La Crosse Safety and Operations Study

No-Build Conditions Report

WisDOT ID 1630-08-00

May 2021

Revision 2 (December, 2021)

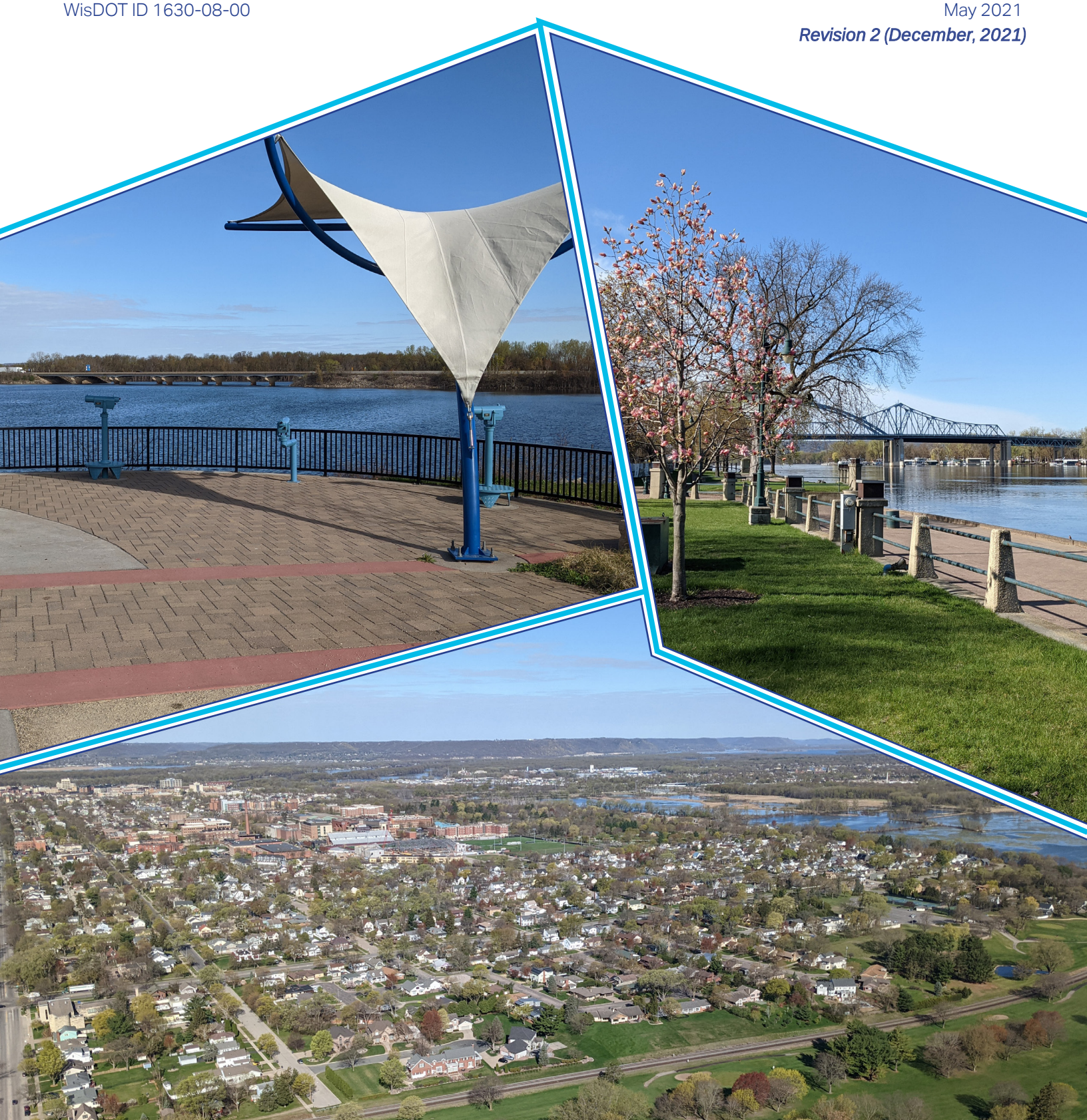

Executive Summary

WisDOT has initiated a Safety & Operations study of major north-south roadways within the City of La Crosse. Roadways included in the study include segments of US 53, WIS 35, WIS 16, US 14 / US 61, and Losey Boulevard.

The purpose of the No-Build Conditions report is to document the anticipated needs for project roadways, including the conditions in each of the following technical areas:

Traffic Operational Characteristics

Structural Conditions

Safety Characteristics

Pavement Conditions

This report documents the methodology used for evaluations of No-Build (2050) traffic operations conditions data and evaluation results from this report will provide a baseline for future alternative comparisons.

With the project's inclusion of all north-south arterials in the City of La Crosse, the list of needs is quite lengthy. In addition, these needs vary greatly by the type of issue addressed and the urgency/severity of the issue addressed. To gain a better understanding of the main concerns on a segment-by-segment basis, needs that address issues of a higher urgency or severity have been defined as "critical needs" to emphasize their higher level of importance.

The list of needs are categorized as follows, including an explanation of what constitutes a "critical need":

Traffic Needs: Traffic deficiencies documented in this No-Build Conditions Report. Critical traffic needs include intersections with traffic deficiencies that will likely require capacity improvements.

Safety Needs: Contributing factors to be addressed for safety concerns at flagged intersections and segments. Critical safety needs include contributing factors most prevalent within each project segment, contributing factors at the Top 10 intersections, and select bicycle & pedestrian concerns.

Structures Needs: Rehabilitation and replacement of existing structures as documented in this No-Build Conditions Report. Critical structures needs include structure rehabilitations and replacements needed by 2030.

Pavement Needs: Pavements with a surface age exceeding 50 years, pavements with a PCI rating of "poor" (as documented in the Existing Conditions Report), and traffic concerns associated with future improvement projects as documented in this No-Build Conditions Report. All these pavement needs are considered critical pavement needs.

Details on the needs and critical needs for each project segment are documented elsewhere in this report, including in the segment needs exhibits, various sections of the report, and in the report appendices. A summary of the type of critical needs present in each segment is in the table below:

Project Segment	*Critical Traffic Needs*	*Critical Safety Needs*	*Critical Structures Needs*	*Critical Pavement Needs*
WIS 16	✓	✓	✓	✓
WIS 35 (Lang Dr, George St)		✓		✓
US 53 (Rose St, Copeland Ave)		✓		✓
WIS 16 (La Crosse St)	✓	✓		✓
Losey Blvd	✓	✓		
WIS 35 (West Ave)	✓	✓		✓
Downtown	✓	✓		✓
US 14/61 (South Ave, Mormon Coulee Rd)		✓		✓

Table of Contents

1. Introduction 1
2. Project Limits 2
3. Segment Needs Summary 3
4. Traffic Analysis 5
   4.1 Traffic Volumes and Forecasting 5
   4.2 Traffic Modeling 7
   4.3 Traffic Analysis Summary 10
5. Crash Analysis 13
   5.1 Contributing Geometric Analysis 13
   5.2 Segment CGA Summary 14
   5.3 Top 10 Intersection CGA Summary 17
   5.4 Bicycle & Pedestrian CGA Summary 19
6. Structure Condition 20
   6.1 Future Work Actions for Structures 20
   6.2 Structure Condition Summary 23
7. Pavement Maintenance Impacts 24
   7.1 Impacts of Future Projects 24
   7.2 Pavement Maintenance Impacts Summary 25
8. Next Steps 26

List of Tables

Table 1: Segment Needs List 4
Table 2: AADT Traffic Forecast Summary 6
Table 3: Traffic Analysis Summary 10
Table 4: Type of Structure Work Action by Decade 21
Table 5: 2021-2030 Structure Work 22
Table 6: 2031-2040 Structure Work 22
Table 7: 2041-2050 Structure Work 22

List of Figures

Figure 1: Project Location Map 1
Figure 2: Project Segments and Intersections 2
Figure 3: Signalized LOS 7
Figure 4: Unsignalized LOS 8
Figure 5: 2050 No-Build Level of Service Results 9

List of Appendices

Appendix 1: Traffic Forecast
Appendix 2: Design Year Turning Movement Traffic Volumes
Appendix 3: No-Build Conditions Traffic Modeling Methodology and Results
Appendix 4: Safety Certification Worksheets
Appendix 5: WiSAMS/FIIPS Duplicate Work Action Review
Appendix 6: Traffic Impacts of Future Projects

1. Introduction

WisDOT has initiated a Safety & Operations study of major north-south roadways within the City of La Crosse. The study includes roadway segments along US 53, WIS 35, WIS 16, US 14 / US 61, and Losey Boulevard. The purpose of the No-Build Conditions Report is to document the needs for project roadways, including 2050 traffic operational characteristics, safety characteristics, structural conditions, and pavement conditions. This report will also document the methodology used for evaluations. No-Build conditions data and evaluation results from this report will provide a baseline for future improvement alternative comparisons.

The roadway segments included in the study are in Figure 1: Project Location Map.

Figure 1: Project Location Map

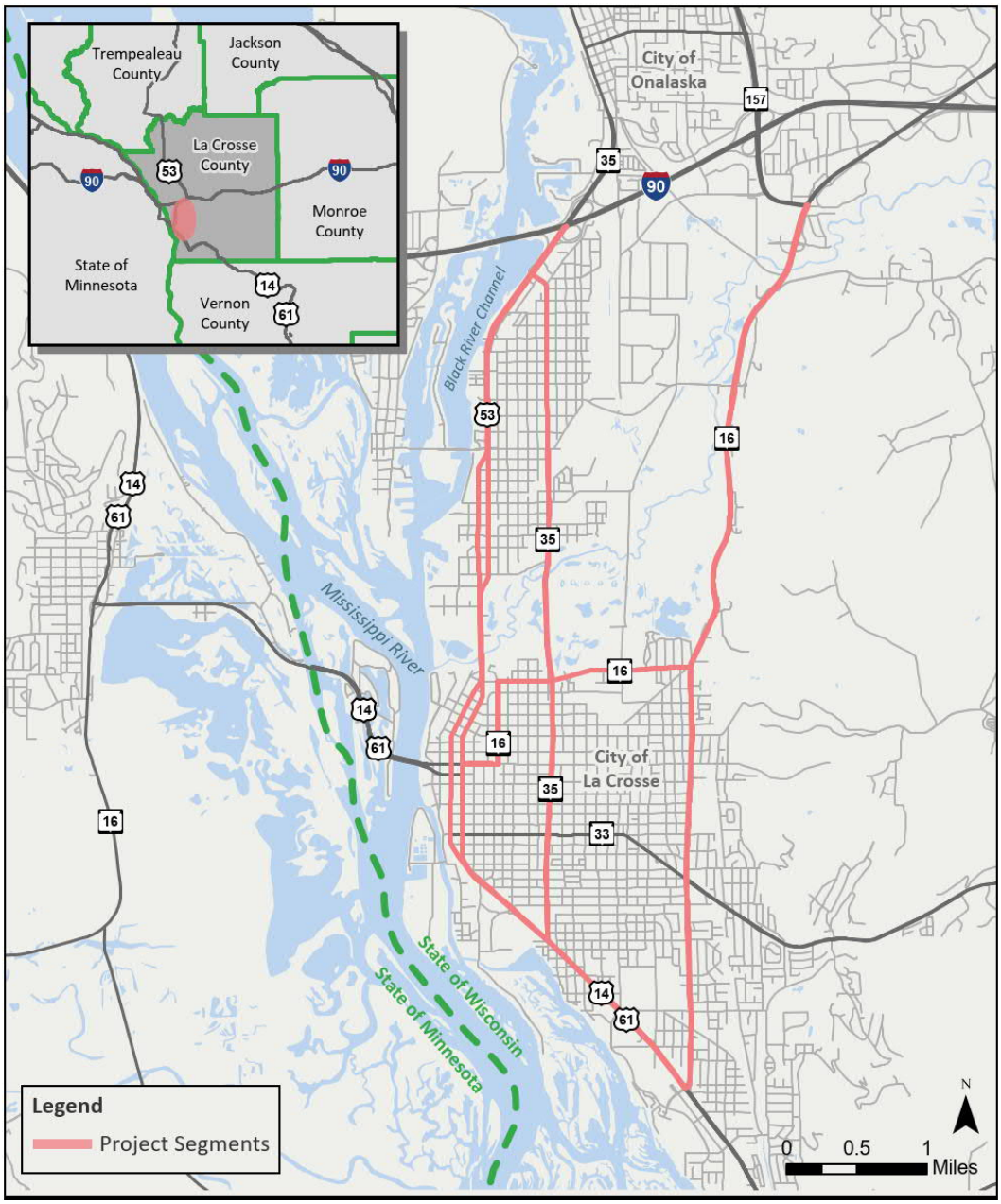

2. Project Limits

As documented in the Existing Conditions Report, project roadways were divided into segments for the purposes of this study. Project segments and project intersections within those segments are in Figure 2: Project Segments and Intersections.

Figure 2: Project Segments and Intersections

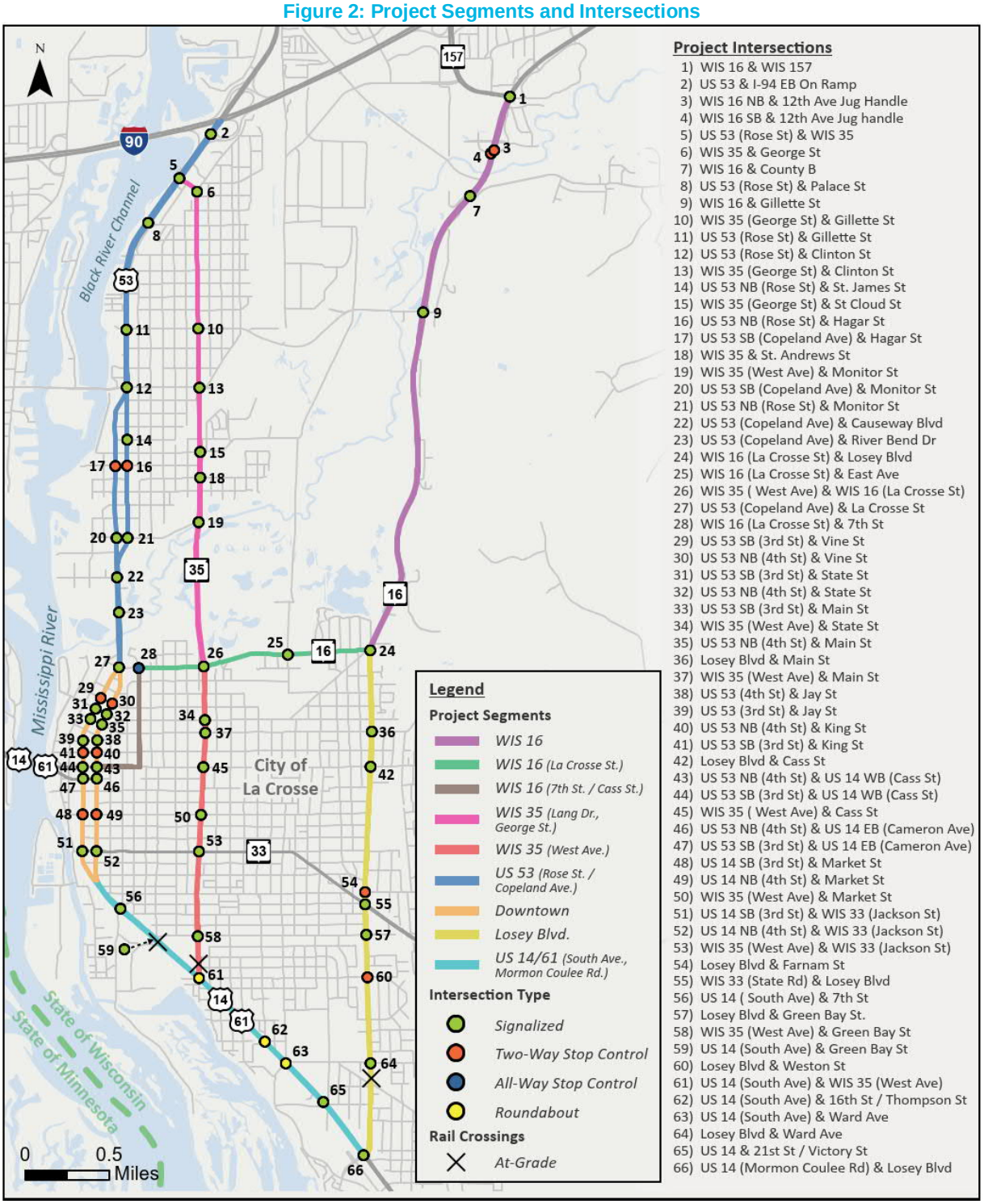

The WIS 16 (7th St / Cass St) segment was not originally included in the scope of this study. Evaluation of this segment is not included in this study but will be included in future study phases.

3. Segment Needs Summary

Each project segment has been evaluated for project needs based on the traffic deficiencies, safety concerns, and infrastructure conditions detailed in the Existing Conditions Report and this No-Build Conditions Report. These needs have been divided into categories, including traffic needs, safety needs, structures needs, and pavement needs.

With the project's inclusion of all north-south arterials in the City of La Crosse, the list of needs is quite lengthy. In addition, these needs vary greatly by the type of issue addressed and the urgency/severity of the issue addressed. To gain a better understanding of the main concerns on a segment-by-segment basis, needs that address issues of a higher urgency or severity have been defined as "critical needs" to emphasize their higher level of importance.

The list of needs is categorized as follows, including an explanation of what constitutes a "critical need":

Traffic Needs: Traffic deficiencies documented in this No-Build Conditions Report. Critical traffic needs include intersections with traffic deficiencies that will likely require capacity improvements.

Safety Needs: Contributing factors to be addressed for safety concerns at flagged intersections and segments. Critical safety needs include contributing factors most prevalent within each project segment, contributing factors at the Top 10 intersections, and select bicycle & pedestrian concerns.

Structures Needs: Rehabilitation and replacement of existing structures as documented in this No-Build Conditions Report. Critical structures needs include structure rehabilitations and replacements needed by 2030.

Pavement Needs: Pavements with a surface age exceeding 50 years, pavements with a PCI rating of "poor" (as documented in the Existing Conditions Report), and traffic concerns associated with future improvement projects as documented in this No-Build Conditions Report. All these pavement needs are considered critical pavement needs.

Segment Needs Exhibits for each project segment follow this section of the report, and each need category is explored in more detail in subsequent sections of the report. These exhibits show all project needs within each segment and the needs categorized as "critical needs" are highlighted for emphasis. A list of the needs and symbols used in the Segment Needs Exhibits is in Table 1: Segment Needs List.

Table 1: Segment Needs List

Category	Need	Description	Symbol	Critical Need Symbol
Traffic	Intersection LOS	Overall intersection LOS or individual movement LOS fails to meet deficiency criteria		
	Turn Lane Queue	Turn lane queues that exceed turn lane length or through lane queues that block access to a turn lane		
	Queue Spillback	Through lane queues that spill back to an adjacent intersection		
Safety	Sight Distance	Side road vehicles or left turning vehicles at intersections have sight distance issues with conflicting vehicle paths		
	Channelized Right Turn	Channelized right turn geometry causes sight distances issues due to drivers having to look over their shoulders		
	Lack of Turn Lanes	The lack of turn lanes at an intersection or driveway causes vehicles to slow for their turn in the mainline thru lanes		
	Queue Spillback	Queues from adjacent signalized intersections spill back to nearby intersections		
	Weather Related	Weather (snow, ice, rain) created poor roadway conditions (snowy, icy, wet)		
	Signal Visibilty	Signalized intersections have signal visibility issues for thru vehicle movements		
	Intersection Geometry	Intersection geometrics do not accommodate truck turning movements at an intersection		
	Unsafe Lane Change	Frequent unsafe lane change maneuvers due to close access spacing		
	Bicycle Crashes	Conflicts between vehicles and bicycles exist due to lack of bike facilities		
	Improper Left Turn	One-way street confusion causes vehicles to make a left turn from the incorrect lane		
	Pedestrian Crashes	Conflicts between vehicles and pedestrians exist, including near-miss crashes with pedestrians		
	Parked Vehicles	The presence of parked vehicles narrow lanes, impede sight distance, and cause vehicles to stop/slow in mainline thru lanes		
	Congestion	Congestion along a corridor or at an intersection causes queuing at unexpected locations		
	Intersection Angle	The intersection angle creates confusion or sight distance issues for drivers		
Structures	Replace Structure	Structure replacement needed by 2050		
	Concrete Overlay	Concrete overlay needed by 2050		
	Polymer Overlay	Polymer overlay needed by 2050		
	Painting	Bridge painting needed by 2050		

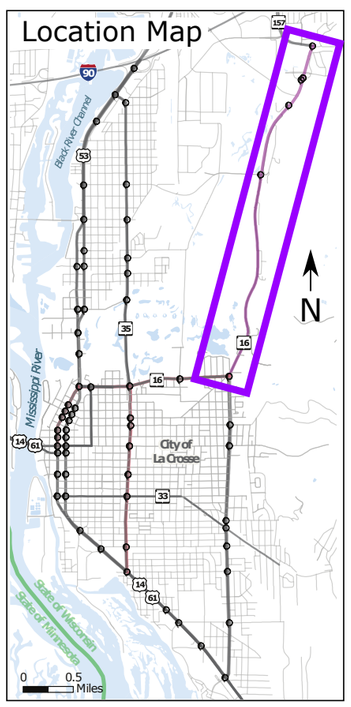

58% of this Segment has safety concerns including

- Congestion during peak hours

Any future reconstruction project on any portion of this segment will likely result in congestion on WIS 16 and parallel routes

Critical Need shown as filled in icon with shadow

Traffic

Traffic Deficiencies under No-Build (2050) Traffic Conditions

- Intersection LOS Deficiency
- Turn lane queue Deficiency
- Queue spillback to adjacent intersection

Safety

Contributing Factors at Flagged Intersections

- Sight distance issues
- Channelized Right Turn Causes Poor Vision
- Lack of turn lanes
- Queue spillback from adjacent signalized intersection
- Weather related crashes
- Signal Visibility issues

Structures

Planned/Recommended Structure Projects

- Replace Structure
- Concrete Overlay
- Polymer Overlay
- Painting

Pavement

No Pavement Issues

Segment Needs
WIS 16 Segment

La Crosse Safety and Operations Study

April 2021

WisDOT ID: 1630-08-00

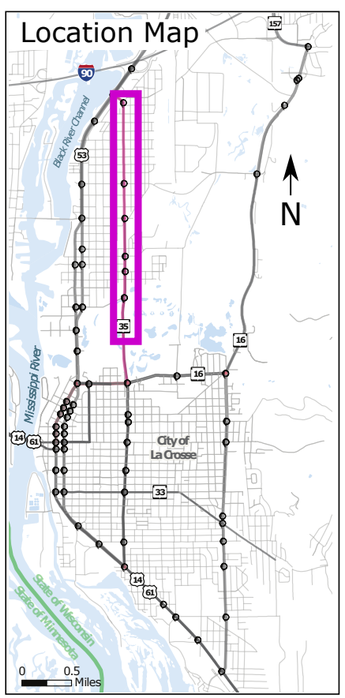

61% of this Segment has safety concerns including

- Lack of bike facilities throughout segment

Between Gillette St. and Palace St.
- -Pedestrian Issues crossing at unmarked crosswalks
- -Lack of turn lanes and cars turning into driveways or uncontrolled intersections
- -Parked vehicles narrow roadway and undefined parking lanes

Between Monitor St & St. Cloud St.
- -Unsafe lane change due to closely spaced intersections and driveways

Critical Need shown as filled in icon with shadow

Traffic

Traffic Deficiencies under No-Build (2050) Traffic Conditions

- Intersection LOS Deficiency
- Turn lane queue Deficiency
- Queue spillback to adjacent intersection

Safety

Contributing Factors at Flagged Intersections

- Sight distance issues
- Intersection geometry inadequate for truck turning movements
- Signal Visibility issues
- Queue spillback from adjacent signalized intersection
- Bike crashes

Structures

Planned/Recommended Structure Projects

- Concrete Overlay

Pavement

- Year 2026 PCI rating "poor

Segment Needs
WIS 35 (George Street/Lang Drive) Segment

La Crosse Safety and Operations Study

April 2021

WisDOT ID: 1630-08-00

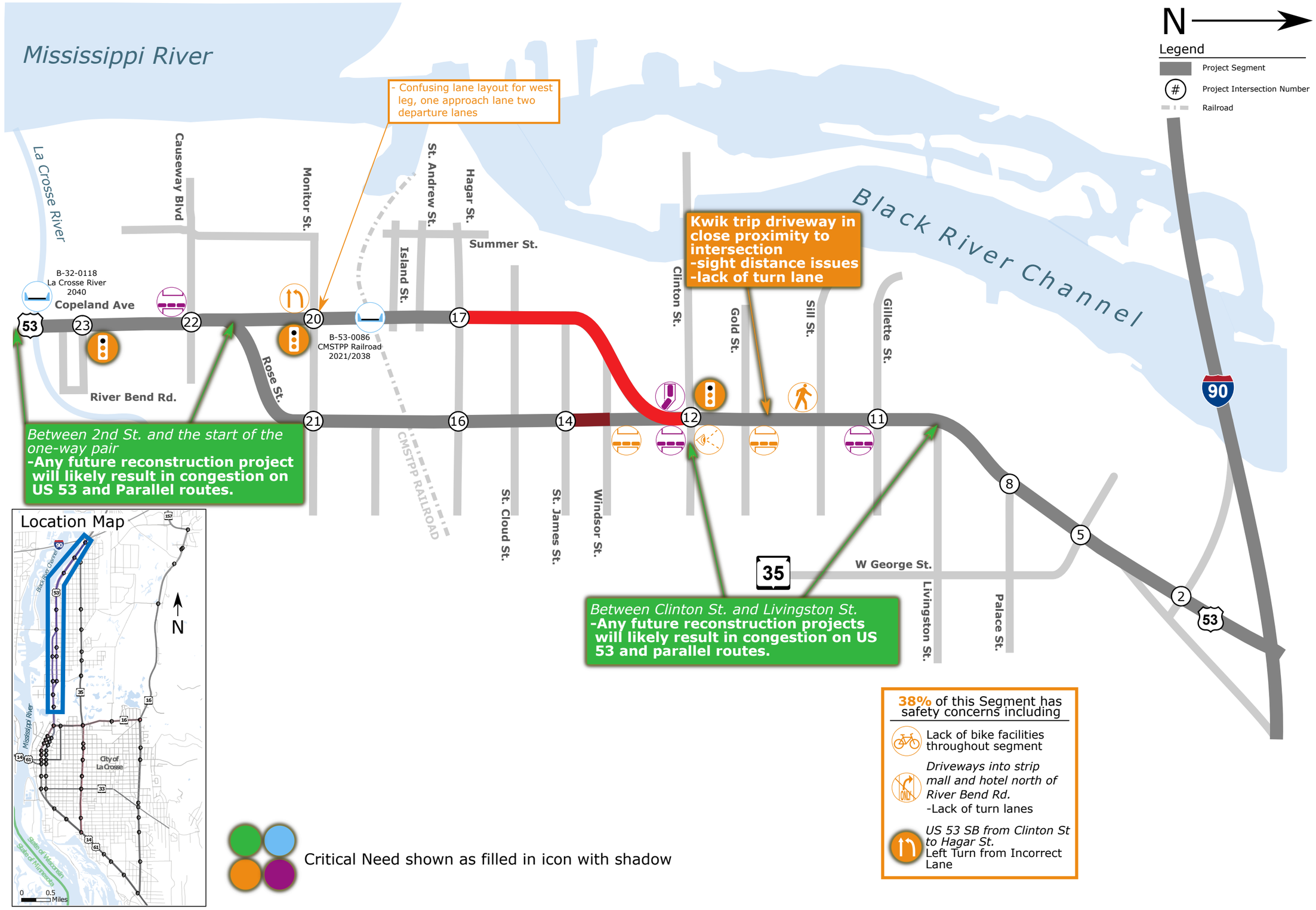

Segment Needs
US 53 (Rose Street/Copeland Avenue) Segment

La Crosse Safety and Operations Study

April 2021

WisDOT ID: 1630-08-00

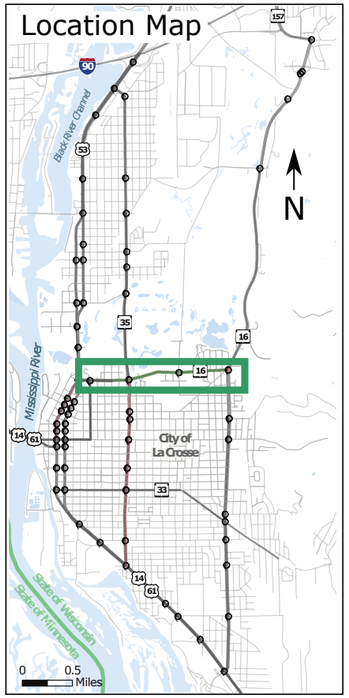

97% of this Segment has safety concerns including

- Lack of turn lanes
- *Between WIS 35 and 24th St*
  - -Pedestrian issues with no median islands or ped refuges
- *Between 7th St and 11th St*
  - - Sight distance issues at alley driveways
  - - Parked vehicles too close to intersections and driveways.
- Lack of bike facilities throughout segment
- Congestion during peak hours

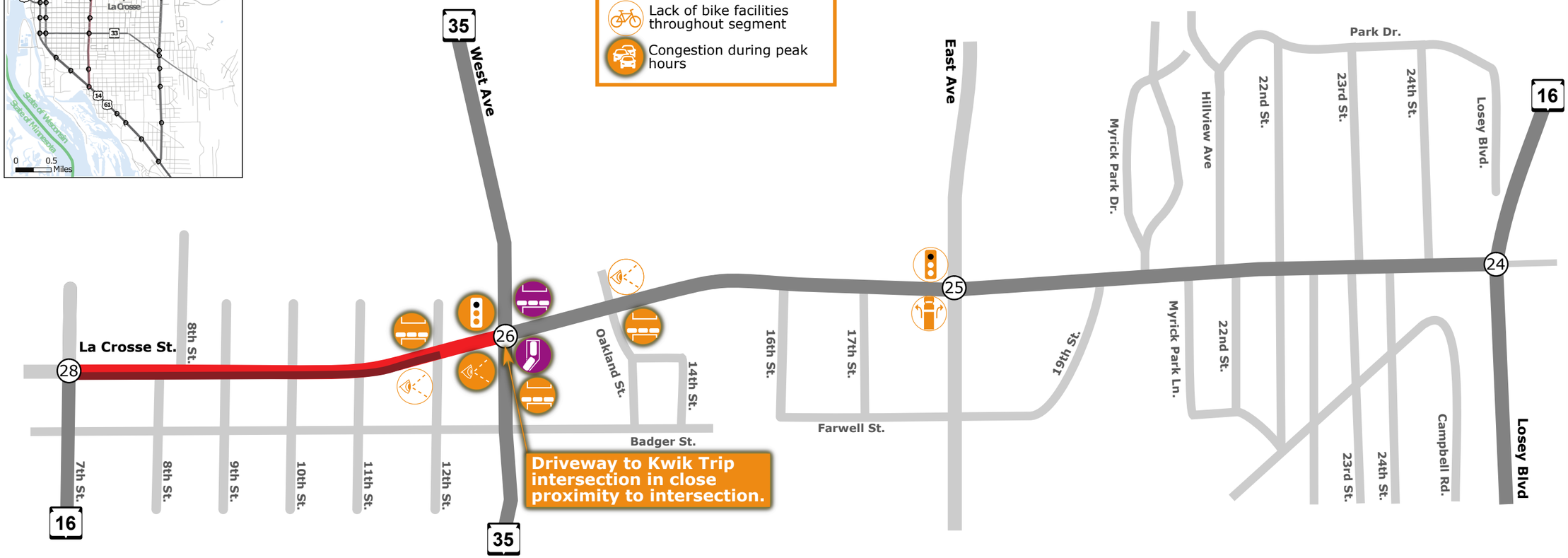

Critical Need shown as filled in icon with shadow

N

Legend

- Project Segment
- # Project Intersection Number

Traffic

Traffic Deficiencies under No-Build (2050) Traffic Conditions

- Intersection LOS Deficiency
- Turn lane queue Deficiency
- Queue spillback to adjacent intersection

Safety

Contributing Factors at Flagged Intersections

- Sight distance issues
- Intersection geometry inadequate for truck turning movements
- Channelized Right Turn Causes Poor Vision
- Signal Visibility issues
- Queue spillback from adjacent signalized intersection

Structures

No Structures

Pavement

- Year 2026 PCI rating "poor
- Age > 50 years

Segment Needs
WIS 16 (La Crosse Street) Segment

La Crosse Safety and Operations Study

April 2021

WisDOT ID: 1630-08-00

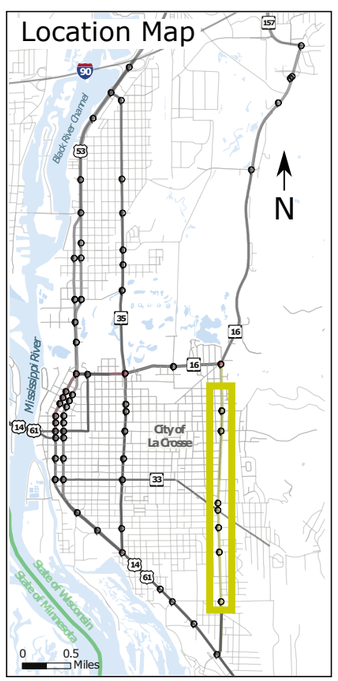

31% of this Segment has safety concerns including

- Lack of bike facilities throughout segment
- Congestion during peak hours
- Unsafe lane changes due to closely spaced intersections/driveways

Critical Need shown as filled in icon with shadow

Traffic

Traffic Deficiencies under No-Build (2050) Traffic Conditions

- Intersection LOS Deficiency
- Turn lane queue Deficiency
- Queue spillback to adjacent intersection

Safety

Contributing Factors at Flagged Intersections

- Sight distance issues
- Intersection geometry inadequate for truck turning movements
- Signal Visibility issues
- Queue spillback from adjacent signalized intersection
- Pedestrian Issues

Structures

No Structures

Pavement

No Data Available

Segment Needs
Losey Boulevard Segment
La Crosse Safety and Operations Study

April 2021
WisDOT ID: 1630-08-00

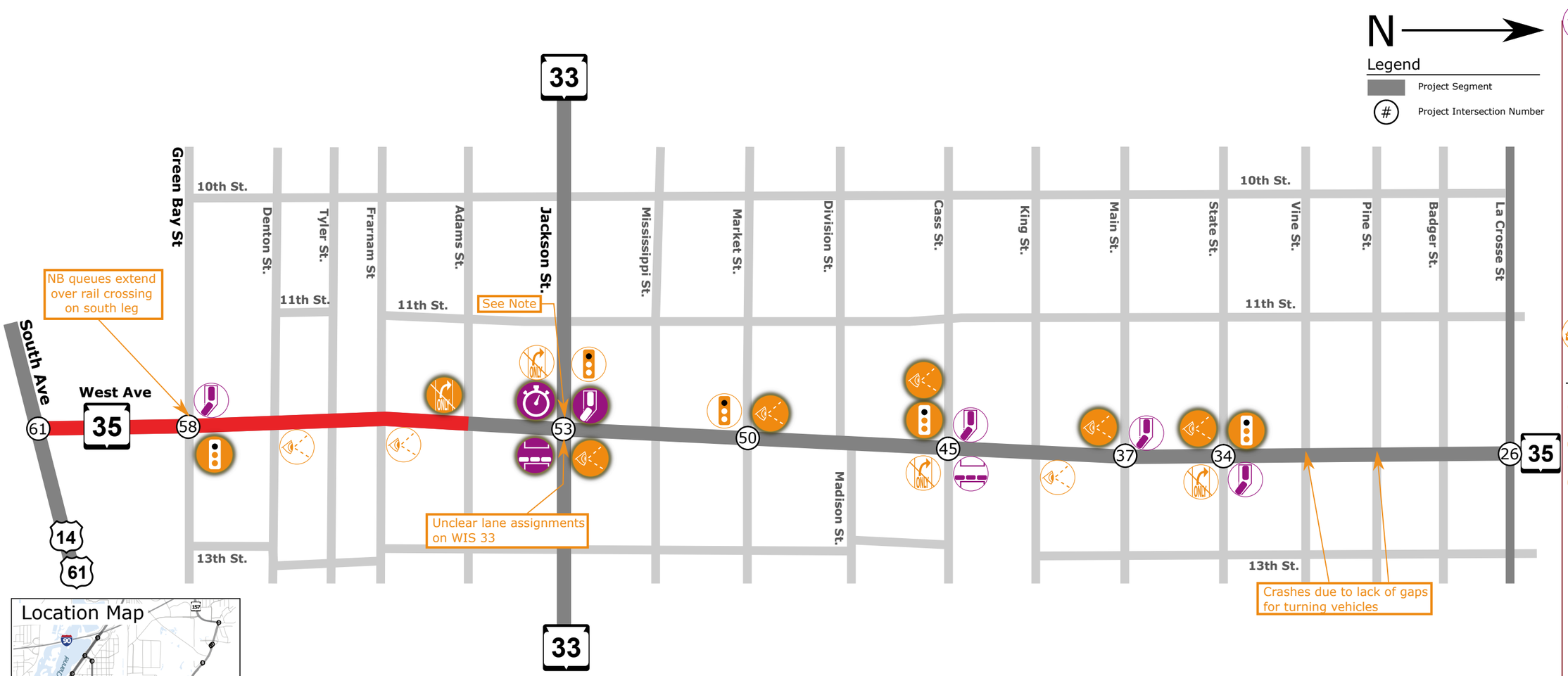

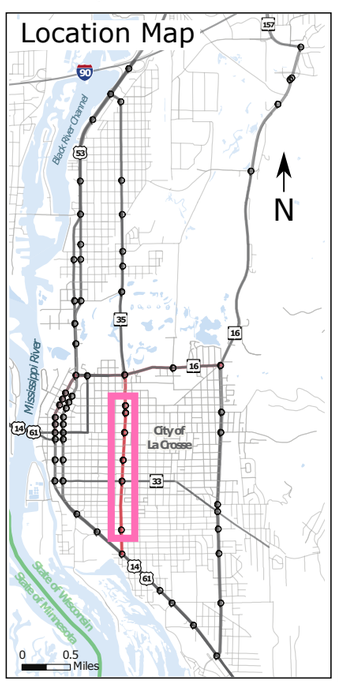

74% of this Segment has safety concerns including

- Congestion during peak hours
- Lack of bike facilities throughout segment
- *Between Badger St. and State St.* Pedestrian Issues

Critical Need shown as filled in icon with shadow

Note: At the WIS 33 and WIS 35 intersection there will be monotubes with heads per lanes installed in a future project as well as Realigning STH 35 left turn lanes with positive offset improving sight distance issues

Traffic

Traffic Deficiencies under No-Build (2050) Traffic Conditions

- Intersection LOS Deficiency
- Turn lane queue Deficiency
- Queue spillback to adjacent intersection

Safety

Contributing Factors at Flagged Intersections

- Sight distance issues
- Lack of turn lanes
- Signal Visibility issues

Structures

No Structures

Pavement

Year 2026 PCI rating "poor

Segment Needs
WIS 35 (West Avenue) Segment

La Crosse Safety and Operations Study

April 2021

WisDOT ID: 1630-08-00

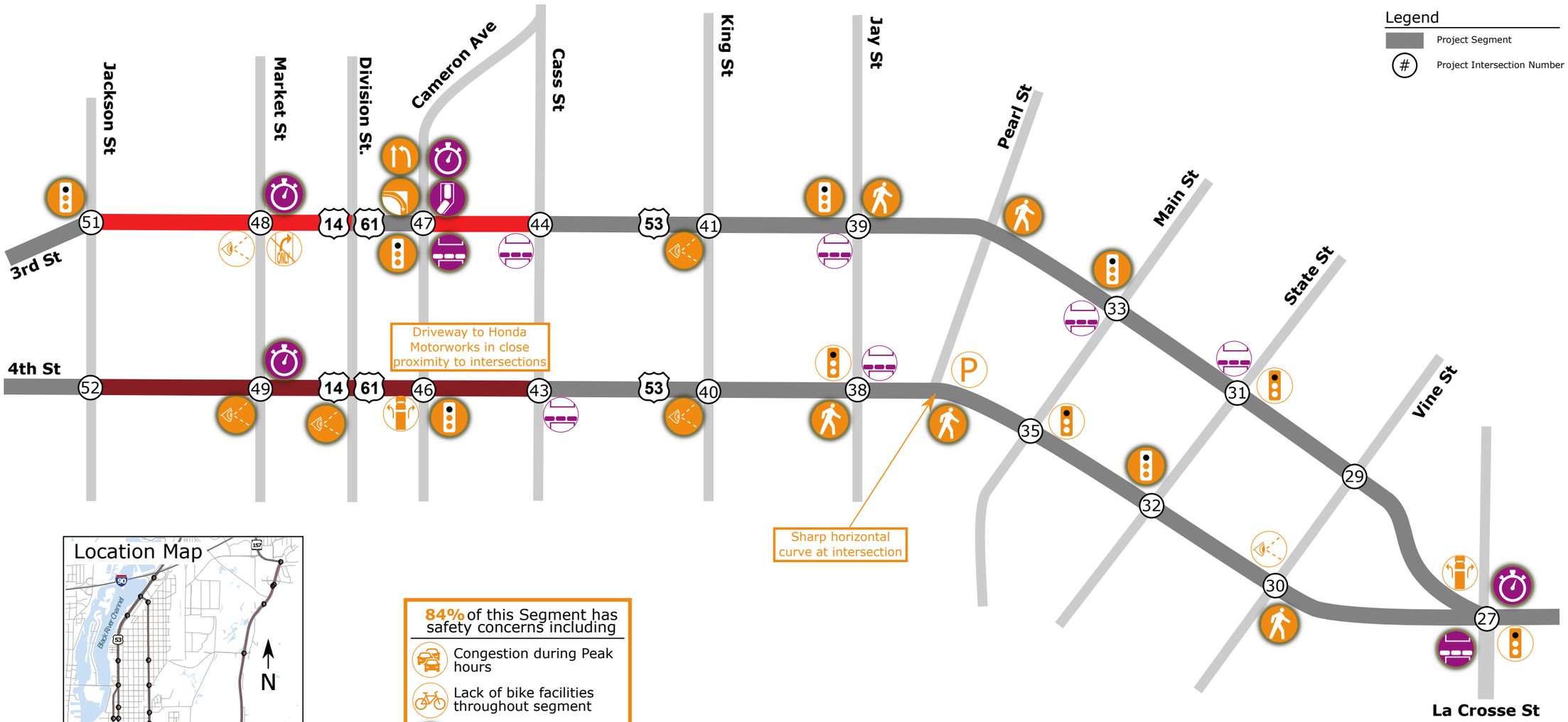

Legend

Project Segment

Project Intersection Number

Traffic

Traffic Deficiencies under No-Build (2050) Traffic Conditions

- Intersection LOS Deficiency
- Turn lane queue Deficiency
- Queue spillback to adjacent intersection

Safety

Contributing Factors at Flagged Intersections

- Signal Visibility issues
- Intersection geometry inadequate for truck turning movements
- Lack of turn lanes
- Parked Vehicles on Horizontal Curve
- Pedestrian Issues
- Sight distance issues
- Channelized Right Turn Causes Poor Vision
- Left Turn from Incorrect Lane

Structures

No Structures

Pavement

- Year 2026 PCI rating "poor"
- Age > 50 years

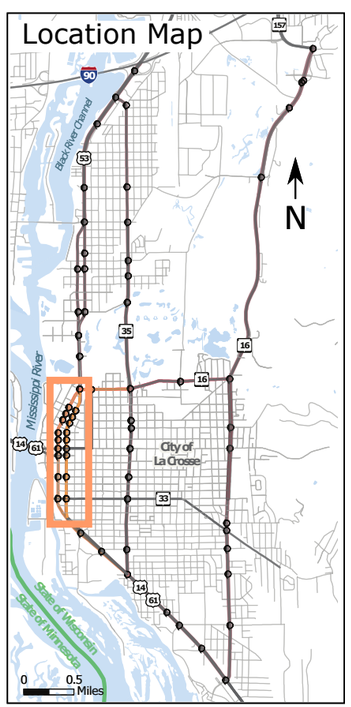

84% of this Segment has safety concerns including

- Congestion during Peak hours
- Lack of bike facilities throughout segment
- Left Turn from Incorrect Lane
- Unsafe lane changes due to closely spaced intersections/driveways

Critical Need shown as filled in icon with shadow

Segment Needs
Downtown Segment

La Crosse Safety and Operations Study

April 2021

WisDOT ID: 1630-08-00

Legend

Project Segment

Project Intersection Number

N

Mid-block crosswalk at Hospital

7th Ave

South Ave

14 61

56

59

See Note

35

West Ave

Green Bay Ave

16th St.

13th St.

Weston St.

Sims Pl.

61

East Ave

Horton St.

Castle Pl

62

63

See Note

Ward Ave

Losey Blvd.

East Ave

Victory St.

65

66

14 61

Mormon Coulee Rd

Bluff Slough

Mississippi River

Traffic

Traffic Deficiencies under No-Build (2050) Traffic Conditions

- Intersection LOS Deficiency
- Turn lane queue Deficiency
- Queue spillback to adjacent intersection

Safety

Contributing Factors at Flagged Intersections

- Sight distance issues
- Signal Visibility issues
- Pedestrian Issues
- Intersection Angle
- Intersection geometry inadequate for truck turning movements

Structures

No Identified/Planned Structures Work

Pavement

Age > 50 years

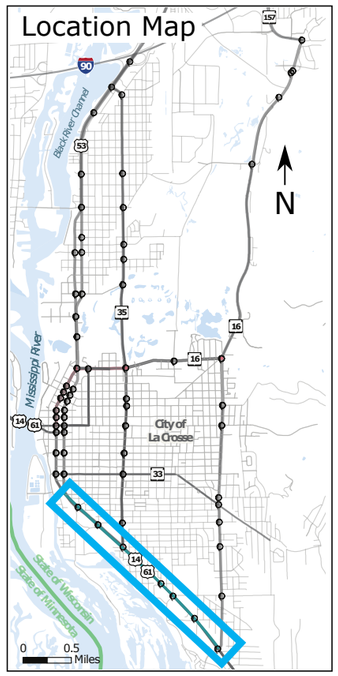

31% of this Segment has safety concerns including

- Lack of bike facilities throughout segment
- Lack of turn lanes

Critical Need shown as filled in icon with shadow

Note: Intersection safety issues at WIS 35/West Ave and Ward Ave will be improved by a future WisDOT project that is planned to construct roundabouts at these locations and at segments and unsignalized intersections between Ward and West Ave.

Segment Needs
US 14/61 (South Avenue/Mormon Coulee Road) Segment

La Crosse Safety and Operations Study

April 2021

WisDOT ID: 1630-08-00

WISCONSIN DEPARTMENT OF TRANSPORTATION

4. Traffic Analysis

4.1 Traffic Volumes and Forecasting

Traffic volumes were collected from a variety of sources, as documented in the Traffic Data Collection Plan and Existing Conditions Report. 2050 No-Build Traffic forecasts were developed by the WisDOT Traffic Forecasting Section for all project intersections and all AADT traffic volume locations. The traffic forecasts are in Appendix 1: Traffic Forecast. Design year (2050) turning movement traffic volumes are in Appendix 2: Design Year Turning Movement Traffic Volumes

A summary of the AADT traffic forecasts by segment is in Table 2: AADT Traffic Forecast Summary. This table includes sub-segmentation of each segment into unique typical sections. For each sub-segment, the forecasted 2050 AADT and AADT threshold ranges for each sub-segment are listed. The source of these AADT thresholds are:

- For roadways with speed limits of 40 mph or less, WisDOT FDM 11-20, Attachment 1.1 (LOS D)
- For roadways with speed limits greater than 40 mph, WisDOT FDM 11-20, Attachment 1.5 (Design AADT)

Forecasted 2050 AADT values highlighted in red indicate AADT values that exceed the upper limit of the threshold volume range.

Table 2: AADT Traffic Forecast Summary

Project Segment	Speed Limit	Typical Section	Forecasted 2050 AADT	AADT Threshold / Design AADT
WIS 16 Segment				
Losey Blvd to WIS 157	40-45	4-Lane Divided	**43,200–48,100**	19,000-42,000
WIS 35 (Lang Dr, George St) Segment				
WIS 16 (La Crosse St) to Monitor St	25	4-Lane Undivided	23,900	17,500-47,000
Monitor St to St Cloud St	25	4-Lane Divided	22,800	22,750-47,000
St Cloud St to Clinton St	25	4-Lane Undivided	25,500	17,500-47,000
Clinton St to Gillette St	25	3-Lane	15,400	7,500-22,500
Gillette St to George St	25	2-Lane Undivided	9,800-10,000	7,500-22,500
George St to US 53 (Rose St)	25	4-Lane Divided	10,000	22,750-47,000
US 53 (Rose St, Copeland Ave) Segment				
WIS 16 (La Crosse St) to Causeway Blvd	30	4-Lane Divided	29,200	22,750-47,000
Causeway Blvd to Clinton St (NB Only)	30	2-Lane One-Way	13,900-14,500	N/A
Clinton St to Causeway Blvd (SB Only)	30	2-Lane One-Way	13,600-14,600	N/A
Clinton St to Livingston St	30	4-Lane Divided	25,700-31,100	22,750-47,000
Livingston St to WIS 35	40	4-Lane Divided	29,700-30,000	22,750-47,000
WIS 35 to I-90	40	6-Lane Divided	39,800	37,500-76,000
WIS 16 (La Crosse St) Segment				
7th Street to WIS 35 (West Ave)	25	2-Lane Undivided	8,800	7,500-22,500
WIS 35 (West Ave) to Losey Blvd	25	3-Lane	10,800-12,500	7,500-22,500
Losey Blvd Segment				
US 14/61 (Mormon Coulee Rd) to Ward Ave	25	4-Lane Undivided	12,200	17,500-47,000
Ward Ave to WIS 16 (La Crosse St)	25	4-Lane Divided	20,900-32,400	22,750-47,000
WIS 35 (West Ave) Segment				
US 14/61 (South Ave) to Adams St	25	4-Lane Undivided	10,600-11,100	17,500-47,000
Adams St to WIS 16 (La Crosse St)	25	4-Lane Divided	15,700-25,900	22,750-47,000
Downtown Segment				
Hood St to Cass St (NB Only)	25	3-Lane One-Way	11,800-18,400	N/A
Cass St to La Crosse St (NB Only)	25	2-Lane One-Way	10,700-12,800	N/A
La Crosse St to Hood St (SB Only)	25	2-Lane One-Way	9,100-15,900	N/A
US 14/61 (South Ave, Mormon Coulee Rd) Segment				
Losey Blvd to Ward Ave	35	4-Lane Divided	22,600-22,800	22,750-47,000
Ward Ave to Hood St	30	4-Lane Divided	18,000-27,100	22,750-47,000

4.2 Traffic Modeling

No-Build traffic models were completed for all project intersections using Synchro and HCS traffic modeling software. To comply with WisDOT Traffic Engineering, Operations, and Safety Manual (TEOpS) guidance, Synchro was used for all signalized, two-way stop control, and all-way stop control intersections, while HCS was used for all roundabout intersections.

The method for evaluating controlled intersections is through assignment of a Level of Service (LOS) for each intersection movement and the intersection as a whole. The assigned LOS is a letter grade based on the amount of delay experienced by the average driver. The average delay thresholds used to assign LOS are different for signalized and unsignalized intersections. LOS thresholds are in Figure 3: Signalized LOS and Figure 4: Unsignalized LOS.

Figure 3: Signalized LOS

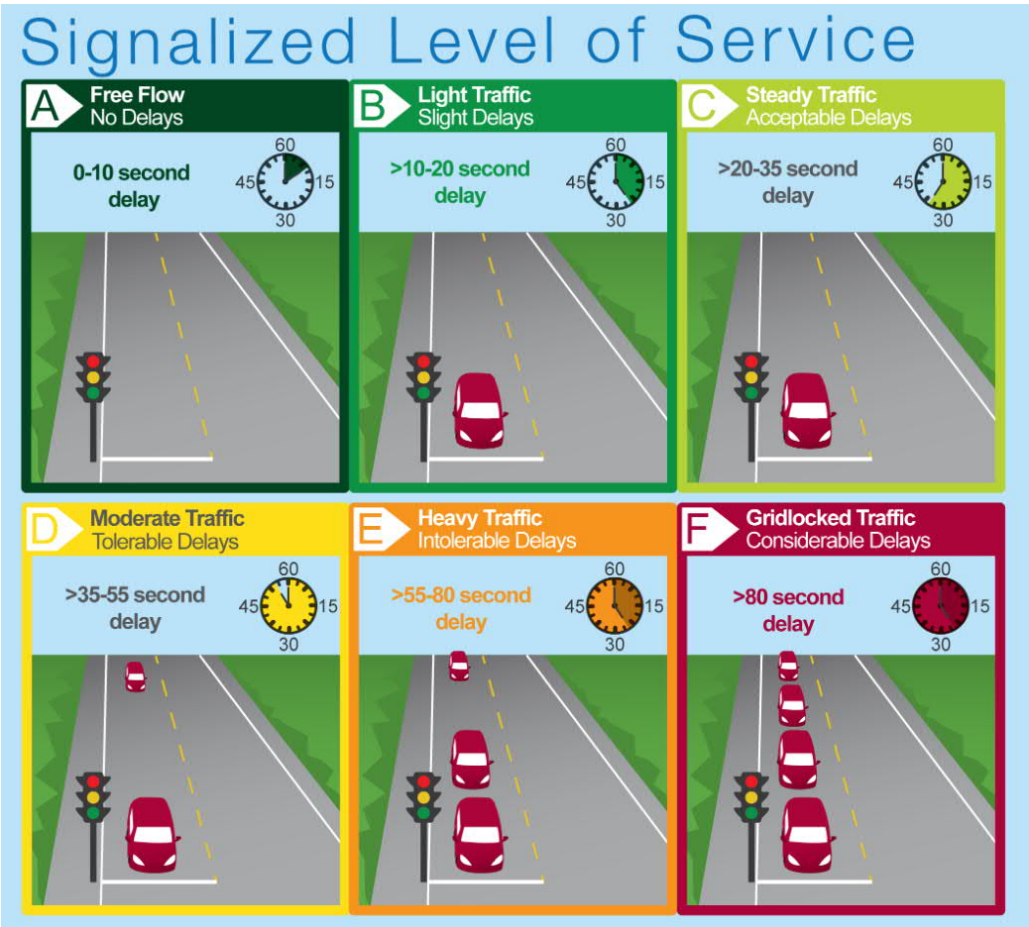

Figure 4: Unsignalized LOS

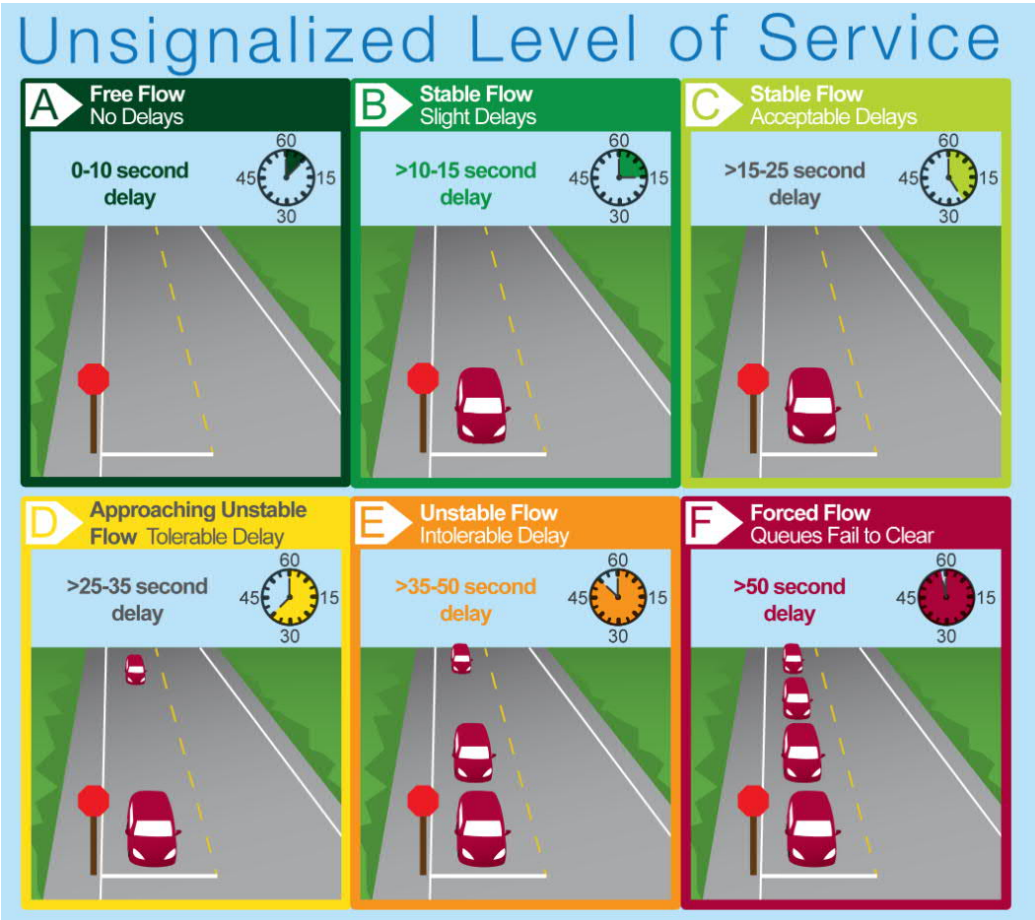

As documented in the Existing Conditions Report, the LOS evaluation methodology developed for this study are as follows:

- LOS A, B, C, and D are considered acceptable for individual movements and overall intersection operations.
- Overall intersection LOS E and F are considered to be deficient
- Individual movement LOS E for mainline through movements is considered to be deficient.
- Individual movement LOS E for non-mainline through movements will not be considered deficient but should be evaluated for improvement / mitigation.
- Individual movement LOS F is considered to be deficient.

The methodology and results of the traffic modeling effort are in Appendix 3: No-Build Conditions Traffic Modeling Methodology and Results and a summary of LOS for project intersections is in Figure 5: 2050 No-Build Level of Service Results.

Figure 5: 2050 No-Build Level of Service Results

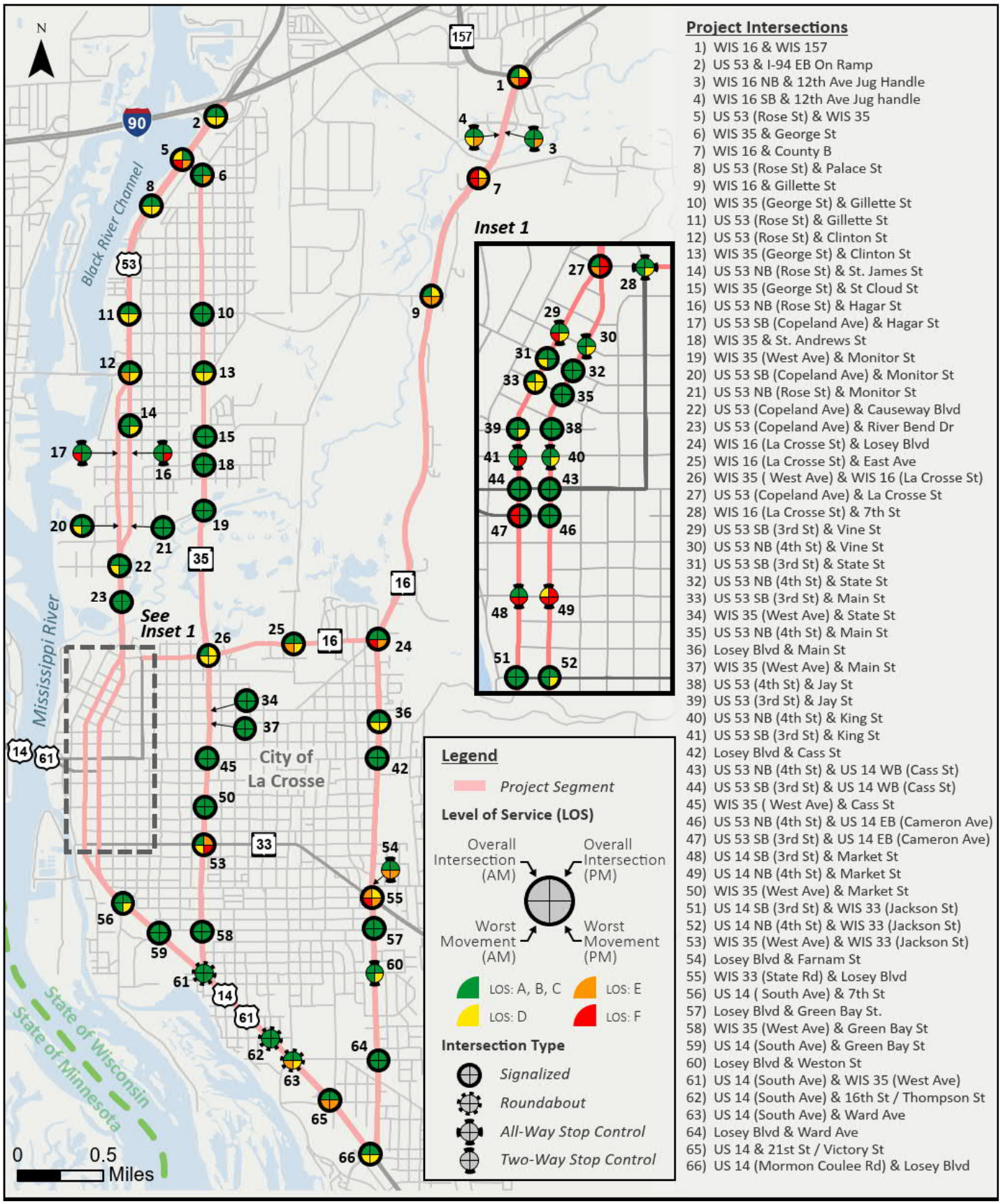

4.3 Traffic Analysis Summary

A summary of traffic issues for each project segment is in Table 3: Traffic Analysis Summary. Critical needs are highlighted, and a description of the need is provided. Detailed traffic analysis results are in Appendix 3: No-Build Conditions Traffic Modeling Methodology and Results.

Table 3: Traffic Analysis Summary

Project Location	*Intersection LOS Deficiency*	*Turn Lane Queue Deficiency*	*Queue Spillback to Adjacent Intersection*
WIS 16 Segment			
1: WIS 16 & WIS 157 / Mall Driveway	✓	✓	✓
LOS E for two mainline movements and LOS F for one side road movement. Turn lane queue deficiencies for four turning movements. Southbound through queue spills back to an adjacent intersection in the PM peak.			
7: WIS 16 & County B / Conoco Rd	✓	✓	✓
Overall intersection LOS F and LOS F for the southbound through movement in the AM peak. Turn lane queue deficiencies for three turning movements. Queue spillback to adjacent intersections for the southbound approach in the AM peak and the northbound approach in the PM peak.			
9: WIS 16 & Gillette St / Sunset Blvd		✓	
Turn lane queues deficiencies for the northbound and southbound through movements.			
Segment-Wide: Forecasted 2050 AADT Exceeds the Design AADT			
24: WIS 16 (La Crosse St) / Edgewood Pl & Losey Blvd		✓	
WIS 35 (Lang Dr, George St) Segment			
13. WIS 35 (George St) & Clinton St / Ranger Rd		✓	
15: WIS 35 (Lang Dr) & St Cloud St		✓	
19: WIS 35 (Lang Dr) & Monitor St		✓	
US 53 (Rose St, Copeland Ave) Segment			
11: US 53 (Rose St) & Gillette St			✓
12: US 53 (Rose St) & Clinton St		✓	✓
22: US 53 (Copeland Ave) & Causeway Blvd			✓

Table 3: Traffic Analysis Summary (Continued)

Project Location	*Intersection LOS Deficiency*	*Turn Lane Queue Deficiency*	*Queue Spillback to Adjacent Intersection*
WIS 16 (La Crosse St) Segment			
26: WIS 16 (La Crosse St) & WIS 35 (West Ave)		✓	✓
Turn lane queue deficiencies for two turning movements and queue spillback to adjacent intersections for three turning movements.			
Losey Blvd Segment			
36: Losey Blvd & Main St		✓	
42: Losey Blvd & Cass St		✓	
55: Losey Blvd & WIS 33 (State Rd)	✓	✓	✓
Overall intersection LOS E, LOS F for westbound movements in the AM peak, and LOS E for eastbound and westbound movements in the PM peak. Turn lane queue deficiencies for three turning movements and queue spillback to adjacent intersections for four turning movements.			
WIS 35 (West Ave) Segment			
34: WIS 35 (West Ave) & State St		✓	
37: WIS 35 (West Ave) & Main St		✓	
45: WIS 35 (West Ave) & Cass St		✓	✓
53: WIS 35 (West Ave) & WIS 33 (Jackson St)	✓		✓
Overall intersection LOS E and LOS F for the eastbound left turn movement in the PM peak. Eastbound queues spill back to an adjacent intersection in the PM peak.			
WIS 35 (West Ave) & Green Bay St		✓	

Table 3: Traffic Analysis Summary (Continued)

Project Location	*Intersection LOS Deficiency*	*Turn Lane Queue Deficiency*	*Queue Spillback to Adjacent Intersection*
Downtown Segment			
27: US 53 (Copeland Ave) & La Crosse St	✓		✓
Overall intersection LOS F and individual movement LOS F for several movements in the PM peak. Queue spillback to adjacent intersections for three turning movements.			
31: SB US 53 (3rd St) & State St			✓
33: SB US 53 (3rd St) & Main St			✓
38: NB US 53 (4th St) & Jay St			✓
39: SB US 53 (3rd St) & Jay St			✓
43: NB US 14/61 (4th St) & Cass St			✓
44: SB US 53 (3rd St) & Cass St			✓
47: SB US 53 (3rd St) & Cameron St	✓	✓	✓
LOS F for the overall intersection and the eastbound right turn movement in the AM peak. Eastbound turn lane queue deficiency. Southbound through queues spill back to an adjacent intersection in the AM and PM peak.			
48: SB US 14/61 (3rd St) & Market St	✓		
LOS F for the eastbound (AM peak only) and westbound (AM and PM peaks) approaches.			
49: NB US 14/61 (4th St) & Market St	✓		
LOS F for the eastbound and westbound approaches in both the AM and PM peak.			
US 14/61 (South Ave, Mormon Coulee Rd) Segment			
56: US 14/61 (South Ave) & 7th St		✓	
66: US 14/61 (Mormon Coulee Rd) & Losey Blvd		✓	

5. Crash Analysis

A historical crash analysis was included for all project segments and intersections in the Existing Conditions Report. This analysis follows the steps of WisDOT's Safety Certification Process (SCP). The Existing Conditions Report documented steps 1 and 2 of the SCP, including Sites of Promise by System Screening and Crash Vetting for Sites of Promise. This No-Build Conditions Report will include the methodology used and results of step 3 of the SCP, Contributing Geometric Analysis (CGA). Step 4 of the SCP, Safety Mitigation Certification Process (SMCP) will be completed in later reports.

5.1 Contributing Geometric Analysis

Following the completion of crash vetting, a Contributing Geometric Analysis (CGA) was completed to determine if existing intersection or roadway geometrics were the primary cause for crash trends. If existing geometric features did not contribute to the type and severity of the crashes, other possible contributing factors were analyzed to assist in identifying possible countermeasures.

The CGA process includes exploration of potential countermeasures that address the identified contributing factors. This memo will not include an in-depth discussion of these countermeasures since the next phase of this study, feasible alternatives, will analyze these potential countermeasures in more detail.

Safety Certification Worksheets were created for each project segment corridor in the study area. Crash data, contributing factors, and possible countermeasures were summarized for segment-related crash trends and intersection-related crash trends.

Intersections were included in the Safety Certification Worksheets if they had 15 or more crashes (post-crash vetting) at the location, including intersections that were not flagged in the system screening. An intersection with less than 15 crashes was included if it was a flagged intersection AND a project intersection. If an intersection had less than 15 crashes, it was analyzed for contributing factors, with analysis results included in the segment-related crashes summary if any contributing factors were determined. These worksheets are in Appendix 4: Safety Certification Worksheets.

A large number of crash concerns and contributing factors are listed in the safety certification worksheets. The most critical of these were determined using engineering judgement and summarized in the following sections of the report. This summary is grouped into segment crashes, crashes at the Top 10 intersections, and bicycle & pedestrian crashes.

5.2 Segment CGA Summary

A majority of crashes in the study area are located at intersections or are caused due to congestion from intersections. The primary crash issues throughout the study area are:

WIS 16 Segment

A majority of crashes along this corridor are associated with the following major signalized intersections: Intersection 1 (WIS 16 & WIS 157), Intersection 7 (WIS 16 & County B), and Intersection 9 (WIS 16 & Gillette St). Queues and congestion during peak hours along this stretch of WIS 16 cause rear end crashes at these intersections, along WIS 16 segments, and extending to nearby uncontrolled intersections, including WIS 16 & Sunset Ln.

Intersection 1 (WIS 16 & WIS 157) has various issues due to the intersection operating like a T-Intersection where a majority of west leg traffic turns onto WIS 16. Sideswipe and rear end crash issues exist for the eastbound to southbound channelized right turn movement due to a short merge and small turning radius. Sideswipe crash issues exist between westbound right-turn-on-red traffic and eastbound left turning vehicles.

At Intersection 24 (WIS 16 (La Crosse St) & Losey Blvd), queues and congestion during peak hours cause rear end crashes and queues extend to the nearby uncontrolled intersection of WIS 16 & Quarry Rd and WIS 16 & Bluff Pass Rd.

WIS 35 (Lang Dr, George St) Segment

A majority of crashes occur at signalized intersections, including Intersection 10 (WIS 35 (George St) & Gillette St), Intersection 13 (WIS 35 (George St) & Clinton St), Intersection 19 (WIS 35 (West Ave) & Monitor St), and Intersection 18 (WIS 35 & St Andrew St). Issues include rear end crashes and angle crashes caused by signal visibility issues, intersection geometry for truck turning movements, and left turn sight distance issues.

Sideswipe and rear end crashes along WIS 35 between Monitor St and St. Cloud St are due to closely spaced intersections and driveways. Issues at Menards and Kwik Trip driveways are due to their close proximity to signalized intersections.

Rear end crashes on WIS 35 between Gillette St and Palace St are primarily caused by unmarked parking stalls, parking narrowing the roadway, and a lack of turn lanes at uncontrolled intersection and driveways.

US 53 (Rose St, Copeland Ave) Segment

A majority of crashes (mainly rear end crashes) occur at signalized intersections along the corridor, including Intersection 27 (US 53 (Copeland Ave) & La Crosse St), Intersection 5 (US 53 (Rose St) & WIS 35), Intersection 20 (US 53 SB (Copeland Ave) & Monitor St). Primary contributing factor for rear end crashes are signal visibility issues, lack of by-lane signal heads, and human error.

A majority of Sideswipe crashes occur on SB US 53 (one-way) at the Hagar St, Saint James St, and Saint Cloud St intersections due to vehicles turning left from the incorrect lane. This may be due to lane assignment confusion with US 53 being a one-way road.

Angle, rear end, and left turn crashes on US 53 between Clinton St and Logan St are due to close intersection spacing (including the Kwik Trip driveway), lack of right turn lanes, a short NB left turn lane into Gold St, and congestion during the peak hours with SB queue spillback from the Clinton St signal.

WIS 16 (La Crosse St) Segment

Angle crashes from 7th St to 11th St are primarily caused by sight distance issues at intersections, alleys, and driveways due to parked vehicles being too close to the intersections and buildings obstructing side road vehicles view of mainline traffic.

Congestion and close intersection/driveway spacing at Intersection 26 (WIS 35 (West Ave) & WIS 16 (La Crosse St) is an issue for this intersection and creates additional issues for surrounding intersections, including WIS 16 (La Crosse St) & 12th St, WIS 16 (La Crosse St) & Oakland St, WIS 35 (West Ave) & Badger St, and the Kwik Trip driveways. This specifically causes angle and left turn crash issues at the intersections noted above.

Losey Blvd Segment

A majority of crashes are at signalized intersections, including Intersection 55 (WIS 33 (State Rd) & Losey Blvd), Intersection 57 (Losey Blvd & Green Bay St), and Intersection 64 (Losey Blvd & Ward Ave). Issues at these intersections primarily consist of typical rear end crash factors at all three intersections and signal visibility issues causing angle crashes at Intersection 57 (Losey Blvd & Green Bay St).

The intersections and driveways from Green Bay St to WIS 33 are closely spaced and queues spill back from Intersection 55 (WIS 33 (State Rd) & Losey Blvd) and Intersection 57 (Losey Blvd & Green Bay St) into the Redfield St and Denton St intersections and several driveways. This is a contributing factor in sideswipe, left turn, and angle crashes.

WIS 35 (West Ave) Segment

A majority of angle crashes occur at signalized intersections and are due to signal visibility issues and a lack of by-lane signal heads. Top intersections with this issue are Intersection 45 (WIS 35 (West Ave) & Cass St) and Intersection 58 (WIS 35 (West Ave) & Green Bay St).

Rear end crashes occur on US 35 (West Ave) due to signal visibility issues, lack of by-lane signal heads, congestion during peak hours, and human error. Top intersections with this issue are Intersection 34 (WIS 35 (West Ave) & State St, intersection 37 (WIS 35 (West Ave) & Main St, intersection 45 (WIS 35 (West Ave) & Cass St).

A majority of left turn crashes are due to negative offset left turn lanes at signalized intersections on WIS 35, causing sight distance issues.

Downtown Segment

A majority of intersections are experiencing sideswipe crashes due to vehicles turning left from the incorrect lane, including lane assignment confusion due to 3rd St and 4th St being one-way streets. Intersections where this issue is most prevalent include Intersection 48 (US 14 SB (3rd St) & Market St), US 53 NB (4th St) & Badger St, Intersection 39 (US 53 SB (3rd St) & Jay St), Intersection 33 (US 53 SB (3rd St) & Main St), Intersection 48 (US 14 SB (3rd St) & WIS 33 (Jackson St)), and intersection 47 (US 53 SB (3rd St) & US 14 (Cameron Ave)). Another contributing factor for sideswipe crashes is the close spacing of intersections and driveways.

Angle crashes at signalized intersections are primarily due to signal visibility issues, lack of by-lane signal heads and human error. Top intersections with these issues include Intersection 46 (US 53 NB (4th St) & US 14 EB (Cameron Ave), intersection 47 (US 53 SB (3rd St) & US 14 (Cameron Ave)), Intersection 51 (USH 53 SB (3rd St) & WIS 33 (Jackson St)), and Intersection 32 (US 53 NB (4th St) & State St).

Angle crashes at uncontrolled intersections are primarily due to side road sight distance issues (due to parking or buildings too close to the intersection) and human error. Top intersections with these issues include US 14 NB (4th St) & Division St, USH 53 NB (4th St) & Market St, Intersection 40 (US 53 NB (4th St) & King St), and Intersection 41 US 53 SB (3rd St) & King St.

US 14/61 (South Ave, Mormon Coulee Rd) Segment

A large number of crashes occur at the signalized intersection 56 (US 14 (South Ave) & 7th St). Contributing factors at this intersection include signal visibility issues, lack of by-lane signal heads, sight distance issues, and human error.

5.3 Top 10 Intersection CGA Summary

A summary of contributing factors at the top 10 flagged intersections, as ranked by post-vetting crash frequency, are summarized below:

WIS 16 Segment

WIS 16 & Gillette St (Rank: 1 of 10)

Rear end crashes on WIS 16 are primarily caused by congestion during peak hours, signal visibility issues, and human error.

Rear end crashes on Gillette St are primarily caused by the EB channelized right turn lane intersection angle issue, congestion during peak hours, and human error.

Intersection 1: WIS 16 & WIS 157 (Rank: 2 of 10)

Rear end crashes on WIS 16 are primarily caused by congestion during peak hours, signal visibility issues, and human error.

Rear end crashes on WIS 157 are primarily caused by the EB channelized right turn lane being free-flow with a small radius causing vehicles to slow down with few gaps on WIS 16, signal visibility issues, congestion during peak hours, and human error.

Sideswipe crashes are primarily caused by the short merge of the EB channelized right turn lane just south of the intersection and there being few gaps to merge during peak periods

WIS 16 (La Crosse St) Segment

WIS 16 (La Crosse St) & WIS 35 (West Ave) (Rank: 3 of 10)

Rear end crashes on WIS 16 and WIS 35 are primarily caused by human error, congestion during peak hours, and signal visibility issues

Left turn crashes from WIS 16 and WIS 35 are primarily caused by sight distance issues due to negative offset left turn lanes.

A majority of pedestrian related crashes were due to vehicles not noticing pedestrians in crosswalks when making turns at the intersection.

WIS 35 (West Ave) Segment

WIS 35 (West Ave) & WIS 33 (Jackson St) (Rank: 4 of 10)

- Future improvements to this intersection address the primary contributing factors for intersection crashes.

WIS 35 (West Ave) & State St (Rank: 5 of 10)

Rear end crashes, including near-miss crashes with pedestrians, on WIS 35 are primarily caused by congestion during peak hours, signal visibility, human error, and the lack of right turn lanes on WIS 35.

Angle crashes are primarily caused by human error and signal visibility issues.

WIS 35 (West Ave) & Badger St (Rank: 10 of 10)

A majority of crashes at this intersection were pedestrian or bicycle related. Rear end crashes are primarily caused by near-miss pedestrian crashes. Issues related to the pedestrian and bicycles include congestion during peak hours making gap selection difficult, lack of traffic control, and the intersection's close proximity to Kwik Trip driveways and the WIS 35 (West Ave) & WIS 16 (La Crosse St) intersection.

Downtown Segment

US 53 SB (3rd St) & US 14/61 EB (Cameron Ave) (Rank: 10 of 10)

Angle crashes are primarily caused by signal visibility issues and human error.

Sideswipe crashes are primarily caused by vehicles turning left from an incorrect lane, confusion of 3rd St being a one-way road, and human error.

Rear end crashes on US 14/Cameron Ave are primarily caused by the EB channelized right turn intersection angle and turning radius causing vehicles to look over their shoulder and requiring them to take their eyes off vehicles in front of them.

US 53 SB (3rd St) & Jay St (Rank: 8 of 10)

Sideswipe crashes are primarily caused by vehicles turning left from an incorrect lane, confusion with 3rd St being a one-way road, and human error.

Rear end crashes on US 53 are primarily caused by congestion during peak hours, signal visibility, and human error.

Angle crashes are primarily caused by signal visibility issues.

US 53 SB & (3rd St) & Main St (Rank: 9 of 10)

Sideswipe crashes are primarily caused by vehicles turning left from an incorrect lane, confusion of 3rd St being a one-way road, and human error.

Rear end crashes on US 53 are primarily caused by congestion during peak hours, signal visibility, and human error.

US 14/61 (South Ave, Mormon Coulee Rd) Segment

US 14/61 (South Ave) & WIS 35 (West Ave) (Rank: 7 of 10)

- Future improvements to this intersection address the primary contributing factors for intersection crashes.

5.4 Bicycle & Pedestrian CGA Summary

The primary bicycle & pedestrian crash issues in the study area are at the following locations:

Signalized Intersections

Bicycle crashes occurred at several signalized intersections, including all intersections in the Top 10 intersections. All of the signalized intersection bicycle crashes involved bicyclists crossing a street using a sidewalk and crosswalk.

WIS 35 (West Ave) Segment

The State St to Badger St segment of WIS 35 has higher than usual pedestrian volumes due to the UW-La Crosse and Viterbo college campuses being adjacent to the corridor. Pedestrian issues are primarily at the following intersections: Intersection 34 (WIS 35 (West Ave) & State St, WIS 35 (West Ave) & Vine St, WIS 35 (West Ave) & Pine St, and WIS 35 (West Ave) & Badger St. The primary issues at these locations include signal visibility issues, lack of right turn lanes on WIS 35, congestion during peak hours creating few gaps to cross WIS 35 at uncontrolled intersections, and human error.

Downtown Segment

A majority of pedestrian crashes on this corridor occur at the following intersections: Intersection 38 (US 53 (4th St) & Jay St), Intersection 39 (US 53 SB (3rd St) & Jay St), US 53 NB (4th St) & Pearl St, US 53 SB (3rd St) & Pearl St, and Intersection 30 (US 53 NB (4th St) & Vine St. These pedestrian crashes are primarily due to lack of vehicle gaps during congestion, a large distance to cross US 53 without traffic control, sight distance issues due to buildings and parking being close to intersections.

US 14/61 (South Ave, Mormon Coulee Rd) Segment

The mid-block crossing between 7th St and Green Bay Ave causes rear-end crashes due to human error and potential visibility issues of the Rectangular Rapid Flashing Beacon (RRFB) pedestrian signal. A majority of crashes are on WB US 14.

6. Structure Condition

The Existing Conditions Report documented structure location, structure age, vertical and lateral clearances, National Bridge Inventory (NBI) ratings, and load postings for the 11 bridges, one multi-cell box culvert, and three additional box culverts within the project area. This No-Build Conditions Report documents the future work actions for structures within the project area.

6.1 Future Work Actions for Structures

Two sources were used to identify future work actions for structures within the project limits, the Financial Integrated Improvement Programming System (FIIPS), and the Wisconsin Structures Asset Management System (WiSAMS).

1. FIIPS: this system contains programmed projects in the Transportation Improvement Program. Projects in FIIPS are funded projects programmed for a variety of reasons, including bridge condition, traffic and safety needs and impacts from adjacent projects.
2. WiSAMS: This system contains recommendations for bridge maintenance and replacement projects based on inventory and condition data. Inventory data includes items that describe the structure's type, overall length, and construction history. Condition data is determined based on evaluations of bridge components through bridge inspections.

FIIPS was reviewed for proposed structure work actions through 2030. WiSAMS was used to review recommended work actions for structures over a longer time horizon through 2050. Data from WiSAMS is one part of what's used to determine what projects are proposed and later programmed in FIIPS. When evaluating projects for programming in FIIPS, WiSAMS recommendations are compared with recent inspection history and input from region maintenance staff and others to determine programmed work actions. WiSAMS makes recommendations solely based on the structural needs of an individual structure and based on the costs for the structural work only. This means that WiSAMS does not consider the costs of traffic control or impacts to traffic.

One of the limitations of the WiSAMS asset management program is that it does not recognize previously recommended work actions or work actions that are programmed in FIIPS. For example, B-32-115, WIS 16 EB over the La Crosse River, is programmed for replacement in 2024. WiSAMS recommends a superstructure replacement of this bridge in 2031. WiSAMS is not considering that the bridge is replaced in 2024. In this example, the 2031 recommended rehabilitation was removed and is not included in the results presented in this report.

In order to complete this analysis, assumptions on how long a rehabilitation or replacement should last were used to determine if both work actions were reasonable or if one should be eliminated. Below are assumptions used to complete this analysis:

- Concrete Overlay: Extend life of deck 15
- Deck Replacement: Extend life of deck 40 years
- New Structure: No work required for 35 years. (excluding polymer overlays)
- Thin Polymer Overlay: Lasts 15 years

Using these assumptions, each bridge that included duplicate work actions was evaluated to see if both actions should be completed. Any work actions that were eliminated based on these criteria were not included in this report. In total, there were two bridges that have duplicate work actions where both work actions will remain following that evaluation. A summary of these duplicate entries is in Appendix 5: .

There were four types of bridge replacement or rehabilitation work actions identified within the project limits. Each of these work actions are summarized below:

Structure Replacement: A structure replacement project is a complete removal and replacement of the existing structure.

Painting: A bridge painting requires the removal of old paint, and cleaning of the steel structure before the new paint can be applied.

Concrete Overlay: A bridge deck concrete overlay includes cleaning and prepping the existing deck prior to placing an average 2” concrete overlay over the deck.

Polymer Overlay: A bridge deck polymer overlay includes prepping the deck and applying a ¼” maximum polymer overlay to resist water and chloride infiltration.

In total, 15 work actions were identified either by WiSAMS or have work actions currently planned in FIIPS. The types of work actions and the numbers identified by FIIPS or WiSAMS, sorted by decade, are in Table 4: Type of Structure Work Action by Decade. Additional details about each work action and the structure recommended for rehabilitation or replacement are in Table 5: 2021-2030 Structure Work, Table 6: 2031-2040 Structure Work, and Table 7: 2041-2050 Structure Work.

Table 4: Type of Structure Work Action by Decade

Work Action		2021-30	2031-40	2041-50	Total
	Replace Structure	1	3	0	4
	Concrete Overlay	3	3	1	7
	Polymer Overlay	0	2	1	3
	Painting	1	0	0	1
	Total	5	8	2	15

Table 5: 2021-2030 Structure Work

Structure Number	Facility On	Facility Below	Year	Work Action
B-32-0086	US 53 SB - Copeland Ave	CMSTPP Railroad/Island Street	2021	Concrete Overlay
B-32-0115	WIS 16 EB	La Crosse River/CMSTPP Railroad	2024	Replace Structure
B-32-0111	WIS 16 WB	La Crosse River/CMSTPP Railroad	2025	Concrete Overlay
B-32-0098	WIS 16	Burlington Northern Santa Fe (BNSF) RR	2027	Paint Structure
B-32-0098	WIS 16	Burlington Northern Santa Fe (BNSF) RR	2030	Concrete Overlay

Table 6: 2031-2040 Structure Work

Structure Number	Facility On	Facility Below	Year	Work Action
B-32-0032	WIS 35 - George St	CMSTPP Railroad	2035	Concrete Overlay
B-32-0214	WIS 16 WB	12th Avenue	2035	Polymer Overlay
C-32-0254	WIS 16	Drainage Way	2036	Replace Structure
C-32-0256	WIS 16	Drainage Way	2036	Replace Structure
B-32-0213	WIS 16 EB	12th Avenue	2036	Polymer Overlay
B-32-0086	US 53 SB - Copeland Ave	CMSTPP Railroad/Island St	2038	Concrete Overlay
B-32-0100	WIS 16	Miller Coulee Pedestrian Trail	2038	Replace Structure
B-32-0118	US 53-Copeland Ave	La Crosse River	2040	Concrete Overlay

Table 7: 2041-2050 Structure Work

Structure Number	Facility On	Facility Below	Year	Work Action
B-32-0062	WIS 35 - Lang Dr	La Crosse River	2047	Concrete Overlay
B-32-0214	WIS 16 WB	12th Avenue	2050	Polymer Overlay

6.2 Structure Condition Summary

The following is a summary of future work actions for structures by 2050 for each project segment:

WIS 16 Segment

Structure B-32-0111 has a concrete overlay proposed in 2025.

- Structures B-32-0115, C-32-0254, C-32-0256, and B-32-0100 will require replacement by 2050.

One of these structure replacements (B-32-0115) is proposed in 2024.

Structure B-32-0111 has a concrete overlay proposed in 2025.

Structure B-32-0098 has a concrete overlay proposed in 2030.

- Structures B-32-0214 (twice) and B-32-0213 will require a polymer overlay by 2050.

Structure B-32-0098 has a structure painting proposed in 2027.

WIS 35 (Lang Dr, George St) Segment

- Structures B-32-0032 and B-32-0062 will require a concrete overlay by 2050.

US 53 (Rose St, Copeland Ave) Segment

- Structures B-32-0086 and B-32-0118 will require a concrete overlay by 2050.

7. Pavement Maintenance Impacts

The Existing Conditions Report documented the pavement type, pavement age, International Roughness Index (IRI) rating for existing year (2020) and future year (2026), and Pavement Condition Index (PCI) / Pavement Surface Evaluation Rating (PASER) for existing year (2020) and future year (2026).

For this No-Build Conditions Report, the pavement condition section includes identification of future pavement maintenance projects that are likely to cause significant traffic concerns.

7.1 Impacts of Future Projects

As documented in the Existing Conditions Report, pavement types, ages, and ratings vary widely within project segments, and different segments have different maintaining authorities. This makes difficult the development of a speculative list of pavement maintenance needs between now and the design year (2050). As an alternative approach, the project team evaluated impacts for each pavement section within each project segment if that pavement section needed to be replaced by the design year.

Under this approach, high-level construction staging options were developed for each project segment. These construction staging options were reviewed to identify project segments where a pavement replacement project would likely cause significant traffic concerns. A summary of this analysis is in Appendix 6: Traffic Impacts of Future Projects.

7.2 Pavement Maintenance Impacts Summary

The following is a list of the primary anticipated traffic concerns associated with future improvement projects:

WIS 16 Segment

- For the entire WIS 16 segment (forecasted AADT: 43,000-48,000), two potential traffic control options were identified, including construction under traffic with single lane closures, and a full closure with a detour. Both options have traffic concerns as noted below. Note these traffic concerns also apply to structure maintenance and replacement work planned within this segment.
    - The full detour option is likely infeasible since it would divert most WIS 16 traffic to the I-90 & US 53 interchange. This would likely overwhelm the interchange, US 53, and WIS 35 (Lang Drive / George Street).
    - The single lane closure option would result in extreme congestion on WIS 16 without diversion. Some traffic would likely divert to the I-90 & US 53 interchange, but it's possible this would result in WIS 16, US 53, and WIS 35 experiencing substantial congestion.

US 53 (Rose St, Copeland Ave) Segment

- For the segment between 2nd Street and the one-way pair split (forecasted AADT: 30,000), the two potential traffic control options identified are construction under traffic with single lane closures, and a full closure with a detour. Both options have traffic concerns:
    - The full detour option is likely infeasible since it would divert most US 53 traffic to WIS 16 (La Crosse Street), WIS 35 (Lang Drive) and Monitor Street. This would likely overwhelm these three routes.
    - The single lane closure option would result in extreme congestion on US 53 without diversion. Some traffic would likely divert to WIS 16 (La Crosse Street), WIS 35 (Lang Drive / George Street), Monitor Street, and other east-west routes, but it's possible this would result in all these routes experiencing substantial congestion.
- For the segment between Clinton Street and Livingston Street (forecasted AADT: 26,000-30,000), the one potential traffic control option identified was construction under traffic with single lane closures. This option may be feasible if substantial diversion were to occur. However, the likely diversion route, WIS 35 (George Street), is a two-lane road where it parallels this segment of US 53 and doesn't have much excess capacity to accommodate a large diversion. Similarly, WIS 16 is currently operating near capacity and likely wouldn't be able to accommodate a large diversion.

8. Next Steps

The next step in the La Crosse Safety & Operations Study will be completion of the Feasible Alternatives memo. This memo will summarize feasible alternatives for all project needs identified in this No-Build Conditions Report.

Appendix 1: Traffic Forecast

Traffic Forecasting Section; Bureau of Planning and Economic Development; Division of Transportation Investment Management

WisDOT TRAFFIC FORECAST REPORT

PROJECT ID(S):	1630-08-00
ROUTE(S):	STH 16
Region/COUNTY(IES):	SW/La Crosse
LOCATION:	WI 16 Segment
COMPLETED:	02/23/2021

Developed By: Miao Zhang
Phone: (608) 266 - 7995

E-Mail: miao.zhang@dot.wi.gov

NOTES ON THE FORECAST:

1. This projection assumes that no major new traffic generators will be added to the development already included in the 2010/2040 La Crosse Regional Travel Demand Model.

2. Vehicle classification data and design values (K factors, directional splits, and percent trucks in design hours) are available here: http://wisconsindot.gov/Pages/projects/data-plan/traf-fore/default.aspx

3. STH 16 is a Factor Group II (Urban-Other) roadways (indicating low to moderate fluctuation in traffic from a seasonal perspective).

4. The 2010/2040 La Crosse Regional Travel Demand Model was used to complete this forecast. The Traffic Analysis Forecasting Information System output was used as a comparison tool to check against the model output. Adjustments were made as needed.

5. Roadway improvements coded within the existing plus committed (E+C) network of the 2010/2040 La Crose Regional Travel Demand Model were assumed to be in place for the purposes of developing this forecast.

Site(s)	**320287**	320474	320296
Routes(s)	**STH 16**	STH 16	STH 16
Volume(s)	33090	46570	43180
Site Growth %	0.61%	0.34%	0.51%

SITE ID = Colored, **bolded**, and underlined

Symbol	Count	Symbol	Forecast
-000-	2017 Count	(000)	2030 AADT
		[000]	2040 AADT
		000	2050 AADT

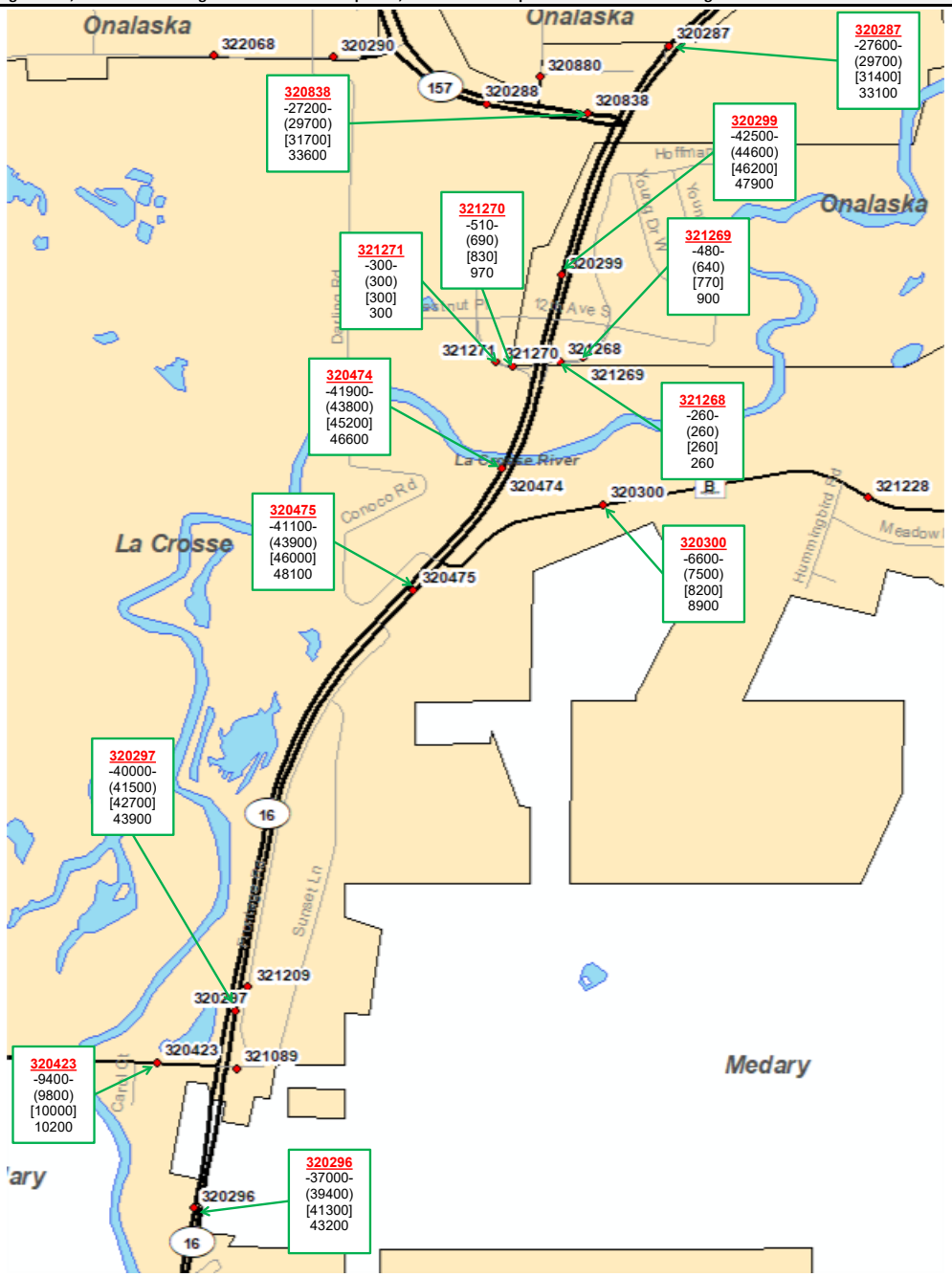

WisDOT Bureau of Planning & Economic Development
Traffic Forecasting Section
Forecast by: Miao Zhang
Phone: (608) 266 - 7995
Email: miao.zhang@dot.wi.gov

Projected AM Design Hour Traffic Volumes

Indicates roundabout

Design Hour: 7:00-8:00am

Forecast Completed: 12/10/2021

Project Description

Project ID(s): 1630-08-00
Route(s): STH 16
Region/COUNTY(IES): SW/La Crosse
Location: WIS 16 & WIS 157

Design Hour Turning Movement Data

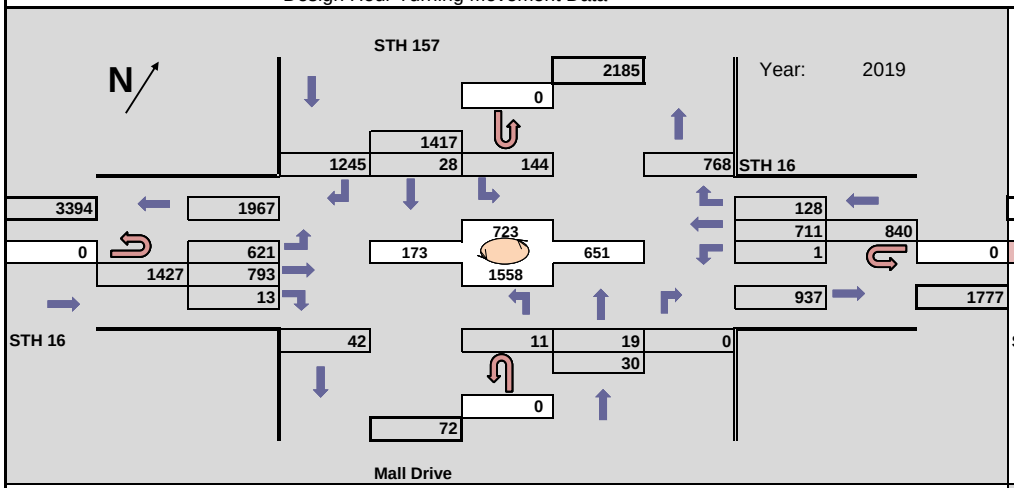

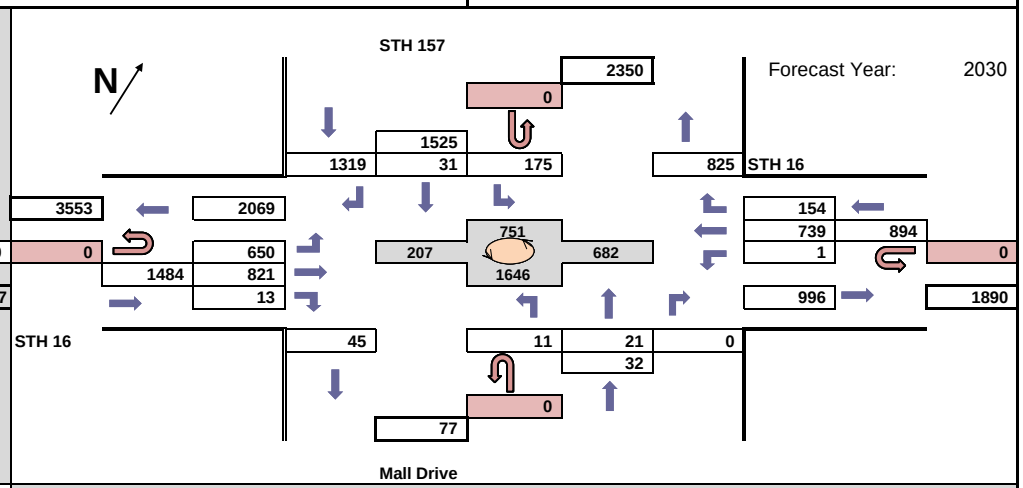

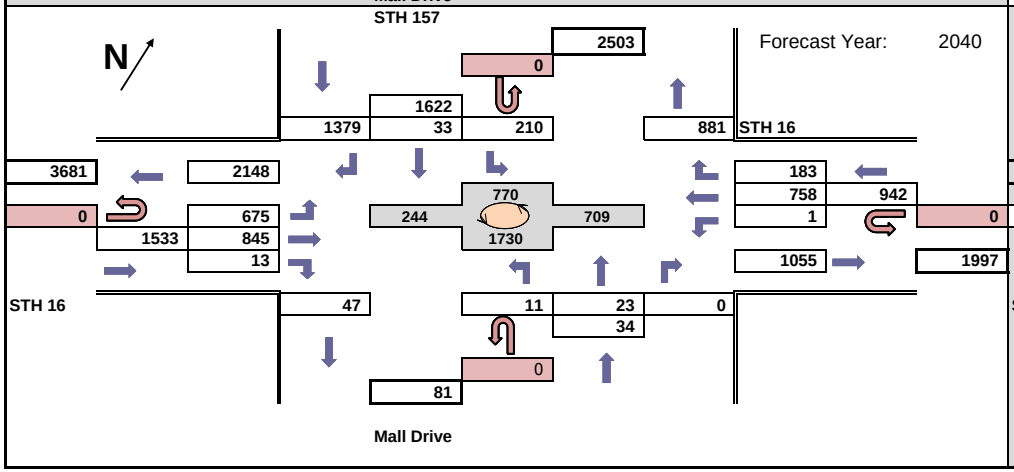

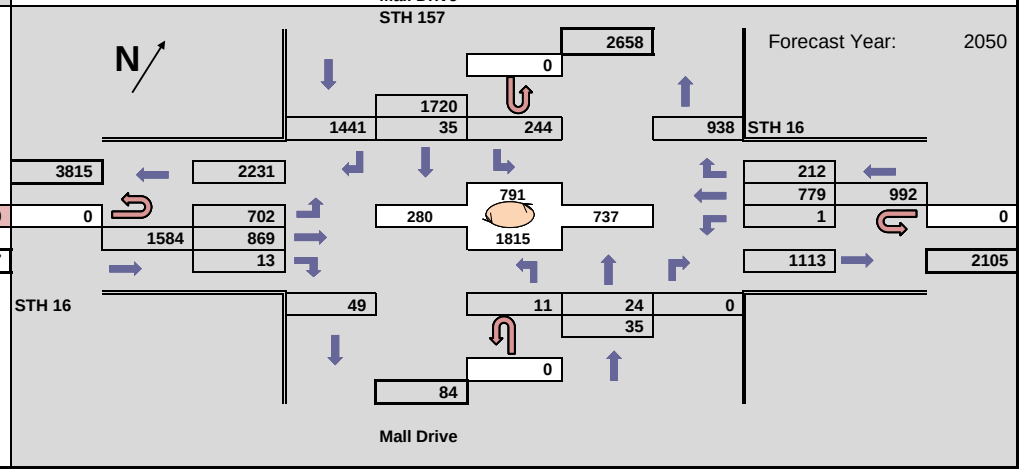

WisDOT Bureau of Planning & Economic Development
Traffic Forecasting Section
Forecast by: Miao Zhang
Phone: (608) 266 - 7995
Email: miao.zhang@dot.wi.gov

Projected PM Design Hour Traffic Volumes

Indicates roundabout

Design Hour: 4:00-5:00pm

Forecast Completed: 12/10/2021

Project Description

Project ID(s): 1630-08-00
Route(s): STH 16
Region/COUNTY(IES): SW/La Crosse
Location: WIS 16 & WIS 157

Design Hour Turning Movement Data

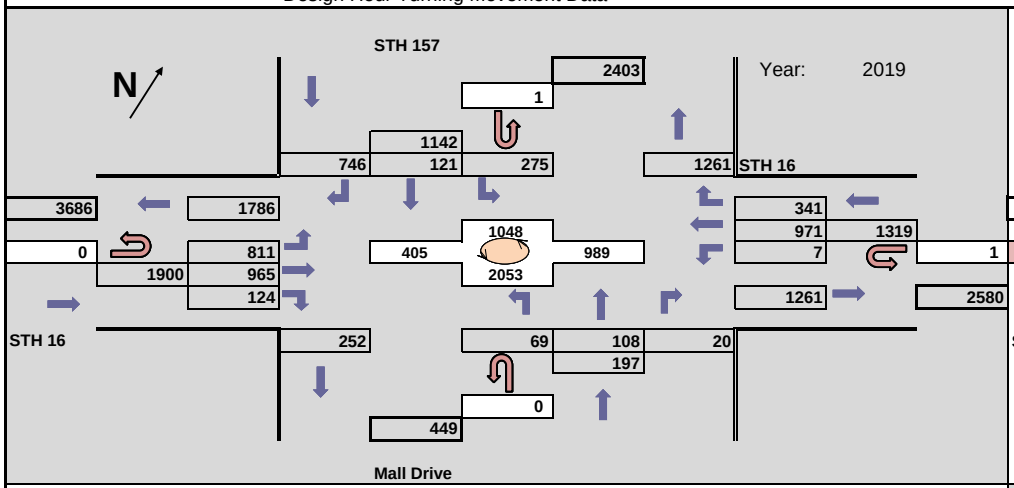

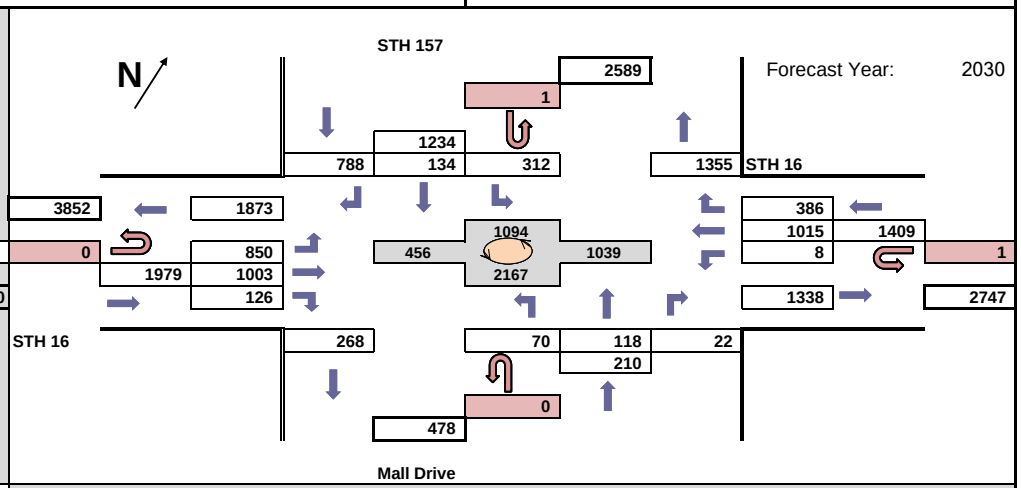

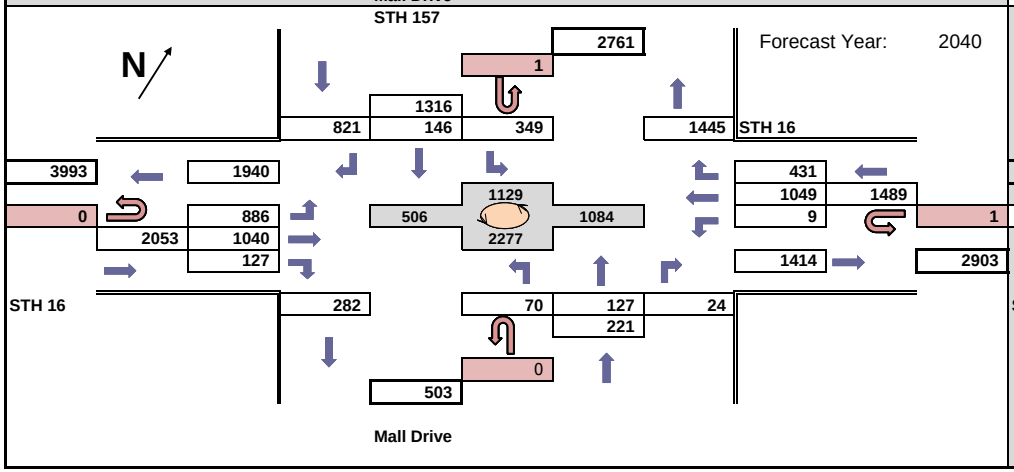

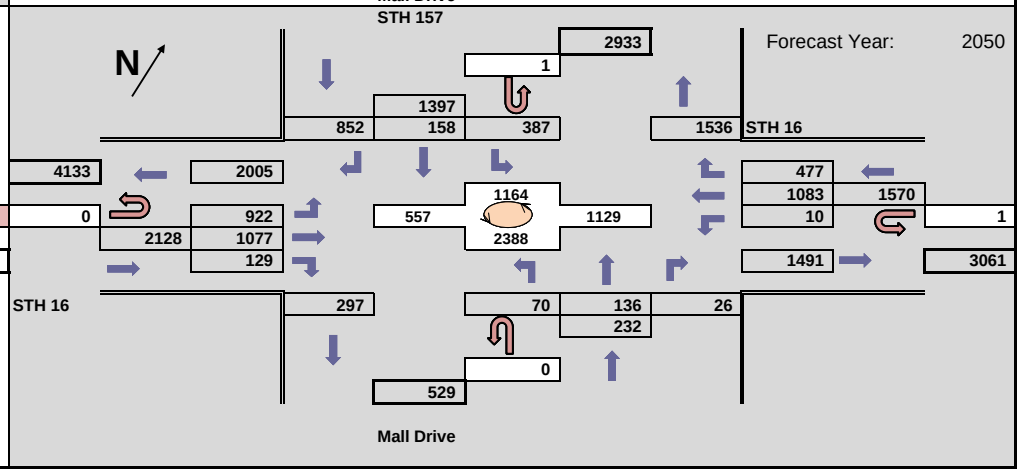

WisDOT Bureau of Planning & Economic Development
Traffic Forecasting Section
Forecast by: Miao Zhang
Phone: (608) 266 - 7995
Email: miao.zhang@dot.wi.gov

Projected AM Design Hour Traffic Volumes

Indicates roundabout

Design Hour: 7:00-8:00am

Forecast Completed: 2/23/2021

Design Hour Turning Movement Data

Project Description

Project ID(s): 1630-08-00
Route(s): STH 16
Region/COUNTY(IES): SW/La Crosse
Location: WIS 16 NB & 12th Ave Jug Handle

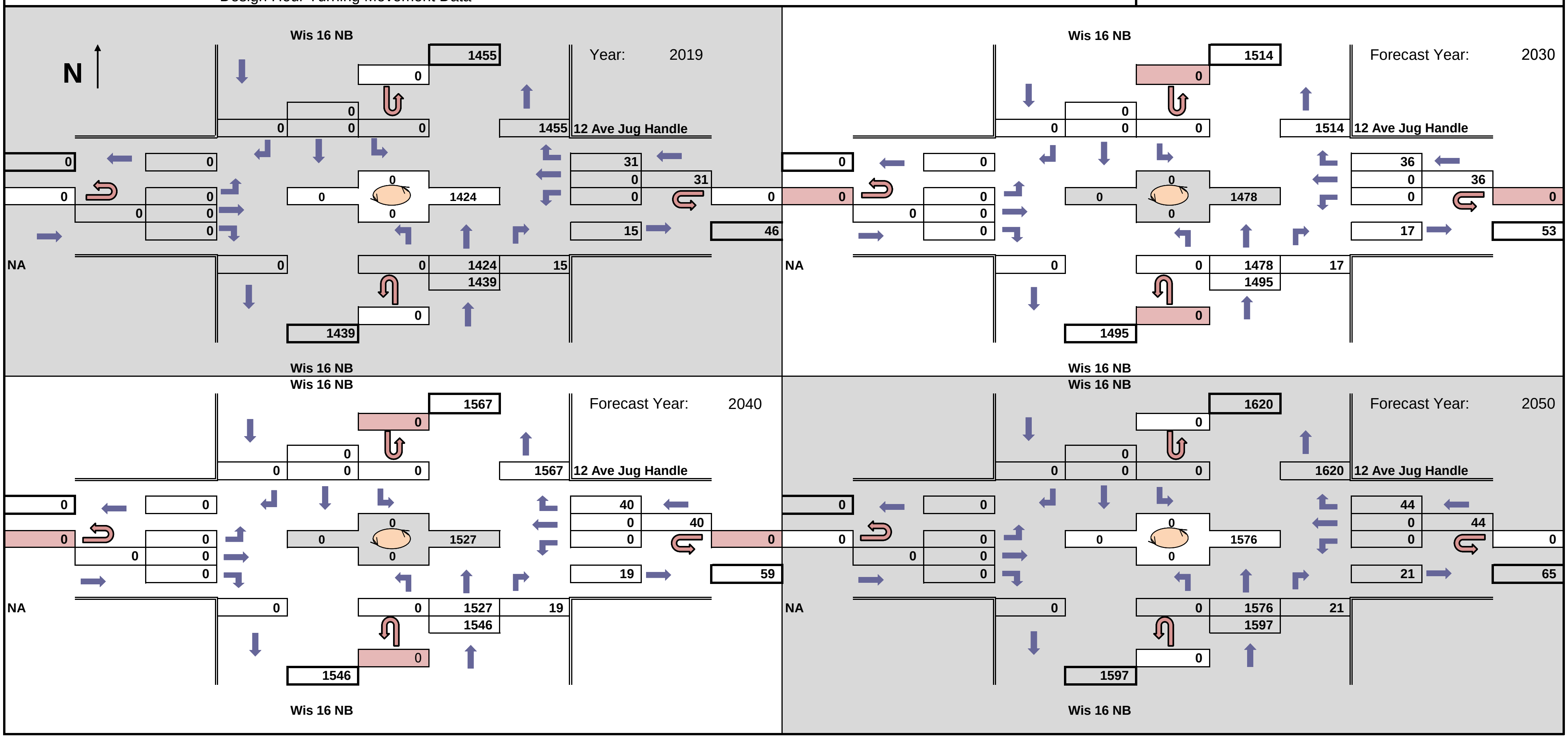

WisDOT Bureau of Planning & Economic Development
Traffic Forecasting Section
Forecast by: Miao Zhang
Phone: (608) 266 - 7995
Email: miao.zhang@dot.wi.gov

Projected PM Design Hour Traffic Volumes

Indicates roundabout

Design Hour: 4:00-5:00pm

Forecast Completed: 2/23/2021

Project Description

Project ID(s): 1630-08-00
Route(s): STH 16
Region/COUNTY(IES): SW/La Crosse
Location: WIS 16 NB & 12th Ave Jug Handle

Design Hour Turning Movement Data

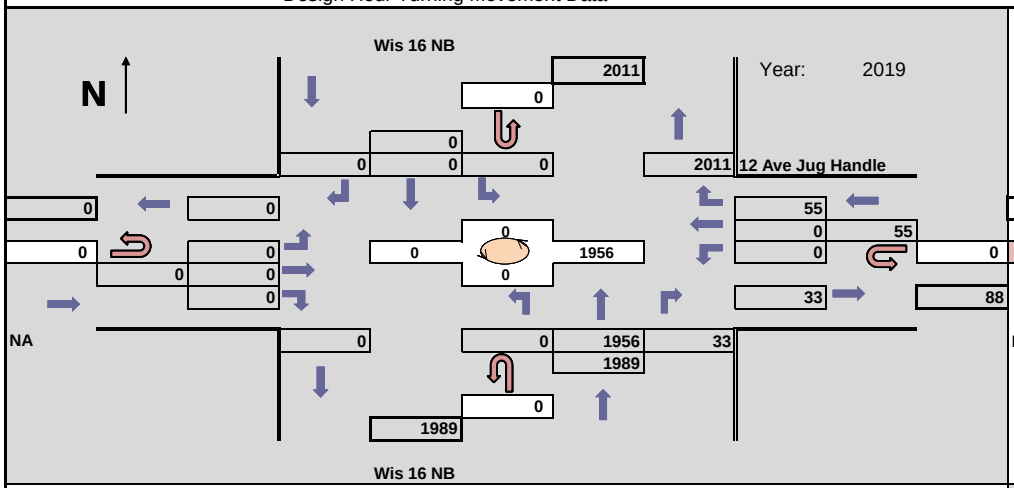

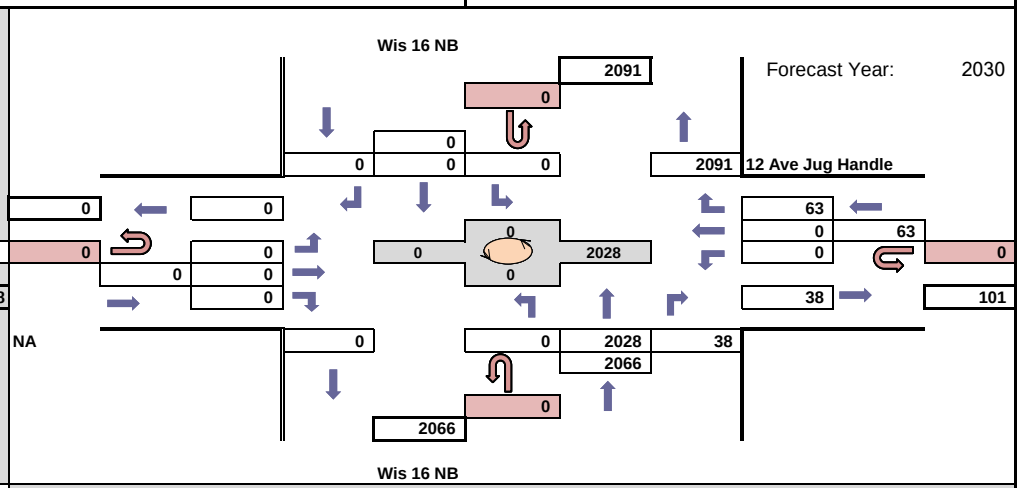

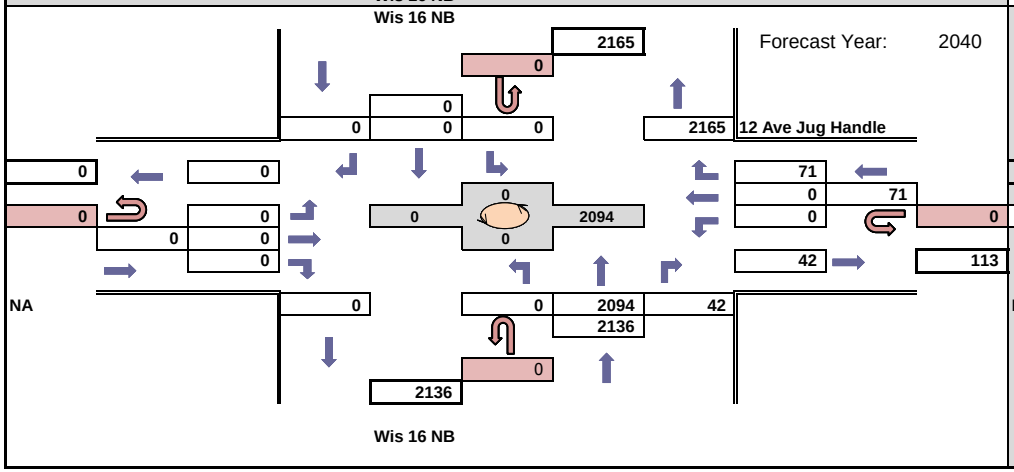

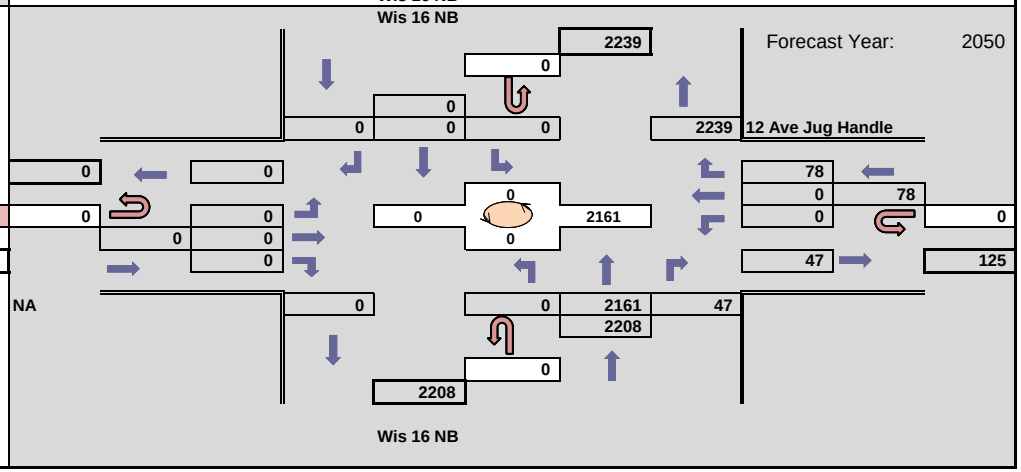

WisDOT Bureau of Planning & Economic Development
Traffic Forecasting Section
Forecast by: Miao Zhang
Phone: (608) 266 - 7995
Email: miao.zhang@dot.wi.gov

Projected AM Design Hour Traffic Volumes

Indicates roundabout

Design Hour: 7:00-8:00am

Forecast Completed: 2/23/2021

Project Description

Project ID(s): 1630-08-00
Route(s): STH 16
Region/COUNTY(IES): SW/La Crosse
Location: WIS 16 SB & 12th Ave Jug handle

Design Hour Turning Movement Data

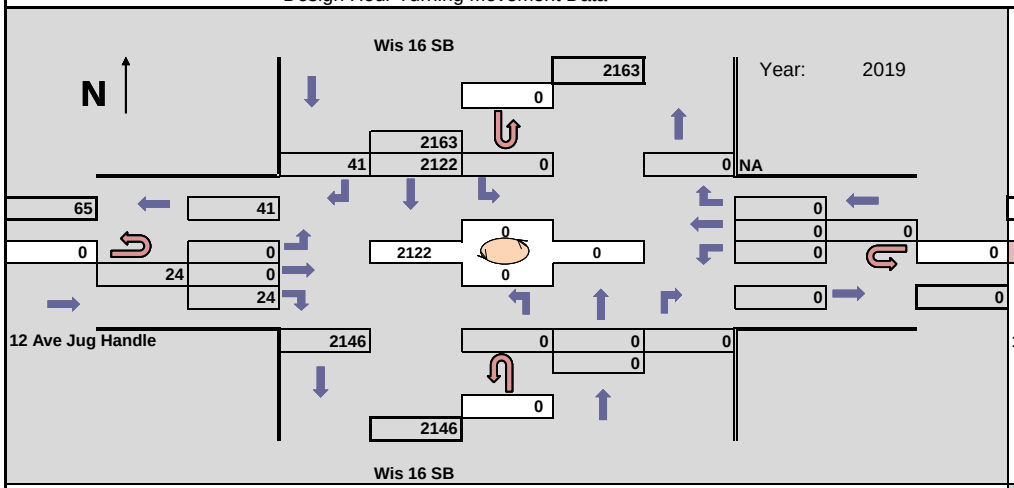

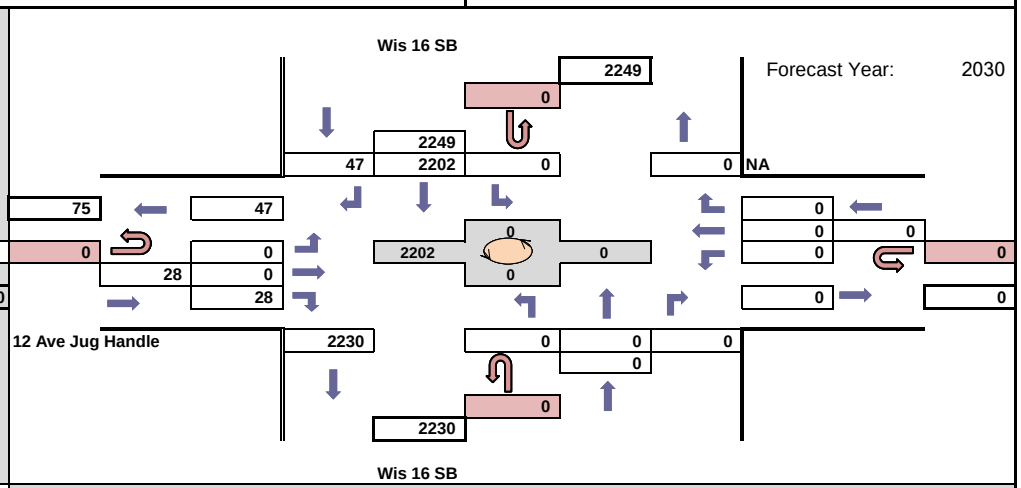

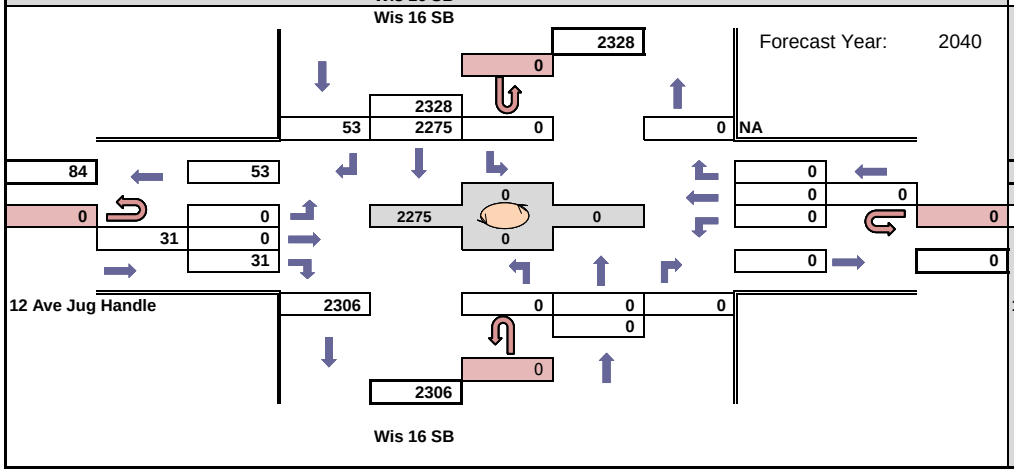

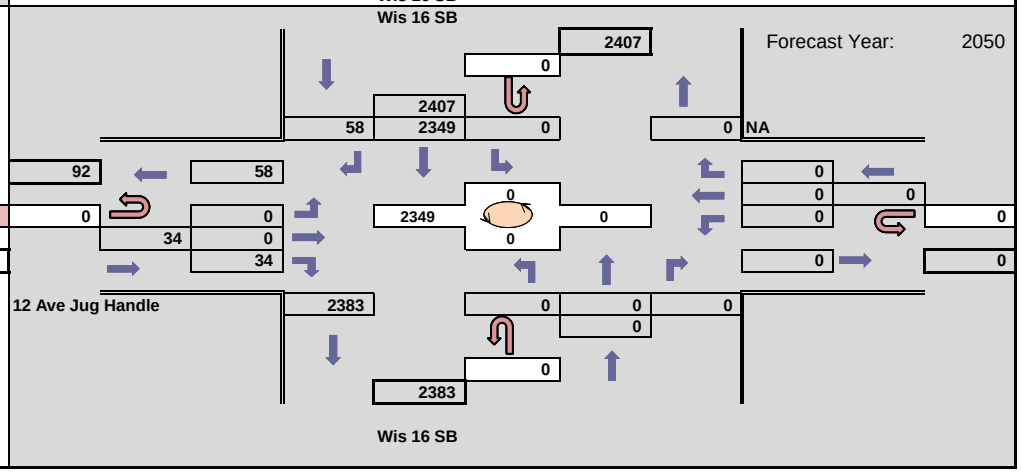

WisDOT Bureau of Planning & Economic Development
Traffic Forecasting Section
Forecast by: Miao Zhang
Phone: (608) 266 - 7995
Email: miao.zhang@dot.wi.gov

Projected PM Design Hour Traffic Volumes

Indicates roundabout

Design Hour: 4:00-5:00pm

Forecast Completed: 2/23/2021

Project Description

Project ID(s): 1630-08-00
Route(s): STH 16
Region/COUNTY(IES): SW/La Crosse
Location: WIS 16 SB & 12th Ave Jug handle

Design Hour Turning Movement Data

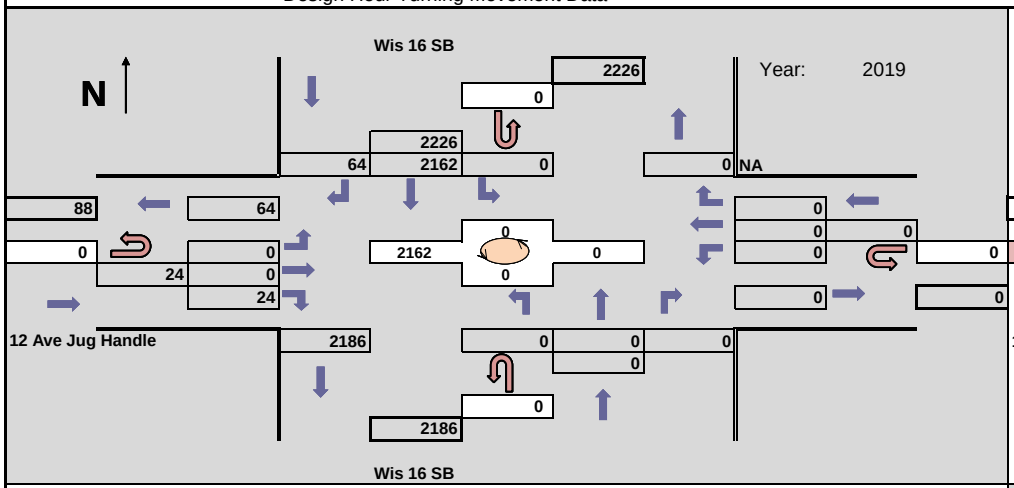

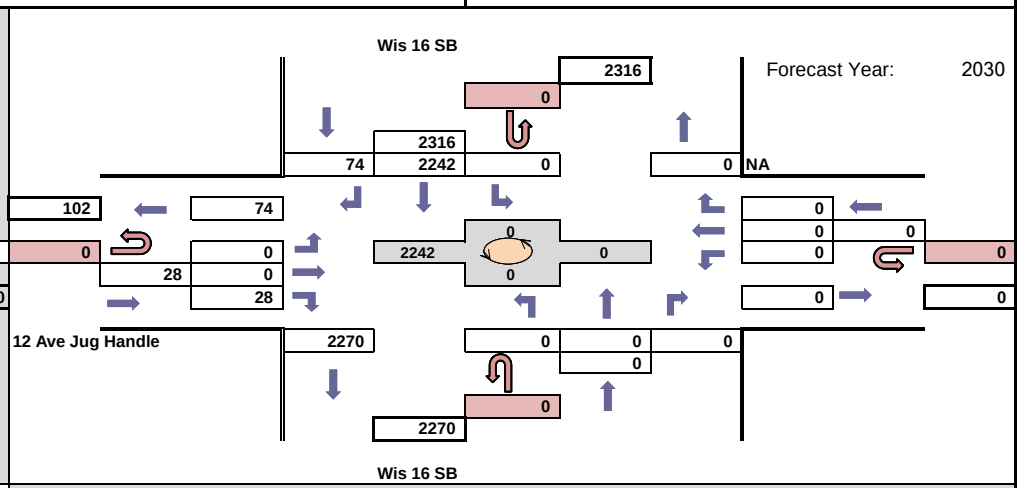

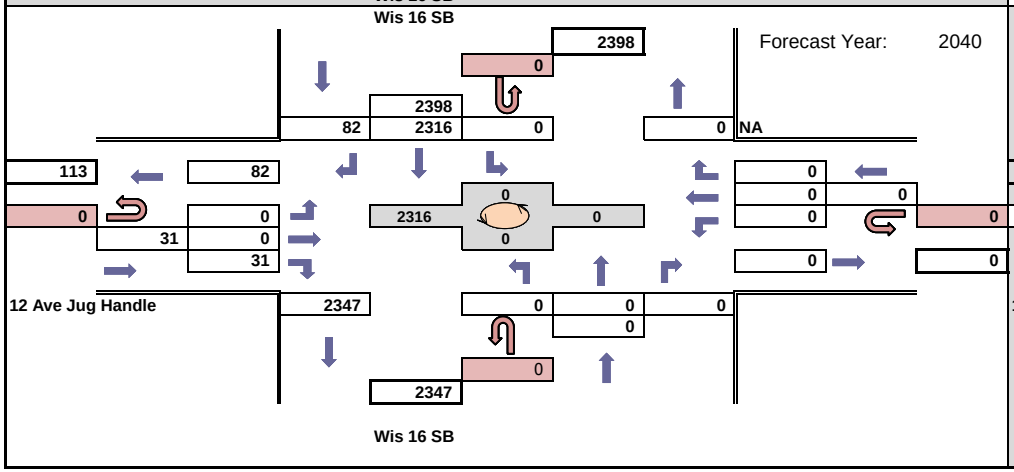

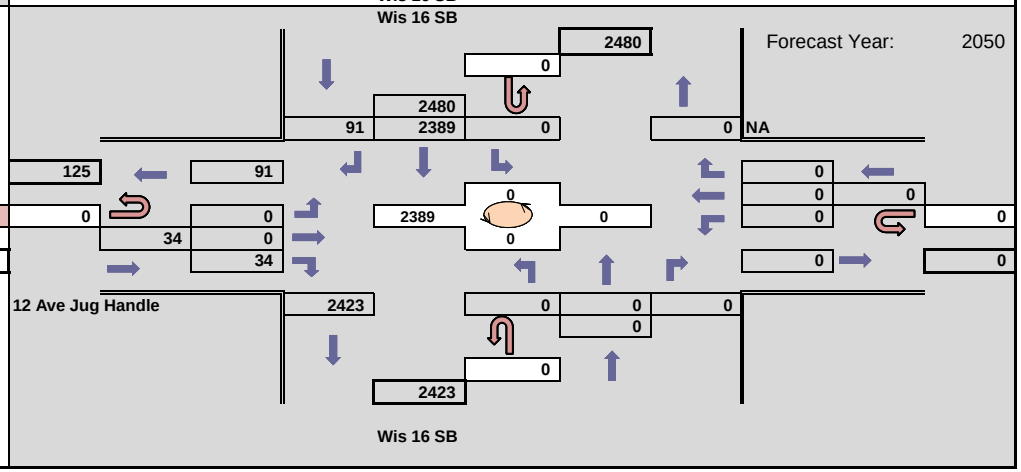

WisDOT Bureau of Planning & Economic Development
Traffic Forecasting Section
Forecast by: Miao Zhang
Phone: (608) 266 - 7995
Email: miao.zhang@dot.wi.gov

Projected AM Design Hour Traffic Volumes

Indicates roundabout

Design Hour: 7:00-8:00am

Forecast Completed: 2/23/2021

Project Description

Project ID(s): 1630-08-00
Route(s): STH 16
Region/COUNTY(IES): SW/La Crosse
Location: WIS 16 & County B

Design Hour Turning Movement Data

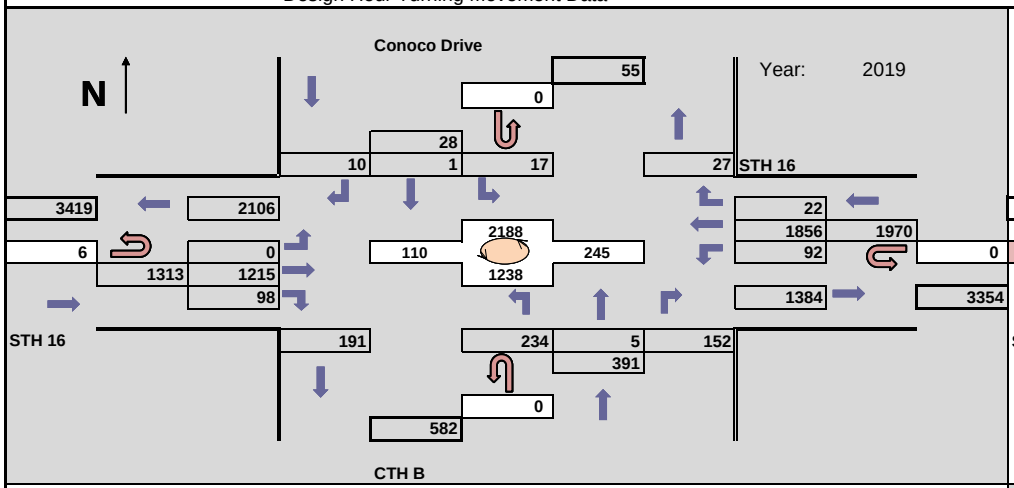

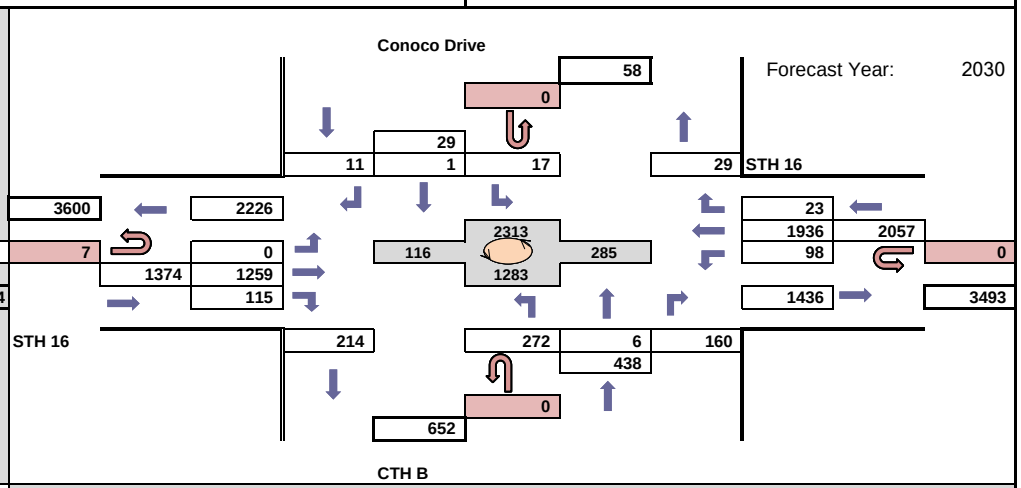

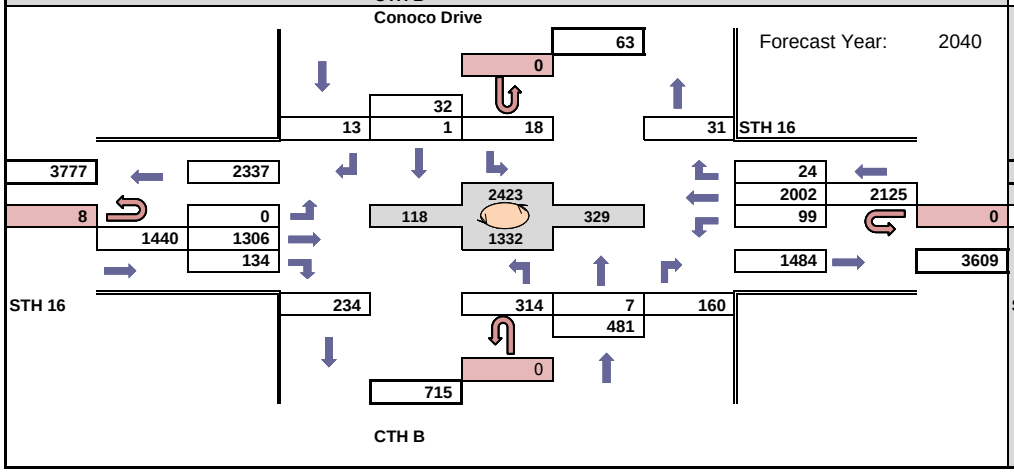

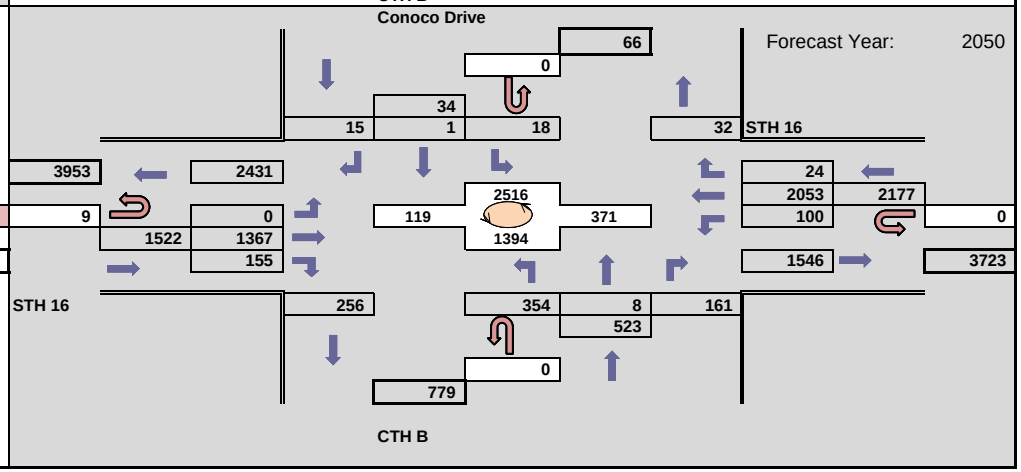

WisDOT Bureau of Planning & Economic Development
Traffic Forecasting Section
Forecast by: Miao Zhang
Phone: (608) 266 - 7995
Email: miao.zhang@dot.wi.gov

Projected PM Design Hour Traffic Volumes

Indicates roundabout

Design Hour: 4:00-5:00pm

Forecast Completed: 2/23/2021

Project Description

Project ID(s): 1630-08-00
Route(s): STH 16
Region/COUNTY(IES): SW/La Crosse
Location: WIS 16 & County B

Design Hour Turning Movement Data

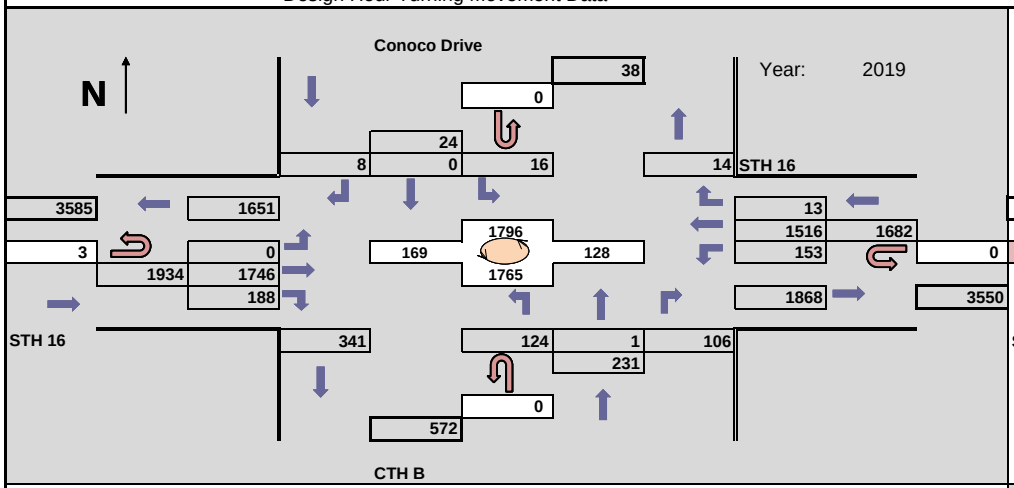

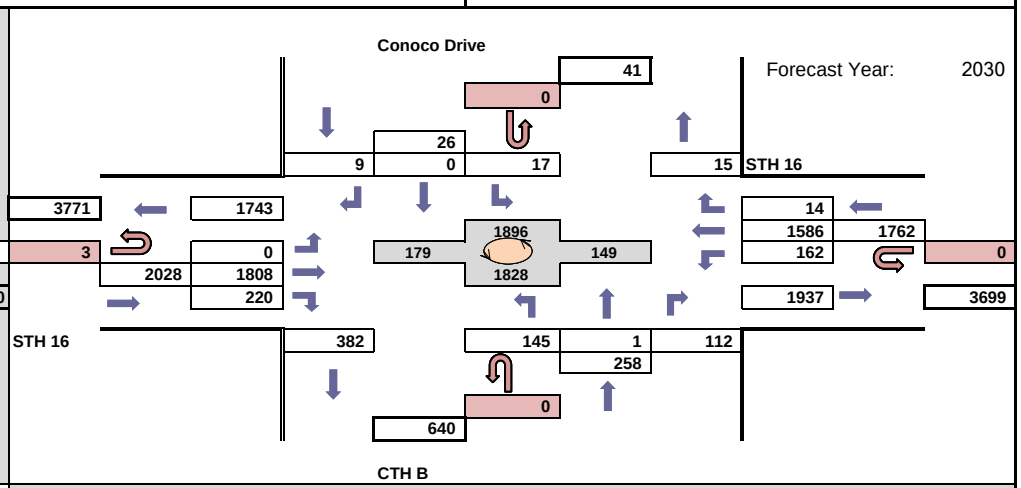

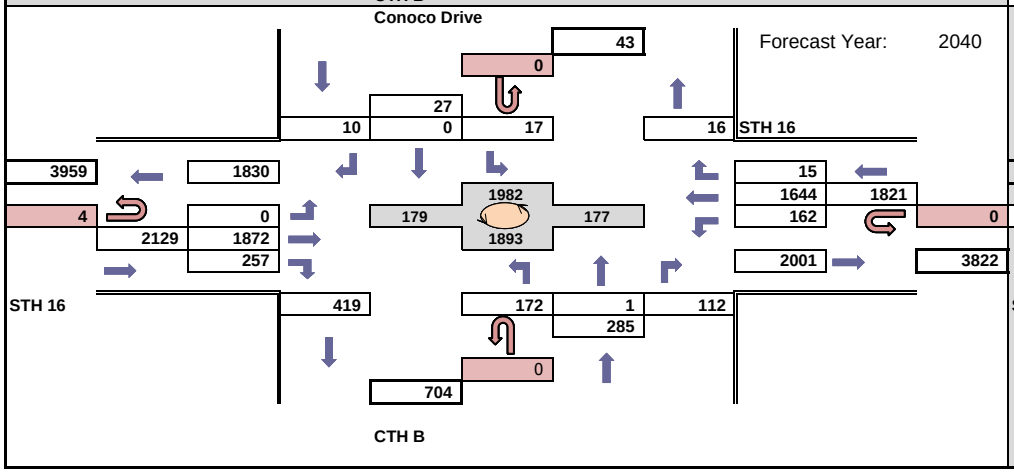

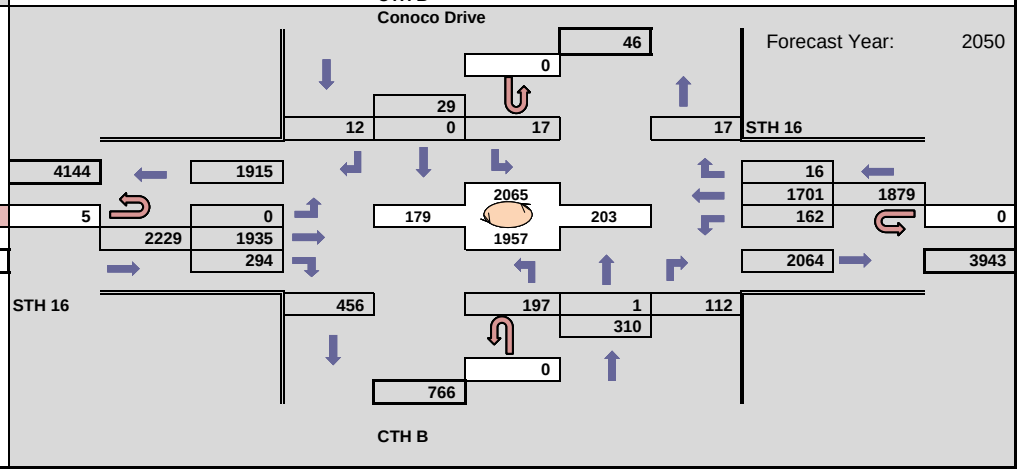

WisDOT Bureau of Planning & Economic Development
Traffic Forecasting Section
Forecast by: Miao Zhang
Phone: (608) 266 - 7995
Email: miao.zhang@dot.wi.gov

Projected AM Design Hour Traffic Volumes

Indicates roundabout

Design Hour: 7:00-8:00am

Forecast Completed: 2/23/2021

Design Hour Turning Movement Data

Project Description

Project ID(s): 1630-08-00
Route(s): STH 16
Region/COUNTY(IES): SW/La Crosse
Location: WIS 16 & Gille□e St

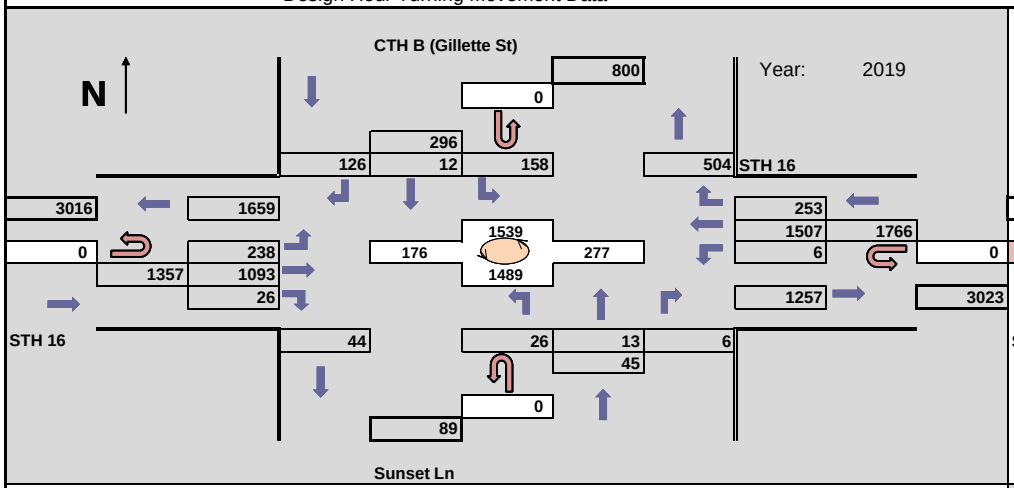

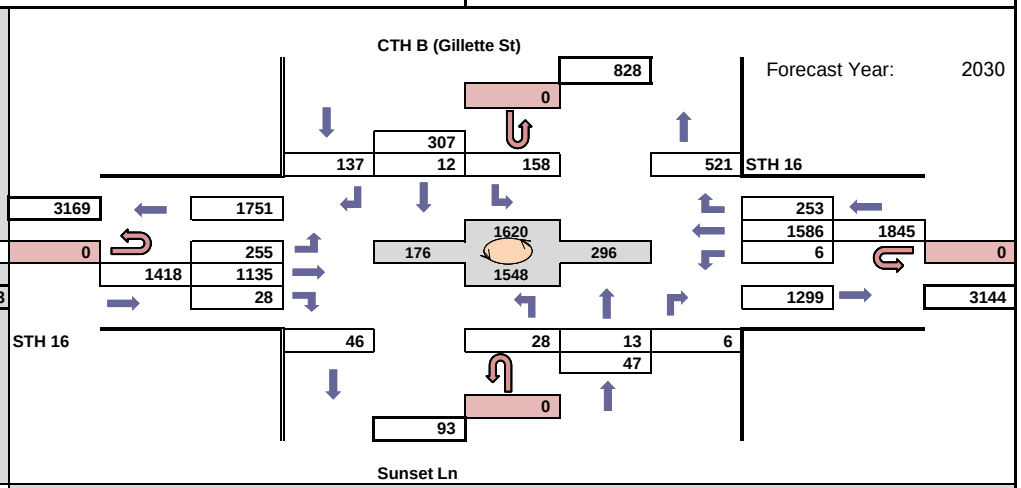

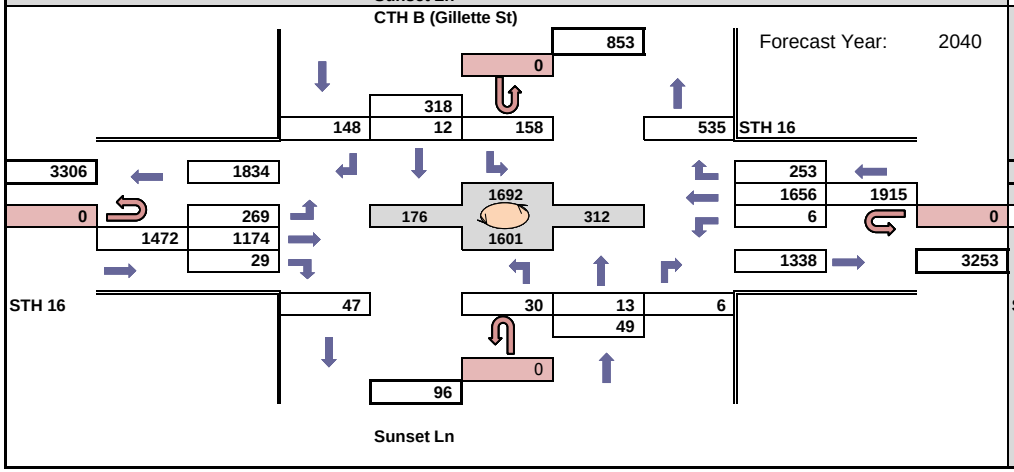

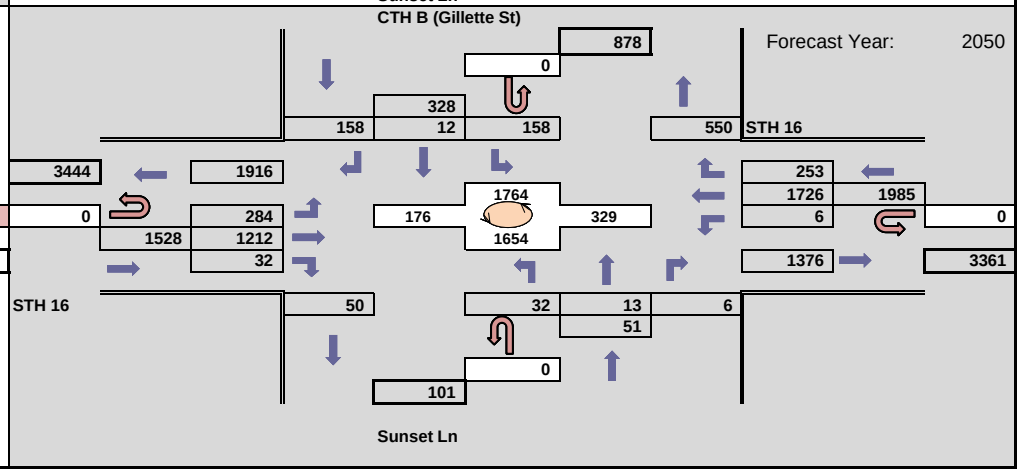

WisDOT Bureau of Planning & Economic Development
Traffic Forecasting Section
Forecast by: Miao Zhang
Phone: (608) 266 - 7995
Email: miao.zhang@dot.wi.gov

Projected PM Design Hour Traffic Volumes

Indicates roundabout

Design Hour: 4:00-5:00pm

Forecast Completed: 2/23/2021

Project Description

Project ID(s): 1630-08-00
Route(s): STH 16
Region/COUNTY(IES): SW/La Crosse
Location: WIS 16 & Gille□e St

Design Hour Turning Movement Data

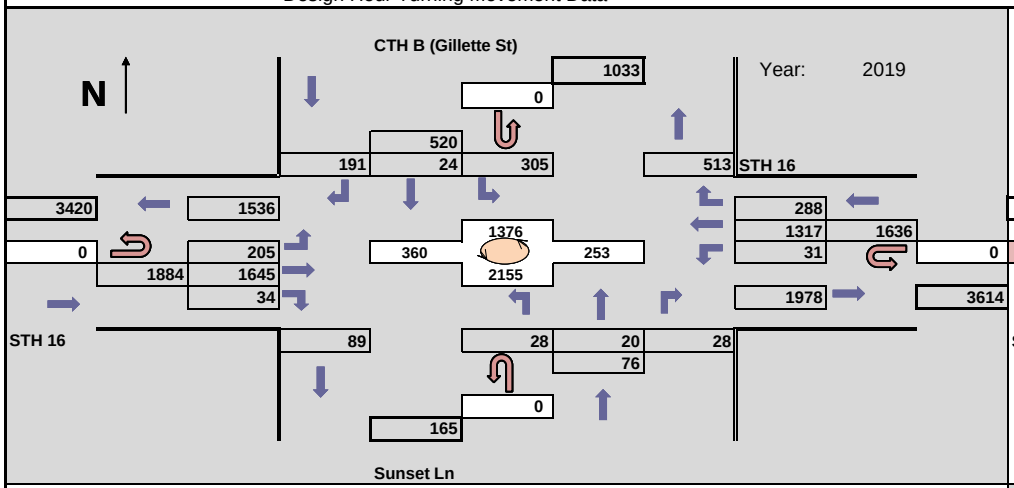

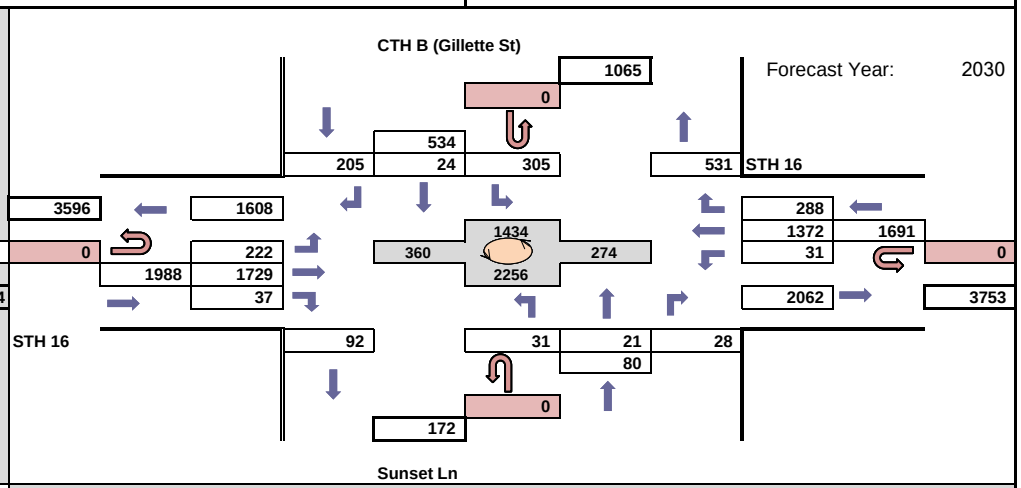

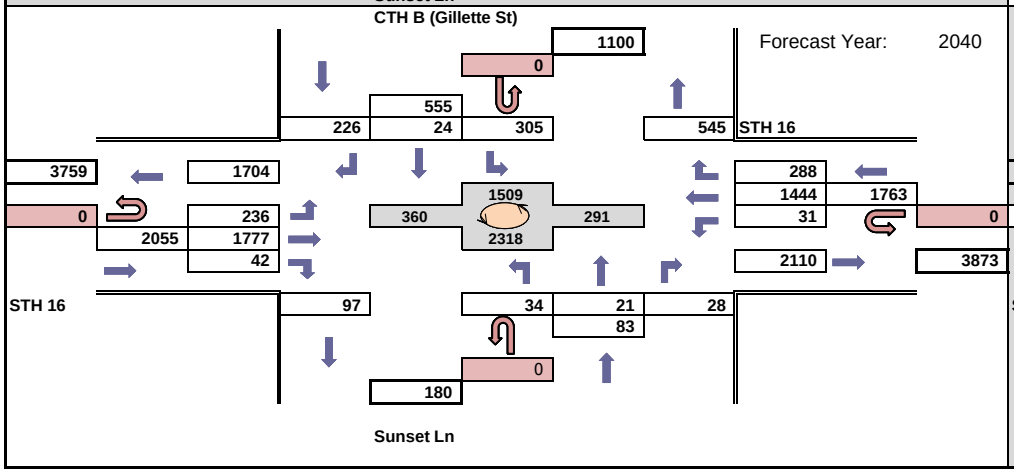

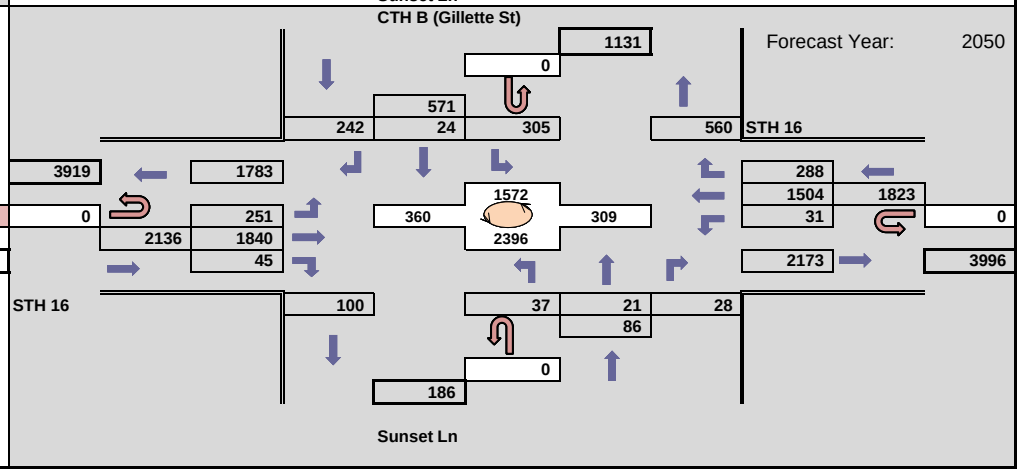

WisDOT Bureau of Planning & Economic Development
Traffic Forecasting Section
Forecast by: Miao Zhang
Phone: (608) 266 - 7995
Email: miao.zhang@dot.wi.gov

Projected AM Design Hour Traffic Volumes

Indicates roundabout

Design Hour: 7:00-8:00am

Forecast Completed: 2/23/2021

Project Description

Project ID(s): 1630-08-00
Route(s): STH 16
Region/COUNTY(IES): SW/La Crosse
Location: WIS 16 (La Crosse St) & Losey Blvd

Design Hour Turning Movement Data

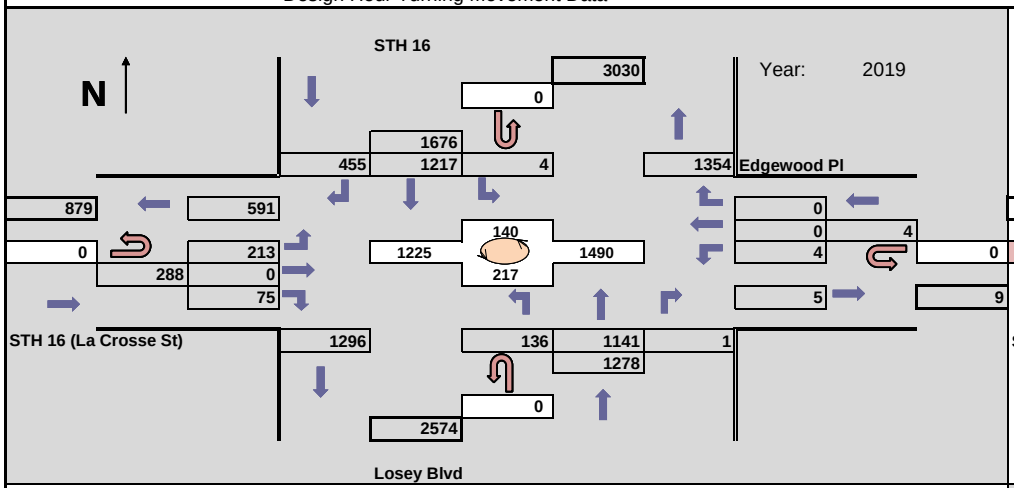

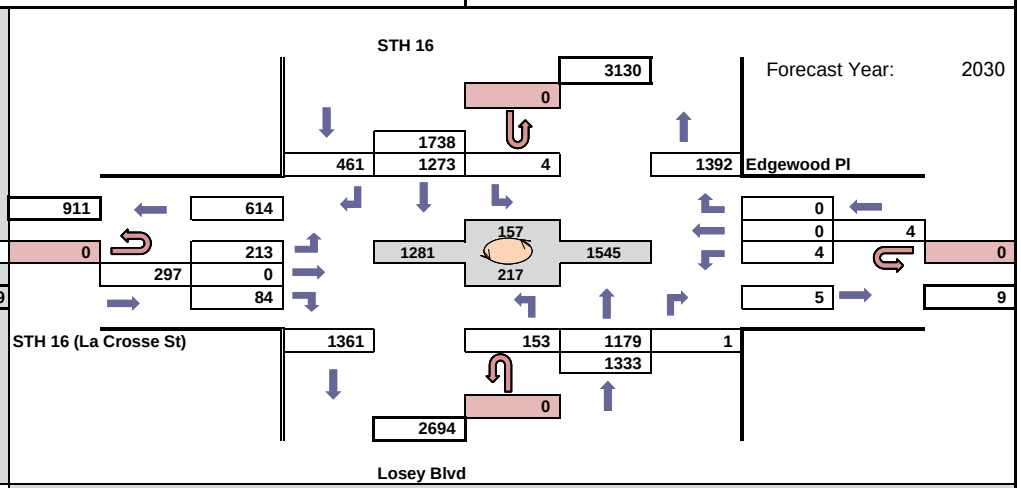

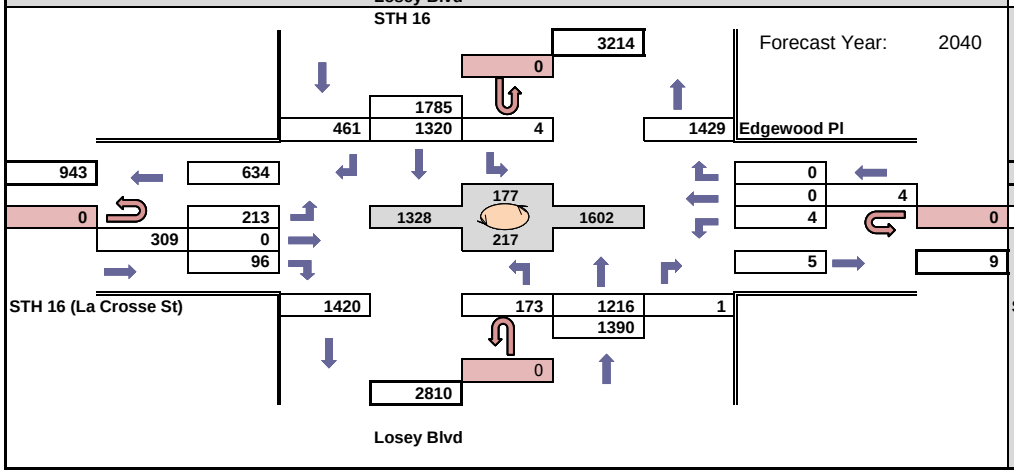

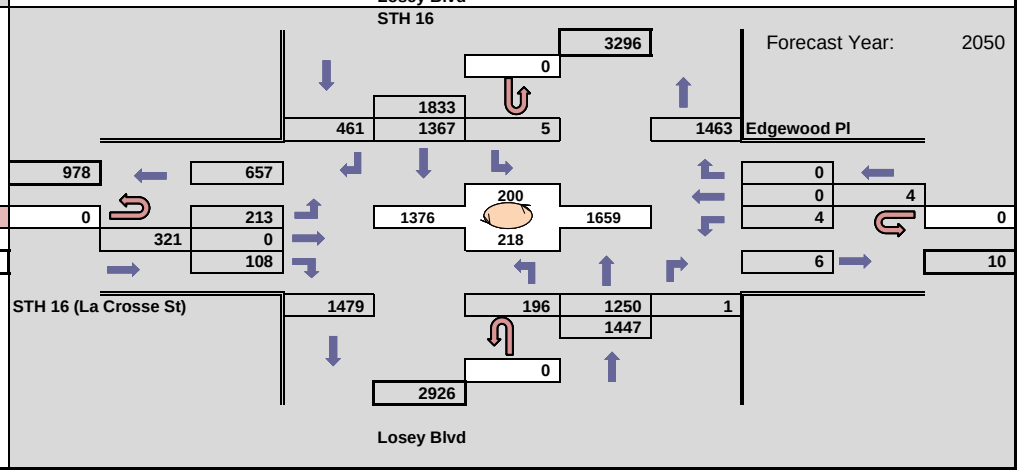

WisDOT Bureau of Planning & Economic Development
Traffic Forecasting Section
Forecast by: Miao Zhang
Phone: (608) 266 - 7995
Email: miao.zhang@dot.wi.gov

Projected PM Design Hour Traffic Volumes

Indicates roundabout

Design Hour: 4:30-5:30pm

Forecast Completed: 2/23/2021

Project Description

Project ID(s): 1630-08-00
Route(s): STH 16
Region/COUNTY(IES): SW/La Crosse
Location: WIS 16 (La Crosse St) & Losey Blvd

Design Hour Turning Movement Data

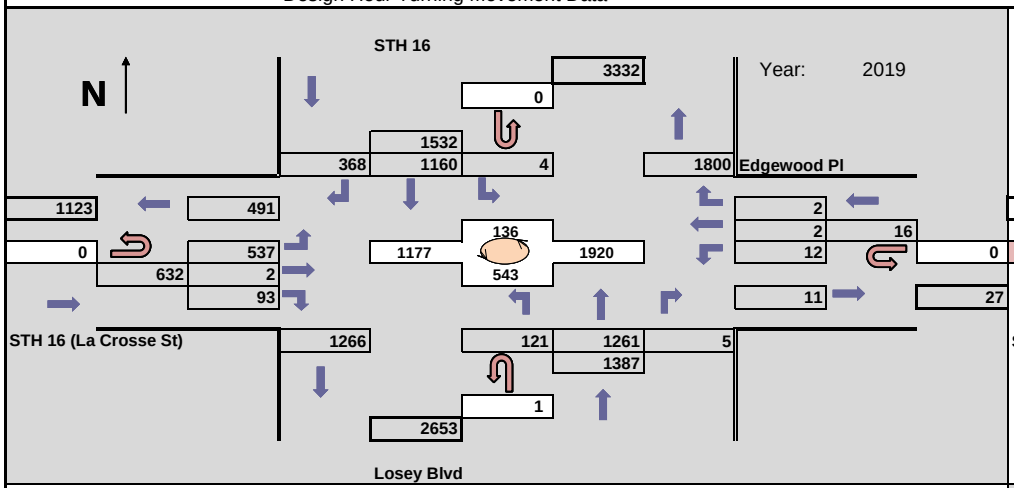

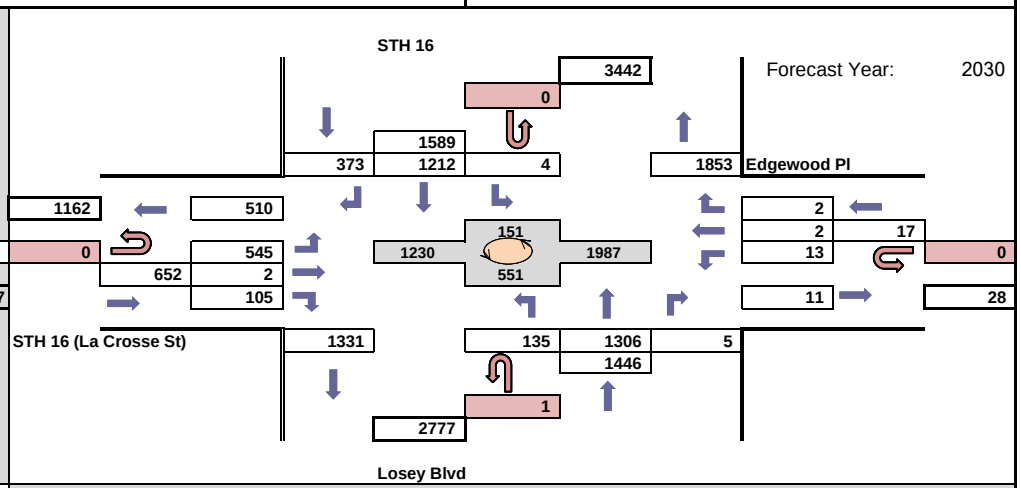

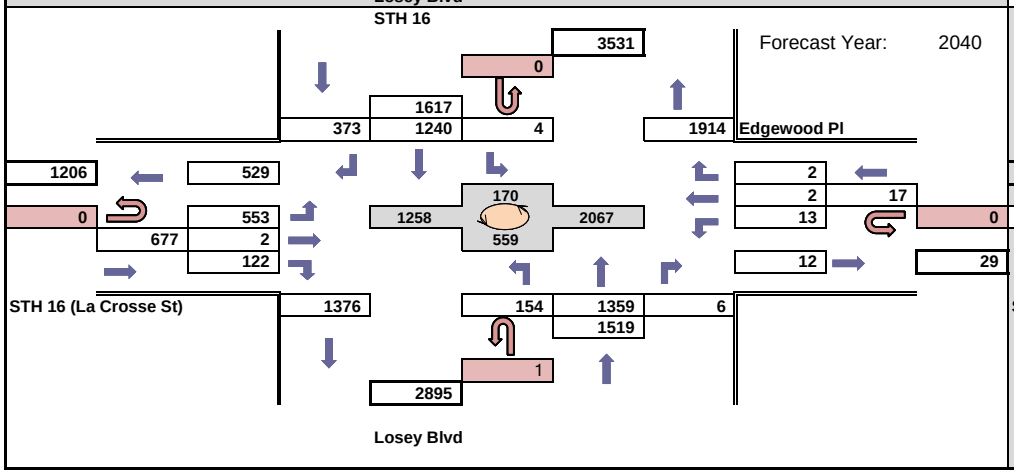

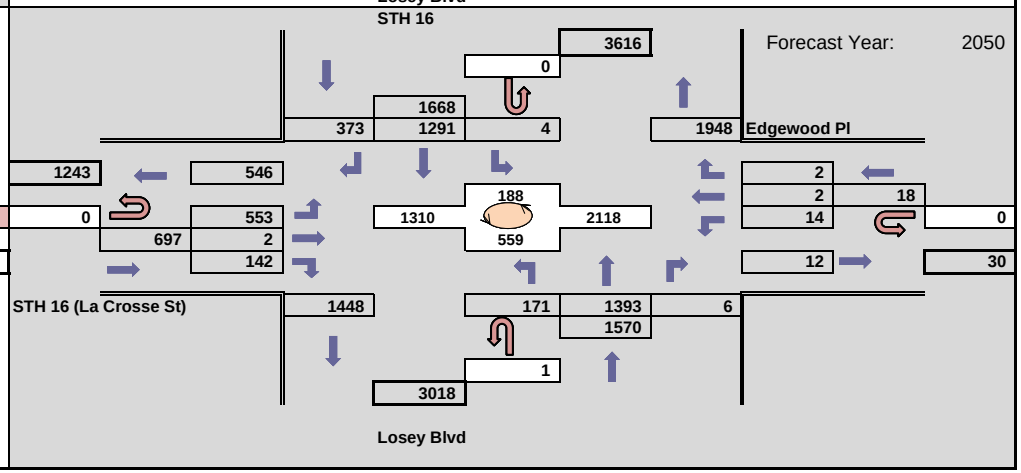

WisDOT TRAFFIC FORECAST REPORT	Region/COUNTY(IES): SW/La Crosse	Developed by: Miao Zhang
PROJECT ID(S): 1630-08-00	LOCATION: STH 35 George St. Segment	Phone: (608) 266-7995
ROUTE(S): STH 35	COMPLETED: 02/23/2021	
Traffic Forecasting Section; Bureau of Planning and Economic Development; Division of Transportation Investment Management		E-Mail: miao.zhang@dot.wi.gov

Site(s)	Route(s)	Volume(s)	Site Growth %
321144	STH 35	9960	0.35%
320430	STH 35	15350	0.34%
320437	STH 35	25530	0.73%
320452	STH 35	22750	0.56%
326122	STH 35	23880	0.44%

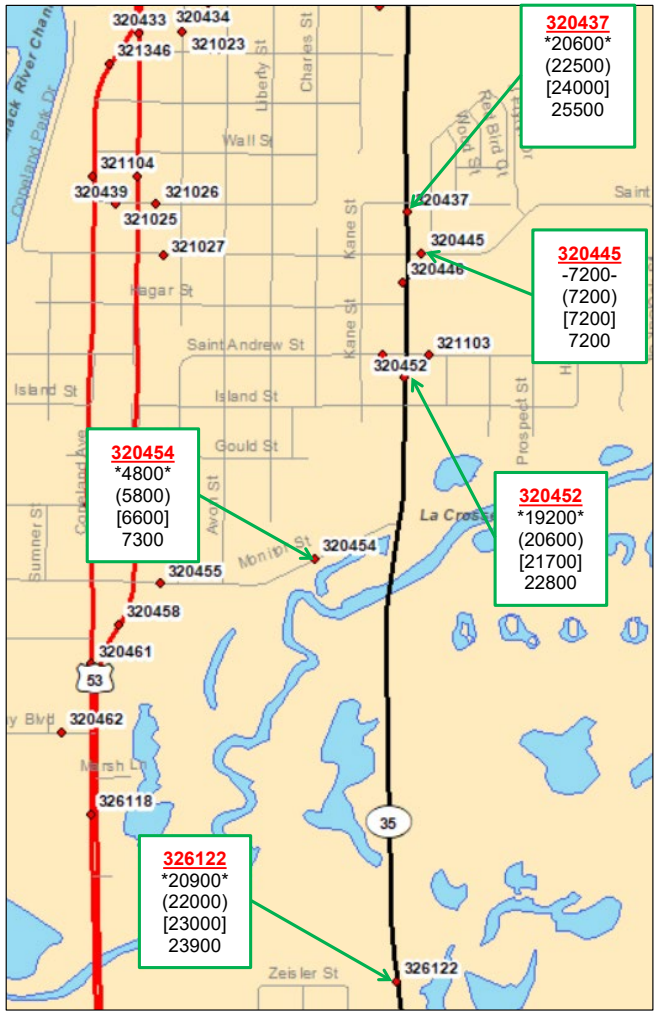

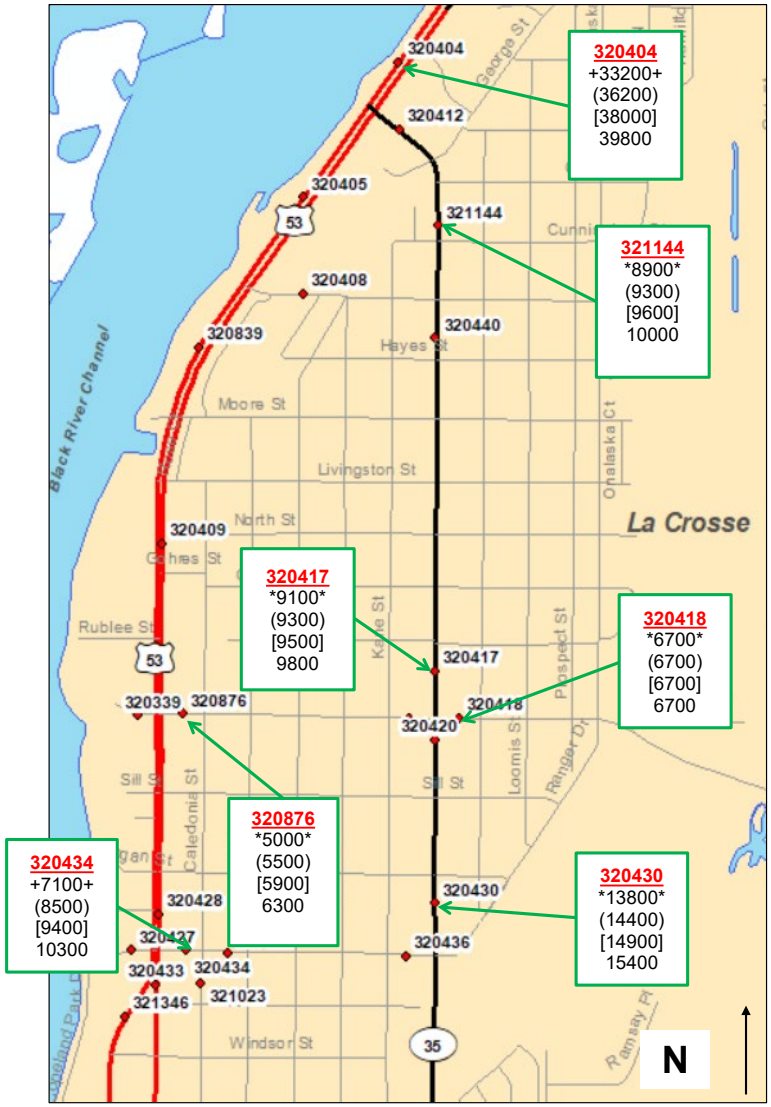

SITE ID = Colored, **bolded**, and underlined

Symbol	Count	Symbol	Forecast
-000-	2019 Count	(000)	2030 AADT
000	2017 Count	[000]	2040 AADT
+000+	2014 Count	000	2050 AADT

NOTES ON THE FORECAST:

1. This projection assumes that no major new traffic generators will be added to the development already included in the 2010/2040 La Crosse Regional Travel Demand Model.
2. Vehicle classification data and design values (K factors, directional splits, and percent trucks in design hours) are available here: http://wisconsindot.gov/Pages/projects/data-plan/traf-fore/default.aspx
3. STH 35 is a Factor Group II (Urban-Other) roadways (indicating low to moderate fluctuation in traffic from a seasonal perspective).
4. The 2010/2040 La Crosse Regional Travel Demand Model was used to complete this forecast. The Traffic Analysis Forecasting Information System output was used as a comparison tool to check against the model output. Adjustments were made as needed.
5. Roadway improvements coded within the existing plus committed (E+C) network of the 2010/2040 La Crosse Regional Travel Demand Model were assumed to be in place for the purposes of developing this forecast.

WisDOT Bureau of Planning & Economic Development
Traffic Forecasting Section
Forecast by: Miao Zhang
Phone: (608) 266 - 7995
Email: miao.zhang@dot.wi.gov

Projected AM Design Hour Traffic Volumes

Indicates roundabout

Design Hour: 7:00-8:00am

Forecast Completed: 2/23/2021

Project Description

Project ID(s): 1630-08-00
Route(s): STH 35
Region/COUNTY(IES): SW/La Crosse
Location: WIS 35 & George St

Design Hour Turning Movement Data

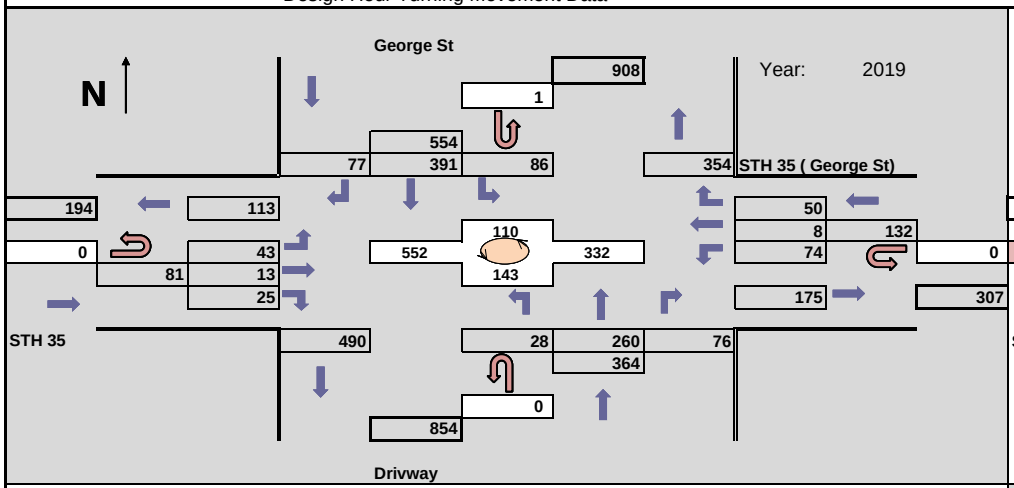

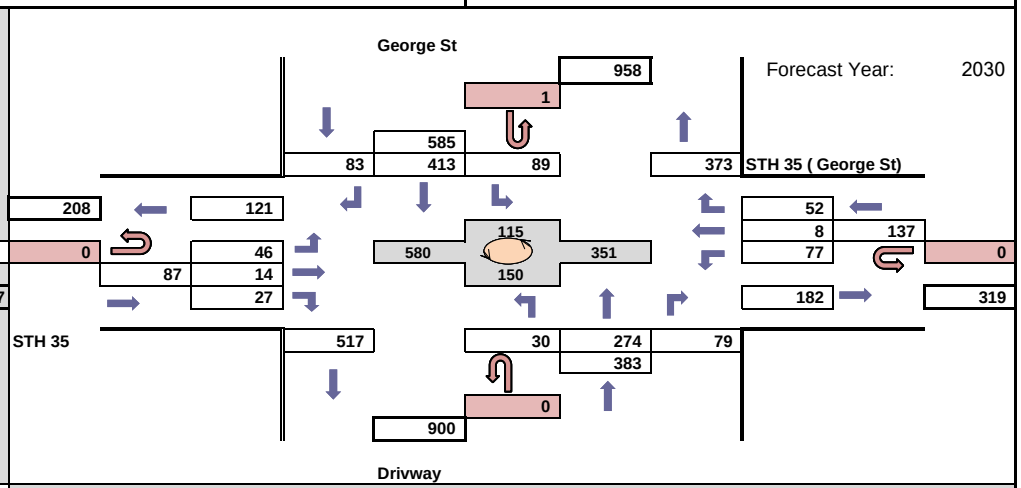

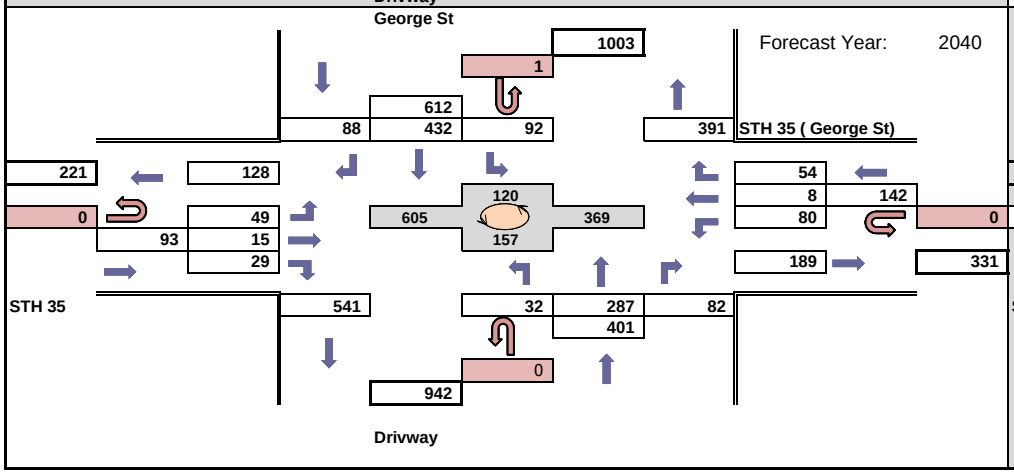

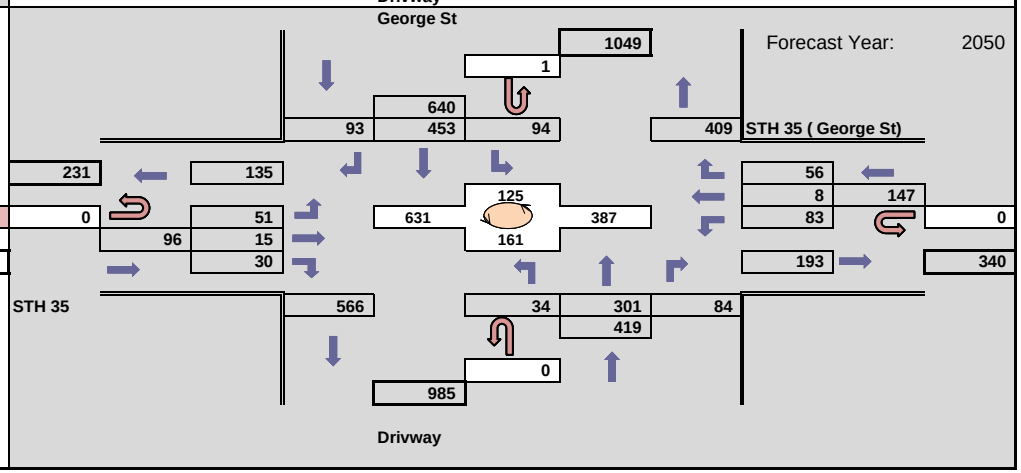

WisDOT Bureau of Planning & Economic Development
Traffic Forecasting Section
Forecast by: Miao Zhang
Phone: (608) 266 - 7995
Email: miao.zhang@dot.wi.gov

Projected PM Design Hour Traffic Volumes

Indicates roundabout

Design Hour: 4:15-5:15pm

Forecast Completed: 2/23/2021

Project Description

Project ID(s): 1630-08-00
Route(s): STH 35
Region/COUNTY(IES): SW/La Crosse
Location: WIS 35 & George St

Design Hour Turning Movement Data

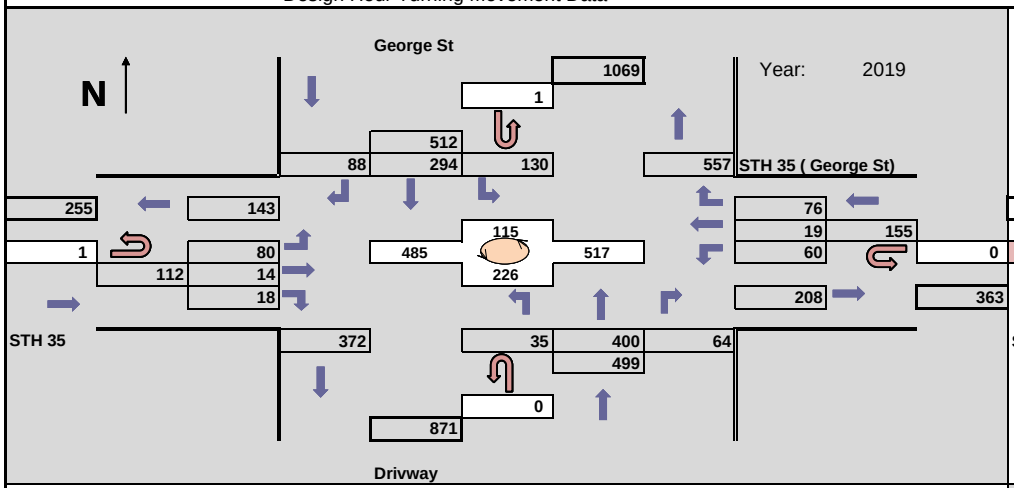

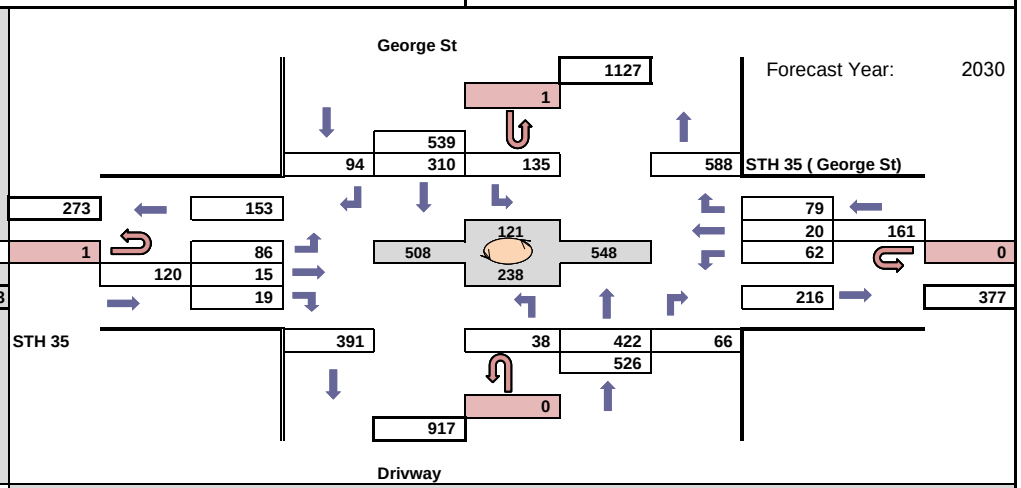

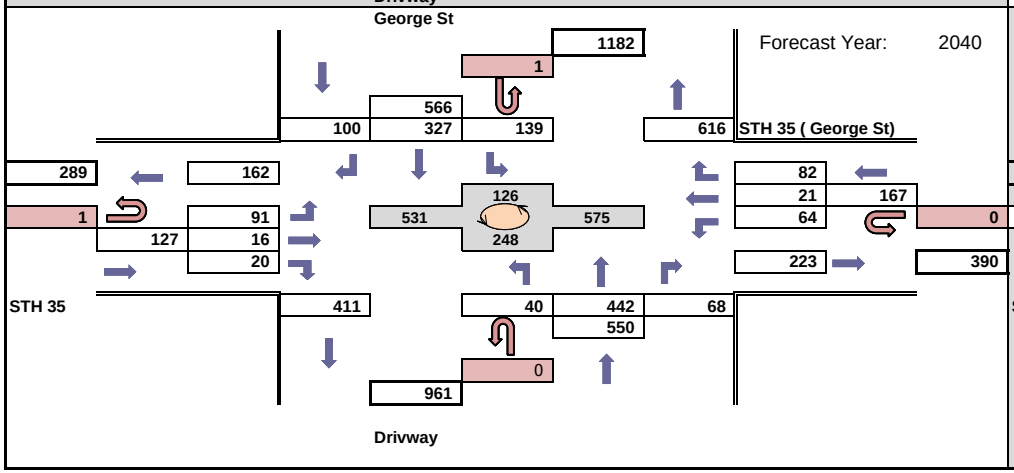

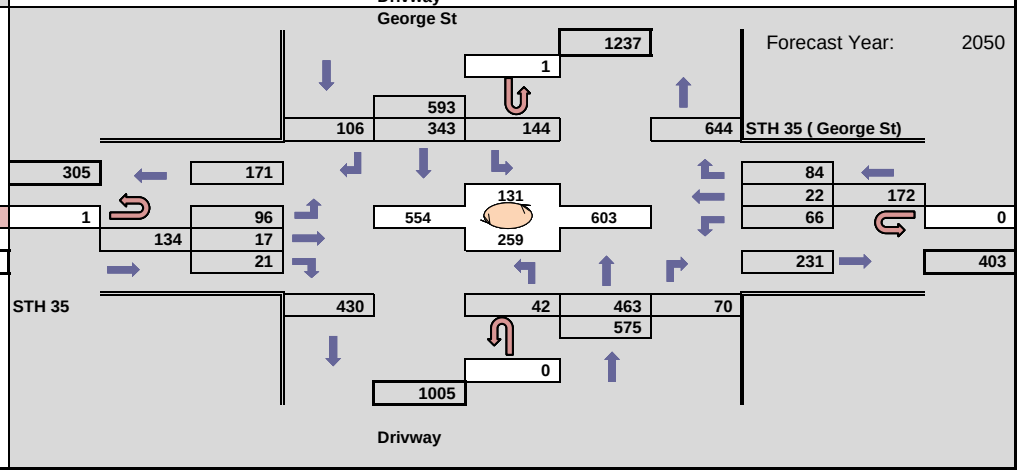

WisDOT Bureau of Planning & Economic Development
Traffic Forecasting Section
Forecast by: Miao Zhang
Phone: (608) 266 - 7995
Email: miao.zhang@dot.wi.gov

Projected AM Design Hour Traffic Volumes

Indicates roundabout

Design Hour: 7:00-8:00am

Forecast Completed: 2/23/2021

Project Description

Project ID(s): 1630-08-00
Route(s): STH 35
Region/COUNTY(IES): SW/La Crosse
Location: WIS 35 (George St) & Gille□e St

Design Hour Turning Movement Data

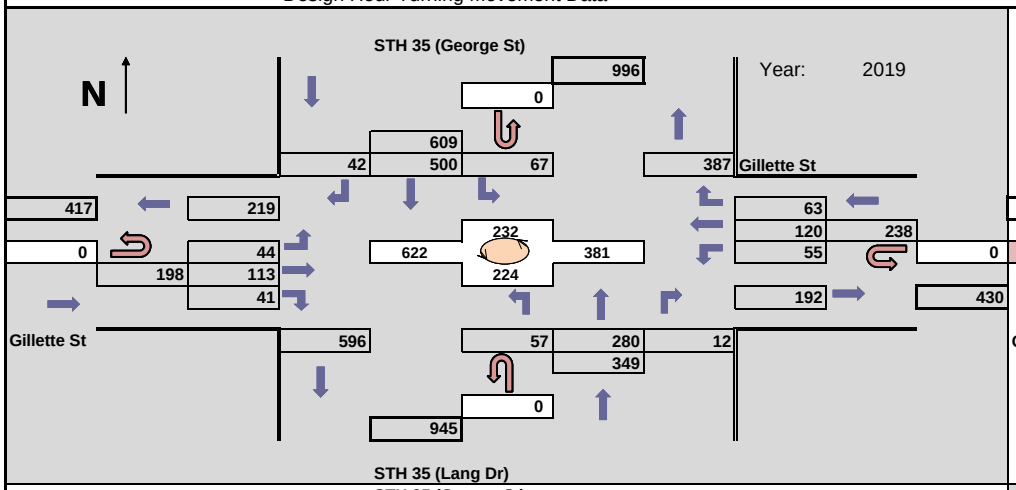

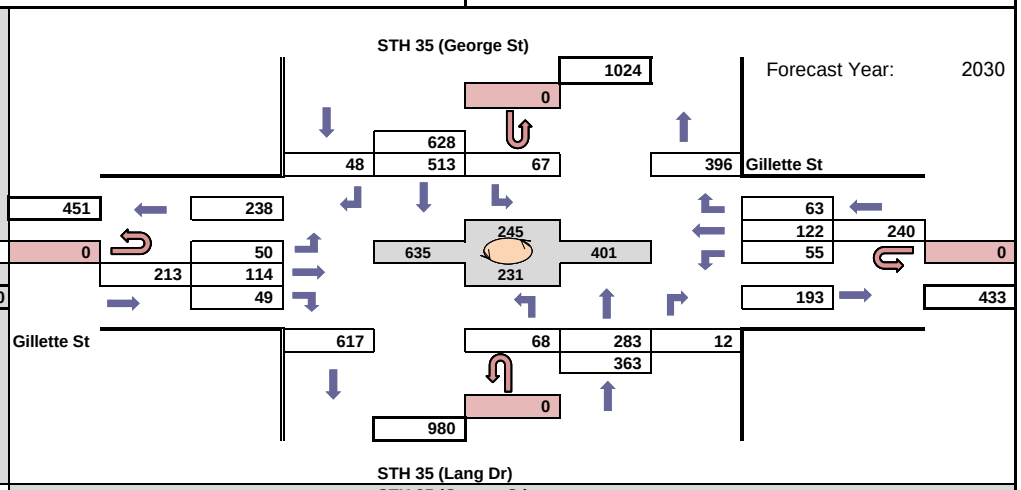

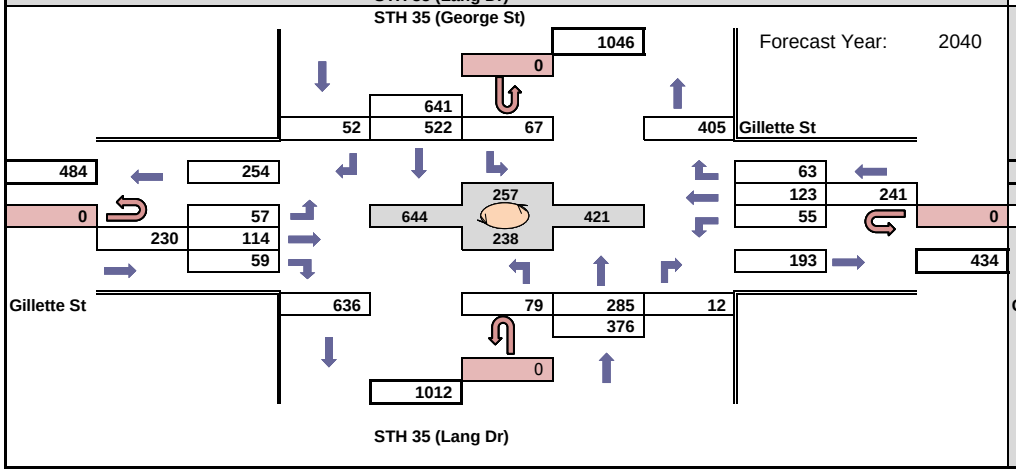

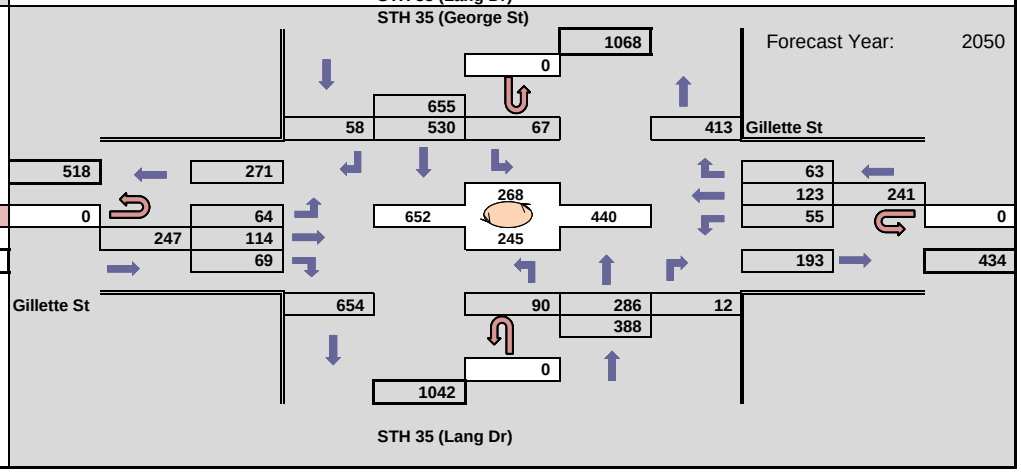

WisDOT Bureau of Planning & Economic Development
Traffic Forecasting Section
Forecast by: Miao Zhang
Phone: (608) 266 - 7995
Email: miao.zhang@dot.wi.gov

Projected PM Design Hour Traffic Volumes

Indicates roundabout

Design Hour: 4:15-5:15pm

Forecast Completed: 2/23/2021

Project Description

Project ID(s): 1630-08-00
Route(s): STH 35
Region/COUNTY(IES): SW/La Crosse
Location: WIS 35 (George St) & Gille□e St

Design Hour Turning Movement Data

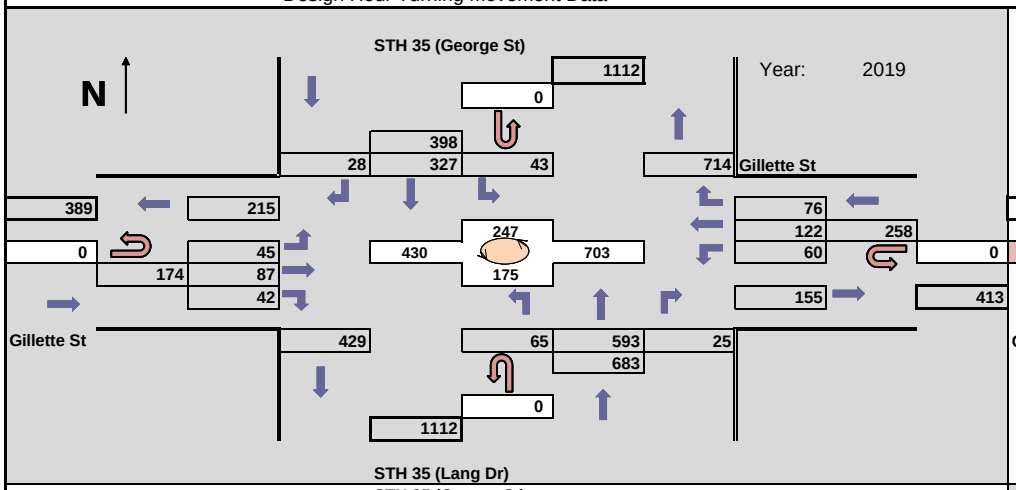

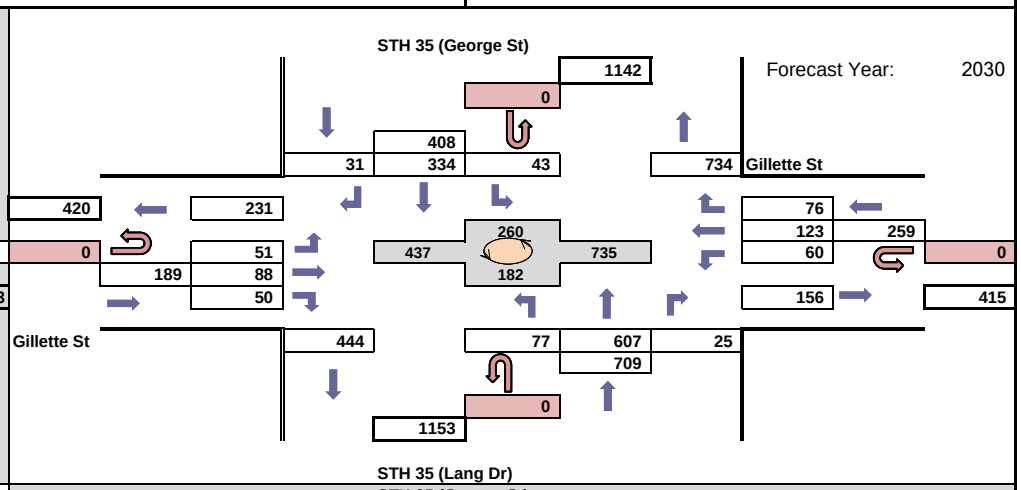

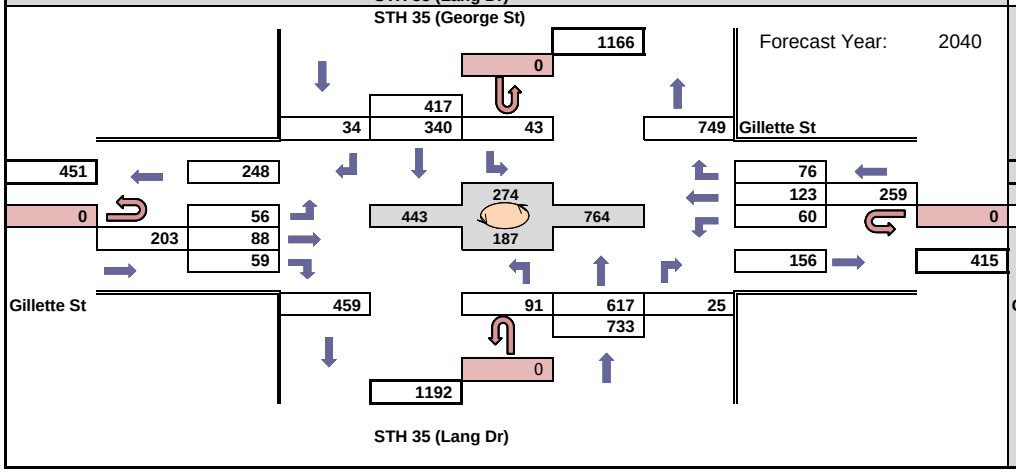

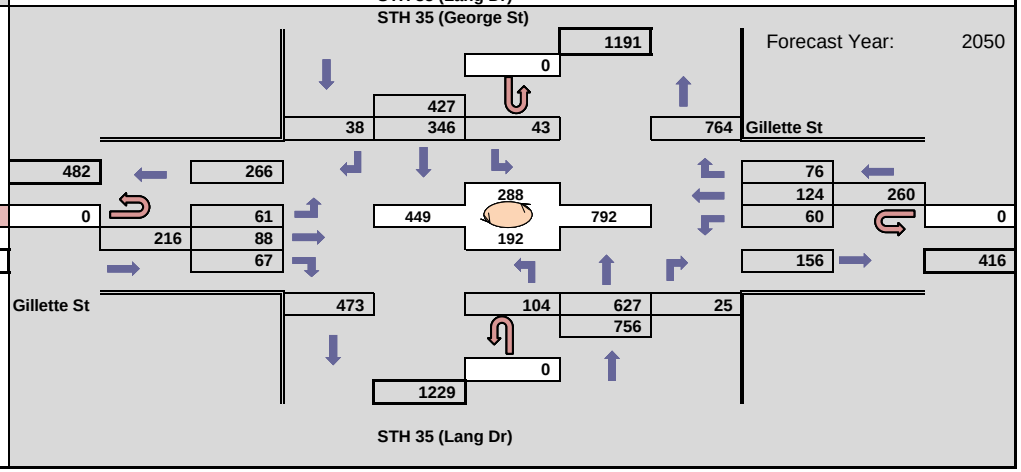

WisDOT Bureau of Planning & Economic Development
Traffic Forecasting Section
Forecast by: Miao Zhang
Phone: (608) 266 - 7995
Email: miao.zhang@dot.wi.gov

Projected AM Design Hour Traffic Volumes

Indicates roundabout

Design Hour: 7:00-8:00am

Forecast Completed: 2/23/2021

Project Description

Project ID(s): 1630-08-00
Route(s): STH 35
Region/COUNTY(IES): SW/La Crosse
Location: WIS 35 (George St) & Clinton St

Design Hour Turning Movement Data

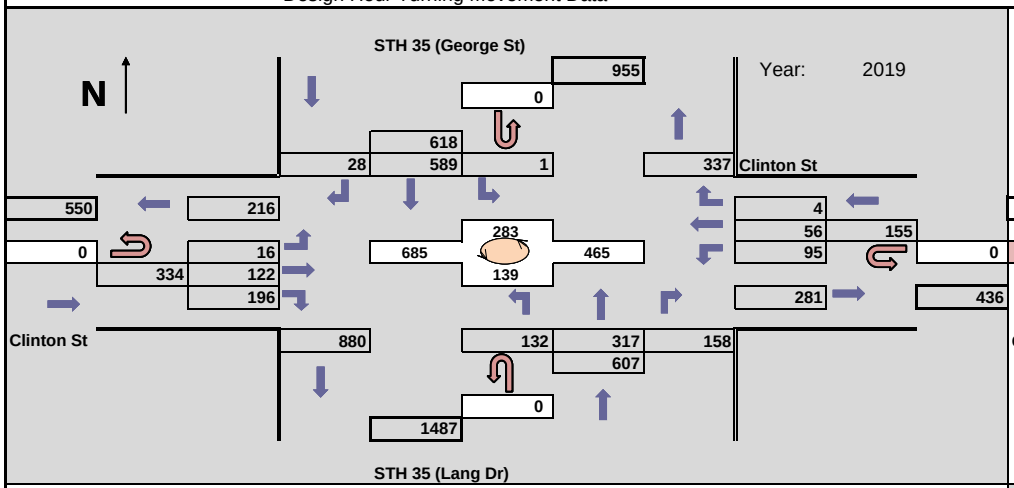

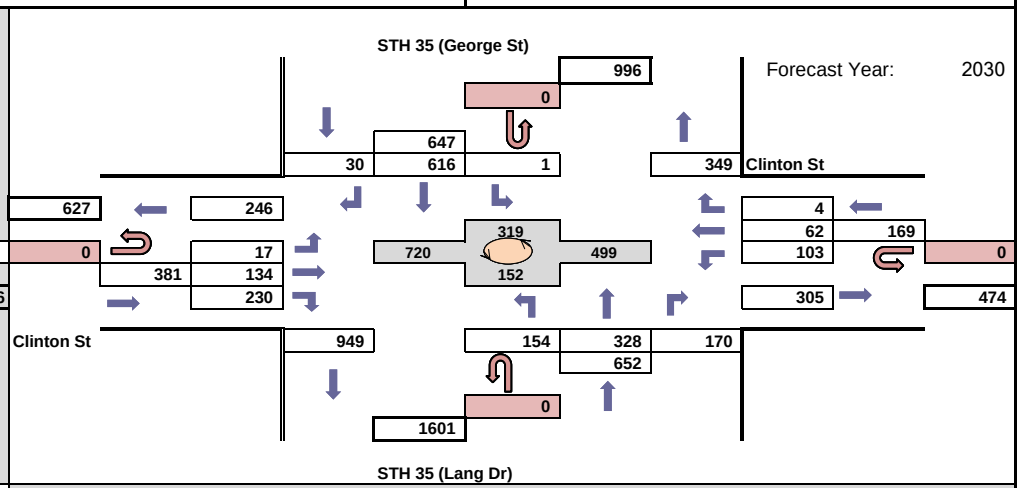

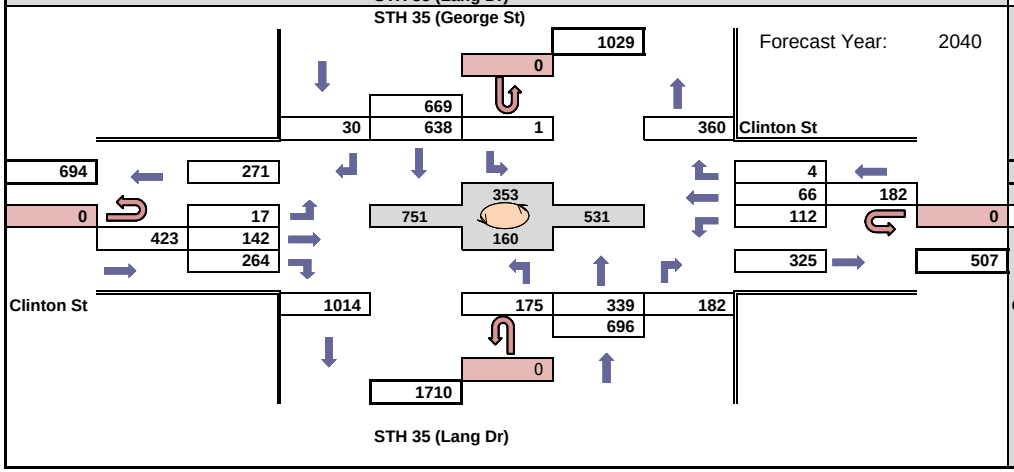

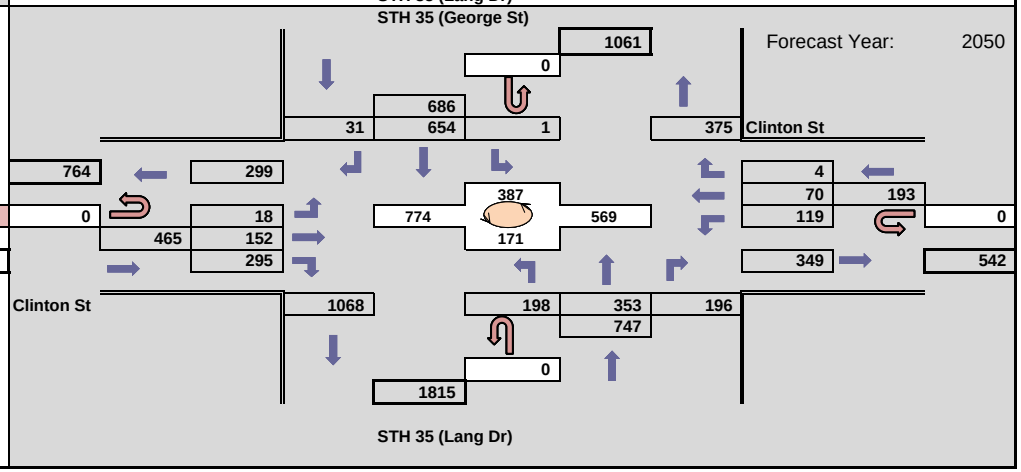

WisDOT Bureau of Planning & Economic Development
Traffic Forecasting Section
Forecast by: Miao Zhang
Phone: (608) 266 - 7995
Email: miao.zhang@dot.wi.gov

Projected PM Design Hour Traffic Volumes

Indicates roundabout

Design Hour: 4:15-5:15pm

Forecast Completed: 2/23/2021

Project Description

Project ID(s): 1630-08-00
Route(s): STH 35
Region/COUNTY(IES): SW/La Crosse
Location: WIS 35 (George St) & Clinton St

Design Hour Turning Movement Data

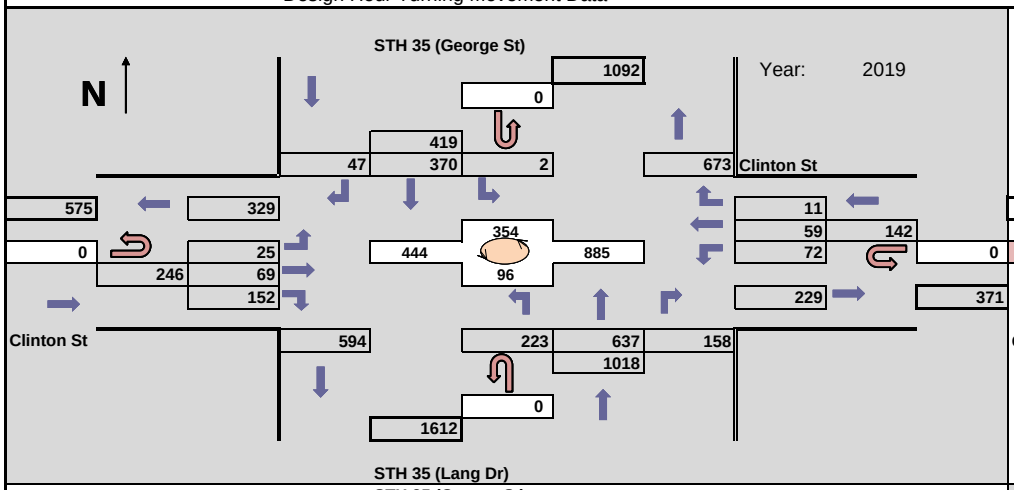

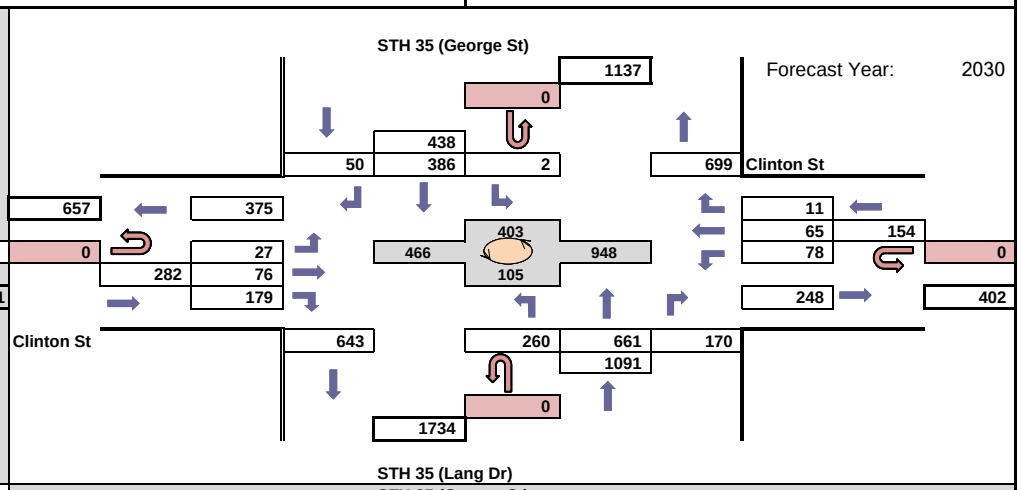

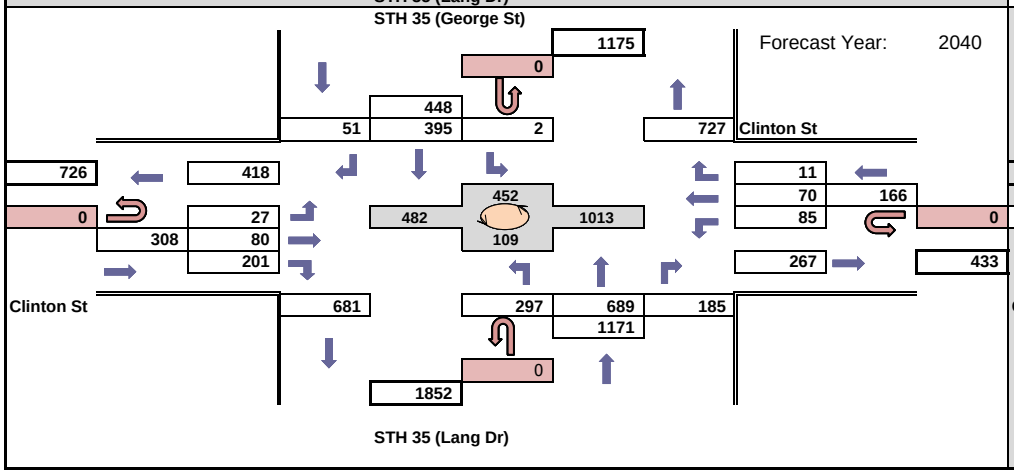

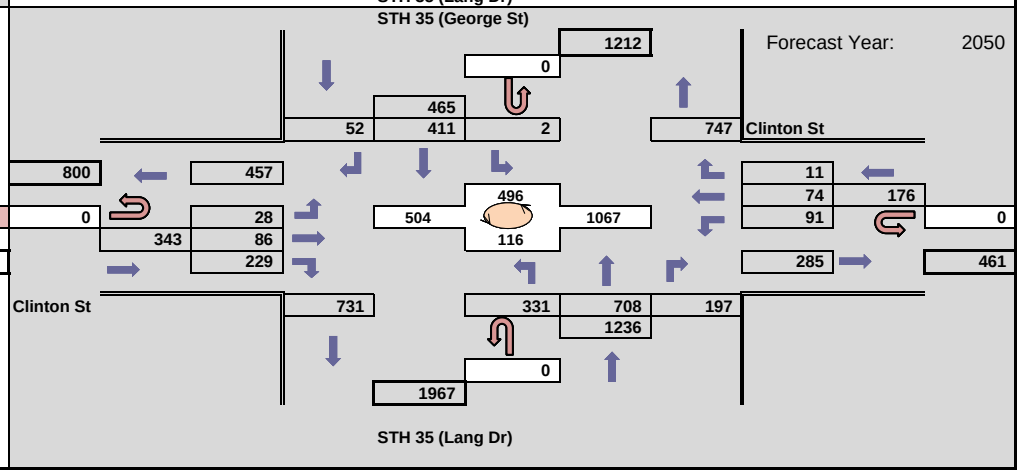

WisDOT Bureau of Planning & Economic Development
Traffic Forecasting Section
Forecast by: Miao Zhang
Phone: (608) 266 - 7995
Email: miao.zhang@dot.wi.gov

Projected AM Design Hour Traffic Volumes

Indicates roundabout

Design Hour: 7:00-8:00am

Forecast Completed: 2/23/2021

Project Description

Project ID(s): 1630-08-00
Route(s): STH 35
Region/COUNTY(IES): SW/La Crosse
Location: WIS 35 (George St) & St Cloud St

Design Hour Turning Movement Data

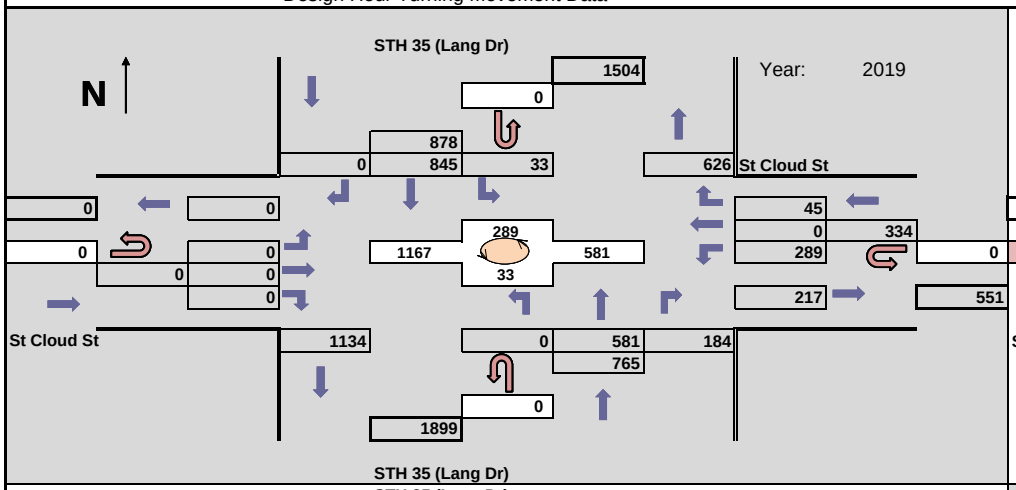

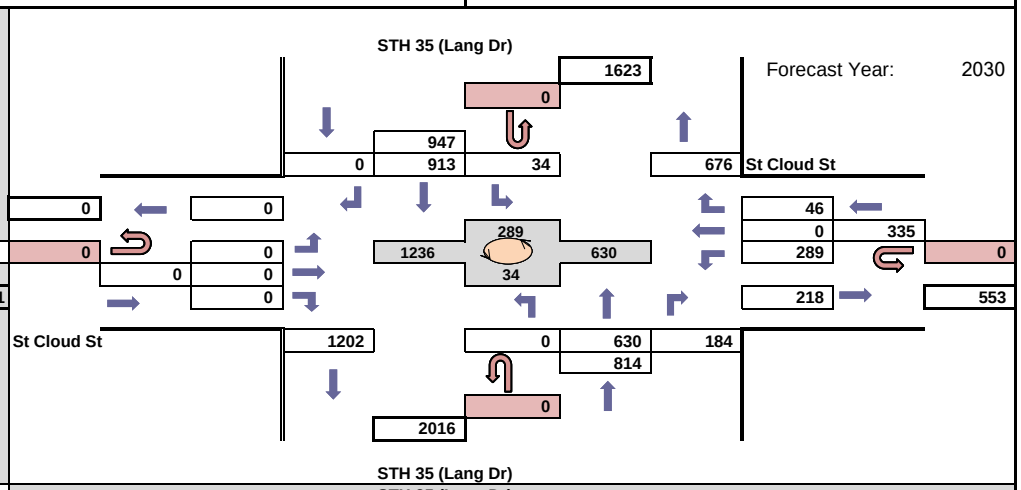

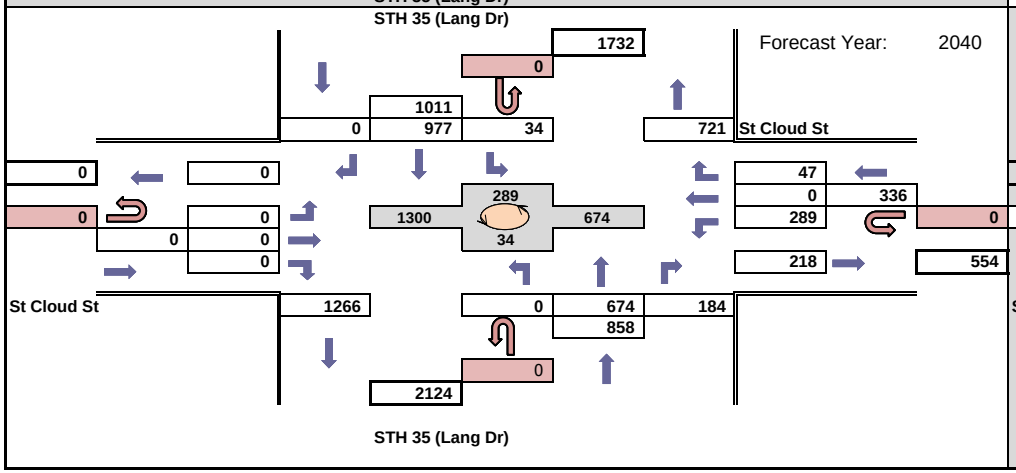

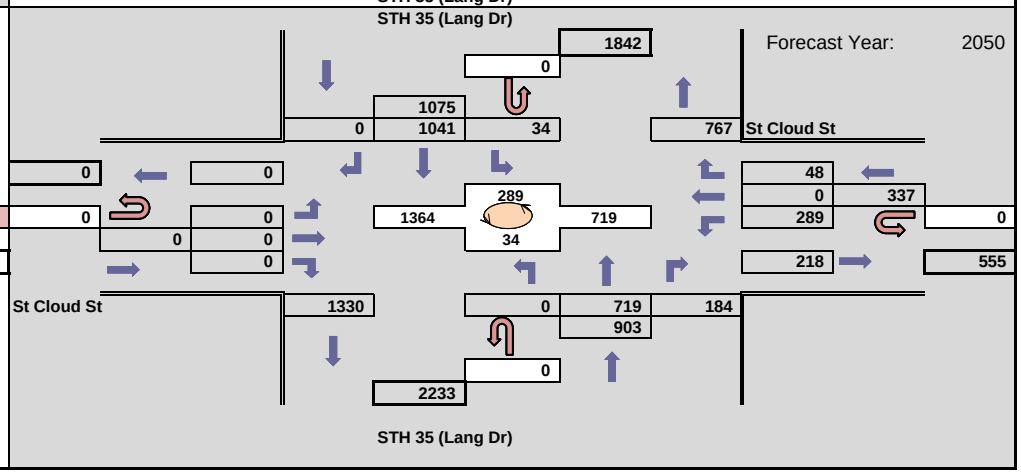

WisDOT Bureau of Planning & Economic Development
Traffic Forecasting Section
Forecast by: Miao Zhang
Phone: (608) 266 - 7995
Email: miao.zhang@dot.wi.gov

Projected PM Design Hour Traffic Volumes

Indicates roundabout

Design Hour: 4:15-5:15pm

Forecast Completed: 2/23/2021

Project Description

Project ID(s): 1630-08-00
Route(s): STH 35
Region/COUNTY(IES): SW/La Crosse
Location: WIS 35 (George St) & St Cloud St

Design Hour Turning Movement Data

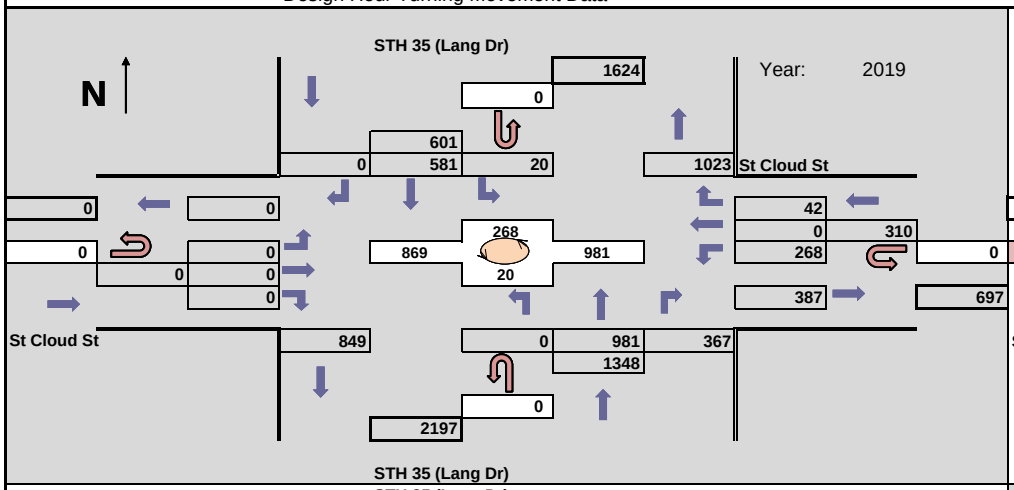

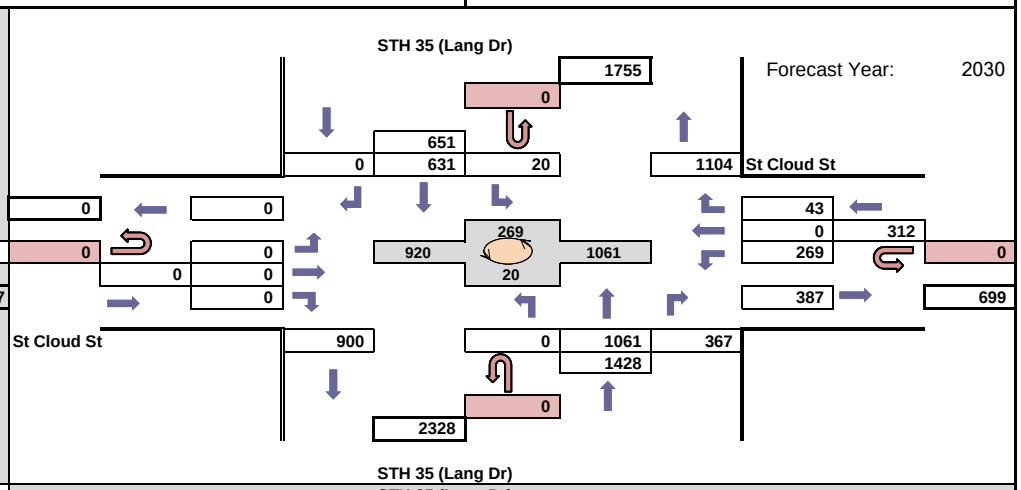

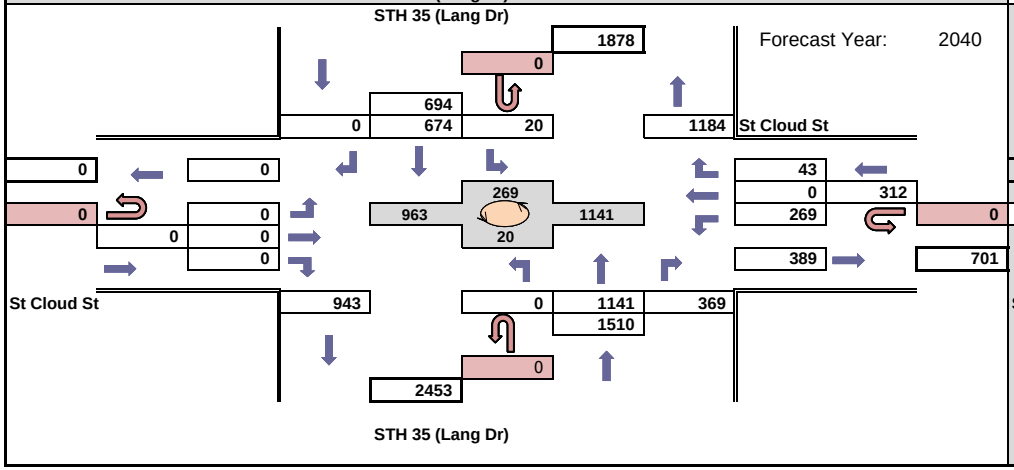

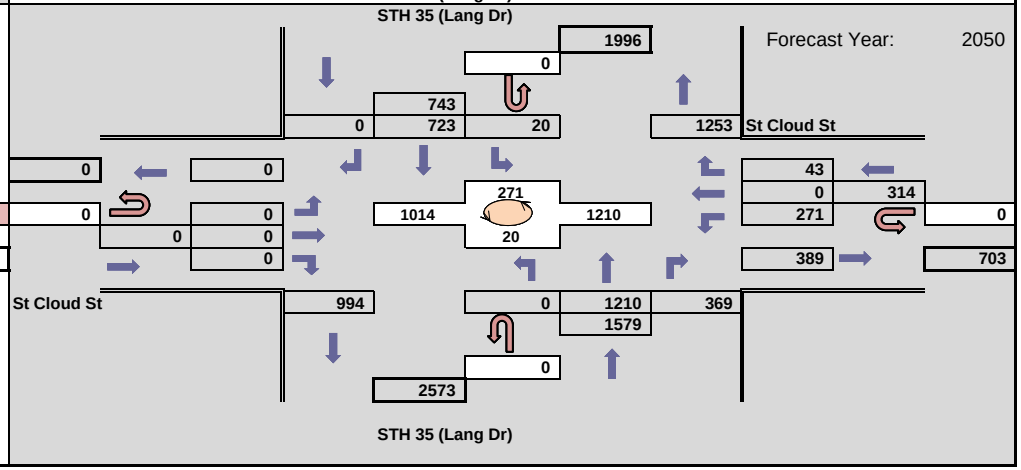

WisDOT Bureau of Planning & Economic Development
Traffic Forecasting Section
Forecast by: Miao Zhang
Phone: (608) 266 - 7995
Email: miao.zhang@dot.wi.gov

Projected AM Design Hour Traffic Volumes

Indicates roundabout

Design Hour: 7:00-8:00am

Forecast Completed: 2/23/2021

Project Description

Project ID(s): 1630-08-00
Route(s): STH 35
Region/COUNTY(IES): SW/La Crosse
Location: WIS 35 & St. Andrews St

Design Hour Turning Movement Data

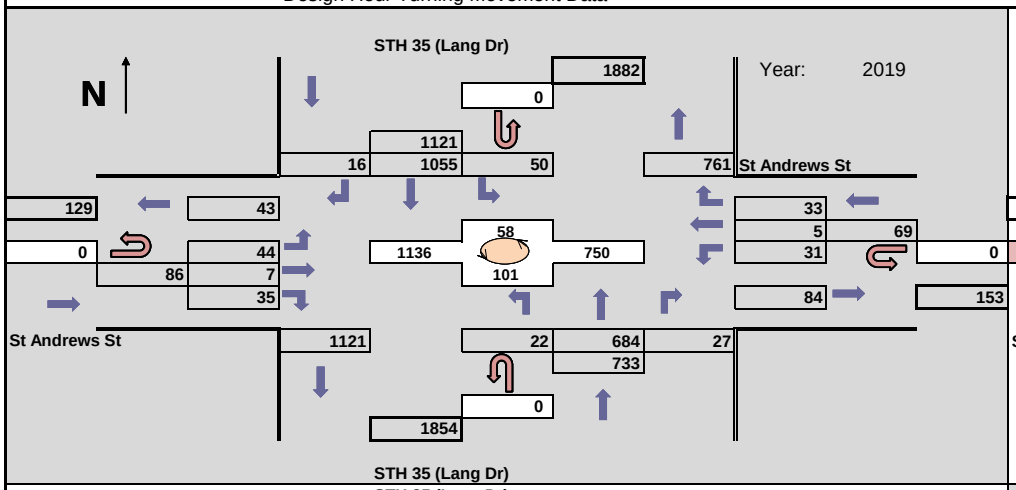

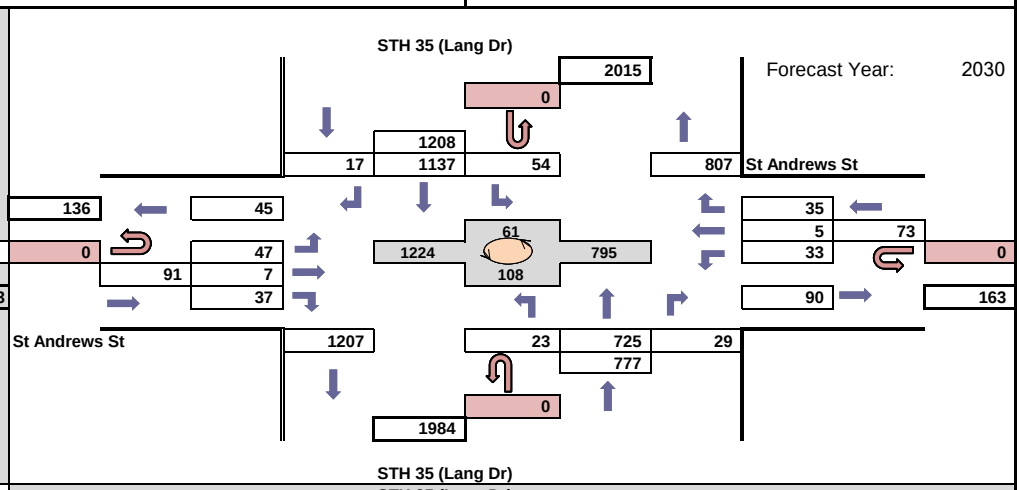

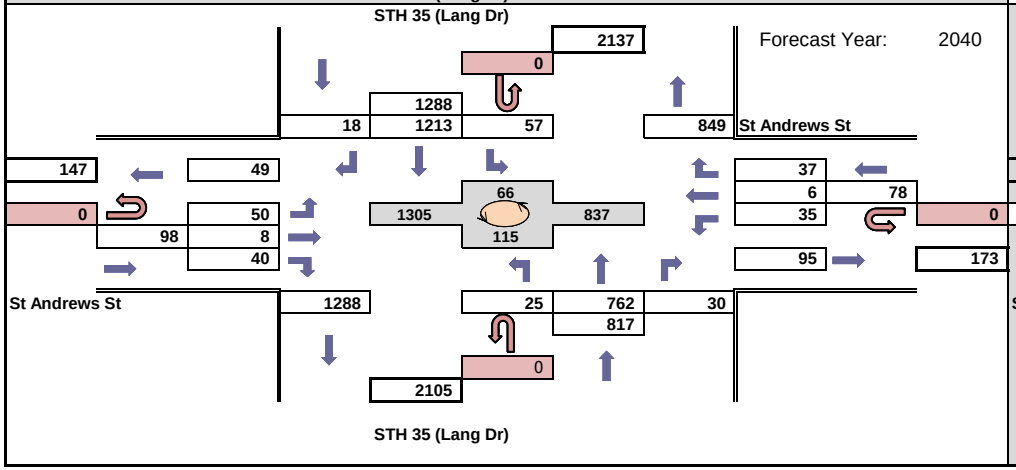

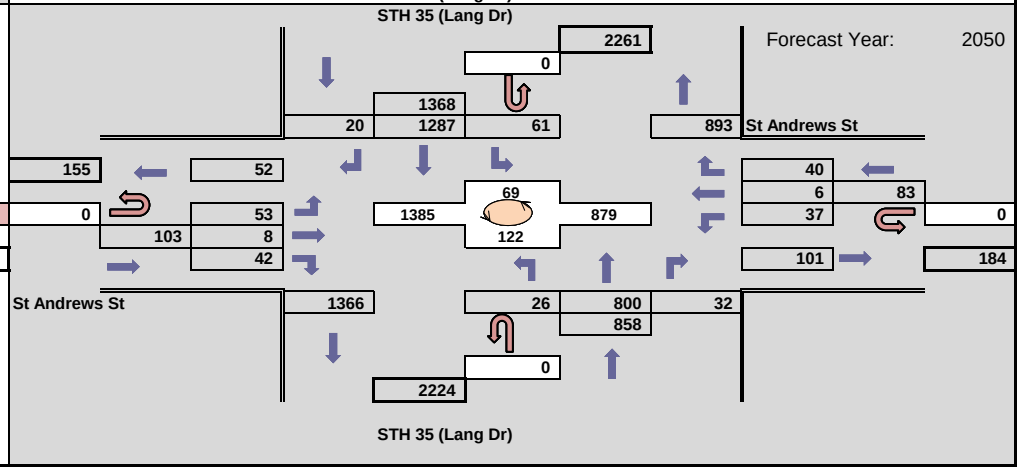

WisDOT Bureau of Planning & Economic Development
Traffic Forecasting Section
Forecast by: Miao Zhang
Phone: (608) 266 - 7995
Email: miao.zhang@dot.wi.gov

Projected PM Design Hour Traffic Volumes

Indicates roundabout

Design Hour: 4:15-5:15pm

Forecast Completed: 2/23/2021

Project Description

Project ID(s): 1630-08-00
Route(s): STH 35
Region/COUNTY(IES): SW/La Crosse
Location: WIS 35 & St. Andrews St

Design Hour Turning Movement Data

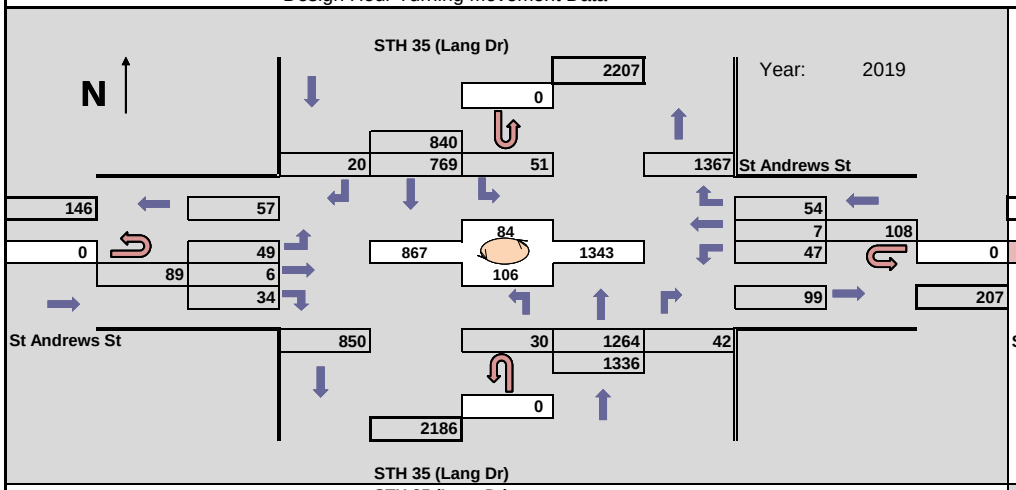

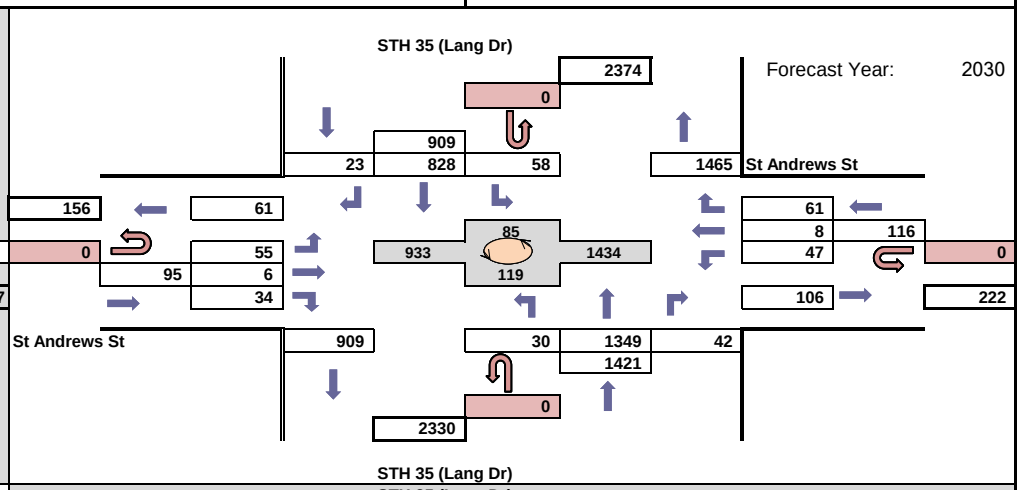

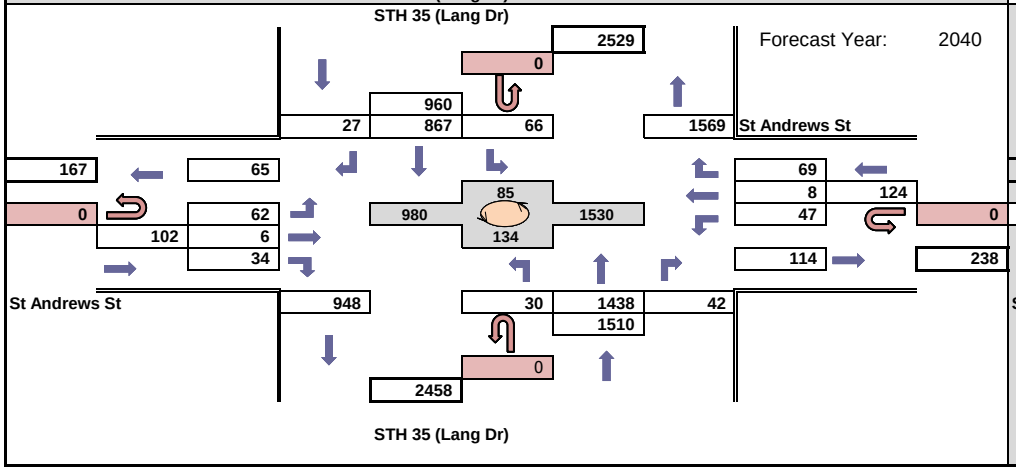

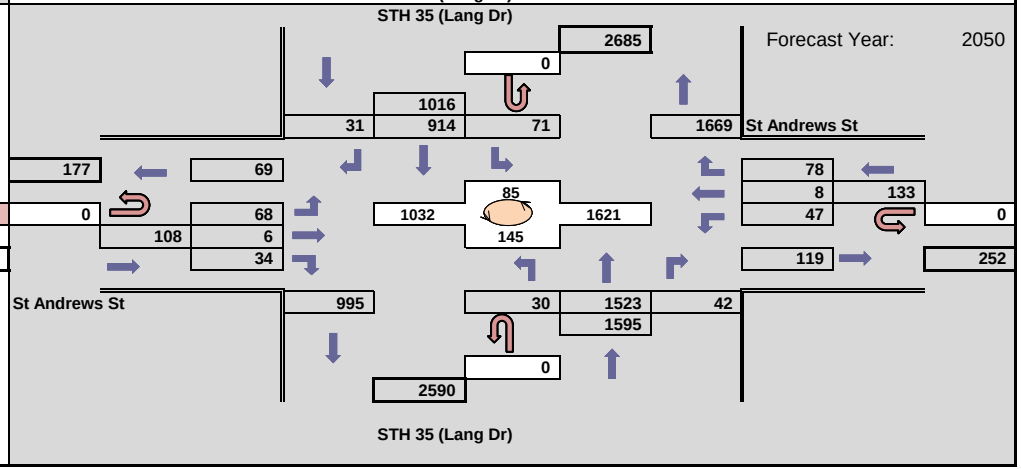

WisDOT Bureau of Planning & Economic Development
Traffic Forecasting Section
Forecast by: Miao Zhang
Phone: (608) 266 - 7995
Email: miao.zhang@dot.wi.gov

Projected AM Design Hour Traffic Volumes

Indicates roundabout

Design Hour: 7:00-8:00am

Forecast Completed: 2/23/2021

Project Description

Project ID(s): 1630-08-00
Route(s): STH 35
Region/COUNTY(IES): SW/La Crosse
Location: WIS 35 (West Ave) & Monitor St

Design Hour Turning Movement Data

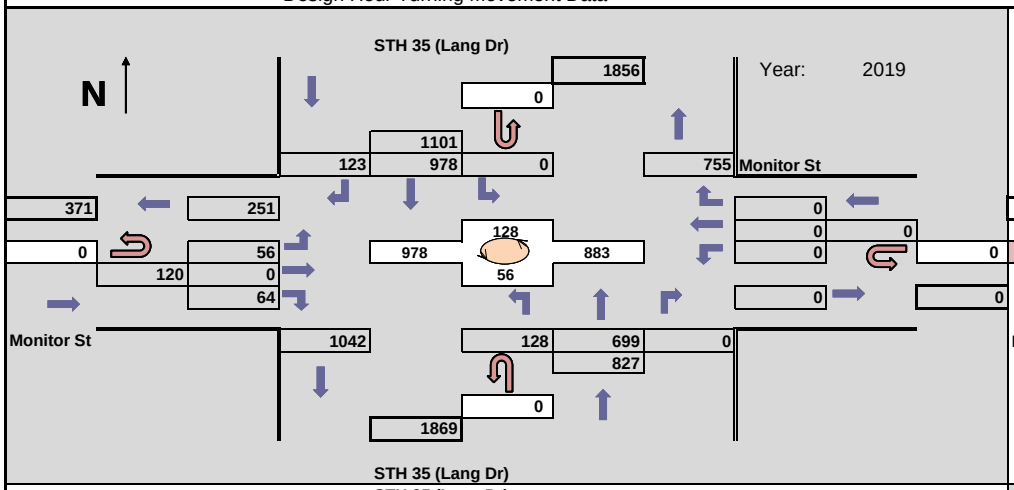

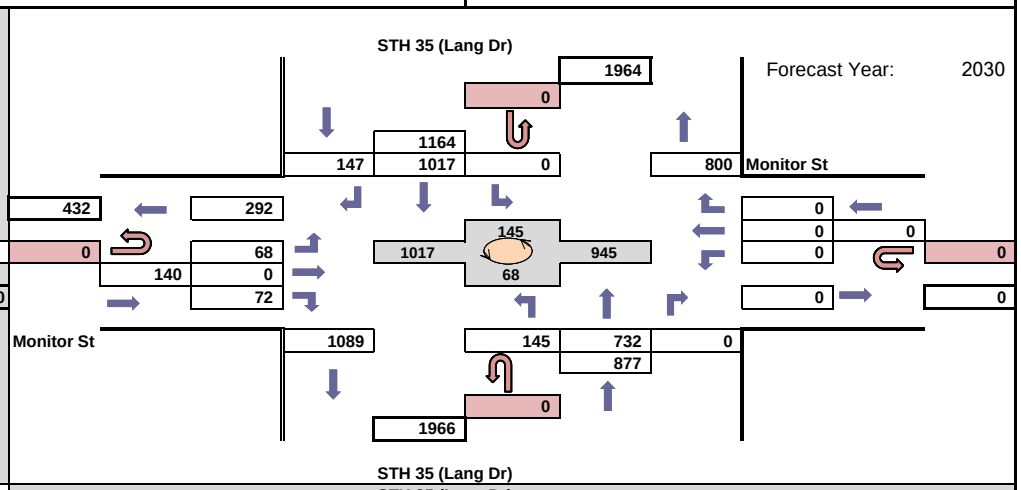

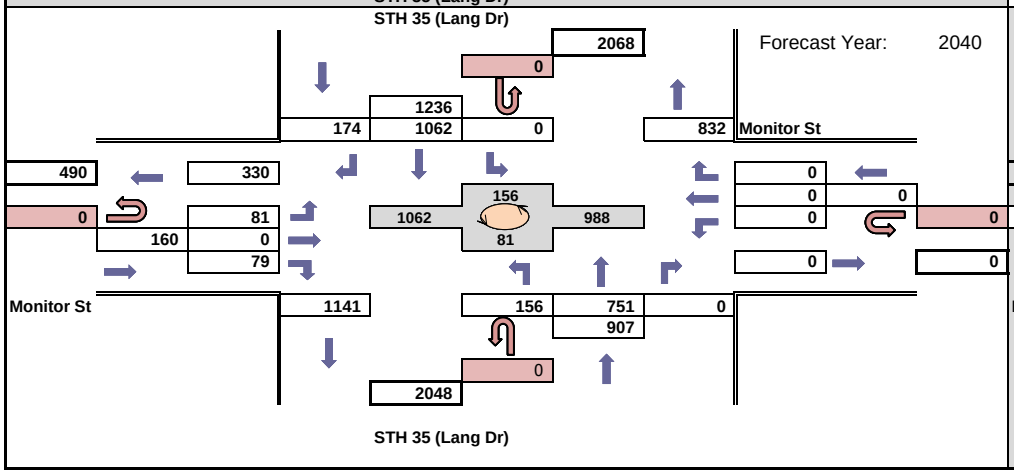

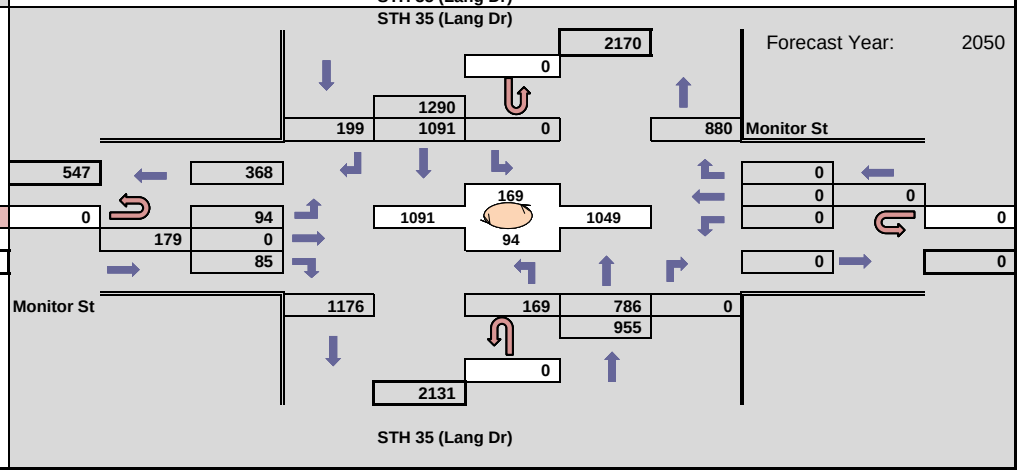

WisDOT Bureau of Planning & Economic Development
Traffic Forecasting Section
Forecast by: Miao Zhang
Phone: (608) 266 - 7995
Email: miao.zhang@dot.wi.gov

Projected PM Design Hour Traffic Volumes

Indicates roundabout

Design Hour: 4:15-5:15pm

Forecast Completed: 2/23/2021

Project Description

Project ID(s): 1630-08-00
Route(s): STH 35
Region/COUNTY(IES): SW/La Crosse
Location: WIS 35 (West Ave) & Monitor St

Design Hour Turning Movement Data

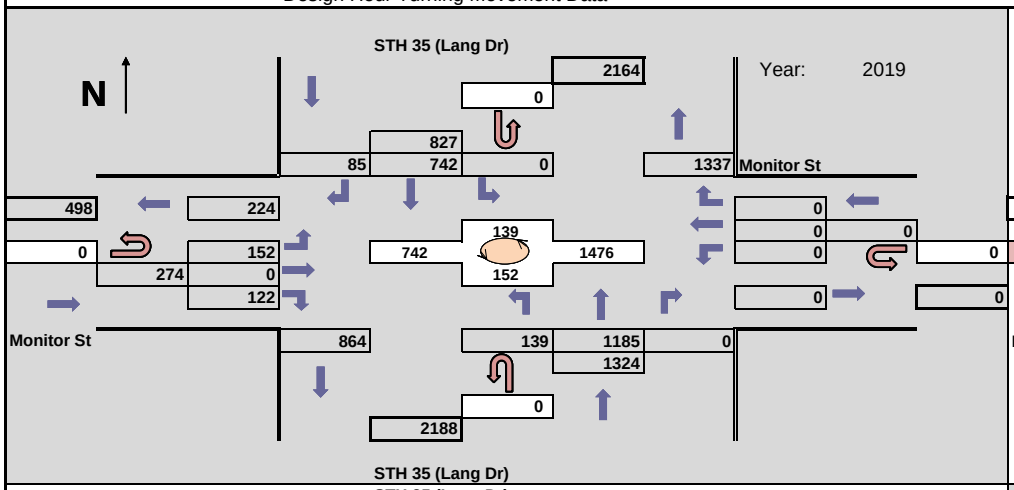

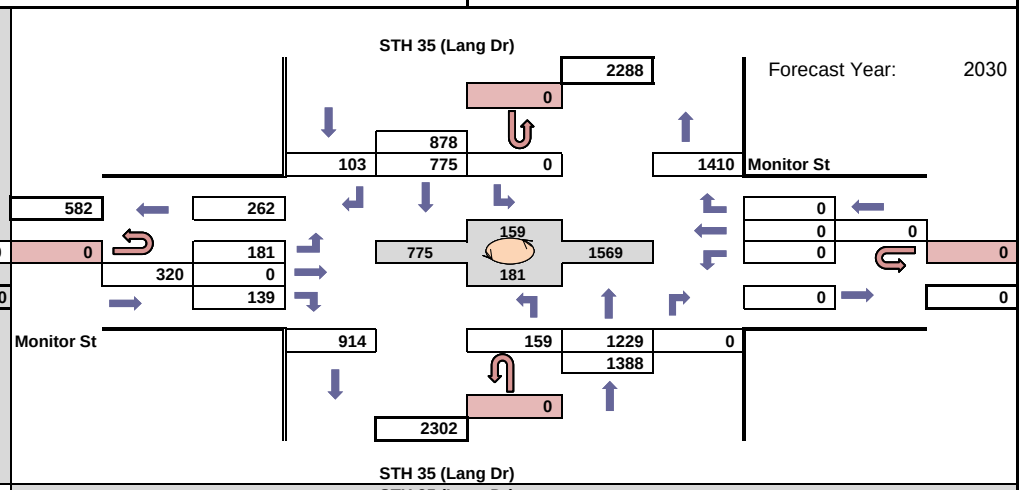

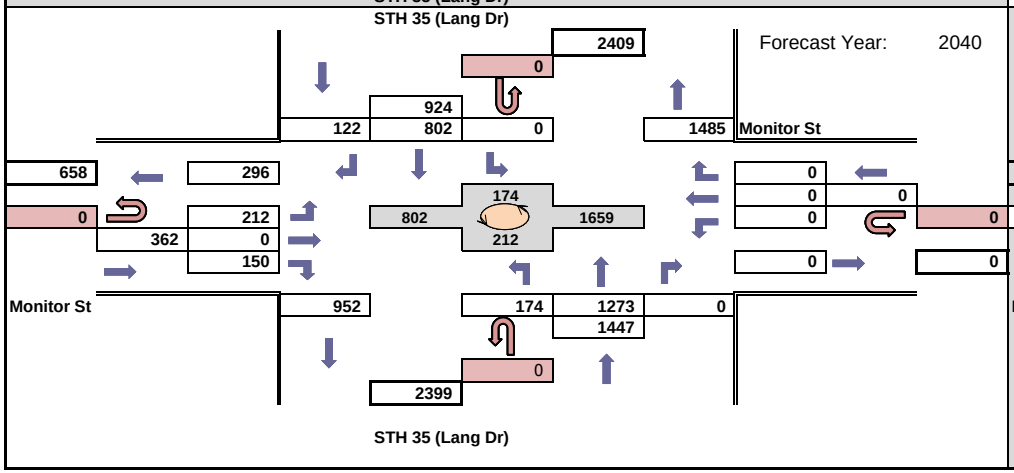

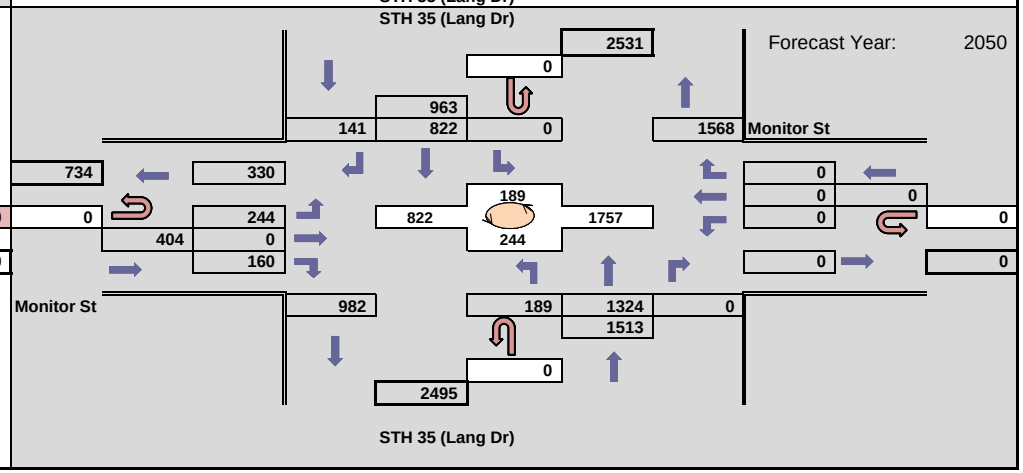

WisDOT TRAFFIC FORECAST REPORT	Region/COUNTY(IES): SW/La Crosse	Developed by: Miao Zhang
PROJECT ID(S): 1630-08-00	LOCATION: STH 53Rose St. Segment	Phone: (608) 266-7995
ROUTE(S): STH 53	COMPLETED: 02/23/2021	
Traffic Forecasting Section; Bureau of Planning and Economic Development; Division of Transportation Investment Management		E-Mail: miao.zhang@dot.wi.gov

Site(s)	Route(s)	Volume(s)	Site Growth %
320405	STH 53	29710	0.73%
320428	STH 53	31140	0.33%
320439	STH 53	14480	0.24%
320457	STH 53	13610	0.17%
326118	STH 53	29610	0.25%

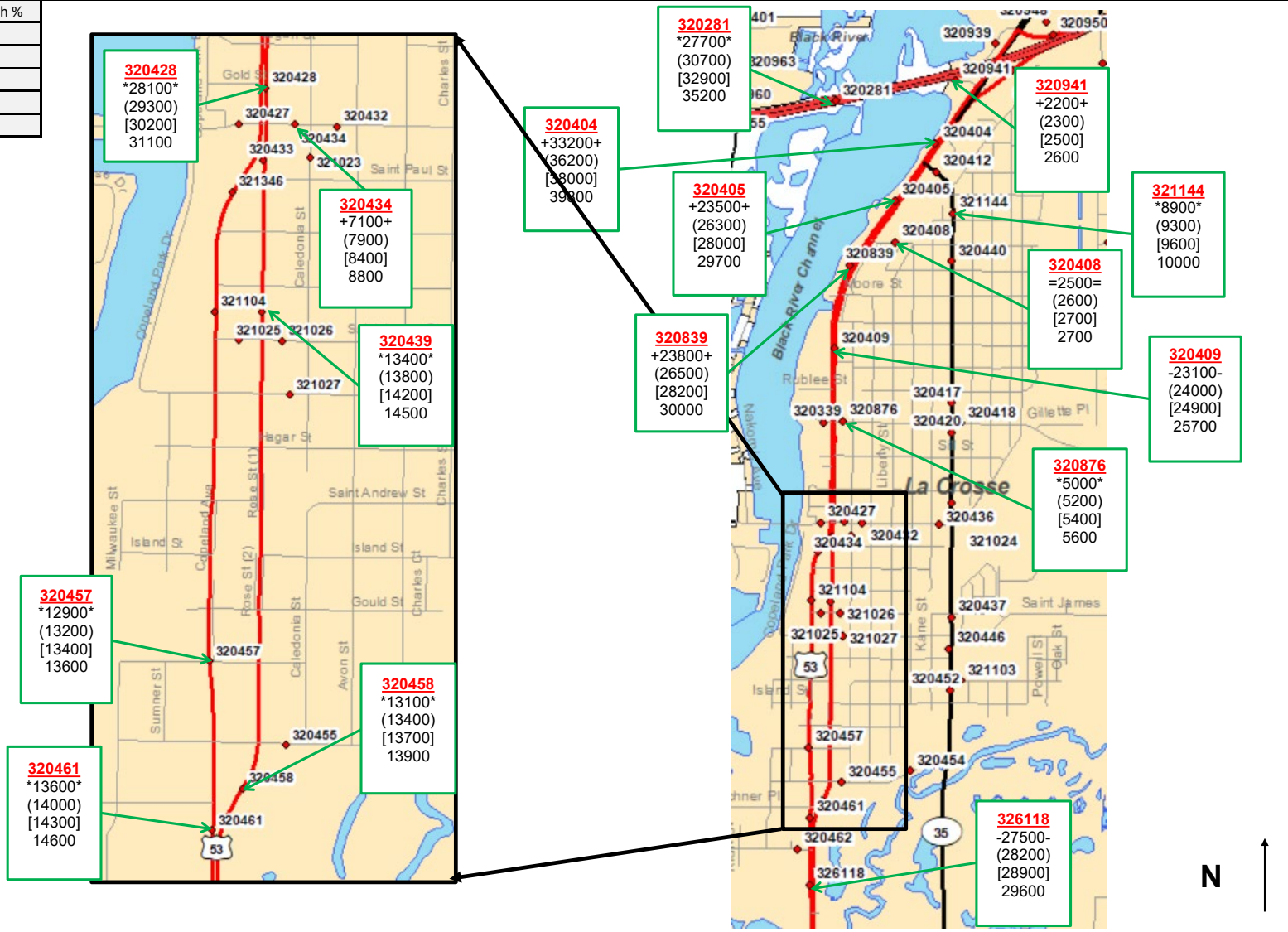

SITE ID = Colored, **bolded**, and underlined

Symbol	Count	Symbol	Forecast
-000-	2019 Count	(000)	2030 AADT
000	2017 Count	[000]	2040 AADT
+000+	2014 Count	000	2050 AADT
=000=	2011 Count		

NOTES ON THE FORECAST:

1. This projection assumes that no major new traffic generators will be added to the development already included in the 2010/2040 La Crosse Regional Travel Demand Model.
2. Vehicle classification data and design values (K factors, directional splits, and percent trucks in design hours) are available here: http://wisconsindot.gov/Pages/projects/data-plan/traf-fore/default.aspx
3. STH 53 is a Factor Group II (Urban-Other) roadways (indicating low to moderate fluctuation in traffic from a seasonal perspective).
4. The 2010/2040 La Crosse Regional Travel Demand Model was used to complete this forecast. The Traffic Analysis Forecasting Information System output was used as a comparison tool to check against the model output. Adjustments were made as needed.
5. Roadway improvements coded within the existing plus committed (E+C) network of the 2010/2040 La Crosse Regional Travel Demand Model were assumed to be in place for the purposes of developing this forecast.

WisDOT Bureau of Planning & Economic Development
Traffic Forecasting Section
Forecast by: Miao Zhang
Phone: (608) 266 - 7995
Email: miao.zhang@dot.wi.gov

Projected AM Design Hour Traffic Volumes

Indicates roundabout

Design Hour: 7:00-8:00am

Forecast Completed: 2/23/2021

Design Hour Turning Movement Data

Project Description

Project ID(s): 1630-08-00
Route(s): USH 53
Region/COUNTY(IES): SW/La Crosse
Location: US 53 & I-90 EB On Ramp

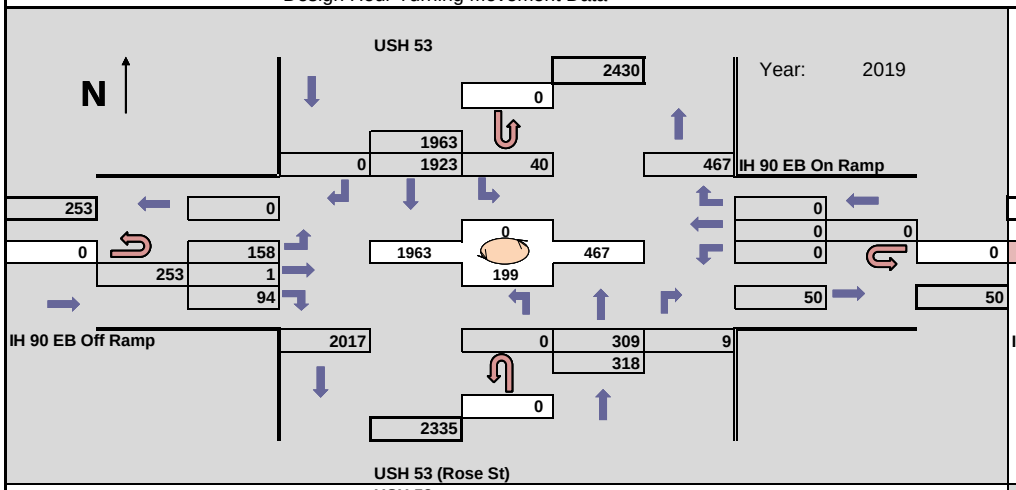

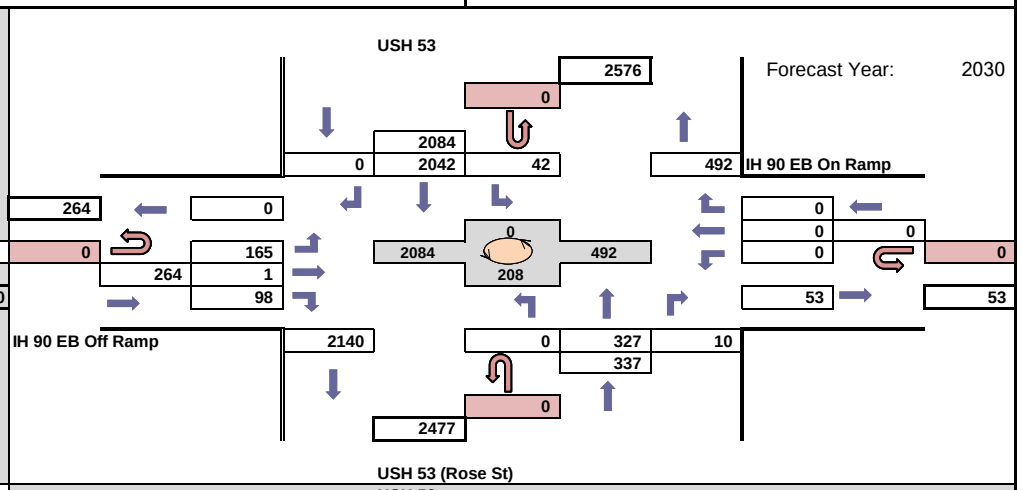

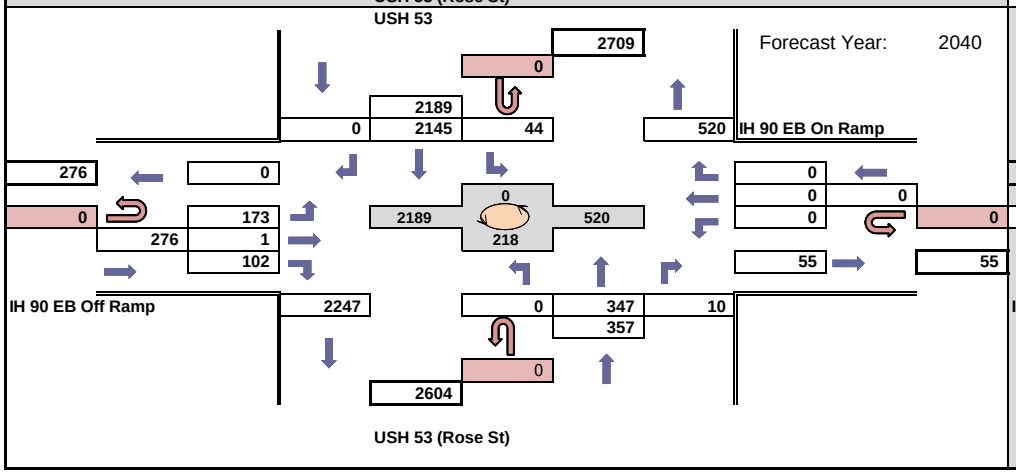

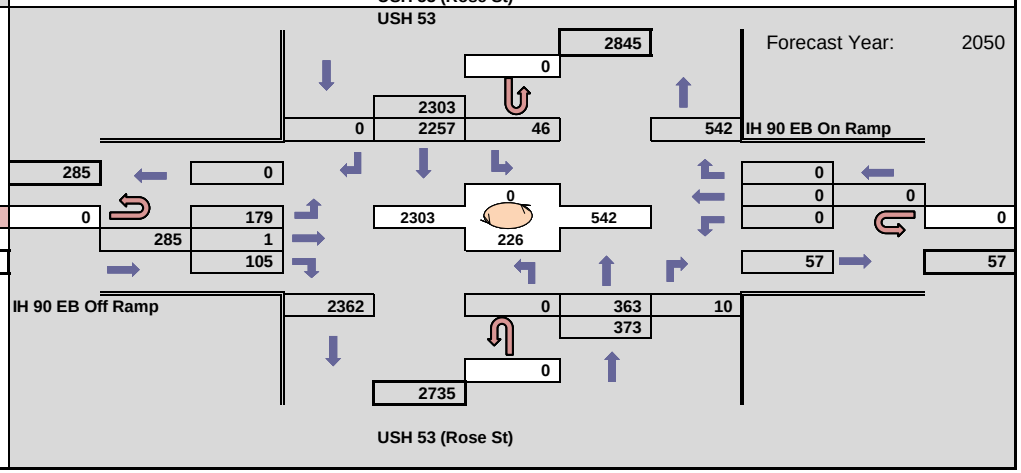

WisDOT Bureau of Planning & Economic Development
Traffic Forecasting Section
Forecast by: Miao Zhang
Phone: (608) 266 - 7995
Email: miao.zhang@dot.wi.gov

Projected PM Design Hour Traffic Volumes

Indicates roundabout

Design Hour: 4:00-5:00pm

Forecast Completed: 2/23/2021

Project Description

Project ID(s): 1630-08-00
Route(s): USH 53
Region/COUNTY(IES): SW/La Crosse
Location: US 53 & I-90 EB On Ramp

Design Hour Turning Movement Data

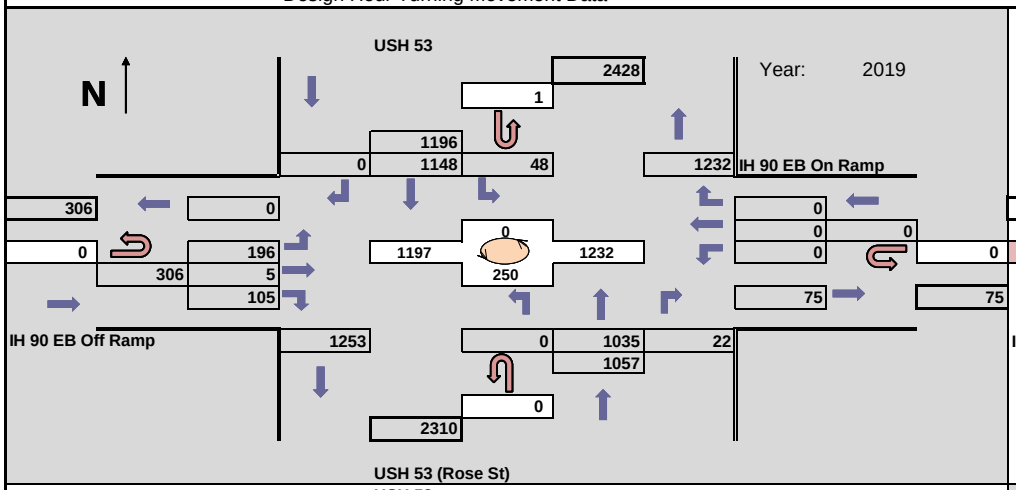

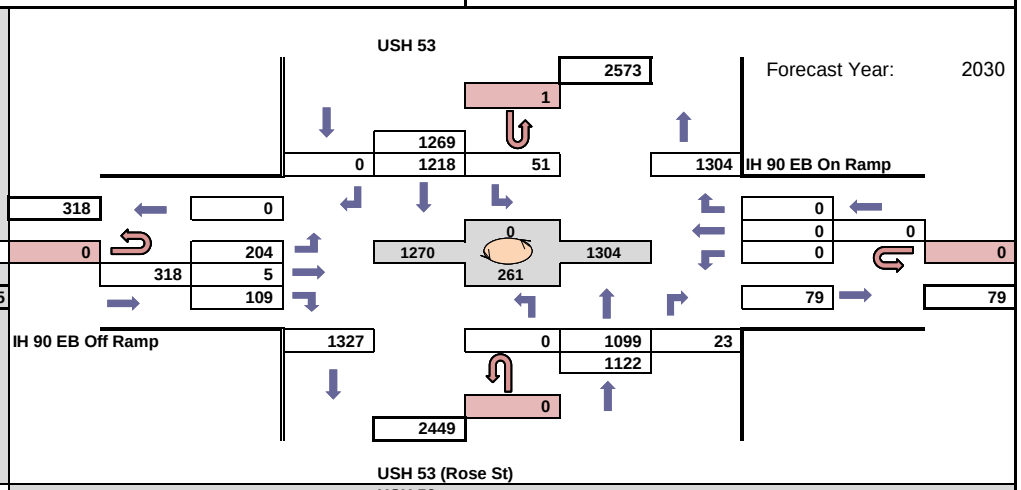

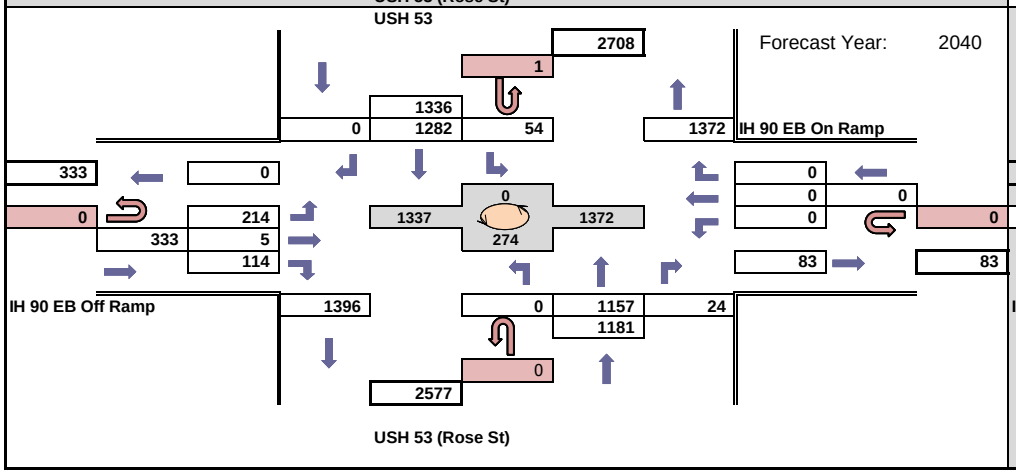

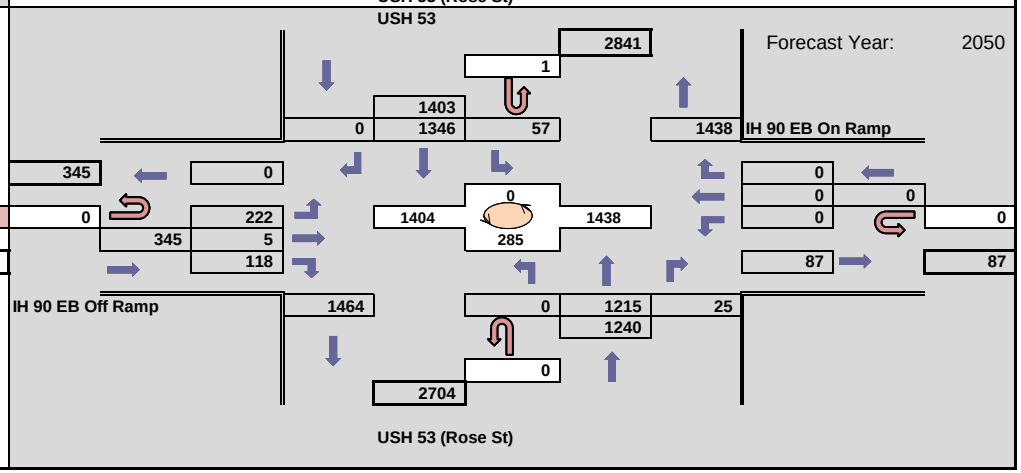

WisDOT Bureau of Planning & Economic Development
Traffic Forecasting Section
Forecast by: Miao Zhang
Phone: (608) 266 - 7995
Email: miao.zhang@dot.wi.gov

Projected AM Design Hour Traffic Volumes

Indicates roundabout

Design Hour: 7:00-8:00am

Forecast Completed: 2/23/2021

Project Description

Project ID(s): 1630-08-00
Route(s): USH 53
Region/COUNTY(IES): SW/La Crosse
Location: US 53 (Rose St) & WIS 35

Design Hour Turning Movement Data

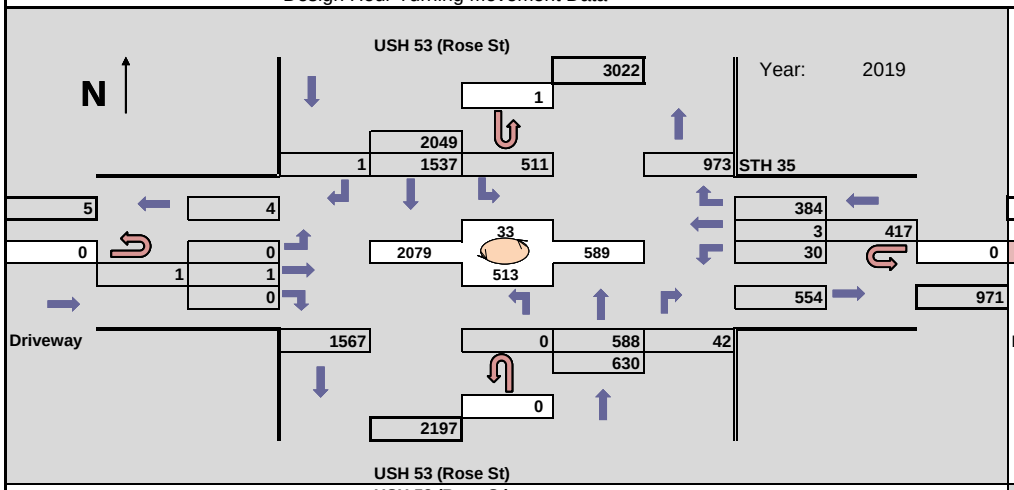

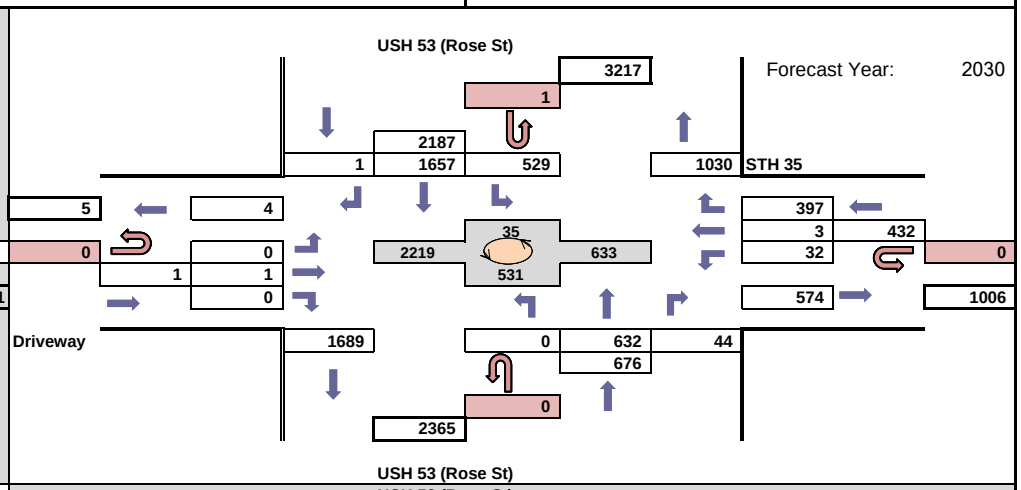

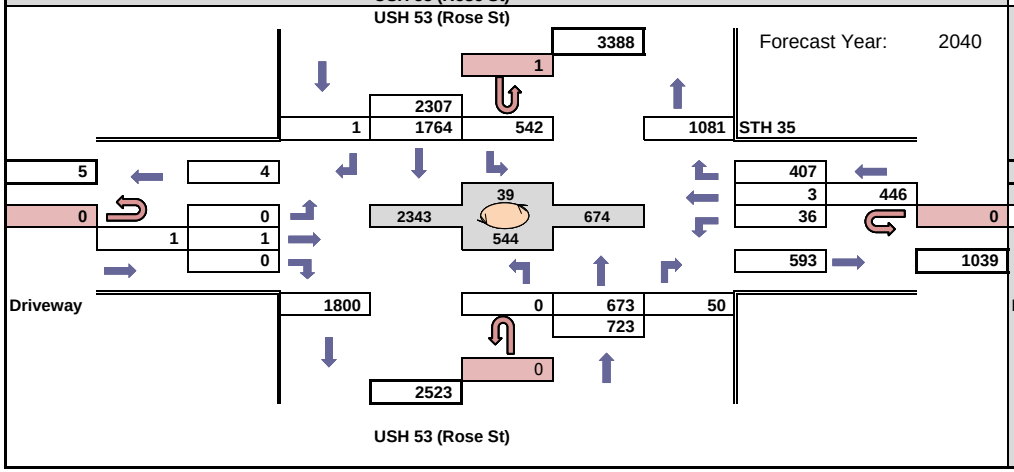

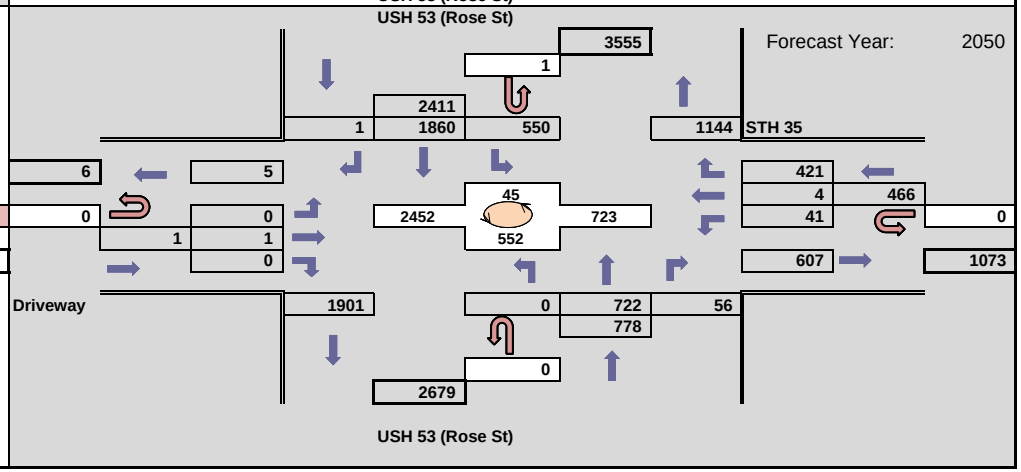

WisDOT Bureau of Planning & Economic Development
Traffic Forecasting Section
Forecast by: Miao Zhang
Phone: (608) 266 - 7995
Email: miao.zhang@dot.wi.gov

Projected PM Design Hour Traffic Volumes

Indicates roundabout

Design Hour: 4:00-5:00pm

Forecast Completed: 2/23/2021

Project Description

Project ID(s): 1630-08-00
Route(s): USH 53
Region/COUNTY(IES): SW/La Crosse
Location: US 53 (Rose St) & WIS 35

Design Hour Turning Movement Data

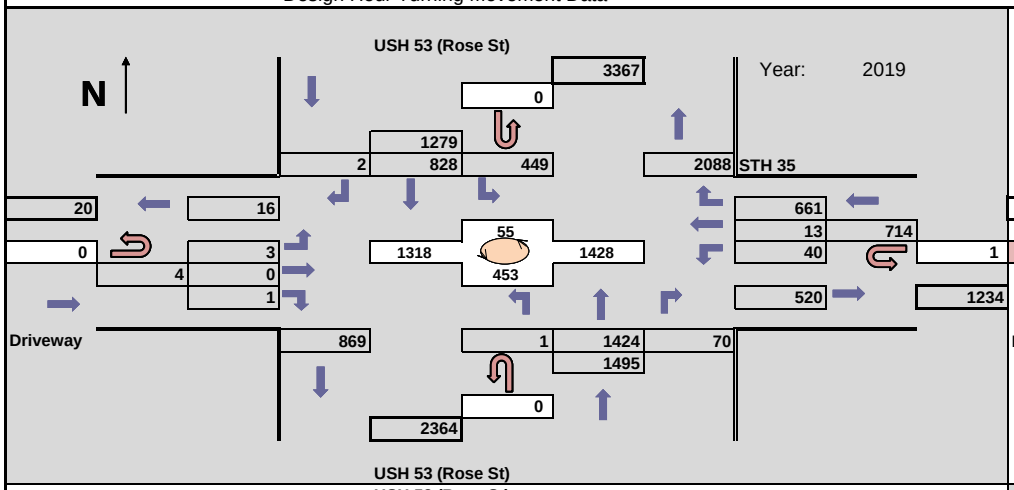

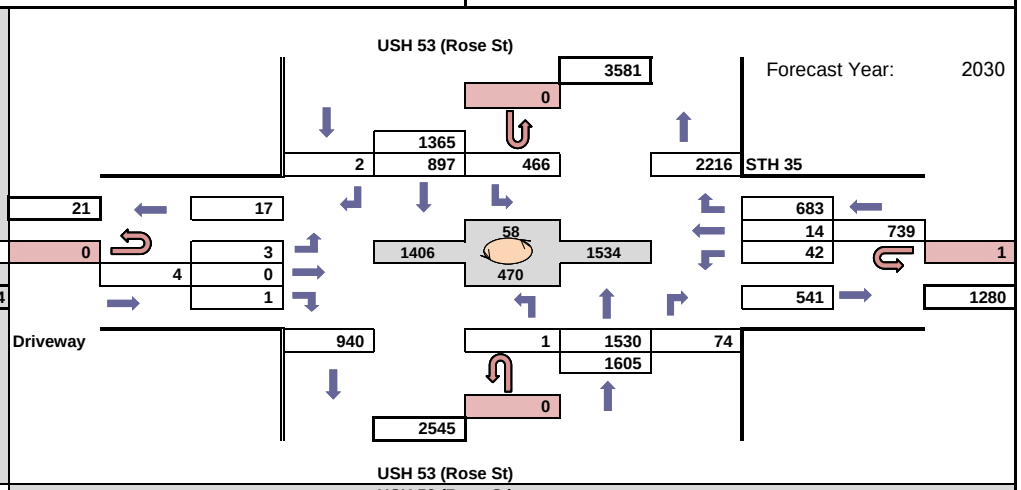

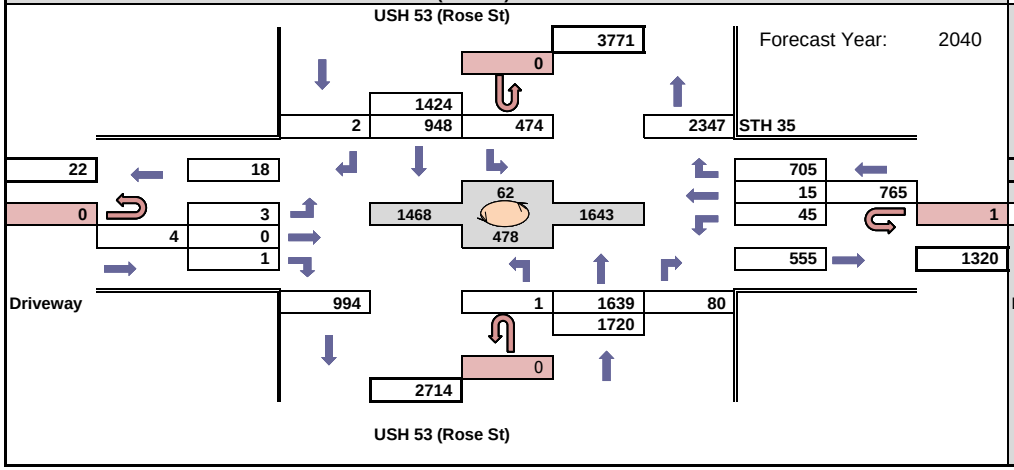

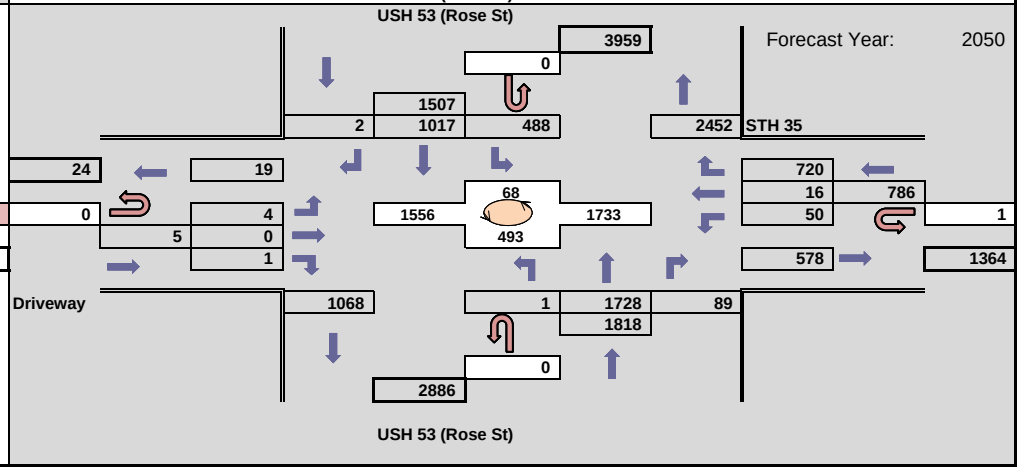

WisDOT Bureau of Planning & Economic Development
Traffic Forecasting Section
Forecast by: Miao Zhang
Phone: (608) 266 - 7995
Email: miao.zhang@dot.wi.gov

Projected AM Design Hour Traffic Volumes

Indicates roundabout

Design Hour: 7:00-8:00am

Forecast Completed: 2/23/2021

Project Description

Project ID(s): 1630-08-00
Route(s): USH 53
Region/COUNTY(IES): SW/La Crosse
Location: US 53 (Rose St) & Palace St

Design Hour Turning Movement Data

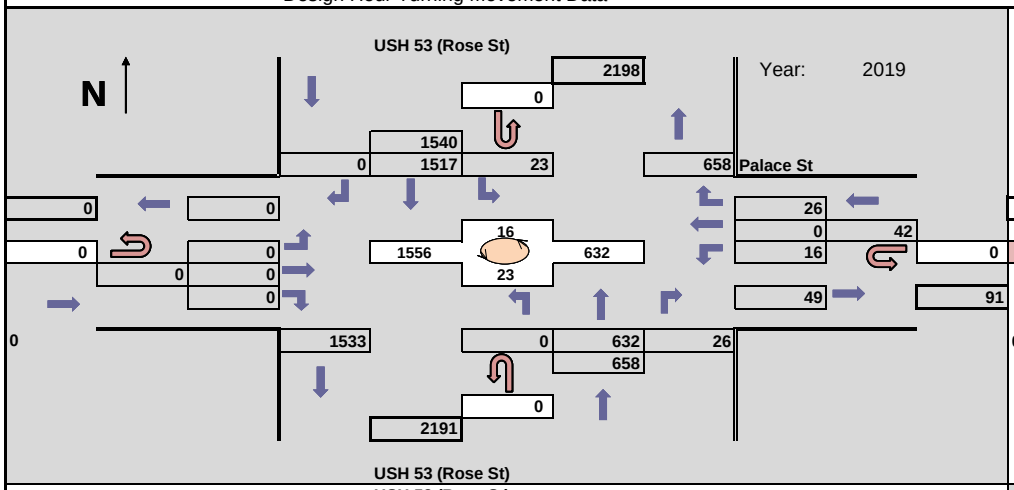

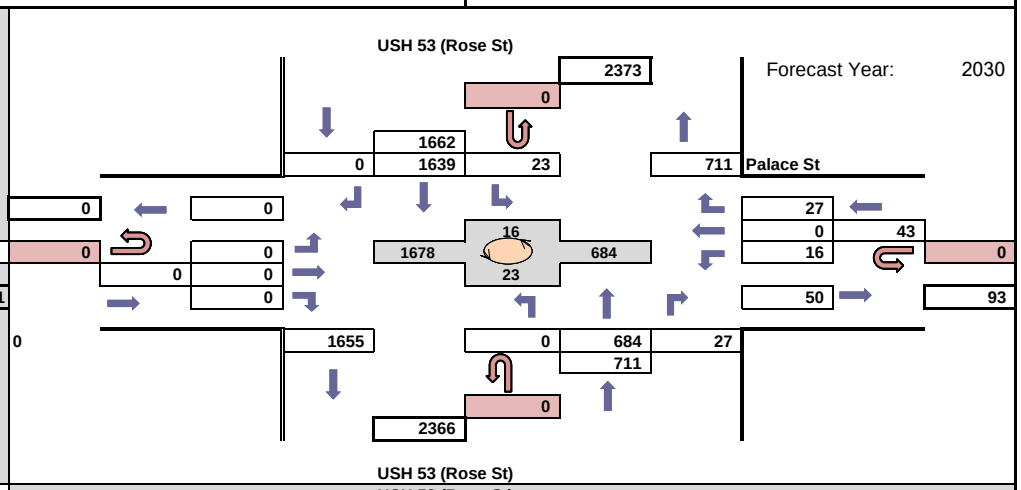

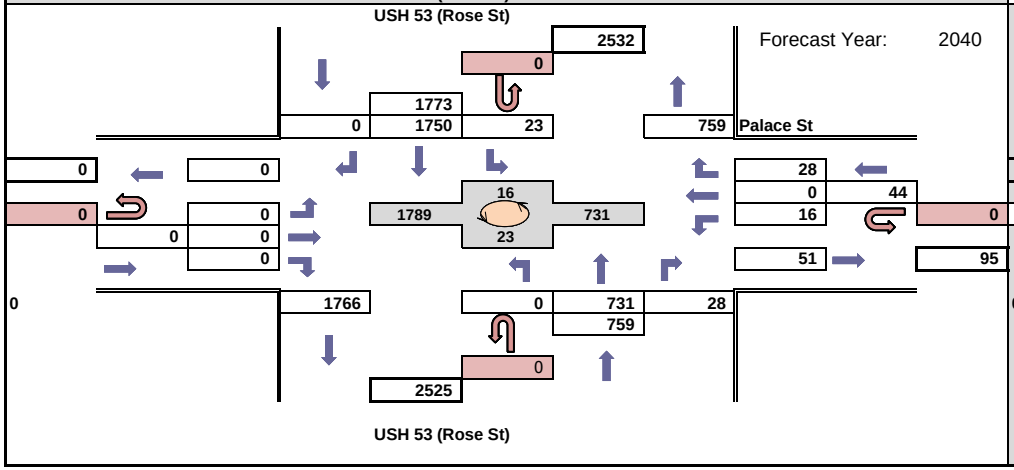

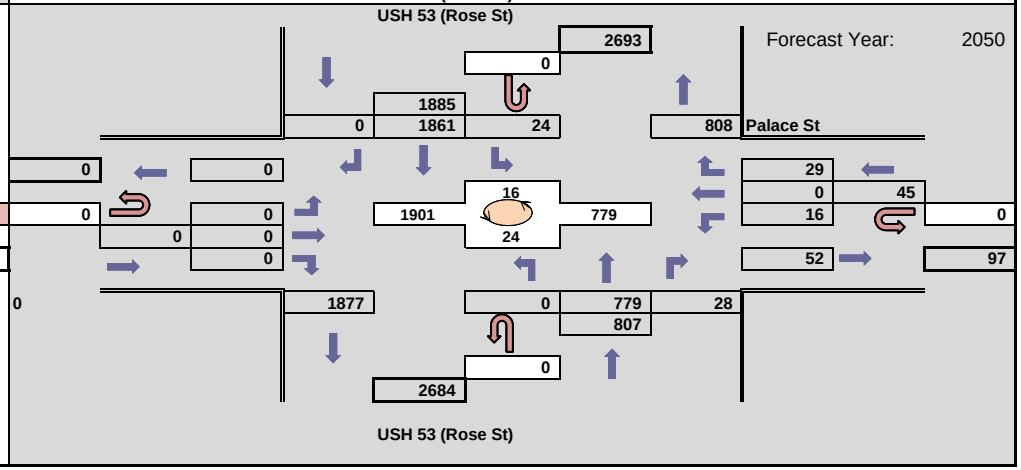

WisDOT Bureau of Planning & Economic Development
Traffic Forecasting Section
Forecast by: Miao Zhang
Phone: (608) 266 - 7995
Email: miao.zhang@dot.wi.gov

Projected PM Design Hour Traffic Volumes

Indicates roundabout

Design Hour: 4:00-5:00pm

Forecast Completed: 2/23/2021

Project Description

Project ID(s): 1630-08-00
Route(s): USH 53
Region/COUNTY(IES): SW/La Crosse
Location: US 53 (Rose St) & Palace St

Design Hour Turning Movement Data

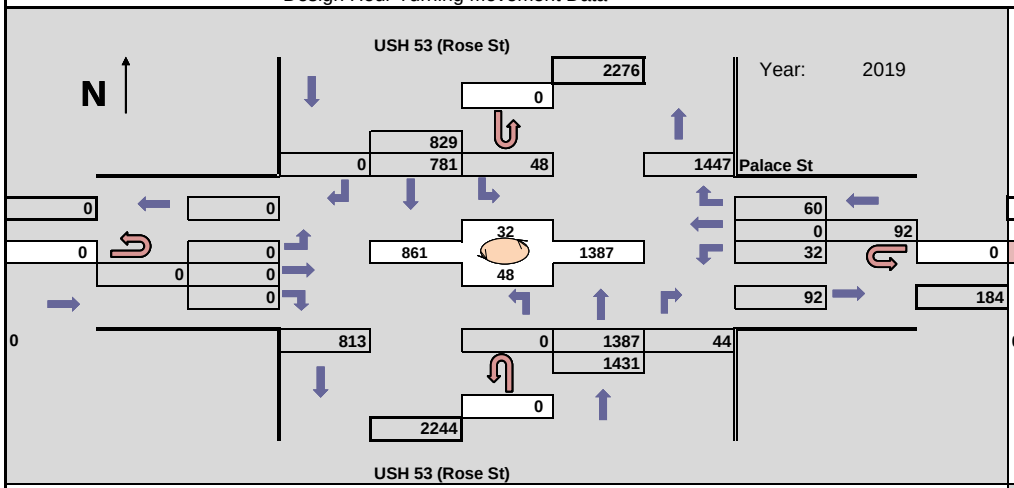

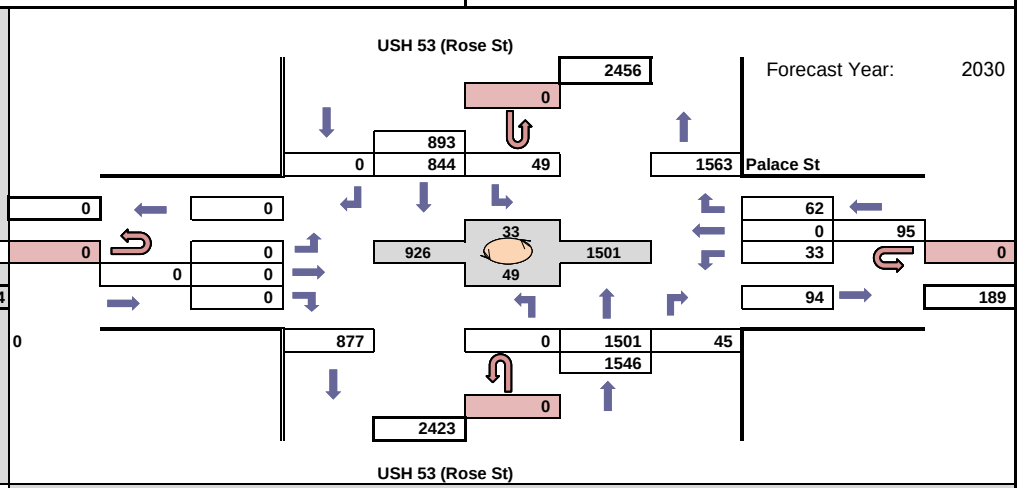

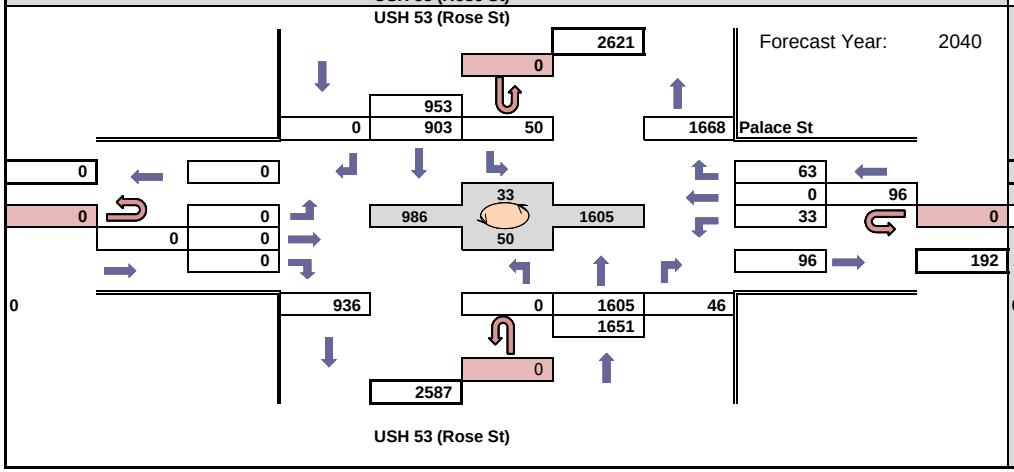

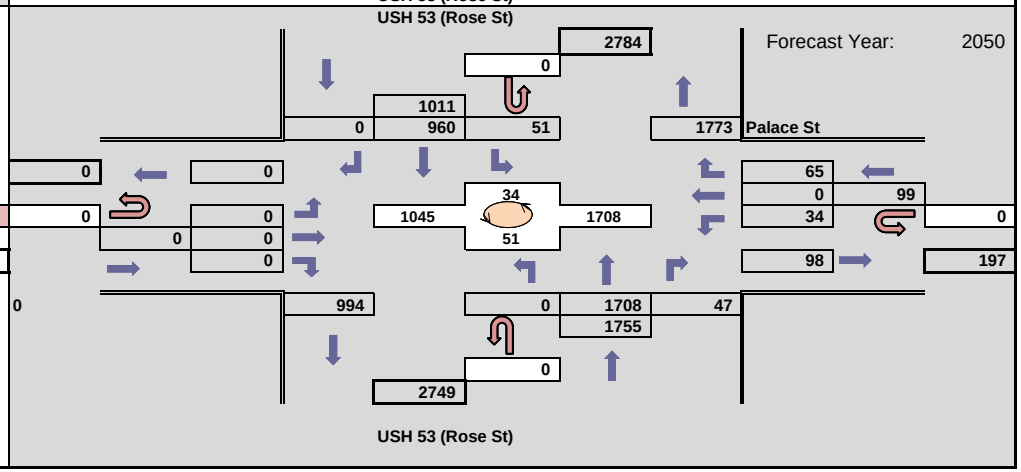

WisDOT Bureau of Planning & Economic Development
Traffic Forecasting Section
Forecast by: Miao Zhang
Phone: (608) 266 - 7995
Email: miao.zhang@dot.wi.gov

Projected AM Design Hour Traffic Volumes

Indicates roundabout

Design Hour: 7:00-8:00am

Forecast Completed: 2/23/2021

Project Description

Project ID(s): 1630-08-00
Route(s): USH 53
Region/COUNTY(IES): SW/La Crosse
Location: US 53 (Rose St) & Gille e St

Design Hour Turning Movement Data

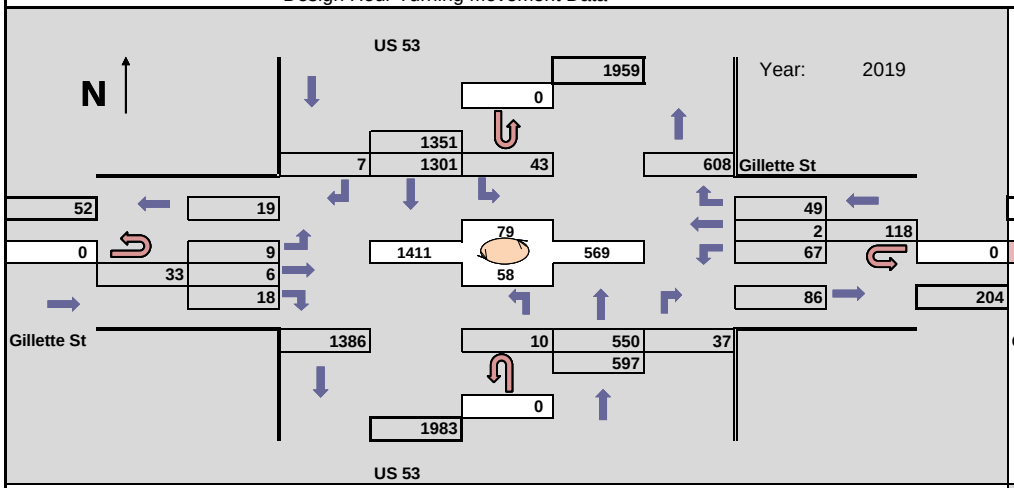

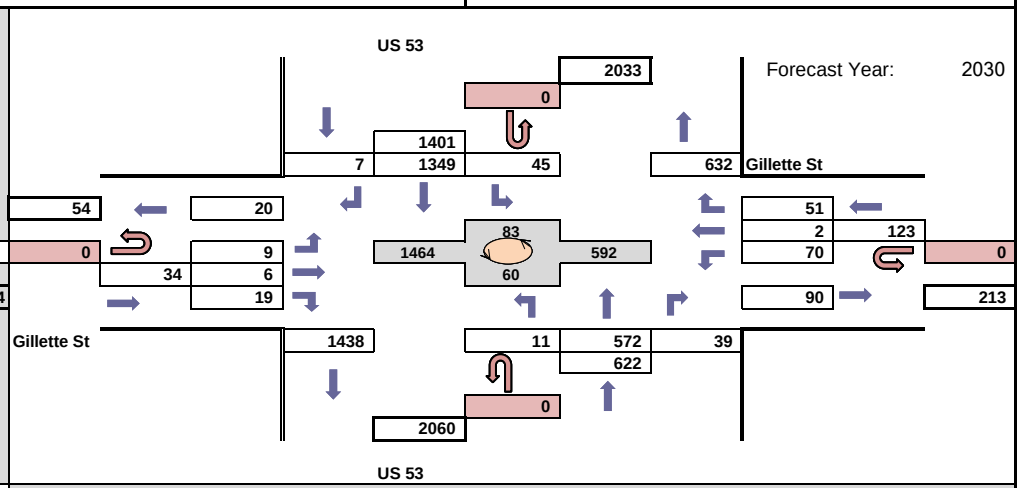

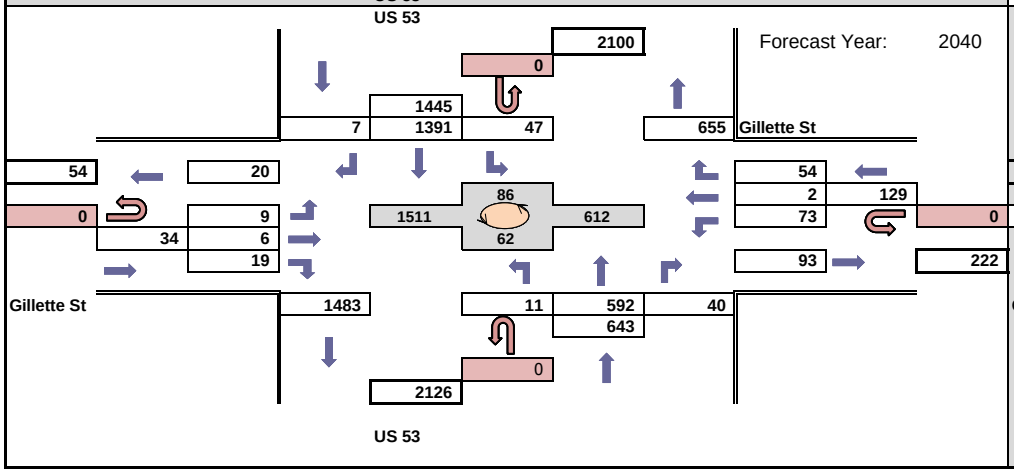

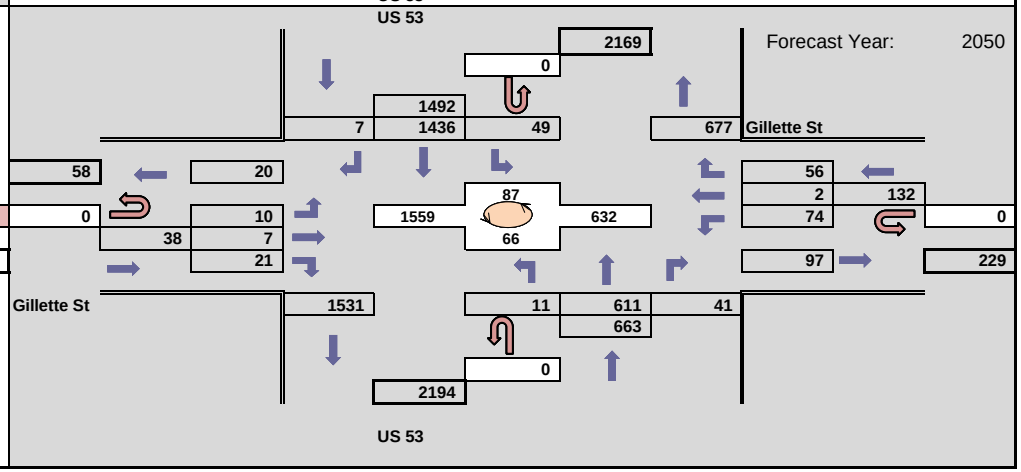

WisDOT Bureau of Planning & Economic Development
Traffic Forecasting Section
Forecast by: Miao Zhang
Phone: (608) 266 - 7995
Email: miao.zhang@dot.wi.gov

Projected PM Design Hour Traffic Volumes

Indicates roundabout

Design Hour: 4:00-5:00pm

Forecast Completed: 2/23/2021

Project Description

Project ID(s): 1630-08-00
Route(s): USH 53
Region/COUNTY(IES): SW/La Crosse
Location: US 53 (Rose St) & Gille□e St

Design Hour Turning Movement Data

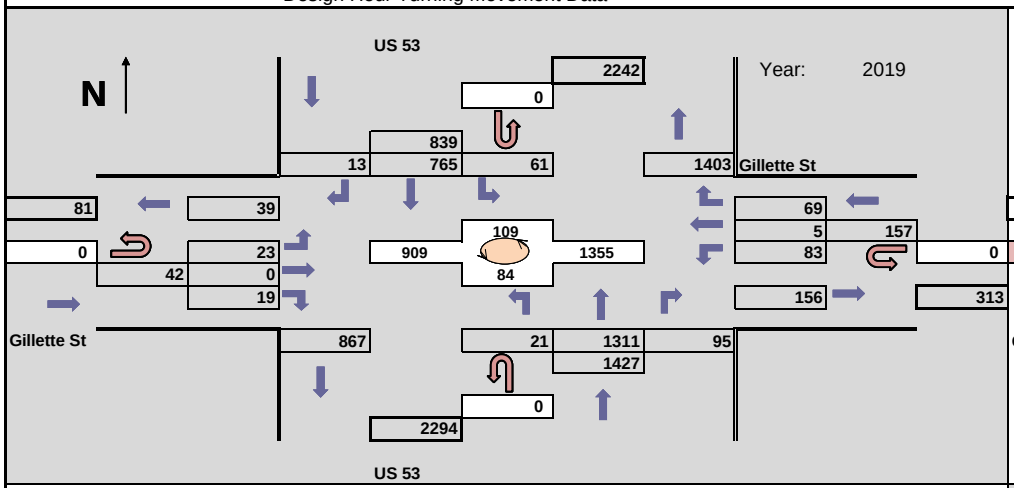

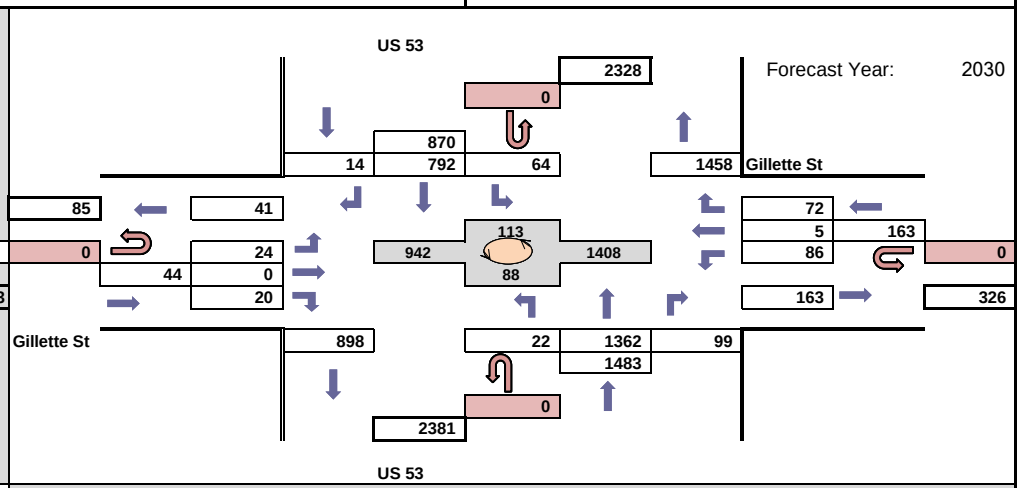

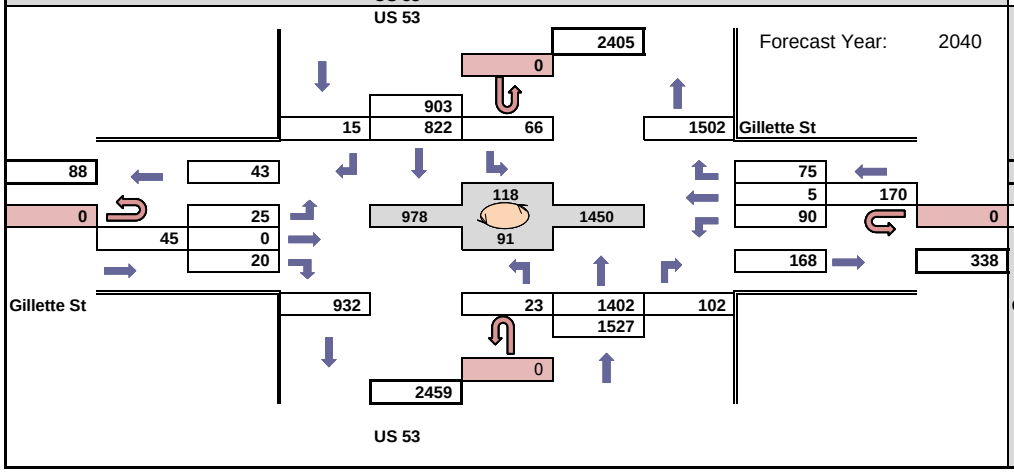

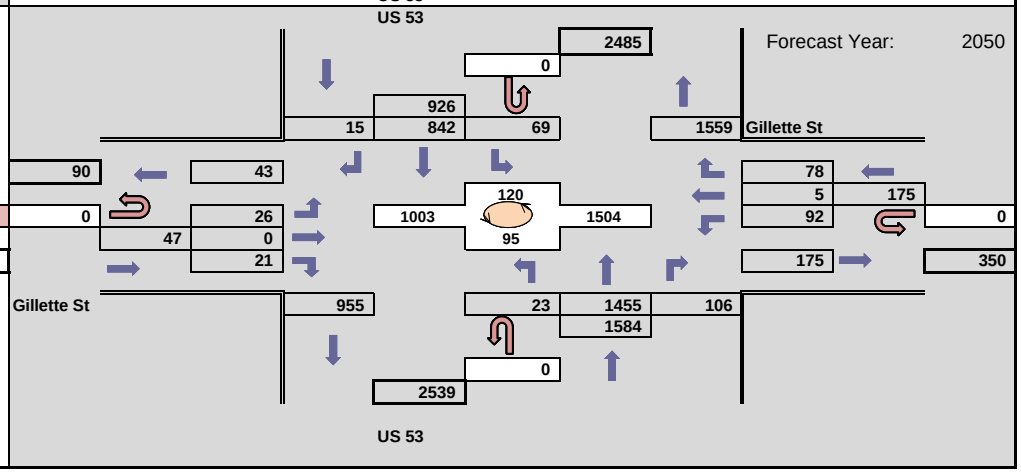

WisDOT Bureau of Planning & Economic Development
Traffic Forecasting Section
Forecast by: Miao Zhang
Phone: (608) 266 - 7995
Email: miao.zhang@dot.wi.gov

Projected AM Design Hour Traffic Volumes

Indicates roundabout

Design Hour: 7:00-8:00am

Forecast Completed: 2/23/2021

Project Description

Project ID(s): 1630-08-00
Route(s): USH 53
Region/COUNTY(IES): SW/La Crosse
Location: US 53 (Rose St) & Clinton St

Design Hour Turning Movement Data

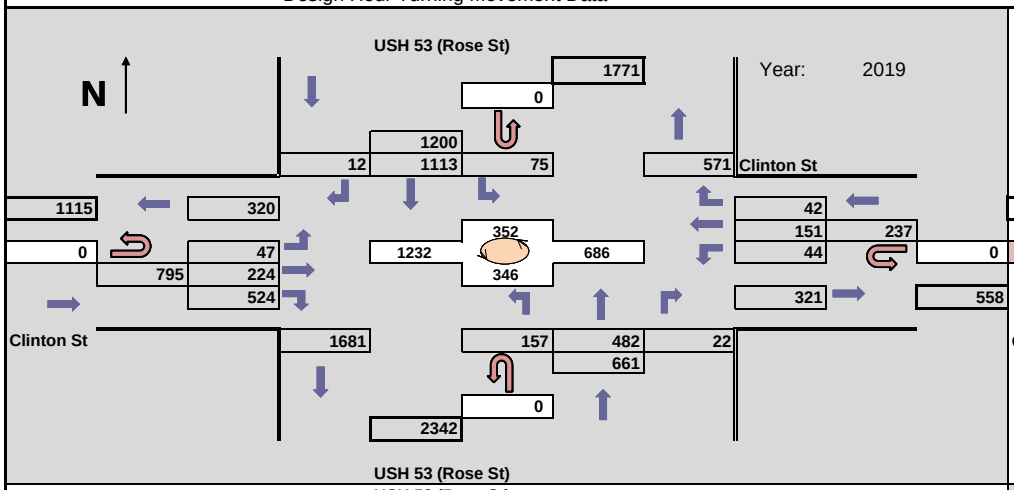

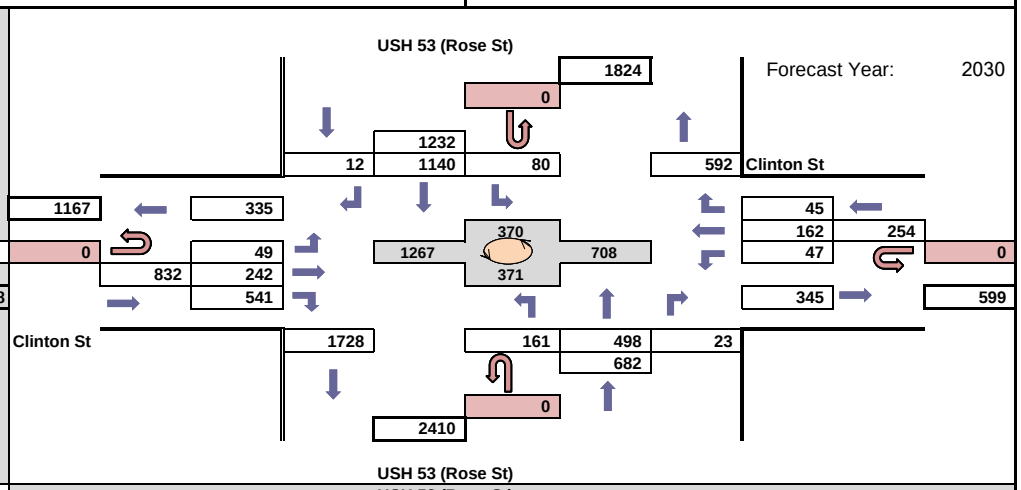

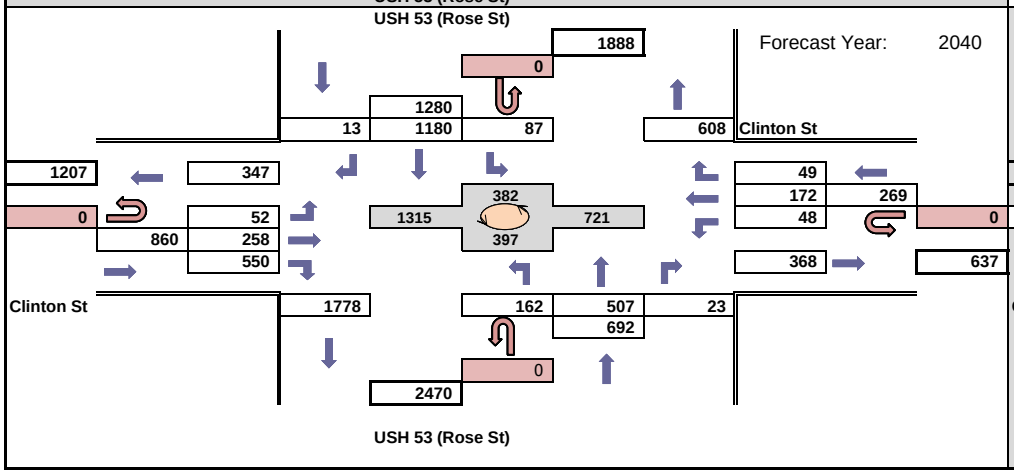

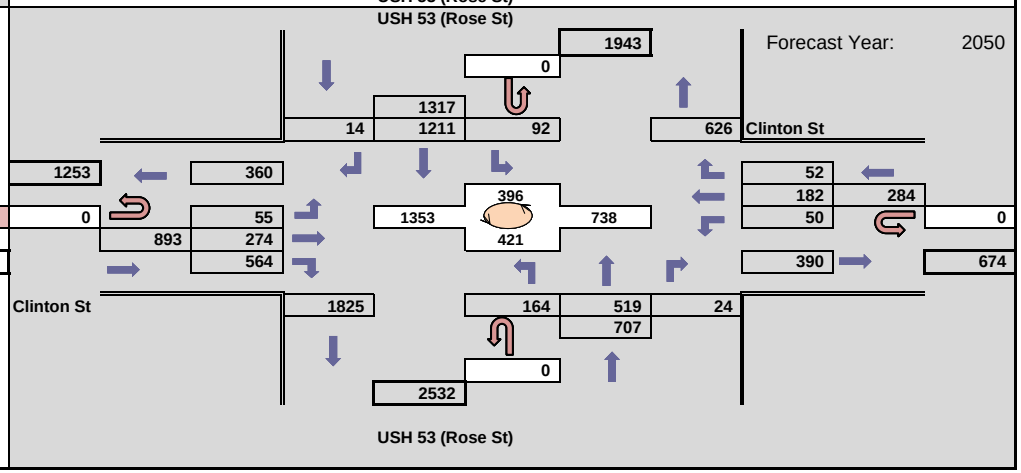

WisDOT Bureau of Planning & Economic Development
Traffic Forecasting Section
Forecast by: Miao Zhang
Phone: (608) 266 - 7995
Email: miao.zhang@dot.wi.gov

Projected PM Design Hour Traffic Volumes

Indicates roundabout

Design Hour: 4:00-5:00pm

Forecast Completed: 2/23/2021

Project Description

Project ID(s): 1630-08-00
Route(s): USH 53
Region/COUNTY(IES): SW/La Crosse
Location: US 53 (Rose St) & Clinton St

Design Hour Turning Movement Data

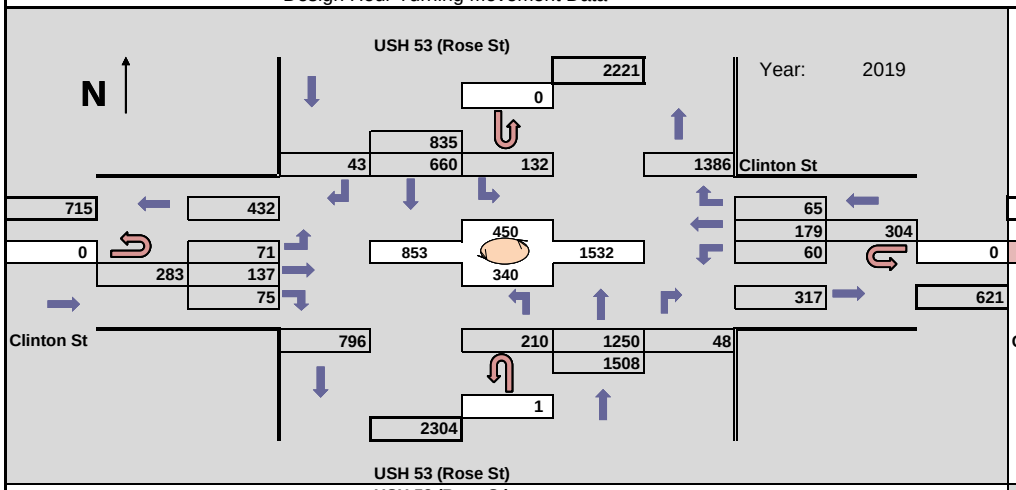

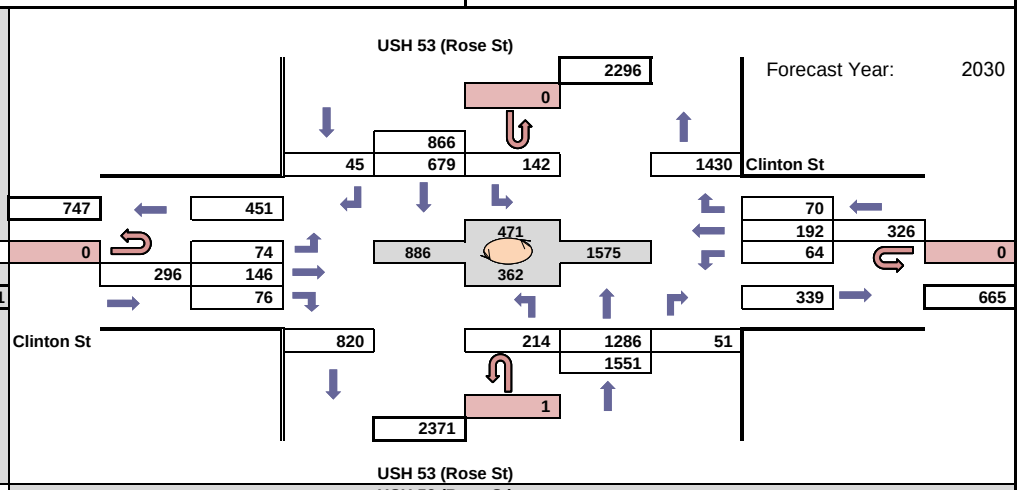

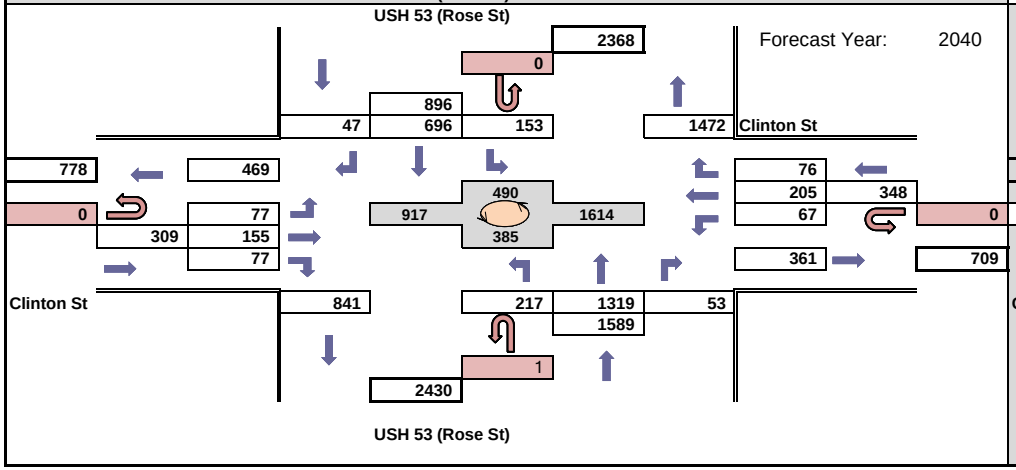

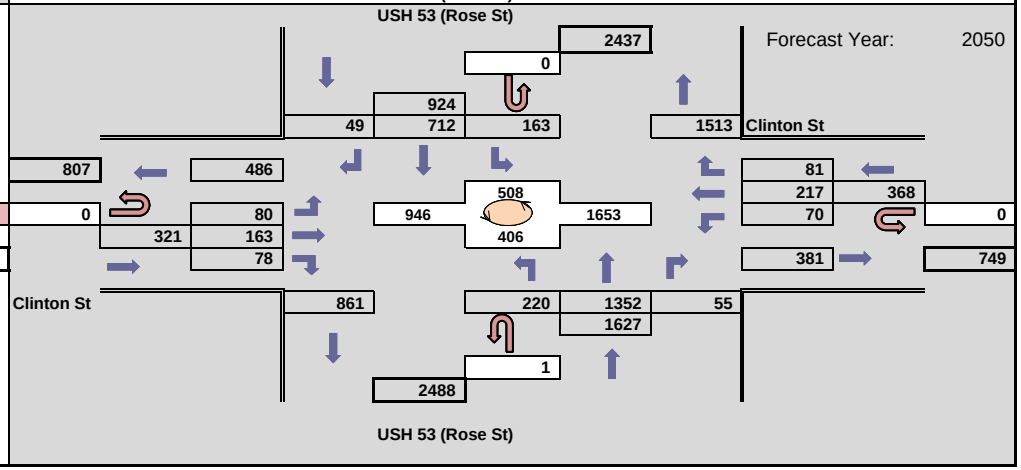

WisDOT Bureau of Planning & Economic Development
Traffic Forecasting Section
Forecast by: Miao Zhang
Phone: (608) 266 - 7995
Email: miao.zhang@dot.wi.gov

Projected AM Design Hour Traffic Volumes

Indicates roundabout

Design Hour: 8:00-9:00am

Forecast Completed: 2/23/2021

Project Description

Project ID(s): 1630-08-00
Route(s): USH 53
Region/COUNTY(IES): SW/La Crosse
Location: US 53 NB (Rose St) & St. James St

Design Hour Turning Movement Data

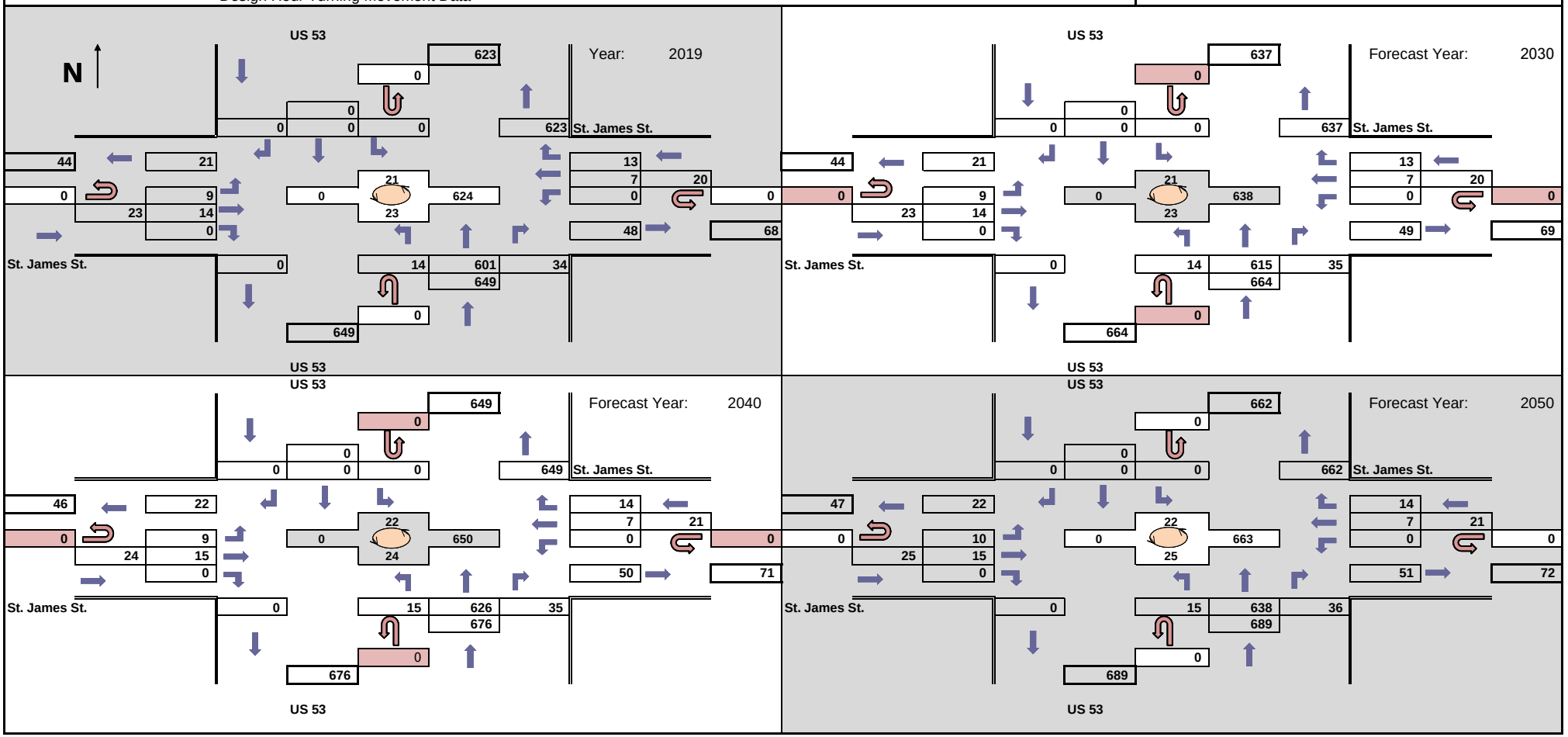

WisDOT Bureau of Planning & Economic Development
Traffic Forecasting Section
Forecast by: Miao Zhang
Phone: (608) 266 - 7995
Email: miao.zhang@dot.wi.gov

Projected PM Design Hour Traffic Volumes

Indicates roundabout

Design Hour: 4:00-5:00pm

Forecast Completed: 2/23/2021

Project Description

Project ID(s): 1630-08-00
Route(s): USH 53
Region/COUNTY(IES): SW/La Crosse
Location: US 53 NB (Rose St) & St. James St

Design Hour Turning Movement Data

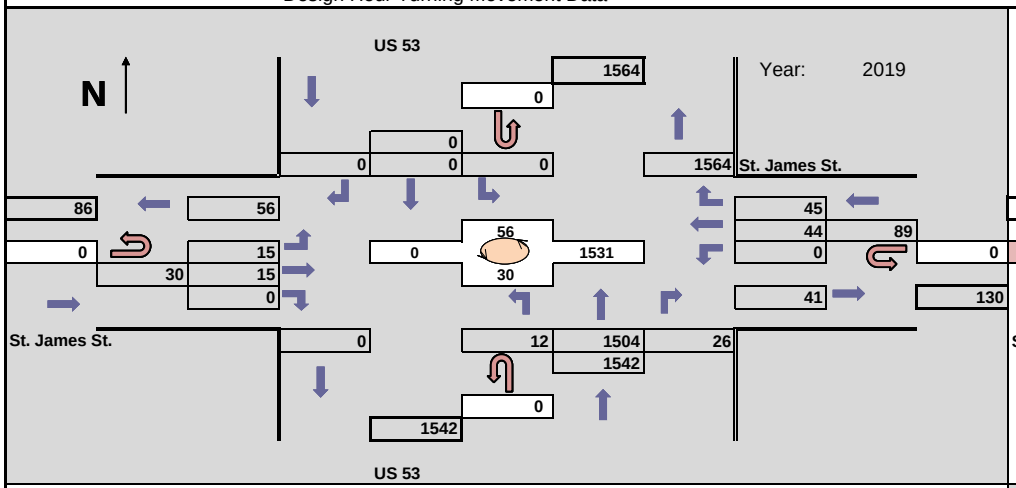

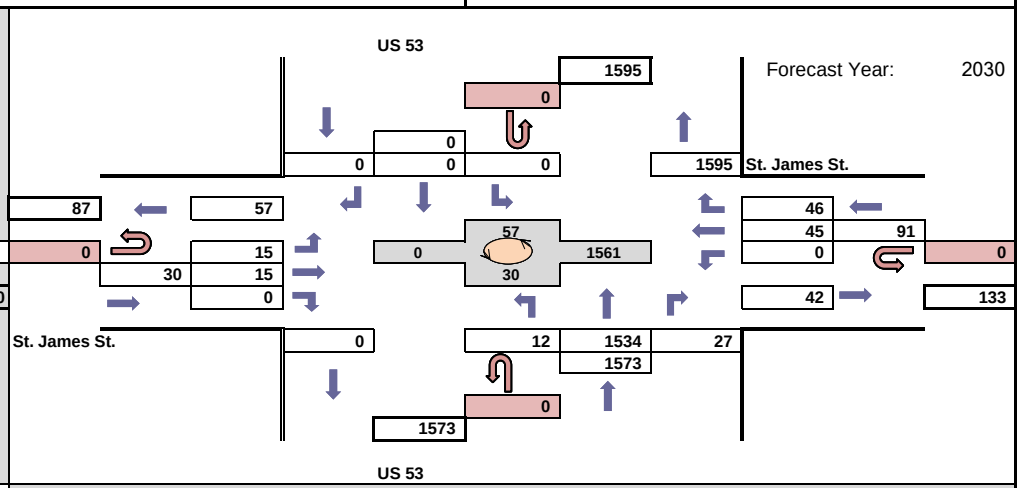

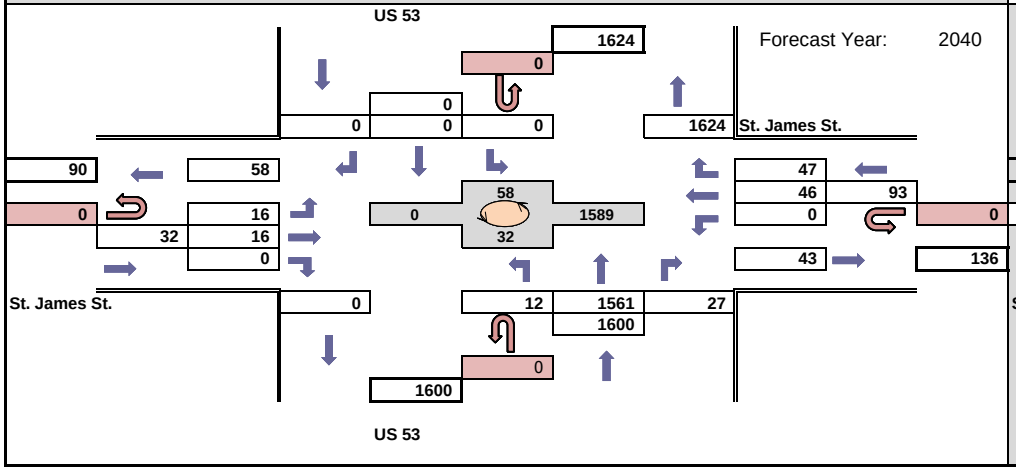

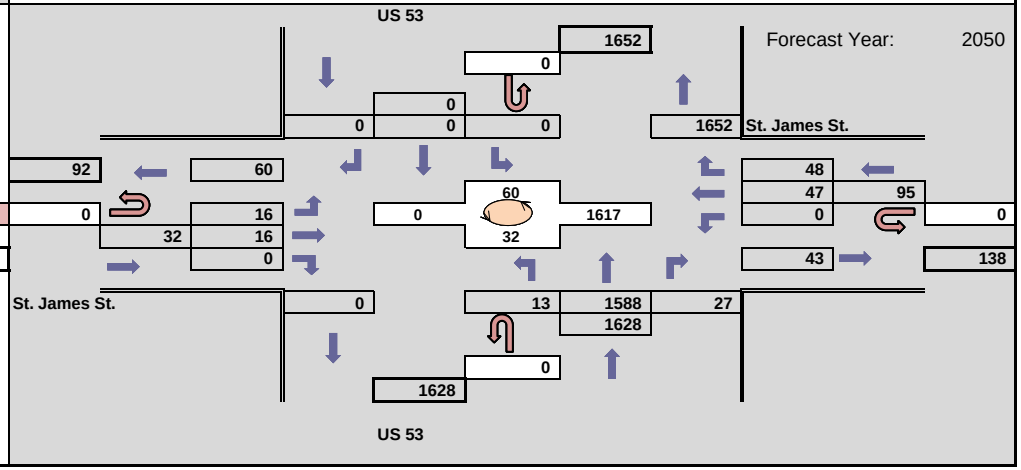

WisDOT Bureau of Planning & Economic Development
Traffic Forecasting Section
Forecast by: Miao Zhang
Phone: (608) 266 - 7995
Email: miao.zhang@dot.wi.gov

Projected AM Design Hour Traffic Volumes

Indicates roundabout

Design Hour: 7:00-8:00am

Forecast Completed: 2/23/2021

Project Description

Project ID(s): 1630-08-00
Route(s): USH 53
Region/COUNTY(IES): SW/La Crosse
Location: US 53 NB (Rose St) & Hagar St

Design Hour Turning Movement Data

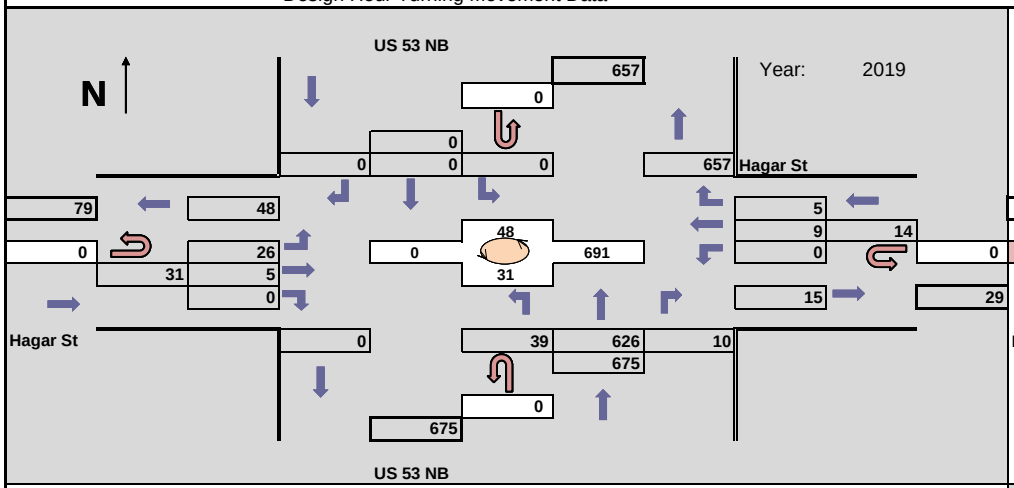

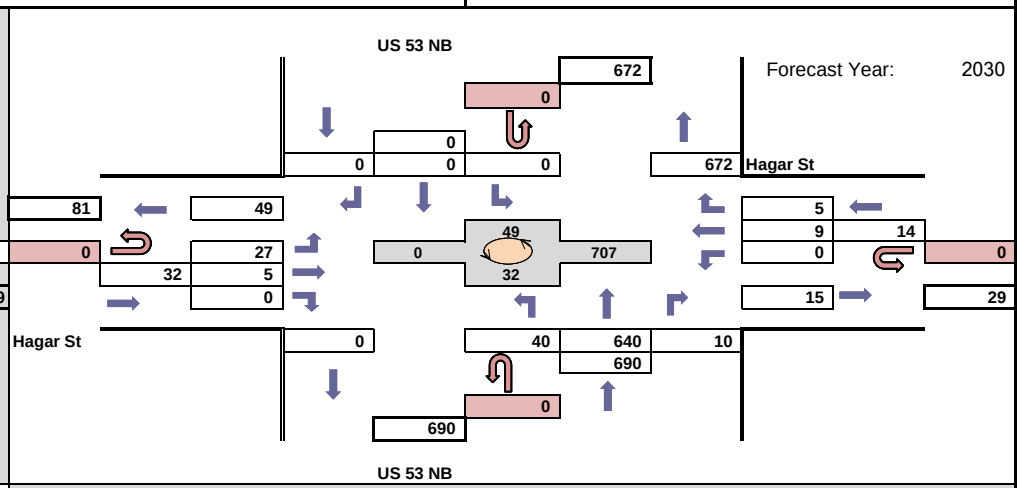

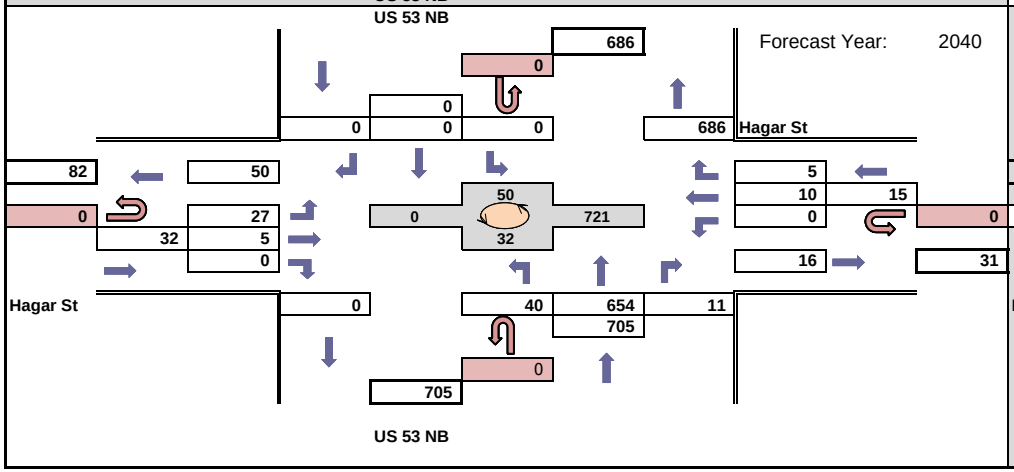

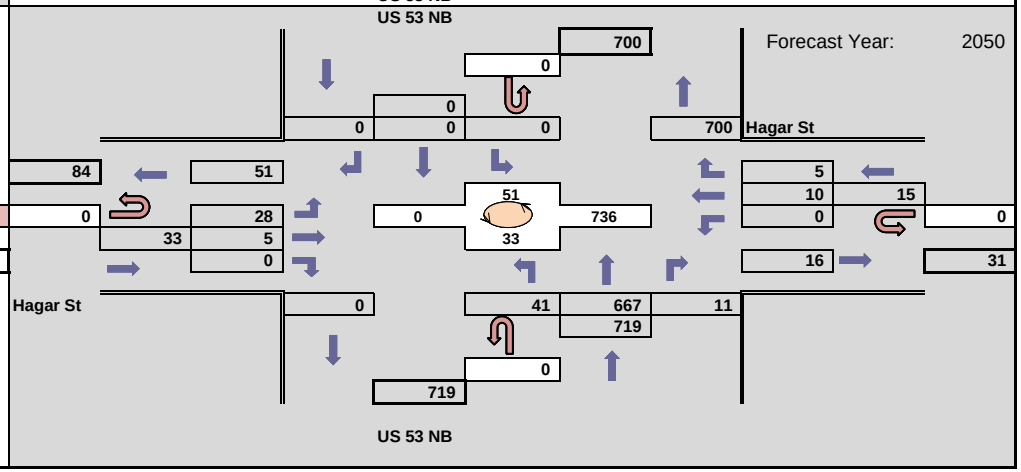

WisDOT Bureau of Planning & Economic Development
Traffic Forecasting Section
Forecast by: Miao Zhang
Phone: (608) 266 - 7995
Email: miao.zhang@dot.wi.gov

Projected PM Design Hour Traffic Volumes

Indicates roundabout

Design Hour: 4:00-5:00pm

Forecast Completed: 2/23/2021

Project Description

Project ID(s): 1630-08-00
Route(s): USH 53
Region/COUNTY(IES): SW/La Crosse
Location: US 53 NB (Rose St) & Hagar St

Design Hour Turning Movement Data

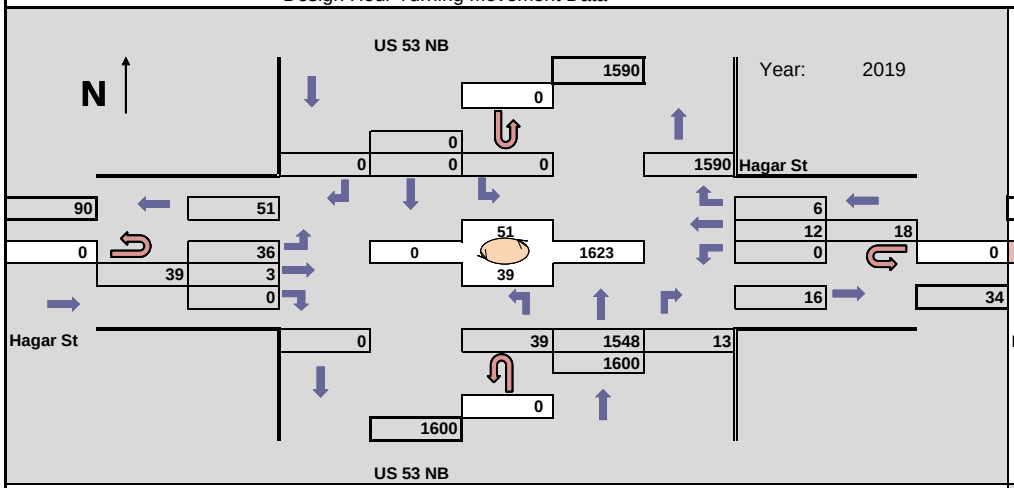

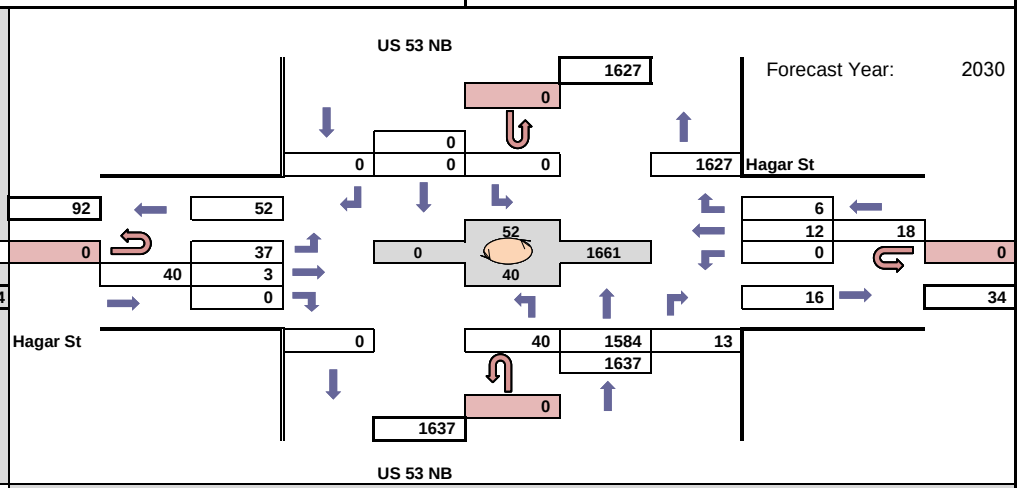

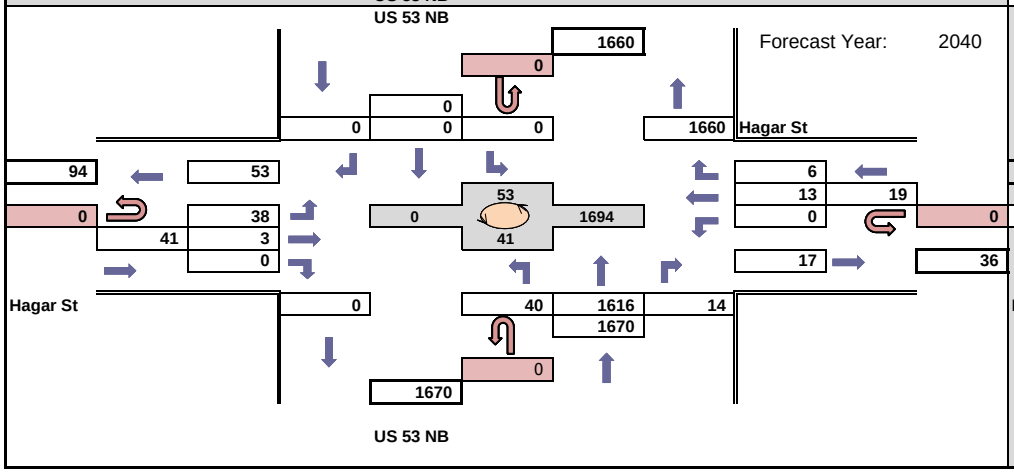

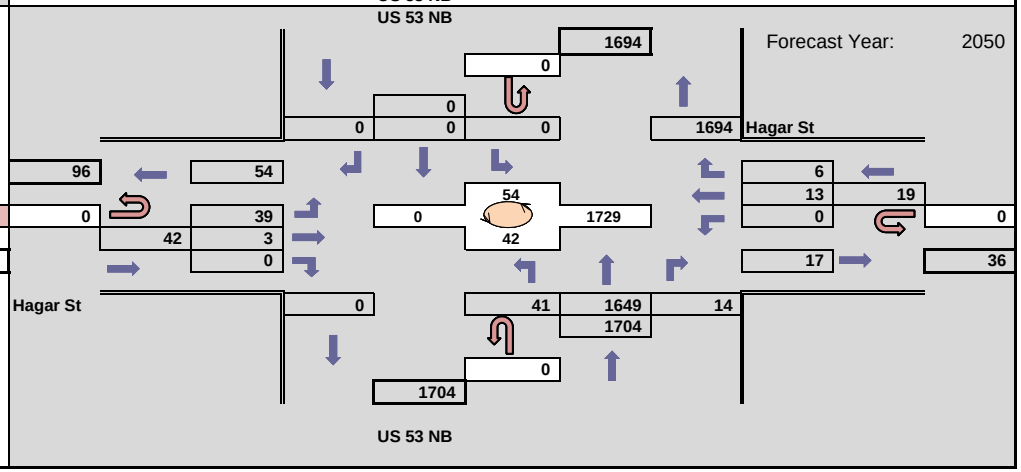

WisDOT Bureau of Planning & Economic Development
Traffic Forecasting Section
Forecast by: Miao Zhang
Phone: (608) 266 - 7995
Email: miao.zhang@dot.wi.gov

Projected AM Design Hour Traffic Volumes

Indicates roundabout

Design Hour: 7:00-8:00am

Forecast Completed: 2/23/2021

Project Description

Project ID(s): 1630-08-00
Route(s): USH 53
Region/COUNTY(IES): SW/La Crosse
Location: US 53 SB (Copeland Ave) & Hagar St

Design Hour Turning Movement Data

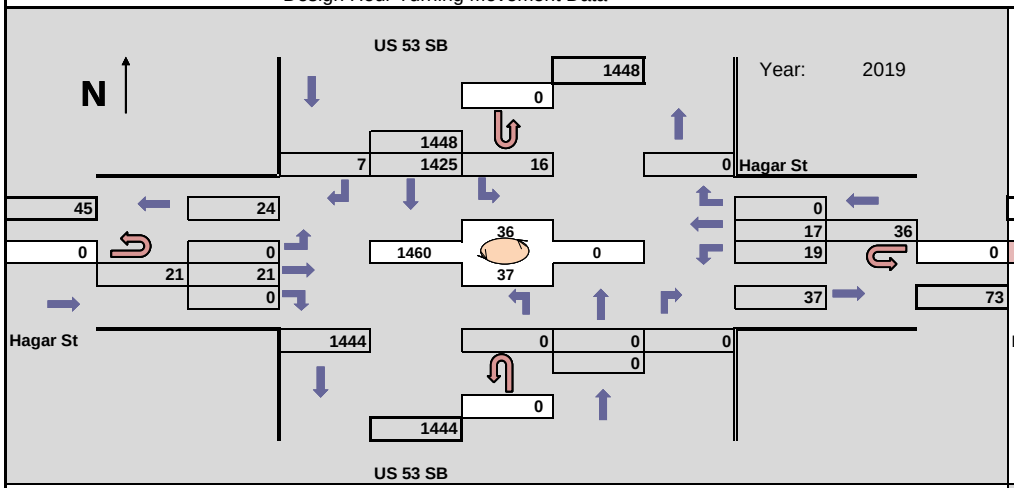

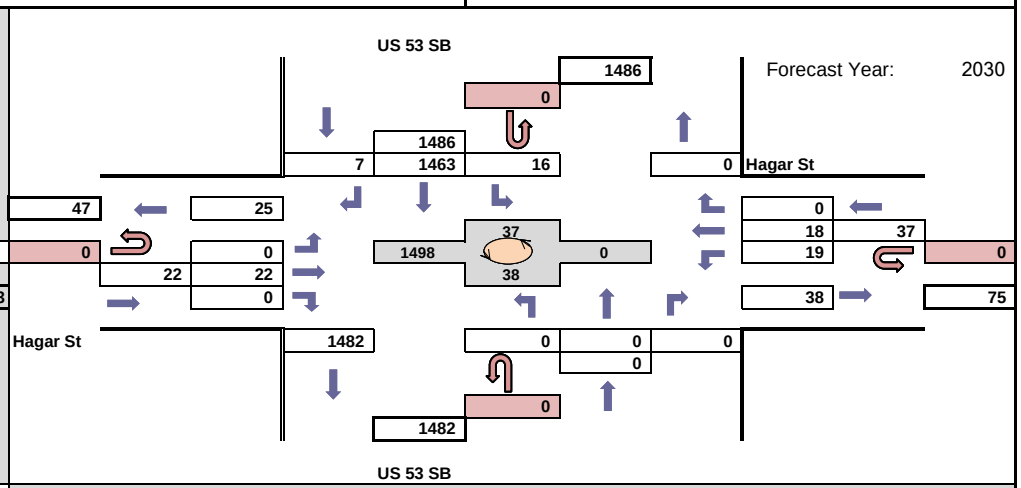

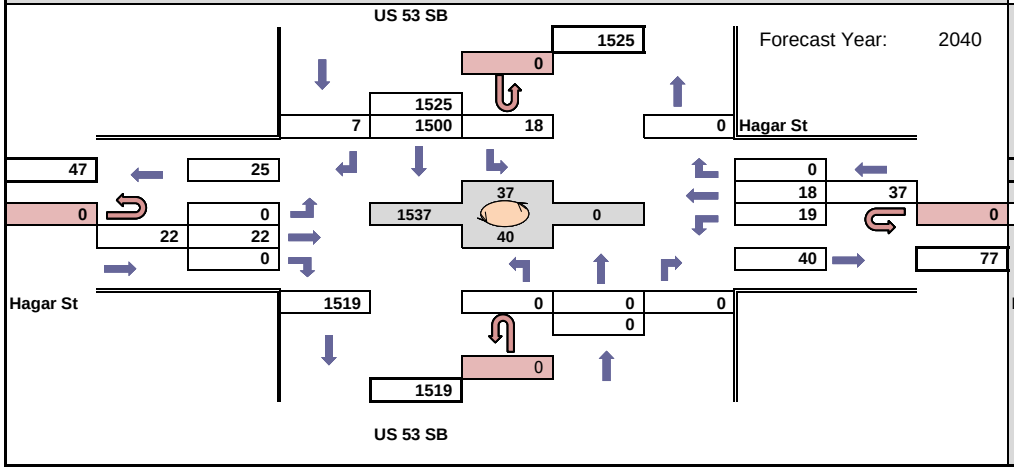

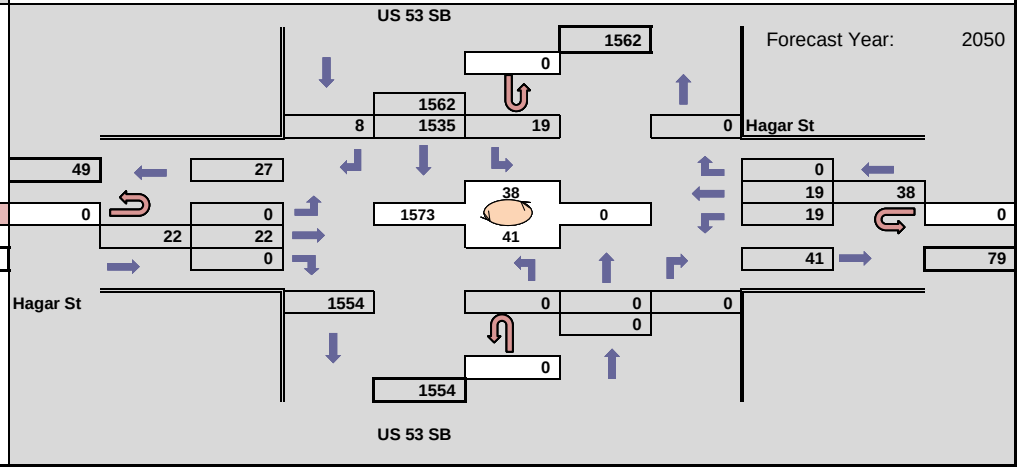

WisDOT Bureau of Planning & Economic Development
Traffic Forecasting Section
Forecast by: Miao Zhang
Phone: (608) 266 - 7995
Email: miao.zhang@dot.wi.gov

Projected PM Design Hour Traffic Volumes

Indicates roundabout

Design Hour: 4:00-5:00pm

Forecast Completed: 2/23/2021

Project Description

Project ID(s): 1630-08-00
Route(s): USH 53
Region/COUNTY(IES): SW/La Crosse
Location: US 53 SB (Copeland Ave) & Hagar St

Design Hour Turning Movement Data

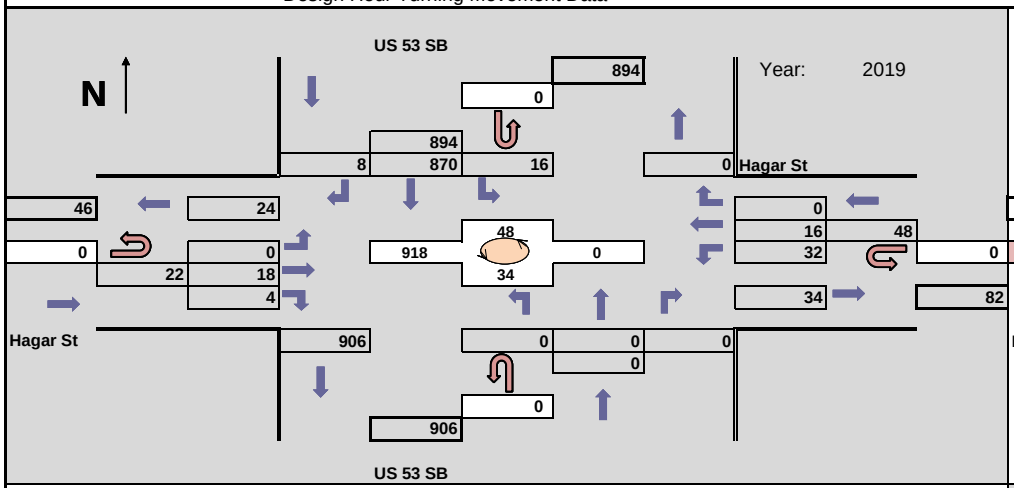

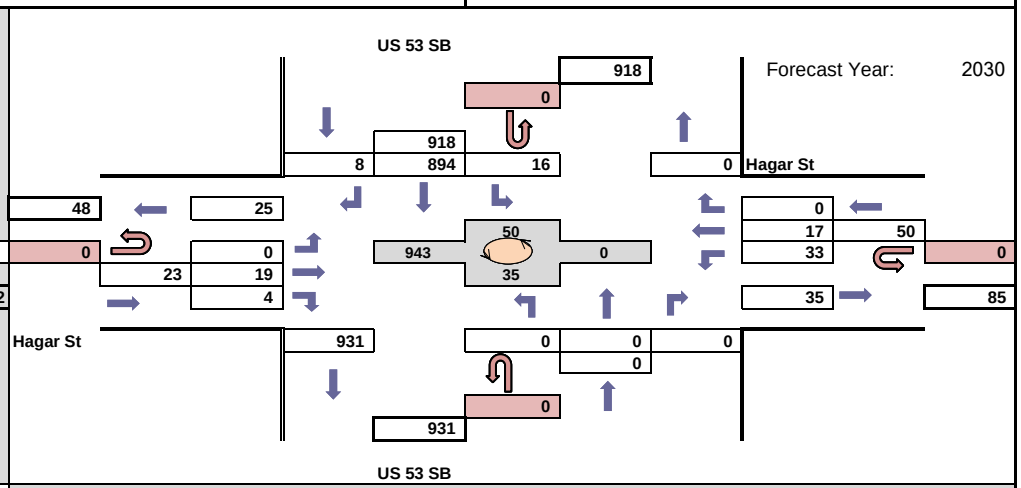

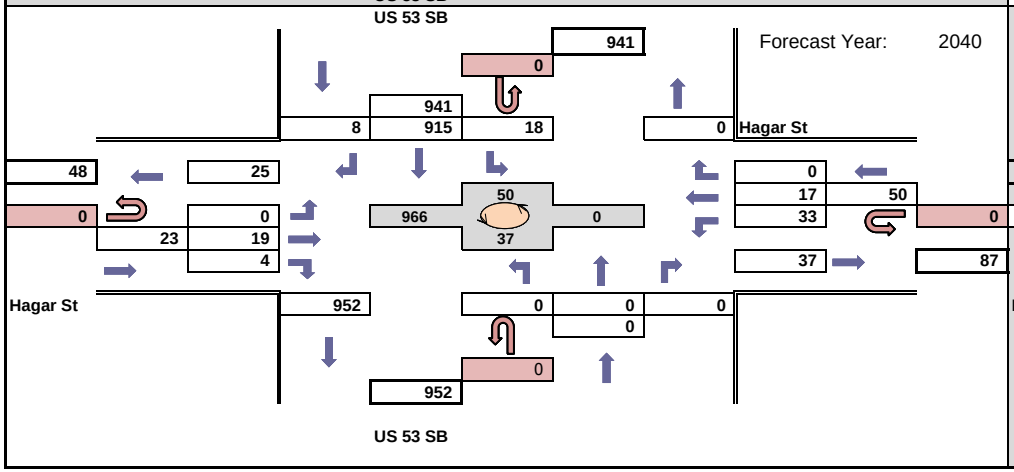

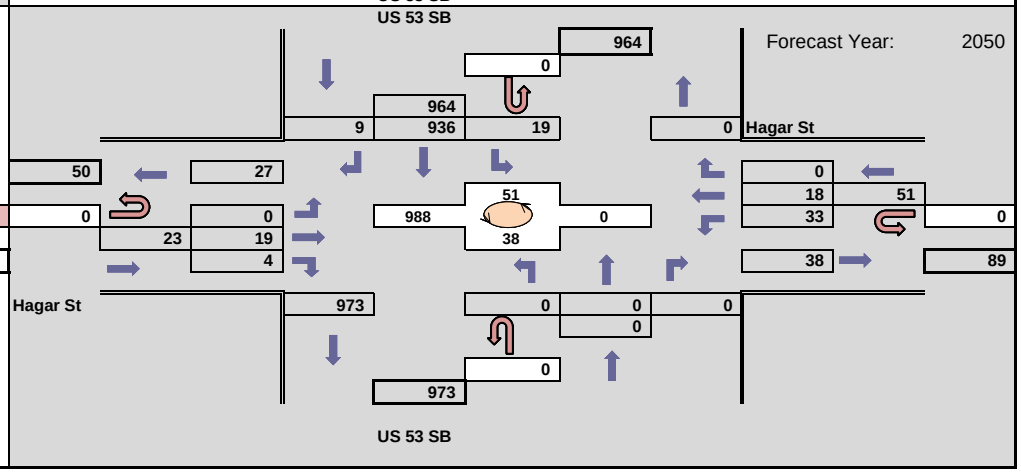

WisDOT Bureau of Planning & Economic Development
Traffic Forecasting Section
Forecast by: Miao Zhang
Phone: (608) 266 - 7995
Email: miao.zhang@dot.wi.gov

Projected AM Design Hour Traffic Volumes

Indicates roundabout

Design Hour: 7:00-8:00am

Forecast Completed: 2/23/2021

Project Description

Project ID(s): 1630-08-00
Route(s): USH 53
Region/COUNTY(IES): SW/La Crosse
Location: US 53 SB (Copeland Ave) & Monitor St

Design Hour Turning Movement Data

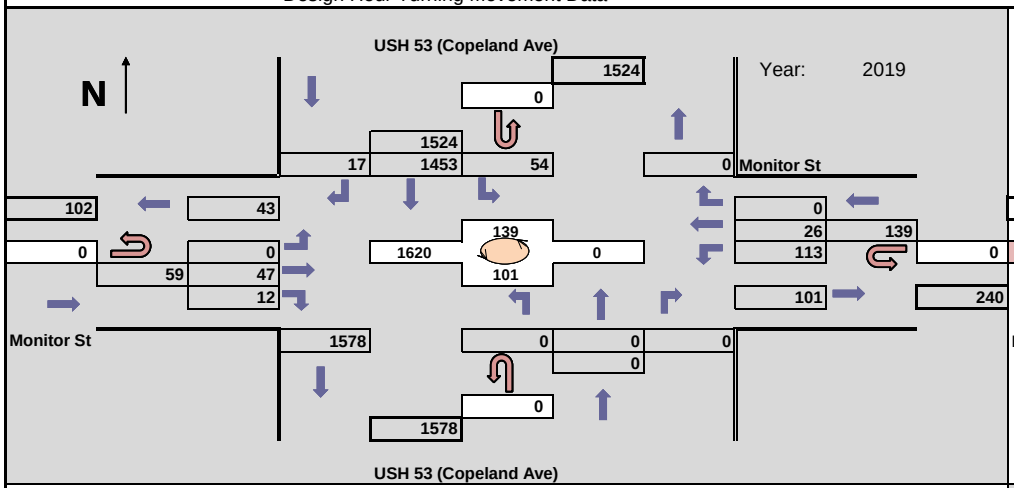

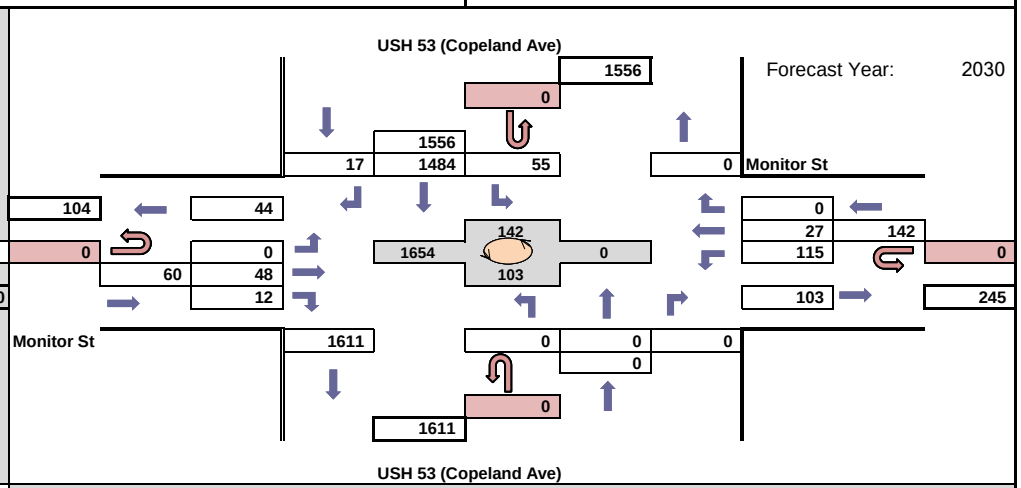

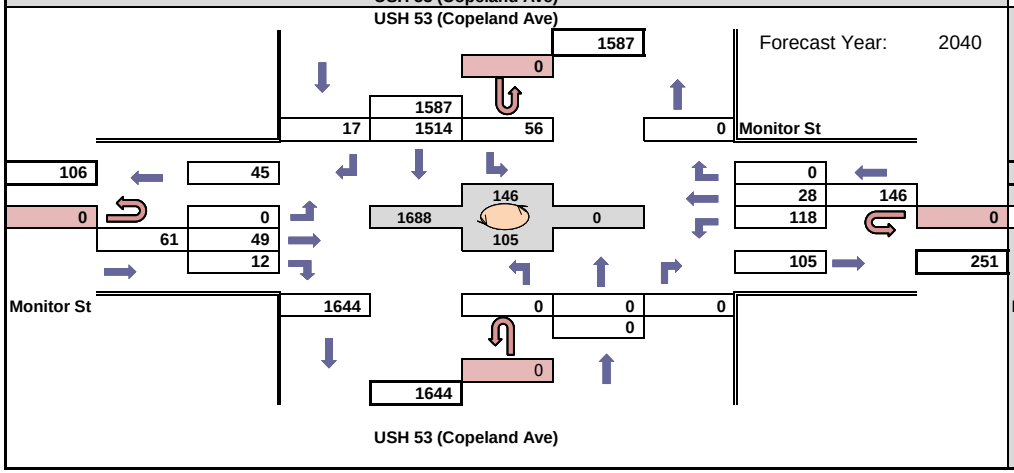

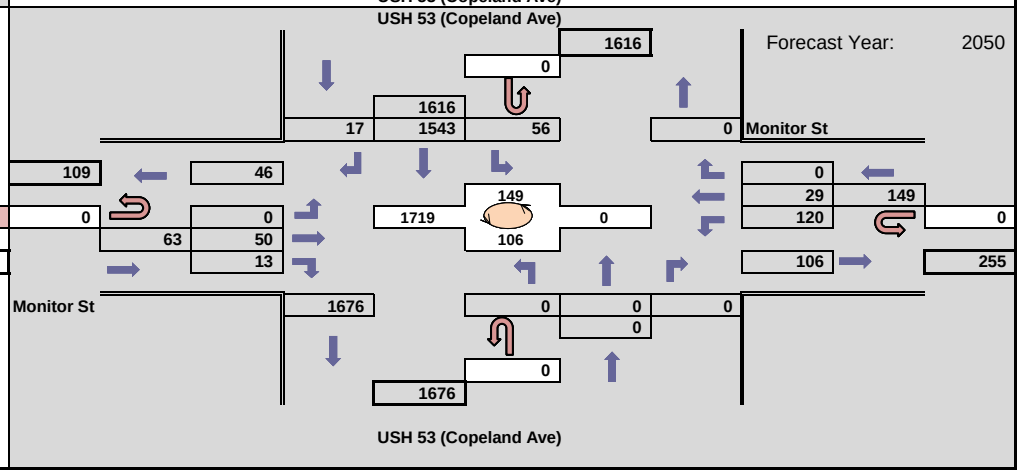

WisDOT Bureau of Planning & Economic Development
Traffic Forecasting Section
Forecast by: Miao Zhang
Phone: (608) 266 - 7995
Email: miao.zhang@dot.wi.gov

Projected PM Design Hour Traffic Volumes

Indicates roundabout

Design Hour: 4:00-5:00pm

Forecast Completed: 2/23/2021

Project Description

Project ID(s): 1630-08-00
Route(s): USH 53
Region/COUNTY(IES): SW/La Crosse
Location: US 53 SB (Copeland Ave) & Monitor St

Design Hour Turning Movement Data

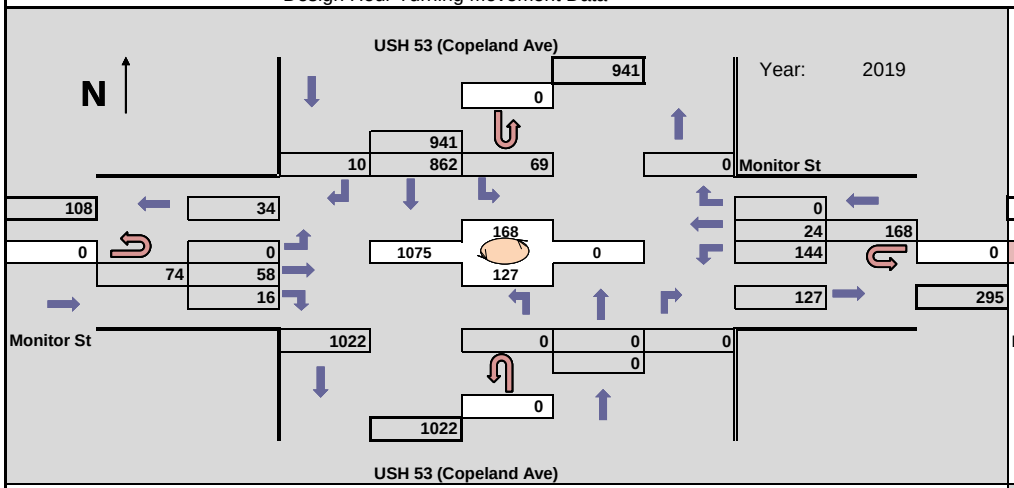

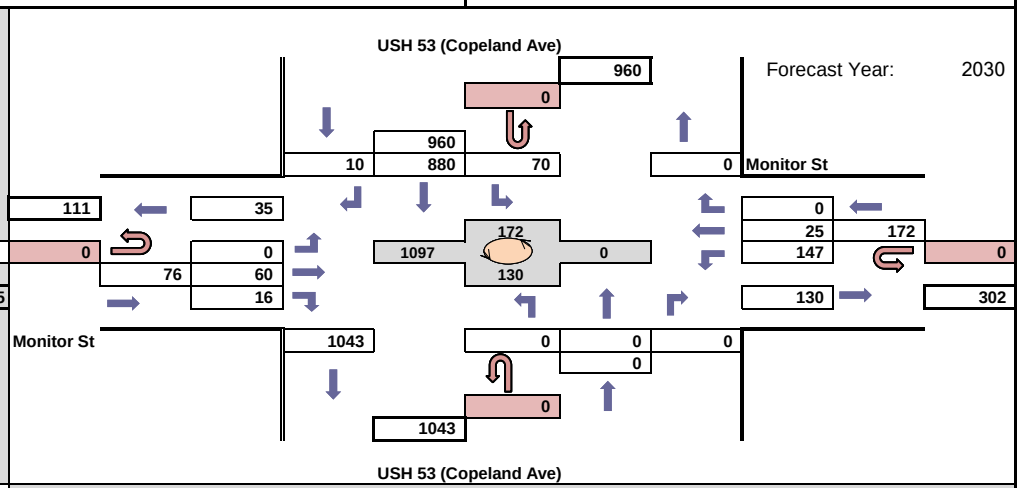

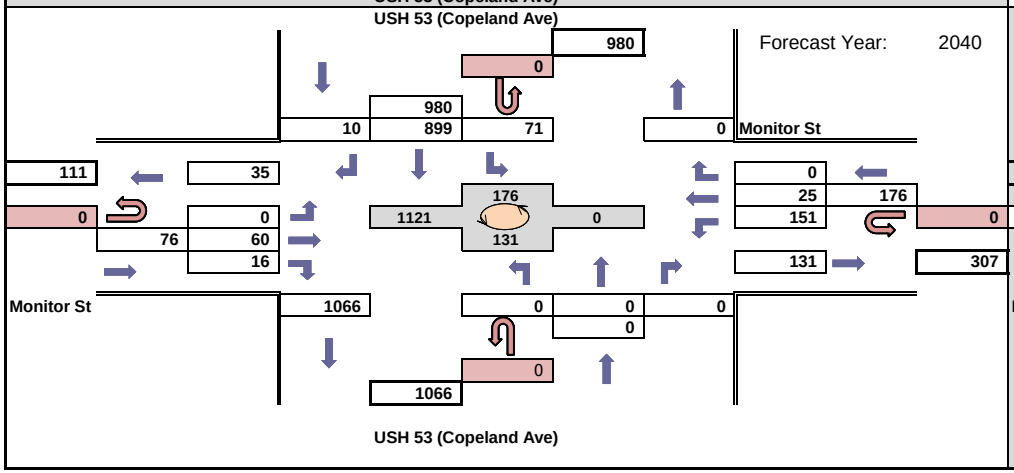

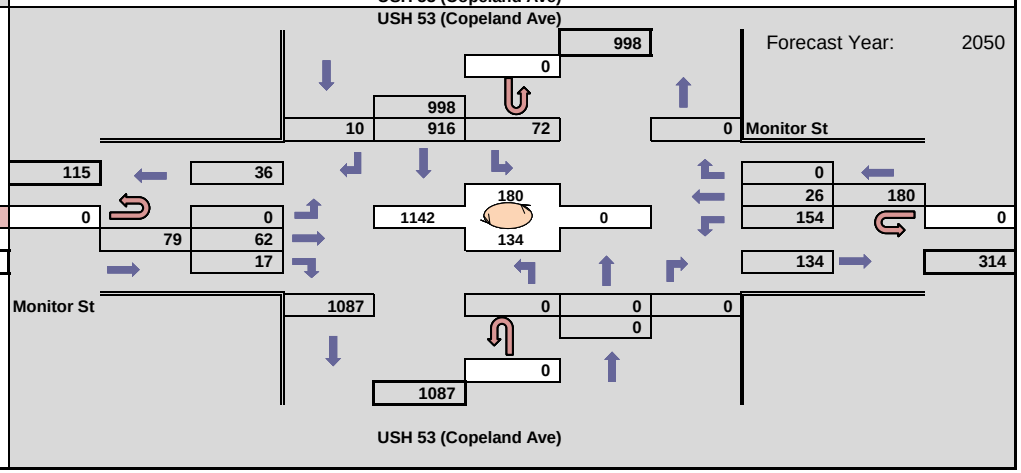

WisDOT Bureau of Planning & Economic Development
Traffic Forecasting Section
Forecast by: Miao Zhang
Phone: (608) 266 - 7995
Email: miao.zhang@dot.wi.gov

Projected AM Design Hour Traffic Volumes

Indicates roundabout

Design Hour: 7:00-8:00am

Forecast Completed: 2/23/2021

Project Description

Project ID(s): 1630-08-00
Route(s): USH 53
Region/COUNTY(IES): SW/La Crosse
Location: US 53 NB (Rose St) & Monitor St

Design Hour Turning Movement Data

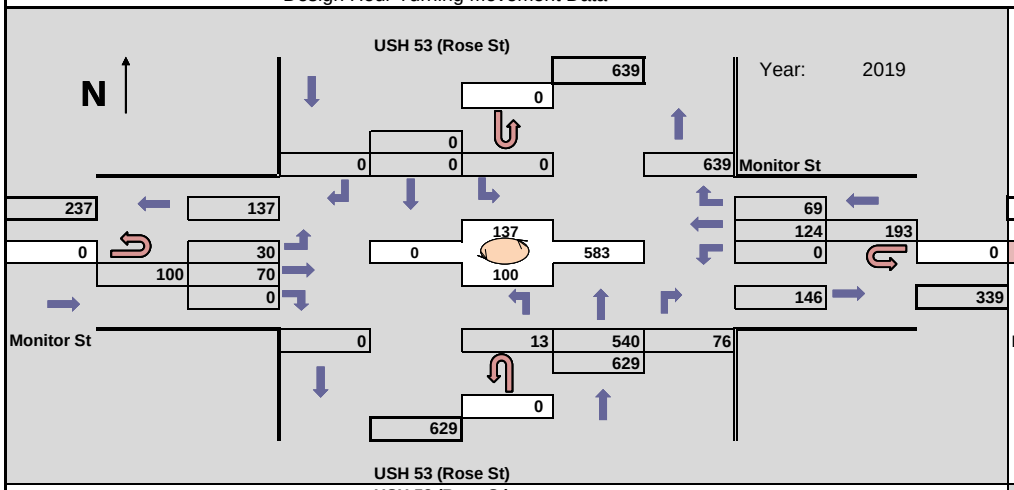

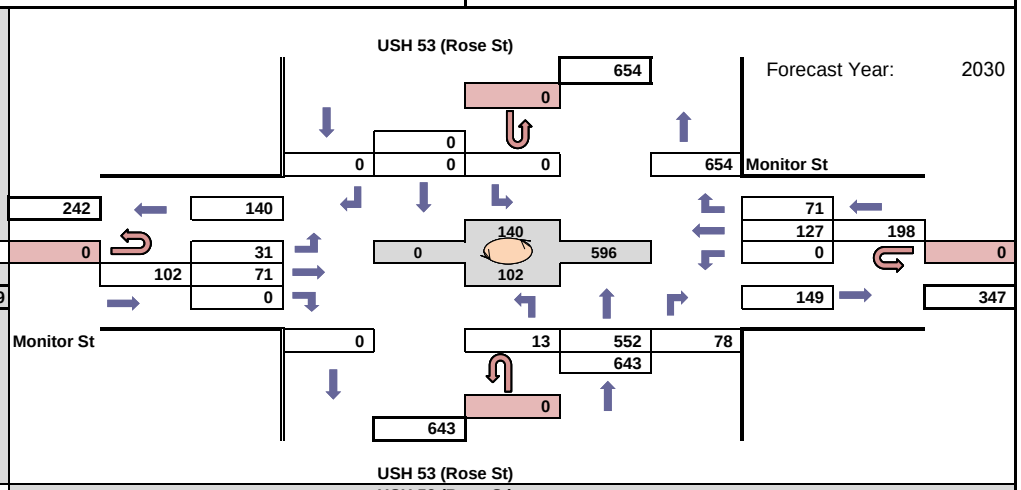

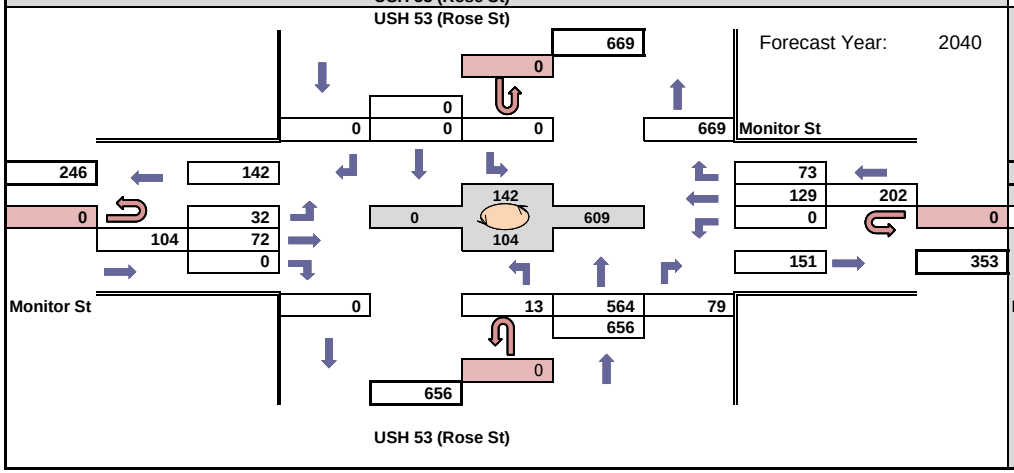

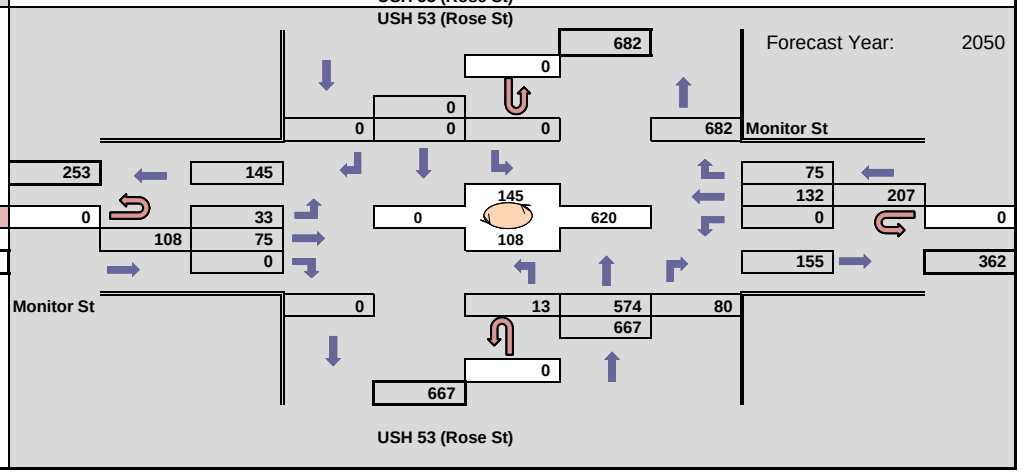

WisDOT Bureau of Planning & Economic Development
Traffic Forecasting Section
Forecast by: Miao Zhang
Phone: (608) 266 - 7995
Email: miao.zhang@dot.wi.gov

Projected PM Design Hour Traffic Volumes

Indicates roundabout

Design Hour: 4:00-5:00pm

Forecast Completed: 2/23/2021

Project Description

Project ID(s): 1630-08-00
Route(s): USH 53
Region/COUNTY(IES): SW/La Crosse
Location: US 53 NB (Rose St) & Monitor St

Design Hour Turning Movement Data

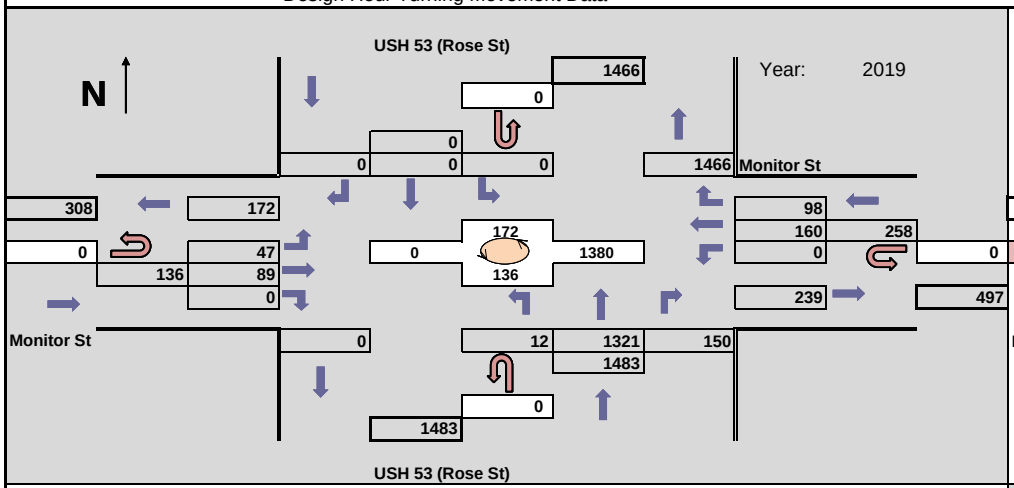

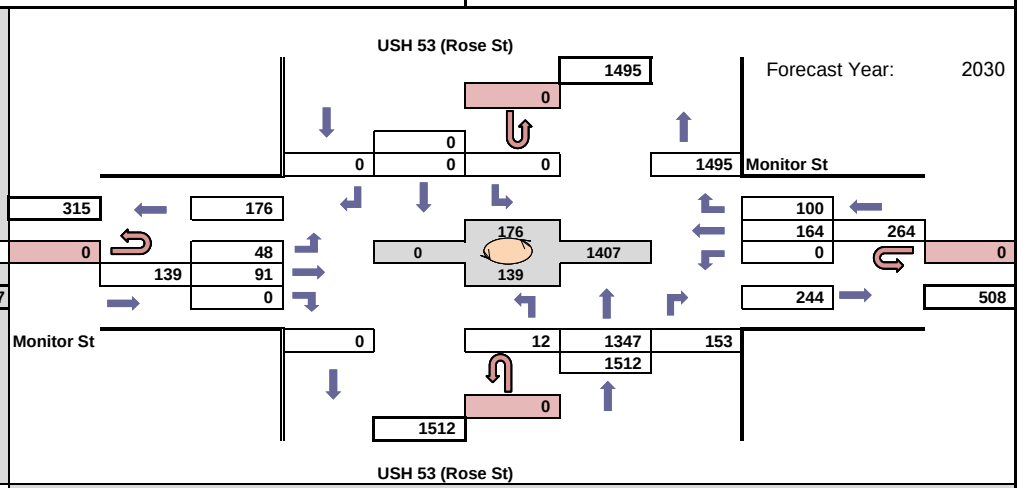

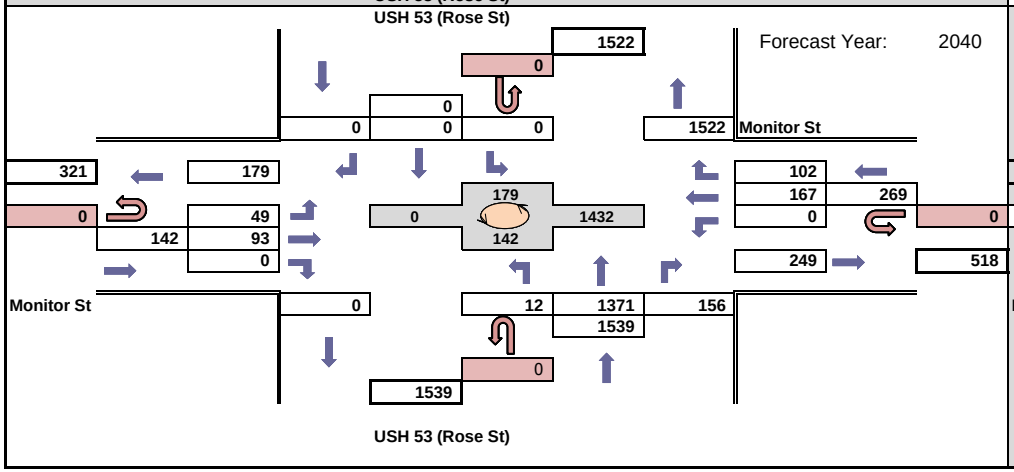

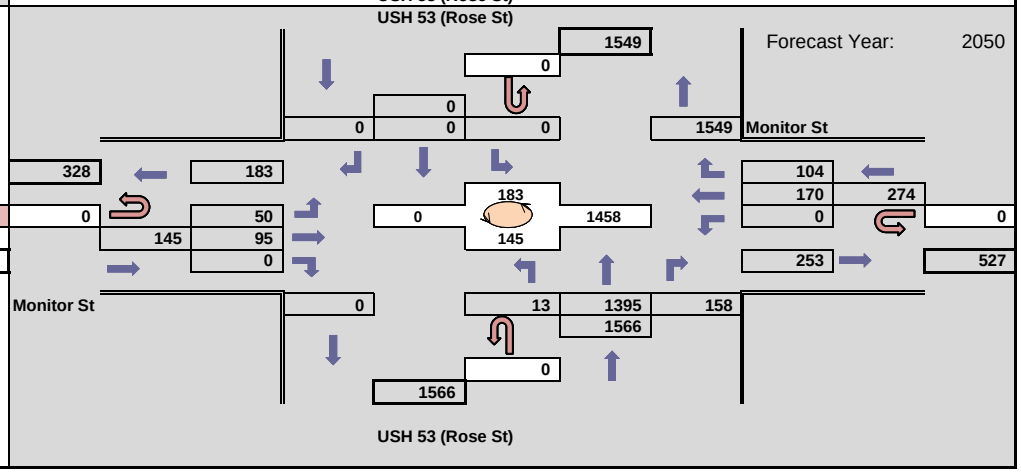

WisDOT Bureau of Planning & Economic Development
Traffic Forecasting Section
Forecast by: Miao Zhang
Phone: (608) 266 - 7995
Email: miao.zhang@dot.wi.gov

Projected AM Design Hour Traffic Volumes

Indicates roundabout

Design Hour: 7:00-8:00am

Forecast Completed: 2/23/2021

Project Description

Project ID(s): 1630-08-00
Route(s): USH 53
Region/COUNTY(IES): SW/La Crosse
Location: US 53 (Copeland Ave) & Causeway Blvd

Design Hour Turning Movement Data

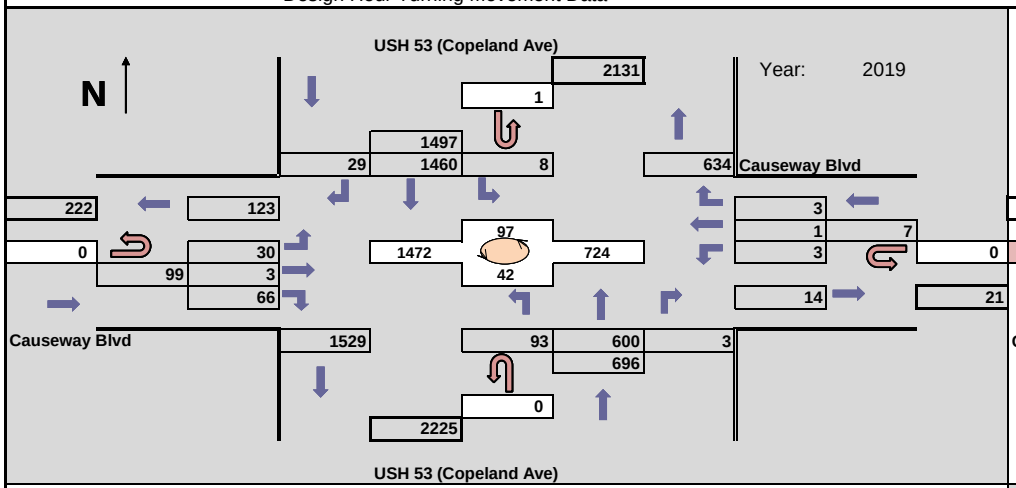

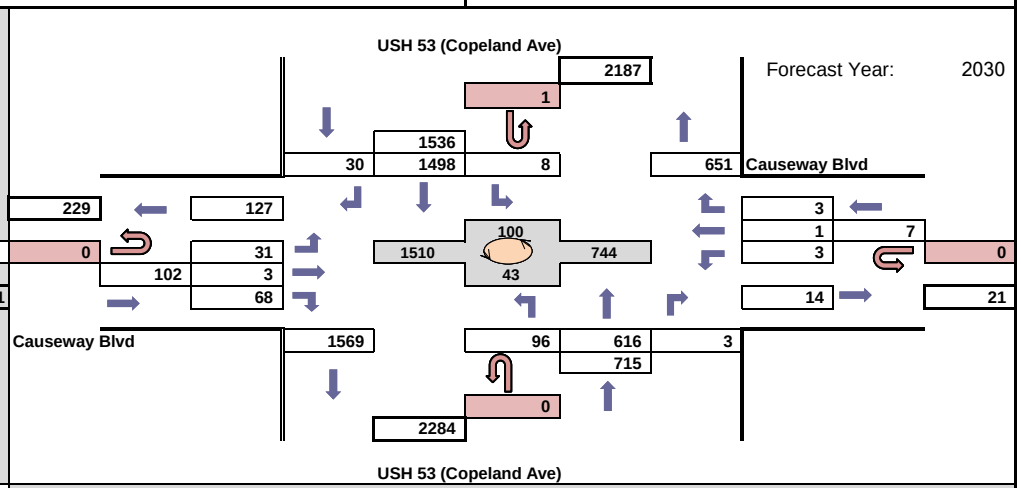

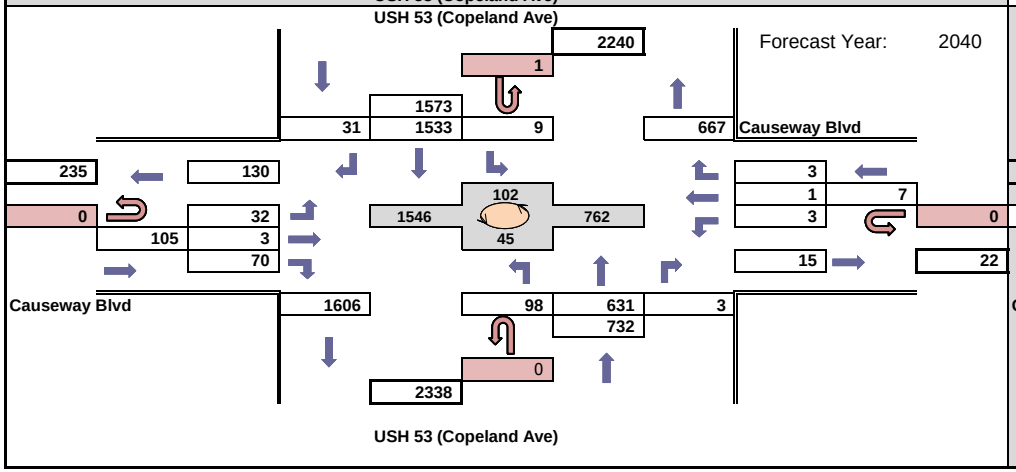

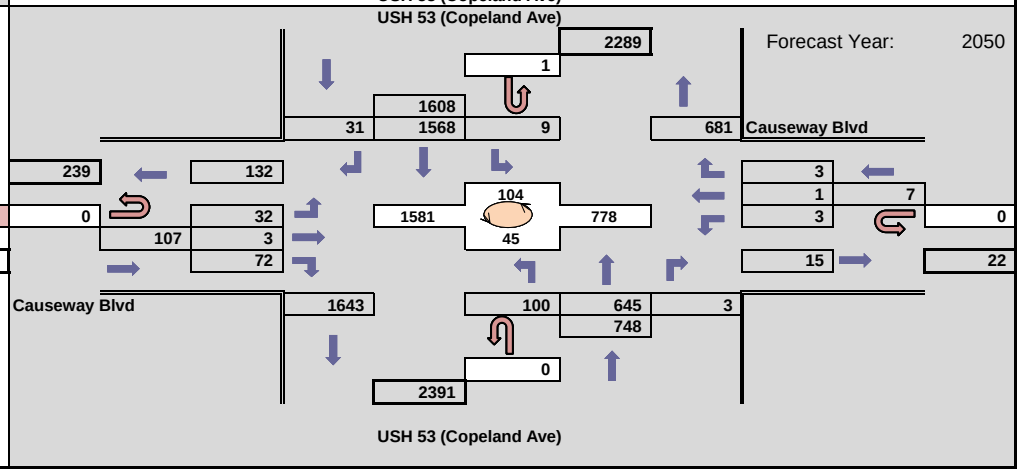

WisDOT Bureau of Planning & Economic Development
Traffic Forecasting Section
Forecast by: Miao Zhang
Phone: (608) 266 - 7995
Email: miao.zhang@dot.wi.gov

Projected PM Design Hour Traffic Volumes

Indicates roundabout

Design Hour: 4:00-5:00pm

Forecast Completed: 2/23/2021

Project Description

Project ID(s): 1630-08-00
Route(s): USH 53
Region/COUNTY(IES): SW/La Crosse
Location: US 53 (Copeland Ave) & Causeway Blvd

Design Hour Turning Movement Data

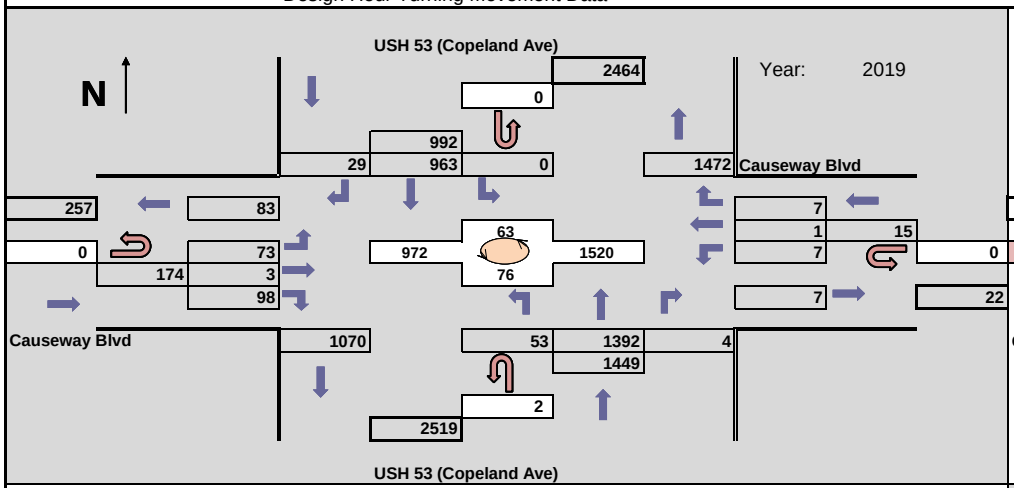

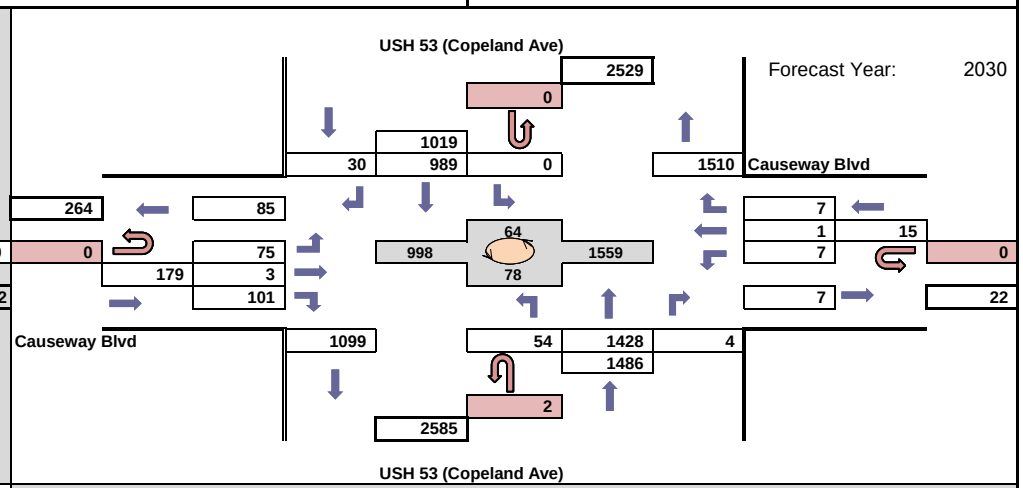

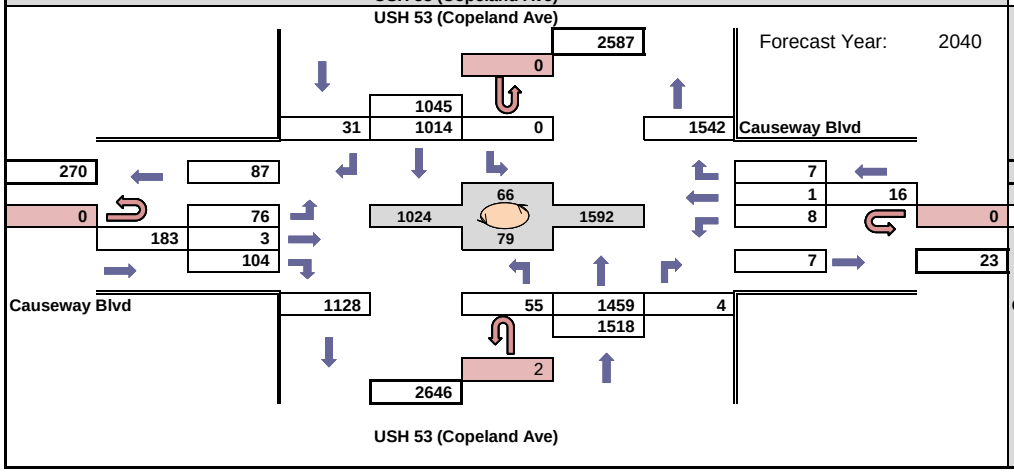

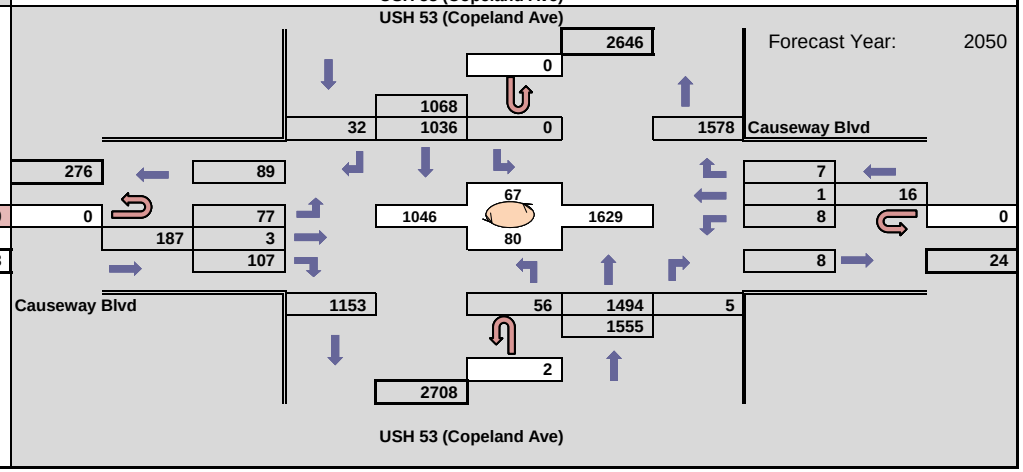

WisDOT Bureau of Planning & Economic Development
Traffic Forecasting Section
Forecast by: Miao Zhang
Phone: (608) 266 - 7995
Email: miao.zhang@dot.wi.gov

Projected AM Design Hour Traffic Volumes

Indicates roundabout

Design Hour: 7:00-8:00am

Forecast Completed: 2/23/2021

Project Description

Project ID(s): 1630-08-00
Route(s): USH 53
Region/COUNTY(IES): SW/La Crosse
Location: US 53 (Copeland Ave) & River Bend Dr

Design Hour Turning Movement Data

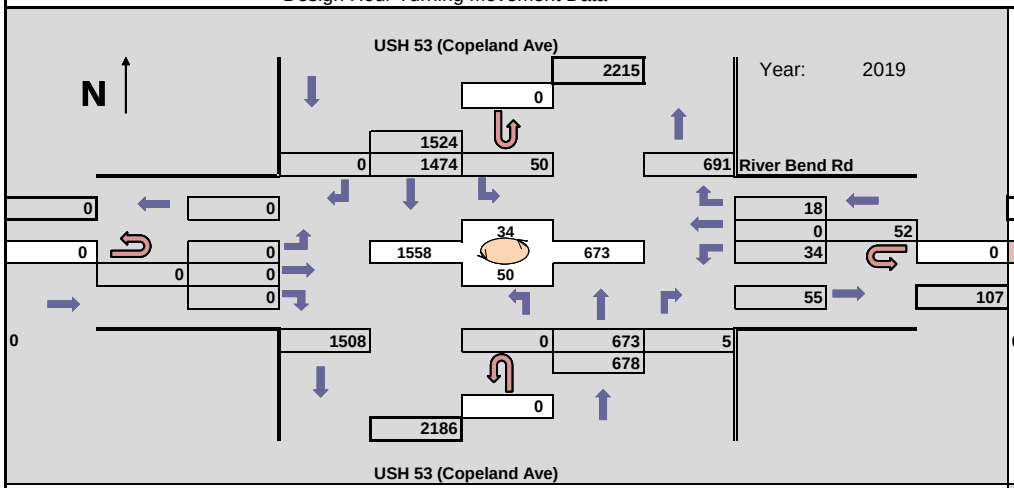

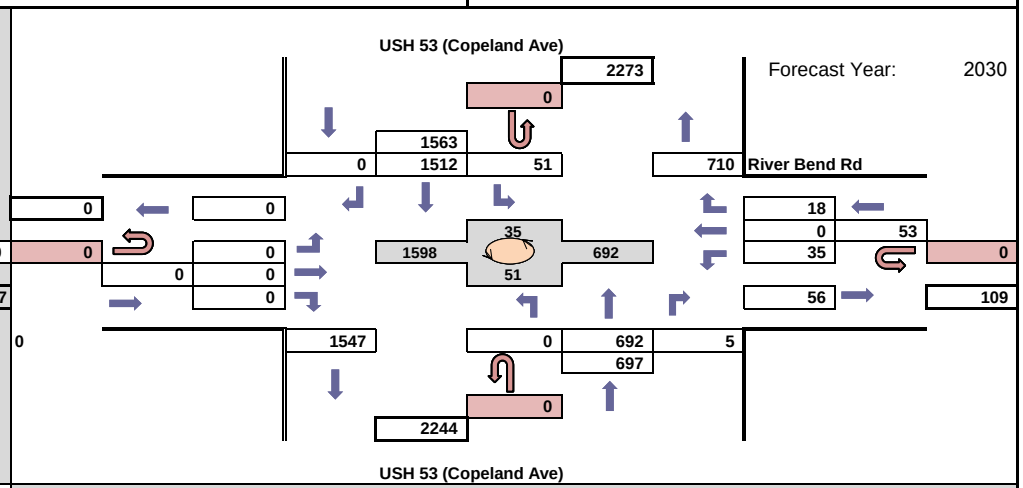

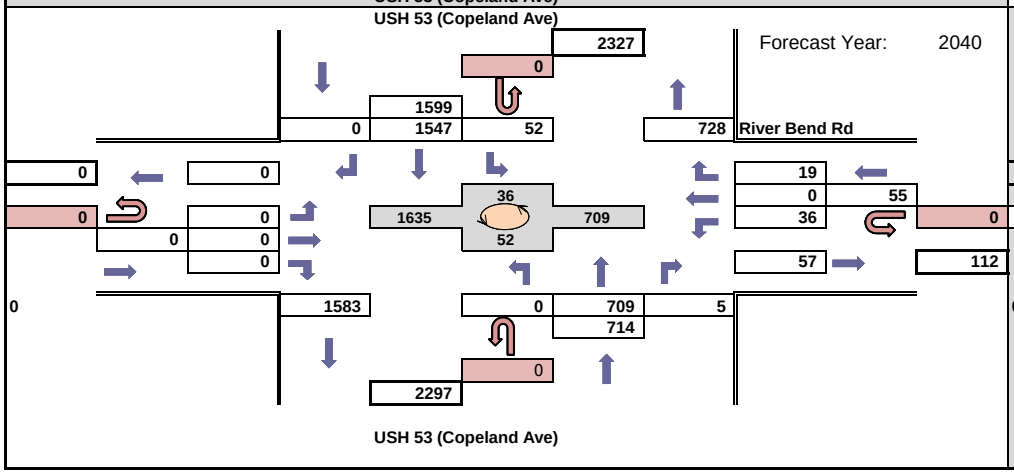

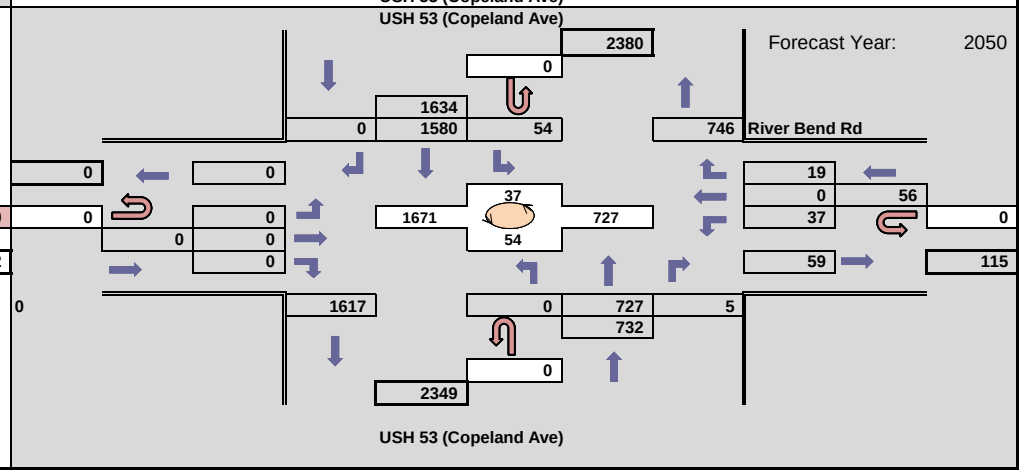

WisDOT Bureau of Planning & Economic Development
Traffic Forecasting Section
Forecast by: Miao Zhang
Phone: (608) 266 - 7995
Email: miao.zhang@dot.wi.gov

Projected PM Design Hour Traffic Volumes

Indicates roundabout

Design Hour: 4:00-5:00pm

Forecast Completed: 2/23/2021

Project Description

Project ID(s): 1630-08-00
Route(s): USH 53
Region/COUNTY(IES): SW/La Crosse
Location: US 53 (Copeland Ave) & River Bend Dr

Design Hour Turning Movement Data

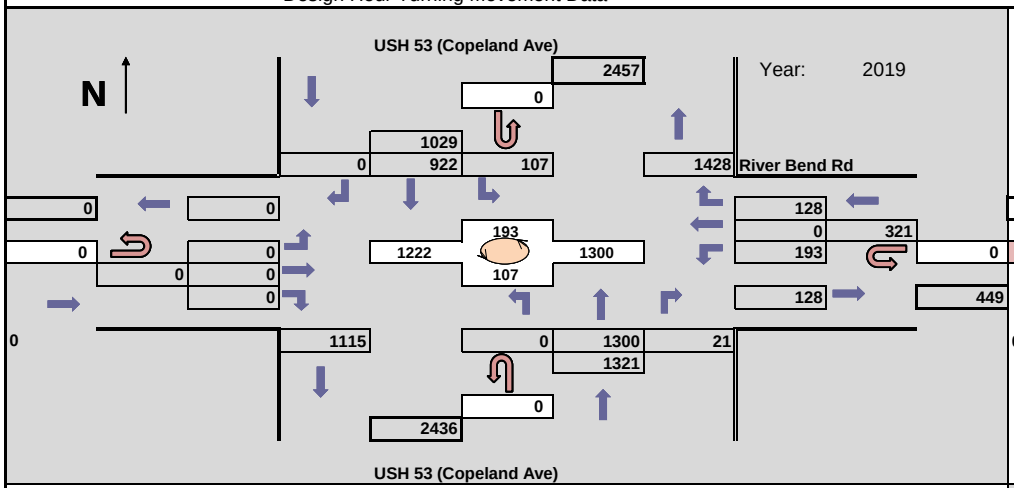

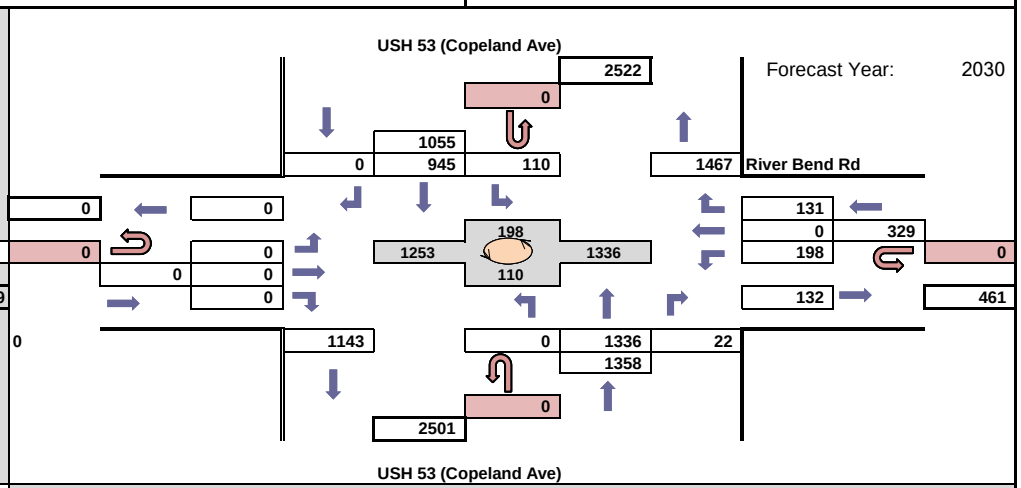

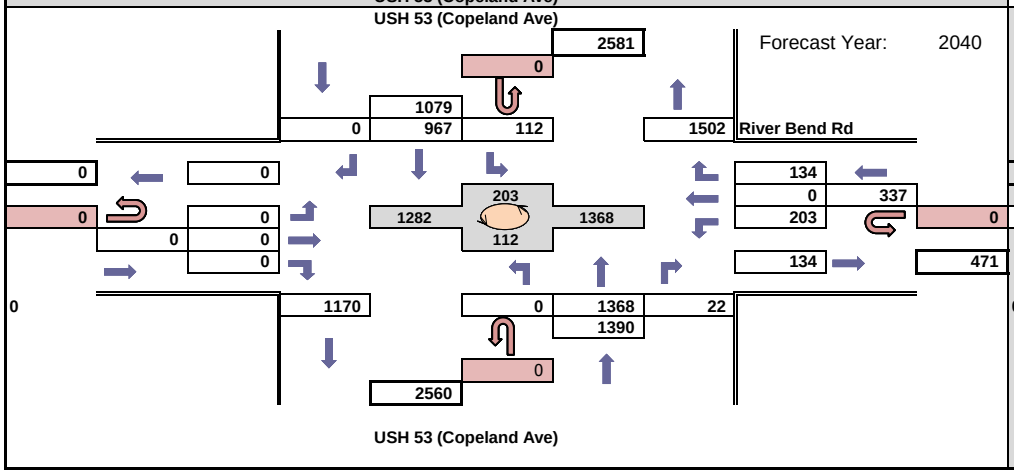

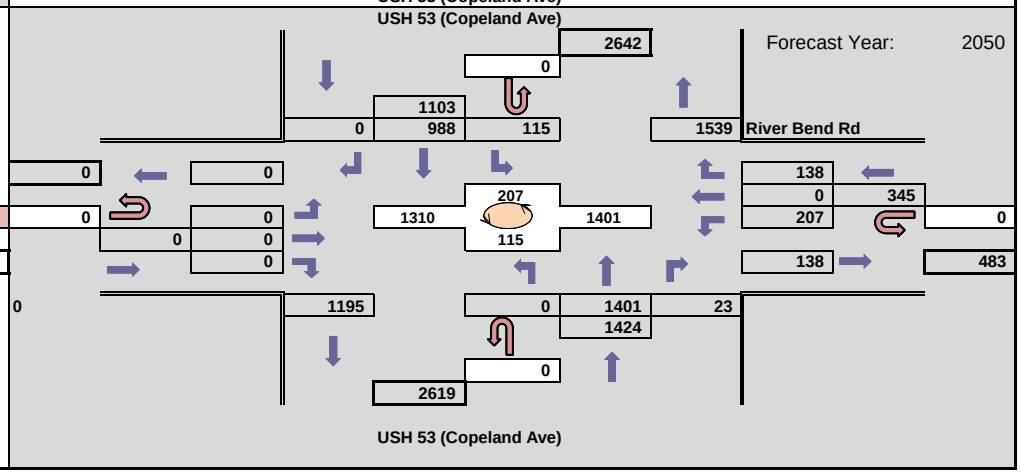

WisDOT TRAFFIC FORECAST REPORT	Region/COUNTY(IES): SW/La Crosse	Developed by: Miao Zhang
PROJECT ID(S): 1630-08-00	LOCATION: STH 16 La Crosse St. Segment	Phone: (608) 266-7995
ROUTE(S): STH 16	COMPLETED: 02/23/2021	
Traffic Forecasting Section; Bureau of Planning and Economic Development; Division of Transportation Investment Management		E-Mail: miao.zhang@dot.wi.gov

Site(s)	Route(s)	Volume(s)	Site Growth %
326119	STH 16	36420	0.26%
321356	STH 16	12460	0.79%
326122	STH 35	23880	0.44%

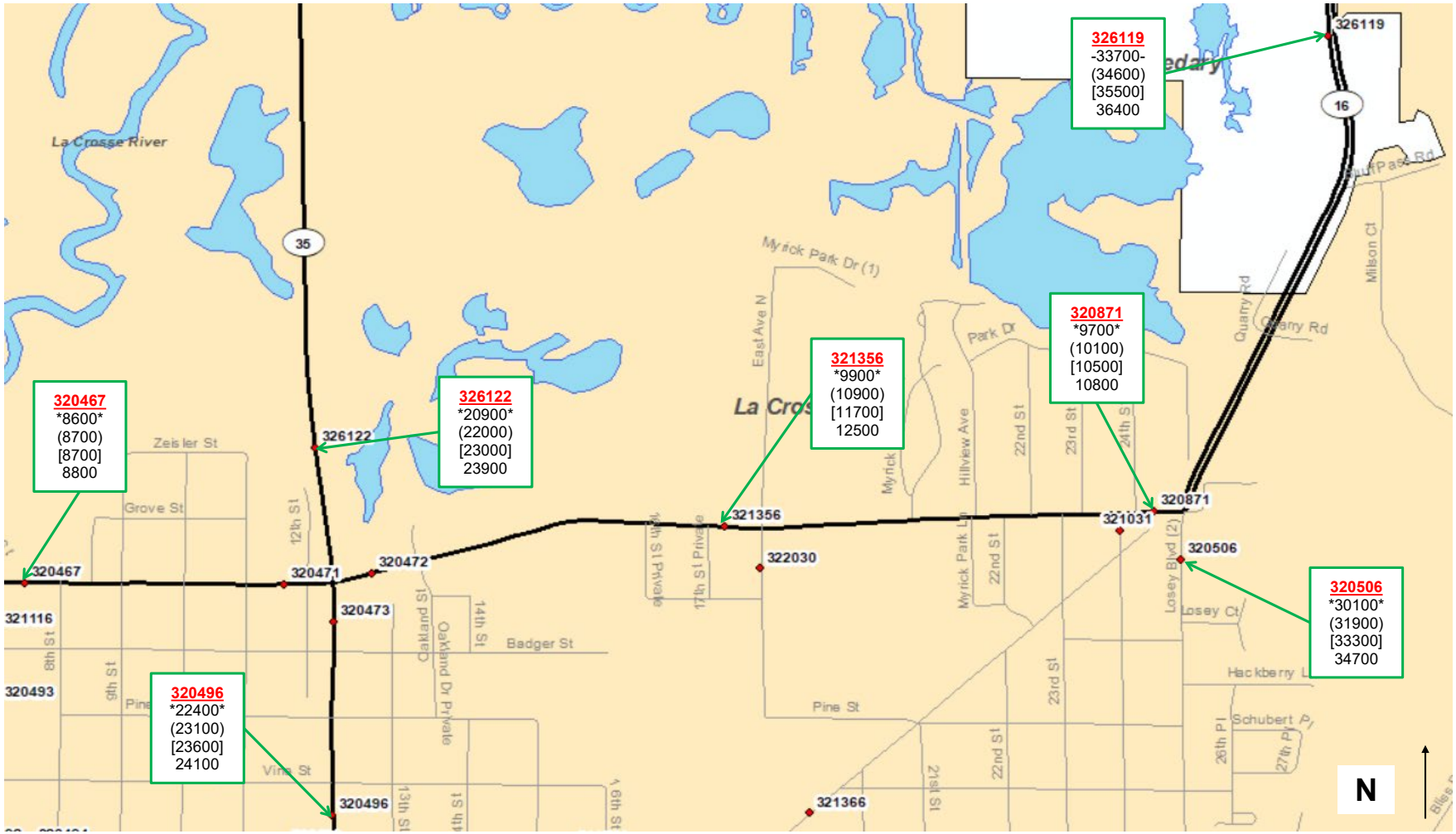

SITE ID = Colored, **bolded**, and underlined

Symbol	Count	Symbol	Forecast
-000-	2019 Count	(000)	2030 AADT
000	2017 Count	[000]	2040 AADT
		000	2050 AADT

NOTES ON THE FORECAST:

1. This projection assumes that no major new traffic generators will be added to the development already included in the 2010/2040 La Crosse Regional Travel Demand Model.
2. Vehicle classification data and design values (K factors, directional splits, and percent trucks in design hours) are available here: http://wisconsindot.gov/Pages/projects/data-plan/traf-fore/default.aspx
3. STH 16 is a Factor Group II (Urban-Other) roadways (indicating low to moderate fluctuation in traffic from a seasonal perspective).
4. The 2010/2040 La Crosse Regional Travel Demand Model was used to complete this forecast. The Traffic Analysis Forecasting Information System output was used as a comparison tool to check against the model output. Adjustments were made as needed.
5. Roadway improvements coded within the existing plus committed (E+C) network of the 2010/2040 La Crose Regional Travel Demand Model were assumed to be in place for the purposes of developing this forecast.

WisDOT Bureau of Planning & Economic Development
Traffic Forecasting Section
Forecast by: Miao Zhang
Phone: (608) 266 - 7995
Email: miao.zhang@dot.wi.gov

Projected AM Design Hour Traffic Volumes

Indicates roundabout

Design Hour: 7:00-8:00am

Forecast Completed: 2/23/2021

Project Description

Project ID(s): 1630-08-00
Route(s): STH 16
Region/COUNTY(IES): SW/La Crosse
Location: WIS 16 (La Crosse St) & East Ave

Design Hour Turning Movement Data

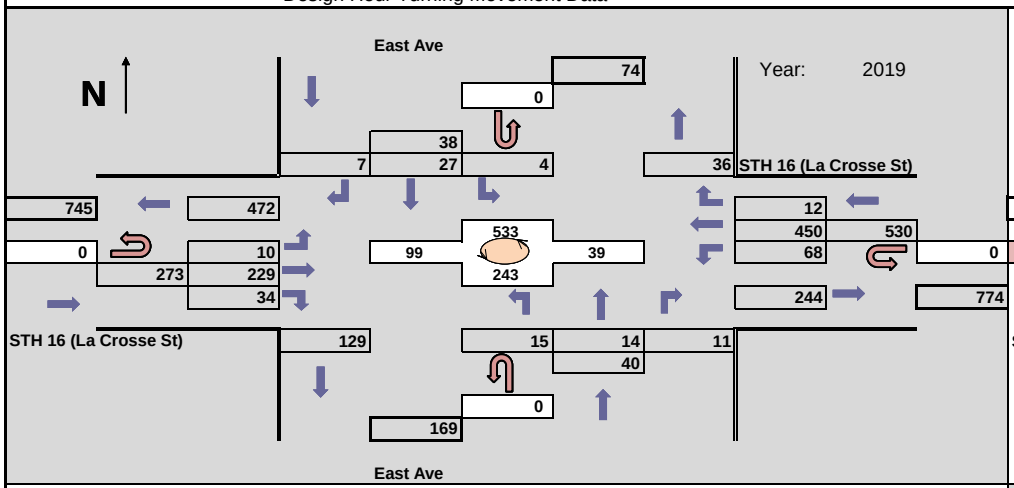

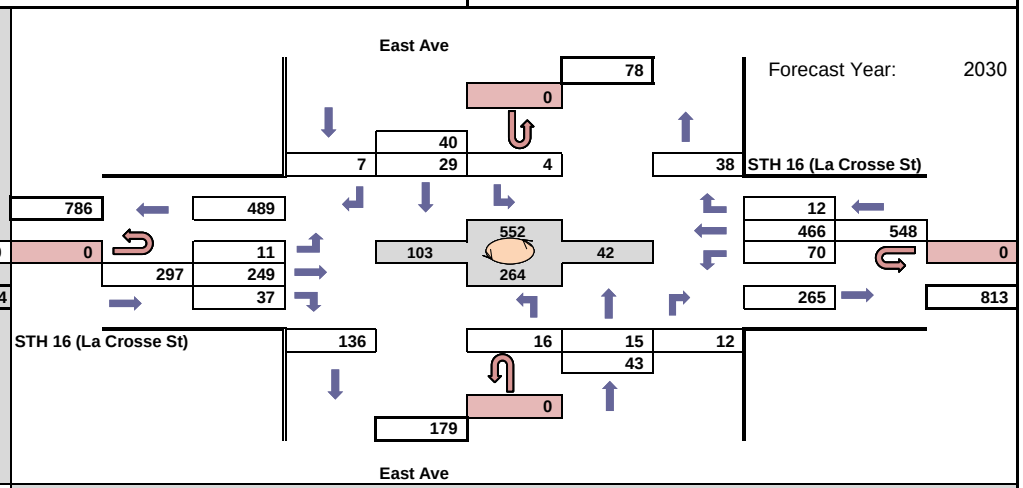

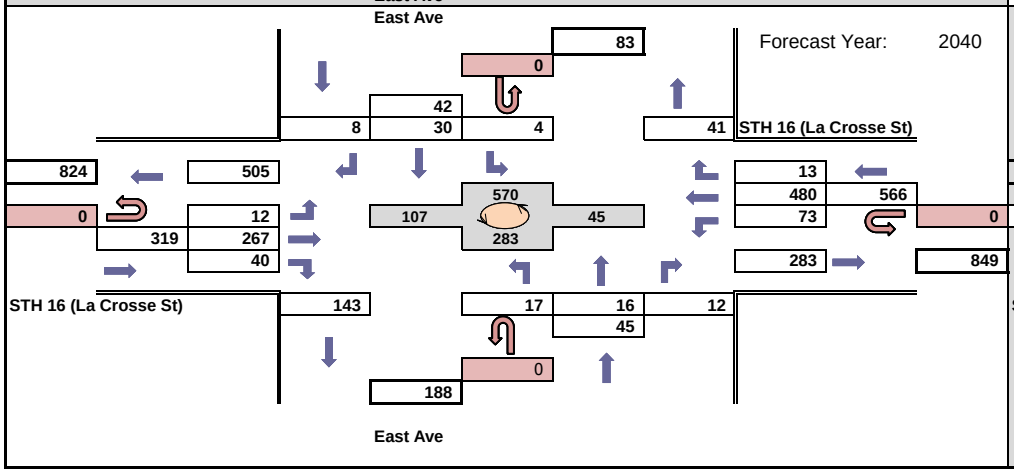

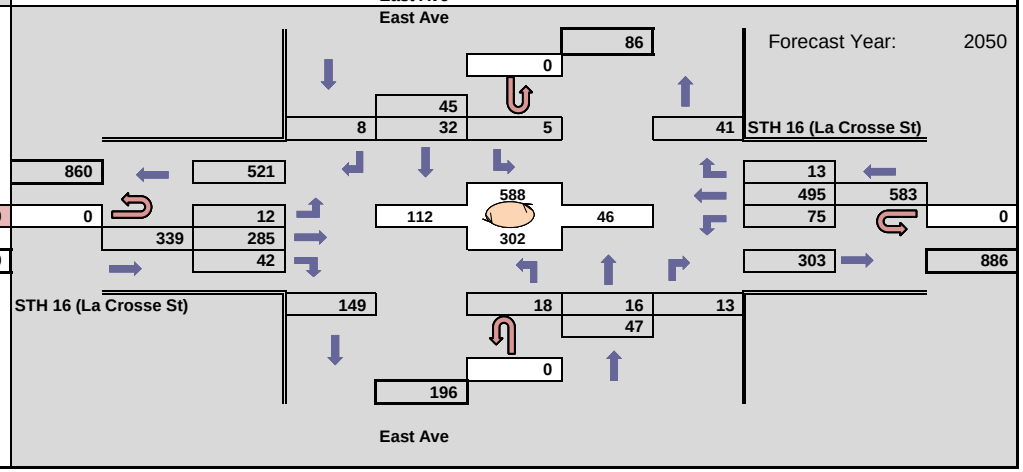

WisDOT Bureau of Planning & Economic Development
Traffic Forecasting Section
Forecast by: Miao Zhang
Phone: (608) 266 - 7995
Email: miao.zhang@dot.wi.gov

Projected PM Design Hour Traffic Volumes

Indicates roundabout

Design Hour: 4:30-5:30pm

Forecast Completed: 2/23/2021

Project Description

Project ID(s): 1630-08-00
Route(s): STH 16
Region/COUNTY(IES): SW/La Crosse
Location: WIS 16 (La Crosse St) & East Ave

Design Hour Turning Movement Data

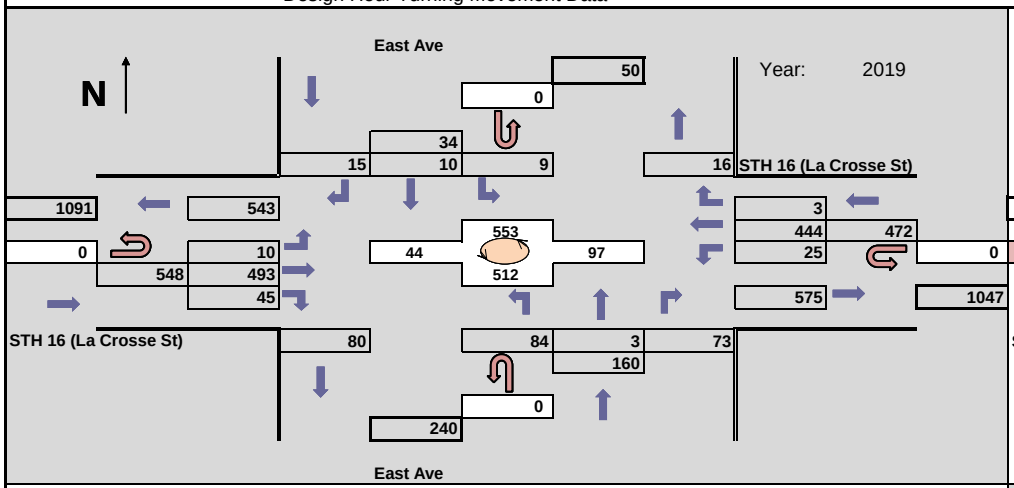

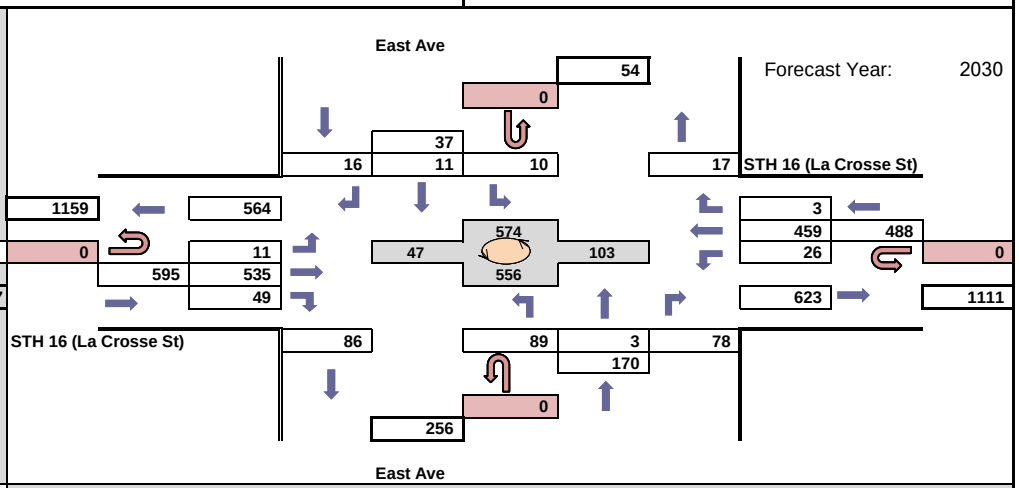

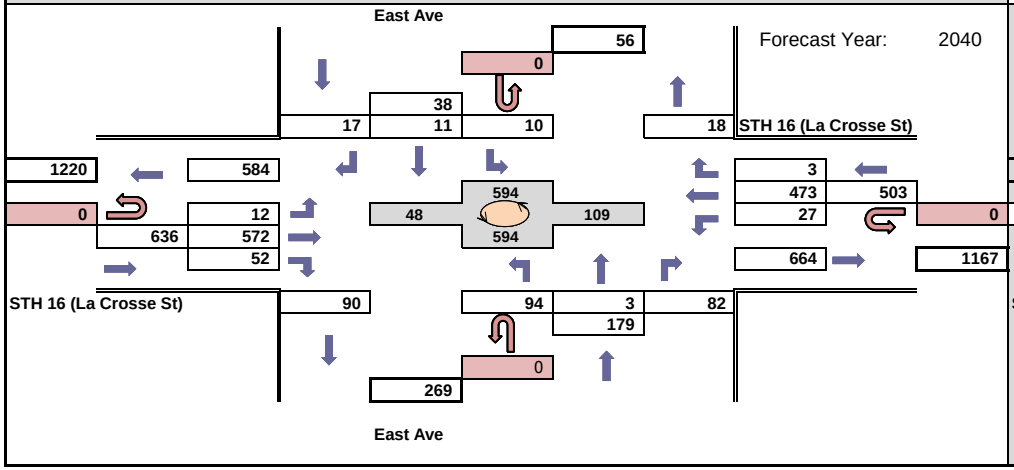

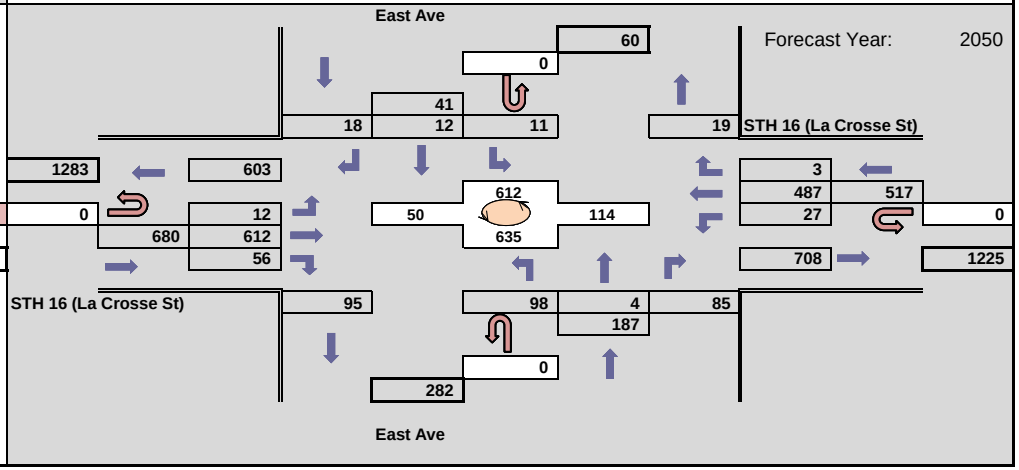

WisDOT Bureau of Planning & Economic Development
Traffic Forecasting Section
Forecast by: Miao Zhang
Phone: (608) 266 - 7995
Email: miao.zhang@dot.wi.gov

Projected AM Design Hour Traffic Volumes

Indicates roundabout

Design Hour: 7:00-8:00am

Forecast Completed: 2/23/2021

Project Description

Project ID(s): 1630-08-00
Route(s): STH 16
Region/COUNTY(IES): SW/La Crosse
Location: WIS 35 (West Ave) & WIS 16 (La Crosse St)

Design Hour Turning Movement Data

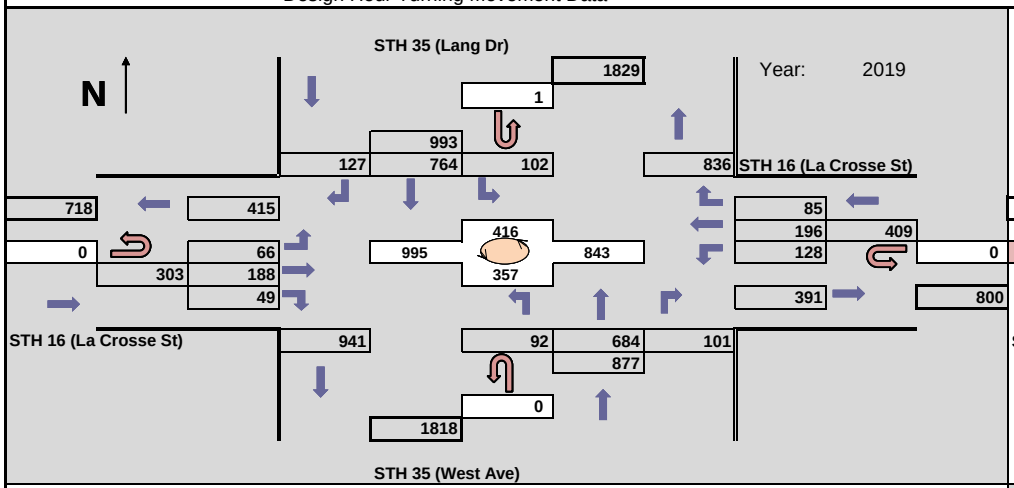

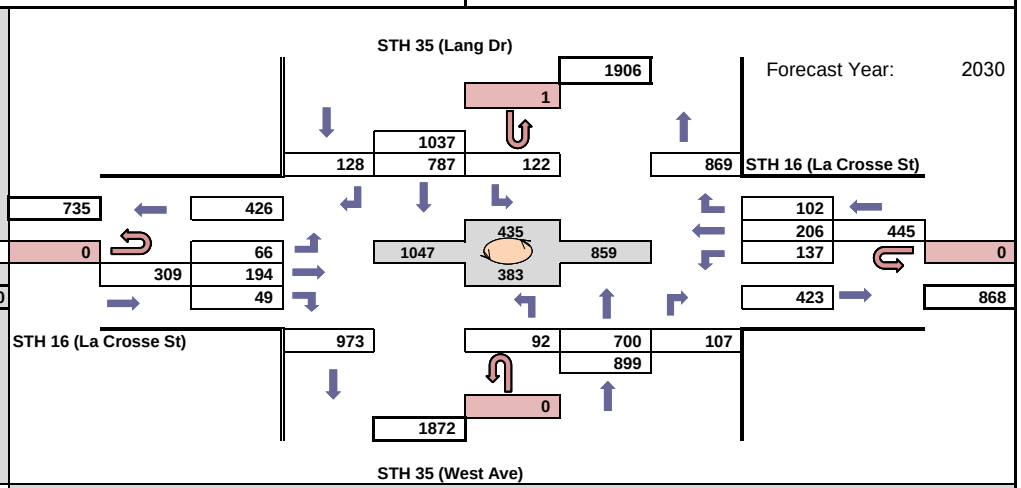

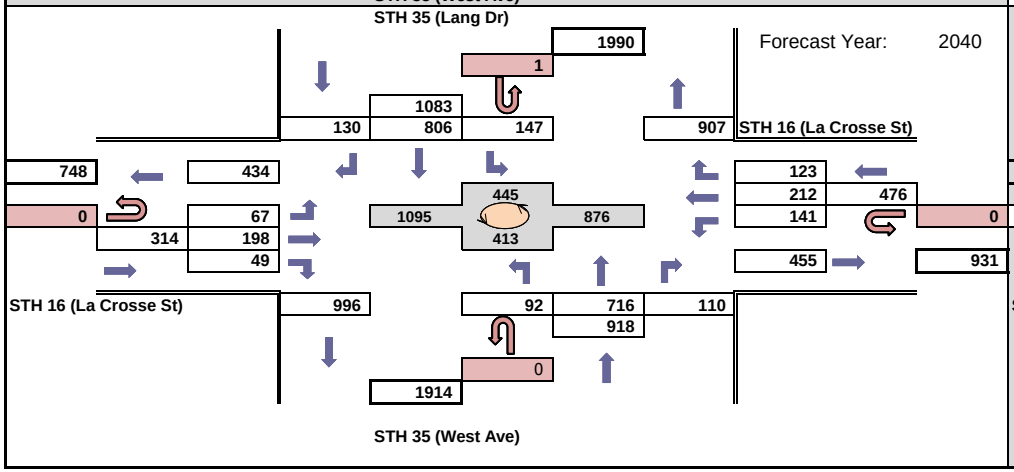

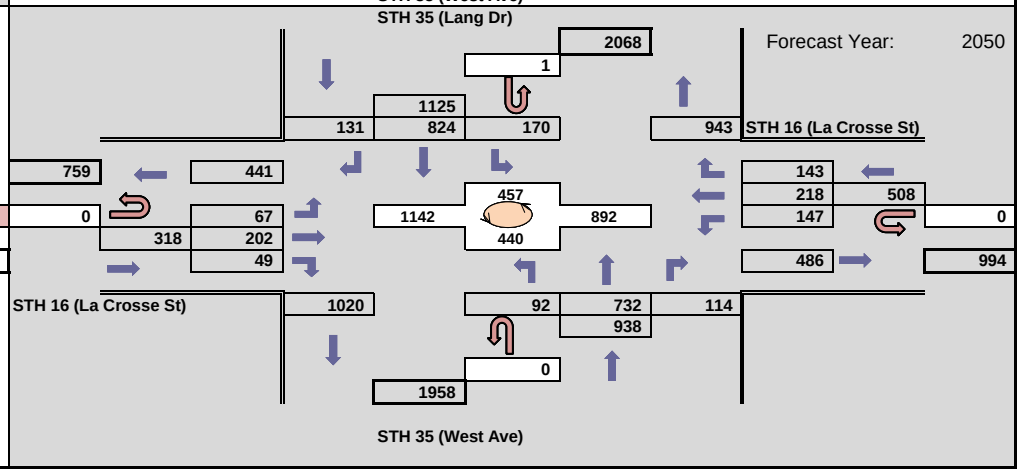

WisDOT Bureau of Planning & Economic Development
Traffic Forecasting Section
Forecast by: Miao Zhang
Phone: (608) 266 - 7995
Email: miao.zhang@dot.wi.gov

Projected PM Design Hour Traffic Volumes

Indicates roundabout

Design Hour: 4:30-5:30pm

Forecast Completed: 2/23/2021

Project Description

Project ID(s): 1630-08-00
Route(s): STH 16
Region/COUNTY(IES): SW/La Crosse
Location: WIS 35 (West Ave) & WIS 16 (La Crosse St)

Design Hour Turning Movement Data

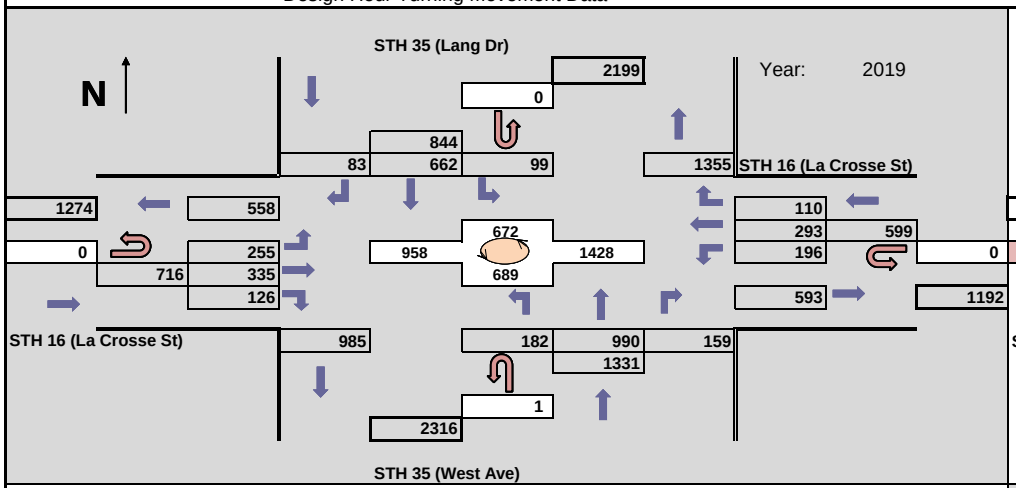

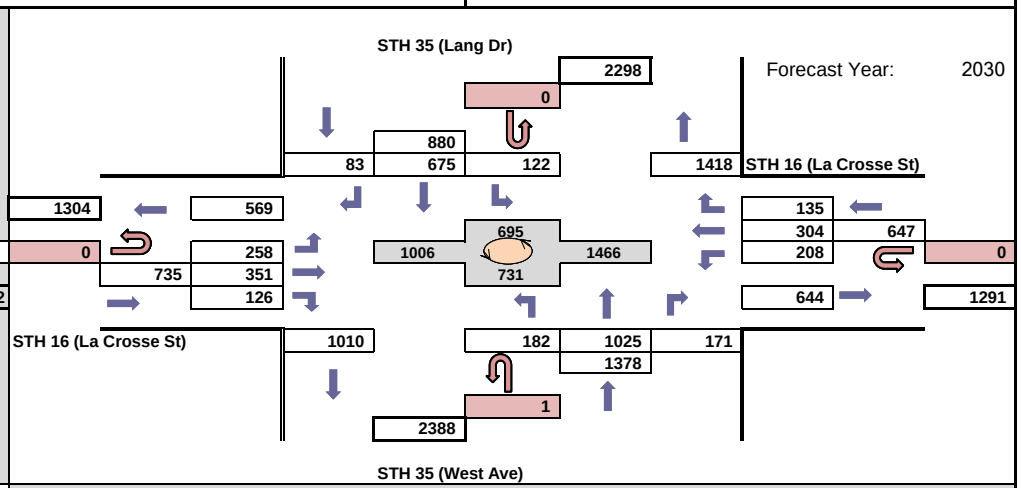

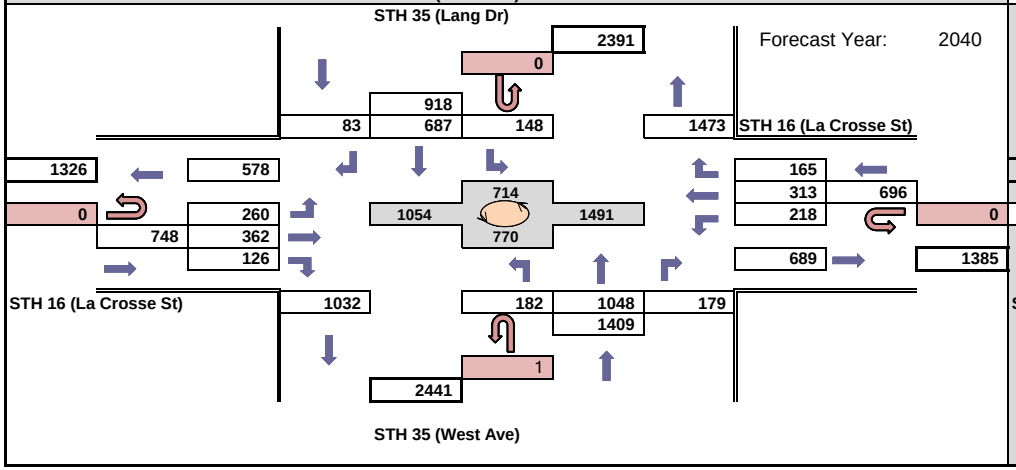

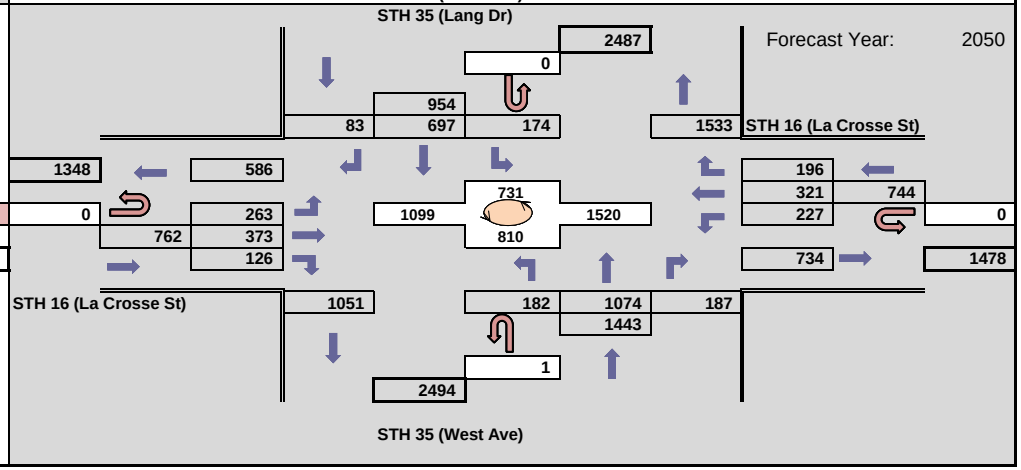

WisDOT Bureau of Planning & Economic Development
Traffic Forecasting Section
Forecast by: Miao Zhang
Phone: (608) 266 - 7995
Email: miao.zhang@dot.wi.gov

Projected AM Design Hour Traffic Volumes

Indicates roundabout

Design Hour: 7:00-8:00am

Forecast Completed: 2/23/2021

Project Description

Project ID(s): 1630-08-00
Route(s): STH 16
Region/COUNTY(IES): SW/La Crosse
Location: STH 16 & 7th St.

Design Hour Turning Movement Data

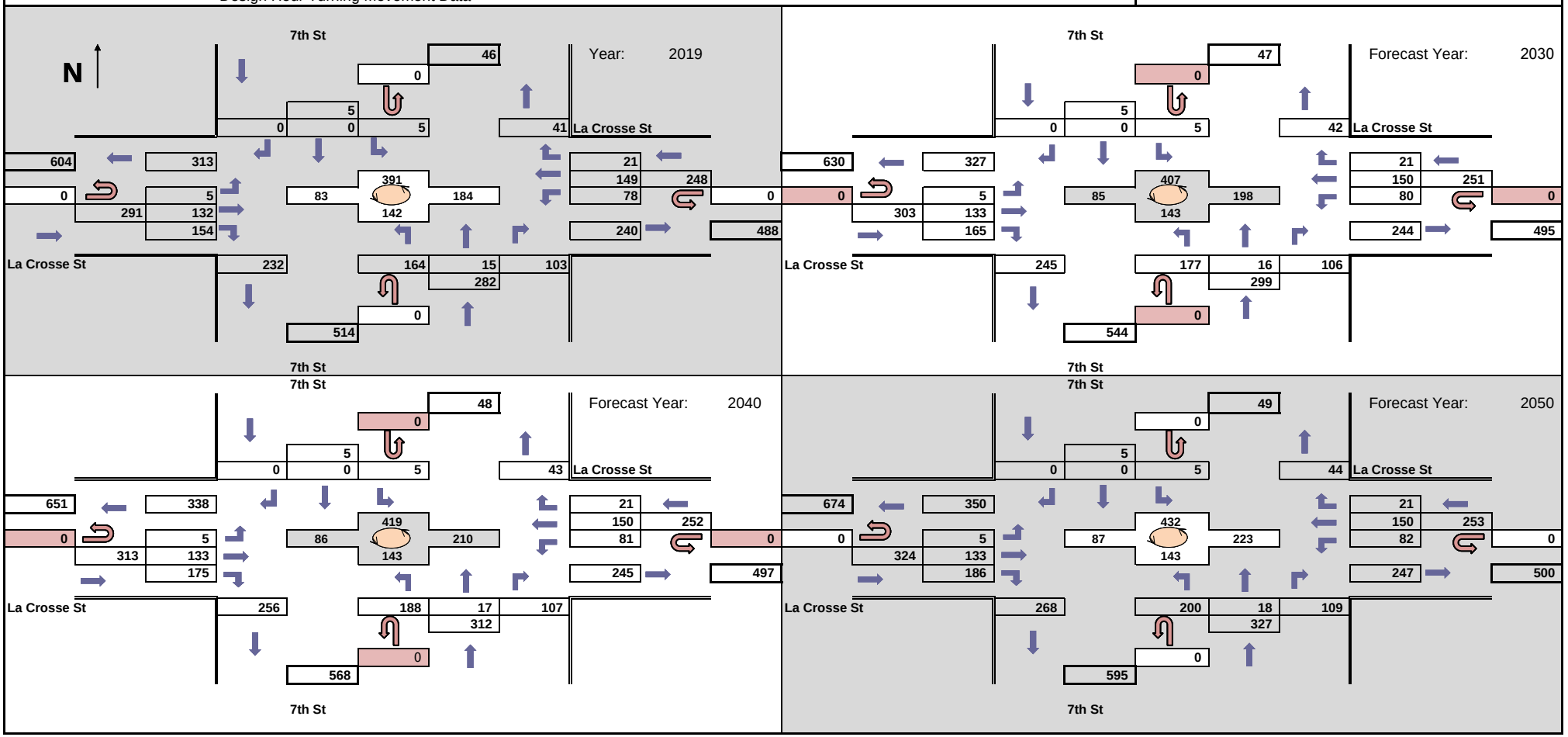

WisDOT Bureau of Planning & Economic Development
Traffic Forecasting Section
Forecast by: Miao Zhang
Phone: (608) 266 - 7995
Email: miao.zhang@dot.wi.gov

Projected PM Design Hour Traffic Volumes

Indicates roundabout

Design Hour: 4:15-5:15pm

Forecast Completed: 2/23/2021

Project Description

Project ID(s): 1630-08-00
Route(s): STH 16
Region/COUNTY(IES): SW/La Crosse
Location: STH 16 & 7th St.

Design Hour Turning Movement Data

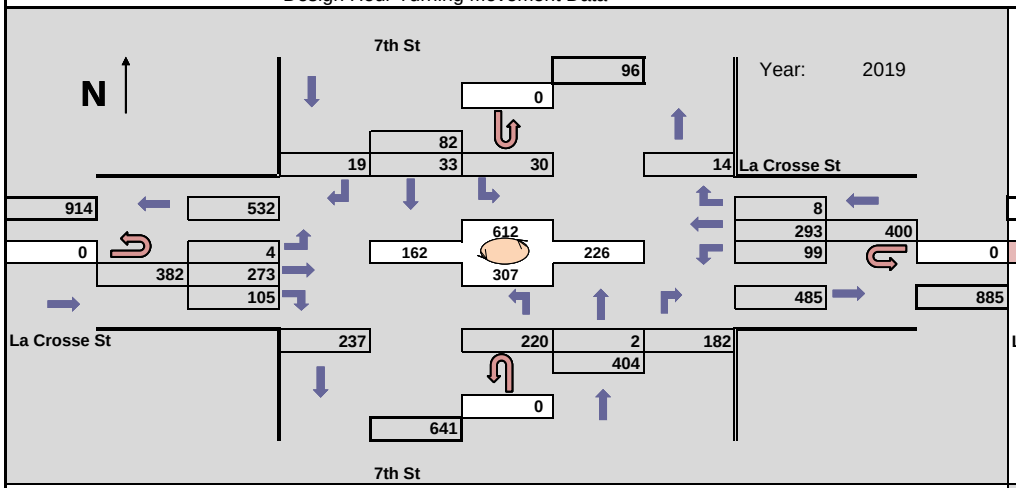

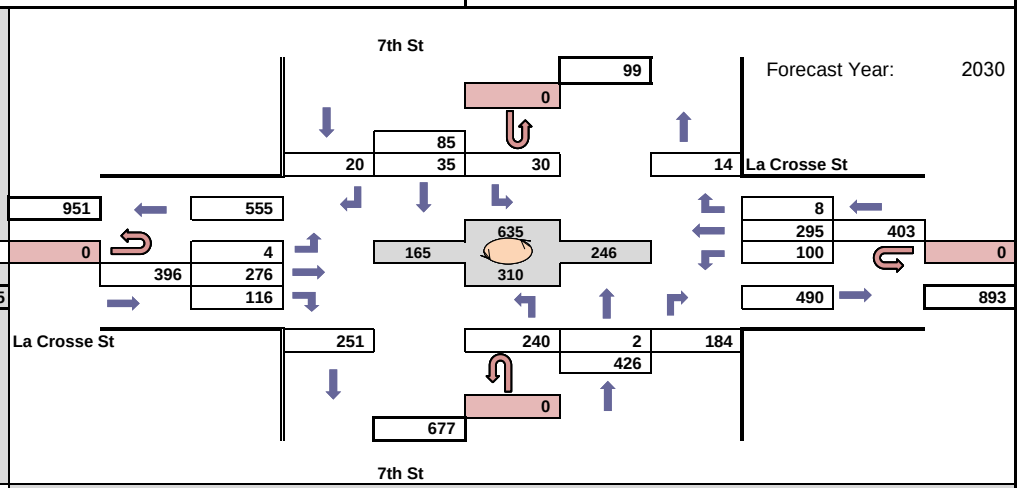

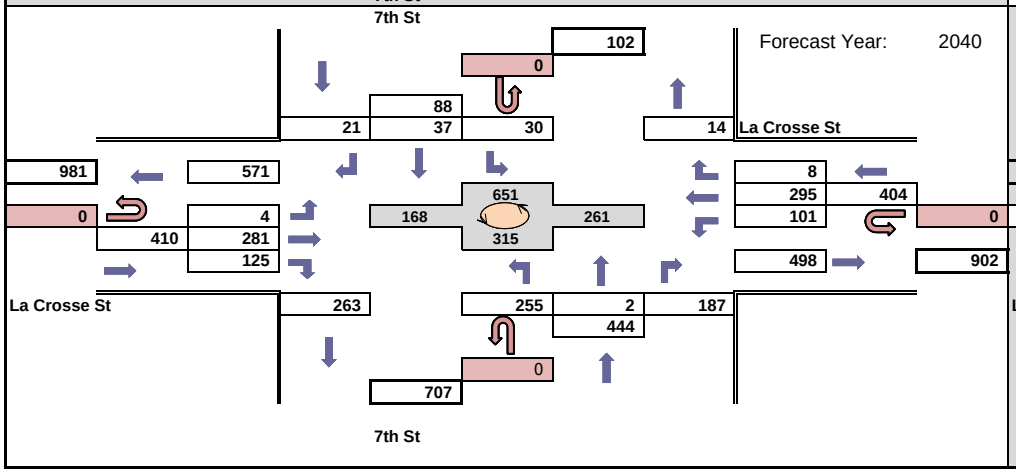

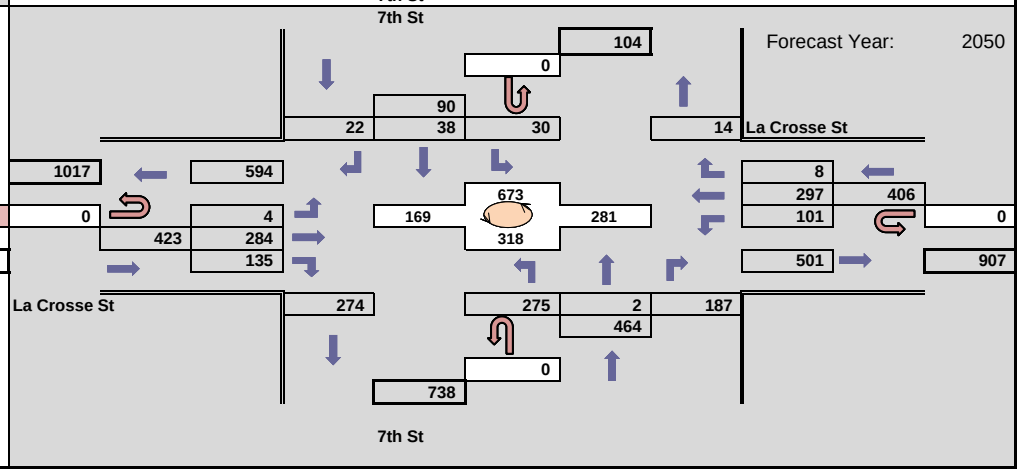

WisDOT TRAFFIC FORECAST REPORT	Region/COUNTY(IES): SW/La Crosse	Developed by: Miao Zhang
PROJECT ID(S): 1630-08-00	LOCATION: Losey Blvd. Segment	Phone: (608) 266-7995
ROUTE(S): Losey Blvd., STH 33	COMPLETED: 02/23/2021	
Traffic Forecasting Section; Bureau of Planning and Economic Development; Division of Transportation Investment Management		E-Mail: miao.zhang@dot.wi.gov

Site(s)	Route(s)	Volume(s)	Site Growth %
320583	STH 33	14990	0.31%

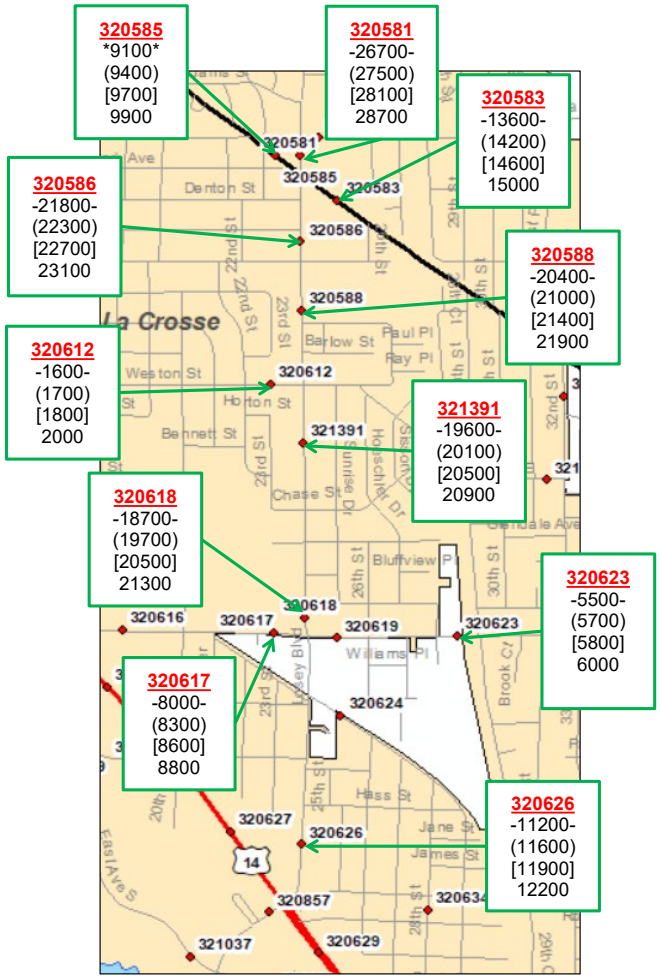

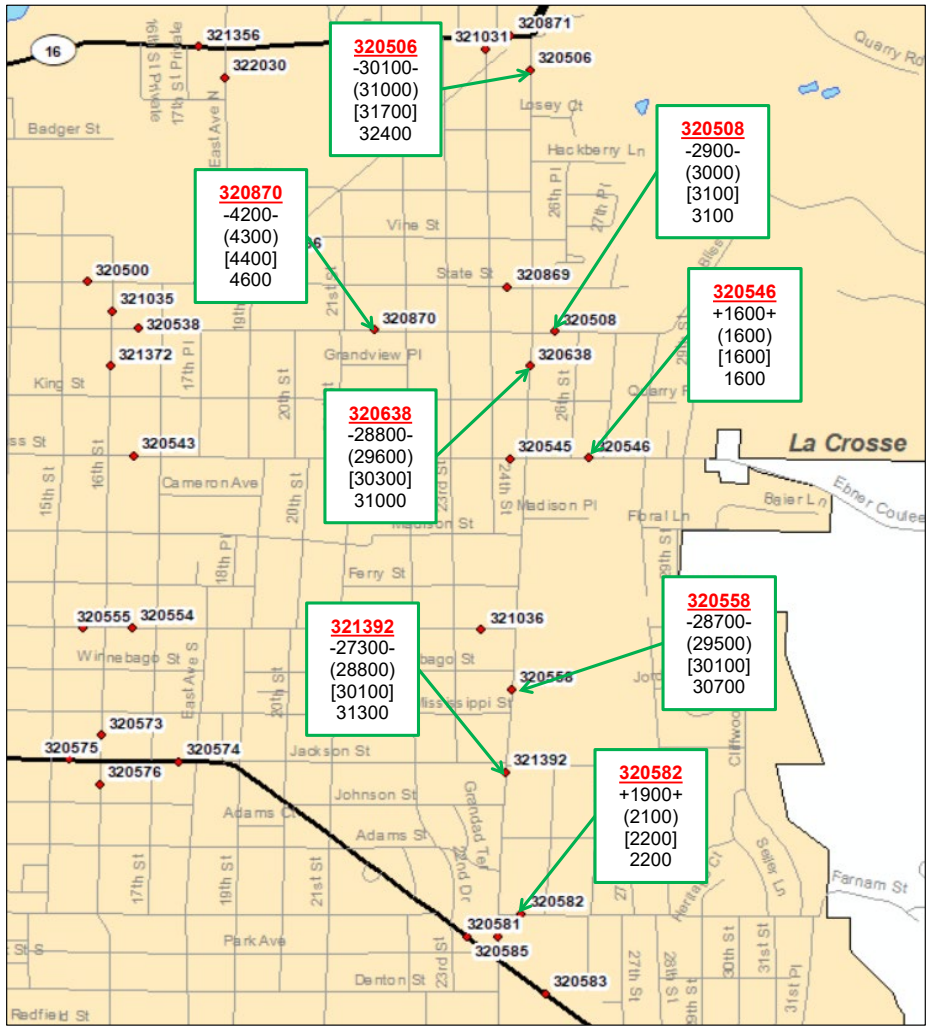

N

SITE ID = Colored, **bolded**, and underlined

Symbol	Count	Symbol	Forecast
-000-	2017 Count	(000)	2030 AADT
000	2014 Count	[000]	2040 AADT
+000+	2011 Count	000	2050 AADT

NOTES ON THE FORECAST:

1. This projection assumes that no major new traffic generators will be added to the development already included in the 2010/2040 La Crosse Regional Travel Demand Model.
2. Vehicle classification data and design values (K factors, directional splits, and percent trucks in design hours) are available here: http://wisconsindot.gov/Pages/projects/data-plan/traf-fore/default.aspx
3. STH 33 is a Factor Group II (Urban-Other) roadways (indicating low to moderate fluctuation in traffic from a seasonal perspective).
4. The 2010/2040 La Crosse Regional Travel Demand Model was used to complete this forecast. The Traffic Analysis Forecasting Information System output was used as a comparison tool to check against the model output. Adjustments were made as needed.
5. Roadway improvements coded within the existing plus committed (E+C) network of the 2010/2040 La Crosse Regional Travel Demand Model were assumed to be in place for the purposes of developing this forecast.

WisDOT Bureau of Planning & Economic Development
Traffic Forecasting Section
Forecast by: Miao Zhang
Phone: (608) 266 - 7995
Email: miao.zhang@dot.wi.gov

Projected AM Design Hour Traffic Volumes

Indicates roundabout

Design Hour: 7:00-8:00am

Forecast Completed: 2/23/2021

Project Description

Project ID(s): 1630-08-00
Route(s): Losey
Region/COUNTY(IES): SW/La Crosse
Location: Losey Blvd & Main St

Design Hour Turning Movement Data

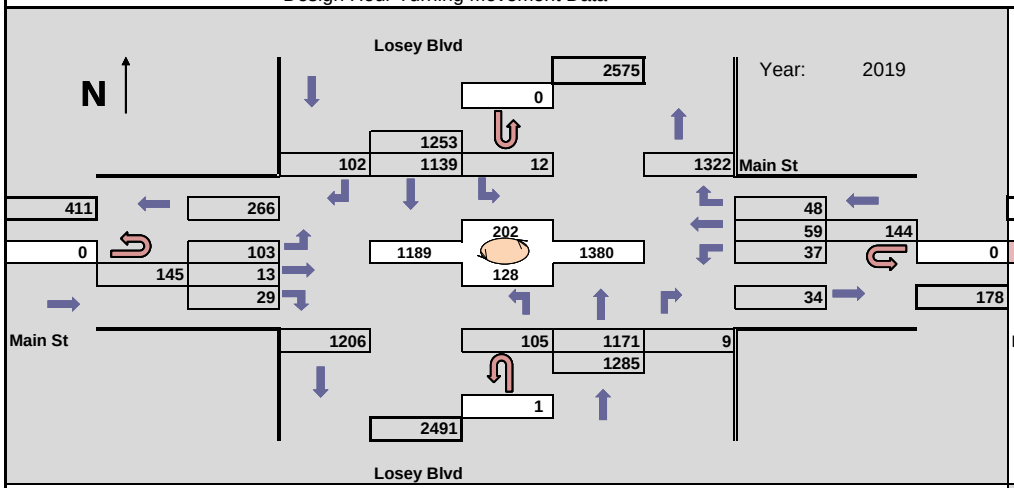

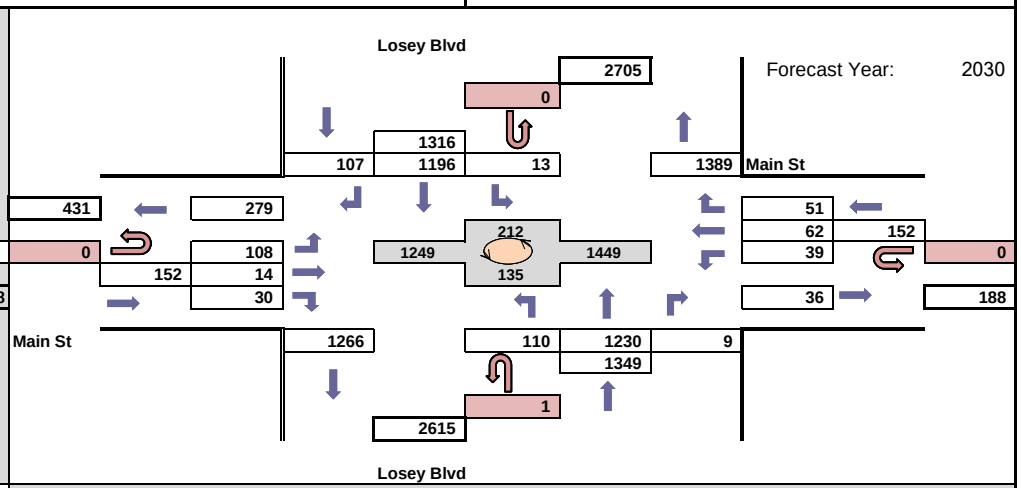

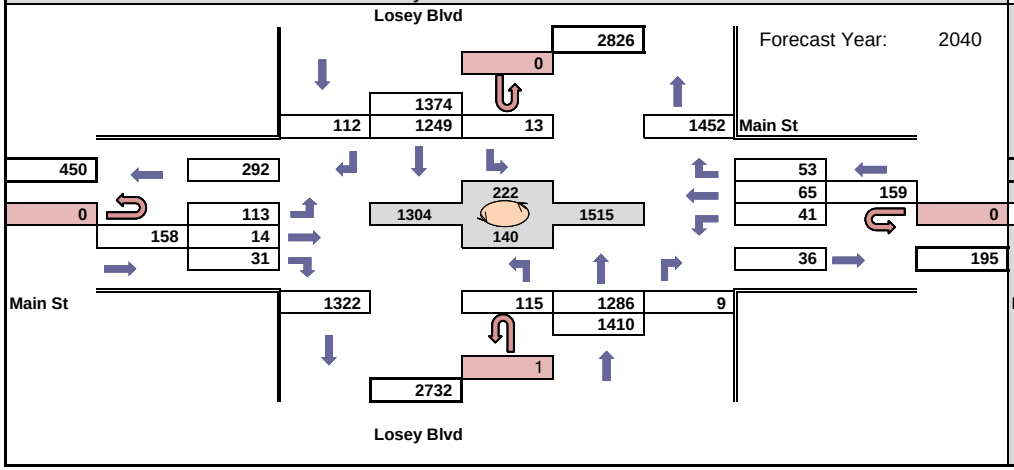

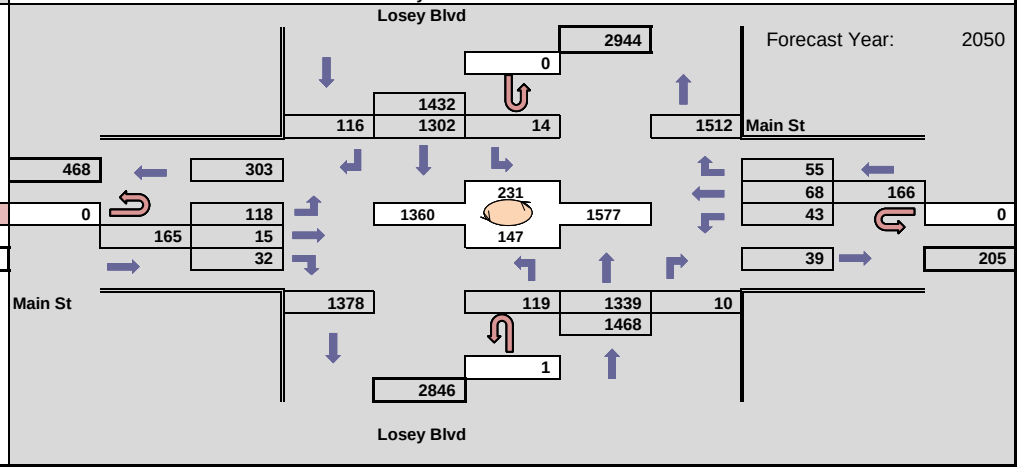

WisDOT Bureau of Planning & Economic Development
Traffic Forecasting Section
Forecast by: Miao Zhang
Phone: (608) 266 - 7995
Email: miao.zhang@dot.wi.gov

Projected PM Design Hour Traffic Volumes

Indicates roundabout

Design Hour: 3:30-4:30pm

Forecast Completed: 2/23/2021

Project Description

Project ID(s): 1630-08-00
Route(s): Losey
Region/COUNTY(IES): SW/La Crosse
Location: Losey Blvd & Main St

Design Hour Turning Movement Data

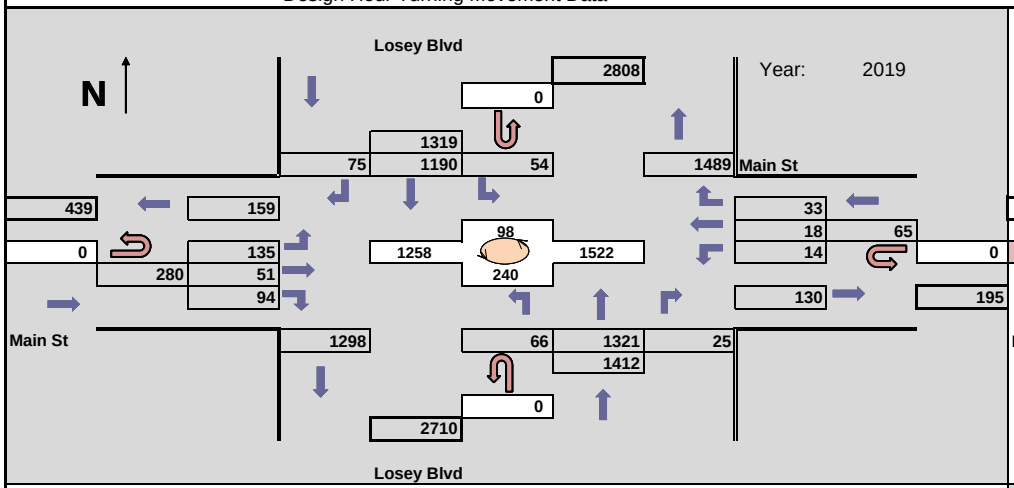

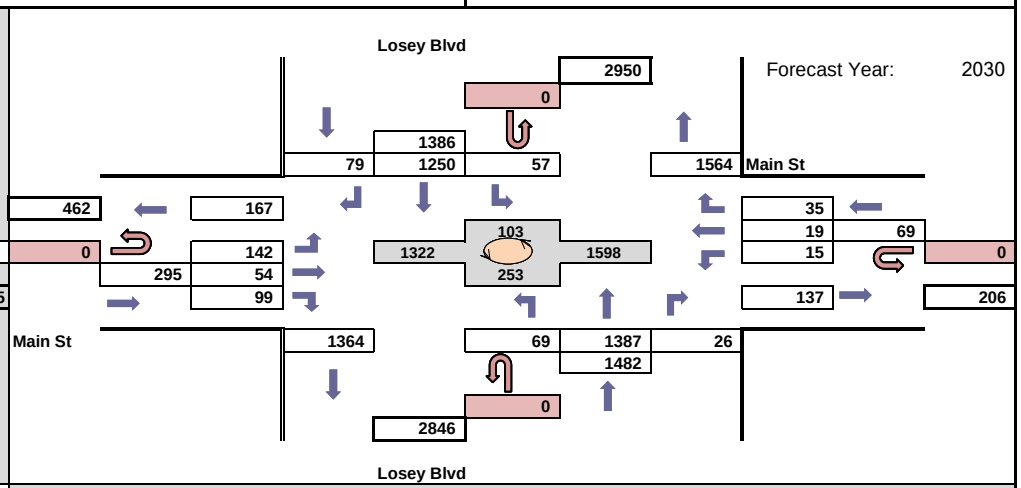

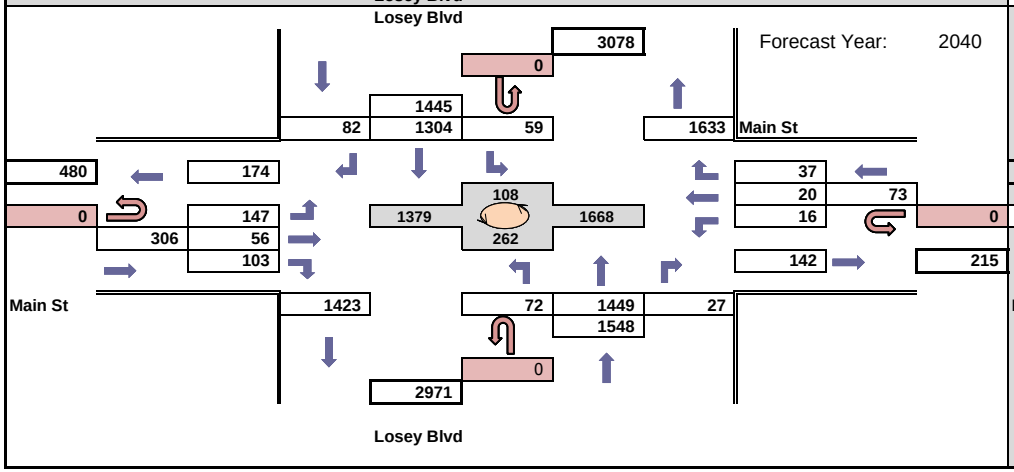

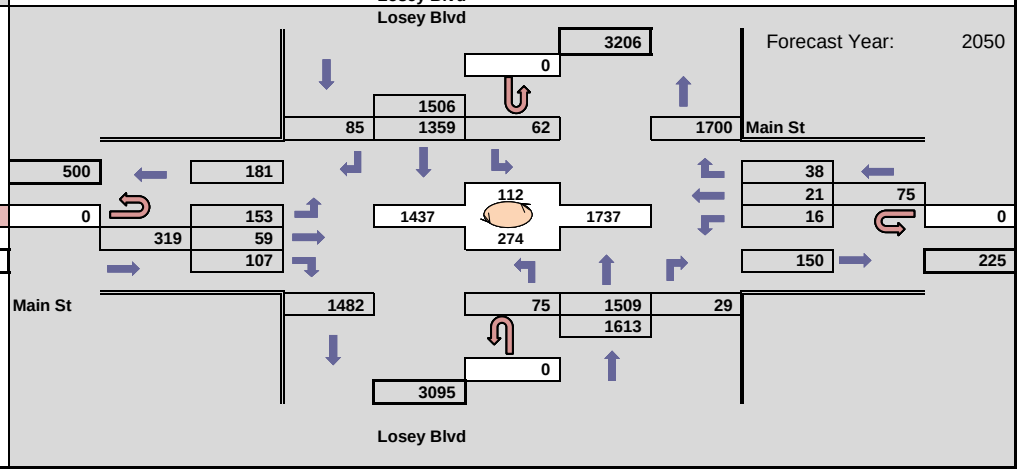

WisDOT Bureau of Planning & Economic Development
Traffic Forecasting Section
Forecast by: Miao Zhang
Phone: (608) 266 - 7995
Email: miao.zhang@dot.wi.gov

Projected AM Design Hour Traffic Volumes

Indicates roundabout

Design Hour: 7:00-8:00am

Forecast Completed: 2/23/2021

Project Description

Project ID(s): 1630-08-00
Route(s): Losey
Region/COUNTY(IES): SW/La Crosse
Location: Losey Blvd & Cass St

Design Hour Turning Movement Data

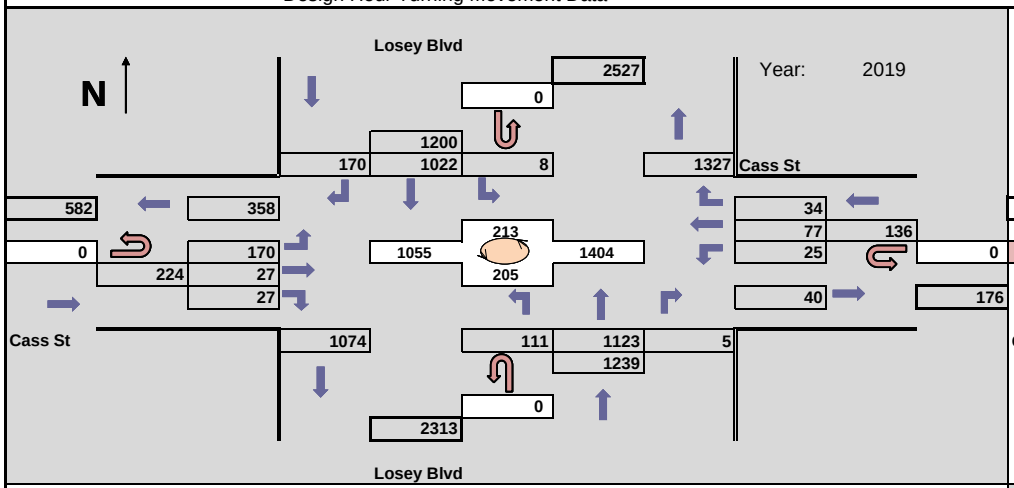

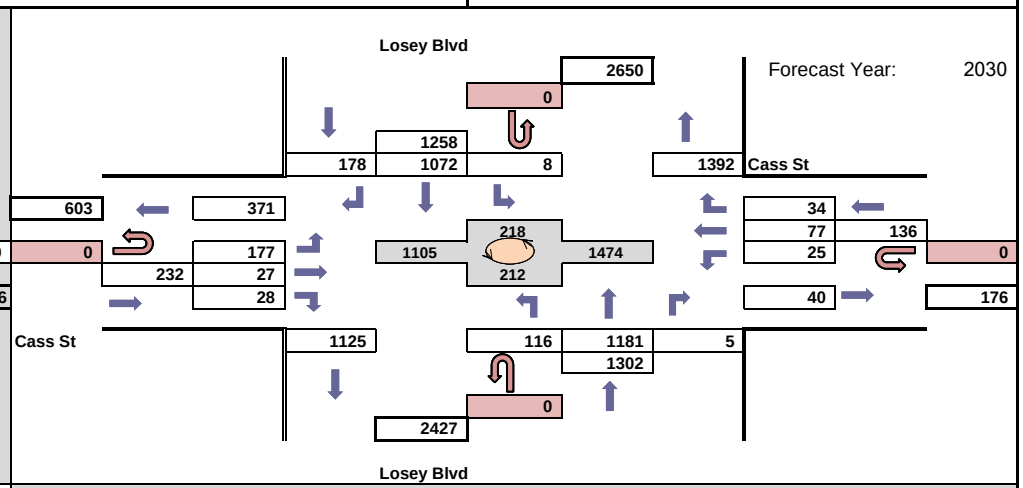

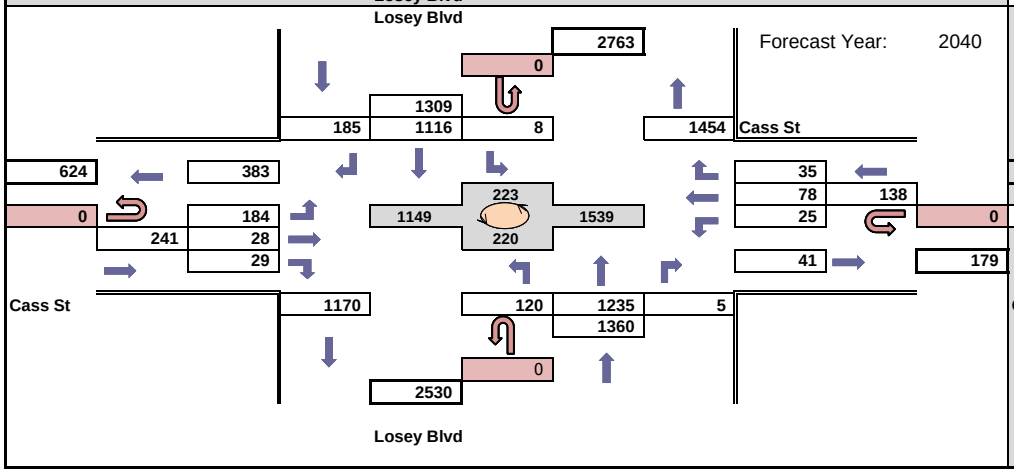

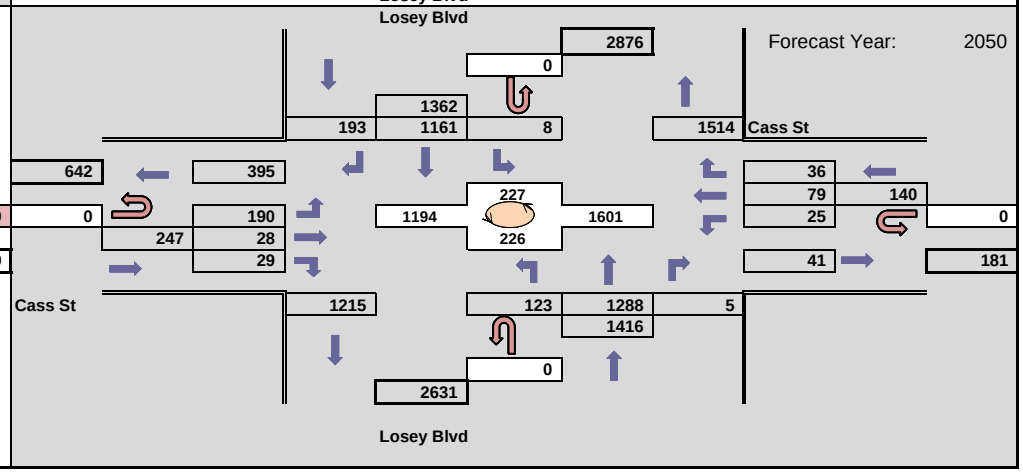

WisDOT Bureau of Planning & Economic Development
Traffic Forecasting Section
Forecast by: Miao Zhang
Phone: (608) 266 - 7995
Email: miao.zhang@dot.wi.gov

Projected PM Design Hour Traffic Volumes

Indicates roundabout

Design Hour: 3:30-4:30pm

Forecast Completed: 2/23/2021

Project Description

Project ID(s): 1630-08-00
Route(s): Losey
Region/COUNTY(IES): SW/La Crosse
Location: Losey Blvd & Cass St

Design Hour Turning Movement Data

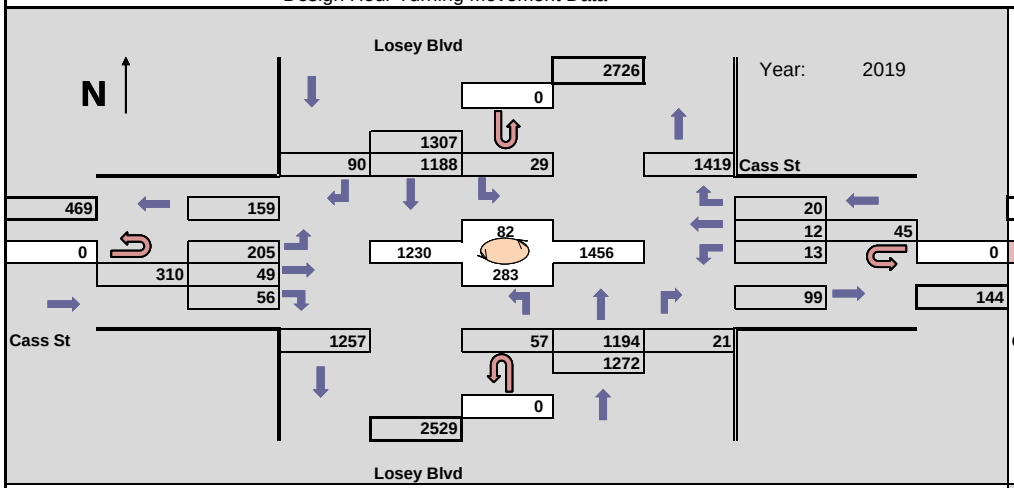

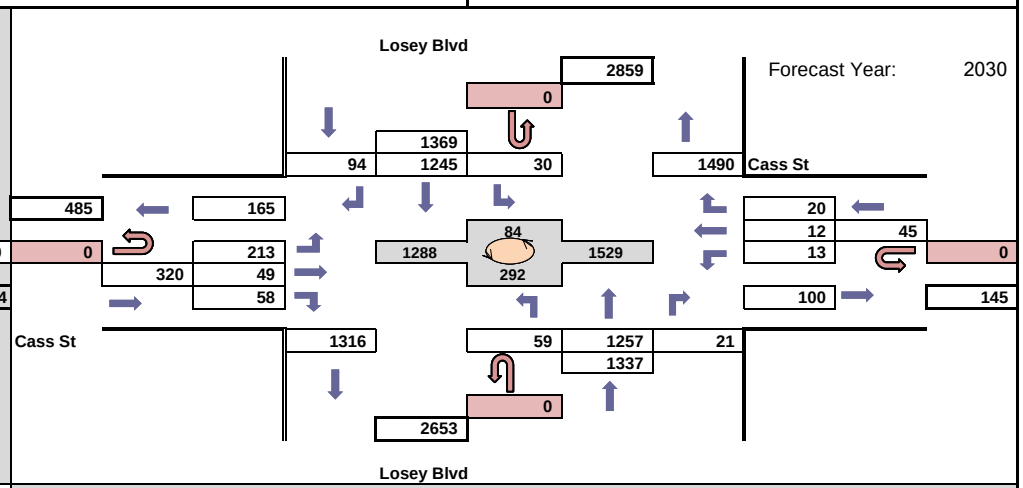

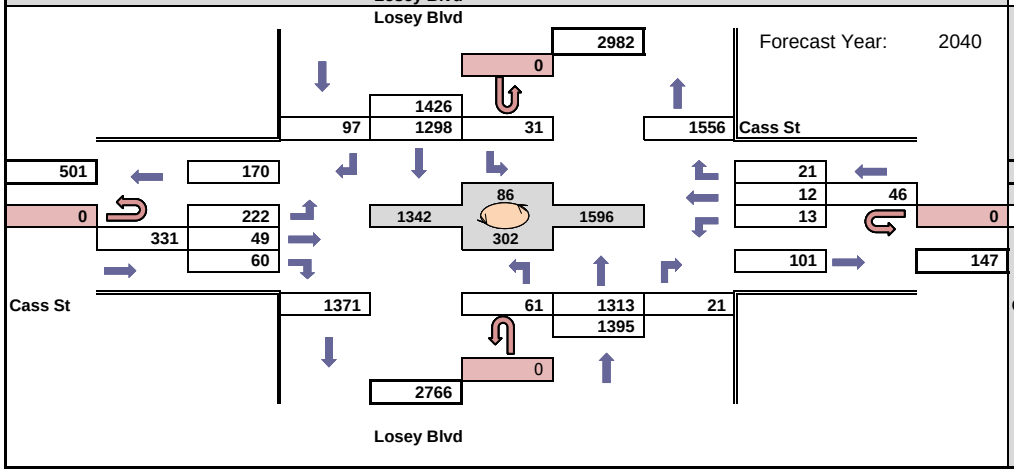

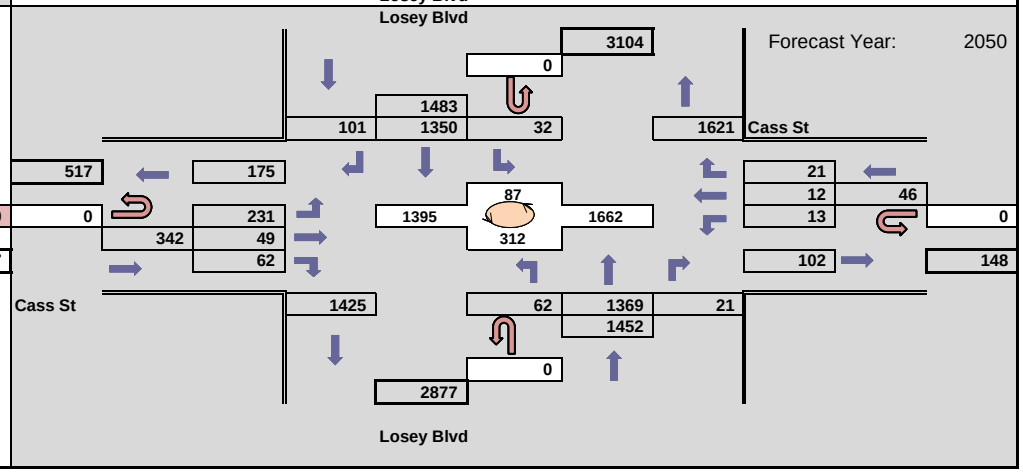

WisDOT Bureau of Planning & Economic Development
Traffic Forecasting Section
Forecast by: Miao Zhang
Phone: (608) 266 - 7995
Email: miao.zhang@dot.wi.gov

Projected AM Design Hour Traffic Volumes

Indicates roundabout

Design Hour: 7:00-8:00am

Forecast Completed: 2/23/2021

Project Description

Project ID(s): 1630-08-00
Route(s): Losey
Region/COUNTY(IES): SW/La Crosse
Location: Losey Blvd & Farnam St

Design Hour Turning Movement Data

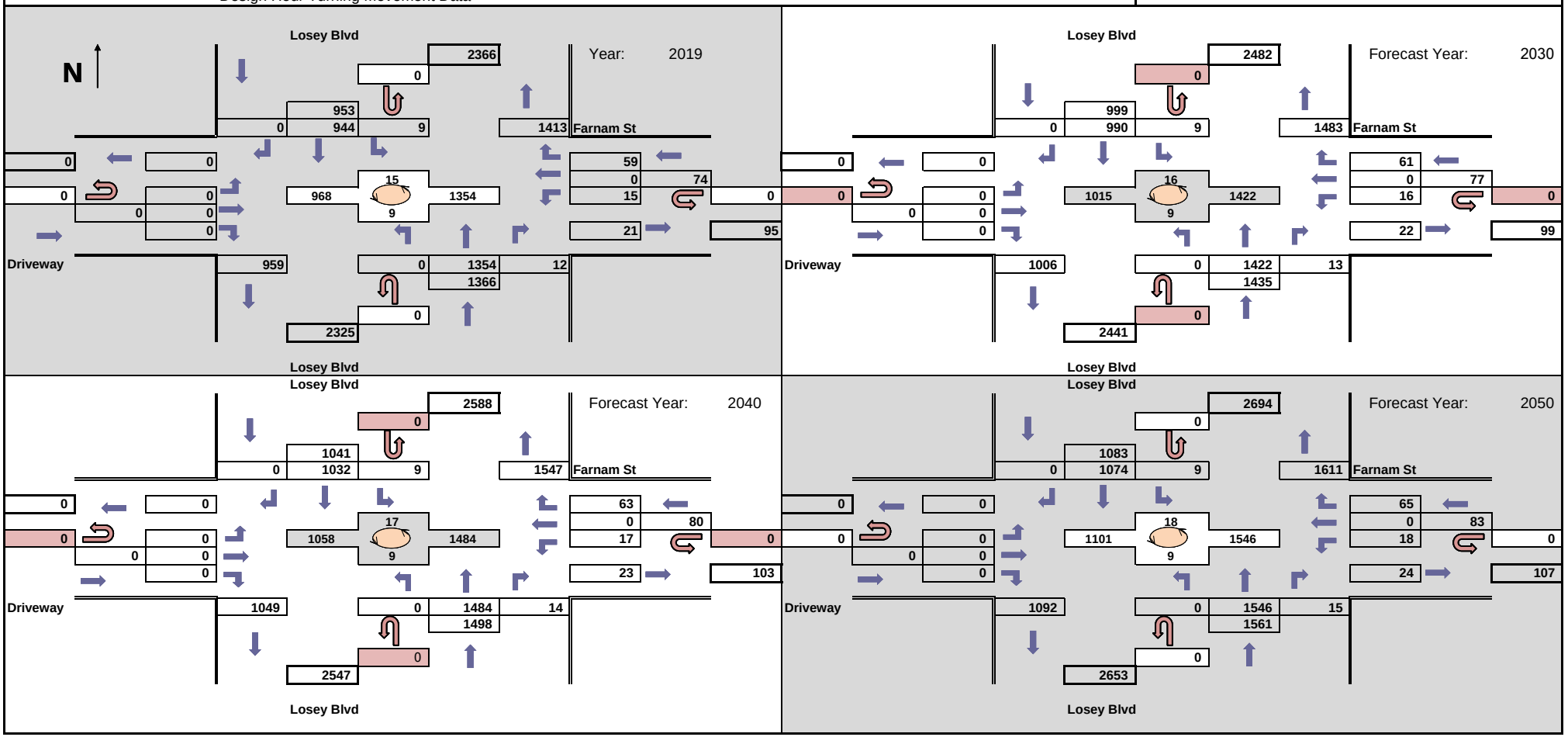

WisDOT Bureau of Planning & Economic Development
Traffic Forecasting Section
Forecast by: Miao Zhang
Phone: (608) 266 - 7995
Email: miao.zhang@dot.wi.gov

Projected PM Design Hour Traffic Volumes

Indicates roundabout

Design Hour: 3:30-4:30pm

Forecast Completed: 2/23/2021

Project Description

Project ID(s): 1630-08-00
Route(s): Losey
Region/COUNTY(IES): SW/La Crosse
Location: Losey Blvd & Farnam St

Design Hour Turning Movement Data

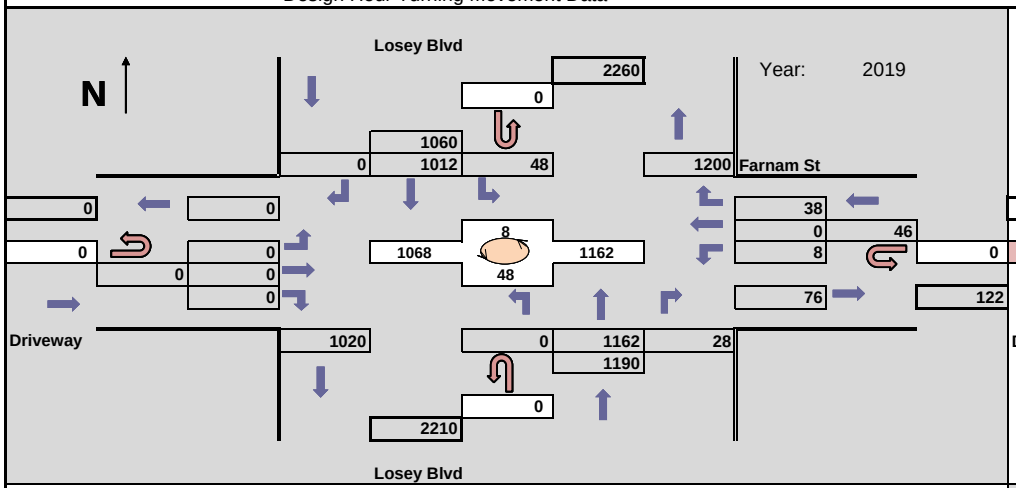

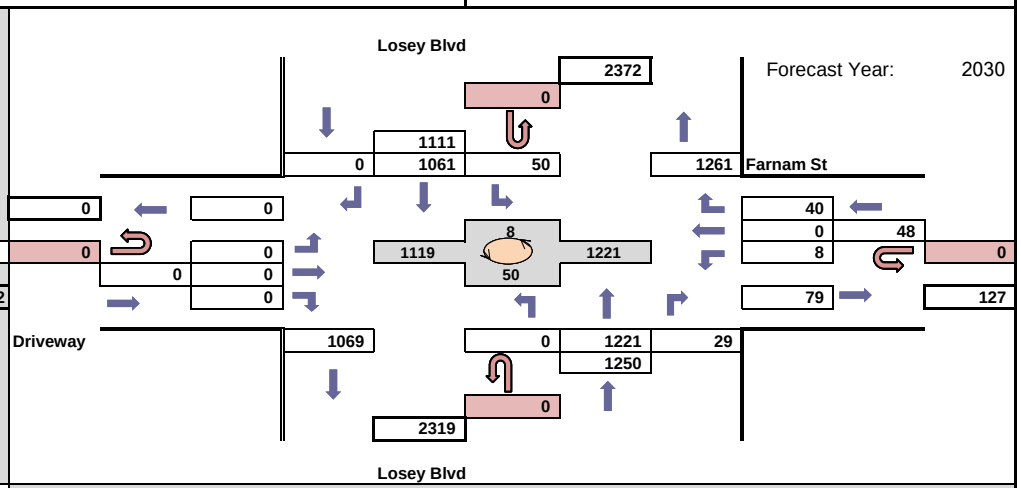

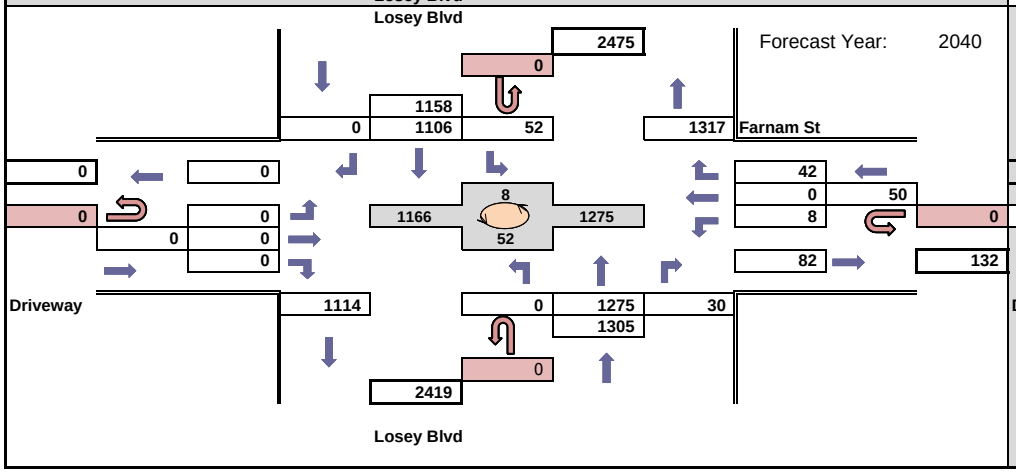

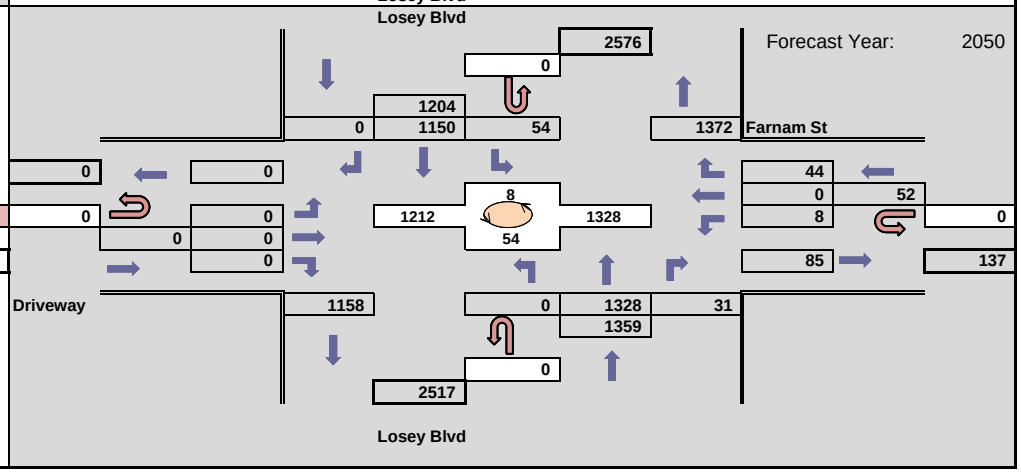

WisDOT Bureau of Planning & Economic Development
Traffic Forecasting Section
Forecast by: Miao Zhang
Phone: (608) 266 - 7995
Email: miao.zhang@dot.wi.gov

Projected AM Design Hour Traffic Volumes

Indicates roundabout

Design Hour: 7:00-8:00am

Forecast Completed: 2/23/2021

Project Description

Project ID(s): 1630-08-00
Route(s): Losey
Region/COUNTY(IES): SW/La Crosse
Location: WIS 33 (State Rd) & Losey Blvd

Design Hour Turning Movement Data

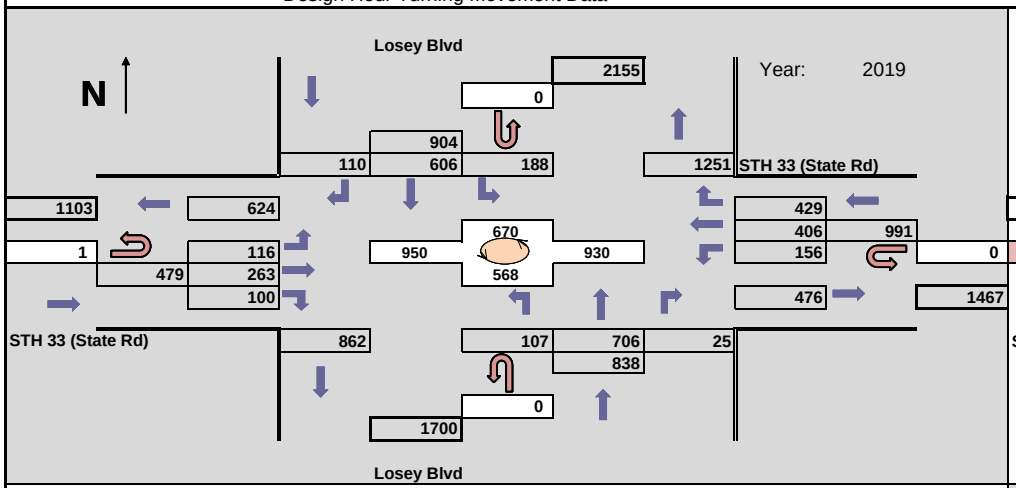

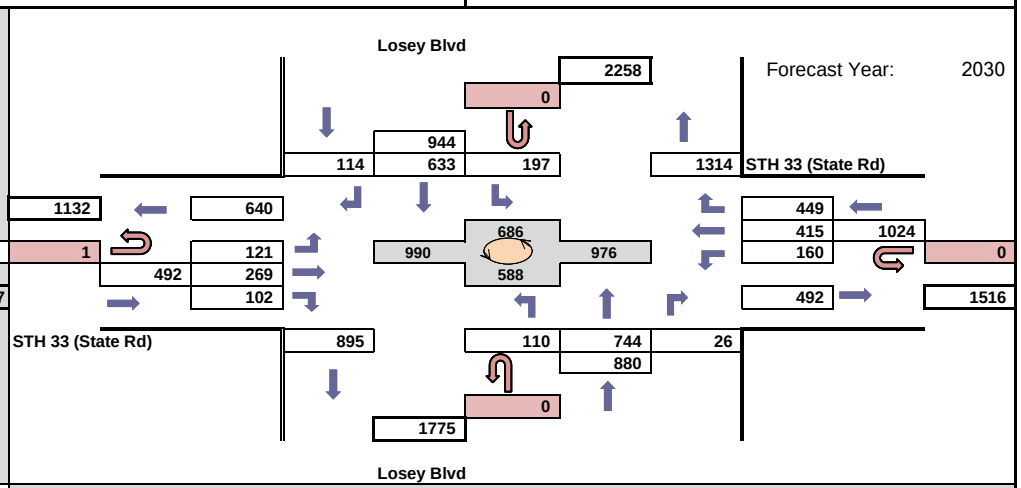

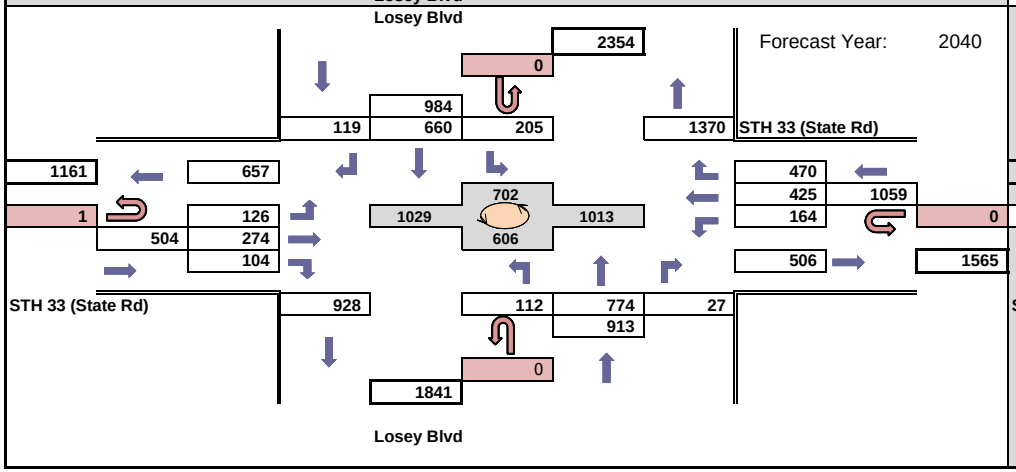

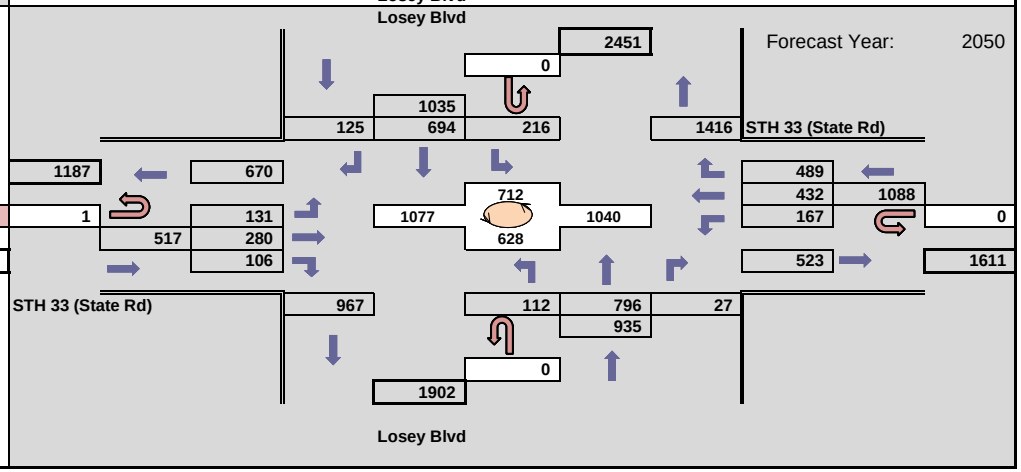

WisDOT Bureau of Planning & Economic Development
Traffic Forecasting Section
Forecast by: Miao Zhang
Phone: (608) 266 - 7995
Email: miao.zhang@dot.wi.gov

Projected PM Design Hour Traffic Volumes

Indicates roundabout

Design Hour: 3:30-4:30pm

Forecast Completed: 2/23/2021

Project Description

Project ID(s): 1630-08-00
Route(s): Losey
Region/COUNTY(IES): SW/La Crosse
Location: WIS 33 (State Rd) & Losey Blvd

Design Hour Turning Movement Data

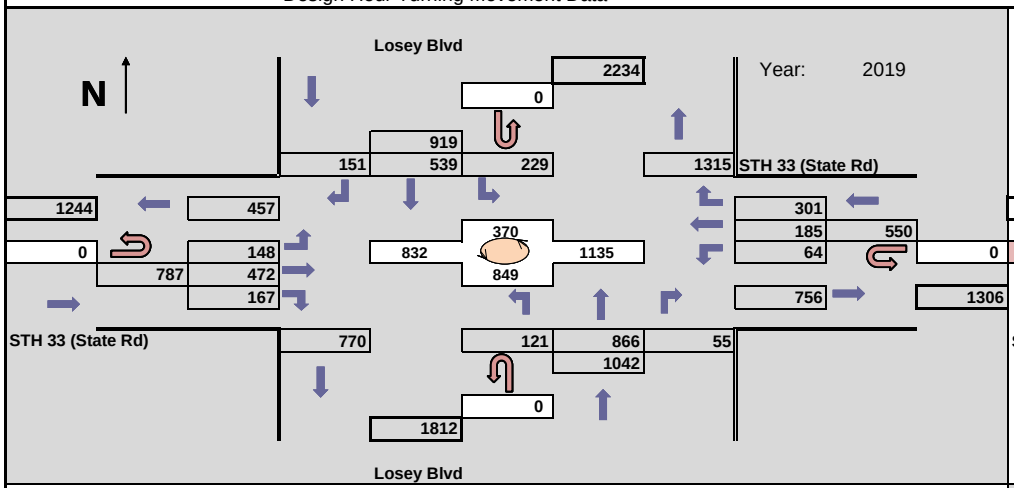

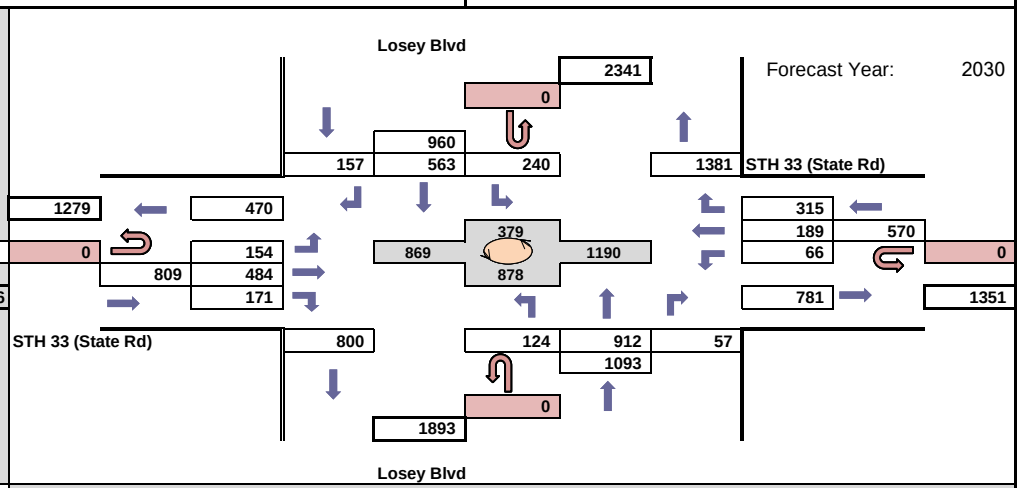

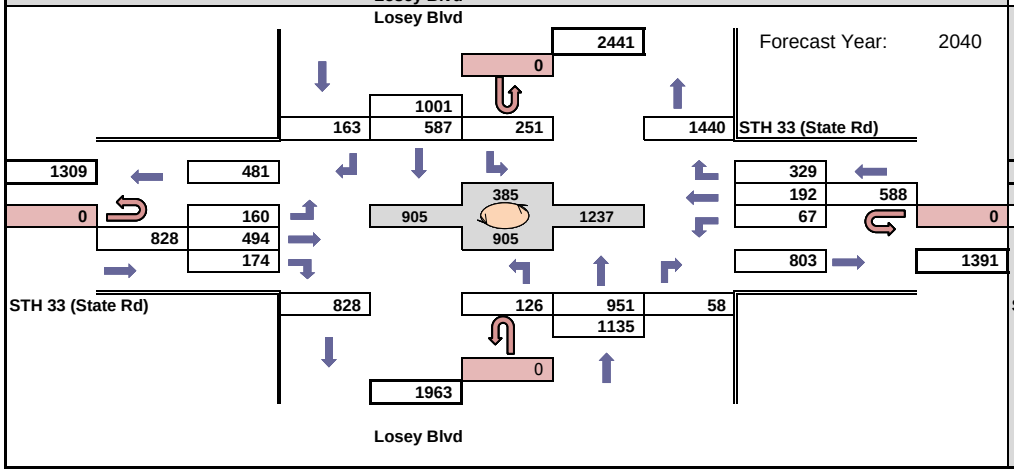

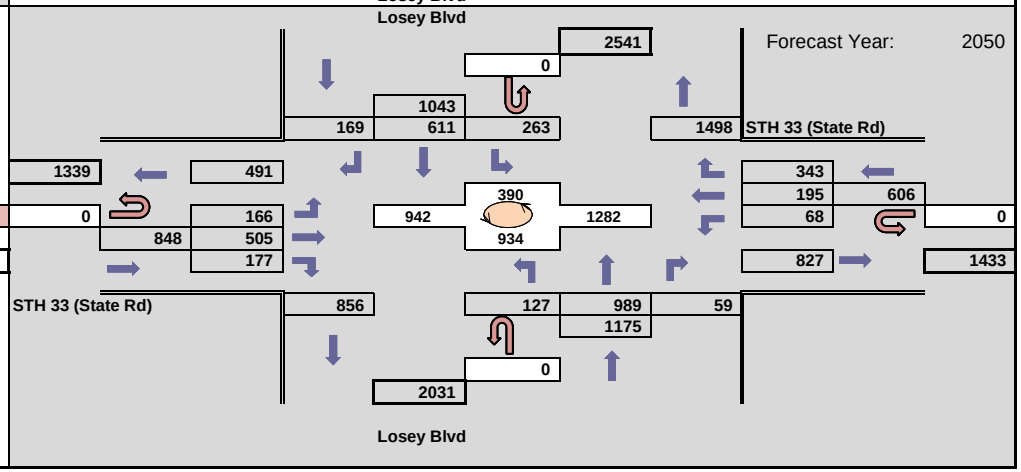

WisDOT Bureau of Planning & Economic Development
Traffic Forecasting Section
Forecast by: Miao Zhang
Phone: (608) 266 - 7995
Email: miao.zhang@dot.wi.gov

Projected AM Design Hour Traffic Volumes

Indicates roundabout

Design Hour: 7:00-8:00am

Forecast Completed: 2/23/2021

Project Description

Project ID(s): 1630-08-00
Route(s): Losey
Region/COUNTY(IES): SW/La Crosse
Location: Losey Blvd & Green Bay St.

Design Hour Turning Movement Data

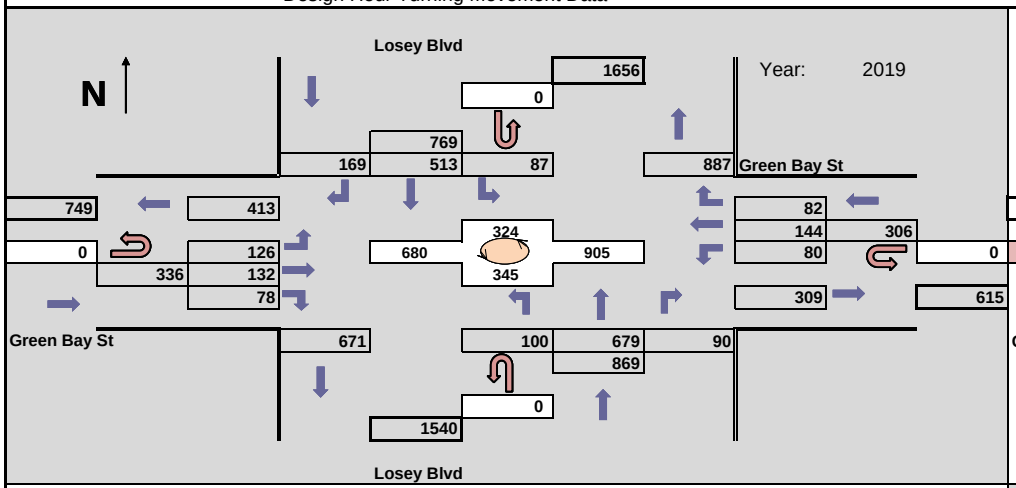

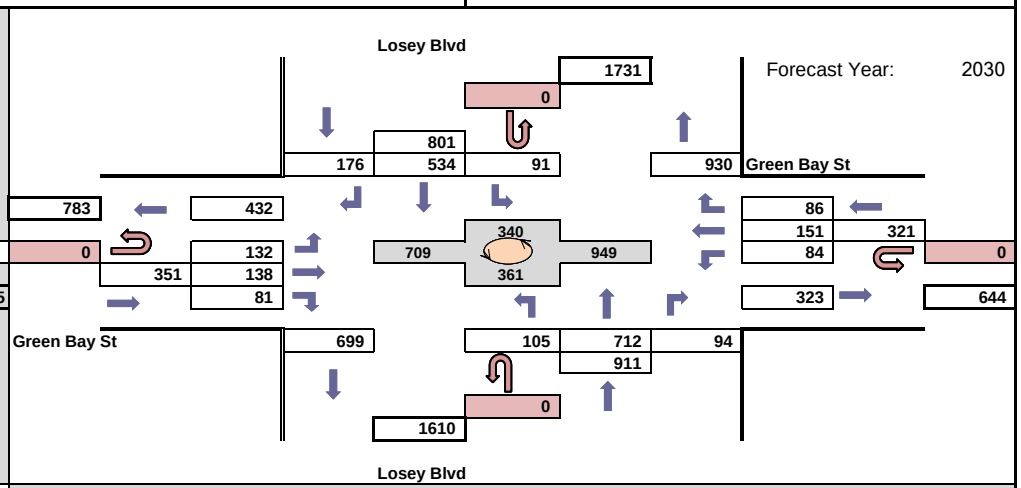

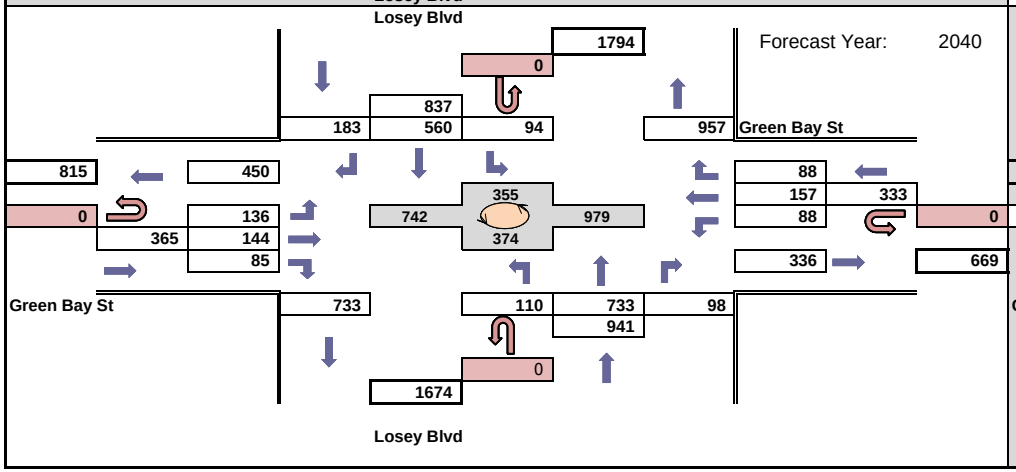

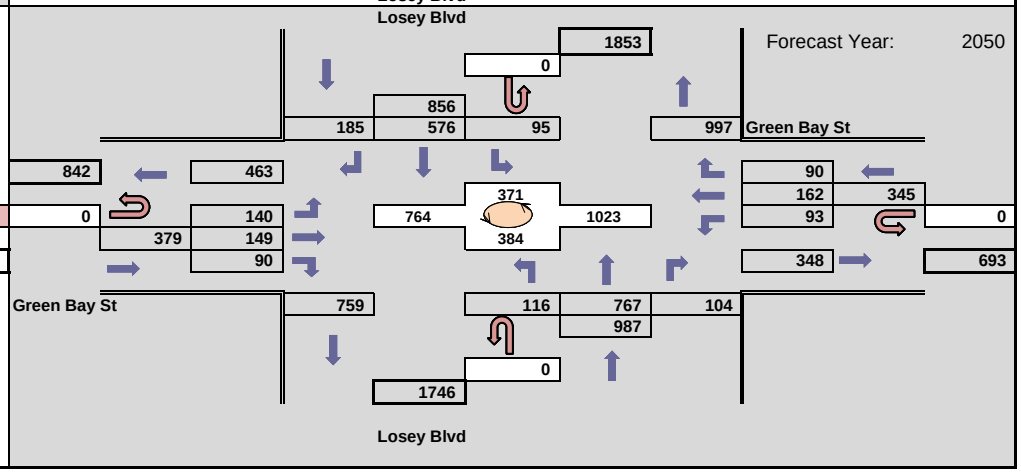

WisDOT Bureau of Planning & Economic Development
Traffic Forecasting Section
Forecast by: Miao Zhang
Phone: (608) 266 - 7995
Email: miao.zhang@dot.wi.gov

Projected PM Design Hour Traffic Volumes

Indicates roundabout

Design Hour: 3:30-4:30pm

Forecast Completed: 2/23/2021

Project Description

Project ID(s): 1630-08-00
Route(s): Losey
Region/COUNTY(IES): SW/La Crosse
Location: Losey Blvd & Green Bay St.

Design Hour Turning Movement Data

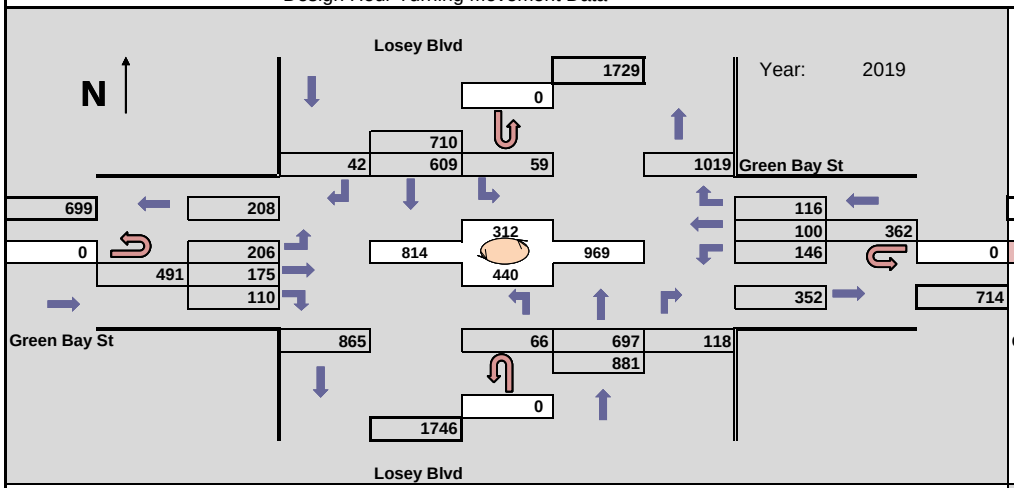

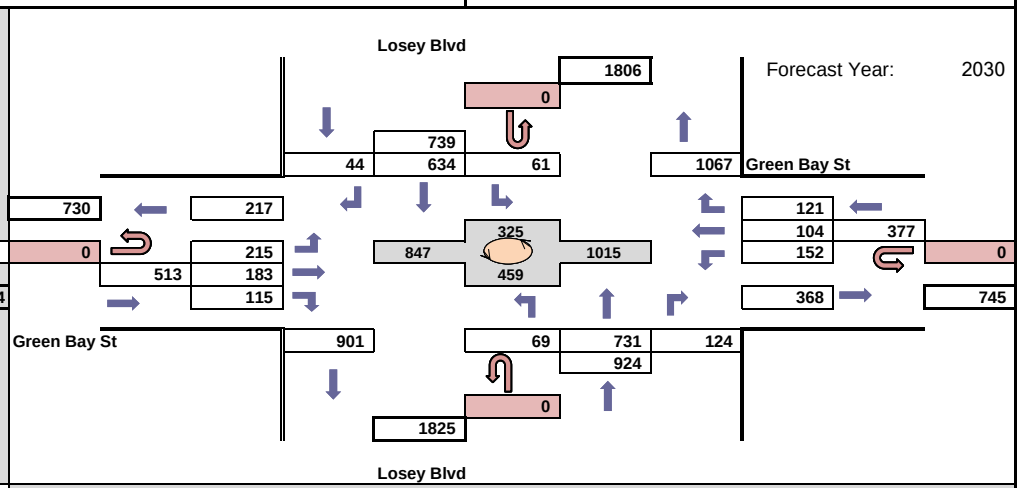

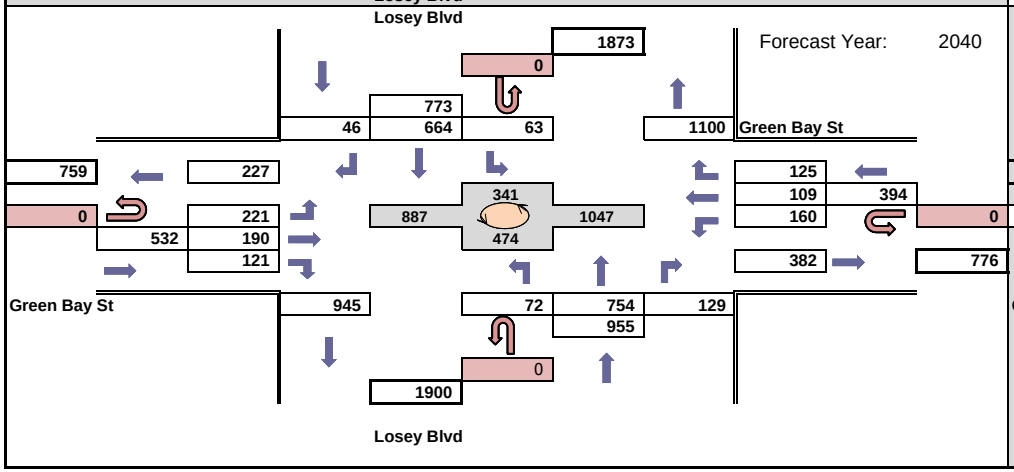

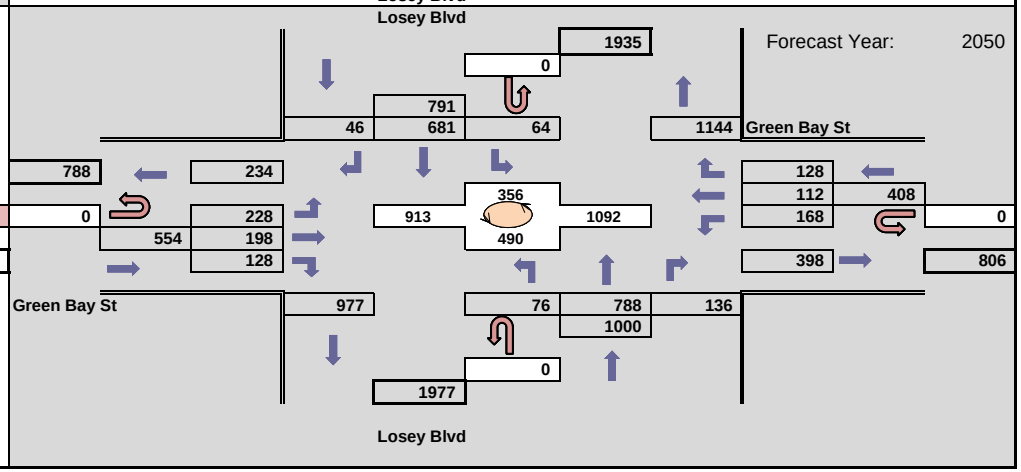

WisDOT Bureau of Planning & Economic Development
Traffic Forecasting Section
Forecast by: Miao Zhang
Phone: (608) 266 - 7995
Email: miao.zhang@dot.wi.gov

Projected AM Design Hour Traffic Volumes

Indicates roundabout

Design Hour: 7:00-8:00am

Forecast Completed: 2/23/2021

Project Description

Project ID(s): 1630-08-00
Route(s): Losey
Region/COUNTY(IES): SW/La Crosse
Location: Losey Blvd & Weston St

Design Hour Turning Movement Data

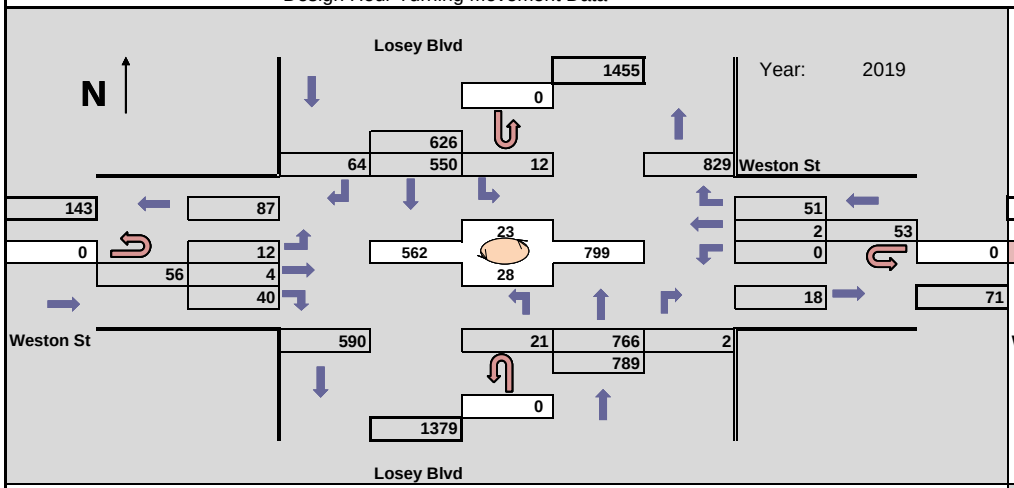

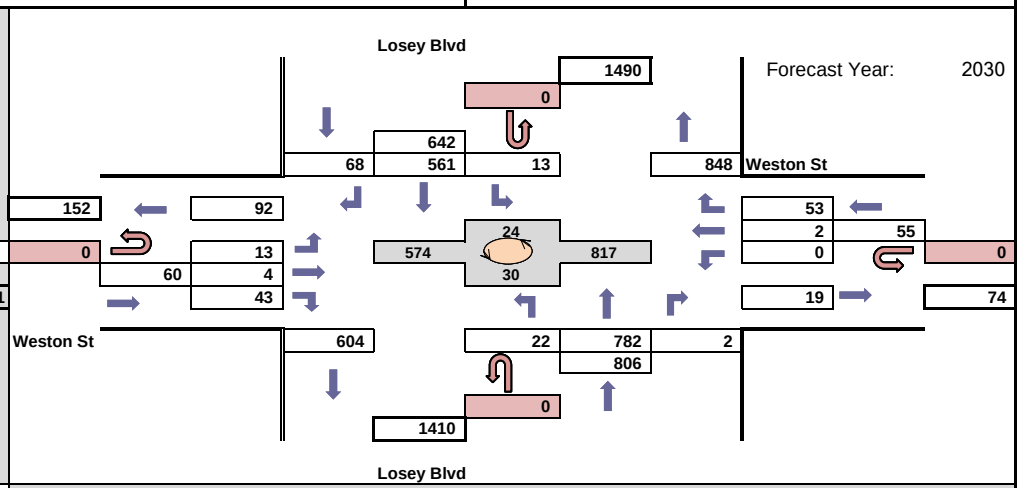

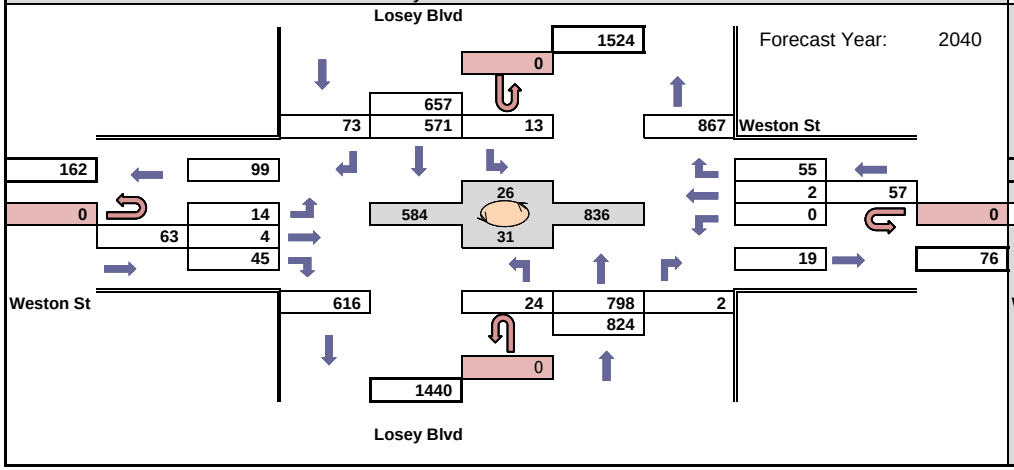

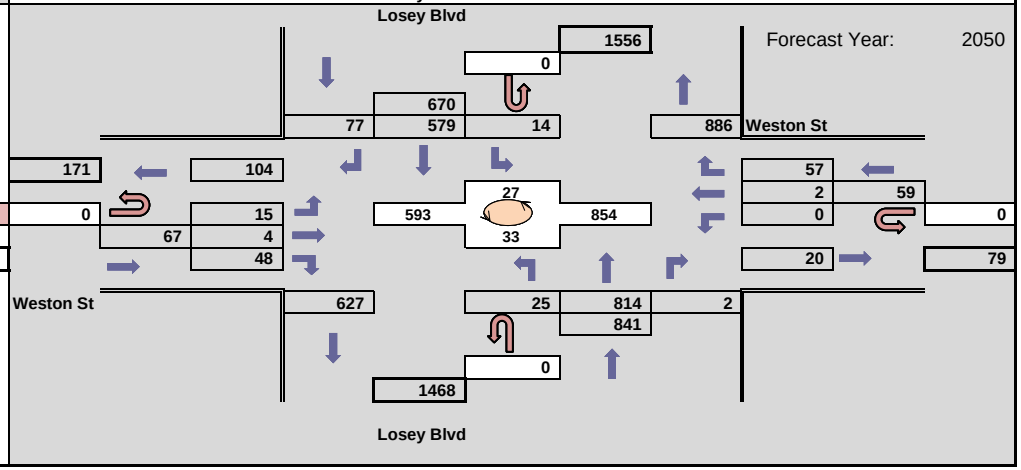

WisDOT Bureau of Planning & Economic Development
Traffic Forecasting Section
Forecast by: Miao Zhang
Phone: (608) 266 - 7995
Email: miao.zhang@dot.wi.gov

Projected PM Design Hour Traffic Volumes

Indicates roundabout

Design Hour: 3:30-4:30pm

Forecast Completed: 2/23/2021

Project Description

Project ID(s): 1630-08-00
Route(s): Losey
Region/COUNTY(IES): SW/La Crosse
Location: Losey Blvd & Weston St

Design Hour Turning Movement Data

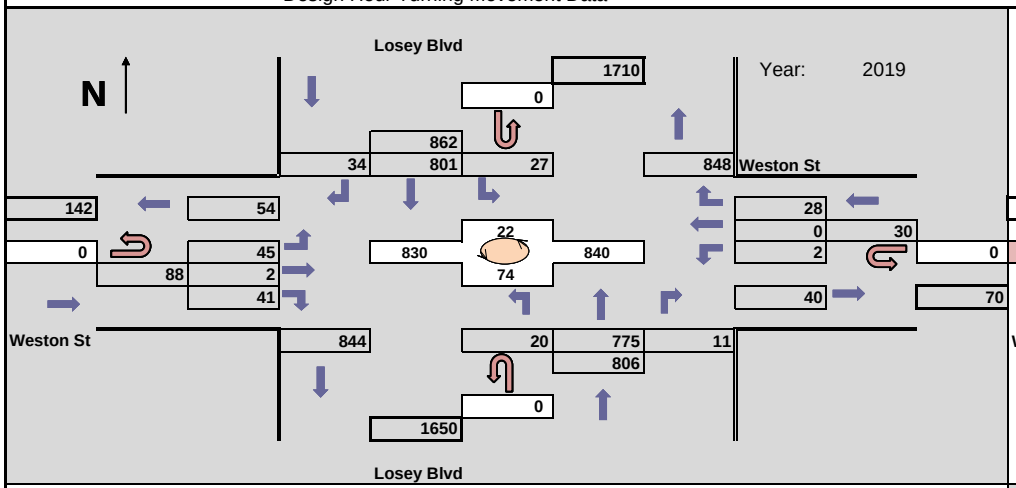

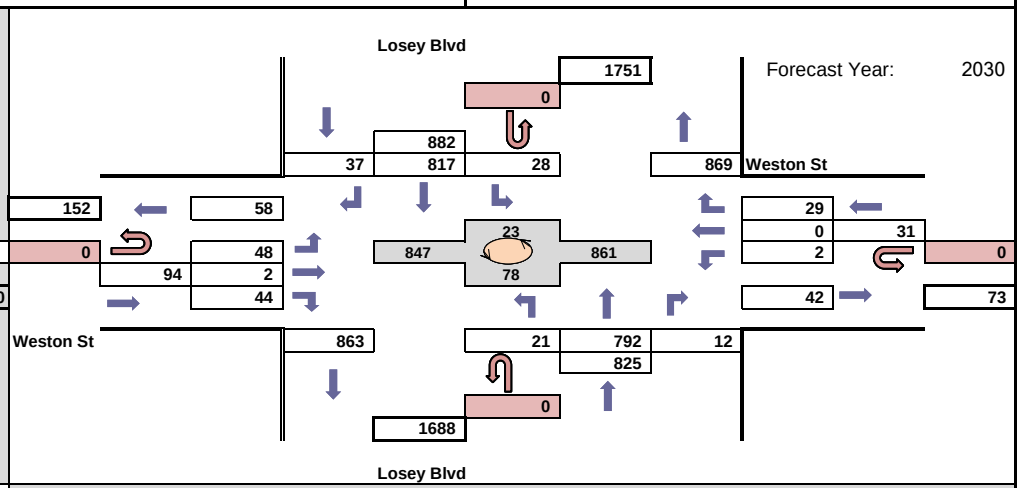

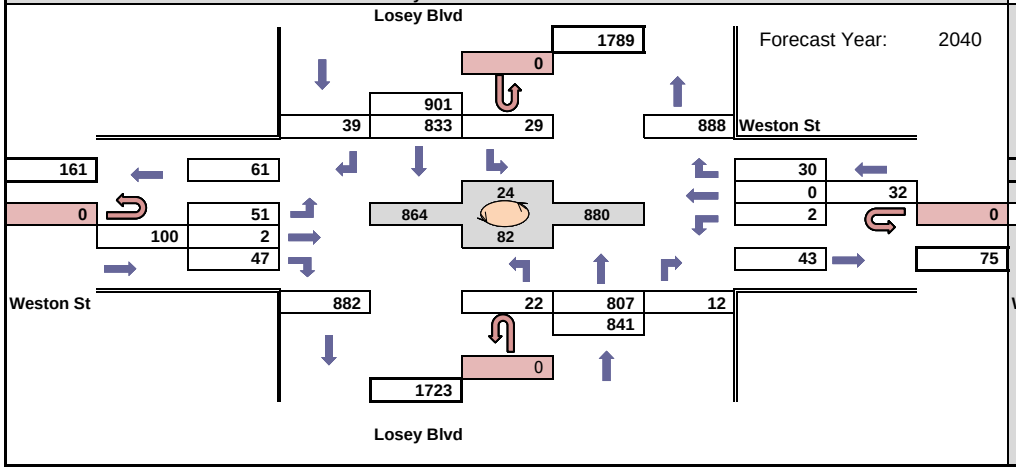

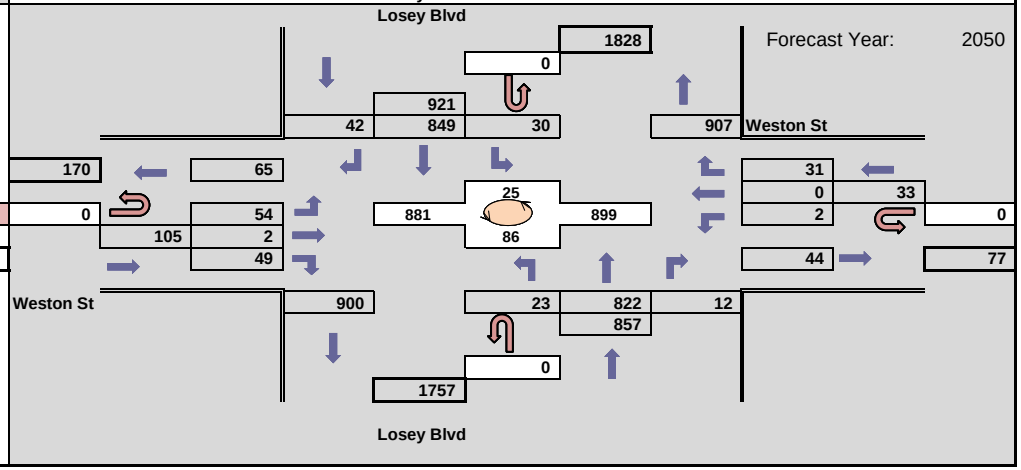

WisDOT Bureau of Planning & Economic Development
Traffic Forecasting Section
Forecast by: Miao Zhang
Phone: (608) 266 - 7995
Email: miao.zhang@dot.wi.gov

Projected AM Design Hour Traffic Volumes

Indicates roundabout

Design Hour: 7:00-8:00am

Forecast Completed: 2/23/2021

Project Description

Project ID(s): 1630-08-00
Route(s): Losey
Region/COUNTY(IES): SW/La Crosse
Location: Losey Blvd & Ward Ave

Design Hour Turning Movement Data

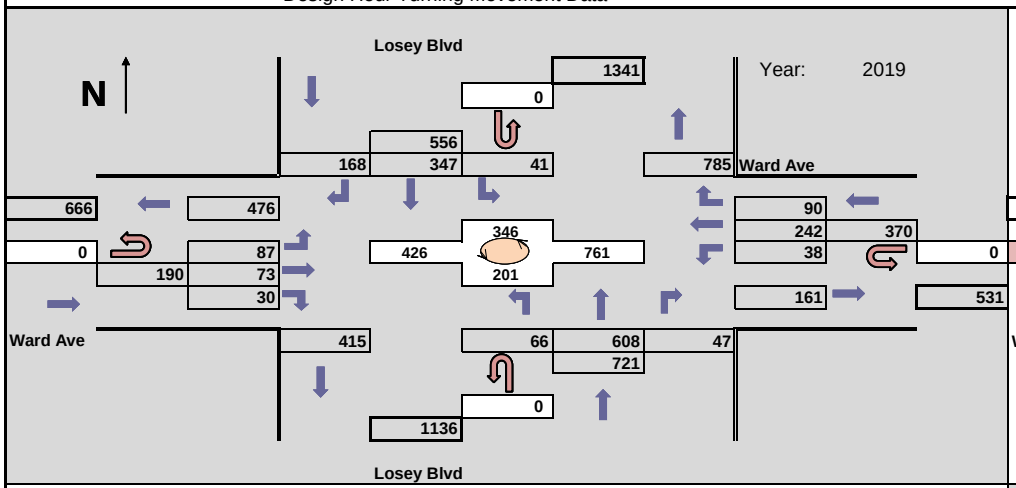

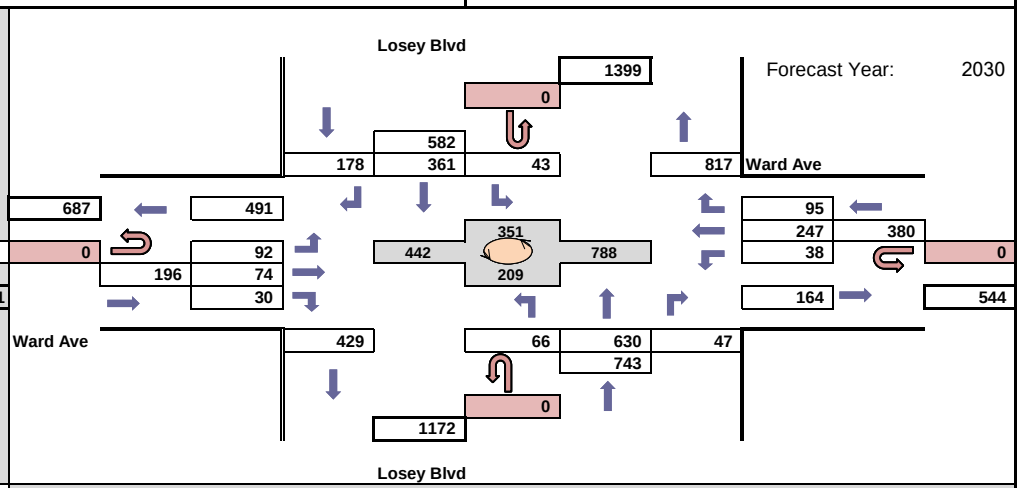

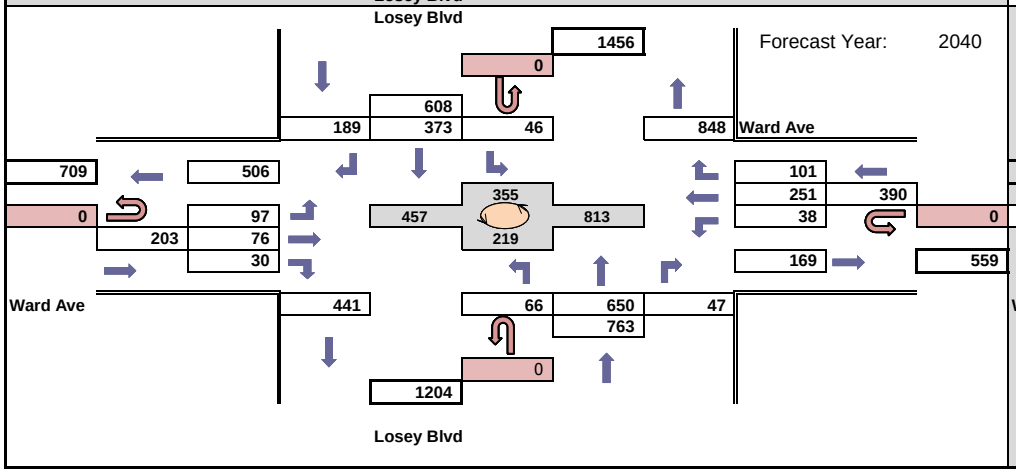

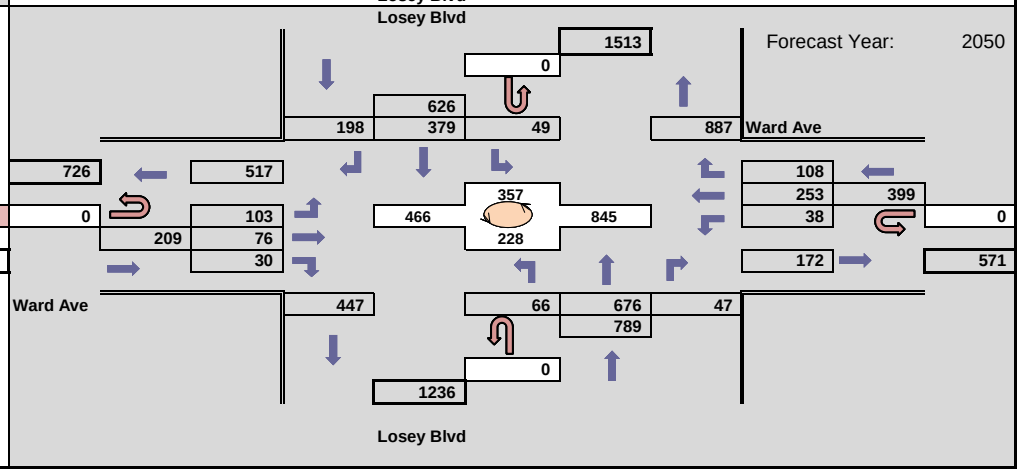

WisDOT Bureau of Planning & Economic Development
Traffic Forecasting Section
Forecast by: Miao Zhang
Phone: (608) 266 - 7995
Email: miao.zhang@dot.wi.gov

Projected PM Design Hour Traffic Volumes

Indicates roundabout

Design Hour: 3:30-4:30pm

Forecast Completed: 2/23/2021

Project Description

Project ID(s): 1630-08-00
Route(s): Losey
Region/COUNTY(IES): SW/La Crosse
Location: Losey Blvd & Ward Ave

Design Hour Turning Movement Data

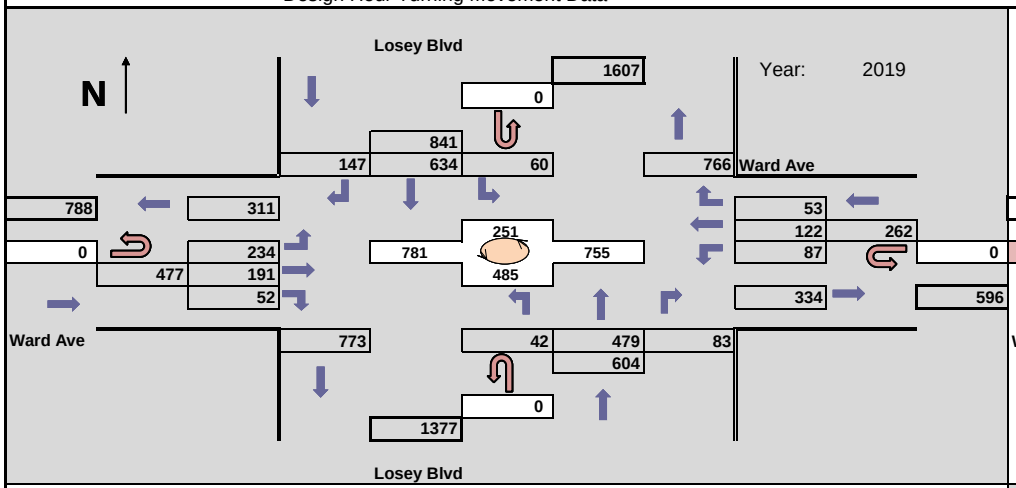

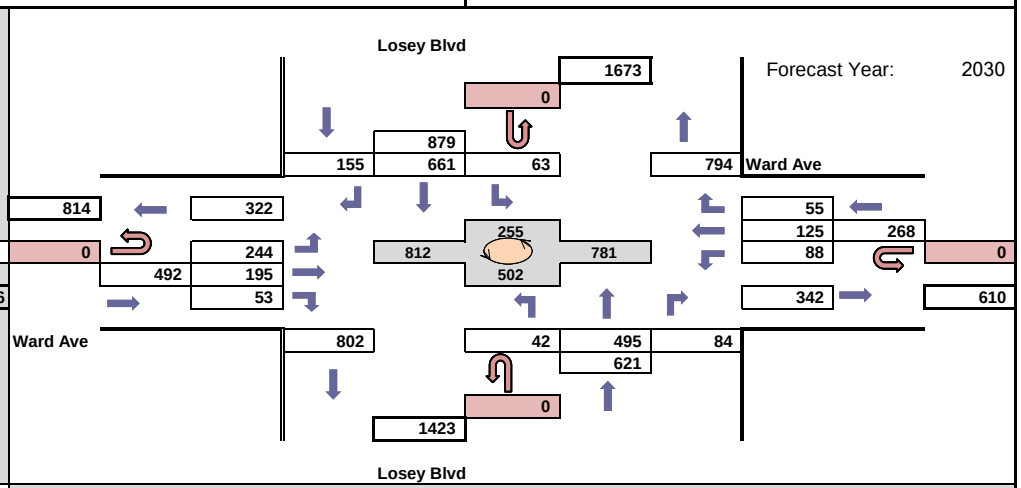

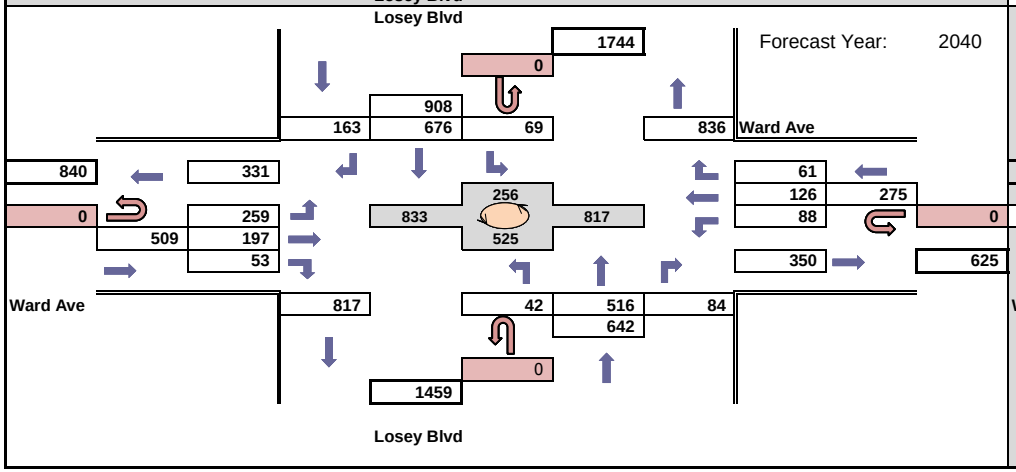

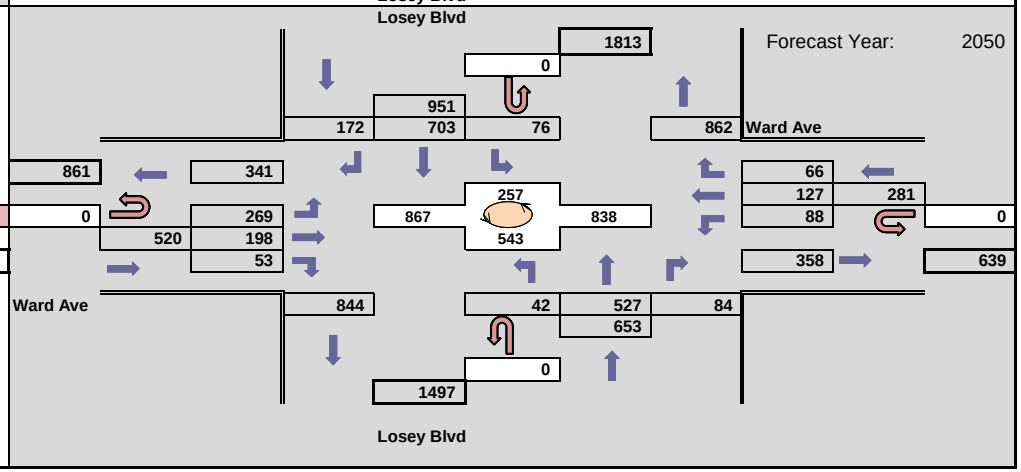

WisDOT TRAFFIC FORECAST REPORT	Region/COUNTY(IES): SW/La Crosse	Developed by: Miao Zhang
PROJECT ID(S): 1630-08-00	LOCATION: STH 35 West Ave. Segment	Phone: (608) 266-7995
ROUTE(S): STH 35	COMPLETED: 02/23/2021	
Traffic Forecasting Section; Bureau of Planning and Economic Development; Division of Transportation Investment Management		E-Mail: miao.zhang@dot.wi.gov

Site(s)	Route(s)	Volume(s)	Site Growth %
320496	STH 35	24830	0.22%
320535	STH 35	23820	0.20%
326116	STH 35	19970	0.19%
320598	STH 35	10570	0.11%
320606	STH 35	11090	0.21%

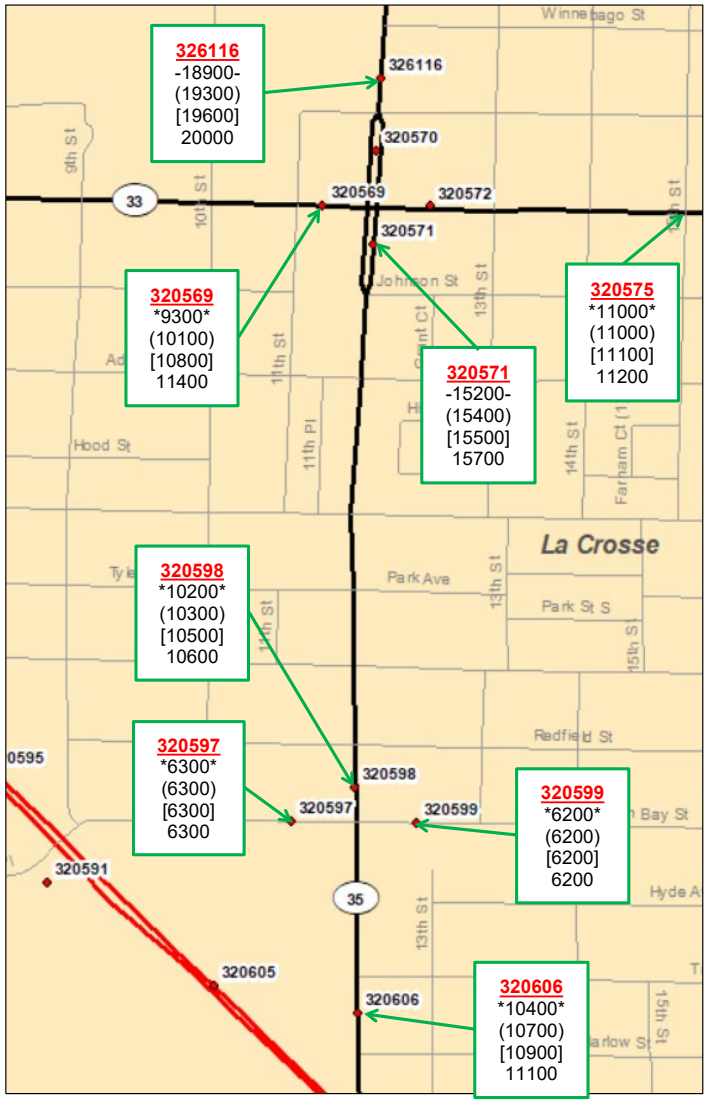

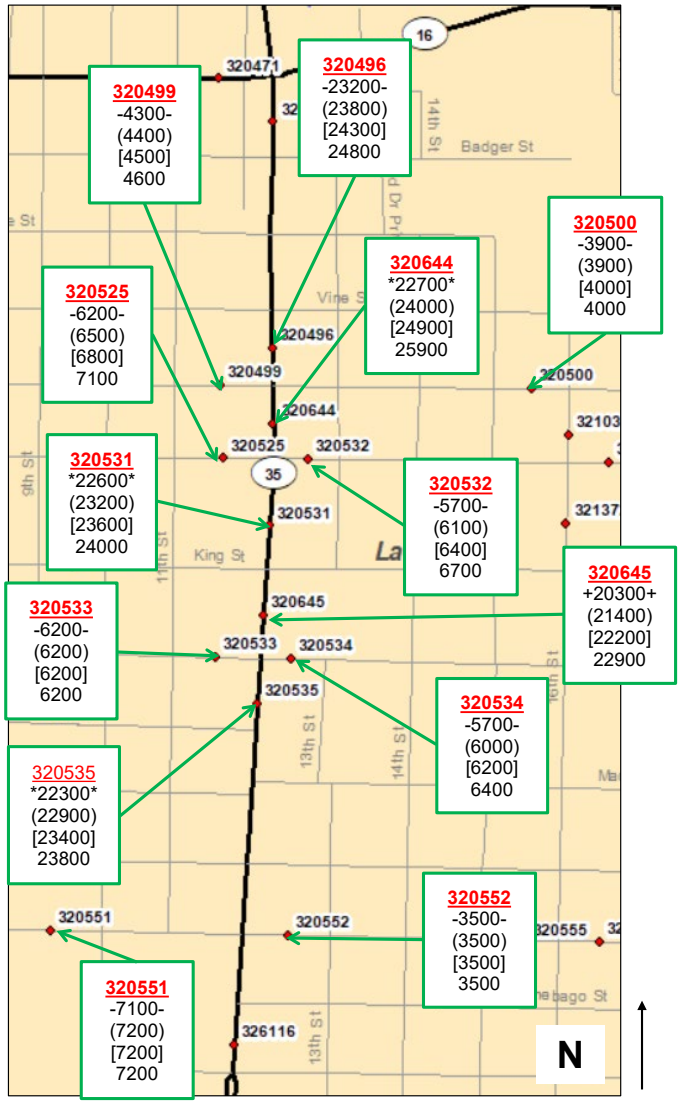

SITE ID = Colored, **bolded**, and underlined

Symbol	Count	Symbol	Forecast
-000-	2019 Count	(000)	2030 AADT
000	2017 Count	[000]	2040 AADT
+000+	2014 Count	000	2050 AADT

NOTES ON THE FORECAST:

1. This projection assumes that no major new traffic generators will be added to the development already included in the 2010/2040 La Crosse Regional Travel Demand Model.
2. Vehicle classification data and design values (K factors, directional splits, and percent trucks in design hours) are available here: http://wisconsindot.gov/Pages/projects/data-plan/traf-fore/default.aspx
3. STH 35 is a Factor Group II (Urban-Other) roadways (indicating low to moderate fluctuation in traffic from a seasonal perspective).
4. The 2010/2040 La Crosse Regional Travel Demand Model was used to complete this forecast. The Traffic Analysis Forecasting Information System output was used as a comparison tool to check against the model output. Adjustments were made as needed.
5. Roadway improvements coded within the existing plus committed (E+C) network of the 2010/2040 La Crosse Regional Travel Demand Model were assumed to be in place for the purposes of developing this forecast.

WisDOT Bureau of Planning & Economic Development
Traffic Forecasting Section
Forecast by: Miao Zhang
Phone: (608) 266 - 7995
Email: miao.zhang@dot.wi.gov

Projected AM Design Hour Traffic Volumes

Indicates roundabout

Design Hour: 7:00-8:00am

Forecast Completed: 2/23/2021

Project Description

Project ID(s): 1630-08-00
Route(s): STH 35
Region/COUNTY(IES): SW/La Crosse
Location: WIS 35 (West Ave) & State St

Design Hour Turning Movement Data

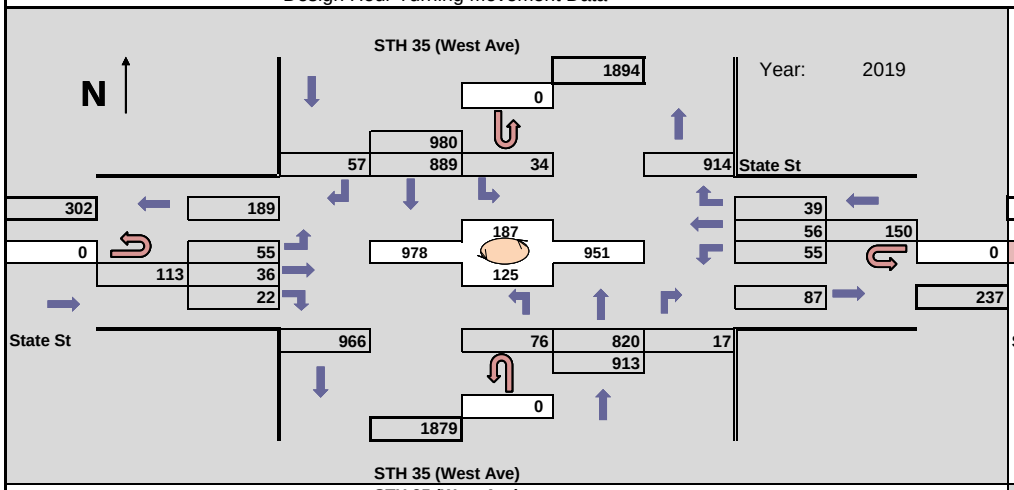

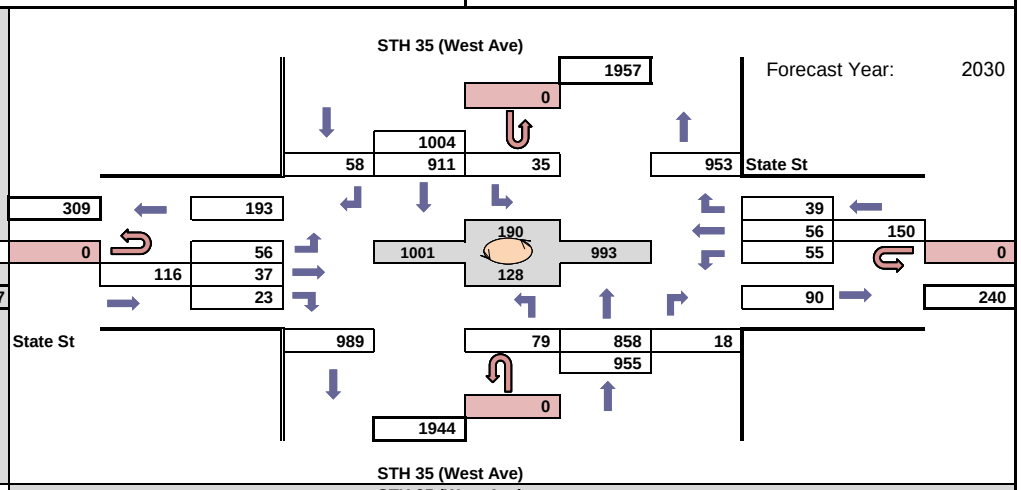

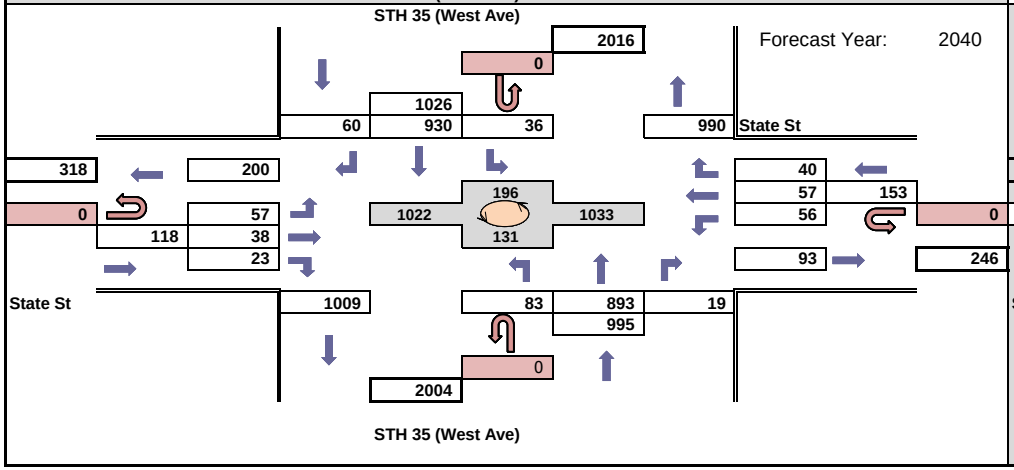

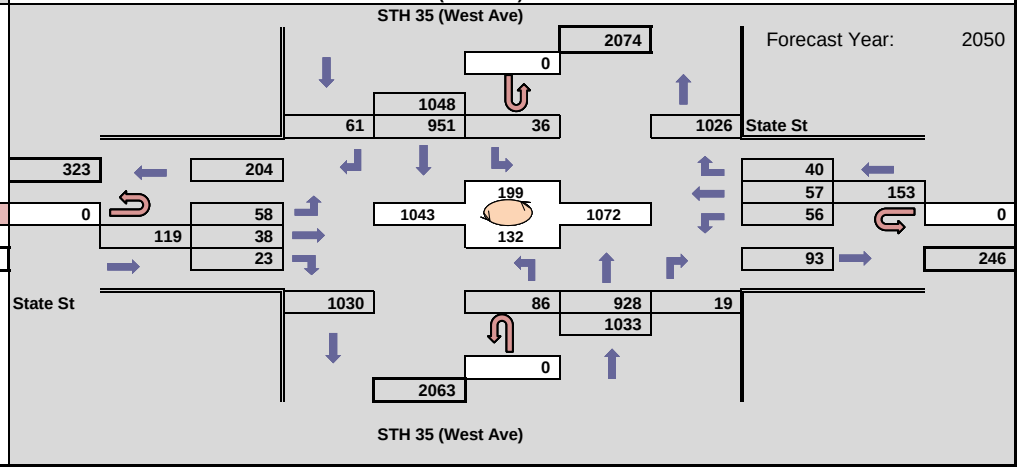

WisDOT Bureau of Planning & Economic Development
Traffic Forecasting Section
Forecast by: Miao Zhang
Phone: (608) 266 - 7995
Email: miao.zhang@dot.wi.gov

Projected PM Design Hour Traffic Volumes

Indicates roundabout

Design Hour: 4:15-5:15pm

Forecast Completed: 2/23/2021

Project Description

Project ID(s): 1630-08-00
Route(s): STH 35
Region/COUNTY(IES): SW/La Crosse
Location: WIS 35 (West Ave) & State St

Design Hour Turning Movement Data

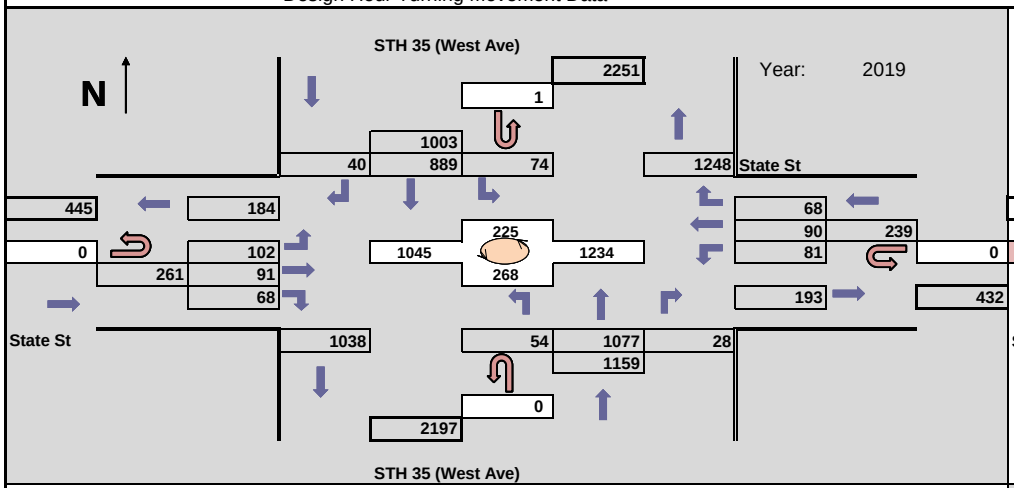

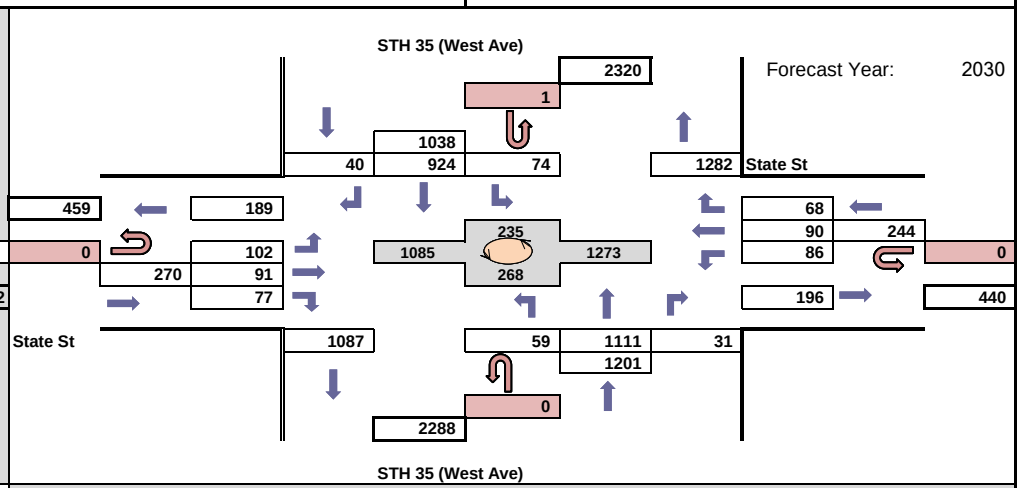

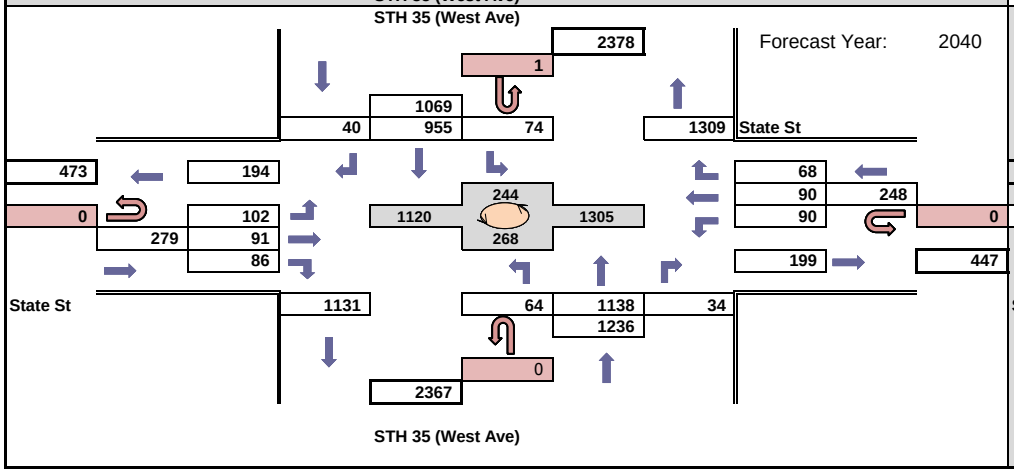

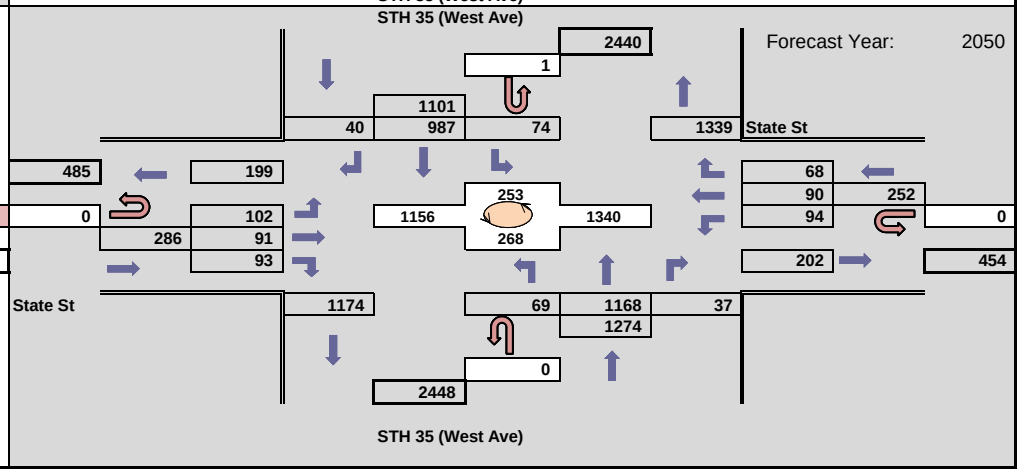

WisDOT Bureau of Planning & Economic Development
Traffic Forecasting Section
Forecast by: Miao Zhang
Phone: (608) 266 - 7995
Email: miao.zhang@dot.wi.gov

Projected AM Design Hour Traffic Volumes

Indicates roundabout

Design Hour: 7:00-8:00am

Forecast Completed: 2/23/2021

Project Description

Project ID(s): 1630-08-00
Route(s): STH 35
Region/COUNTY(IES): SW/La Crosse
Location: WIS 35 (West Ave) & Main St

Design Hour Turning Movement Data

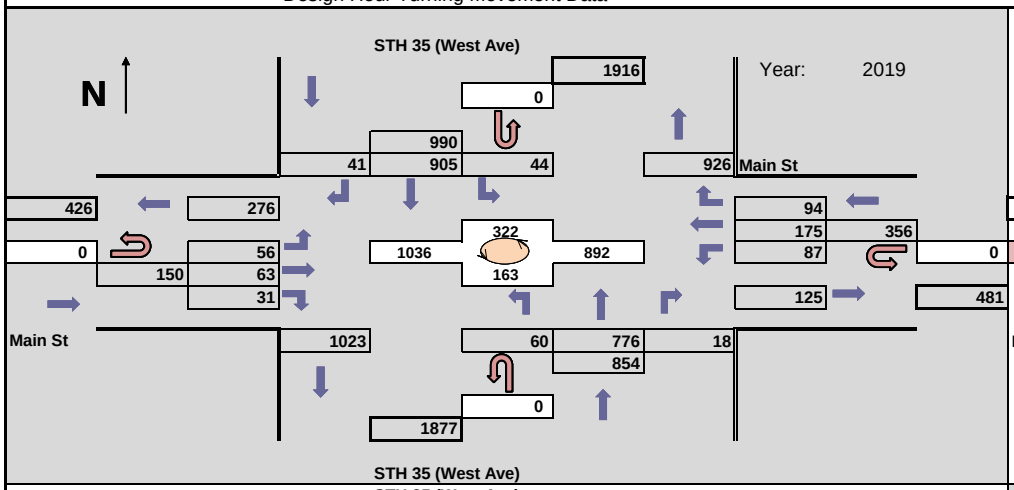

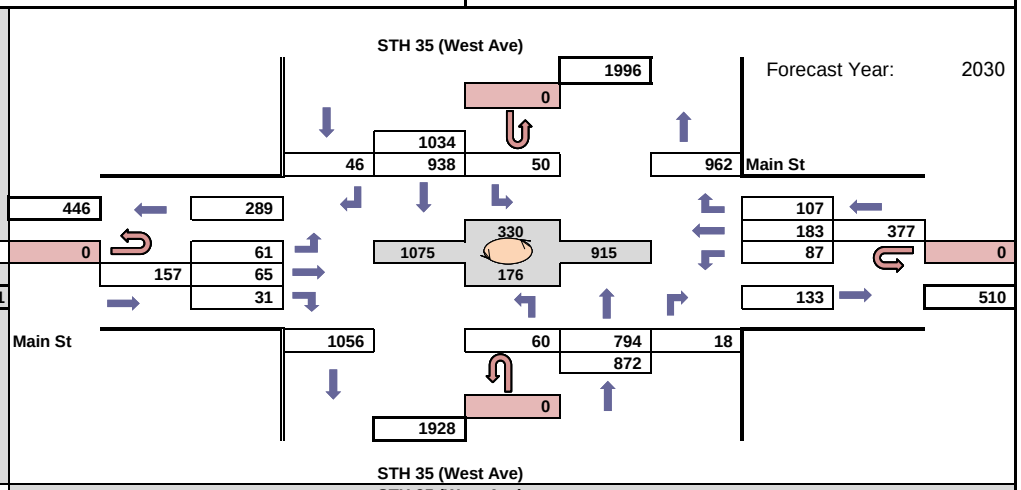

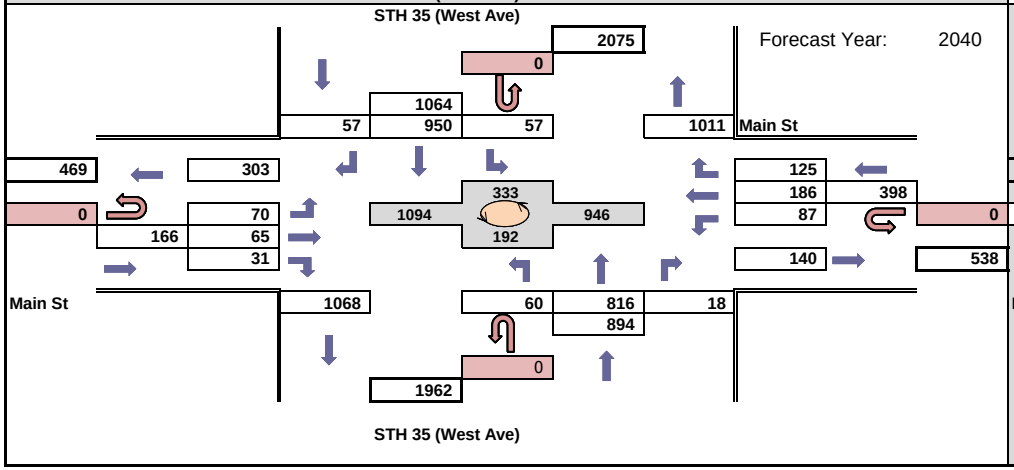

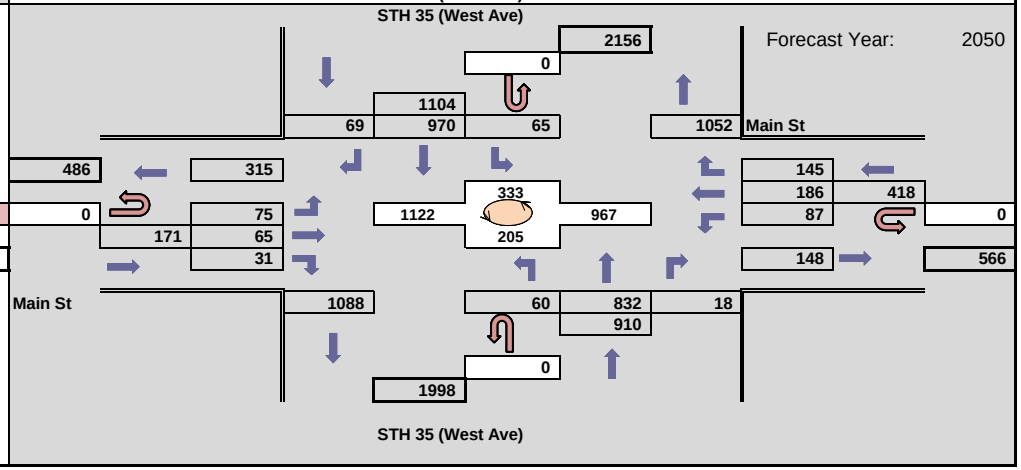

WisDOT Bureau of Planning & Economic Development
Traffic Forecasting Section
Forecast by: Miao Zhang
Phone: (608) 266 - 7995
Email: miao.zhang@dot.wi.gov

Projected PM Design Hour Traffic Volumes

Indicates roundabout

Design Hour: 4:15-5:15pm

Forecast Completed: 2/23/2021

Project Description

Project ID(s): 1630-08-00
Route(s): STH 35
Region/COUNTY(IES): SW/La Crosse
Location: WIS 35 (West Ave) & Main St

Design Hour Turning Movement Data

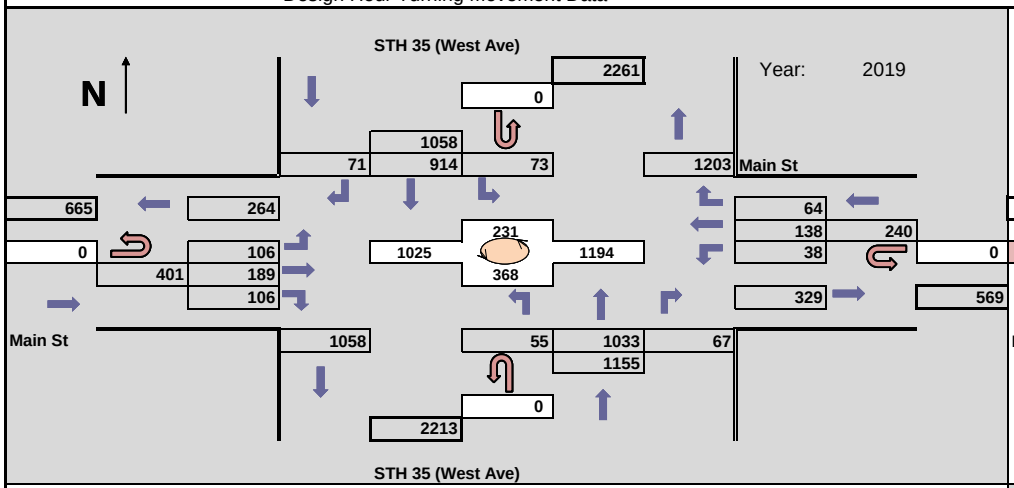

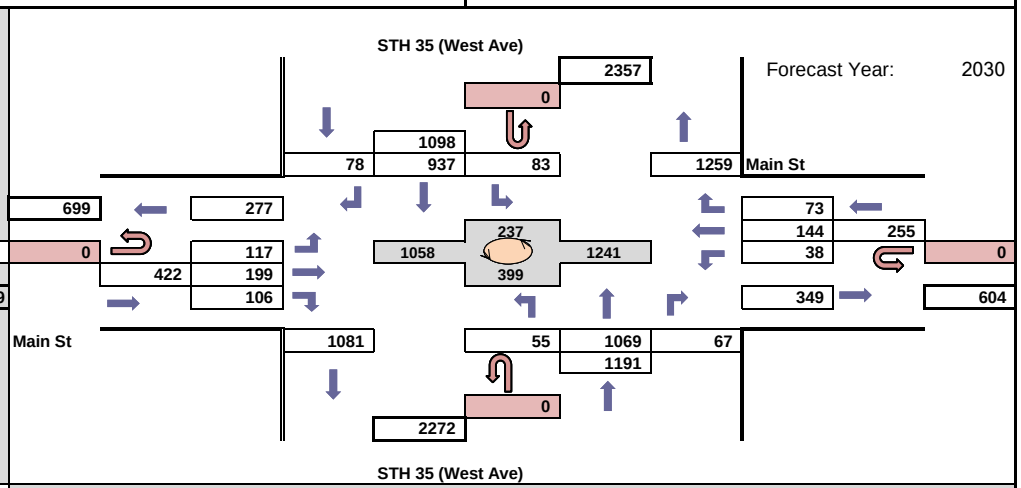

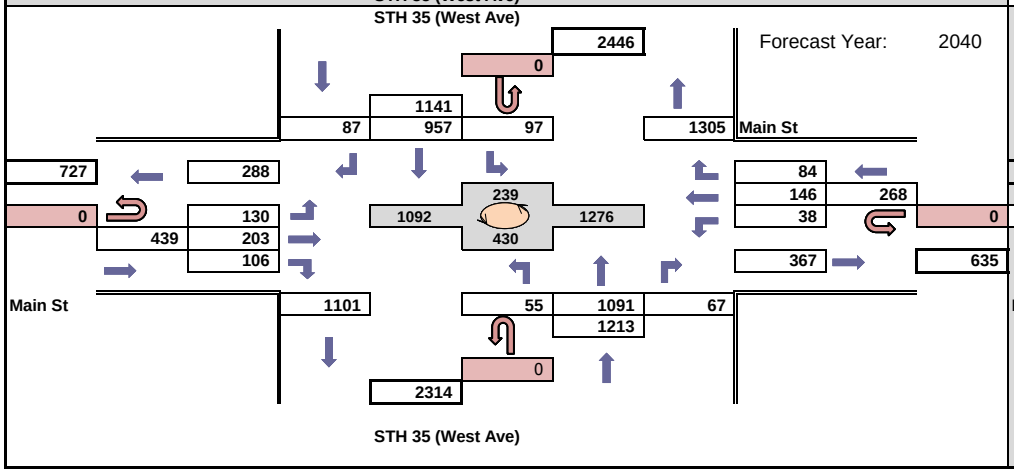

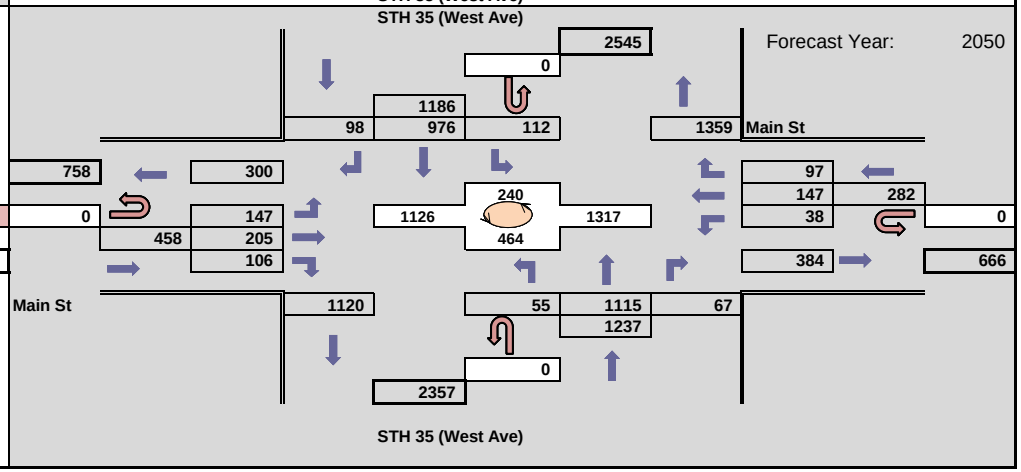

WisDOT Bureau of Planning & Economic Development
Traffic Forecasting Section
Forecast by: Miao Zhang
Phone: (608) 266 - 7995
Email: miao.zhang@dot.wi.gov

Projected AM Design Hour Traffic Volumes

Indicates roundabout

Design Hour: 7:00-8:00am

Forecast Completed: 2/23/2021

Project Description

Project ID(s): 1630-08-00
Route(s): STH 35
Region/COUNTY(IES): SW/La Crosse
Location: WIS 35 (West Ave) & Cass St

Design Hour Turning Movement Data

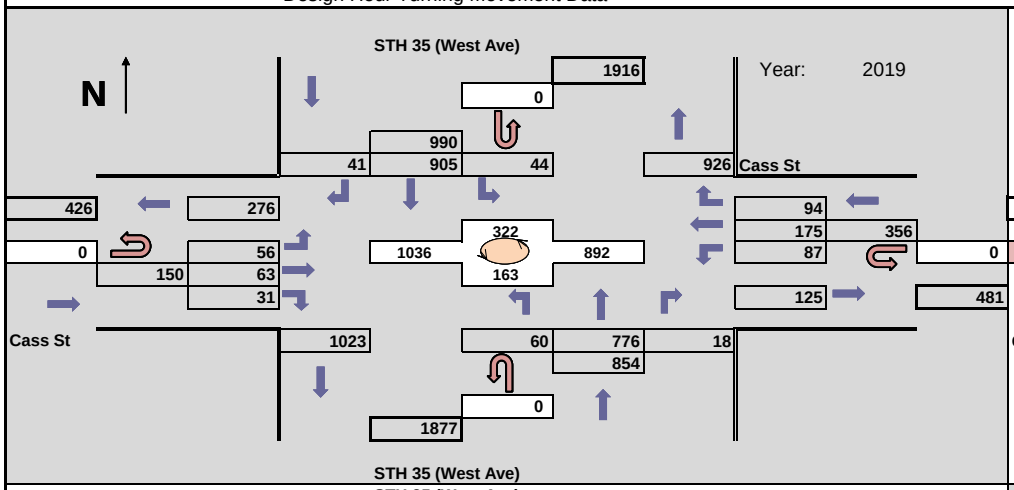

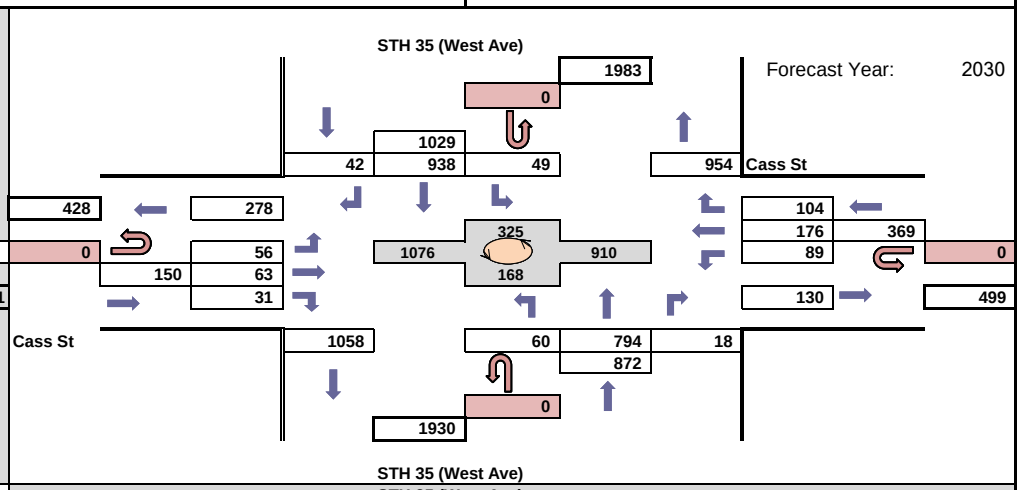

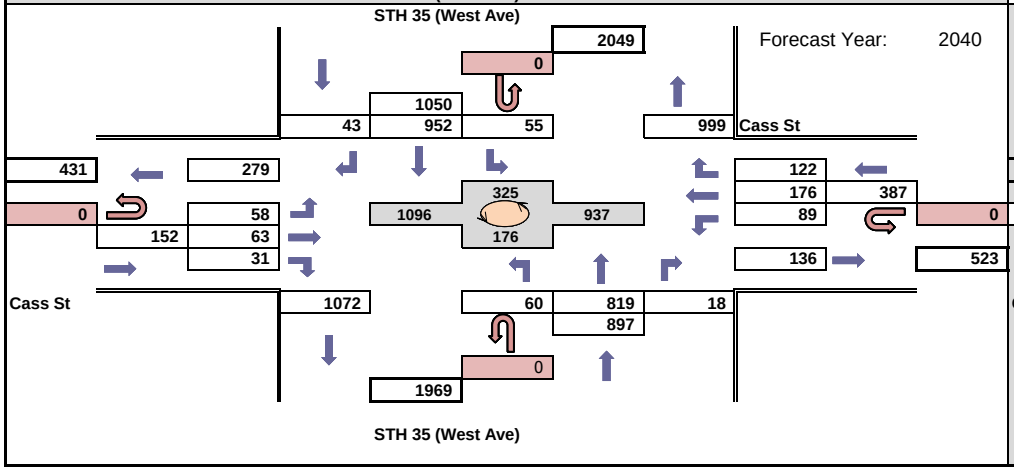

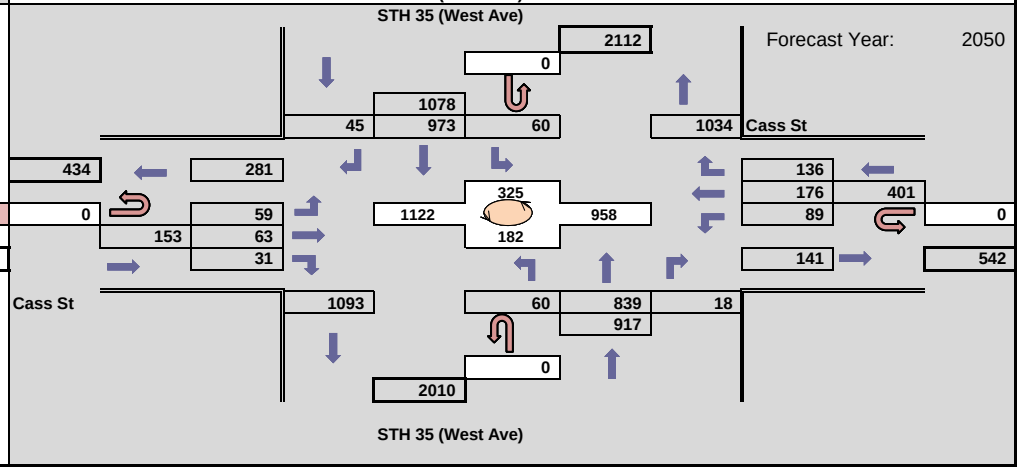

WisDOT Bureau of Planning & Economic Development
Traffic Forecasting Section
Forecast by: Miao Zhang
Phone: (608) 266 - 7995
Email: miao.zhang@dot.wi.gov

Projected PM Design Hour Traffic Volumes

Indicates roundabout

Design Hour: 4:15-5:15pm

Forecast Completed: 2/23/2021

Project Description

Project ID(s): 1630-08-00
Route(s): STH 35
Region/COUNTY(IES): SW/La Crosse
Location: WIS 35 (West Ave) & Cass St

Design Hour Turning Movement Data

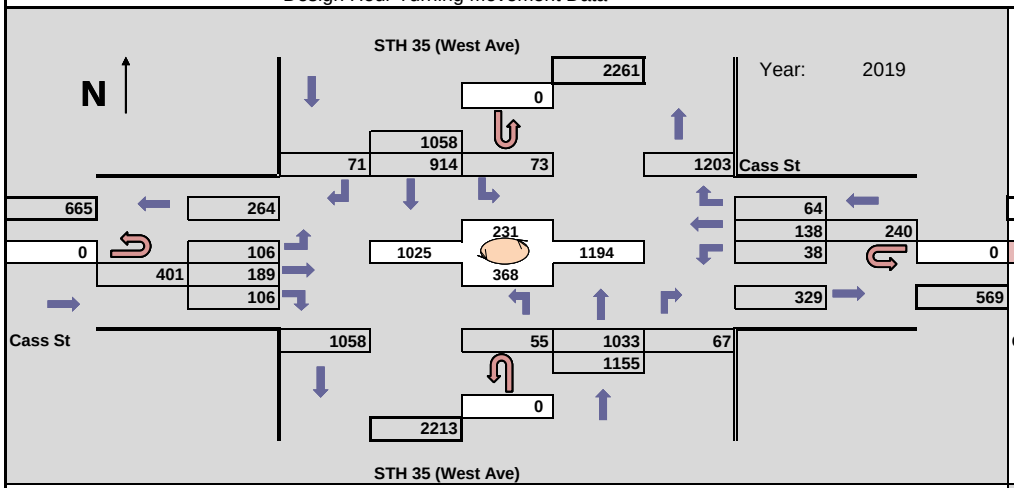

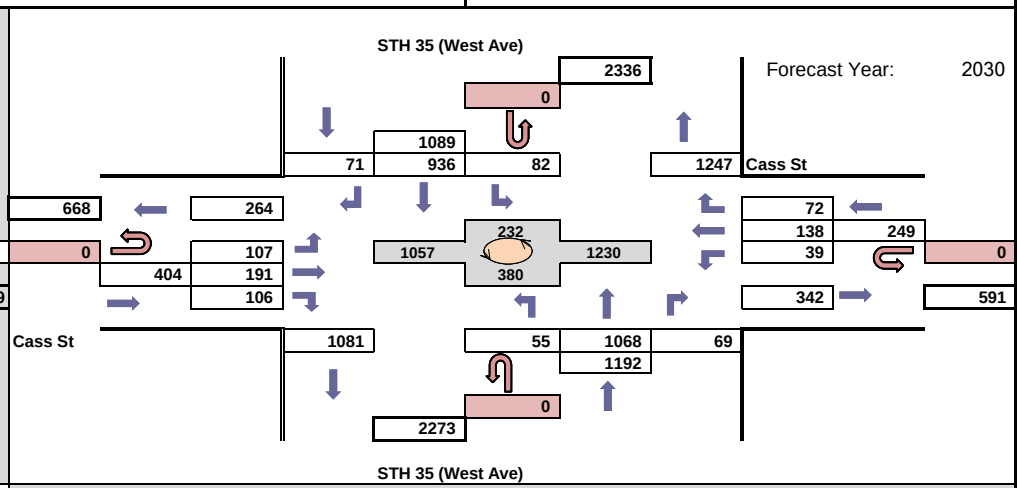

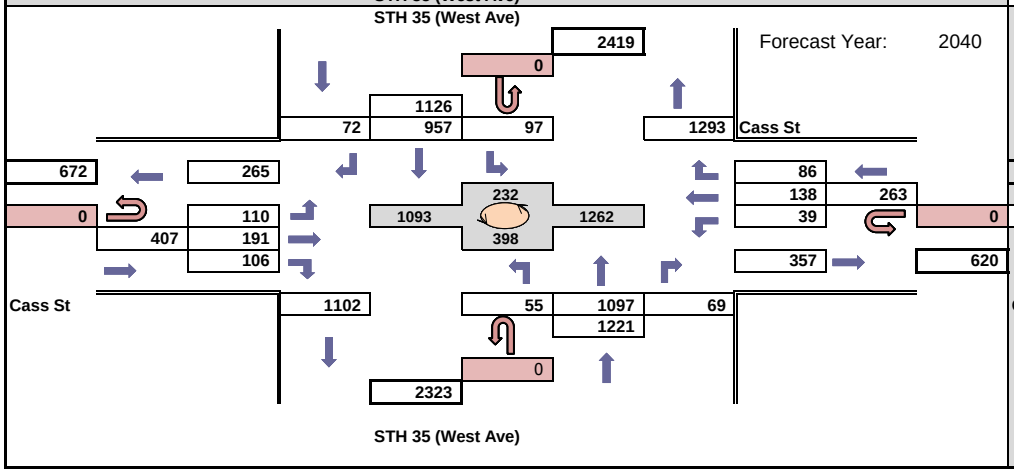

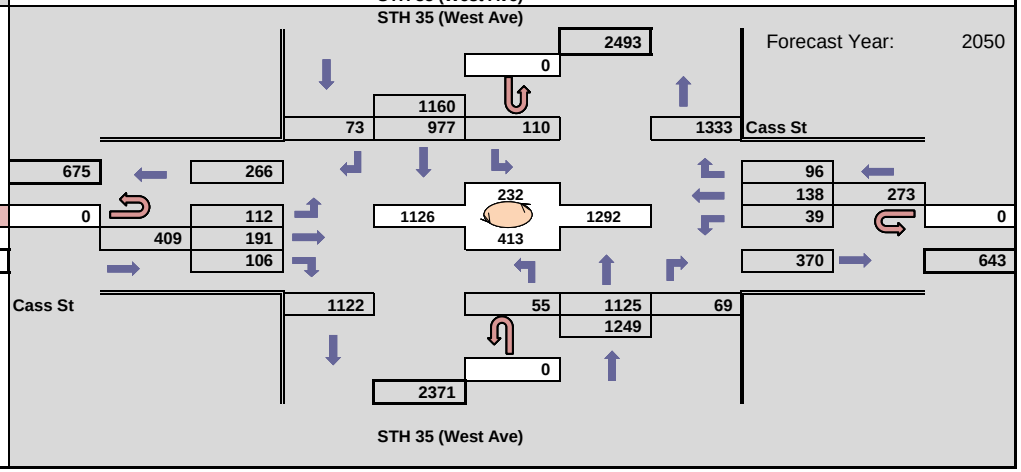

WisDOT Bureau of Planning & Economic Development
Traffic Forecasting Section
Forecast by: Miao Zhang
Phone: (608) 266 - 7995
Email: miao.zhang@dot.wi.gov

Projected AM Design Hour Traffic Volumes

Indicates roundabout

Design Hour: 7:00-8:00am

Forecast Completed: 2/23/2021

Project Description

Project ID(s): 1630-08-00
Route(s): STH 35
Region/COUNTY(IES): SW/La Crosse
Location: WIS 35 (West Ave) & Market St

Design Hour Turning Movement Data

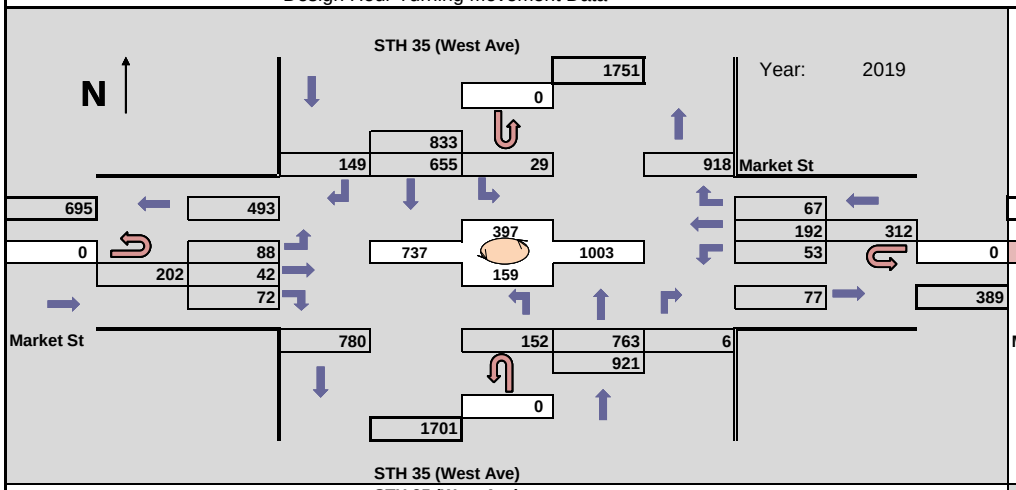

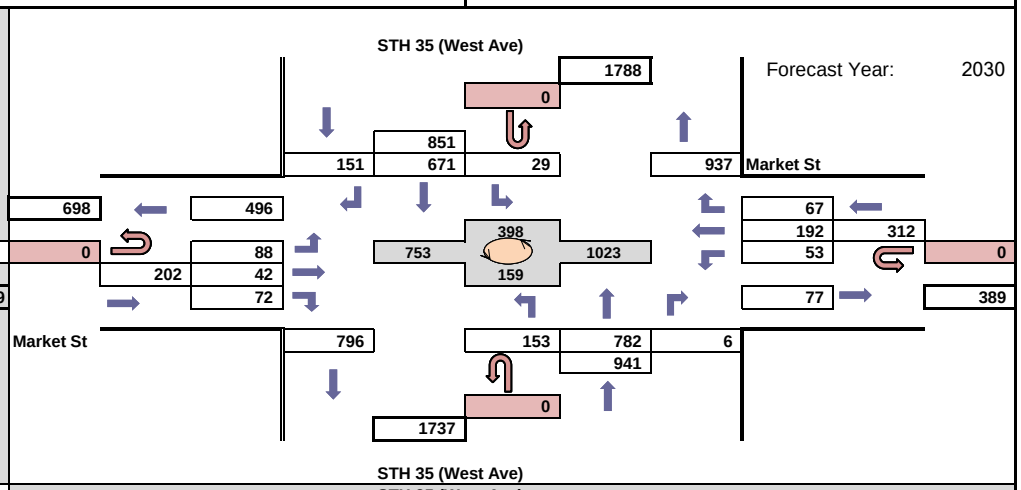

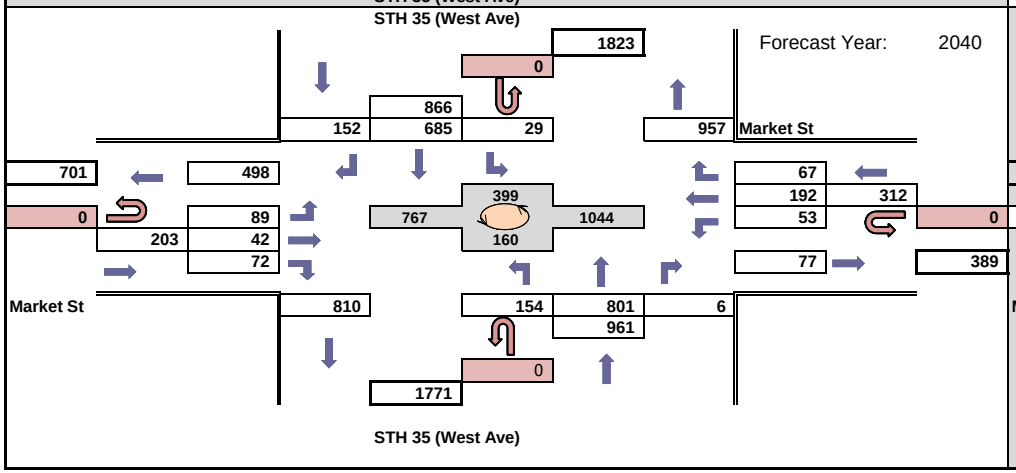

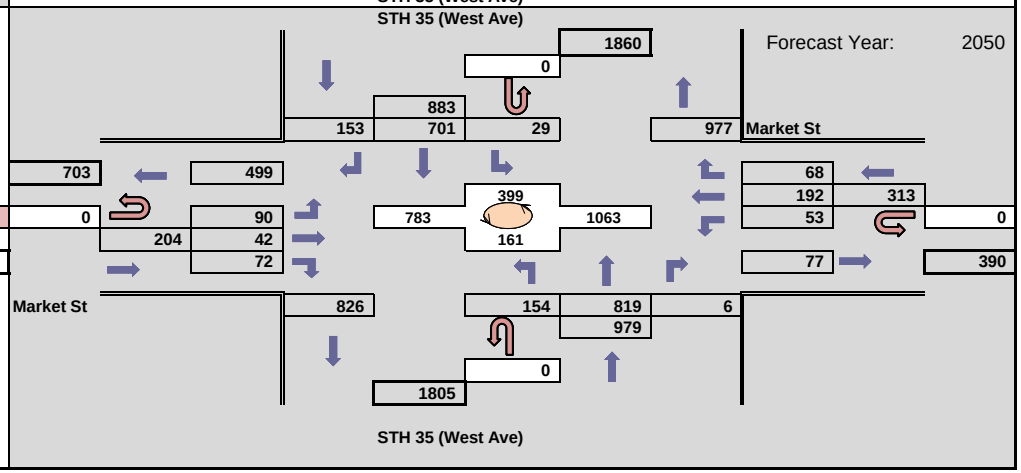

WisDOT Bureau of Planning & Economic Development
Traffic Forecasting Section
Forecast by: Miao Zhang
Phone: (608) 266 - 7995
Email: miao.zhang@dot.wi.gov

Projected PM Design Hour Traffic Volumes

Indicates roundabout

Design Hour: 4:15-5:15pm

Forecast Completed: 2/23/2021

Project Description

Project ID(s): 1630-08-00
Route(s): STH 35
Region/COUNTY(IES): SW/La Crosse
Location: WIS 35 (West Ave) & Market St

Design Hour Turning Movement Data

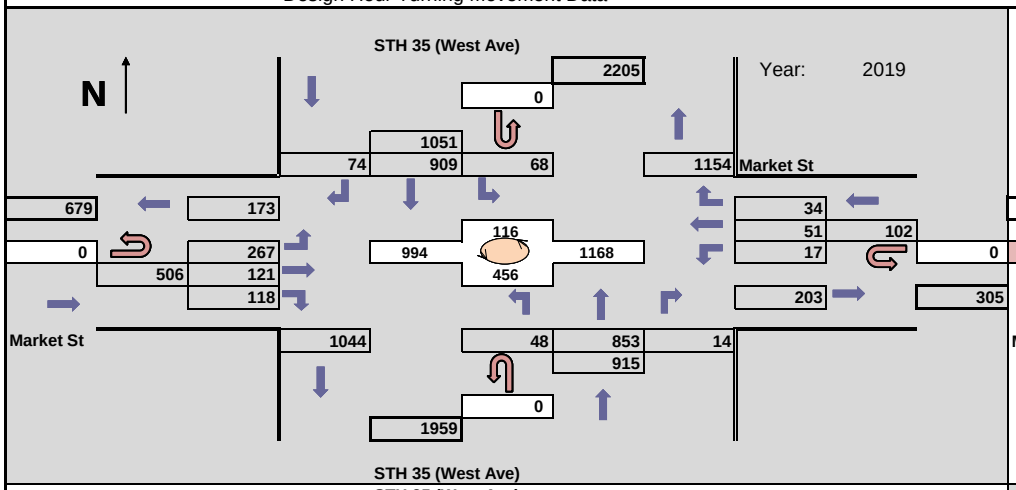

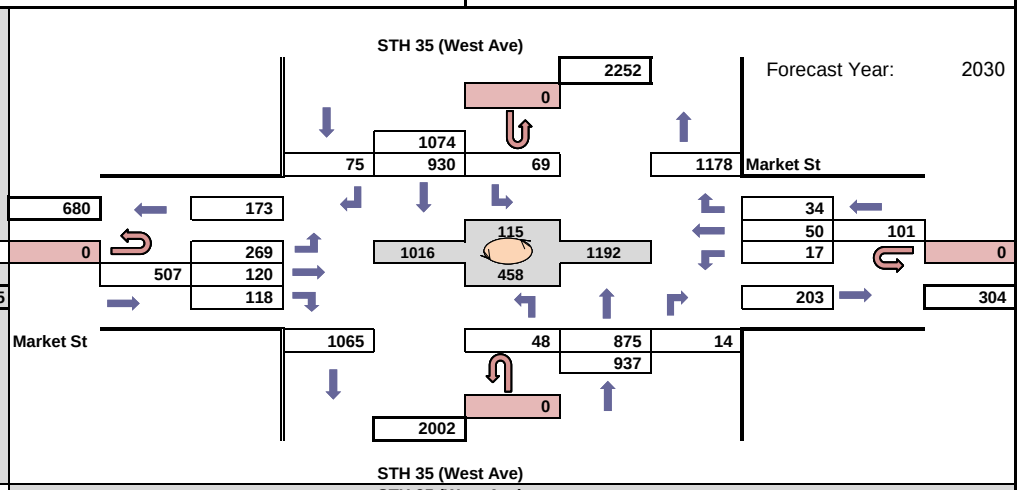

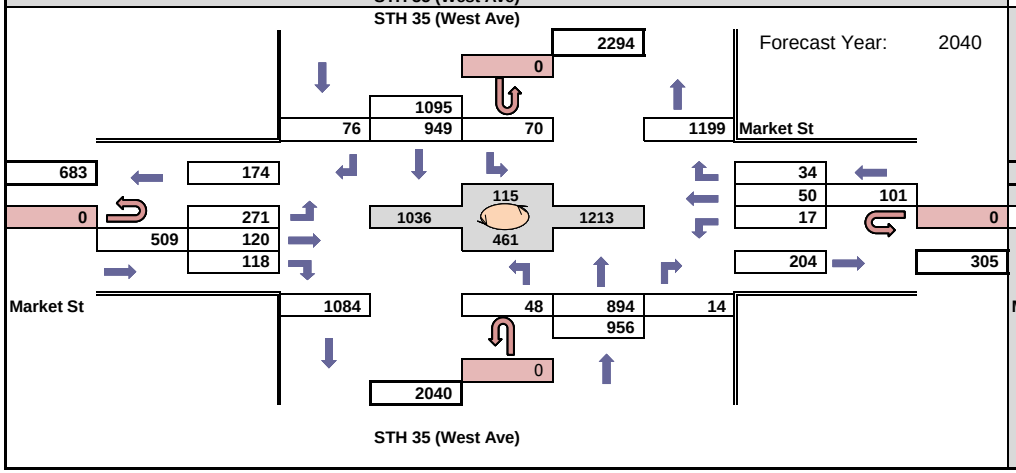

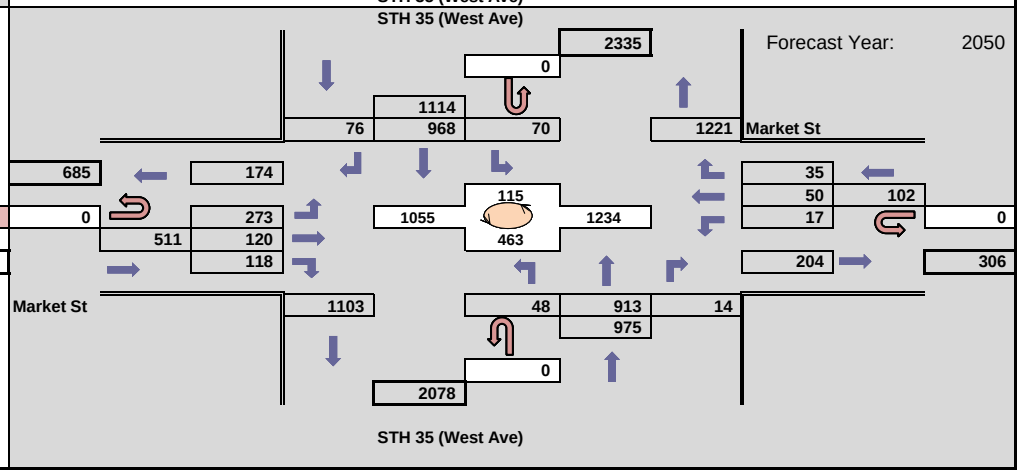

WisDOT Bureau of Planning & Economic Development
Traffic Forecasting Section
Forecast by: Miao Zhang
Phone: (608) 266 - 7995
Email: miao.zhang@dot.wi.gov

Projected AM Design Hour Traffic Volumes

Indicates roundabout

Design Hour: 7:00-8:00am

Forecast Completed: 2/23/2021

Project Description

Project ID(s): 1630-08-00
Route(s): STH 35
Region/COUNTY(IES): SW/La Crosse
Location: WIS 35 (West Ave) & WIS 33 (Jackson St)

Design Hour Turning Movement Data

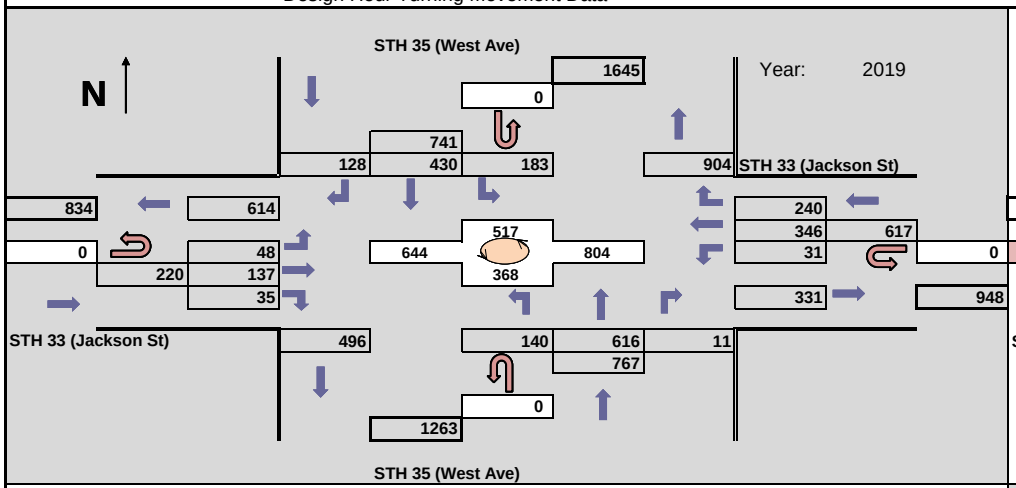

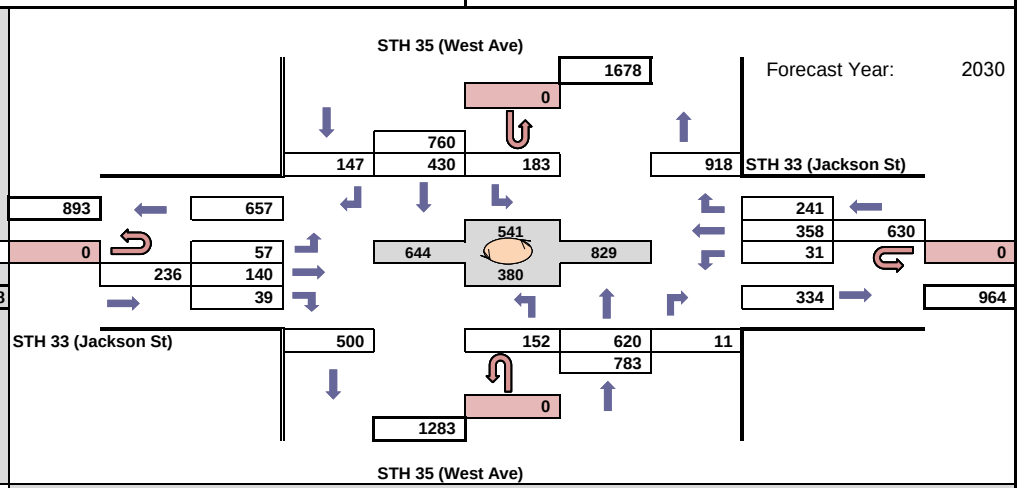

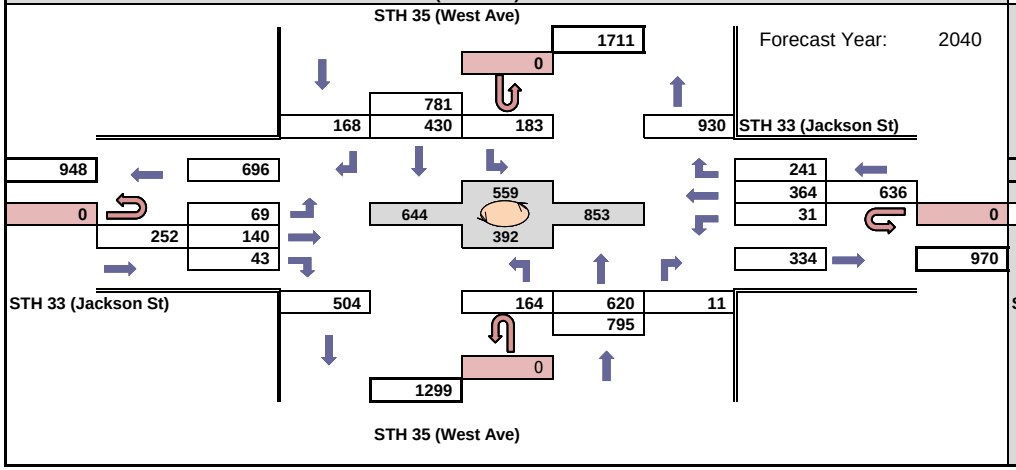

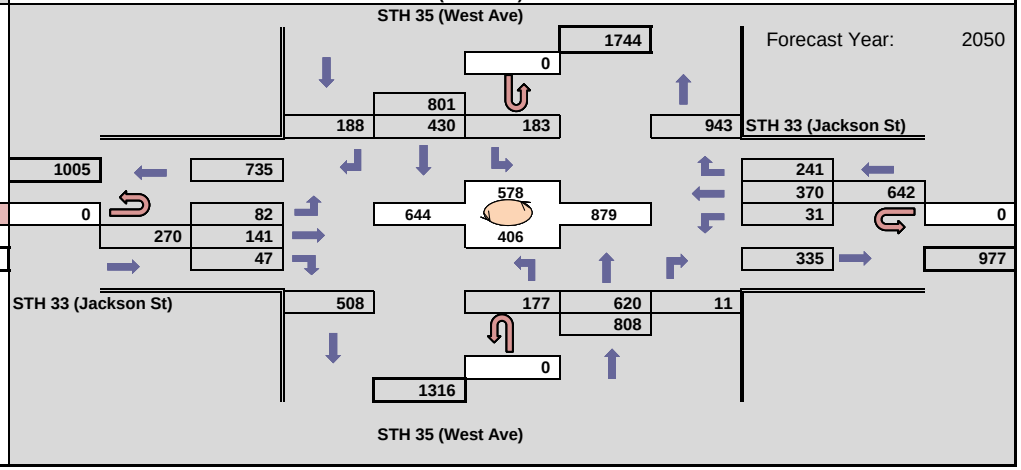

WisDOT Bureau of Planning & Economic Development
Traffic Forecasting Section
Forecast by: Miao Zhang
Phone: (608) 266 - 7995
Email: miao.zhang@dot.wi.gov

Projected PM Design Hour Traffic Volumes

Indicates roundabout

Design Hour: 4:15-5:15pm

Forecast Completed: 2/23/2021

Project Description

Project ID(s): 1630-08-00
Route(s): STH 35
Region/COUNTY(IES): SW/La Crosse
Location: WIS 35 (West Ave) & WIS 33 (Jackson St)

Design Hour Turning Movement Data

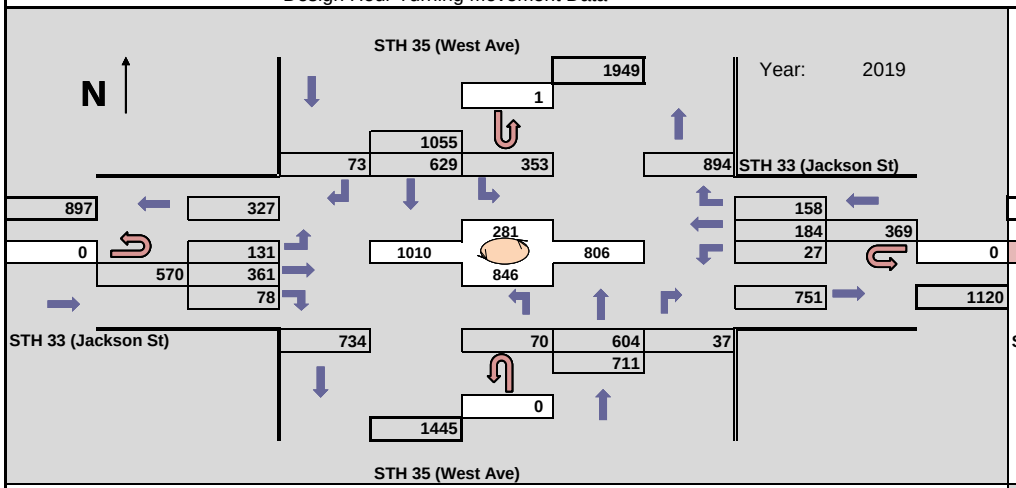

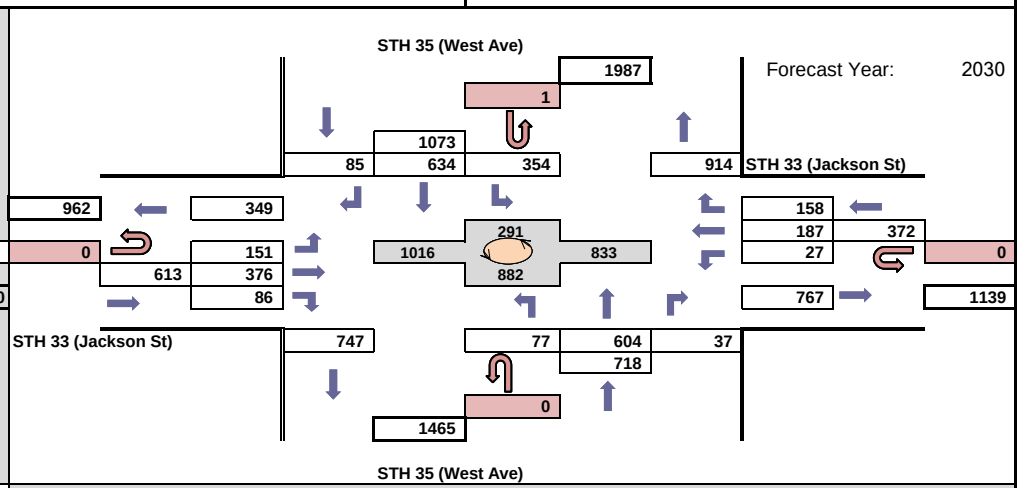

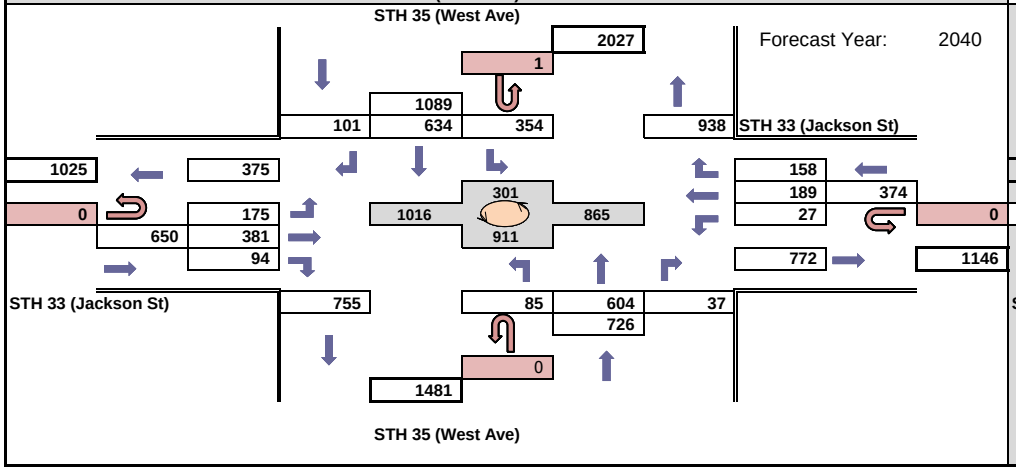

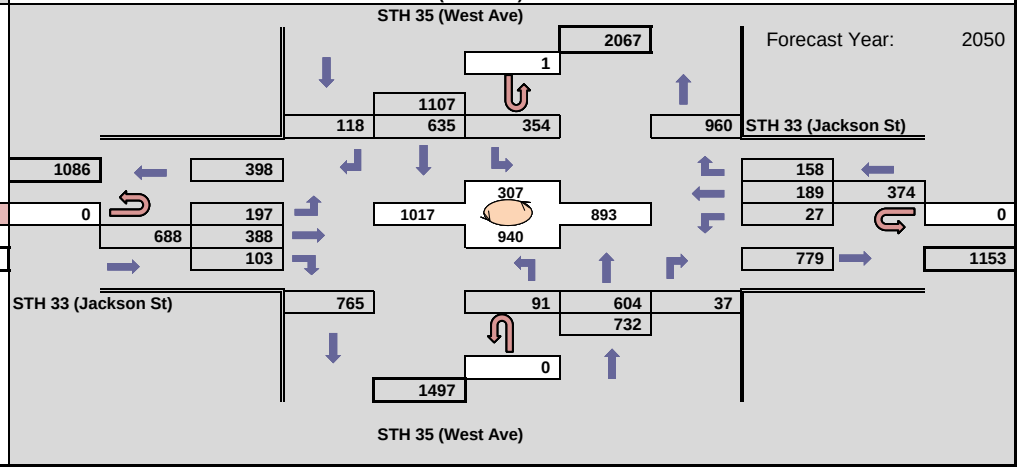

WisDOT Bureau of Planning & Economic Development
Traffic Forecasting Section
Forecast by: Miao Zhang
Phone: (608) 266 - 7995
Email: miao.zhang@dot.wi.gov

Projected AM Design Hour Traffic Volumes

Indicates roundabout

Design Hour: 7:00-8:00am

Forecast Completed: 2/23/2021

Project Description

Project ID(s): 1630-08-00
Route(s): STH 35
Region/COUNTY(IES): SW/La Crosse
Location: WIS 35 (West Ave) & Green Bay St

Design Hour Turning Movement Data

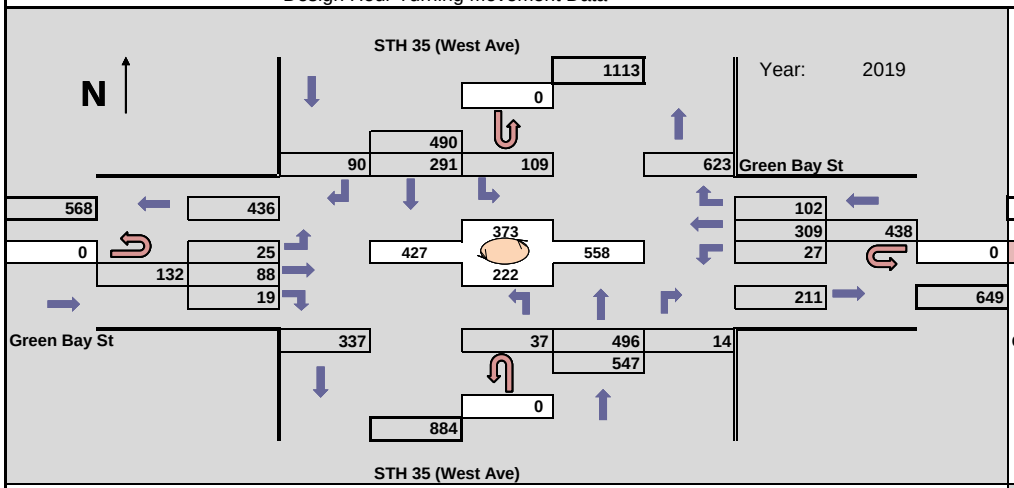

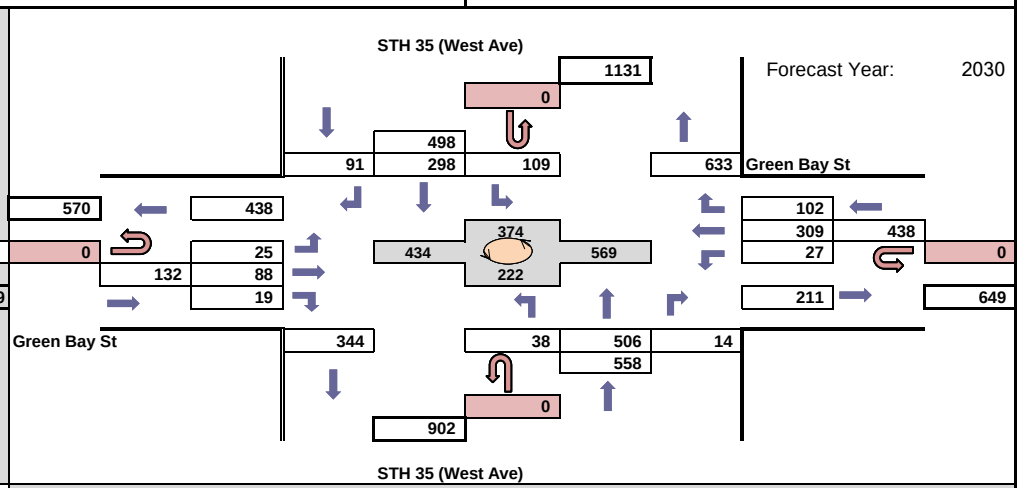

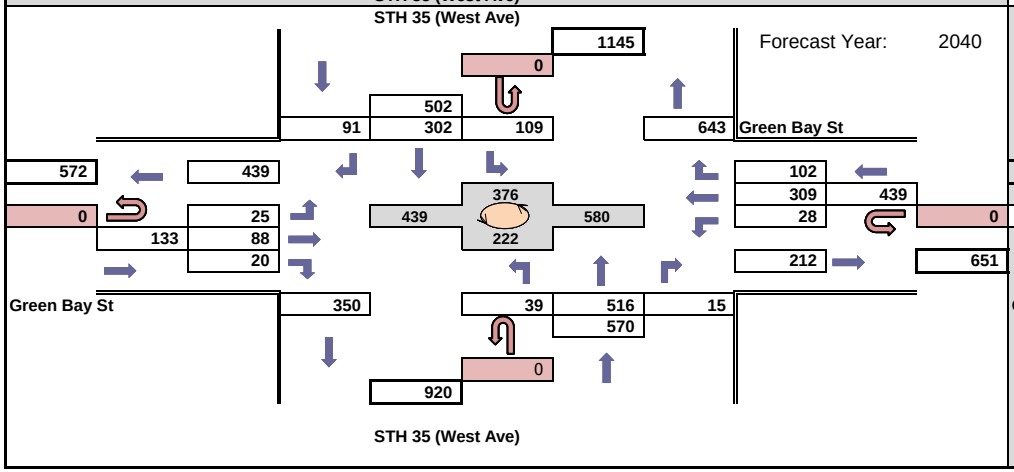

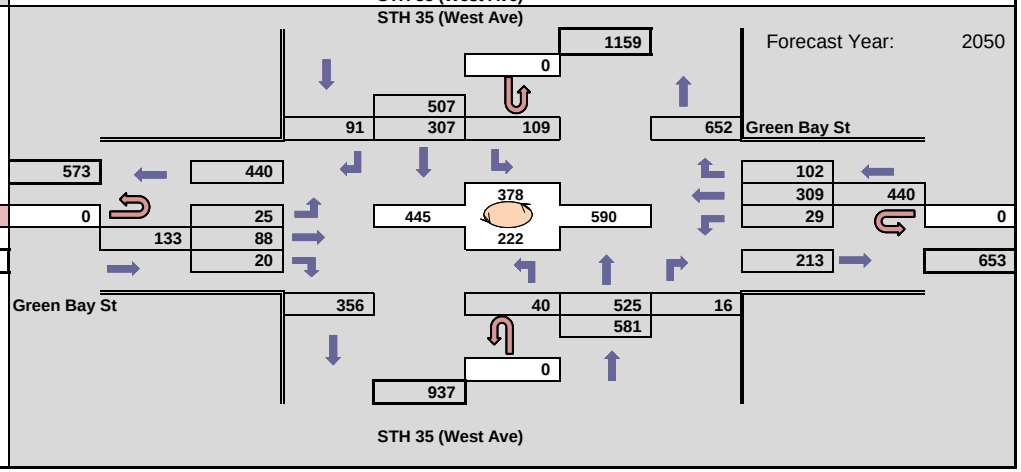

WisDOT Bureau of Planning & Economic Development
Traffic Forecasting Section
Forecast by: Miao Zhang
Phone: (608) 266 - 7995
Email: miao.zhang@dot.wi.gov

Projected PM Design Hour Traffic Volumes

Indicates roundabout

Design Hour: 4:15-5:15pm

Forecast Completed: 2/23/2021

Project Description

Project ID(s): 1630-08-00
Route(s): STH 35
Region/COUNTY(IES): SW/La Crosse
Location: WIS 35 (West Ave) & Green Bay St

Design Hour Turning Movement Data

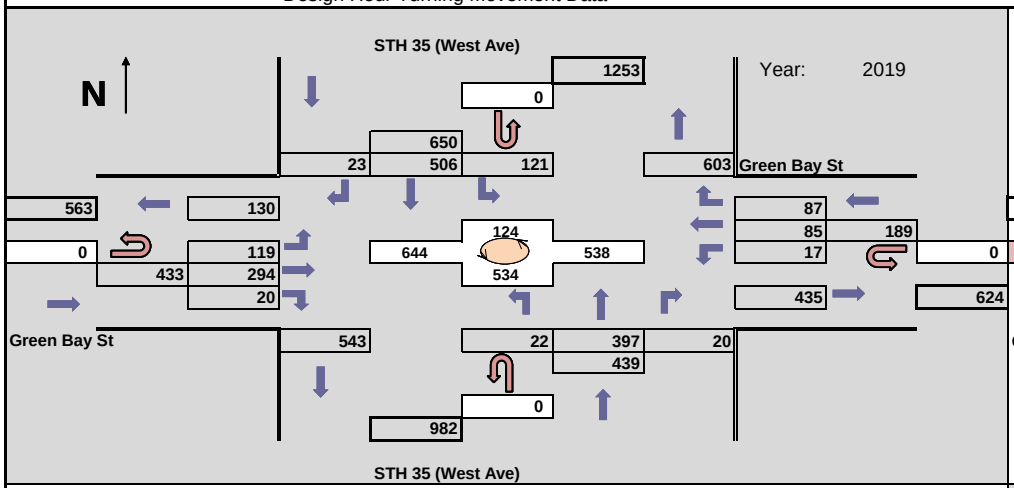

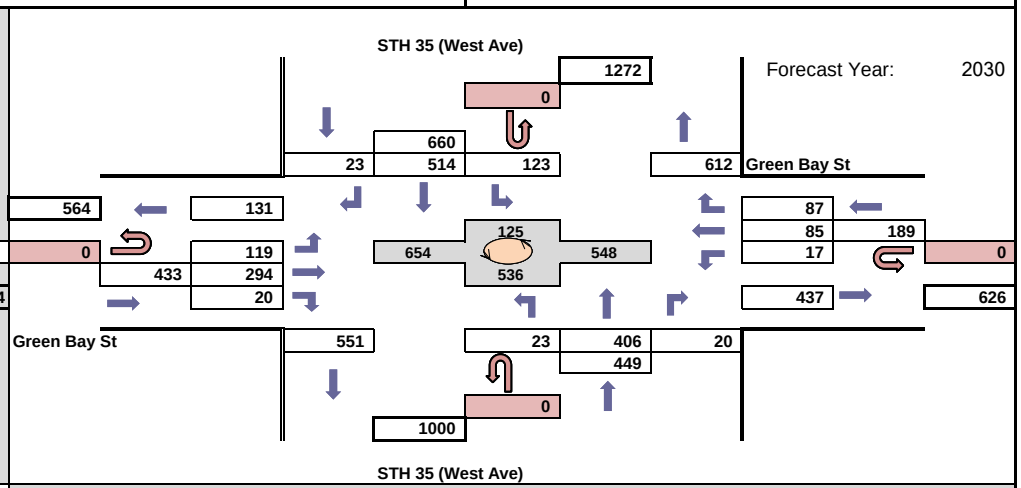

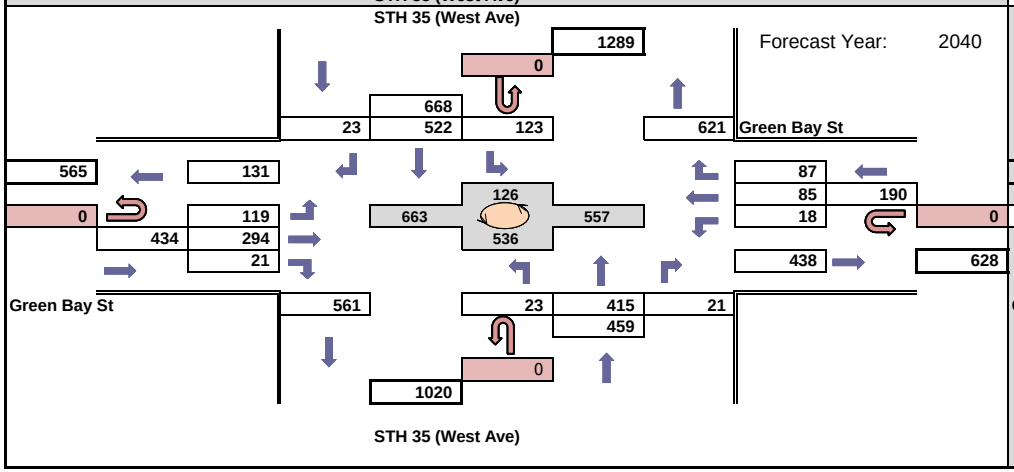

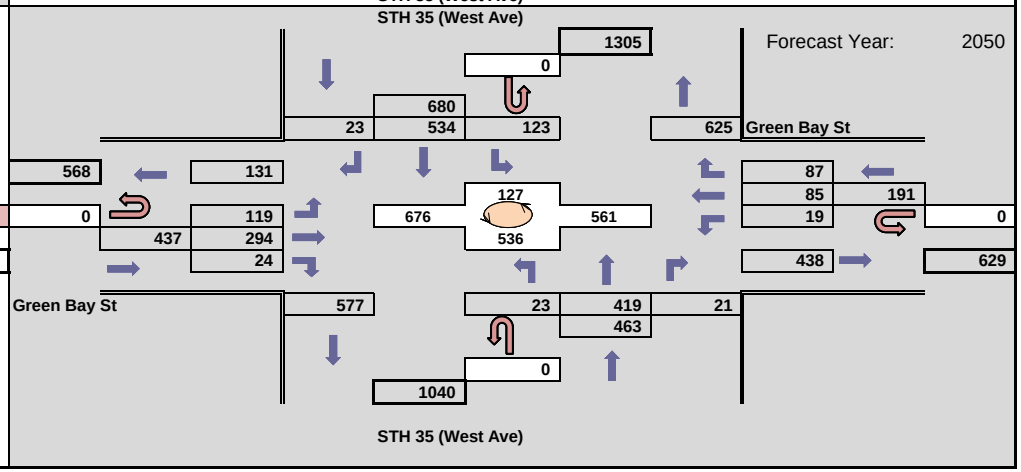

Traffic Forecasting Section; Bureau of Planning and Economic Development; Division of Transportation Investment Management

WisDOT TRAFFIC FORECAST REPORT

PROJECT ID(S):	1630-08-00
ROUTE(S):	USH 53
Region/COUNTY(IES):	SW/La Crosse
LOCATION:	Downtown Segment
COMPLETED:	02/23/2021

Developed By: Miao Zhang
Phone: (608) 266 - 7995
E-Mail: miao.zhang@dot.wi.gov

NOTES ON THE FORECAST:

1. This projection assumes that no major new traffic generators will be added to the development already included in the 2010/2040 La Crosse Regional Travel Demand Model.

2. Vehicle classification data and design values (K factors, directional splits, and percent trucks in design hours) are available here: http://wisconsindot.gov/Pages/projects/data-plan/traf-fore/default.aspx

3. US53, US14 and STH 16 are Factor Group II (Urban-Other) roadways (indicating low to moderate fluctuation in traffic from a seasonal perspective).

4. The 2010/2040 La Crosse Regional Travel Demand Model was used to complete this forecast. The Traffic Analysis Forecasting Information System output was used as a comparison tool to check against the model output. Adjustments were made as needed.

5. Roadway improvements coded within the existing plus committed (E+C) network of the 2010/2040 La Crose Regional Travel Demand Model were assumed to be in place for the purposes of developing this forecast.

Site(s)	**320640**	321110	320563
Routes(s)	**USH 53**	USH 53	USH 14/USH 61
Volume(s)	9090	10720	18370
Site Growth %	0.26%	0.20%	0.44%

Site(s)	**320566**	320567	320592
Routes(s)	USH 14/USH 61	USH 14/USH 61	USH 14/USH 61
Volume(s)	11250	11760	20720
Site Growth %	0.26%	0.48%	0.26%

SITE ID = Colored, **bolded**, and underlined

Symbol	Count	Symbol	Forecast
-000-	2019 Count	(000)	2030 AADT
000	2017 Count	[000]	2040 AADT
+000+	2014 Count	000	2050 AADT
=000=	2011 Count		
%000%	2008 Count		

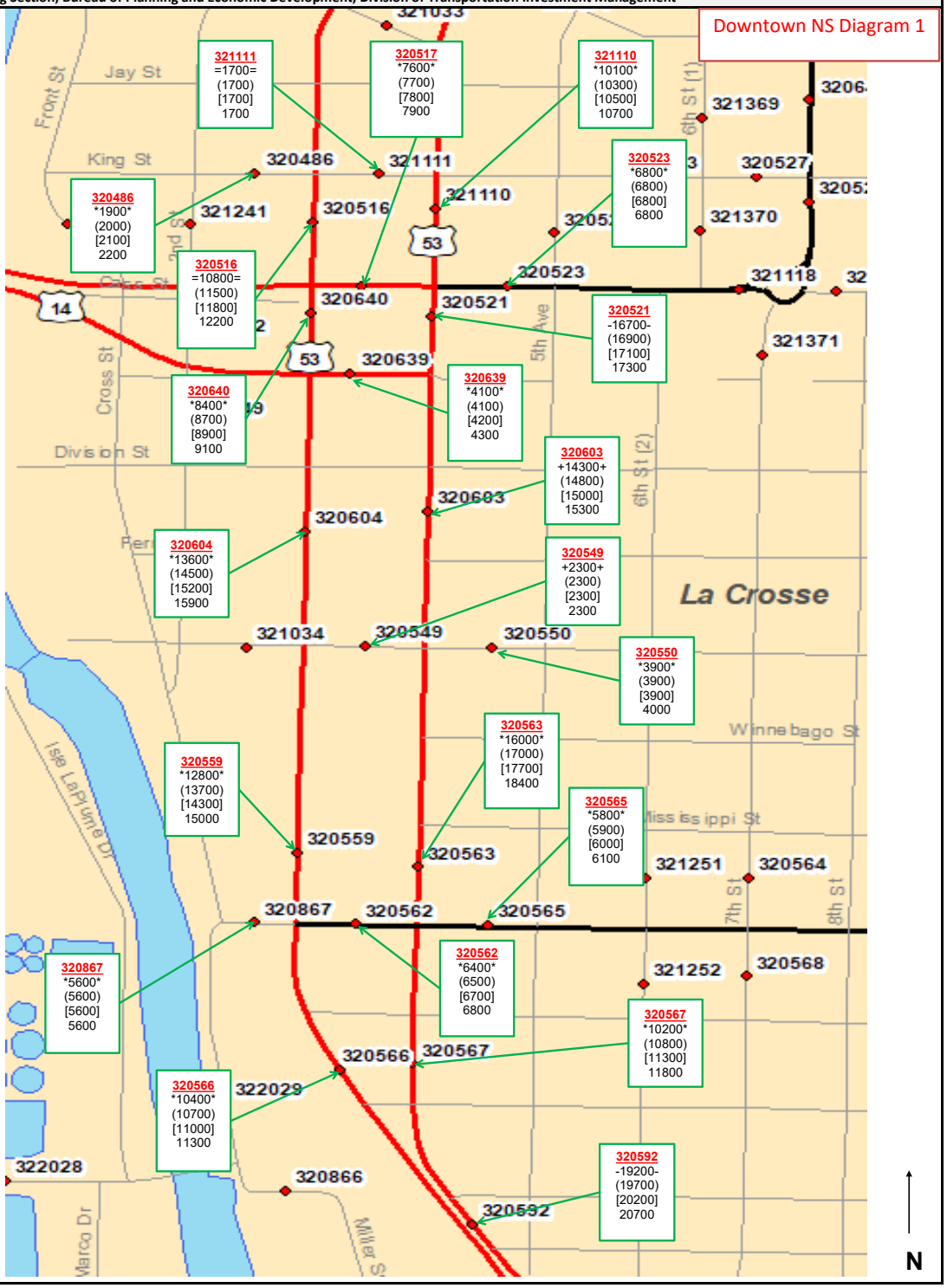

Traffic Forecasting Section; Bureau of Planning and Economic Development; Division of Transportation Investment Management

WisDOT TRAFFIC FORECAST REPORT

PROJECT ID(S):	1630-08-00
ROUTE(S):	USH 53
Region/COUNTY(IES):	SW/La Crosse
LOCATION:	Downtown Segment
COMPLETED:	02/23/2021

Developed By: Miao Zhang
Phone: (608) 266 - 7995
E-Mail: miao.zhang@dot.wi.gov

NOTES ON THE FORECAST:

1. This projection assumes that no major new traffic generators will be added to the development already included in the 2010/2040 La Crosse Regional Travel Demand Model.

2. Vehicle classification data and design values (K factors, directional splits, and percent trucks in design hours) are available here: http://wisconsindot.gov/Pages/projects/data-plan/traf-fore/default.aspx

3. US53, US14 and STH 16 are Factor Group II (Urban-Other) roadways (indicating low to moderate fluctuation in traffic from a seasonal perspective).

4. The 2010/2040 La Crosse Regional Travel Demand Model was used to complete this forecast. The Traffic Analysis Forecasting Information System output was used as a comparison tool to check against the model output. Adjustments were made as needed.

5. Roadway improvements coded within the existing plus committed (E+C) network of the 2010/2040 La Crose Regional Travel Demand Model were assumed to be in place for the purposes of developing this forecast.

Site(s)	**321021**	320464	320468
Routes(s)	**USH 53**	**USH 53**	**USH 53**
Volume(s)	29220	14180	12240
Site Growth %	0.15%	0.39%	0.22%

Site(s)	**320467**	320490	321117
Routes(s)	**STH 16**	**USH 53**	**USH 53**
Volume(s)	8790	11030	10500
Site Growth %	0.07%	0.24%	0.18%

SITE ID = Colored, **bolded**, and underlined

Symbol	Count	Symbol	Forecast
-000-	2019 Count	(000)	2030 AADT
000	2017 Count	[000]	2040 AADT
+000+	2014 Count	000	2050 AADT
=000=	2011 Count		
%000%	2008 Count		

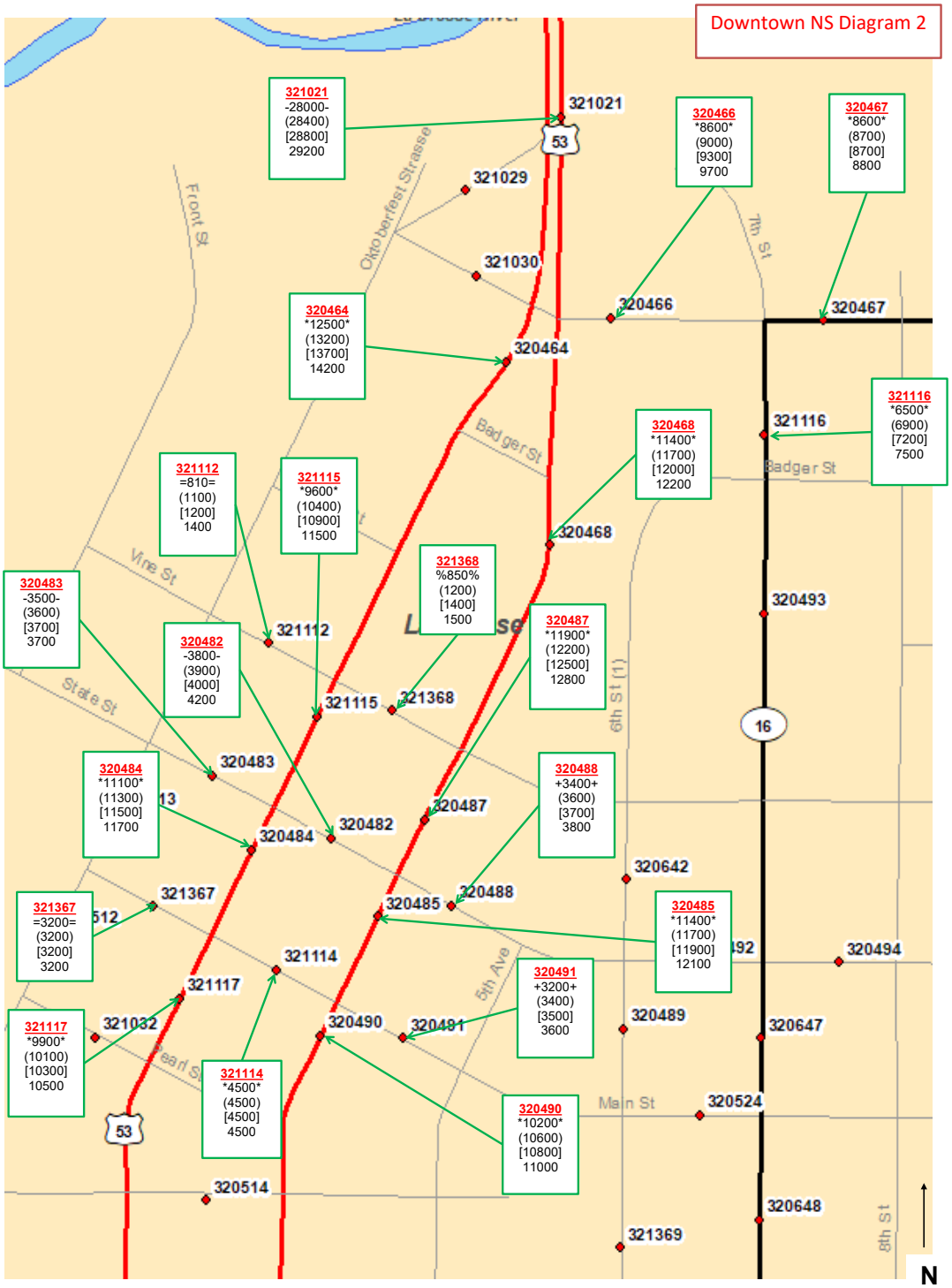

WisDOT Bureau of Planning & Economic Development
Traffic Forecasting Section
Forecast by: Miao Zhang
Phone: (608) 266 - 7995
Email: miao.zhang@dot.wi.gov

Projected AM Design Hour Traffic Volumes

Indicates roundabout

Design Hour: 7:00-8:00am

Forecast Completed: 4/12/2021

Project Description

Project ID(s): 1630-08-00
Route(s): USH 53
Region/COUNTY(IES): SW/La Crosse
Location: US 53 (Copeland Ave) & La Crosse St

Design Hour Turning Movement Data

Note: 2019 count was modified with 2015 count and StreetLight Data.

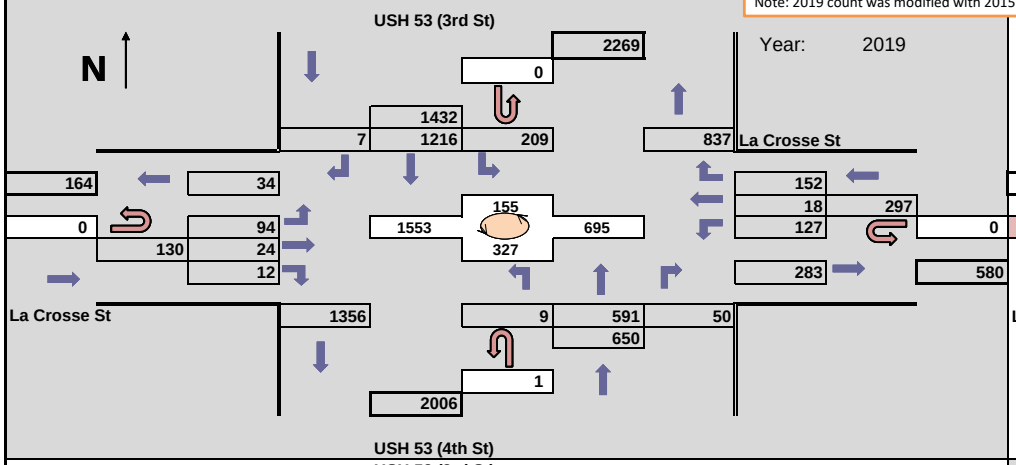

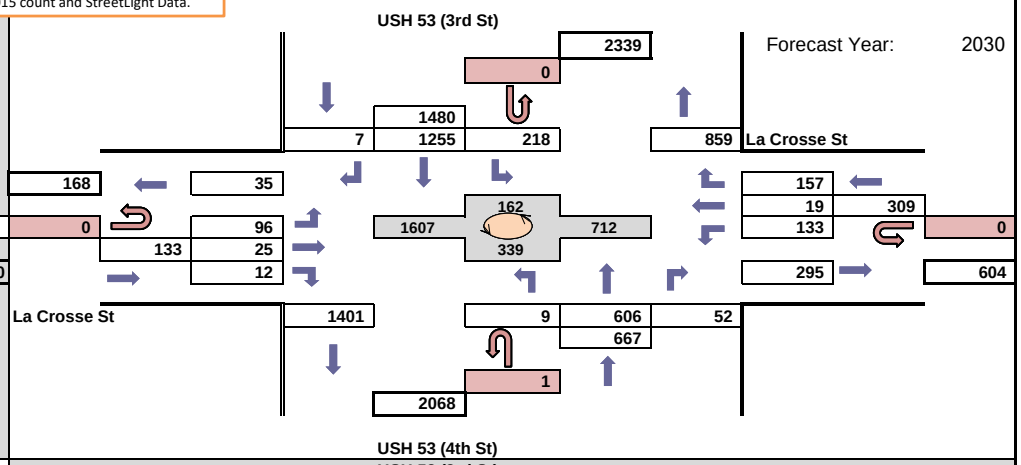

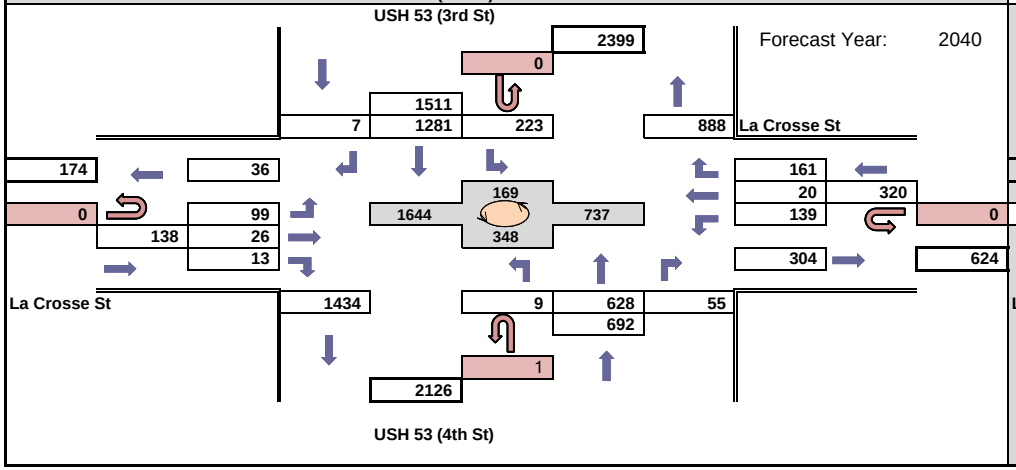

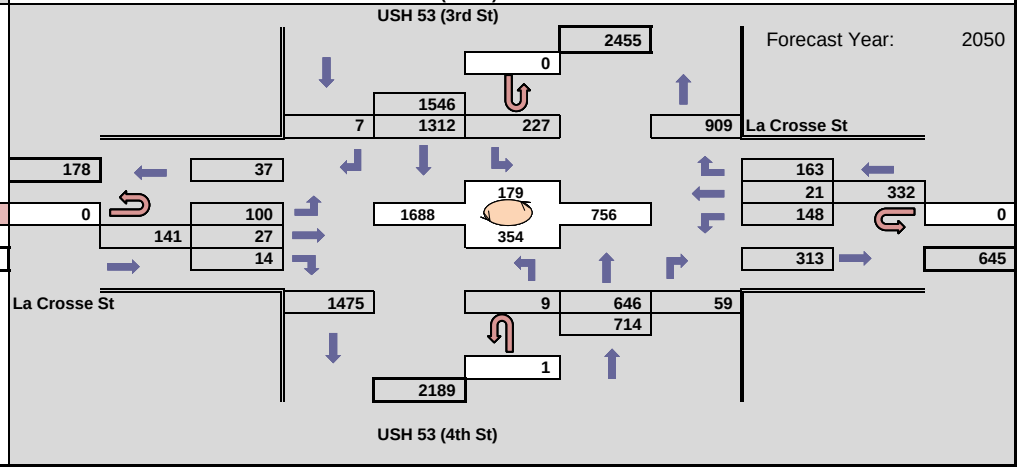

WisDOT Bureau of Planning & Economic Development
Traffic Forecasting Section
Forecast by: Miao Zhang
Phone: (608) 266 - 7995
Email: miao.zhang@dot.wi.gov

Projected PM Design Hour Traffic Volumes

Indicates roundabout

Design Hour: 4:15-5:15pm

Forecast Completed: 4/12/2021

Project Description

Project ID(s): 1630-08-00
Route(s): USH 53
Region/COUNTY(IES): SW/La Crosse
Location: US 53 (Copeland Ave) & La Crosse St

Design Hour Turning Movement Data

Note: 2019 count was modified with 2015 count and StreetLight Data.

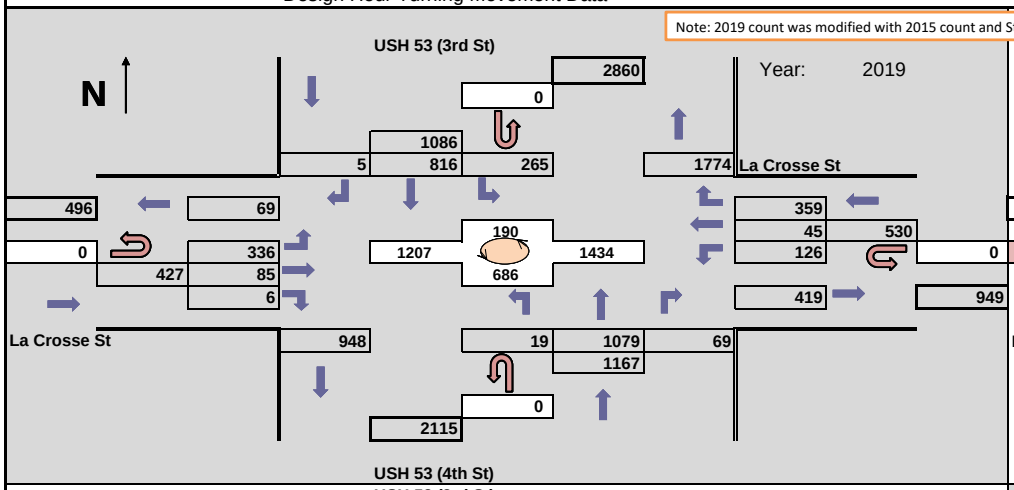

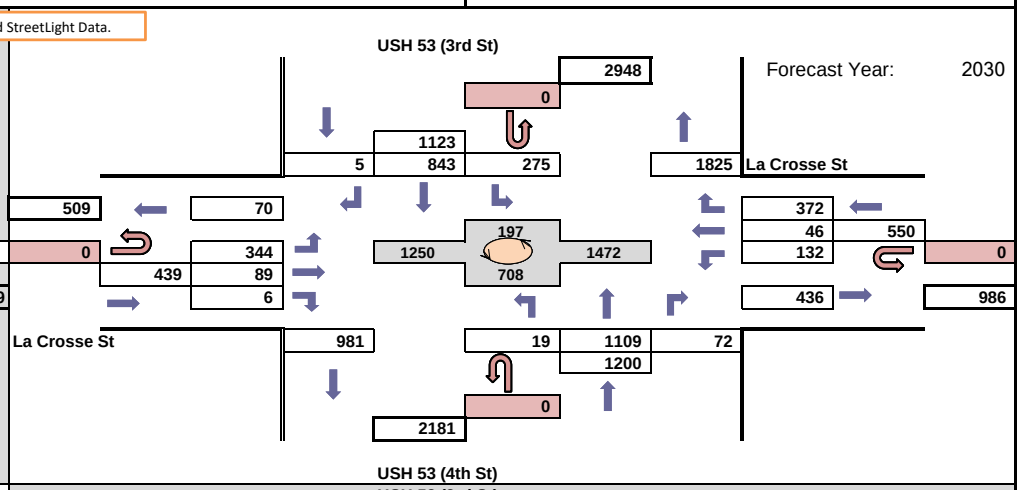

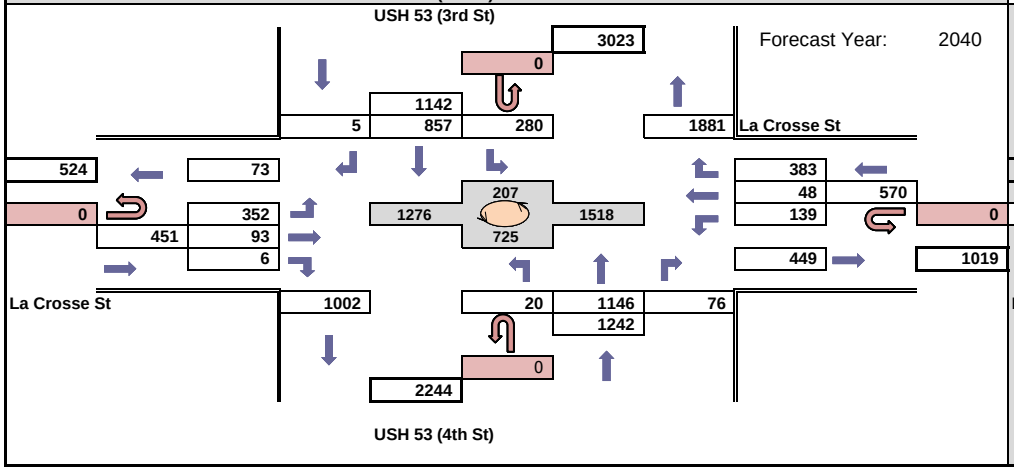

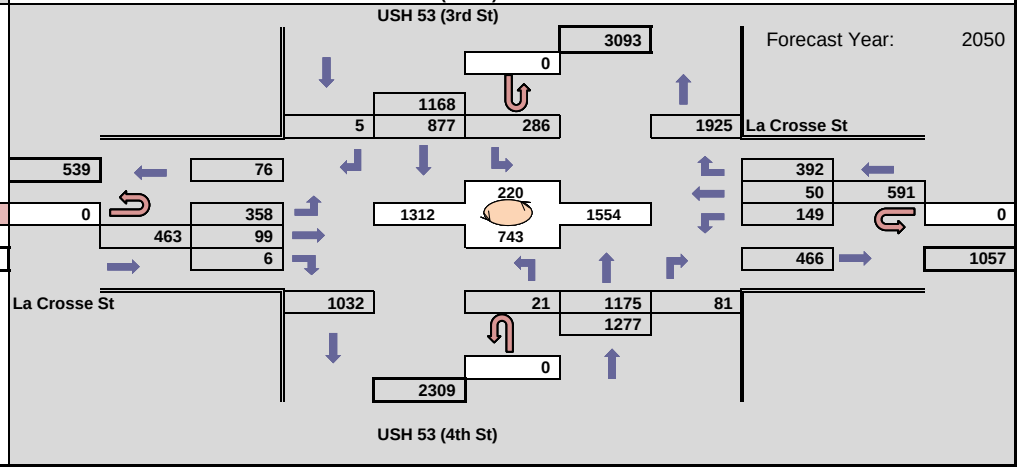

WisDOT Bureau of Planning & Economic Development
Traffic Forecasting Section
Forecast by: Miao Zhang
Phone: (608) 266 - 7995
Email: miao.zhang@dot.wi.gov

Projected AM Design Hour Traffic Volumes

Indicates roundabout

Design Hour: 7:15-8:15am

Forecast Completed: 2/23/2021

Project Description

Project ID(s): 1630-08-00
Route(s): US 53
Region/COUNTY(IES): SW/La Crosse
Location: US 53 SB & Vine St.

Design Hour Turning Movement Data

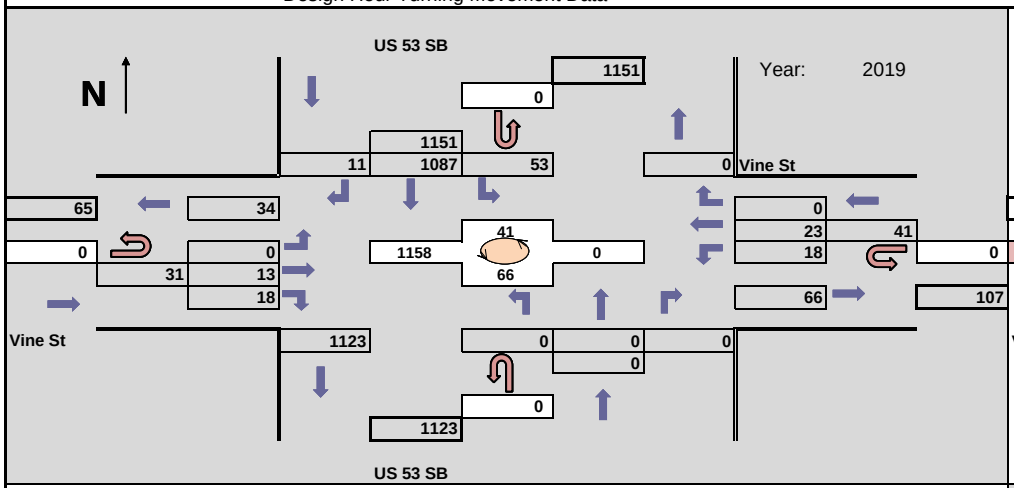

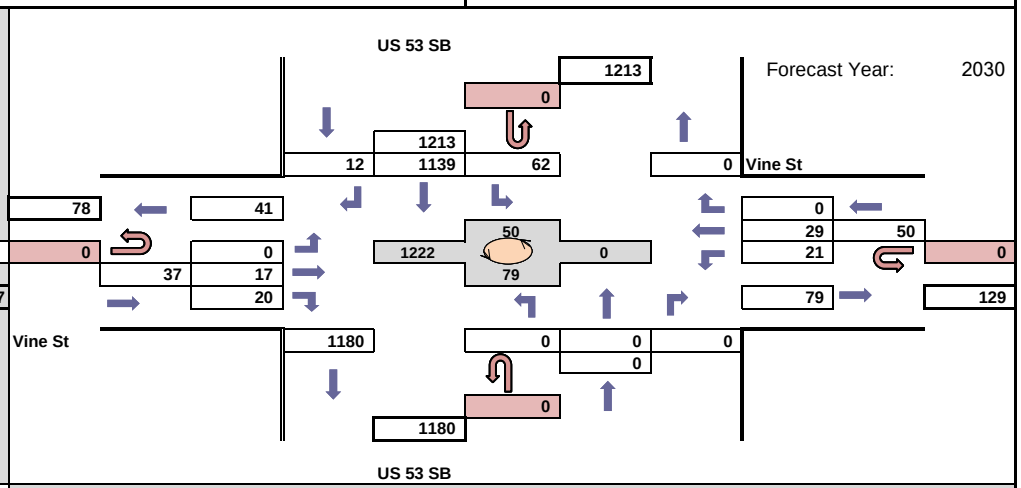

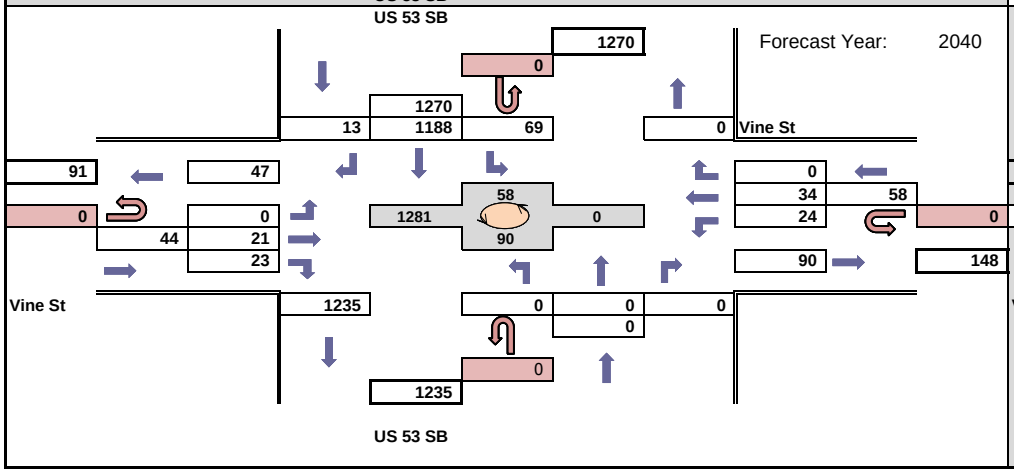

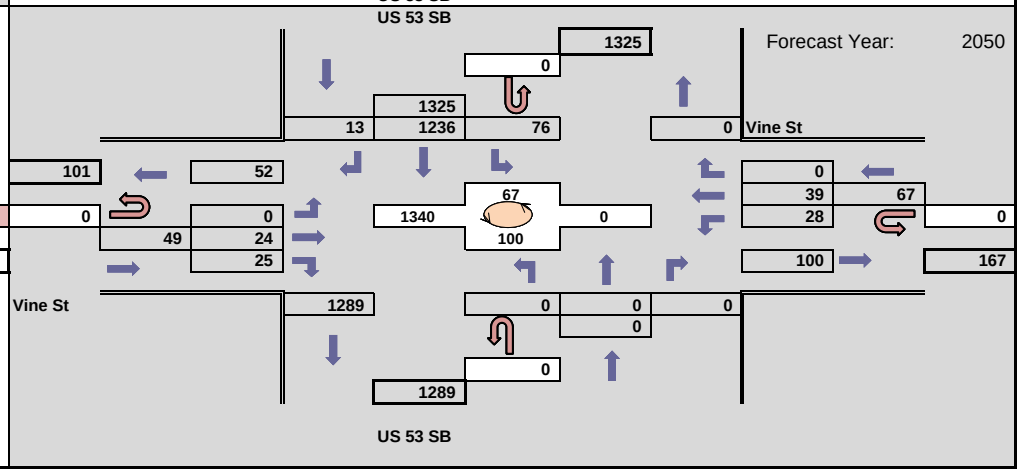

WisDOT Bureau of Planning & Economic Development
Traffic Forecasting Section
Forecast by: Miao Zhang
Phone: (608) 266 - 7995
Email: miao.zhang@dot.wi.gov

Projected PM Design Hour Traffic Volumes

Indicates roundabout

Design Hour: 4:15-5:15pm

Forecast Completed: 2/23/2021

Project Description

Project ID(s): 1630-08-00
Route(s): US 53
Region/COUNTY(IES): SW/La Crosse
Location: US 53 SB & Vine St.

Design Hour Turning Movement Data

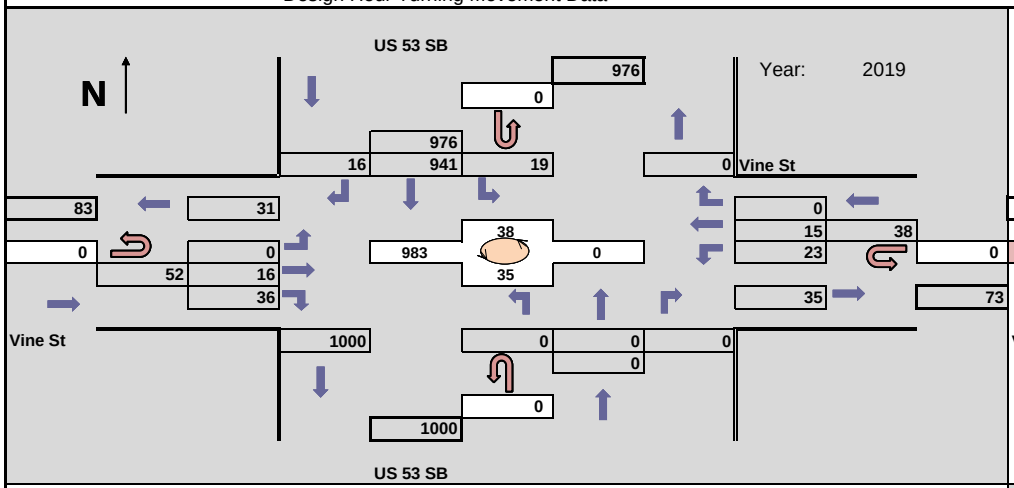

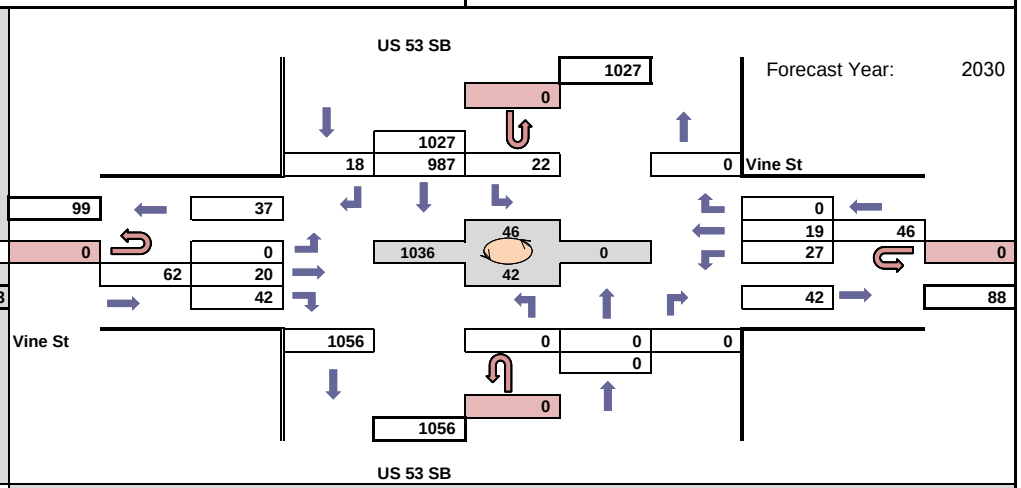

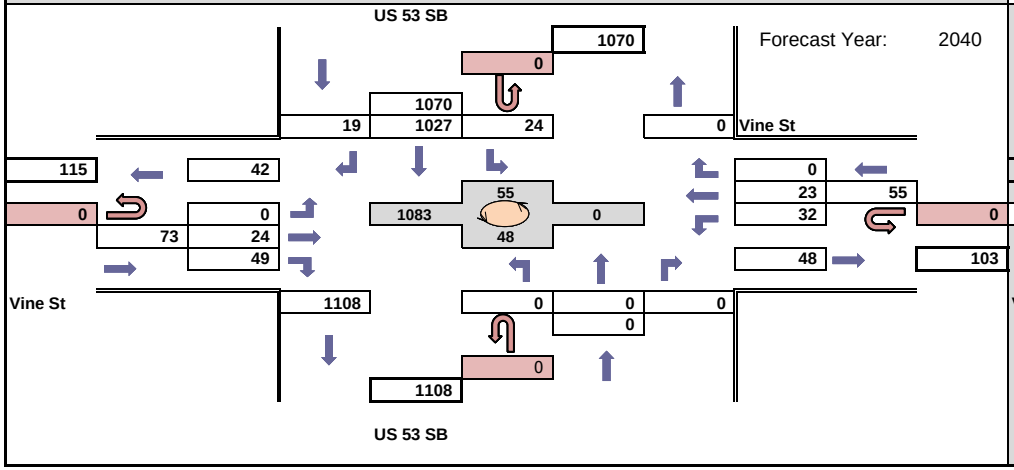

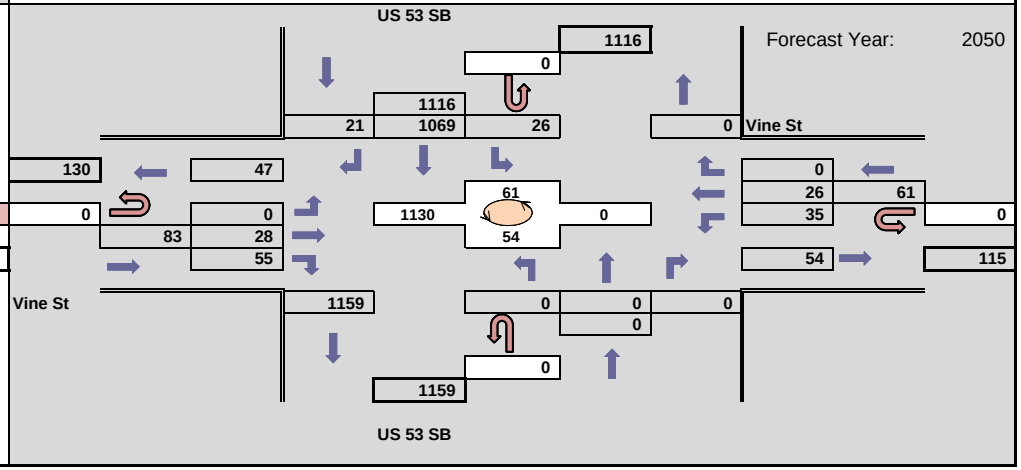

WisDOT Bureau of Planning & Economic Development
Traffic Forecasting Section
Forecast by: Miao Zhang
Phone: (608) 266 - 7995
Email: miao.zhang@dot.wi.gov

Projected AM Design Hour Traffic Volumes

Indicates roundabout

Design Hour: 7:00-8:00am

Forecast Completed: 2/23/2021

Project Description

Project ID(s): 1630-08-00
Route(s): US 53
Region/COUNTY(IES): SW/La Crosse
Location: US 53 NB (4th St) & Vine St

Design Hour Turning Movement Data

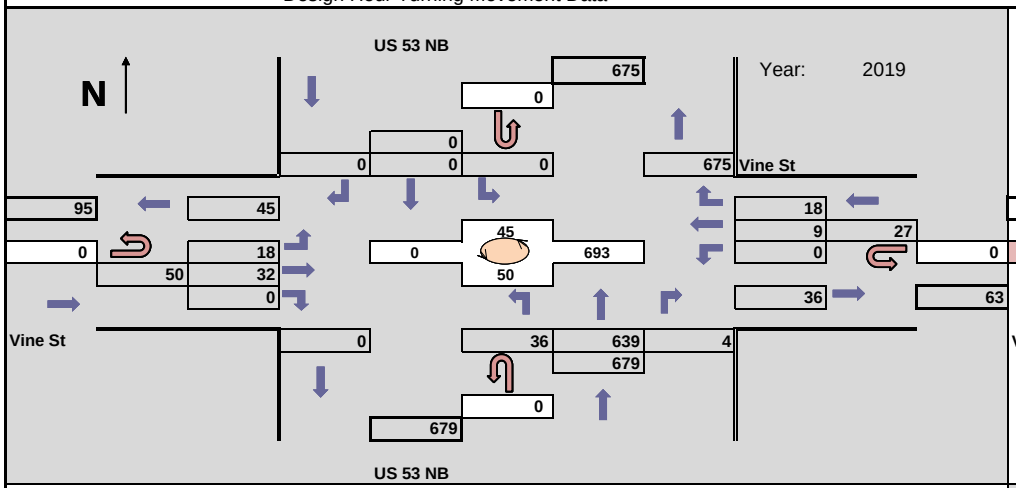

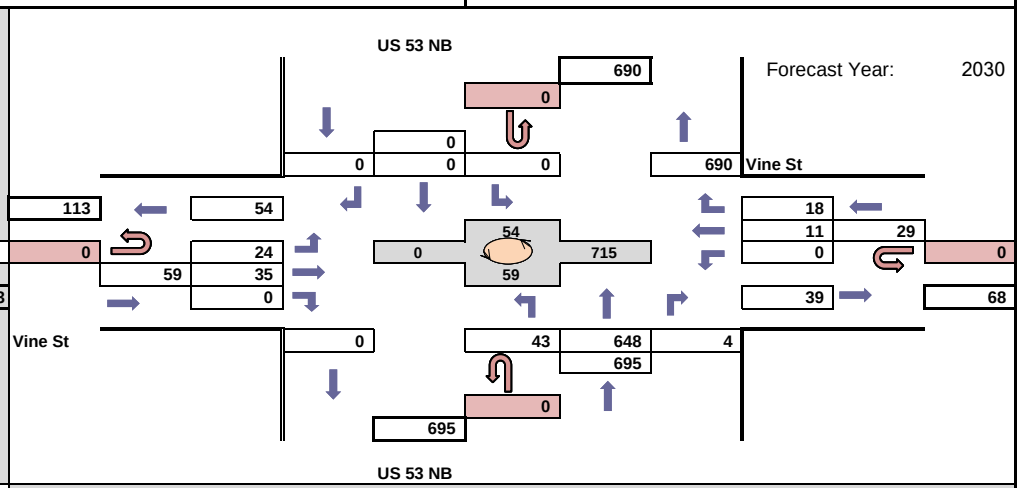

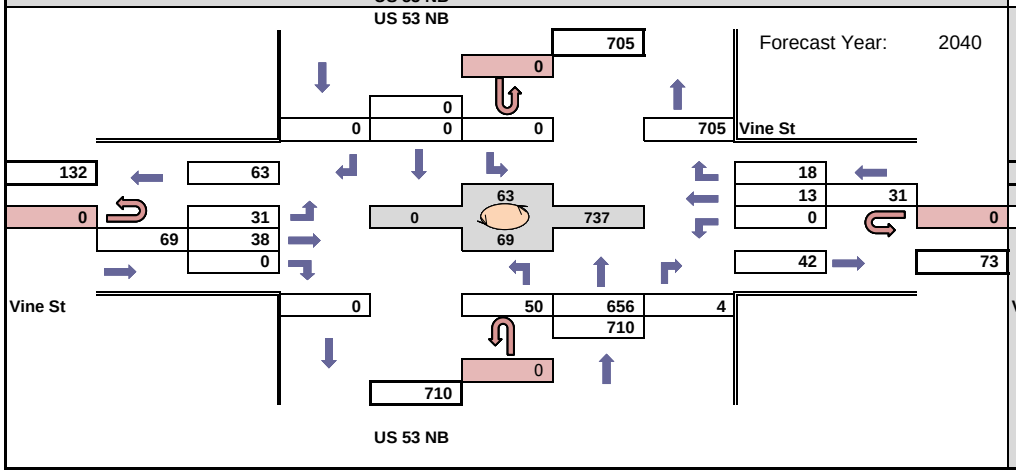

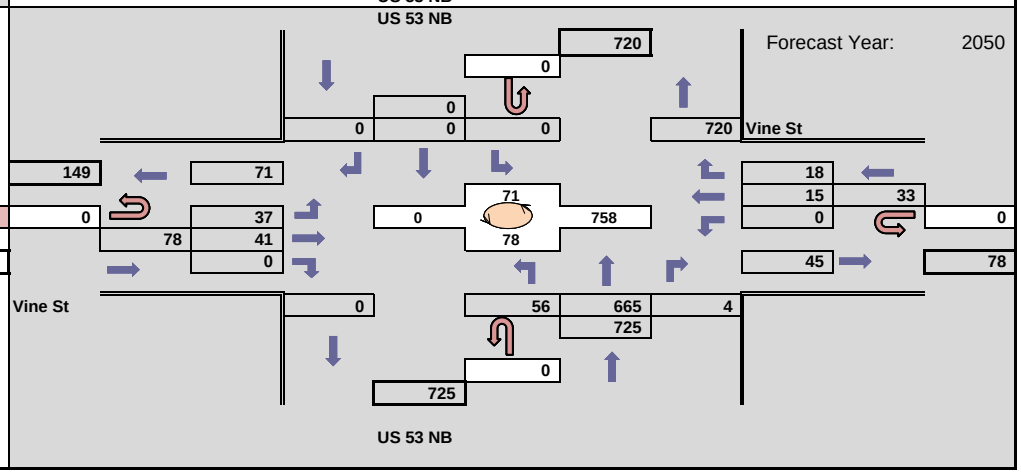

WisDOT Bureau of Planning & Economic Development
Traffic Forecasting Section
Forecast by: Miao Zhang
Phone: (608) 266 - 7995
Email: miao.zhang@dot.wi.gov

Projected PM Design Hour Traffic Volumes

Indicates roundabout

Design Hour: 4:15-5:15pm

Forecast Completed: 2/23/2021

Project Description

Project ID(s): 1630-08-00
Route(s): US 53
Region/COUNTY(IES): SW/La Crosse
Location: US 53 NB (4th St) & Vine St

Design Hour Turning Movement Data

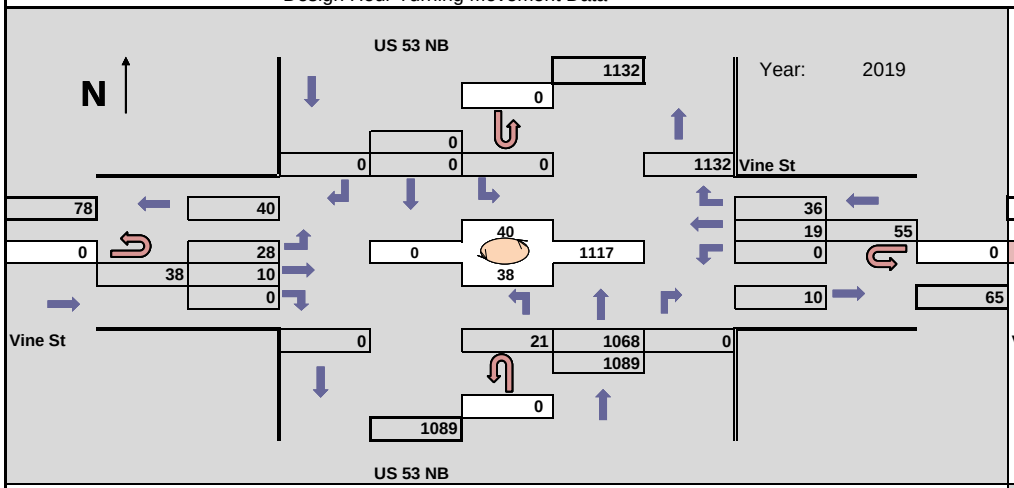

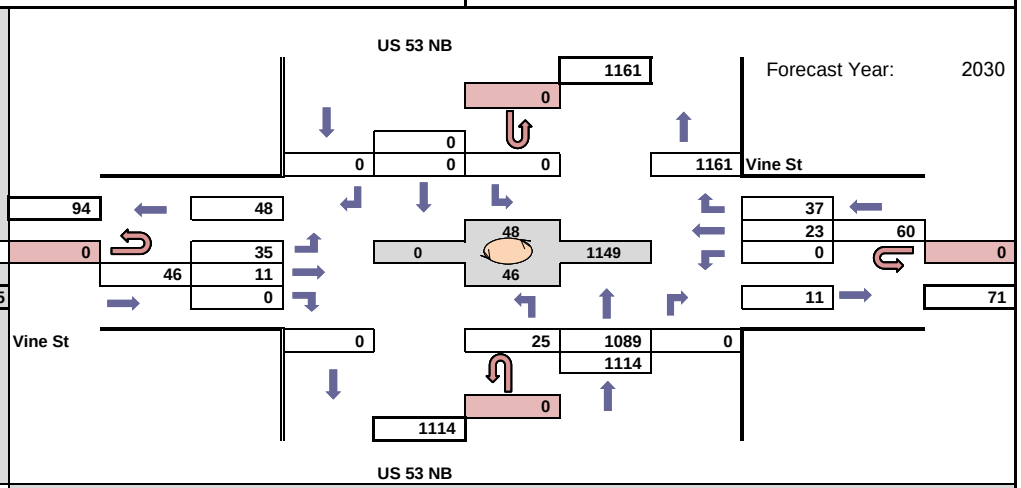

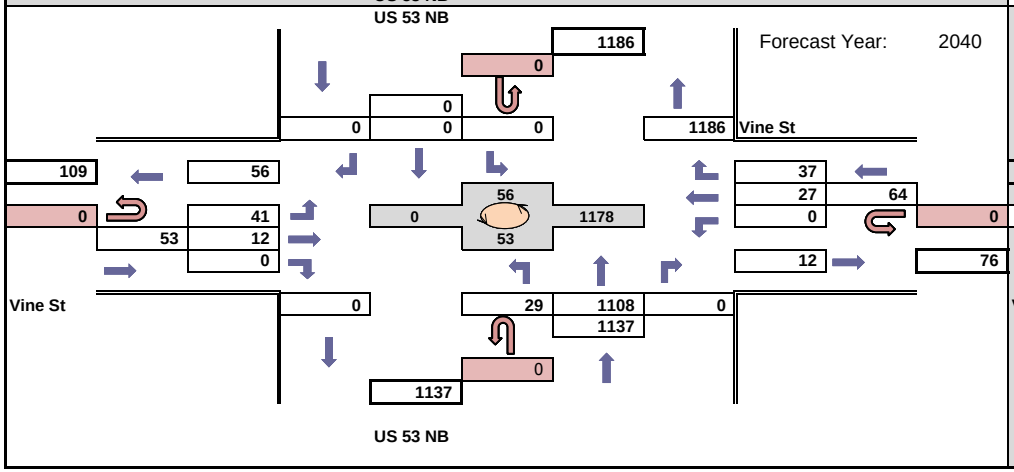

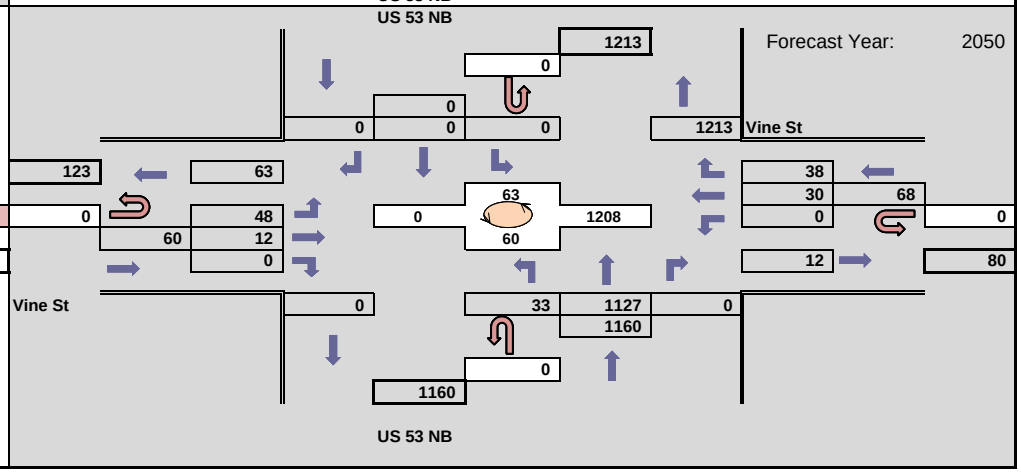

WisDOT Bureau of Planning & Economic Development
Traffic Forecasting Section
Forecast by: Miao Zhang
Phone: (608) 266 - 7995
Email: miao.zhang@dot.wi.gov

Projected AM Design Hour Traffic Volumes

Indicates roundabout

Design Hour: 7:00-8:00am

Forecast Completed: 2/23/2021

Project Description

Project ID(s): 1630-08-00
Route(s): US 53
Region/COUNTY(IES): SW/La Crosse
Location: US 53 SB (3rd St) & State St

Design Hour Turning Movement Data

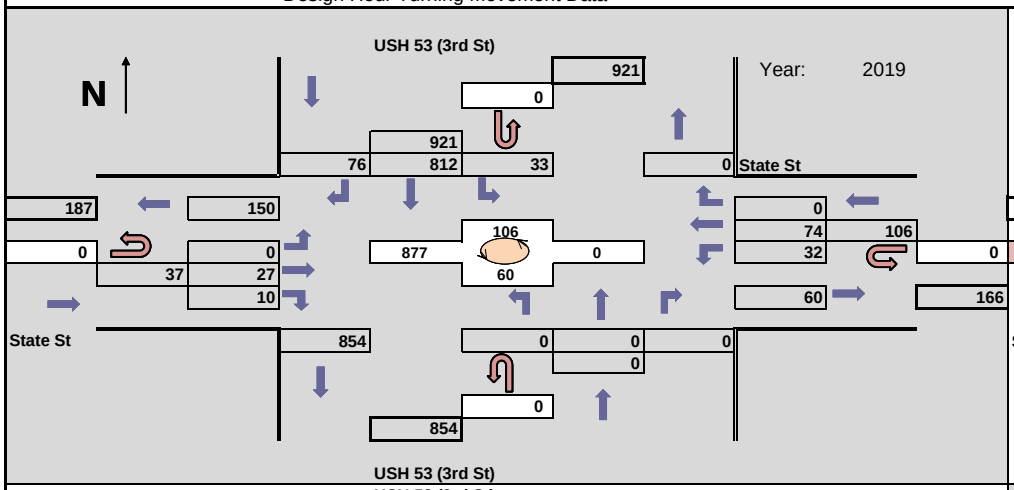

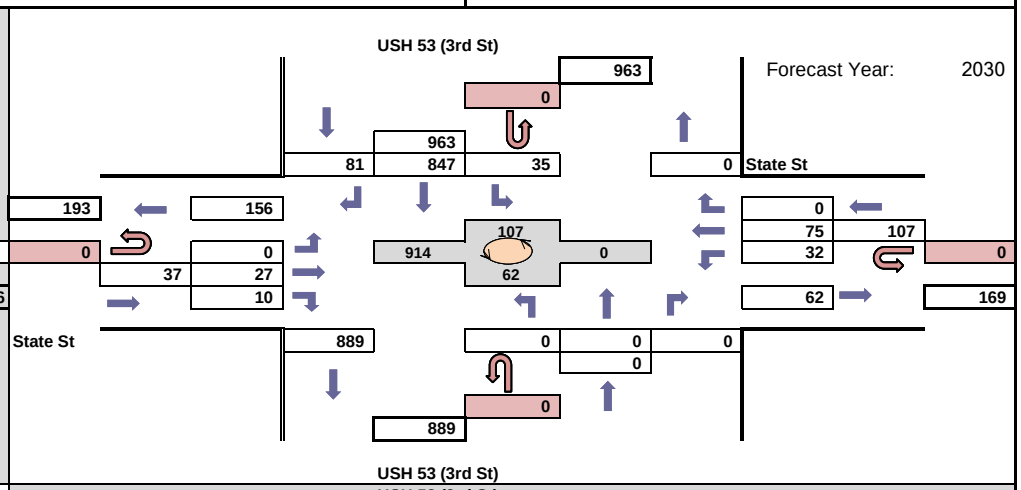

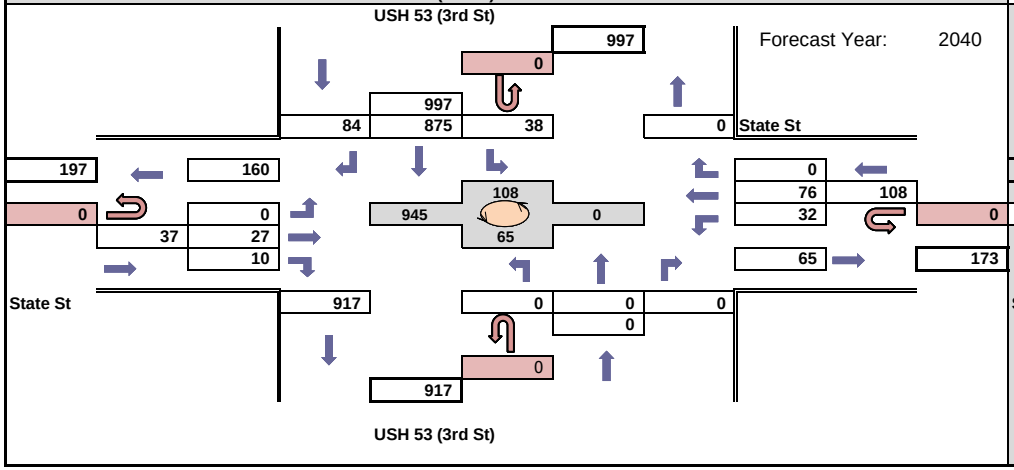

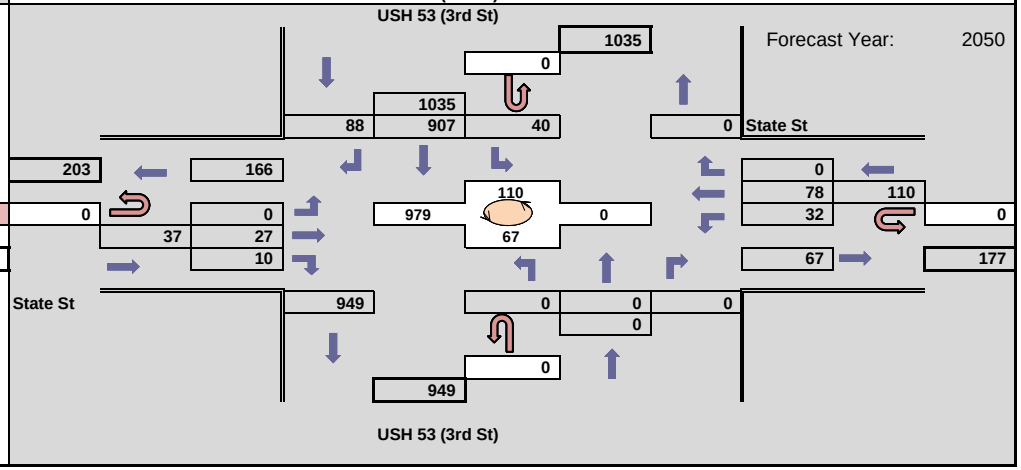

WisDOT Bureau of Planning & Economic Development
Traffic Forecasting Section
Forecast by: Miao Zhang
Phone: (608) 266 - 7995
Email: miao.zhang@dot.wi.gov

Projected PM Design Hour Traffic Volumes

Indicates roundabout

Design Hour: 4:15-5:15pm

Forecast Completed: 2/23/2021

Project Description

Project ID(s): 1630-08-00
Route(s): US 53
Region/COUNTY(IES): SW/La Crosse
Location: US 53 SB (3rd St) & State St

Design Hour Turning Movement Data

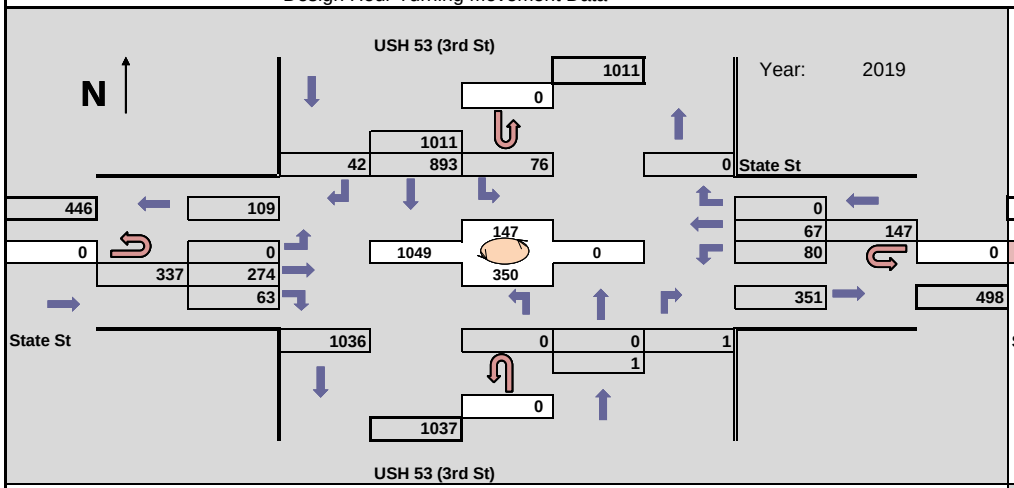

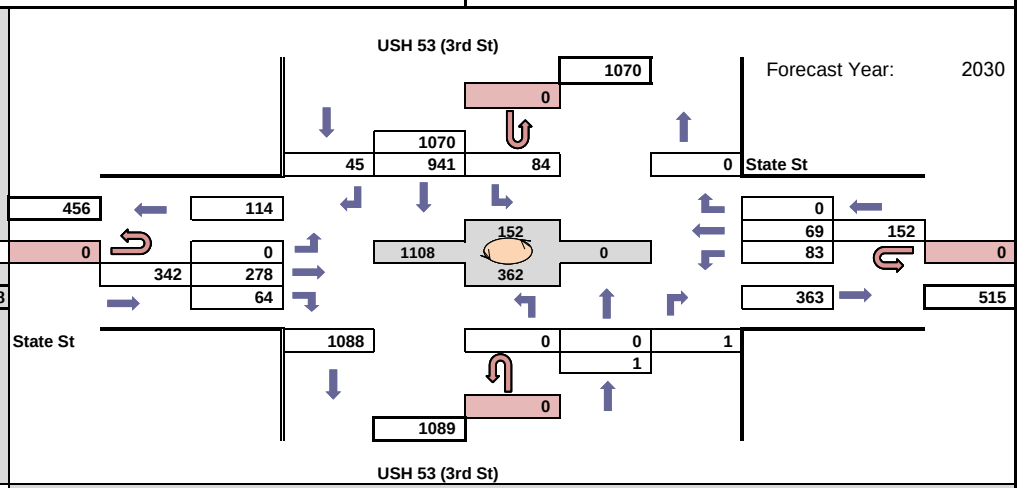

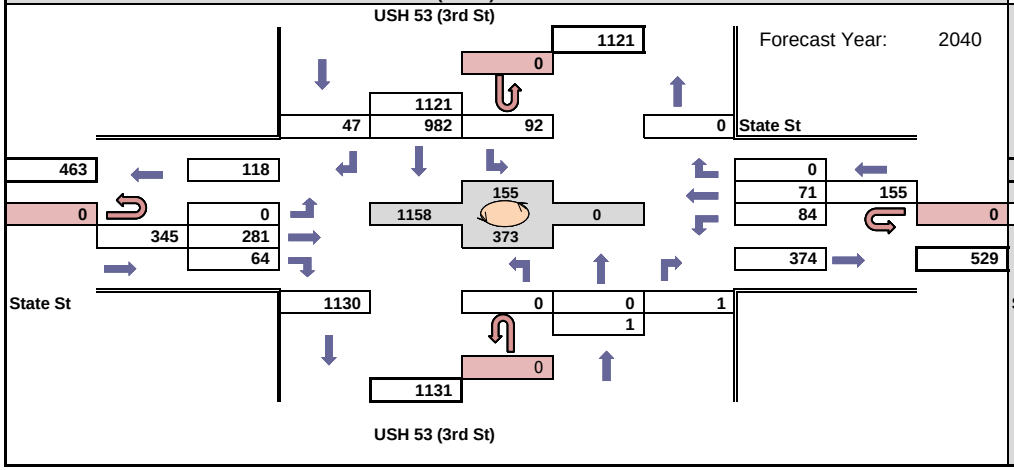

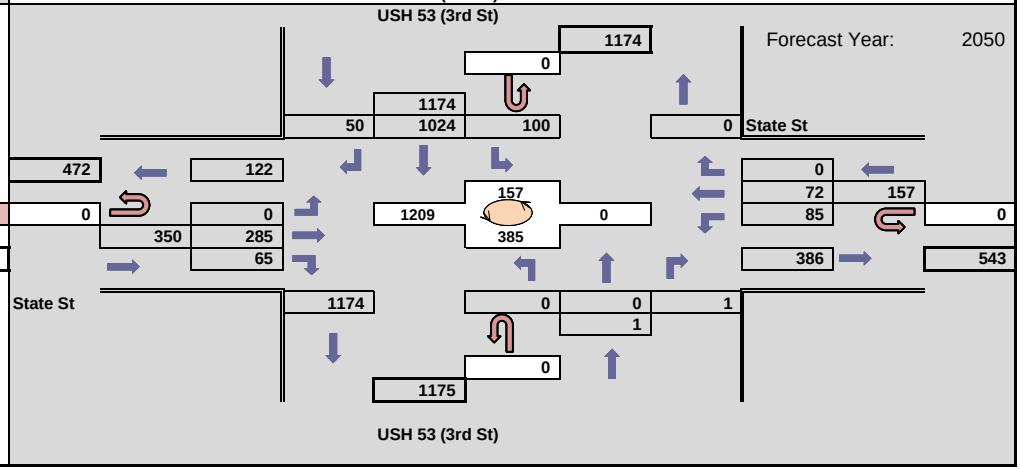

WisDOT Bureau of Planning & Economic Development
Traffic Forecasting Section
Forecast by: Miao Zhang
Phone: (608) 266 - 7995
Email: miao.zhang@dot.wi.gov

Projected AM Design Hour Traffic Volumes

Indicates roundabout

Design Hour: 7:00-8:00am

Forecast Completed: 2/23/2021

Project Description

Project ID(s): 1630-08-00
Route(s): US 53
Region/COUNTY(IES): SW/La Crosse
Location: US 53 NB (4th St) & State St

Design Hour Turning Movement Data

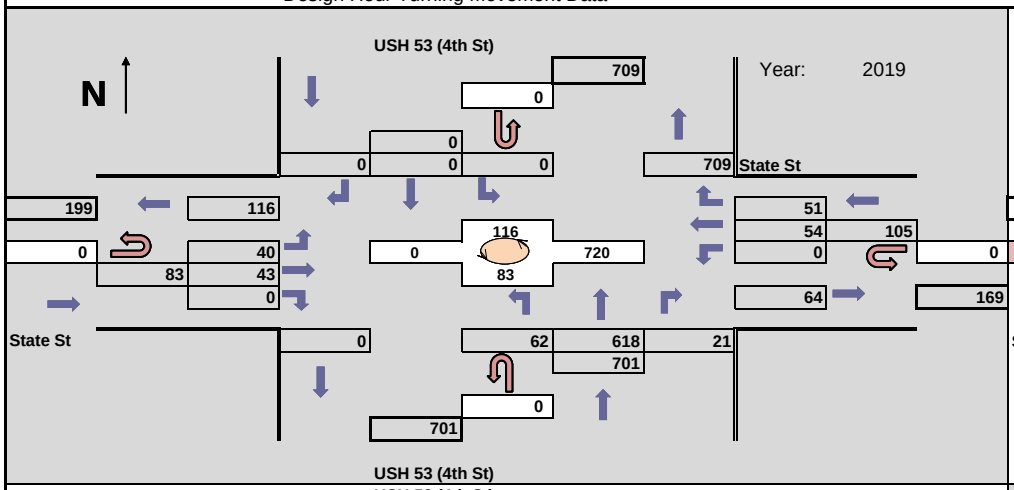

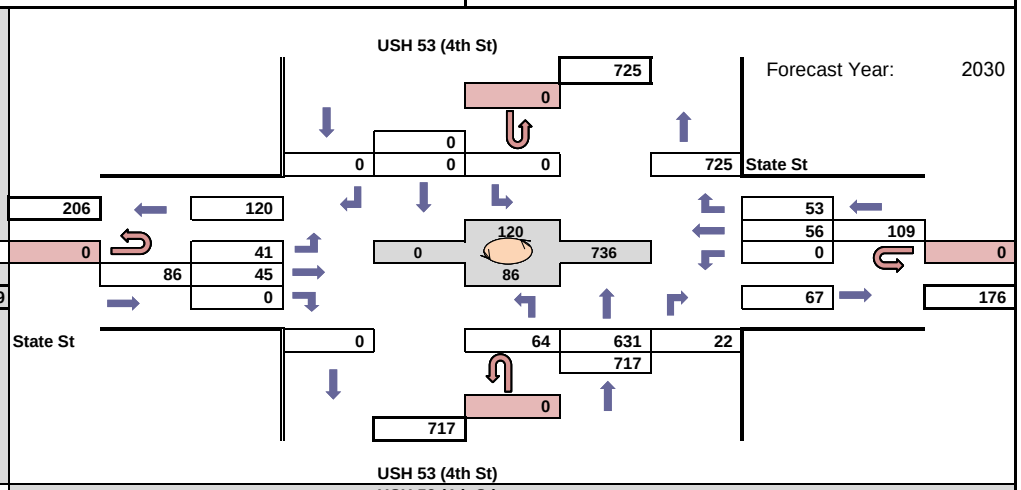

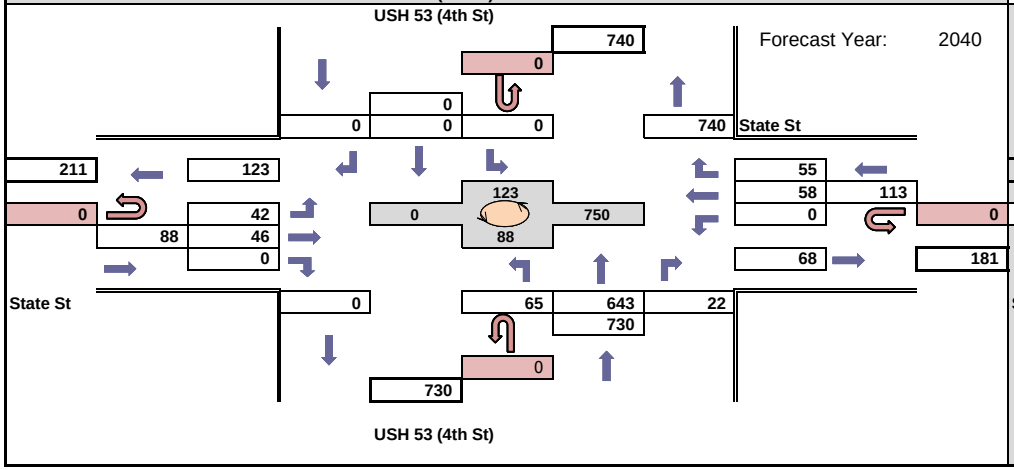

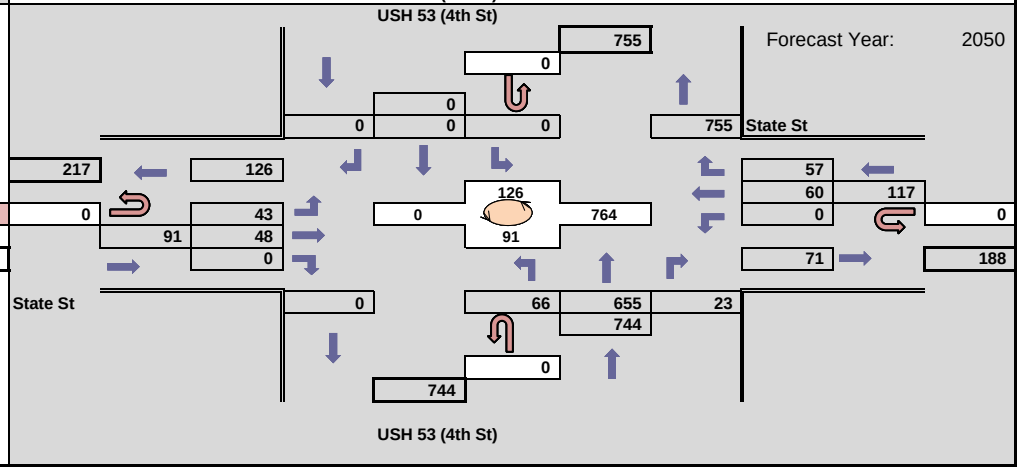

WisDOT Bureau of Planning & Economic Development
Traffic Forecasting Section
Forecast by: Miao Zhang
Phone: (608) 266 - 7995
Email: miao.zhang@dot.wi.gov

Projected PM Design Hour Traffic Volumes

Indicates roundabout

Design Hour: 4:15-5:15pm

Forecast Completed: 2/23/2021

Project Description

Project ID(s): 1630-08-00
Route(s): US 53
Region/COUNTY(IES): SW/La Crosse
Location: US 53 NB (4th St) & State St

Design Hour Turning Movement Data

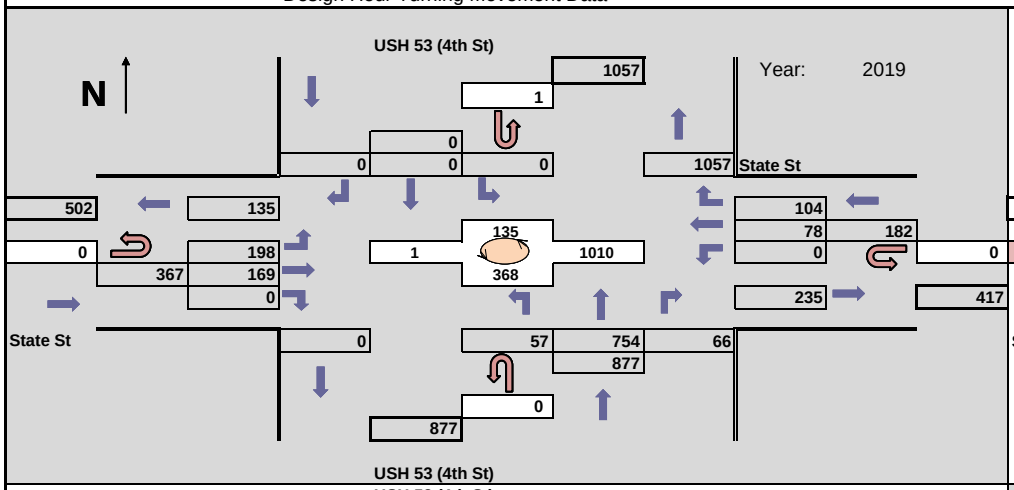

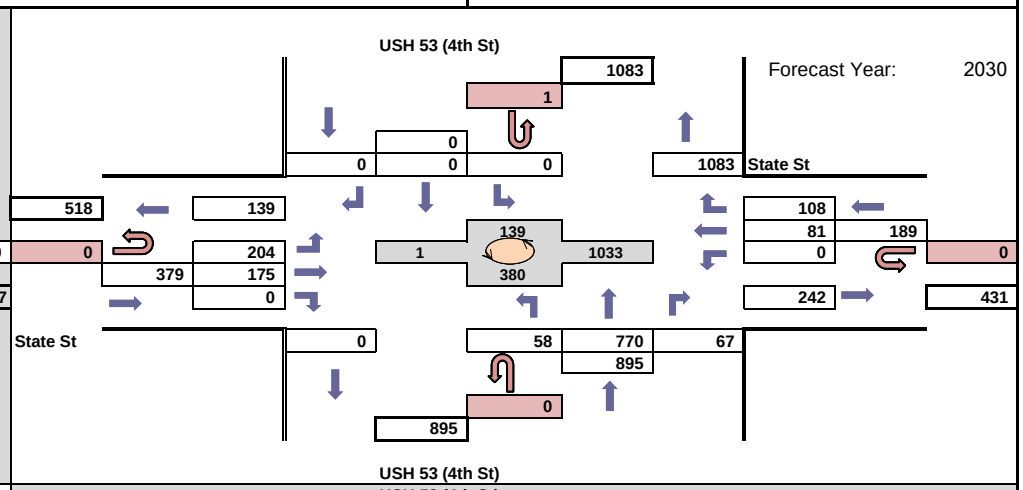

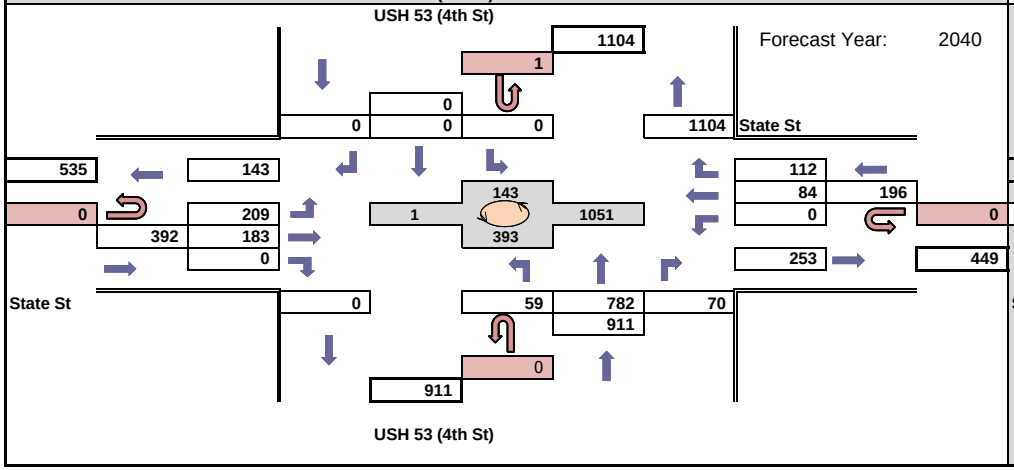

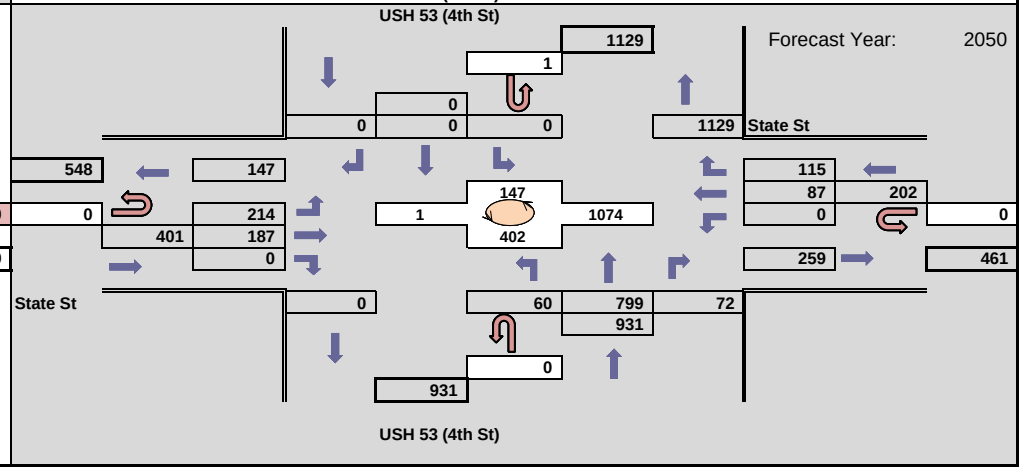

WisDOT Bureau of Planning & Economic Development
Traffic Forecasting Section
Forecast by: Miao Zhang
Phone: (608) 266 - 7995
Email: miao.zhang@dot.wi.gov

Projected AM Design Hour Traffic Volumes

Indicates roundabout

Design Hour: 7:00-8:00am

Forecast Completed: 2/23/2021

Project Description

Project ID(s): 1630-08-00
Route(s): US 53
Region/COUNTY(IES): SW/La Crosse
Location: US 53 SB (3rd St) & Main St

Design Hour Turning Movement Data

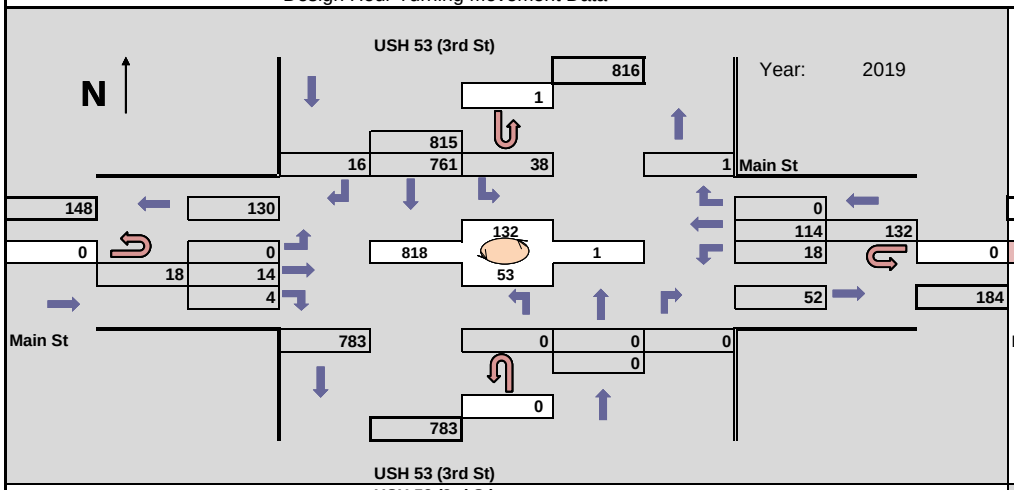

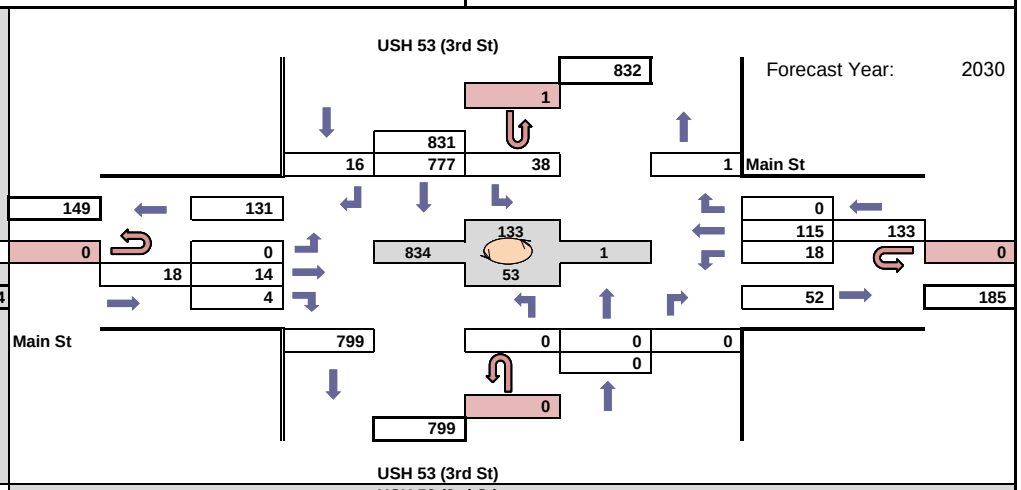

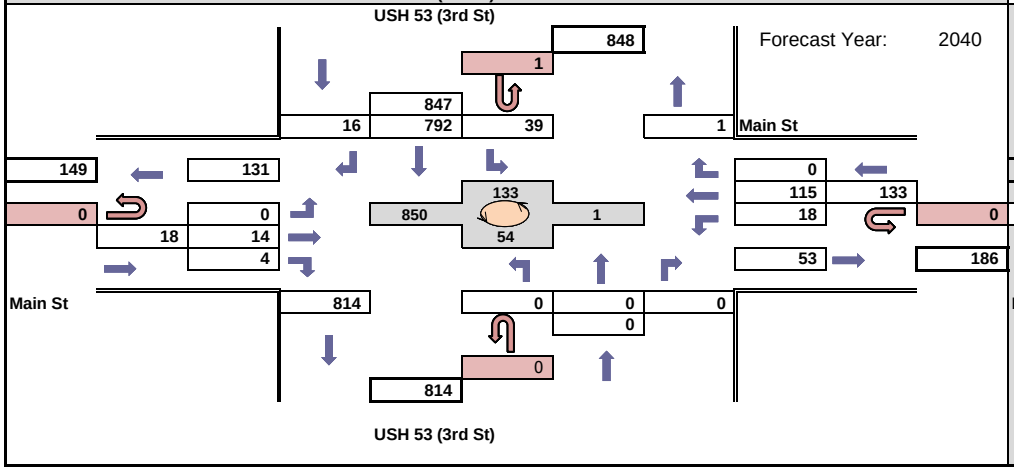

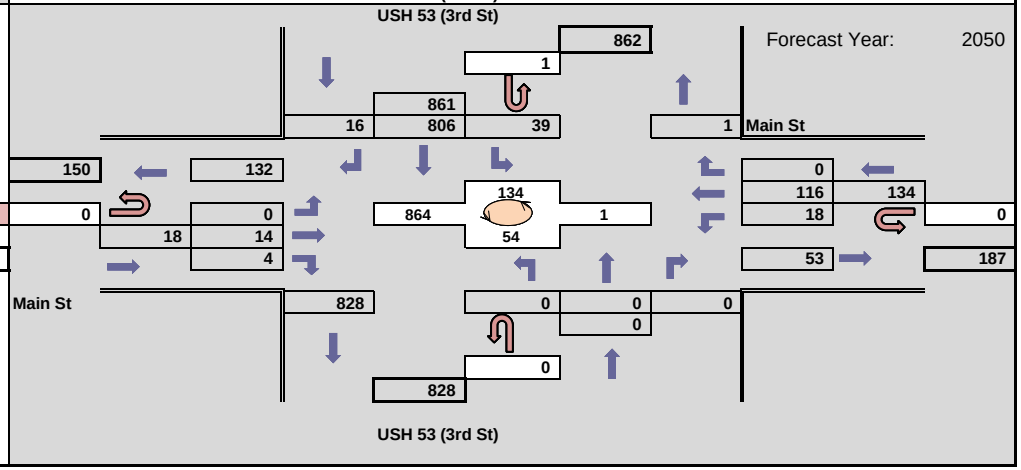

WisDOT Bureau of Planning & Economic Development
Traffic Forecasting Section
Forecast by: Miao Zhang
Phone: (608) 266 - 7995
Email: miao.zhang@dot.wi.gov

Projected PM Design Hour Traffic Volumes

Indicates roundabout

Design Hour: 4:15-5:15pm

Forecast Completed: 2/23/2021

Project Description

Project ID(s): 1630-08-00
Route(s): US 53
Region/COUNTY(IES): SW/La Crosse
Location: US 53 SB (3rd St) & Main St

Design Hour Turning Movement Data

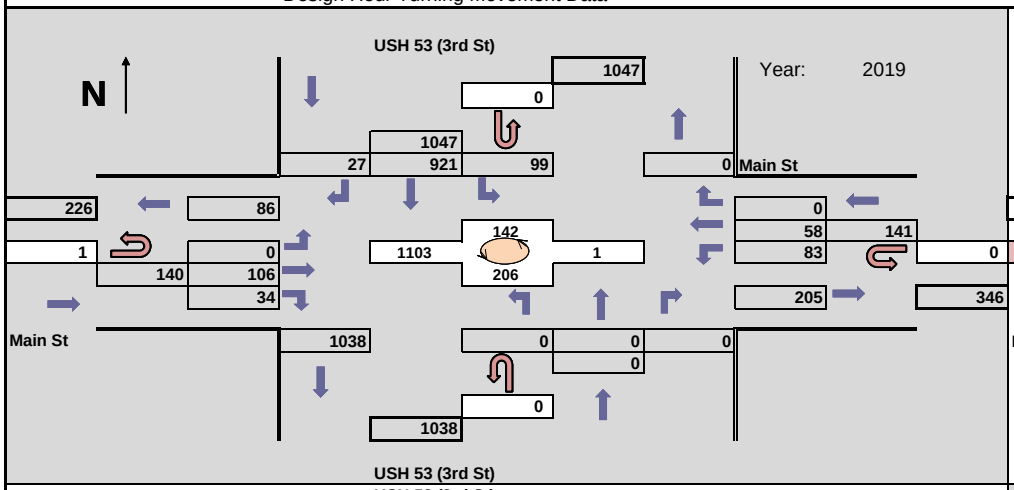

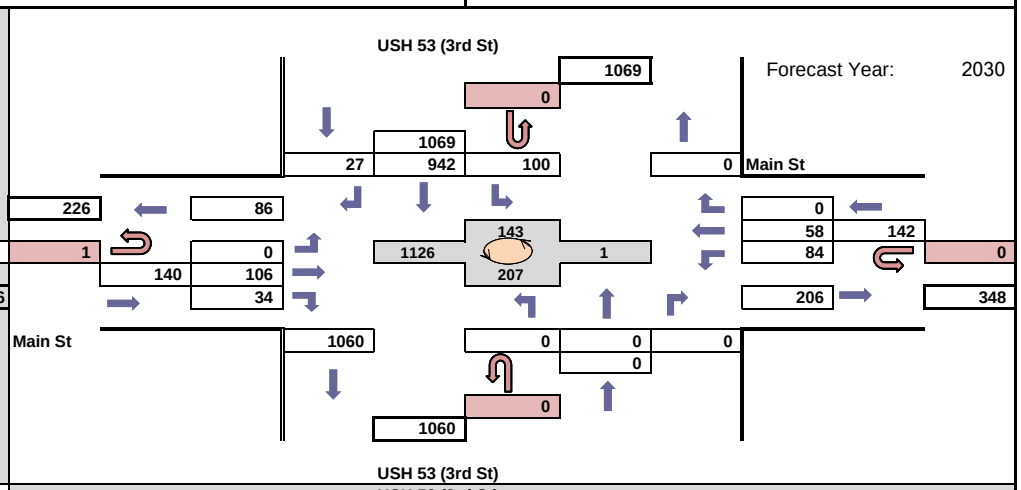

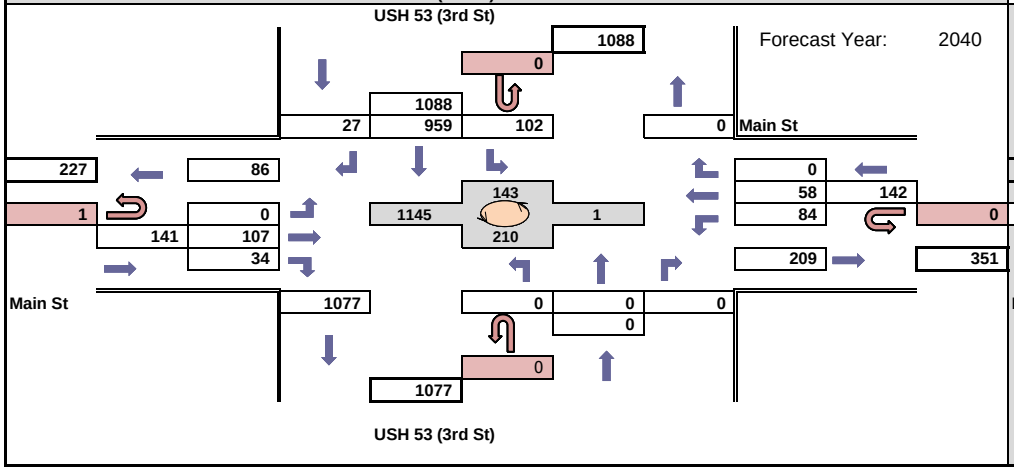

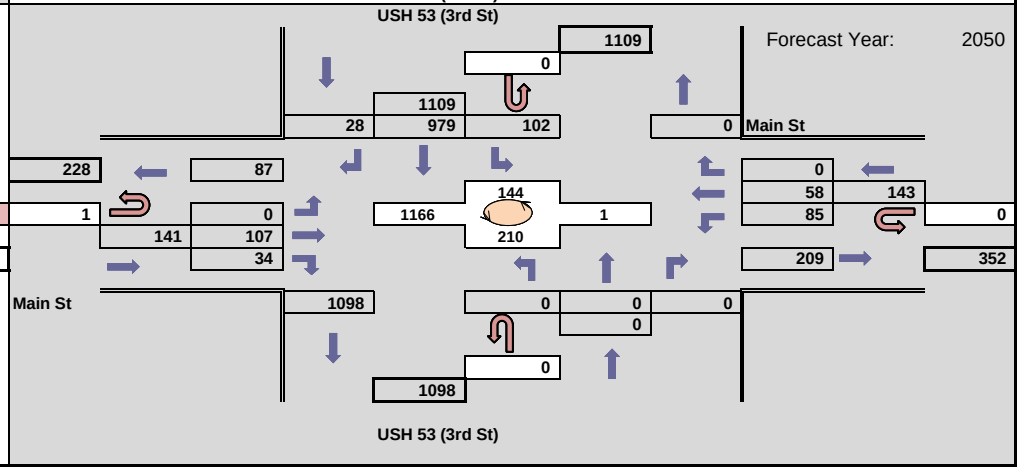

WisDOT Bureau of Planning & Economic Development
Traffic Forecasting Section
Forecast by: Miao Zhang
Phone: (608) 266 - 7995
Email: miao.zhang@dot.wi.gov

Projected AM Design Hour Traffic Volumes

Indicates roundabout

Design Hour: 7:00-8:00am

Forecast Completed: 2/23/2021

Project Description

Project ID(s): 1630-08-00
Route(s): US 53
Region/COUNTY(IES): SW/La Crosse
Location: US 53 NB (4th St) & Main St

Design Hour Turning Movement Data

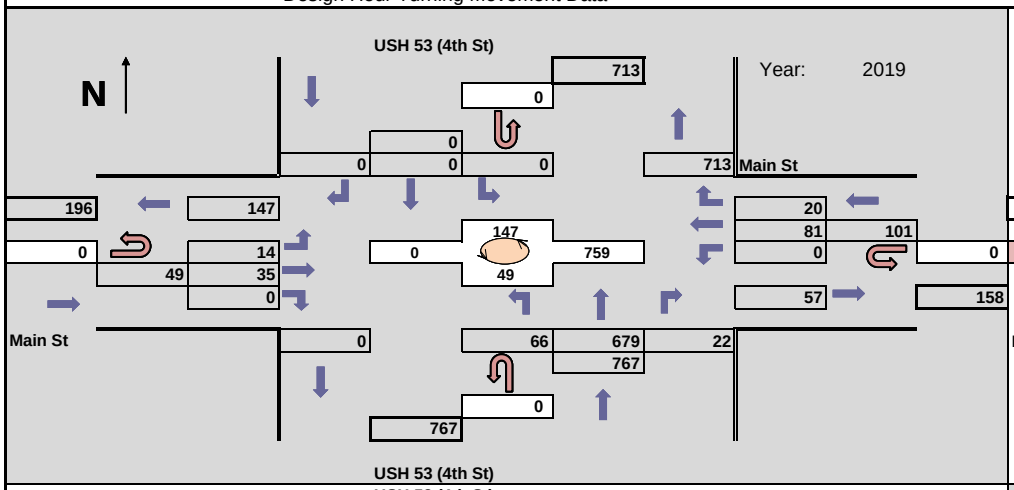

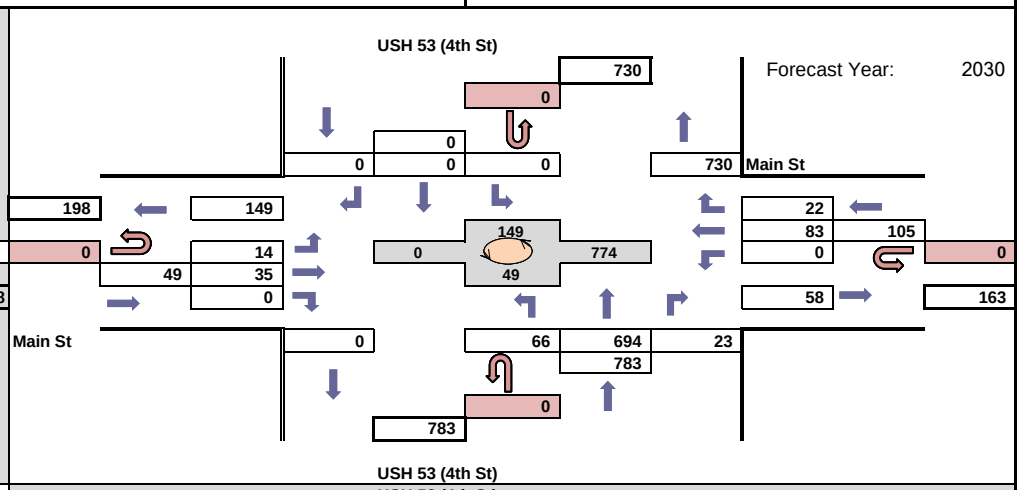

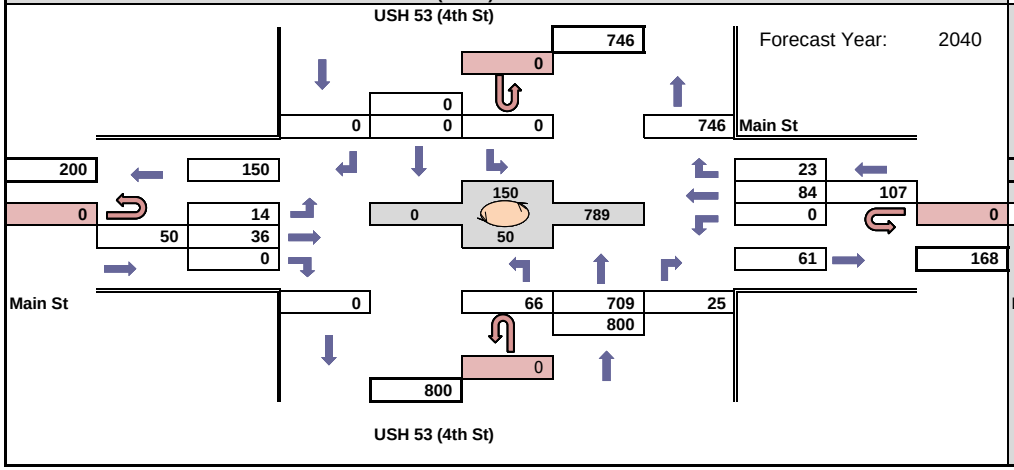

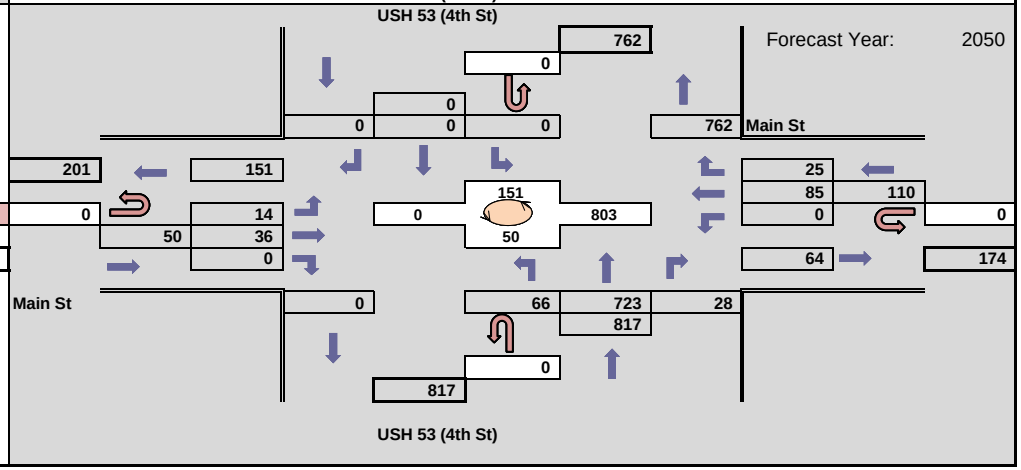

WisDOT Bureau of Planning & Economic Development
Traffic Forecasting Section
Forecast by: Miao Zhang
Phone: (608) 266 - 7995
Email: miao.zhang@dot.wi.gov

Projected PM Design Hour Traffic Volumes

Indicates roundabout

Design Hour: 4:15-5:15pm

Forecast Completed: 2/23/2021

Project Description

Project ID(s): 1630-08-00
Route(s): US 53
Region/COUNTY(IES): SW/La Crosse
Location: US 53 NB (4th St) & Main St

Design Hour Turning Movement Data

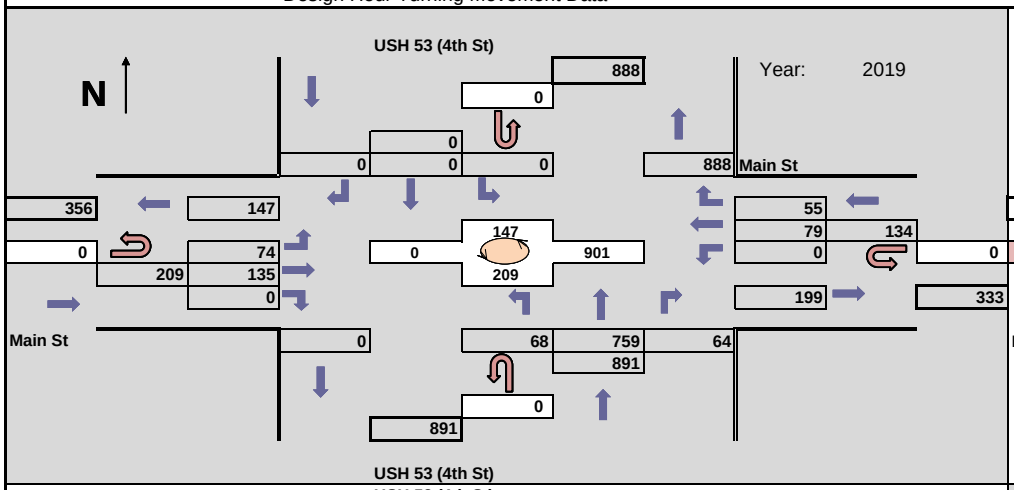

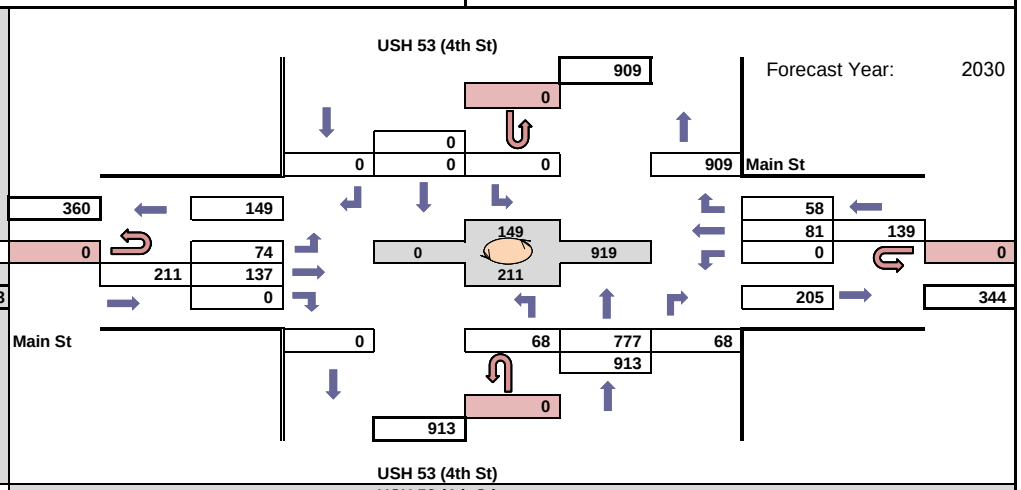

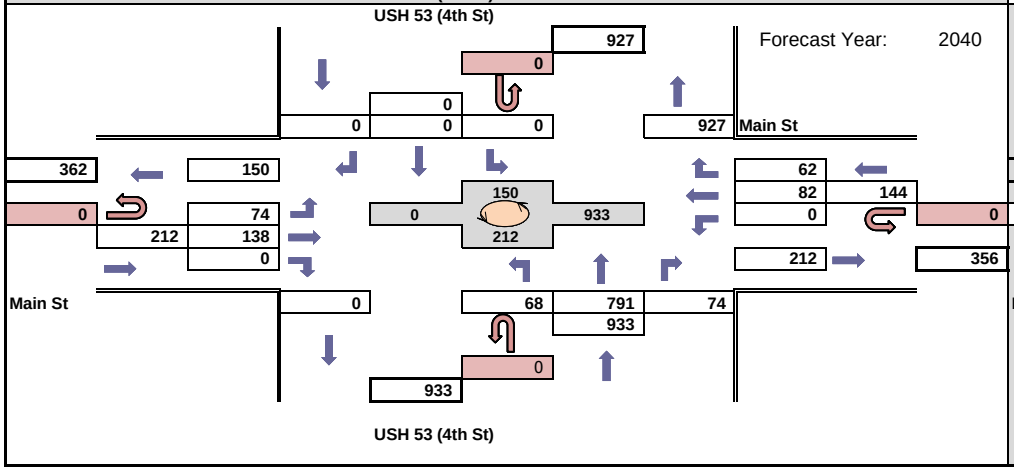

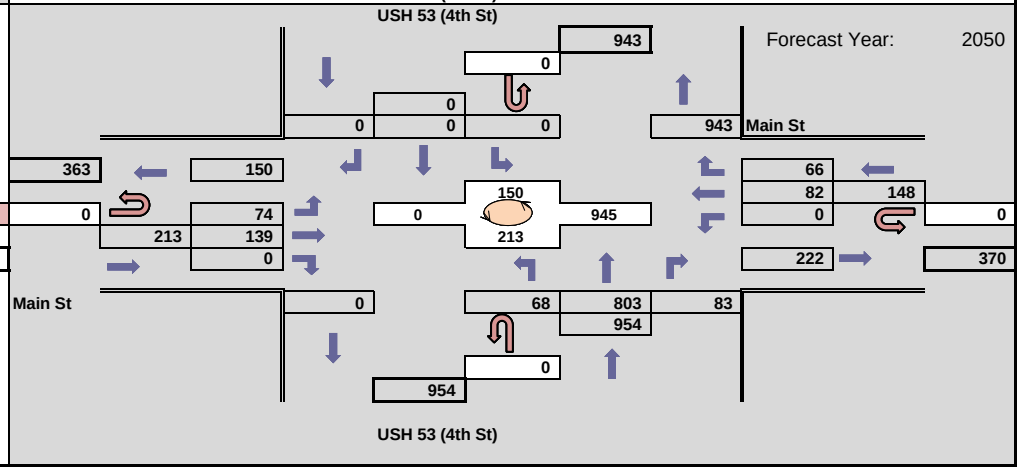

WisDOT Bureau of Planning & Economic Development
Traffic Forecasting Section
Forecast by: Miao Zhang
Phone: (608) 266 - 7995
Email: miao.zhang@dot.wi.gov

Projected AM Design Hour Traffic Volumes

Indicates roundabout

Design Hour: 7:00-8:00am

Forecast Completed: 2/23/2021

Project Description

Project ID(s): 1630-08-00
Route(s): US 53
Region/COUNTY(IES): SW/La Crosse
Location: US 53 NB (4th St) & Jay St

Design Hour Turning Movement Data

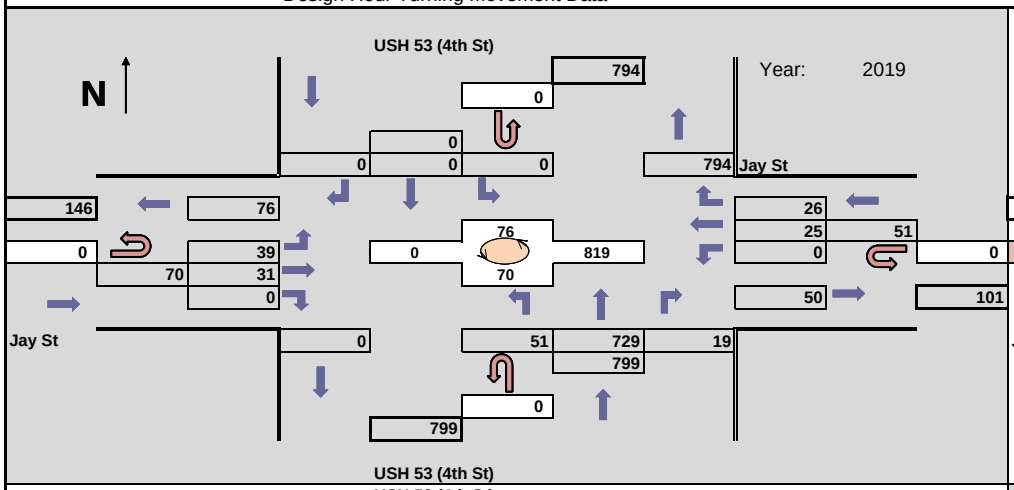

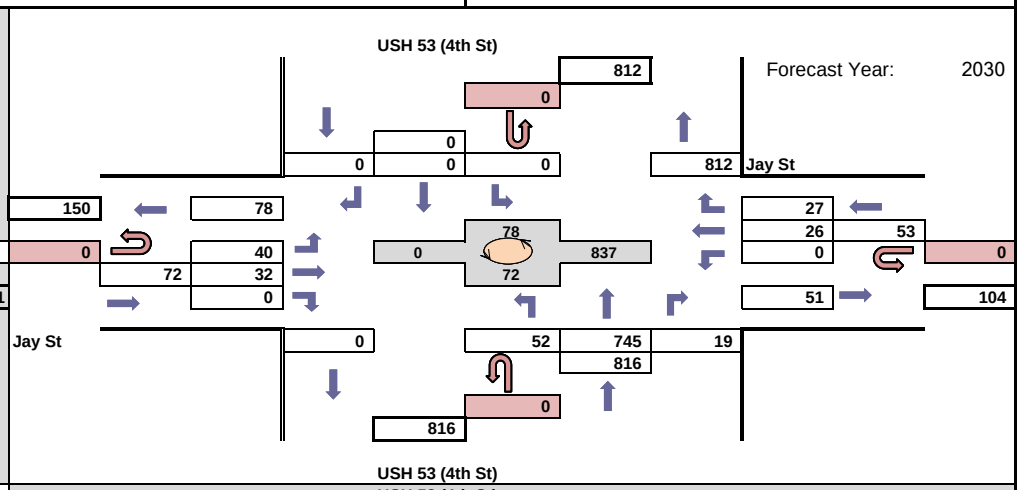

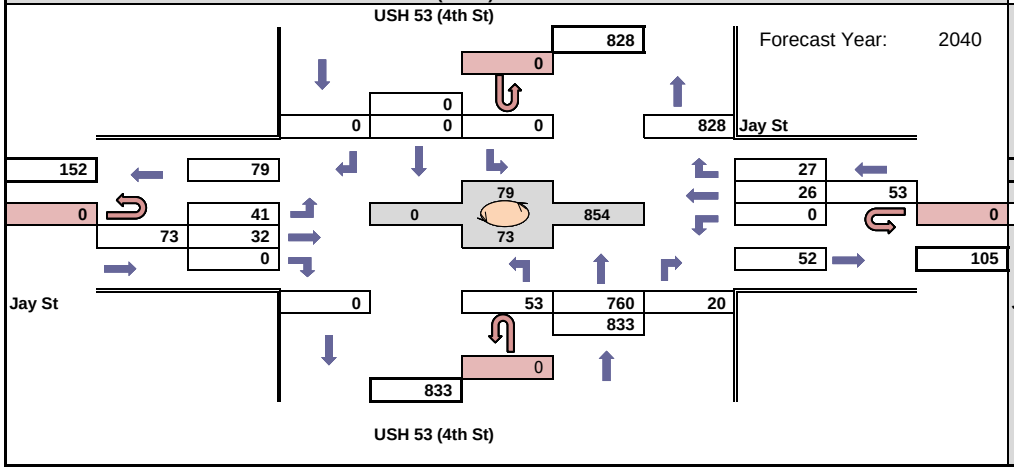

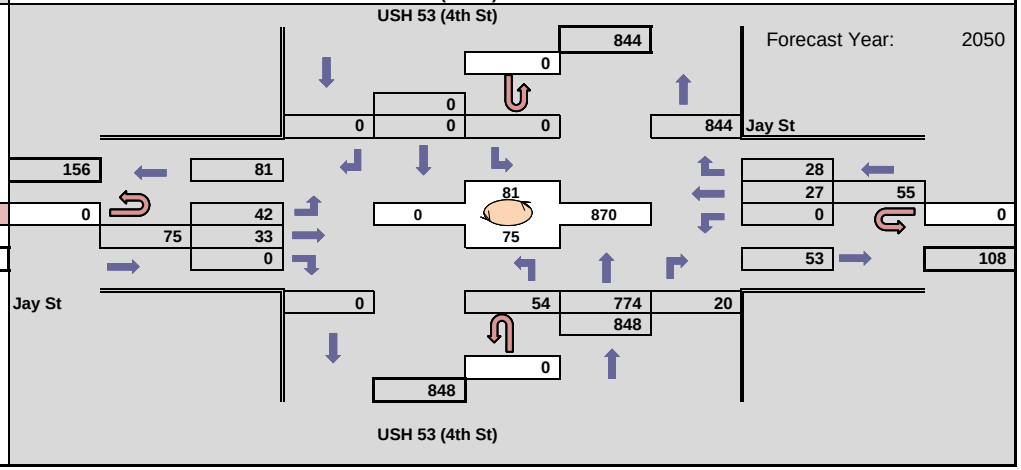

WisDOT Bureau of Planning & Economic Development
Traffic Forecasting Section
Forecast by: Miao Zhang
Phone: (608) 266 - 7995
Email: miao.zhang@dot.wi.gov

Projected PM Design Hour Traffic Volumes

Indicates roundabout

Design Hour: 4:15-5:15pm

Forecast Completed: 2/23/2021

Project Description

Project ID(s): 1630-08-00
Route(s): US 53
Region/COUNTY(IES): SW/La Crosse
Location: US 53 NB (4th St) & Jay St

Design Hour Turning Movement Data

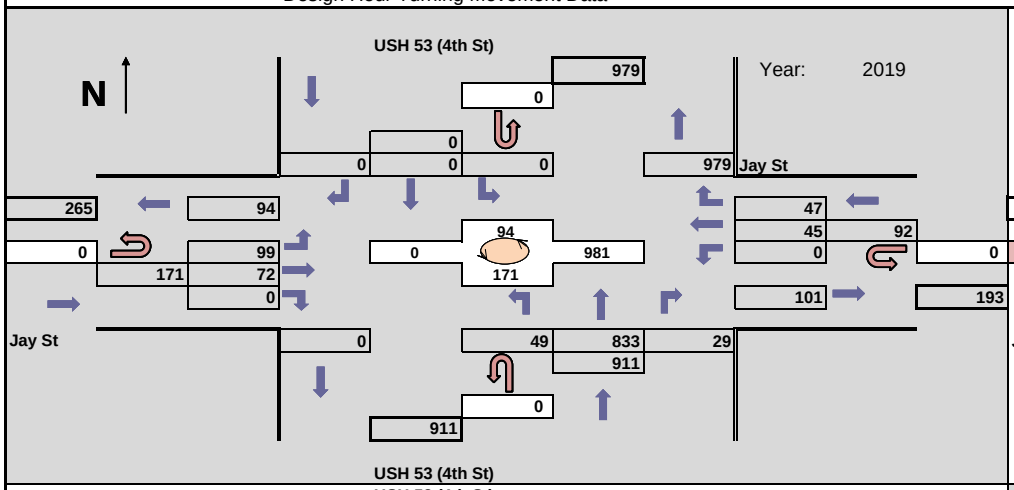

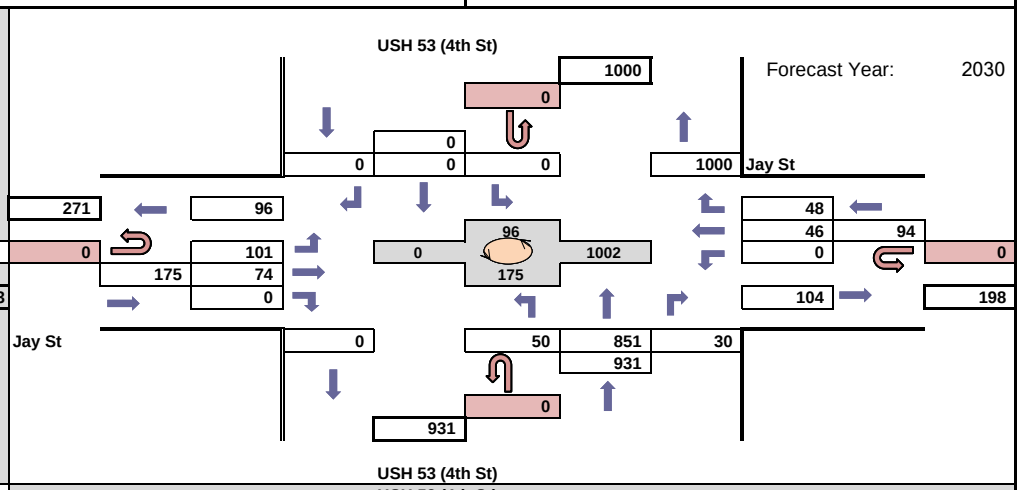

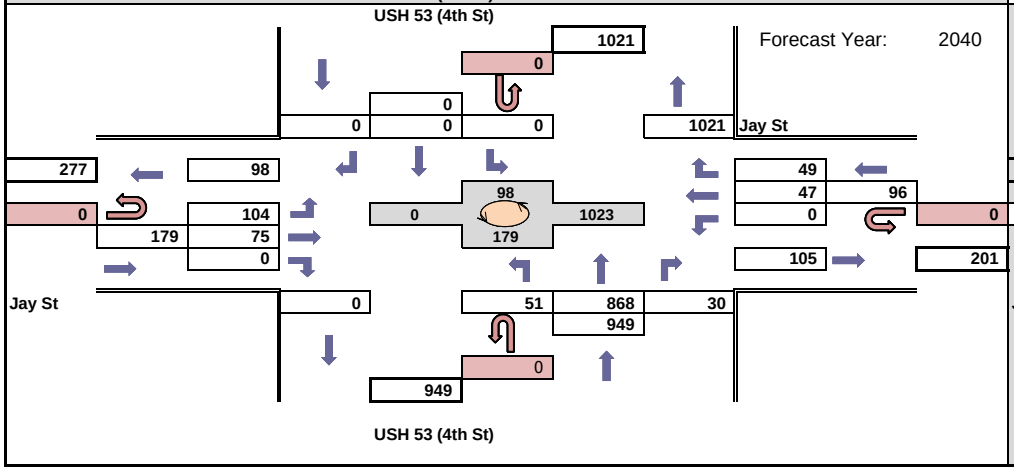

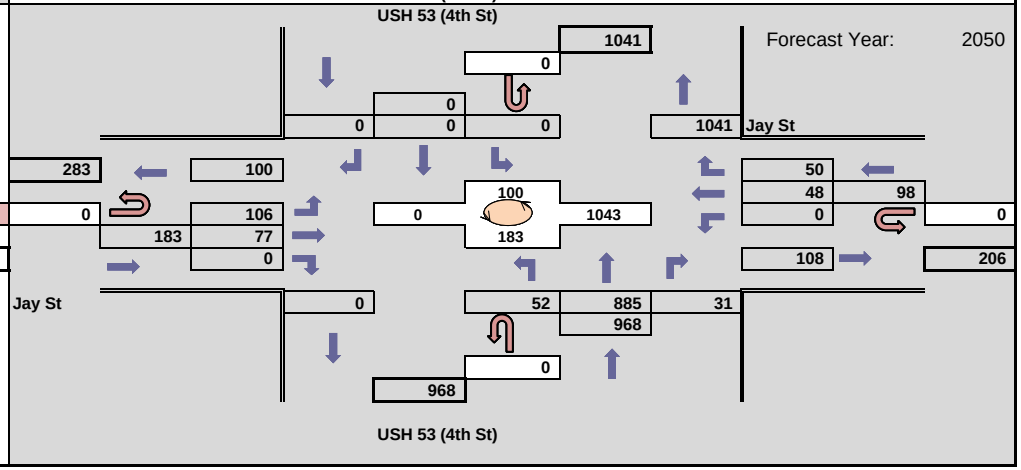

WisDOT Bureau of Planning & Economic Development
Traffic Forecasting Section
Forecast by: Miao Zhang
Phone: (608) 266 - 7995
Email: miao.zhang@dot.wi.gov

Projected AM Design Hour Traffic Volumes

Indicates roundabout

Design Hour: 7:00-8:00am

Forecast Completed: 2/23/2021

Project Description

Project ID(s): 1630-08-00
Route(s): US 53
Region/COUNTY(IES): SW/La Crosse
Location: US 53 SB (3rd St) & Jay St

Design Hour Turning Movement Data

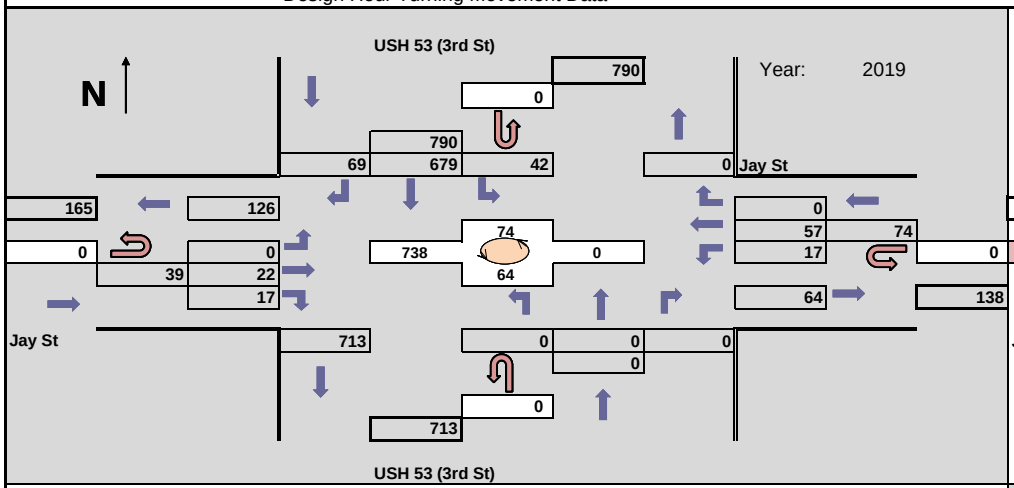

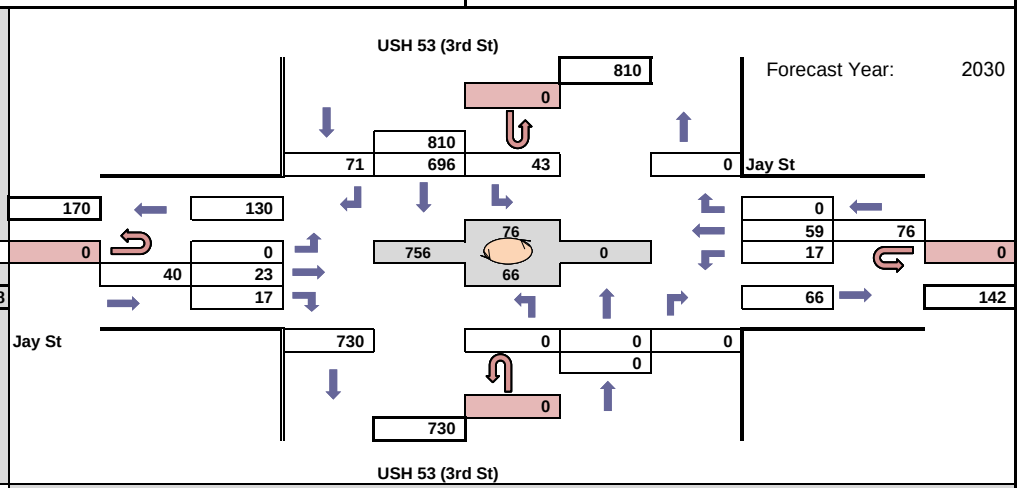

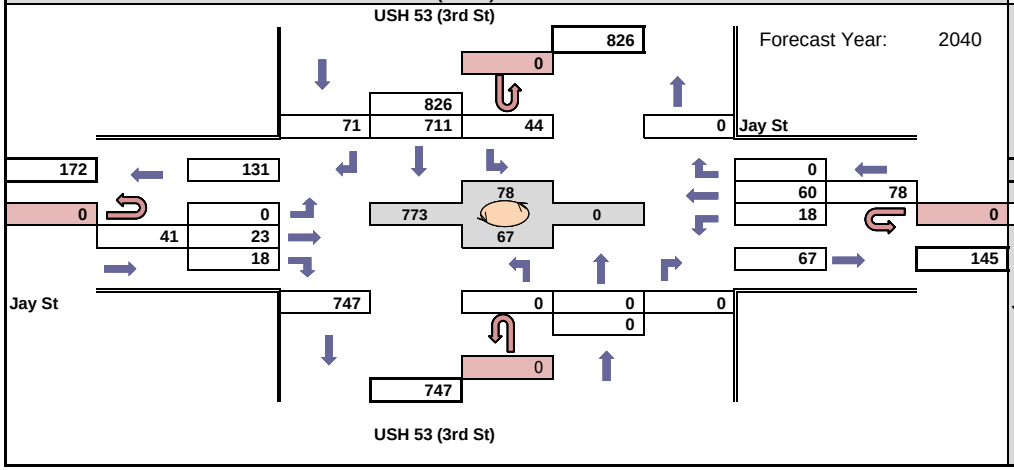

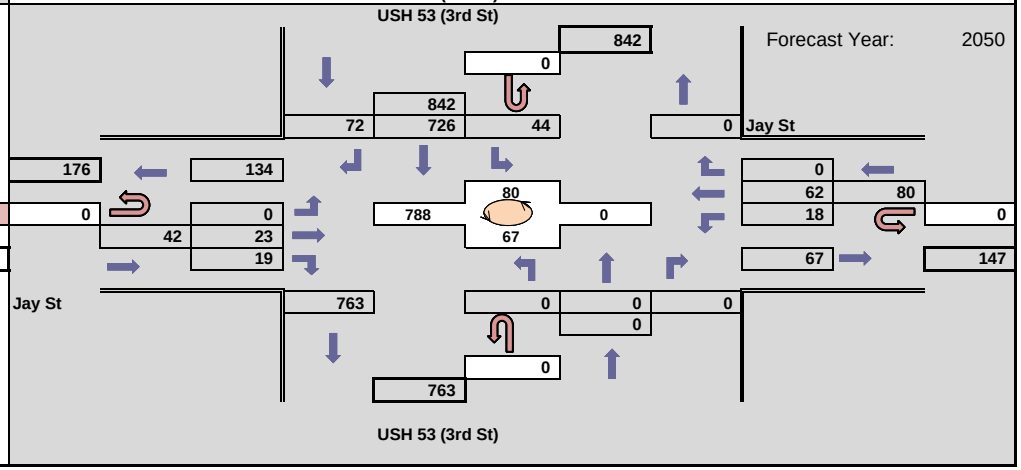

WisDOT Bureau of Planning & Economic Development
Traffic Forecasting Section
Forecast by: Miao Zhang
Phone: (608) 266 - 7995
Email: miao.zhang@dot.wi.gov

Projected PM Design Hour Traffic Volumes

Indicates roundabout

Design Hour: 4:15-5:15pm

Forecast Completed: 2/23/2021

Project Description

Project ID(s): 1630-08-00
Route(s): US 53
Region/COUNTY(IES): SW/La Crosse
Location: US 53 SB (3rd St) & Jay St

Design Hour Turning Movement Data

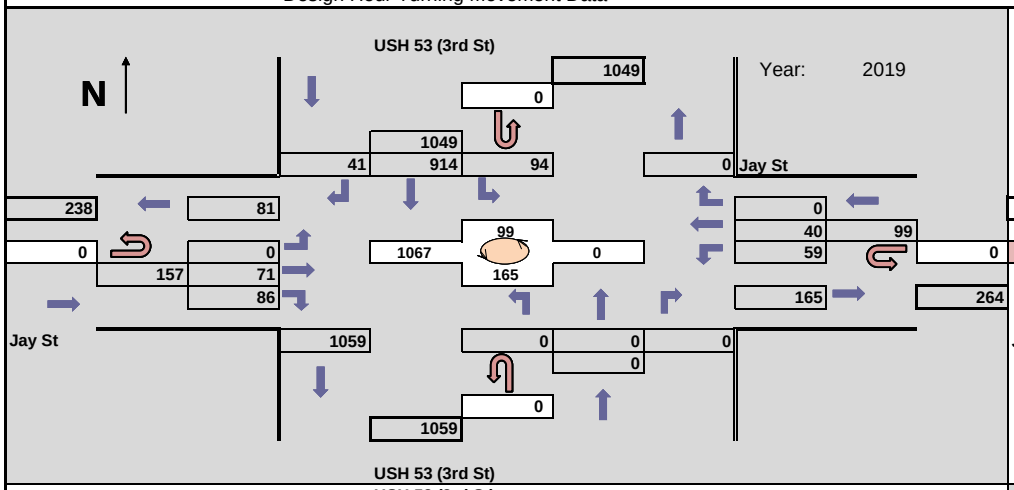

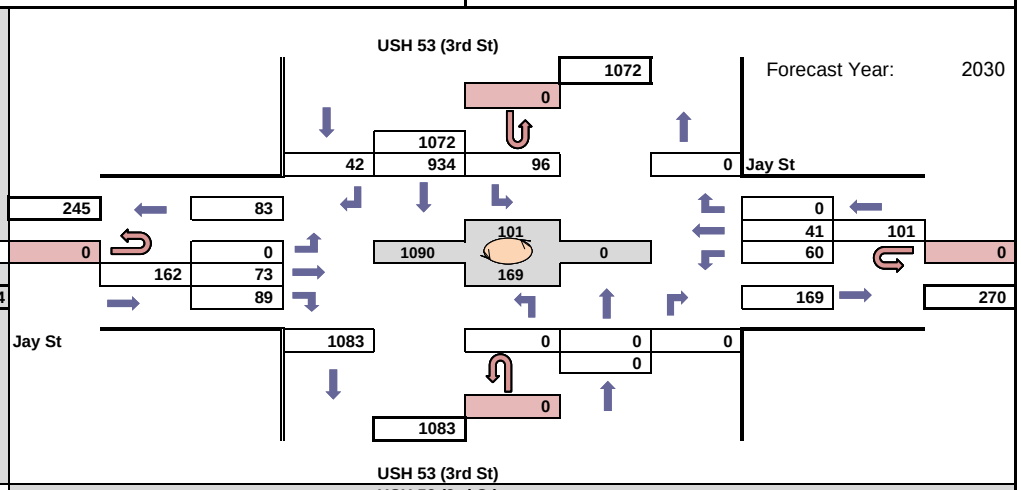

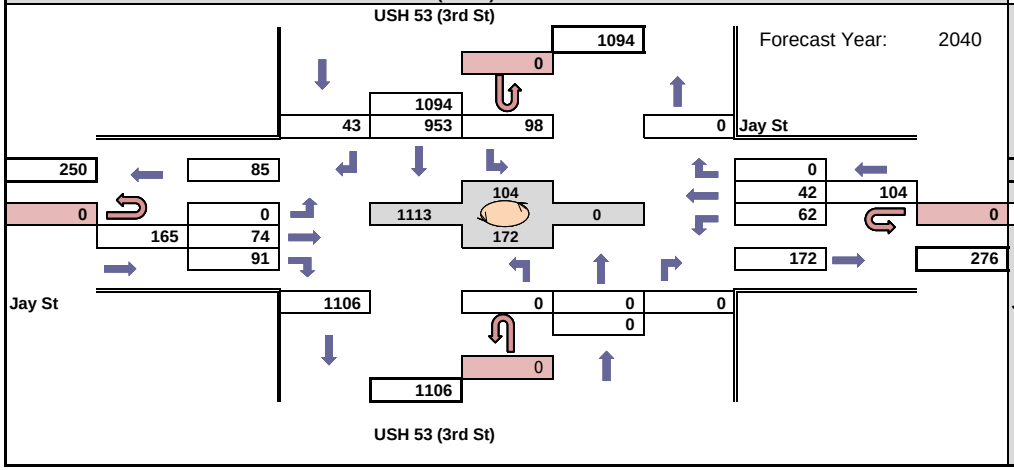

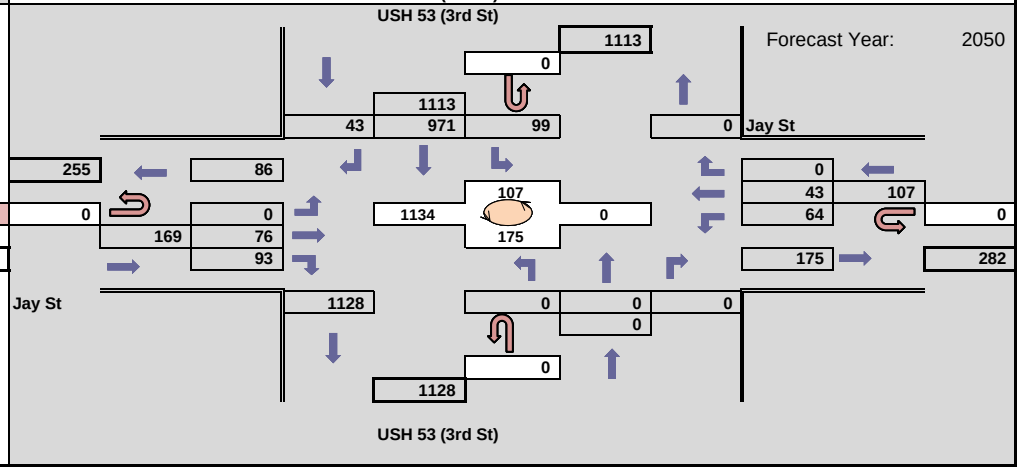

WisDOT Bureau of Planning & Economic Development
Traffic Forecasting Section
Forecast by: Miao Zhang
Phone: (608) 266 - 7995
Email: miao.zhang@dot.wi.gov

Projected AM Design Hour Traffic Volumes

Indicates roundabout

Design Hour: 7:00-8:00am

Forecast Completed: 2/23/2021

Project Description

Project ID(s): 1630-08-00
Route(s): US 53
Region/COUNTY(IES): SW/La Crosse
Location: US 53 NB (4th St) & King St

Design Hour Turning Movement Data

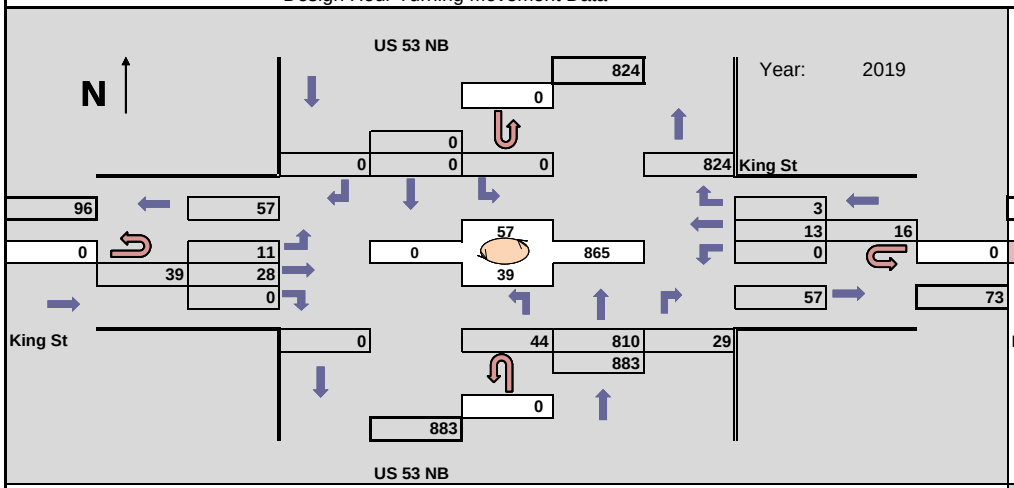

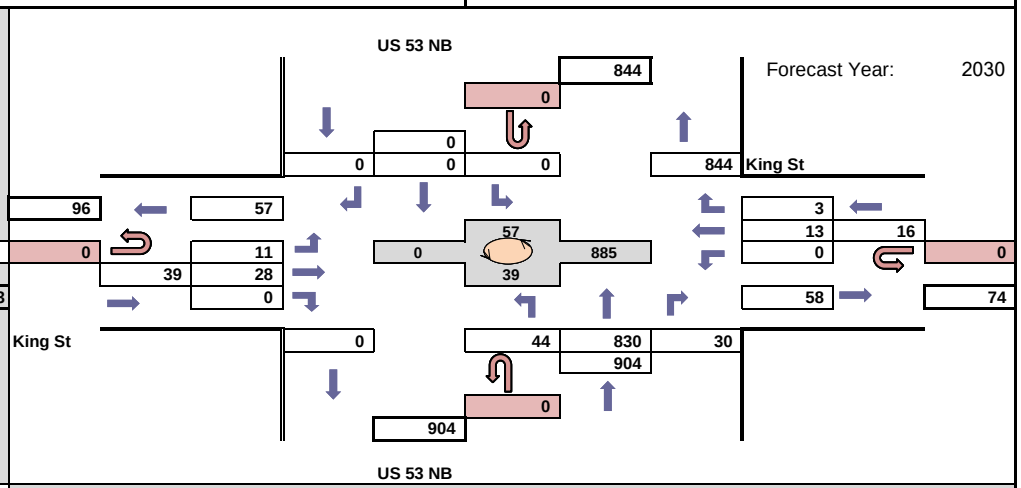

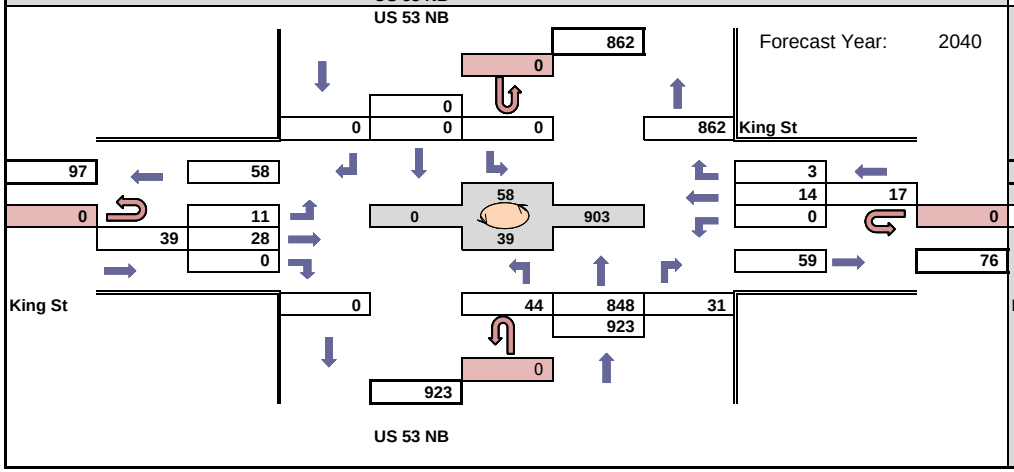

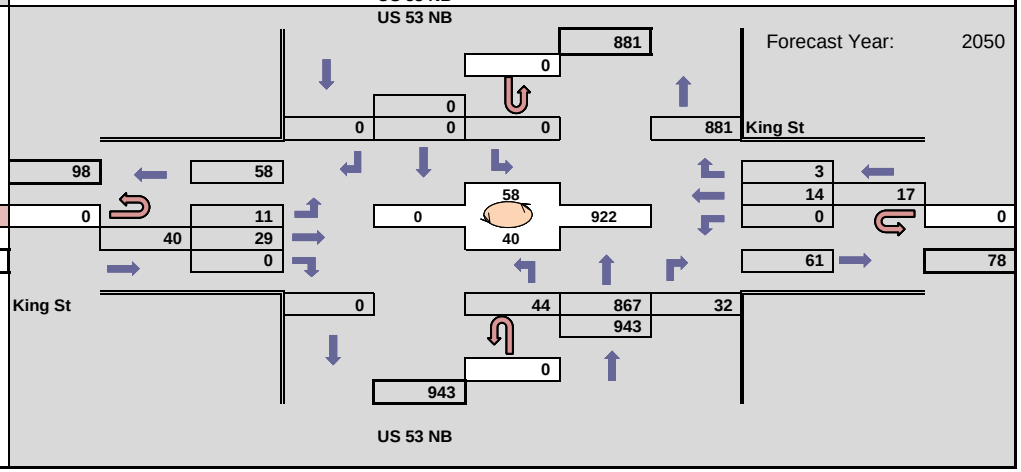

WisDOT Bureau of Planning & Economic Development
Traffic Forecasting Section
Forecast by: Miao Zhang
Phone: (608) 266 - 7995
Email: miao.zhang@dot.wi.gov

Projected PM Design Hour Traffic Volumes

Indicates roundabout

Design Hour: 4:15-5:15pm

Forecast Completed: 2/23/2021

Project Description

Project ID(s): 1630-08-00
Route(s): US 53
Region/COUNTY(IES): SW/La Crosse
Location: US 53 NB (4th St) & King St

Design Hour Turning Movement Data

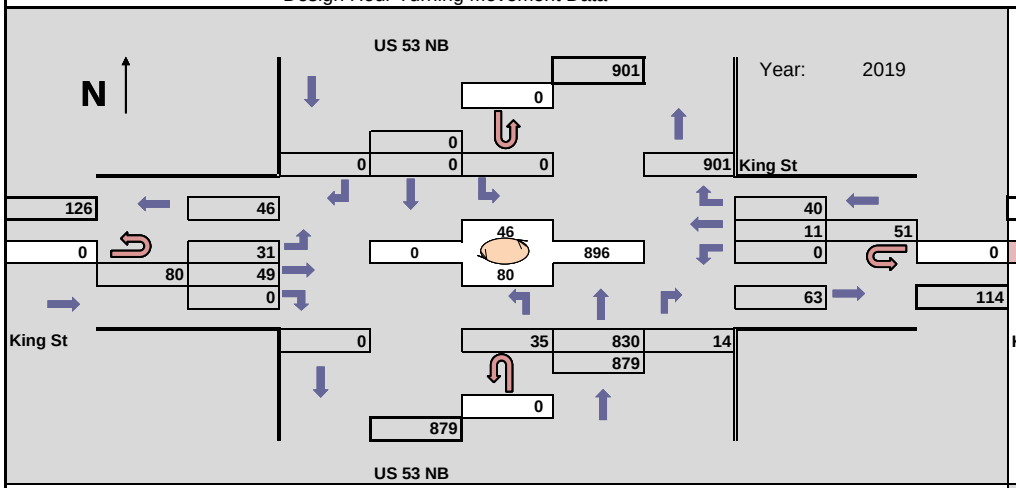

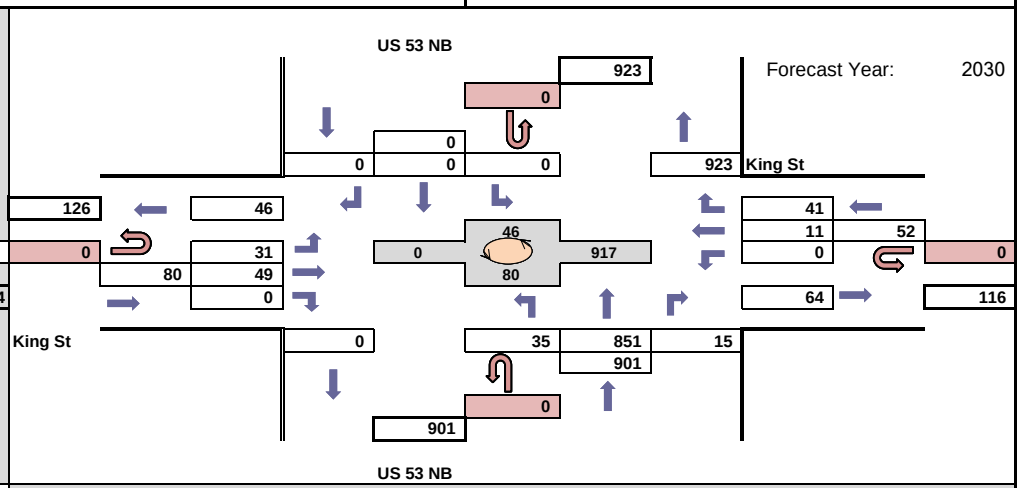

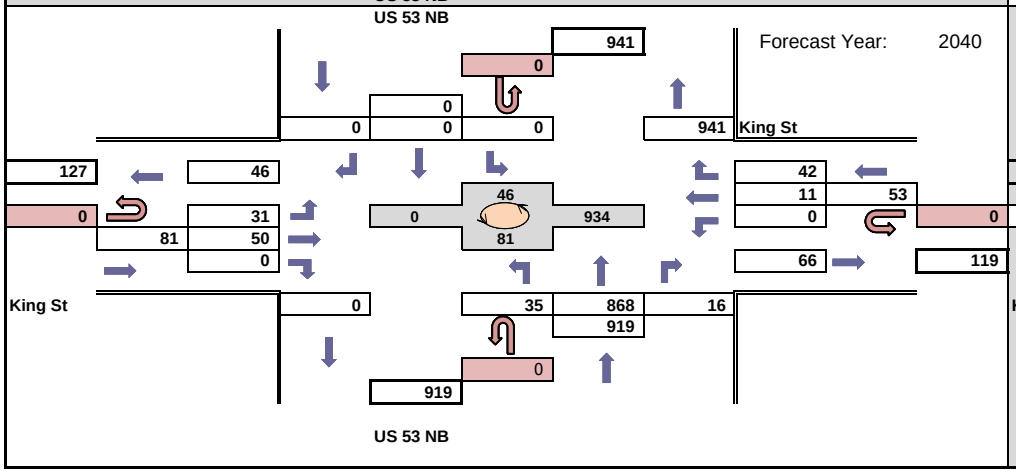

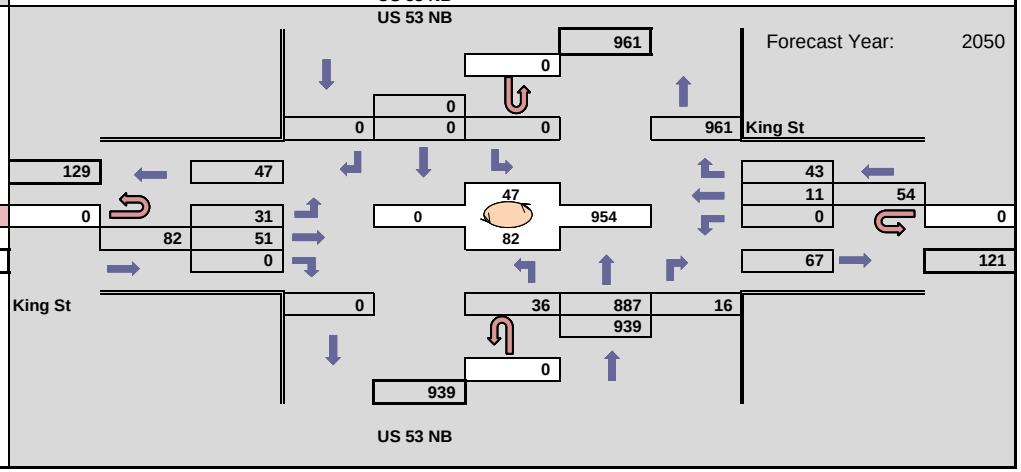

WisDOT Bureau of Planning & Economic Development
Traffic Forecasting Section
Forecast by: Miao Zhang
Phone: (608) 266 - 7995
Email: miao.zhang@dot.wi.gov

Projected AM Design Hour Traffic Volumes

Indicates roundabout

Design Hour: 7:00-8:00am

Forecast Completed: 2/23/2021

Project Description

Project ID(s): 1630-08-00
Route(s): US 53
Region/COUNTY(IES): SW/La Crosse
Location: US 53 SB (3rd St) & King St

Design Hour Turning Movement Data

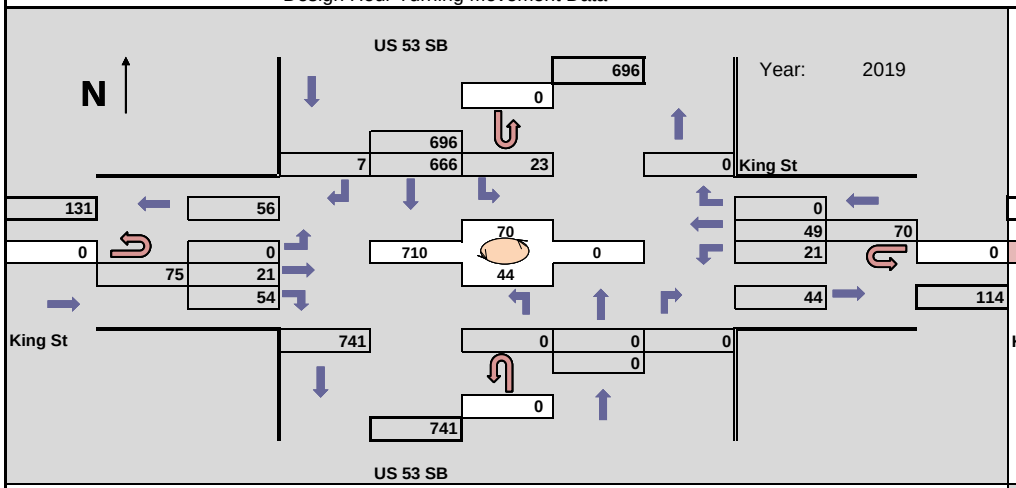

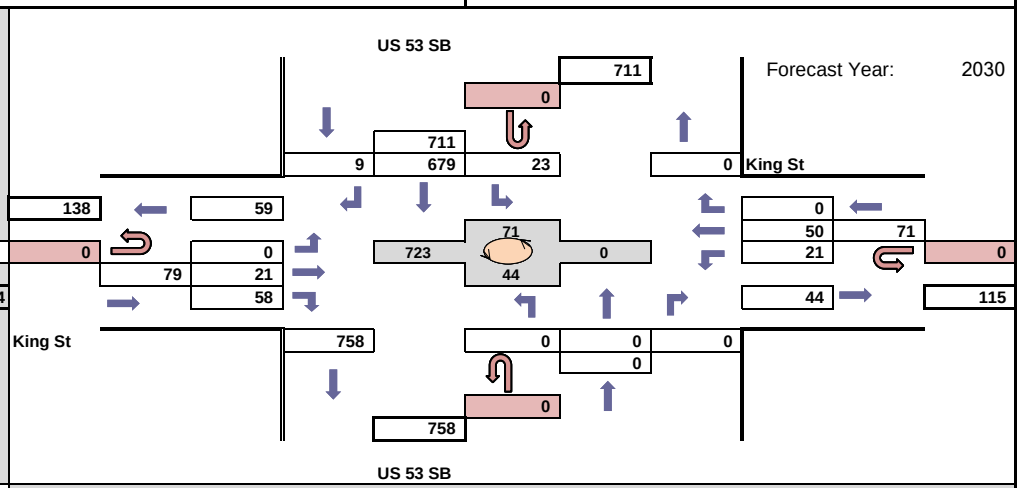

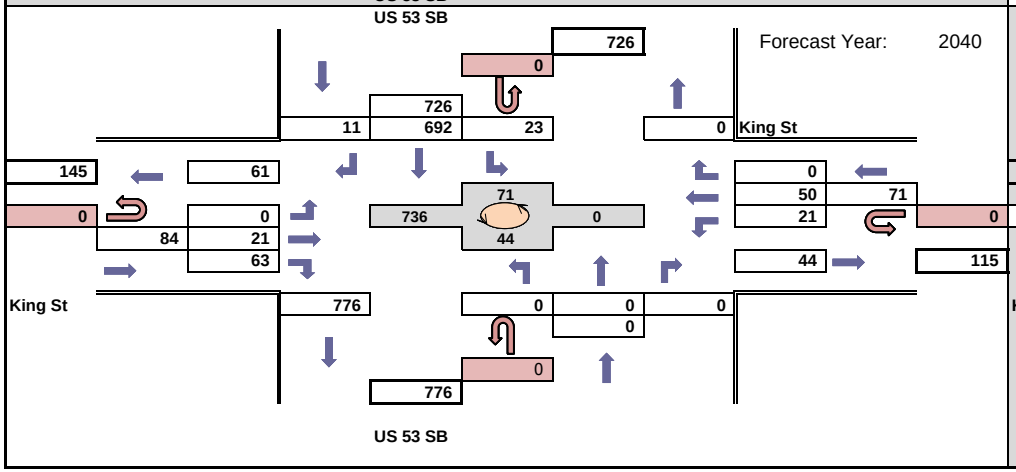

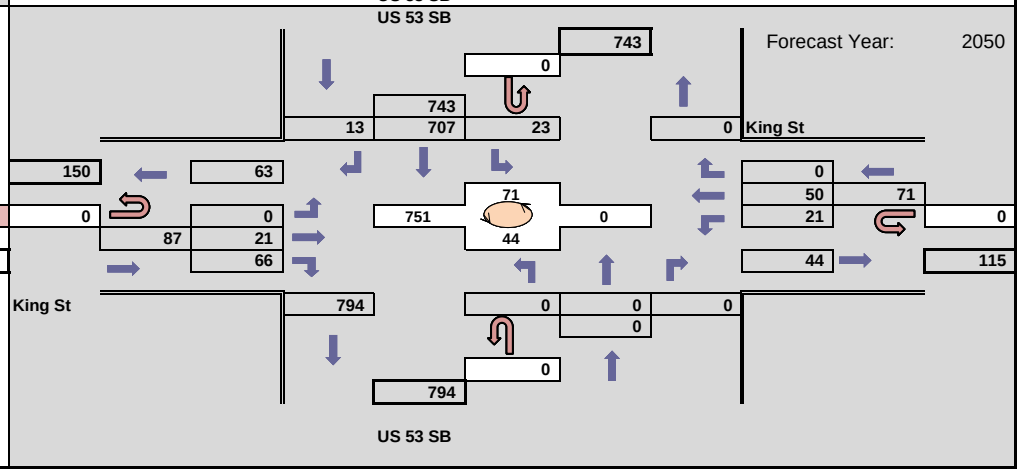

WisDOT Bureau of Planning & Economic Development
Traffic Forecasting Section
Forecast by: Miao Zhang
Phone: (608) 266 - 7995
Email: miao.zhang@dot.wi.gov

Projected PM Design Hour Traffic Volumes

Indicates roundabout

Design Hour: 4:15-5:15pm

Forecast Completed: 2/23/2021

Project Description

Project ID(s): 1630-08-00
Route(s): US 53
Region/COUNTY(IES): SW/La Crosse
Location: US 53 SB (3rd St) & King St

Design Hour Turning Movement Data

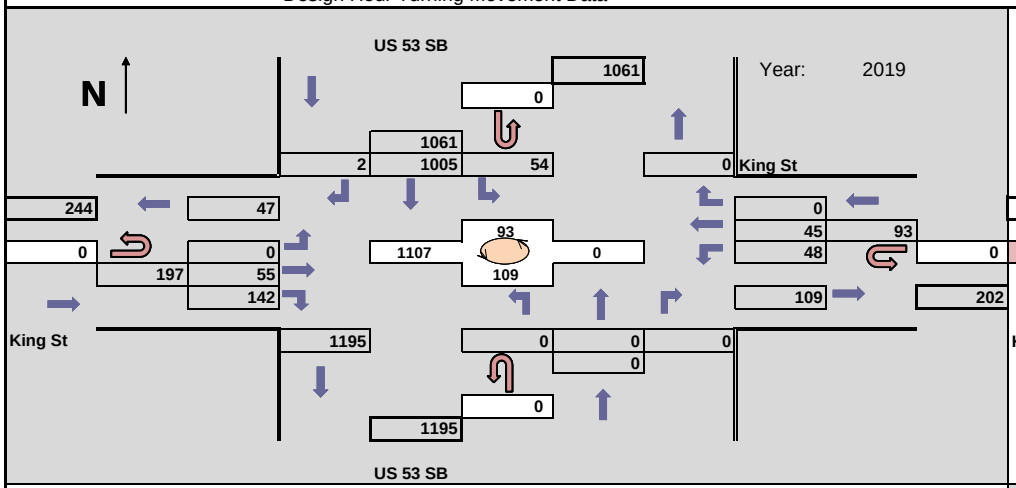

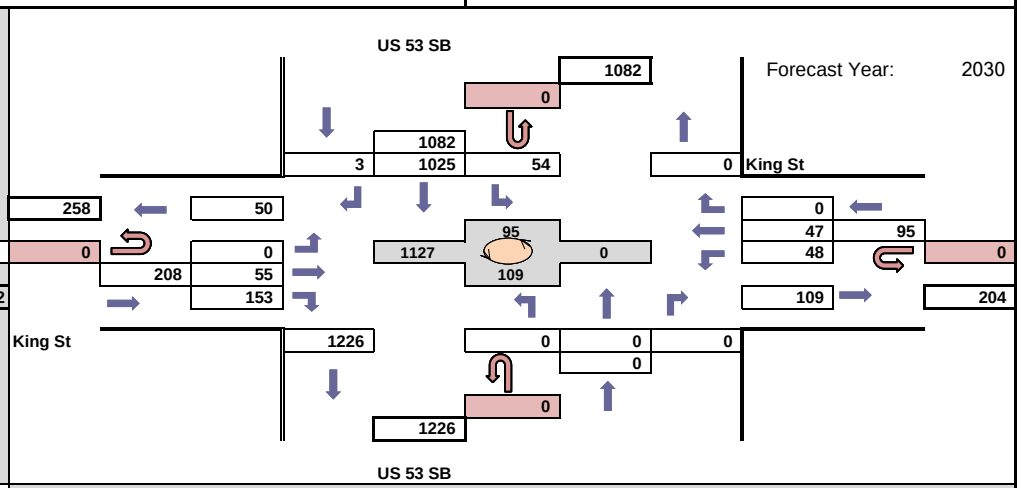

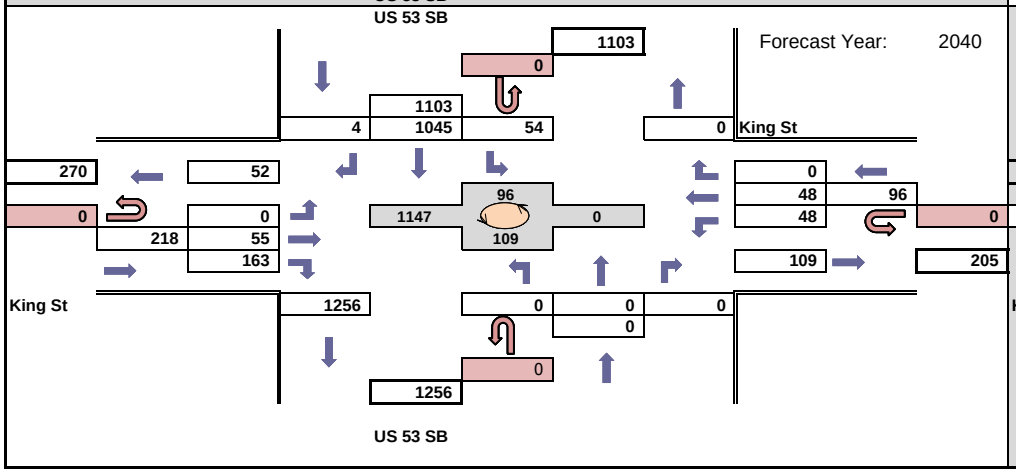

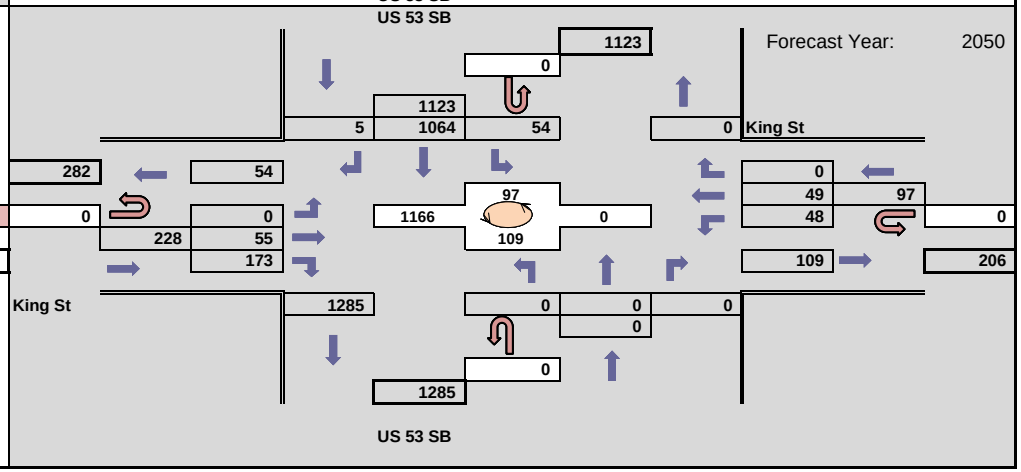

WisDOT Bureau of Planning & Economic Development
Traffic Forecasting Section
Forecast by: Miao Zhang
Phone: (608) 266 - 7995
Email: miao.zhang@dot.wi.gov

Projected AM Design Hour Traffic Volumes

Indicates roundabout

Design Hour: 7:00-8:00am

Forecast Completed: 2/23/2021

Project Description

Project ID(s): 1630-08-00
Route(s): US 53
Region/COUNTY(IES): SW/La Crosse
Location: US 53 NB (4th St) & US 14 WB (Cass St)

Design Hour Turning Movement Data

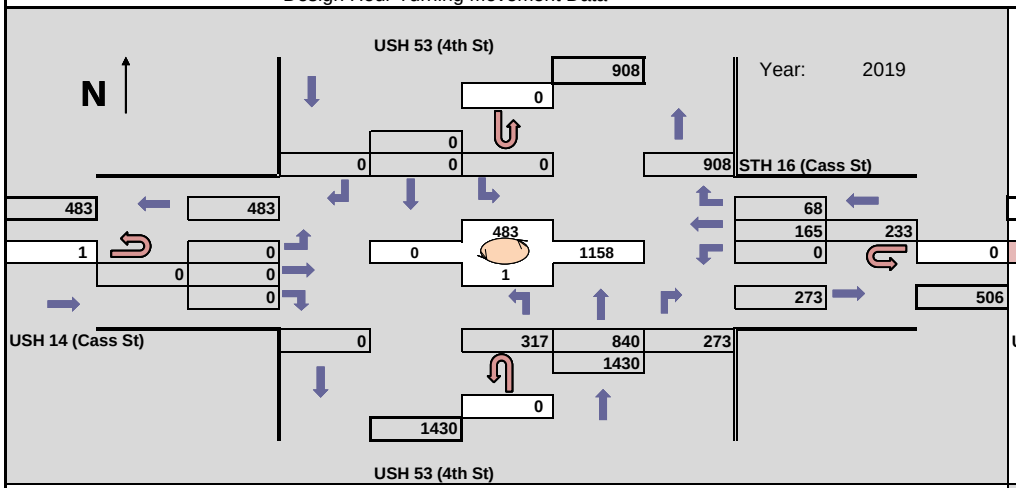

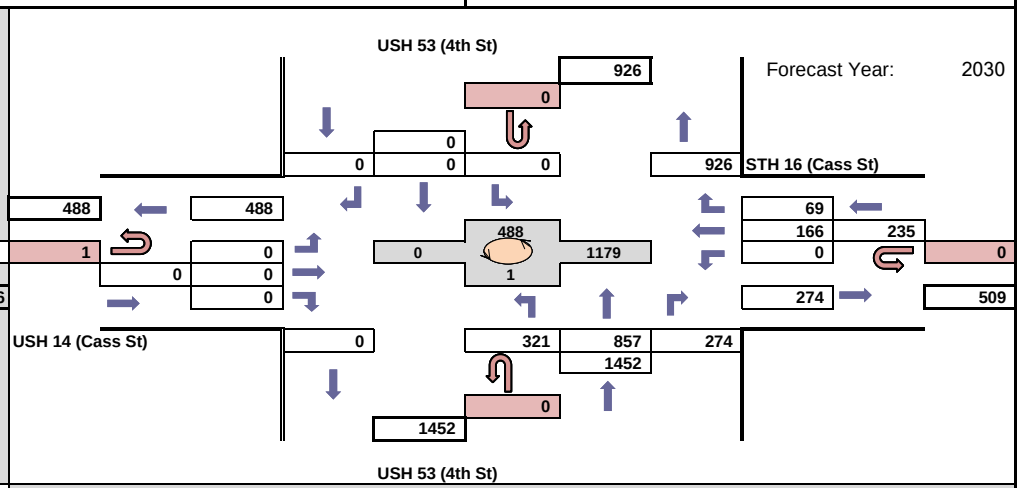

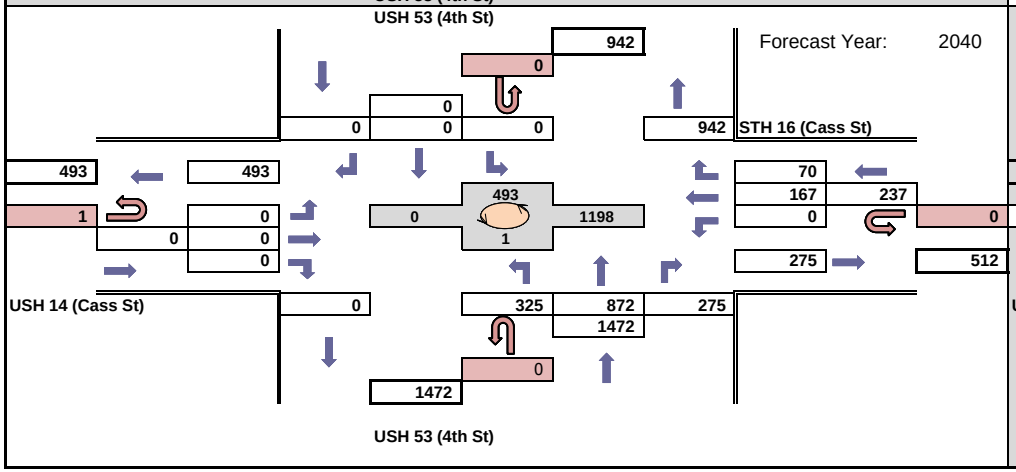

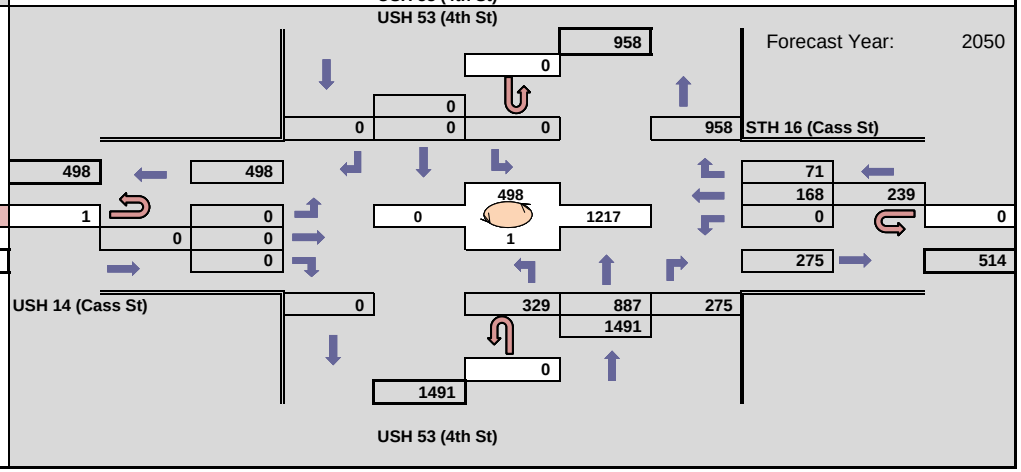

WisDOT Bureau of Planning & Economic Development
Traffic Forecasting Section
Forecast by: Miao Zhang
Phone: (608) 266 - 7995
Email: miao.zhang@dot.wi.gov

Projected PM Design Hour Traffic Volumes

Indicates roundabout

Design Hour: 4:15-5:15pm

Forecast Completed: 2/23/2021

Project Description

Project ID(s): 1630-08-00
Route(s): US 53
Region/COUNTY(IES): SW/La Crosse
Location: US 53 NB (4th St) & US 14 WB (Cass St)

Design Hour Turning Movement Data

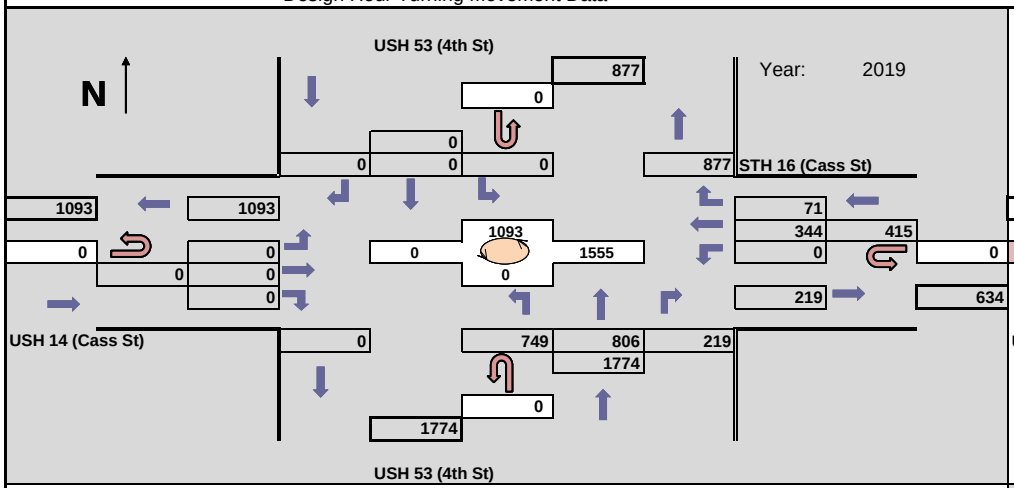

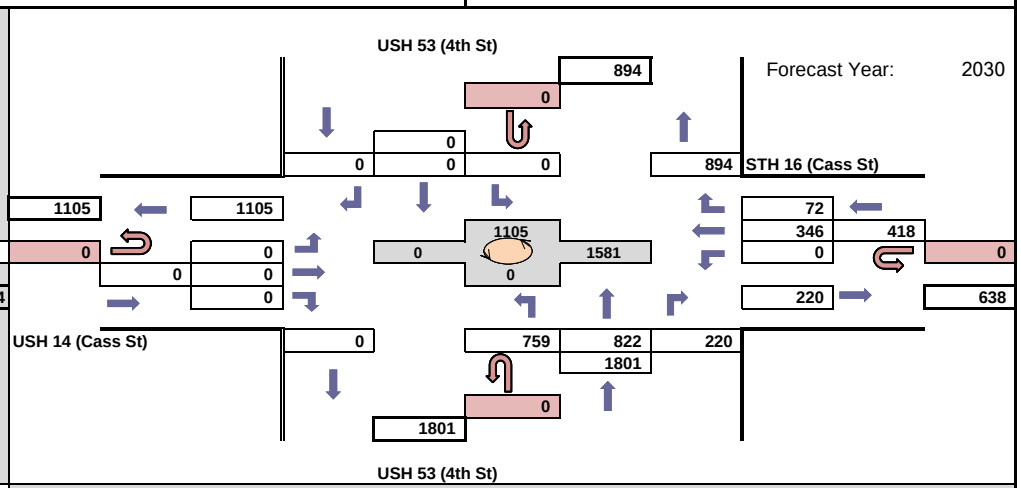

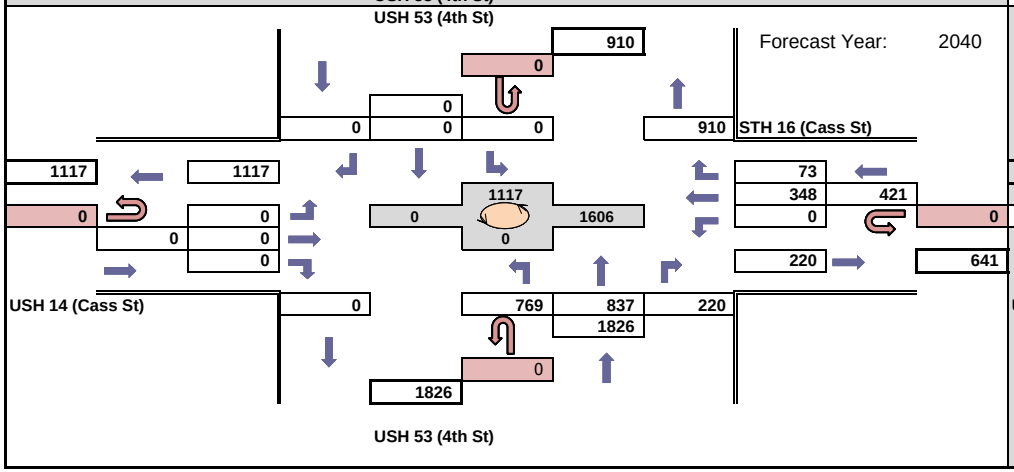

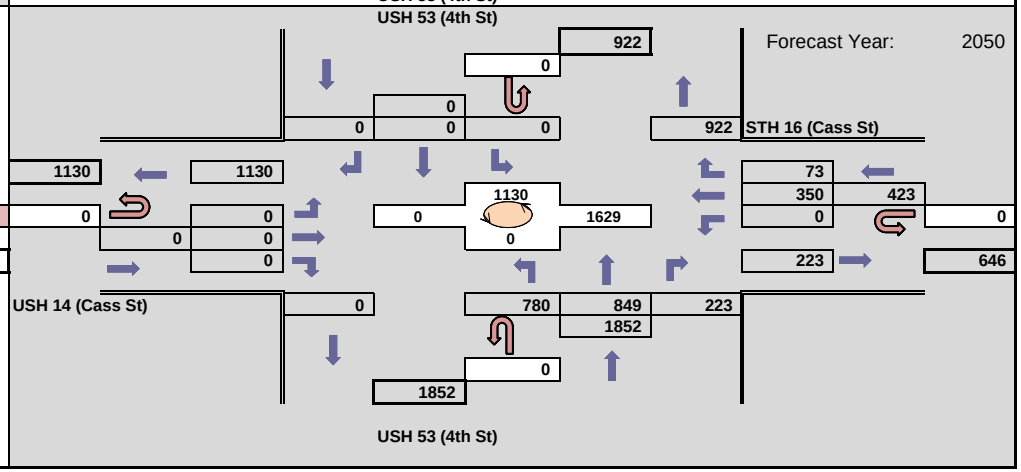

WisDOT Bureau of Planning & Economic Development
Traffic Forecasting Section
Forecast by: Miao Zhang
Phone: (608) 266 - 7995
Email: miao.zhang@dot.wi.gov

Projected AM Design Hour Traffic Volumes

Indicates roundabout

Design Hour: 7:00-8:00am

Forecast Completed: 2/23/2021

Project Description

Project ID(s): 1630-08-00
Route(s): US 53
Region/COUNTY(IES): SW/La Crosse
Location: US 53 SB (3rd St) & US 14 WB (Cass St)

Design Hour Turning Movement Data

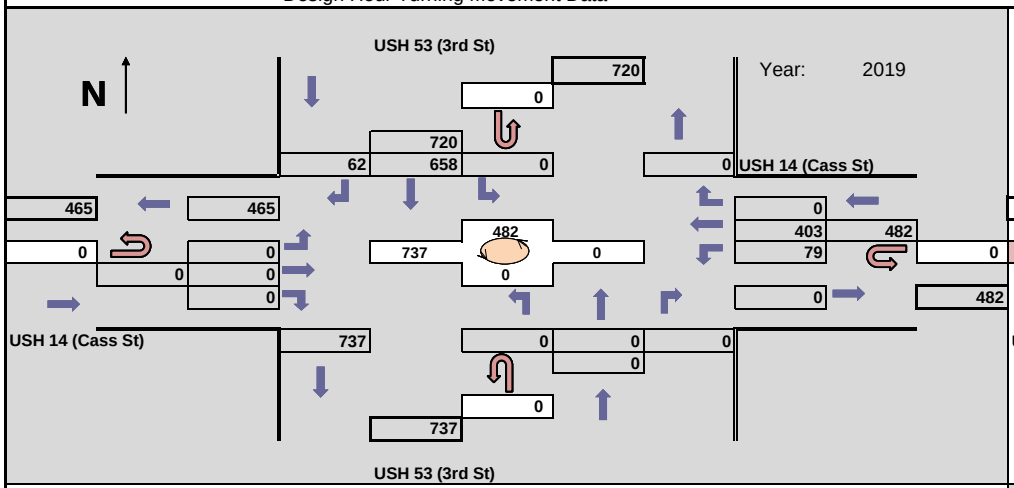

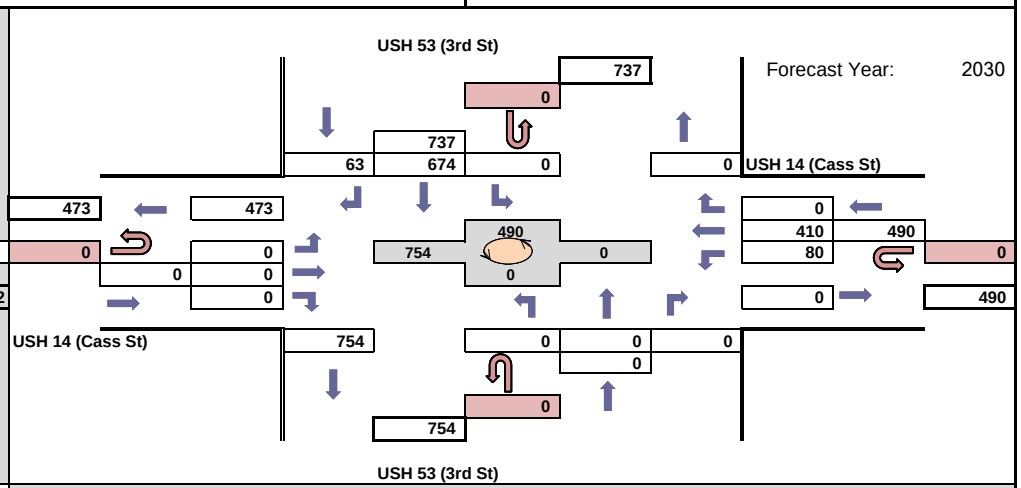

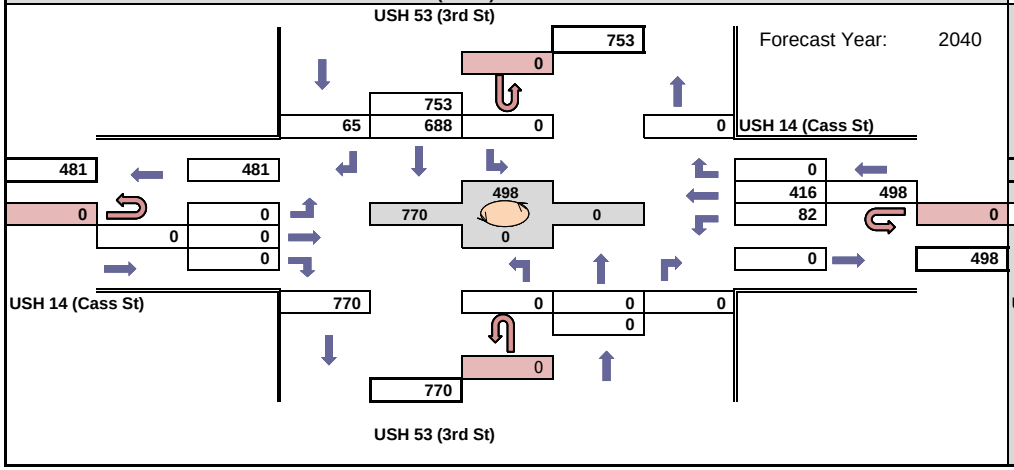

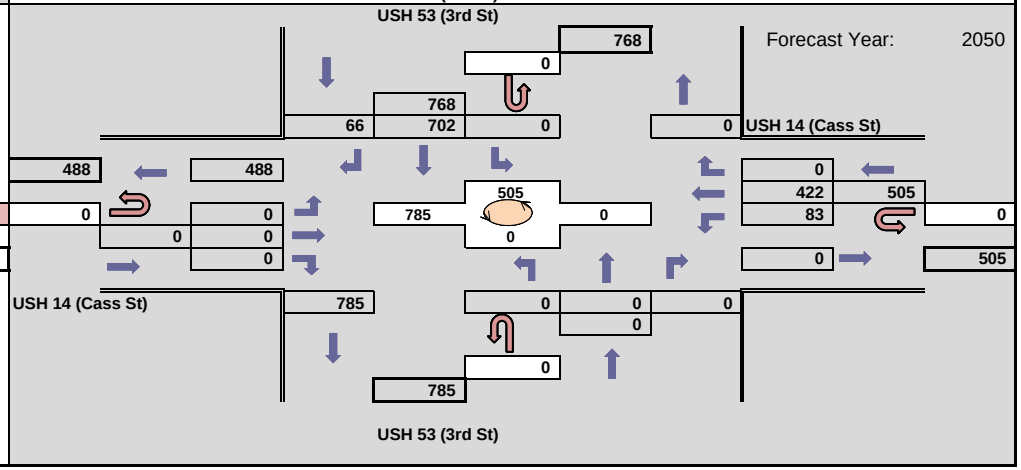

WisDOT Bureau of Planning & Economic Development
Traffic Forecasting Section
Forecast by: Miao Zhang
Phone: (608) 266 - 7995
Email: miao.zhang@dot.wi.gov

Projected PM Design Hour Traffic Volumes

Indicates roundabout

Design Hour: 4:15-5:15pm

Forecast Completed: 2/23/2021

Project Description

Project ID(s): 1630-08-00
Route(s): US 53
Region/COUNTY(IES): SW/La Crosse
Location: US 53 SB (3rd St) & US 14 WB (Cass St)

Design Hour Turning Movement Data

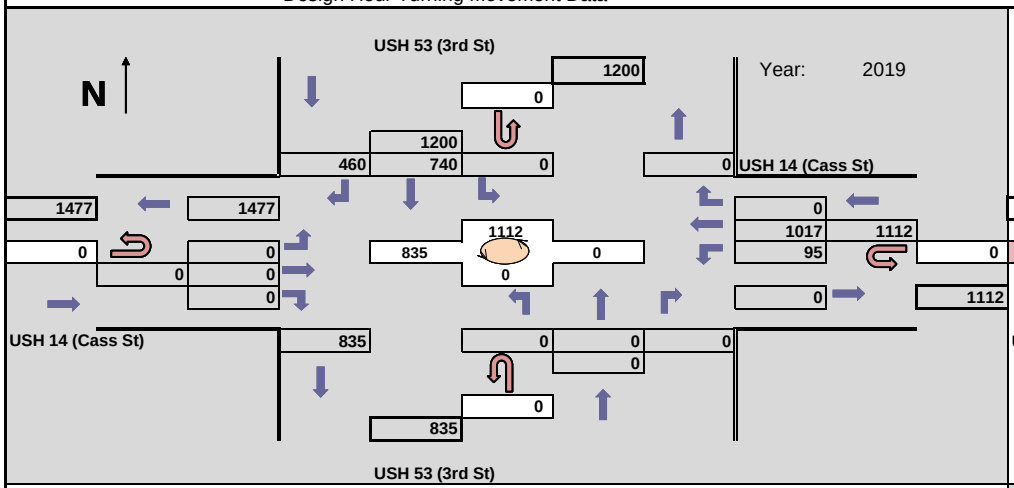

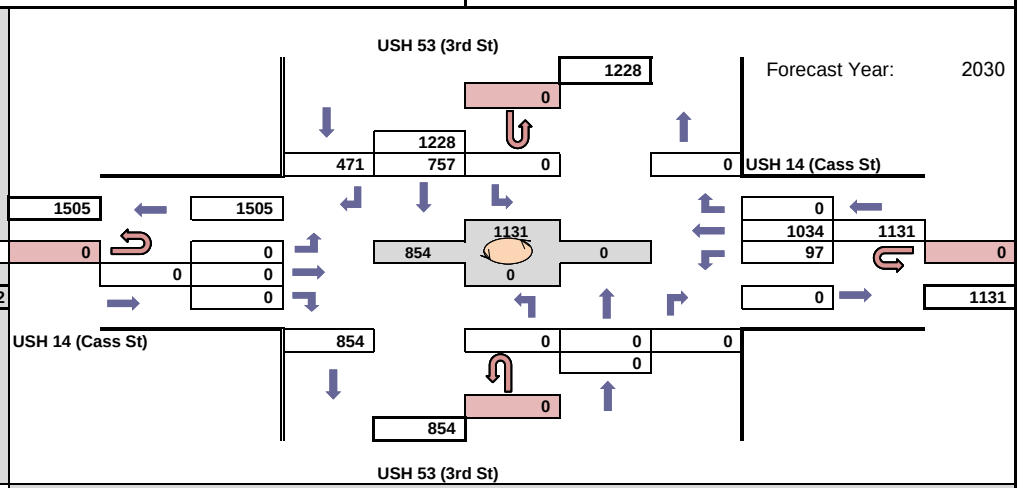

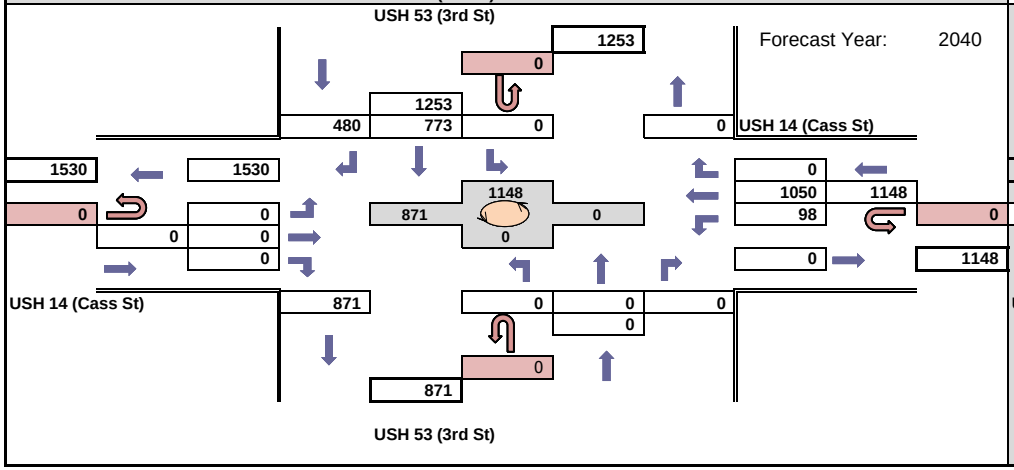

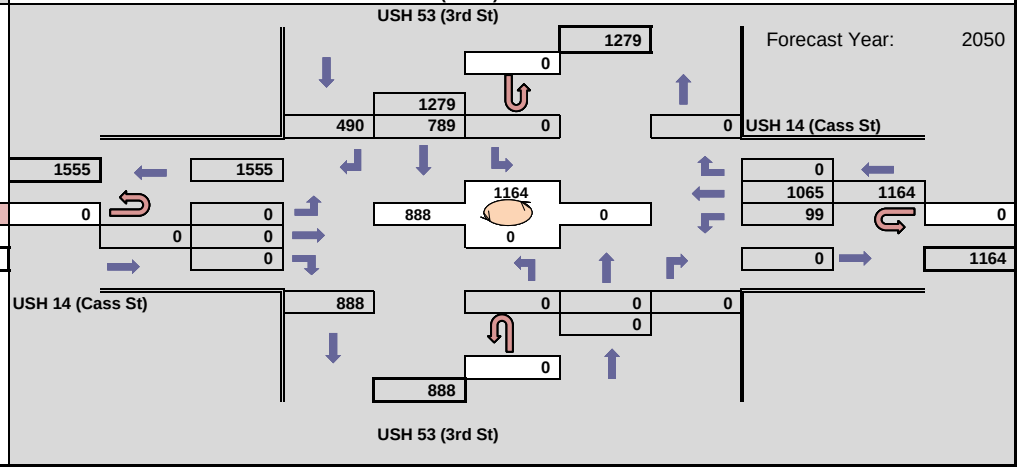

WisDOT Bureau of Planning & Economic Development
Traffic Forecasting Section
Forecast by: Miao Zhang
Phone: (608) 266 - 7995
Email: miao.zhang@dot.wi.gov

Projected AM Design Hour Traffic Volumes

Indicates roundabout

Design Hour: 7:00-8:00am

Forecast Completed: 2/23/2021

Project Description

Project ID(s): 1630-08-00
Route(s): US 53
Region/COUNTY(IES): SW/La Crosse
Location: US 53 NB (4th St) & US 14 EB (Cameron Ave)

Design Hour Turning Movement Data

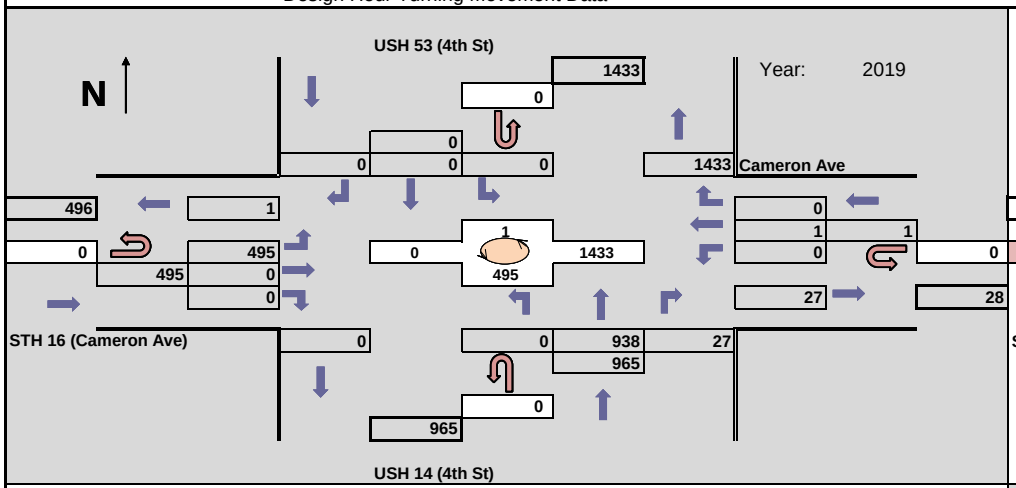

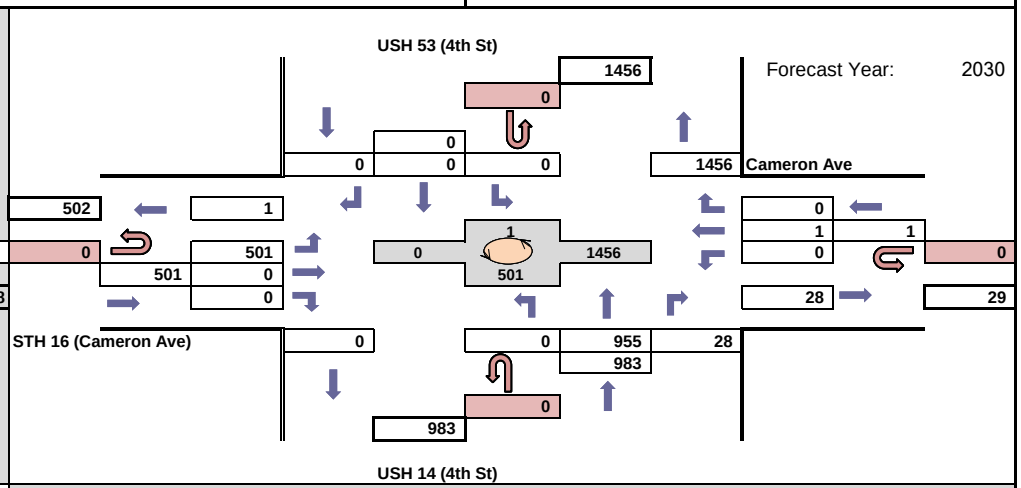

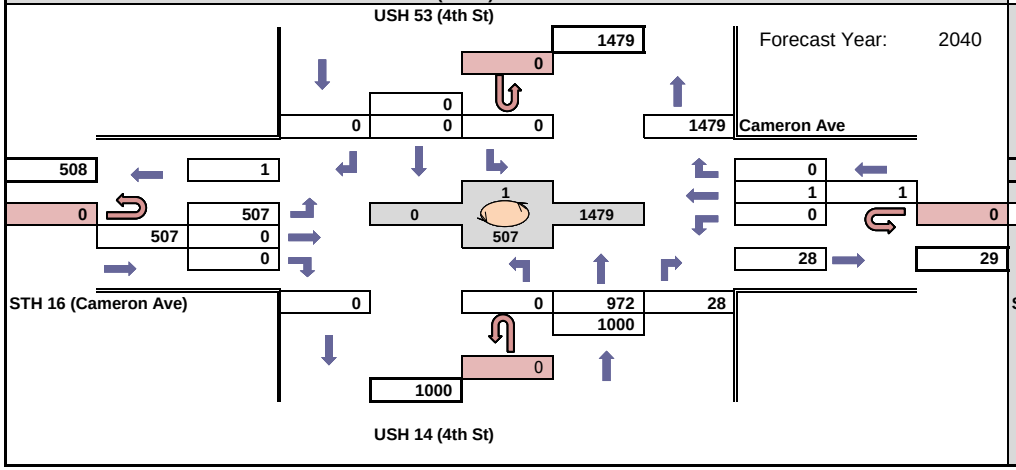

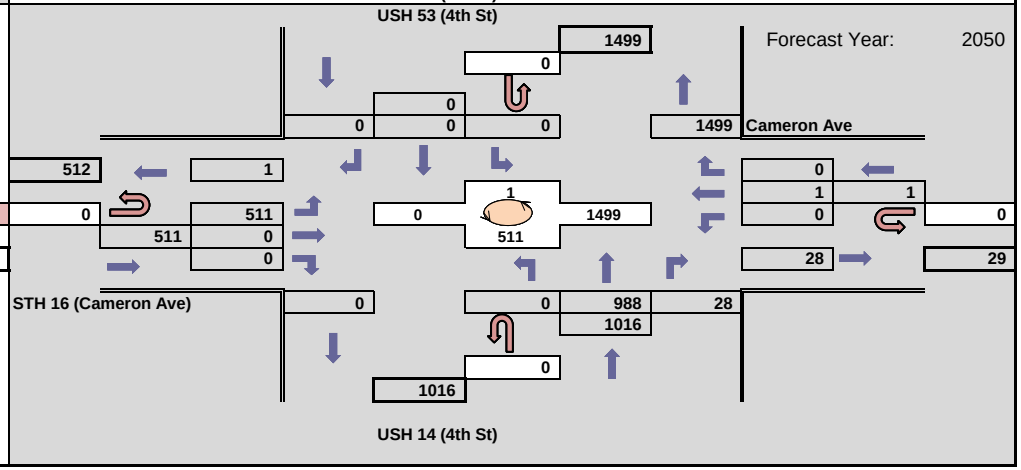

WisDOT Bureau of Planning & Economic Development
Traffic Forecasting Section
Forecast by: Miao Zhang
Phone: (608) 266 - 7995
Email: miao.zhang@dot.wi.gov

Projected PM Design Hour Traffic Volumes

Indicates roundabout

Design Hour: 4:15-5:15pm

Forecast Completed: 2/23/2021

Project Description

Project ID(s): 1630-08-00
Route(s): US 53
Region/COUNTY(IES): SW/La Crosse
Location: US 53 NB (4th St) & US 14 EB (Cameron Ave)

Design Hour Turning Movement Data

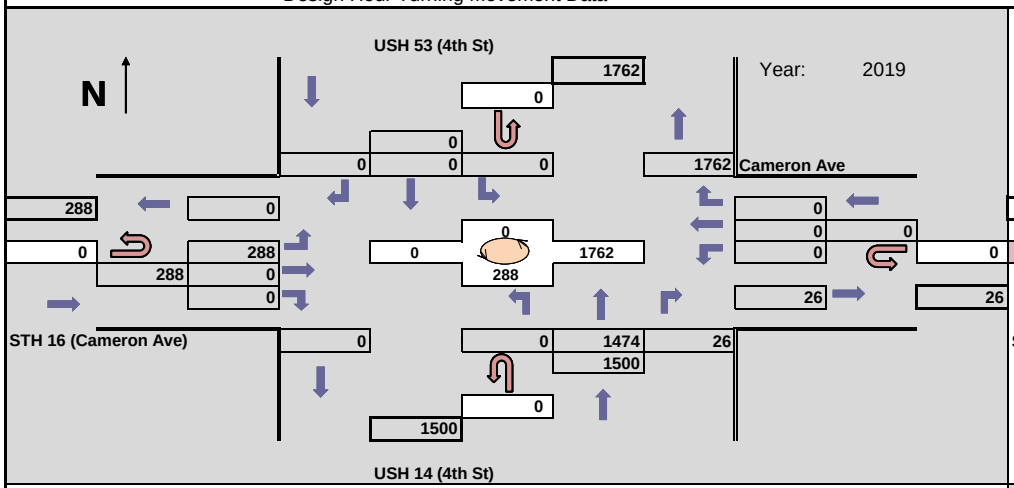

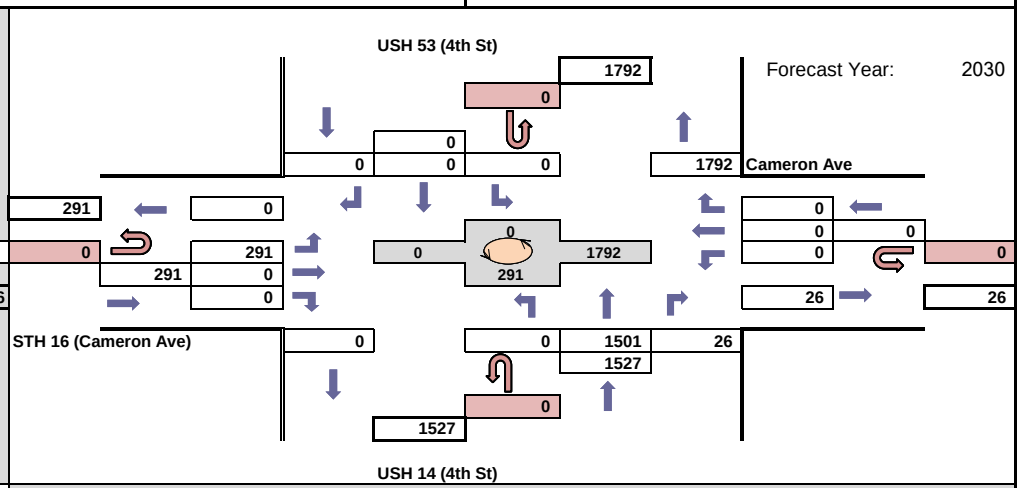

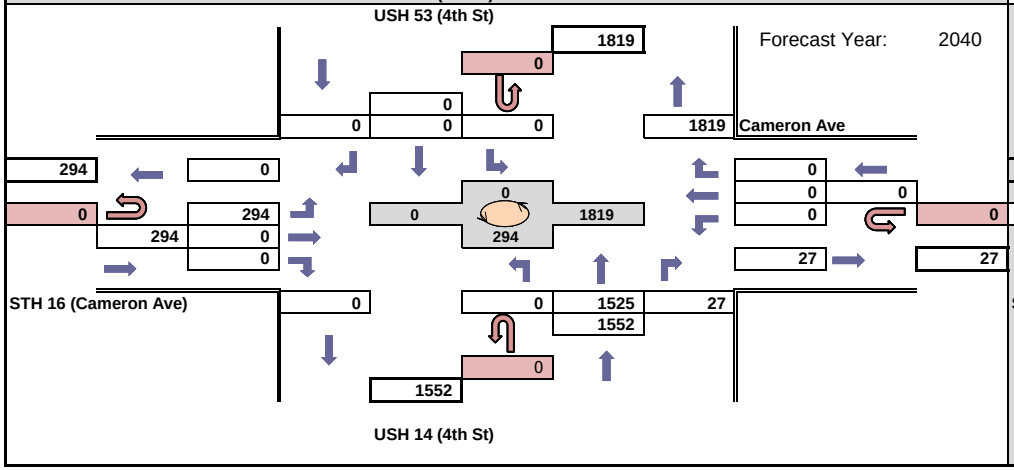

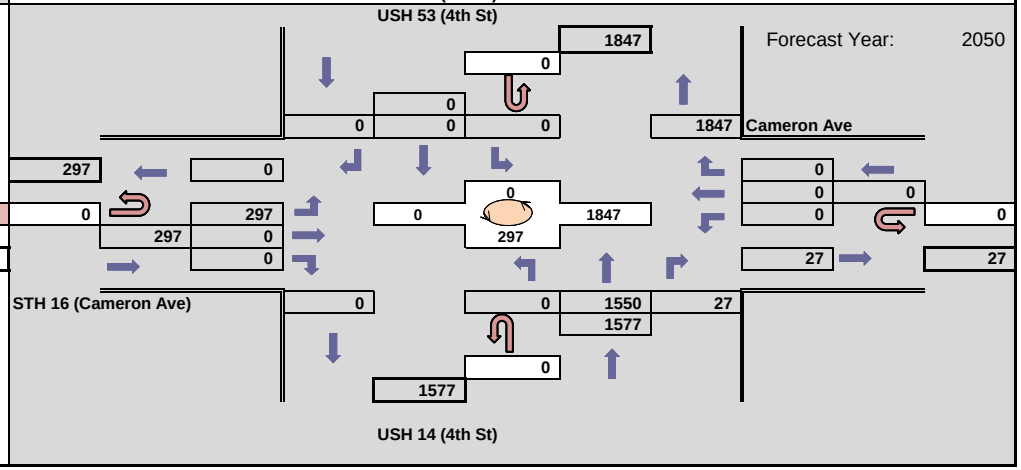

WisDOT Bureau of Planning & Economic Development
Traffic Forecasting Section
Forecast by: Miao Zhang
Phone: (608) 266 - 7995
Email: miao.zhang@dot.wi.gov

Projected AM Design Hour Traffic Volumes

Indicates roundabout

Design Hour: 7:00-8:00am

Forecast Completed: 2/23/2021

Project Description

Project ID(s): 1630-08-00
Route(s): US 53
Region/COUNTY(IES): SW/La Crosse
Location: US 53 SB (3rd St) & US 14 EB (Cameron Ave)

Design Hour Turning Movement Data

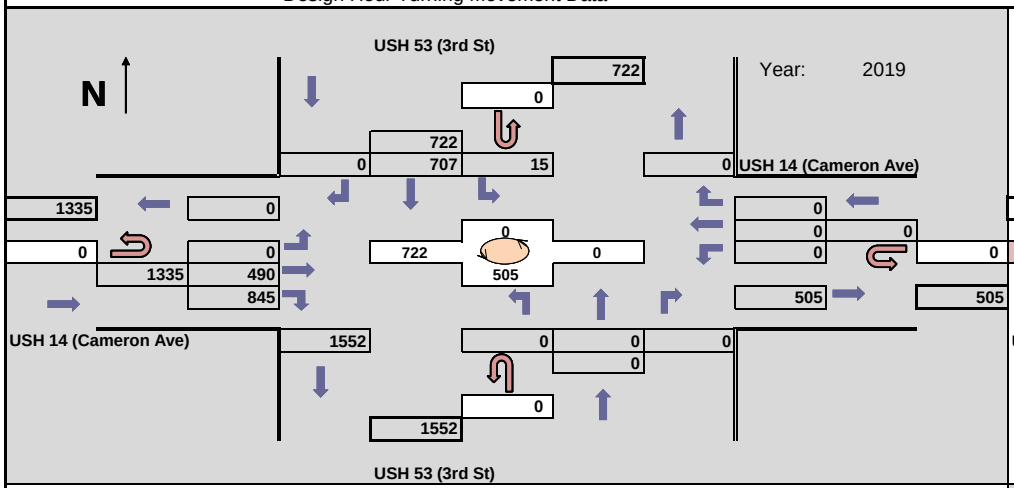

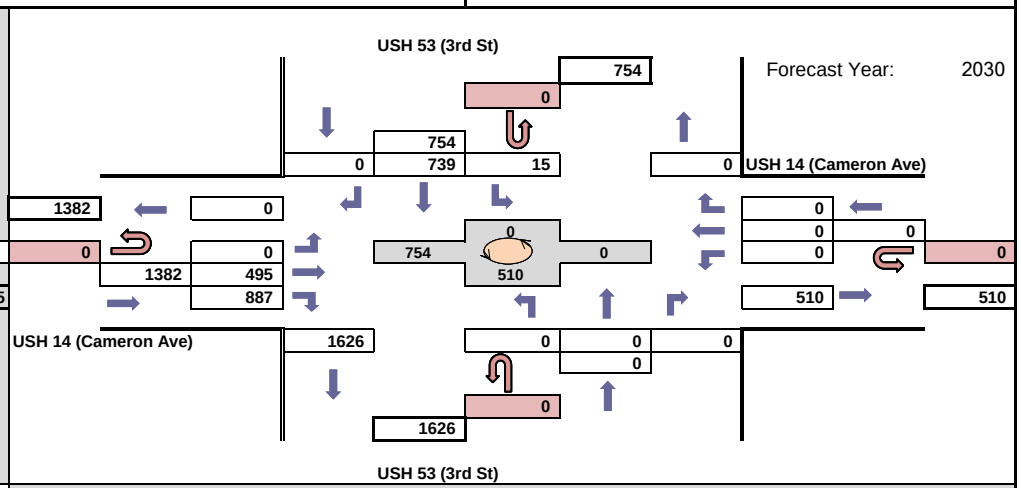

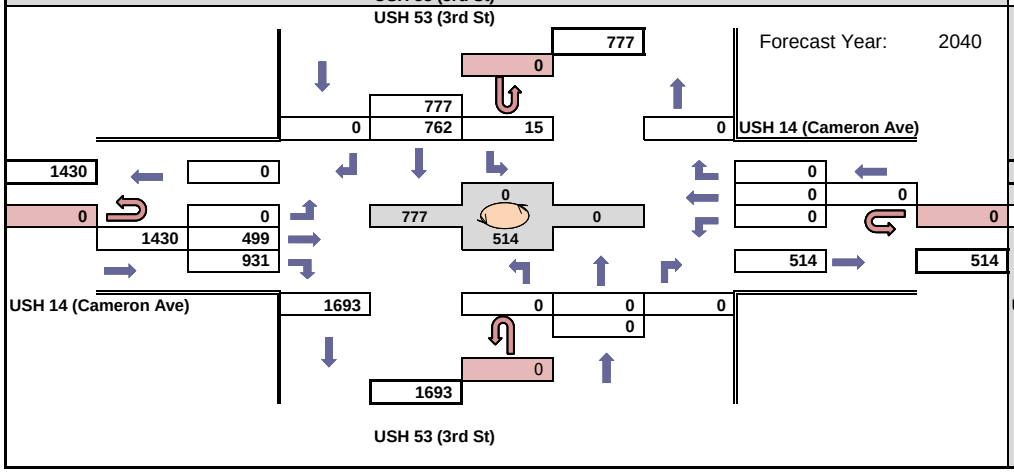

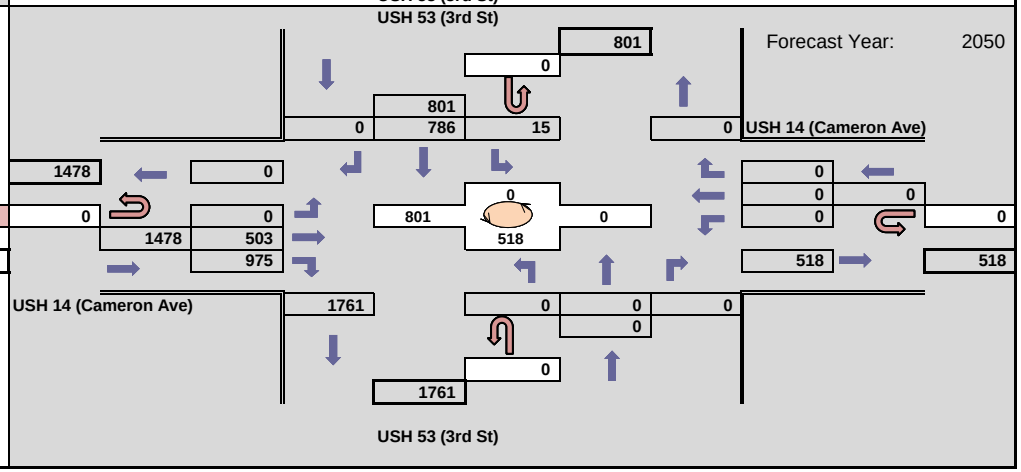

WisDOT Bureau of Planning & Economic Development
Traffic Forecasting Section
Forecast by: Miao Zhang
Phone: (608) 266 - 7995
Email: miao.zhang@dot.wi.gov

Projected PM Design Hour Traffic Volumes

Indicates roundabout

Design Hour: 4:15-5:15pm

Forecast Completed: 2/23/2021

Project Description

Project ID(s): 1630-08-00
Route(s): US 53
Region/COUNTY(IES): SW/La Crosse
Location: US 53 SB (3rd St) & US 14 EB (Cameron Ave)

Design Hour Turning Movement Data

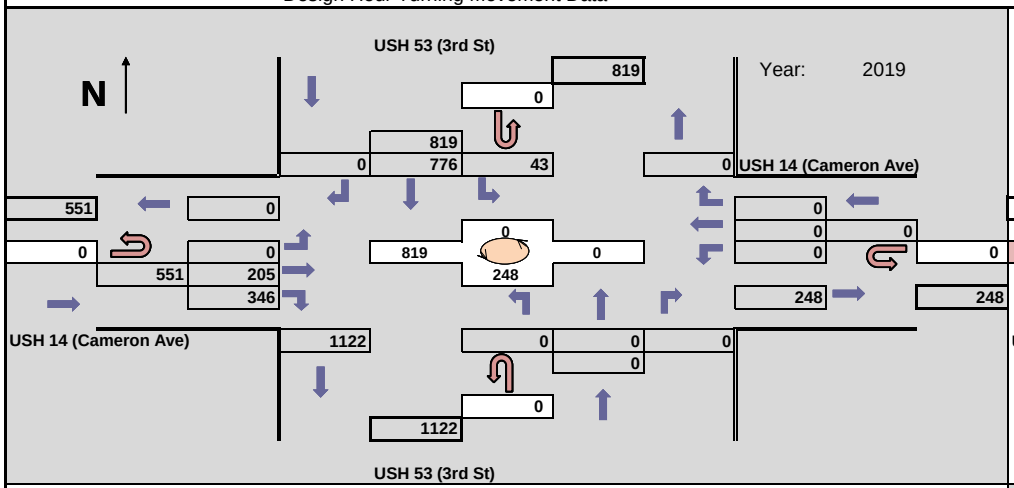

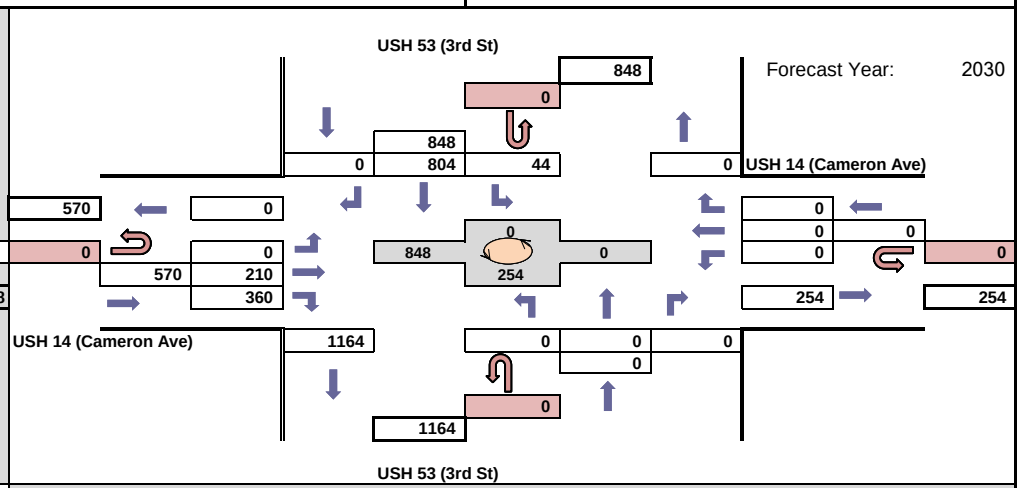

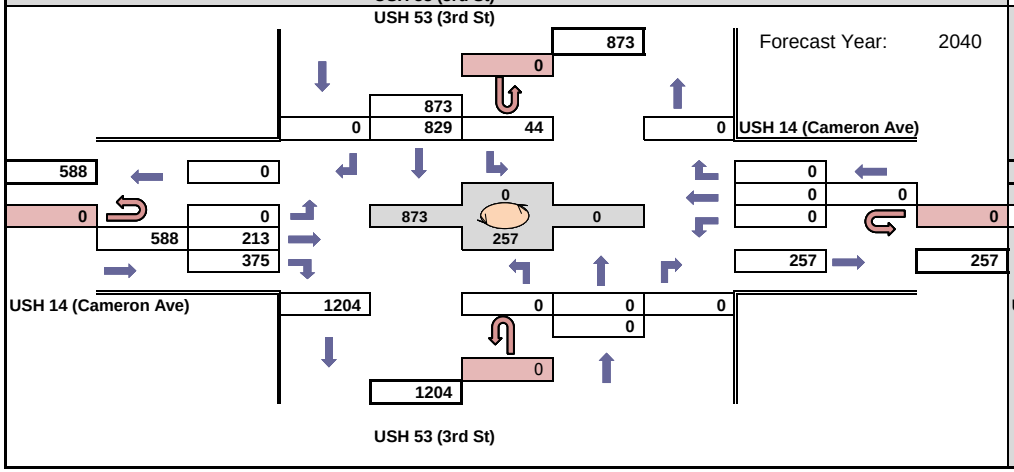

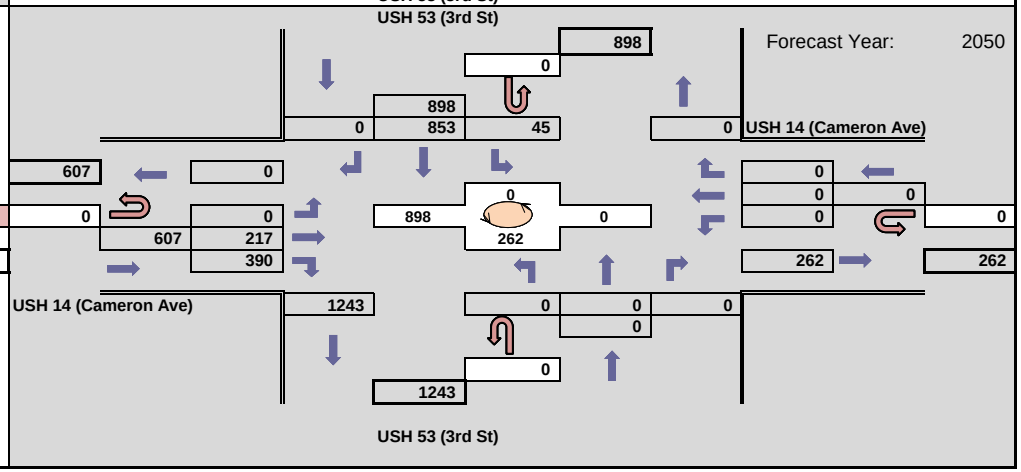

WisDOT Bureau of Planning & Economic Development
Traffic Forecasting Section
Forecast by: Miao Zhang
Phone: (608) 266 - 7995
Email: miao.zhang@dot.wi.gov

Projected AM Design Hour Traffic Volumes

Indicates roundabout

Design Hour: 7:00-8:00am

Forecast Completed: 2/23/2021

Project Description

Project ID(s): 1630-08-00
Route(s): US 14
Region/COUNTY(IES): SW/La Crosse
Location: US 14 SB (3rd St) & Market St

Design Hour Turning Movement Data

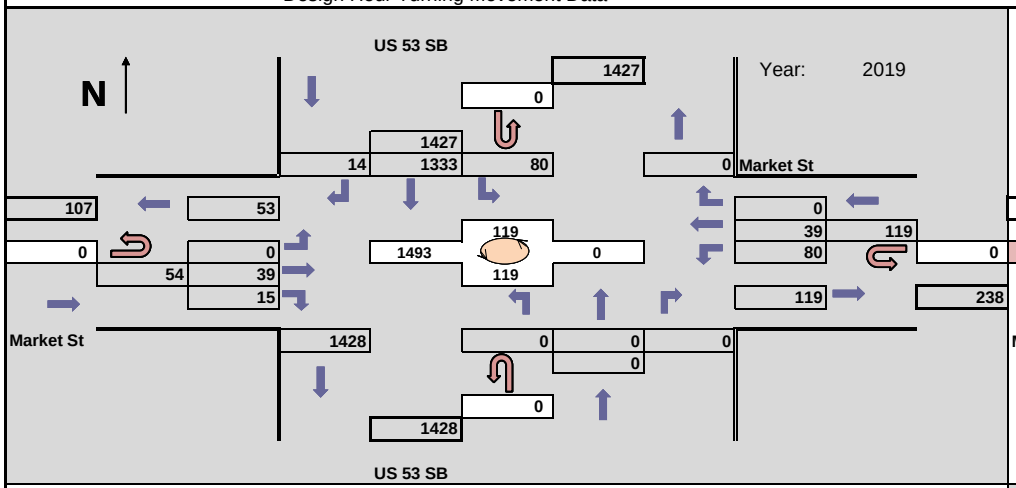

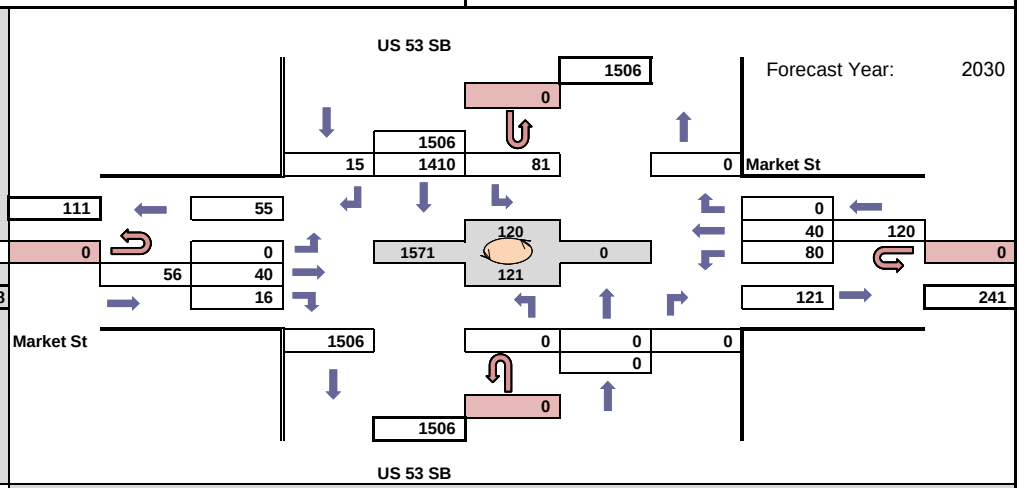

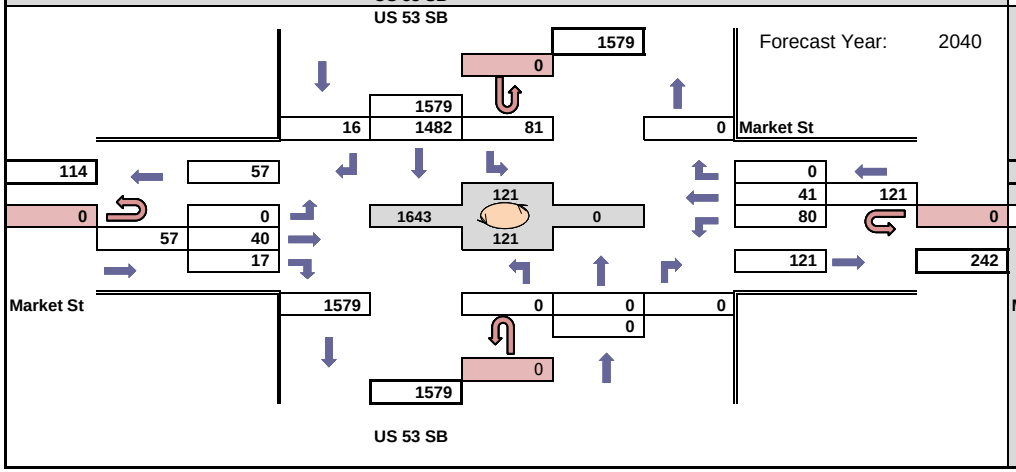

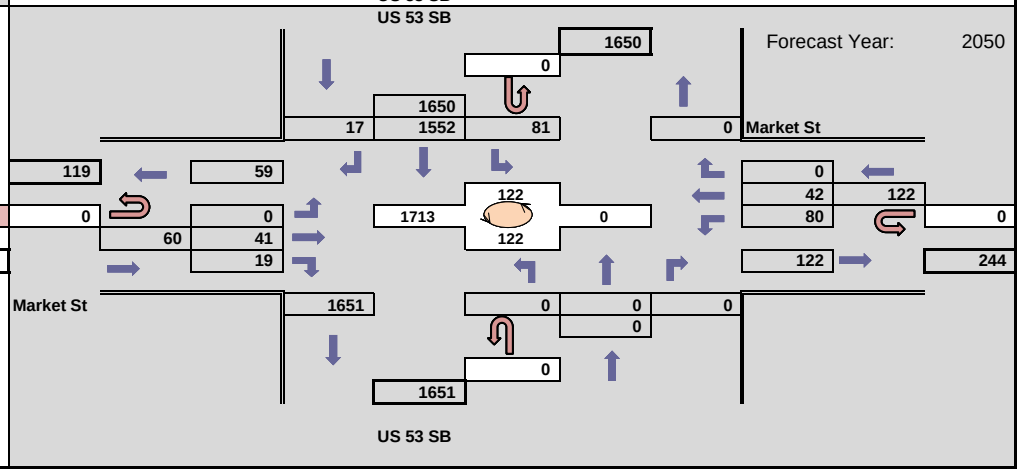

WisDOT Bureau of Planning & Economic Development
Traffic Forecasting Section
Forecast by: Miao Zhang
Phone: (608) 266 - 7995
Email: miao.zhang@dot.wi.gov

Projected PM Design Hour Traffic Volumes

Indicates roundabout

Design Hour: 4:15-5:15pm

Forecast Completed: 2/23/2021

Project Description

Project ID(s): 1630-08-00
Route(s): US 14
Region/COUNTY(IES): SW/La Crosse
Location: US 14 SB (3rd St) & Market St

Design Hour Turning Movement Data

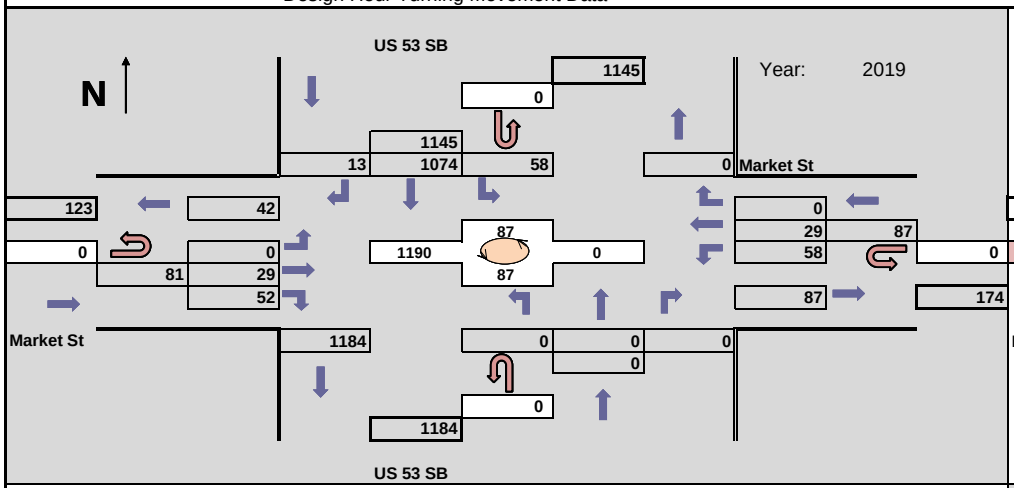

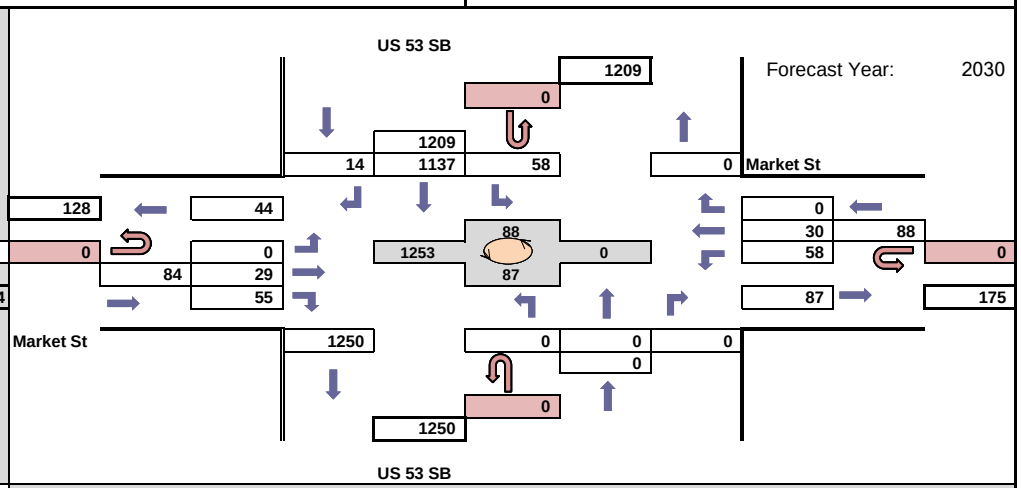

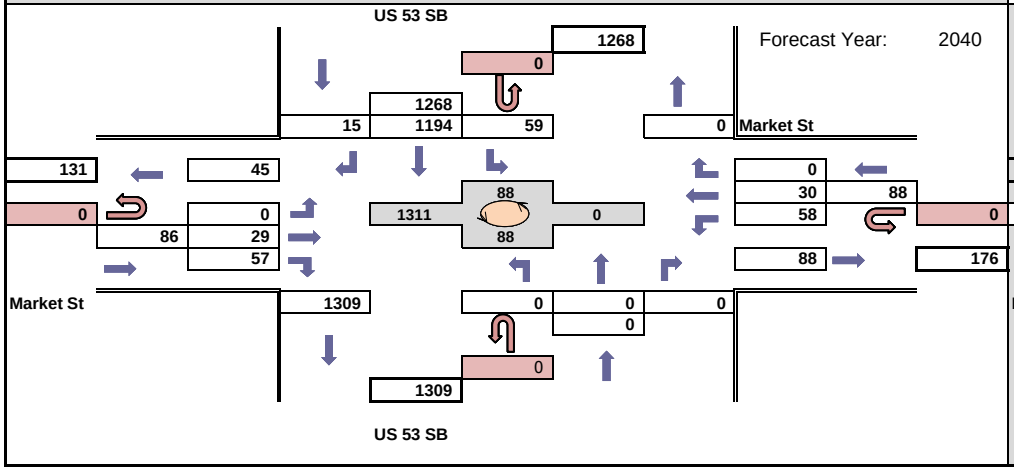

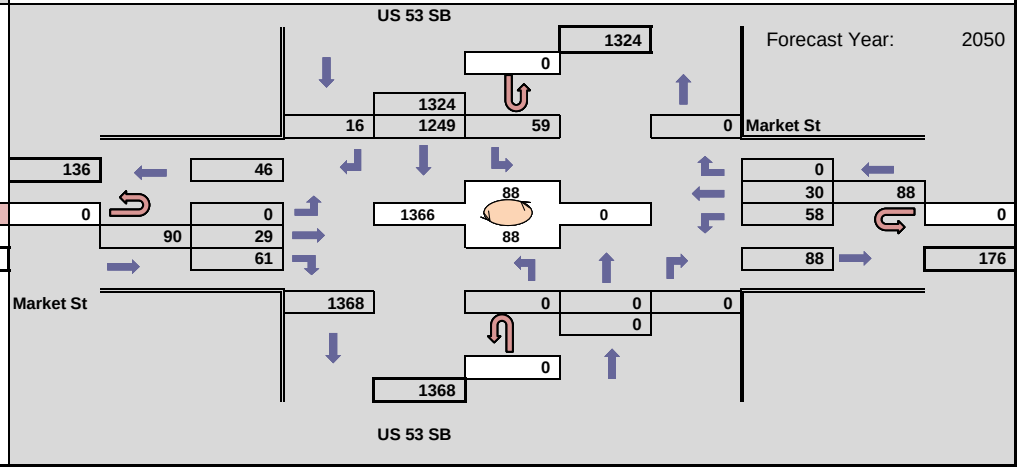

WisDOT Bureau of Planning & Economic Development
Traffic Forecasting Section
Forecast by: Miao Zhang
Phone: (608) 266 - 7995
Email: miao.zhang@dot.wi.gov

Projected AM Design Hour Traffic Volumes

Indicates roundabout

Design Hour: 7:00-8:00am

Forecast Completed: 2/23/2021

Project Description

Project ID(s): 1630-08-00
Route(s): US 14
Region/COUNTY(IES): SW/La Crosse
Location: US 14 NB (4th St) & Market St

Design Hour Turning Movement Data

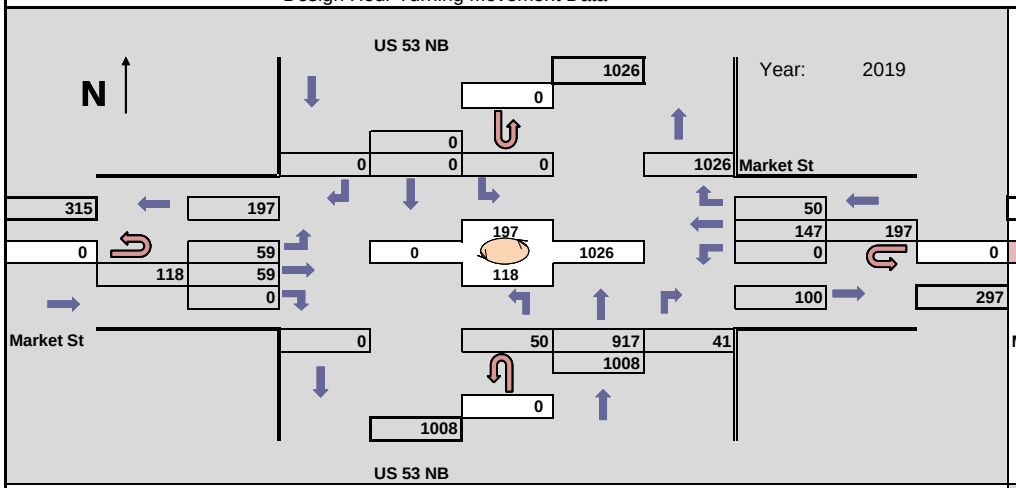

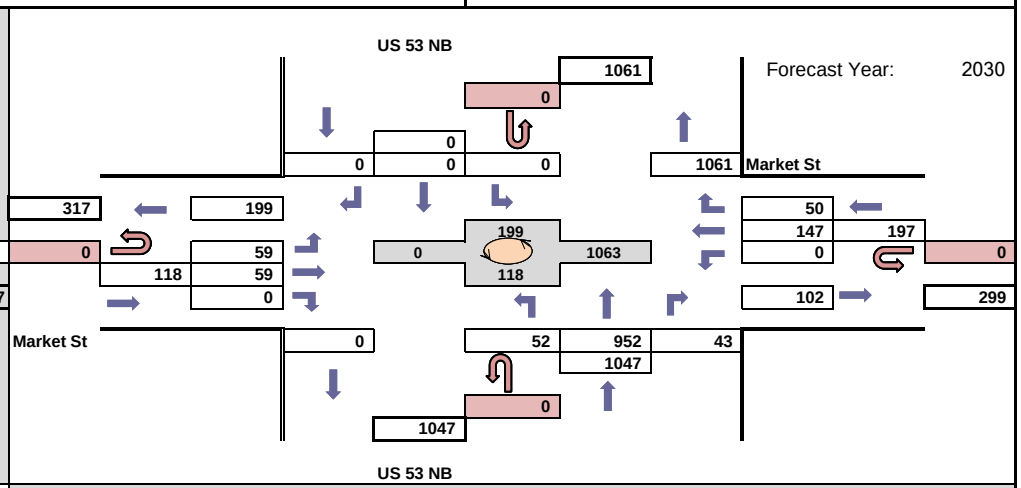

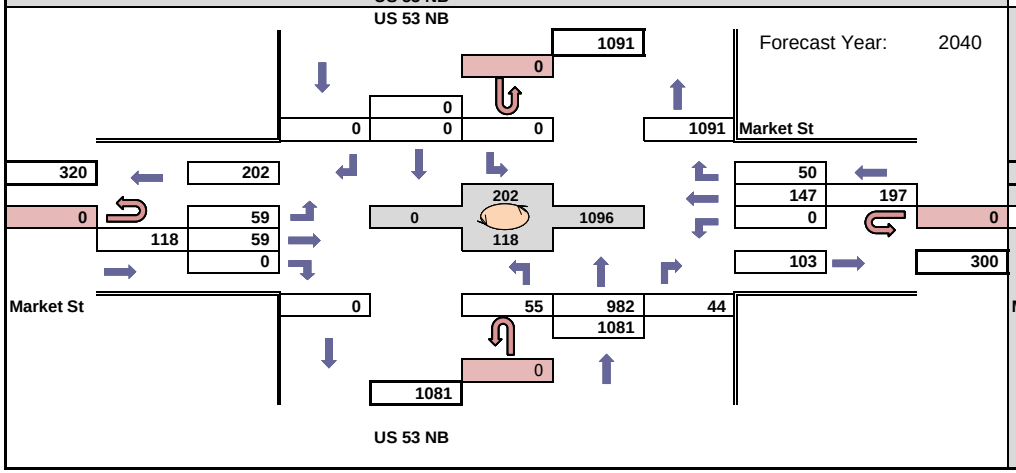

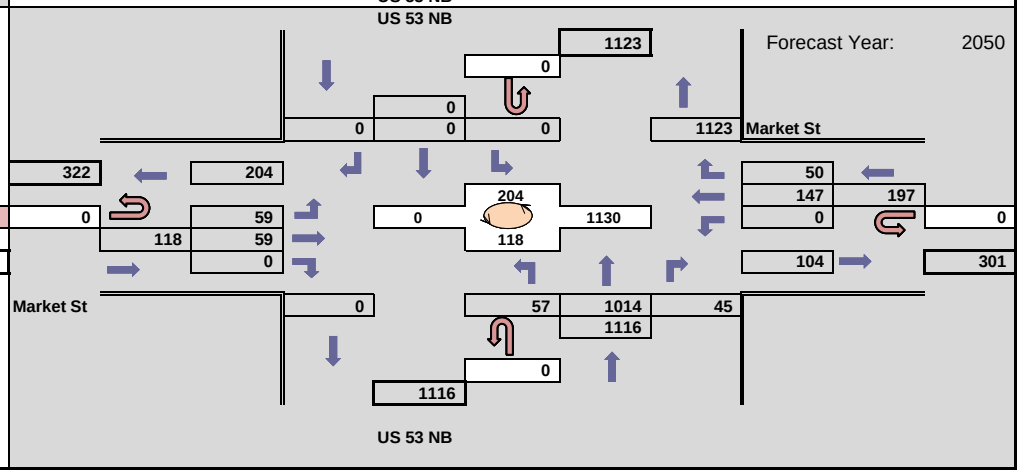

WisDOT Bureau of Planning & Economic Development
Traffic Forecasting Section
Forecast by: Miao Zhang
Phone: (608) 266 - 7995
Email: miao.zhang@dot.wi.gov

Projected PM Design Hour Traffic Volumes

Indicates roundabout

Design Hour: 4:15-5:15pm

Forecast Completed: 2/23/2021

Project Description

Project ID(s): 1630-08-00
Route(s): US 14
Region/COUNTY(IES): SW/La Crosse
Location: US 14 NB (4th St) & Market St

Design Hour Turning Movement Data

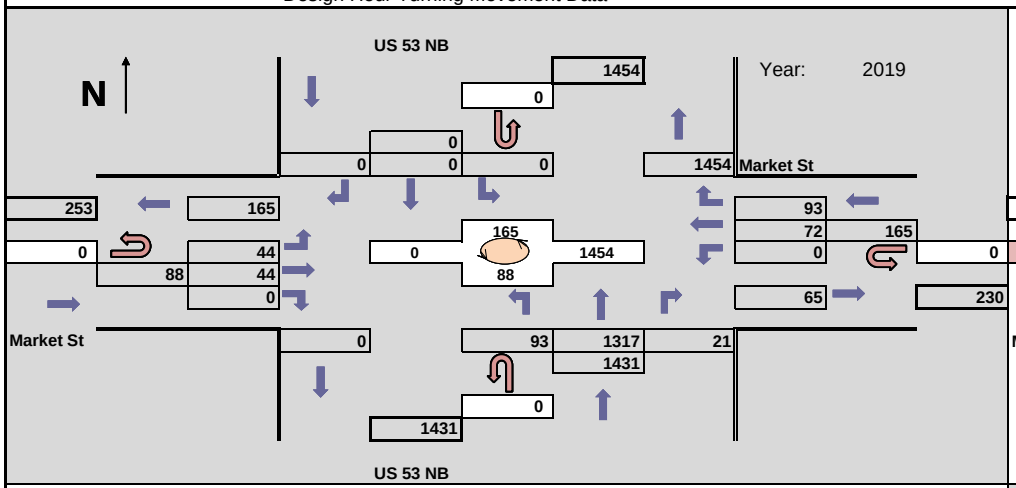

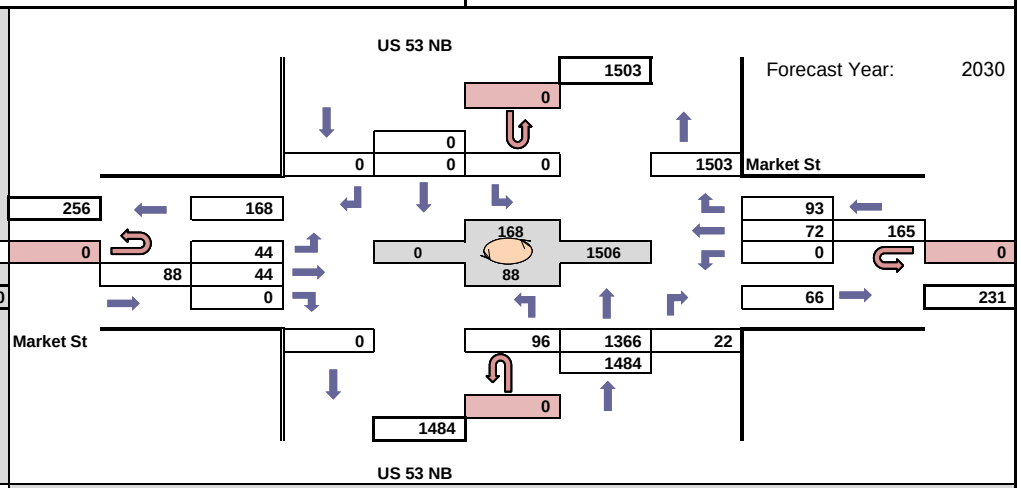

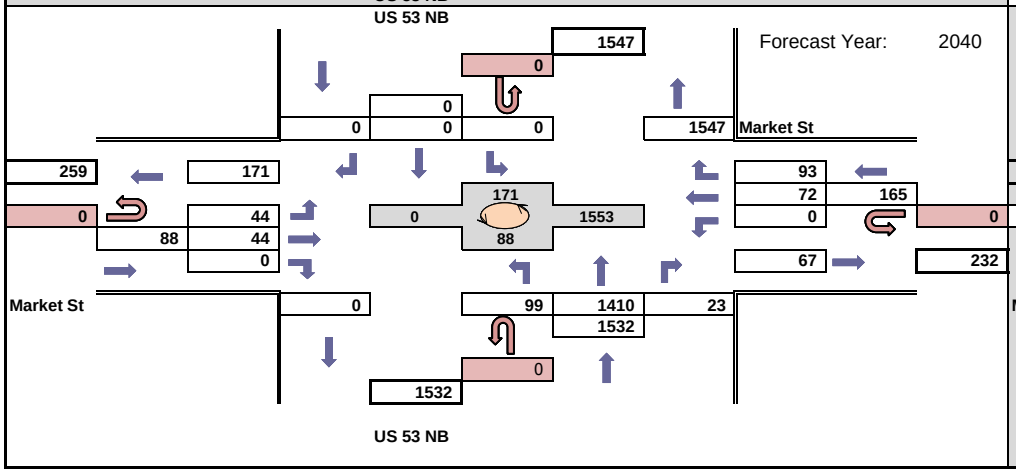

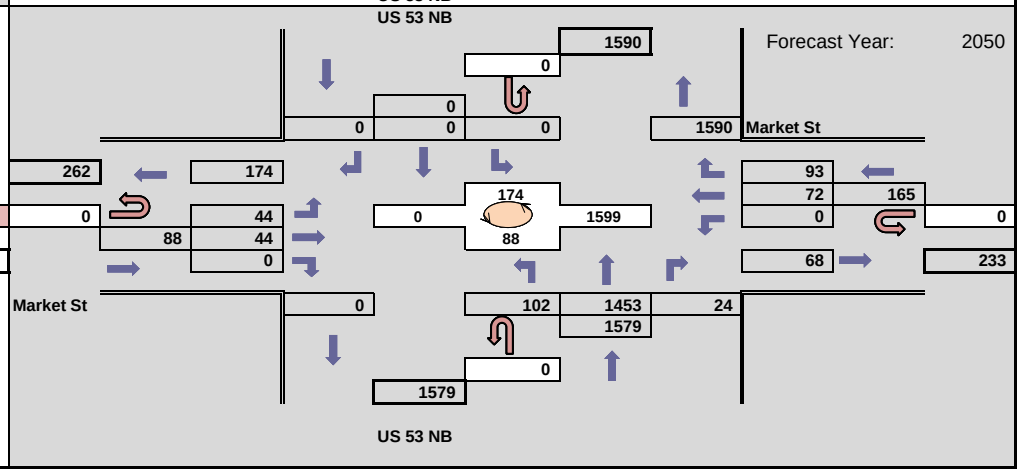

WisDOT Bureau of Planning & Economic Development
Traffic Forecasting Section
Forecast by: Miao Zhang
Phone: (608) 266 - 7995
Email: miao.zhang@dot.wi.gov

Projected AM Design Hour Traffic Volumes

Indicates roundabout

Design Hour: 7:00-8:00am

Forecast Completed: 2/23/2021

Project Description

Project ID(s): 1630-08-00
Route(s): US 14
Region/COUNTY(IES): SW/La Crosse
Location: US 14 SB (3rd St) & WIS 33 (Jackson St)

Design Hour Turning Movement Data

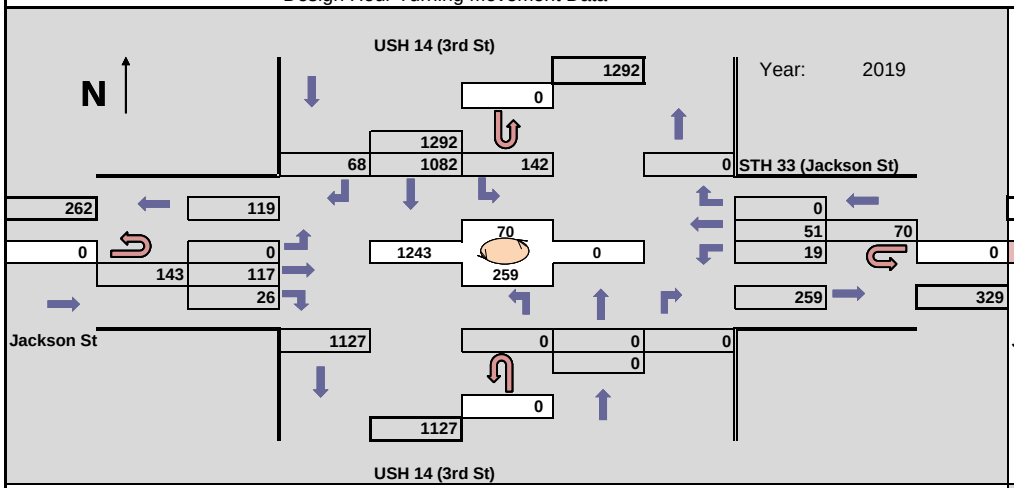

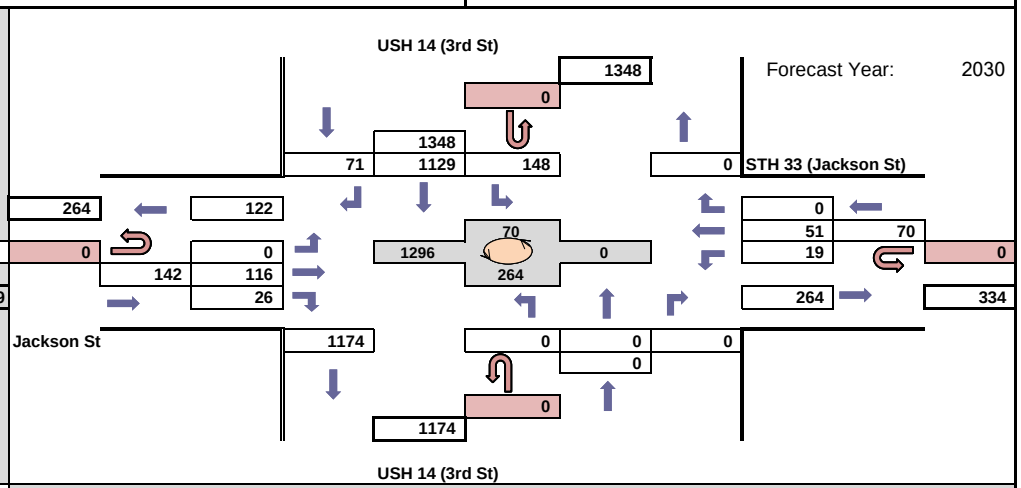

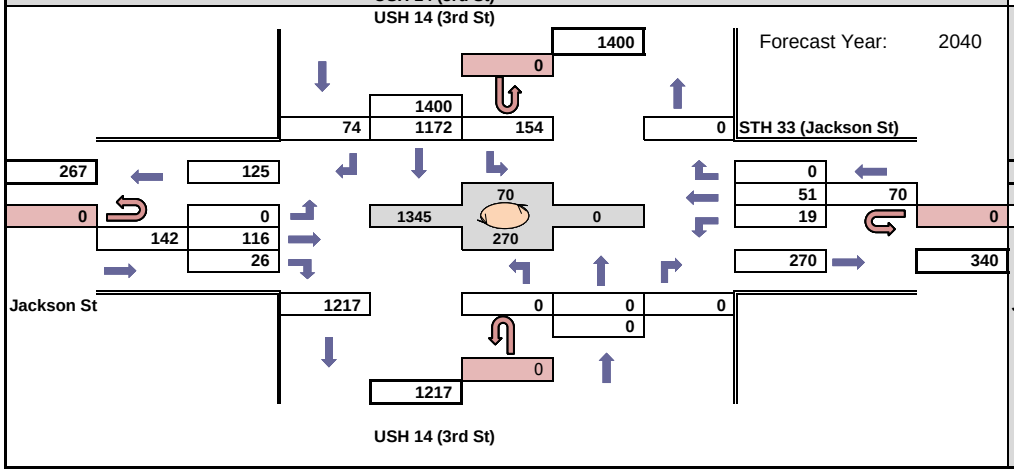

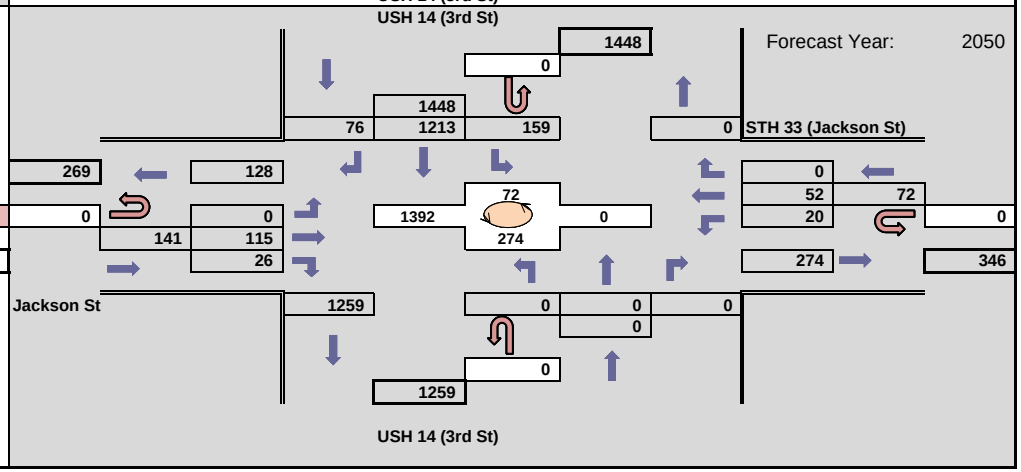

WisDOT Bureau of Planning & Economic Development
Traffic Forecasting Section
Forecast by: Miao Zhang
Phone: (608) 266 - 7995
Email: miao.zhang@dot.wi.gov

Projected PM Design Hour Traffic Volumes

Indicates roundabout

Design Hour: 4:15-5:15pm

Forecast Completed: 2/23/2021

Project Description

Project ID(s): 1630-08-00
Route(s): US 14
Region/COUNTY(IES): SW/La Crosse
Location: US 14 SB (3rd St) & WIS 33 (Jackson St)

Design Hour Turning Movement Data

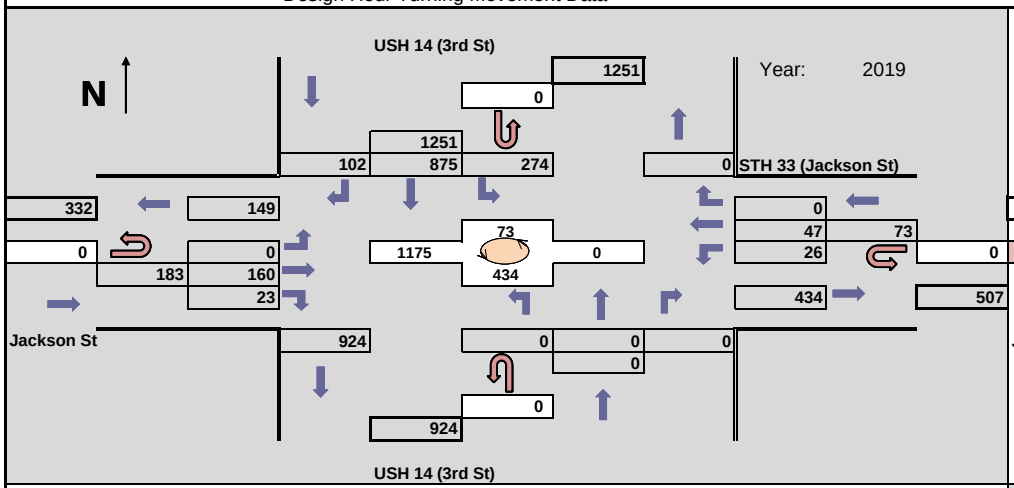

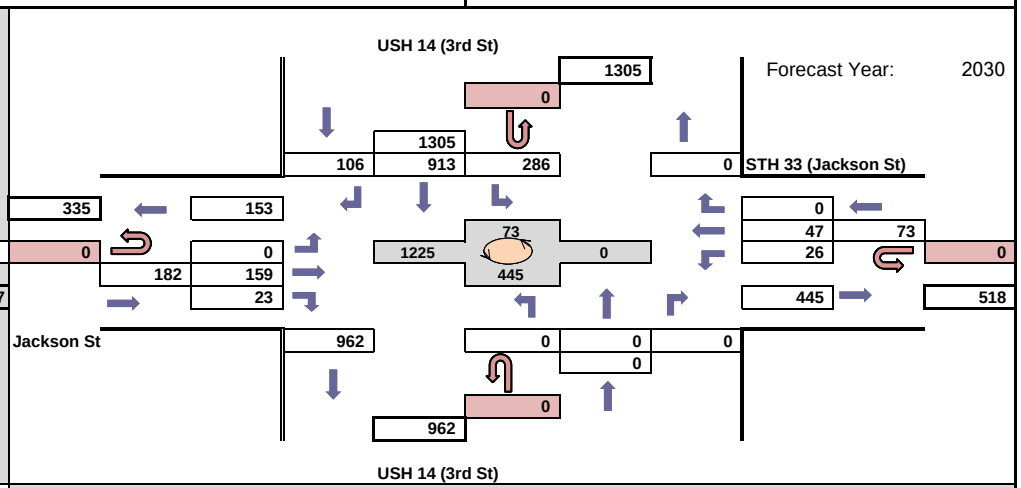

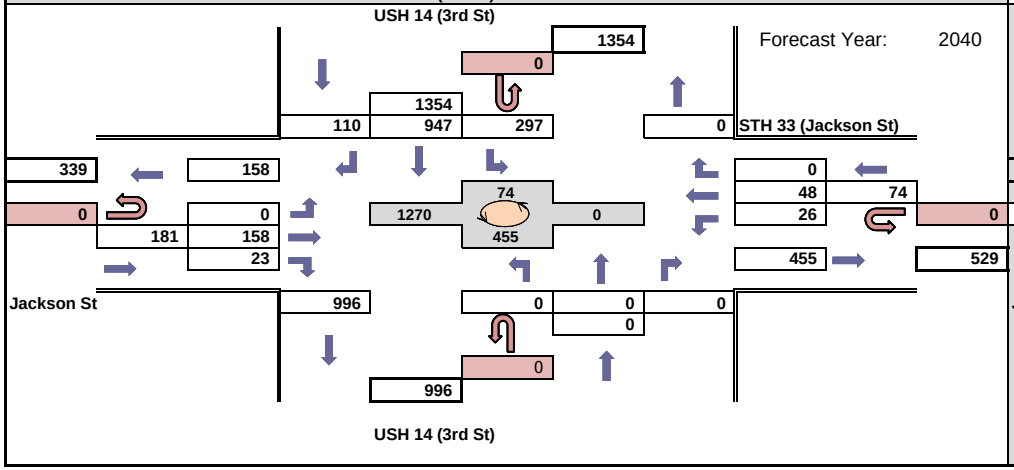

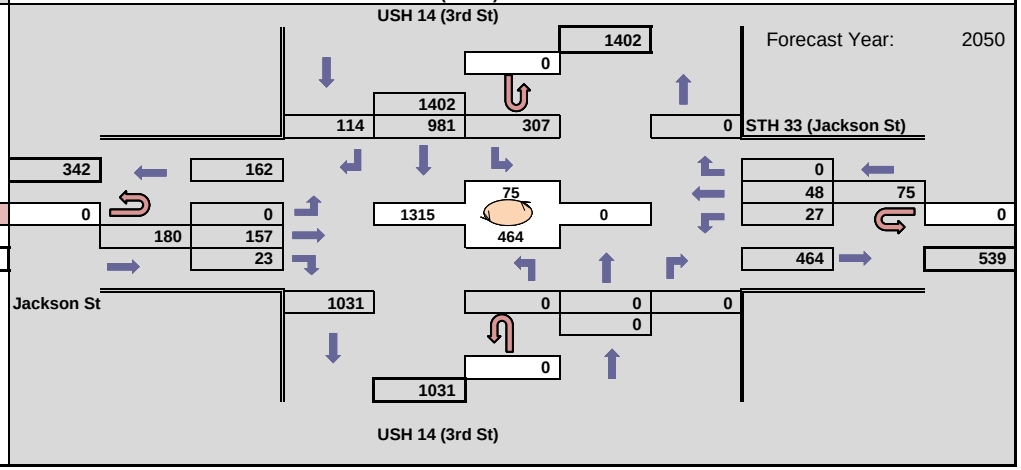

WisDOT Bureau of Planning & Economic Development
Traffic Forecasting Section
Forecast by: Miao Zhang
Phone: (608) 266 - 7995
Email: miao.zhang@dot.wi.gov

Projected AM Design Hour Traffic Volumes

Indicates roundabout

Design Hour: 7:00-8:00am

Forecast Completed: 2/23/2021

Project Description

Project ID(s): 1630-08-00
Route(s): US 14
Region/COUNTY(IES): SW/La Crosse
Location: US 14 NB (4th St) & WIS 33 (Jackson St)

Design Hour Turning Movement Data

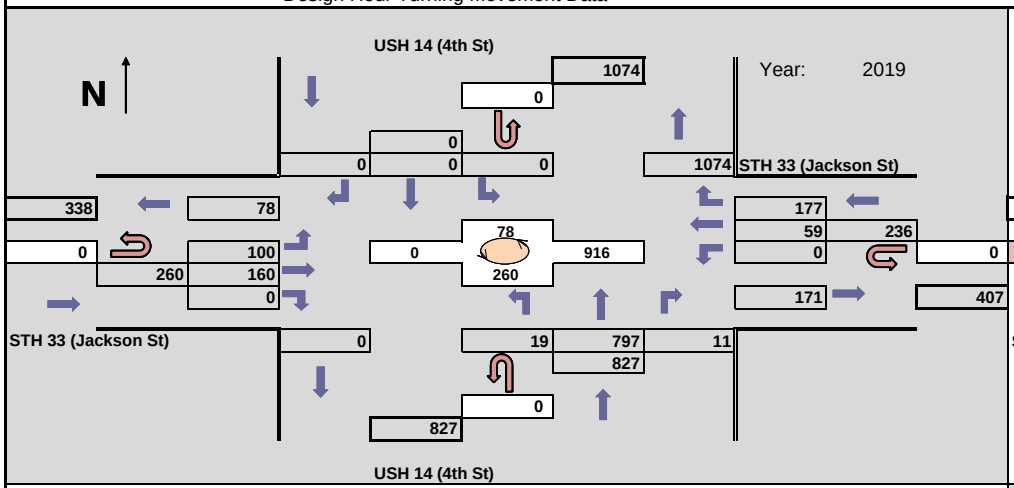

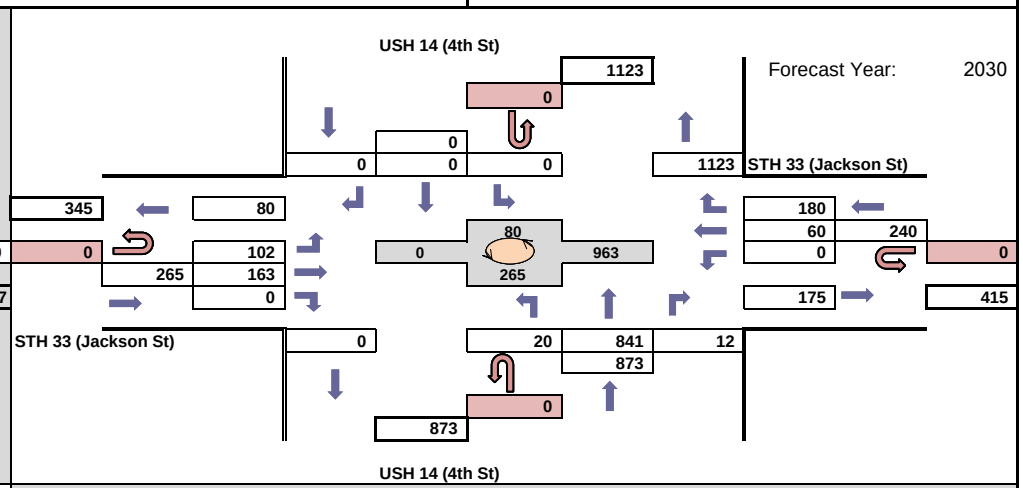

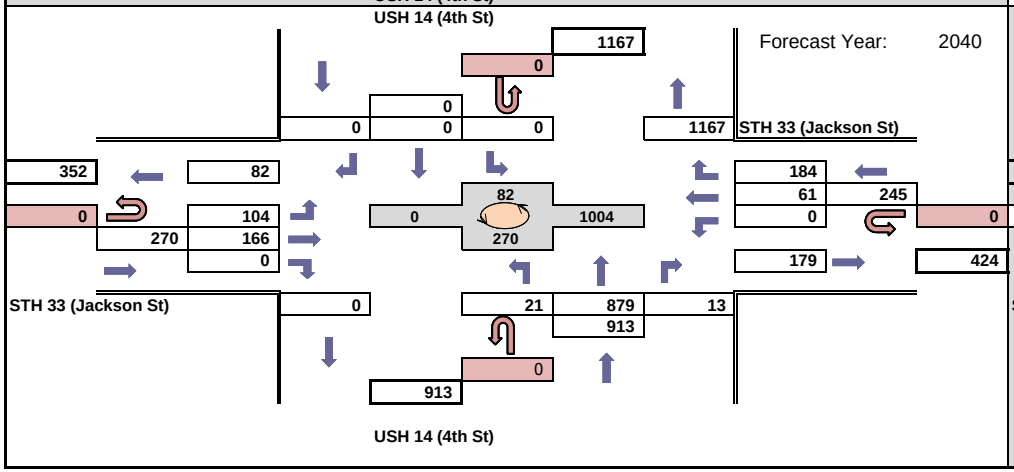

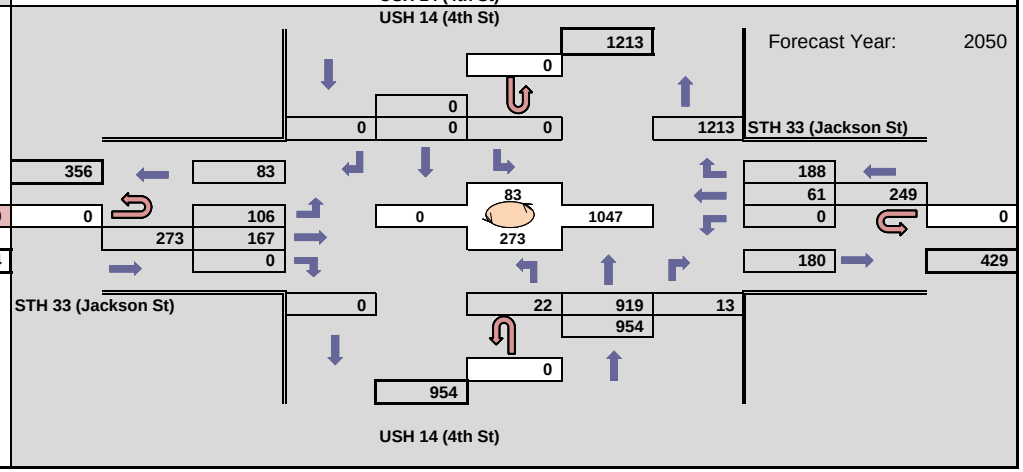

WisDOT Bureau of Planning & Economic Development
Traffic Forecasting Section
Forecast by: Miao Zhang
Phone: (608) 266 - 7995
Email: miao.zhang@dot.wi.gov

Projected PM Design Hour Traffic Volumes

Indicates roundabout

Design Hour: 4:15-5:15pm

Forecast Completed: 2/23/2021

Project Description

Project ID(s): 1630-08-00
Route(s): US 14
Region/COUNTY(IES): SW/La Crosse
Location: US 14 NB (4th St) & WIS 33 (Jackson St)

Design Hour Turning Movement Data

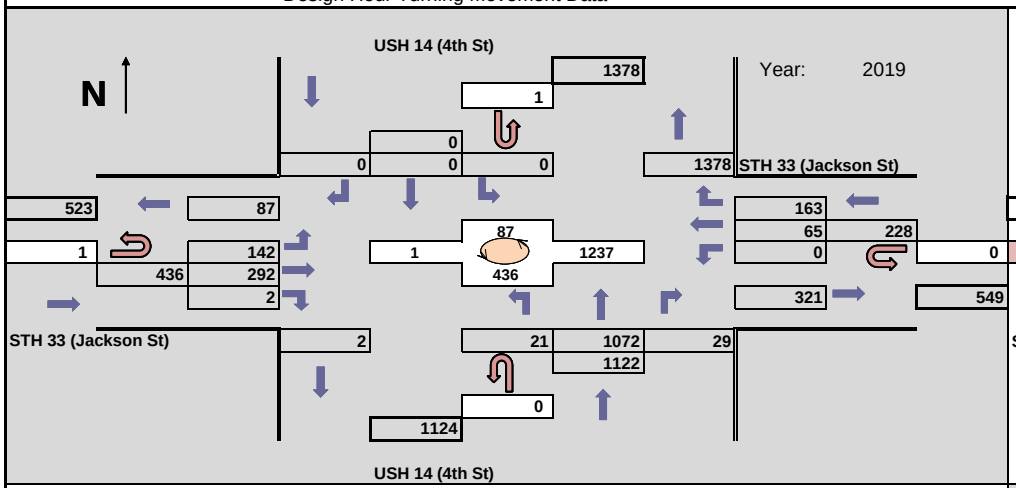

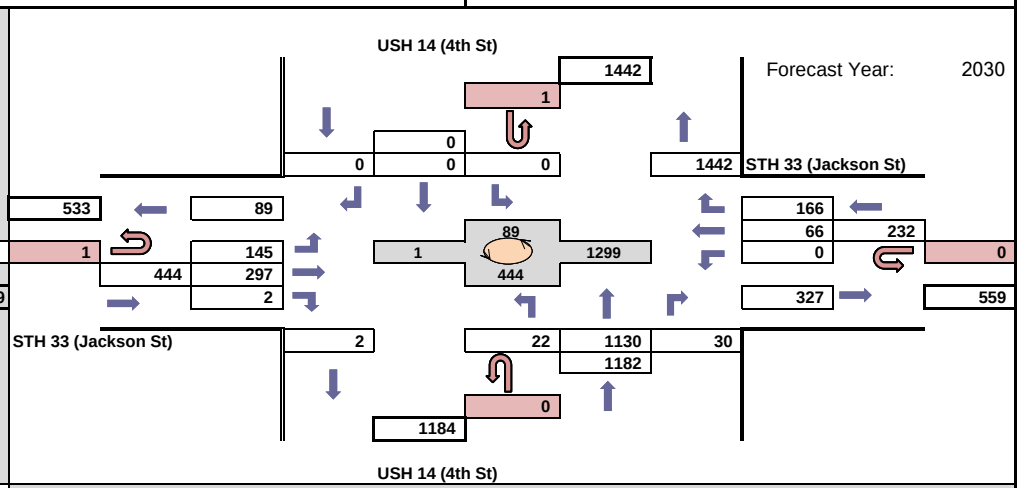

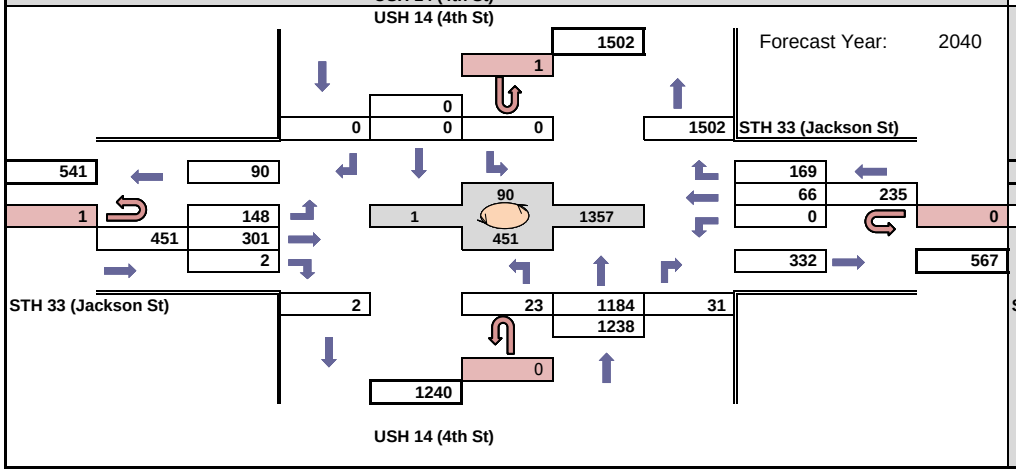

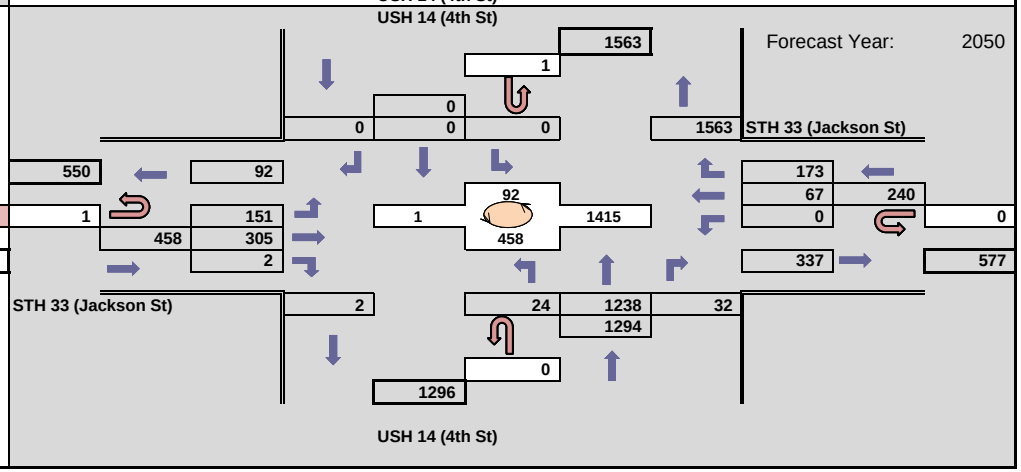

WisDOT TRAFFIC FORECAST REPORT	Region/COUNTY(IES): SW/La Crosse	Developed by: Miao Zhang
PROJECT ID(S): 1630-08-00	LOCATION: US 14 Segment	Phone: (608) 266-7995
ROUTE(S): USH 14	COMPLETED: 02/23/2021	
Traffic Forecasting Section; Bureau of Planning and Economic Development; Division of Transportation Investment Management		E-Mail: miao.zhang@dot.wi.gov

Site(s)	Route(s)	Volume(s)	Site Growth %
320592	USH 14	20720	0.26%
320595	USH 14	19460	0.38%
320629	USH 14	32460	0.37%

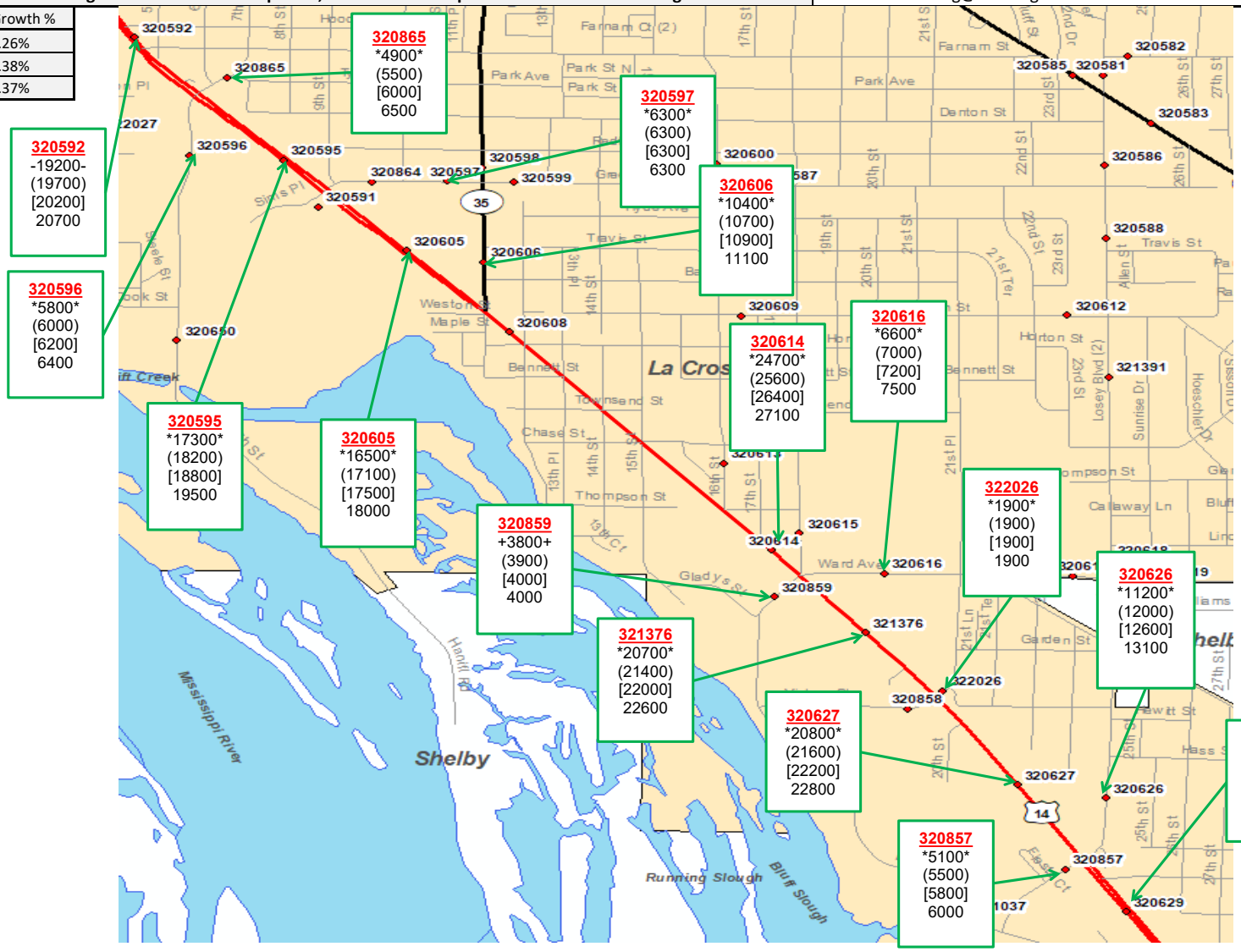

SITE ID = Colored, **bolded**, and underlined

Symbol	Count	Symbol	Forecast
-000-	2019 Count	(000)	2030 AADT
000	2017 Count	[000]	2040 AADT
+000+	2011 Count	000	2050 AADT

NOTES ON THE FORECAST:

1. This projection assumes that no major new traffic generators will be added to the development already included in the 2010/2040 La Crosse Regional Travel Demand Model.
2. Vehicle classification data and design values (K factors, directional splits, and percent trucks in design hours) are available here: http://wisconsindot.gov/Pages/projects/data-plan/traf-fore/default.aspx
3. USH 14 is a Factor Group II (Urban-Other) roadways (indicating low to moderate fluctuation in traffic from a seasonal perspective).
4. The 2010/2040 La Crosse Regional Travel Demand Model was used to complete this forecast. The Traffic Analysis Forecasting Information System output was used as a comparison tool to check against the model output. Adjustments were made as needed.
5. Roadway improvements coded within the existing plus committed (E+C) network of the 2010/2040 La Crosse Regional Travel Demand Model were assumed to be in place for the purposes of developing this forecast.

WisDOT Bureau of Planning & Economic Development
Traffic Forecasting Section
Forecast by: Miao Zhang
Phone: (608) 266 - 7995
Email: miao.zhang@dot.wi.gov

Projected AM Design Hour Traffic Volumes

Indicates roundabout

Design Hour: 7:00-8:00am

Forecast Completed: 2/23/2021

Project Description

Project ID(s): 1630-08-00
Route(s): US 14
Region/COUNTY(IES): SW/La Crosse
Location: US 14 (South Ave) & 7th St

Design Hour Turning Movement Data

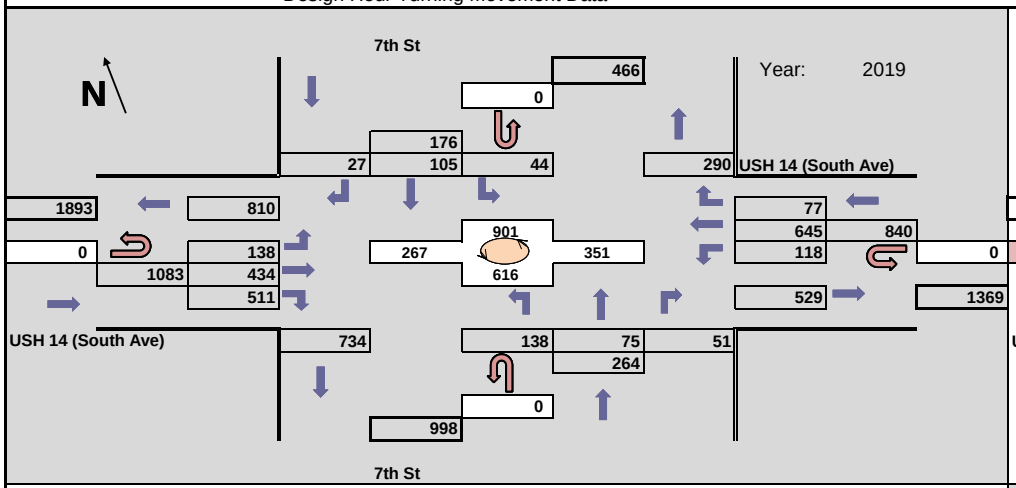

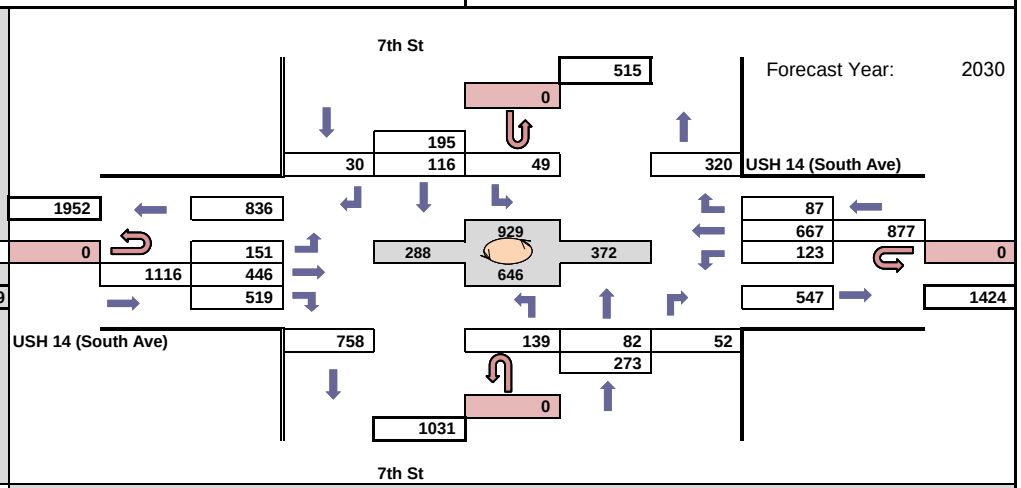

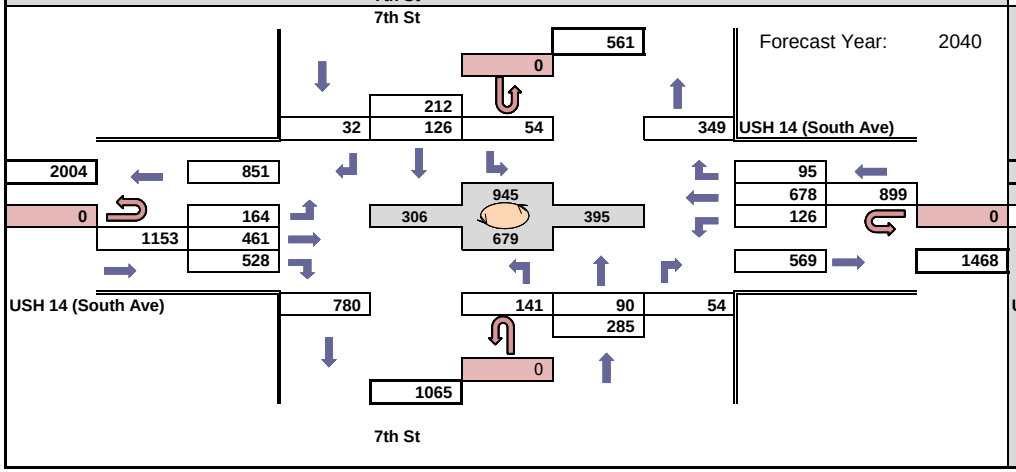

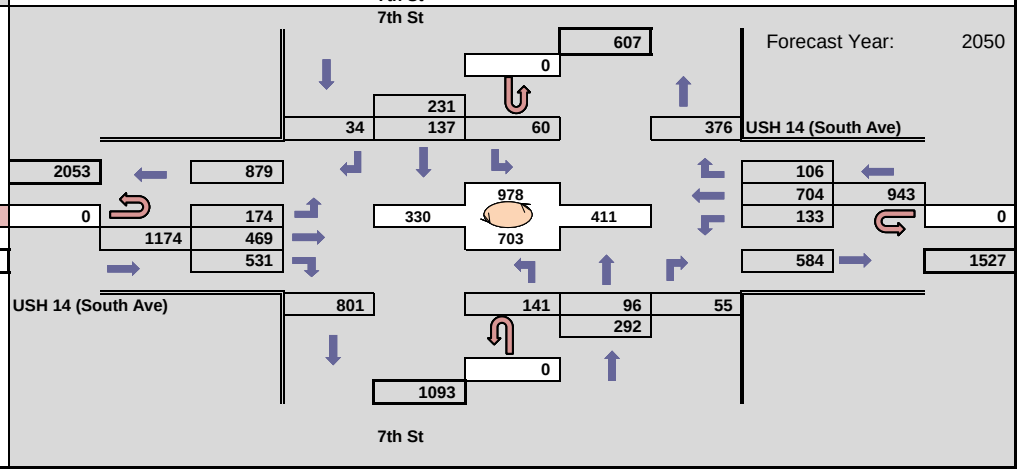

WisDOT Bureau of Planning & Economic Development
Traffic Forecasting Section
Forecast by: Miao Zhang
Phone: (608) 266 - 7995
Email: miao.zhang@dot.wi.gov

Projected PM Design Hour Traffic Volumes

Indicates roundabout

Design Hour: 4:00-5:00pm

Forecast Completed: 2/23/2021

Project Description

Project ID(s): 1630-08-00
Route(s): US 14
Region/COUNTY(IES): SW/La Crosse
Location: US 14 (South Ave) & 7th St

Design Hour Turning Movement Data

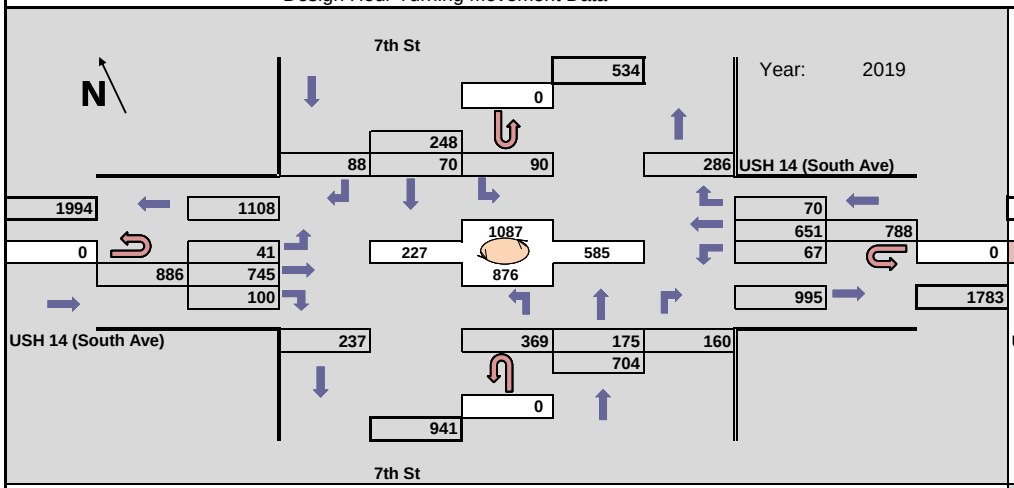

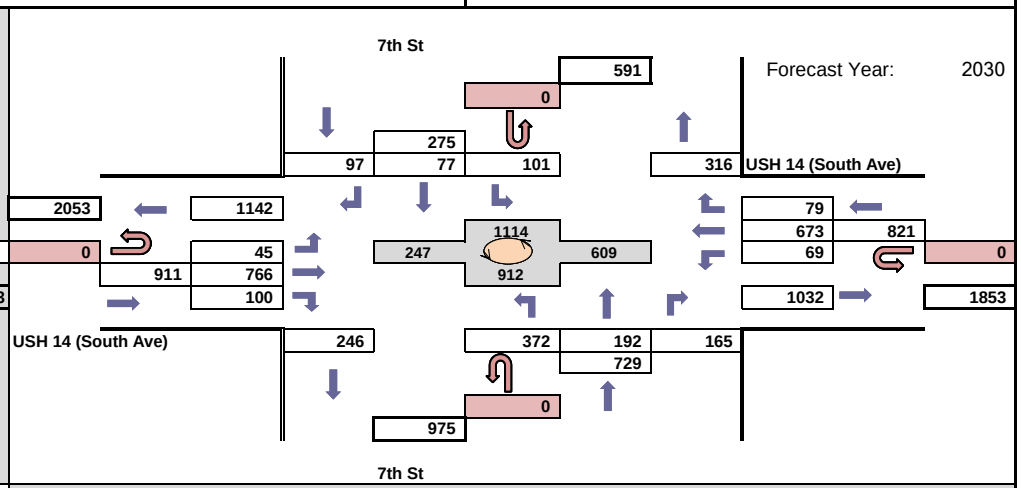

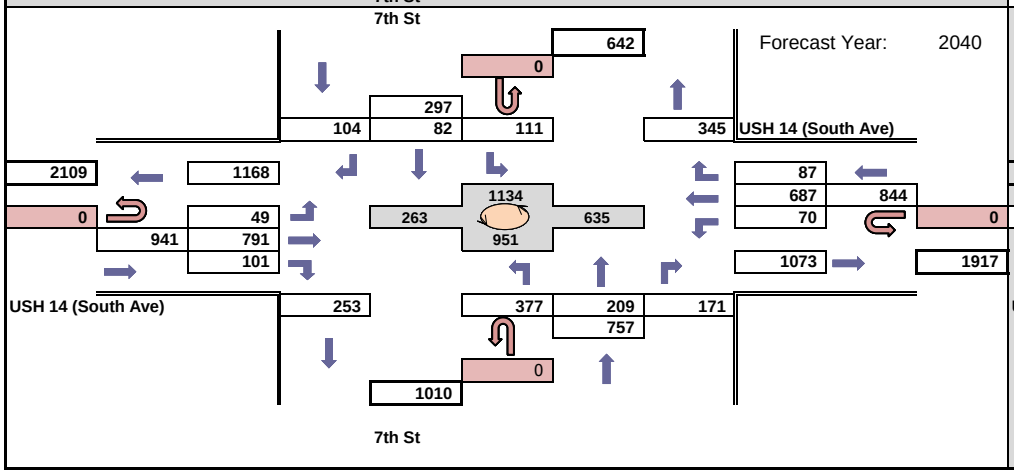

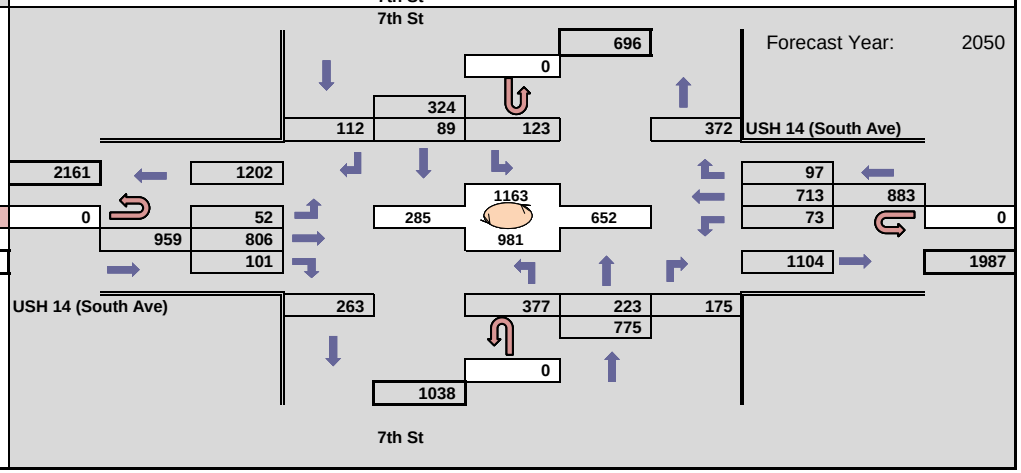

WisDOT Bureau of Planning & Economic Development
Traffic Forecasting Section
Forecast by: Miao Zhang
Phone: (608) 266 - 7995
Email: miao.zhang@dot.wi.gov

Projected AM Design Hour Traffic Volumes

Indicates roundabout

Design Hour: 7:00-8:00am

Forecast Completed: 2/23/2021

Project Description

Project ID(s): 1630-08-00
Route(s): US 14
Region/COUNTY(IES): SW/La Crosse
Location: US 14 (South Ave) & Green Bay St

Design Hour Turning Movement Data

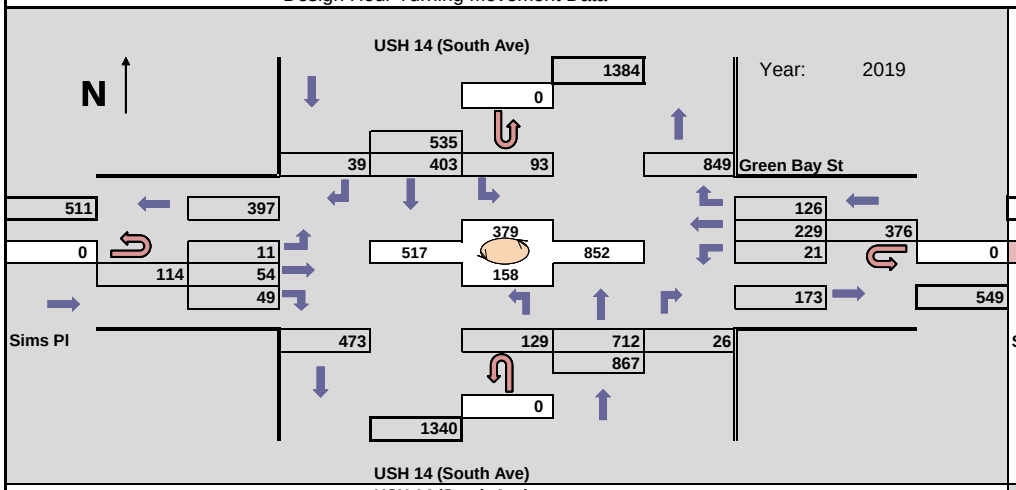

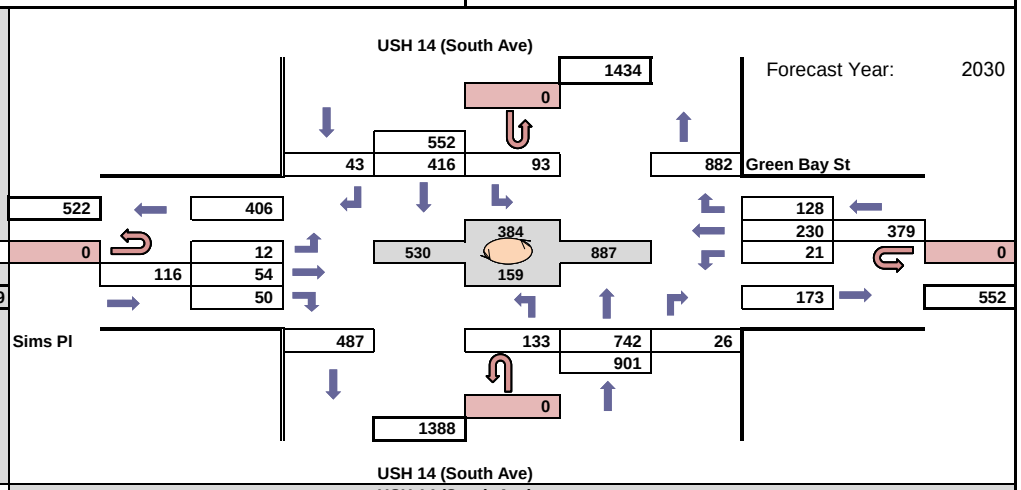

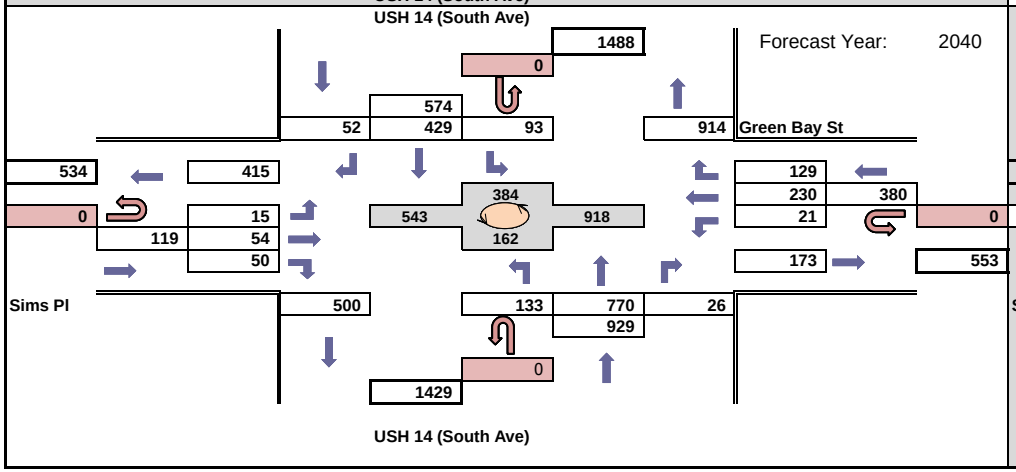

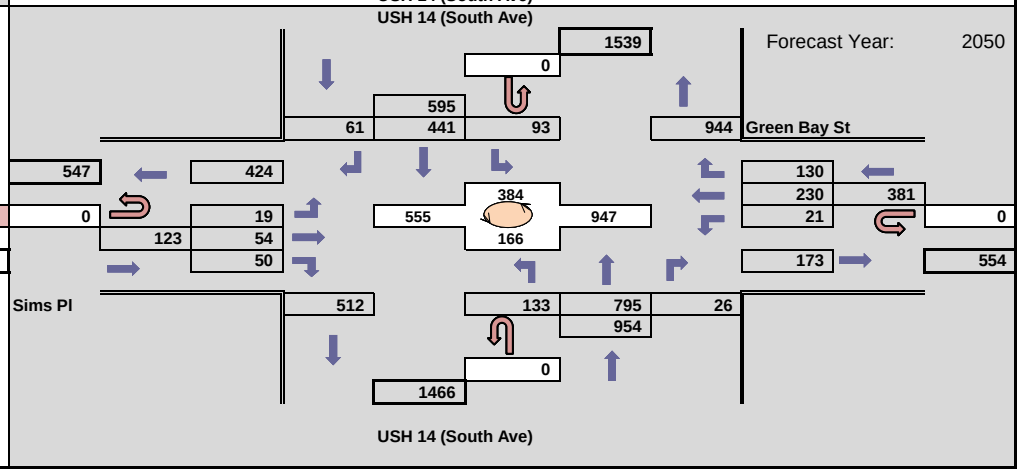

WisDOT Bureau of Planning & Economic Development
Traffic Forecasting Section
Forecast by: Miao Zhang
Phone: (608) 266 - 7995
Email: miao.zhang@dot.wi.gov

Projected PM Design Hour Traffic Volumes

Indicates roundabout

Design Hour: 4:00-5:00pm

Forecast Completed: 2/23/2021

Project Description

Project ID(s): 1630-08-00
Route(s): US 14
Region/COUNTY(IES): SW/La Crosse
Location: US 14 (South Ave) & Green Bay St

Design Hour Turning Movement Data

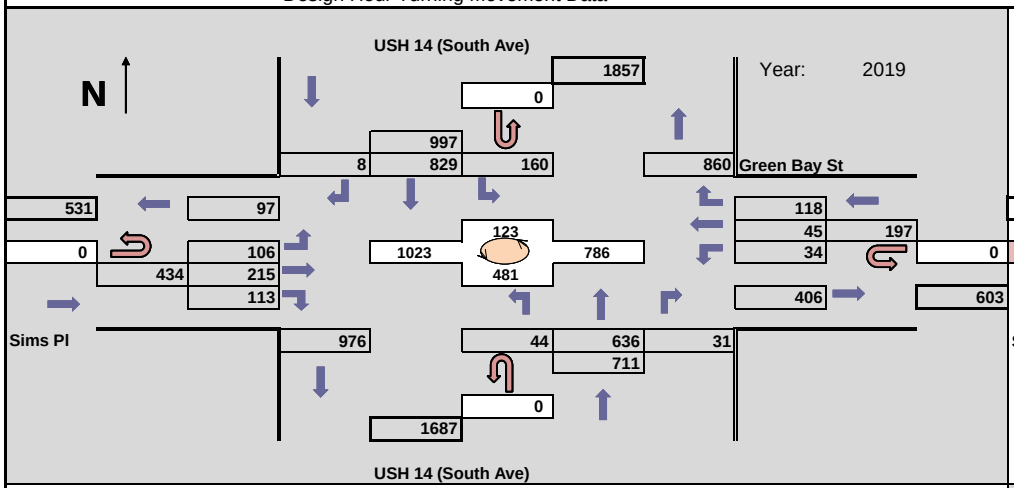

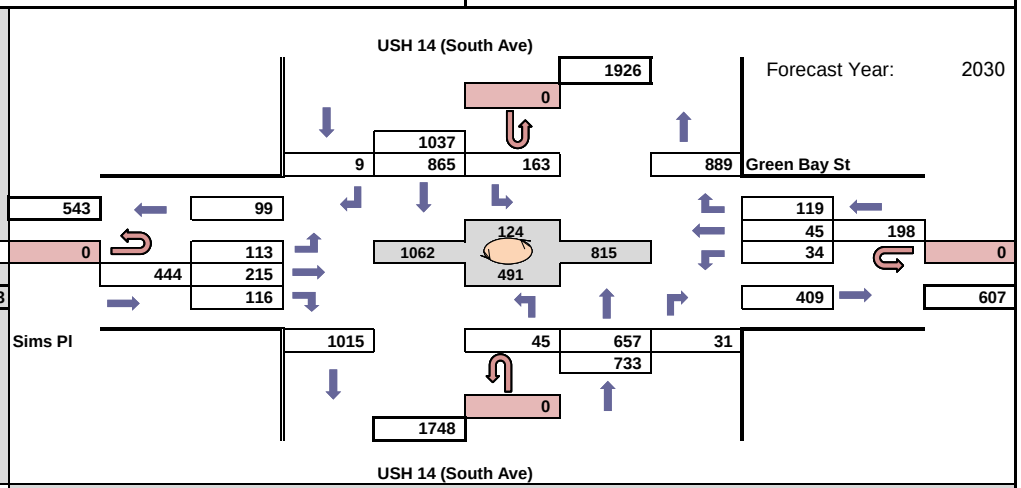

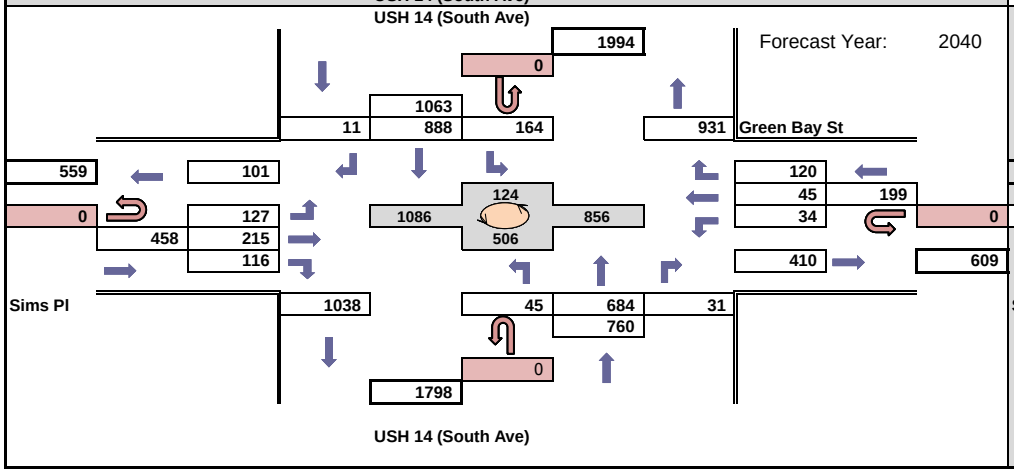

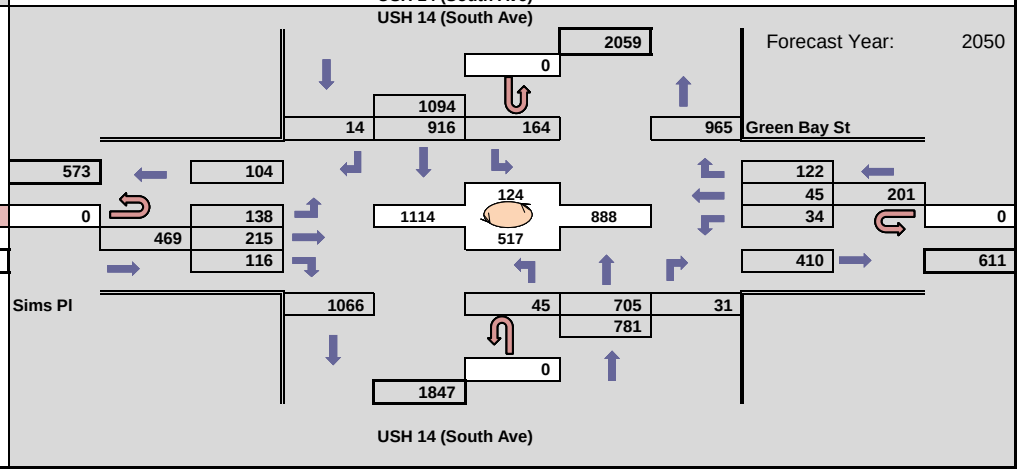

WisDOT Bureau of Planning & Economic Development
Traffic Forecasting Section
Forecast by: Miao Zhang
Phone: (608) 266 - 7995
Email: miao.zhang@dot.wi.gov

Projected AM Design Hour Traffic Volumes

Indicates roundabout

Design Hour: 7:00-8:00am

Forecast Completed: 2/25/2021

Project Description

Project ID(s): 1630-08-00
Route(s): US 14
Region/COUNTY(IES): SW/La Crosse
Location: US14(South Ave) & STH35(West Ave)

Design Hour Turning Movement Data

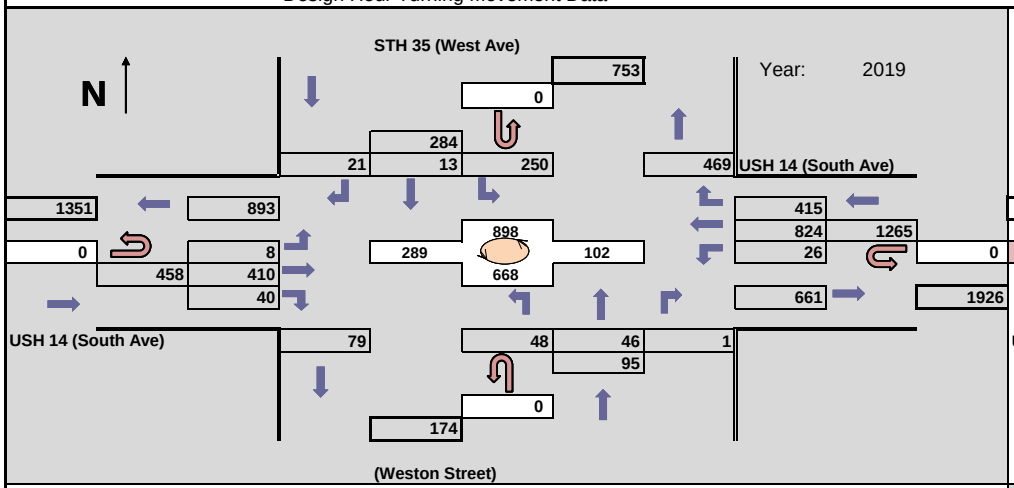

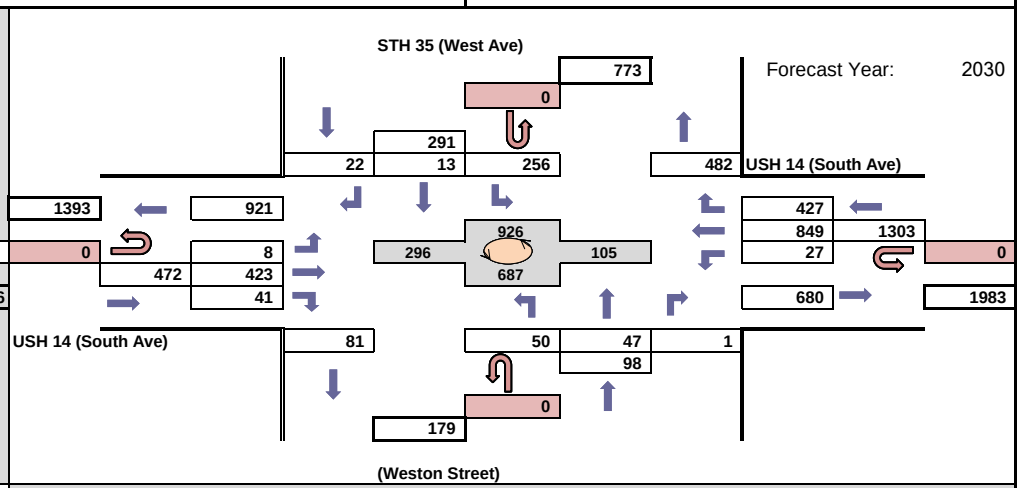

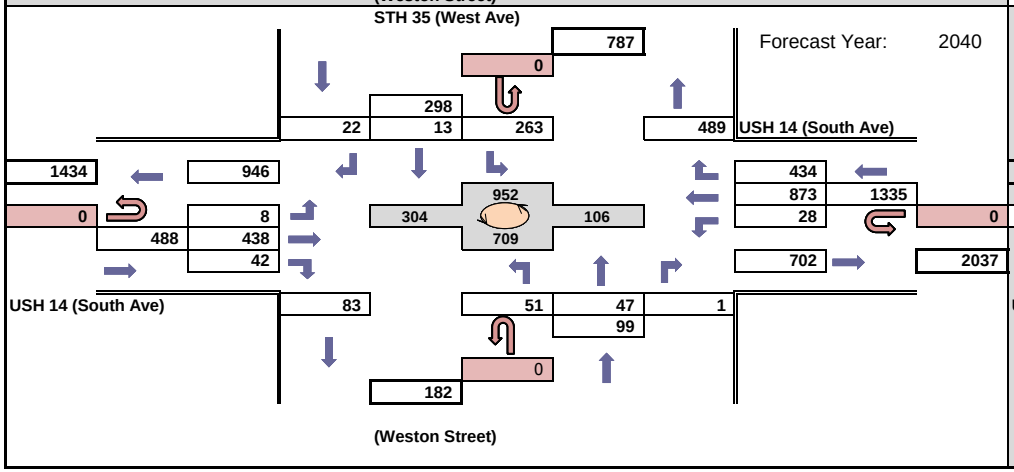

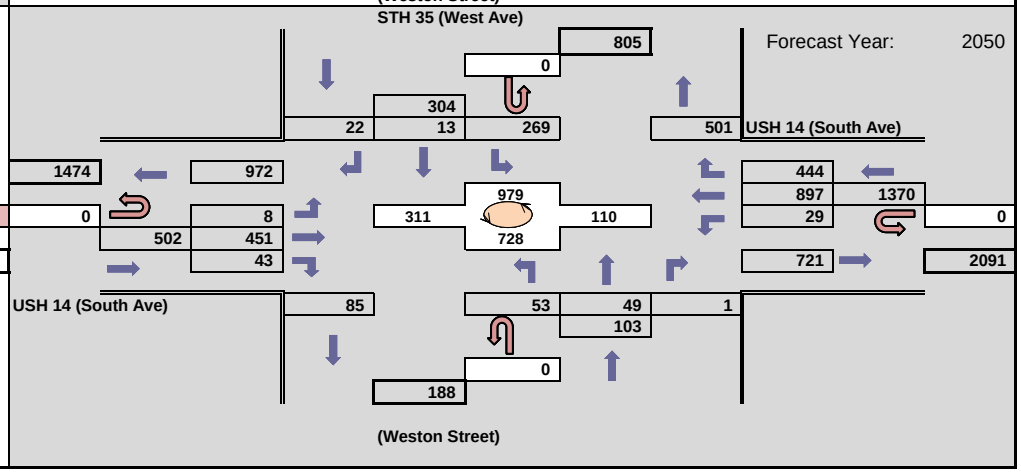

WisDOT Bureau of Planning & Economic Development
Traffic Forecasting Section
Forecast by: Miao Zhang
Phone: (608) 266 - 7995
Email: miao.zhang@dot.wi.gov

Projected AM Design Hour Traffic Volumes

Indicates roundabout

Design Hour: 7:00-8:00am

Forecast Completed: 2/25/2021

Project Description

Project ID(s): 1630-08-00
Route(s): US 14
Region/COUNTY(IES): SW/La Crosse
Location: US14(South Ave) & West Ave

Design Hour Turning Movement Data

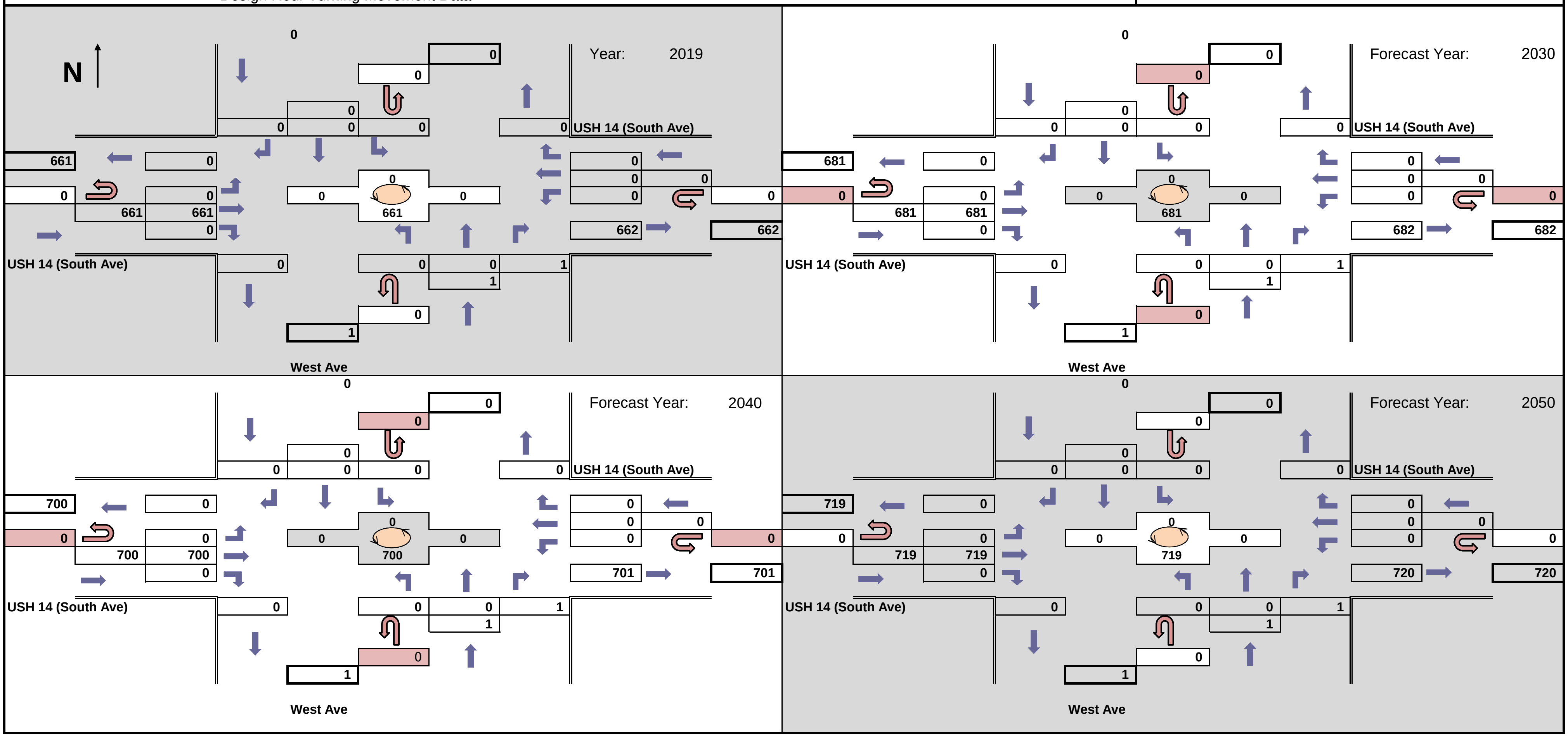

WisDOT Bureau of Planning & Economic Development
Traffic Forecasting Section
Forecast by: Miao Zhang
Phone: (608) 266 - 7995
Email: miao.zhang@dot.wi.gov

Projected PM Design Hour Traffic Volumes

Indicates roundabout

Design Hour: 4:00-5:00pm

Forecast Completed: 2/25/2021

Project Description

Project ID(s): 1630-08-00
Route(s): US 14
Region/COUNTY(IES): SW/La Crosse
Location: US14(South Ave) & STH35(West Ave)

Design Hour Turning Movement Data

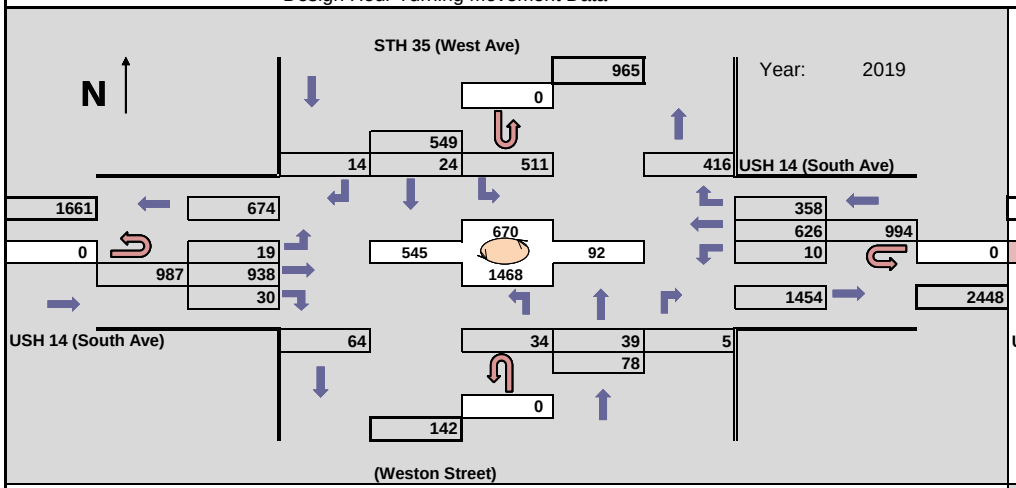

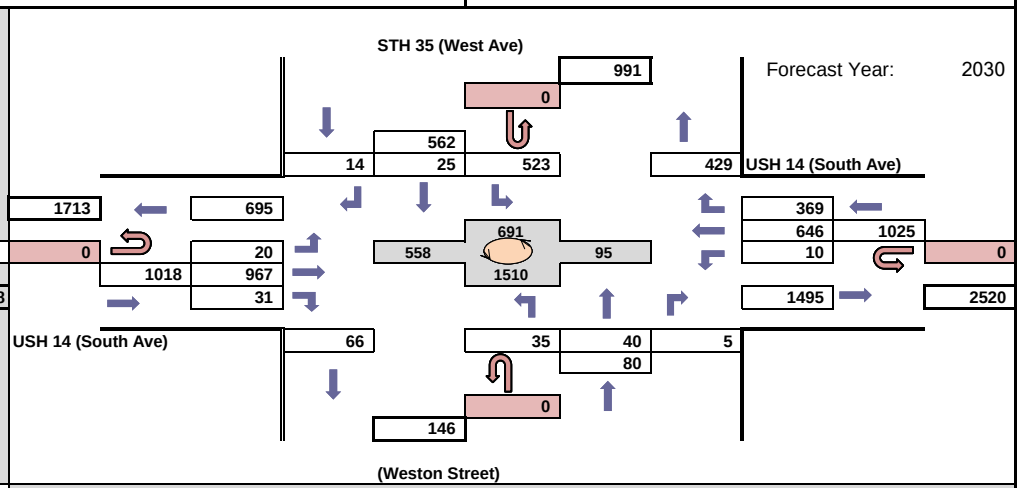

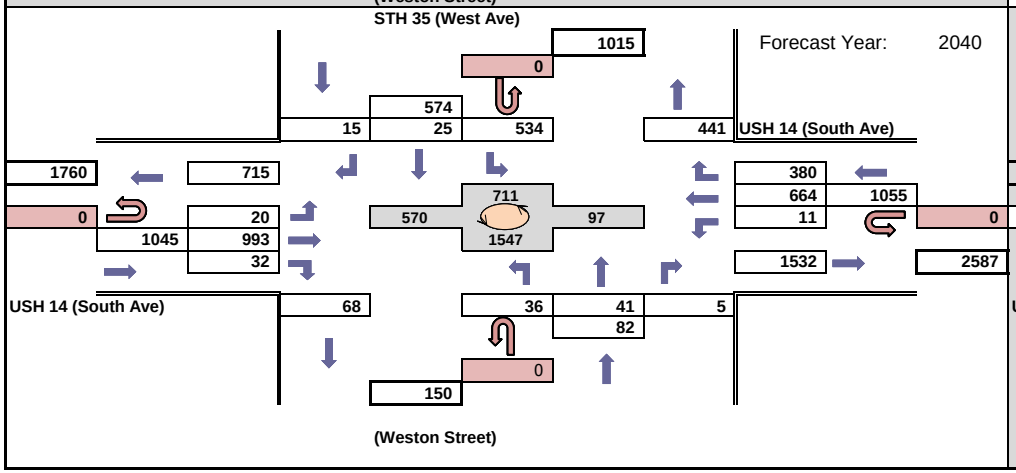

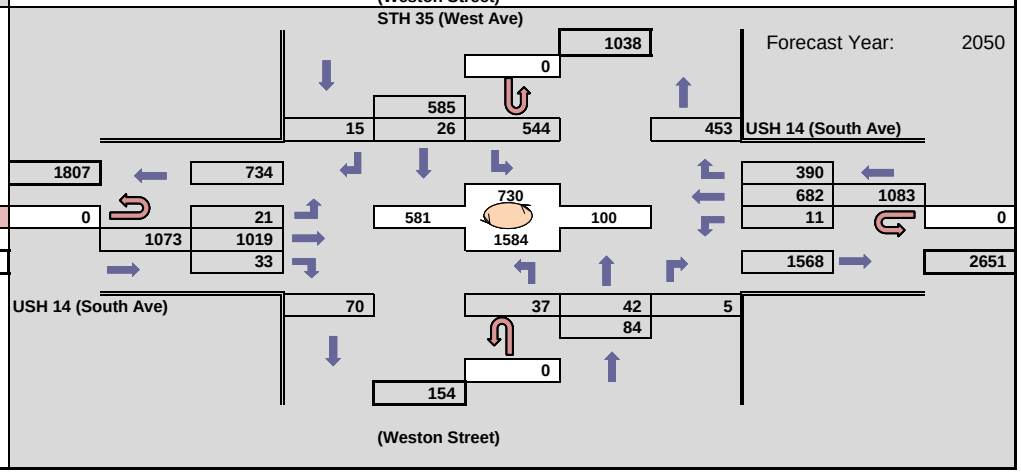

WisDOT Bureau of Planning & Economic Development
Traffic Forecasting Section
Forecast by: Miao Zhang
Phone: (608) 266 - 7995
Email: miao.zhang@dot.wi.gov

Projected PM Design Hour Traffic Volumes

Indicates roundabout

Design Hour: 4:00-5:00pm

Forecast Completed: 2/25/2021

Project Description

Project ID(s): 1630-08-00
Route(s): US 14
Region/COUNTY(IES): SW/La Crosse
Location: US14(South Ave) & West Ave

Design Hour Turning Movement Data

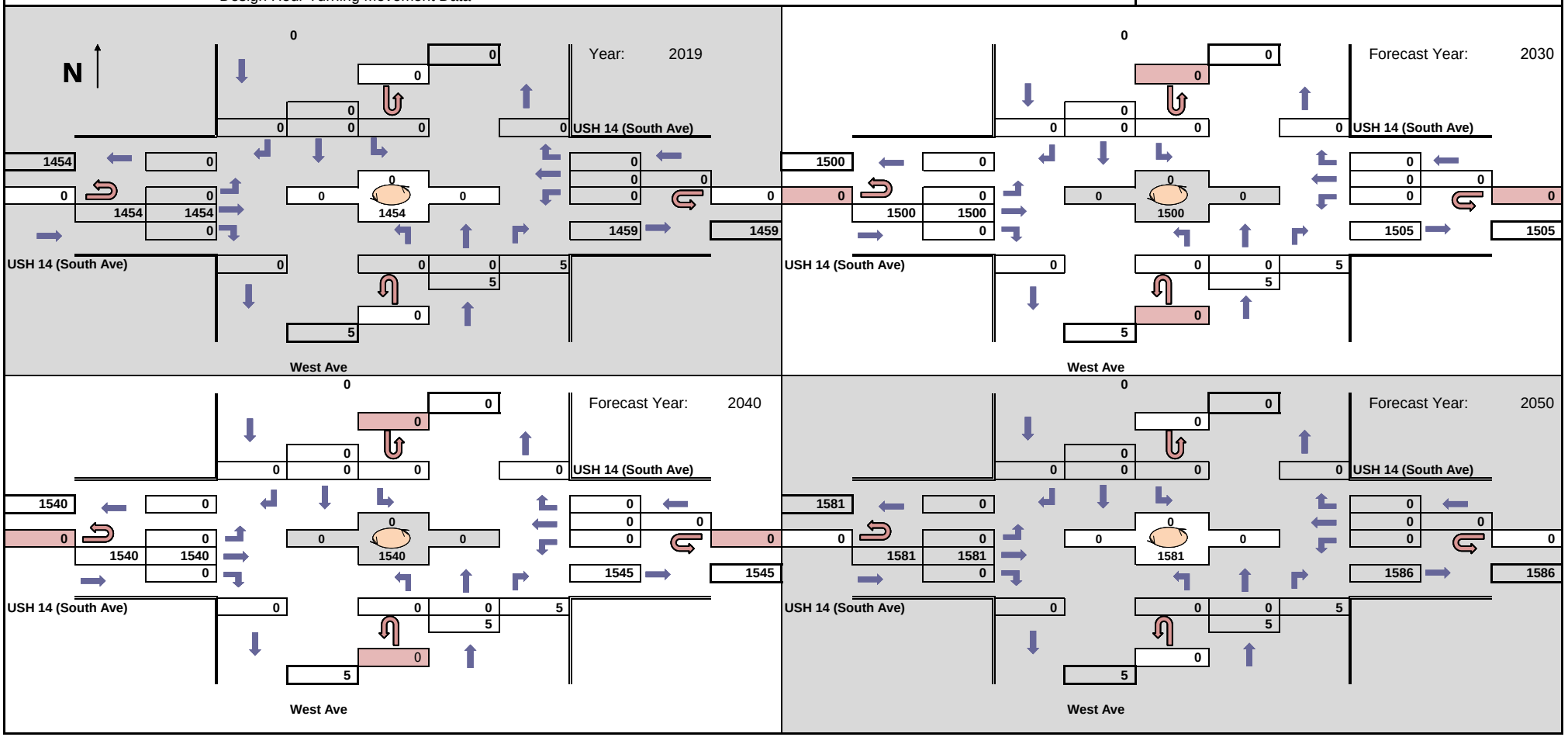

WisDOT Bureau of Planning & Economic Development
Traffic Forecasting Section
Forecast by: Miao Zhang
Phone: (608) 266 - 7995
Email: miao.zhang@dot.wi.gov

Projected AM Design Hour Traffic Volumes

Indicates roundabout

Design Hour: 7:00-8:00am

Forecast Completed: 2/25/2021

Project Description

Project ID(s): 1630-08-00
Route(s): US 14
Region/COUNTY(IES): SW/La Crosse
Location: US 14 (South Ave) & 16th St / Thompson St

Design Hour Turning Movement Data

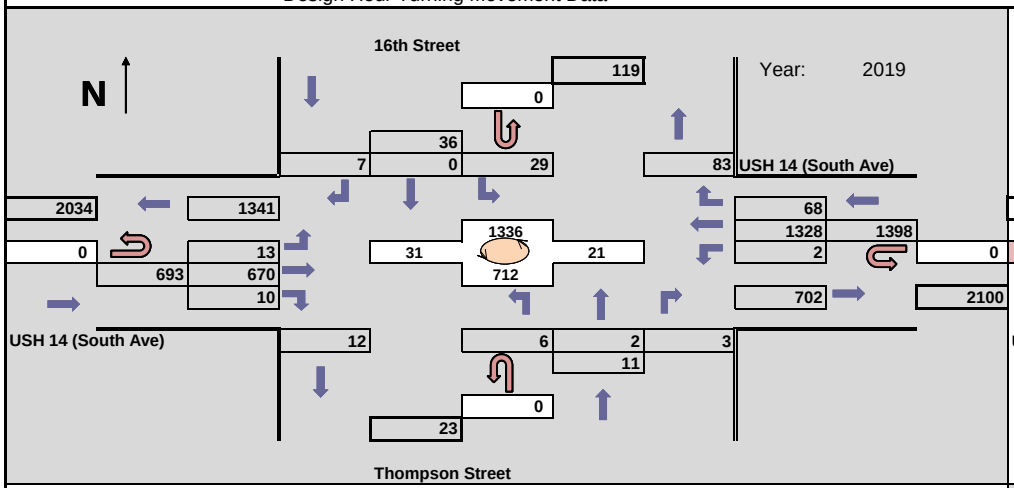

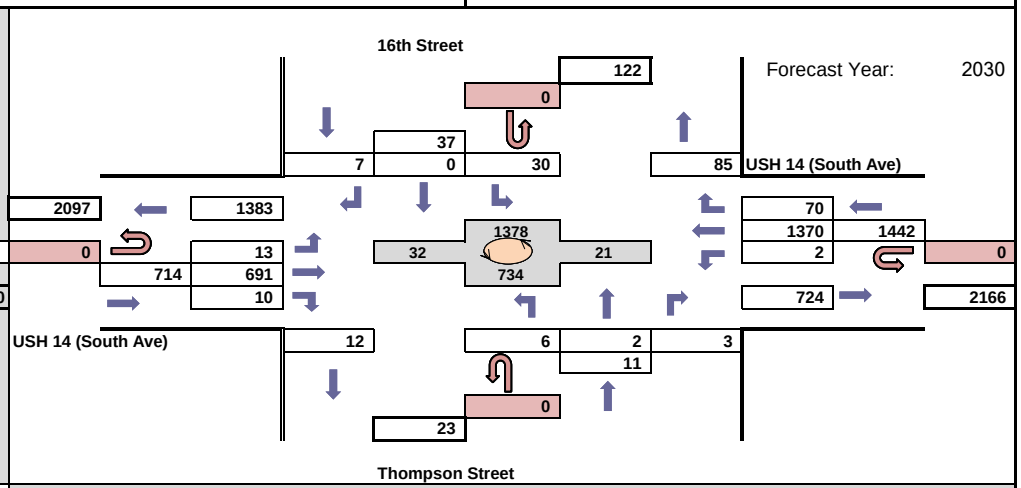

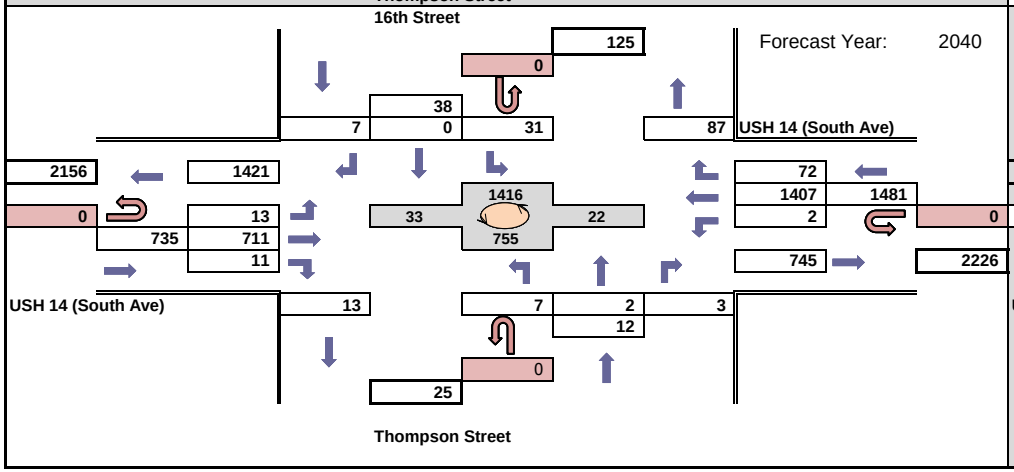

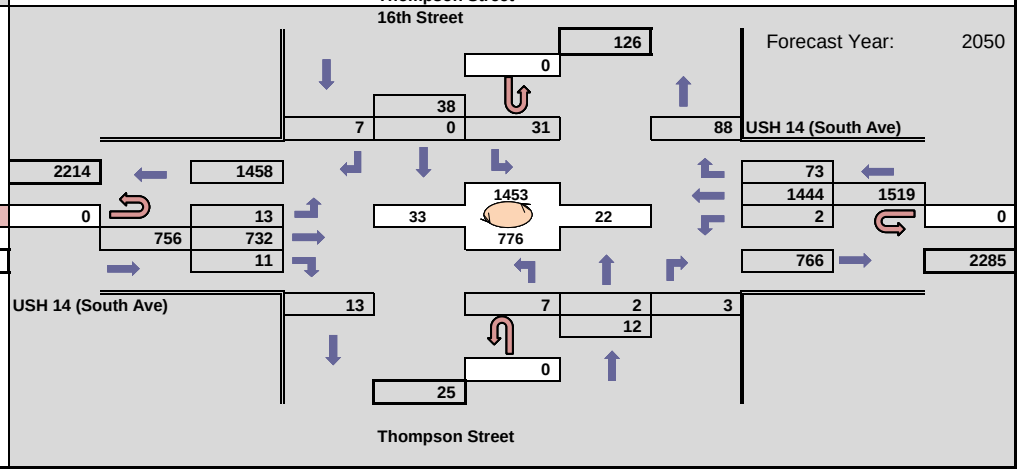

WisDOT Bureau of Planning & Economic Development
Traffic Forecasting Section
Forecast by: Miao Zhang
Phone: (608) 266 - 7995
Email: miao.zhang@dot.wi.gov

Projected PM Design Hour Traffic Volumes

Indicates roundabout

Design Hour: 4:00-5:00pm

Forecast Completed: 2/25/2021

Project Description

Project ID(s): 1630-08-00
Route(s): US 14
Region/COUNTY(IES): SW/La Crosse
Location: US 14 (South Ave) & 16th St / Thompson St

Design Hour Turning Movement Data

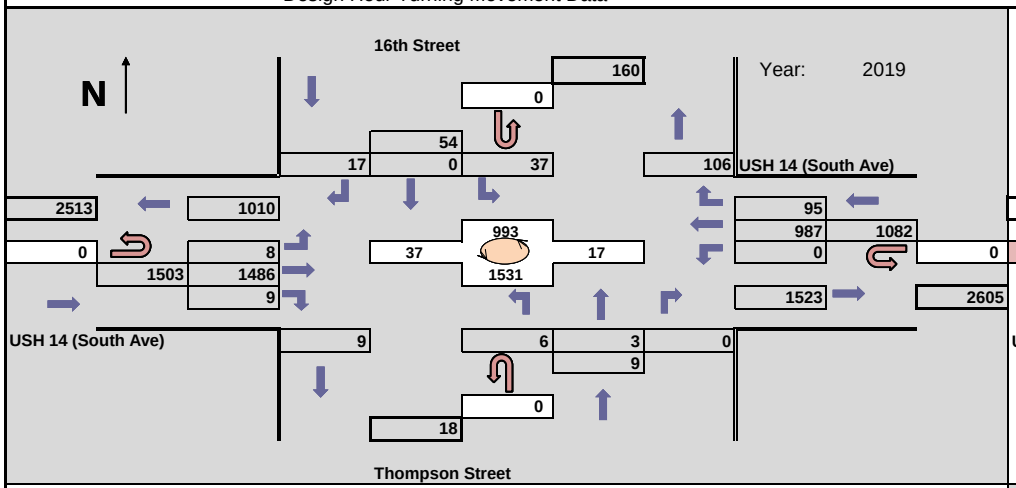

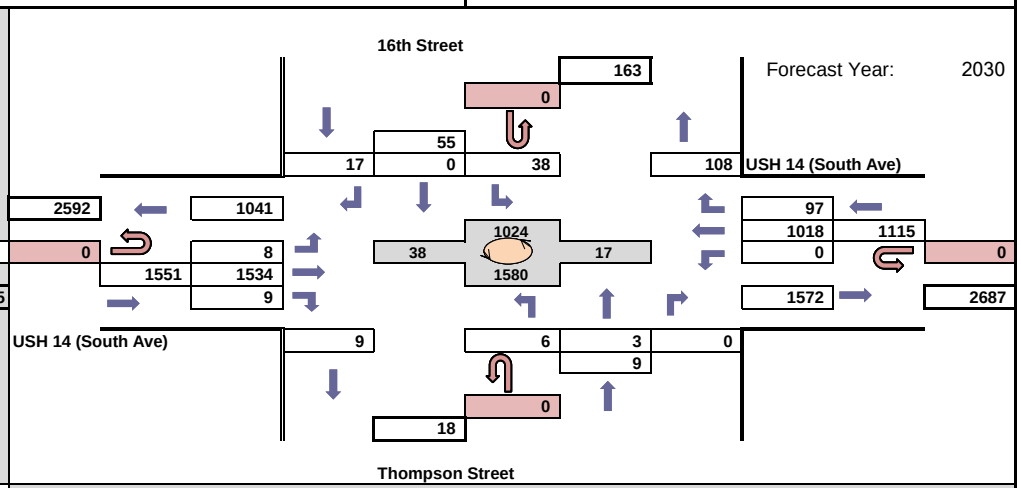

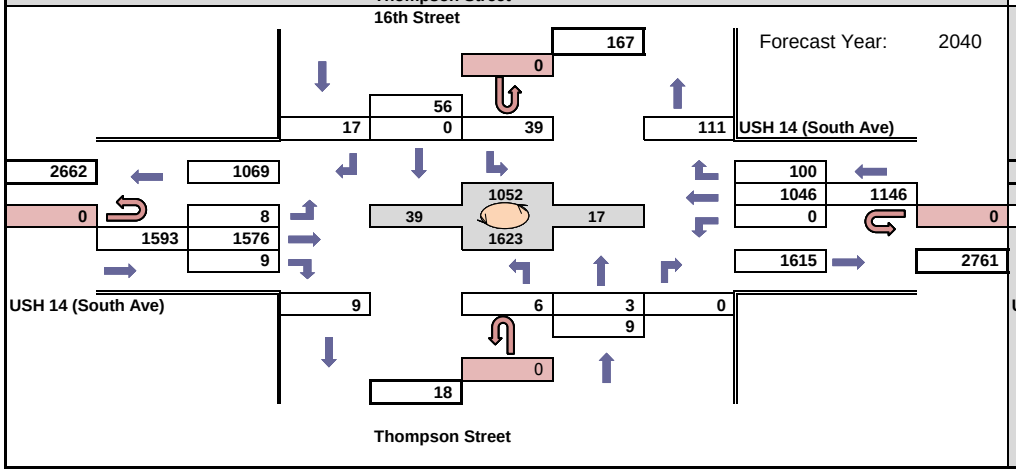

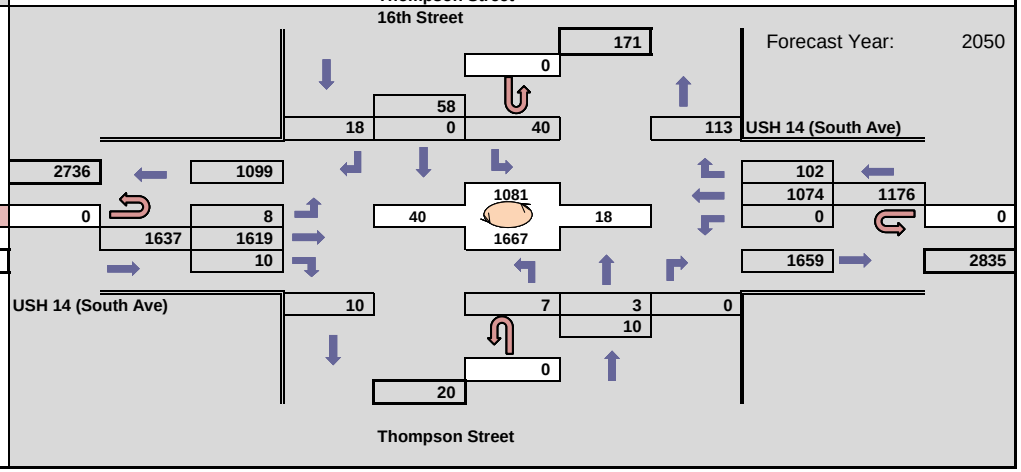

WisDOT Bureau of Planning & Economic Development
Traffic Forecasting Section
Forecast by: Miao Zhang
Phone: (608) 266 - 7995
Email: miao.zhang@dot.wi.gov

Projected AM Design Hour Traffic Volumes

Indicates roundabout

Design Hour: 7:00-8:00am

Forecast Completed: 2/25/2021

Project Description

Project ID(s): 1630-08-00
Route(s): US 14
Region/COUNTY(IES): SW/La Crosse
Location: US 14 (South Ave) & Ward Ave

Design Hour Turning Movement Data

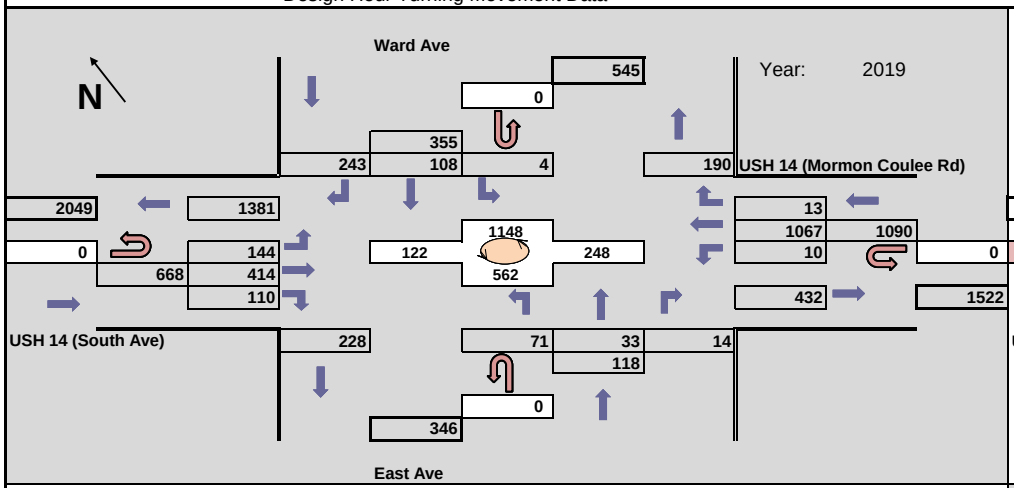

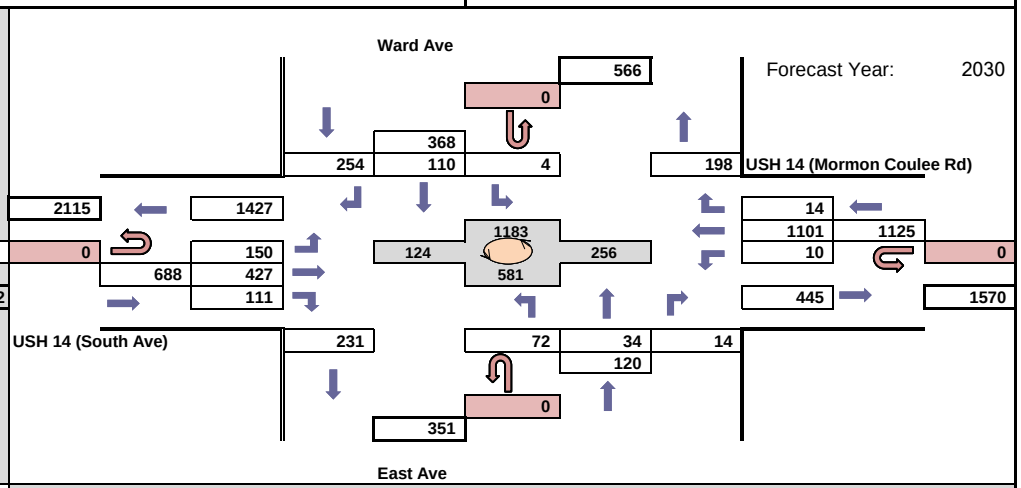

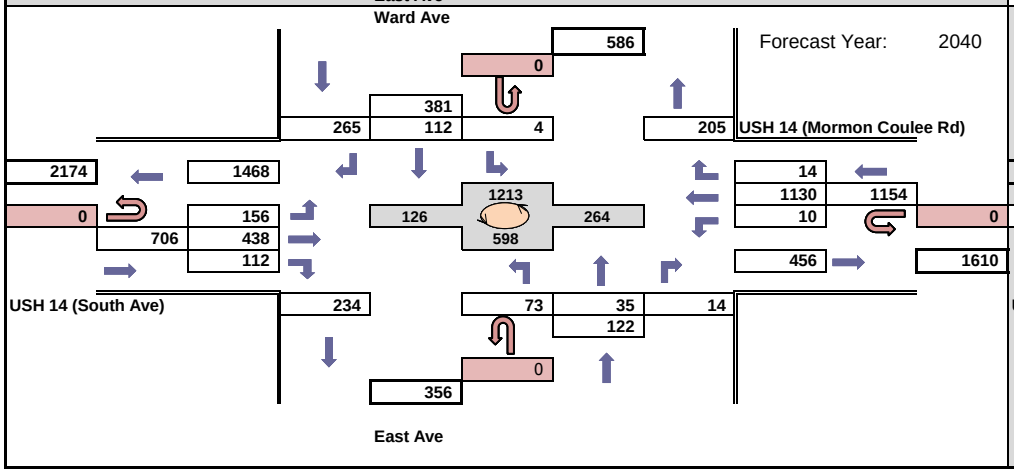

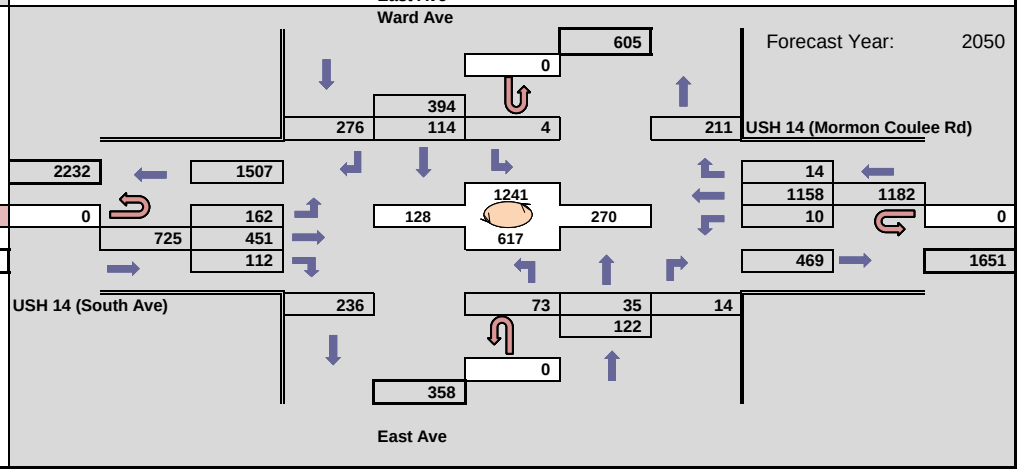

WisDOT Bureau of Planning & Economic Development
Traffic Forecasting Section
Forecast by: Miao Zhang
Phone: (608) 266 - 7995
Email: miao.zhang@dot.wi.gov

Projected AM Design Hour Traffic Volumes

Indicates roundabout

Design Hour: 7:00-8:00am

Forecast Completed: 2/25/2021

Project Description

Project ID(s): 1630-08-00
Route(s): US 14
Region/COUNTY(IES): SW/La Crosse
Location: US 14 (South Ave) & East Ave

Design Hour Turning Movement Data

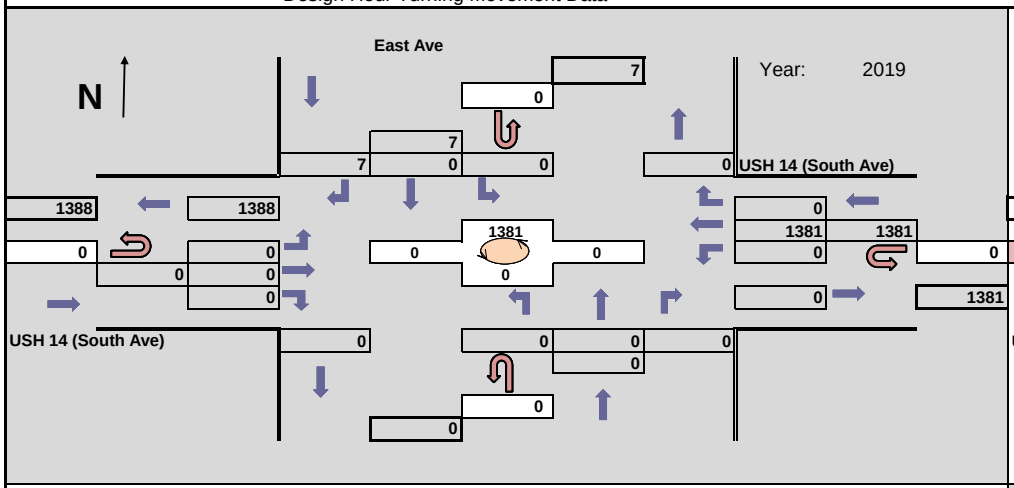

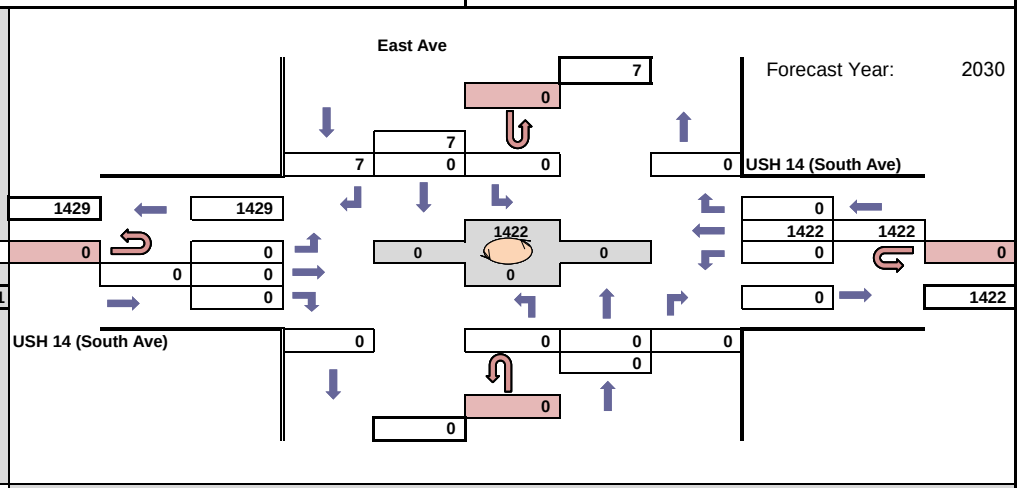

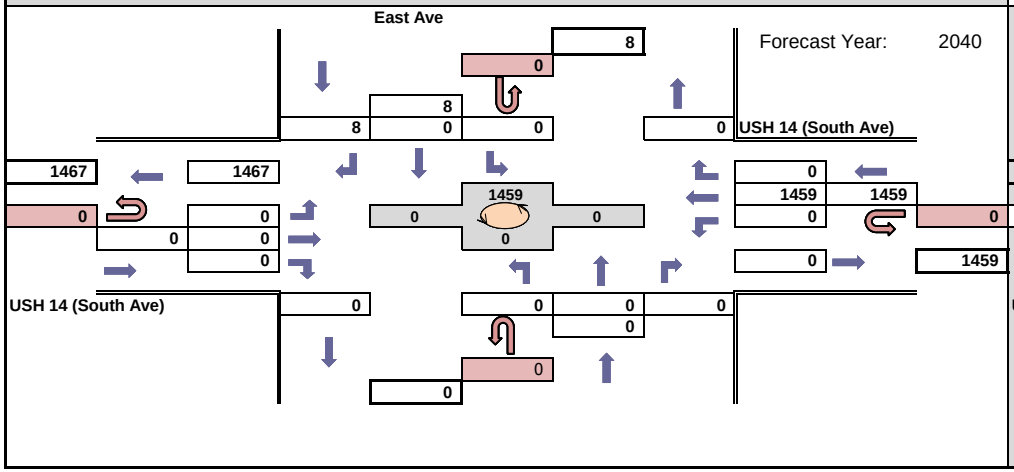

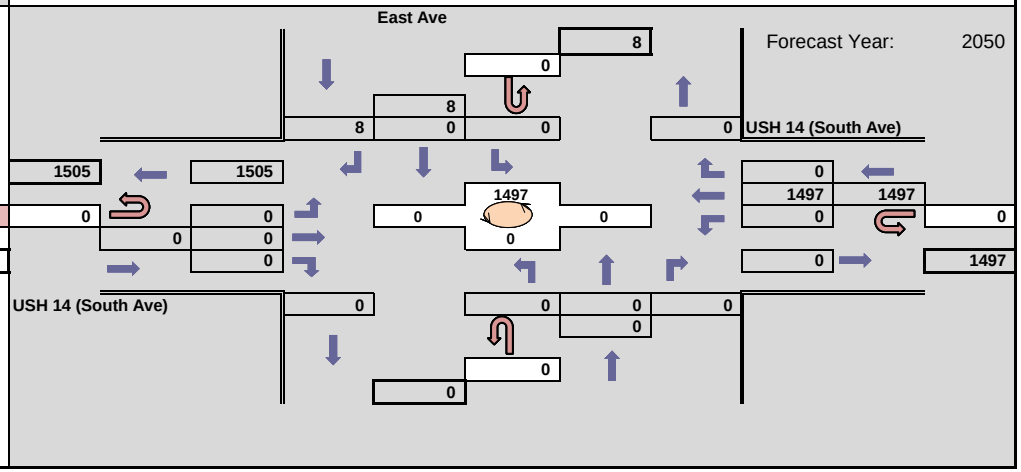

WisDOT Bureau of Planning & Economic Development
Traffic Forecasting Section
Forecast by: Miao Zhang
Phone: (608) 266 - 7995
Email: miao.zhang@dot.wi.gov

Projected PM Design Hour Traffic Volumes

Indicates roundabout

Design Hour: 4:00-5:00pm

Forecast Completed: 2/25/2021

Project Description

Project ID(s): 1630-08-00
Route(s): US 14
Region/COUNTY(IES): SW/La Crosse
Location: US 14 (South Ave) & Ward Ave

Design Hour Turning Movement Data

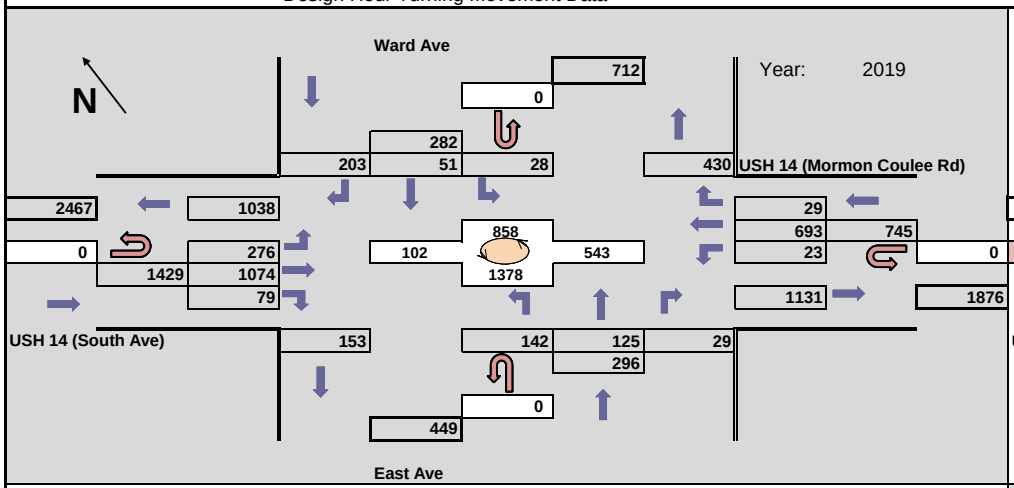

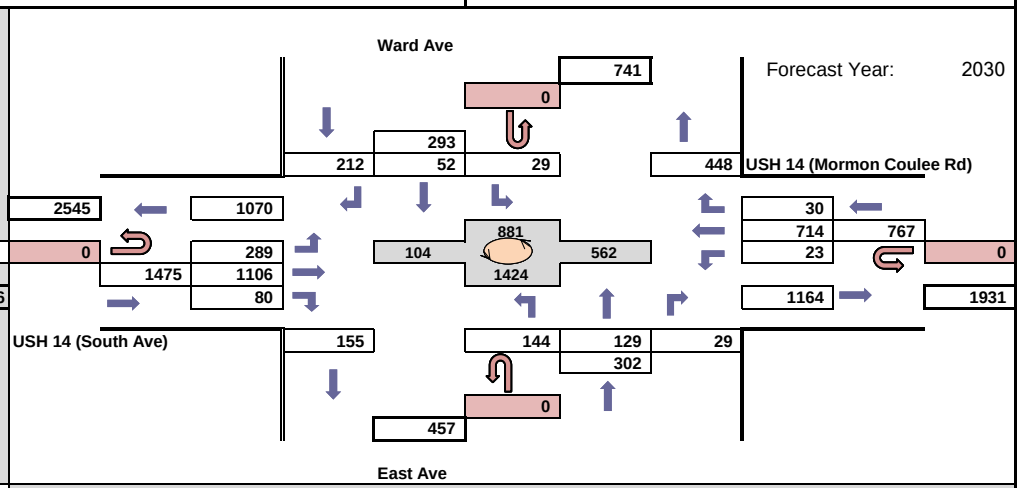

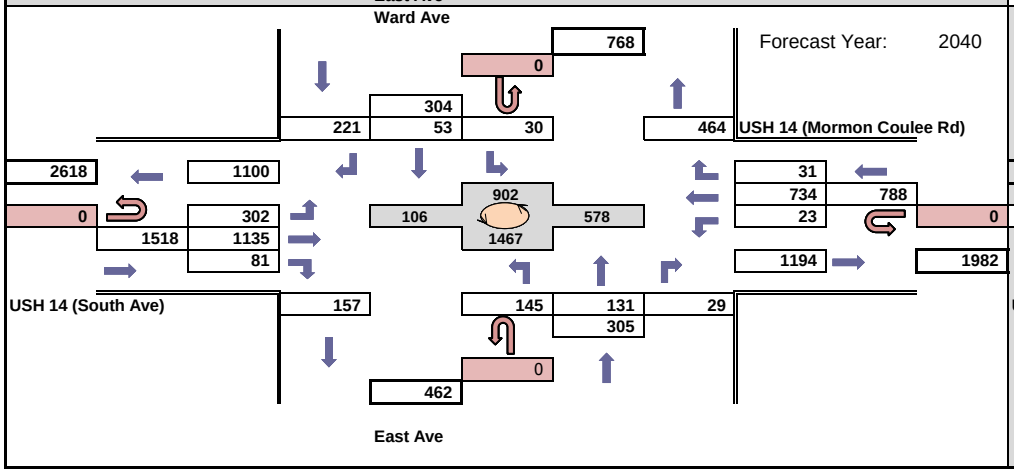

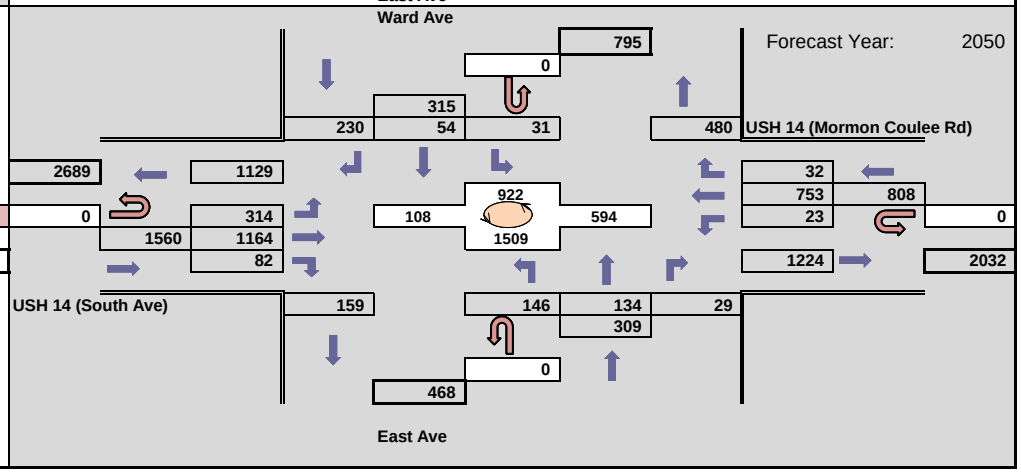

WisDOT Bureau of Planning & Economic Development
Traffic Forecasting Section
Forecast by: Miao Zhang
Phone: (608) 266 - 7995
Email: miao.zhang@dot.wi.gov

Projected PM Design Hour Traffic Volumes

Indicates roundabout

Design Hour: 4:00-5:00pm

Forecast Completed: 2/25/2021

Project Description

Project ID(s): 1630-08-00
Route(s): US 14
Region/COUNTY(IES): SW/La Crosse
Location: US 14 (South Ave) & East Ave

Design Hour Turning Movement Data

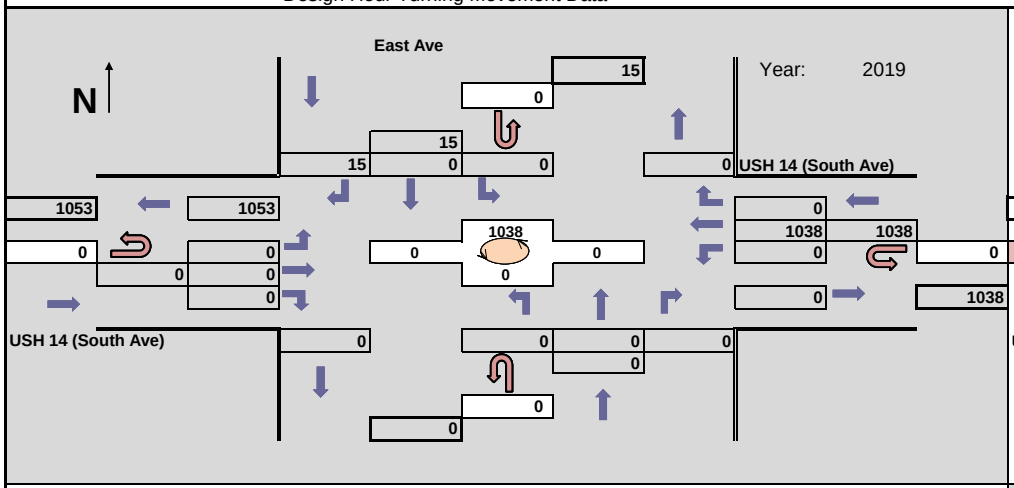

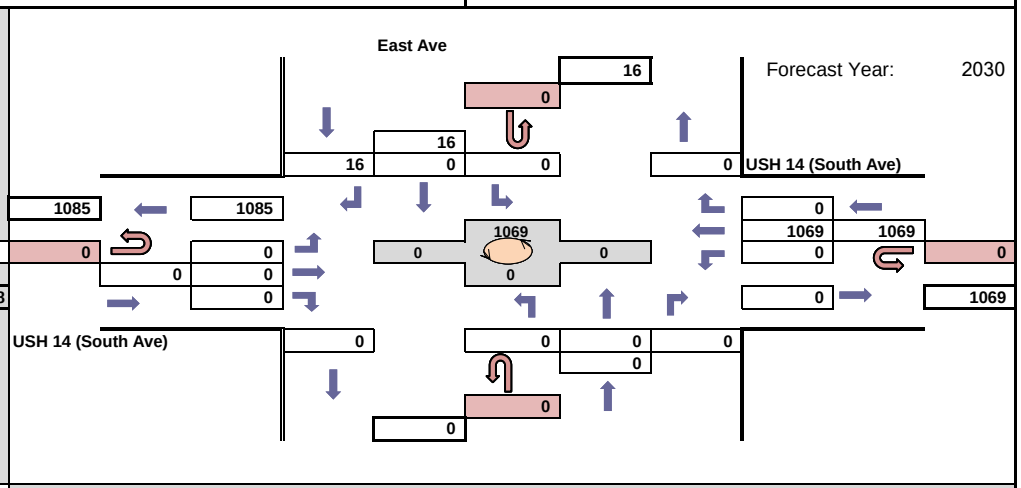

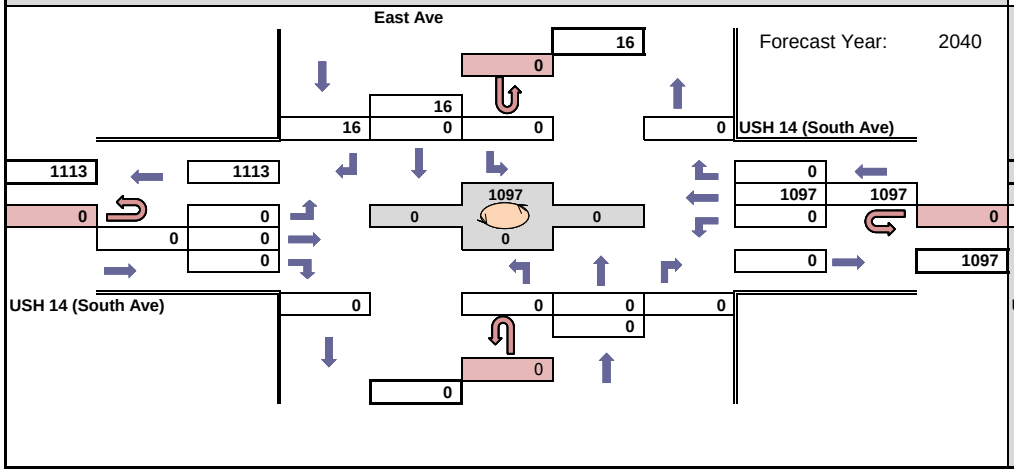

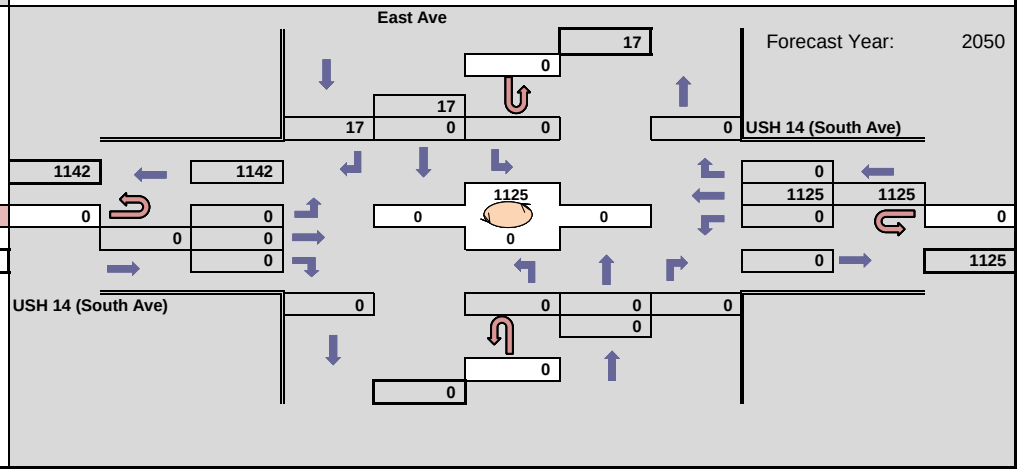

WisDOT Bureau of Planning & Economic Development
Traffic Forecasting Section
Forecast by: Miao Zhang
Phone: (608) 266 - 7995
Email: miao.zhang@dot.wi.gov

Projected AM Design Hour Traffic Volumes

Indicates roundabout

Design Hour: 7:00-8:00am

Forecast Completed: 2/23/2021

Project Description

Project ID(s): 1630-08-00
Route(s): US 14
Region/COUNTY(IES): SW/La Crosse
Location: US 14 & 21st St / Victory St

Design Hour Turning Movement Data

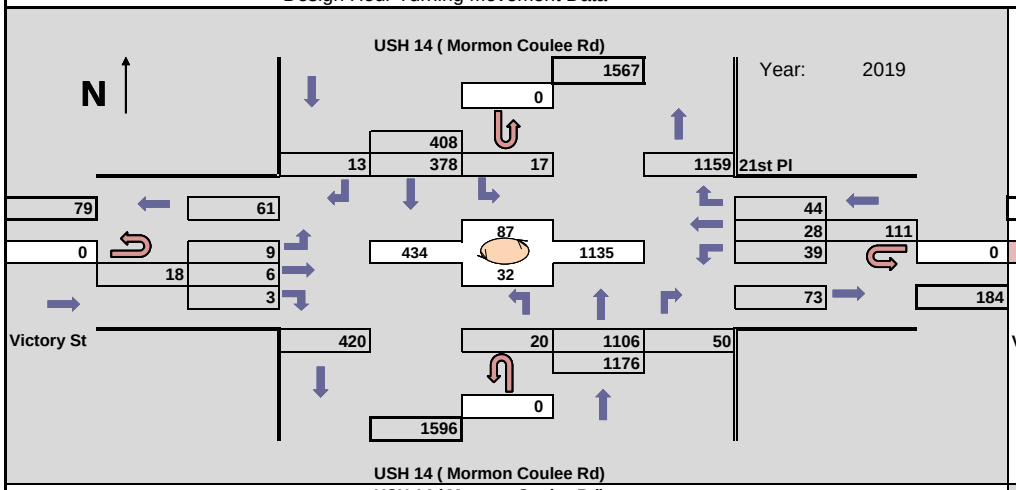

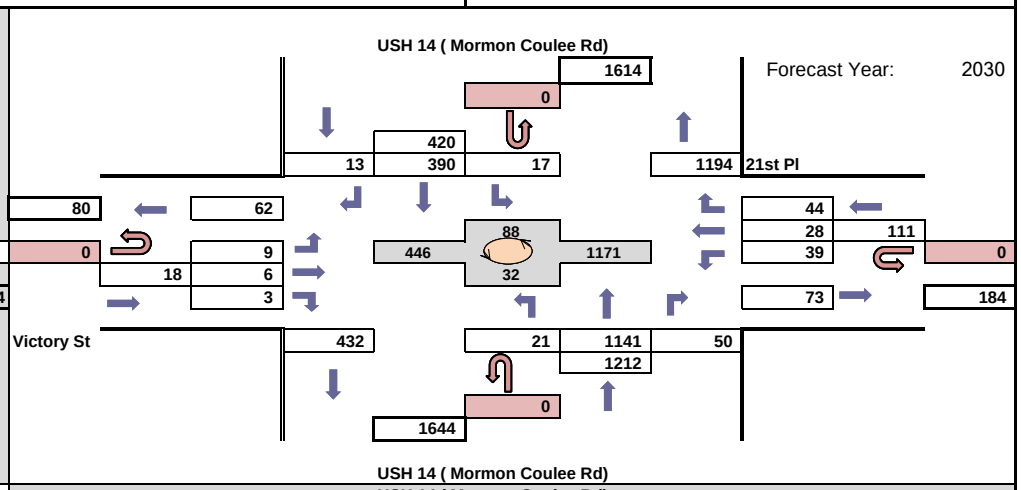

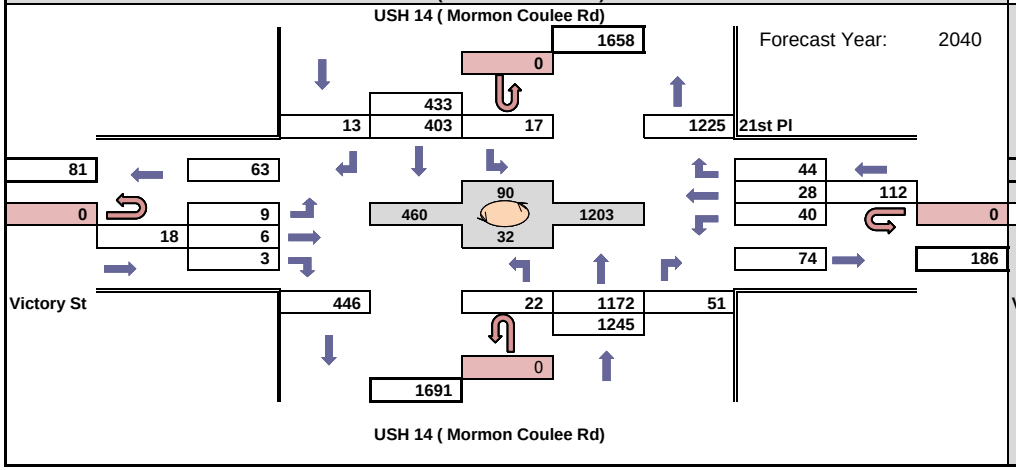

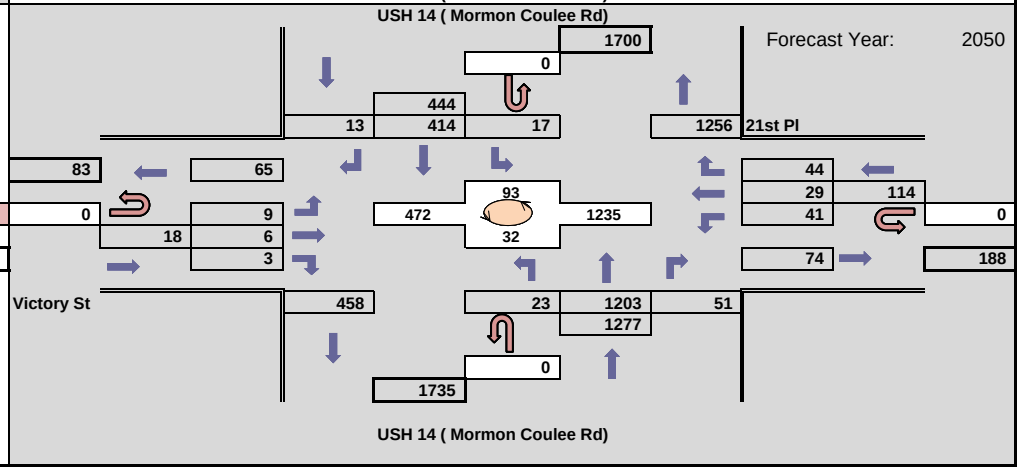

WisDOT Bureau of Planning & Economic Development
Traffic Forecasting Section
Forecast by: Miao Zhang
Phone: (608) 266 - 7995
Email: miao.zhang@dot.wi.gov

Projected PM Design Hour Traffic Volumes

Indicates roundabout

Design Hour: 4:00-5:00pm

Forecast Completed: 2/23/2021

Project Description

Project ID(s): 1630-08-00
Route(s): US 14
Region/COUNTY(IES): SW/La Crosse
Location: US 14 & 21st St / Victory St

Design Hour Turning Movement Data

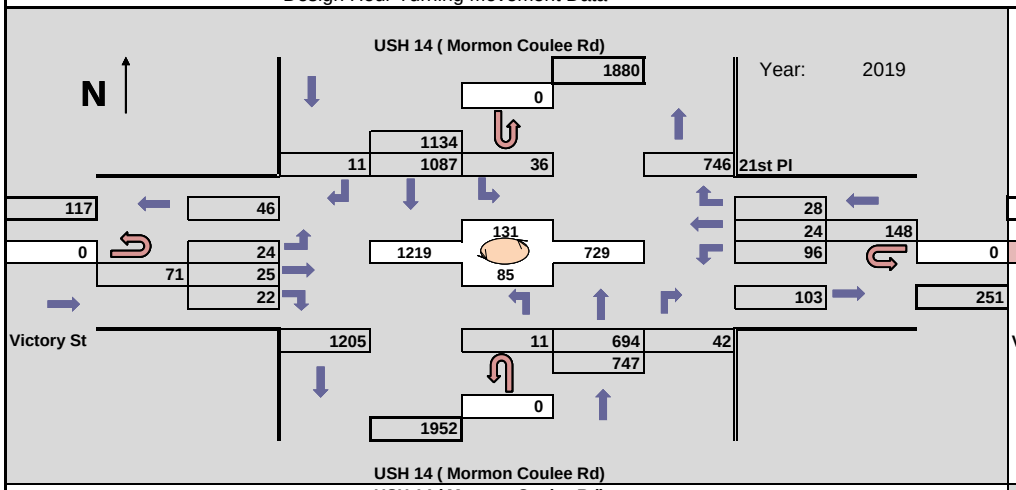

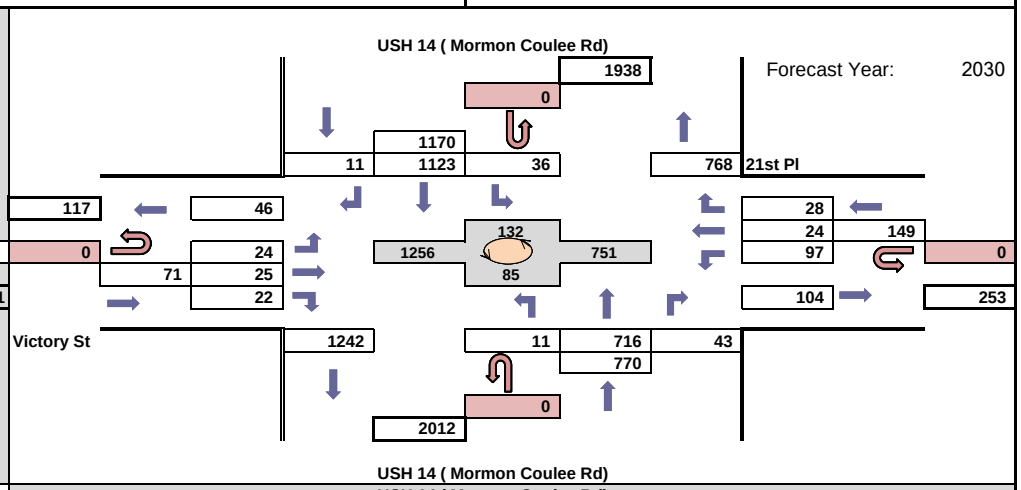

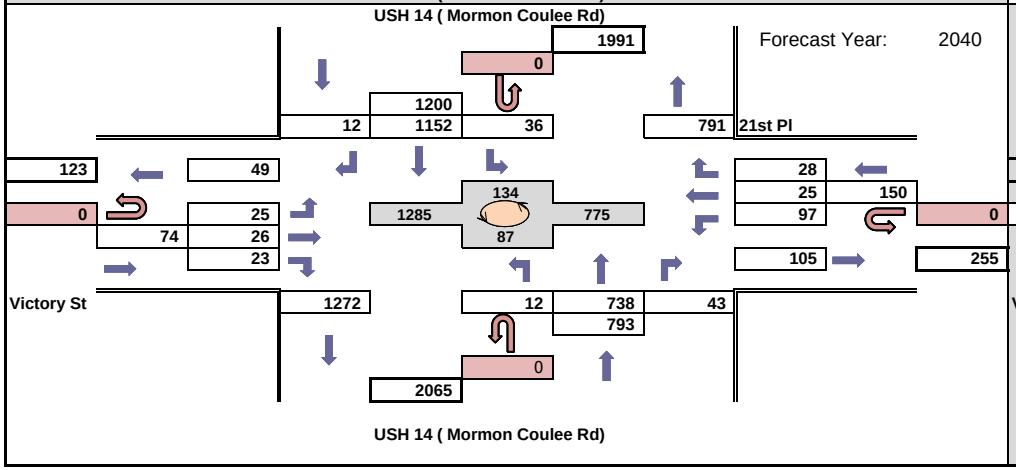

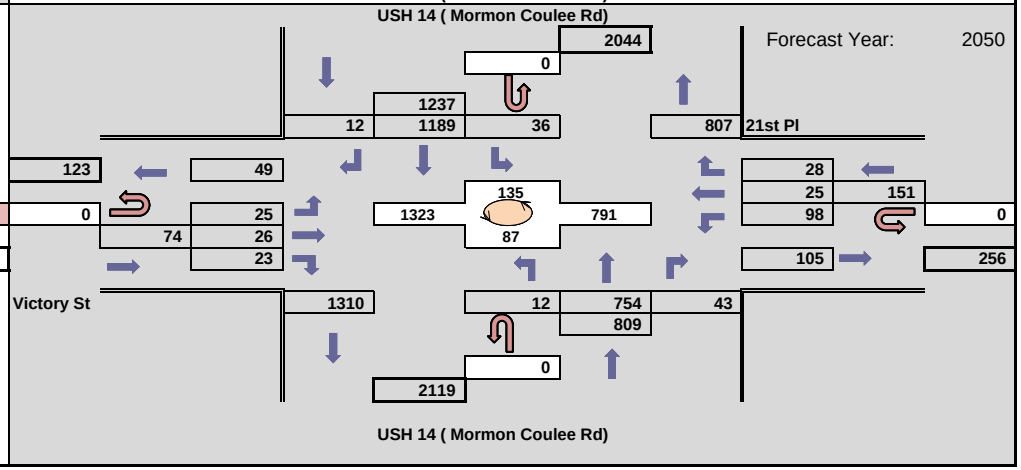

WisDOT Bureau of Planning & Economic Development
Traffic Forecasting Section
Forecast by: Miao Zhang
Phone: (608) 266 - 7995
Email: miao.zhang@dot.wi.gov

Projected AM Design Hour Traffic Volumes

Indicates roundabout

Design Hour: 7:00-8:00am

Forecast Completed: 2/23/2021

Project Description

Project ID(s): 1630-08-00
Route(s): US 14
Region/COUNTY(IES): SW/La Crosse
Location: US 14 (Mormon Coulee Rd) & Losey Blvd

Design Hour Turning Movement Data

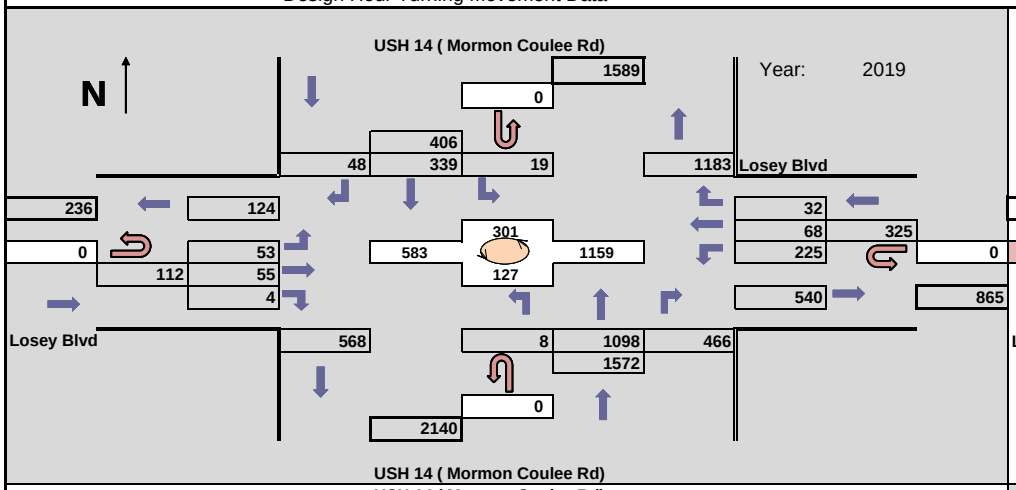

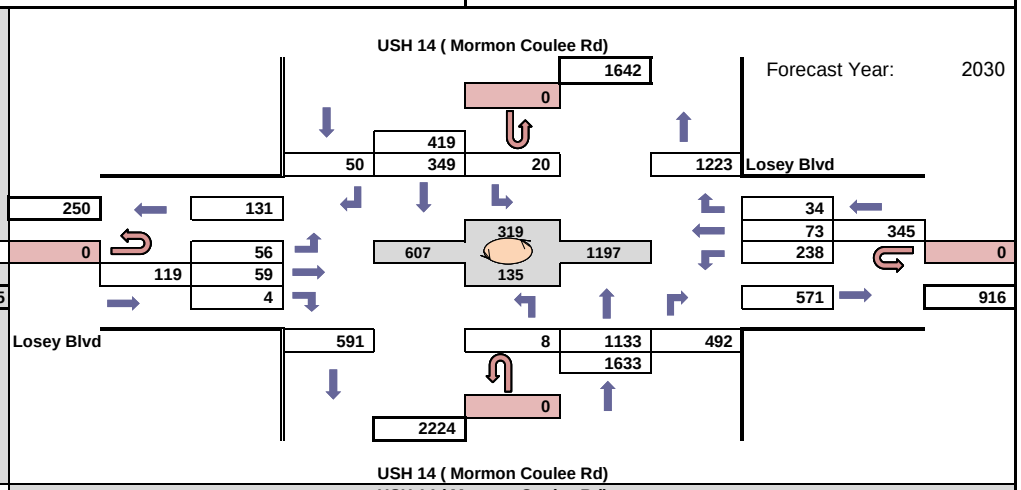

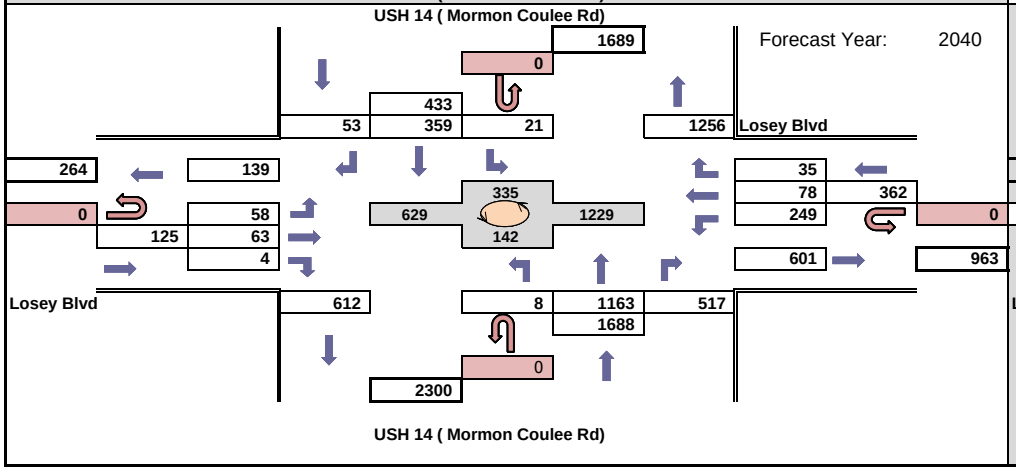

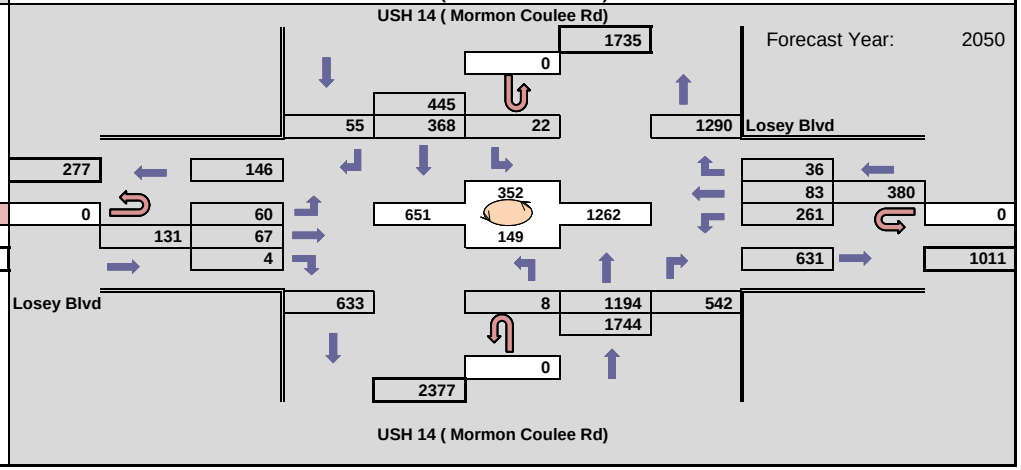

WisDOT Bureau of Planning & Economic Development
Traffic Forecasting Section
Forecast by: Miao Zhang
Phone: (608) 266 - 7995
Email: miao.zhang@dot.wi.gov

Projected PM Design Hour Traffic Volumes

Indicates roundabout

Design Hour: 4:00-5:00pm

Forecast Completed: 2/23/2021

Project Description

Project ID(s): 1630-08-00
Route(s): US 14
Region/COUNTY(IES): SW/La Crosse
Location: US 14 (Mormon Coulee Rd) & Losey Blvd

Design Hour Turning Movement Data

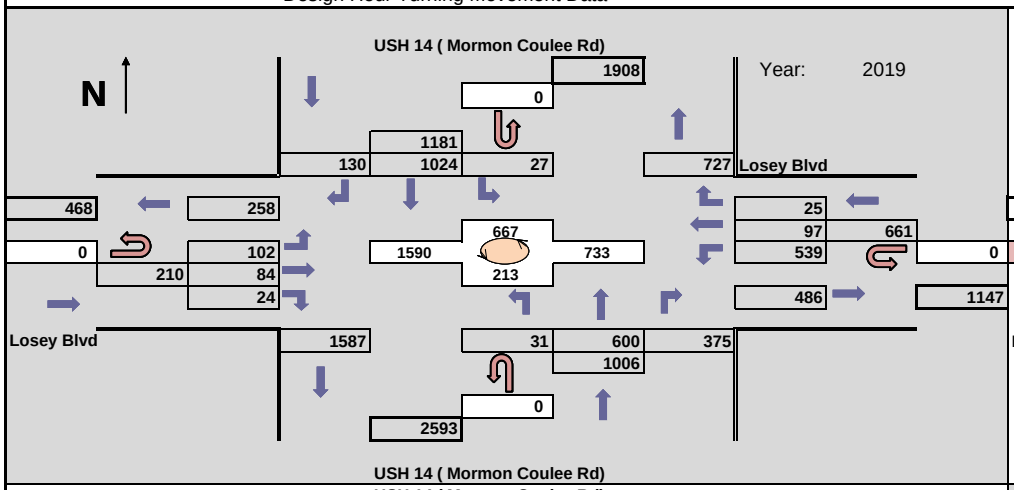

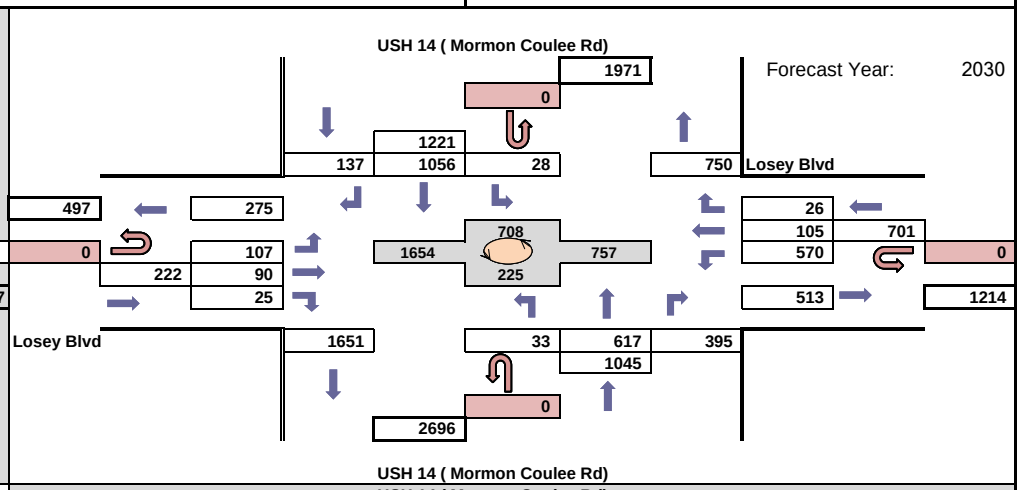

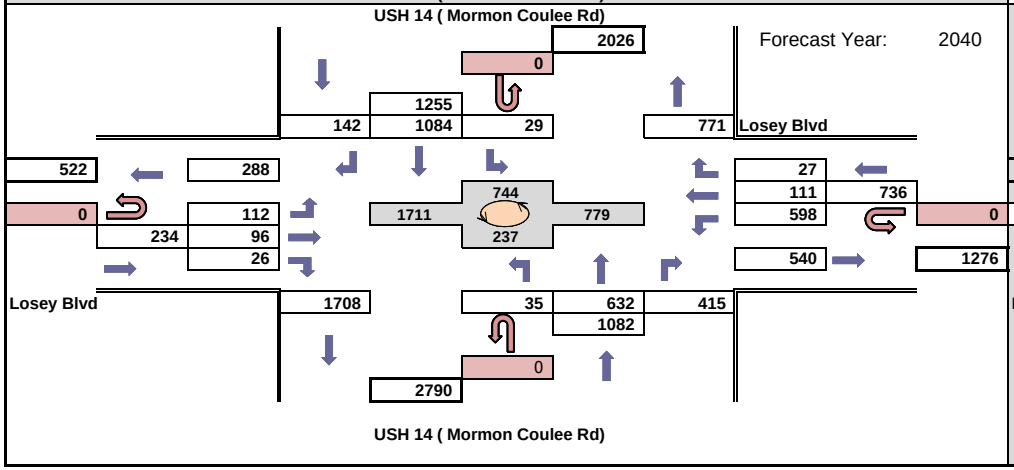

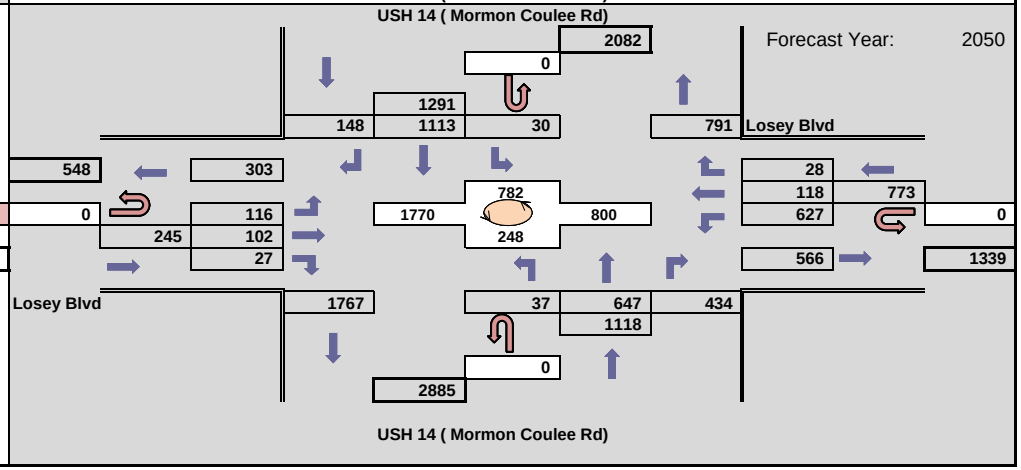

Appendix 2: Design Year Turning Movement Traffic Volumes

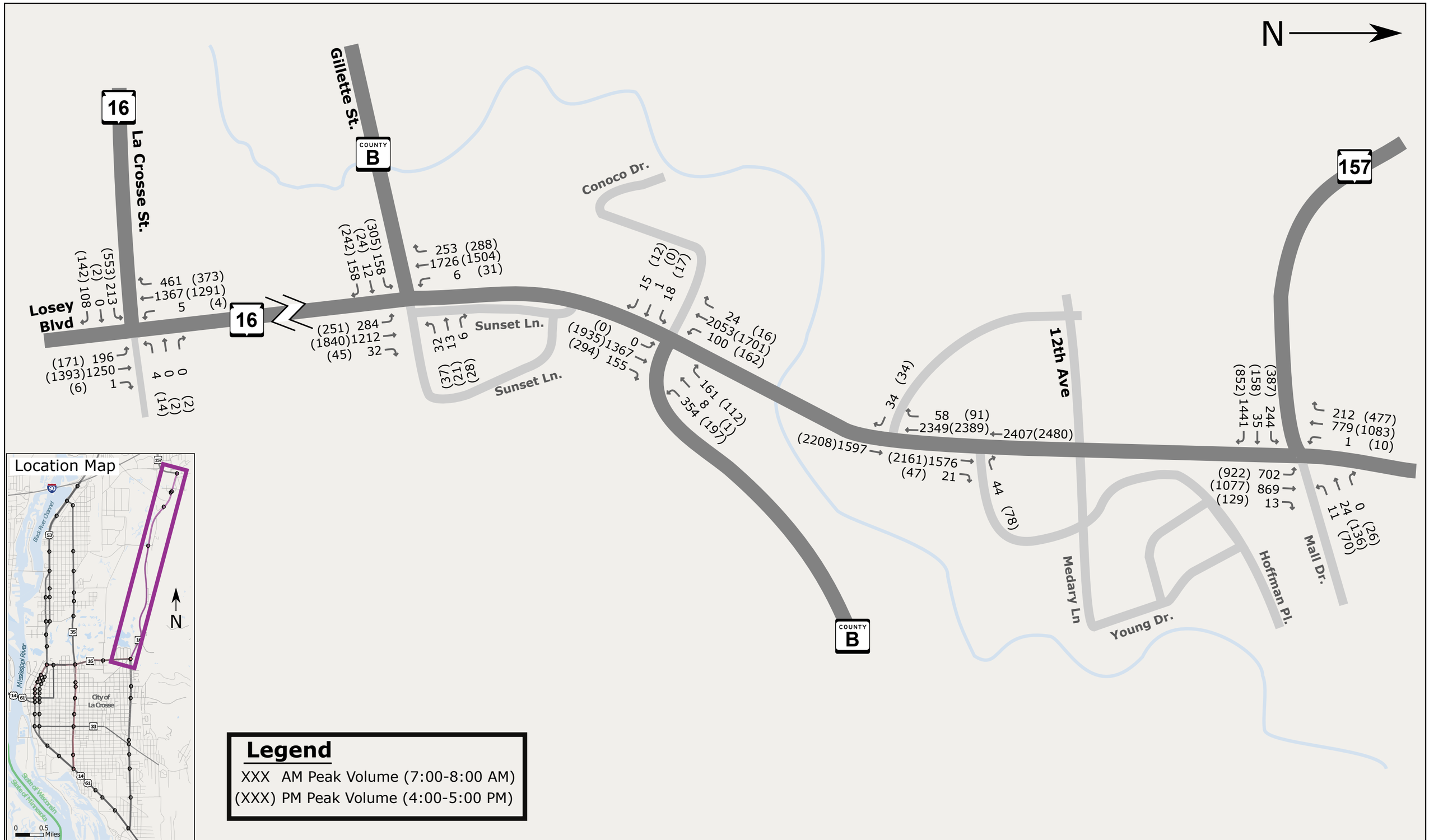

Legend

XXX AM Peak Volume (7:00-8:00 AM)

(XXX) PM Peak Volume (4:00-5:00 PM)

Design Year Turning Movement Traffic Volumes
WIS 16 Segment
La Crosse Safety and Operations Study

December 2021

WisDOT ID: 1630-08-00

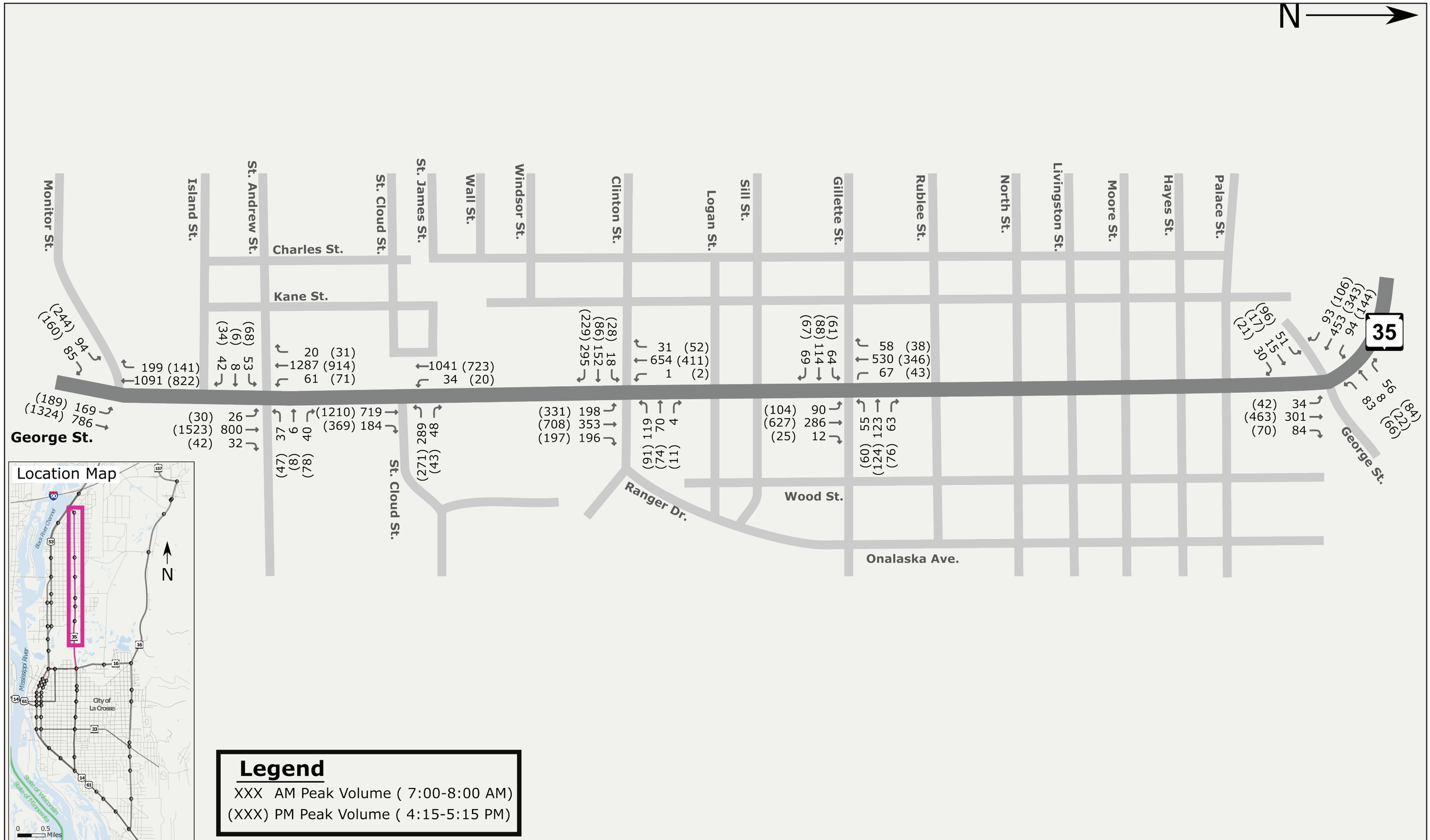

Legend

XXX AM Peak Volume (7:00-8:00 AM)

(XXX) PM Peak Volume (4:15-5:15 PM)

Design Year Turning Movement Traffic Volumes
WIS 35 (George Street / Lang Drive) Segment
La Crosse Safety and Operations Study

March 2021
WisDOT ID: 1630-08-00

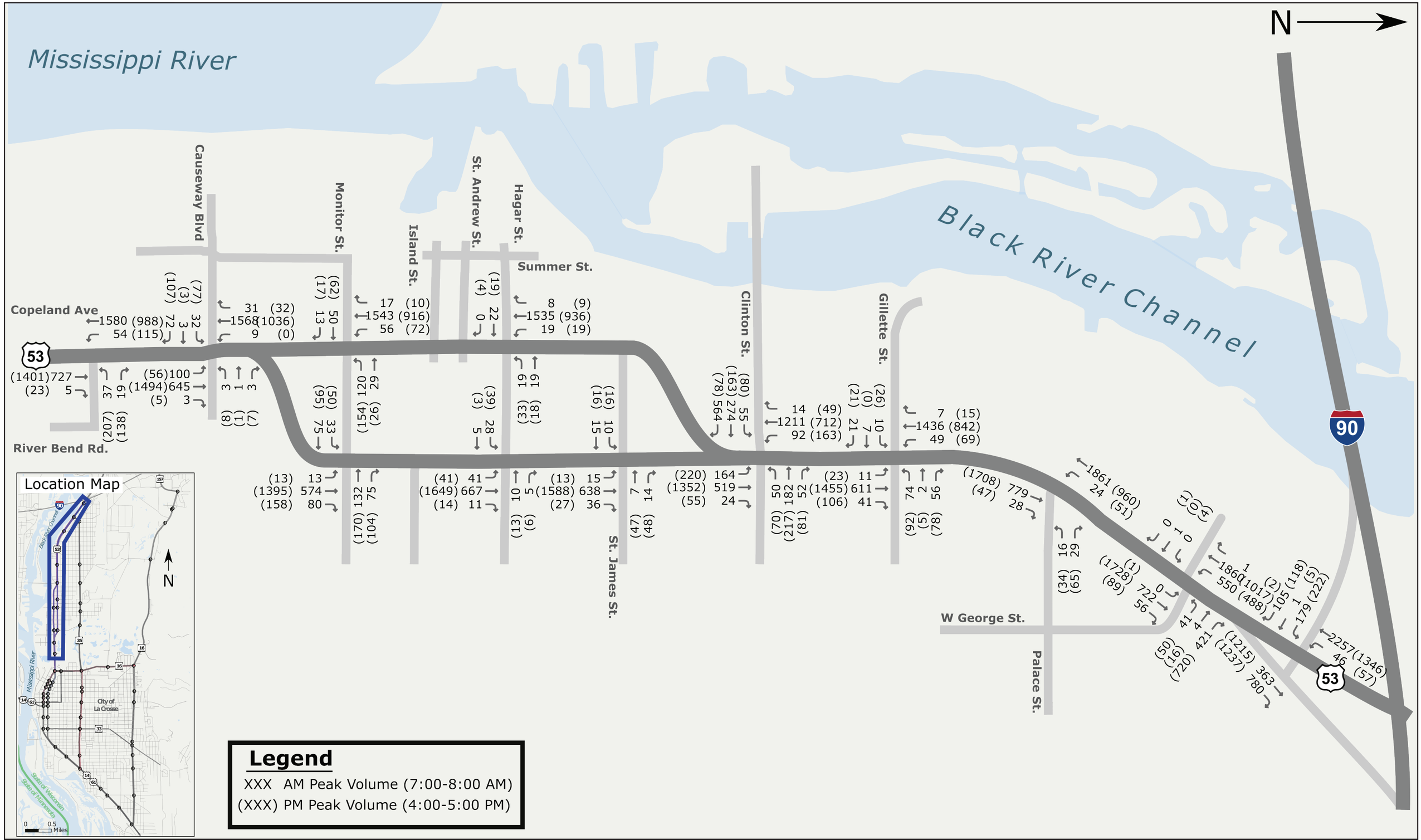

Legend

XXX AM Peak Volume (7:00-8:00 AM)

(XXX) PM Peak Volume (4:00-5:00 PM)

Design Year Turning Movement Traffic Volumes
US 53 (Rose Street / Copeland Avenue) Segment
La Crosse Safety and Operations Study

March 2021

WisDOT ID: 1630-08-00

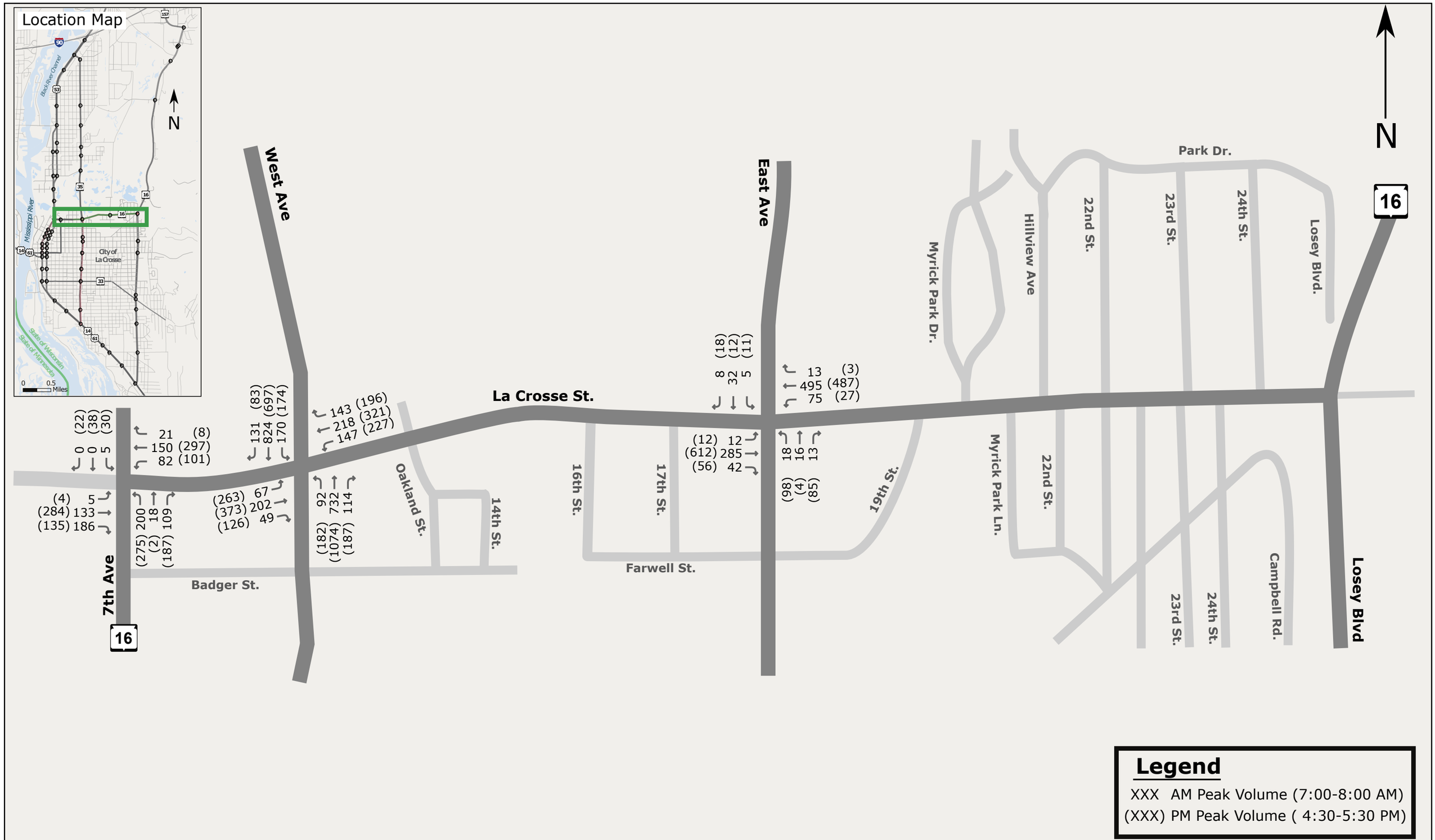

Design Year Turning Movement Traffic Volumes
WIS 16 (La Crosse Street) Segment
La Crosse Safety and Operations Study

December 2021
WisDOT ID: 1630-08-00

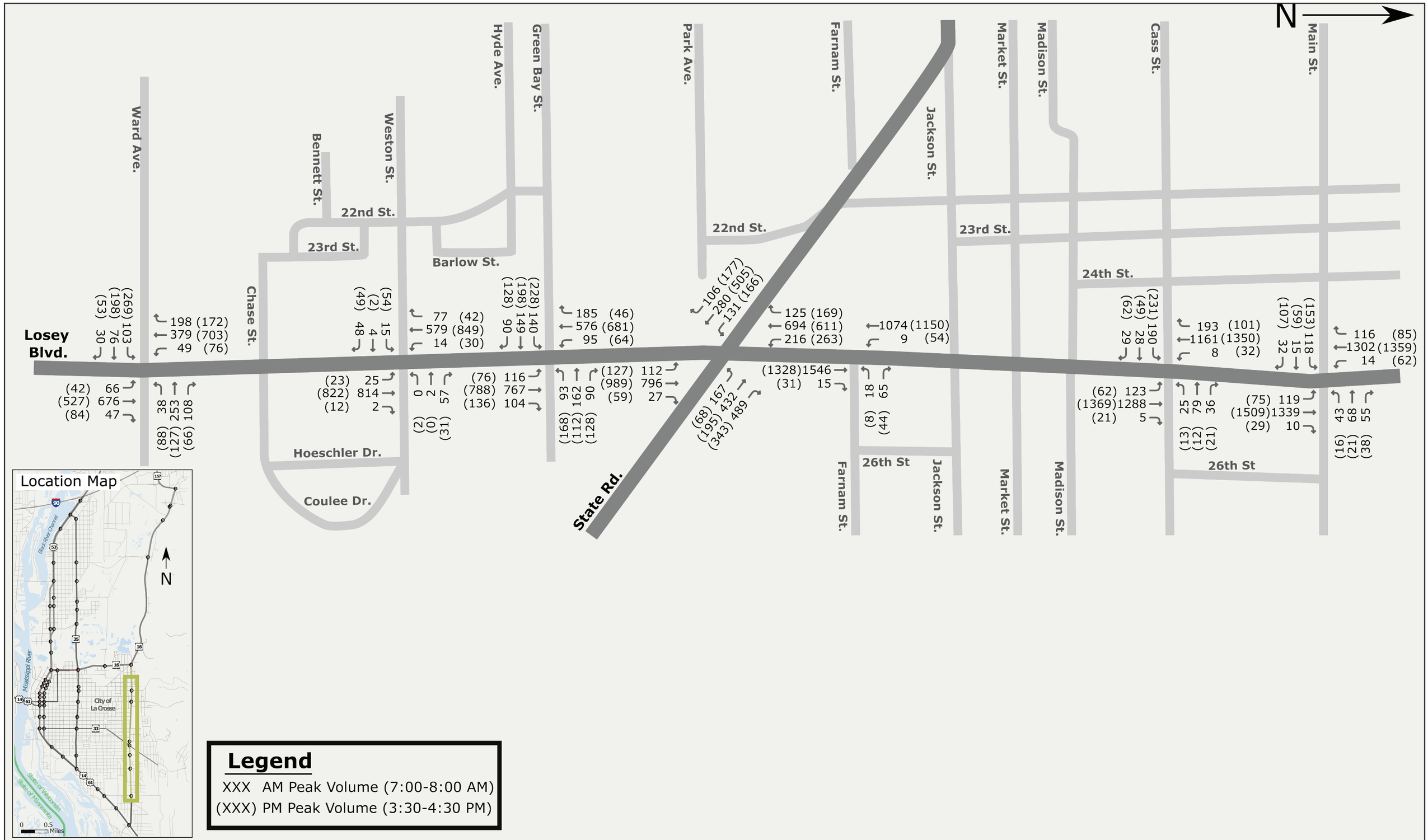

Design Year Turning Movement Traffic Volumes
Losey Boulevard Segment
La Crosse Safety and Operations Study

March 2021
WisDOT ID: 1630-08-00

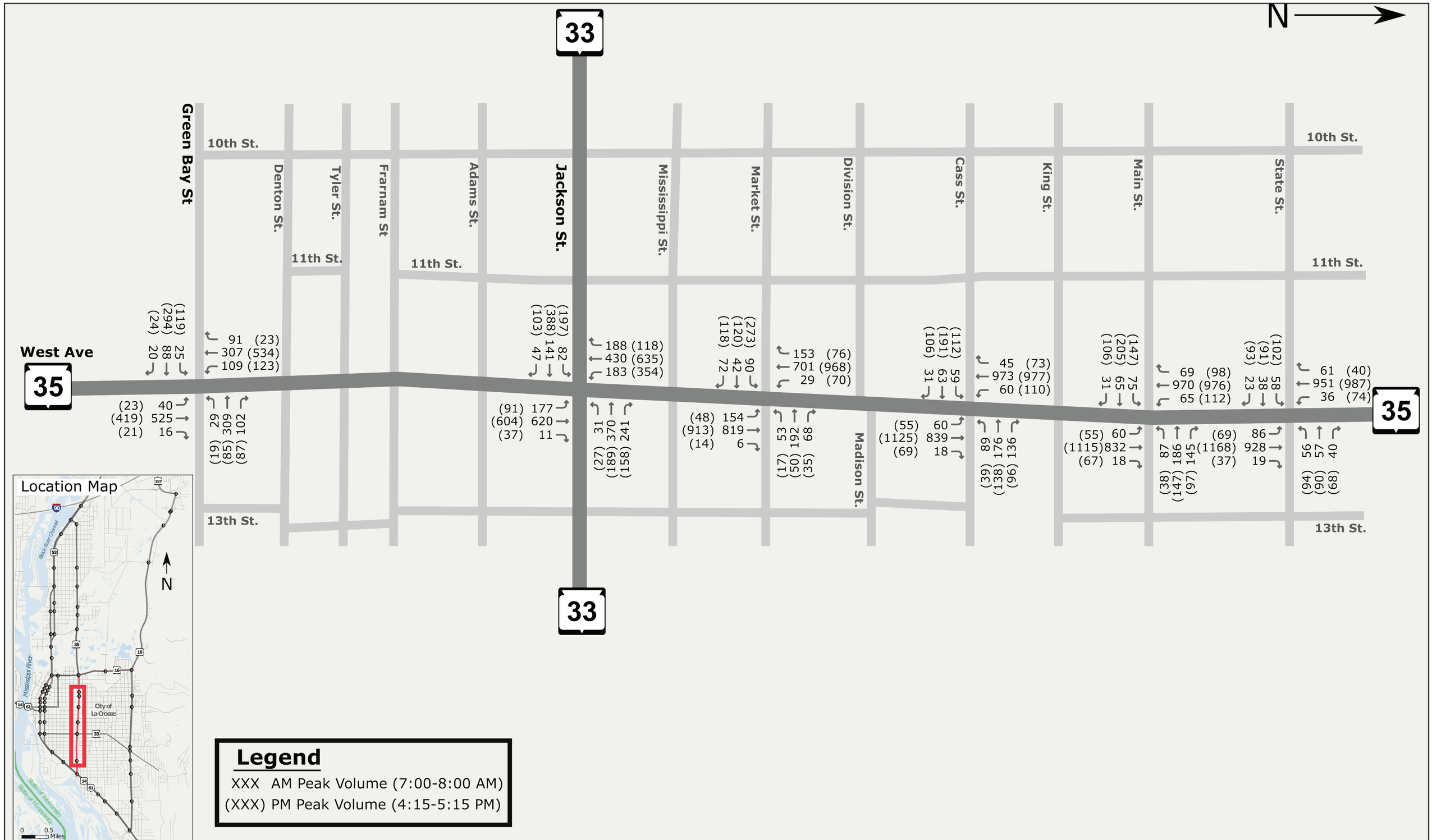

Design Year Turning Movement Traffic Volumes
WIS 35 (West Avenue) Segment
La Crosse Safety and Operations Study

March 2021
WisDOT ID: 1630-08-00

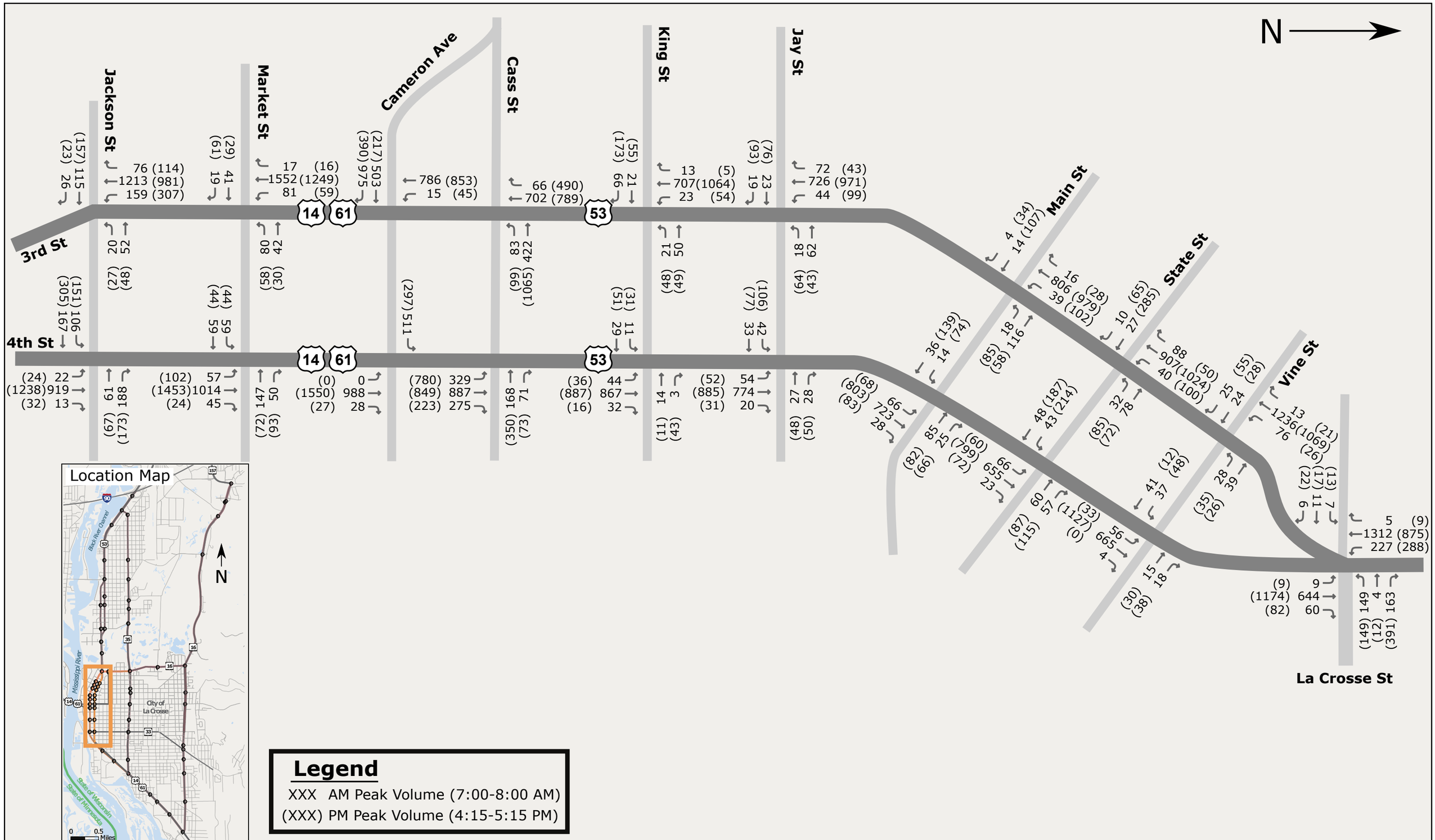

Design Year Turning Movement Traffic Volumes
Downtown Segment
La Crosse Safety and Operations Study

December 2021
WisDOT ID: 1630-08-00

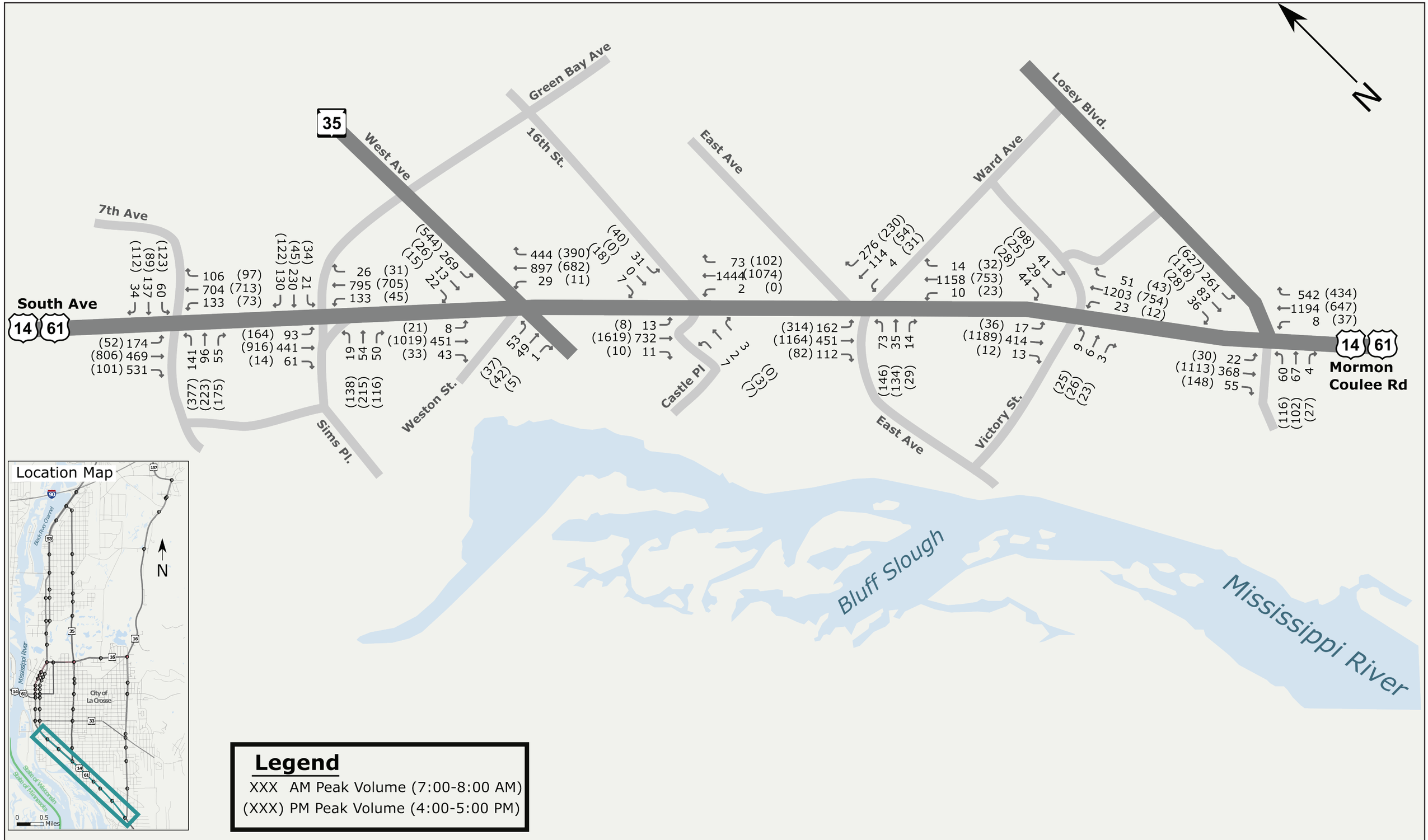

Design Year Turning Movement Traffic Volumes
US 14/61 (South Avenue / Mormon Coulee Road) Segment
La Crosse Safety and Operations Study

March 2021
WisDOT ID: 1630-08-00

Appendix 3: No-Build Conditions Traffic Modeling Methodology and Results

AECOM
1350 Deming Way
Middleton, WI 53562
aecom.com

Project name:
La Crosse Safety & Operations Study

Project ref:
1630-08-00

From:
Jeff Sandberg

Date:
December 16, 2021

To:
Josh Koebernick, WisDOT
Ruchi Datta, WisDOT

CC:
Andy Winga, WisDOT

Memorandum

Subject: No-Build Conditions Traffic Modeling Methodology

AECOM is working with the Wisconsin Department of Transportation (WisDOT) Southwest Region to complete a Safety & Operations Study of major north-south roadways in the City of La Crosse, WI. This study includes development of traffic models to evaluate critical intersections on project roadways. The purpose of this memo is to document the methodology and results of the no-build conditions traffic modeling effort.

Project Location

The La Crosse Safety & Operations Study encompasses portions of US 53, WI 35, WI 16, US 14/61, and Losey Blvd. 66 intersections were identified as critical intersections for analysis, including 50 signalized intersections, 12 two-way stop controlled intersections, three roundabout intersections, and one all-way stop controlled intersections. A project location map, which shows project segments and intersections, is attached.

No-Build Conditions

This memo documents the no-build conditions (2050) traffic modeling effort. “No-Build Conditions” is defined as forecasted design year (2050) traffic volumes and current roadway geometry plus programmed projects.

The existing conditions traffic modeling methodology was documented in the Existing Conditions Report. That report included details on programmed projects, traffic volumes and data, model adjustments made to conform with WisDOT TEOpS guidance, and accommodations made to allow for reporting of HCM results. The no-build conditions modeling effort started with the existing conditions models, so the existing conditions traffic modeling methodology and adjustments and accommodations have been incorporated into the no-build conditions models.

Traffic Forecasts

The WisDOT Central Office Forecasting Unit developed segment and intersection turning movement traffic forecasts based on the traffic volumes used in the Existing Conditions Report. The traffic forecasts and a summary of design year (2050) turning movement traffic volumes are attached.

Model Development

The no-build conditions traffic models include current roadway geometry plus programmed improvements and current traffic control. The process used to develop these traffic models is as follows:

1. Start with the traffic models developed for the Existing Conditions Report.
2. Insert forecasted design year (2050) turning movement traffic volumes.

3. For intersections with deficient level of service (LOS), adjust splits to determine if the deficiency can be eliminated with signal timing adjustments. This is meant to emulate the operational effects of periodic signal re-timing.

Traffic Analysis Results

Traffic model reports are attached, and a summary of traffic analysis results, sorted by project segment, are in the tables below. The deficiencies highlighted in the tables indicate the following:

1. Cells highlighted in orange indicate:
    a. LOS E on mainline through movements, or
    b. LOS E for the overall intersection, or
    c. Turn lane queues that exceed turn lane length, or
    d. Through queues that block turn lanes
2. Cells highlighted in red in the traffic analysis results tables indicate:
    a. LOS F, or
    b. Queues that spill back to adjacent intersections

Several of the highlighted deficiencies need not be addressed in the alternative development process due to the minor impacts of the deficiency or other extraneous circumstances. These deficiencies are differentiated as follows:

1. Highlighted cells with bold colors indicate deficiencies that need to be addressed. Example:

Example
Example

2. Highlighted cells with faded colors indicate deficiencies that need not be addressed. Example:

Example
Example

The reasoning for deficiencies that need not be addressed is as follows:

❶ The side street is low-volume and/or one-way

❷ Presence of one of the following effectively increases the length of the turn lane:

- TWLTL
- Striped median
- Wide road with parking restriction or infrequent parking

❸ Signals are not warranted; access possible at nearby signalized intersections

❹ Lengthening of turn lanes is impractical due to loss of parking

❺ Queue length exceeds specified length by less than 2 vehicles (50’)

❻ Through lane queue blocks turn lane with a volume less than 100 vph

❼ Existing access control measures in place that address queueing concerns

Traffic Analysis Results - WIS 16 Segment

Traffic Analysis Results – WIS 16 & WIS 157 / Mall Driveway												
Intersection #:	*1*	NB			SB			EB			WB	
Intersection Type:	*Signalized*	WIS 16			WIS 16			WIS 157			Mall Driveway	
Scenario	Data Type	LT	TH	RT	LT	TH	RT	LT	TH	RT	LT	TH/RT
	No. Lanes	2	2	1	1	2	1	2	1	1	1	2
No-Build (2050) AM Peak	LOS	D	B	A	E	C	C	D	D	A	D	E
	Delay (s/veh)	53	16	6	56	34	21	53	51	0	49	59
	v/c Ratio	0.87	0.44	0.01	0.01	0.61	0.20	0.52	0.17	0.00	0.05	0.15
	95% Queue (ft)	425	275 ❻	25	25	**375**	125	175	50	0	25	25
	Storage (ft)	480	-	210	230	-	230	210	-	470	120	-
	Int. Delay (LOS)	34 (C)										
No-Build (2050) PM Peak	LOS	**E**	B	B	E	**E**	C	E	E	A	D	**F**
	Delay (s/veh)	77	17	12	79	73	30	55	60	0	50	83
	v/c Ratio	0.99	0.51	0.09	0.51	0.99	0.46	0.69	0.59	0.00	0.34	0.76
	95% Queue (ft)	**650**	**375**	75	25	**750**	**300**	225	225	0	125 ❺	125 ❺
	Storage (ft)	480	-	210	230	-	230	210	-	470	120	-
	Int. Delay (LOS)	54 (D)										

Traffic Analysis Results – WIS 16 & 12th Ave NB Ramps				
Intersection #:	*3*	NB		WB
Intersection Type:	*TWSC*	WIS 16		12th Ave NB Ramps
Scenario	Data Type	TH	RT	RT
	No. Lanes	2	1	1
No-Build (2050) AM Peak	LOS	A	A	C
	Delay (s/veh)	0	0	19
	v/c Ratio	0.00	0.00	0.16
	95% Queue (ft)	0	0	25
	Storage (ft)	-	160	-
	Int. Delay (LOS)	1 (A)		
No-Build (2050) PM Peak	LOS	A	A	E
	Delay (s/veh)	0	0	40
	v/c Ratio	0.00	0.00	0.46
	95% Queue (ft)	0	0	75
	Storage (ft)	-	160	-
	Int. Delay (LOS)	1 (A)		

Traffic Analysis Results – WIS 16 & 12th Ave SB Ramps				
Intersection #:	***4***	**SB**		**EB**
Intersection Type:	***TWSC***	**WIS 16**		**12th Ave SB Ramps**
Scenario	**Data Type**	**TH**	**RT**	**RT**
	No. Lanes	2	1	1
No-Build (2050) AM Peak	LOS	A	A	D
	Delay (s/veh)	0	0	35
	v/c Ratio	0.00	0.00	0.24
	95% Queue (ft)	0	0	25
	Storage (ft)	-	-	-
	Int. Delay (LOS)	1 (A)		
No-Build (2050) PM Peak	LOS	A	A	E
	Delay (s/veh)	0	0	36
	v/c Ratio	0.00	0.00	0.24
	95% Queue (ft)	0	0	25
	Storage (ft)	-	-	-
	Int. Delay (LOS)	1 (A)		

Traffic Analysis Results – WIS 16 & County B / Conoco Rd											
Intersection #:	***7***	**NB**			**SB**			**EB**		**WB**	
Intersection Type:	***Signalized***	**WIS 16**			**WIS 16**			**Conoco Rd**		**County B**	
Scenario	**Data Type**	**LT**	**TH**	**RT**	**LT**	**TH**	**RT**	**LT/TH**	**RT**	**LT/TH**	**RT**
	No. Lanes	1	2	1	1	2	1	1	1	2	1
No-Build (2050) AM Peak	LOS	A	C	B	E	**F**	B	E	E	E	D
	Delay (s/veh)	0	30	16	65	202	17	64	62	59	52
	v/c Ratio	0.00	0.83	0.14	0.83	1.37	0.02	0.42	0.23	0.83	0.52
	95% Queue (ft)	0	**650**	75	175	**2350**	25	50	25	275 ❷	150
	Storage (ft)	210	-	160	200	-	150	-	80	-	210
	Int. Delay (LOS)	**119 (F)**									
No-Build (2050) PM Peak	LOS	A	D	B	E	C	B	E	E	E	E
	Delay (s/veh)	0	38	14	75	25	11	72	71	79	70
	v/c Ratio	0.00	0.95	0.22	0.88	0.82	0.01	0.41	0.20	0.81	0.64
	95% Queue (ft)	0	**1025**	150	**275**	**725**	25	50	25	175	125
	Storage (ft)	210	-	160	200	-	150	-	80	-	210
	Int. Delay (LOS)	36 (D)									

Traffic Analysis Results – WIS 16 & Gillette St / Sunset Blvd											
Intersection #:	***9***	**NB**			**SB**			**EB**		**WB**	
Intersection Type:	***Signalized***	**WIS 16**			**WIS 16**			**Conoco Rd**		**County B**	
Scenario	**Data Type**	**LT**	**TH**	**RT**	**LT**	**TH**	**RT**	**LT/TH**	**RT**	**LT**	**TH/RT**
	No. Lanes	2	2	1	1	2	1	2	1	1	1
No-Build (2050) AM Peak	LOS	E	B	A	E	D	B	E	D	E	E
	Delay (s/veh)	62	14	8	61	42	11	67	45	67	63
	v/c Ratio	0.76	0.58	0.02	0.11	0.97	0.19	0.78	0.35	0.64	0.39
	95% Queue (ft)	225	375 ❺	25	25	**925**	125	150	150	75 ❺	50
	Storage (ft)	330	-	290	180	-	390	-	250	70	-
	Int. Delay (LOS)	35 (C)									
No-Build (2050) PM Peak	LOS	E	D	B	E	D	B	E	D	E	E
	Delay (s/veh)	62	43	14	73	50	12	65	43	70	78
	v/c Ratio	0.62	0.97	0.04	0.56	0.95	0.21	0.67	0.36	0.53	0.73
	95% Queue (ft)	200	**1050**	25	75	**925**	175	250	200 ❺	75 ❺	100 ❺
	Storage (ft)	330	-	290	180	-	390	-	250	70	-
	Int. Delay (LOS)	48 (D)									

Traffic Analysis Results – WIS 16 (La Crosse St) / Edgewood Pl & Losey Blvd									
Intersection #:	***24***	**NB**		**SB**			**EB**		**WB**
Intersection Type:	***Signalized***	**Losey Blvd**		**WIS 16**			**WIS 16**		**Edgewood Pl**
Scenario	**Data Type**	**LT**	**TH/RT**	**LT**	**TH**	**RT**	**LT/TH**	**RT**	**RT**
	No. Lanes	1	2	1	2	1	2	1	1
No-Build (2050) AM Peak	LOS	C	B	A	B	A	D	D	F ❶
	Delay (s/veh)	25	11	9	15	5	43	42	93
	v/c Ratio	0.80	0.61	0.02	0.72	0.30	0.61	0.42	0.46
	95% Queue (ft)	150	**300**	25	**375**	150	125	100 ❺	25
	Storage (ft)	240	-	70	-	200	310	90	-
	Int. Delay (LOS)	16 (B)							
No-Build (2050) PM Peak	LOS	C	C	C	C	A	D	D	E
	Delay (s/veh)	33	28	20	29	5	45	37	80
	v/c Ratio	0.84	0.81	0.03	0.82	0.24	0.76	0.26	0.60
	95% Queue (ft)	150	**625**	25	**575**	175	325 ❺	125 ❺	50
	Storage (ft)	240	-	70	-	200	310	90	-
	Int. Delay (LOS)	30 (C)							

Traffic Analysis Results - WIS 35 (Lang Dr, George St) Segment

Traffic Analysis Results – WIS 35 (George St) & George St											
Intersection #:	*6*	NB			SB			EB		WB	
Intersection Type:	*Signalized*	WIS 35			WIS 35			George St		George St	
Scenario	Data Type	LT	TH	RT	LT	TH	RT	LT/TH	RT	LT/TH	RT
	No. Lanes	1	2	1	1	2	1	1	1	1	1
No-Build (2050) AM Peak	LOS	A	A	B	A	A	A	C	B	C	B
	Delay (s/veh)	5	9	11	5	8	9	20	16	22	17
	v/c Ratio	0.06	0.17	0.10	0.15	0.23	0.11	0.31	0.08	0.41	0.15
	95% Queue (ft)	25	75 ❺	50 ❺	25	100	50	50	25	75	50
	Storage (ft)	160	-	30	200	-	150	-	100	-	100
	Int. Delay (LOS)	10 (B)									
No-Build (2050) PM Peak	LOS	A	B	B	A	A	A	E	C	D	D
	Delay (s/veh)	5	11	10	3	1	2	56	31	46	36
	v/c Ratio	0.07	0.26	0.09	0.26	0.17	0.12	0.69	0.06	0.54	0.26
	95% Queue (ft)	25	125 ❻	50 ❺	50	25	25	125	25	100	75
	Storage (ft)	160	-	30	200	-	150	-	100	-	100
	Int. Delay (LOS)	14 (B)									

Traffic Analysis Results – WIS 35 (George St) & Gillette St									
Intersection #:	*10*	NB		SB		EB		WB	
Intersection Type:	*Signalized*	WIS 35		WIS 35		Gillette St		Gillette St	
Scenario	Data Type	LT	TH/RT	LT	TH/RT	LT	TH/RT	LT	TH/RT
	No. Lanes	1	1	1	1	1	1	1	1
No-Build (2050) AM Peak	LOS	B	B	A	B	C	C	C	C
	Delay (s/veh)	13	12	9	18	21	27	21	28
	v/c Ratio	0.34	0.43	0.13	0.86	0.28	0.76	0.24	0.77
	95% Queue (ft)	50	150	25	300 ❻	50	150	50	150 ❺
	Storage (ft)	340	-	110	-	200	-	130	-
	Int. Delay (LOS)	19 (B)							
No-Build (2050) PM Peak	LOS	A	B	B	B	C	C	C	C
	Delay (s/veh)	9	19	14	14	24	29	24	31
	v/c Ratio	0.23	0.86	0.19	0.54	0.30	0.63	0.25	0.80
	95% Queue (ft)	50	375 ❺	25	200	50	125	50	175 ❺
	Storage (ft)	340	-	110	-	200	-	130	-
	Int. Delay (LOS)	20 (B)							

Traffic Analysis Results – WIS 35 (George St) & Clinton St / Ranger Rd										
Intersection #:	***13***	**NB**			**SB**		**EB**		**WB**	
Intersection Type:	***Signalized***	**WIS 35**			**WIS 35**		**Clinton St**		**Ranger Rd**	
Scenario	**Data Type**	**LT**	**TH**	**RT**	**LT/TH**	**TH/RT**	**LT/TH**	**RT**	**LT/TH**	**RT**
	No. Lanes	1	2	1	1	1	1	1	1	1
No-Build (2050) AM Peak	LOS	D	B	B	C	C	C	D	D	C
	Delay (s/veh)	43	15	14	25	26	35	39	43	32
	v/c Ratio	0.81	0.27	0.21	0.63	0.67	0.59	0.78	0.82	0.01
	95% Queue (ft)	**175**	**125**	100 ❺	300	275	175 ❷	200 ❷	225 ❷	25
	Storage (ft)	100	-	70	-	-	-	70	-	70
	Int. Delay (LOS)	29 (C)								
No-Build (2050) PM Peak	LOS	D	B	B	B	B	C	C	C	C
	Delay (s/veh)	42	13	11	19	19	26	29	30	24
	v/c Ratio	0.89	0.53	0.20	0.46	0.51	0.45	0.67	0.72	0.03
	95% Queue (ft)	**225**	**175**	50	150	150	100 ❷	125 ❷	125 ❷r	25
	Storage (ft)	100	-	70	-	-	-	70	-	70
	Int. Delay (LOS)	22 (C)								

Traffic Analysis Results – WIS 35 (Lang Dr) & St Cloud St						
Intersection #:	***15***	**NB**		**SB**		**WB**
Intersection Type:	***Signalized***	**WIS 35**		**WIS 35**		**St Cloud St**
Scenario	**Data Type**	**TH**	**RT**	**LT**	**TH**	**LT/RT**
	No. Lanes	2	1	1	2	1
No-Build (2050) AM Peak	LOS	A	A	A	A	C
	Delay (s/veh)	9	2	6	7	27
	v/c Ratio	0.46	0.12	0.09	0.57	0.67
	95% Queue (ft)	150 ❺	50	25	150 ❺	125
	Storage (ft)	-	125	125	-	125
	Int. Delay (LOS)	10 (B)				
No-Build (2050) PM Peak	LOS	A	A	A	A	C
	Delay (s/veh)	9	2	7	5	35
	v/c Ratio	0.63	0.21	0.08	0.34	0.69
	95% Queue (ft)	**225**	75	25	100	150 ❺
	Storage (ft)	-	125	125	-	125
	Int. Delay (LOS)	10 (B)				

Traffic Analysis Results – WIS 35 (Lang Dr) & St Andrews St										
Intersection #:	***18***	**NB**			**SB**		**EB**		**WB**	
Intersection Type:	***Signalized***	**WIS 35**			**WIS 35**		**St Andrews St**		**St Andrews St**	
Scenario	**Data Type**	**LT**	**TH**	**RT**	**LT**	**TH/RT**	**LT**	**TH/RT**	**LT**	**TH/RT**
	No. Lanes	1	2	1	1	2	1	1	1	1
No-Build (2050) AM Peak	LOS	A	A	A	A	B	C	C	C	C
	Delay (s/veh)	9	9	6	6	14	24	22	23	22
	v/c Ratio	0.11	0.50	0.03	0.15	0.77	0.20	0.24	0.14	0.21
	95% Queue (ft)	25	125 ❻	25	25	250 ❻	50	50	25	50
	Storage (ft)	80	-	50	160	-	50	-	130	-
	Int. Delay (LOS)	12 (B)								
No-Build (2050) PM Peak	LOS	A	B	A	B	A	C	C	C	C
	Delay (s/veh)	6	17	6	12	8	27	23	24	24
	v/c Ratio	0.08	0.87	0.03	0.29	0.51	0.28	0.17	0.16	0.38
	95% Queue (ft)	25	325 ❻	25	25	150	50	25	50	75
	Storage (ft)	80	-	50	160	-	50	-	130	-
	Int. Delay (LOS)	14 (B)								

Traffic Analysis Results – WIS 35 (Lang Dr) & Monitor St							
Intersection #:	***19***	**NB**		**SB**		**EB**	
Intersection Type:	***Signalized***	**WIS 35**		**WIS 35**		**Monitor St**	
Scenario	**Data Type**	**LT**	**TH**	**TH**	**RT**	**LT**	**RT**
	No. Lanes	1	2	2	1	1	1
No-Build (2050) AM Peak	LOS	A	A	A	A	C	C
	Delay (s/veh)	9	4	10	6	26	24
	v/c Ratio	0.49	0.39	0.69	0.18	0.60	0.39
	95% Queue (ft)	50	50	**175**	50	75	50
	Storage (ft)	180	-	-	80	-	-
	Int. Delay (LOS)	9 (A)					
No-Build (2050) PM Peak	LOS	A	A	B	A	C	B
	Delay (s/veh)	9	10	13	10	22	19
	v/c Ratio	0.46	0.72	0.60	0.14	0.70	0.32
	95% Queue (ft)	50	175	**150**	50	150	50
	Storage (ft)	180	-	-	80	-	-
	Int. Delay (LOS)	12 (B)					

Traffic Analysis Results - US 53 (Rose St, Copeland Ave) Segment

Traffic Analysis Results – US 53 (Rose St) & IH 90 EB Ramps						
Intersection #:	***2***	**NB**	**SB**		**EB**	
Intersection Type:	***Signalized***	**US 53**	**US 53**		**IH 90 EB Ramps**	
Scenario	**Data Type**	**TH**	**LT**	**TH**	**LT/TH**	**RT**
	No. Lanes	2	1	3	1	1
No-Build (2050) AM Peak	LOS	A	A	A	D	D
	Delay (s/veh)	8	6	10	43	37
	v/c Ratio	0.20	0.08	0.72	0.78	0.18
	95% Queue (ft)	100	25	325 ❻	200	100
	Storage (ft)	-	250	-	-	230
	Int. Delay (LOS)	12 (B)				
No-Build (2050) PM Peak	LOS	B	B	A	D	C
	Delay (s/veh)	19	14	8	41	31
	v/c Ratio	0.78	0.30	0.49	0.81	0.17
	95% Queue (ft)	400	25	175	250 ❺	125
	Storage (ft)	-	250	-	-	230
	Int. Delay (LOS)	16 (B)				

Traffic Analysis Results – US 53 (Rose St) & WI 35									
Intersection #:	***5***	**NB**			**SB**		**EB**	**WB**	
Intersection Type:	***Signalized***	**US 53**			**US 53**		**Lot Entrance**	**WI 35**	
Scenario	**Data Type**	**LT**	**TH**	**RT**	**LT**	**TH/RT**	**LT/TH/RT**	**LT/TH**	**RT**
	No. Lanes	1	3	1	2	2	1	1	2
No-Build (2050) AM Peak	LOS	A	C	B	D	D	F ❶	D	C
	Delay (s/veh)	0	20	17	42	46	89	44	26
	v/c Ratio	0.00	0.37	0.06	0.76	0.99	0.42	0.37	0.38
	95% Queue (ft)	0	175 ❻	25	275	825	25	75	150
	Storage (ft)	120	-	110	-	-	-	200	-
	Int. Delay (LOS)	38 (D)							
No-Build (2050) PM Peak	LOS	D	C	B	E	B	E	D	C
	Delay (s/veh)	36	27	16	76	20	58	37	31
	v/c Ratio	0.01	0.83	0.09	0.99	0.60	0.48	0.32	0.70
	95% Queue (ft)	0	400 ❻	50	300	300	25	75	225 ❺
	Storage (ft)	120	-	110	-	-	-	200	-
	Int. Delay (LOS)	32 (C)							

Traffic Analysis Results – US 53 (Rose St) & Palace St							
Intersection #:	***8***	**NB**		**SB**		**WB**	
Intersection Type:	***Signalized***	**US 53**		**US 53**		**Palace St**	
Scenario	**Data Type**	**TH**	**RT**	**LT**	**TH**	**LT**	**RT***
	No. Lanes	2	1	1	2	1	1
No-Build (2050) AM Peak	LOS	A	A	A	A	D	D
	Delay (s/veh)	4	3	3	4	49	48
	v/c Ratio	0.32	0.02	0.05	0.69	0.34	0.24
	95% Queue (ft)	100	25	25	125	25	50
	Storage (ft)	-	180	260	-	-	100
	Int. Delay (LOS)	4 (A)					
No-Build (2050) PM Peak	LOS	A	A	A	A	D	D
	Delay (s/veh)	10	4	9	3	44	49
	v/c Ratio	0.73	0.03	0.21	0.36	0.41	0.45
	95% Queue (ft)	300 ❻	25	25	50	50	50
	Storage (ft)	-	180	260	-	-	100
	Int. Delay (LOS)	8 (A)					

* Synchro results reported since HCM doesn't provide traffic analysis results for yield-controlled right turn lanes.

Traffic Analysis Results – US 53 (Rose St) & Gillette St									
Intersection #:	***11***	**NB**			**SB**		**EB**	**WB**	
Intersection Type:	***Signalized***	**US 53**			**US 53**		**Gillette St**	**Gillette St**	
Scenario	**Data Type**	**LT**	**TH**	**RT**	**LT**	**TH/RT**	**LT/TH/RT**	**LT**	**TH/RT**
	No. Lanes	1	2	1	1	2	1	1	1
No-Build (2050) AM Peak	LOS	A	A	A	A	A	D	D	D
	Delay (s/veh)	3	4	3	1	3	40	51	46
	v/c Ratio	0.08	0.33	0.03	0.12	0.72	0.22	0.54	0.41
	95% Queue (ft)	25	100 ❷	25	0	100	75	100 ❺	75 ❺
	Storage (ft)	80	-	100	130	-	-	60	-
	Int. Delay (LOS)	7 (A)							
No-Build (2050) PM Peak	LOS	A	B	A	C	A	C	D	D
	Delay (s/veh)	2	17	3	28	7	35	48	42
	v/c Ratio	0.09	0.88	0.09	0.51	0.49	0.26	0.60	0.49
	95% Queue (ft)	25	650	25	50	200 ❷	75	100 ❺	100 ❺
	Storage (ft)	80	-	100	130	-	-	60	-
	Int. Delay (LOS)	16 (B)							

Traffic Analysis Results – US 53 (Rose St) & Clinton St										
Intersection #:	***12***	**NB**		**SB**		**EB**			**WB**	
Intersection Type:	***Signalized***	**US 53**		**US 53**		**Clinton St**			**Clinton St**	
Scenario	**Data Type**	**LT**	**TH/RT**	**LT**	**TH/RT**	**LT**	**TH**	**RT**	**LT**	**TH/RT**
	No. Lanes	1	2	1	2	1	1	1	1	1
No-Build (2050) AM Peak	LOS	B	B	A	C	D	C	E	D	C
	Delay (s/veh)	20	13	10	24	40	35	74	43	33
	v/c Ratio	0.66	0.32	0.19	0.76	0.27	0.64	0.97	0.34	0.57
	95% Queue (ft)	100	175	50	450 ❷	75	**250**	**450**	75	225 ❻
	Storage (ft)	-	-	140	-	-	-	130	100	-
	Int. Delay (LOS)	30 (C)								
No-Build (2050) PM Peak	LOS	B	D	C	B	D	C	C	C	C
	Delay (s/veh)	12	36	22	19	41	27	25	32	32
	v/c Ratio	0.54	0.91	0.77	0.52	0.46	0.36	0.13	0.28	0.70
	95% Queue (ft)	100	**600**	100	250 ❷	100	150 ❺	50	75	250 ❻
	Storage (ft)	-	-	140	-	-	-	130	100	-
	Int. Delay (LOS)	29 (C)								

Traffic Analysis Results – NB US 53 (Rose St) & St James St							
Intersection #:	***14***	**NB**		**EB**		**WB**	
Intersection Type:	***Signalized***	**US 53**		**St James St**		**St James St**	
Scenario	**Data Type**	**LT/TH**	**TH/RT**	**LT**	**TH**	**TH**	**RT**
	No. Lanes	1	1	1	1	1	1
No-Build (2050) AM Peak	LOS	A	A	B	B	B	B
	Delay (s/veh)	3	3	15	16	15	16
	v/c Ratio	0.37	0.34	0.04	0.19	0.10	0.13
	95% Queue (ft)	25	25	25	25	25	25
	Storage (ft)	-	-	100	-	-	100
	Int. Delay (LOS)	4 (A)					
No-Build (2050) PM Peak	LOS	A	A	D	D	D	D
	Delay (s/veh)	6	5	44	42	46	44
	v/c Ratio	0.66	0.60	0.14	0.17	0.50	0.37
	95% Queue (ft)	200	175	25	25	75	50
	Storage (ft)	-	-	100	-	-	100
	Int. Delay (LOS)	8 (A)					

Traffic Analysis Results – NB US 53 (Rose St) & Hagar St					
Intersection #:	***16***	**NB**		**EB**	**WB**
Intersection Type:	***TWSC***	**US 53**		**Hagar St**	**Hagar St**
Scenario	**Data Type**	**LT/TH**	**TH/RT**	**LT/TH**	**TH/RT**
	No. Lanes	1	1	1	1
No-Build (2050) AM Peak	LOS	-	-	B	C
	Delay (s/veh)	-	-	14	15
	v/c Ratio	-	-	0.08	0.04
	95% Queue (ft)	-	-	25	25
	Storage (ft)	-	-	-	-
	Int. Delay (LOS)	1 (A)			
No-Build (2050) PM Peak	LOS	-	-	E	F ❸
	Delay (s/veh)	-	-	39	56
	v/c Ratio	-	-	0.30	0.23
	95% Queue (ft)	-	-	50	25
	Storage (ft)	-	-	-	-
	Int. Delay (LOS)	2 (A)			

Traffic Analysis Results – SB US 53 (Copeland Ave) & Hagar St					
Intersection #:	***17***	**SB**		**EB**	**WB**
Intersection Type:	***TWSC***	**US 53**		**Hagar St**	**Hagar St**
Scenario	**Data Type**	**LT/TH**	**TH/RT**	**TH/RT**	**LT/TH**
	No. Lanes	1	1	1	1
No-Build (2050) AM Peak	LOS	-	-	F ❶	E
	Delay (s/veh)	-	-	60	49
	v/c Ratio	-	-	0.27	0.34
	95% Queue (ft)	-	-	25	50
	Storage (ft)	-	-	-	-
	Int. Delay (LOS)	2 (A)			
No-Build (2050) PM Peak	LOS	-	-	C	C
	Delay (s/veh)	-	-	21	20
	v/c Ratio	-	-	0.10	0.18
	95% Queue (ft)	-	-	25	25
	Storage (ft)	-	-	-	-
	Int. Delay (LOS)	1 (A)			

Traffic Analysis Results – SB US 53 (Copeland Ave) & Monitor St						
Intersection #:	***20***	**SB**		**EB**	**WB**	
Intersection Type:	***Signalized***	**US 53**		**Monitor St**	**Monitor St**	
Scenario	**Data Type**	**LT/TH**	**TH/RT**	**TH/RT**	**LT**	**TH**
	No. Lanes	1	1	1	1	1
No-Build (2050) AM Peak	LOS	D	C	B	C	B
	Delay (s/veh)	38	22	18	23	18
	v/c Ratio	0.99	0.90	0.20	0.37	0.09
	95% Queue (ft)	550	400	50	100	25
	Storage (ft)	-	-	-	260	-
	Int. Delay (LOS)	30 (C)				
No-Build (2050) PM Peak	LOS	B	A	B	B	B
	Delay (s/veh)	11	10	14	17	13
	v/c Ratio	0.63	0.57	0.18	0.35	0.06
	95% Queue (ft)	150	150	50	75	25
	Storage (ft)	-	-	-	260	-
	Int. Delay (LOS)	11 (B)				

Traffic Analysis Results – NB US 53 (Rose St) & Monitor St							
Intersection #:	***21***	**NB**		**EB**		**WB**	
Intersection Type:	***Signalized***	**US 53**		**Monitor St**		**Monitor St**	
Scenario	**Data Type**	**LT/TH**	**TH/RT**	**LT**	**TH**	**TH**	**TH/RT**
	No. Lanes	1	1	1	1	1	1
No-Build (2050) AM Peak	LOS	A	A	B	B	B	B
	Delay (s/veh)	6	6	15	13	13	13
	v/c Ratio	0.47	0.43	0.11	0.25	0.36	0.39
	95% Queue (ft)	50	50	75	50	25	25
	Storage (ft)	-	-	260	-	-	-
	Int. Delay (LOS)	8 (A)					
No-Build (2050) PM Peak	LOS	A	A	C	C	C	C
	Delay (s/veh)	8	7	32	27	28	28
	v/c Ratio	0.72	0.66	0.28	0.34	0.52	0.56
	95% Queue (ft)	250	200	50	75	100	100
	Storage (ft)	-	-	260	-	-	-
	Int. Delay (LOS)	12 (B)					

Traffic Analysis Results – US 53 (Copeland Ave) & Causeway Blvd								
Intersection #:	***22***	**NB**		**SB**		**EB**		**WB**
Intersection Type:	***Signalized***	**Losey Blvd**		**Losey Blvd**		**WIS 33**		**WIS 33**
Scenario	**Data Type**	**LT**	**TH/RT**	**LT**	**TH/RT**	**LT/TH**	**RT**	**LT/TH/RT**
	No. Lanes	1	2	1	2	1	1	1
No-Build (2050) AM Peak	LOS	C	A	A	C	D	D	D
	Delay (s/veh)	23	5	5	22	43	43	37
	v/c Ratio	0.49	0.29	0.02	0.85	0.26	0.29	0.03
	95% Queue (ft)	100	200 ❷	25	1,000	75	75	25
	Storage (ft)	100	-	100	-	-	260	-
	Int. Delay (LOS)	18 (B)						
No-Build (2050) PM Peak	LOS	A	B	A	B	C	C	C
	Delay (s/veh)	6	11	0	15	28	28	23
	v/c Ratio	0.19	0.72	0.00	0.65	0.33	0.38	0.04
	95% Queue (ft)	50	450 ❷	0	375 ❷	100	100	25
	Storage (ft)	100	-	100	-	-	260	-
	Int. Delay (LOS)	14 (B)						

Traffic Analysis Results – US 53 (Copeland Ave) & River Bend Dr						
Intersection #:	***23***	**NB**	**SB**		**WB**	
Intersection Type:	***Signalized***	**US 53**	**US 53**		**River Bend Dr**	
Scenario	**Data Type**	**TH/RT**	**LT**	**TH**	**LT**	**RT**
	No. Lanes	2	1	2	1	1
No-Build (2050) AM Peak	LOS	B	A	B	C	C
	Delay (s/veh)	12	6	11	21	20
	v/c Ratio	0.56	0.13	0.84	0.17	0.06
	95% Queue (ft)	150	25	225 ❺	25	25
	Storage (ft)	-	200	-	-	50
	Int. Delay (LOS)	11 (B)				
No-Build (2050) PM Peak	LOS	C	B	A	C	C
	Delay (s/veh)	32	15	6	31	26
	v/c Ratio	0.90	0.35	0.46	0.62	0.29
	95% Queue (ft)	475	50	150	150 ❻	75 ❻
	Storage (ft)	-	200	-	-	50
	Int. Delay (LOS)	22 (C)				

Traffic Analysis Results - WIS 16 (La Crosse St) Segment

Traffic Analysis Results – WIS 16 (La Crosse St) & East Ave									
Intersection #:	*25*	NB		SB		EB		WB	
Intersection Type:	*Signalized*	East Ave		East Ave		WIS 16		WIS 16	
Scenario	Data Type	LT/TH	RT	LT	TH/RT	LT	TH/RT	LT	TH/RT
	No. Lanes	1	2	1	2	1	2	1	1
No-Build (2050) AM Peak	LOS	D	D	D	E	A	A	A	A
	Delay (s/veh)	48	39	38	57	8	4	6	5
	v/c Ratio	0.62	0.17	0.09	0.77	0.03	0.34	0.13	0.50
	95% Queue (ft)	50	25	25	75 ❺	25	100	50	175 ❷
	Storage (ft)	-	200	-	60	140	-	100	-
	Int. Delay (LOS)	9 (A)							
No-Build (2050) PM Peak	LOS	D	C	D	D	A	A	B	A
	Delay (s/veh)	37	33	37	43	10	9	15	7
	v/c Ratio	0.66	0.39	0.19	0.54	0.02	0.66	0.08	0.48
	95% Queue (ft)	100	50	25	50	25	250 ❷	25	175 ❷
	Storage (ft)	-	200	-	60	140	-	100	-
	Int. Delay (LOS)	13 (B)							

Traffic Analysis Results – WIS 16 (La Crosse St) & WIS 35 (West Ave)										
Intersection #:	*26*	NB		SB		EB		WB		
Intersection Type:	*Signalized*	WIS 35		WIS 35		WIS 16		WIS 16		
Scenario	Data Type	LT	TH/RT	LT	TH/RT	LT	TH/RT	LT	TH	RT
	No. Lanes	1	2	1	2	1	2	1	1	1
No-Build (2050) AM Peak	LOS	B	B	B	B	C	D	C	C	C
	Delay (s/veh)	13	18	13	17	31	39	28	35	31
	v/c Ratio	0.34	0.60	0.52	0.64	0.33	0.73	0.56	0.73	0.35
	95% Queue (ft)	50	275 ❺	75	**300**	75	**175**	150	**200**	100 ❺
	Storage (ft)	260	-	200	-	160	-	450	-	80
	Int. Delay (LOS)	21 (C)								
No-Build (2050) PM Peak	LOS	B	D	D	C	D	D	D	D	D
	Delay (s/veh)	20	45	42	27	51	49	40	54	43
	v/c Ratio	0.51	0.89	0.82	0.54	0.84	0.79	0.74	0.88	0.39
	95% Queue (ft)	150	**675**	175	**325**	**300**	**250**	325	**250**	**375**
	Storage (ft)	260	-	200	-	160	-	450	-	80
	Int. Delay (LOS)	41 (D)								

Traffic Analysis Results – WIS 16 (La Crosse St) & 7th St								
Intersection #:	**28**	**NB**		**SB**	**EB**		**WB**	
Intersection Type:	**AWSC**	**7th St**		**7th St**	**WIS 16**		**WIS 16**	
Scenario	**Data Type**	**TH/LT**	**RT**	**LT/TH/RT**	**TH/LT**	**RT**	**LT/TH**	**TH/RT**
	No. Lanes	1	1	1	1	1	1	1
No-Build (2050) AM Peak	LOS	B	A	B	B	B	B	A
	Delay (s/veh)	15	9	10	11	10	12	10
	v/c Ratio	0.44	0.18	0.01	0.25	0.30	0.30	0.17
	95% Queue (ft)	75	25	0	25	50	50	25
	Storage (ft)	-	60	-	-	500	-	-
	Int. Delay (LOS)	12 (B)						
No-Build (2050) PM Peak	LOS	D	B	B	C	B	C	B
	Delay (s/veh)	26	14	14	24	12	21	14
	v/c Ratio	0.67	0.39	0.23	0.65	0.28	0.58	0.36
	95% Queue (ft)	125 ❷	50	25	125	50	100	50
	Storage (ft)	-	60	-	-	500	-	-
	Int. Delay (LOS)	20 (C)						

Traffic Analysis Results - Losey Blvd Segment

Traffic Analysis Results – Losey Blvd & Main St									
Intersection #:	***36***	**NB**		**SB**		**EB**		**WB**	
Intersection Type:	***Signalized***	**Losey Blvd**		**Losey Blvd**		**Main St**		**Main St**	
Scenario	**Data Type**	**LT**	**TH/RT**	**LT**	**TH/RT**	**LT**	**TH/RT**	**LT**	**TH/RT**
	No. Lanes	1	2	1	2	1	1	1	1
No-Build (2050) AM Peak	LOS	C	B	B	C	D	D	D	D
	Delay (s/veh)	22	16	12	22	49	36	39	39
	v/c Ratio	0.62	0.71	0.08	0.81	0.59	0.17	0.16	0.43
	95% Queue (ft)	125	450 ❷	25	**550**	175	75	75	150
	Storage (ft)	210	-	140	-	-	280	-	210
	Int. Delay (LOS)	21 (C)							
No-Build (2050) PM Peak	LOS	B	B	B	B	D	D	D	D
	Delay (s/veh)	12	16	13	15	44	41r	45	36
	v/c Ratio	0.30	0.75	0.27	0.71	0.59	0.63	0.10	0.22
	95% Queue (ft)	50	450 ❷	25	**375**	175	175	25	75
	Storage (ft)	210	-	140	-	-	280	-	210
	Int. Delay (LOS)	18 (B)							

Traffic Analysis Results – Losey Blvd & Cass St								
Intersection #:	***42***	**NB**		**SB**		**EB**		**WB**
Intersection Type:	***Signalized***	**Losey Blvd**		**Losey Blvd**		**Cass St**		**Cass St**
Scenario	**Data Type**	**LT**	**TH/RT**	**LT**	**TH/RT**	**LT**	**TH/RT**	**LT/TH/RT**
	No. Lanes	1	2	1	2	1	1	1
No-Build (2050) AM Peak	LOS	C	B	B	C	C	C	C
	Delay (s/veh)	20	16	12	27	34	27	29
	v/c Ratio	0.65	0.74	0.05	0.89	0.63	0.18	0.38
	95% Queue (ft)	75	375 ❷	25	**500**	200	50	125
	Storage (ft)	100	-	100	-	-	200	-
	Int. Delay (LOS)	22 (C)						
No-Build (2050) PM Peak	LOS	B	B	B	B	C	C	C
	Delay (s/veh)	13	15	11	18	30	26	25
	v/c Ratio	0.27	0.75	0.14	0.81	0.61	0.35	0.12
	95% Queue (ft)	25	325 ❷	25	375 ❷	175	100	50
	Storage (ft)	100	-	100	-	-	200	-
	Int. Delay (LOS)	18 (B)						

Traffic Analysis Results – Losey Blvd & Farnam St						
Intersection #:	***54***	**NB**	**SB**		**WB**	
Intersection Type:	***TWSC***	**US 53**	**Vine St**		**Vine St**	
Scenario	**Data Type**	**TH/RT**	**LT**	**TH**	**LT**	**RT**
	No. Lanes	2	1	2	1	1
No-Build (2050) AM Peak	LOS	-	B	-	E	C
	Delay (s/veh)	-	15	-	47	20
	v/c Ratio	-	0.03	-	0.19	0.23
	95% Queue (ft)	-	25	-	25	25
	Storage (ft)	-	90	-	-	80
	Int. Delay (LOS)	1 (A)				
No-Build (2050) PM Peak	LOS	-	B	-	E	C
	Delay (s/veh)	-	14	-	36	17
	v/c Ratio	-	0.13	-	0.07	0.13
	95% Queue (ft)	-	25	-	25	25
	Storage (ft)	-	90	-	-	80
	Int. Delay (LOS)	1 (A)				

Traffic Analysis Results – Losey Blvd & WIS 33 (State Rd)											
Intersection #:	***55***	**NB**		**SB**		**EB**			**WB**		
Intersection Type:	***Signalized***	**Losey Blvd**		**Losey Blvd**		**WIS 33**			**WIS 33**		
Scenario	**Data Type**	**LT**	**TH/RT**	**LT**	**TH/RT**	**LT**	**TH**	**RT**	**LT**	**TH**	**TH/RT**
	No. Lanes	1	2	1	2	1	1	1	1	1	1
No-Build (2050) AM Peak	LOS	C	D	D	D	C	C	C	C	**F**	**F**
	Delay (s/veh)	23	54	35	37	35	33	26	23	79	182
	v/c Ratio	0.51	0.92	0.85	0.81	0.74	0.64	0.18	0.53	1.02	1.29
	95% Queue (ft)	100	**475**	200	**400**	150	**250**	75	150	**575**	**1000**
	Storage (ft)	180	-	275	-	150	-	375	220	-	-
	Int. Delay (LOS)	**64 (E)**									
No-Build (2050) PM Peak	LOS	C	D	E	C	D	**E**	C	D	D	**E**
	Delay (s/veh)	23	47	57	28	44	76	34	37	40	70
	v/c Ratio	0.40	0.86	0.92	0.57	0.75	0.97	0.25	0.50	0.46	0.91
	95% Queue (ft)	125	**600**	275	**350**	**200**	**700**	125	75	225 ❺	475
	Storage (ft)	180	-	275	-	150	-	375	220	-	-
	Int. Delay (LOS)	48 (D)									

Traffic Analysis Results – Losey Blvd & Green Bay St									
Intersection #:	***57***	**NB**		**SB**		**EB**		**WB**	
Intersection Type:	***Signalized***	**Losey Blvd**		**Losey Blvd**		**Green Bay St**		**Green Bay St**	
Scenario	**Data Type**	**LT**	**TH/RT**	**LT**	**TH/RT**	**LT**	**TH/RT**	**LT**	**TH/RT**
	No. Lanes	1	2	1	2	1	1	1	1
No-Build (2050) AM Peak	LOS	B	B	B	B	C	C	C	C
	Delay (s/veh)	14	20	15	19	21	28	21	33
	v/c Ratio	0.41	0.74	0.38	0.68	0.52	0.71	0.35	0.83
	95% Queue (ft)	75	275 ❷	50	200 ❻	100	200 ❷	75	225 ❷
	Storage (ft)	140	-	120	-	100	-	100	-
	Int. Delay (LOS)	21 (C)							
No-Build (2050) PM Peak	LOS	B	C	B	C	C	C	C	C
	Delay (s/veh)	15	23	16	20	21	35	22	32
	v/c Ratio	0.25	0.76	0.27	0.59	0.61	0.86	0.58	0.72
	95% Queue (ft)	50	300 ❷	50	225 ❻	150	275 ❷	125	200 ❷
	Storage (ft)	140	-	120	-	100	-	100	-
	Int. Delay (LOS)	24 (C)							

Traffic Analysis Results – Losey Blvd & Weston St							
Intersection #:	***60***	**NB**		**SB**		**EB**	**WB**
Intersection Type:	***TWSC***	**Losey Blvd**		**Losey Blvd**		**Weston St**	**Weston St**
Scenario	**Data Type**	**LT**	**TH/RT**	**LT**	**TH/RT**	**LT/TH/RT**	**LT/TH/RT**
	No. Lanes	1	2	1	2	1	1
No-Build (2050) AM Peak	LOS	A	-	A	-	C	B
	Delay (s/veh)	9	-	10	-	15	13
	v/c Ratio	0.03	-	0.02	-	0.17	0.12
	95% Queue (ft)	25	-	25	-	25	25
	Storage (ft)	50	-	70	-	-	-
	Int. Delay (LOS)	1 (A)					
No-Build (2050) PM Peak	LOS	B	-	B	-	D	B
	Delay (s/veh)	10	-	10	-	30	13
	v/c Ratio	0.04	-	0.04	-	0.45	0.07
	95% Queue (ft)	25	-	25	-	75	25
	Storage (ft)	50	-	70	-	-	-
	Int. Delay (LOS)	2 (A)					

Traffic Analysis Results – Losey Blvd & Ward Ave										
Intersection #:	***64***	**NB**		**SB**			**EB**		**WB**	
Intersection Type:	***Signalized***	**Losey Blvd**		**Losey Blvd**			**Ward Ave**		**Ward Ave**	
Scenario	**Data Type**	**LT**	**TH/RT**	**LT**	**TH**	**RT**	**LT**	**TH/RT**	**LT**	**TH/RT**
	No. Lanes	1	2	1	2	1	1	1	1	1
No-Build (2050) AM Peak	LOS	B	C	B	B	B	C	C	B	C
	Delay (s/veh)	12	21	14	18	18	21	23	19	31
	v/c Ratio	0.15	0.64	0.15	0.36	0.26	0.45	0.27	0.09	0.91
	95% Queue (ft)	50	225 ❻	25	125 ❺	75	75	75	25	275 ❻
	Storage (ft)	90	-	130	-	120	100	-	90	-
	Int. Delay (LOS)	22 (C)								
No-Build (2050) PM Peak	LOS	B	C	B	C	B	C	C	C	C
	Delay (s/veh)	14	22	13	20	16	23	27	25	35
	v/c Ratio	0.15	0.62	0.21	0.65	0.22	0.74	0.68	0.30	0.84
	95% Queue (ft)	25	200 ❻	50	225 ❻	75	200 ❷	200 ❷	75	175 ❻
	Storage (ft)	90	-	130	-	120	100	-	90	-
	Int. Delay (LOS)	22 (C)								

Traffic Analysis Results - WIS 35 (West Ave) Segment

Traffic Analysis Results – WIS 35 (West Ave) & State St									
Intersection #:	*34*	NB		SB		EB		WB	
Intersection Type:	*Signalized*	WIS 35		WIS 35		State St		State St	
Scenario	Data Type	LT	TH/RT	LT	TH/RT	LT	TH/RT	LT	TH/RT
	No. Lanes	1	2	1	2	1	1	1	1
No-Build (2050) AM Peak	LOS	B	A	A	B	B	B	B	B
	Delay (s/veh)	11	3	9	15	19	16	18	17
	v/c Ratio	0.42	0.62	0.11	0.67	0.14	0.13	0.12	0.20
	95% Queue (ft)	50	25	25	250 ❻	50	50	50	75 ❺
	Storage (ft)	100	-	130	-	-	60	-	70
	Int. Delay (LOS)	10 (B)							
No-Build (2050) PM Peak	LOS	A	A	B	B	C	C	C	C
	Delay (s/veh)	5	2	11	14	27	23	28	22
	v/c Ratio	0.26	0.68	0.22	0.57	0.27	0.38	0.27	0.33
	95% Queue (ft)	25	25	50	225 ❻	100 ❺	**150**	100 ❺	125 ❷
	Storage (ft)	100	-	130	-	-	60	-	70
	Int. Delay (LOS)	11 (B)							

Traffic Analysis Results – WIS 35 (West Ave) & Main St									
Intersection #:	*37*	NB		SB		EB		WB	
Intersection Type:	*Signalized*	WIS 35		WIS 35		Main St		Main St	
Scenario	Data Type	LT	TH/RT	LT	TH/RT	LT	TH/RT	LT	TH/RT
	No. Lanes	1	2	1	2	1	2	1	2
No-Build (2050) AM Peak	LOS	A	A	A	A	C	C	C	C
	Delay (s/veh)	7	2	7	3	30	21	24	25
	v/c Ratio	0.15	0.55	0.15	0.68	0.34	0.14	0.25	0.50
	95% Queue (ft)	25	25	25	50	75	50	75	125 ❺
	Storage (ft)	140	-	100	-	90	-	80	-
	Int. Delay (LOS)	8 (A)							
No-Build (2050) PM Peak	LOS	A	B	B	A	C	C	C	C
	Delay (s/veh)	8	17	12	3	33	26	29	25
	v/c Ratio	0.13	0.71	0.39	0.63	0.50	0.41	0.15	0.33
	95% Queue (ft)	25	300 ❻	50	50	**150**	125 ❺	50	100 ❺
	Storage (ft)	140	-	100	-	90	-	80	-
	Int. Delay (LOS)	14 (B)							

Traffic Analysis Results – WIS 35 (West Ave) & Cass St									
Intersection #:	*45*	NB		SB		EB		WB	
Intersection Type:	*Signalized*	WIS 35		WIS 35		Cass St		Cass St	
Scenario	Data Type	LT	TH/RT	LT	TH/RT	LT	TH/RT	LT	TH/RT
	No. Lanes	1	2	1	2	1	1	1	1
No-Build (2050) AM Peak	LOS	B	B	B	C	C	B	C	C
	Delay (s/veh)	12	17	10	23	32	19	22	28
	v/c Ratio	0.24	0.60	0.19	0.71	0.32	0.22	0.24	0.73
	95% Queue (ft)	25	225 ❻	25	325 ❻	75	75	75	225 ❻
	Storage (ft)	140	-	160	-	100	-	120	-
	Int. Delay (LOS)	21 (C)							
No-Build (2050) PM Peak	LOS	B	C	B	B	C	C	C	C
	Delay (s/veh)	11	21	13	16	35	30	34	27
	v/c Ratio	0.18	0.73	0.40	0.62	0.44	0.68	0.20	0.54
	95% Queue (ft)	25	**350**	50	**250**	125 ❷	225 ❷	50	175 ❻
	Storage (ft)	140	-	160	-	100	-	120	-
	Int. Delay (LOS)	21 (C)							

Traffic Analysis Results – WIS 35 (West Ave) & Market St										
Intersection #:	*50*	NB		SB		EB			WB	
Intersection Type:	*Signalized*	WIS 35		WIS 35		Market St			Market St	
Scenario	Data Type	LT	TH/RT	LT	TH/RT	LT	TH	RT	LT	TH/RT
	No. Lanes	1	2	1	2	1	1	1	1	1
No-Build (2050) AM Peak	LOS	B	A	A	B	C	B	B	C	C
	Delay (s/veh)	10	2	9	19	32	19	19	20	25
	v/c Ratio	0.47	0.55	0.08	0.65	0.42	0.10	0.12	0.13	0.62
	95% Queue (ft)	50	25	25	250 ❻	100	25	50	50	200 ❻
	Storage (ft)	140	-	140	-	70	-	70	70	-
	Int. Delay (LOS)	13 (B)								
No-Build (2050) PM Peak	LOS	B	A	A	B	C	C	C	C	C
	Delay (s/veh)	11	2	9	19	34	22	21	23	21
	v/c Ratio	0.18	0.59	0.16	0.66	0.68	0.25	0.18	0.05	0.19
	95% Queue (ft)	25	25	50	300 ❻	225 ❷	100 ❷	50	25	75 ❺
	Storage (ft)	140	-	140	-	70	-	70	70	-
	Int. Delay (LOS)	14 (B)								

Traffic Analysis Results – WIS 35 (West Ave) & WIS 33 (Jackson St)									
Intersection #:	*53*	NB		SB		EB		WB	
Intersection Type:	*Signalized*	WIS 35		WIS 35		WIS 33		WIS 33	
Scenario	Data Type	LT	TH/RT	LT	TH/RT	LT	TH/RT	TH/LT	RT
	No. Lanes	1	2	1	2	1	1	1	1
No-Build (2050) AM Peak	LOS	B	C	B	C	D	B	C	C
	Delay (s/veh)	15	22	15	29	37	18	25	21
	v/c Ratio	0.52	0.59	0.51	0.62	0.52	0.39	0.72	0.55
	95% Queue (ft)	100	225	100	250	100	125	275 ❺	175
	Storage (ft)	290	-	550	-	250	-	250	-
	Int. Delay (LOS)	23 (C)							
No-Build (2050) PM Peak	LOS	B	C	C	C	**F**	D	C	C
	Delay (s/veh)	15	21	28	29	493	46	26	21
	v/c Ratio	0.29	0.51	0.84	0.54	1.93	0.91	0.61	0.34
	95% Queue (ft)	50	200	175	300	**675**	**425**	150	125
	Storage (ft)	290	-	550	-	250	-	250	-
	Int. Delay (LOS)	**60 (E)**							

Traffic Analysis Results – WIS 35 (West Ave) & Green Bay St									
Intersection #:	*58*	NB		SB		EB		WB	
Intersection Type:	*Signalized*	WIS 35		WIS 35		Green Bay St		Green Bay St	
Scenario	Data Type	LT	TH/RT	LT	TH/RT	LT	TH/RT	LT	TH/RT
	No. Lanes	1	2	1	2	1	1	1	1
No-Build (2050) AM Peak	LOS	A	B	B	B	C	B	C	D
	Delay (s/veh)	10	15	10	13	33	19	20	35
	v/c Ratio	0.08	0.41	0.26	0.30	0.17	0.24	0.08	0.85
	95% Queue (ft)	25	150 ❺	50	100	25	75	25	325 ❻
	Storage (ft)	100	-	140	-	110	-	70	-
	Int. Delay (LOS)	20 (B)							
No-Build (2050) PM Peak	LOS	A	B	A	B	C	C	C	C
	Delay (s/veh)	9	12	8	11	34	33	35	26
	v/c Ratio	0.05	0.30	0.24	0.34	0.46	0.75	0.12	0.45
	95% Queue (ft)	25	125 ❺	50	150 ❺	125 ❺	**275**	25	150 ❻
	Storage (ft)	100	-	140	-	110	-	70	-
	Int. Delay (LOS)	18 (B)							

Traffic Analysis Results - Downtown Segment

Traffic Analysis Results – US 53 (Copeland Ave) & La Crosse St										
Intersection #:	*27*	NB		SB		EB		WB		
Intersection Type:	*Signalized*	US 53		US 53		La Crosse St		STH 16		
Scenario	Data Type	LT	TH/RT	LT	TH/RT	LT	TH/RT	LT	TH	RT
	No. Lanes	1	2	1	2	1	1	1	1	1
No-Build (2050) AM Peak	LOS	E	C	E	C	D	E	D	D	E
	Delay (s/veh)	75	29	70	21	49	57	48	52	62
	v/c Ratio	0.59	0.64	0.92	0.81	0.43	0.43	0.59	0.15	0.85
	95% Queue (ft)	25	**375**	350 ❷	**575**	150	75	200	25	175
	Storage (ft)	320	-	300	-	-	-	500	-	500
	Int. Delay (LOS)	32 (C)								
No-Build (2050) PM Peak	LOS	**F**	**F**	**F**	C	**F**	E	E	E	**F**
	Delay (s/veh)	108	111	141	24	95	64	62	72	292
	v/c Ratio	0.79	1.07	1.05	0.52	0.95	0.34	0.44	0.24	1.40
	95% Queue (ft)	75	**1225**	625 ❶	**425**	325	200	250	100	**700**
	Storage (ft)	320	-	300	-	-	-	500	-	500
	Int. Delay (LOS)	**98 (F)**								

Traffic Analysis Results – SB US 53 (3rd St) & Vine St				
Intersection #:	29	SB	EB	WB
Intersection Type:	TWSC	US 53	Vine St	Vine St
Scenario	Data Type	LT/TH/RT	TH/RT	LT/TH
	No. Lanes	2	1	1
No-Build (2050) AM Peak	LOS	-	D	F ❸
	Delay (s/veh)	-	32	56
	v/c Ratio	-	0.29	0.52
	95% Queue (ft)	-	50	75
	Storage (ft)	-	-	-
	Int. Delay (LOS)	4 (A)		
No-Build (2050) PM Peak	LOS	-	C	D
	Delay (s/veh)	-	23	29
	v/c Ratio	-	0.31	0.31
	95% Queue (ft)	-	50	50
	Storage (ft)	-	-	-
	Int. Delay (LOS)	3 (A)		

Traffic Analysis Results – NB US 53 (4th St) & Vine St						
Intersection #:	30	NB			EB	WB
Intersection Type:	TWSC	US 53			Vine St	Vine St
Scenario	Data Type	LT	TH	RT	LT/TH	TH/RT
	No. Lanes	1	2	1	1	1
No-Build (2050) AM Peak	LOS	-	-	-	C	B
	Delay (s/veh)	-	-	-	19	14
	v/c Ratio	-	-	-	0.25	0.09
	95% Queue (ft)	-	-	-	25	25
	Storage (ft)	70	-	70	-	-
	Int. Delay (LOS)	2 (A)				
No-Build (2050) PM Peak	LOS	-	-	-	D	D
	Delay (s/veh)	-	-	-	28	26
	v/c Ratio	-	-	-	0.29	0.30
	95% Queue (ft)	-	-	-	50	50
	Storage (ft)	70	-	70	-	-
	Int. Delay (LOS)	3 (A)				

Traffic Analysis Results – SB US 53 (3rd St) & State St							
Intersection #:	31	SB		EB		WB	
Intersection Type:	Signalized	US 53		State St		State St	
Scenario	Data Type	LT	TH/RT	TH	RT	LT	TH
	No. Lanes	1	2	1	1	1	1
No-Build (2050) AM Peak	LOS	B	D	B	B	B	B
	Delay (s/veh)	12	36	12	12	19	19
	v/c Ratio	0.07	0.89	0.05	0.01	0.06	0.14
	95% Queue (ft)	25	**375**	25	25	25	75
	Storage (ft)	50	-	-	100	-	100
	Int. Delay (LOS)	33 (C)					
No-Build (2050) PM Peak	LOS	B	C	B	B	C	B
	Delay (s/veh)	12	32	19	14	24	14
	v/c Ratio	0.16	0.87	0.50	0.14	0.29	0.13
	95% Queue (ft)	50	275 ❹	175 ❹	50	75	50
	Storage (ft)	50	-	-	100	-	100
	Int. Delay (LOS)	26 (C)					

Traffic Analysis Results – NB US 53 (4th St) & State St								
Intersection #:	32	NB			EB		WB	
Intersection Type:	Signalized	US 53			State St		State St	
Scenario	Data Type	LT	TH	RT	LT	TH	TH	RT
	No. Lanes	1	2	1	1	1	1	1
No-Build (2050) AM Peak	LOS	B	C	B	B	B	B	B
	Delay (s/veh)	16	22	15	17	15	16	15
	v/c Ratio	0.10	0.50	0.03	0.10	0.10	0.12	0.09
	95% Queue (ft)	50	250 ❹	25	25	50	50	25
	Storage (ft)	50	-	100	-	100	-	50
	Int. Delay (LOS)	21 (C)						
No-Build (2050) PM Peak	LOS	B	C	B	C	C	B	B
	Delay (s/veh)	16	24	16	32	25	16	16
	v/c Ratio	0.09	0.57	0.07	0.49	0.35	0.16	0.16
	95% Queue (ft)	50	275 ❹	50	200 ❹	150 ❹	50	50
	Storage (ft)	50	-	100	-	100	-	50
	Int. Delay (LOS)	24 (C)						

Traffic Analysis Results – SB US 53 (3rd St) & Main St					
Intersection #:	33	SB		EB	WB
Intersection Type:	Signalized	US 53		Main St	Main St
Scenario	Data Type	LT/TH	TH/RT	TH/RT	LT/TH
	No. Lanes	1	1	1	1
No-Build (2050) AM Peak	LOS	D	C	B	A
	Delay (s/veh)	37	33	11	3
	v/c Ratio	0.78	0.71	0.03	0.20
	95% Queue (ft)	**375**	**325**	25	25
	Storage (ft)	-	-	-	-
	Int. Delay (LOS)	30 (C)			
No-Build (2050) PM Peak	LOS	D	D	B	B
	Delay (s/veh)	51	41	14	15
	v/c Ratio	0.93	0.85	0.23	0.26
	95% Queue (ft)	**525**	**425**	75	100
	Storage (ft)	-	-	-	-
	Int. Delay (LOS)	39 (D)			

Traffic Analysis Results – NB US 53 (4th St) & Main St								
Intersection #:	35	NB			EB		WB	
Intersection Type:	Signalized	US 53			Main St		Main St	
Scenario	Data Type	LT	TH	RT	LT	TH	TH	RT
	No. Lanes	1	2	1	1	1	1	1
No-Build (2050) AM Peak	LOS	A	B	A	B	B	B	B
	Delay (s/veh)	10	15	9	17	15	17	15
	v/c Ratio	0.12	0.65	0.04	0.04	0.09	0.21	0.04
	95% Queue (ft)	50	225 ❹	25	25	25	75 ❺	25
	Storage (ft)	50	-	50	-	50	-	50
	Int. Delay (LOS)	15 (B)						
No-Build (2050) PM Peak	LOS	A	B	A	A	A	B	B
	Delay (s/veh)	10	14	9	8	8	16	15
	v/c Ratio	0.10	0.56	0.08	0.16	0.27	0.16	0.09
	95% Queue (ft)	25	200 ❹	25	25	50	50	25
	Storage (ft)	50	-	100	-	50	-	50
	Int. Delay (LOS)	13 (B)						

Traffic Analysis Results – NB US 53 (4th St) & Jay St								
Intersection #:	38	NB			EB		WB	
Intersection Type:	Signalized	US 53			Jay St		Jay St	
Scenario	Data Type	LT	TH	RT	LT	TH	TH	RT
	No. Lanes	1	2	1	1	1	1	1
No-Build (2050) AM Peak	LOS	B	C	B	B	B	B	B
	Delay (s/veh)	16	27	15	17	15	15	15
	v/c Ratio	0.10	0.68	0.02	0.12	0.09	0.07	0.05
	95% Queue (ft)	50	**325**	25	50	25	25	25
	Storage (ft)	50	-	50	-	50	-	75
	Int. Delay (LOS)	25 (C)						
No-Build (2050) PM Peak	LOS	B	C	B	C	C	B	B
	Delay (s/veh)	16	25	15	25	22	15	15
	v/c Ratio	0.08	0.63	0.03	0.22	0.15	0.09	0.07
	95% Queue (ft)	50	300 ❹	25	100 ❹	75	25	25
	Storage (ft)	50	-	100	-	50	-	75
	Int. Delay (LOS)	24 (C)						

Traffic Analysis Results – SB US 53 (3rd St) & Jay St						
Intersection #:	39	SB		EB		WB
Intersection Type:	Signalized	US 53		Jay St		Jay St
Scenario	Data Type	LT/TH	TH/RT	TH	RT	LT/TH
	No. Lanes	1	1	1	1	1
No-Build (2050) AM Peak	LOS	C	B	B	B	B
	Delay (s/veh)	22	20	13	13	14
	v/c Ratio	0.10	0.18	0.04	0.03	0.14
	95% Queue (ft)	275	225	25	25	50
	Storage (ft)	-	-	-	100	-
	Int. Delay (LOS)	20 (B)				
No-Build (2050) PM Peak	LOS	D	C	B	B	B
	Delay (s/veh)	40	30	12	12	13
	v/c Ratio	0.92	0.84	0.12	0.11	0.19
	95% Queue (ft)	**425**	**350**	50	50	75
	Storage (ft)	-	-	-	100	-
	Int. Delay (LOS)	31 (C)				

Traffic Analysis Results – NB US 53 (4th St) & King St						
Intersection #:	40	NB			EB	WB
Intersection Type:	TWSC	US 53			King St	King St
Scenario	Data Type	LT	TH	RT	LT/TH	TH/RT
	No. Lanes	1	2	1	1	1
No-Build (2050) AM Peak	LOS	-	-	-	C	C
	Delay (s/veh)	-	-	-	23	20
	v/c Ratio	-	-	-	0.18	0.07
	95% Queue (ft)	-	-	-	25	25
	Storage (ft)	50	-	75	-	-
	Int. Delay (LOS)	1 (A)				
No-Build (2050) PM Peak	LOS	-	-	-	D	C
	Delay (s/veh)	-	-	-	26	15
	v/c Ratio	-	-	-	0.34	0.14
	95% Queue (ft)	-	-	-	50	25
	Storage (ft)	70	-	70	-	-
	Int. Delay (LOS)	3 (A)				

Traffic Analysis Results – SB US 53 (3rd St) & King St				
Intersection #:	41	SB	EB	WB
Intersection Type:	TWSC	US 53	King St	King St
Scenario	Data Type	LT/TH/RT	TH/RT	LT/TH
	No. Lanes	2	1	1
No-Build (2050) AM Peak	LOS	-	B	C
	Delay (s/veh)	-	13	17
	v/c Ratio	-	0.18	0.20
	95% Queue (ft)	-	25	25
	Storage (ft)	-	-	-
	Int. Delay (LOS)	3 (A)		
No-Build (2050) PM Peak	LOS	-	E	F ❸
	Delay (s/veh)	-	46	75
	v/c Ratio	-	0.77	0.72
	95% Queue (ft)	-	175	125
	Storage (ft)	-	-	-
	Int. Delay (LOS)	12 (B)		

Traffic Analysis Results – NB US 14/61 (4th St) & Cass St					
Intersection #:	43	NB			WB
Intersection Type:	Signalized	US 14/61			Cass St
Scenario	Data Type	LT	LT/TH	RT	TH/RT
	No. Lanes	1	2	1	1
No-Build (2050) AM Peak	LOS	C	C	C	B
	Delay (s/veh)	28	34	24	14
	v/c Ratio	0.55	0.83	0.38	0.25
	95% Queue (ft)	300	**375**	175	75
	Storage (ft)	280	-	280	-
	Int. Delay (LOS)	29 (C)			
No-Build (2050) PM Peak	LOS	C	C	B	B
	Delay (s/veh)	32	33	19	18
	v/c Ratio	0.70	0.83	0.23	0.39
	95% Queue (ft)	**400**	**425**	125	125
	Storage (ft)	280	-	280	-
	Int. Delay (LOS)	29 (C)			

Traffic Analysis Results – SB US 53 (3rd St) & Cass St					
Intersection #:	44	SB		WB	
Intersection Type:	Signalized	US 53		Cass St	
Scenario	Data Type	TH	RT	LT	LT/TH
	No. Lanes	2	1	1	2
No-Build (2050) AM Peak	LOS	C	B	B	C
	Delay (s/veh)	28	19	19	21
	v/c Ratio	0.64	0.08	0.12	0.34
	95% Queue (ft)	275 ❹	50	75	175
	Storage (ft)	-	160	250	-
	Int. Delay (LOS)	25 (C)			
No-Build (2050) PM Peak	LOS	C	C	B	C
	Delay (s/veh)	34	35	17	28
	v/c Ratio	0.79	0.68	0.12	0.73
	95% Queue (ft)	325 ❹	275 ❹	75	**375**
	Storage (ft)	-	160	250	-
	Int. Delay (LOS)	31 (C)			

Traffic Analysis Results – NB US 14/61 (4th St) & Cameron Ave			
Intersection #:	46	NB	EB
Intersection Type:	Signalized	US 14/61	Cameron Ave
Scenario	Data Type	TH/RT	LT
	No. Lanes	4	2
No-Build (2050) AM Peak	LOS	B	A
	Delay (s/veh)	17	9
	v/c Ratio	0.58	0.50
	95% Queue (ft)	150	50
	Storage (ft)	-	-
	Int. Delay (LOS)	15 (B)	
No-Build (2050) PM Peak	LOS	B	A
	Delay (s/veh)	20	9
	v/c Ratio	0.74	0.24
	95% Queue (ft)	225	50
	Storage (ft)	-	-
	Int. Delay (LOS)	18 (B)	

Traffic Analysis Results – SB US 53 (3rd St) & Cameron St					
Intersection #:	47	SB		EB	
Intersection Type:	Signalized	US 53		Cameron Ave	
Scenario	Data Type	LT	TH	TH	RT
	No. Lanes	1	2	2	1
No-Build (2050) AM Peak	LOS	C	D	B	F
	Delay (s/veh)	21	48	11	74
	v/c Ratio	0.03	0.95	0.40	1.08
	95% Queue (ft)	25	400	125	700
	Storage (ft)	270	-	-	400
	Int. Delay (LOS)	47 (D)			
No-Build (2050) PM Peak	LOS	B	C	B	B
	Delay (s/veh)	19	31	12	16
	v/c Ratio	0.07	0.74	0.18	0.45
	95% Queue (ft)	50	325	50	150
	Storage (ft)	270	-	-	400
	Int. Delay (LOS)	25 (C)			

Traffic Analysis Results – SB US 14/61 (3rd St) & Market St				
Intersection #:	48	SB	EB	WB
Intersection Type:	TWSC	US 14/61	Market St	Market St
Scenario	Data Type	LT/TH/RT	TH/RT	LT/TH
	No. Lanes	2	1	1
No-Build (2050) AM Peak	LOS	-	F	F
	Delay (s/veh)	-	104	444
	v/c Ratio	-	0.69	1.70
	95% Queue (ft)	-	100	300
	Storage (ft)	-	-	-
	Int. Delay (LOS)	33 (C)		
No-Build (2050) PM Peak	LOS	-	D	F
	Delay (s/veh)	-	32	62
	v/c Ratio	-	0.43	0.63
	95% Queue (ft)	-	50	100
	Storage (ft)	-	-	-
	Int. Delay (LOS)	6 (A)		

Traffic Analysis Results – NB US 14/61 (4th St) & Market St				
Intersection #:	49	NB	EB	WB
Intersection Type:	TWSC	US 14/61	Market St	Market St
Scenario	Data Type	LT/TH/RT	TH/RT	LT/TH
	No. Lanes	3	1	1
No-Build (2050) AM Peak	LOS	-	F	F
	Delay (s/veh)	-	327	133
	v/c Ratio	-	1.43	1.07
	95% Queue (ft)	-	250	250
	Storage (ft)	-	-	-
	Int. Delay (LOS)	45 (D)		
No-Build (2050) PM Peak	LOS	-	F	F
	Delay (s/veh)	-	1972	261
	v/c Ratio	-	4.56	1.35
	95% Queue (ft)	-	325	300
	Storage (ft)	-	-	-
	Int. Delay (LOS)	119 (F)		

Traffic Analysis Results – SB US 14/61 (3rd St) & WIS 33 (Jackson St)								
Intersection #:	51	SB			EB		WB	
Intersection Type:	Signalized	US 14/61			Jackson St		WIS 33	
Scenario	Data Type	LT	TH	RT	TH	RT	LT	TH
	No. Lanes	1	2	1	1	1	1	1
No-Build (2050) AM Peak	LOS	A	A	A	C	B	C	C
	Delay (s/veh)	3	5	3	22	20	24	20
	v/c Ratio	0.16	0.60	0.05	0.63	0.10	0.11	0.26
	95% Queue (ft)	25	125 ❹	25	75	25	25	25
	Storage (ft)	60	-	60	-	80	100	-
	Int. Delay (LOS)	7 (A)						
No-Build (2050) PM Peak	LOS	A	A	A	B	B	C	B
	Delay (s/veh)	4	5	3	20	17	21	18
	v/c Ratio	0.32	0.51	0.08	0.63	0.07	0.13	0.20
	95% Queue (ft)	50	100 ❹	25	75	25	25	25
	Storage (ft)	60	-	60	-	80	100	-
	Int. Delay (LOS)	7 (A)						

Traffic Analysis Results – NB US 14/61 (4th St) & WIS 33 (Jackson St)							
Intersection #:	52	NB			EB		WB
Intersection Type:	Signalized	US 14/61			WIS 33		WIS 33
Scenario	Data Type	LT/TH	TH	TH/RT	LT	TH	TH/RT
	No. Lanes	1	1	1	1	1	1
No-Build (2050) AM Peak	LOS	A	A	A	C	B	B
	Delay (s/veh)	10	9	9	23	15	18
	v/c Ratio	0.46	0.42	0.42	0.40	0.36	0.58
	95% Queue (ft)	125	100	125	75	100	150
	Storage (ft)	-	-	-	100	-	-
	Int. Delay (LOS)	12 (B)					
No-Build (2050) PM Peak	LOS	B	B	B	D	C	C
	Delay (s/veh)	12	12	12	40	26	25
	v/c Ratio	0.59	0.53	0.53	0.67	0.66	0.59
	95% Queue (ft)	250	200	225	175	250	200
	Storage (ft)	-	-	-	350	-	-
	Int. Delay (LOS)	18 (B)					

Traffic Analysis Results - US 14/61 (South Ave, Mormon Coulee Rd) Segment

Traffic Analysis Results – US 14/61 (South Ave) & 7th St											
Intersection #:	*56*	NB			SB			EB		WB	
Intersection Type:	*Signalized*	US 14/61			US 14/61			7th St		7th St	
Scenario	Data Type	LT	TH	RT	LT	TH	RT	LT	TH/RT	LT	TH/RT
	No. Lanes	1	2	1	1	2	1	1	2	1	2
No-Build (2050) AM Peak	LOS	A	B	C	B	B	B	C	C	C	C
	Delay (s/veh)	10	15	11	10	12	16	26	31	26	34
	v/c Ratio	0.30	0.47	0.10	0.41	0.30	0.49	0.44	0.35	0.19	0.45
	95% Queue (ft)	50	175	50	75	125	175	125	75	50	100
	Storage (ft)	230	-	250	180	-	210	190	-	160	-
	Int. Delay (LOS)	17 (B)									
No-Build (2050) PM Peak	LOS	B	B	B	B	C	B	D	D	C	D
	Delay (s/veh)	16	19	15	14	21	15	53	36	34	47
	v/c Ratio	0.26	0.50	0.10	0.17	0.57	0.10	0.92	0.60	0.42	0.65
	95% Queue (ft)	50	250 ❺	50	50	**300**	50	**400**	200 ❺	125	150
	Storage (ft)	230	-	250	180	-	210	190	-	160	-
	Int. Delay (LOS)	29 (C)									

Traffic Analysis Results – US 14/61 (South Ave) & Green Bay St											
Intersection #:	***59***	**NB**		**SB**		**EB**			**WB**		
Intersection Type:	***Signalized***	**US 14/61**		**US 14/61**		**Green Bay St**			**Green Bay St**		
Scenario	**Data Type**	**LT**	**TH/RT**	**LT**	**TH/RT**	**LT**	**TH**	**RT***	**LT**	**TH**	**RT**
	No. Lanes	1	2	1	1	2	1	1	2	1	2
No-Build (2050) AM Peak	LOS	A	B	B	B	C	C	C	B	C	C
	Delay (s/veh)	9	15	11	14	21	22	26	20	28	23
	v/c Ratio	0.30	0.61	0.30	0.41	0.10	0.17	0.08	0.06	0.69	0.29
	95% Queue (ft)	50	200	50	125	25	50	50	25	175 ❷	75
	Storage (ft)	280	-	230	-	80	-	230	90	-	130
	Int. Delay (LOS)	16 (B)									
No-Build (2050) PM Peak	LOS	B	B	B	B	C	C	C	C	C	C
	Delay (s/veh)	11	15	10	14	21	29	27	25	28	30
	v/c Ratio	0.15	0.54	0.41	0.61	0.36	0.66	0.15	0.15	0.20	0.40
	95% Queue (ft)	25	200	75	225	100 ❷	175 ❷	100	25	50	75
	Storage (ft)	280	-	230	-	80	-	230	90	-	130
	Int. Delay (LOS)	17 (B)									

* Synchro results reported since HCM doesn't provide traffic analysis results for stop-controlled right turn lanes.

Traffic Analysis Results – US 14/61 (South Ave) & WIS 35 (West Ave) / Weston St								
Intersection #:	***61***	**NB**	**SB**		**EB**		**WB**	
Intersection Type:	***Roundabout***	**Weston St**	**WIS 35**		**US 14/61**		**US 14/61**	
Scenario	**Data Type**	**LT/TH/RT**	**LT**	**LT/TH/RT**	**LT/TH**	**TH/RT**	**LT/TH**	**TH/RT**
	No. Lanes	1	1	1	1	1	1	1
No-Build (2050) AM Peak	LOS	A	C	B	A	A	B	B
	Delay (s/veh)	9	15	12	7	7	10	12
	v/c Ratio	0.21	0.41	0.33	0.30	0.33	0.61	0.68
	95% Queue (ft)	25	50	50	50	50	125	150
	Storage (ft)	-	-	-	-	-	-	-
	Int. Delay (LOS)	11 (B)						
No-Build (2050) PM Peak	LOS	C	B	B	C	C	A	A
	Delay (s/veh)	22	13	11	17	19	5	6
	v/c Ratio	0.33	0.49	0.41	0.68	0.73	0.29	0.32
	95% Queue (ft)	50	75	50	150	175	50	50
	Storage (ft)	-	-	-	-	-	-	-
	Int. Delay (LOS)	13 (B)						

Traffic Analysis Results – US 14/61 (South Ave) & 16TH St / Castle Pl							
Intersection #:	***62***	**NB**	**SB**	**EB**		**WB**	
Intersection Type:	***Roundabout***	**Castle Pl**	**16th St**	**US 14/61**		**US 14/61**	
Scenario	**Data Type**	**LT/TH/RT**	**LT/TH/RT**	**LT/TH**	**TH/RT**	**LT/TH**	**TH/RT**
	No. Lanes	1	1	1	1	1	1
No-Build (2050) AM Peak	LOS	A	C	A	A	A	B
	Delay (s/veh)	6	16	5	5	9	10
	v/c Ratio	0.02	0.15	0.28	0.32	0.56	0.63
	95% Queue (ft)	25	25	50	50	100	125
	Storage (ft)	-	-	-	-	-	-
	Int. Delay (LOS)	8 (A)					
No-Build (2050) PM Peak	LOS	C	B	A	B	A	A
	Delay (s/veh)	17	11	10	12	7	8
	v/c Ratio	0.05	0.15	0.62	0.69	0.43	0.49
	95% Queue (ft)	25	25	125	175	75	75
	Storage (ft)	-	-	-	-	-	-
	Int. Delay (LOS)	9 (A)					

Traffic Analysis Results – US 14/61 (South Ave) & Ward Ave / East Ave									
Intersection #:	***63***	**NB**		**SB**		**EB**		**WB**	
Intersection Type:	***Roundabout***	**East Ave**		**Ward Ave**		**US 14/61**		**US 14/61**	
Scenario	**Data Type**	**LT**	**LT/TH/RT**	**LT/TH**	**RT**	**LT/TH**	**TH/RT**	**LT/TH**	**TH/RT**
	No. Lanes	1	1	1	1	1	1	1	1
No-Build (2050) AM Peak	LOS	A	A	C	E	A	A	B	C
	Delay (s/veh)	7	6	19	44	6	7	13	15
	v/c Ratio	0.11	0.09	0.40	0.82	0.34	0.38	0.65	0.71
	95% Queue (ft)	25	25	50	200	50	50	125	175
	Storage (ft)	200	-	-	200	-	-	-	-
	Int. Delay (LOS)	15 (C)							
No-Build (2050) PM Peak	LOS	D	D	A	B	B	B	B	C
	Delay (s/veh)	31	27	10	15	11	14	15	15
	v/c Ratio	0.58	0.56	0.19	0.47	0.65	0.73	0.59	0.63
	95% Queue (ft)	100	100	25	75	150	175	100	125
	Storage (ft)	200	-	-	200	-	-	-	-
	Int. Delay (LOS)	15 (B)							

Traffic Analysis Results – US 14/61 (Mormon Coulee Rd) & Victory St / 21st Pl									
Intersection #:	***65***	**NB**		**SB**		**EB**		**WB**	
Intersection Type:	***Signalized***	**US 14/61**		**US 14/61**		**Victory St**		**21st Pl**	
Scenario	**Data Type**	**LT**	**TH/RT**	**LT**	**TH/RT**	**LT/TH**	**RT**	**LT/TH**	**RT**
	No. Lanes	1	2	1	2	1	1	1	1
No-Build (2050) AM Peak	LOS	A	A	A	A	D	D	E	D
	Delay (s/veh)	1	4	4	6	43	41	59	45
	v/c Ratio	0.04	0.55	0.08	0.21	0.10	0.01	0.55	0.19
	95% Queue (ft)	0	125	25	100	50	25	100	50
	Storage (ft)	130	-	130	-	-	110	-	130
	Int. Delay (LOS)	7 (A)							
No-Build (2050) PM Peak	LOS	A	A	A	A	D	D	E	D
	Delay (s/veh)	3	9	5	10	40	36	60	36
	v/c Ratio	0.04	0.36	0.09	0.51	0.23	0.06	0.68	0.08
	95% Queue (ft)	0	400 ❷	25	400 ❷	75	25	150 ❺	50
	Storage (ft)	130	-	130	-	-	110	-	130
	Int. Delay (LOS)	13 (B)							

Traffic Analysis Results – US 14/61 (Mormon Coulee) & Losey Blvd											
Intersection #:	***66***	**NB**			**SB**			**EB**		**WB**	
Intersection Type:	***Signalized***	**US 14/61**			**US 14/61**			**Losey Blvd**		**Losey Blvd**	
Scenario	**Data Type**	**LT**	**TH**	**RT**	**LT**	**TH**	**RT**	**LT**	**TH/RT**	**LT**	**LT/TH/RT**
	No. Lanes	1	2	1	1	2	1	1	2	1	2
No-Build (2050) AM Peak	LOS	B	C	A	B	B	B	D	D	D	D
	Delay (s/veh)	11	20	8	15	12	11	52	49	45	46
	v/c Ratio	0.02	0.70	0.37	0.14	0.22	0.05	0.53	0.31	0.63	0.58
	95% Queue (ft)	25	425 ❼	**225**	25	125	25	100	50	175	150
	Storage (ft)	160	-	160	170	-	190	120	-	-	250
	Int. Delay (LOS)	23 (C)									
No-Build (2050) PM Peak	LOS	C	C	A	B	C	C	D	D	D	C
	Delay (s/veh)	23	24	8	18	32	20	53	48	42	34
	v/c Ratio	0.22	0.46	0.29	0.11	0.79	0.16	0.71	0.41	0.78	0.36
	95% Queue (ft)	25	250 ❼	**225**	25	475 ❻	75	150 ❺	100	325	150
	Storage (ft)	160	-	160	170	-	190	120	-	-	-
	Int. Delay (LOS)	31 (C)									

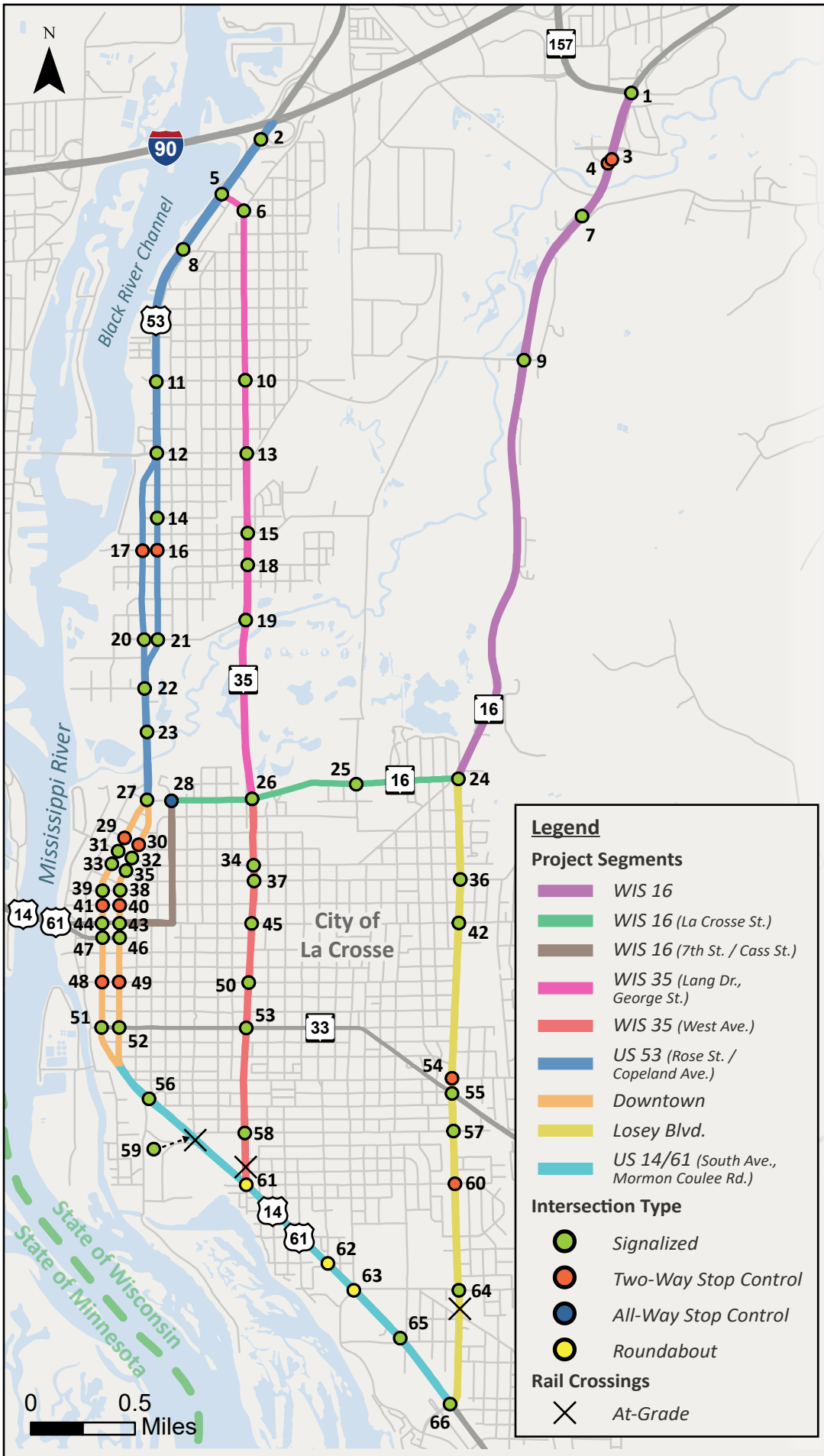

Project Intersections

1) WIS 16 & WIS 157
2) US 53 & I-94 EB On Ramp
3) WIS 16 NB & 12th Ave Jug Handle
4) WIS 16 SB & 12th Ave Jug handle
5) US 53 (Rose St) & WIS 35
6) WIS 35 & George St
7) WIS 16 & County B
8) US 53 (Rose St) & Palace St
9) WIS 16 & Gillette St
10) WIS 35 (George St) & Gillette St
11) US 53 (Rose St) & Gillette St
12) US 53 (Rose St) & Clinton St
13) WIS 35 (George St) & Clinton St
14) US 53 NB (Rose St) & St. James St
15) WIS 35 (George St) & St Cloud St
16) US 53 NB (Rose St) & Hagar St
17) US 53 SB (Copeland Ave) & Hagar St
18) WIS 35 & St. Andrews St
19) WIS 35 (West Ave) & Monitor St
20) US 53 SB (Copeland Ave) & Monitor St
21) US 53 NB (Rose St) & Monitor St
22) US 53 (Copeland Ave) & Causeway Blvd
23) US 53 (Copeland Ave) & River Bend Dr
24) WIS 16 (La Crosse St) & Losey Blvd
25) WIS 16 (La Crosse St) & East Ave
26) WIS 35 (West Ave) & WIS 16 (La Crosse St)
27) US 53 (Copeland Ave) & La Crosse St
28) WIS 16 (La Crosse St) & 7th St
29) US 53 SB (3rd St) & Vine St
30) US 53 NB (4th St) & Vine St
31) US 53 SB (3rd St) & State St
32) US 53 NB (4th St) & State St
33) US 53 SB (3rd St) & Main St
34) WIS 35 (West Ave) & State St
35) US 53 NB (4th St) & Main St
36) Losey Blvd & Main St
37) WIS 35 (West Ave) & Main St
38) US 53 (4th St) & Jay St
39) US 53 (3rd St) & Jay St
40) US 53 NB (4th St) & King St
41) US 53 SB (3rd St) & King St
42) Losey Blvd & Cass St
43) US 53 NB (4th St) & US 14 WB (Cass St)
44) US 53 SB (3rd St) & US 14 WB (Cass St)
45) WIS 35 (West Ave) & Cass St
46) US 53 NB (4th St) & US 14 EB (Cameron Ave)
47) US 53 SB (3rd St) & US 14 EB (Cameron Ave)
48) US 14 SB (3rd St) & Market St
49) US 14 NB (4th St) & Market St
50) WIS 35 (West Ave) & Market St
51) US 14 SB (3rd St) & WIS 33 (Jackson St)
52) US 14 NB (4th St) & WIS 33 (Jackson St)
53) WIS 35 (West Ave) & WIS 33 (Jackson St)
54) Losey Blvd & Farnam St
55) WIS 33 (State Rd) & Losey Blvd
56) US 14 (South Ave) & 7th St
57) Losey Blvd & Green Bay St.
58) WIS 35 (West Ave) & Green Bay St
59) US 14 (South Ave) & Green Bay St
60) Losey Blvd & Weston St
61) US 14 (South Ave) & WIS 35 (West Ave)
62) US 14 (South Ave) & 16th St / Thompson St
63) US 14 (South Ave) & Ward Ave
64) Losey Blvd & Ward Ave
65) US 14 & 21st St / Victory St
66) US 14 (Mormon Coulee Rd) & Losey Blvd

Project Location Map

La Crosse Safety and Operations Study

December 2021

WisDOT ID: 1630-08-00

Traffic Forecasting Section; Bureau of Planning and Economic Development; Division of Transportation Investment Management

WisDOT TRAFFIC FORECAST REPORT

PROJECT ID(S):	1630-08-00
ROUTE(S):	STH 16
Region/COUNTY(IES):	SW/La Crosse
LOCATION:	WI 16 Segment
COMPLETED:	02/23/2021

Developed By: Miao Zhang
Phone: (608) 266 - 7995

E-Mail: miao.zhang@dot.wi.gov

NOTES ON THE FORECAST:

1. This projection assumes that no major new traffic generators will be added to the development already included in the 2010/2040 La Crosse Regional Travel Demand Model.

2. Vehicle classification data and design values (K factors, directional splits, and percent trucks in design hours) are available here: http://wisconsindot.gov/Pages/projects/data-plan/traf-fore/default.aspx

3. STH 16 is a Factor Group II (Urban-Other) roadways (indicating low to moderate fluctuation in traffic from a seasonal perspective).

4. The 2010/2040 La Crosse Regional Travel Demand Model was used to complete this forecast. The Traffic Analysis Forecasting Information System output was used as a comparison tool to check against the model output. Adjustments were made as needed.

5. Roadway improvements coded within the existing plus committed (E+C) network of the 2010/2040 La Crose Regional Travel Demand Model were assumed to be in place for the purposes of developing this forecast.

Site(s)	**320287**	320474	320296
Routes(s)	**STH 16**	STH 16	STH 16
Volume(s)	33090	46570	43180
Site Growth %	0.61%	0.34%	0.51%

SITE ID = Colored, **bolded**, and underlined

Symbol	Count	Symbol	Forecast
-000-	2017 Count	(000)	2030 AADT
		[000]	2040 AADT
		000	2050 AADT

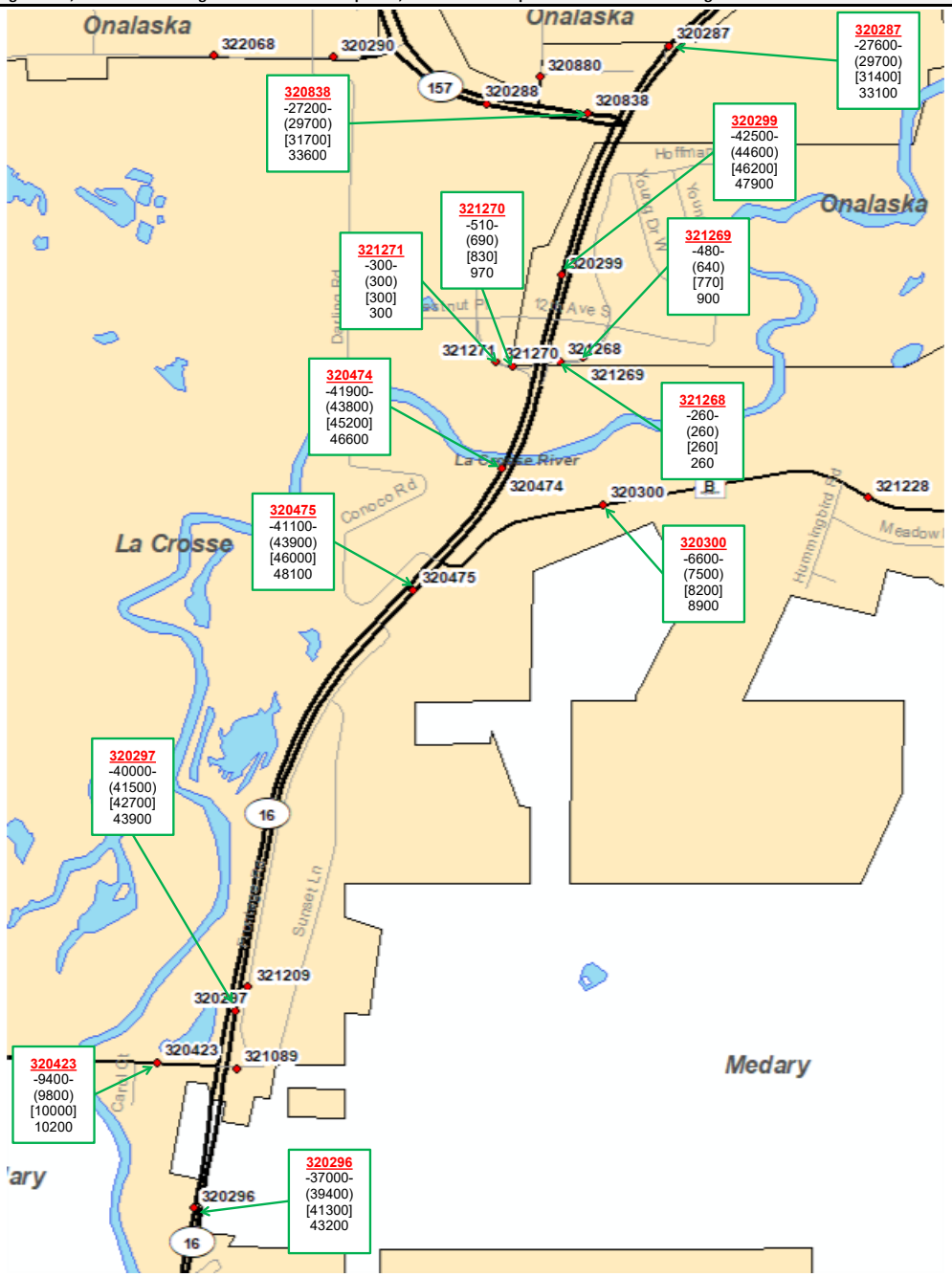

WisDOT Bureau of Planning & Economic Development
Traffic Forecasting Section
Forecast by: Miao Zhang
Phone: (608) 266 - 7995
Email: miao.zhang@dot.wi.gov

Projected AM Design Hour Traffic Volumes

Indicates roundabout

Design Hour: 7:00-8:00am

Forecast Completed: 12/10/2021

Project Description

Project ID(s): 1630-08-00
Route(s): STH 16
Region/COUNTY(IES): SW/La Crosse
Location: WIS 16 & WIS 157

Design Hour Turning Movement Data

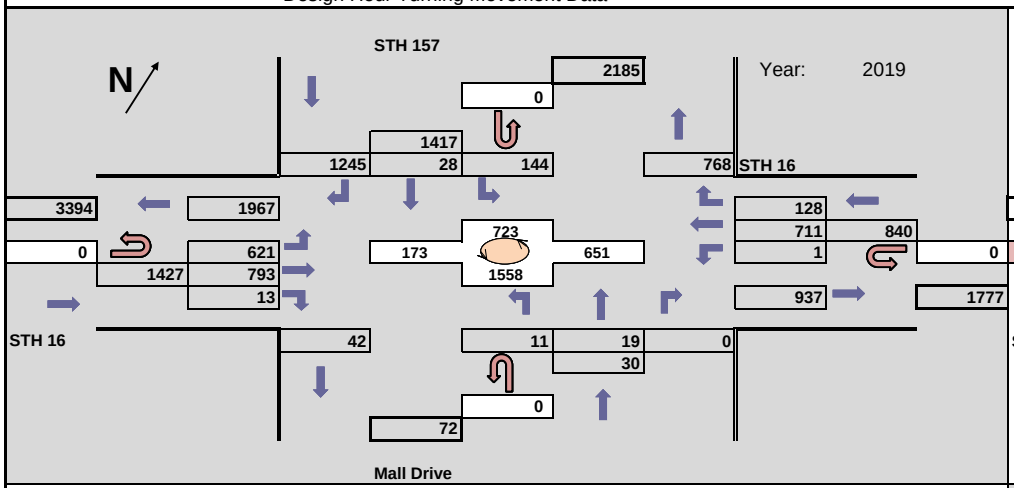

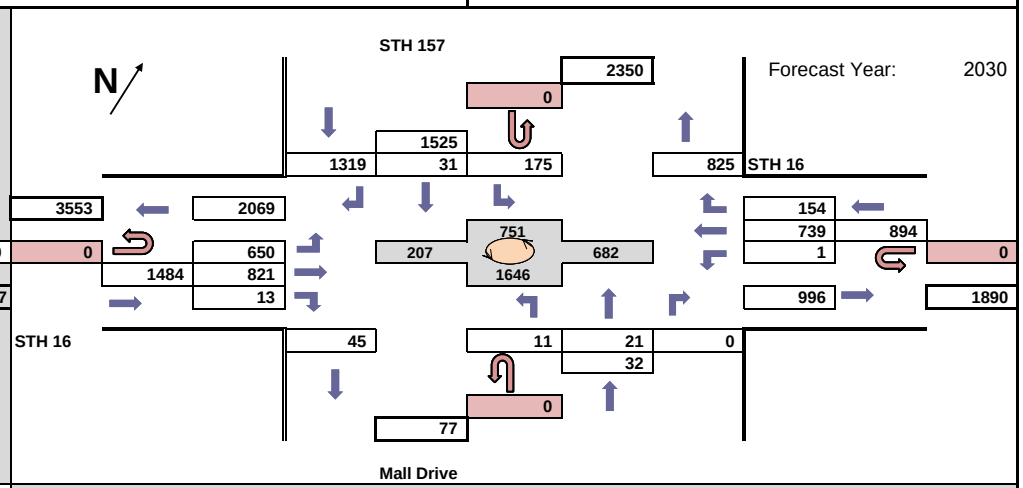

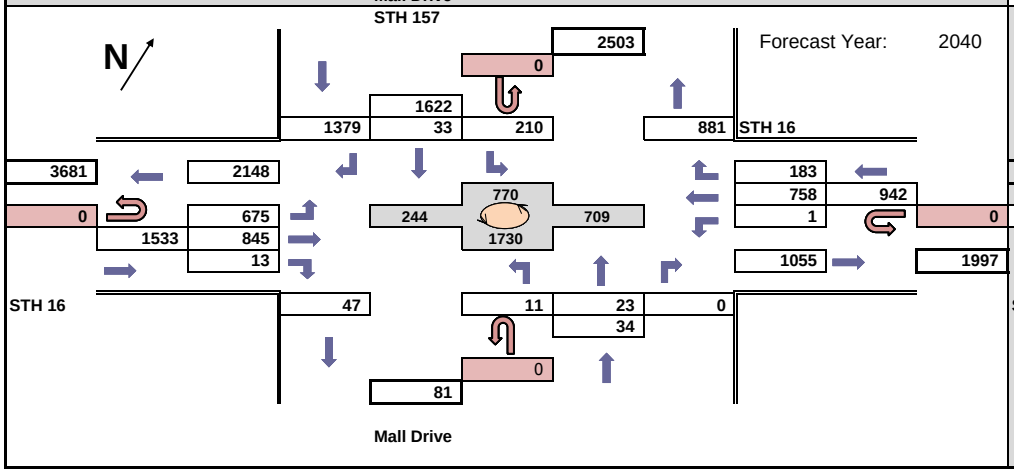

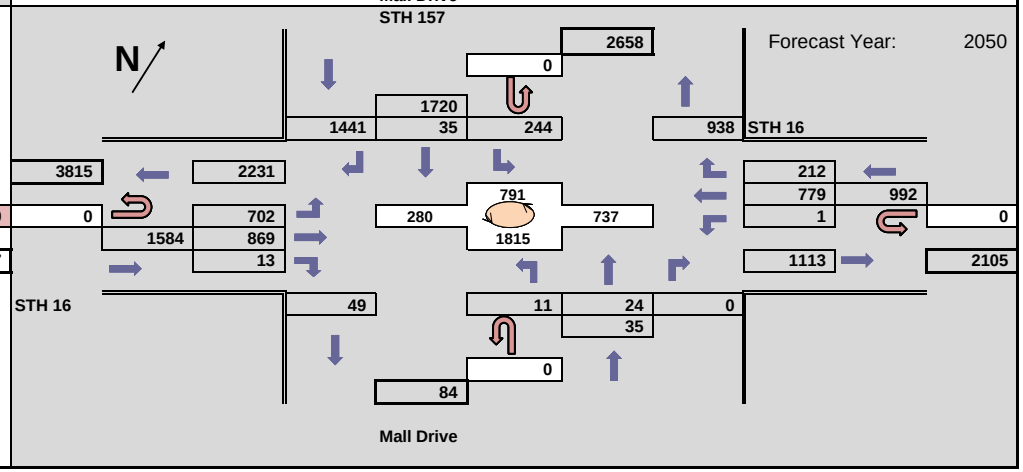

WisDOT Bureau of Planning & Economic Development
Traffic Forecasting Section
Forecast by: Miao Zhang
Phone: (608) 266 - 7995
Email: miao.zhang@dot.wi.gov

Projected PM Design Hour Traffic Volumes

Indicates roundabout

Design Hour: 4:00-5:00pm

Forecast Completed: 12/10/2021

Project Description

Project ID(s): 1630-08-00
Route(s): STH 16
Region/COUNTY(IES): SW/La Crosse
Location: WIS 16 & WIS 157

Design Hour Turning Movement Data

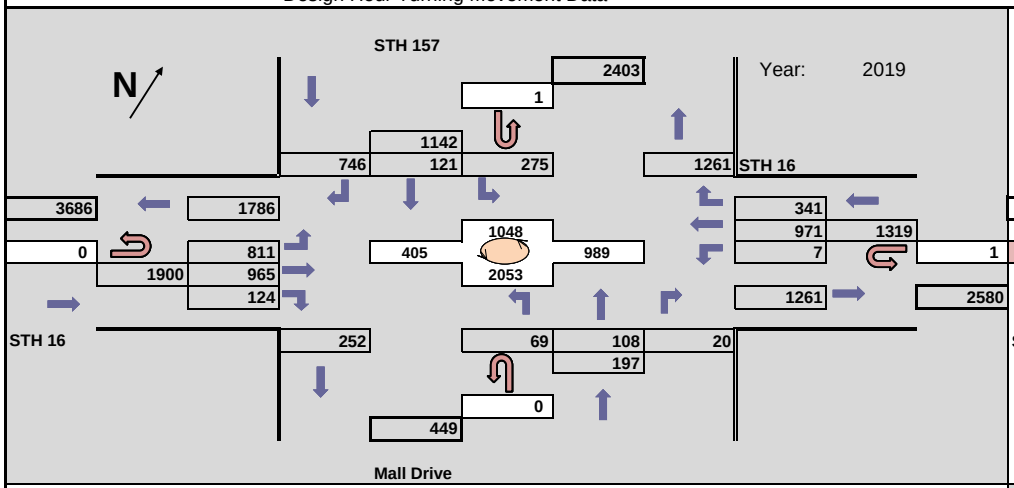

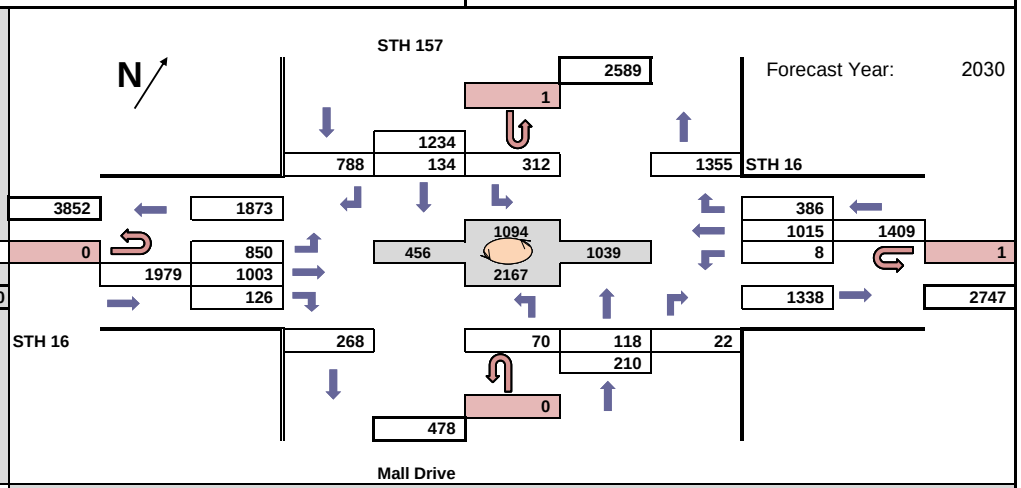

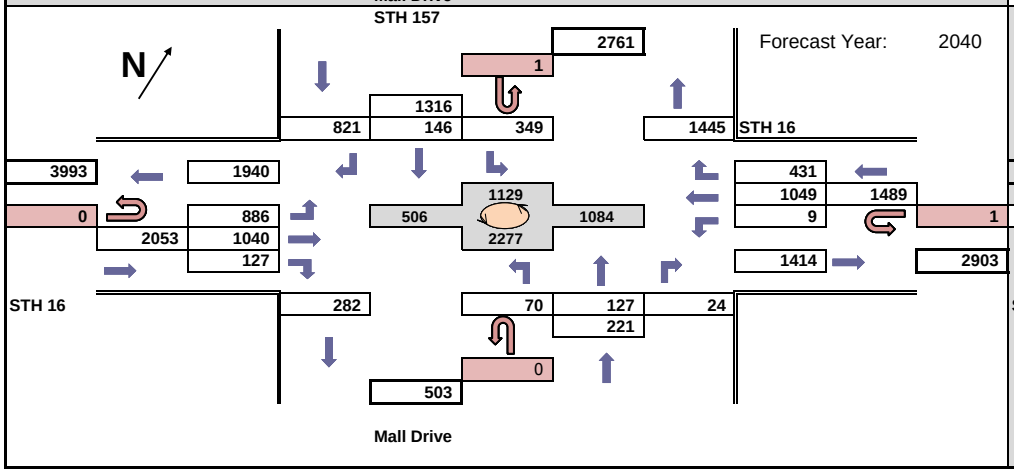

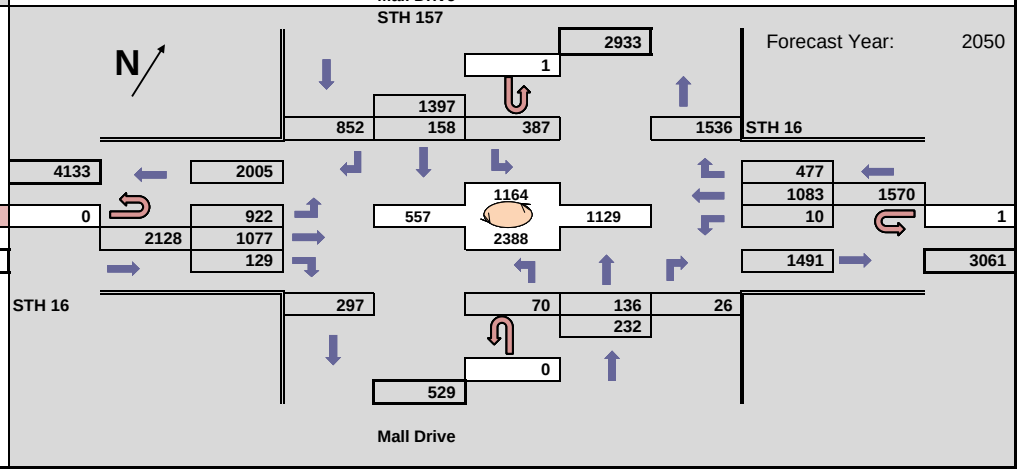

WisDOT Bureau of Planning & Economic Development
Traffic Forecasting Section
Forecast by: Miao Zhang
Phone: (608) 266 - 7995
Email: miao.zhang@dot.wi.gov

Projected AM Design Hour Traffic Volumes

Indicates roundabout

Design Hour: 7:00-8:00am

Forecast Completed: 2/23/2021

Project Description

Project ID(s):	**1630-08-00**
Route(s):	**STH 16**
Region/COUNTY(IES):	**SW/La Crosse**
Location:	**WIS 16 NB & 12th Ave Jug Handle**

Design Hour Turning Movement Data

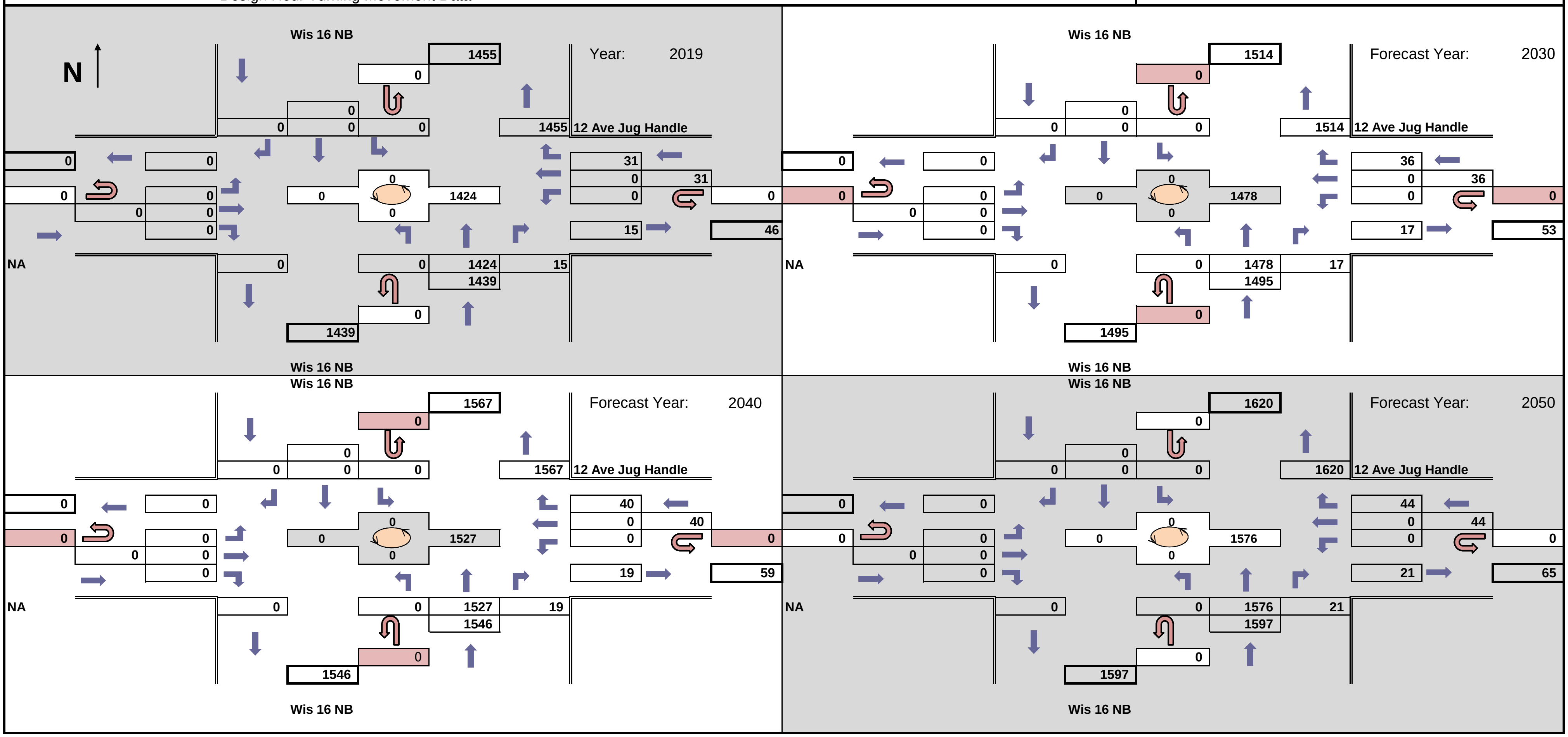

WisDOT Bureau of Planning & Economic Development
Traffic Forecasting Section
Forecast by: Miao Zhang
Phone: (608) 266 - 7995
Email: miao.zhang@dot.wi.gov

Projected PM Design Hour Traffic Volumes

Indicates roundabout

Design Hour: 4:00-5:00pm

Forecast Completed: 2/23/2021

Project Description

Project ID(s): 1630-08-00
Route(s): STH 16
Region/COUNTY(IES): SW/La Crosse
Location: WIS 16 NB & 12th Ave Jug Handle

Design Hour Turning Movement Data

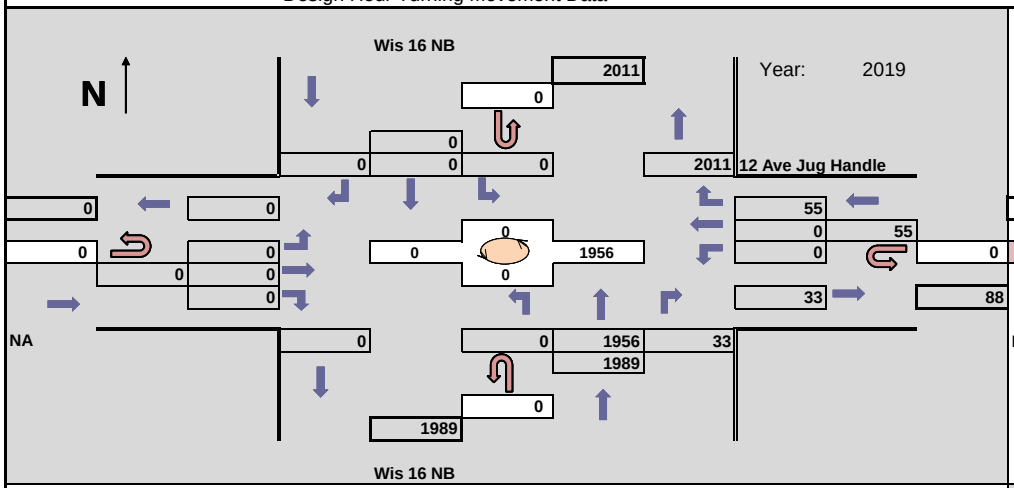

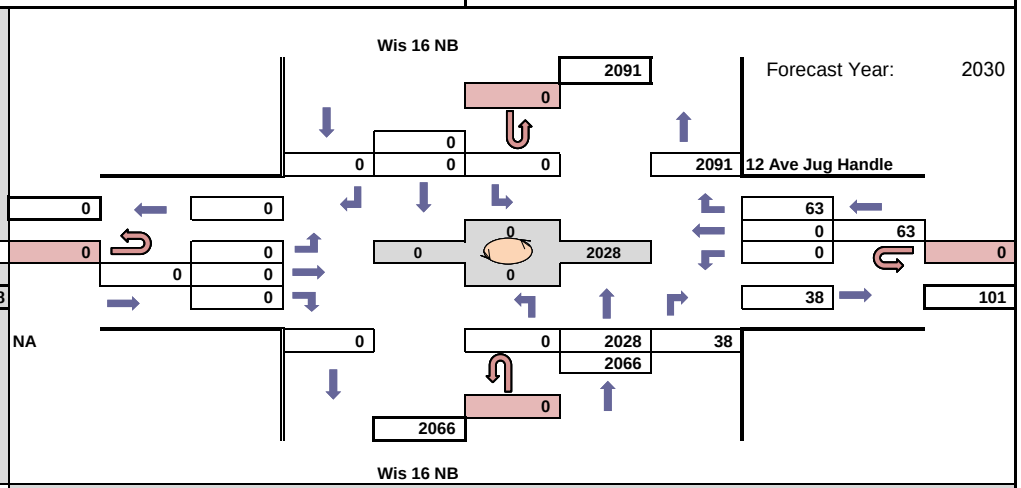

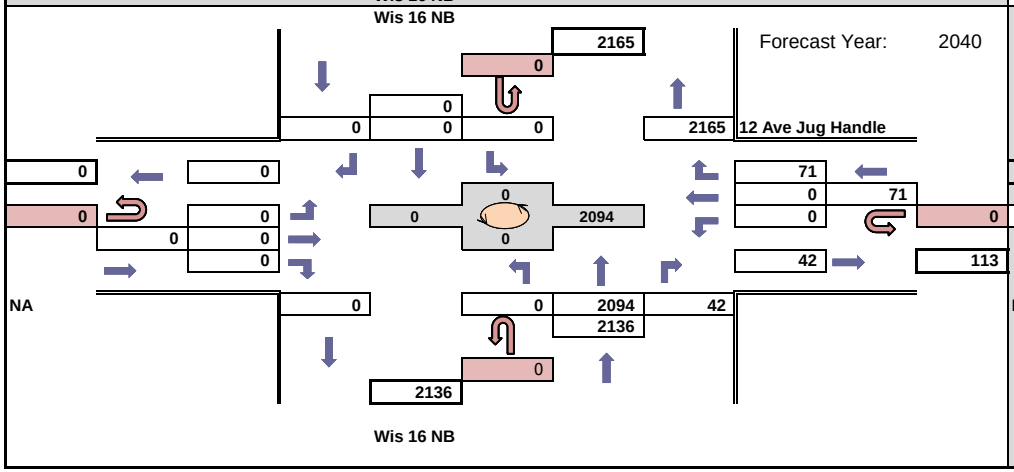

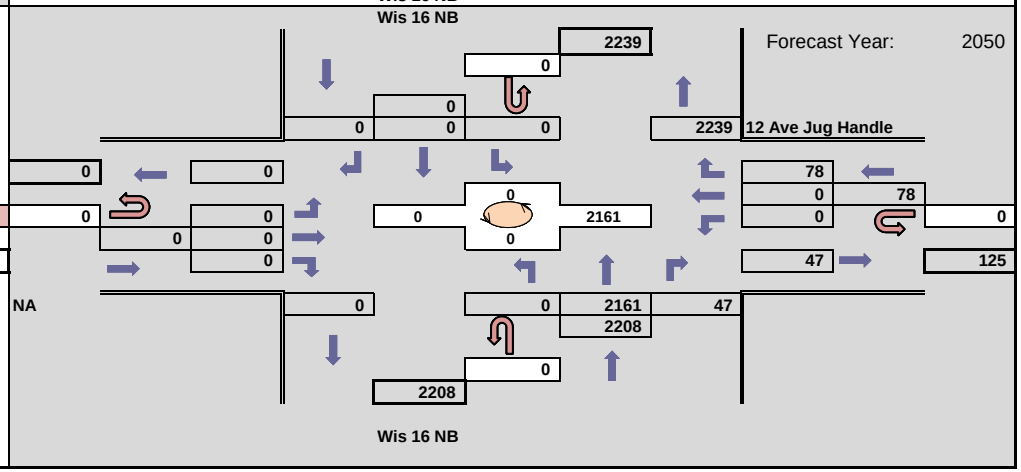

WisDOT Bureau of Planning & Economic Development
Traffic Forecasting Section
Forecast by: Miao Zhang
Phone: (608) 266 - 7995
Email: miao.zhang@dot.wi.gov

Projected AM Design Hour Traffic Volumes

Indicates roundabout

Design Hour: 7:00-8:00am

Forecast Completed: 2/23/2021

Project Description

Project ID(s): 1630-08-00
Route(s): STH 16
Region/COUNTY(IES): SW/La Crosse
Location: WIS 16 SB & 12th Ave Jug handle

Design Hour Turning Movement Data

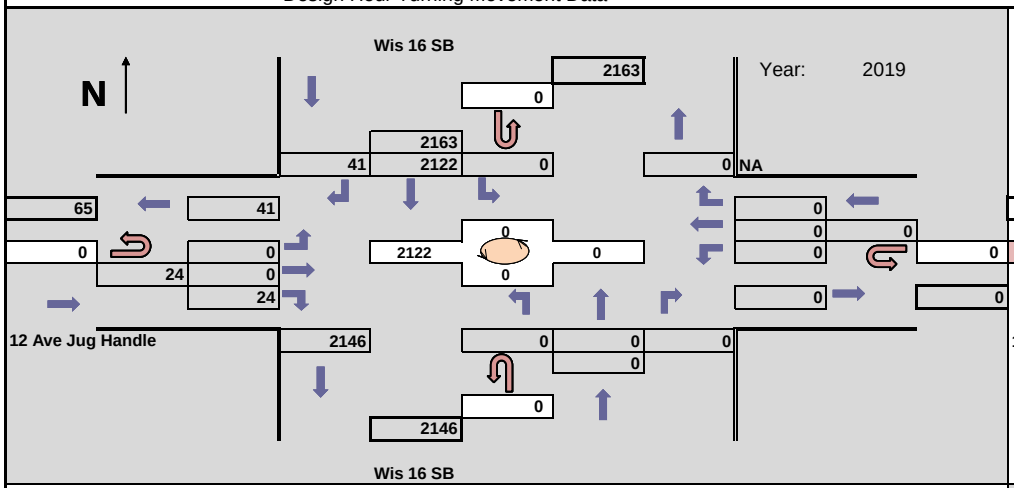

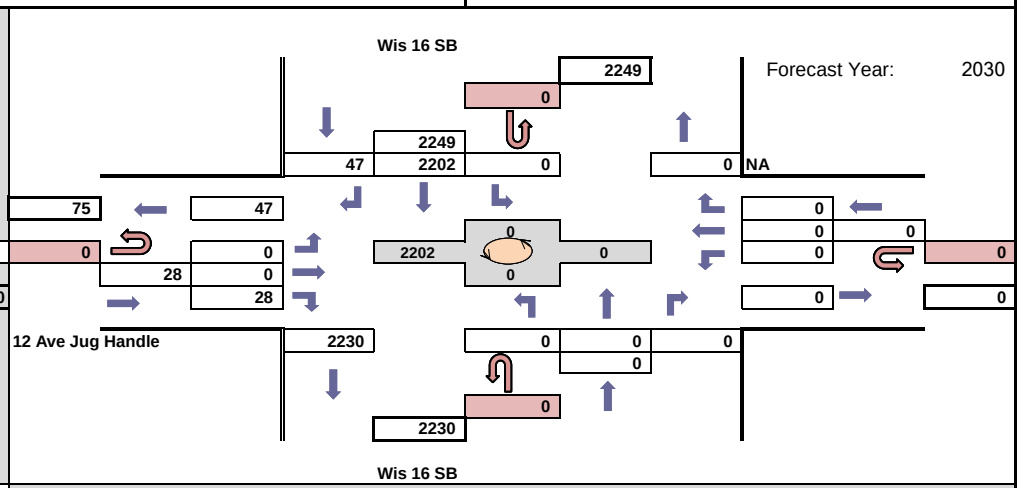

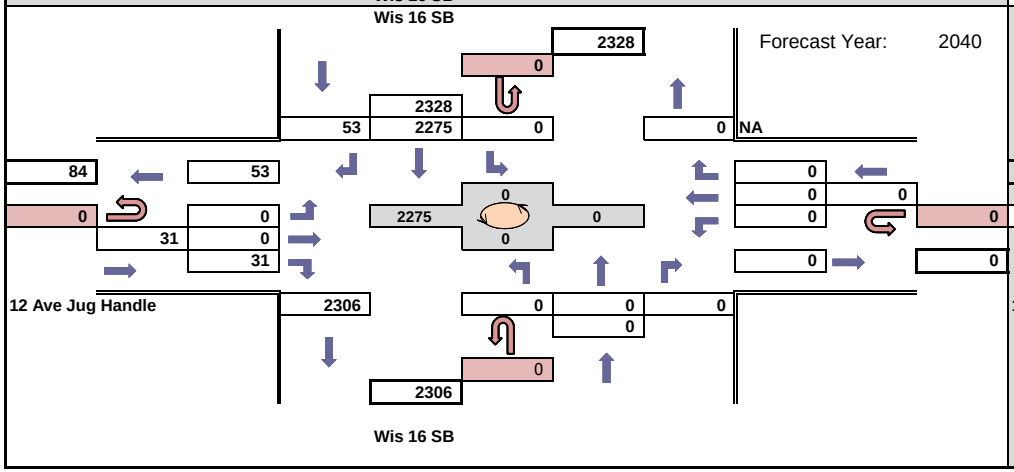

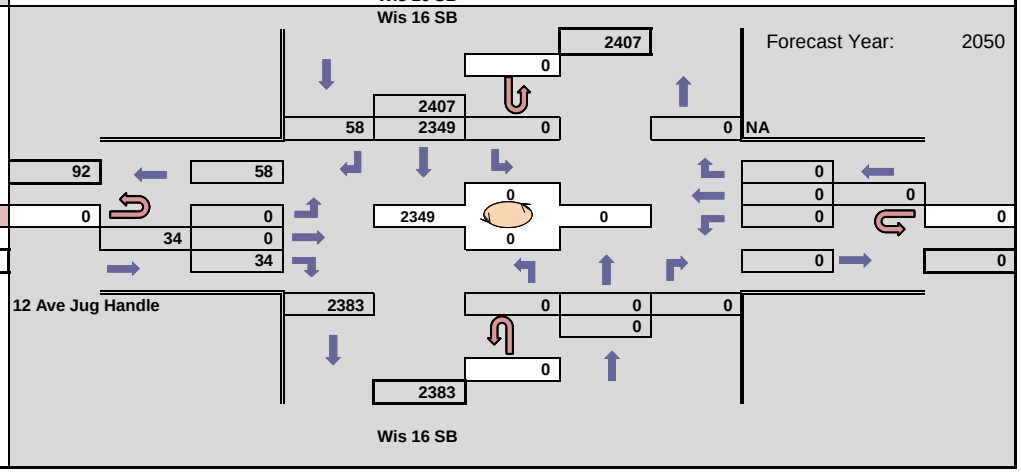

WisDOT Bureau of Planning & Economic Development
Traffic Forecasting Section
Forecast by: Miao Zhang
Phone: (608) 266 - 7995
Email: miao.zhang@dot.wi.gov

Projected PM Design Hour Traffic Volumes

Indicates roundabout

Design Hour: 4:00-5:00pm

Forecast Completed: 2/23/2021

Project Description

Project ID(s): 1630-08-00
Route(s): STH 16
Region/COUNTY(IES): SW/La Crosse
Location: WIS 16 SB & 12th Ave Jug handle

Design Hour Turning Movement Data

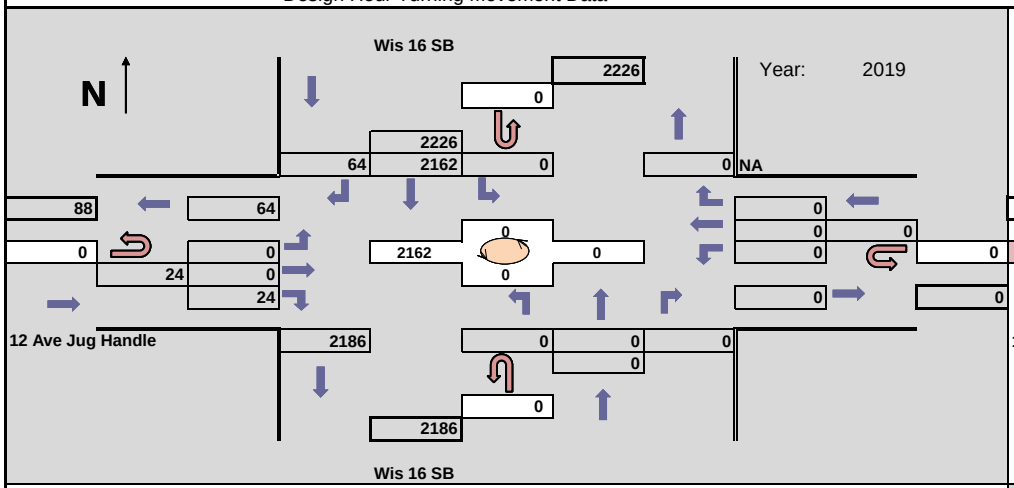

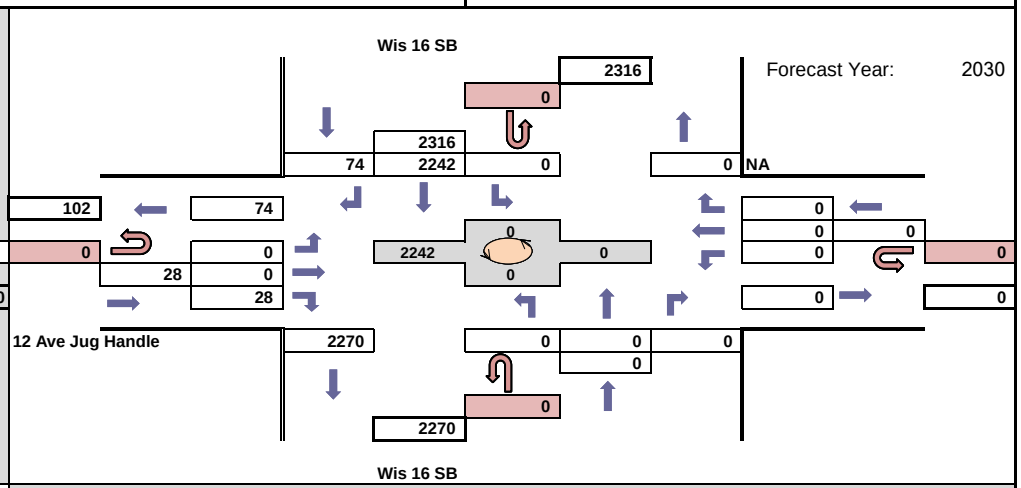

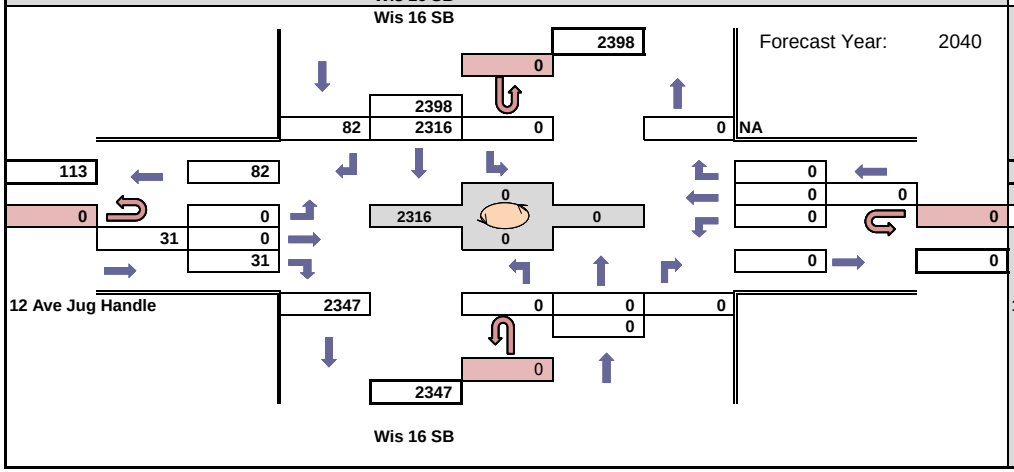

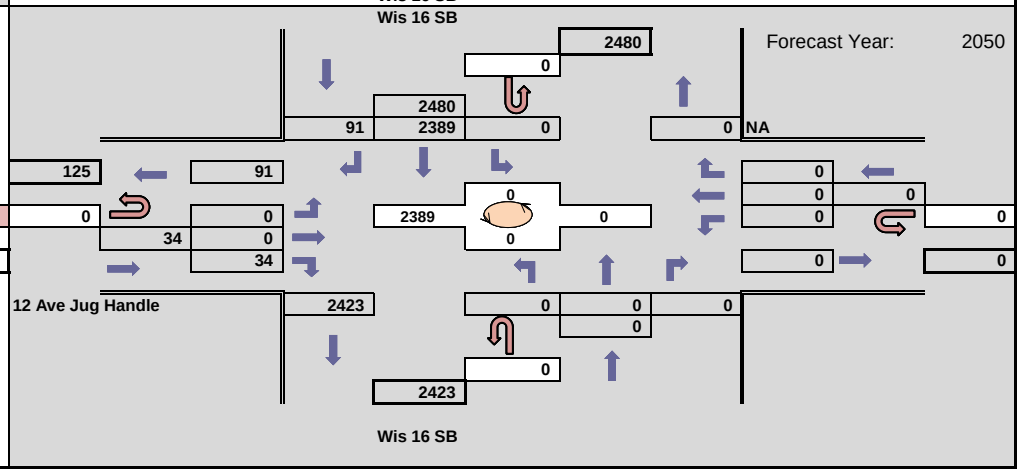

WisDOT Bureau of Planning & Economic Development
Traffic Forecasting Section
Forecast by: Miao Zhang
Phone: (608) 266 - 7995
Email: miao.zhang@dot.wi.gov

Projected AM Design Hour Traffic Volumes

Indicates roundabout

Design Hour: 7:00-8:00am

Forecast Completed: 2/23/2021

Project Description

Project ID(s): 1630-08-00
Route(s): STH 16
Region/COUNTY(IES): SW/La Crosse
Location: WIS 16 & County B

Design Hour Turning Movement Data

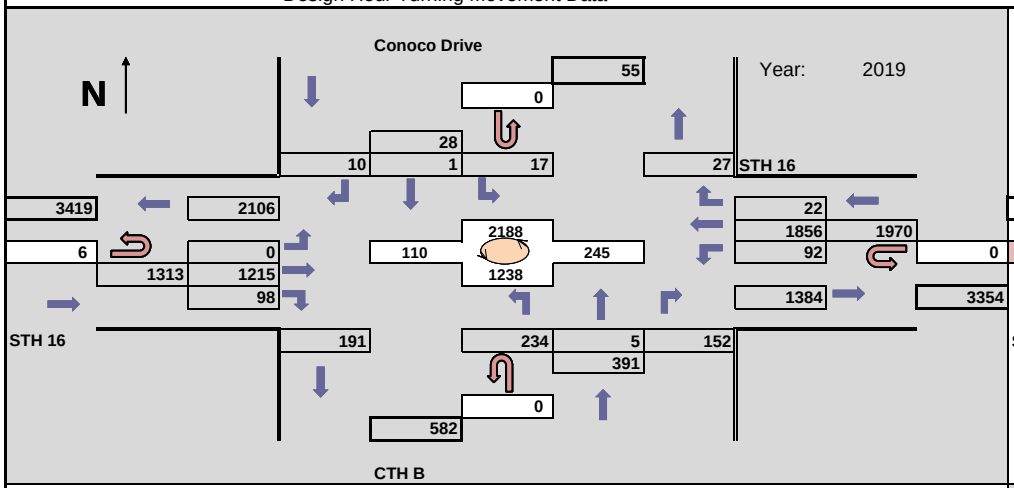

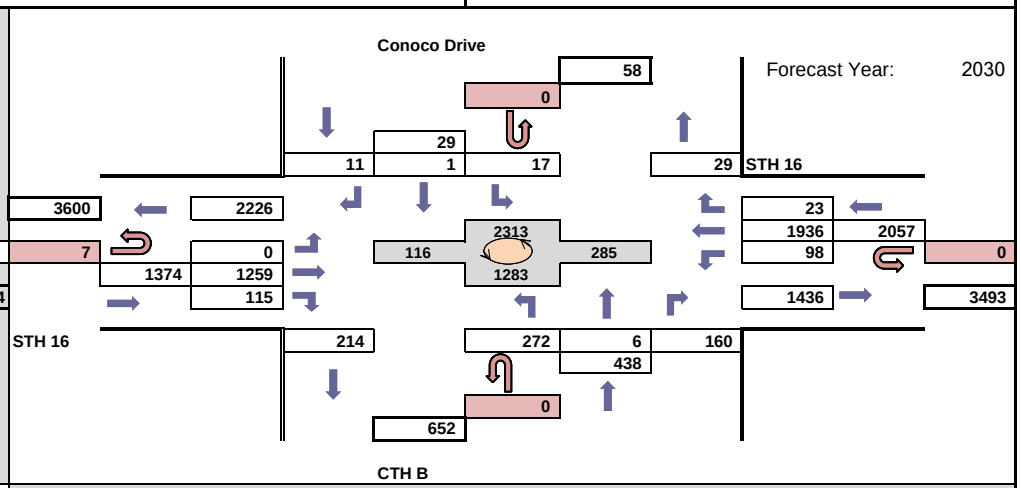

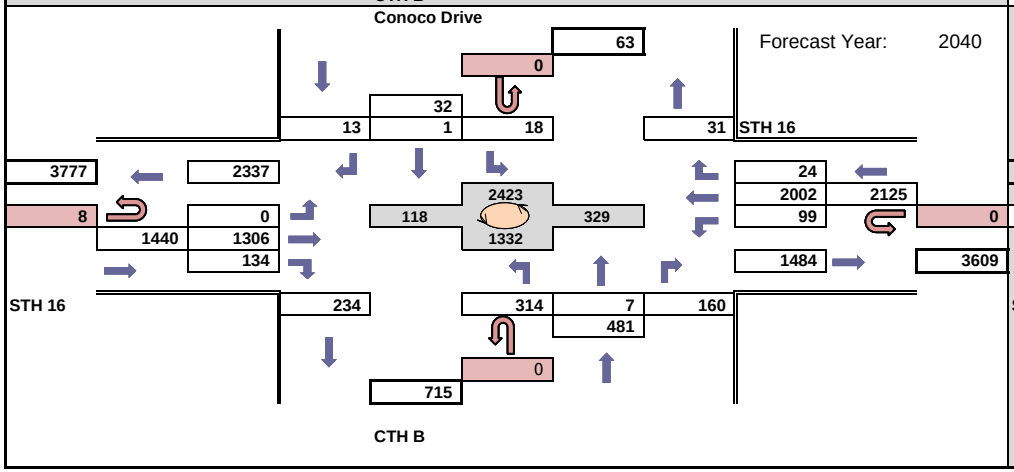

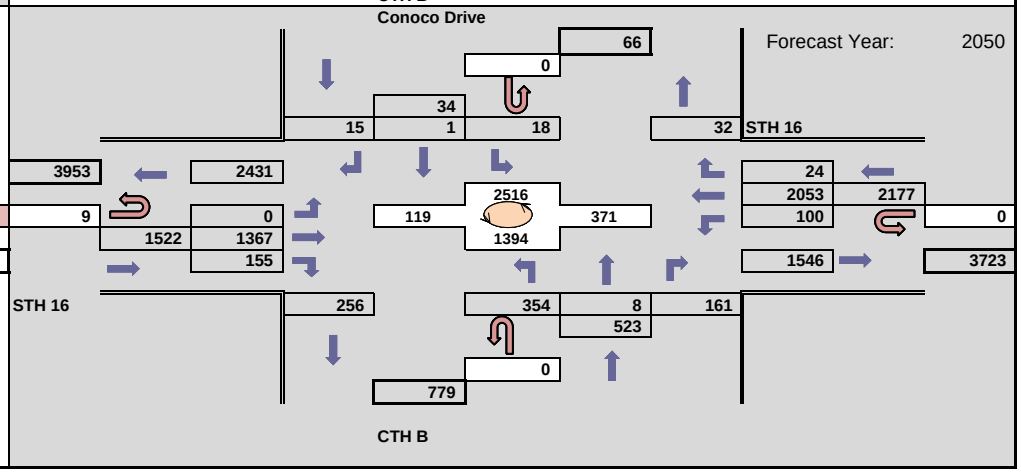

WisDOT Bureau of Planning & Economic Development
Traffic Forecasting Section
Forecast by: Miao Zhang
Phone: (608) 266 - 7995
Email: miao.zhang@dot.wi.gov

Projected PM Design Hour Traffic Volumes

Indicates roundabout

Design Hour: 4:00-5:00pm

Forecast Completed: 2/23/2021

Project Description

Project ID(s): 1630-08-00
Route(s): STH 16
Region/COUNTY(IES): SW/La Crosse
Location: WIS 16 & County B

Design Hour Turning Movement Data

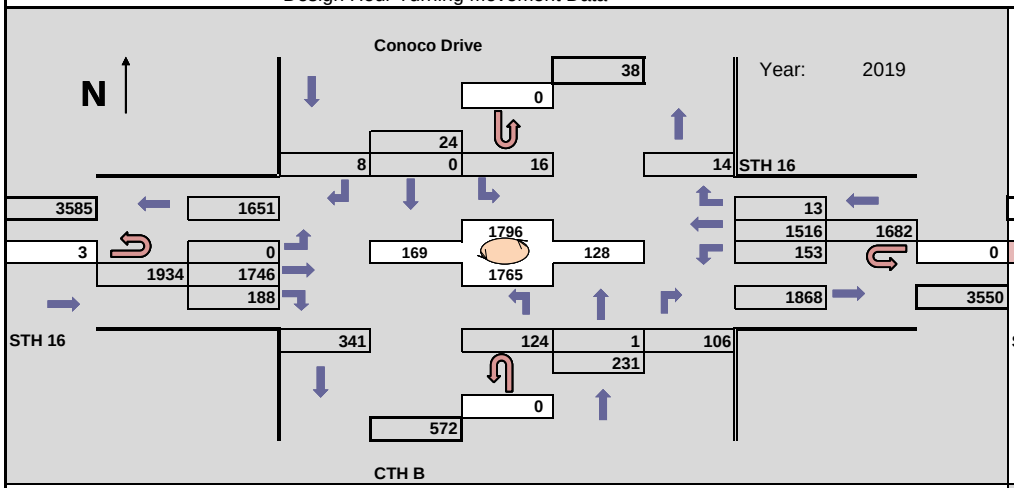

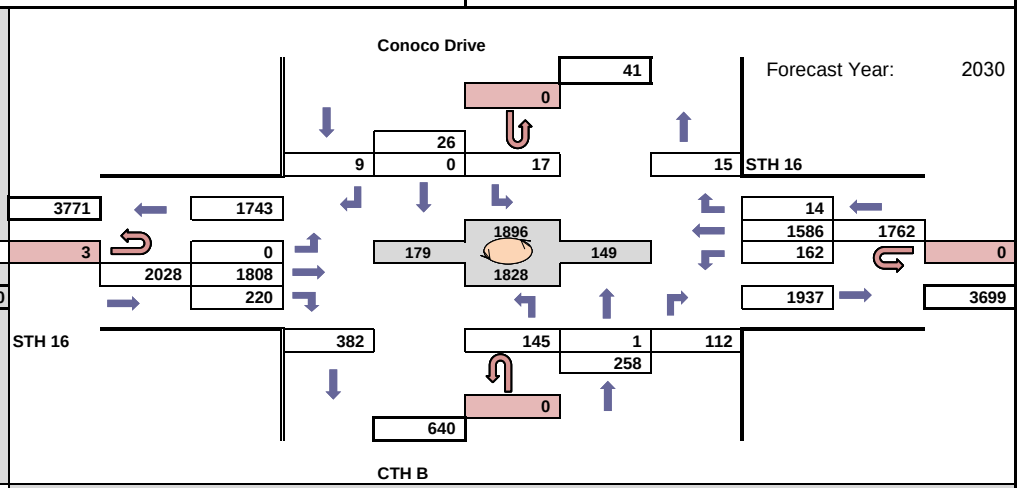

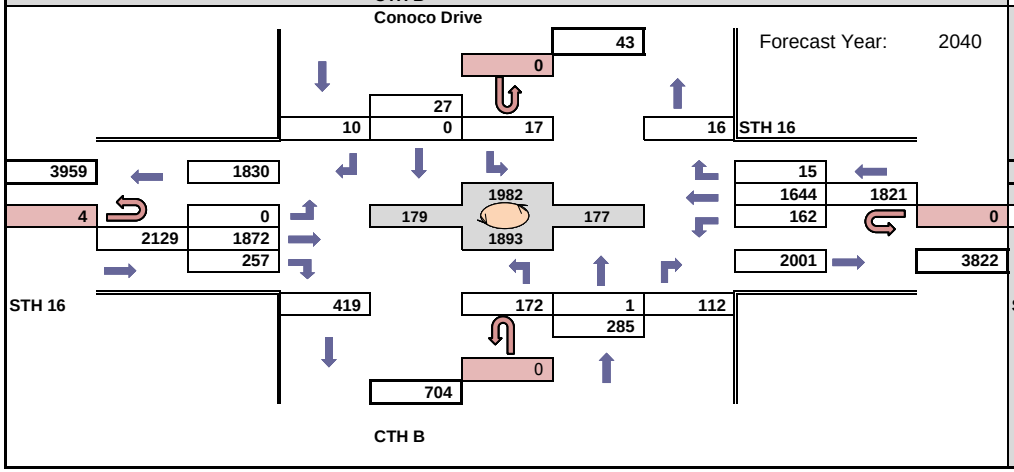

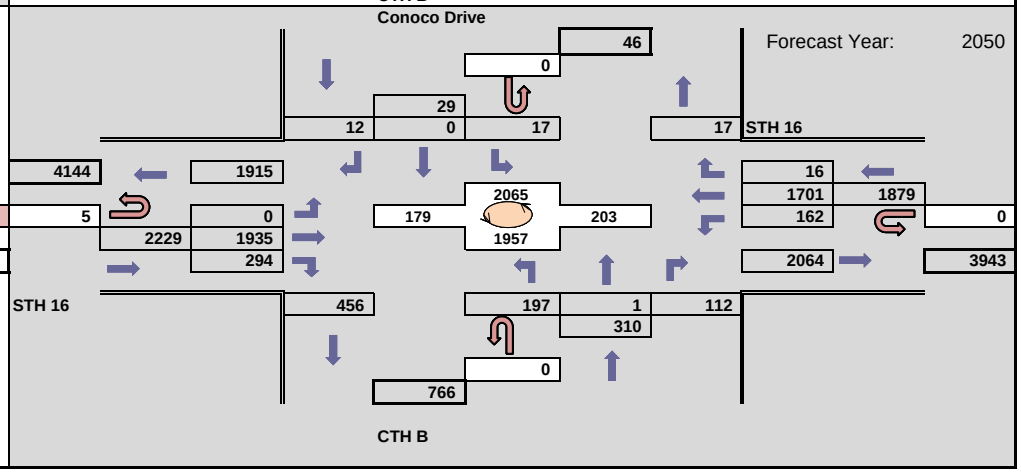

WisDOT Bureau of Planning & Economic Development
Traffic Forecasting Section
Forecast by: Miao Zhang
Phone: (608) 266 - 7995
Email: miao.zhang@dot.wi.gov

Projected AM Design Hour Traffic Volumes

Indicates roundabout

Design Hour: 7:00-8:00am

Forecast Completed: 2/23/2021

Design Hour Turning Movement Data

Project Description

Project ID(s): 1630-08-00
Route(s): STH 16
Region/COUNTY(IES): SW/La Crosse
Location: WIS 16 & Gille□e St

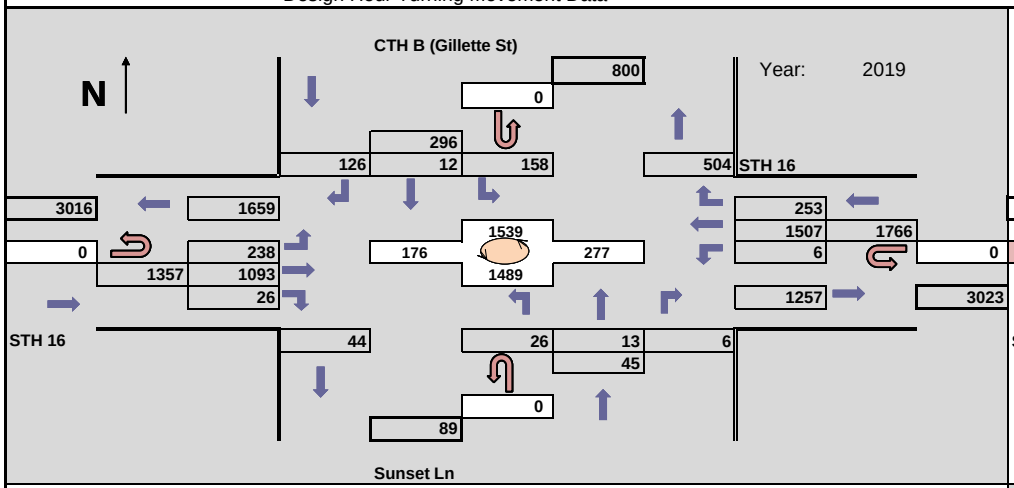

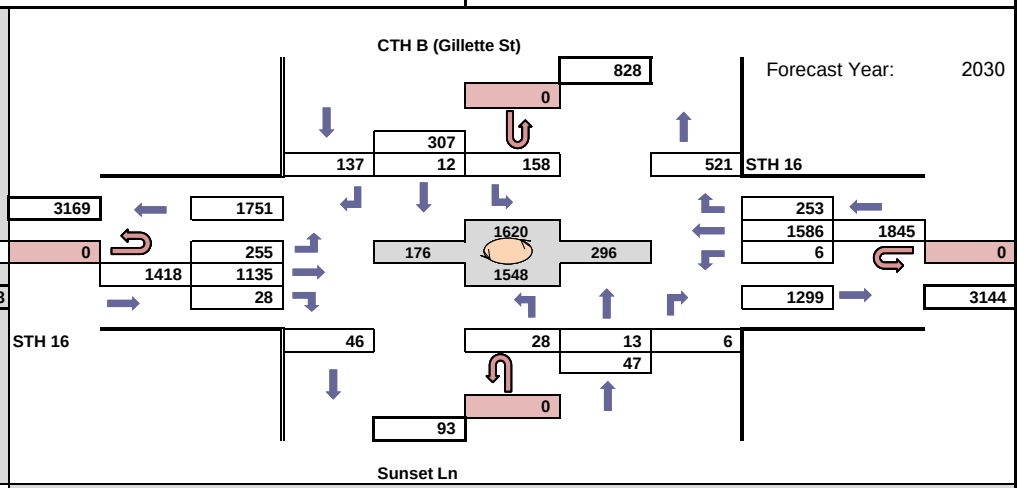

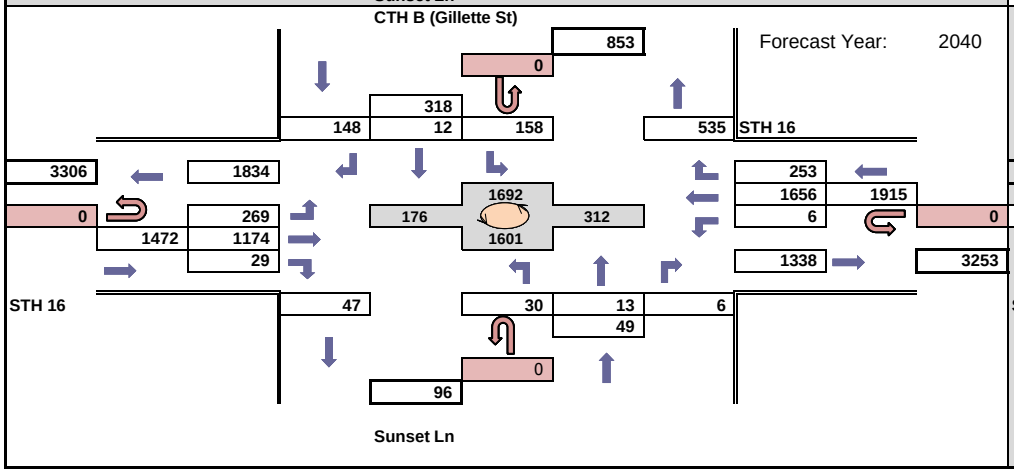

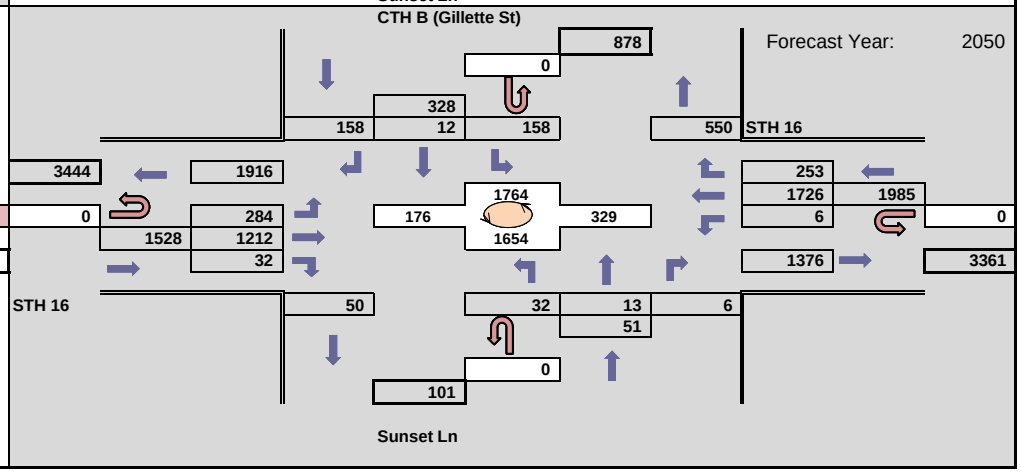

WisDOT Bureau of Planning & Economic Development
Traffic Forecasting Section
Forecast by: Miao Zhang
Phone: (608) 266 - 7995
Email: miao.zhang@dot.wi.gov

Projected PM Design Hour Traffic Volumes

Indicates roundabout

Design Hour: 4:00-5:00pm

Forecast Completed: 2/23/2021

Project Description

Project ID(s): 1630-08-00
Route(s): STH 16
Region/COUNTY(IES): SW/La Crosse
Location: WIS 16 & Gille□e St

Design Hour Turning Movement Data

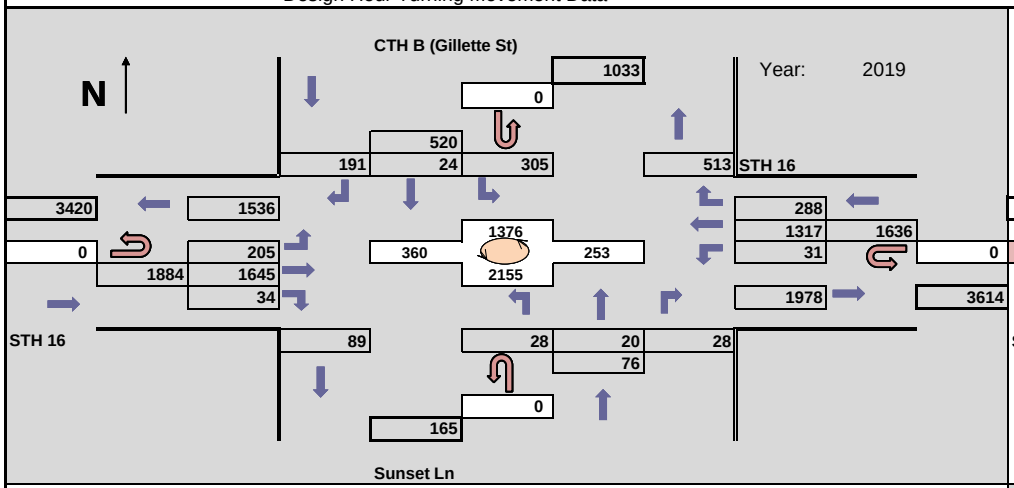

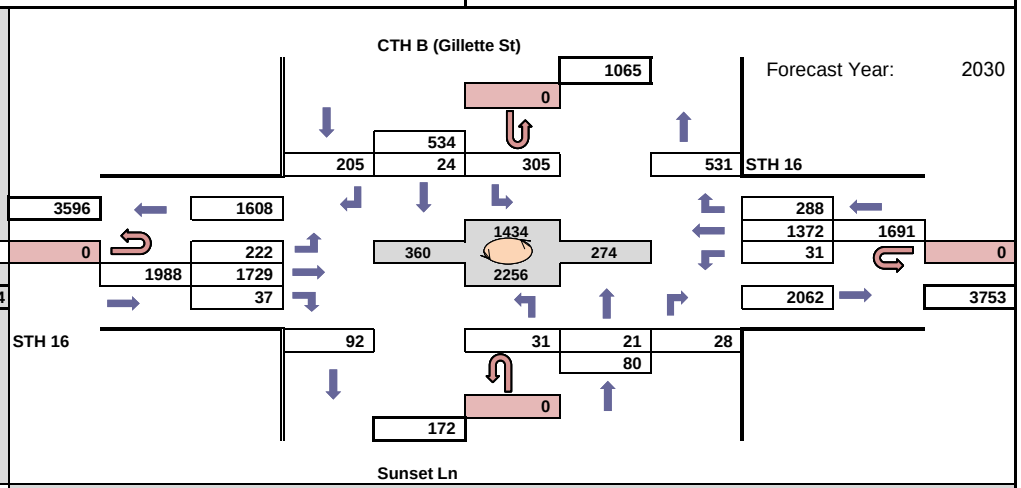

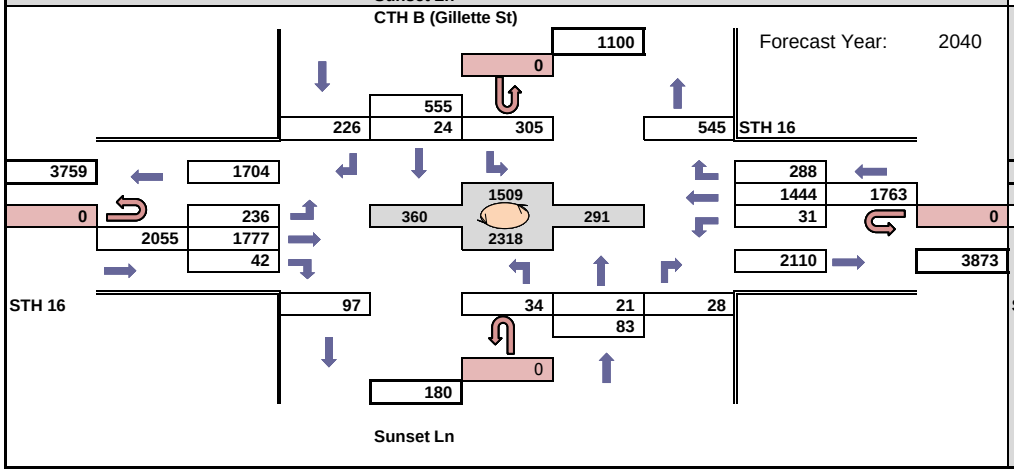

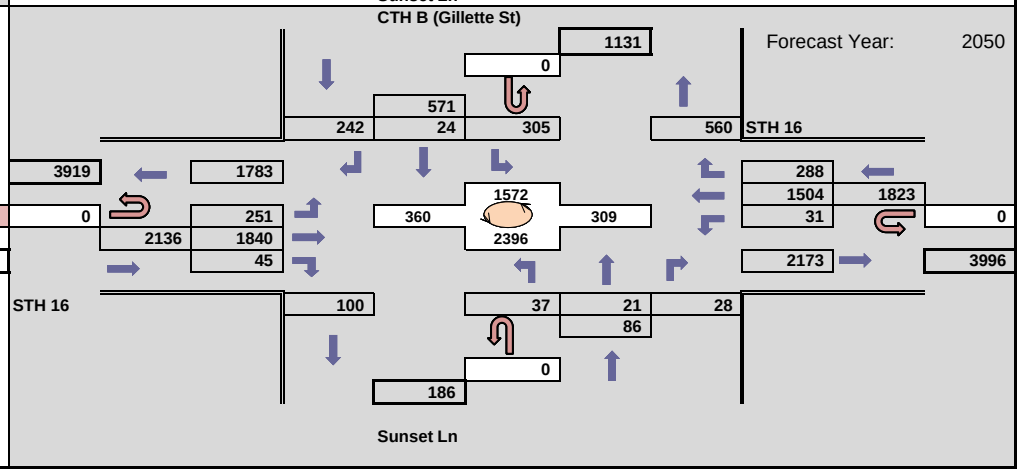

WisDOT Bureau of Planning & Economic Development
Traffic Forecasting Section
Forecast by: Miao Zhang
Phone: (608) 266 - 7995
Email: miao.zhang@dot.wi.gov

Projected AM Design Hour Traffic Volumes

Indicates roundabout

Design Hour: 7:00-8:00am

Forecast Completed: 2/23/2021

Project Description

Project ID(s): 1630-08-00
Route(s): STH 16
Region/COUNTY(IES): SW/La Crosse
Location: WIS 16 (La Crosse St) & Losey Blvd

Design Hour Turning Movement Data

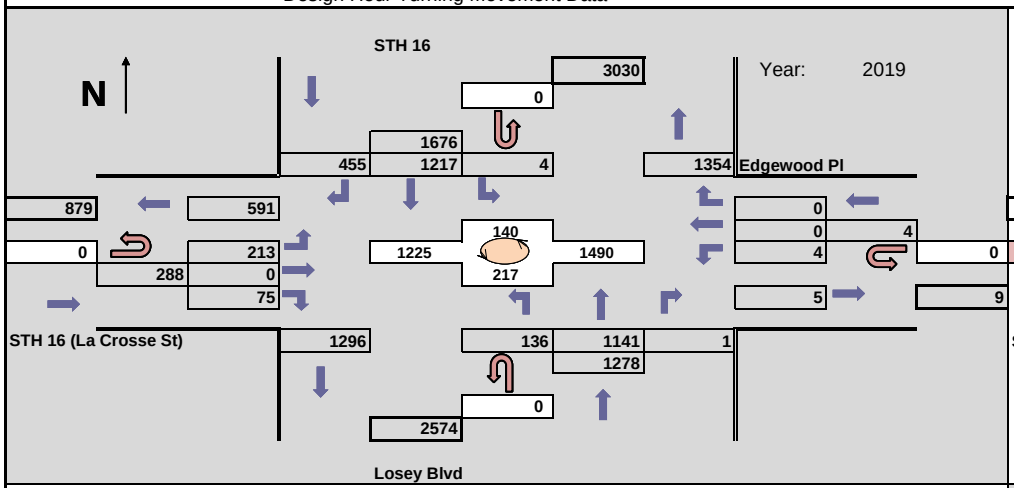

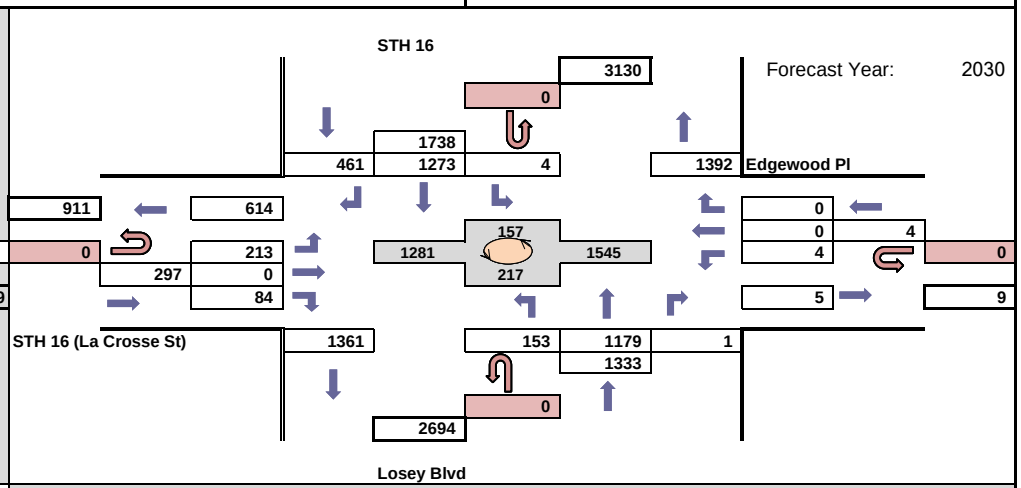

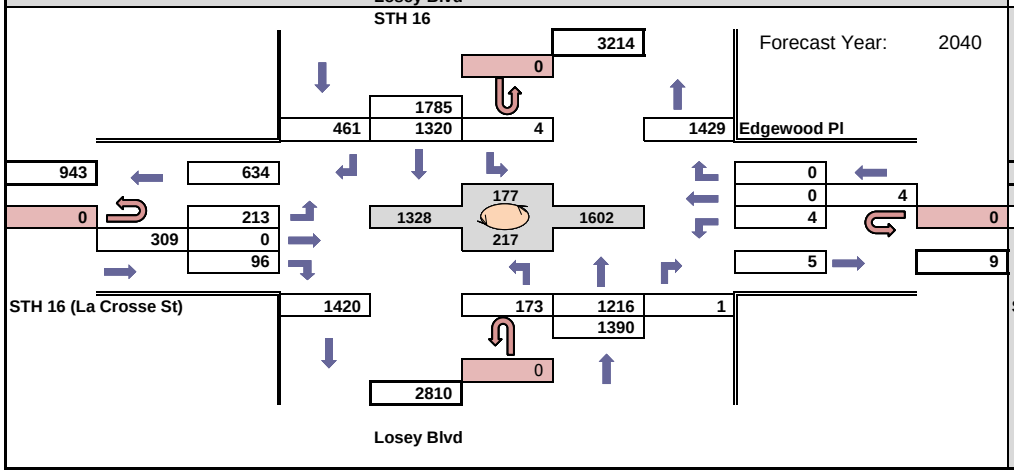

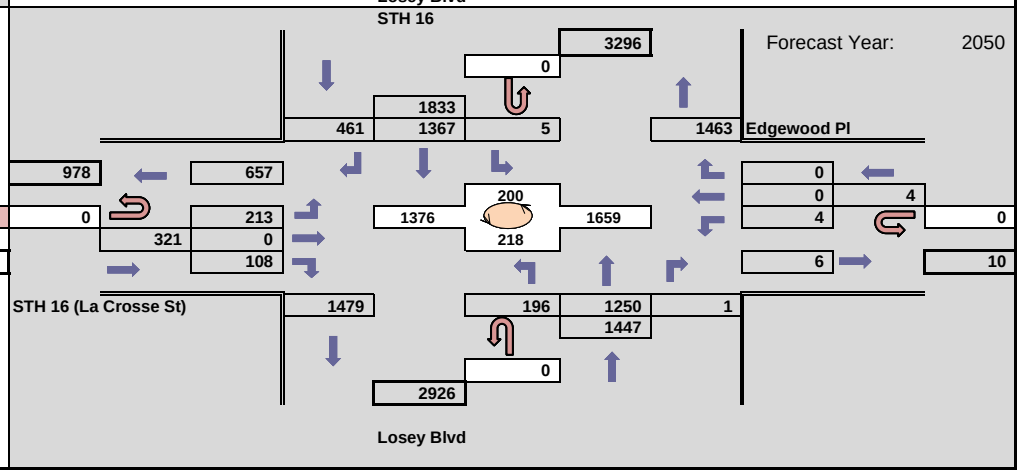

WisDOT Bureau of Planning & Economic Development
Traffic Forecasting Section
Forecast by: Miao Zhang
Phone: (608) 266 - 7995
Email: miao.zhang@dot.wi.gov

Projected PM Design Hour Traffic Volumes

Indicates roundabout

Design Hour: 4:30-5:30pm

Forecast Completed: 2/23/2021

Project Description

Project ID(s): 1630-08-00
Route(s): STH 16
Region/COUNTY(IES): SW/La Crosse
Location: WIS 16 (La Crosse St) & Losey Blvd

Design Hour Turning Movement Data

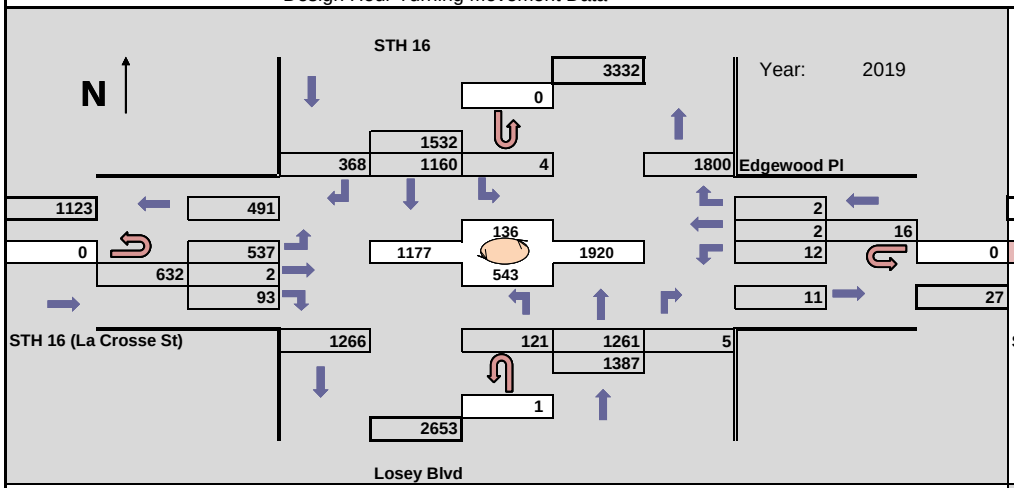

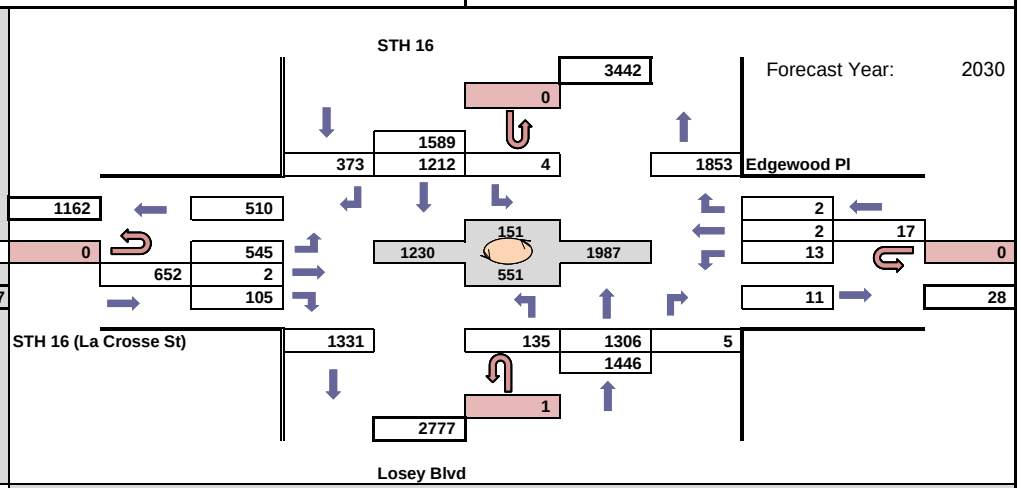

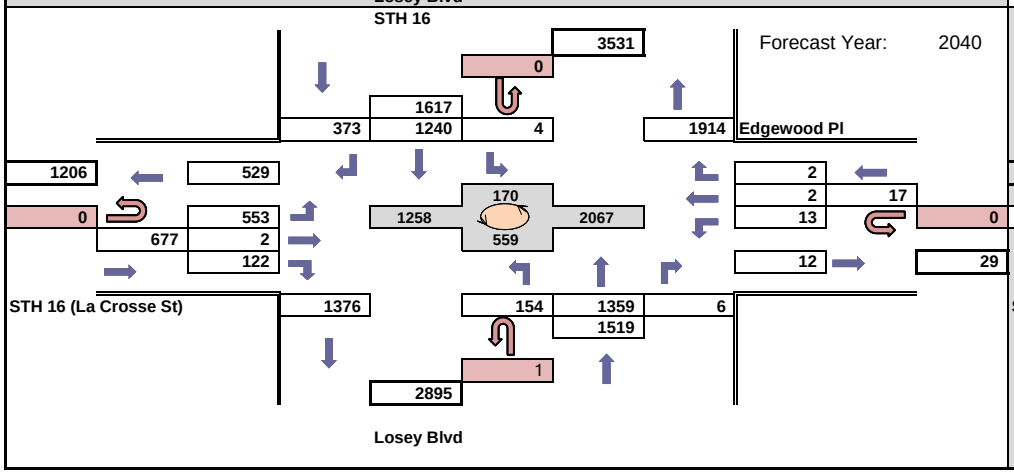

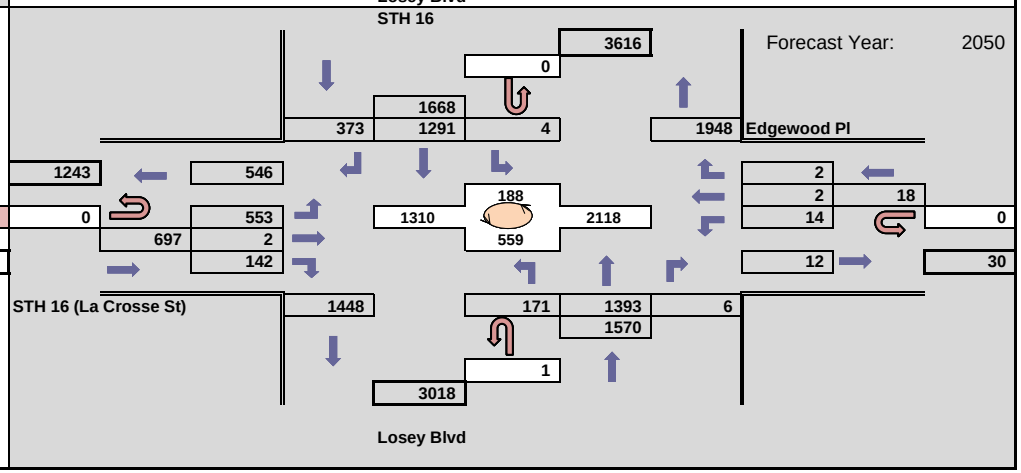

WisDOT TRAFFIC FORECAST REPORT	Region/COUNTY(IES): SW/La Crosse	Developed by: Miao Zhang
PROJECT ID(S): 1630-08-00	LOCATION: STH 35 George St. Segment	Phone: (608) 266-7995
ROUTE(S): STH 35	COMPLETED: 02/23/2021	
Traffic Forecasting Section; Bureau of Planning and Economic Development; Division of Transportation Investment Management		E-Mail: miao.zhang@dot.wi.gov

Site(s)	Route(s)	Volume(s)	Site Growth %
321144	STH 35	9960	0.35%
320430	STH 35	15350	0.34%
320437	STH 35	25530	0.73%
320452	STH 35	22750	0.56%
326122	STH 35	23880	0.44%

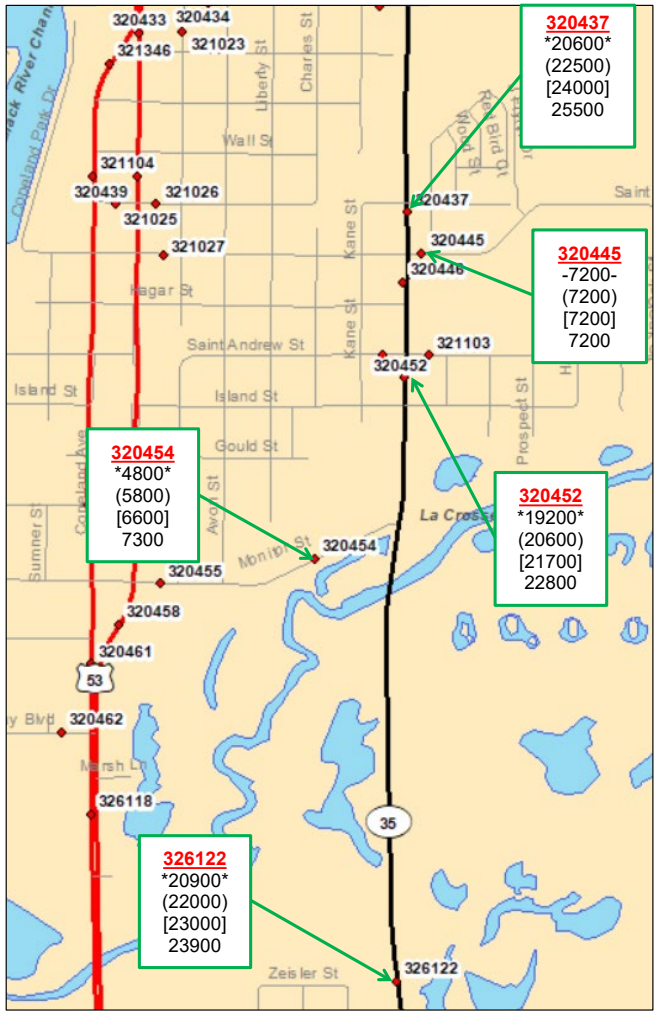

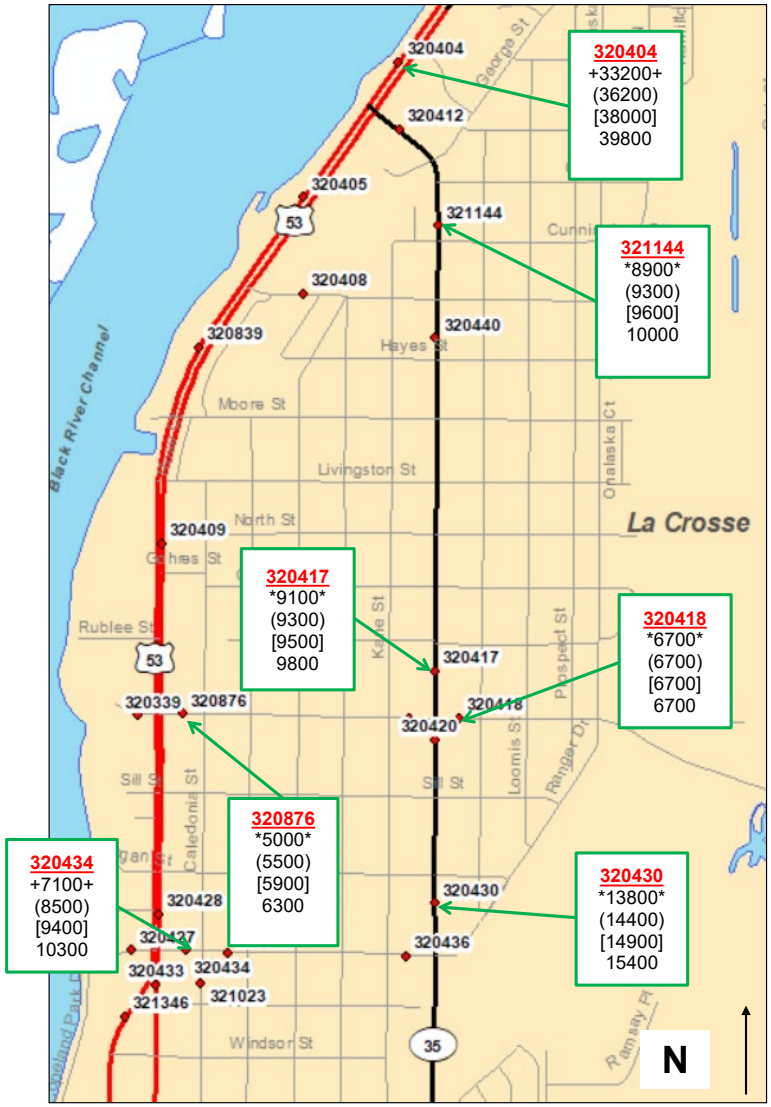

SITE ID = Colored, **bolded**, and underlined

Symbol	Count	Symbol	Forecast
-000-	2019 Count	(000)	2030 AADT
000	2017 Count	[000]	2040 AADT
+000+	2014 Count	000	2050 AADT

NOTES ON THE FORECAST:

1. This projection assumes that no major new traffic generators will be added to the development already included in the 2010/2040 La Crosse Regional Travel Demand Model.
2. Vehicle classification data and design values (K factors, directional splits, and percent trucks in design hours) are available here: http://wisconsindot.gov/Pages/projects/data-plan/traf-fore/default.aspx
3. STH 35 is a Factor Group II (Urban-Other) roadways (indicating low to moderate fluctuation in traffic from a seasonal perspective).
4. The 2010/2040 La Crosse Regional Travel Demand Model was used to complete this forecast. The Traffic Analysis Forecasting Information System output was used as a comparison tool to check against the model output. Adjustments were made as needed.
5. Roadway improvements coded within the existing plus committed (E+C) network of the 2010/2040 La Crosse Regional Travel Demand Model were assumed to be in place for the purposes of developing this forecast.

WisDOT Bureau of Planning & Economic Development
Traffic Forecasting Section
Forecast by: Miao Zhang
Phone: (608) 266 - 7995
Email: miao.zhang@dot.wi.gov

Projected AM Design Hour Traffic Volumes

Indicates roundabout

Design Hour: 7:00-8:00am

Forecast Completed: 2/23/2021

Project Description

Project ID(s): 1630-08-00
Route(s): STH 35
Region/COUNTY(IES): SW/La Crosse
Location: WIS 35 & George St

Design Hour Turning Movement Data

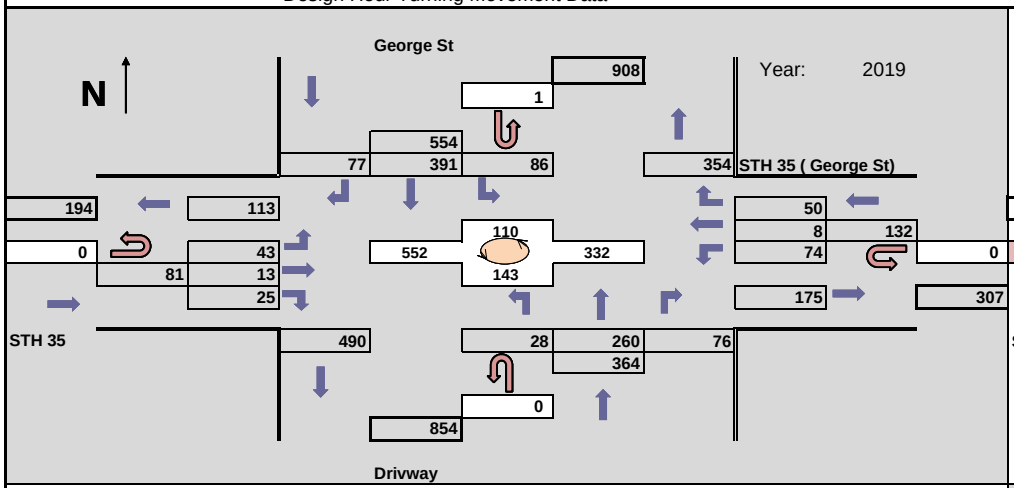

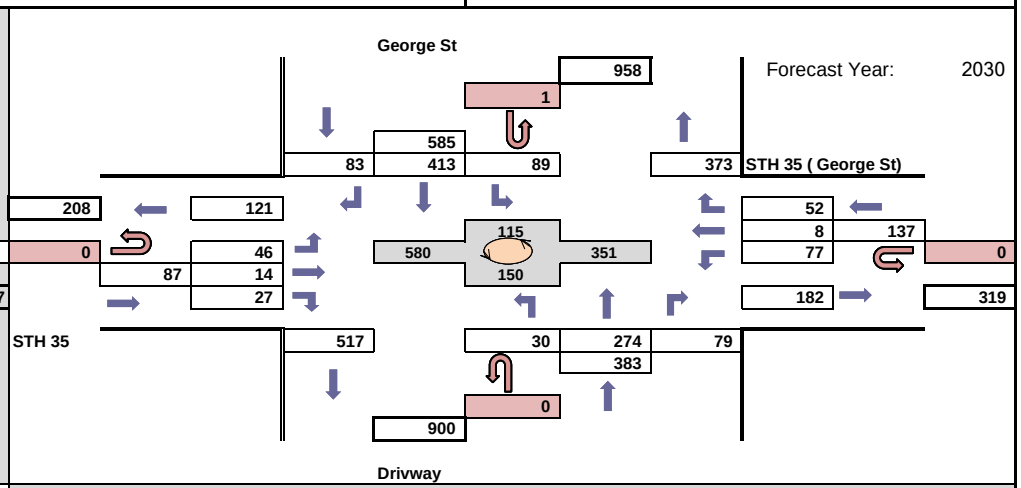

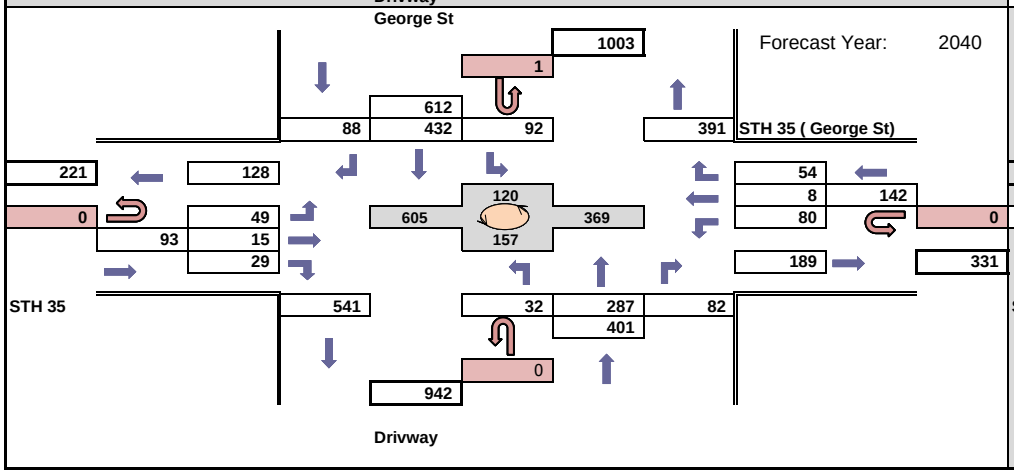

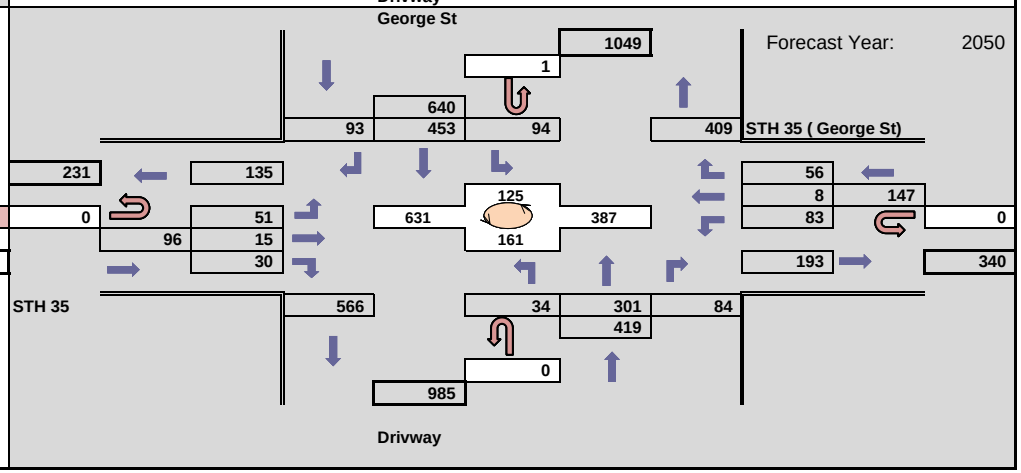

WisDOT Bureau of Planning & Economic Development
Traffic Forecasting Section
Forecast by: Miao Zhang
Phone: (608) 266 - 7995
Email: miao.zhang@dot.wi.gov

Projected PM Design Hour Traffic Volumes

Indicates roundabout

Design Hour: 4:15-5:15pm

Forecast Completed: 2/23/2021

Project Description

Project ID(s): 1630-08-00
Route(s): STH 35
Region/COUNTY(IES): SW/La Crosse
Location: WIS 35 & George St

Design Hour Turning Movement Data

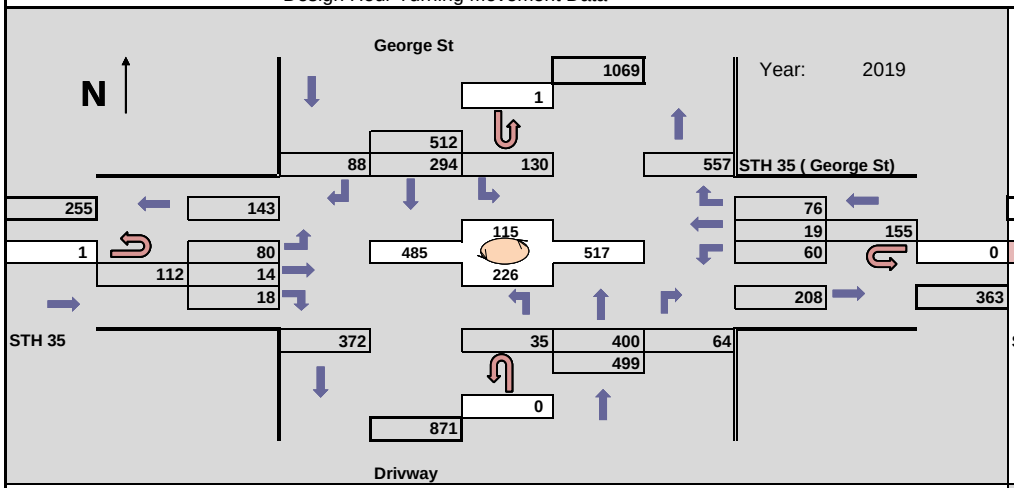

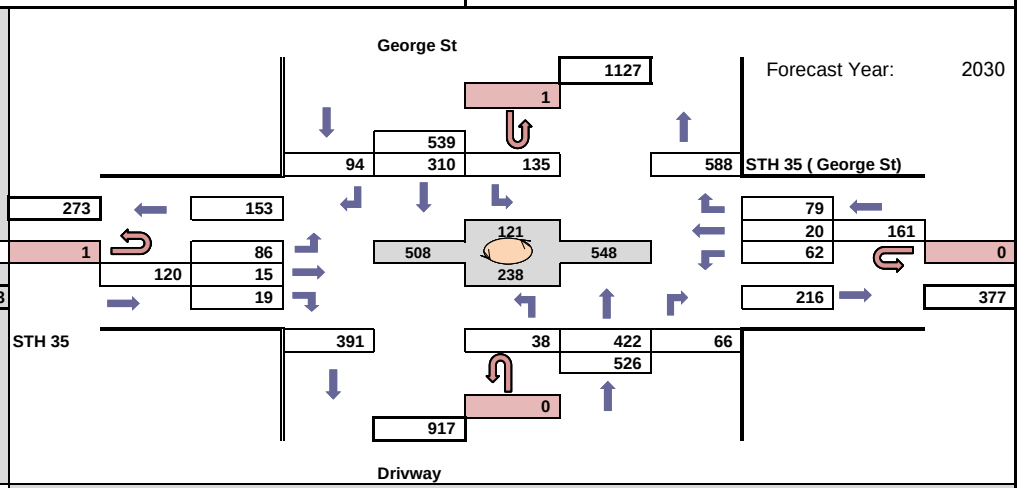

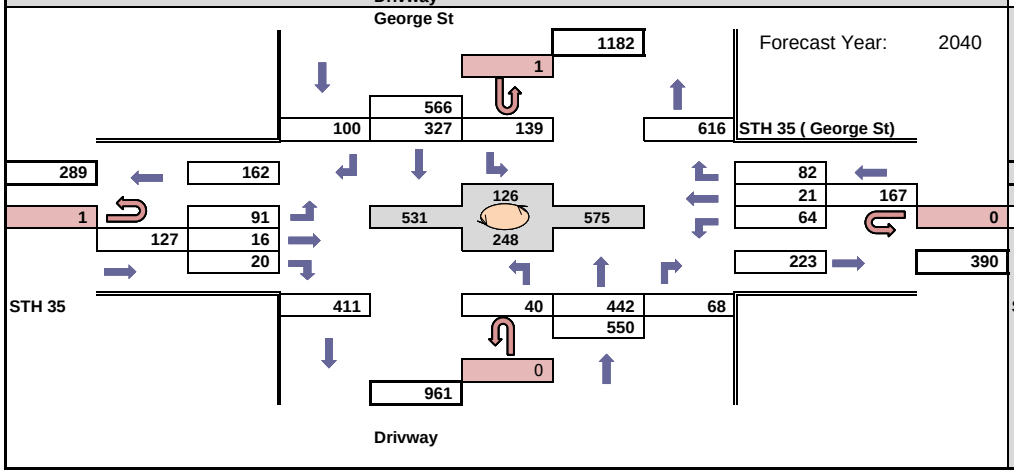

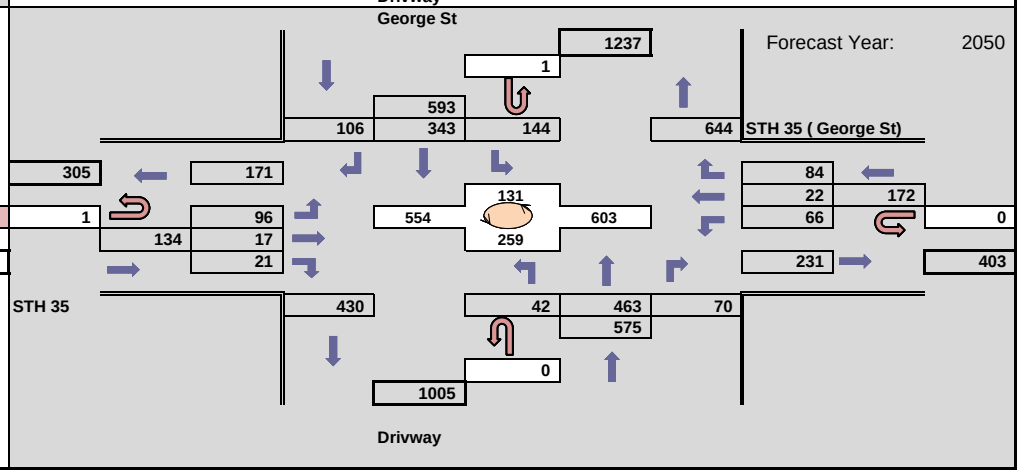

WisDOT Bureau of Planning & Economic Development
Traffic Forecasting Section
Forecast by: Miao Zhang
Phone: (608) 266 - 7995
Email: miao.zhang@dot.wi.gov

Projected AM Design Hour Traffic Volumes

Indicates roundabout

Design Hour: 7:00-8:00am

Forecast Completed: 2/23/2021

Project Description

Project ID(s): 1630-08-00
Route(s): STH 35
Region/COUNTY(IES): SW/La Crosse
Location: WIS 35 (George St) & Gille□e St

Design Hour Turning Movement Data

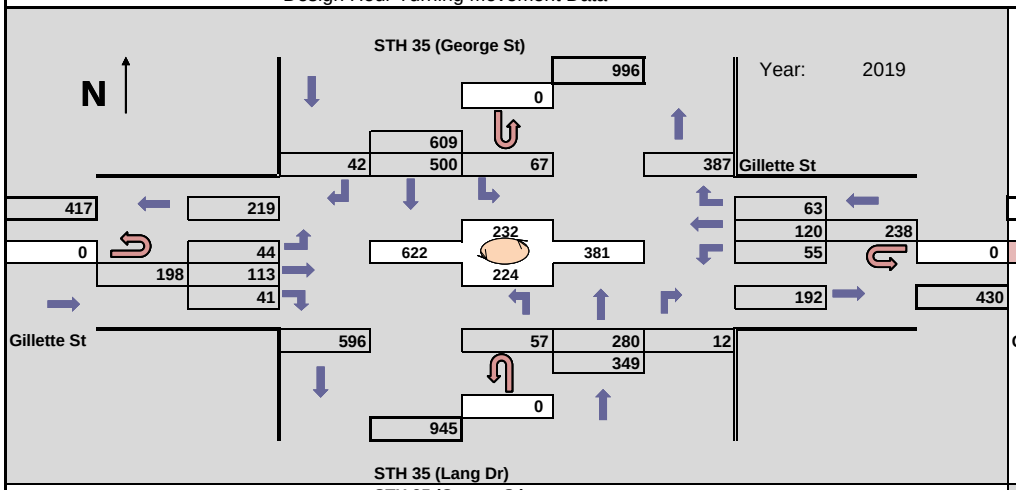

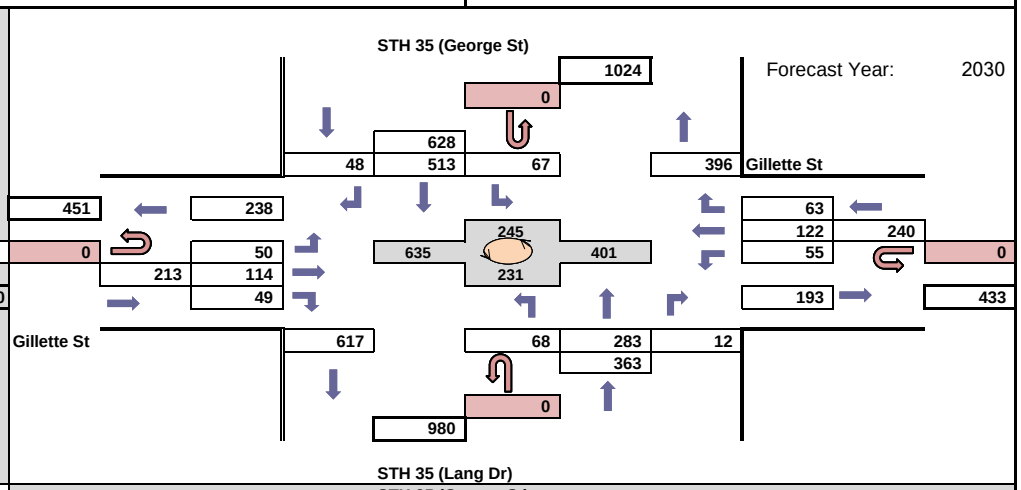

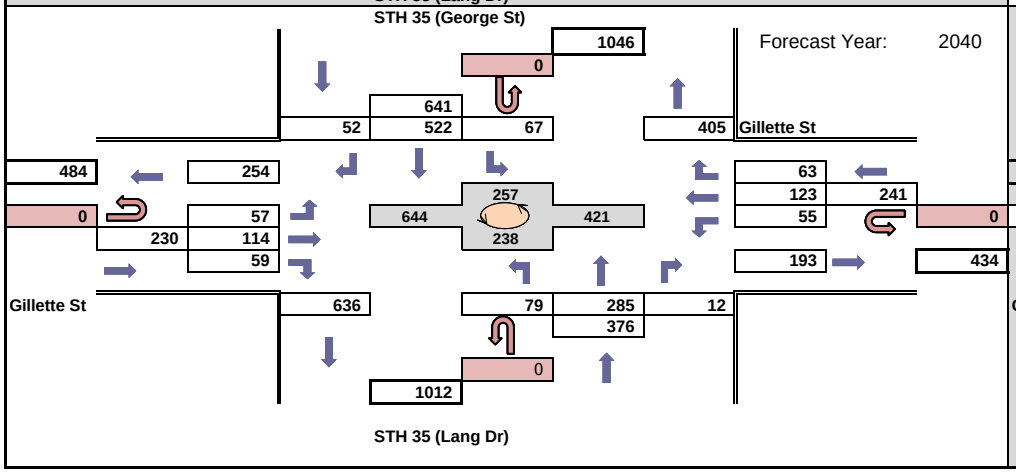

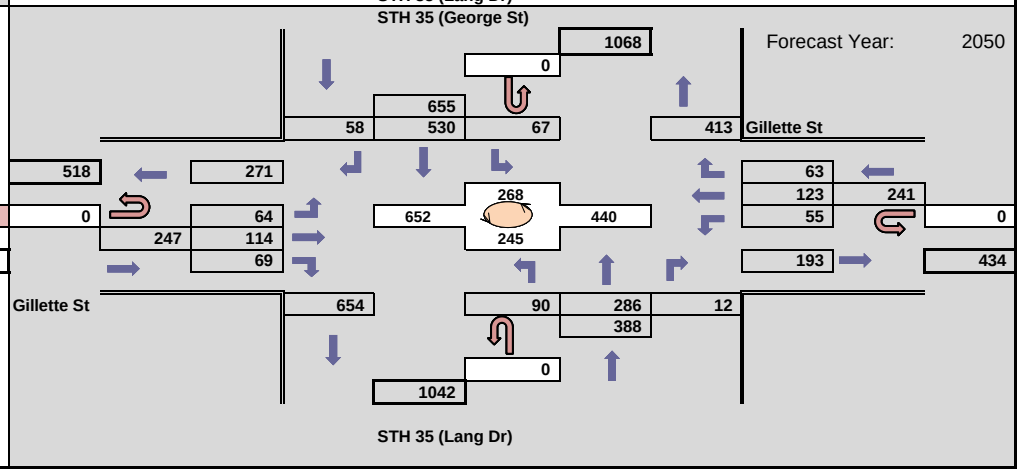

WisDOT Bureau of Planning & Economic Development
Traffic Forecasting Section
Forecast by: Miao Zhang
Phone: (608) 266 - 7995
Email: miao.zhang@dot.wi.gov

Projected PM Design Hour Traffic Volumes

Indicates roundabout

Design Hour: 4:15-5:15pm

Forecast Completed: 2/23/2021

Project Description

Project ID(s): 1630-08-00
Route(s): STH 35
Region/COUNTY(IES): SW/La Crosse
Location: WIS 35 (George St) & Gille□e St

Design Hour Turning Movement Data

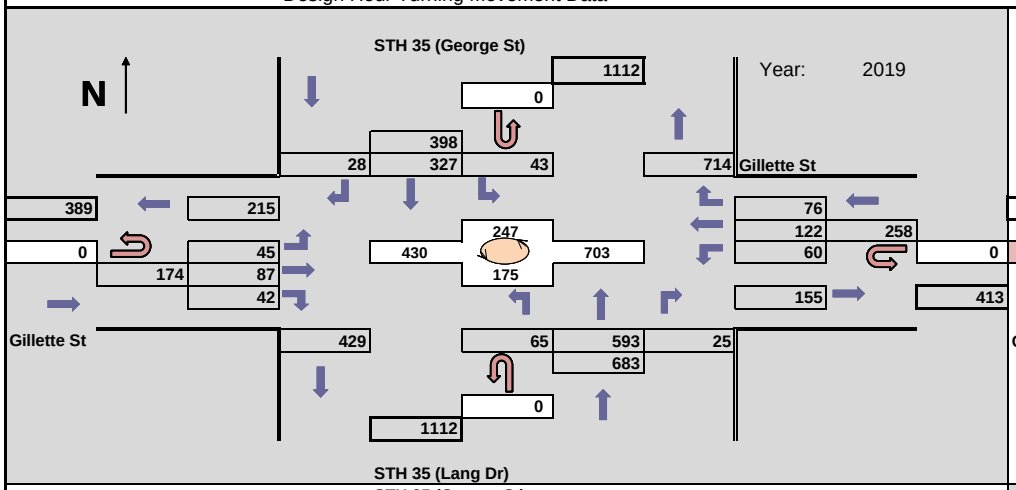

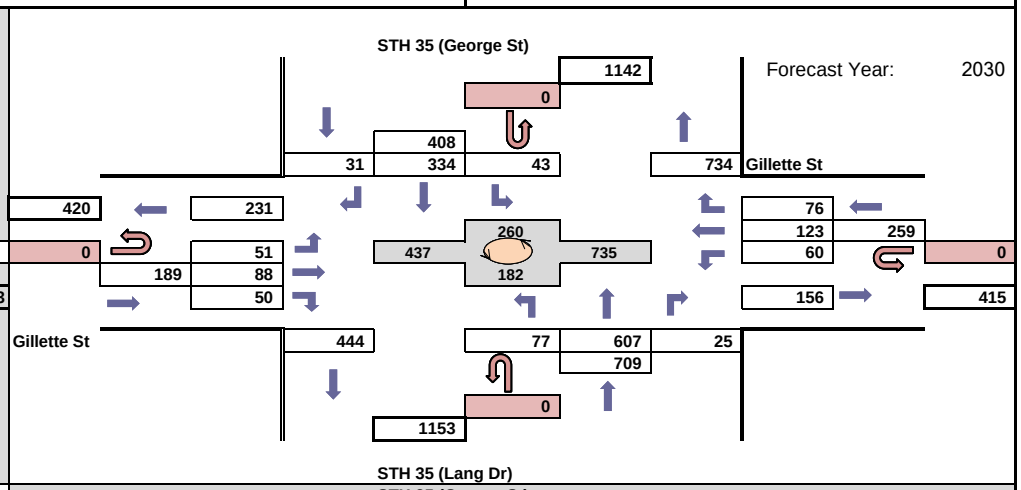

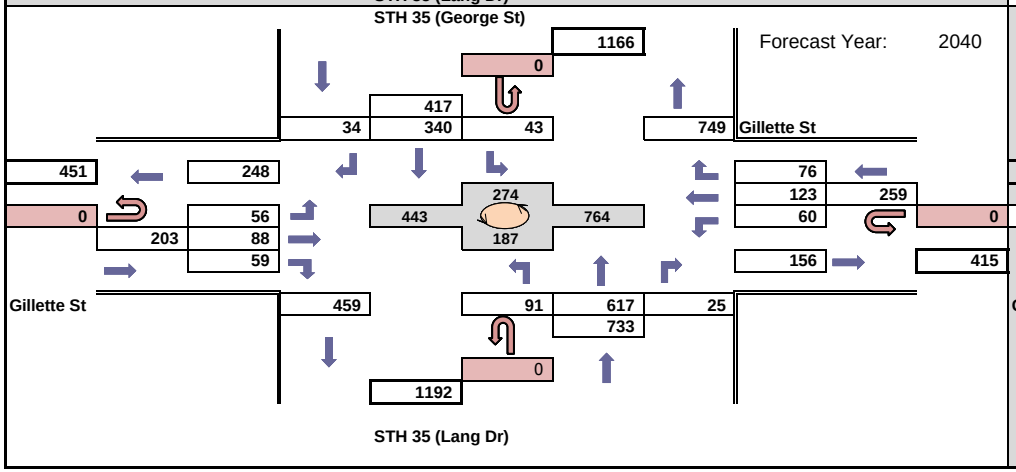

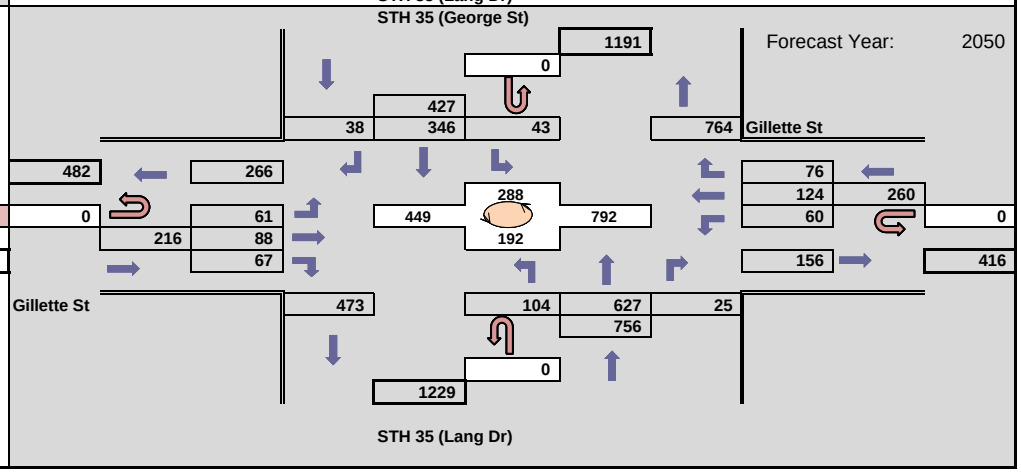

WisDOT Bureau of Planning & Economic Development
Traffic Forecasting Section
Forecast by: Miao Zhang
Phone: (608) 266 - 7995
Email: miao.zhang@dot.wi.gov

Projected AM Design Hour Traffic Volumes

Indicates roundabout

Design Hour: 7:00-8:00am

Forecast Completed: 2/23/2021

Project Description

Project ID(s): 1630-08-00
Route(s): STH 35
Region/COUNTY(IES): SW/La Crosse
Location: WIS 35 (George St) & Clinton St

Design Hour Turning Movement Data

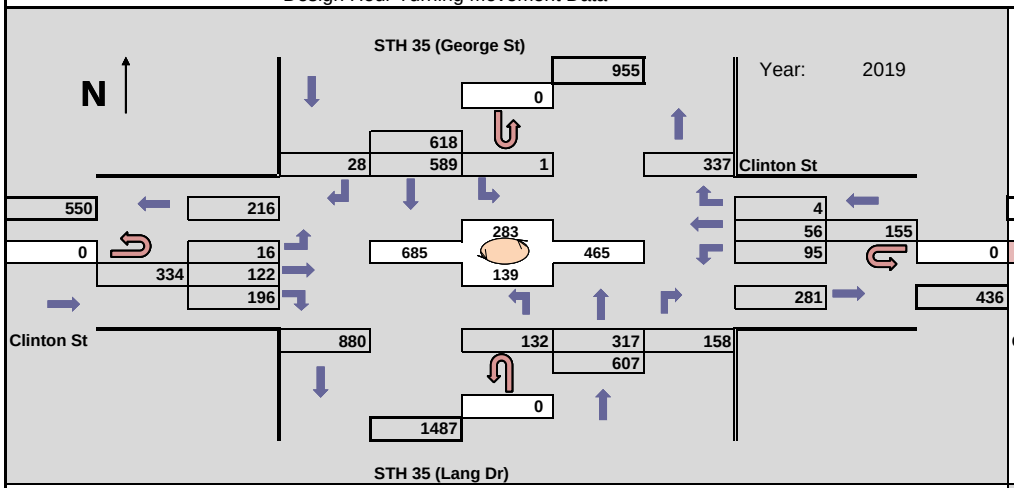

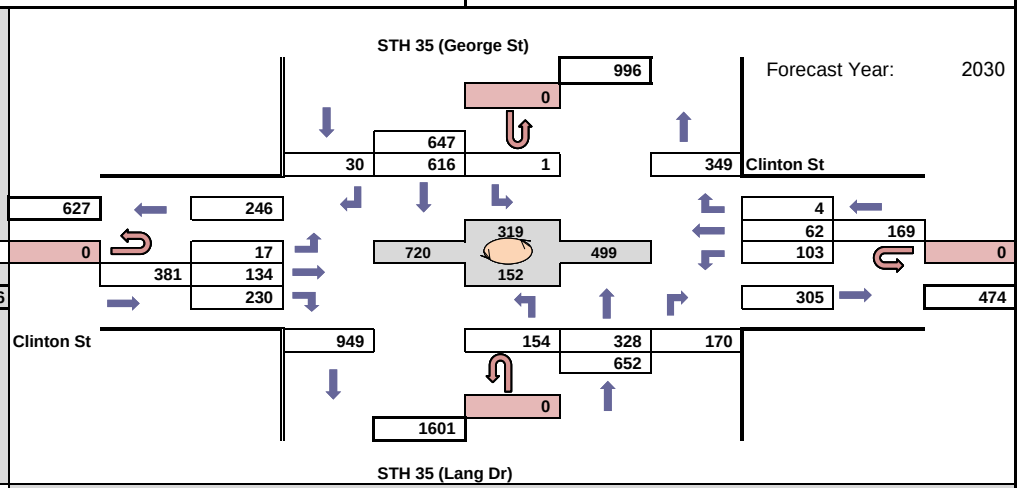

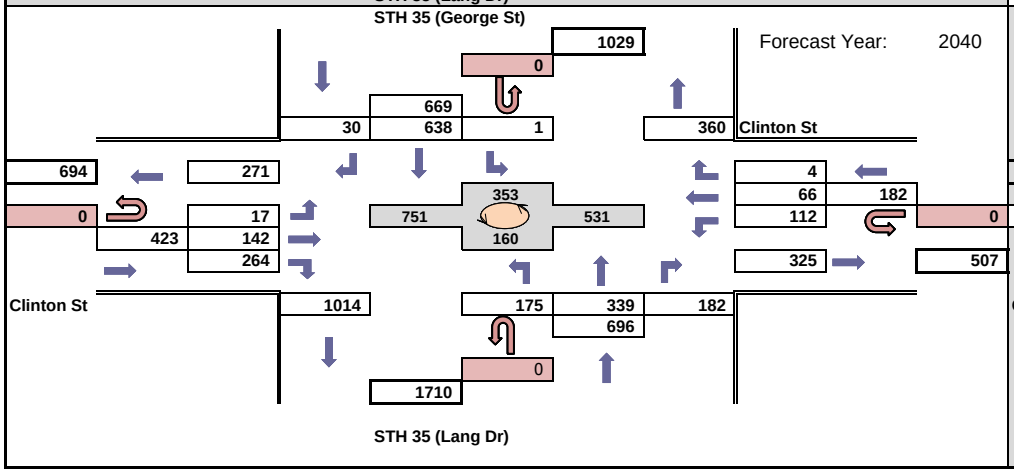

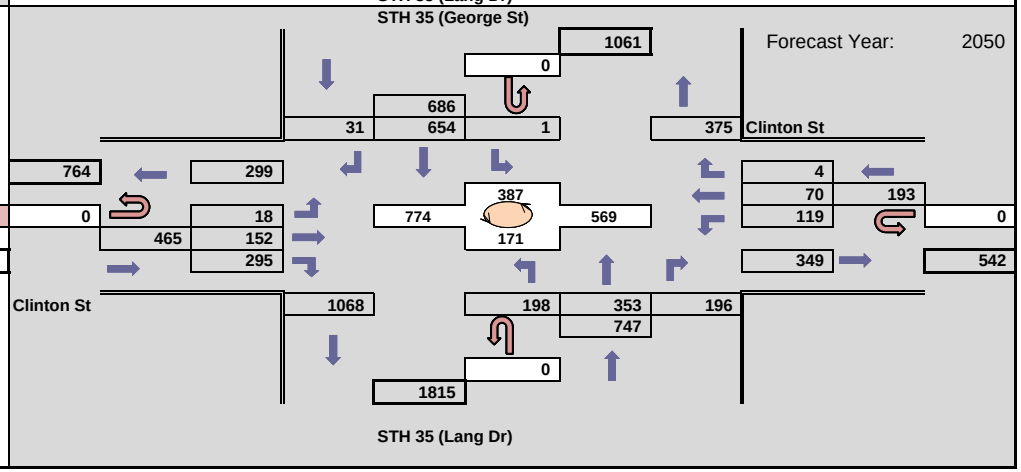

WisDOT Bureau of Planning & Economic Development
Traffic Forecasting Section
Forecast by: Miao Zhang
Phone: (608) 266 - 7995
Email: miao.zhang@dot.wi.gov

Projected PM Design Hour Traffic Volumes

Indicates roundabout

Design Hour: 4:15-5:15pm

Forecast Completed: 2/23/2021

Project Description

Project ID(s): 1630-08-00
Route(s): STH 35
Region/COUNTY(IES): SW/La Crosse
Location: WIS 35 (George St) & Clinton St

Design Hour Turning Movement Data

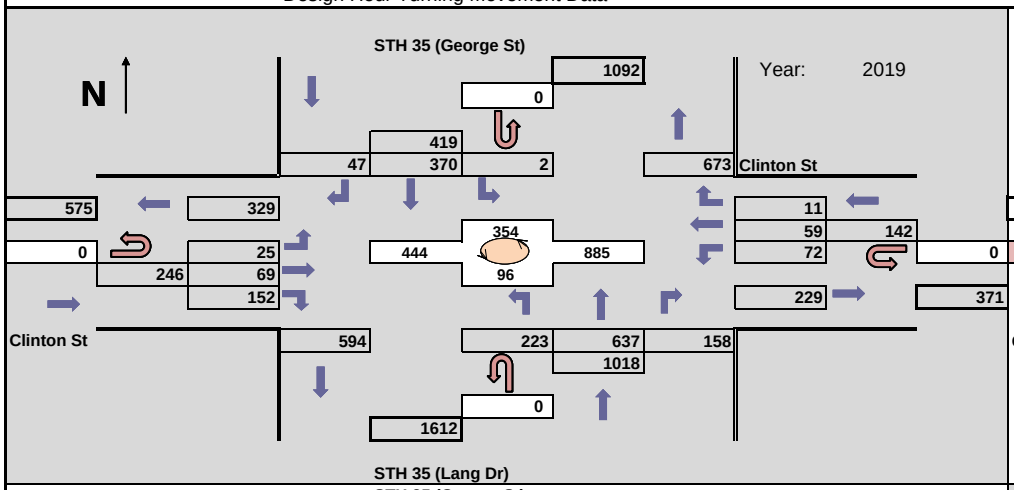

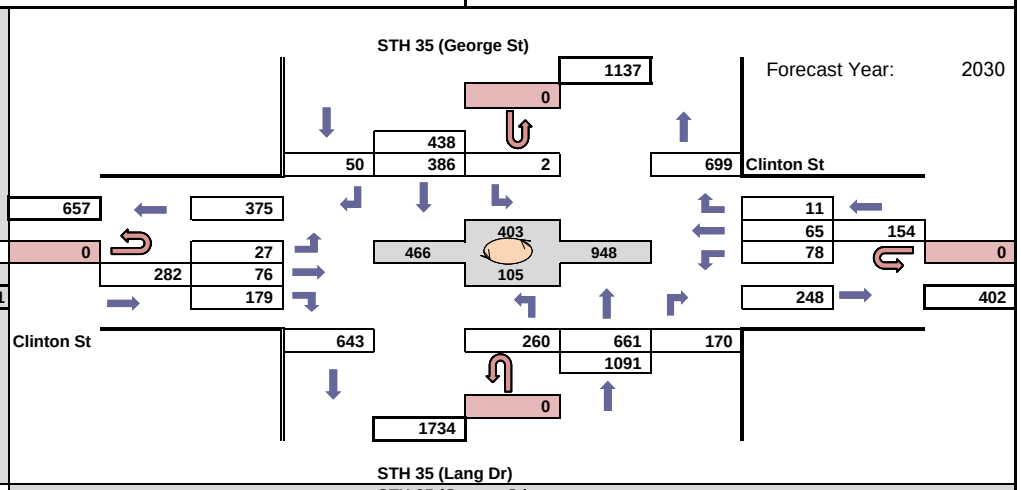

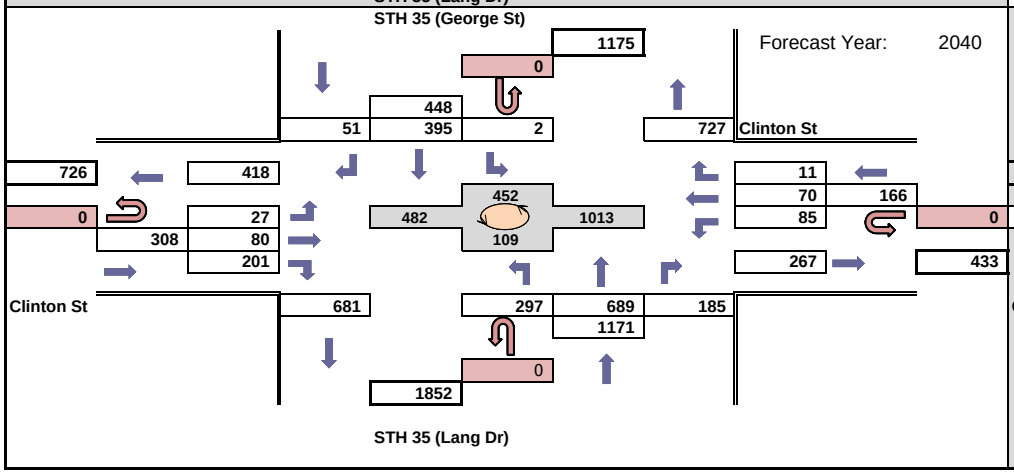

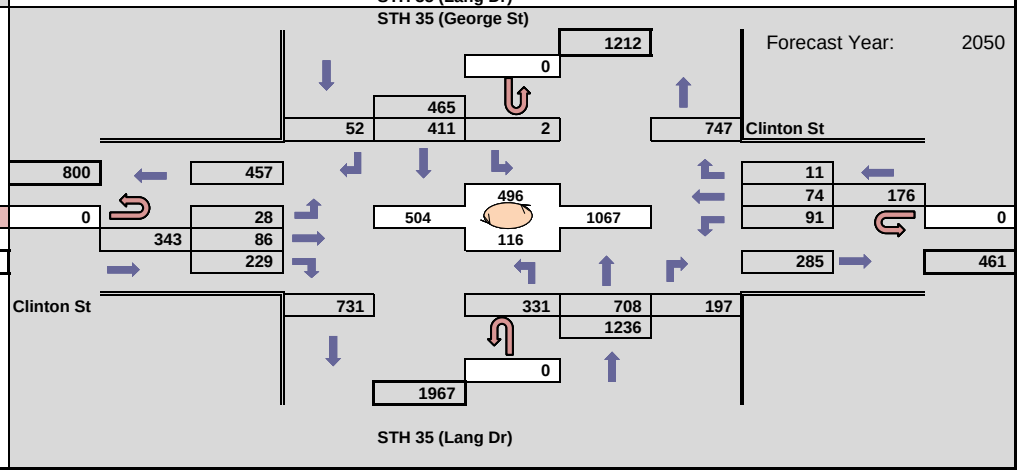

WisDOT Bureau of Planning & Economic Development
Traffic Forecasting Section
Forecast by: Miao Zhang
Phone: (608) 266 - 7995
Email: miao.zhang@dot.wi.gov

Projected AM Design Hour Traffic Volumes

Indicates roundabout

Design Hour: 7:00-8:00am

Forecast Completed: 2/23/2021

Project Description

Project ID(s): 1630-08-00
Route(s): STH 35
Region/COUNTY(IES): SW/La Crosse
Location: WIS 35 (George St) & St Cloud St

Design Hour Turning Movement Data

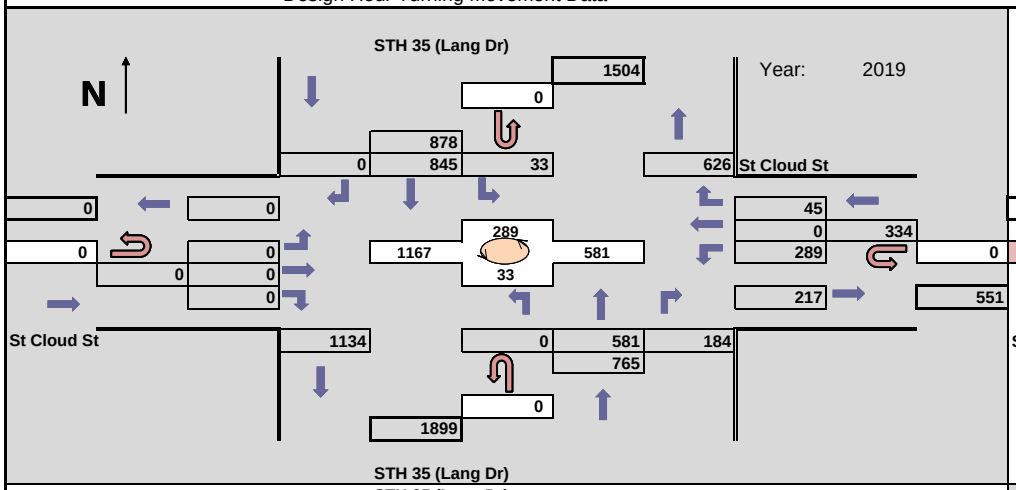

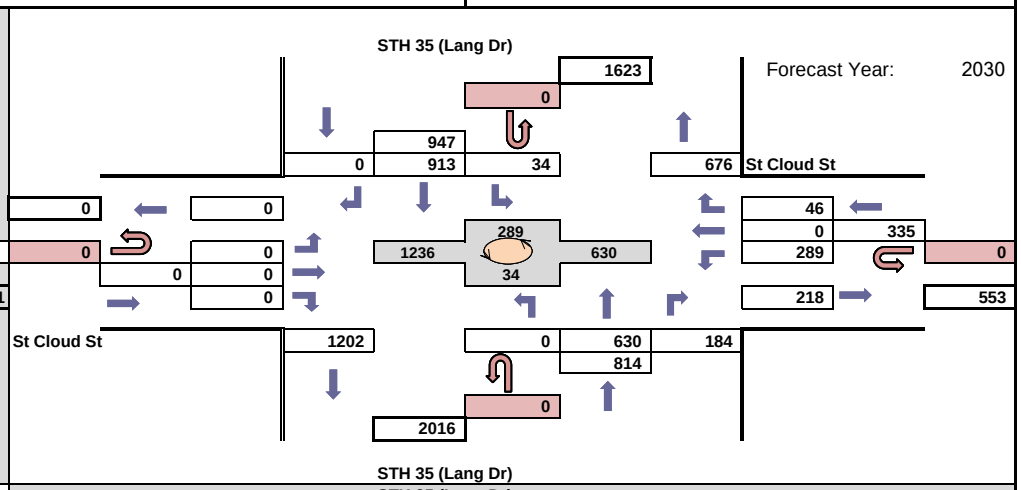

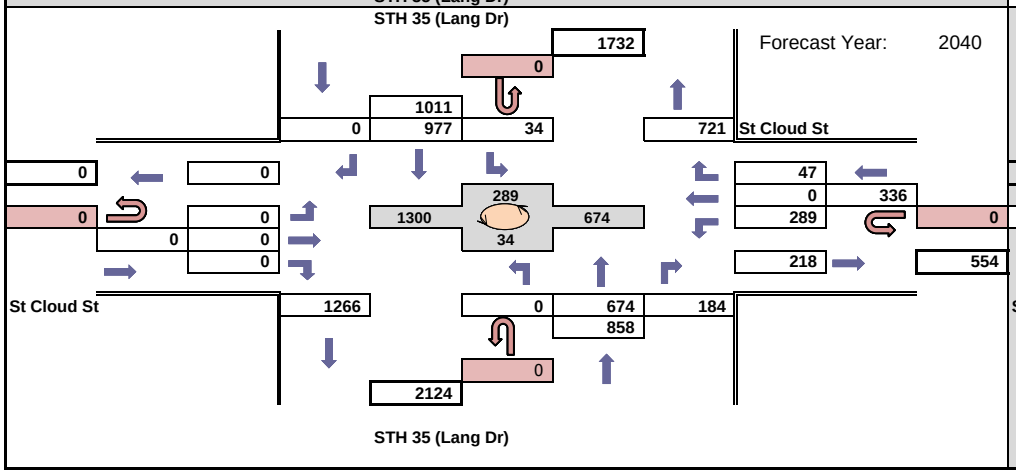

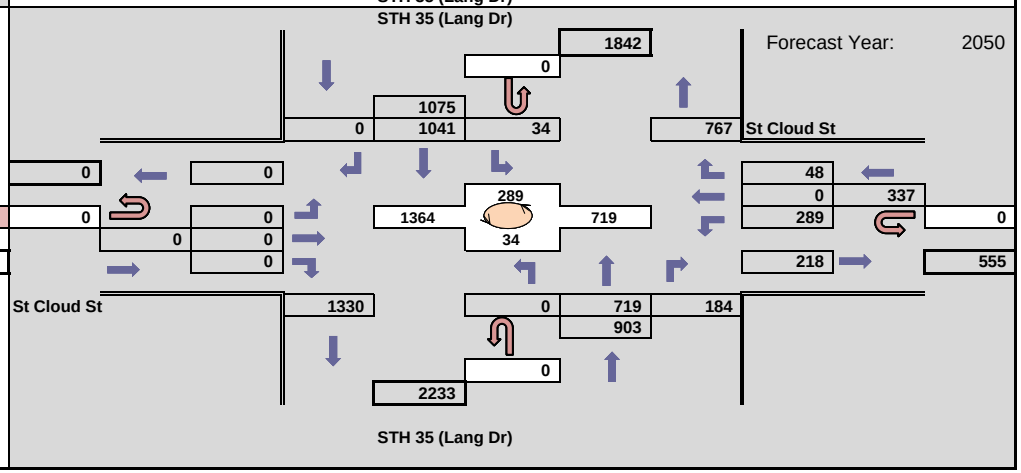

WisDOT Bureau of Planning & Economic Development
Traffic Forecasting Section
Forecast by: Miao Zhang
Phone: (608) 266 - 7995
Email: miao.zhang@dot.wi.gov

Projected PM Design Hour Traffic Volumes

Indicates roundabout

Design Hour: 4:15-5:15pm

Forecast Completed: 2/23/2021

Project Description

Project ID(s): 1630-08-00
Route(s): STH 35
Region/COUNTY(IES): SW/La Crosse
Location: WIS 35 (George St) & St Cloud St

Design Hour Turning Movement Data

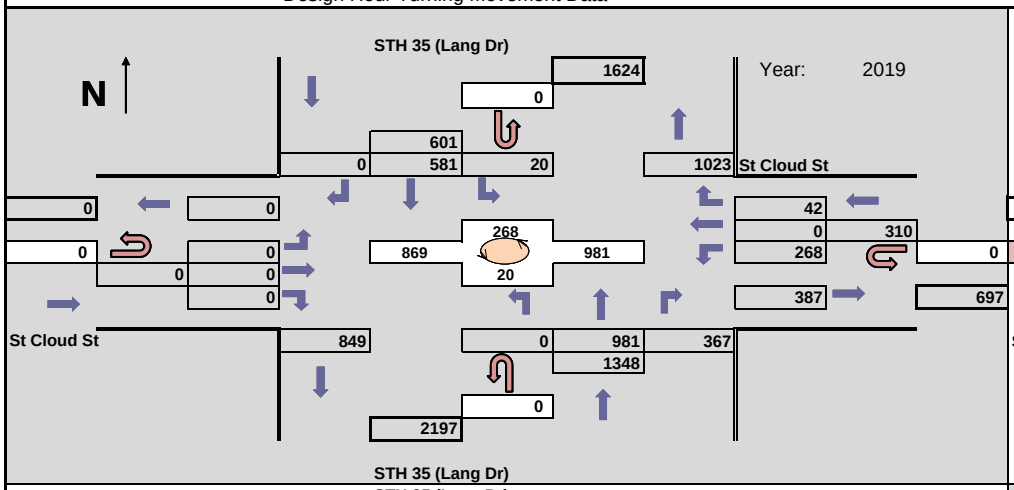

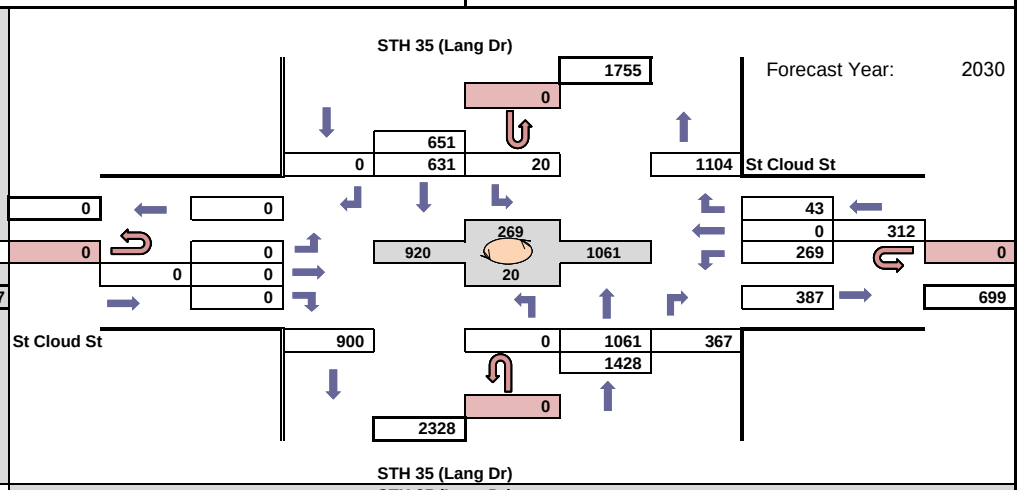

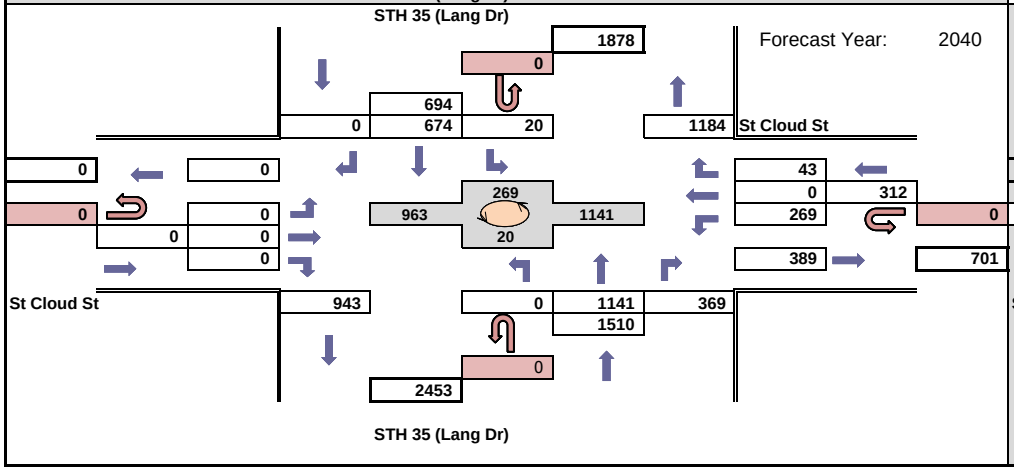

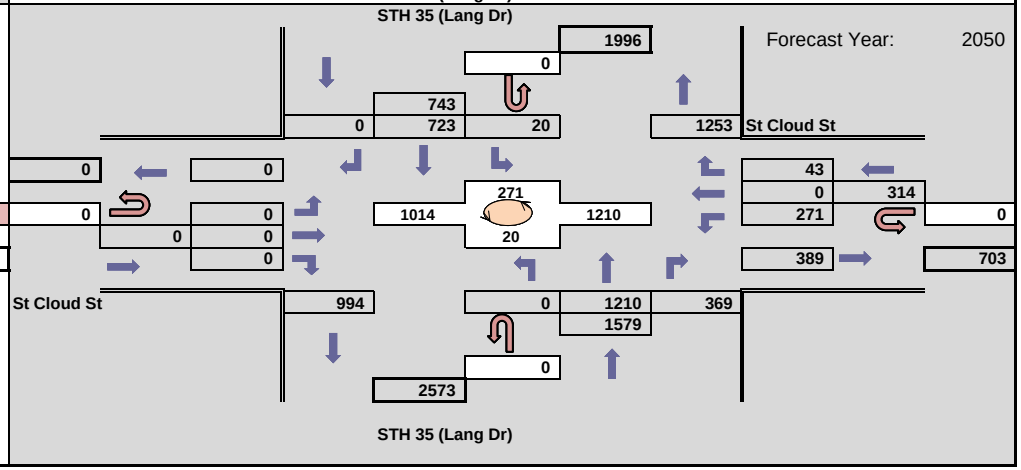

WisDOT Bureau of Planning & Economic Development
Traffic Forecasting Section
Forecast by: Miao Zhang
Phone: (608) 266 - 7995
Email: miao.zhang@dot.wi.gov

Projected AM Design Hour Traffic Volumes

Indicates roundabout

Design Hour: 7:00-8:00am

Forecast Completed: 2/23/2021

Project Description

Project ID(s): 1630-08-00
Route(s): STH 35
Region/COUNTY(IES): SW/La Crosse
Location: WIS 35 & St. Andrews St

Design Hour Turning Movement Data

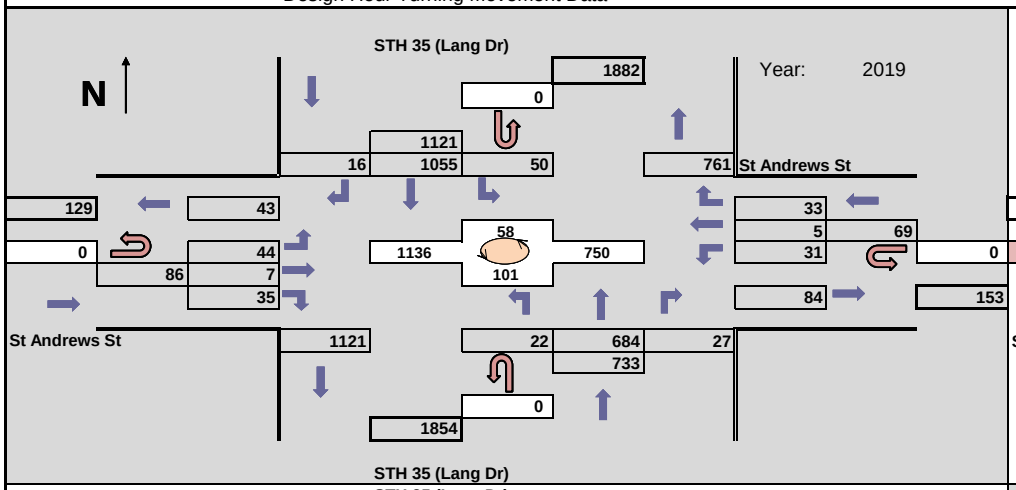

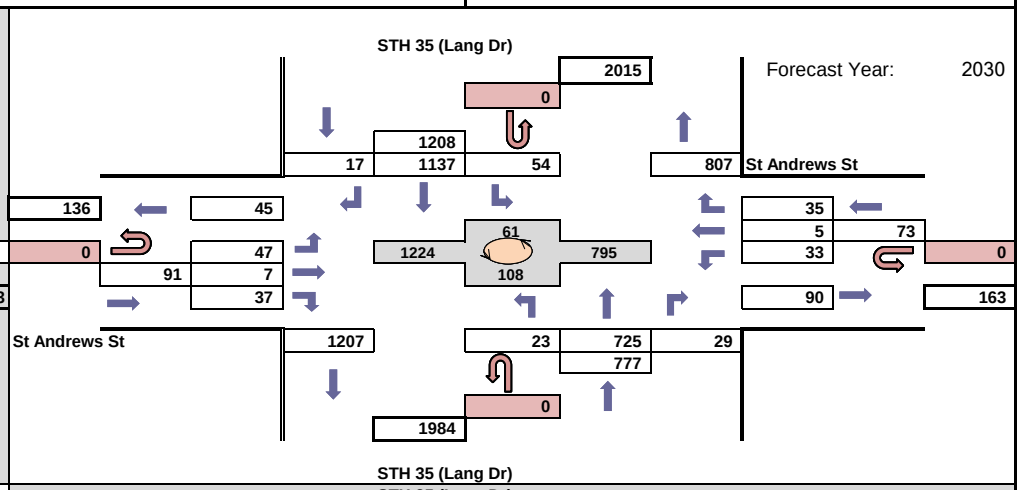

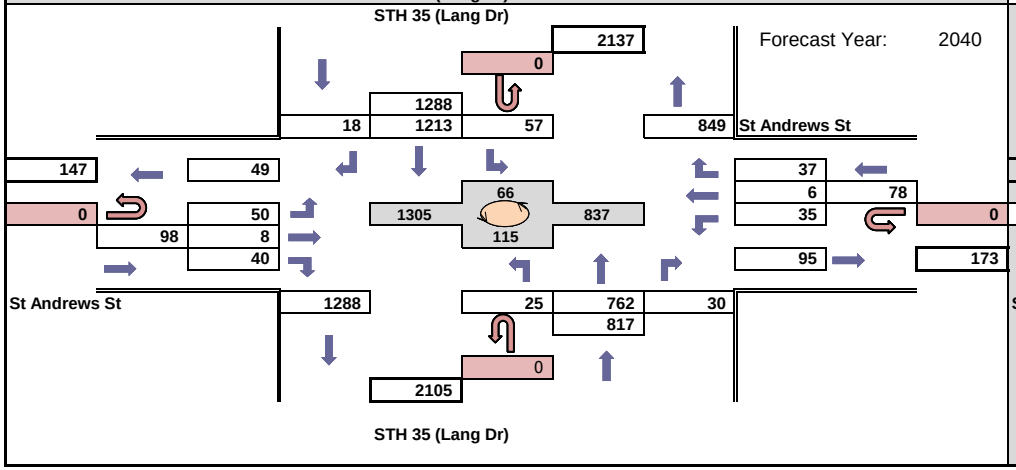

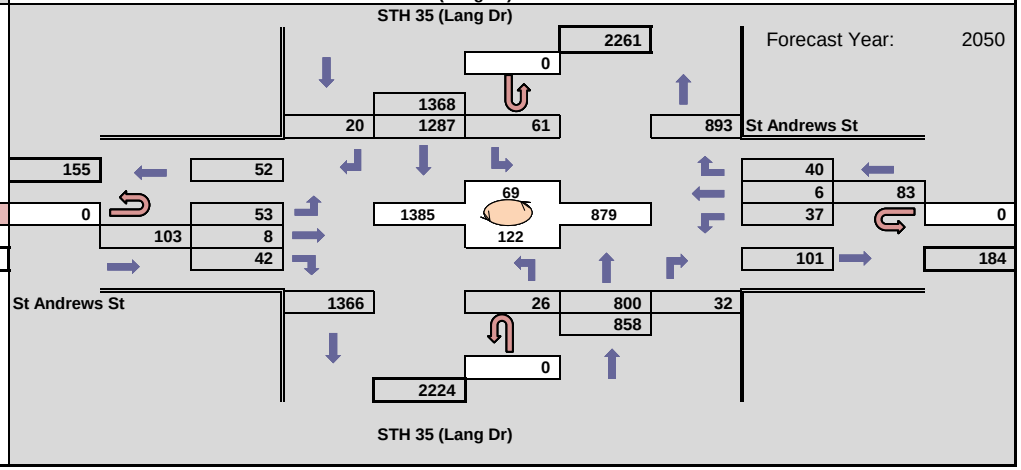

WisDOT Bureau of Planning & Economic Development
Traffic Forecasting Section
Forecast by: Miao Zhang
Phone: (608) 266 - 7995
Email: miao.zhang@dot.wi.gov

Projected PM Design Hour Traffic Volumes

Indicates roundabout

Design Hour: 4:15-5:15pm

Forecast Completed: 2/23/2021

Project Description

Project ID(s): 1630-08-00
Route(s): STH 35
Region/COUNTY(IES): SW/La Crosse
Location: WIS 35 & St. Andrews St

Design Hour Turning Movement Data

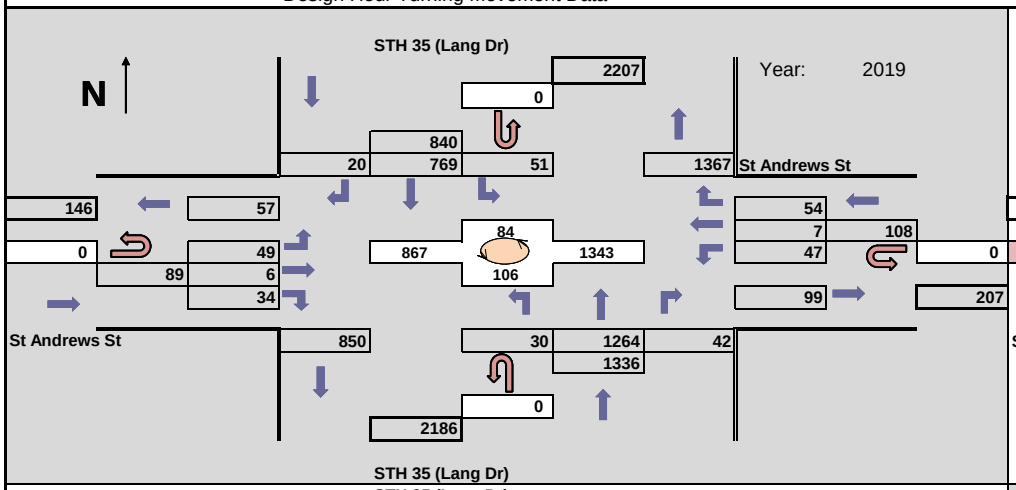

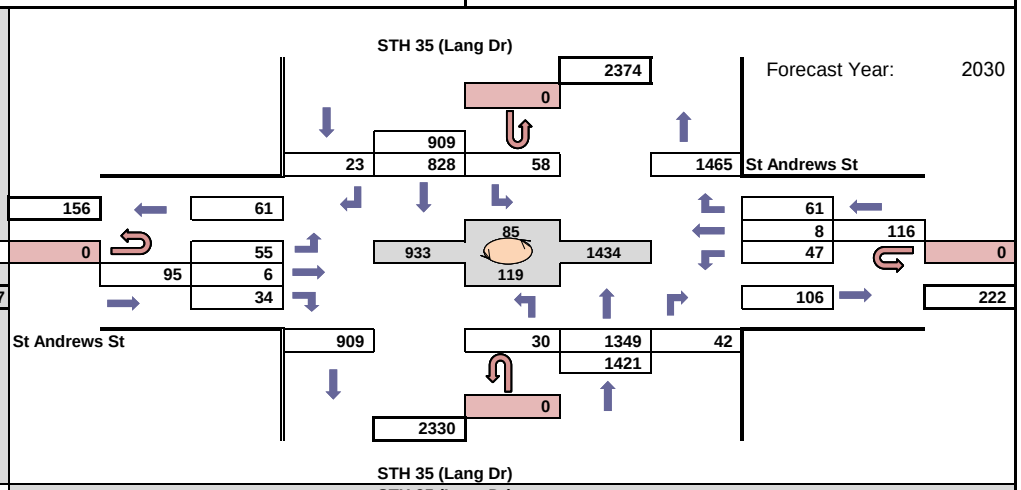

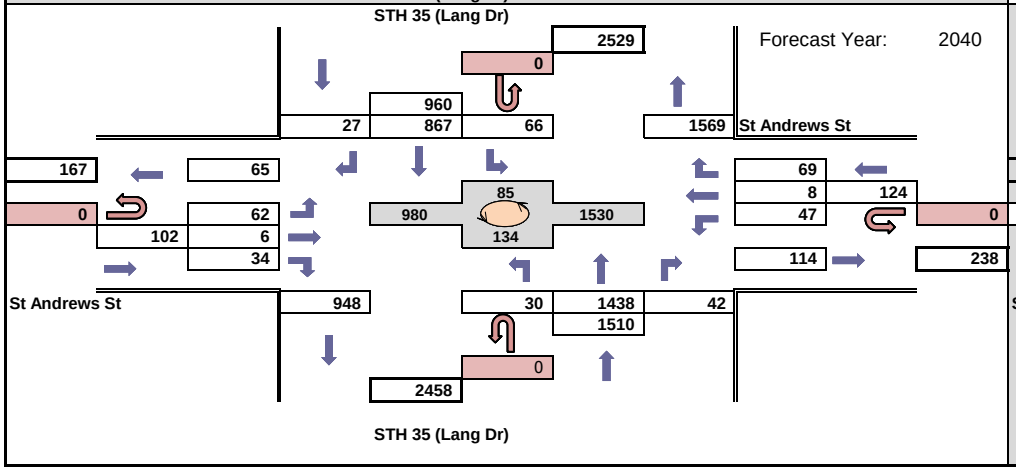

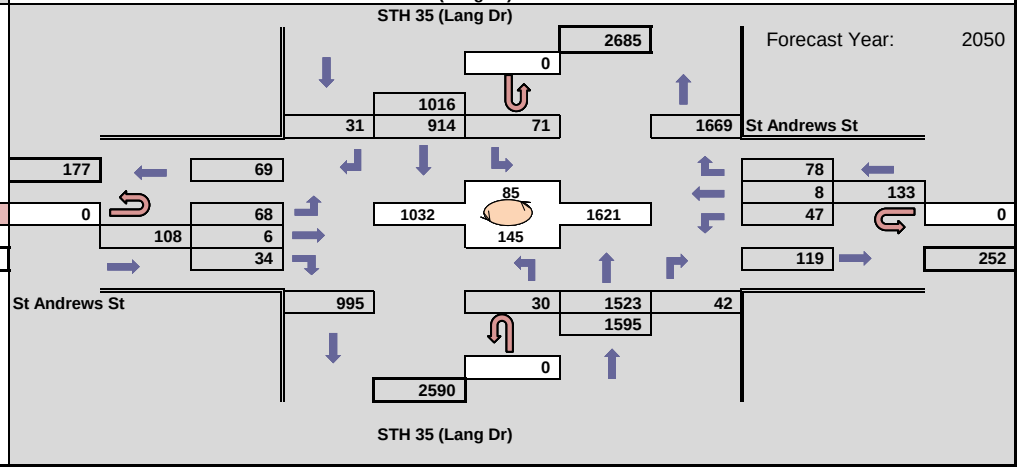

WisDOT Bureau of Planning & Economic Development
Traffic Forecasting Section
Forecast by: Miao Zhang
Phone: (608) 266 - 7995
Email: miao.zhang@dot.wi.gov

Projected AM Design Hour Traffic Volumes

Indicates roundabout

Design Hour: 7:00-8:00am

Forecast Completed: 2/23/2021

Project Description

Project ID(s): 1630-08-00
Route(s): STH 35
Region/COUNTY(IES): SW/La Crosse
Location: WIS 35 (West Ave) & Monitor St

Design Hour Turning Movement Data

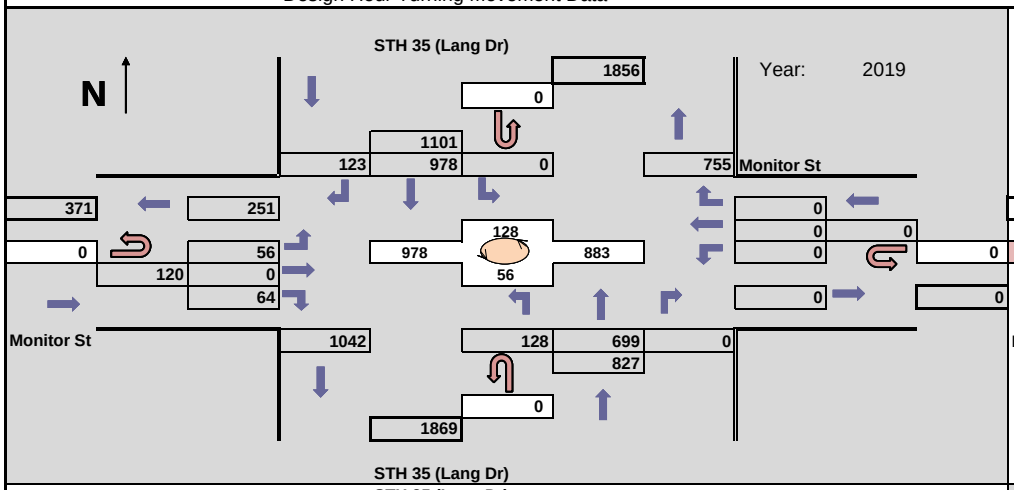

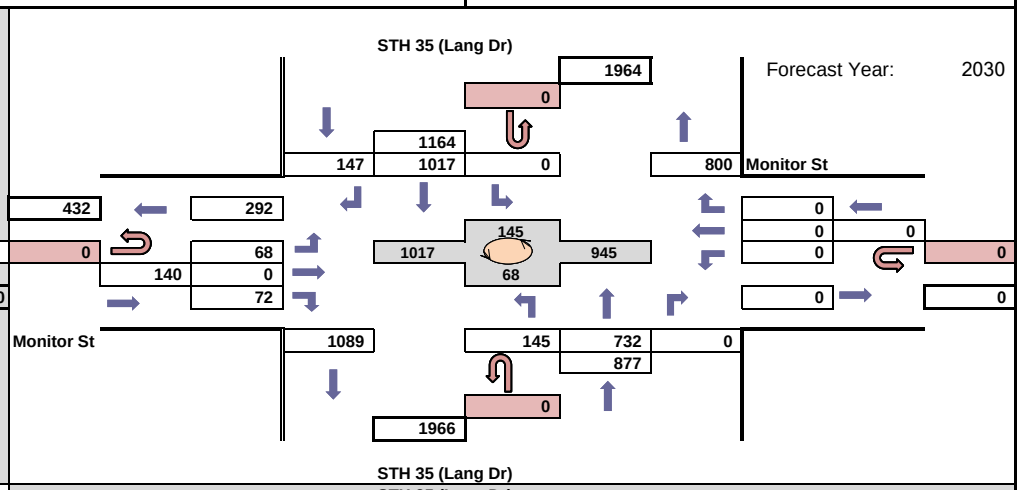

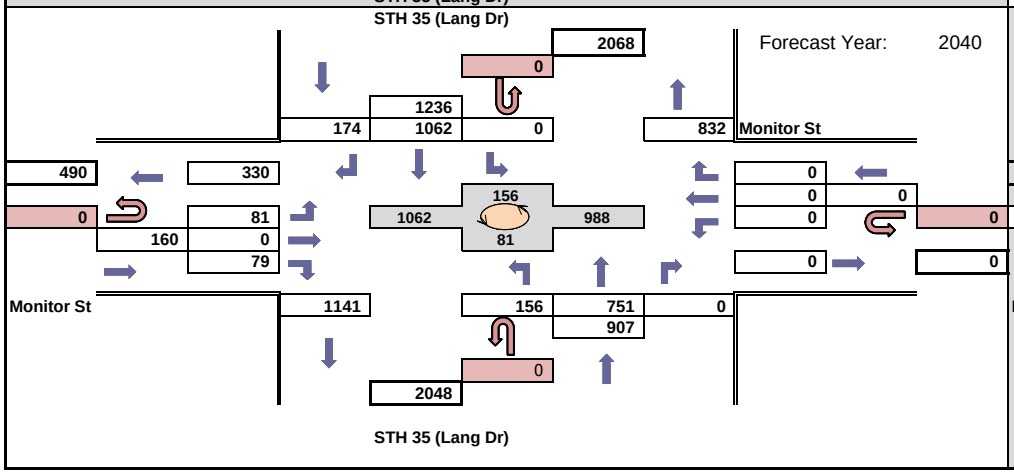

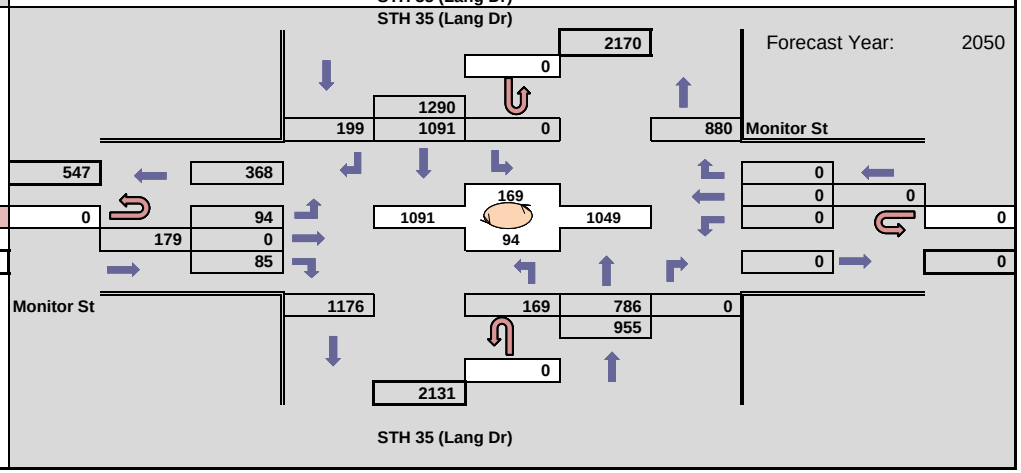

WisDOT Bureau of Planning & Economic Development
Traffic Forecasting Section
Forecast by: Miao Zhang
Phone: (608) 266 - 7995
Email: miao.zhang@dot.wi.gov

Projected PM Design Hour Traffic Volumes

Indicates roundabout

Design Hour: 4:15-5:15pm

Forecast Completed: 2/23/2021

Project Description

Project ID(s): 1630-08-00
Route(s): STH 35
Region/COUNTY(IES): SW/La Crosse
Location: WIS 35 (West Ave) & Monitor St

Design Hour Turning Movement Data

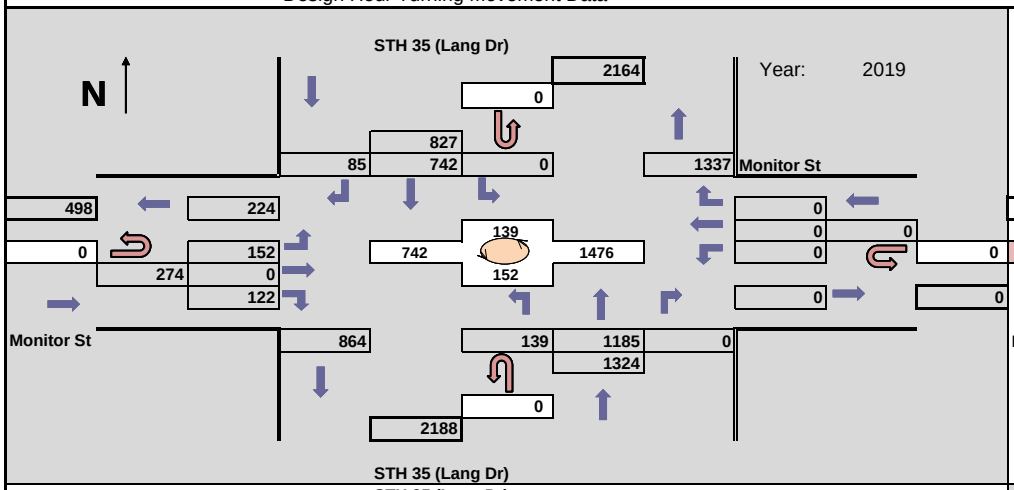

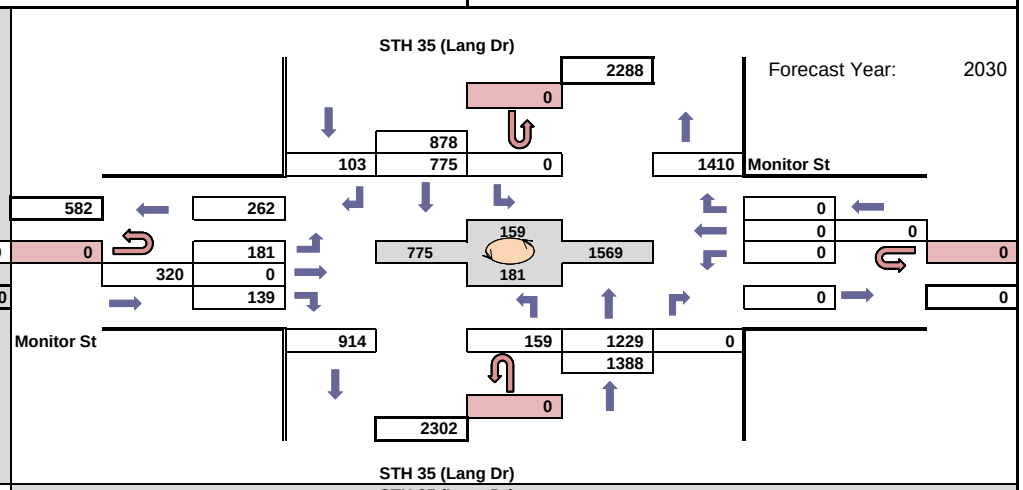

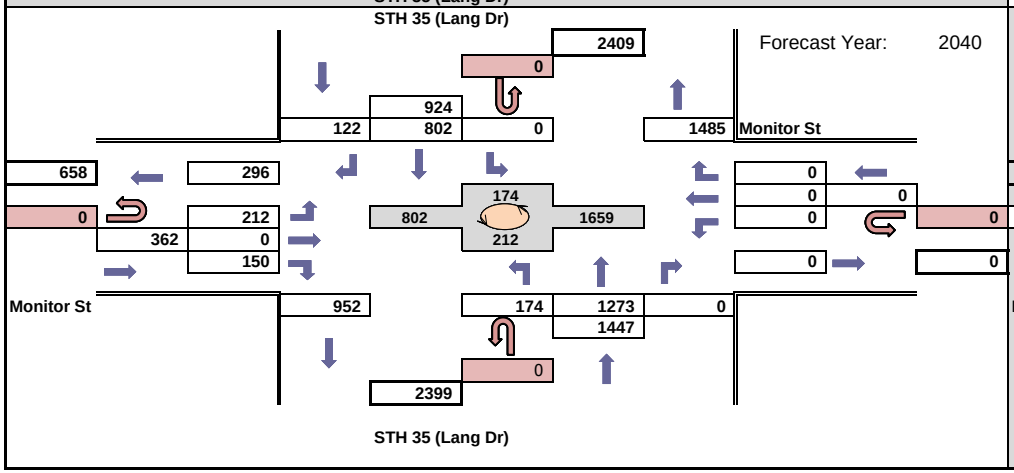

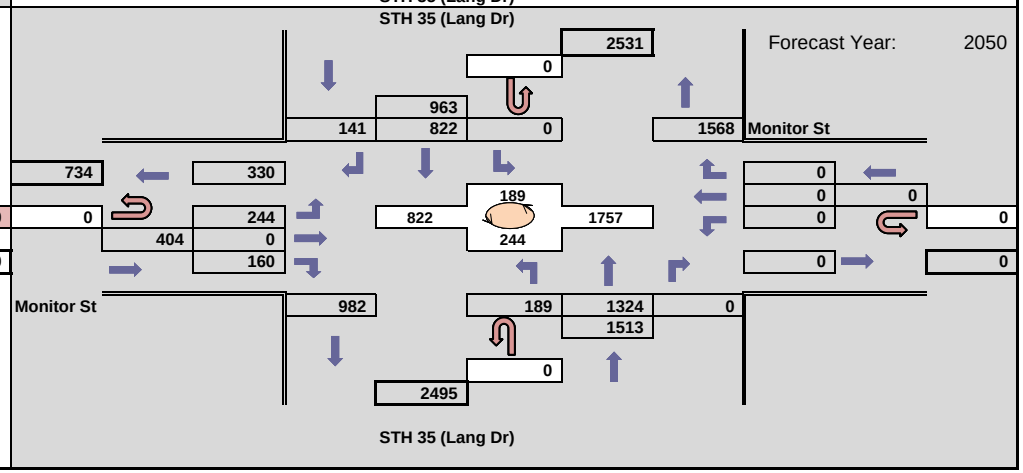

WisDOT TRAFFIC FORECAST REPORT	Region/COUNTY(IES): SW/La Crosse	Developed by: Miao Zhang
PROJECT ID(S): 1630-08-00	LOCATION: STH 53Rose St. Segment	Phone: (608) 266-7995
ROUTE(S): STH 53	COMPLETED: 02/23/2021	
Traffic Forecasting Section; Bureau of Planning and Economic Development; Division of Transportation Investment Management		E-Mail: miao.zhang@dot.wi.gov

Site(s)	Route(s)	Volume(s)	Site Growth %
320405	STH 53	29710	0.73%
320428	STH 53	31140	0.33%
320439	STH 53	14480	0.24%
320457	STH 53	13610	0.17%
326118	STH 53	29610	0.25%

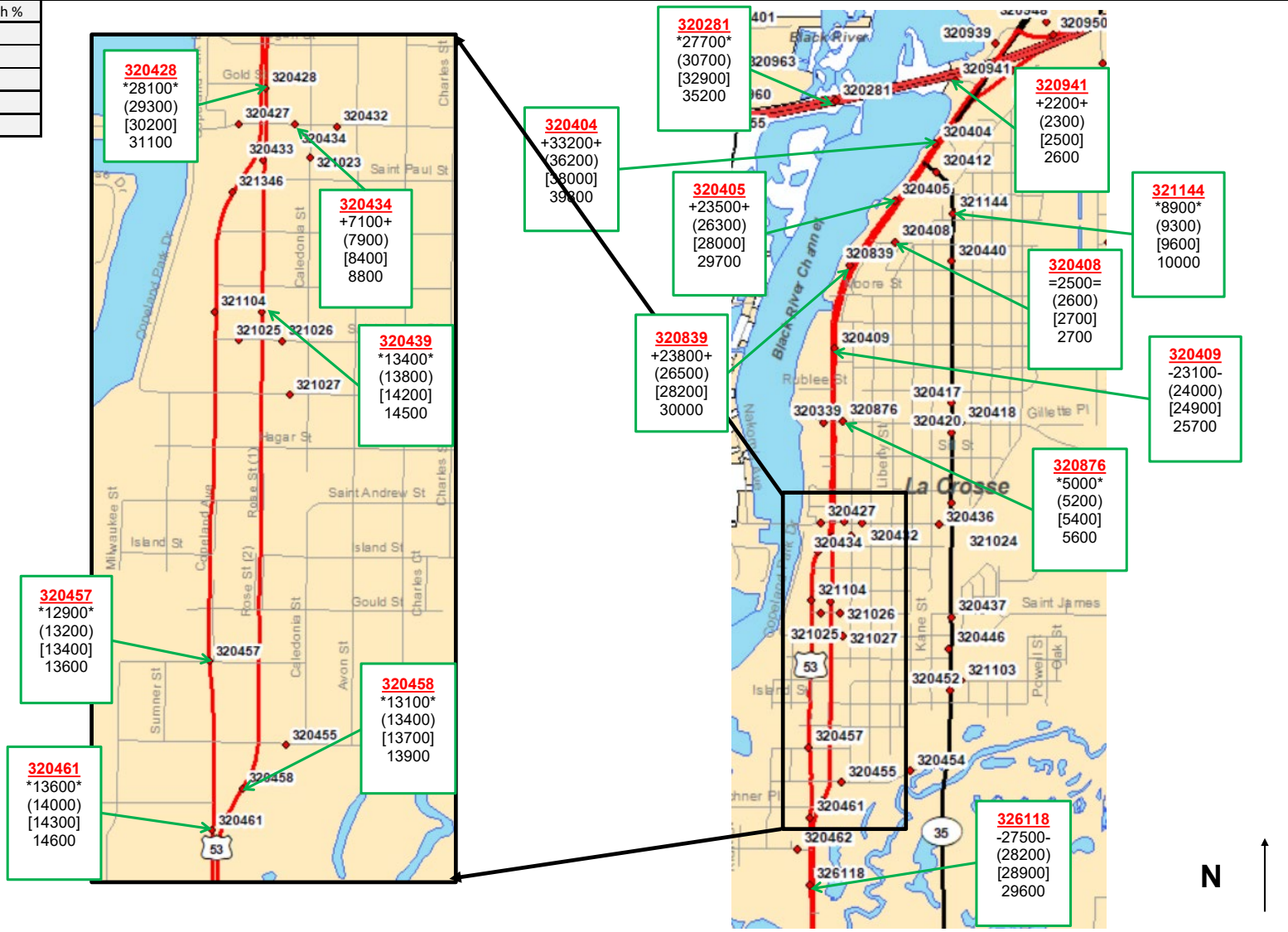

SITE ID = Colored, **bolded**, and underlined

Symbol	Count	Symbol	Forecast
-000-	2019 Count	(000)	2030 AADT
000	2017 Count	[000]	2040 AADT
+000+	2014 Count	000	2050 AADT
=000=	2011 Count		

NOTES ON THE FORECAST:

1. This projection assumes that no major new traffic generators will be added to the development already included in the 2010/2040 La Crosse Regional Travel Demand Model.
2. Vehicle classification data and design values (K factors, directional splits, and percent trucks in design hours) are available here: http://wisconsindot.gov/Pages/projects/data-plan/traf-fore/default.aspx
3. STH 53 is a Factor Group II (Urban-Other) roadways (indicating low to moderate fluctuation in traffic from a seasonal perspective).
4. The 2010/2040 La Crosse Regional Travel Demand Model was used to complete this forecast. The Traffic Analysis Forecasting Information System output was used as a comparison tool to check against the model output. Adjustments were made as needed.
5. Roadway improvements coded within the existing plus committed (E+C) network of the 2010/2040 La Crosse Regional Travel Demand Model were assumed to be in place for the purposes of developing this forecast.

WisDOT Bureau of Planning & Economic Development
Traffic Forecasting Section
Forecast by: Miao Zhang
Phone: (608) 266 - 7995
Email: miao.zhang@dot.wi.gov

Projected AM Design Hour Traffic Volumes

Indicates roundabout

Design Hour: 7:00-8:00am

Forecast Completed: 2/23/2021

Design Hour Turning Movement Data

Project Description

Project ID(s): 1630-08-00
Route(s): USH 53
Region/COUNTY(IES): SW/La Crosse
Location: US 53 & I-90 EB On Ramp

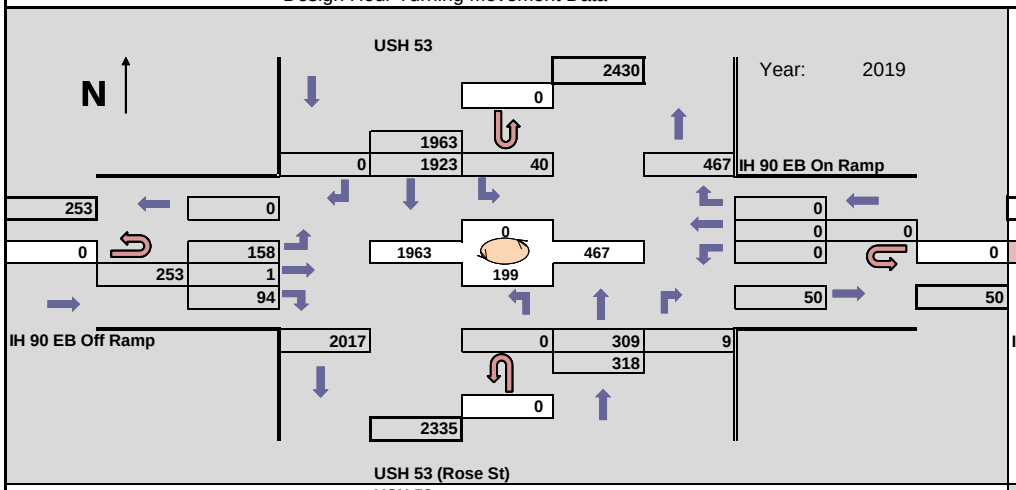

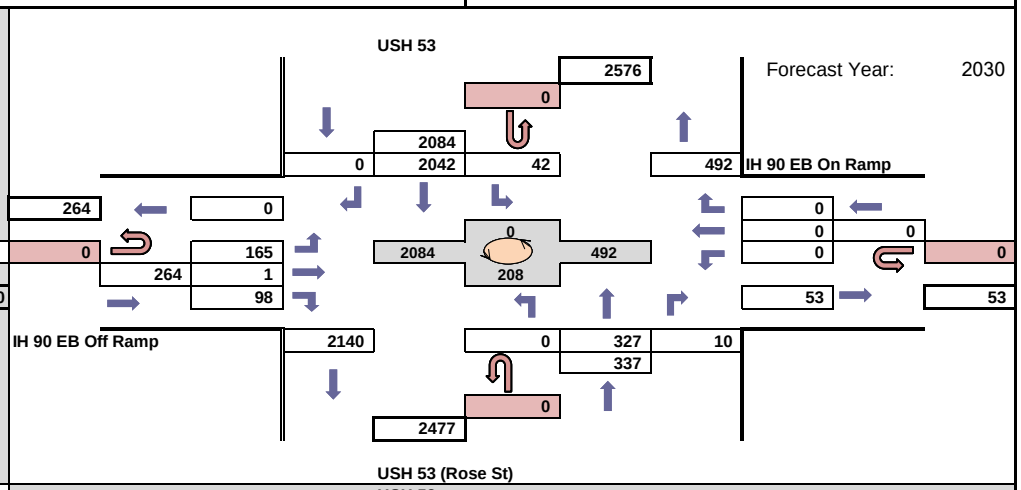

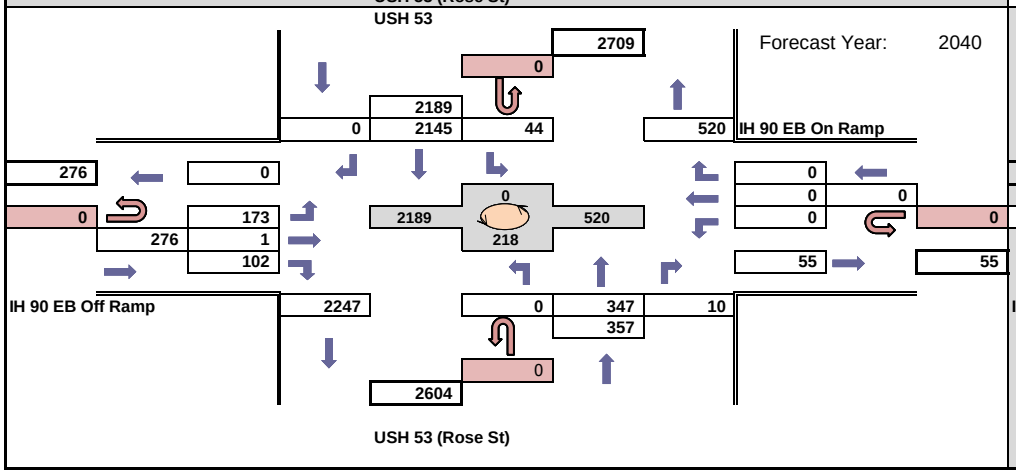

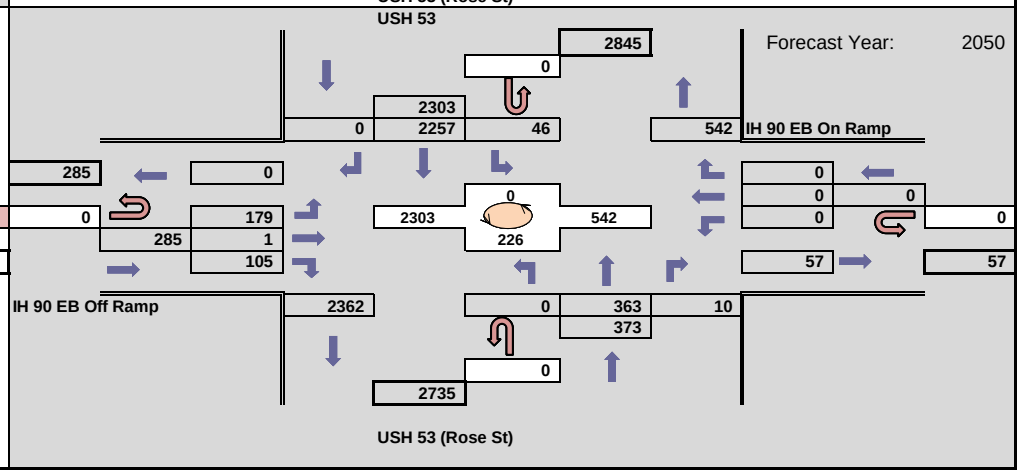

WisDOT Bureau of Planning & Economic Development
Traffic Forecasting Section
Forecast by: Miao Zhang
Phone: (608) 266 - 7995
Email: miao.zhang@dot.wi.gov

Projected PM Design Hour Traffic Volumes

Indicates roundabout

Design Hour: 4:00-5:00pm

Forecast Completed: 2/23/2021

Project Description

Project ID(s): 1630-08-00
Route(s): USH 53
Region/COUNTY(IES): SW/La Crosse
Location: US 53 & I-90 EB On Ramp

Design Hour Turning Movement Data

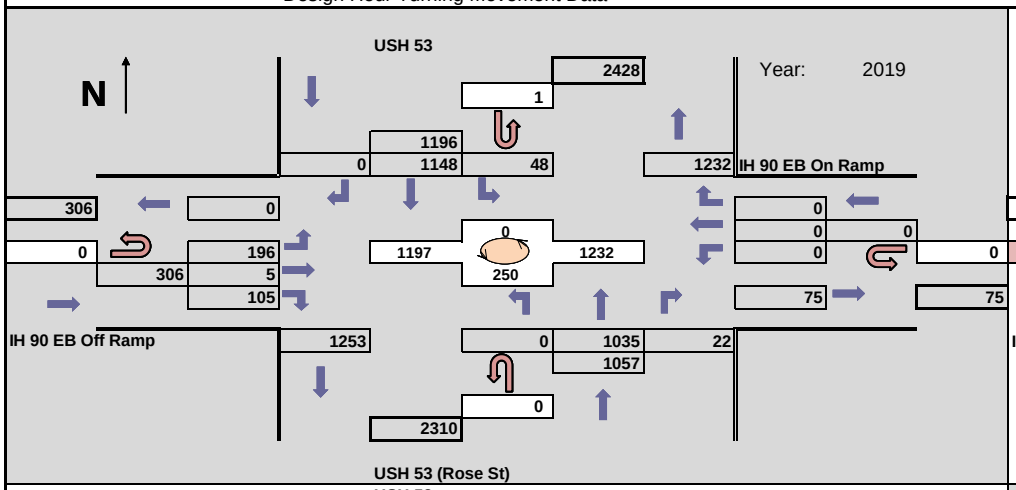

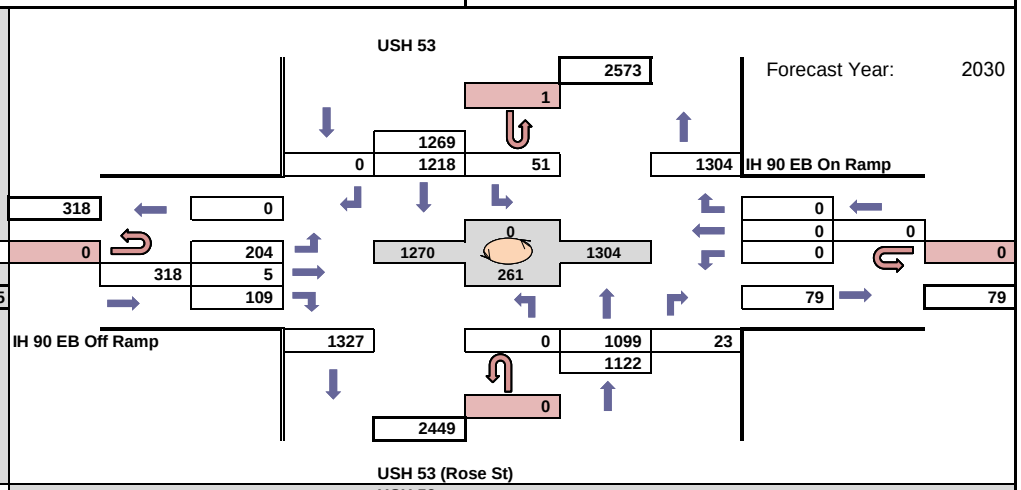

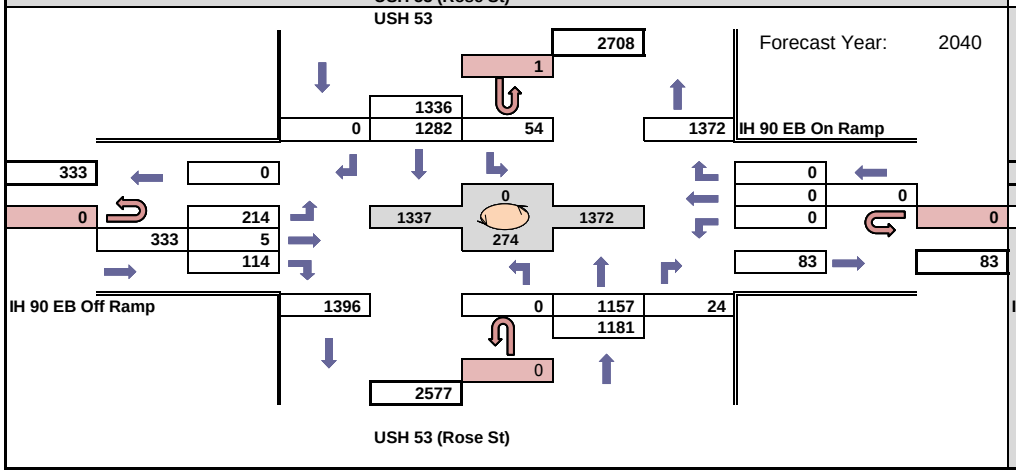

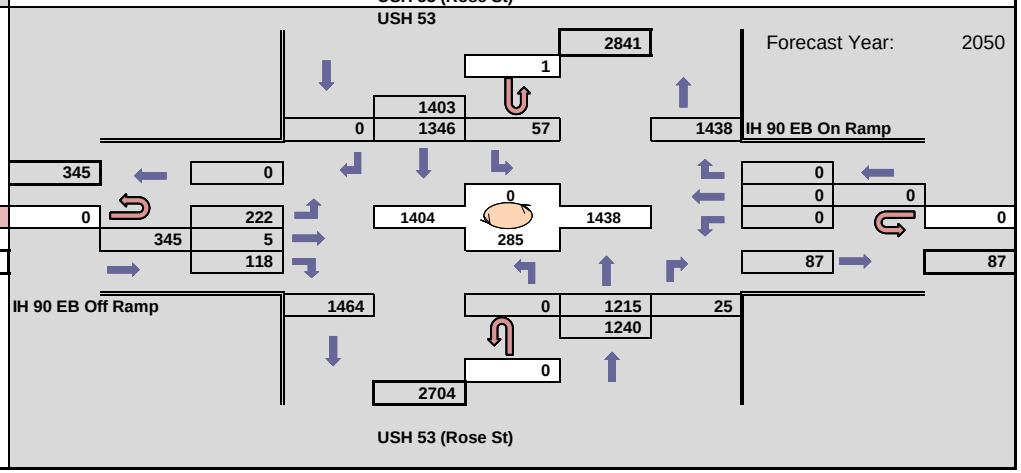

WisDOT Bureau of Planning & Economic Development
Traffic Forecasting Section
Forecast by: Miao Zhang
Phone: (608) 266 - 7995
Email: miao.zhang@dot.wi.gov

Projected AM Design Hour Traffic Volumes

Indicates roundabout

Design Hour: 7:00-8:00am

Forecast Completed: 2/23/2021

Project Description

Project ID(s): 1630-08-00
Route(s): USH 53
Region/COUNTY(IES): SW/La Crosse
Location: US 53 (Rose St) & WIS 35

Design Hour Turning Movement Data

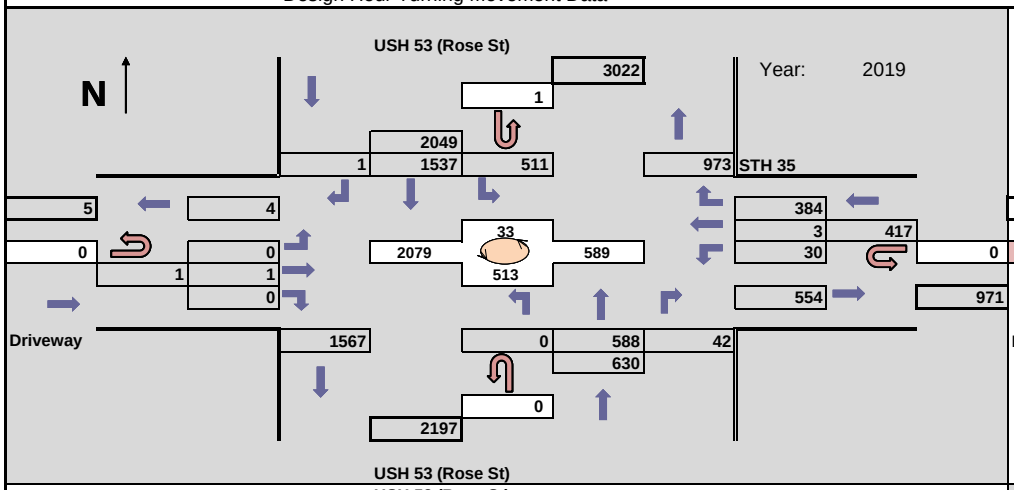

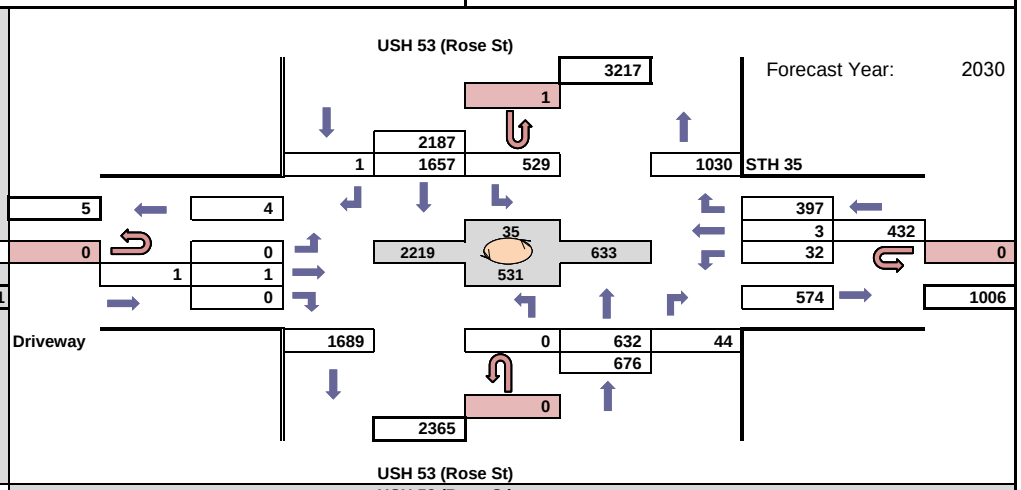

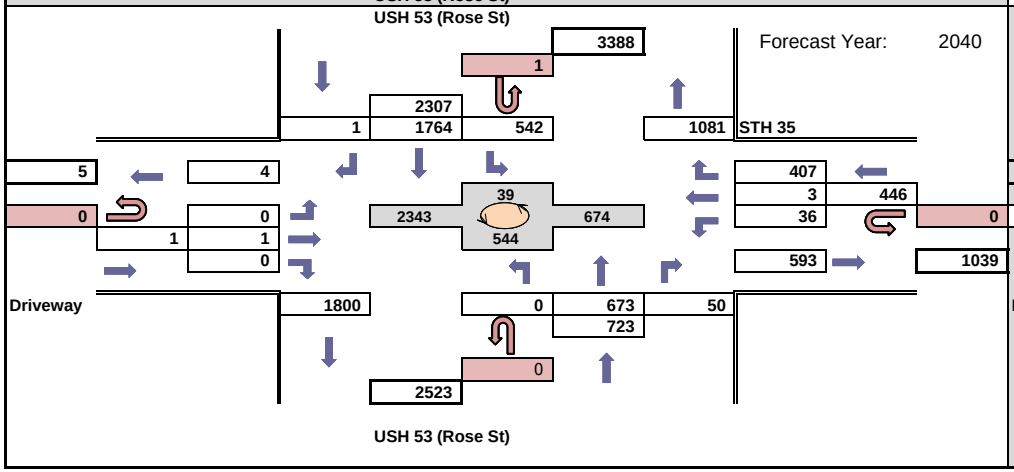

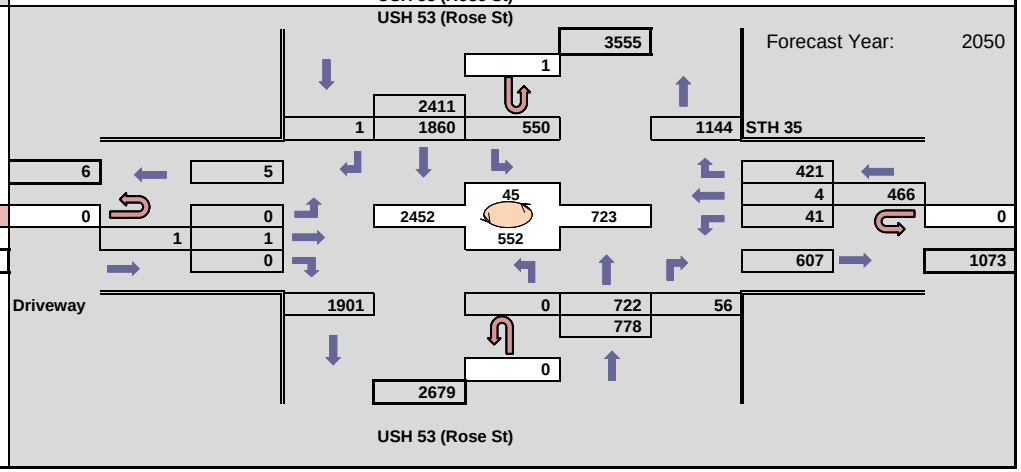

WisDOT Bureau of Planning & Economic Development
Traffic Forecasting Section
Forecast by: Miao Zhang
Phone: (608) 266 - 7995
Email: miao.zhang@dot.wi.gov

Projected PM Design Hour Traffic Volumes

Indicates roundabout

Design Hour: 4:00-5:00pm

Forecast Completed: 2/23/2021

Project Description

Project ID(s): 1630-08-00
Route(s): USH 53
Region/COUNTY(IES): SW/La Crosse
Location: US 53 (Rose St) & WIS 35

Design Hour Turning Movement Data

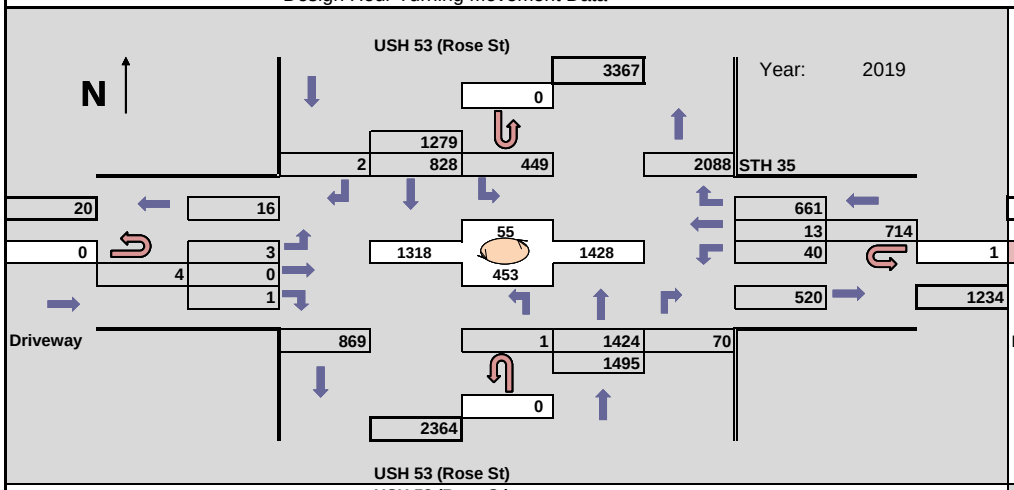

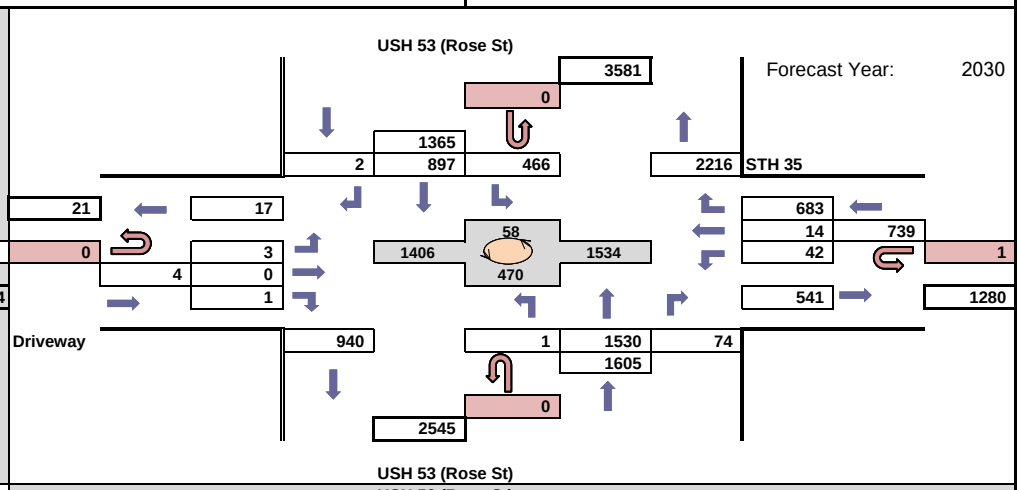

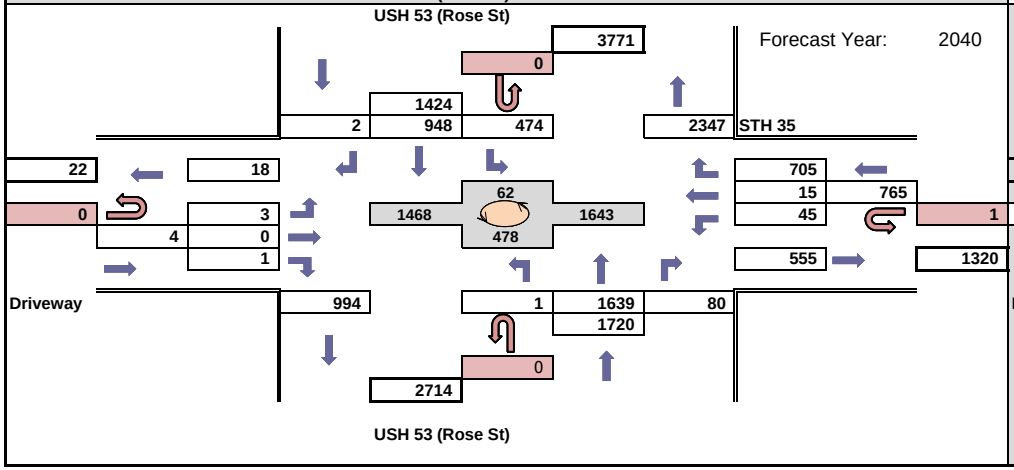

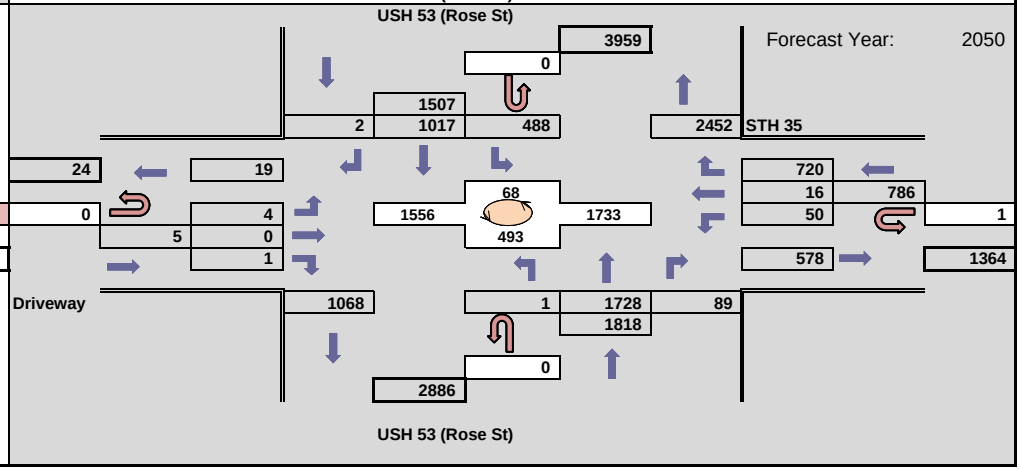

WisDOT Bureau of Planning & Economic Development
Traffic Forecasting Section
Forecast by: Miao Zhang
Phone: (608) 266 - 7995
Email: miao.zhang@dot.wi.gov

Projected AM Design Hour Traffic Volumes

Indicates roundabout

Design Hour: 7:00-8:00am

Forecast Completed: 2/23/2021

Project Description

Project ID(s): 1630-08-00
Route(s): USH 53
Region/COUNTY(IES): SW/La Crosse
Location: US 53 (Rose St) & Palace St

Design Hour Turning Movement Data

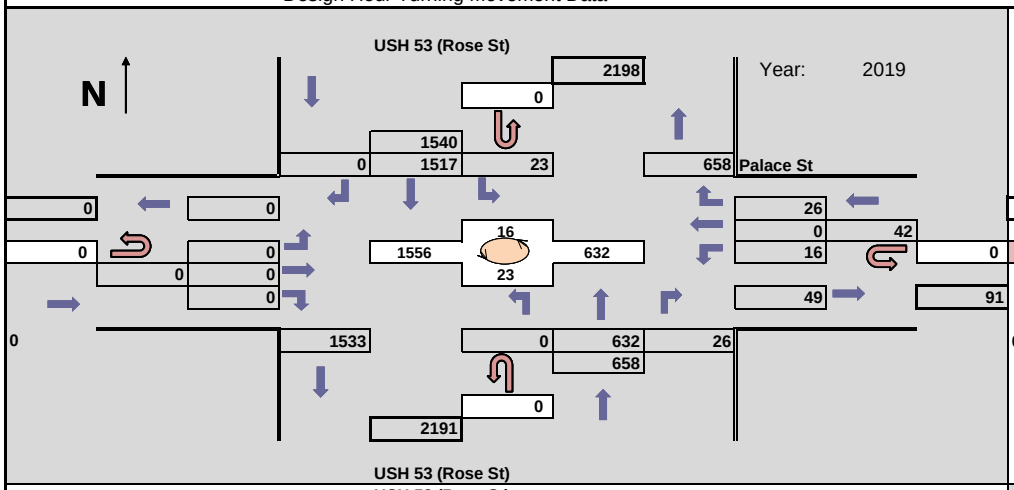

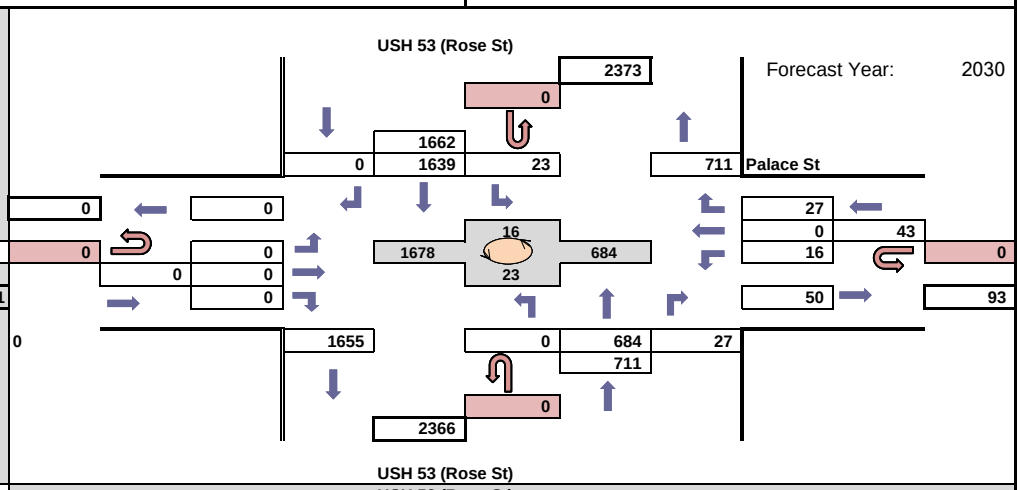

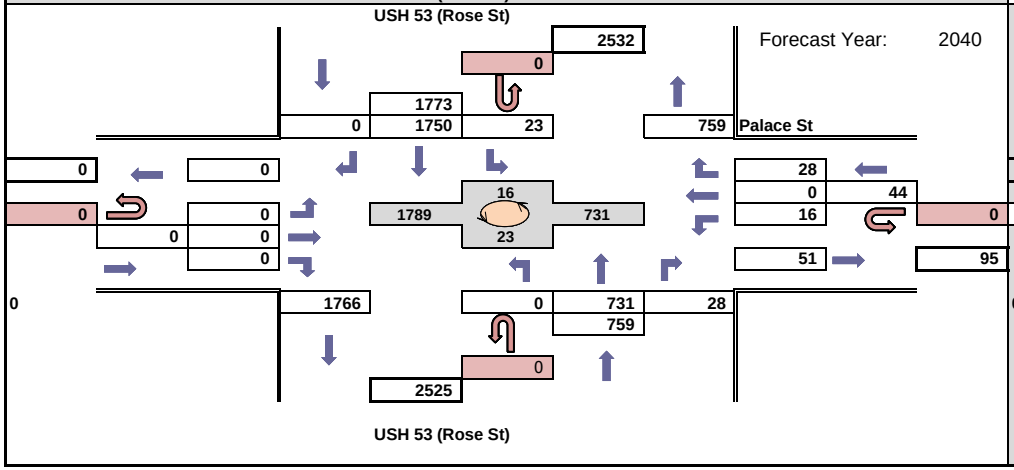

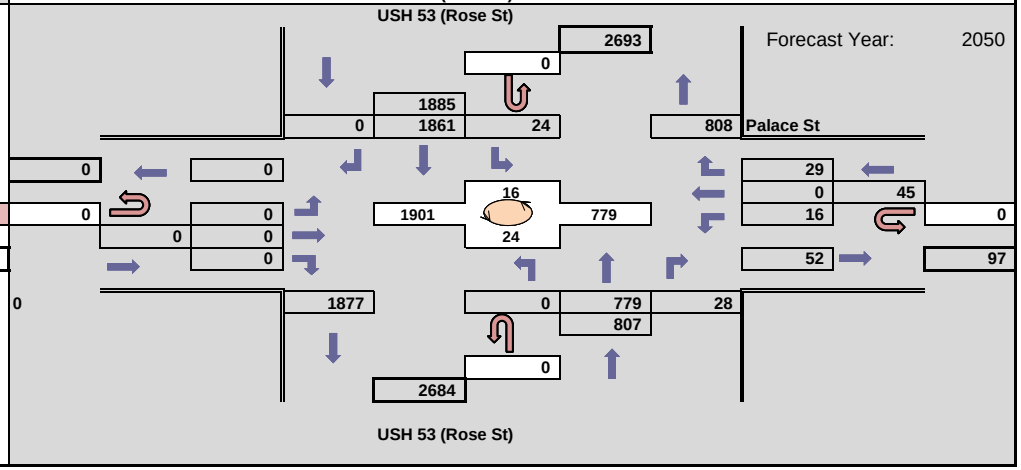

WisDOT Bureau of Planning & Economic Development
Traffic Forecasting Section
Forecast by: Miao Zhang
Phone: (608) 266 - 7995
Email: miao.zhang@dot.wi.gov

Projected PM Design Hour Traffic Volumes

Indicates roundabout

Design Hour: 4:00-5:00pm

Forecast Completed: 2/23/2021

Project Description

Project ID(s): 1630-08-00
Route(s): USH 53
Region/COUNTY(IES): SW/La Crosse
Location: US 53 (Rose St) & Palace St

Design Hour Turning Movement Data

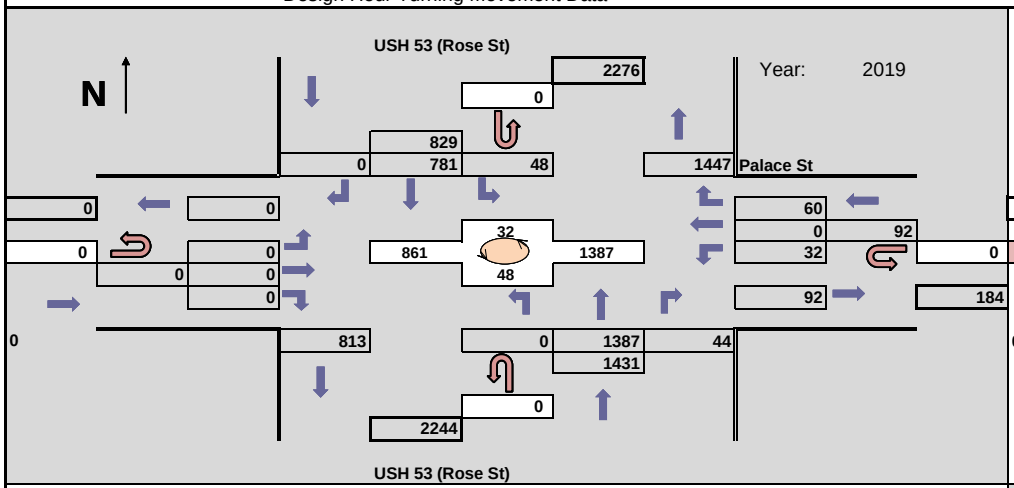

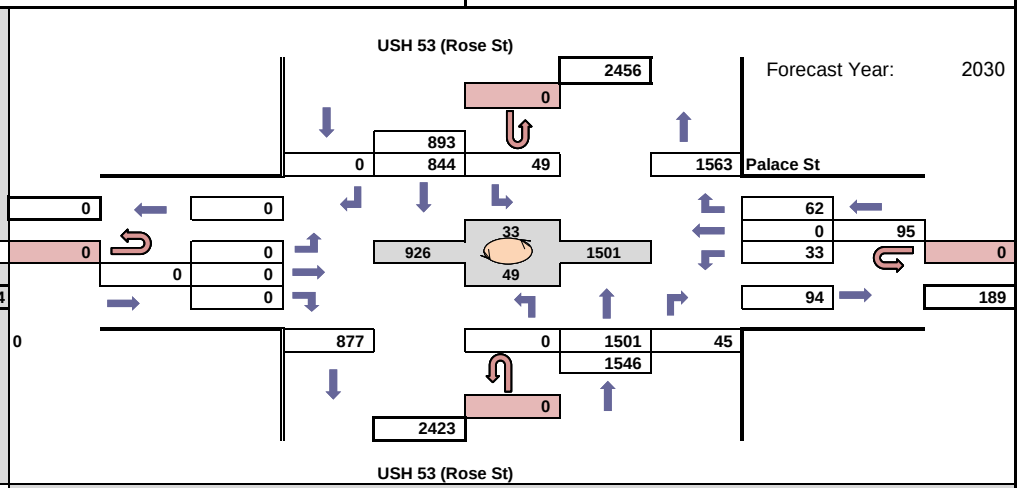

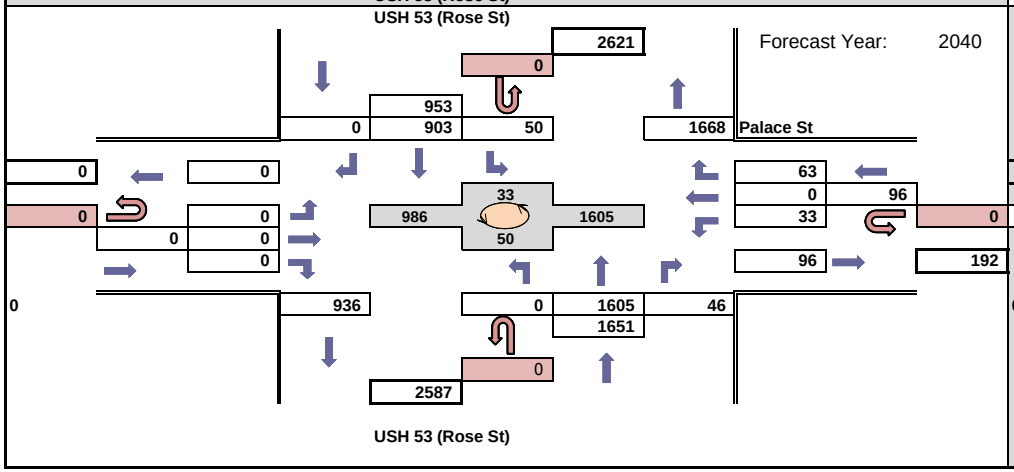

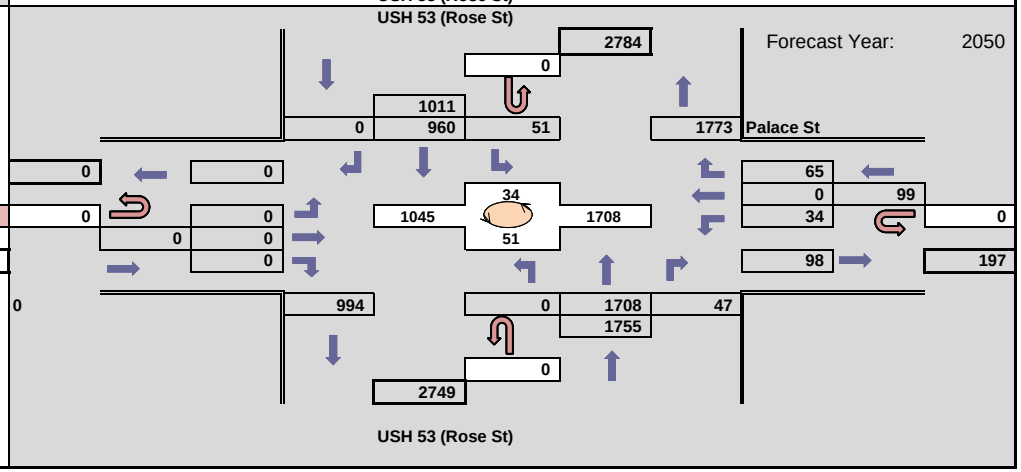

WisDOT Bureau of Planning & Economic Development
Traffic Forecasting Section
Forecast by: Miao Zhang
Phone: (608) 266 - 7995
Email: miao.zhang@dot.wi.gov

Projected AM Design Hour Traffic Volumes

Indicates roundabout

Design Hour: 7:00-8:00am

Forecast Completed: 2/23/2021

Project Description

Project ID(s): 1630-08-00
Route(s): USH 53
Region/COUNTY(IES): SW/La Crosse
Location: US 53 (Rose St) & Gille e St

Design Hour Turning Movement Data

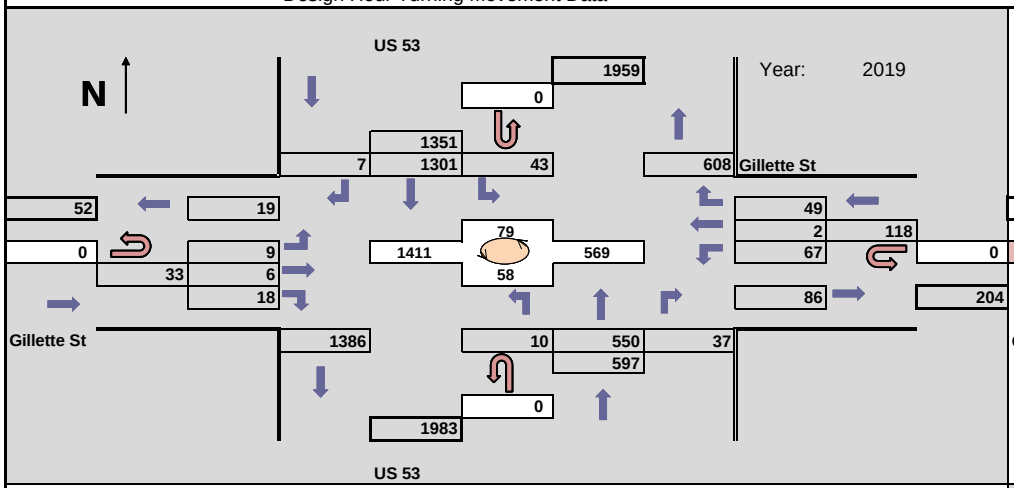

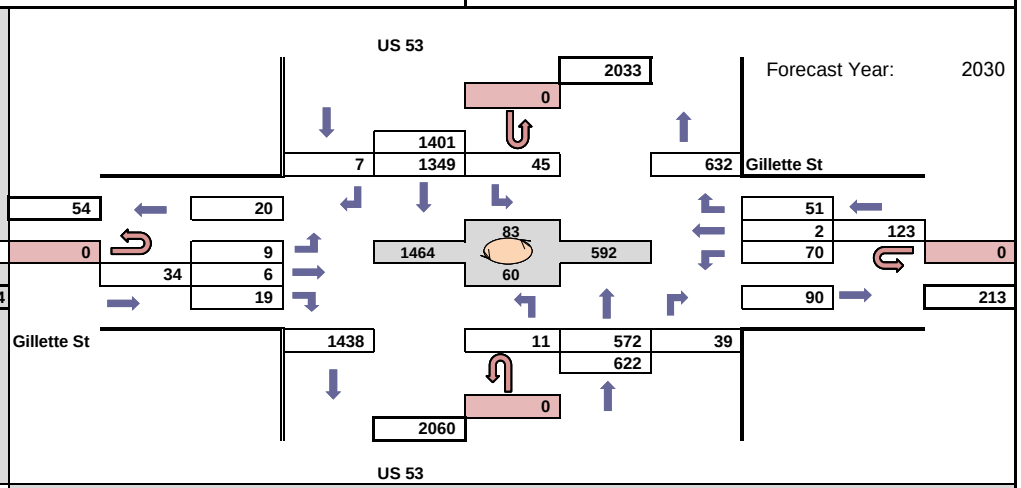

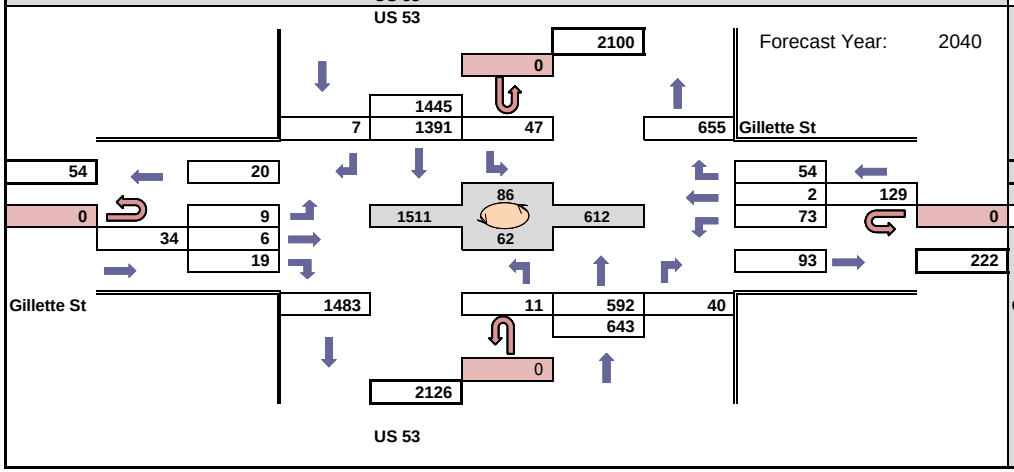

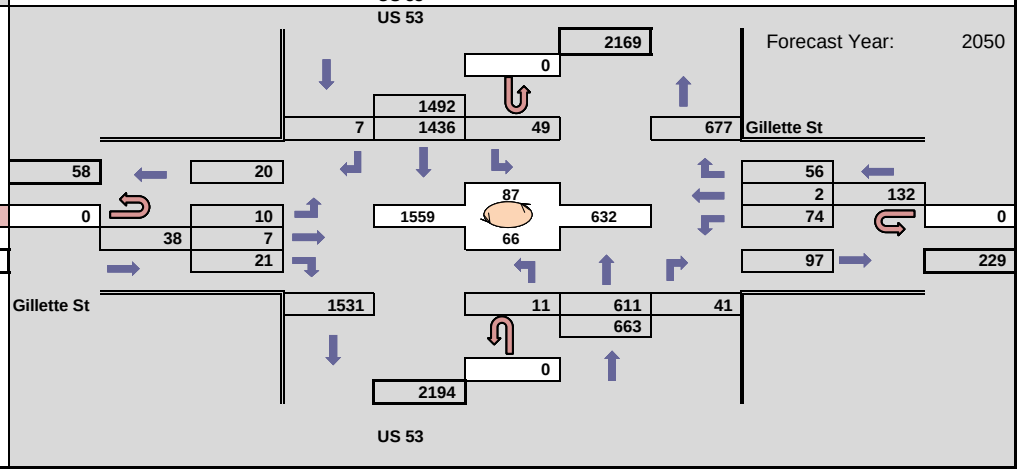

WisDOT Bureau of Planning & Economic Development
Traffic Forecasting Section
Forecast by: Miao Zhang
Phone: (608) 266 - 7995
Email: miao.zhang@dot.wi.gov

Projected PM Design Hour Traffic Volumes

Indicates roundabout

Design Hour: 4:00-5:00pm

Forecast Completed: 2/23/2021

Project Description

Project ID(s): 1630-08-00
Route(s): USH 53
Region/COUNTY(IES): SW/La Crosse
Location: US 53 (Rose St) & Gille□e St

Design Hour Turning Movement Data

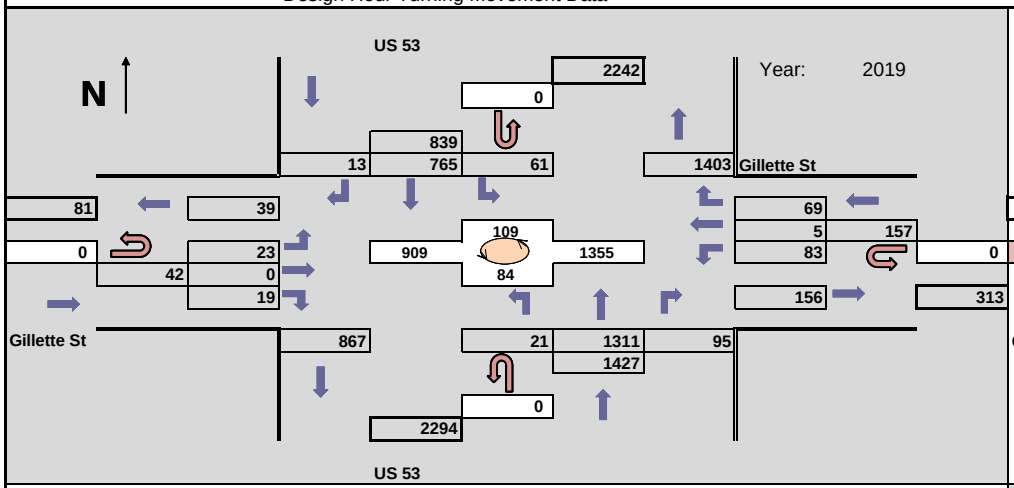

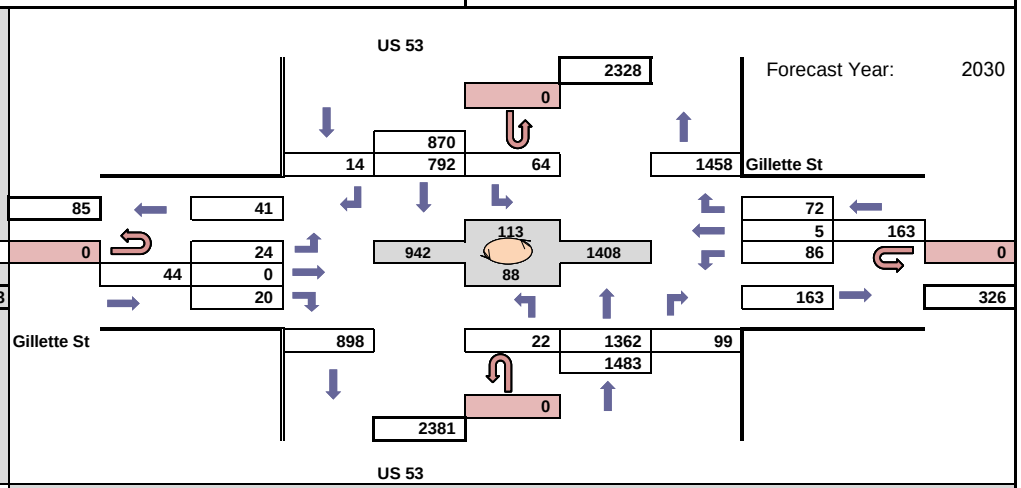

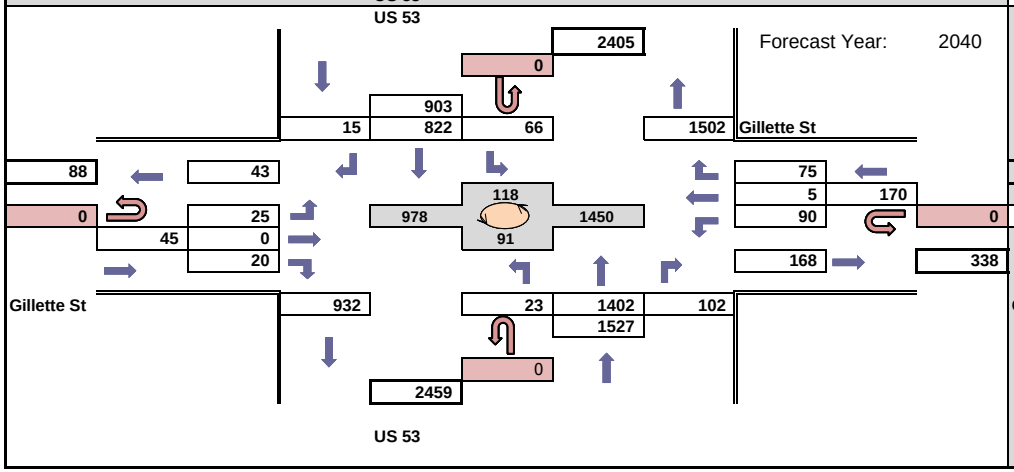

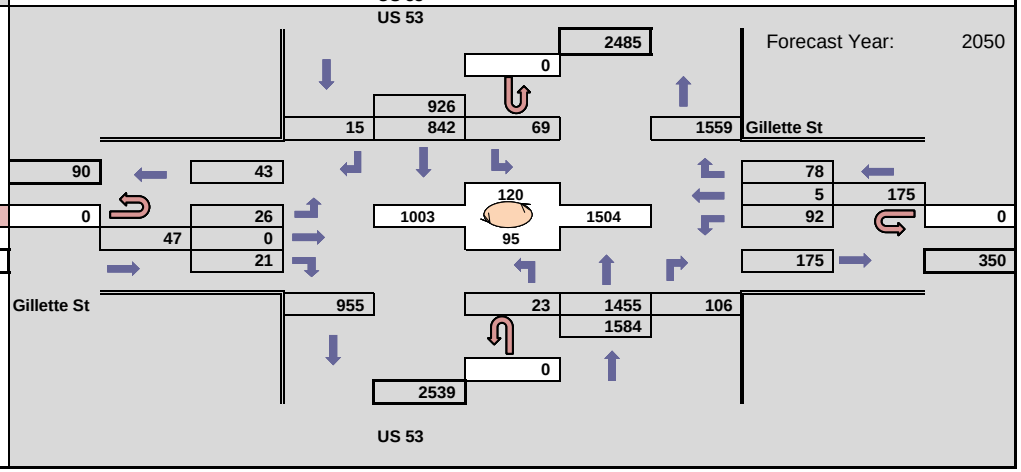

WisDOT Bureau of Planning & Economic Development
Traffic Forecasting Section
Forecast by: Miao Zhang
Phone: (608) 266 - 7995
Email: miao.zhang@dot.wi.gov

Projected AM Design Hour Traffic Volumes

Indicates roundabout

Design Hour: 7:00-8:00am

Forecast Completed: 2/23/2021

Project Description

Project ID(s): 1630-08-00
Route(s): USH 53
Region/COUNTY(IES): SW/La Crosse
Location: US 53 (Rose St) & Clinton St

Design Hour Turning Movement Data

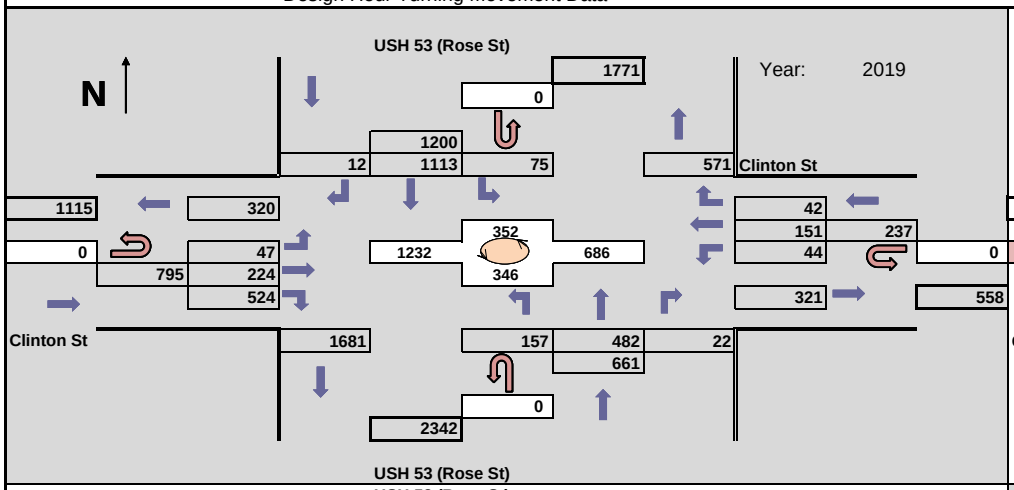

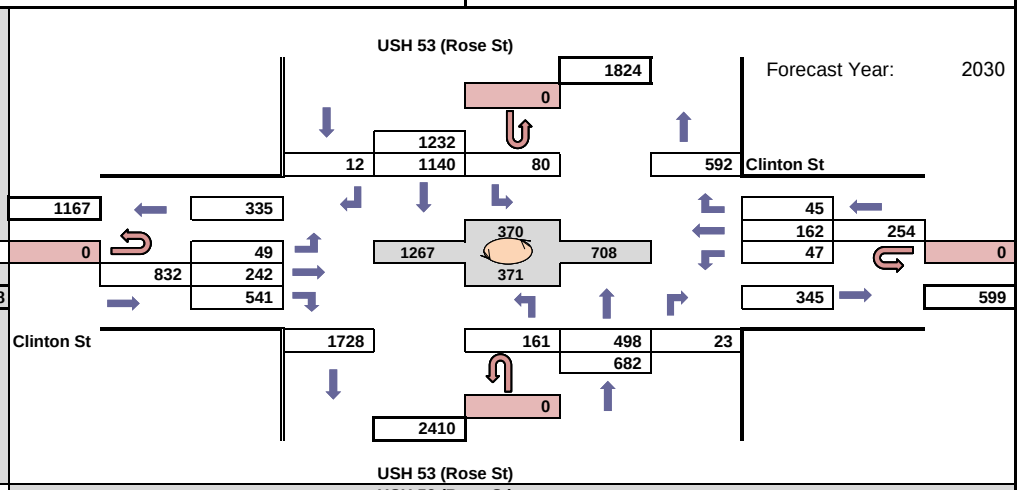

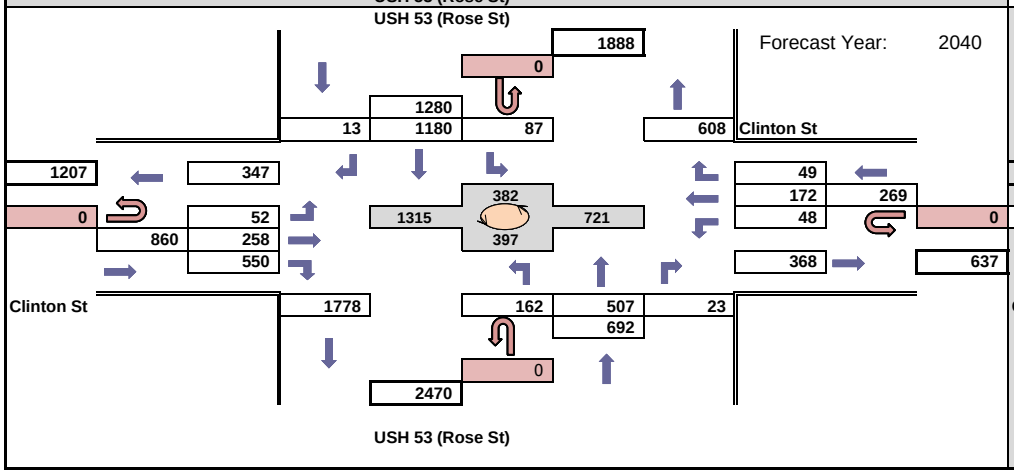

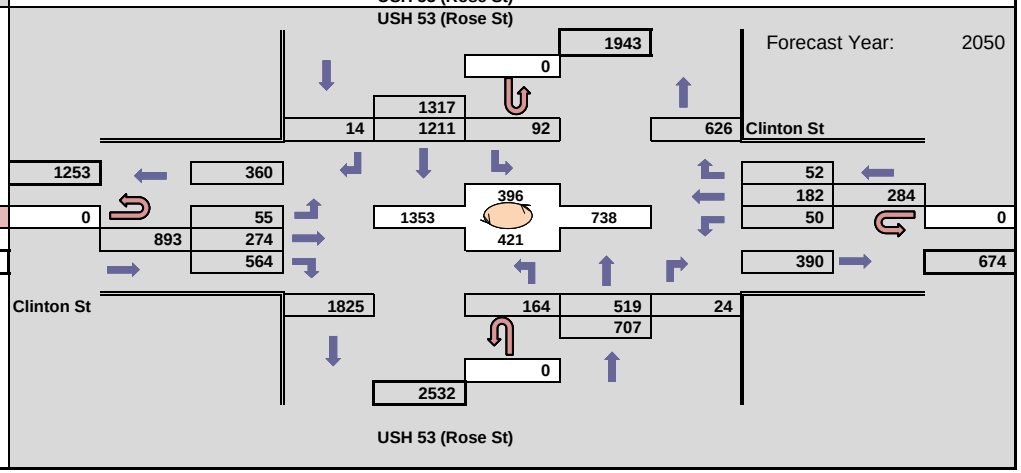

WisDOT Bureau of Planning & Economic Development
Traffic Forecasting Section
Forecast by: Miao Zhang
Phone: (608) 266 - 7995
Email: miao.zhang@dot.wi.gov

Projected PM Design Hour Traffic Volumes

Indicates roundabout

Design Hour: 4:00-5:00pm

Forecast Completed: 2/23/2021

Project Description

Project ID(s): 1630-08-00
Route(s): USH 53
Region/COUNTY(IES): SW/La Crosse
Location: US 53 (Rose St) & Clinton St

Design Hour Turning Movement Data

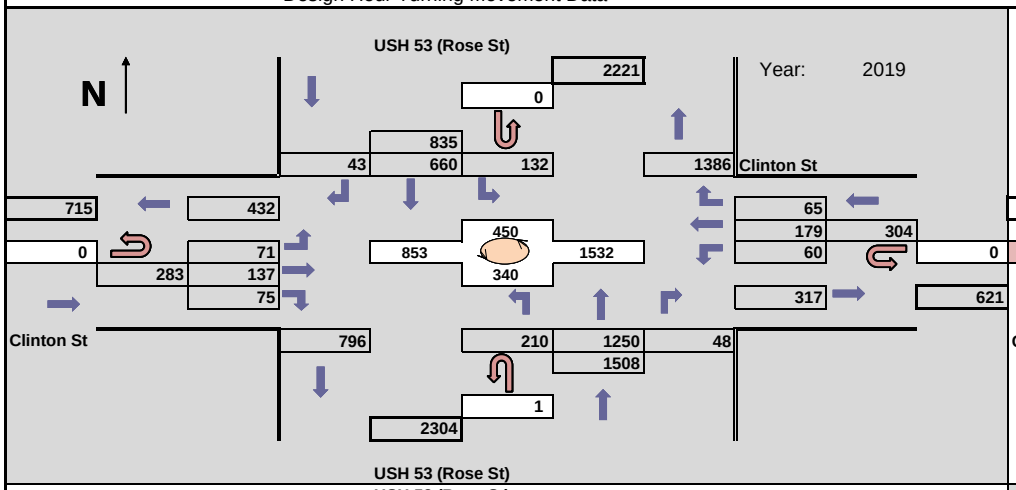

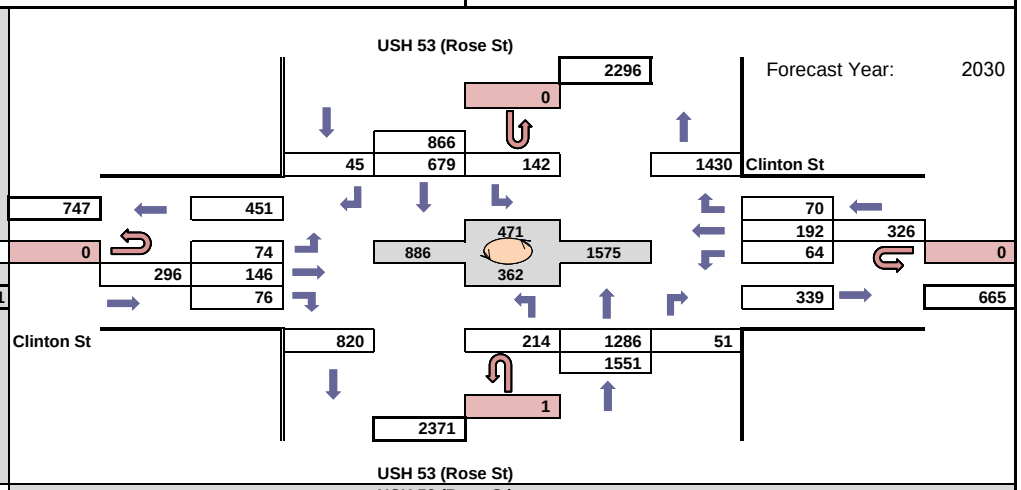

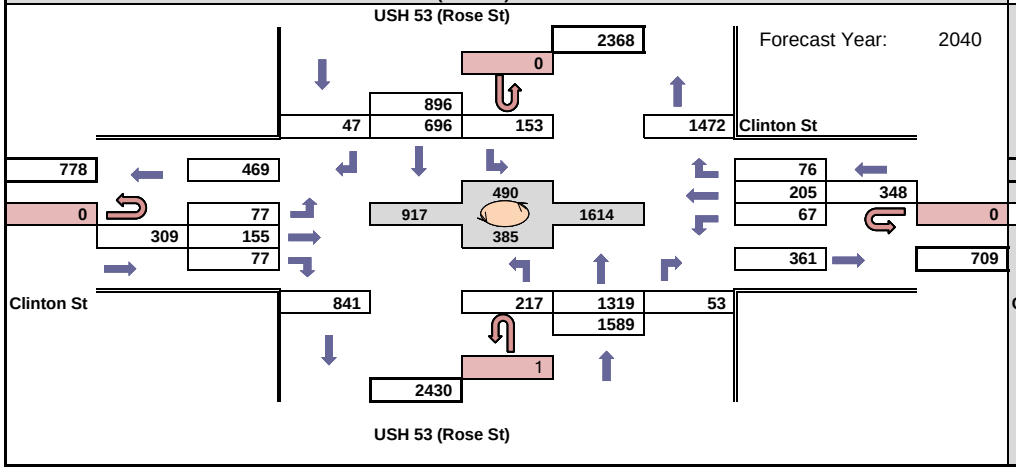

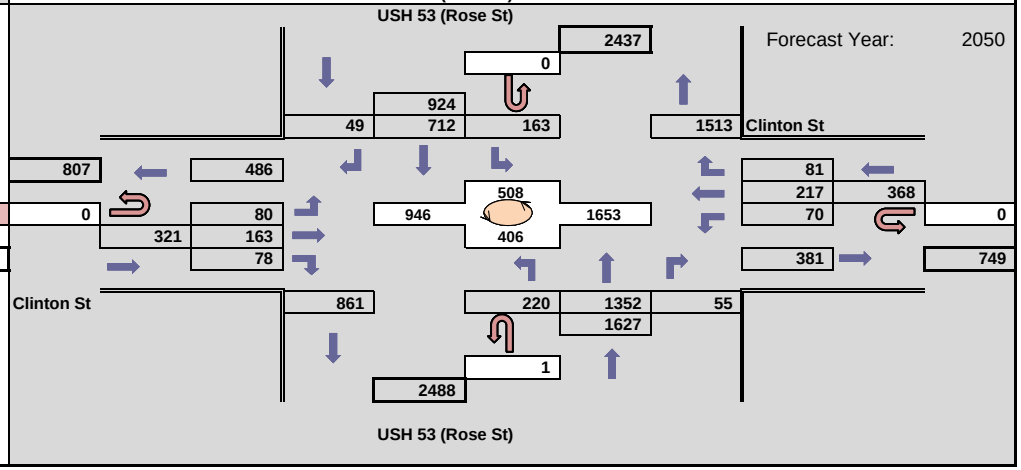

WisDOT Bureau of Planning & Economic Development
Traffic Forecasting Section
Forecast by: Miao Zhang
Phone: (608) 266 - 7995
Email: miao.zhang@dot.wi.gov

Projected AM Design Hour Traffic Volumes

Indicates roundabout

Design Hour: 8:00-9:00am

Forecast Completed: 2/23/2021

Project Description

Project ID(s): 1630-08-00
Route(s): USH 53
Region/COUNTY(IES): SW/La Crosse
Location: US 53 NB (Rose St) & St. James St

Design Hour Turning Movement Data

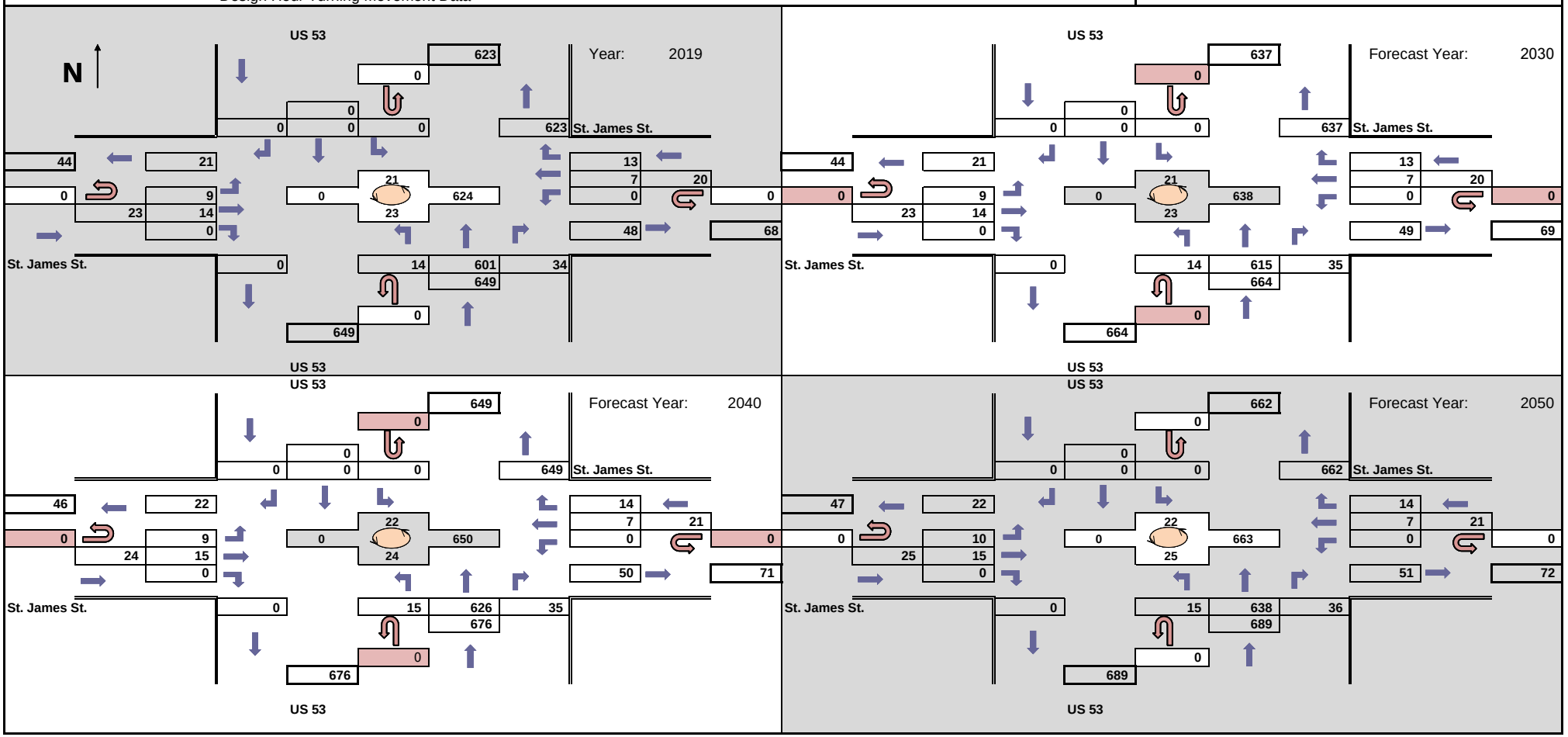

WisDOT Bureau of Planning & Economic Development
Traffic Forecasting Section
Forecast by: Miao Zhang
Phone: (608) 266 - 7995
Email: miao.zhang@dot.wi.gov

Projected PM Design Hour Traffic Volumes

Indicates roundabout

Design Hour: 4:00-5:00pm

Forecast Completed: 2/23/2021

Project Description

Project ID(s): 1630-08-00
Route(s): USH 53
Region/COUNTY(IES): SW/La Crosse
Location: US 53 NB (Rose St) & St. James St

Design Hour Turning Movement Data

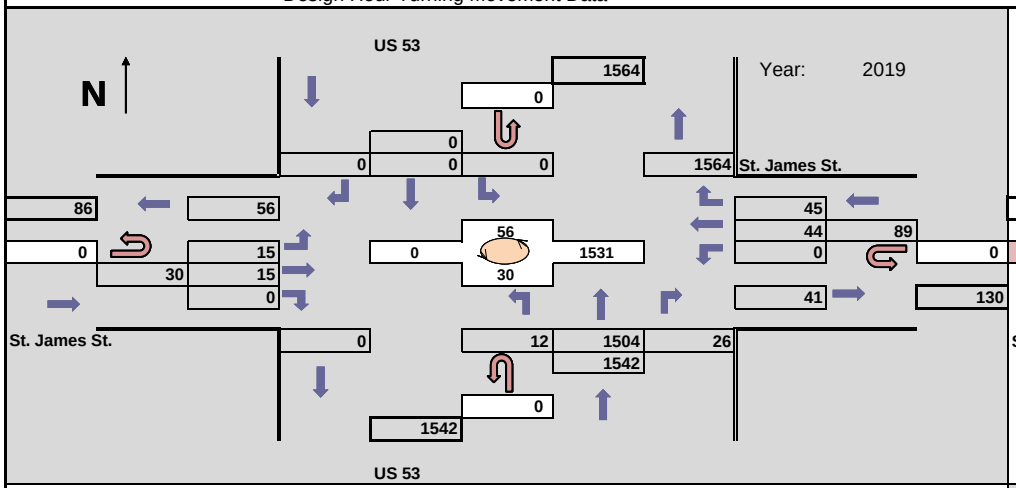

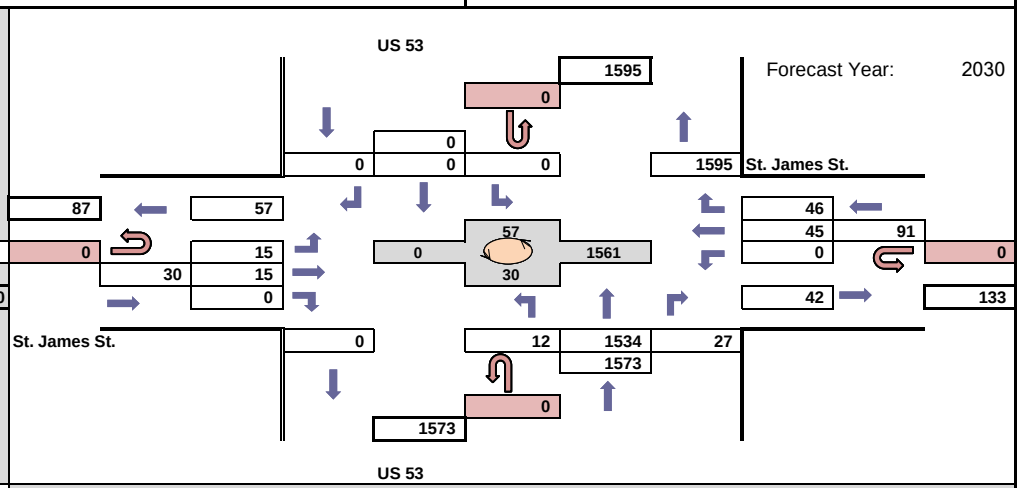

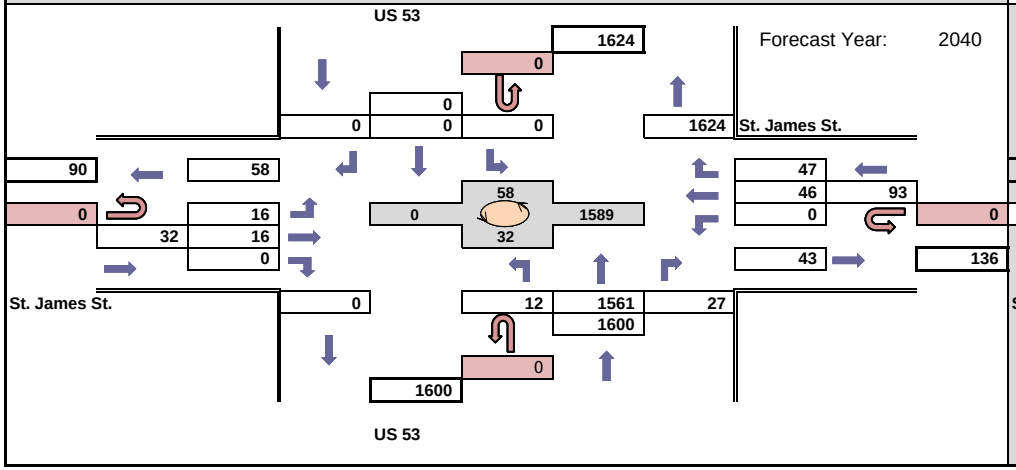

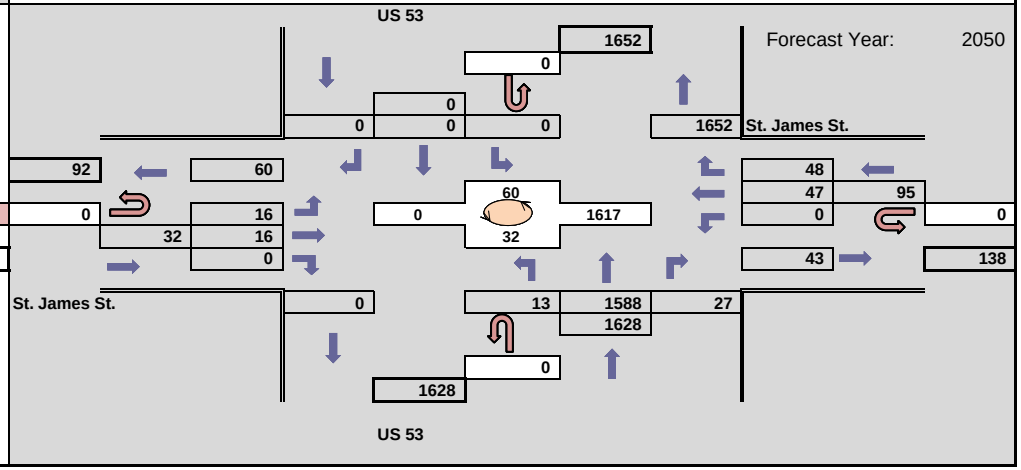

WisDOT Bureau of Planning & Economic Development
Traffic Forecasting Section
Forecast by: Miao Zhang
Phone: (608) 266 - 7995
Email: miao.zhang@dot.wi.gov

Projected AM Design Hour Traffic Volumes

Indicates roundabout

Design Hour: 7:00-8:00am

Forecast Completed: 2/23/2021

Project Description

Project ID(s): 1630-08-00
Route(s): USH 53
Region/COUNTY(IES): SW/La Crosse
Location: US 53 NB (Rose St) & Hagar St

Design Hour Turning Movement Data

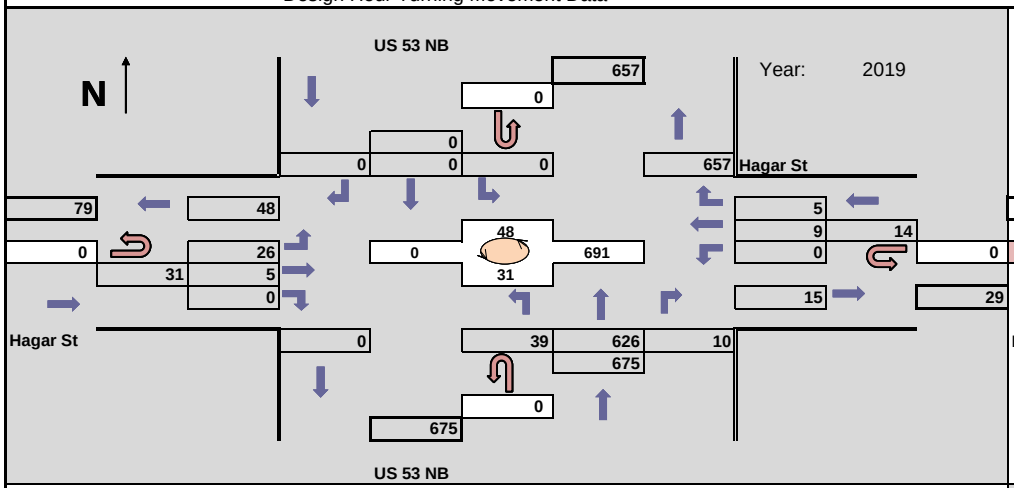

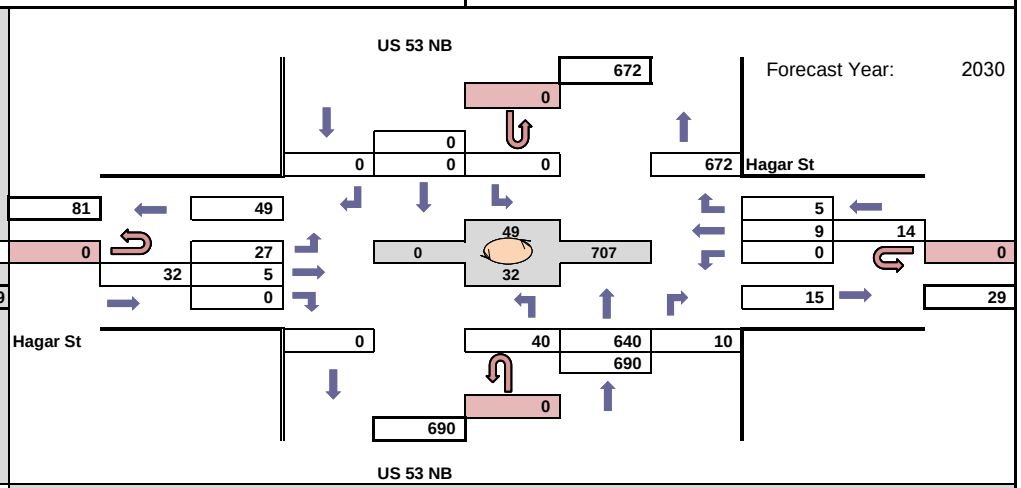

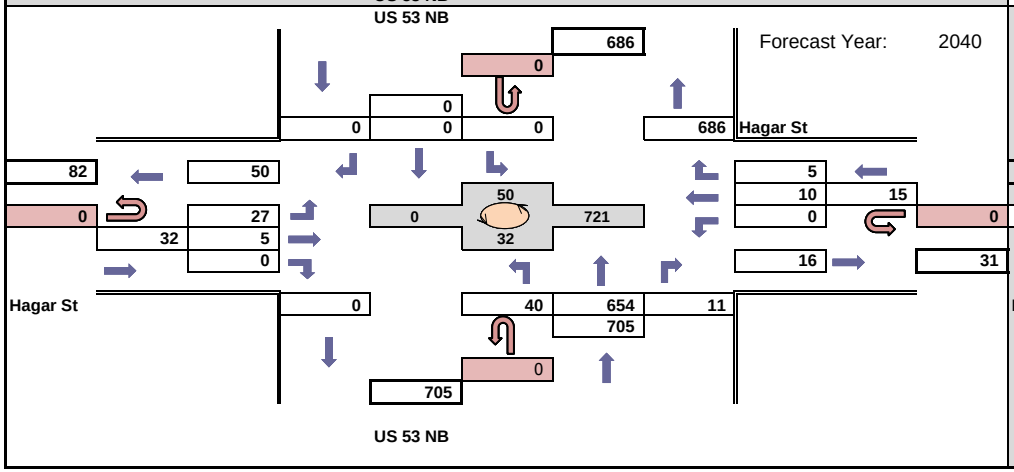

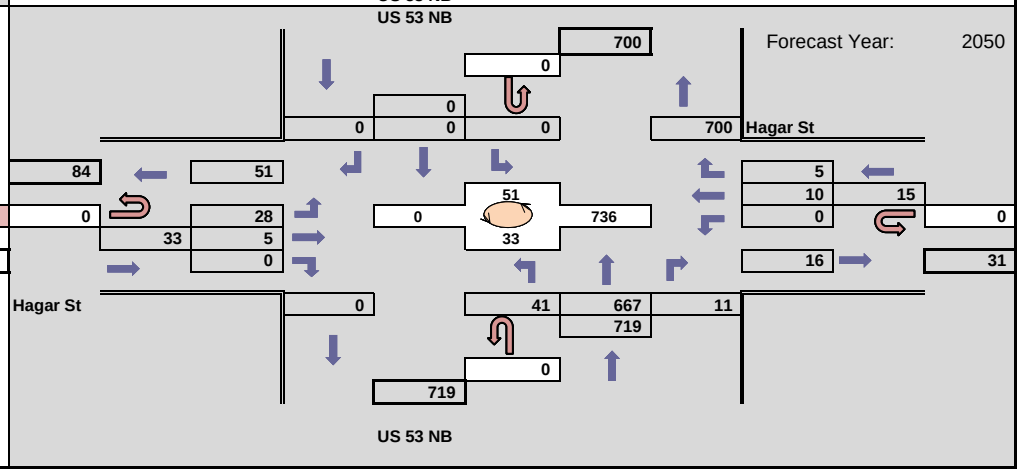

WisDOT Bureau of Planning & Economic Development
Traffic Forecasting Section
Forecast by: Miao Zhang
Phone: (608) 266 - 7995
Email: miao.zhang@dot.wi.gov

Projected PM Design Hour Traffic Volumes

Indicates roundabout

Design Hour: 4:00-5:00pm

Forecast Completed: 2/23/2021

Project Description

Project ID(s): 1630-08-00
Route(s): USH 53
Region/COUNTY(IES): SW/La Crosse
Location: US 53 NB (Rose St) & Hagar St

Design Hour Turning Movement Data

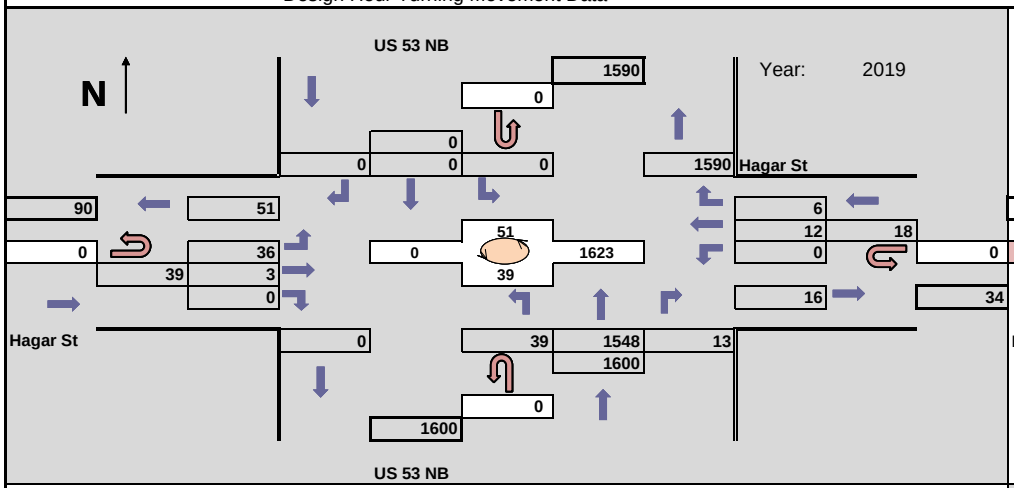

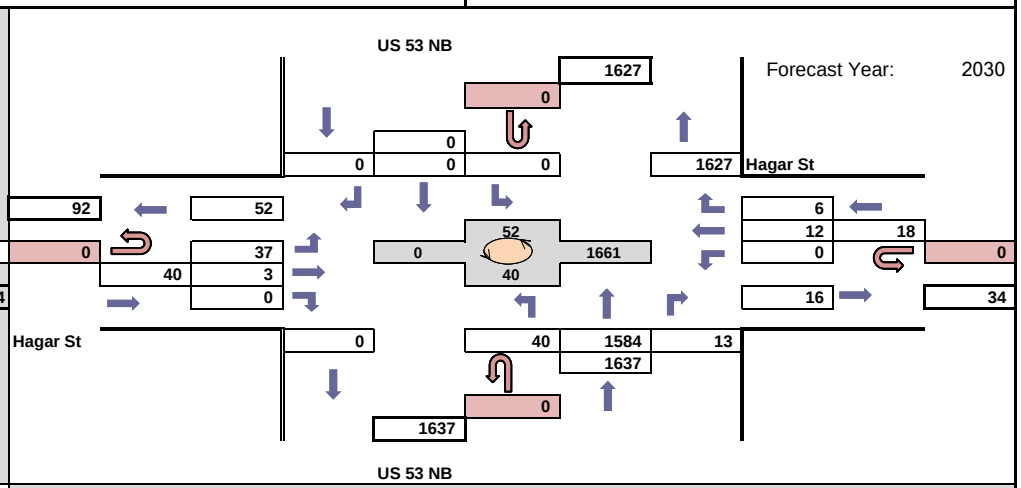

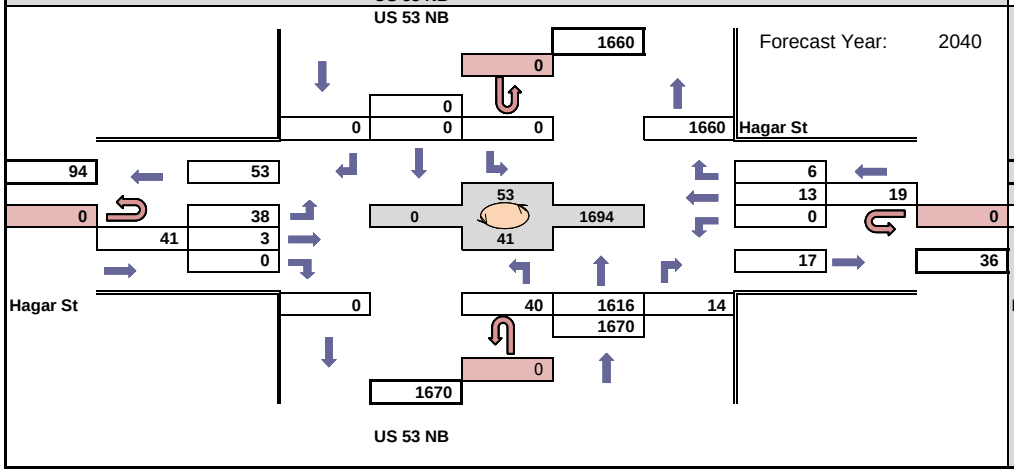

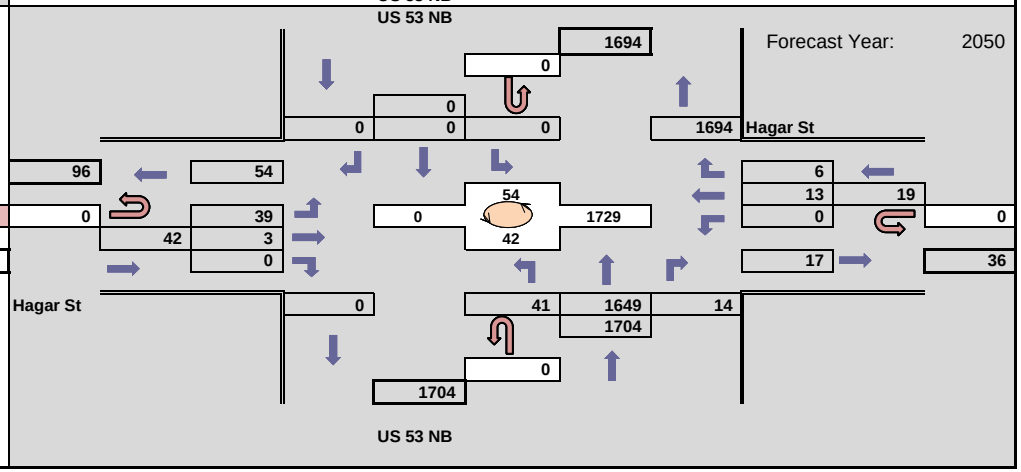

WisDOT Bureau of Planning & Economic Development
Traffic Forecasting Section
Forecast by: Miao Zhang
Phone: (608) 266 - 7995
Email: miao.zhang@dot.wi.gov

Projected AM Design Hour Traffic Volumes

Indicates roundabout

Design Hour: 7:00-8:00am

Forecast Completed: 2/23/2021

Project Description

Project ID(s): 1630-08-00
Route(s): USH 53
Region/COUNTY(IES): SW/La Crosse
Location: US 53 SB (Copeland Ave) & Hagar St

Design Hour Turning Movement Data

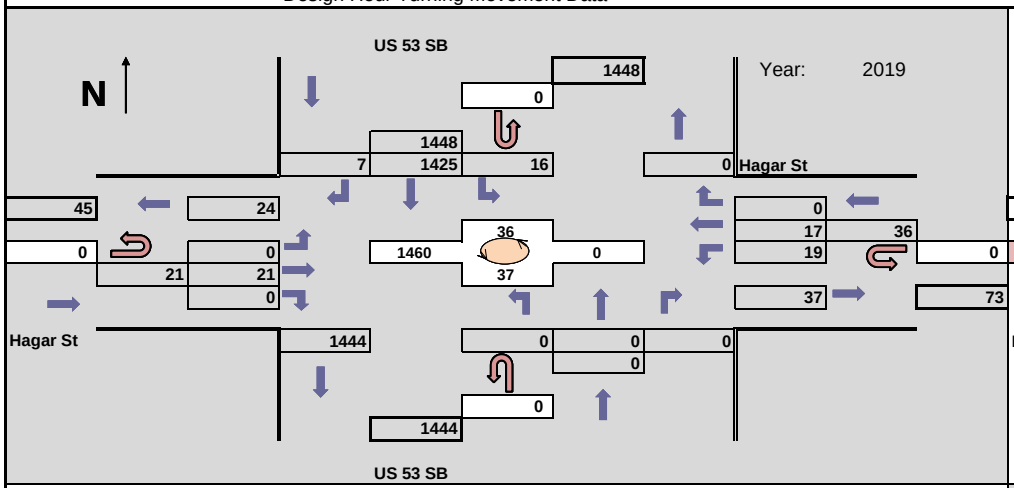

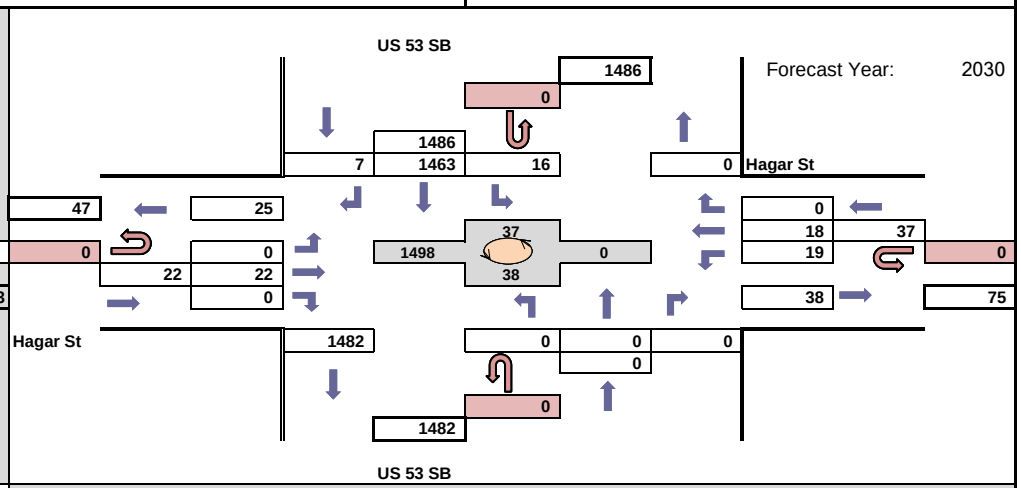

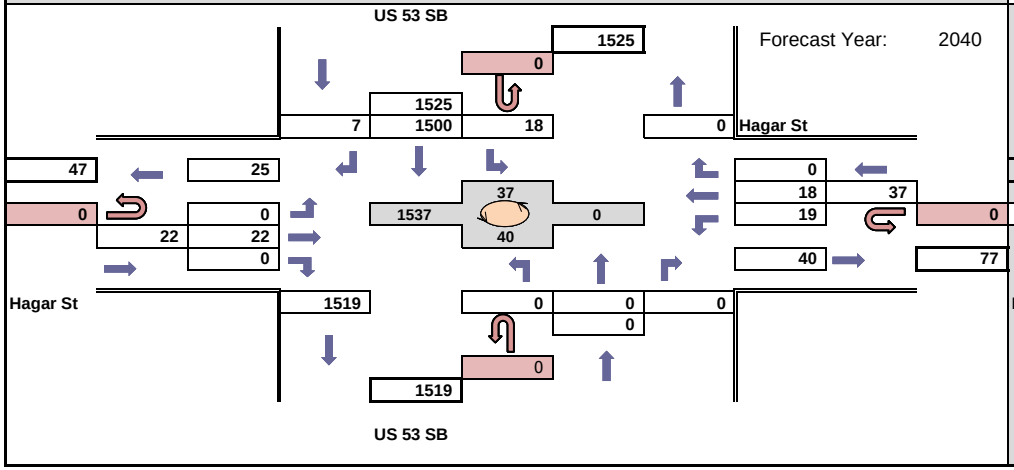

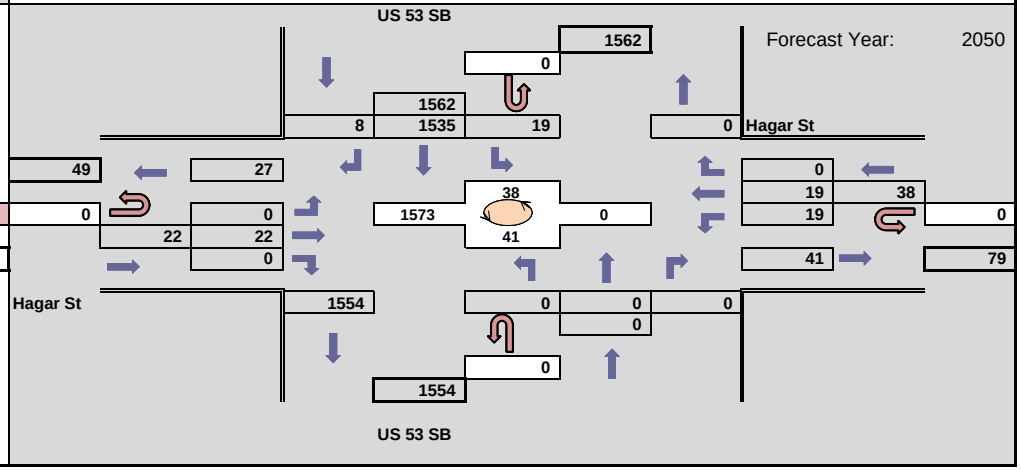

WisDOT Bureau of Planning & Economic Development
Traffic Forecasting Section
Forecast by: Miao Zhang
Phone: (608) 266 - 7995
Email: miao.zhang@dot.wi.gov

Projected PM Design Hour Traffic Volumes

Indicates roundabout

Design Hour: 4:00-5:00pm

Forecast Completed: 2/23/2021

Project Description

Project ID(s): 1630-08-00
Route(s): USH 53
Region/COUNTY(IES): SW/La Crosse
Location: US 53 SB (Copeland Ave) & Hagar St

Design Hour Turning Movement Data

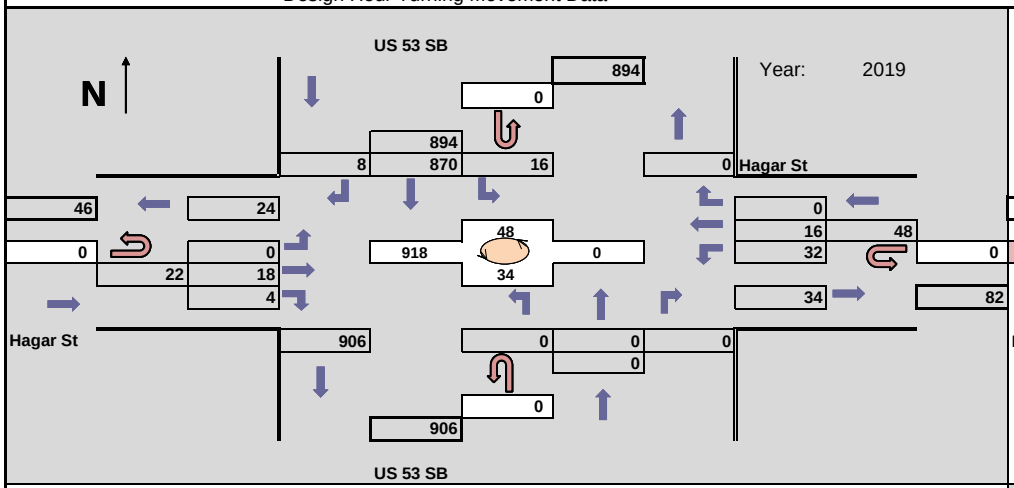

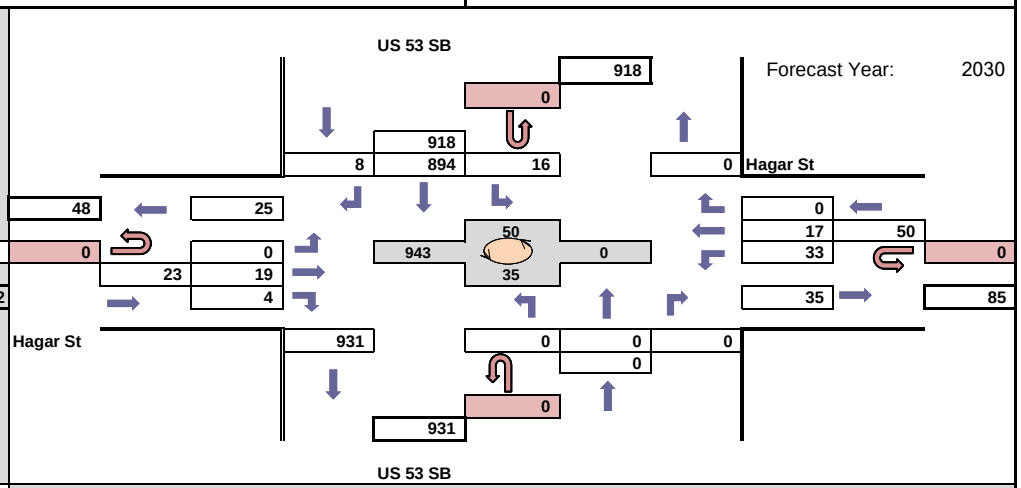

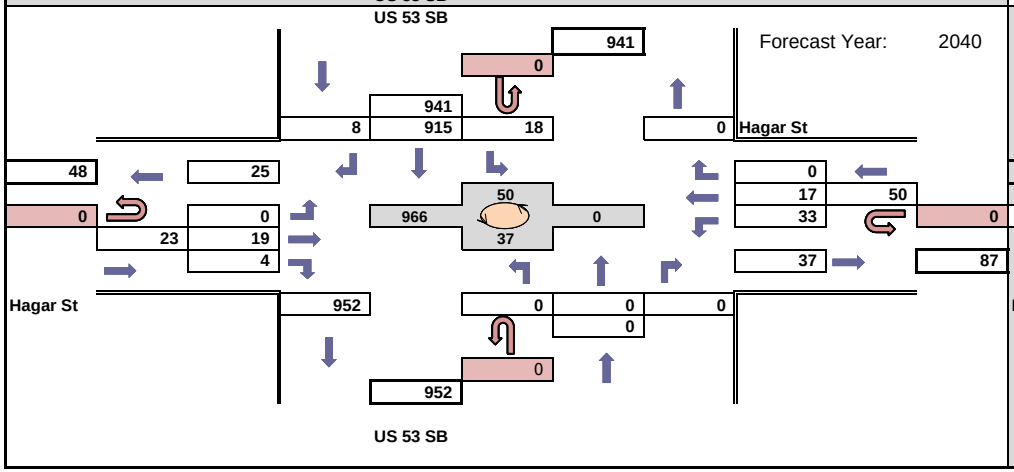

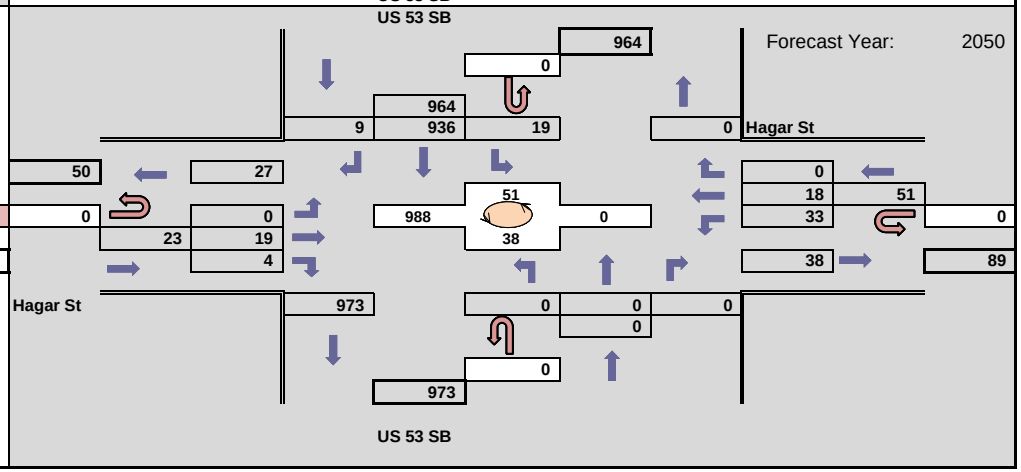

WisDOT Bureau of Planning & Economic Development
Traffic Forecasting Section
Forecast by: Miao Zhang
Phone: (608) 266 - 7995
Email: miao.zhang@dot.wi.gov

Projected AM Design Hour Traffic Volumes

Indicates roundabout

Design Hour: 7:00-8:00am

Forecast Completed: 2/23/2021

Project Description

Project ID(s): 1630-08-00
Route(s): USH 53
Region/COUNTY(IES): SW/La Crosse
Location: US 53 SB (Copeland Ave) & Monitor St

Design Hour Turning Movement Data

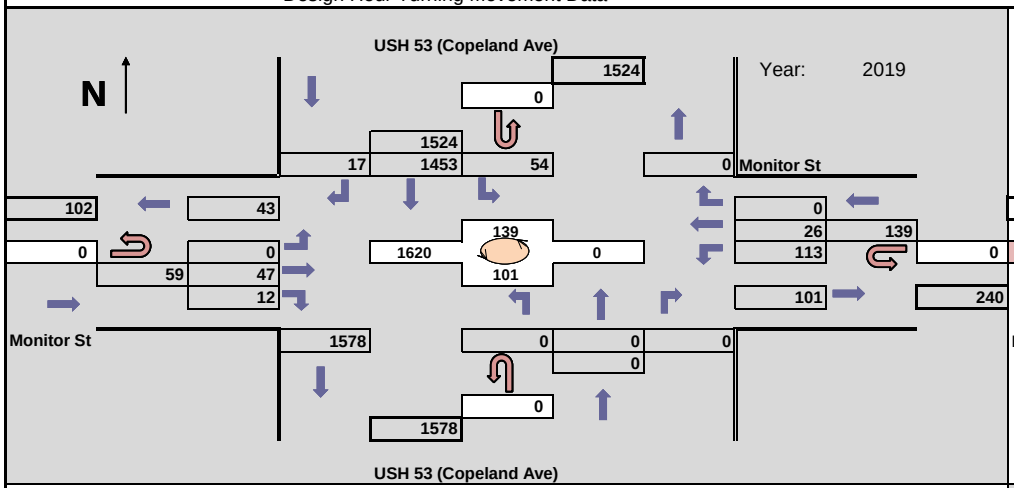

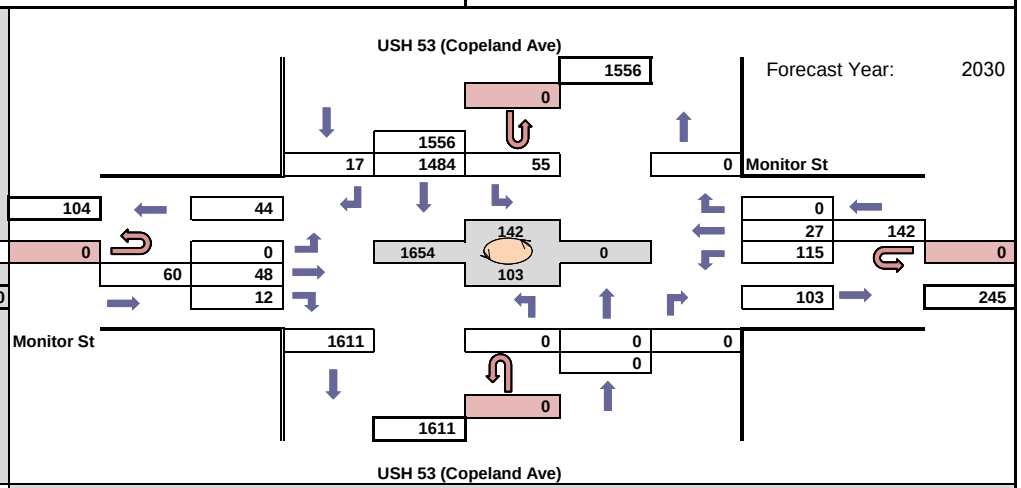

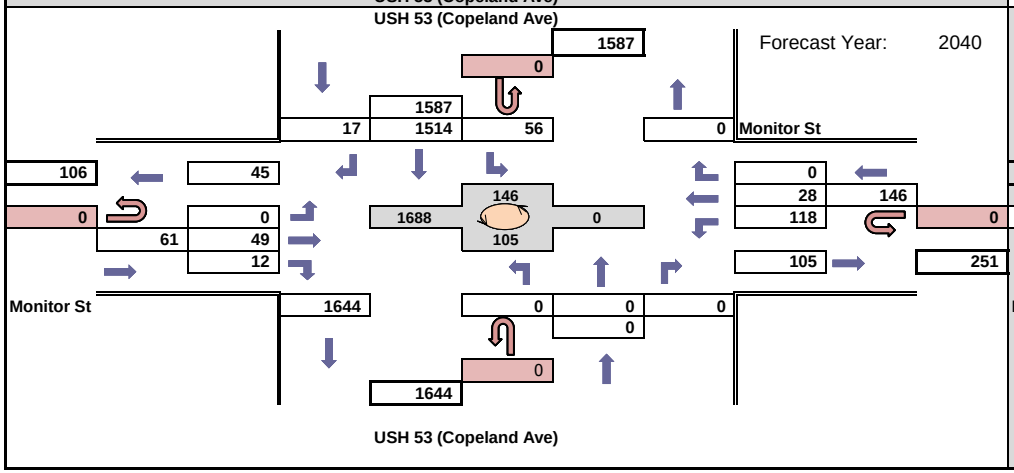

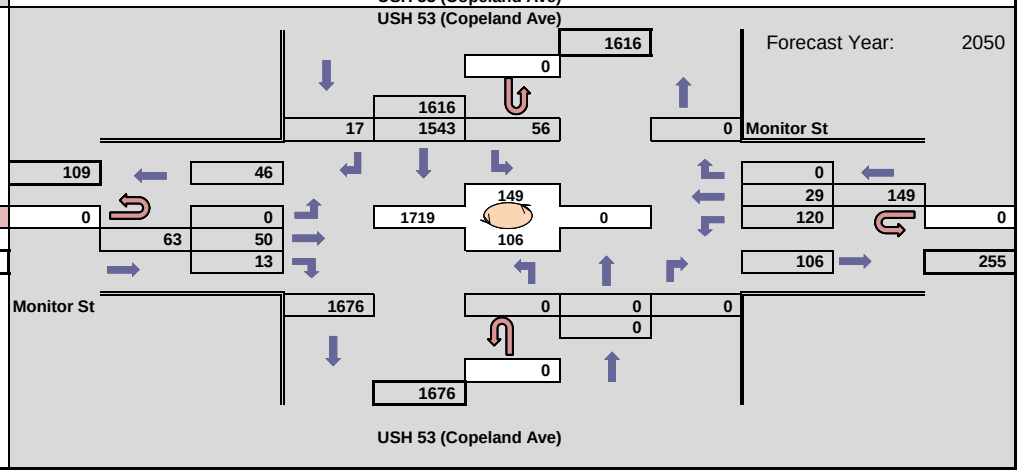

WisDOT Bureau of Planning & Economic Development
Traffic Forecasting Section
Forecast by: Miao Zhang
Phone: (608) 266 - 7995
Email: miao.zhang@dot.wi.gov

Projected PM Design Hour Traffic Volumes

Indicates roundabout

Design Hour: 4:00-5:00pm

Forecast Completed: 2/23/2021

Project Description

Project ID(s): 1630-08-00
Route(s): USH 53
Region/COUNTY(IES): SW/La Crosse
Location: US 53 SB (Copeland Ave) & Monitor St

Design Hour Turning Movement Data

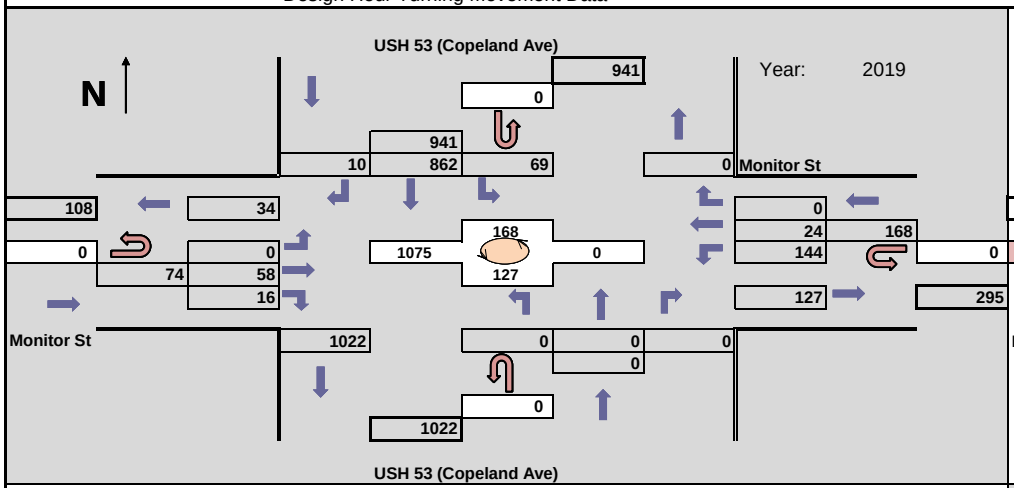

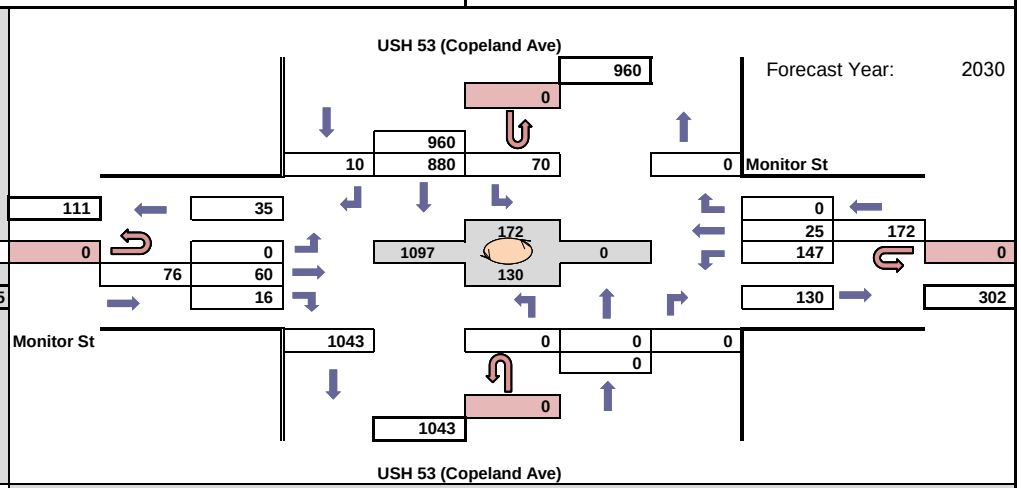

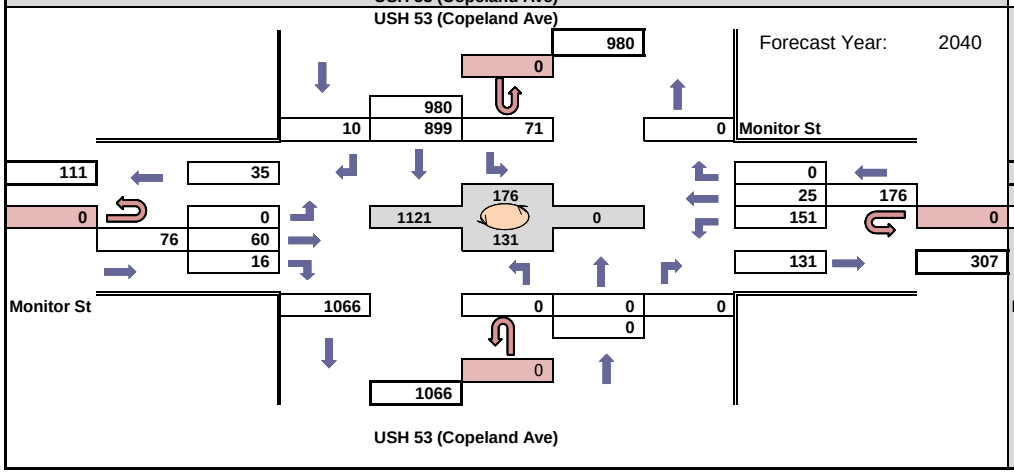

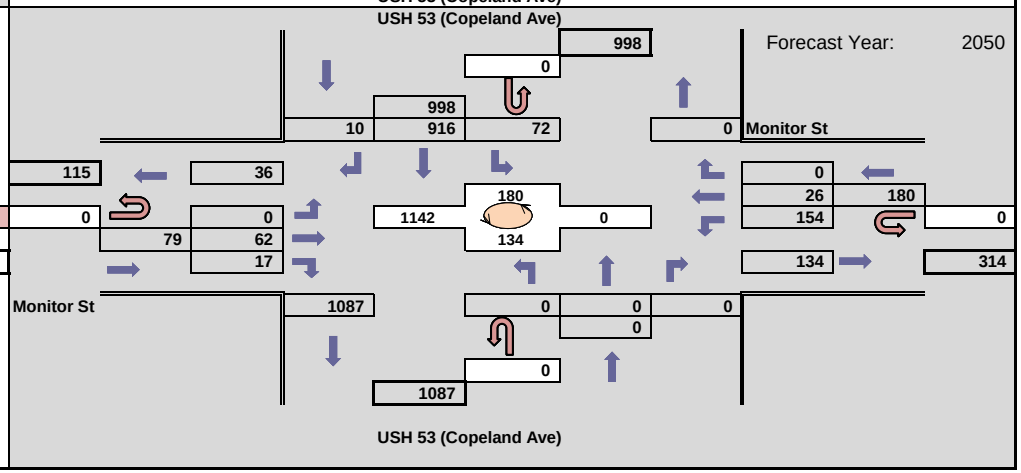

WisDOT Bureau of Planning & Economic Development
Traffic Forecasting Section
Forecast by: Miao Zhang
Phone: (608) 266 - 7995
Email: miao.zhang@dot.wi.gov

Projected AM Design Hour Traffic Volumes

Indicates roundabout

Design Hour: 7:00-8:00am

Forecast Completed: 2/23/2021

Project Description

Project ID(s): 1630-08-00
Route(s): USH 53
Region/COUNTY(IES): SW/La Crosse
Location: US 53 NB (Rose St) & Monitor St

Design Hour Turning Movement Data

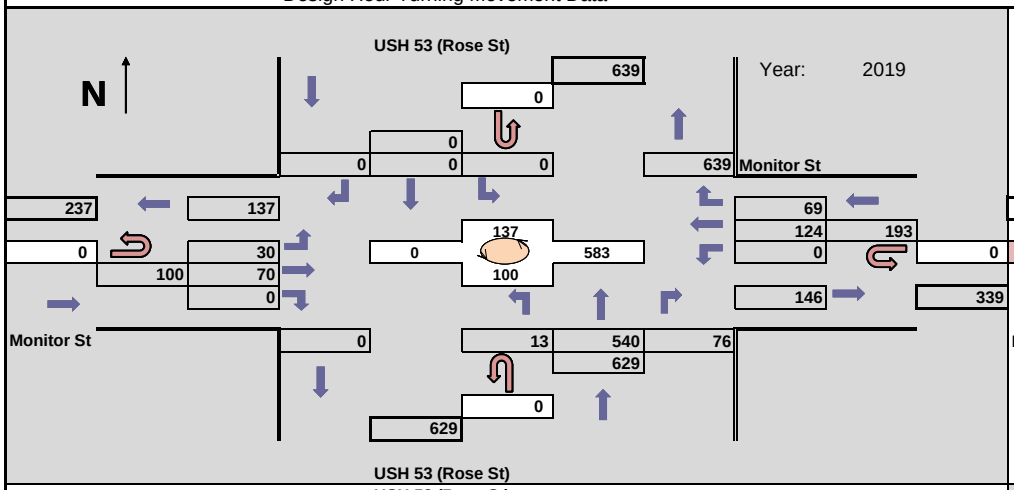

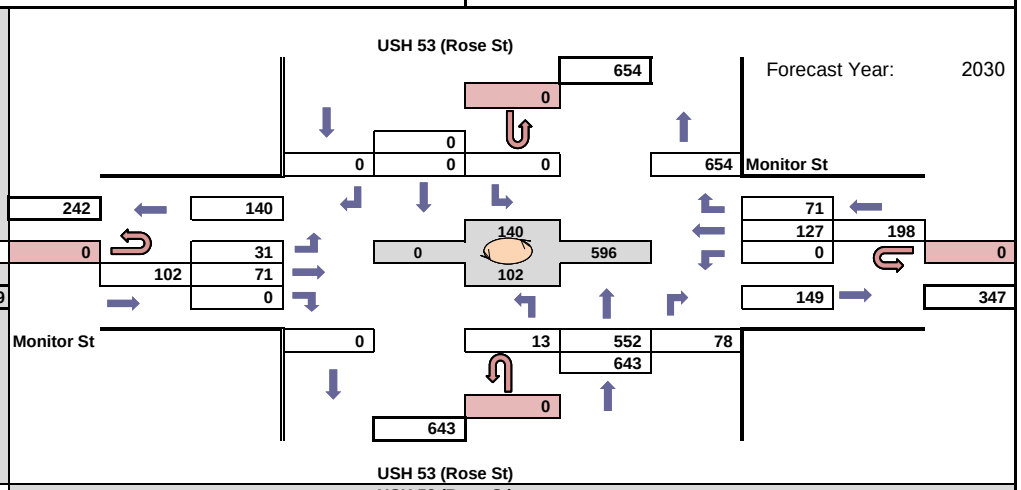

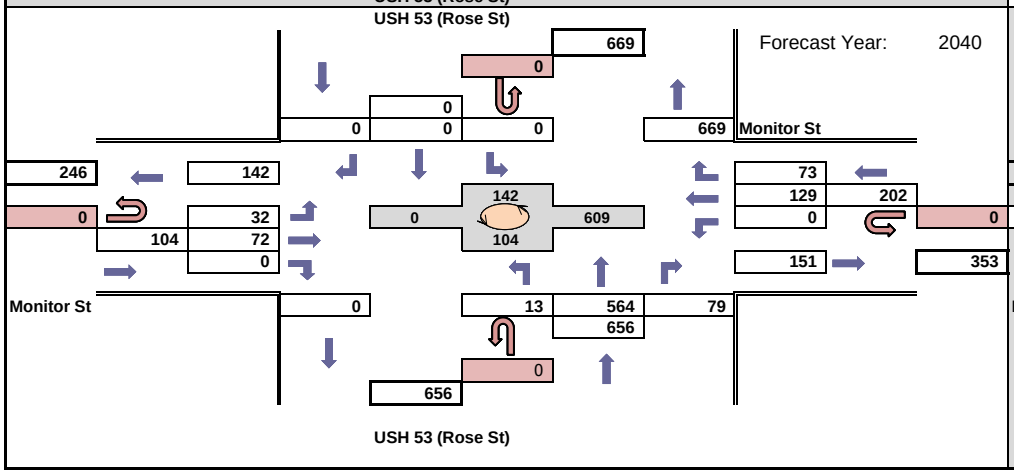

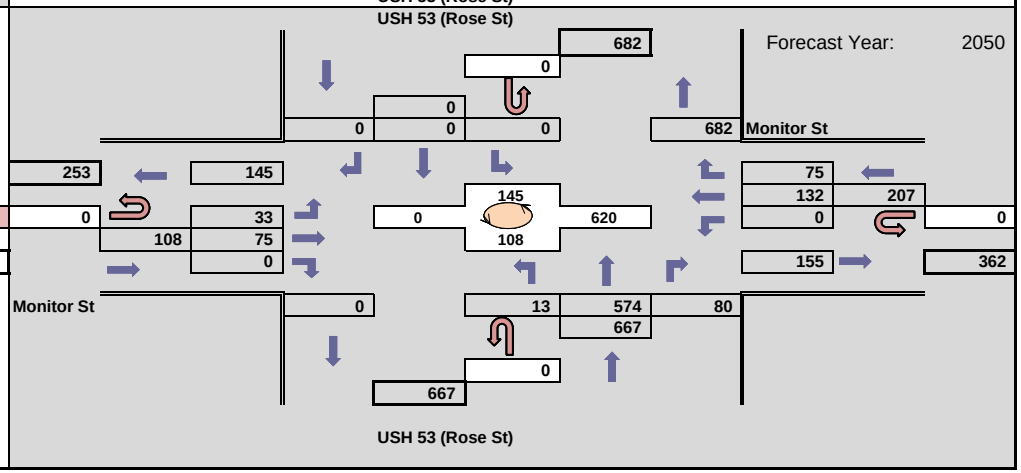

WisDOT Bureau of Planning & Economic Development
Traffic Forecasting Section
Forecast by: Miao Zhang
Phone: (608) 266 - 7995
Email: miao.zhang@dot.wi.gov

Projected PM Design Hour Traffic Volumes

Indicates roundabout

Design Hour: 4:00-5:00pm

Forecast Completed: 2/23/2021

Project Description

Project ID(s): 1630-08-00
Route(s): USH 53
Region/COUNTY(IES): SW/La Crosse
Location: US 53 NB (Rose St) & Monitor St

Design Hour Turning Movement Data

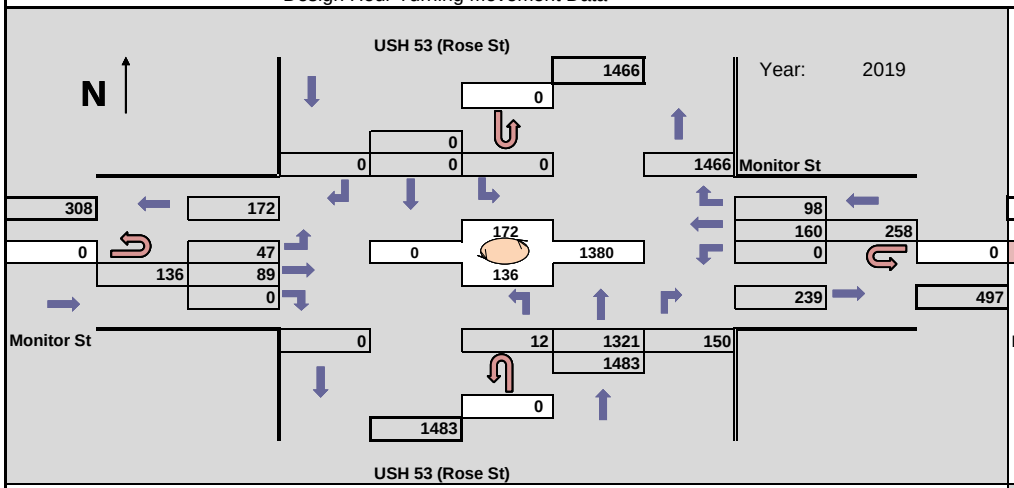

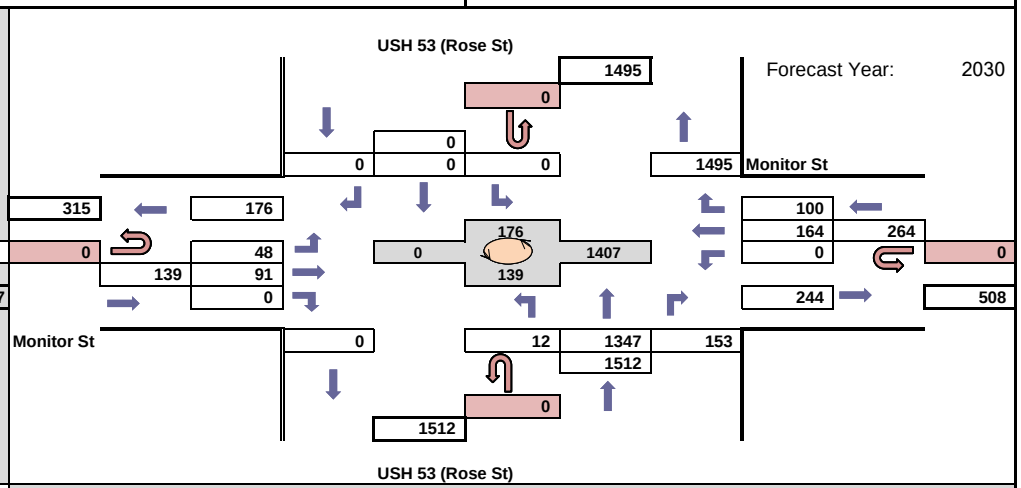

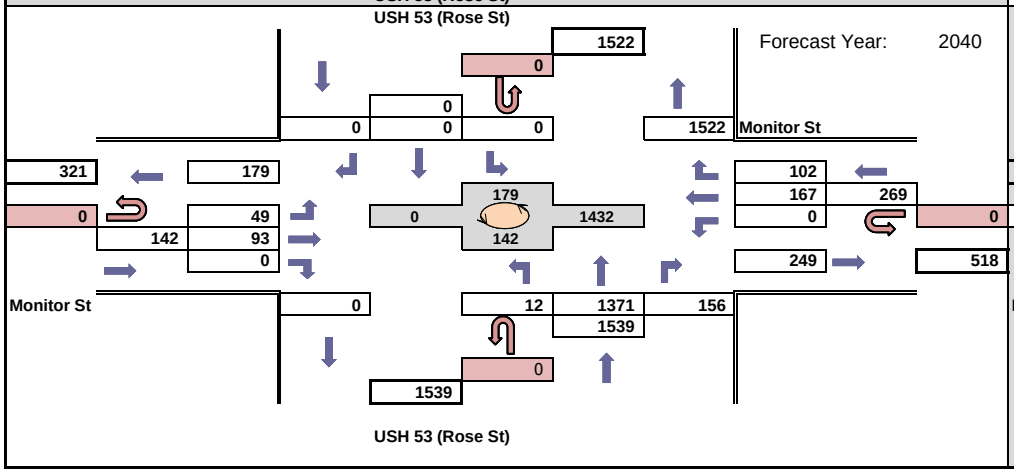

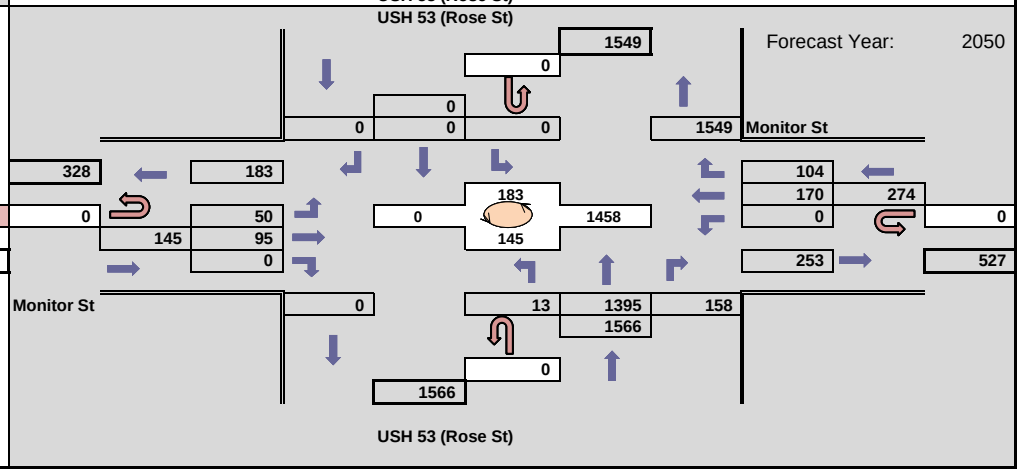

WisDOT Bureau of Planning & Economic Development
Traffic Forecasting Section
Forecast by: Miao Zhang
Phone: (608) 266 - 7995
Email: miao.zhang@dot.wi.gov

Projected AM Design Hour Traffic Volumes

Indicates roundabout

Design Hour: 7:00-8:00am

Forecast Completed: 2/23/2021

Project Description

Project ID(s): 1630-08-00
Route(s): USH 53
Region/COUNTY(IES): SW/La Crosse
Location: US 53 (Copeland Ave) & Causeway Blvd

Design Hour Turning Movement Data

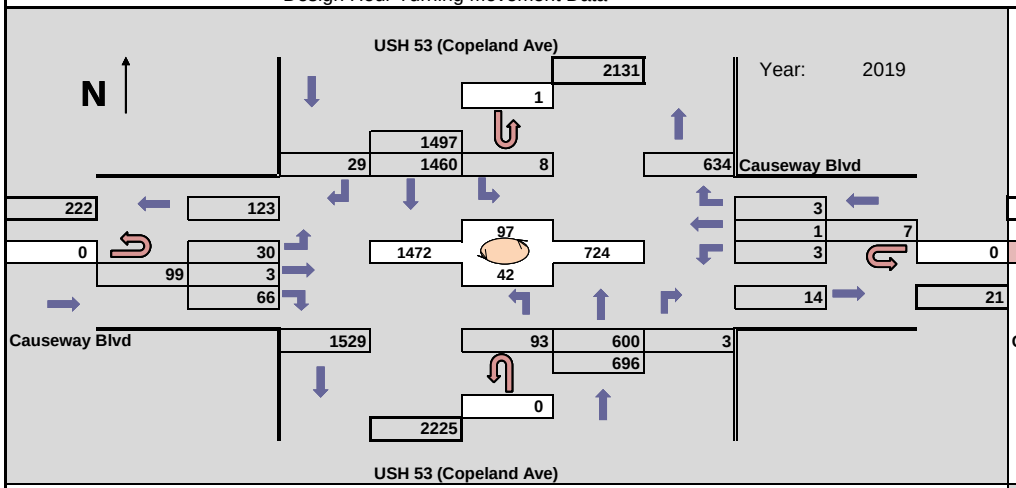

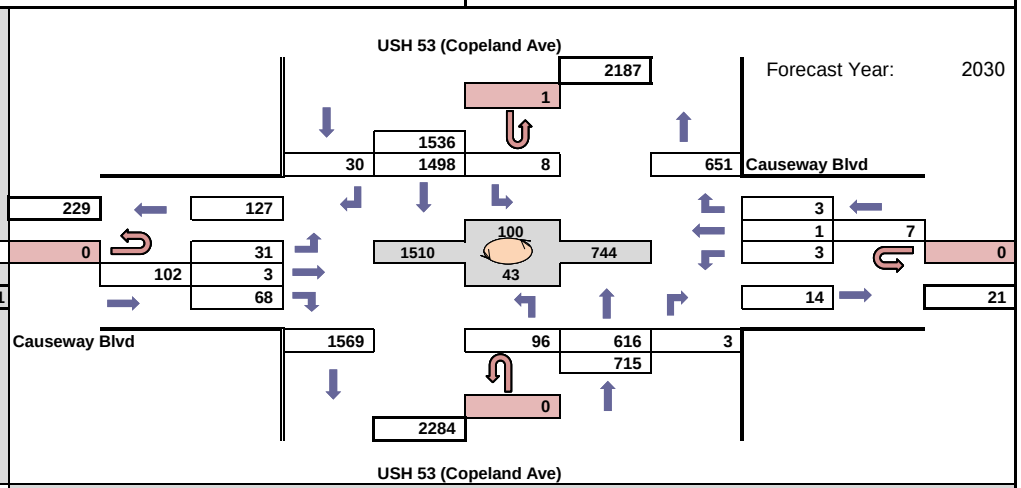

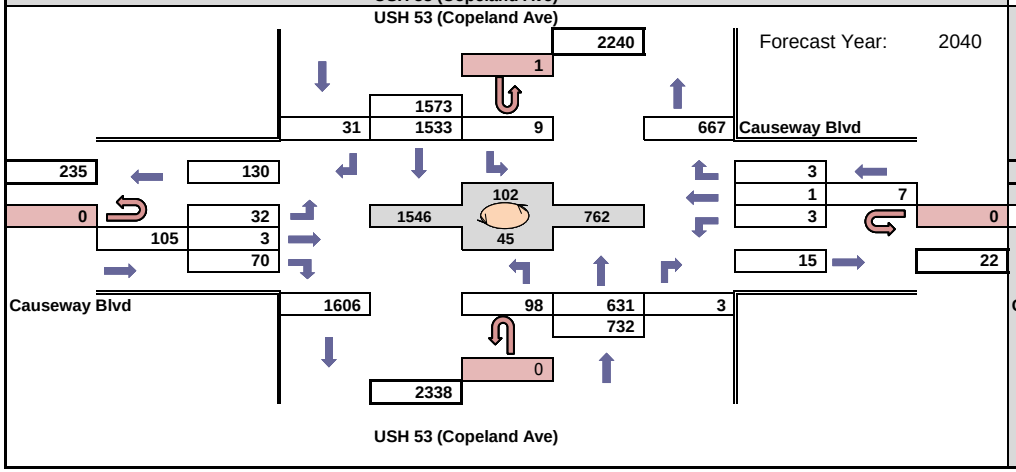

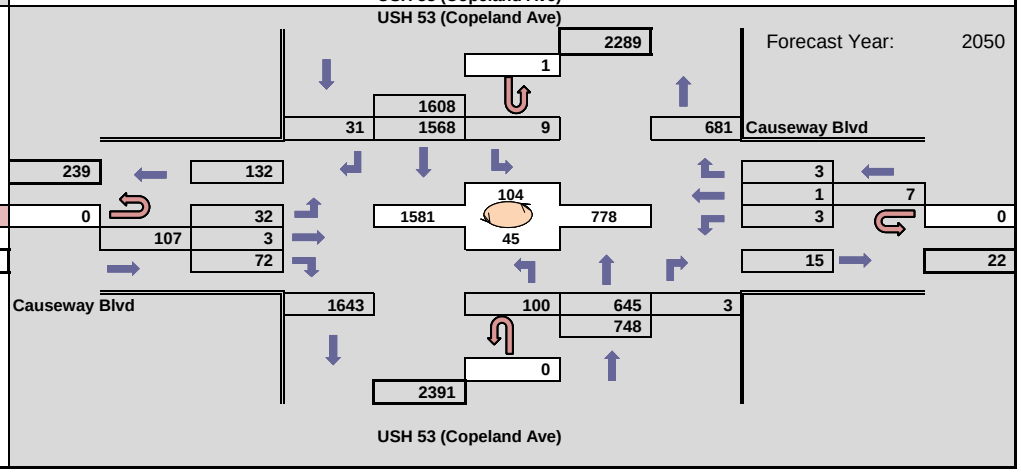

WisDOT Bureau of Planning & Economic Development
Traffic Forecasting Section
Forecast by: Miao Zhang
Phone: (608) 266 - 7995
Email: miao.zhang@dot.wi.gov

Projected PM Design Hour Traffic Volumes

Indicates roundabout

Design Hour: 4:00-5:00pm

Forecast Completed: 2/23/2021

Project Description

Project ID(s): 1630-08-00
Route(s): USH 53
Region/COUNTY(IES): SW/La Crosse
Location: US 53 (Copeland Ave) & Causeway Blvd

Design Hour Turning Movement Data

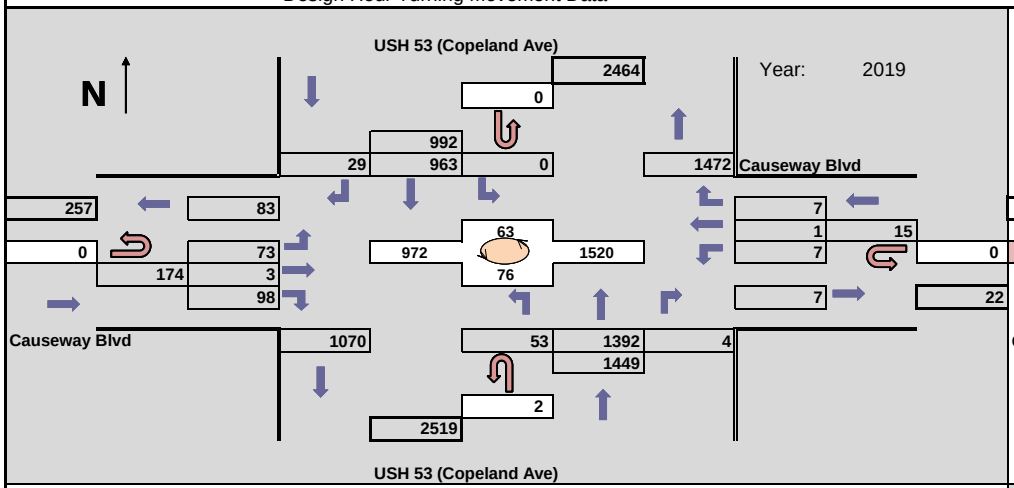

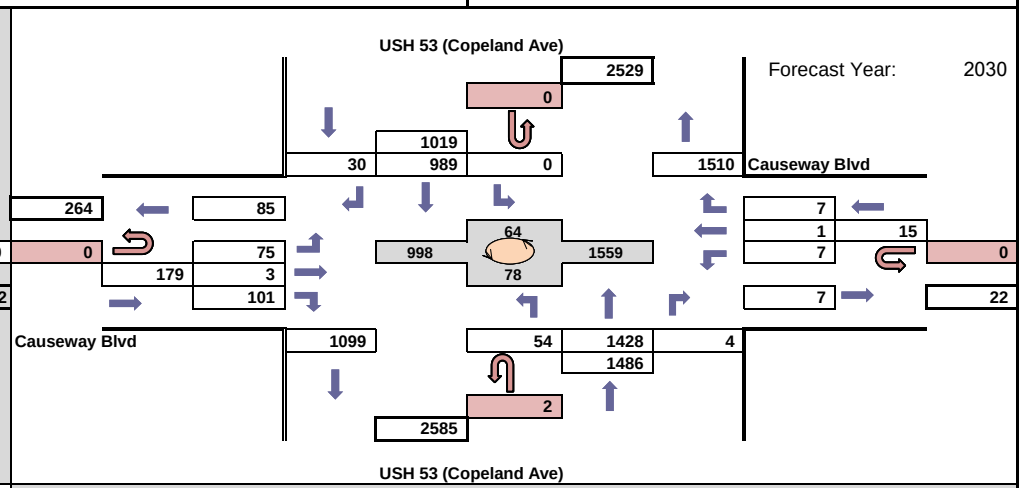

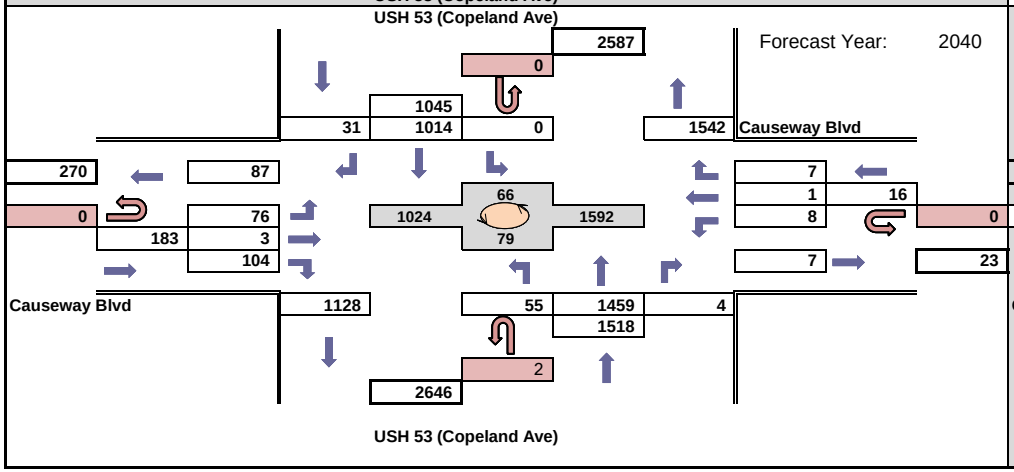

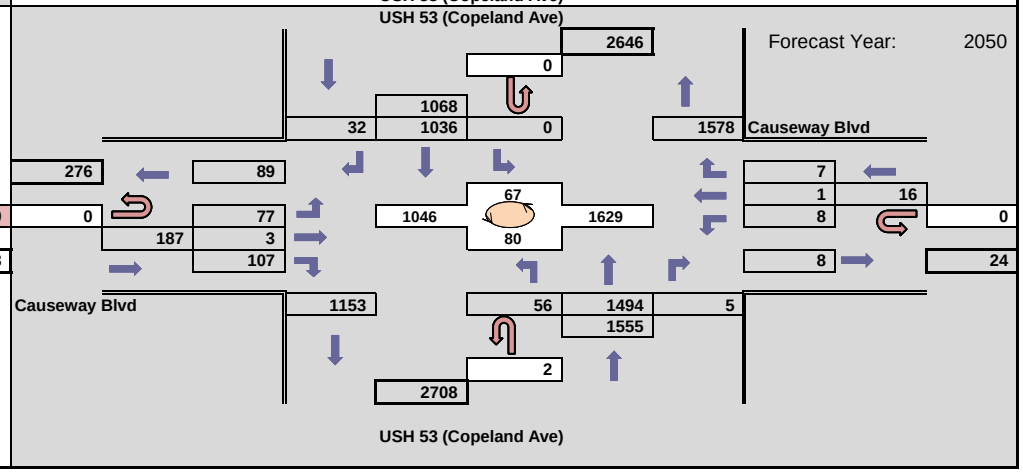

WisDOT Bureau of Planning & Economic Development
Traffic Forecasting Section
Forecast by: Miao Zhang
Phone: (608) 266 - 7995
Email: miao.zhang@dot.wi.gov

Projected AM Design Hour Traffic Volumes

Indicates roundabout

Design Hour: 7:00-8:00am

Forecast Completed: 2/23/2021

Project Description

Project ID(s): 1630-08-00
Route(s): USH 53
Region/COUNTY(IES): SW/La Crosse
Location: US 53 (Copeland Ave) & River Bend Dr

Design Hour Turning Movement Data

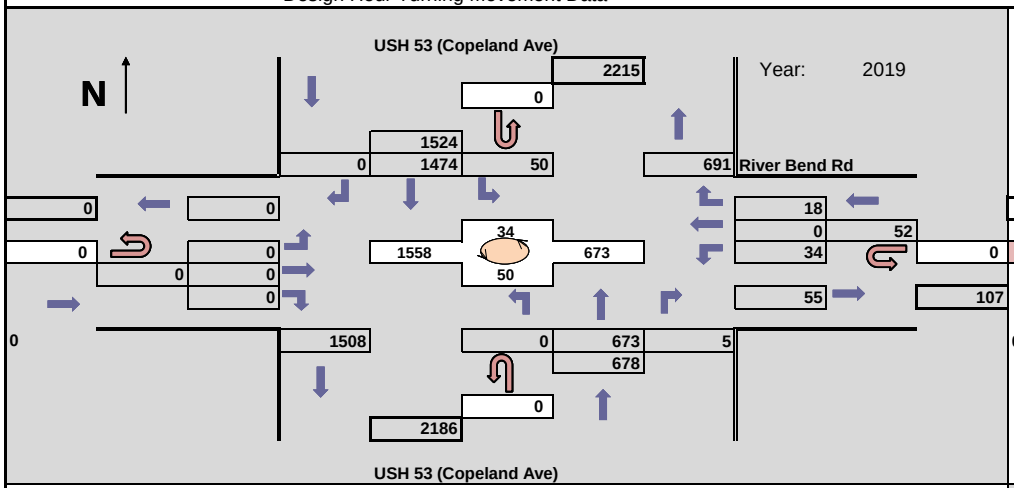

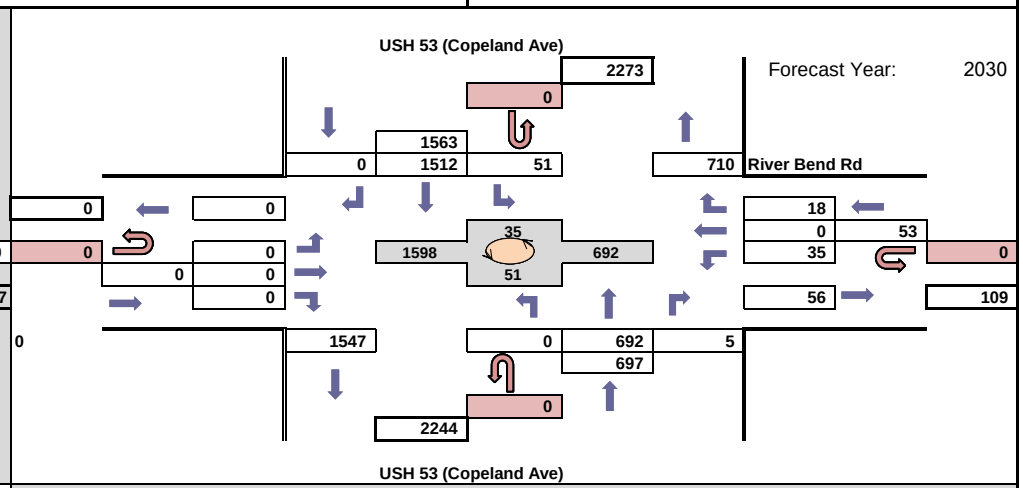

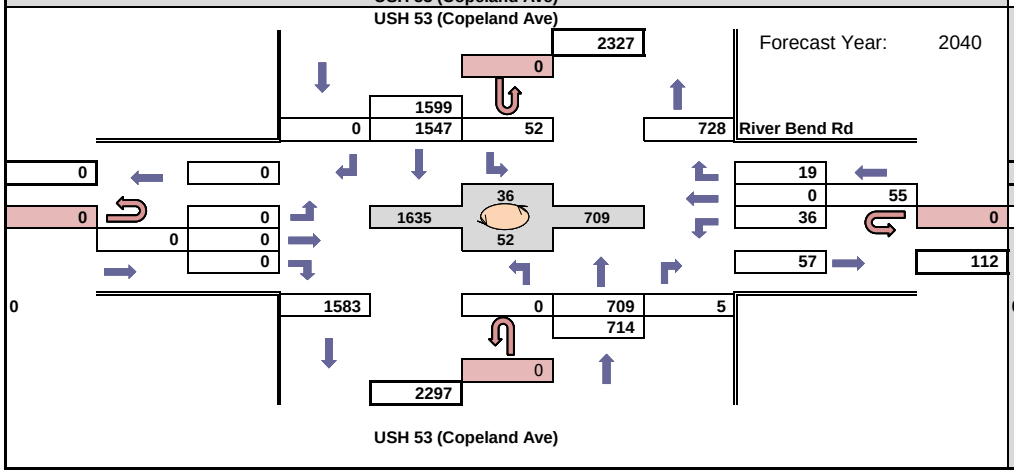

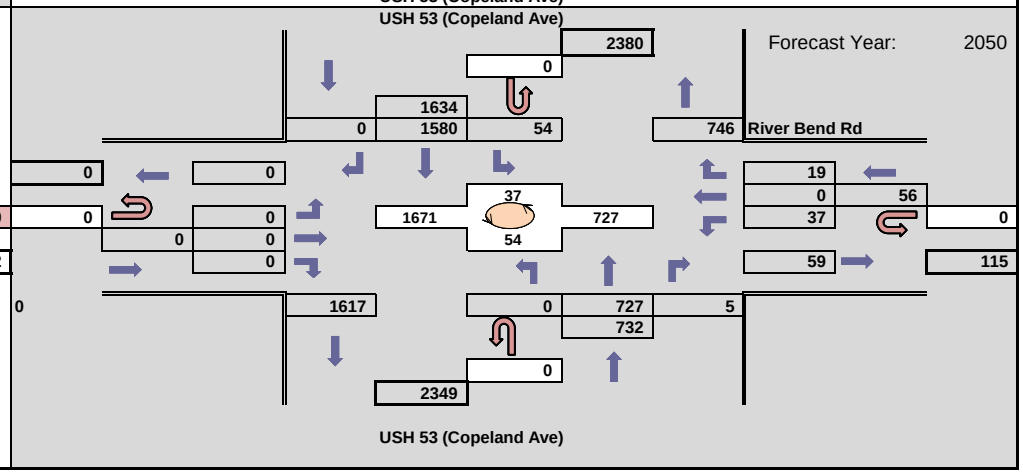

WisDOT Bureau of Planning & Economic Development
Traffic Forecasting Section
Forecast by: Miao Zhang
Phone: (608) 266 - 7995
Email: miao.zhang@dot.wi.gov

Projected PM Design Hour Traffic Volumes

Indicates roundabout

Design Hour: 4:00-5:00pm

Forecast Completed: 2/23/2021

Project Description

Project ID(s): 1630-08-00
Route(s): USH 53
Region/COUNTY(IES): SW/La Crosse
Location: US 53 (Copeland Ave) & River Bend Dr

Design Hour Turning Movement Data

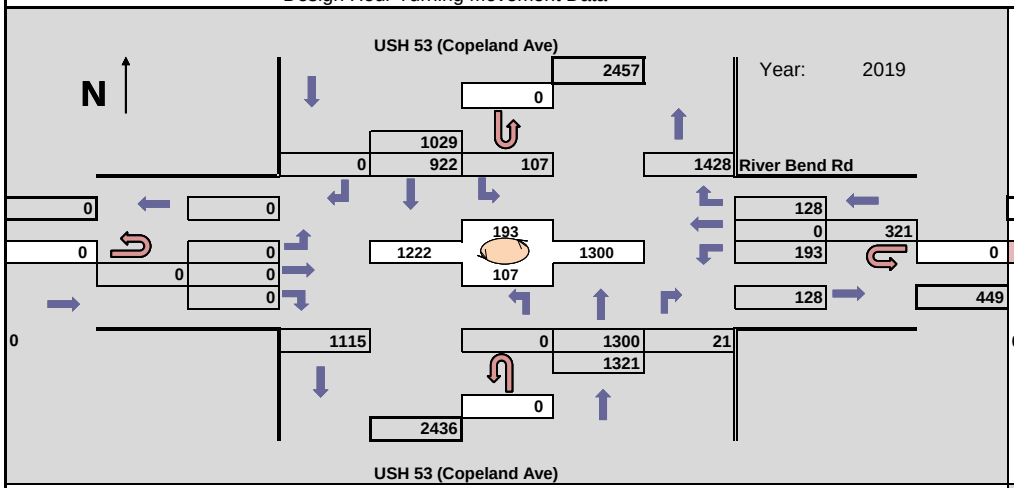

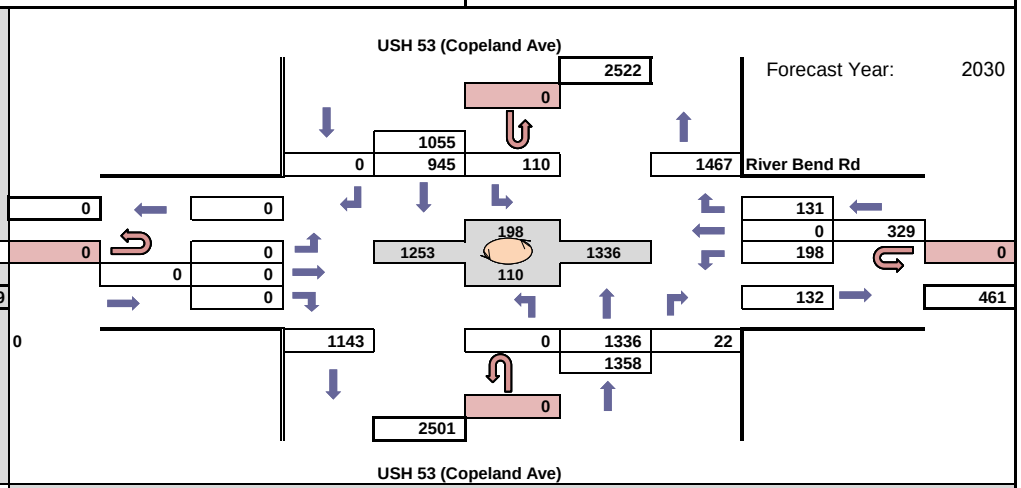

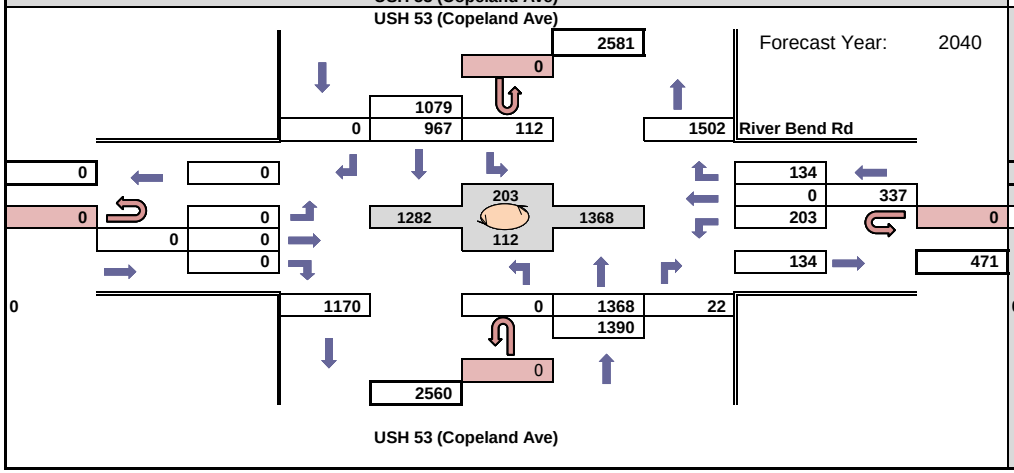

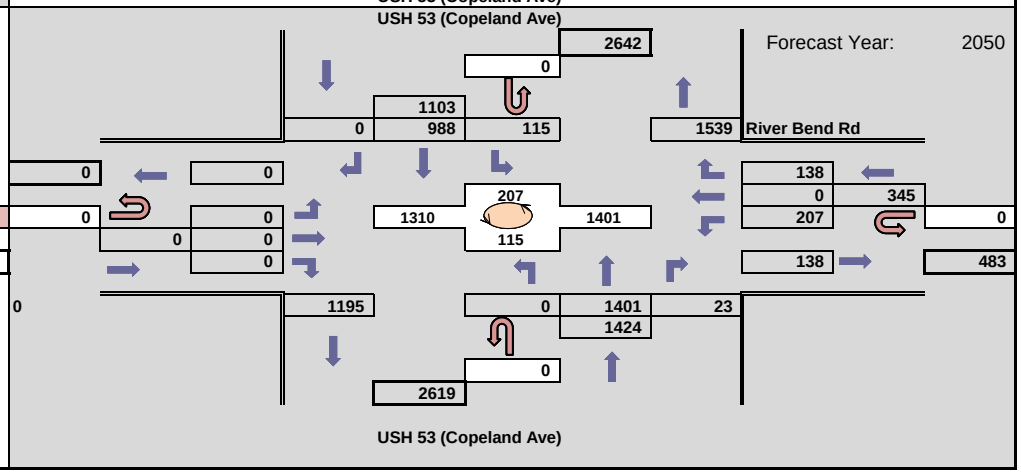

WisDOT TRAFFIC FORECAST REPORT	Region/COUNTY(IES): SW/La Crosse	Developed by: Miao Zhang
PROJECT ID(S): 1630-08-00	LOCATION: STH 16 La Crosse St. Segment	Phone: (608) 266-7995
ROUTE(S): STH 16	COMPLETED: 02/23/2021	
Traffic Forecasting Section; Bureau of Planning and Economic Development; Division of Transportation Investment Management		E-Mail: miao.zhang@dot.wi.gov

Site(s)	Route(s)	Volume(s)	Site Growth %
326119	STH 16	36420	0.26%
321356	STH 16	12460	0.79%
326122	STH 35	23880	0.44%

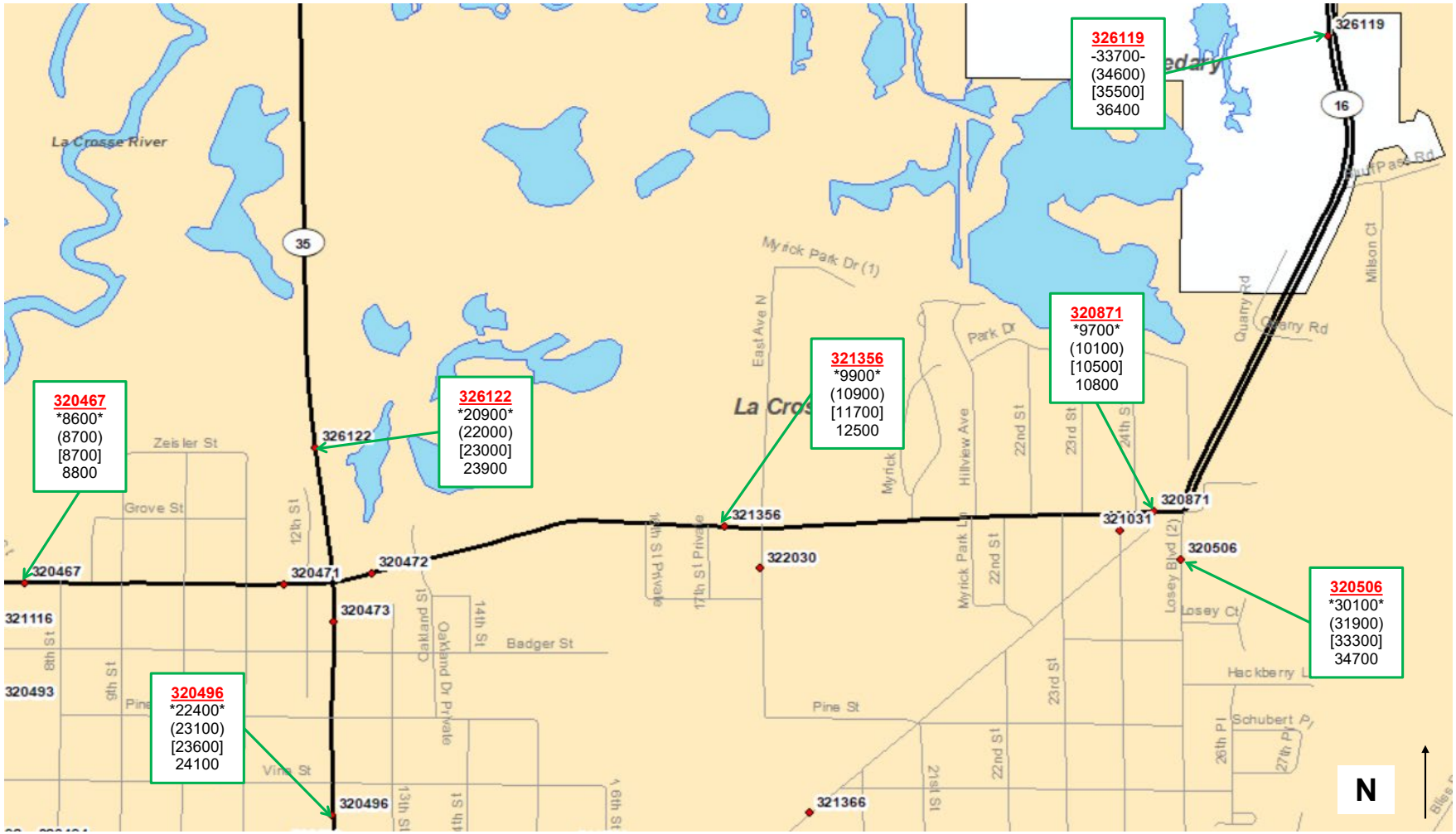

SITE ID = Colored, **bolded**, and underlined

Symbol	Count	Symbol	Forecast
-000-	2019 Count	(000)	2030 AADT
000	2017 Count	[000]	2040 AADT
		000	2050 AADT

NOTES ON THE FORECAST:

1. This projection assumes that no major new traffic generators will be added to the development already included in the 2010/2040 La Crosse Regional Travel Demand Model.
2. Vehicle classification data and design values (K factors, directional splits, and percent trucks in design hours) are available here: http://wisconsindot.gov/Pages/projects/data-plan/traf-fore/default.aspx
3. STH 16 is a Factor Group II (Urban-Other) roadways (indicating low to moderate fluctuation in traffic from a seasonal perspective).
4. The 2010/2040 La Crosse Regional Travel Demand Model was used to complete this forecast. The Traffic Analysis Forecasting Information System output was used as a comparison tool to check against the model output. Adjustments were made as needed.
5. Roadway improvements coded within the existing plus committed (E+C) network of the 2010/2040 La Crose Regional Travel Demand Model were assumed to be in place for the purposes of developing this forecast.

WisDOT Bureau of Planning & Economic Development
Traffic Forecasting Section
Forecast by: Miao Zhang
Phone: (608) 266 - 7995
Email: miao.zhang@dot.wi.gov

Projected AM Design Hour Traffic Volumes

Indicates roundabout

Design Hour: 7:00-8:00am

Forecast Completed: 2/23/2021

Project Description

Project ID(s): 1630-08-00
Route(s): STH 16
Region/COUNTY(IES): SW/La Crosse
Location: WIS 16 (La Crosse St) & East Ave

Design Hour Turning Movement Data

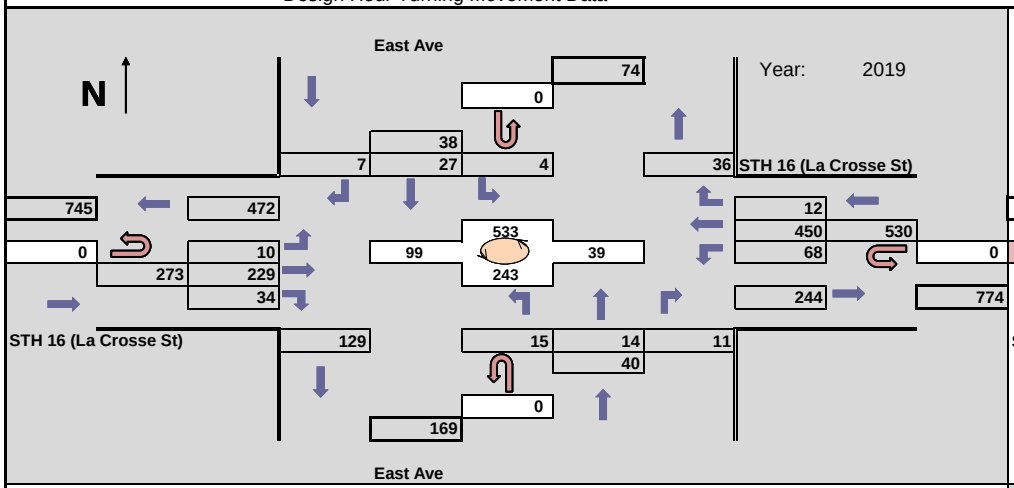

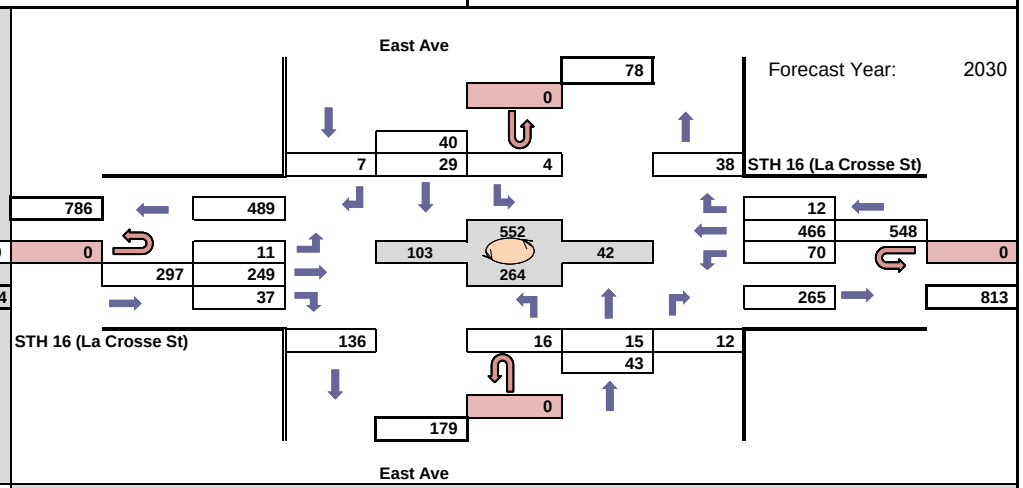

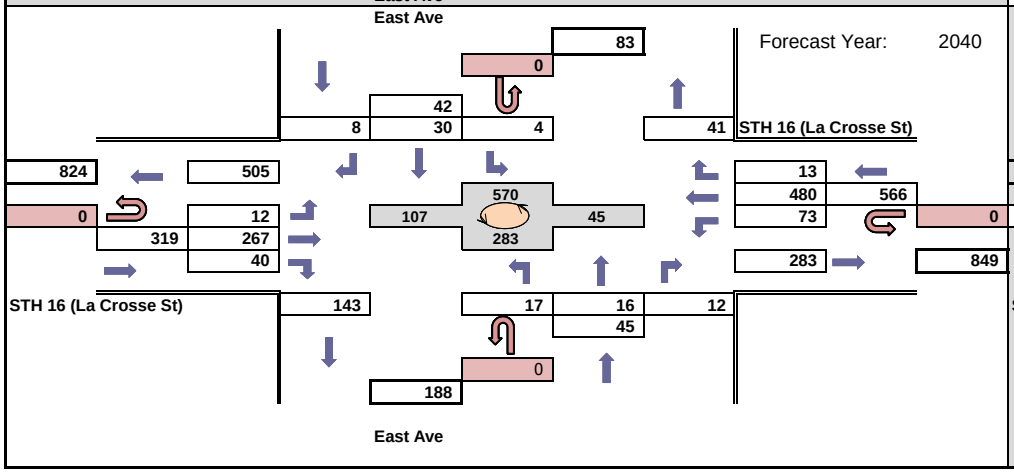

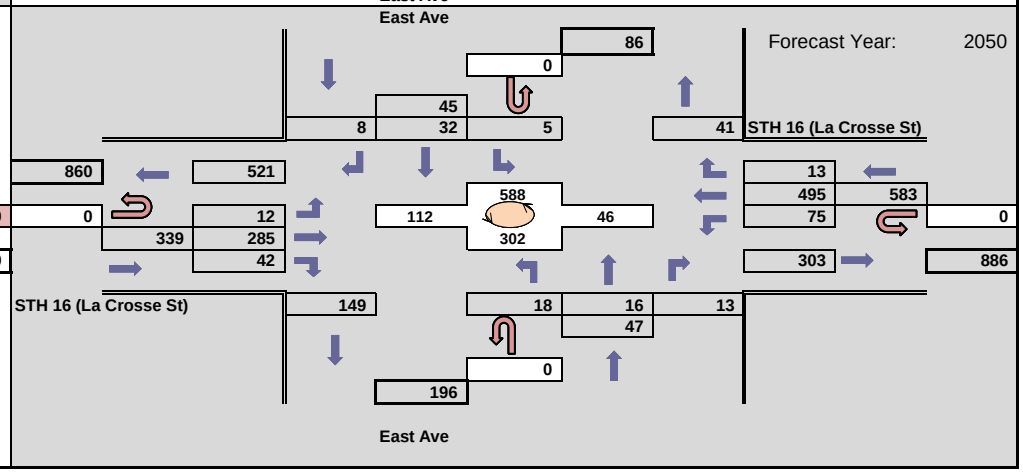

WisDOT Bureau of Planning & Economic Development
Traffic Forecasting Section
Forecast by: Miao Zhang
Phone: (608) 266 - 7995
Email: miao.zhang@dot.wi.gov

Projected PM Design Hour Traffic Volumes

Indicates roundabout

Design Hour: 4:30-5:30pm

Forecast Completed: 2/23/2021

Project Description

Project ID(s): 1630-08-00
Route(s): STH 16
Region/COUNTY(IES): SW/La Crosse
Location: WIS 16 (La Crosse St) & East Ave

Design Hour Turning Movement Data

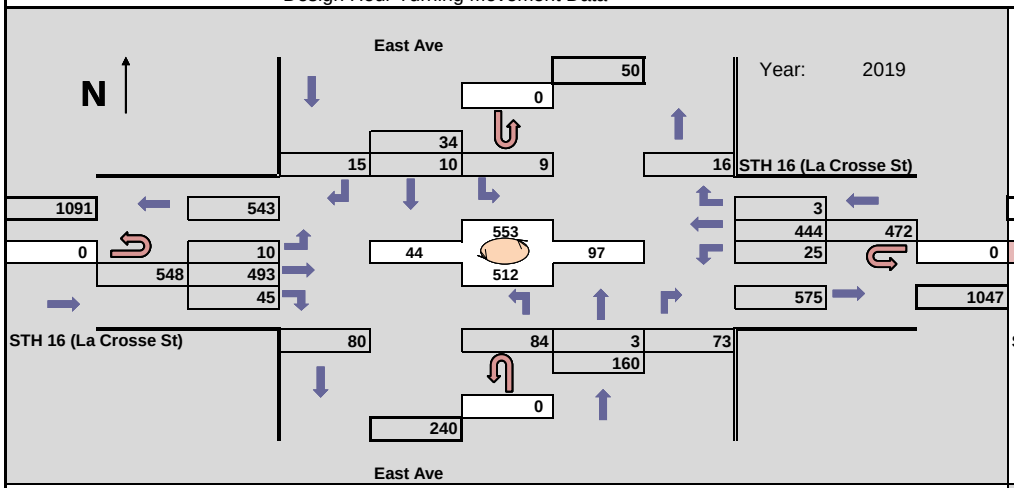

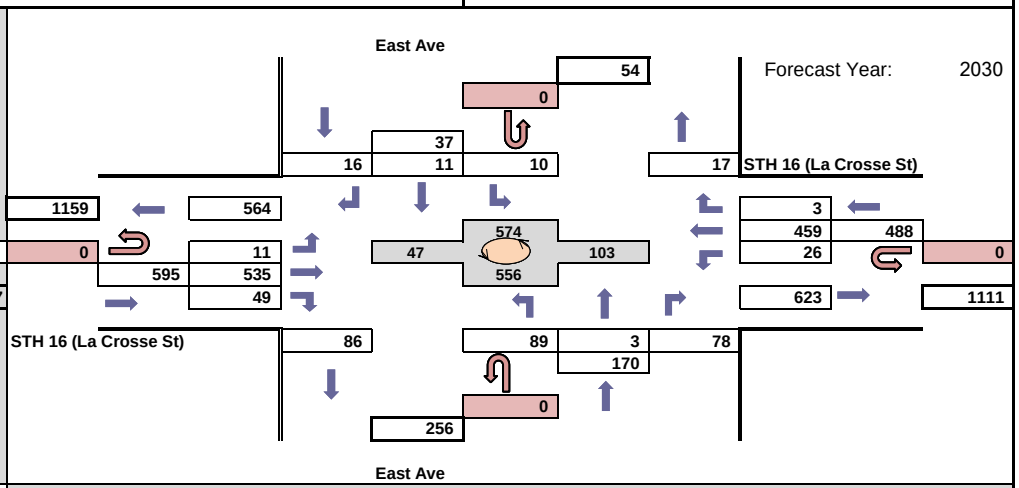

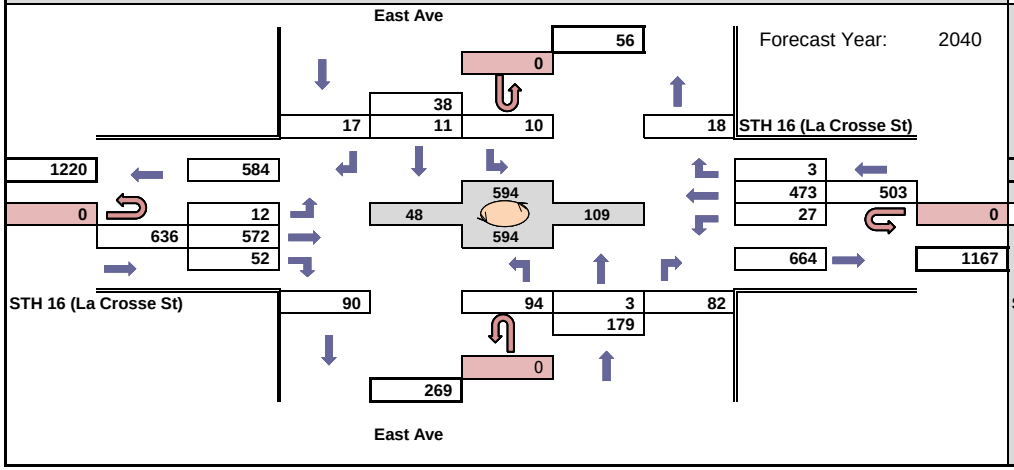

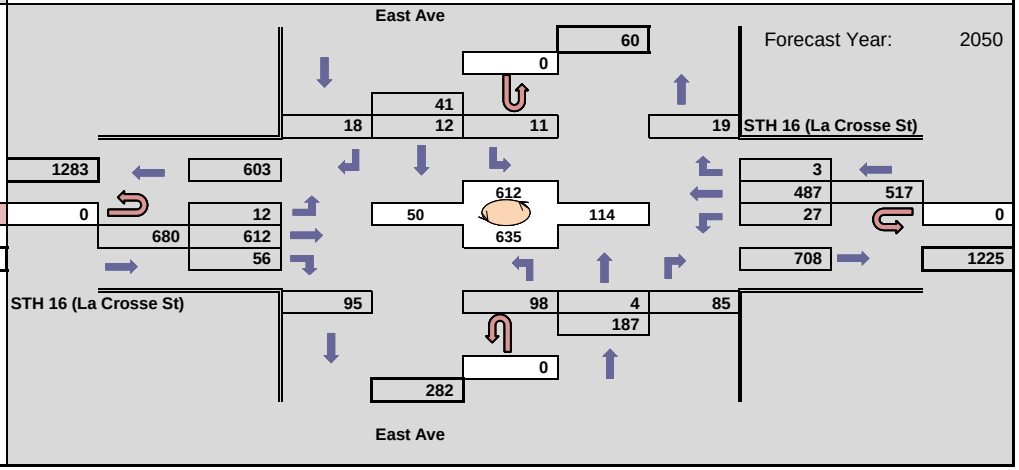

WisDOT Bureau of Planning & Economic Development
Traffic Forecasting Section
Forecast by: Miao Zhang
Phone: (608) 266 - 7995
Email: miao.zhang@dot.wi.gov

Projected AM Design Hour Traffic Volumes

Indicates roundabout

Design Hour: 7:00-8:00am

Forecast Completed: 2/23/2021

Project Description

Project ID(s): 1630-08-00
Route(s): STH 16
Region/COUNTY(IES): SW/La Crosse
Location: WIS 35 (West Ave) & WIS 16 (La Crosse St)

Design Hour Turning Movement Data

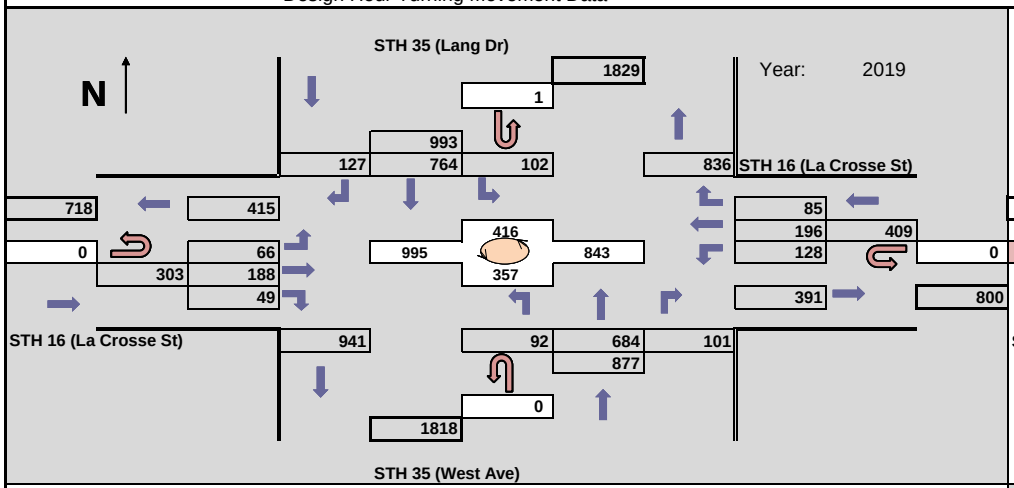

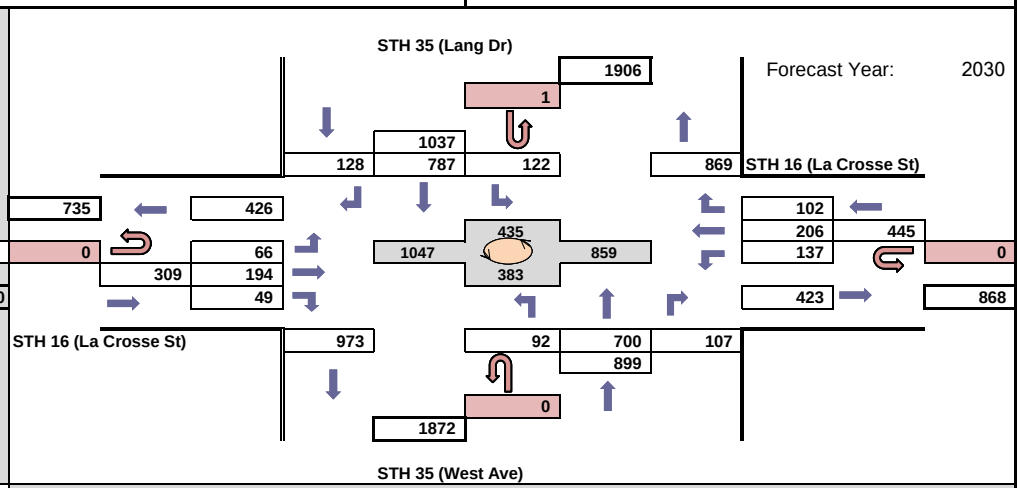

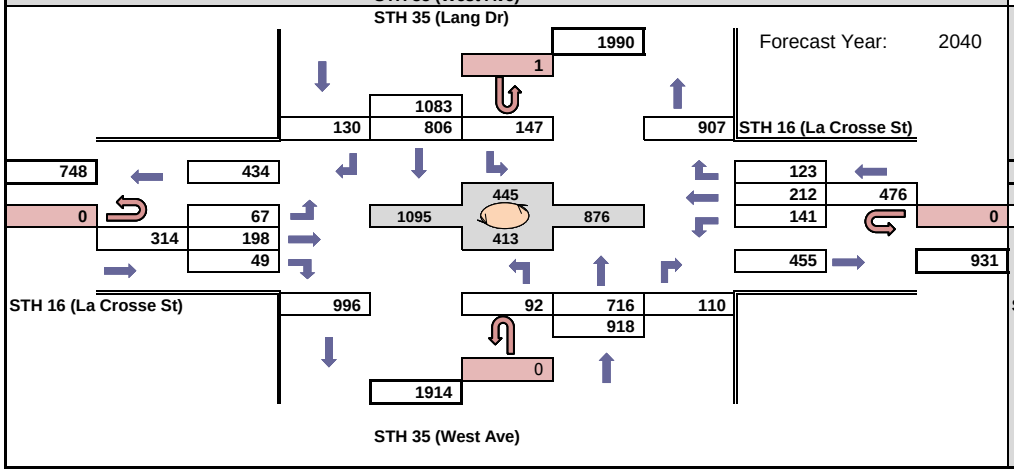

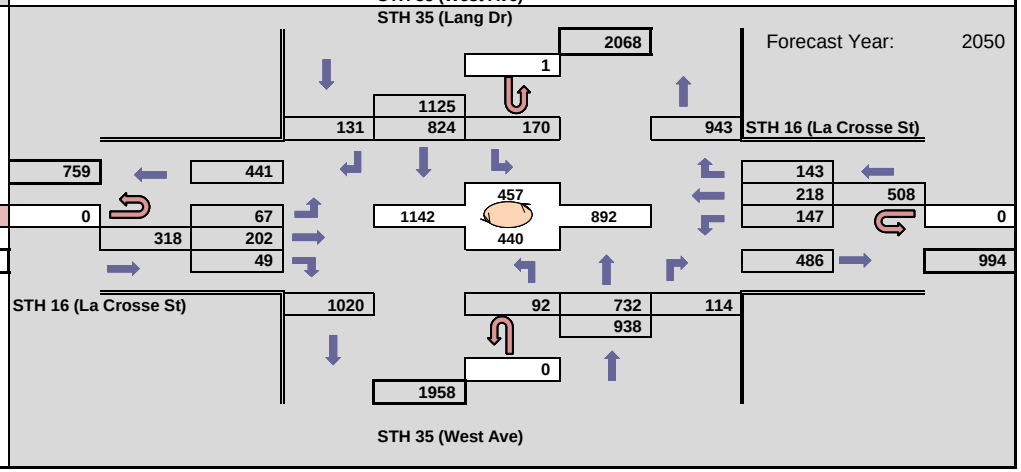

WisDOT Bureau of Planning & Economic Development
Traffic Forecasting Section
Forecast by: Miao Zhang
Phone: (608) 266 - 7995
Email: miao.zhang@dot.wi.gov

Projected PM Design Hour Traffic Volumes

Indicates roundabout

Design Hour: 4:30-5:30pm

Forecast Completed: 2/23/2021

Project Description

Project ID(s): 1630-08-00
Route(s): STH 16
Region/COUNTY(IES): SW/La Crosse
Location: WIS 35 (West Ave) & WIS 16 (La Crosse St)

Design Hour Turning Movement Data

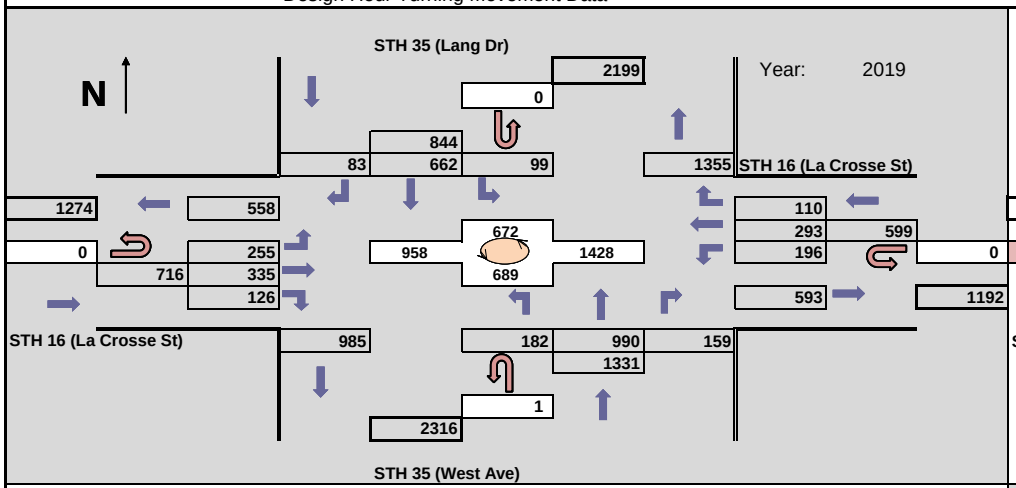

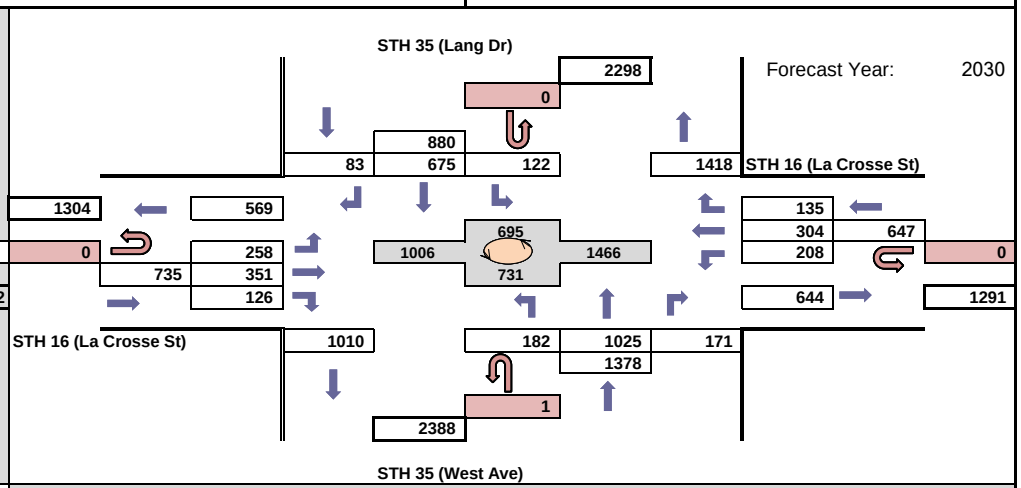

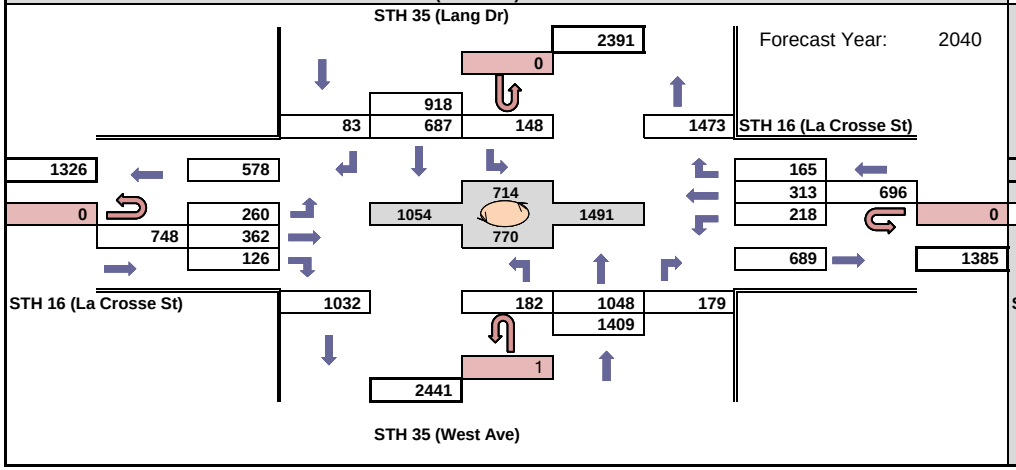

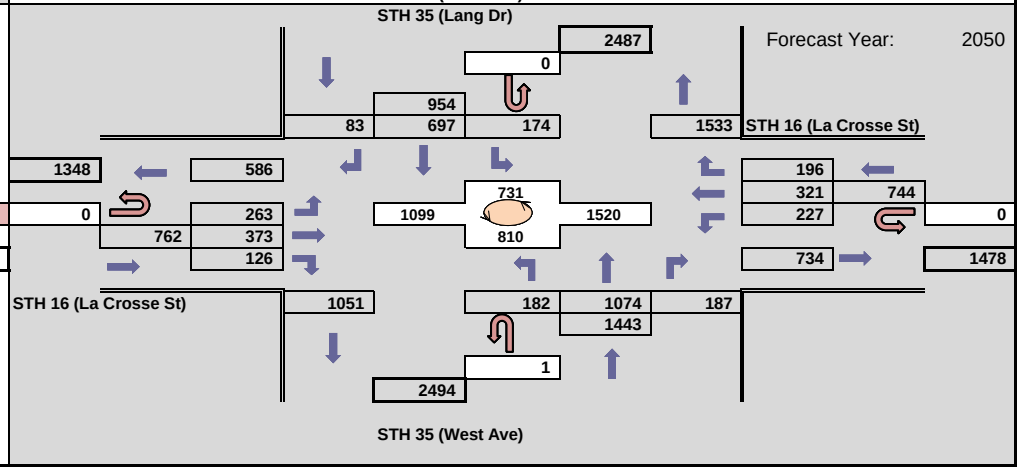

WisDOT Bureau of Planning & Economic Development
Traffic Forecasting Section
Forecast by: Miao Zhang
Phone: (608) 266 - 7995
Email: miao.zhang@dot.wi.gov

Projected AM Design Hour Traffic Volumes

Indicates roundabout

Design Hour: 7:00-8:00am

Forecast Completed: 2/23/2021

Project Description

Project ID(s): 1630-08-00
Route(s): STH 16
Region/COUNTY(IES): SW/La Crosse
Location: STH 16 & 7th St.

Design Hour Turning Movement Data

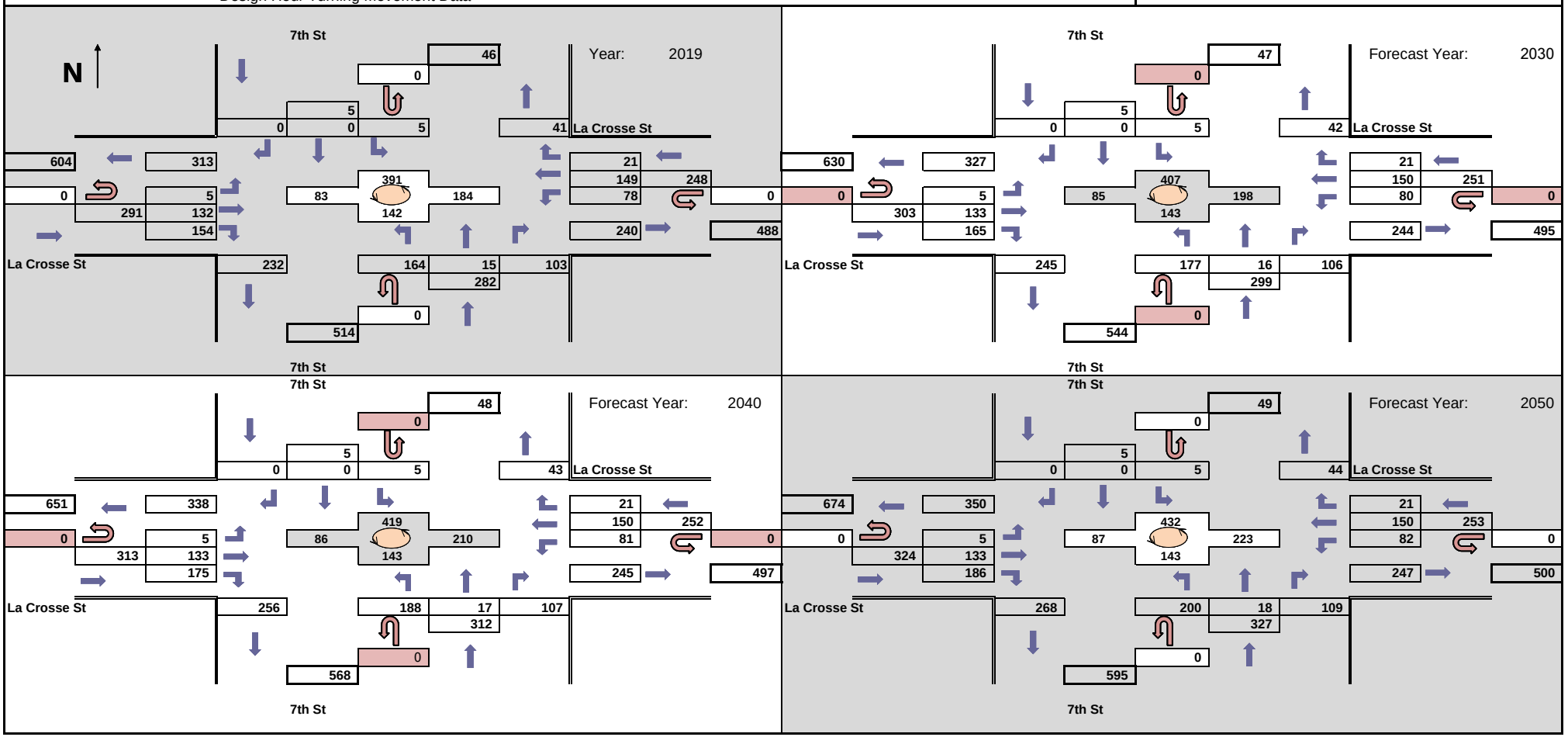

WisDOT Bureau of Planning & Economic Development
Traffic Forecasting Section
Forecast by: Miao Zhang
Phone: (608) 266 - 7995
Email: miao.zhang@dot.wi.gov

Projected PM Design Hour Traffic Volumes

Indicates roundabout

Design Hour: 4:15-5:15pm

Forecast Completed: 2/23/2021

Project Description

Project ID(s): 1630-08-00
Route(s): STH 16
Region/COUNTY(IES): SW/La Crosse
Location: STH 16 & 7th St.

Design Hour Turning Movement Data

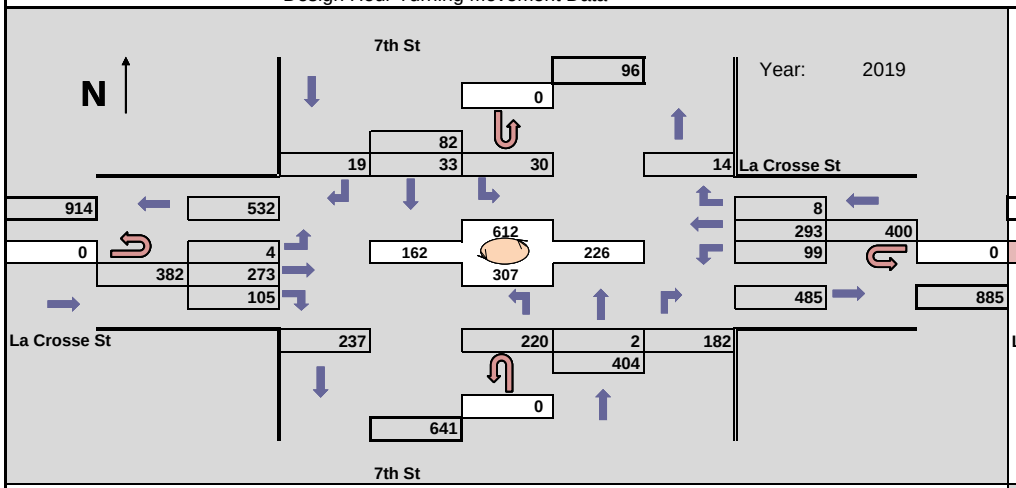

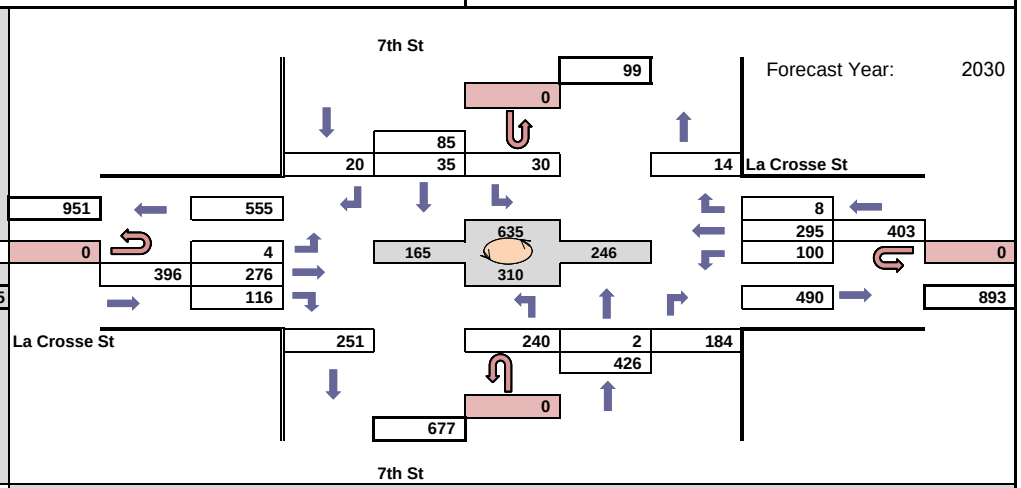

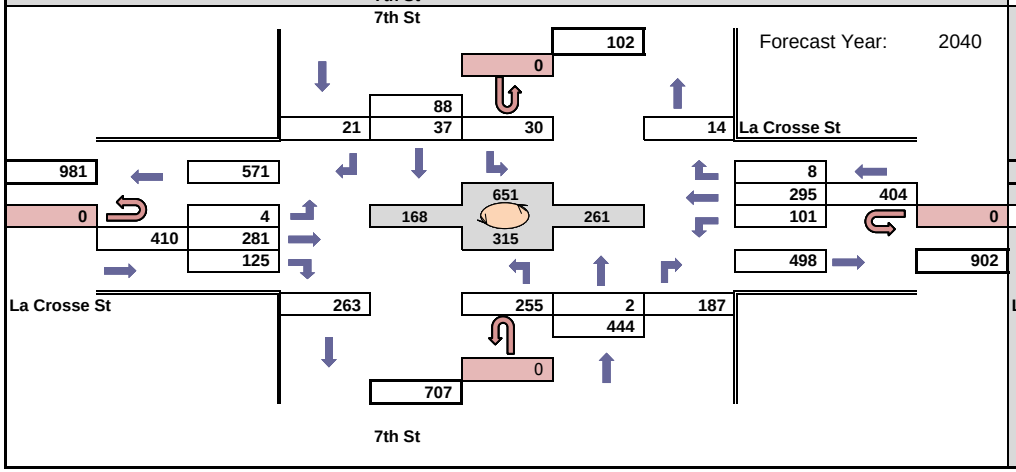

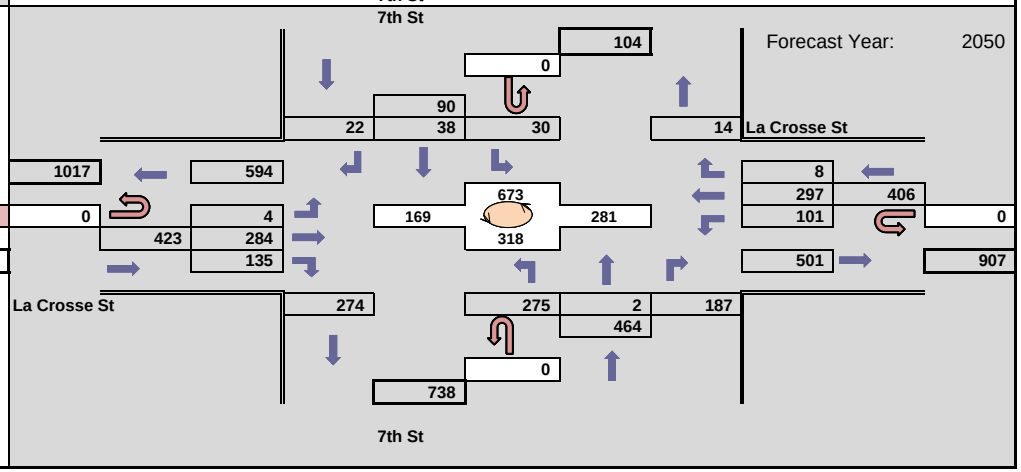

WisDOT TRAFFIC FORECAST REPORT	Region/COUNTY(IES): SW/La Crosse	Developed by: Miao Zhang
PROJECT ID(S): 1630-08-00	LOCATION: Losey Blvd. Segment	Phone: (608) 266-7995
ROUTE(S): Losey Blvd., STH 33	COMPLETED: 02/23/2021	
Traffic Forecasting Section; Bureau of Planning and Economic Development; Division of Transportation Investment Management		E-Mail: miao.zhang@dot.wi.gov

Site(s)	Route(s)	Volume(s)	Site Growth %
320583	STH 33	14990	0.31%

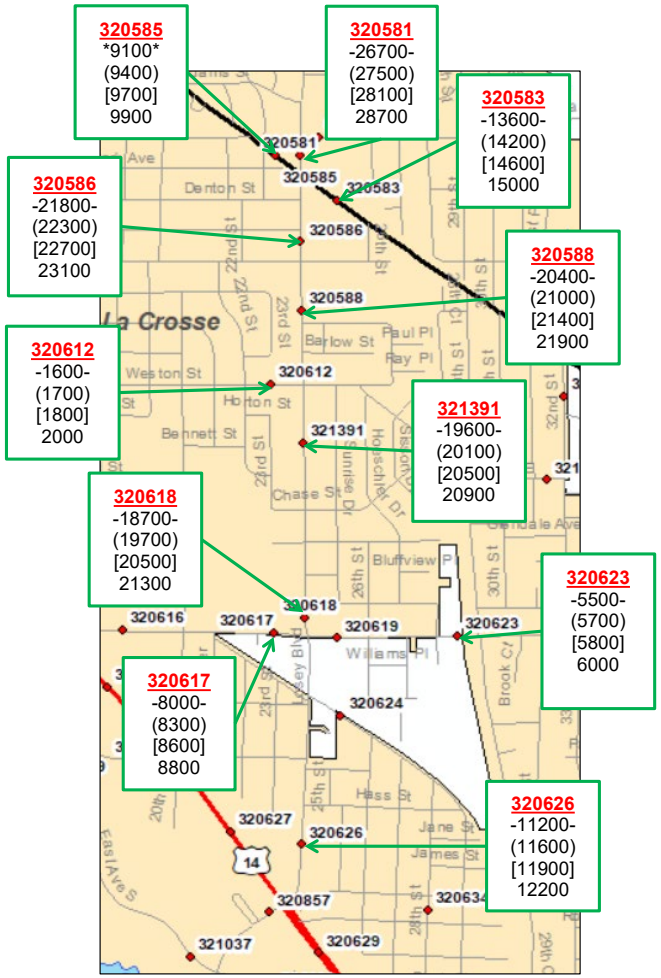

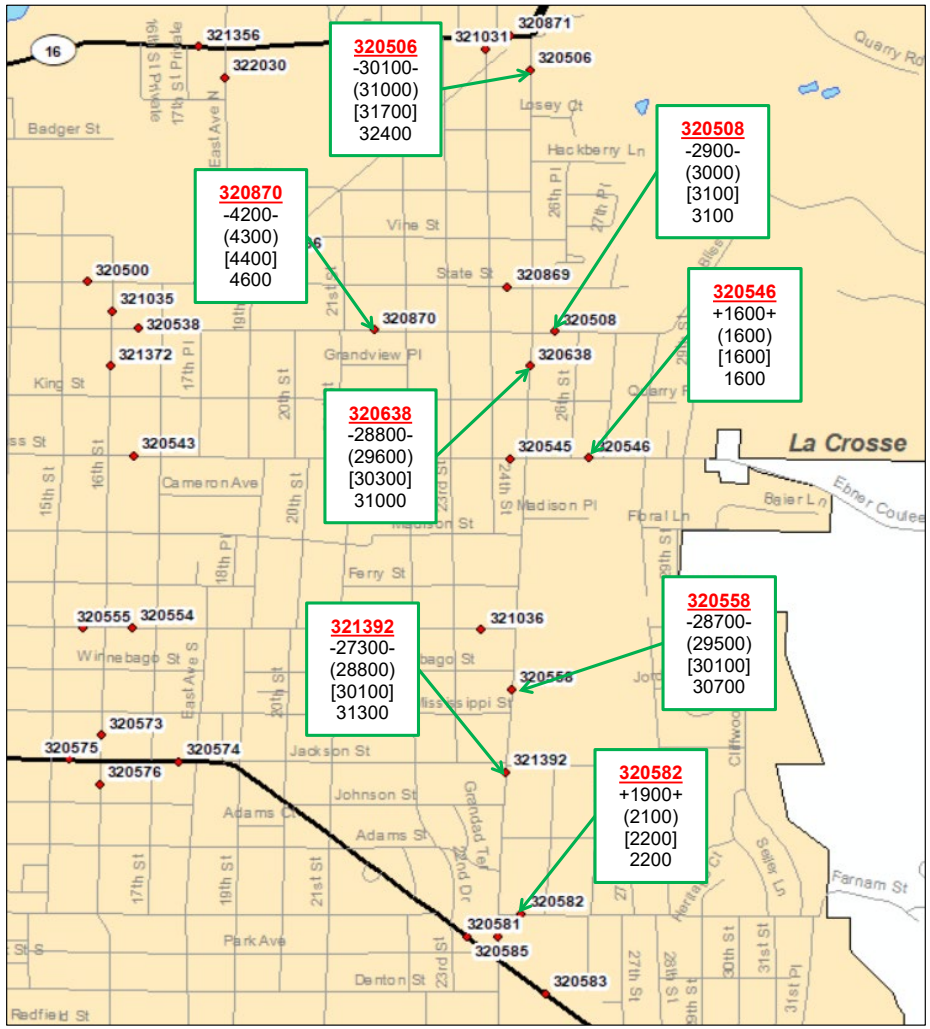

N

SITE ID = Colored, **bolded**, and underlined

Symbol	Count	Symbol	Forecast
-000-	2017 Count	(000)	2030 AADT
000	2014 Count	[000]	2040 AADT
+000+	2011 Count	000	2050 AADT

NOTES ON THE FORECAST:

1. This projection assumes that no major new traffic generators will be added to the development already included in the 2010/2040 La Crosse Regional Travel Demand Model.
2. Vehicle classification data and design values (K factors, directional splits, and percent trucks in design hours) are available here: http://wisconsindot.gov/Pages/projects/data-plan/traf-fore/default.aspx
3. STH 33 is a Factor Group II (Urban-Other) roadways (indicating low to moderate fluctuation in traffic from a seasonal perspective).
4. The 2010/2040 La Crosse Regional Travel Demand Model was used to complete this forecast. The Traffic Analysis Forecasting Information System output was used as a comparison tool to check against the model output. Adjustments were made as needed.
5. Roadway improvements coded within the existing plus committed (E+C) network of the 2010/2040 La Crosse Regional Travel Demand Model were assumed to be in place for the purposes of developing this forecast.

WisDOT Bureau of Planning & Economic Development
Traffic Forecasting Section
Forecast by: Miao Zhang
Phone: (608) 266 - 7995
Email: miao.zhang@dot.wi.gov

Projected AM Design Hour Traffic Volumes

Indicates roundabout

Design Hour: 7:00-8:00am

Forecast Completed: 2/23/2021

Project Description

Project ID(s): 1630-08-00
Route(s): Losey
Region/COUNTY(IES): SW/La Crosse
Location: Losey Blvd & Main St

Design Hour Turning Movement Data

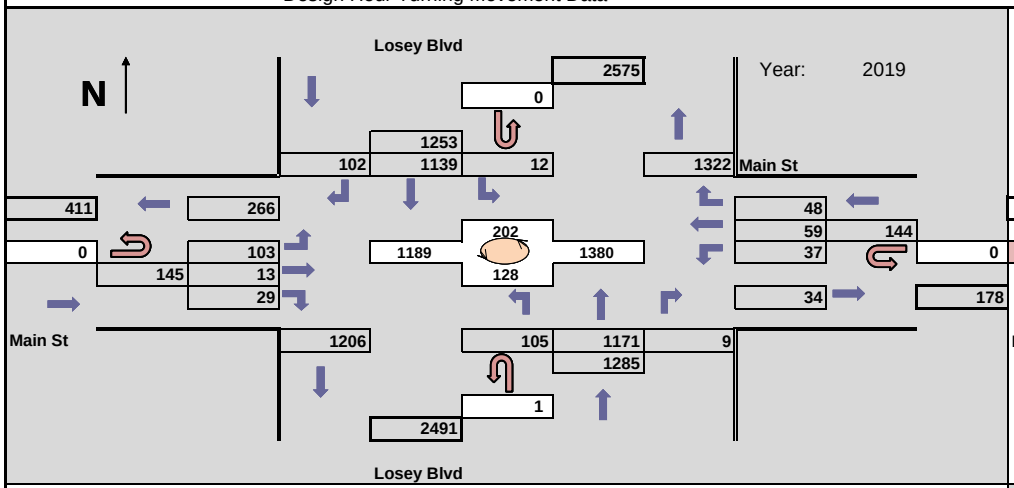

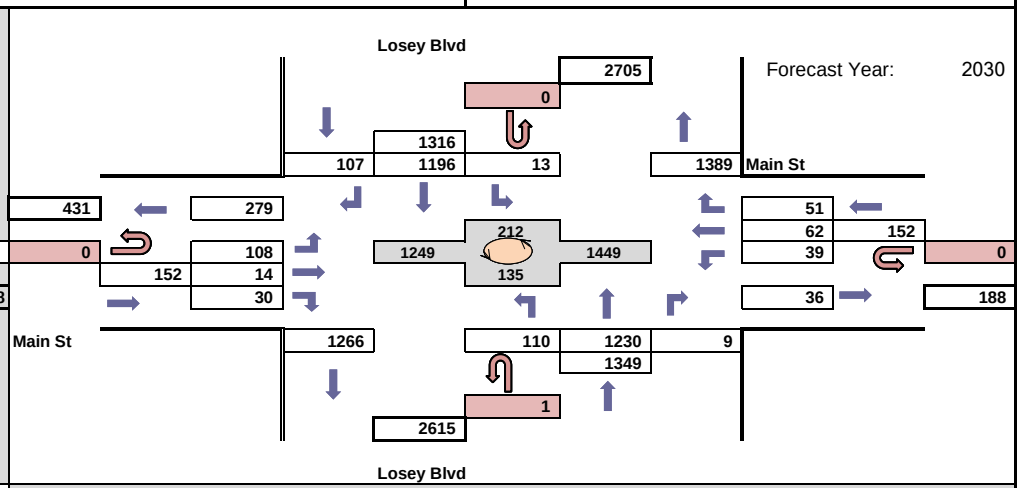

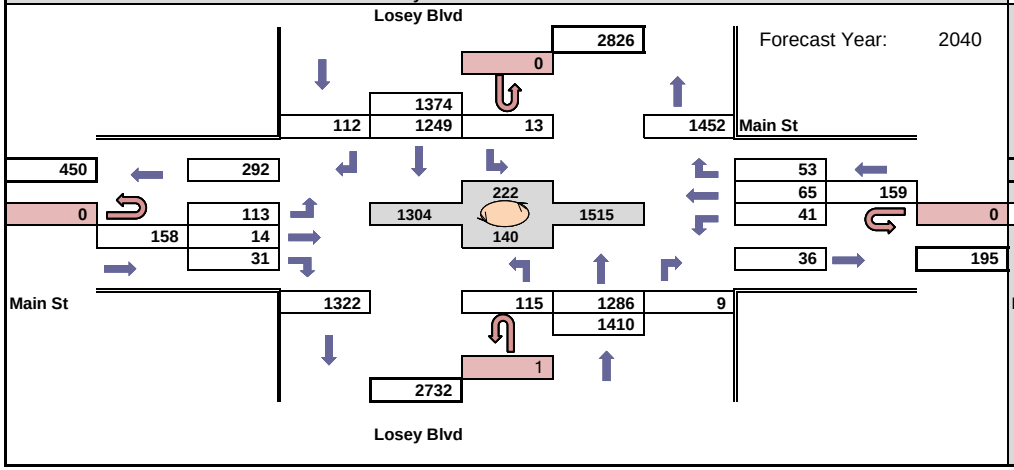

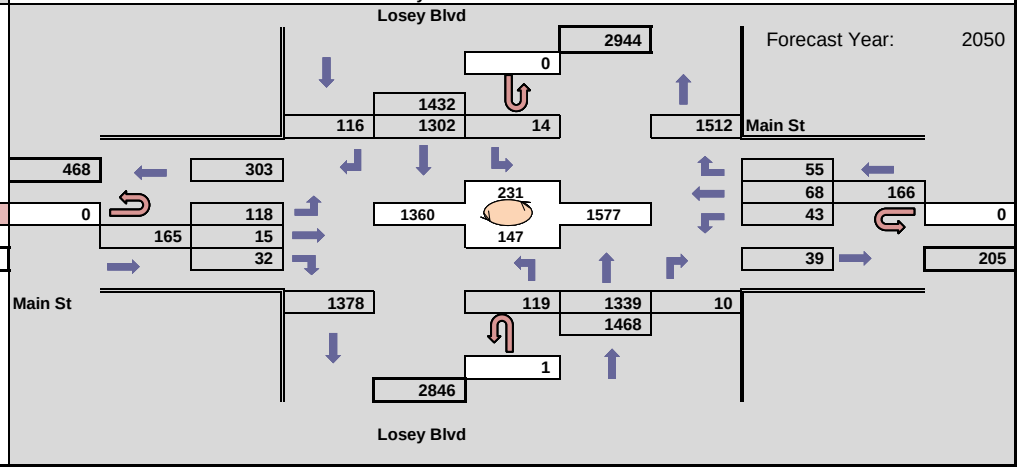

WisDOT Bureau of Planning & Economic Development
Traffic Forecasting Section
Forecast by: Miao Zhang
Phone: (608) 266 - 7995
Email: miao.zhang@dot.wi.gov

Projected PM Design Hour Traffic Volumes

Indicates roundabout

Design Hour: 3:30-4:30pm

Forecast Completed: 2/23/2021

Project Description

Project ID(s): 1630-08-00
Route(s): Losey
Region/COUNTY(IES): SW/La Crosse
Location: Losey Blvd & Main St

Design Hour Turning Movement Data

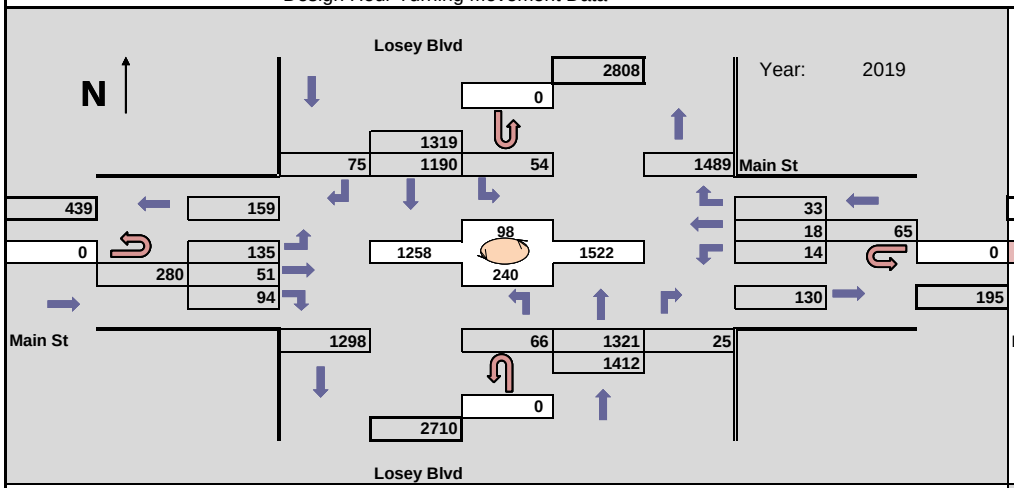

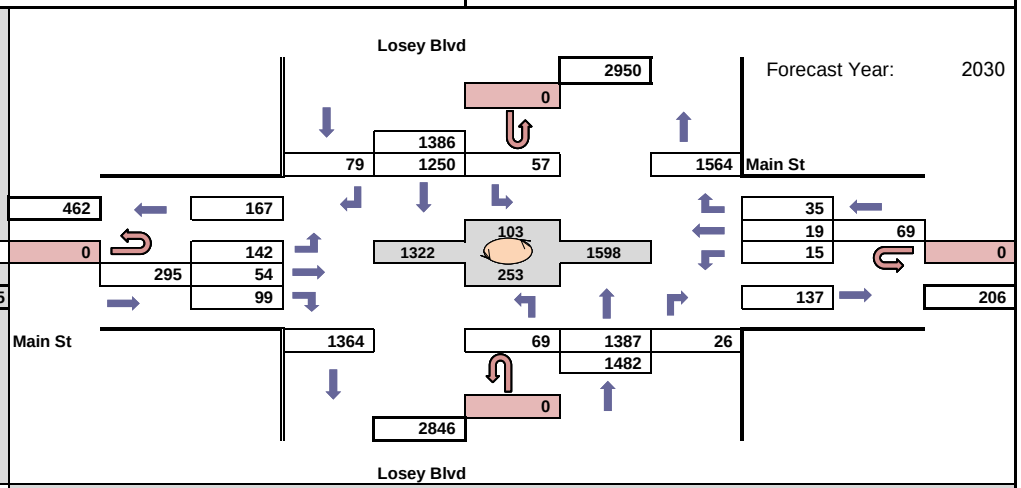

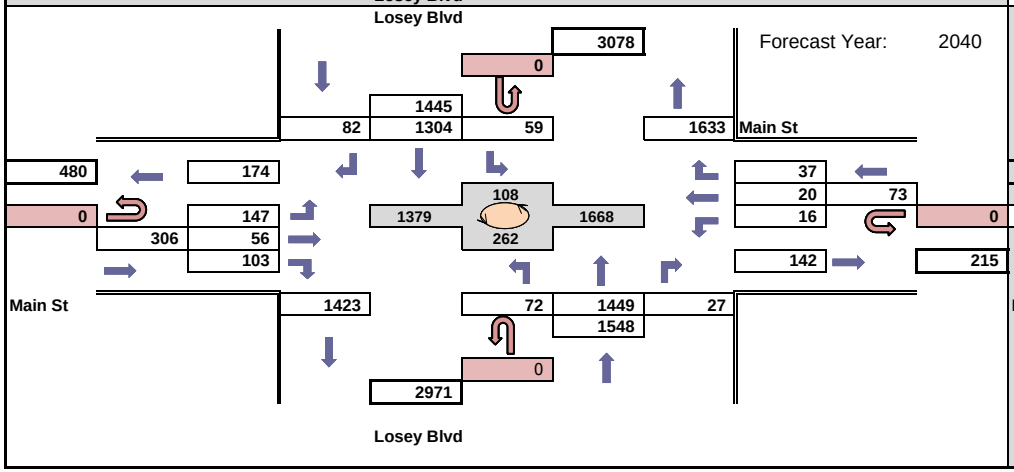

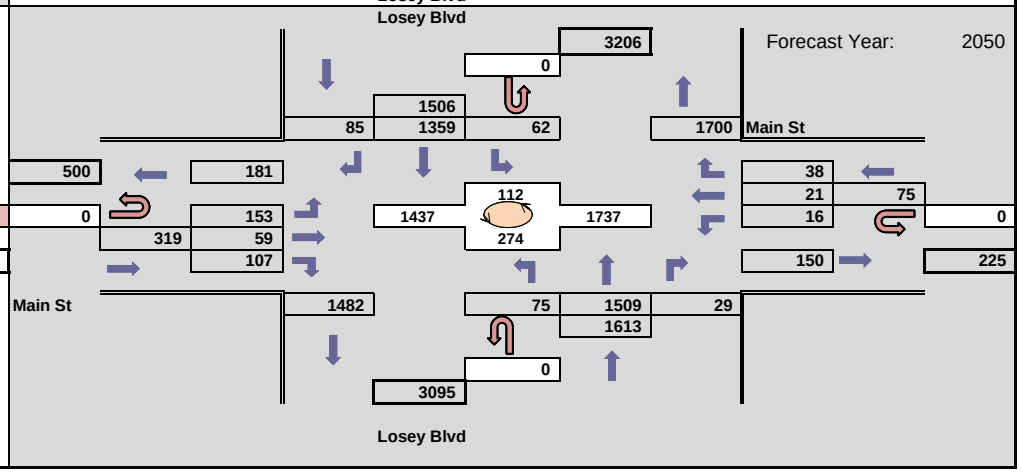

WisDOT Bureau of Planning & Economic Development
Traffic Forecasting Section
Forecast by: Miao Zhang
Phone: (608) 266 - 7995
Email: miao.zhang@dot.wi.gov

Projected AM Design Hour Traffic Volumes

Indicates roundabout

Design Hour: 7:00-8:00am

Forecast Completed: 2/23/2021

Project Description

Project ID(s): 1630-08-00
Route(s): Losey
Region/COUNTY(IES): SW/La Crosse
Location: Losey Blvd & Cass St

Design Hour Turning Movement Data

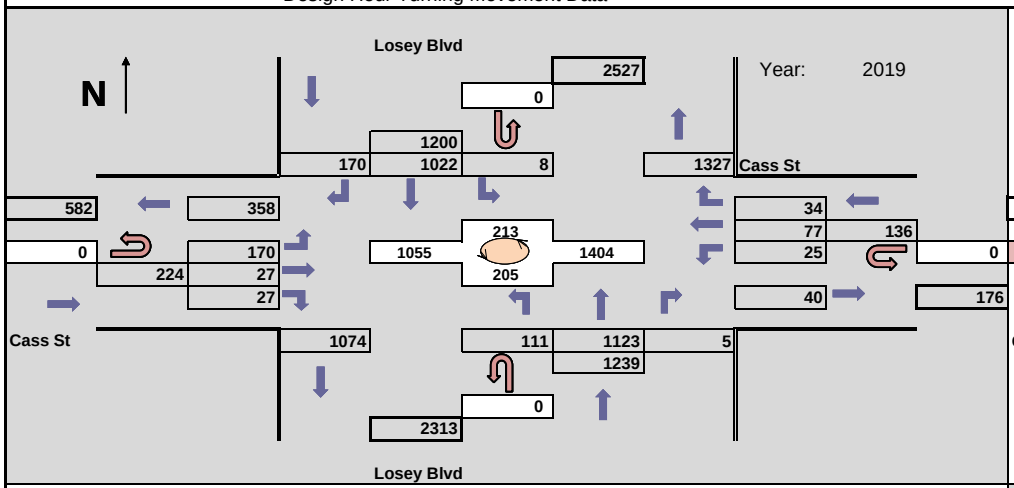

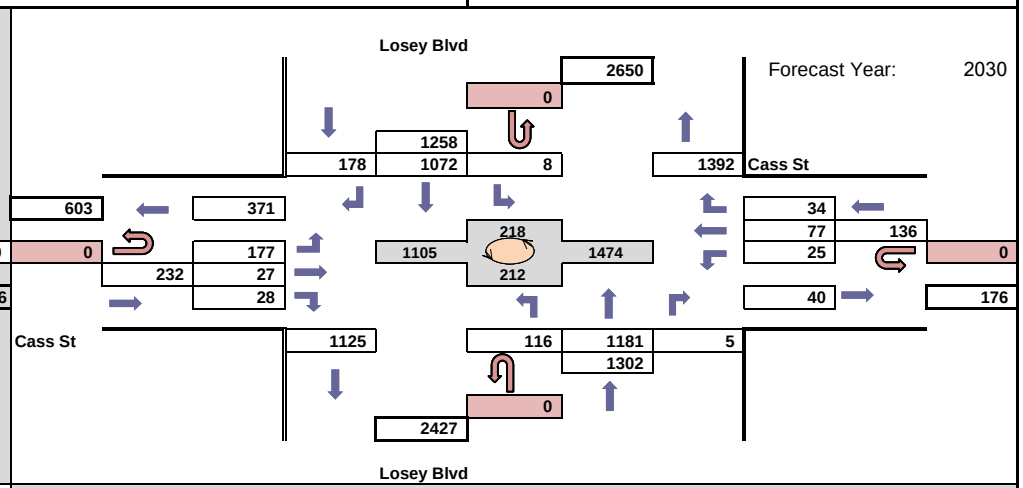

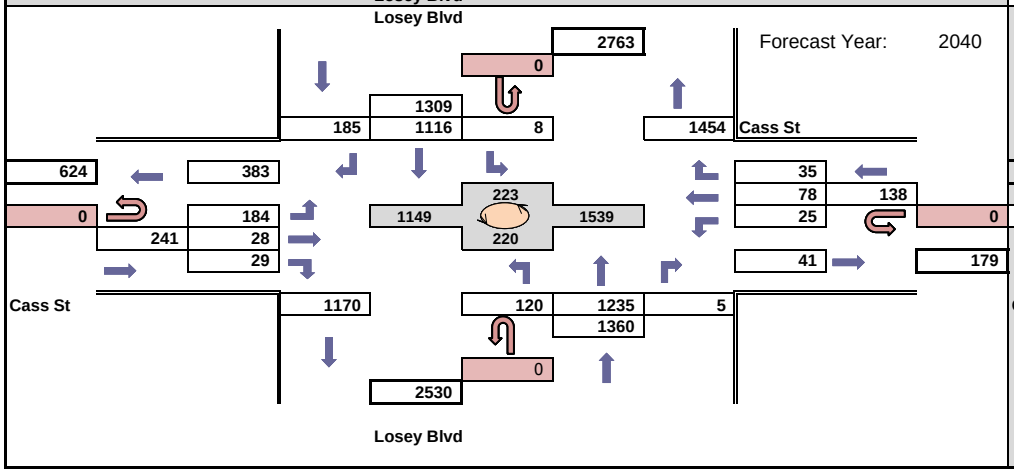

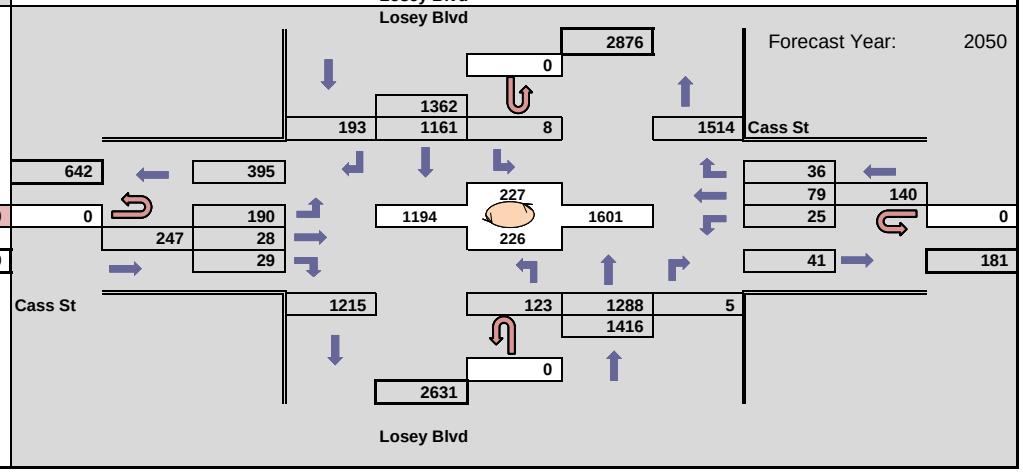

WisDOT Bureau of Planning & Economic Development
Traffic Forecasting Section
Forecast by: Miao Zhang
Phone: (608) 266 - 7995
Email: miao.zhang@dot.wi.gov

Projected PM Design Hour Traffic Volumes

Indicates roundabout

Design Hour: 3:30-4:30pm

Forecast Completed: 2/23/2021

Project Description

Project ID(s): 1630-08-00
Route(s): Losey
Region/COUNTY(IES): SW/La Crosse
Location: Losey Blvd & Cass St

Design Hour Turning Movement Data

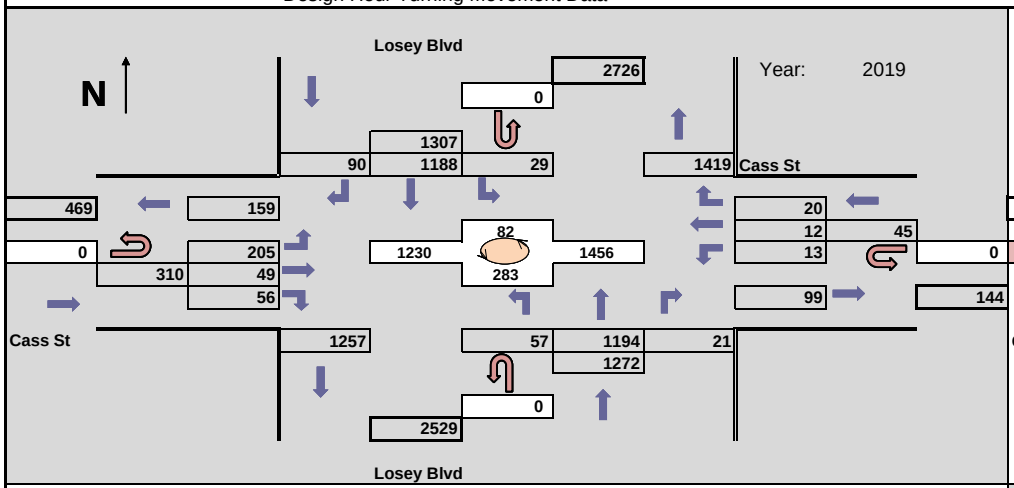

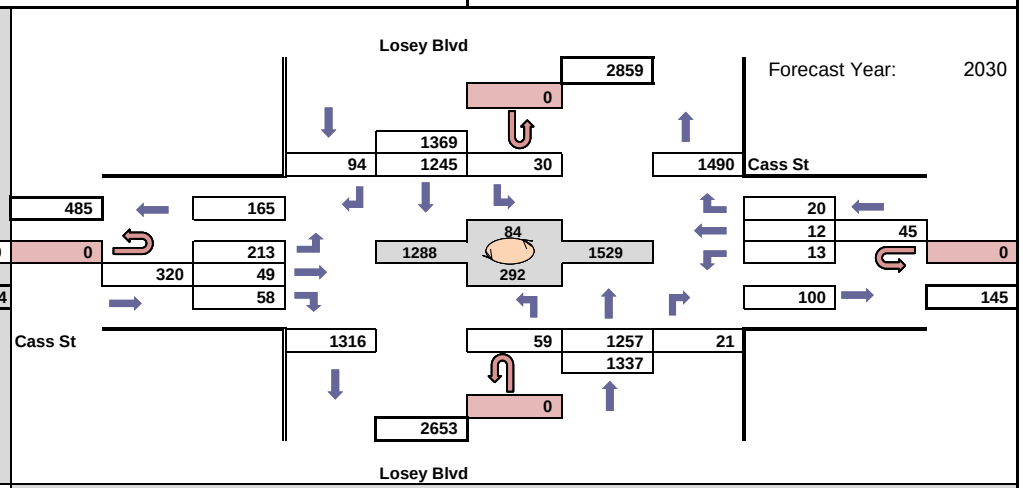

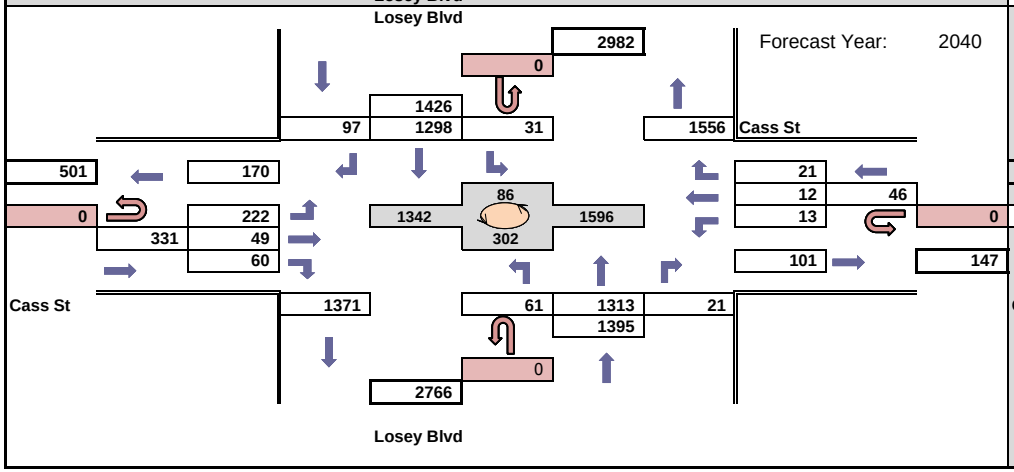

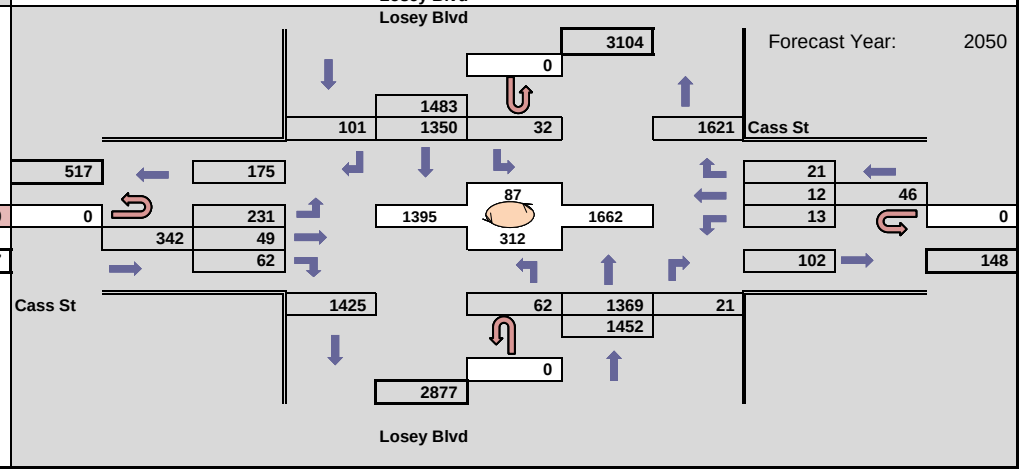

WisDOT Bureau of Planning & Economic Development
Traffic Forecasting Section
Forecast by: Miao Zhang
Phone: (608) 266 - 7995
Email: miao.zhang@dot.wi.gov

Projected AM Design Hour Traffic Volumes

Indicates roundabout

Design Hour: 7:00-8:00am

Forecast Completed: 2/23/2021

Project Description

Project ID(s): 1630-08-00
Route(s): Losey
Region/COUNTY(IES): SW/La Crosse
Location: Losey Blvd & Farnam St

Design Hour Turning Movement Data

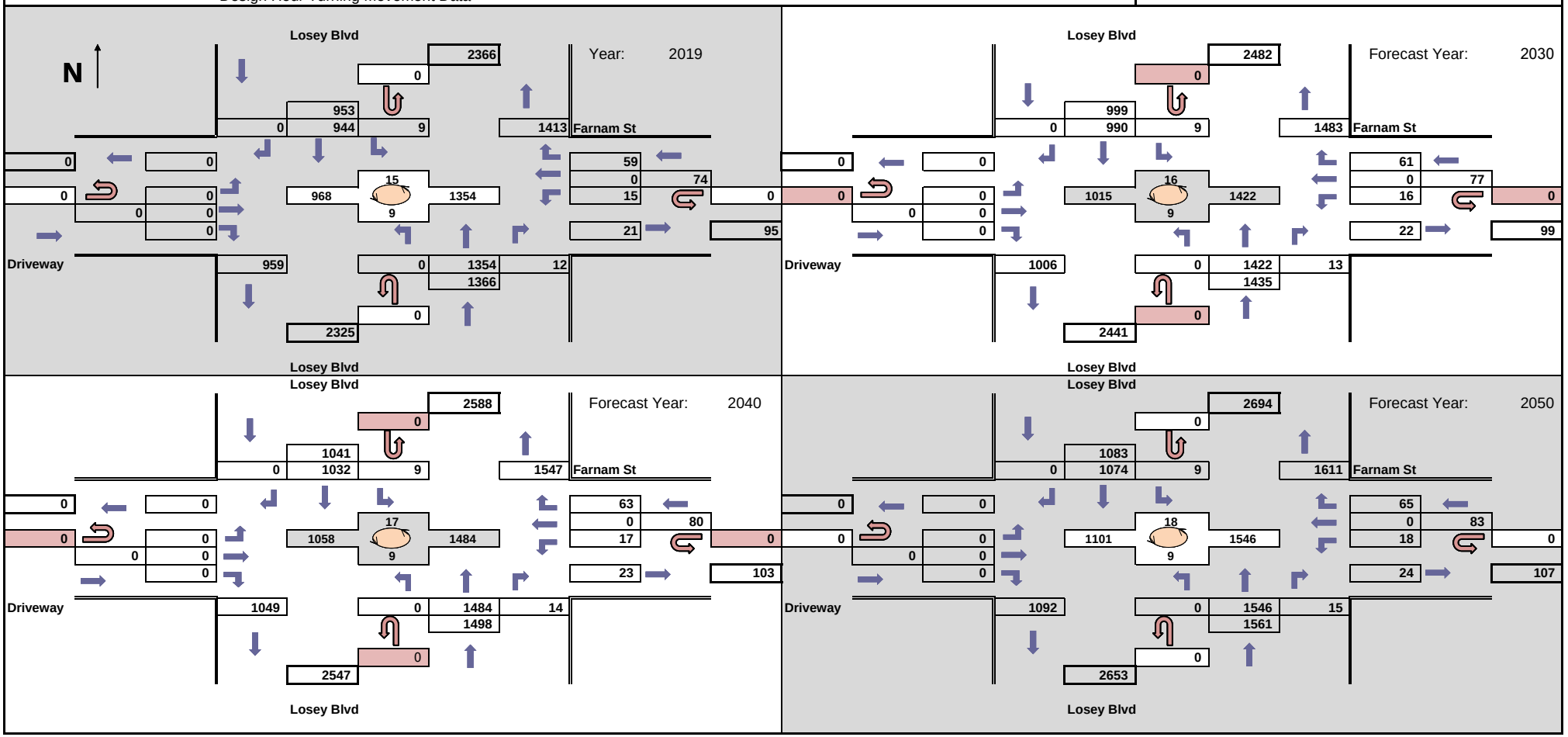

WisDOT Bureau of Planning & Economic Development
Traffic Forecasting Section
Forecast by: Miao Zhang
Phone: (608) 266 - 7995
Email: miao.zhang@dot.wi.gov

Projected PM Design Hour Traffic Volumes

Indicates roundabout

Design Hour: 3:30-4:30pm

Forecast Completed: 2/23/2021

Project Description

Project ID(s): 1630-08-00
Route(s): Losey
Region/COUNTY(IES): SW/La Crosse
Location: Losey Blvd & Farnam St

Design Hour Turning Movement Data

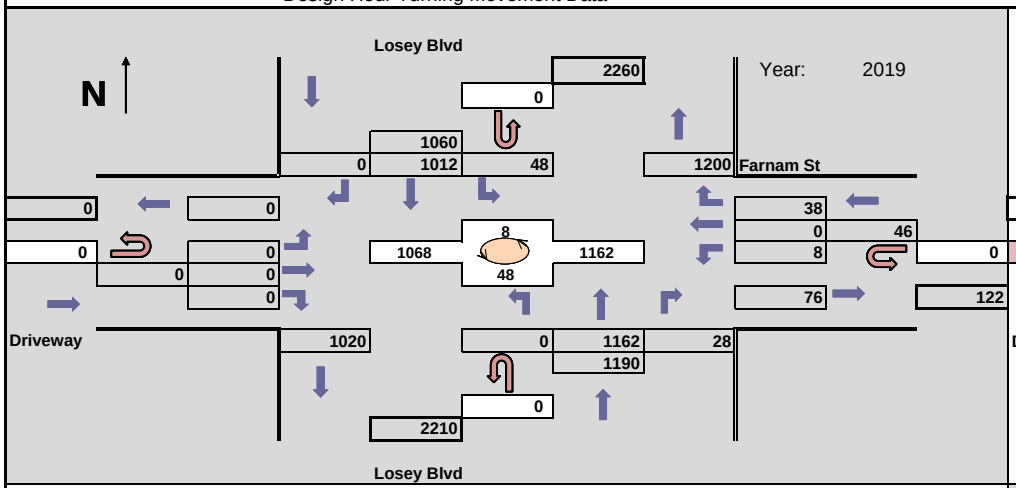

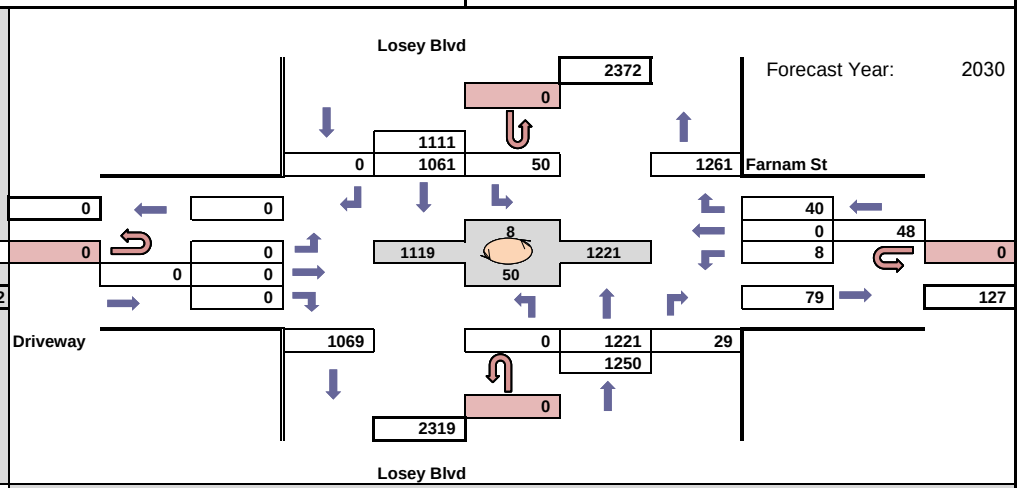

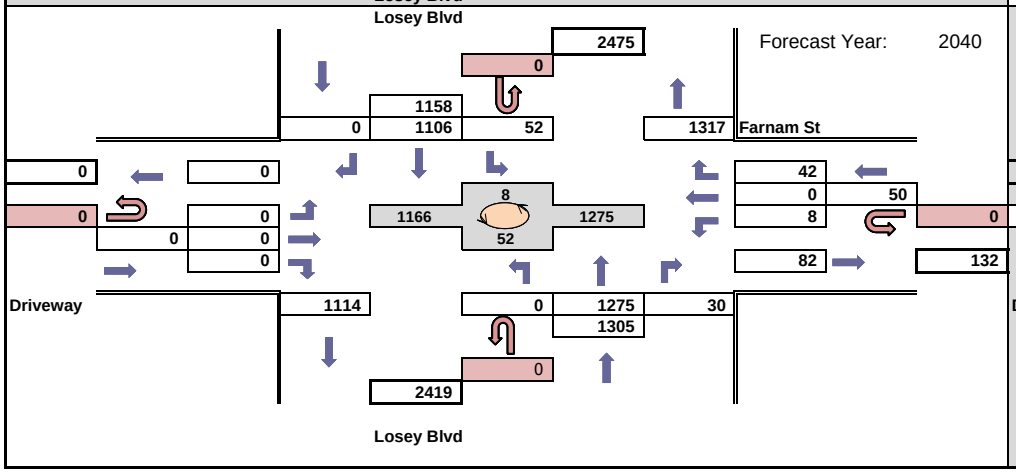

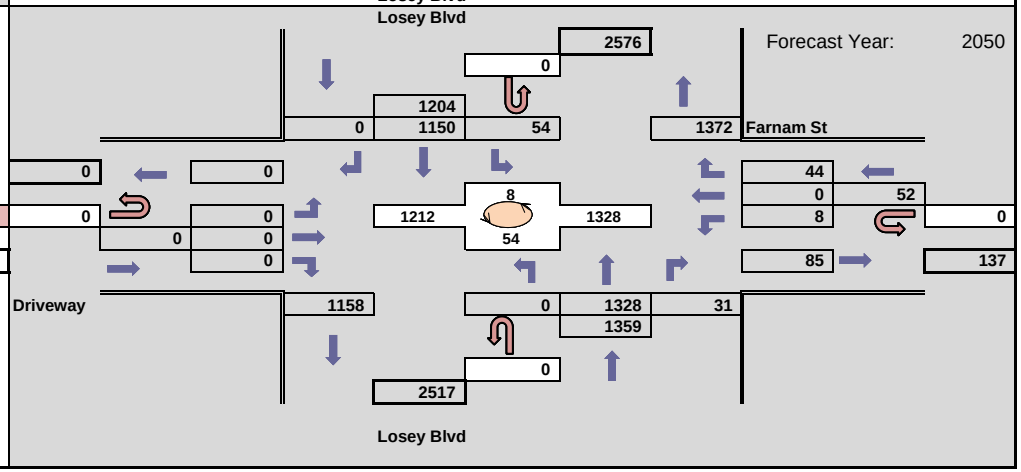

WisDOT Bureau of Planning & Economic Development
Traffic Forecasting Section
Forecast by: Miao Zhang
Phone: (608) 266 - 7995
Email: miao.zhang@dot.wi.gov

Projected AM Design Hour Traffic Volumes

Indicates roundabout

Design Hour: 7:00-8:00am

Forecast Completed: 2/23/2021

Project Description

Project ID(s): 1630-08-00
Route(s): Losey
Region/COUNTY(IES): SW/La Crosse
Location: WIS 33 (State Rd) & Losey Blvd

Design Hour Turning Movement Data

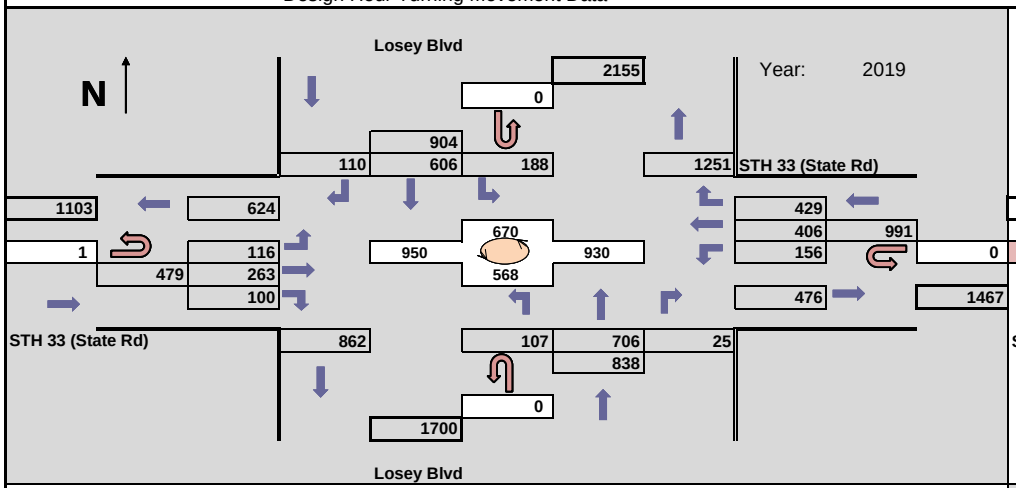

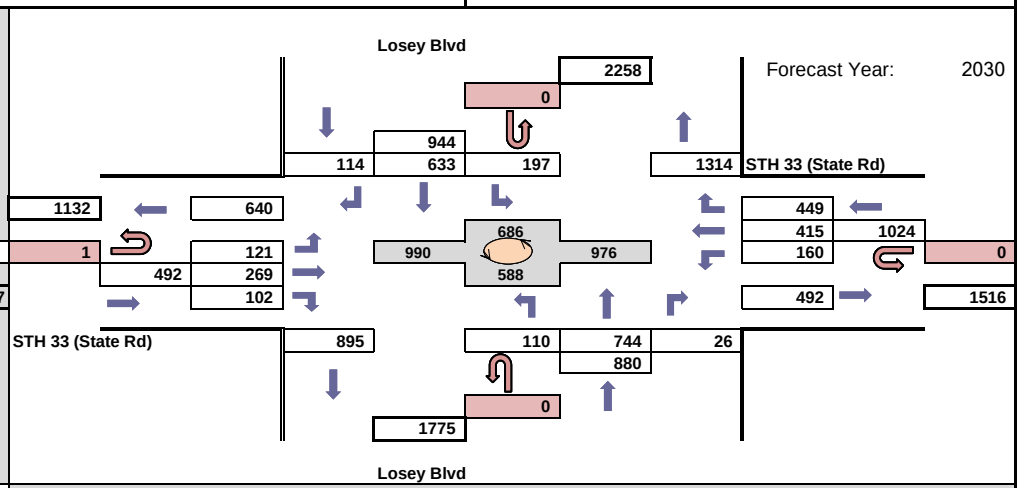

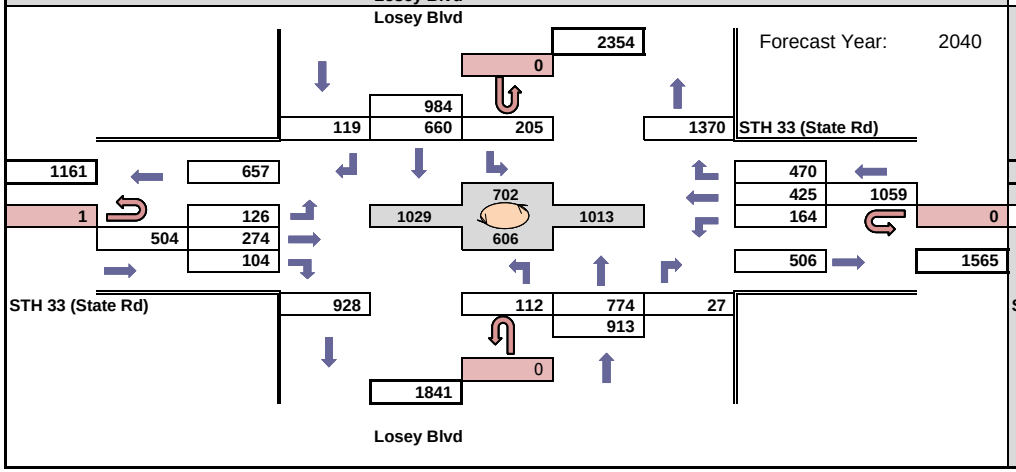

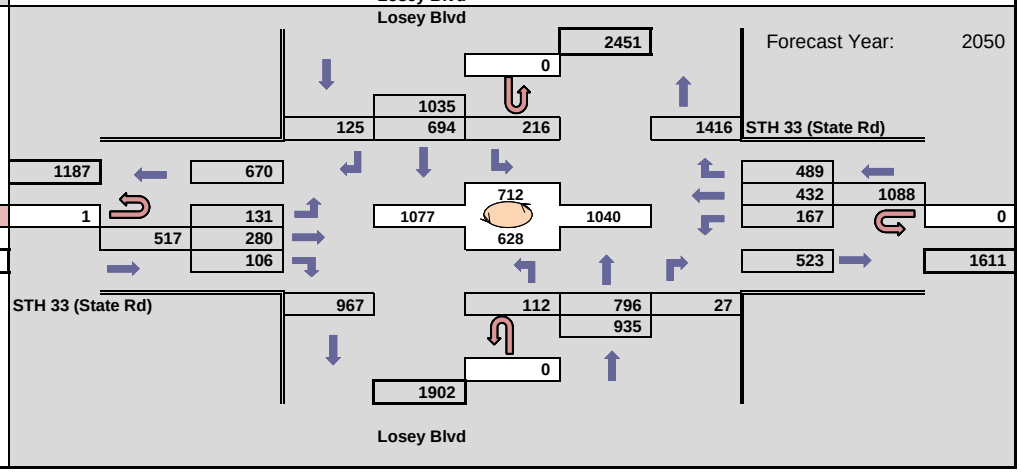

WisDOT Bureau of Planning & Economic Development
Traffic Forecasting Section
Forecast by: Miao Zhang
Phone: (608) 266 - 7995
Email: miao.zhang@dot.wi.gov

Projected PM Design Hour Traffic Volumes

Indicates roundabout

Design Hour: 3:30-4:30pm

Forecast Completed: 2/23/2021

Project Description

Project ID(s): 1630-08-00
Route(s): Losey
Region/COUNTY(IES): SW/La Crosse
Location: WIS 33 (State Rd) & Losey Blvd

Design Hour Turning Movement Data

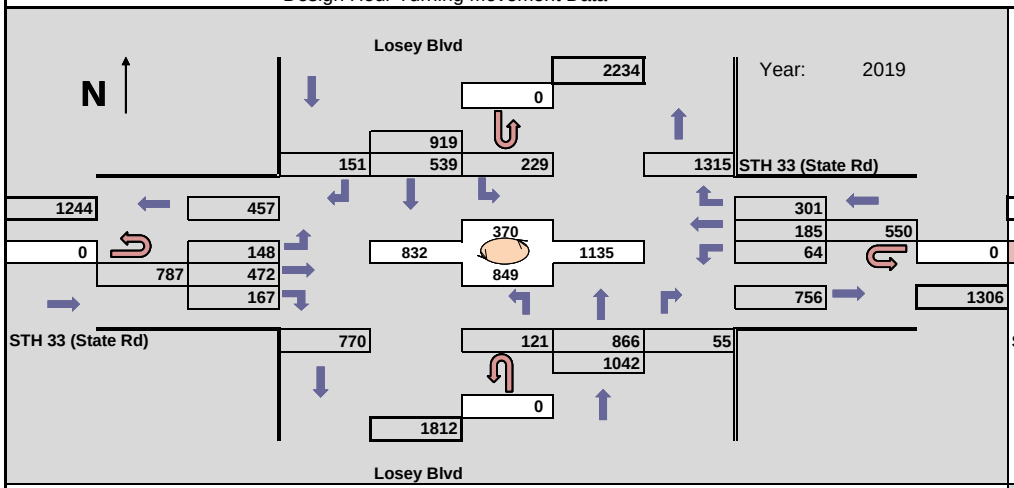

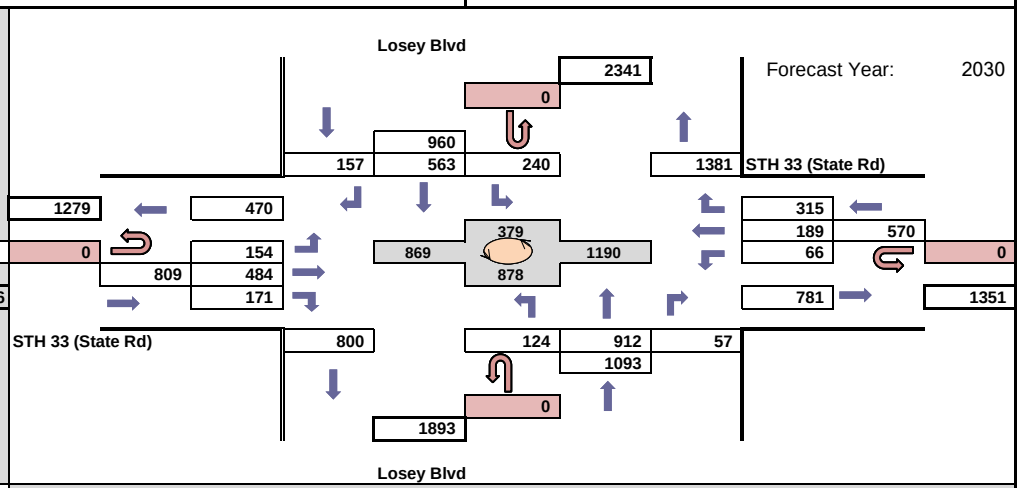

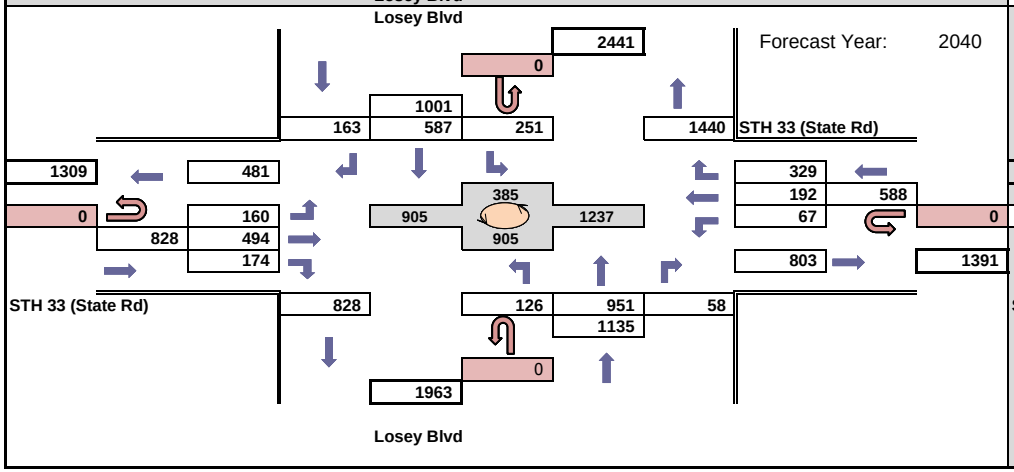

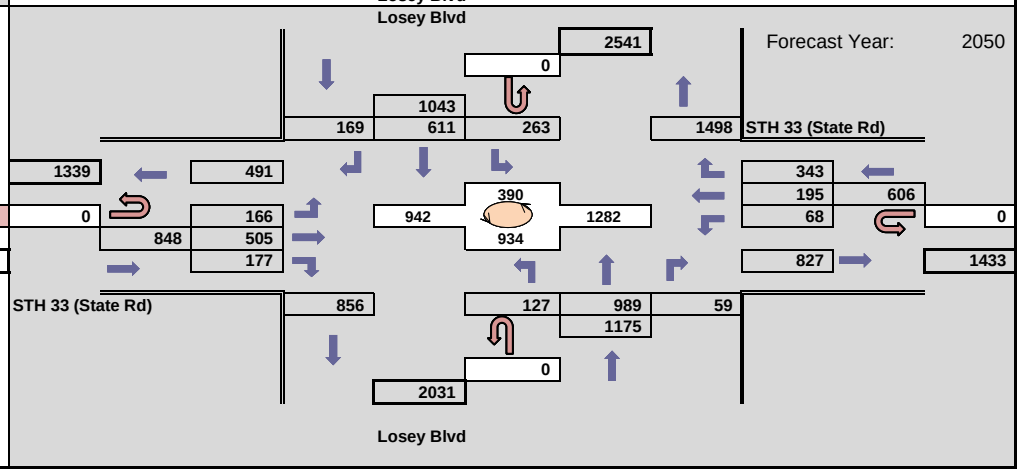

WisDOT Bureau of Planning & Economic Development
Traffic Forecasting Section
Forecast by: Miao Zhang
Phone: (608) 266 - 7995
Email: miao.zhang@dot.wi.gov

Projected AM Design Hour Traffic Volumes

Indicates roundabout

Design Hour: 7:00-8:00am

Forecast Completed: 2/23/2021

Project Description

Project ID(s): 1630-08-00
Route(s): Losey
Region/COUNTY(IES): SW/La Crosse
Location: Losey Blvd & Green Bay St.

Design Hour Turning Movement Data

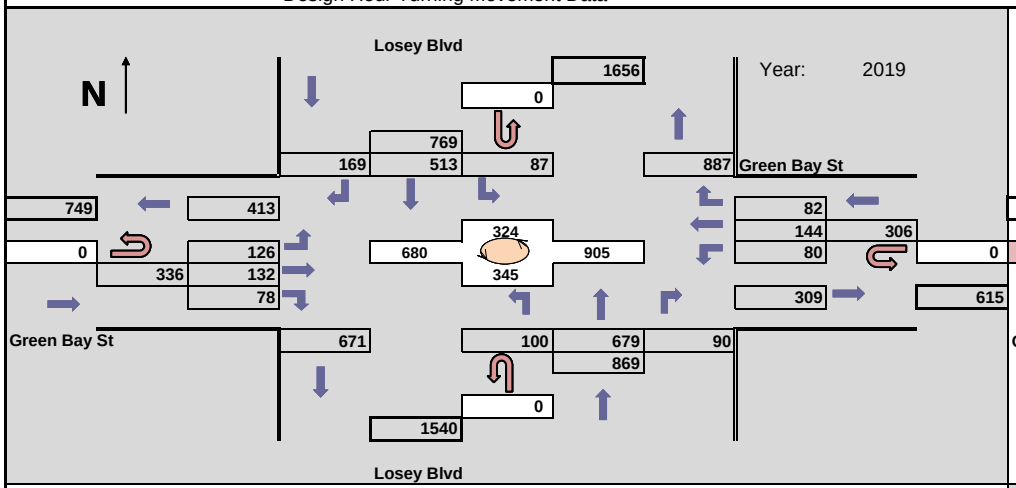

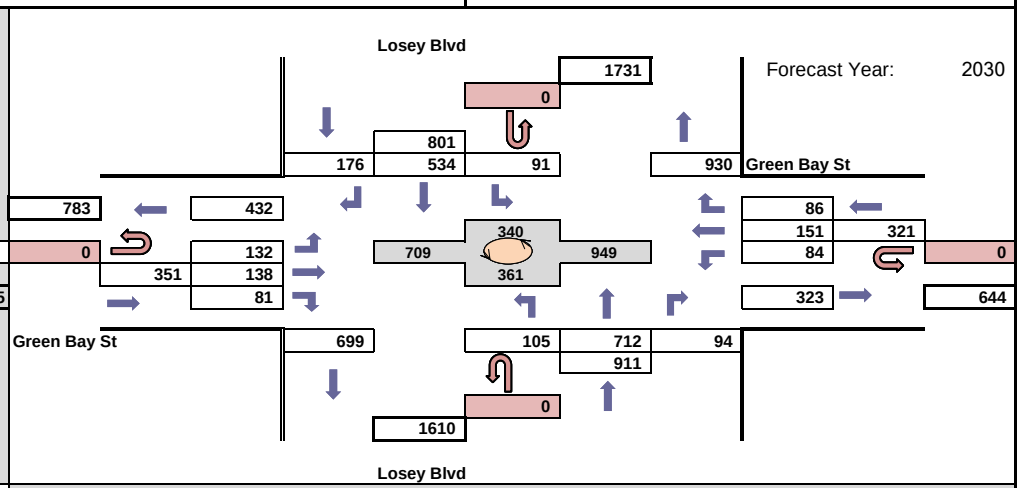

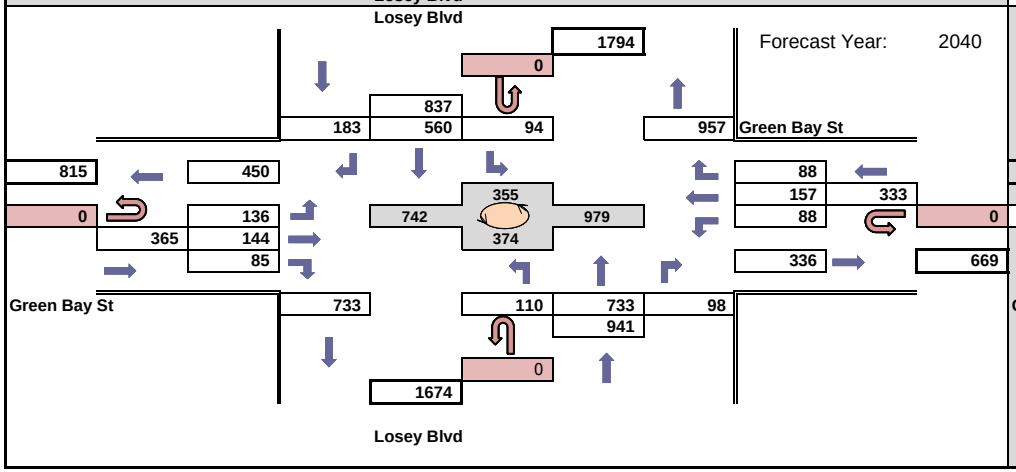

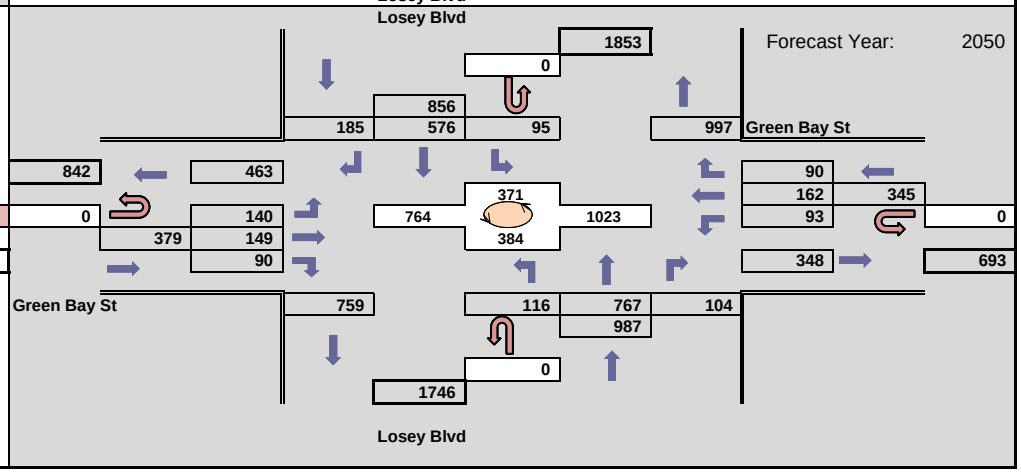

WisDOT Bureau of Planning & Economic Development
Traffic Forecasting Section
Forecast by: Miao Zhang
Phone: (608) 266 - 7995
Email: miao.zhang@dot.wi.gov

Projected PM Design Hour Traffic Volumes

Indicates roundabout

Design Hour: 3:30-4:30pm

Forecast Completed: 2/23/2021

Project Description

Project ID(s): 1630-08-00
Route(s): Losey
Region/COUNTY(IES): SW/La Crosse
Location: Losey Blvd & Green Bay St.

Design Hour Turning Movement Data

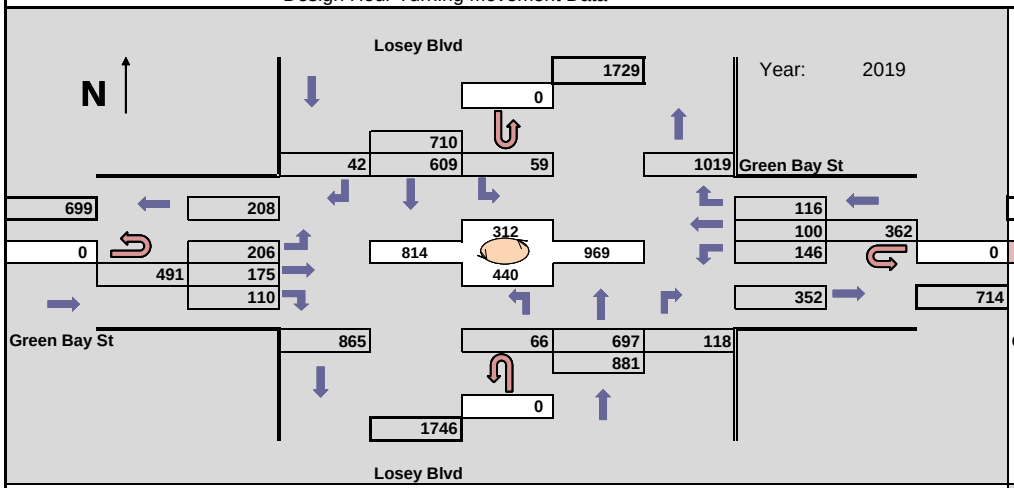

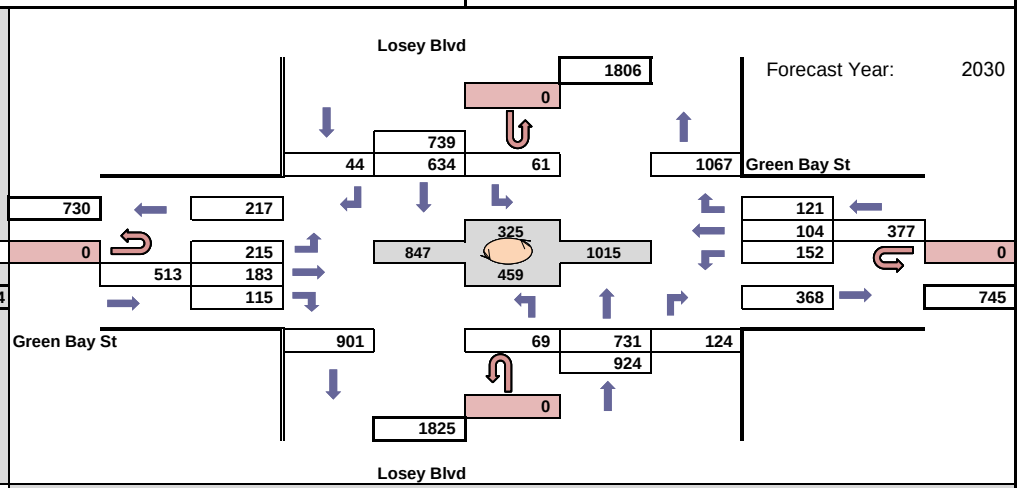

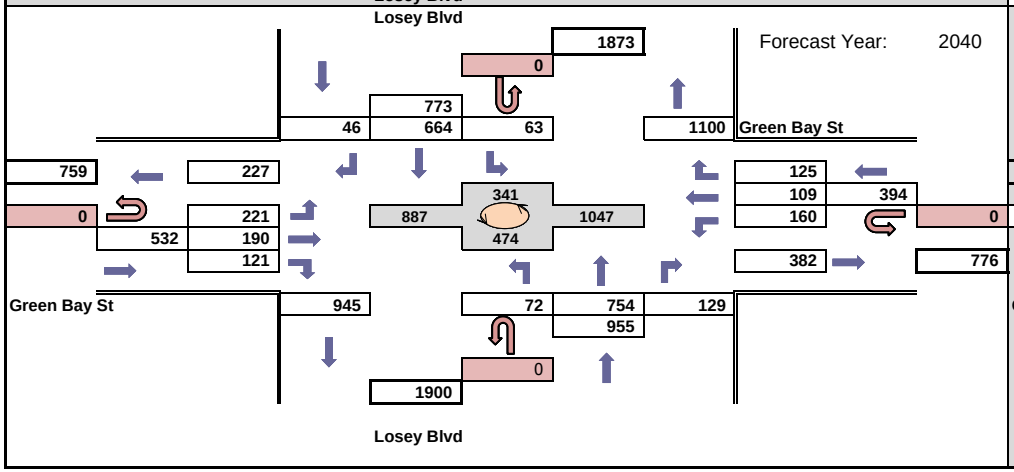

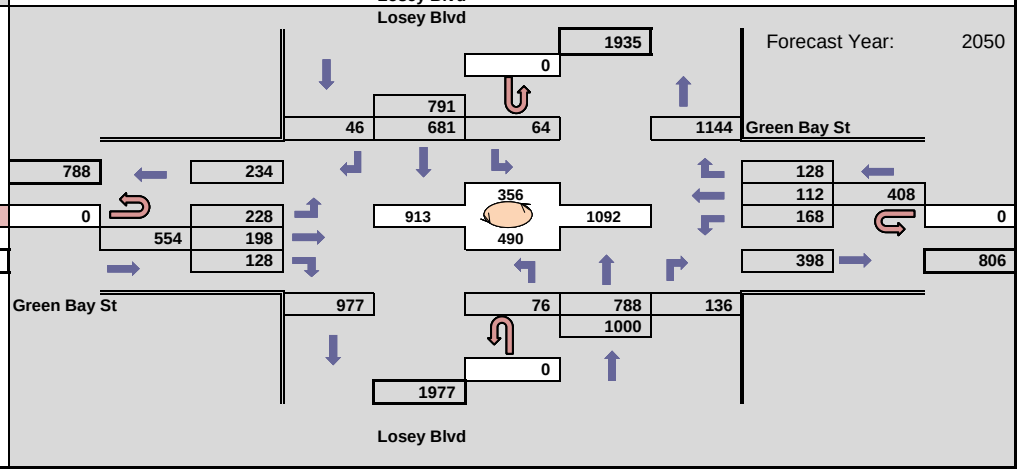

WisDOT Bureau of Planning & Economic Development
Traffic Forecasting Section
Forecast by: Miao Zhang
Phone: (608) 266 - 7995
Email: miao.zhang@dot.wi.gov

Projected AM Design Hour Traffic Volumes

Indicates roundabout

Design Hour: 7:00-8:00am

Forecast Completed: 2/23/2021

Project Description

Project ID(s): 1630-08-00
Route(s): Losey
Region/COUNTY(IES): SW/La Crosse
Location: Losey Blvd & Weston St

Design Hour Turning Movement Data

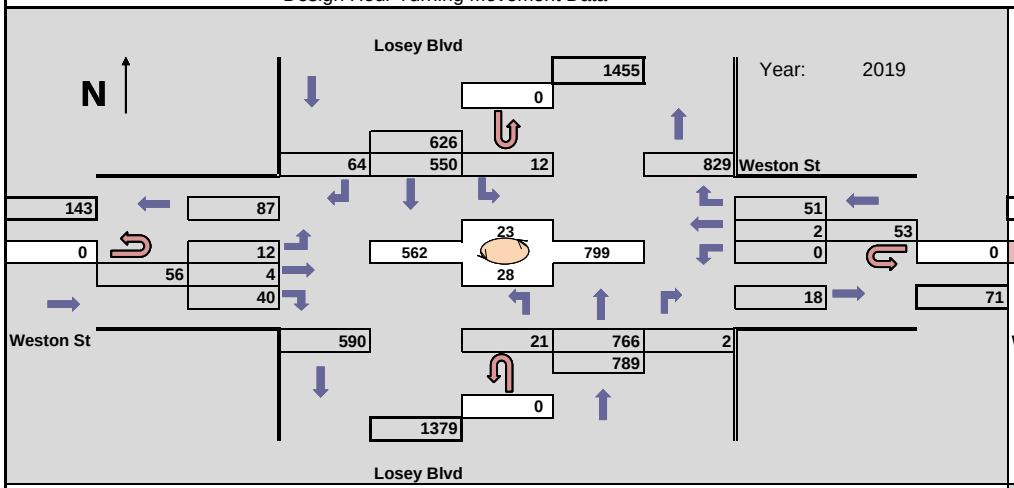

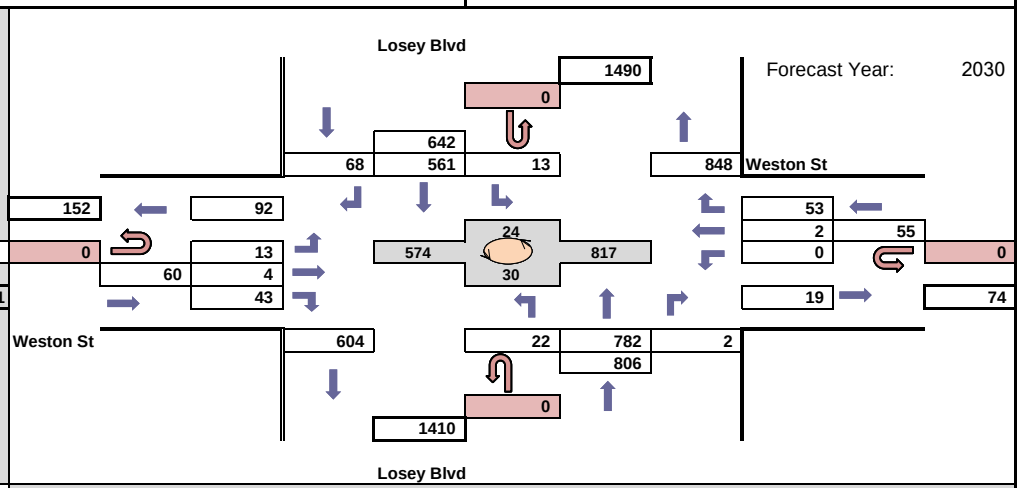

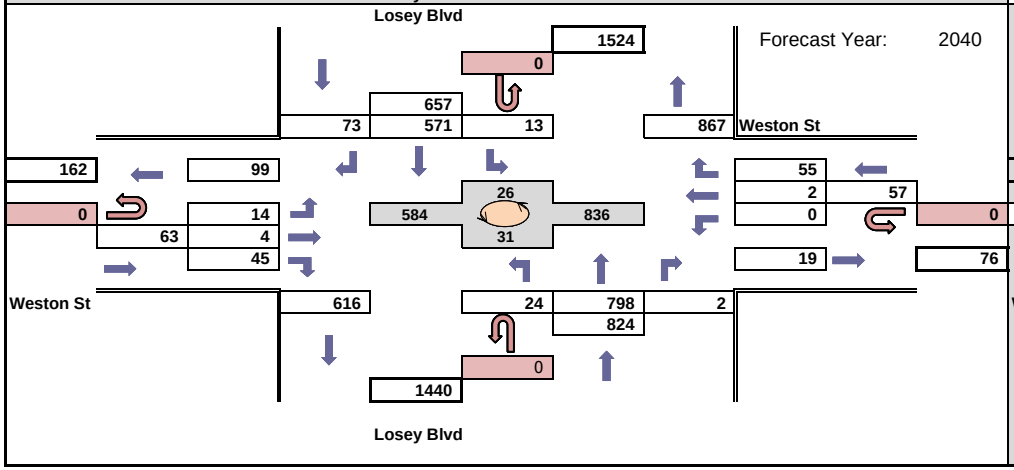

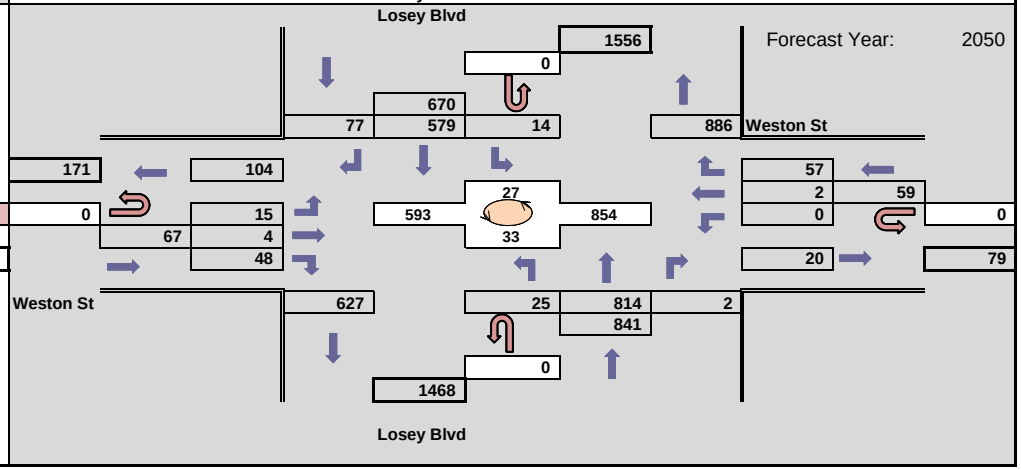

WisDOT Bureau of Planning & Economic Development
Traffic Forecasting Section
Forecast by: Miao Zhang
Phone: (608) 266 - 7995
Email: miao.zhang@dot.wi.gov

Projected PM Design Hour Traffic Volumes

Indicates roundabout

Design Hour: 3:30-4:30pm

Forecast Completed: 2/23/2021

Project Description

Project ID(s): 1630-08-00
Route(s): Losey
Region/COUNTY(IES): SW/La Crosse
Location: Losey Blvd & Weston St

Design Hour Turning Movement Data

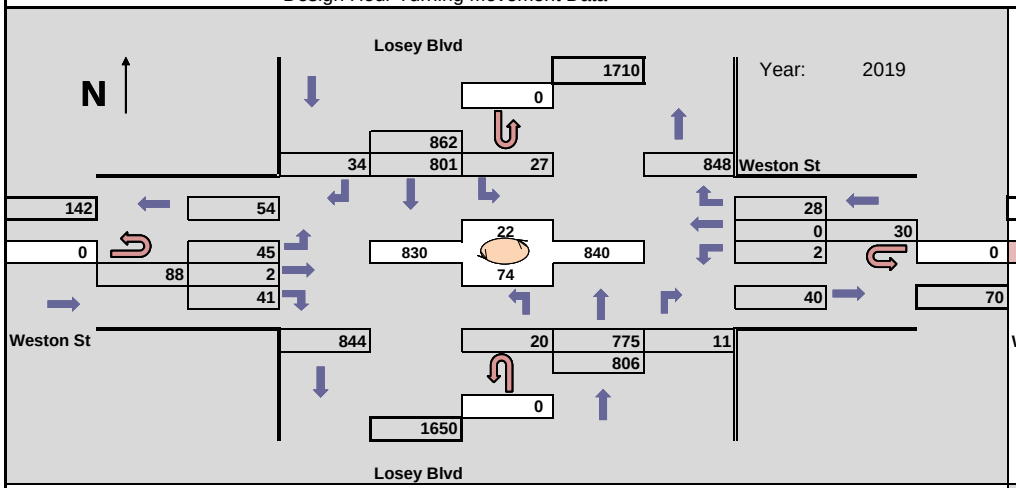

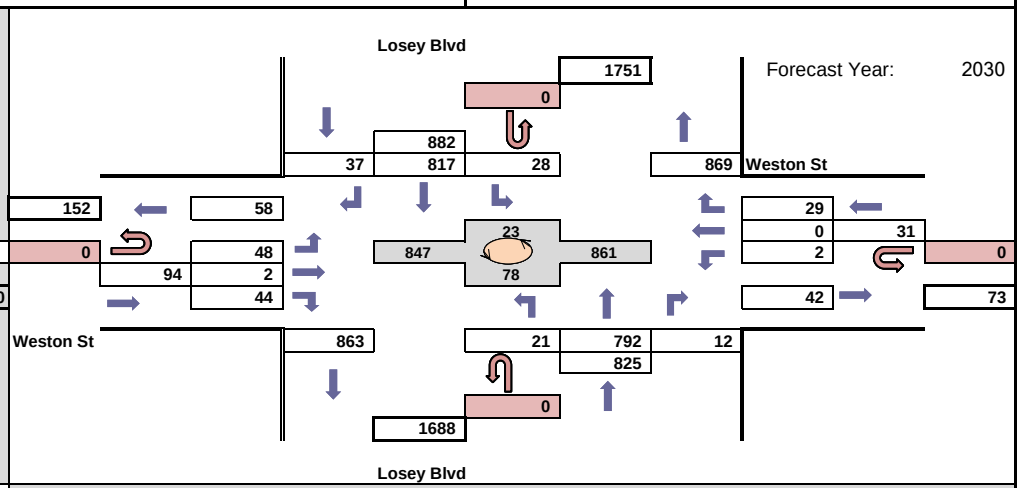

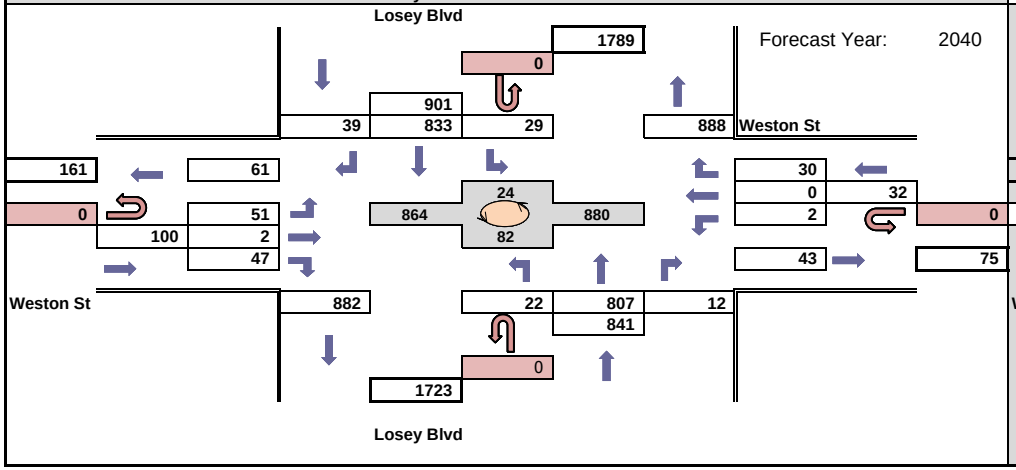

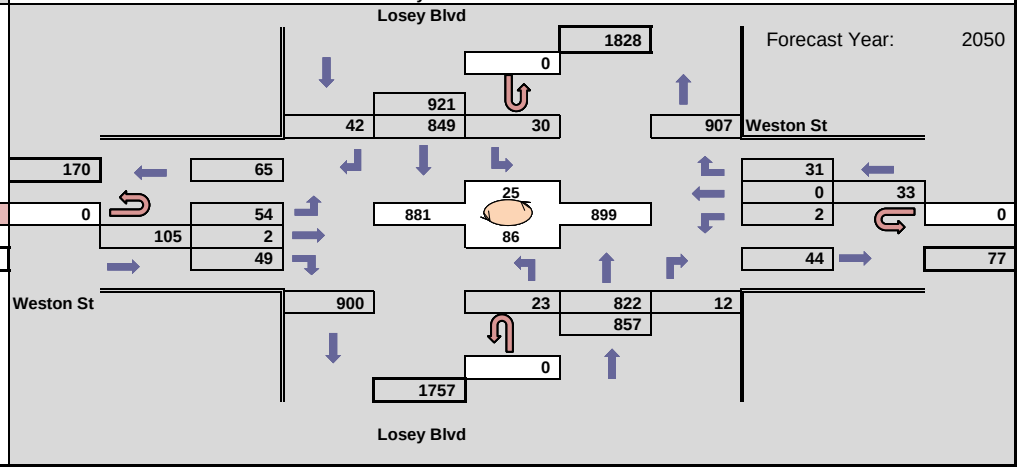

WisDOT Bureau of Planning & Economic Development
Traffic Forecasting Section
Forecast by: Miao Zhang
Phone: (608) 266 - 7995
Email: miao.zhang@dot.wi.gov

Projected AM Design Hour Traffic Volumes

Indicates roundabout

Design Hour: 7:00-8:00am

Forecast Completed: 2/23/2021

Project Description

Project ID(s): 1630-08-00
Route(s): Losey
Region/COUNTY(IES): SW/La Crosse
Location: Losey Blvd & Ward Ave

Design Hour Turning Movement Data

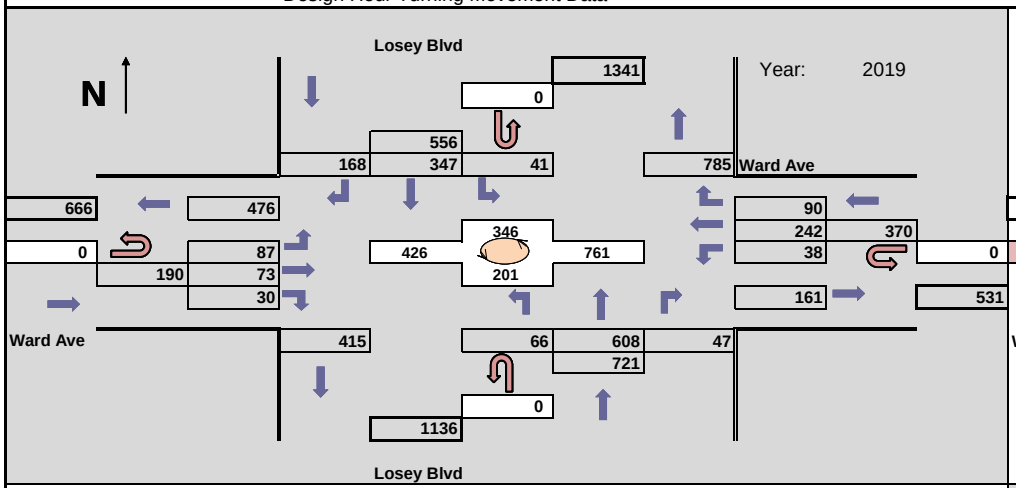

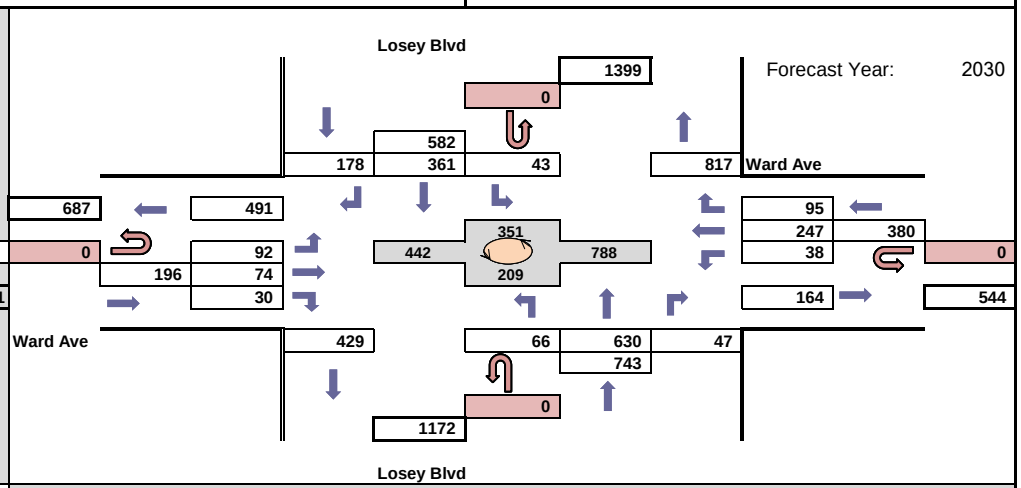

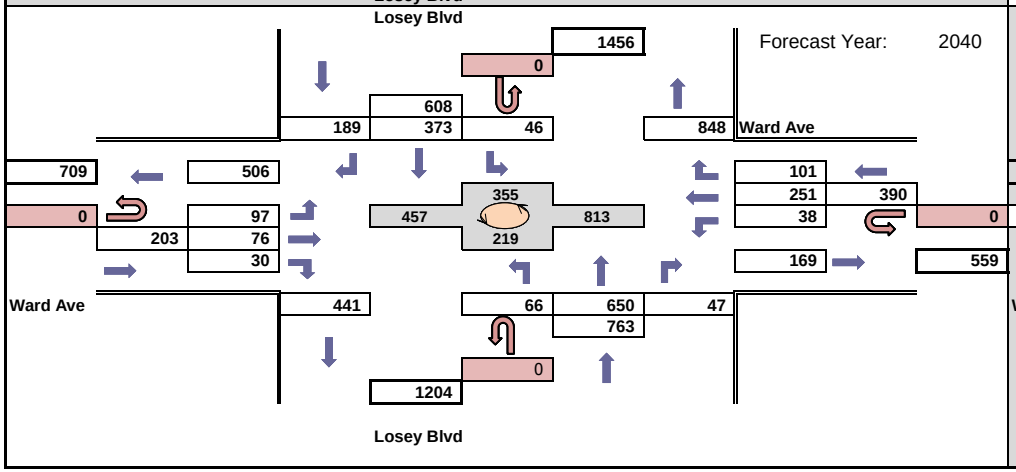

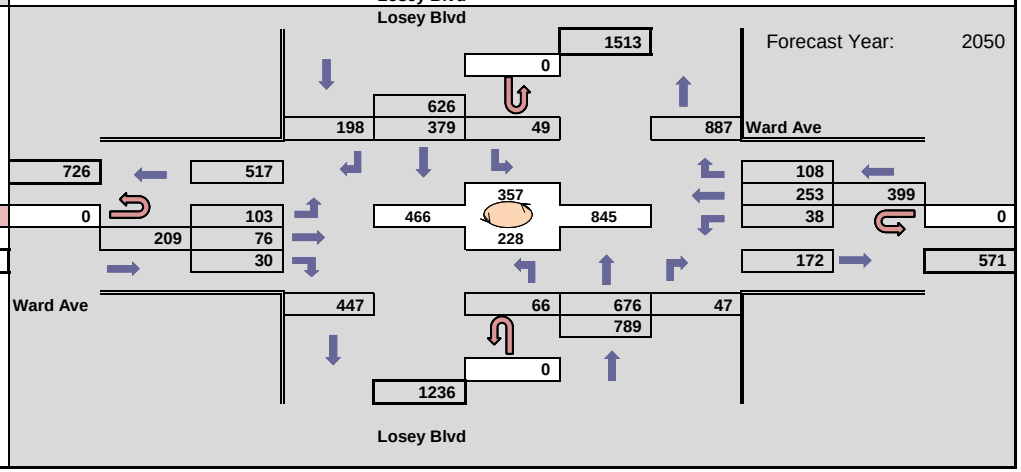

WisDOT Bureau of Planning & Economic Development
Traffic Forecasting Section
Forecast by: Miao Zhang
Phone: (608) 266 - 7995
Email: miao.zhang@dot.wi.gov

Projected PM Design Hour Traffic Volumes

Indicates roundabout

Design Hour: 3:30-4:30pm

Forecast Completed: 2/23/2021

Project Description

Project ID(s): 1630-08-00
Route(s): Losey
Region/COUNTY(IES): SW/La Crosse
Location: Losey Blvd & Ward Ave

Design Hour Turning Movement Data

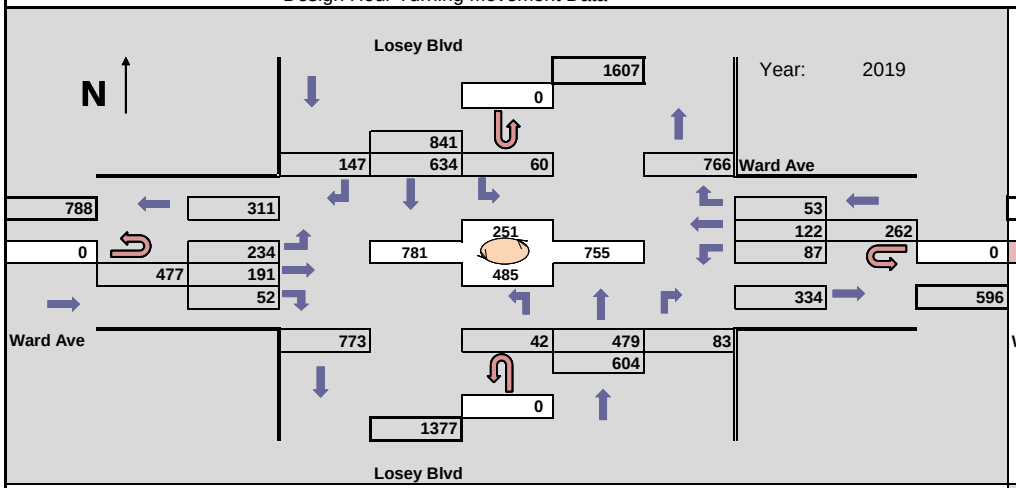

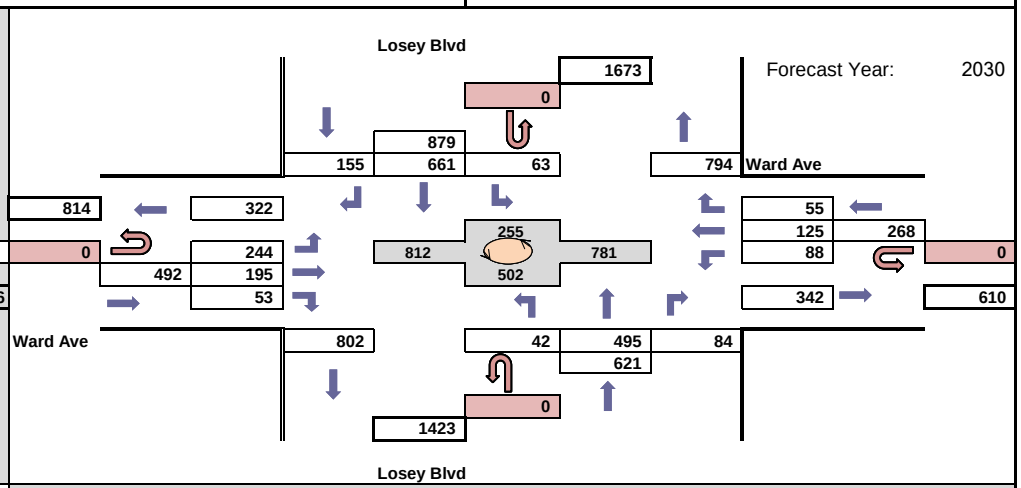

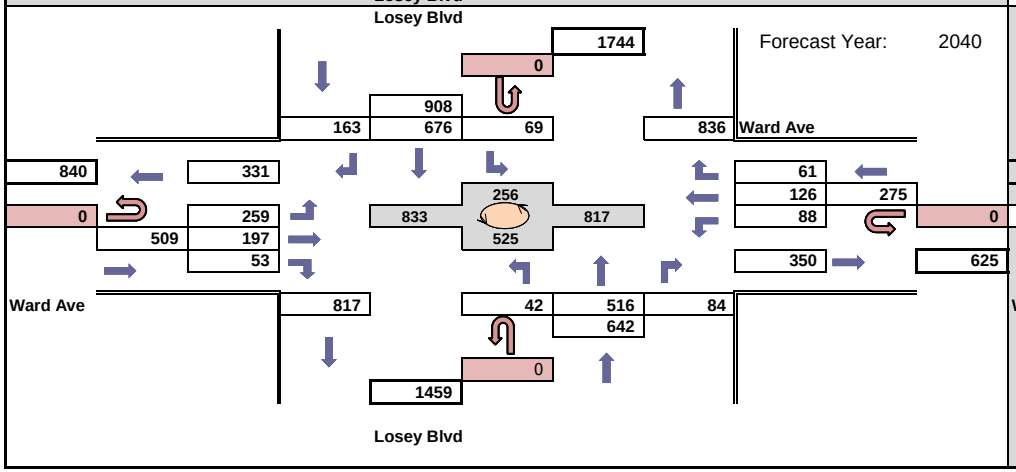

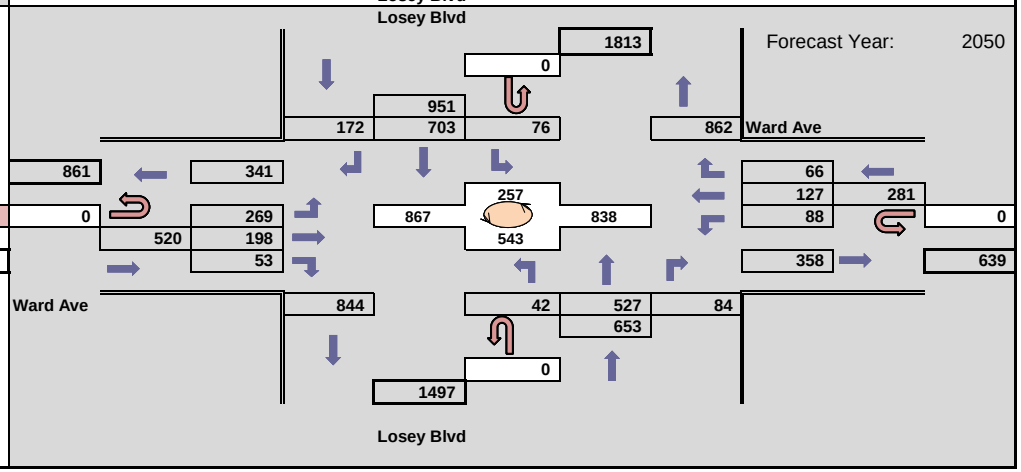

WisDOT TRAFFIC FORECAST REPORT	Region/COUNTY(IES): SW/La Crosse	Developed by: Miao Zhang
PROJECT ID(S): 1630-08-00	LOCATION: STH 35 West Ave. Segment	Phone: (608) 266-7995
ROUTE(S): STH 35	COMPLETED: 02/23/2021	
Traffic Forecasting Section; Bureau of Planning and Economic Development; Division of Transportation Investment Management		E-Mail: miao.zhang@dot.wi.gov

Site(s)	Route(s)	Volume(s)	Site Growth %
320496	STH 35	24830	0.22%
320535	STH 35	23820	0.20%
326116	STH 35	19970	0.19%
320598	STH 35	10570	0.11%
320606	STH 35	11090	0.21%

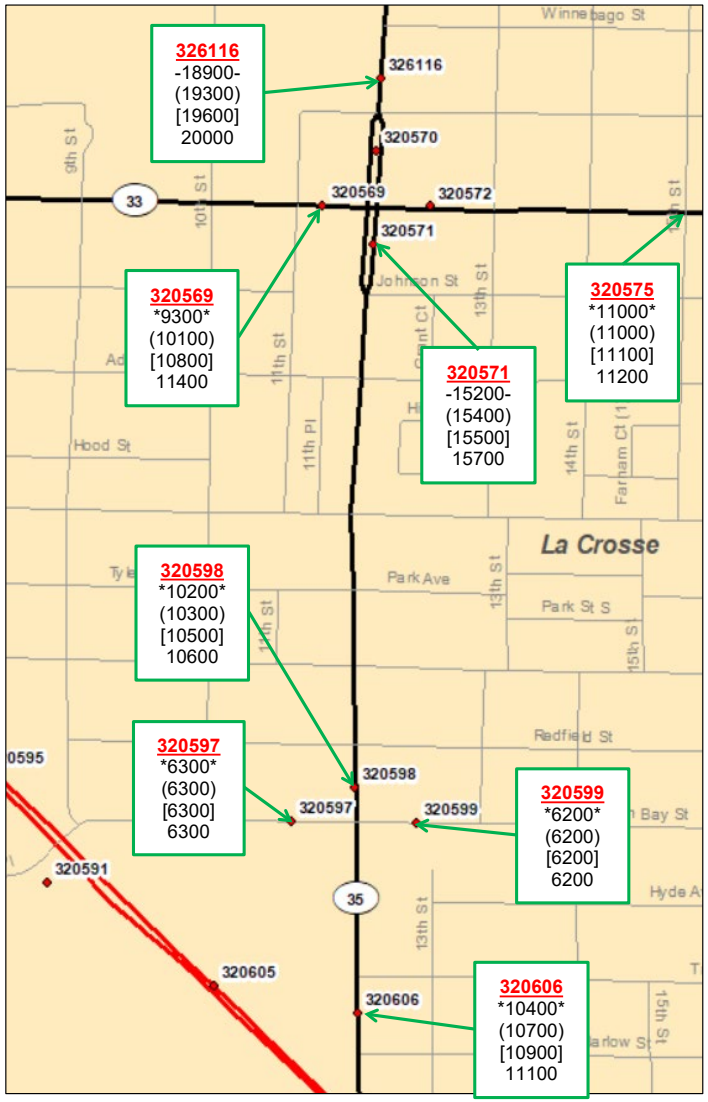

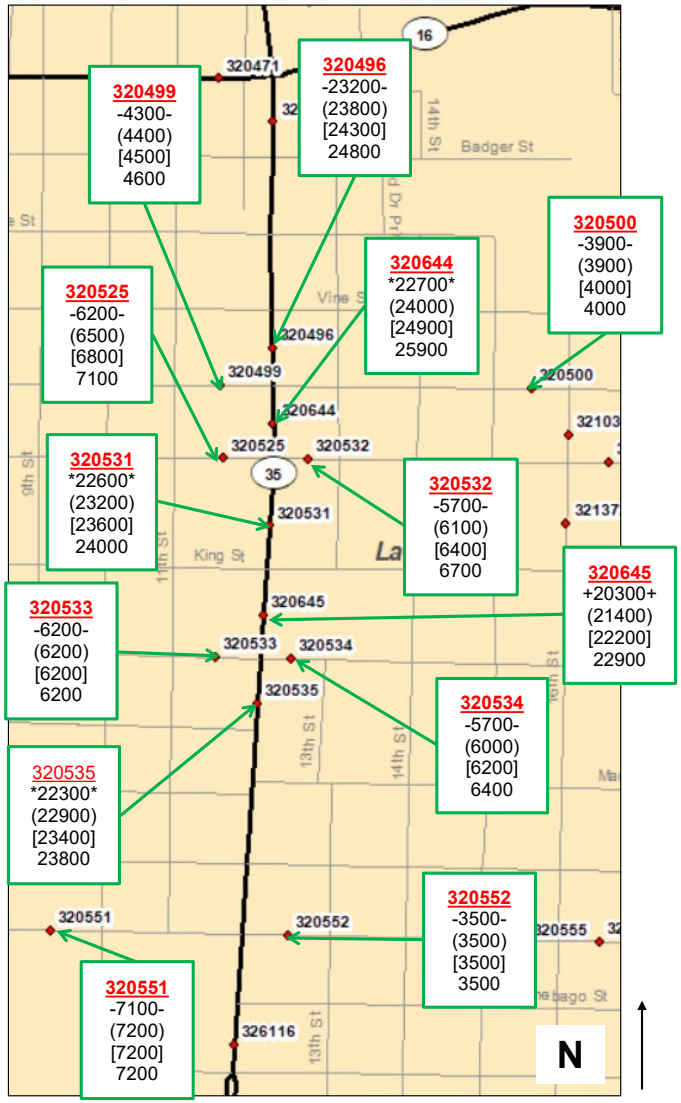

SITE ID = Colored, **bolded**, and underlined

Symbol	Count	Symbol	Forecast
-000-	2019 Count	(000)	2030 AADT
000	2017 Count	[000]	2040 AADT
+000+	2014 Count	000	2050 AADT

NOTES ON THE FORECAST:

1. This projection assumes that no major new traffic generators will be added to the development already included in the 2010/2040 La Crosse Regional Travel Demand Model.
2. Vehicle classification data and design values (K factors, directional splits, and percent trucks in design hours) are available here: http://wisconsindot.gov/Pages/projects/data-plan/traf-fore/default.aspx
3. STH 35 is a Factor Group II (Urban-Other) roadways (indicating low to moderate fluctuation in traffic from a seasonal perspective).
4. The 2010/2040 La Crosse Regional Travel Demand Model was used to complete this forecast. The Traffic Analysis Forecasting Information System output was used as a comparison tool to check against the model output. Adjustments were made as needed.
5. Roadway improvements coded within the existing plus committed (E+C) network of the 2010/2040 La Crosse Regional Travel Demand Model were assumed to be in place for the purposes of developing this forecast.

WisDOT Bureau of Planning & Economic Development
Traffic Forecasting Section
Forecast by: Miao Zhang
Phone: (608) 266 - 7995
Email: miao.zhang@dot.wi.gov

Projected AM Design Hour Traffic Volumes

Indicates roundabout

Design Hour: 7:00-8:00am

Forecast Completed: 2/23/2021

Project Description

Project ID(s): 1630-08-00
Route(s): STH 35
Region/COUNTY(IES): SW/La Crosse
Location: WIS 35 (West Ave) & State St

Design Hour Turning Movement Data

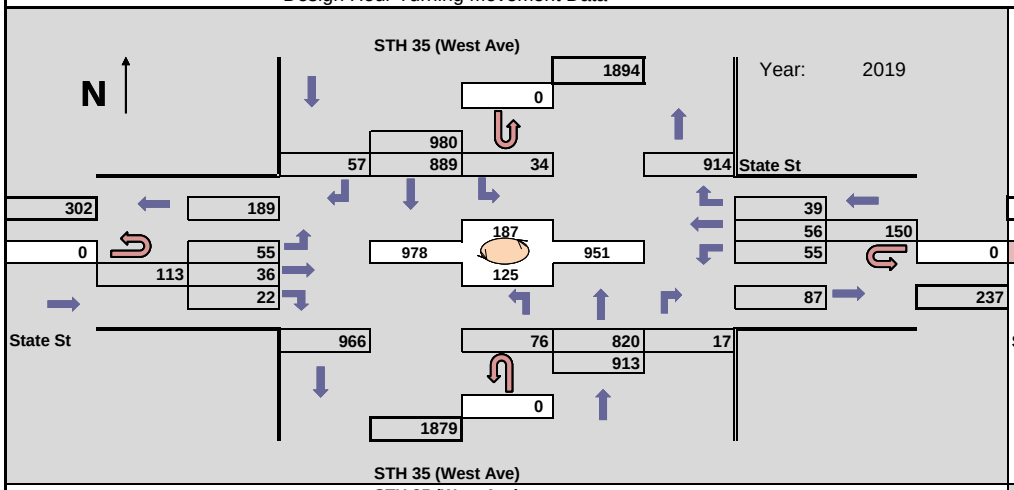

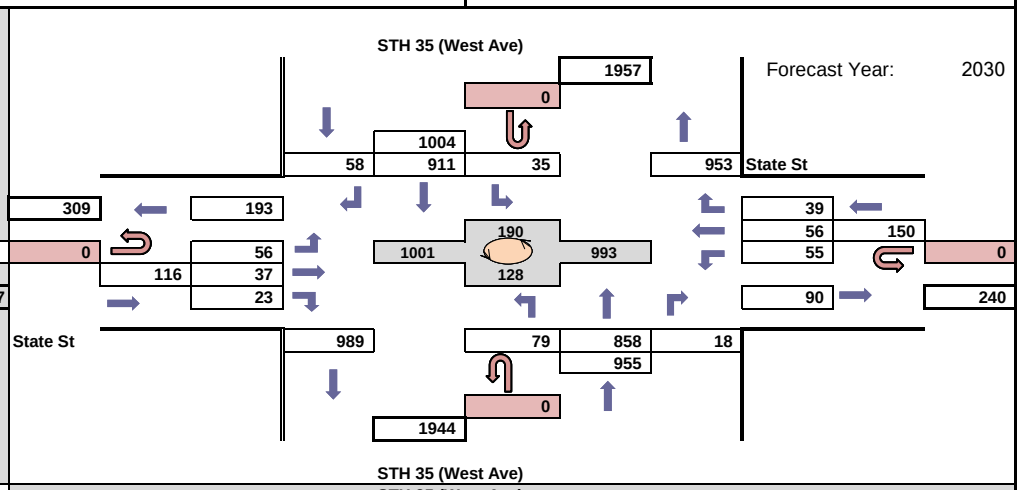

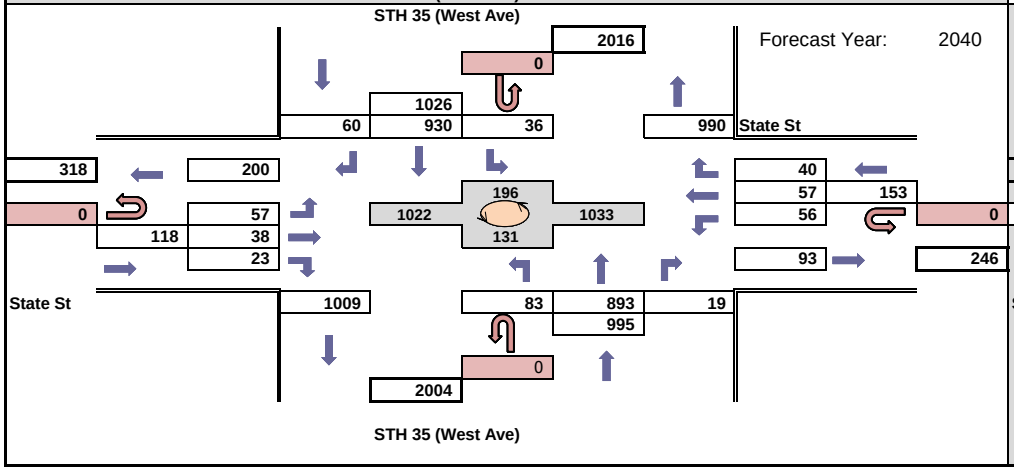

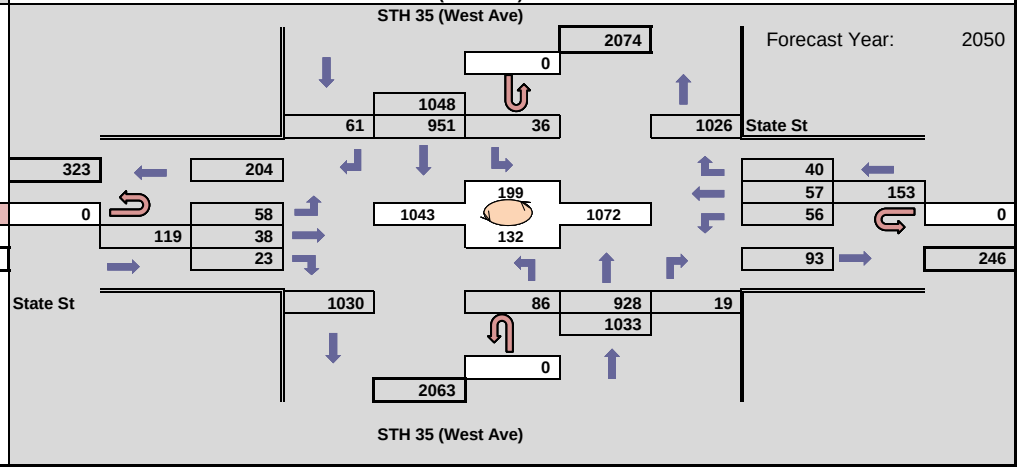

WisDOT Bureau of Planning & Economic Development
Traffic Forecasting Section
Forecast by: Miao Zhang
Phone: (608) 266 - 7995
Email: miao.zhang@dot.wi.gov

Projected PM Design Hour Traffic Volumes

Indicates roundabout

Design Hour: 4:15-5:15pm

Forecast Completed: 2/23/2021

Project Description

Project ID(s): 1630-08-00
Route(s): STH 35
Region/COUNTY(IES): SW/La Crosse
Location: WIS 35 (West Ave) & State St

Design Hour Turning Movement Data

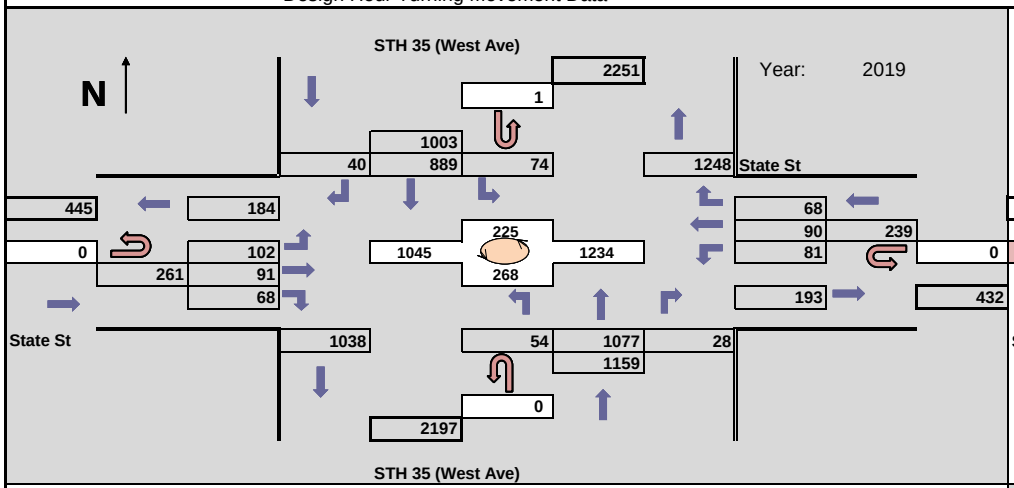

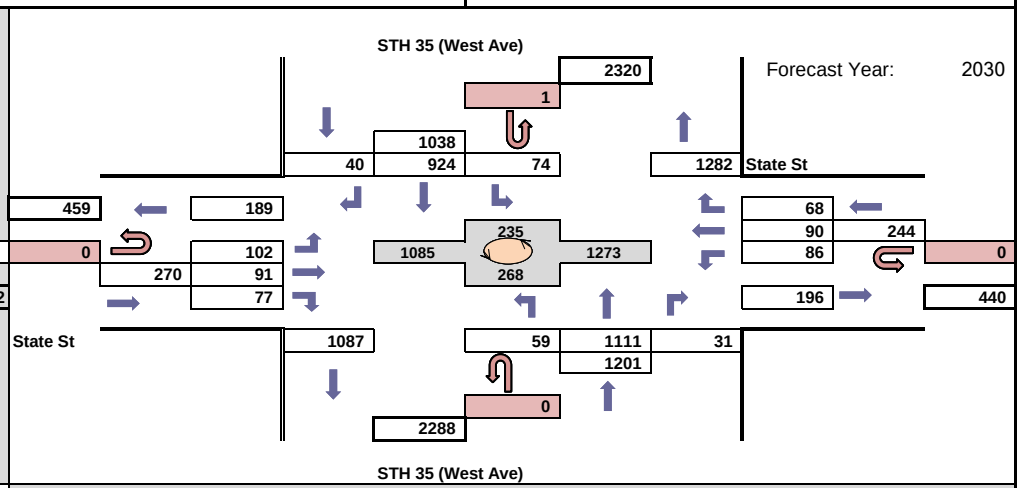

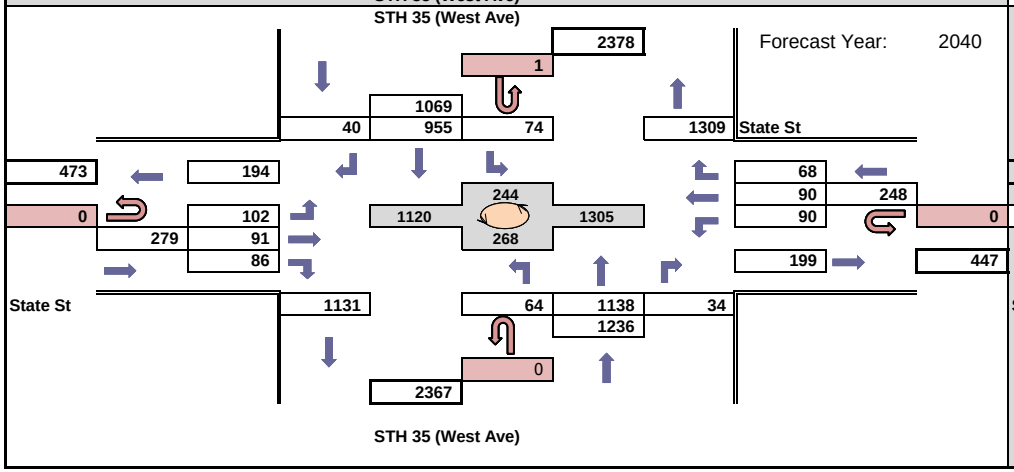

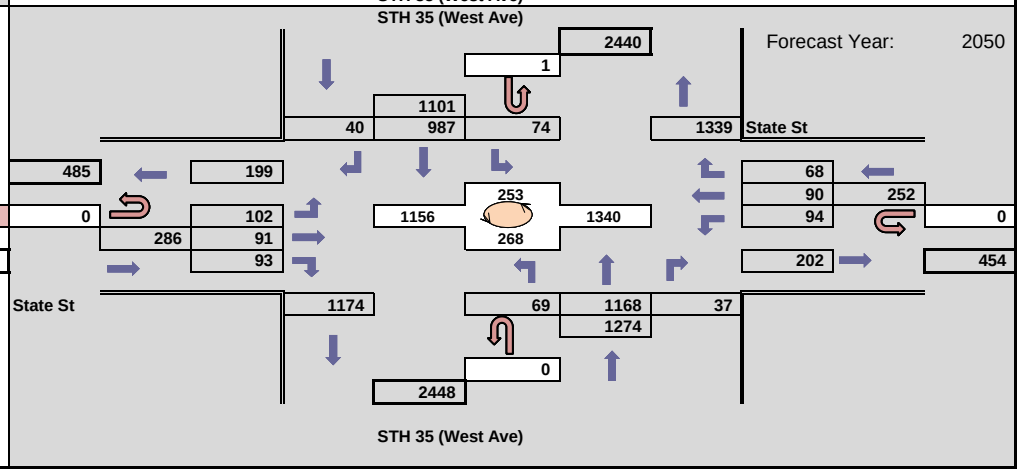

WisDOT Bureau of Planning & Economic Development
Traffic Forecasting Section
Forecast by: Miao Zhang
Phone: (608) 266 - 7995
Email: miao.zhang@dot.wi.gov

Projected AM Design Hour Traffic Volumes

Indicates roundabout

Design Hour: 7:00-8:00am

Forecast Completed: 2/23/2021

Project Description

Project ID(s): 1630-08-00
Route(s): STH 35
Region/COUNTY(IES): SW/La Crosse
Location: WIS 35 (West Ave) & Main St

Design Hour Turning Movement Data

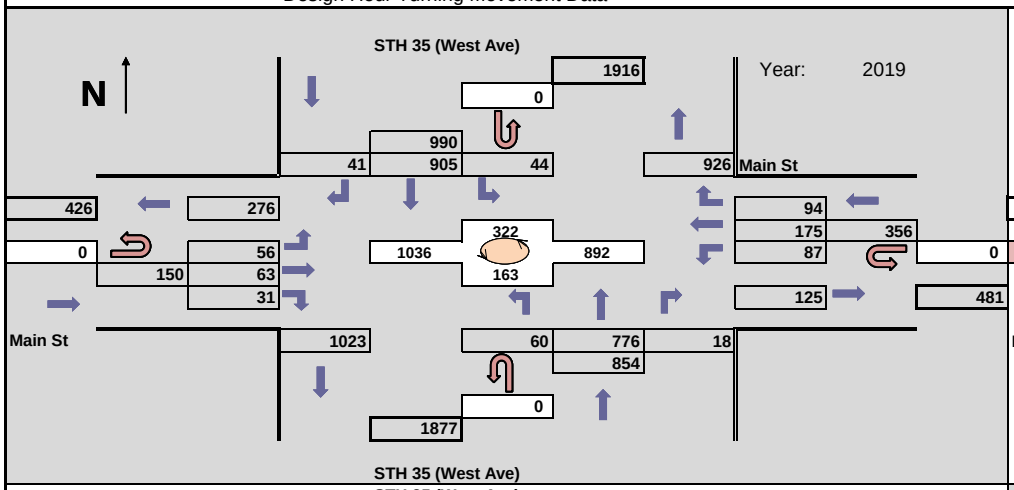

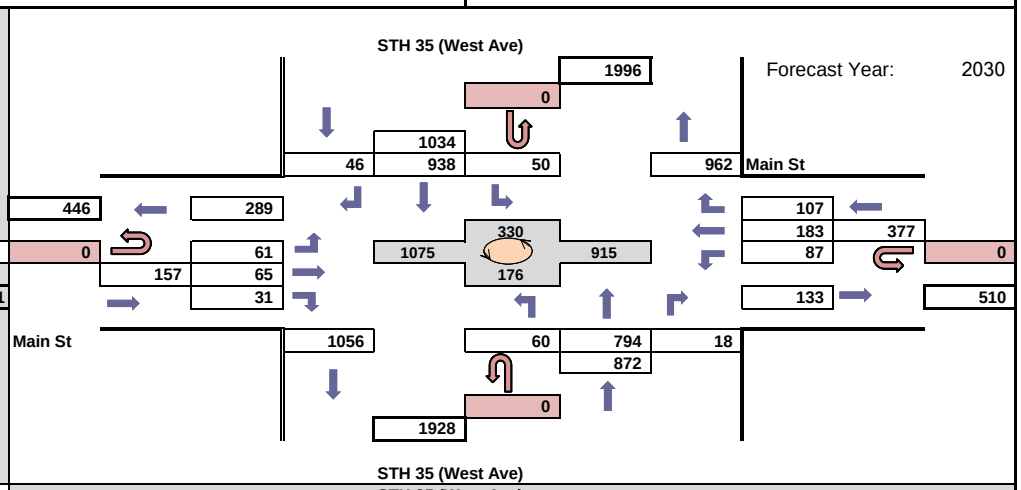

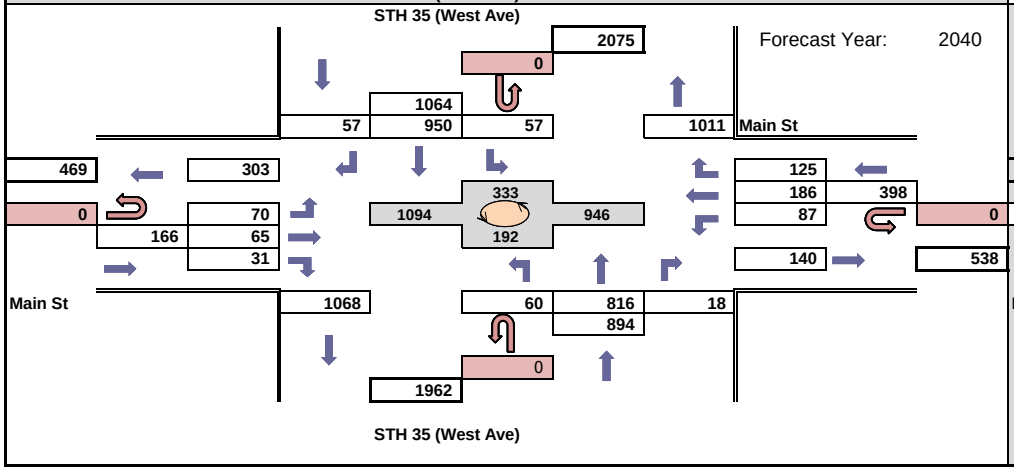

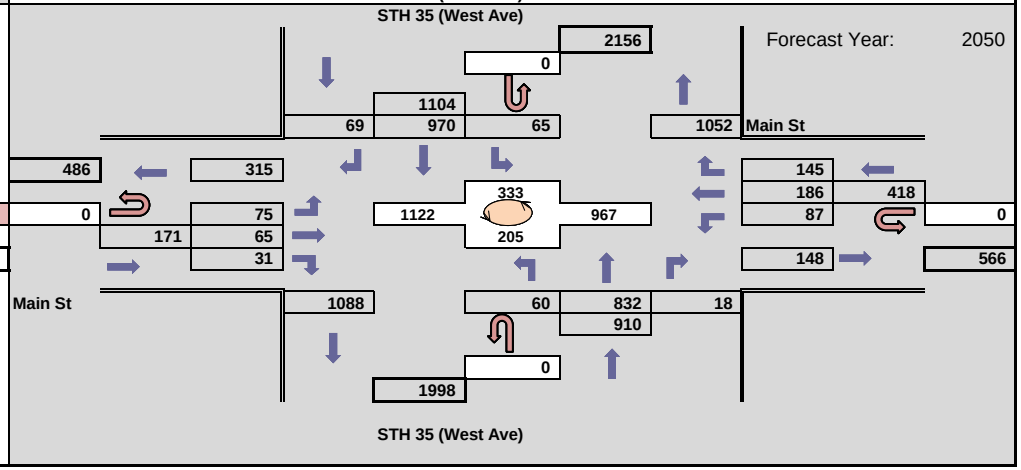

WisDOT Bureau of Planning & Economic Development
Traffic Forecasting Section
Forecast by: Miao Zhang
Phone: (608) 266 - 7995
Email: miao.zhang@dot.wi.gov

Projected PM Design Hour Traffic Volumes

Indicates roundabout

Design Hour: 4:15-5:15pm

Forecast Completed: 2/23/2021

Project Description

Project ID(s): 1630-08-00
Route(s): STH 35
Region/COUNTY(IES): SW/La Crosse
Location: WIS 35 (West Ave) & Main St

Design Hour Turning Movement Data

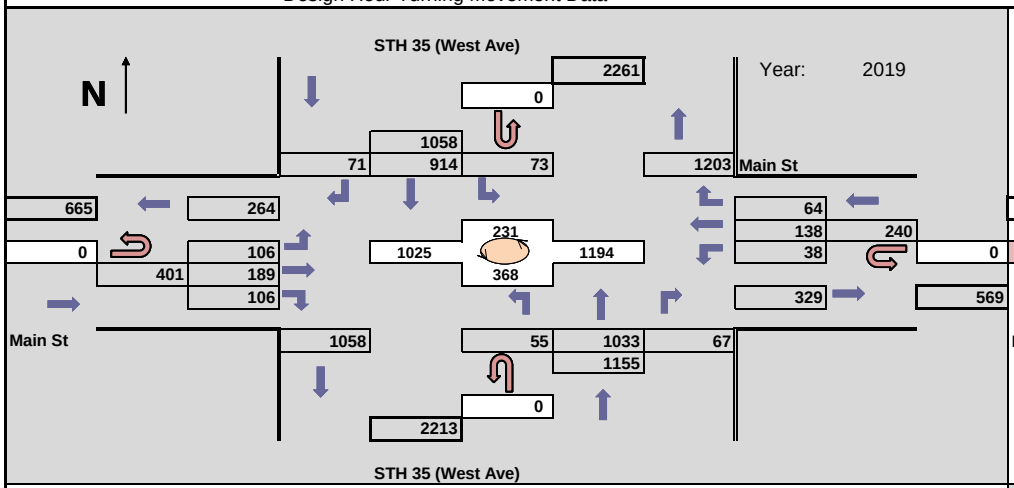

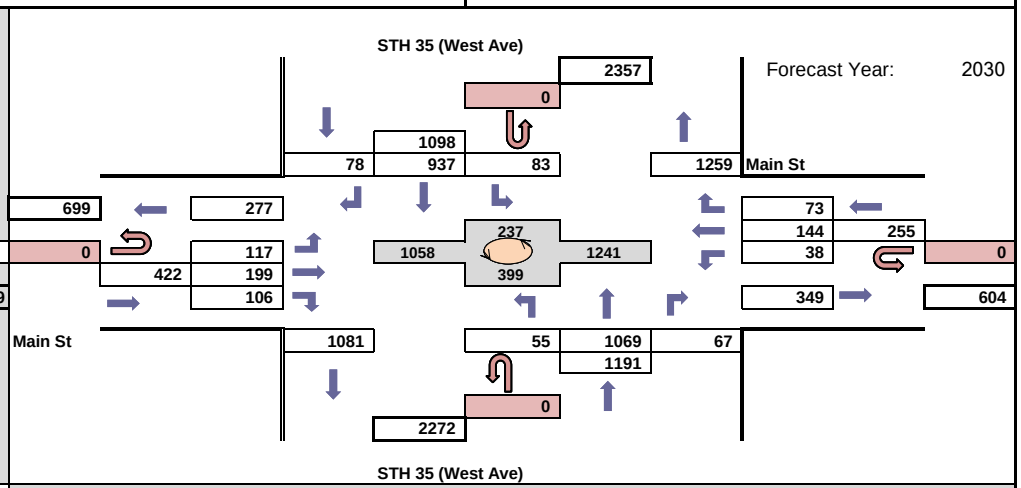

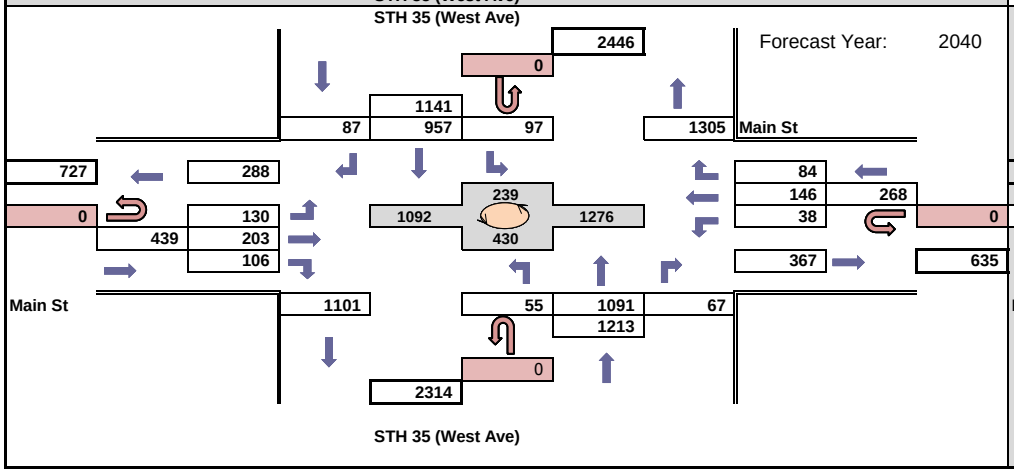

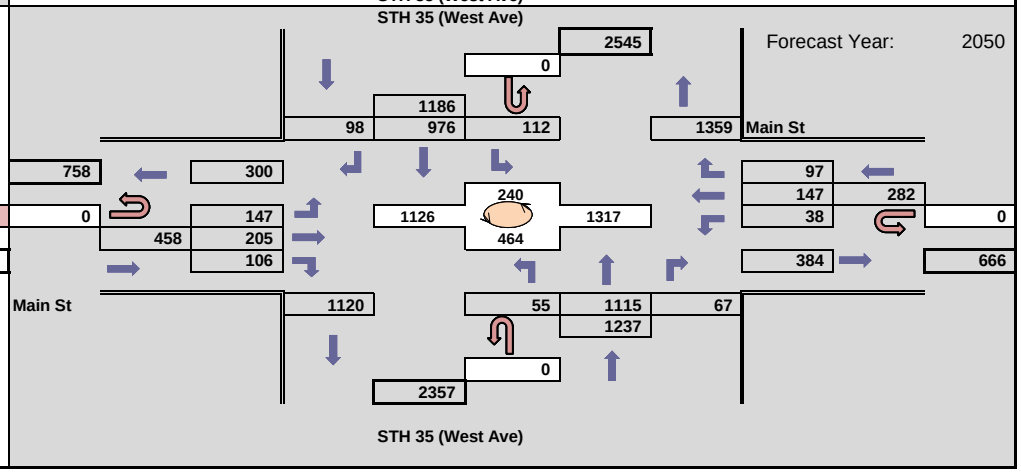

WisDOT Bureau of Planning & Economic Development
Traffic Forecasting Section
Forecast by: Miao Zhang
Phone: (608) 266 - 7995
Email: miao.zhang@dot.wi.gov

Projected AM Design Hour Traffic Volumes

Indicates roundabout

Design Hour: 7:00-8:00am

Forecast Completed: 2/23/2021

Project Description

Project ID(s): 1630-08-00
Route(s): STH 35
Region/COUNTY(IES): SW/La Crosse
Location: WIS 35 (West Ave) & Cass St

Design Hour Turning Movement Data

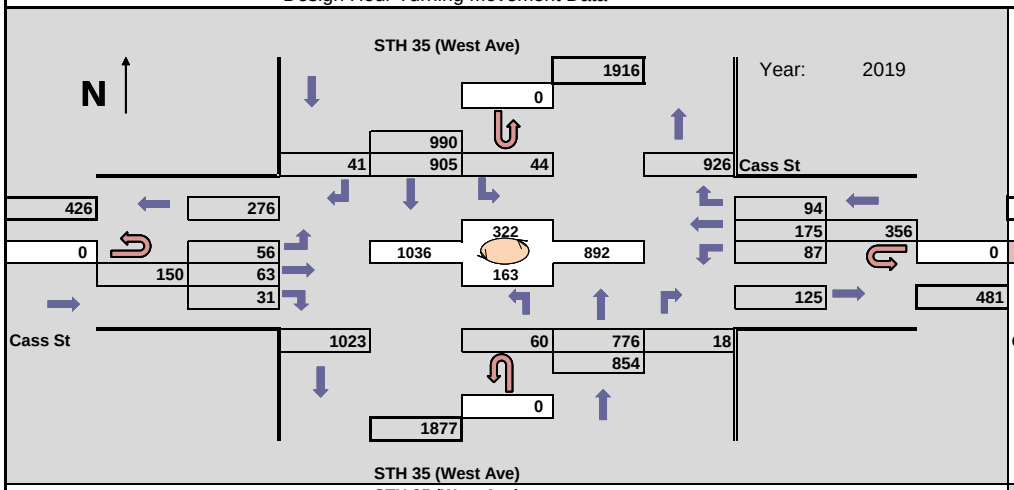

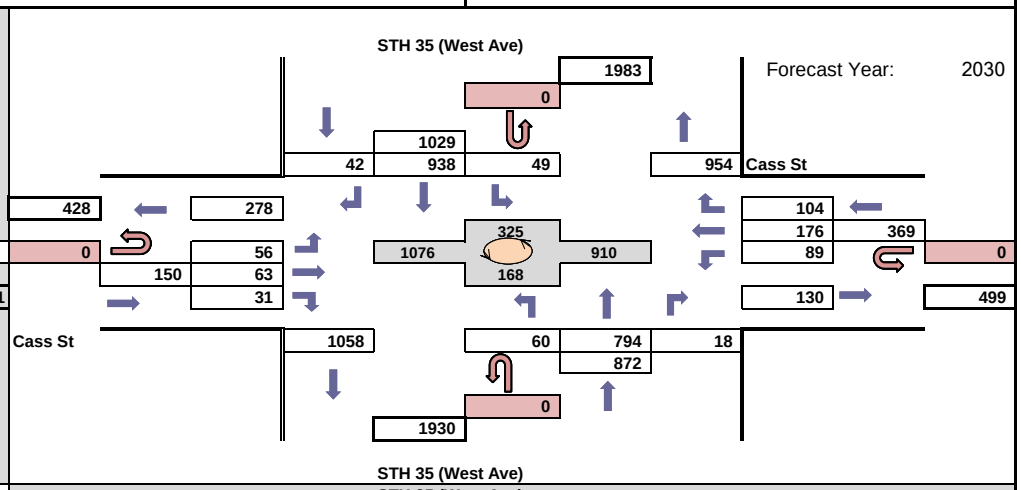

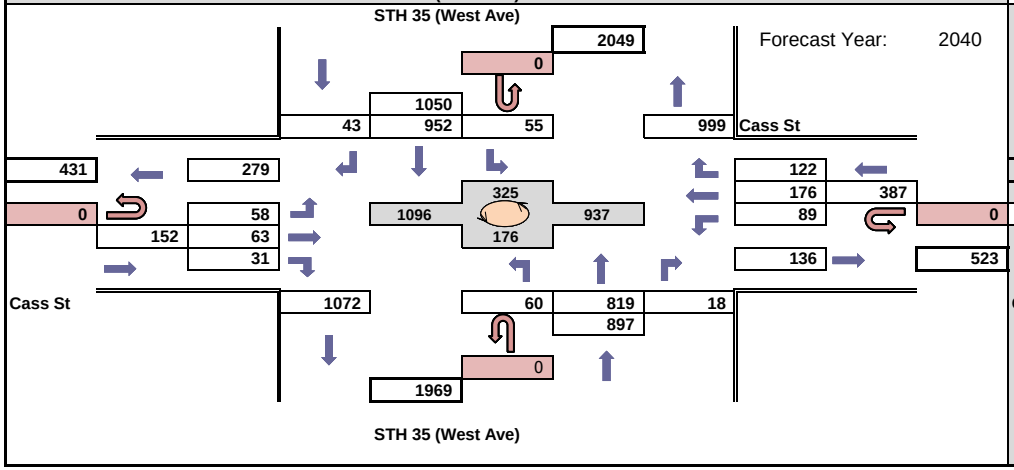

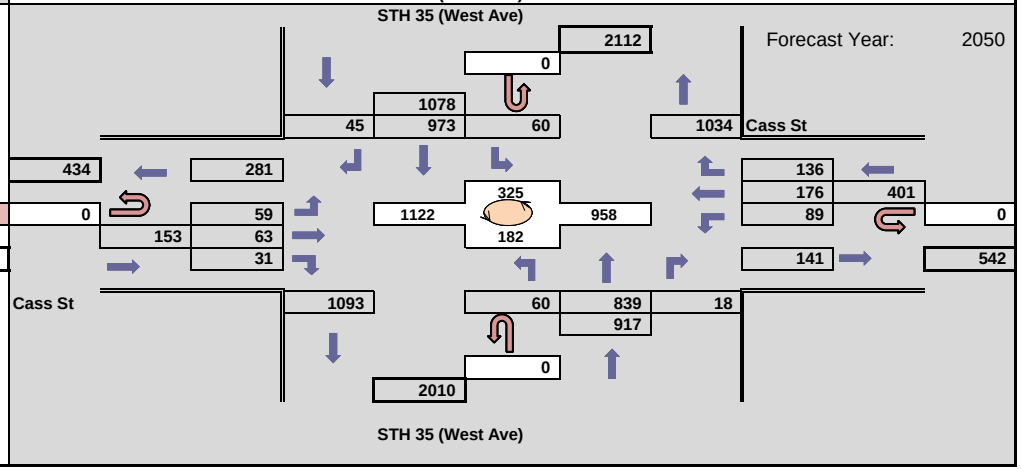

WisDOT Bureau of Planning & Economic Development
Traffic Forecasting Section
Forecast by: Miao Zhang
Phone: (608) 266 - 7995
Email: miao.zhang@dot.wi.gov

Projected PM Design Hour Traffic Volumes

Indicates roundabout

Design Hour: 4:15-5:15pm

Forecast Completed: 2/23/2021

Project Description

Project ID(s): 1630-08-00
Route(s): STH 35
Region/COUNTY(IES): SW/La Crosse
Location: WIS 35 (West Ave) & Cass St

Design Hour Turning Movement Data

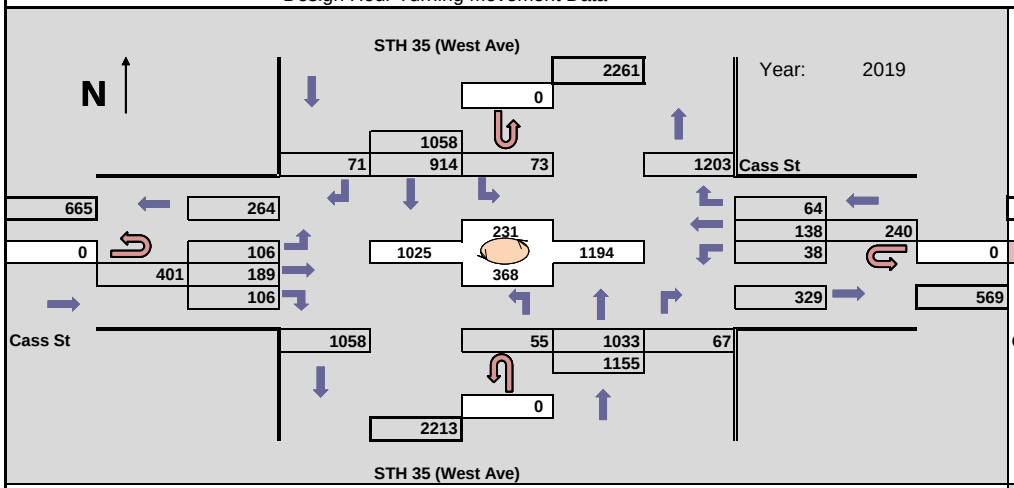

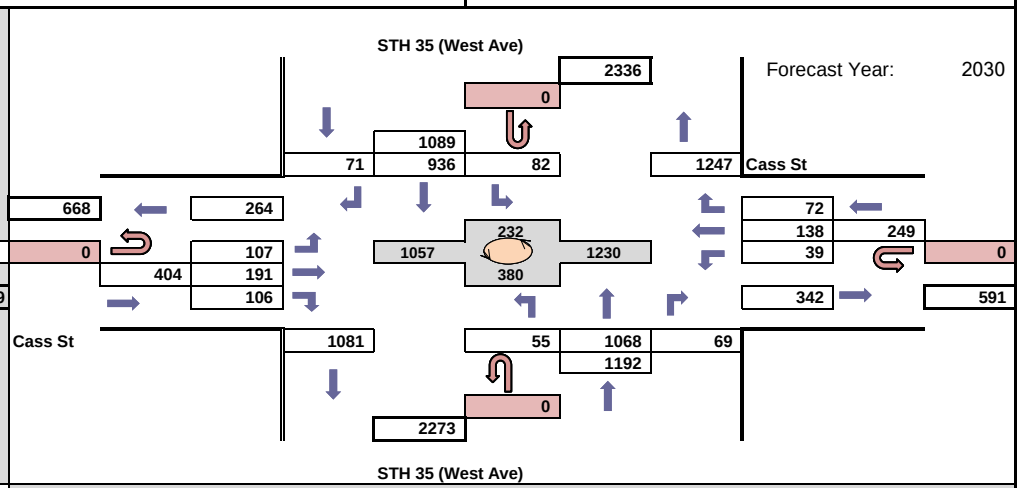

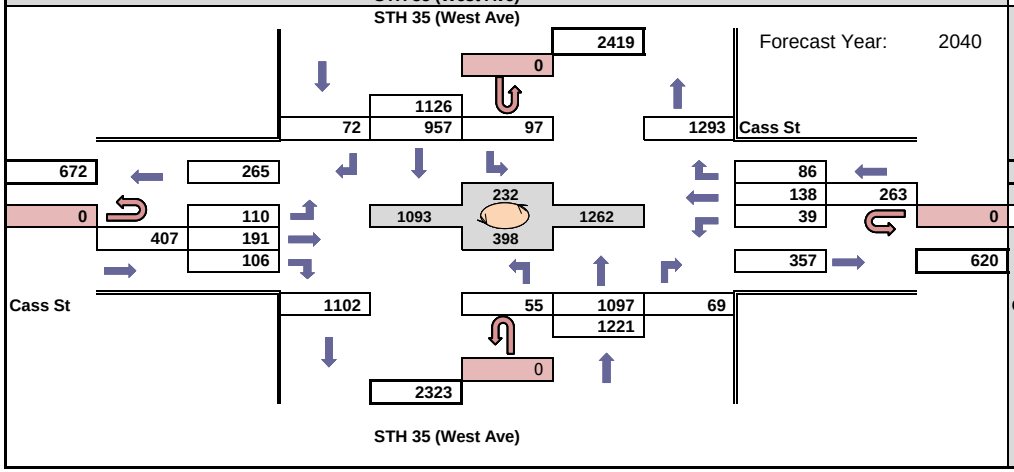

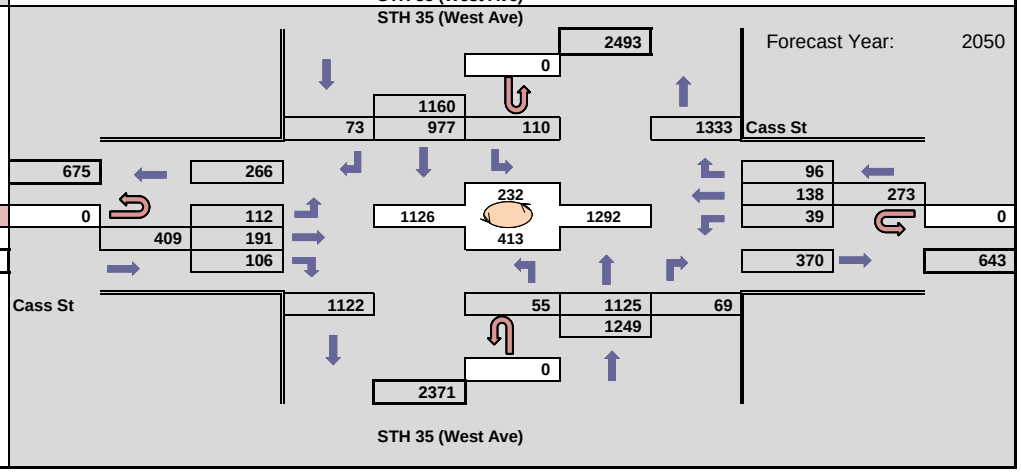

WisDOT Bureau of Planning & Economic Development
Traffic Forecasting Section
Forecast by: Miao Zhang
Phone: (608) 266 - 7995
Email: miao.zhang@dot.wi.gov

Projected AM Design Hour Traffic Volumes

Indicates roundabout

Design Hour: 7:00-8:00am

Forecast Completed: 2/23/2021

Project Description

Project ID(s): 1630-08-00
Route(s): STH 35
Region/COUNTY(IES): SW/La Crosse
Location: WIS 35 (West Ave) & Market St

Design Hour Turning Movement Data

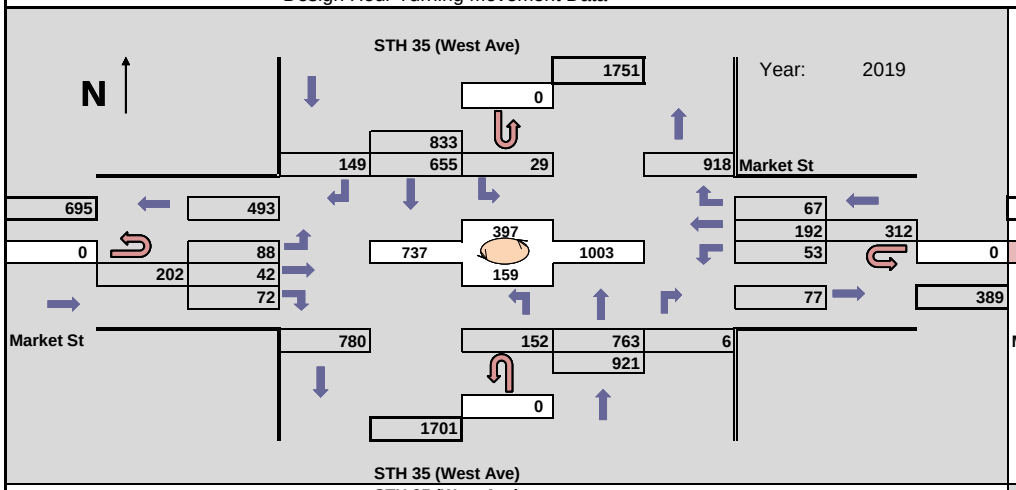

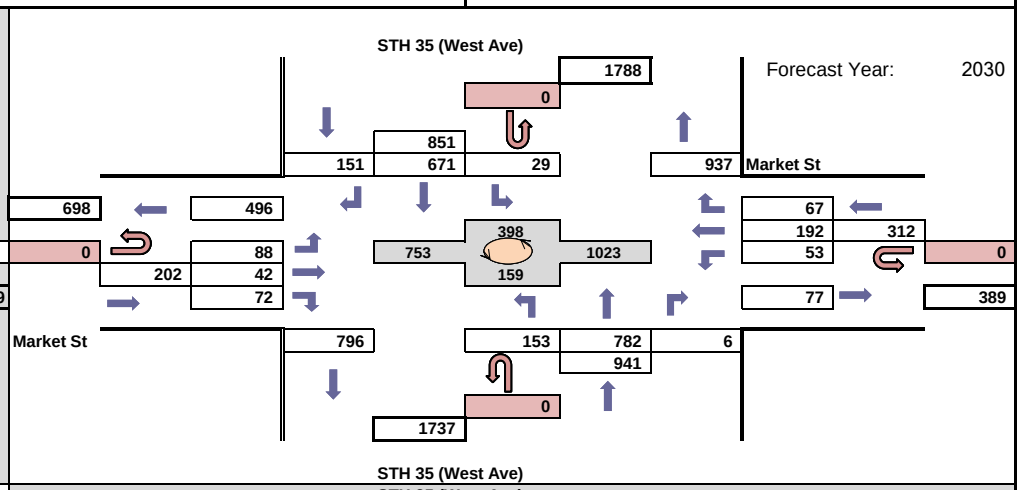

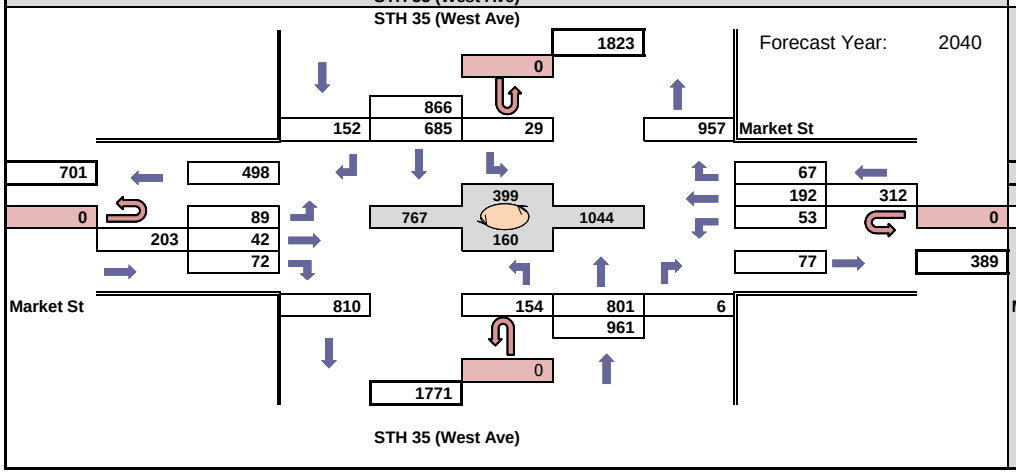

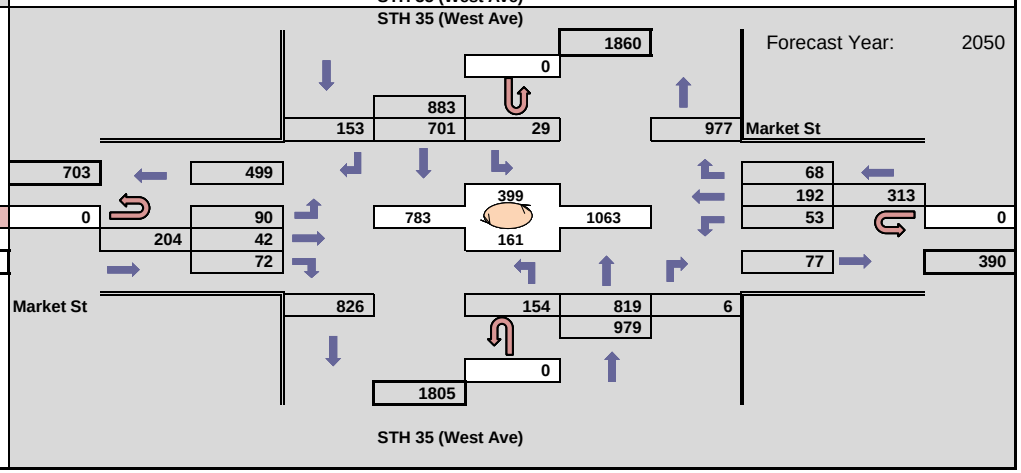

WisDOT Bureau of Planning & Economic Development
Traffic Forecasting Section
Forecast by: Miao Zhang
Phone: (608) 266 - 7995
Email: miao.zhang@dot.wi.gov

Projected PM Design Hour Traffic Volumes

Indicates roundabout

Design Hour: 4:15-5:15pm

Forecast Completed: 2/23/2021

Project Description

Project ID(s): 1630-08-00
Route(s): STH 35
Region/COUNTY(IES): SW/La Crosse
Location: WIS 35 (West Ave) & Market St

Design Hour Turning Movement Data

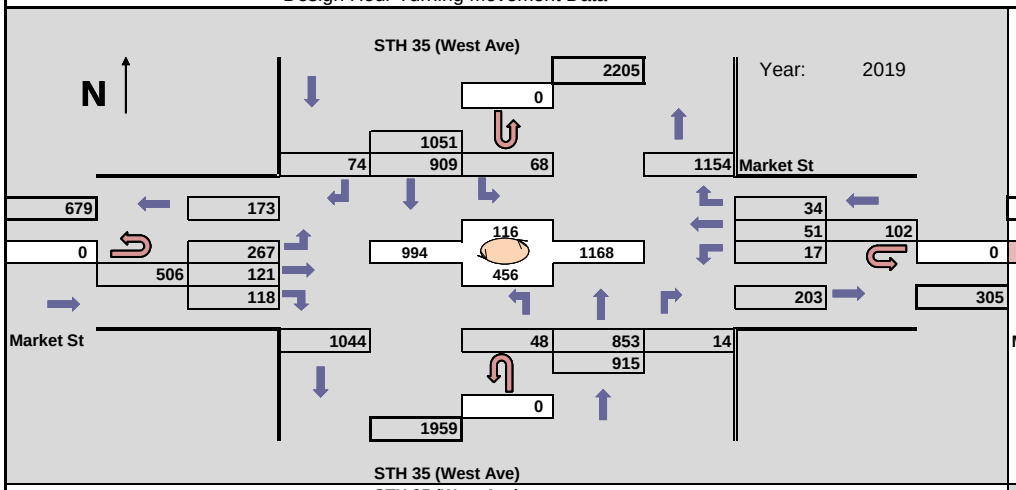

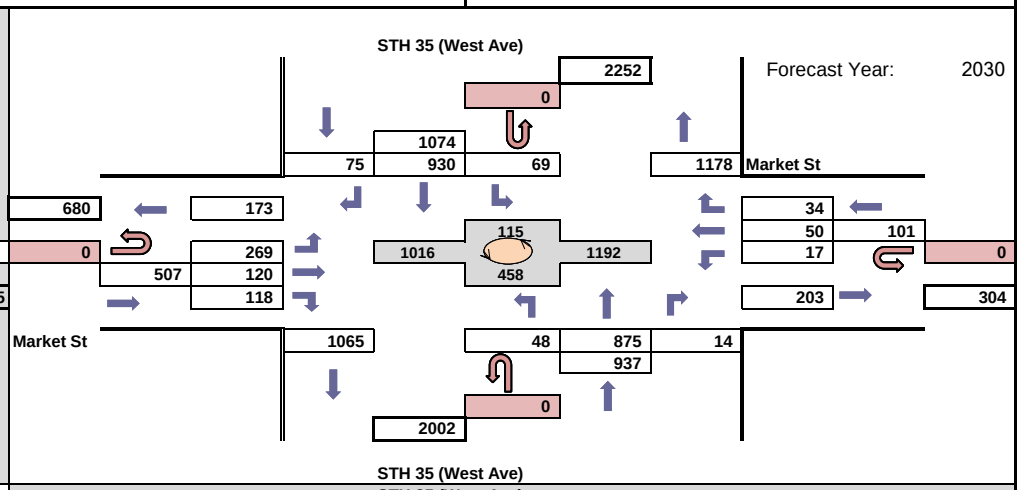

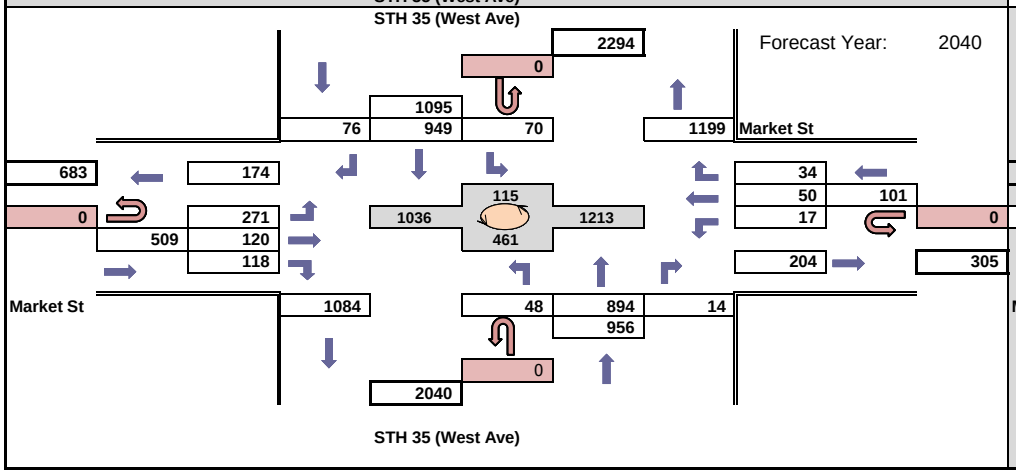

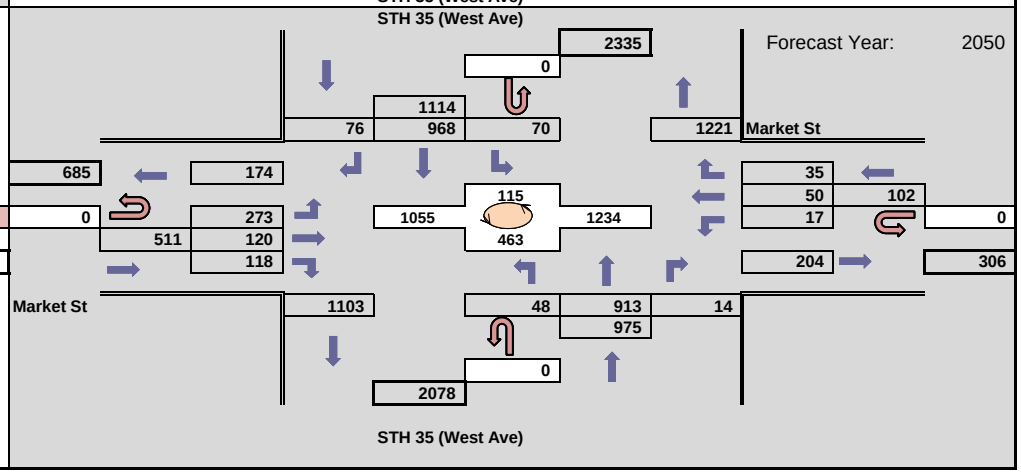

WisDOT Bureau of Planning & Economic Development
Traffic Forecasting Section
Forecast by: Miao Zhang
Phone: (608) 266 - 7995
Email: miao.zhang@dot.wi.gov

Projected AM Design Hour Traffic Volumes

Indicates roundabout

Design Hour: 7:00-8:00am

Forecast Completed: 2/23/2021

Project Description

Project ID(s): 1630-08-00
Route(s): STH 35
Region/COUNTY(IES): SW/La Crosse
Location: WIS 35 (West Ave) & WIS 33 (Jackson St)

Design Hour Turning Movement Data

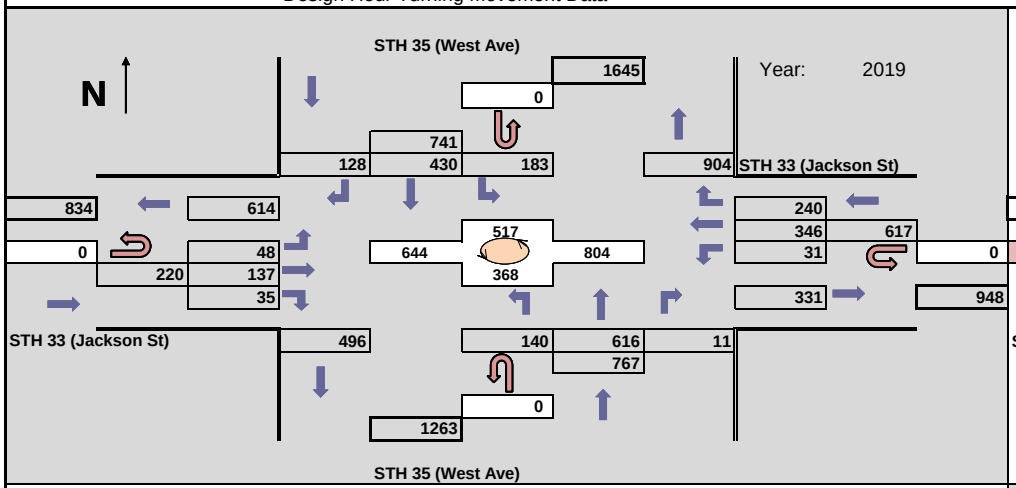

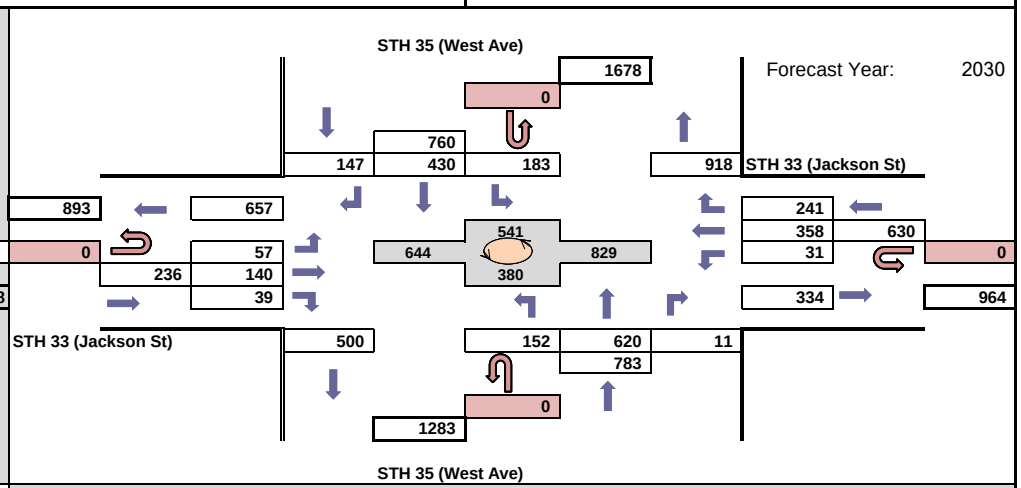

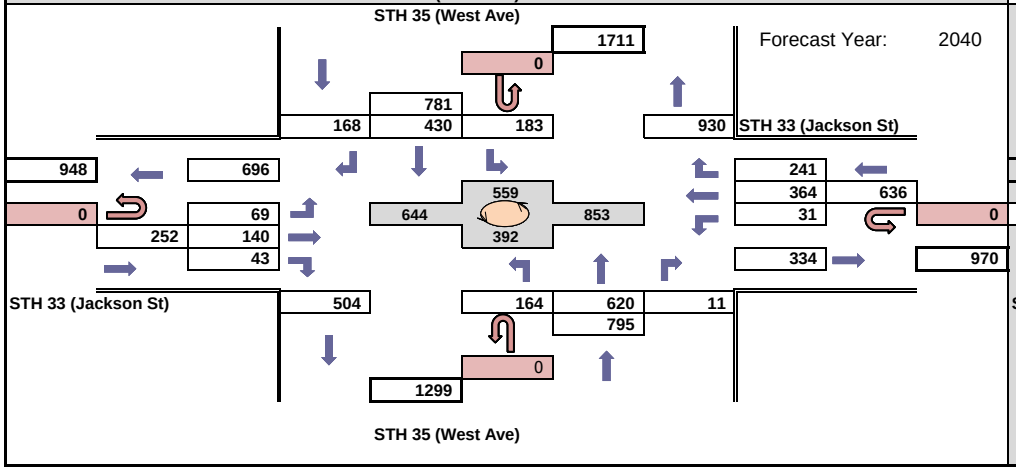

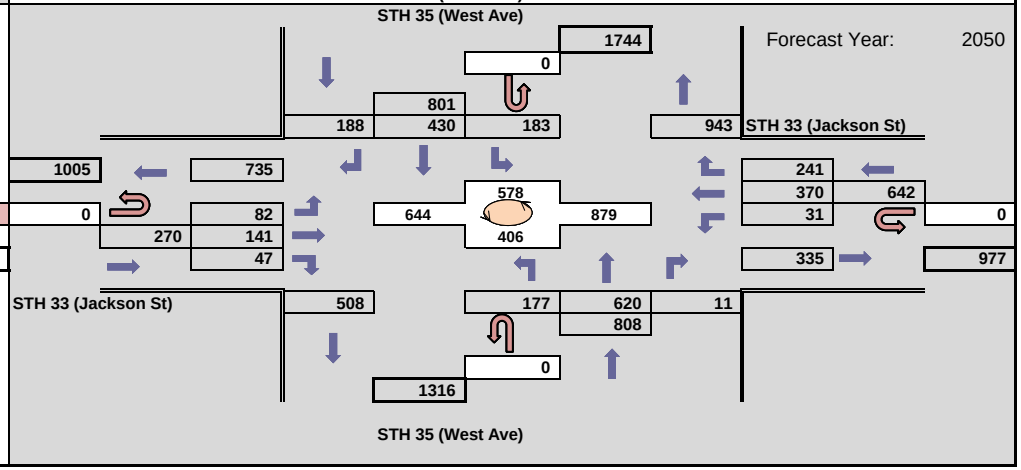

WisDOT Bureau of Planning & Economic Development
Traffic Forecasting Section
Forecast by: Miao Zhang
Phone: (608) 266 - 7995
Email: miao.zhang@dot.wi.gov

Projected PM Design Hour Traffic Volumes

Indicates roundabout

Design Hour: 4:15-5:15pm

Forecast Completed: 2/23/2021

Project Description

Project ID(s): 1630-08-00
Route(s): STH 35
Region/COUNTY(IES): SW/La Crosse
Location: WIS 35 (West Ave) & WIS 33 (Jackson St)

Design Hour Turning Movement Data

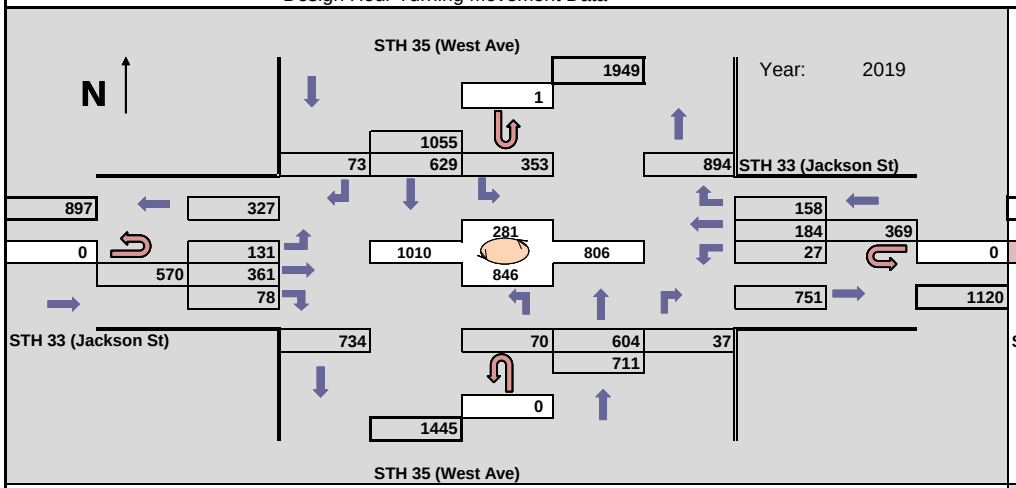

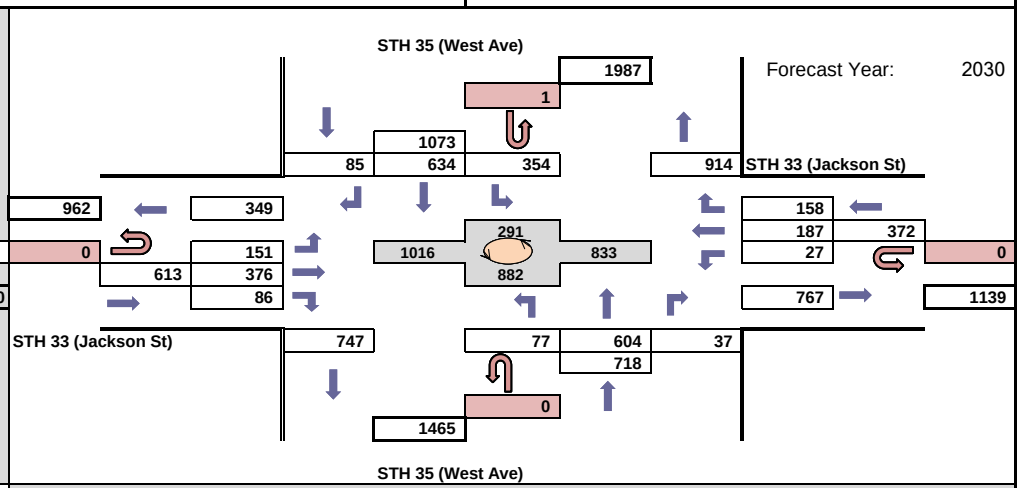

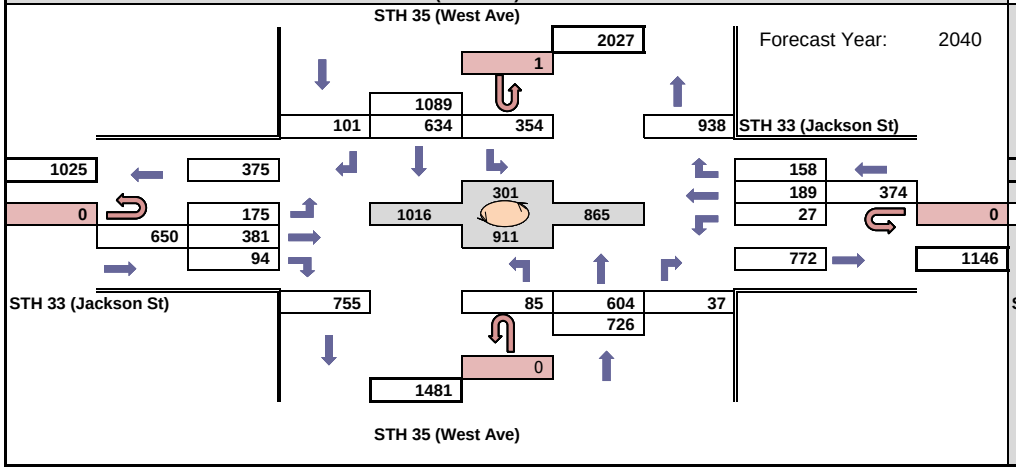

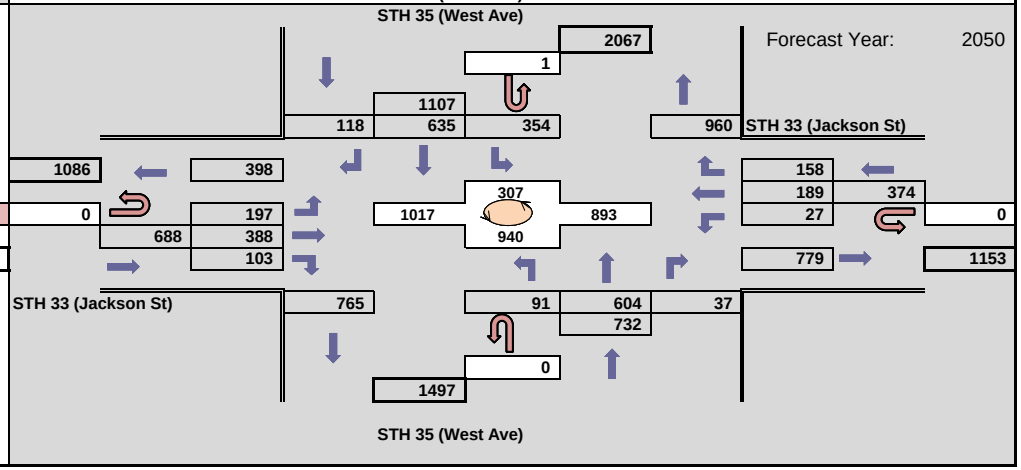

WisDOT Bureau of Planning & Economic Development
Traffic Forecasting Section
Forecast by: Miao Zhang
Phone: (608) 266 - 7995
Email: miao.zhang@dot.wi.gov

Projected AM Design Hour Traffic Volumes

Indicates roundabout

Design Hour: 7:00-8:00am

Forecast Completed: 2/23/2021

Project Description

Project ID(s): 1630-08-00
Route(s): STH 35
Region/COUNTY(IES): SW/La Crosse
Location: WIS 35 (West Ave) & Green Bay St

Design Hour Turning Movement Data

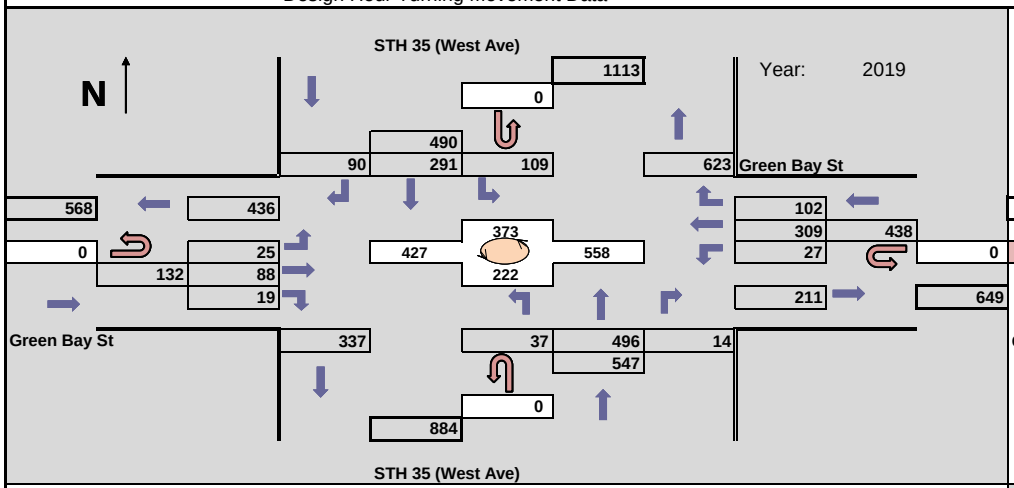

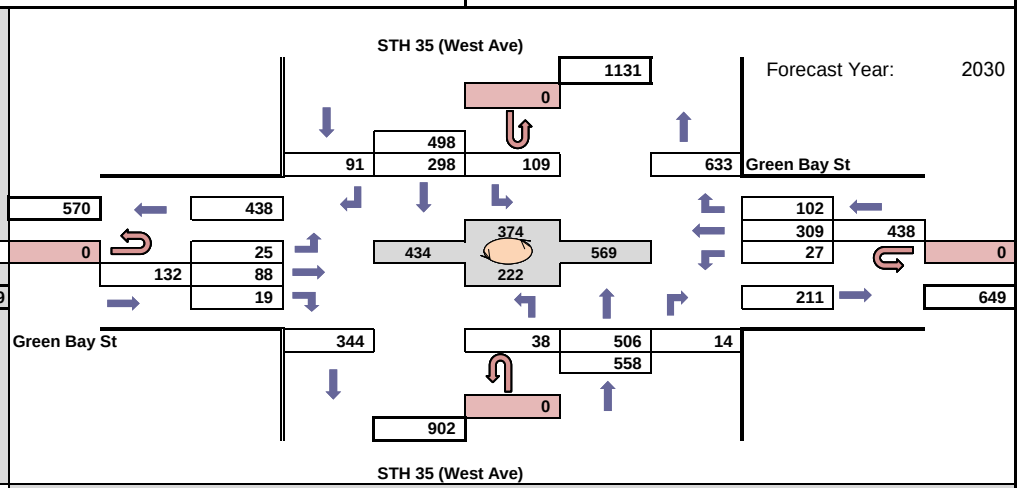

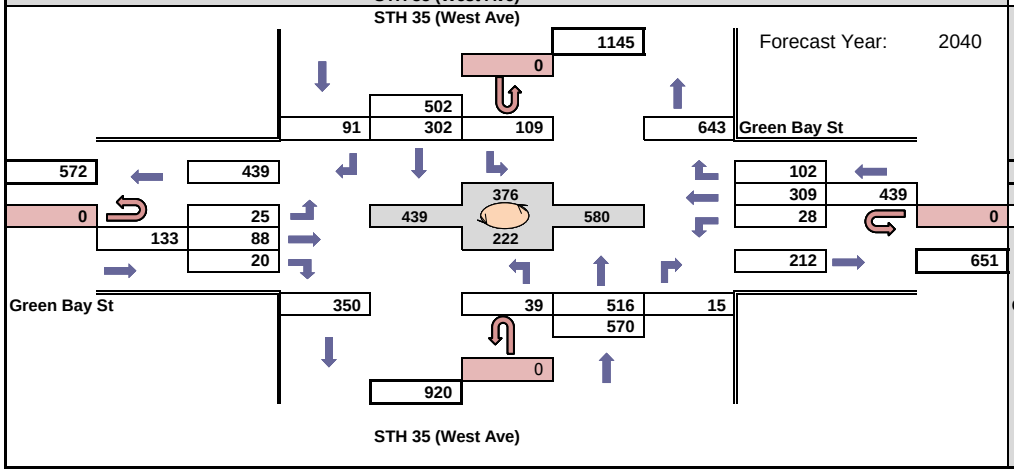

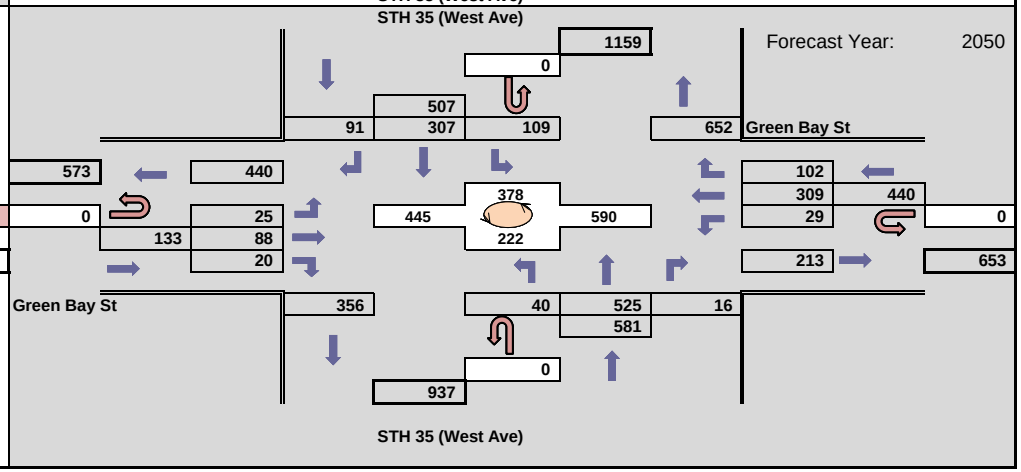

WisDOT Bureau of Planning & Economic Development
Traffic Forecasting Section
Forecast by: Miao Zhang
Phone: (608) 266 - 7995
Email: miao.zhang@dot.wi.gov

Projected PM Design Hour Traffic Volumes

Indicates roundabout

Design Hour: 4:15-5:15pm

Forecast Completed: 2/23/2021

Project Description

Project ID(s): 1630-08-00
Route(s): STH 35
Region/COUNTY(IES): SW/La Crosse
Location: WIS 35 (West Ave) & Green Bay St

Design Hour Turning Movement Data

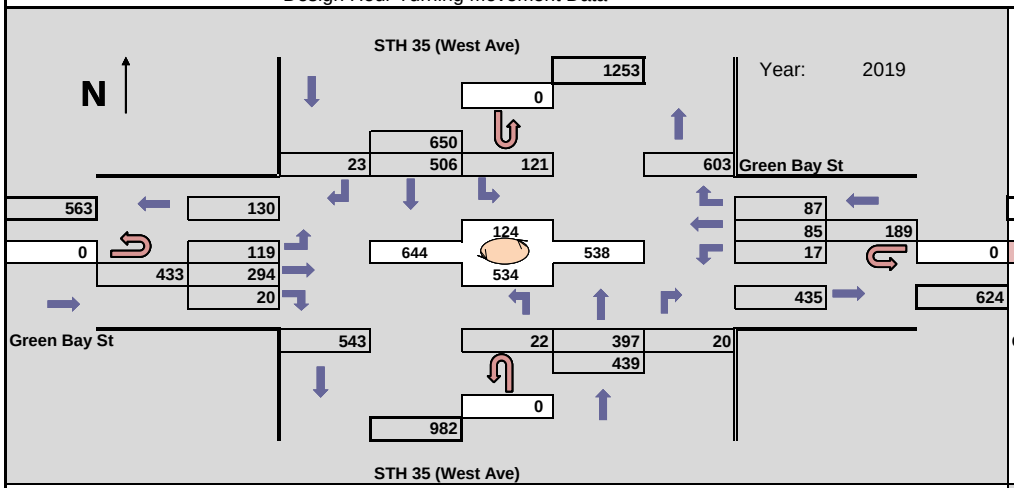

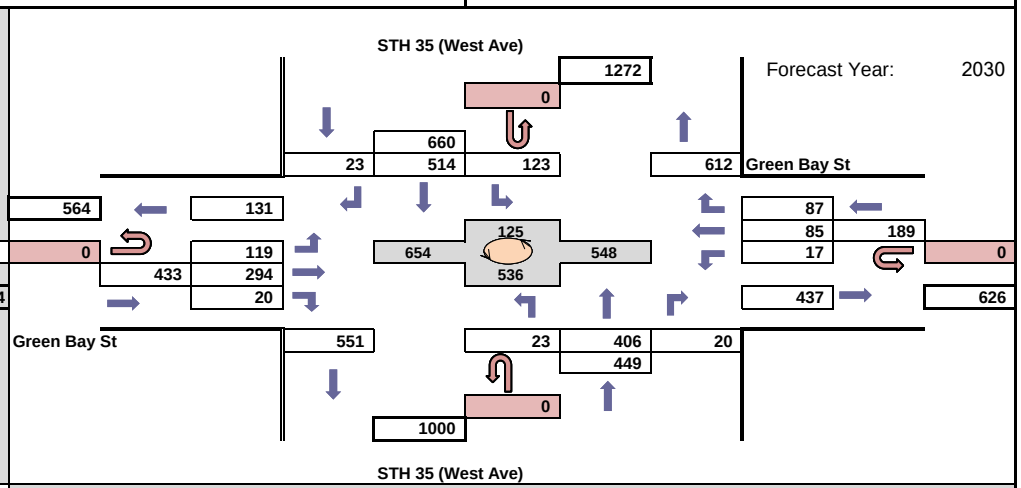

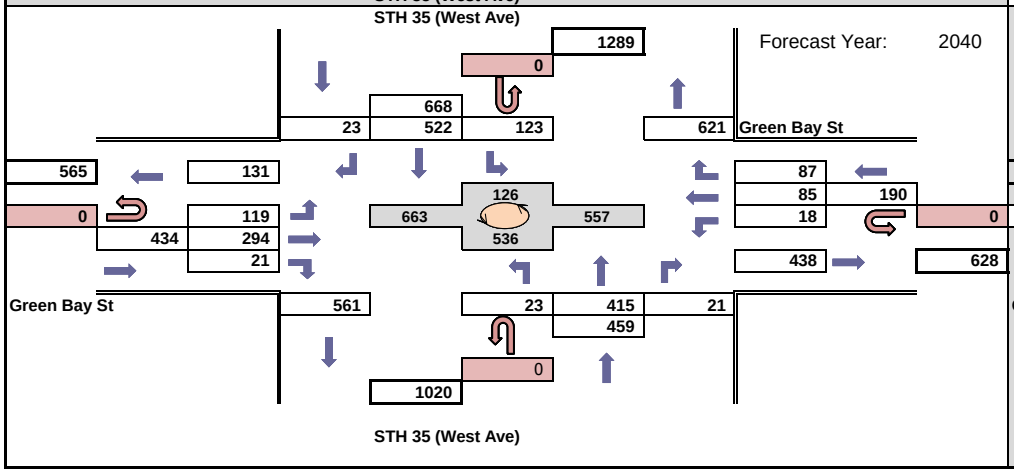

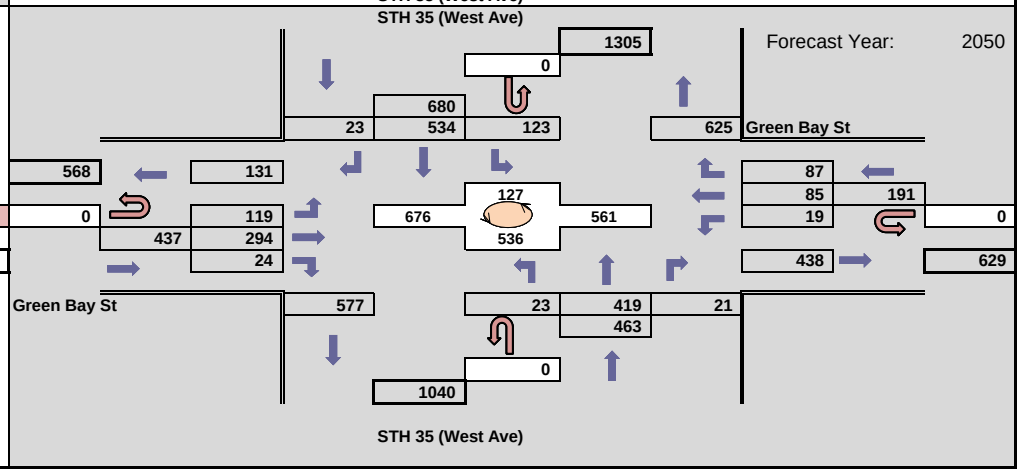

Traffic Forecasting Section; Bureau of Planning and Economic Development; Division of Transportation Investment Management

WisDOT TRAFFIC FORECAST REPORT

PROJECT ID(S):	1630-08-00
ROUTE(S):	USH 53
Region/COUNTY(IES):	SW/La Crosse
LOCATION:	Downtown Segment
COMPLETED:	02/23/2021

Developed By: Miao Zhang
Phone: (608) 266 - 7995
E-Mail: miao.zhang@dot.wi.gov

NOTES ON THE FORECAST:

1. This projection assumes that no major new traffic generators will be added to the development already included in the 2010/2040 La Crosse Regional Travel Demand Model.

2. Vehicle classification data and design values (K factors, directional splits, and percent trucks in design hours) are available here: http://wisconsindot.gov/Pages/projects/data-plan/traf-fore/default.aspx

3. US53, US14 and STH 16 are Factor Group II (Urban-Other) roadways (indicating low to moderate fluctuation in traffic from a seasonal perspective).

4. The 2010/2040 La Crosse Regional Travel Demand Model was used to complete this forecast. The Traffic Analysis Forecasting Information System output was used as a comparison tool to check against the model output. Adjustments were made as needed.

5. Roadway improvements coded within the existing plus committed (E+C) network of the 2010/2040 La Crose Regional Travel Demand Model were assumed to be in place for the purposes of developing this forecast.

Site(s)	**320640**	321110	320563
Routes(s)	**USH 53**	USH 53	USH 14/USH 61
Volume(s)	9090	10720	18370
Site Growth %	0.26%	0.20%	0.44%

Site(s)	**320566**	320567	320592
Routes(s)	USH 14/USH 61	USH 14/USH 61	USH 14/USH 61
Volume(s)	11250	11760	20720
Site Growth %	0.26%	0.48%	0.26%

SITE ID = Colored, **bolded**, and underlined

Symbol	Count	Symbol	Forecast
-000-	2019 Count	(000)	2030 AADT
000	2017 Count	[000]	2040 AADT
+000+	2014 Count	000	2050 AADT
=000=	2011 Count		
%000%	2008 Count		

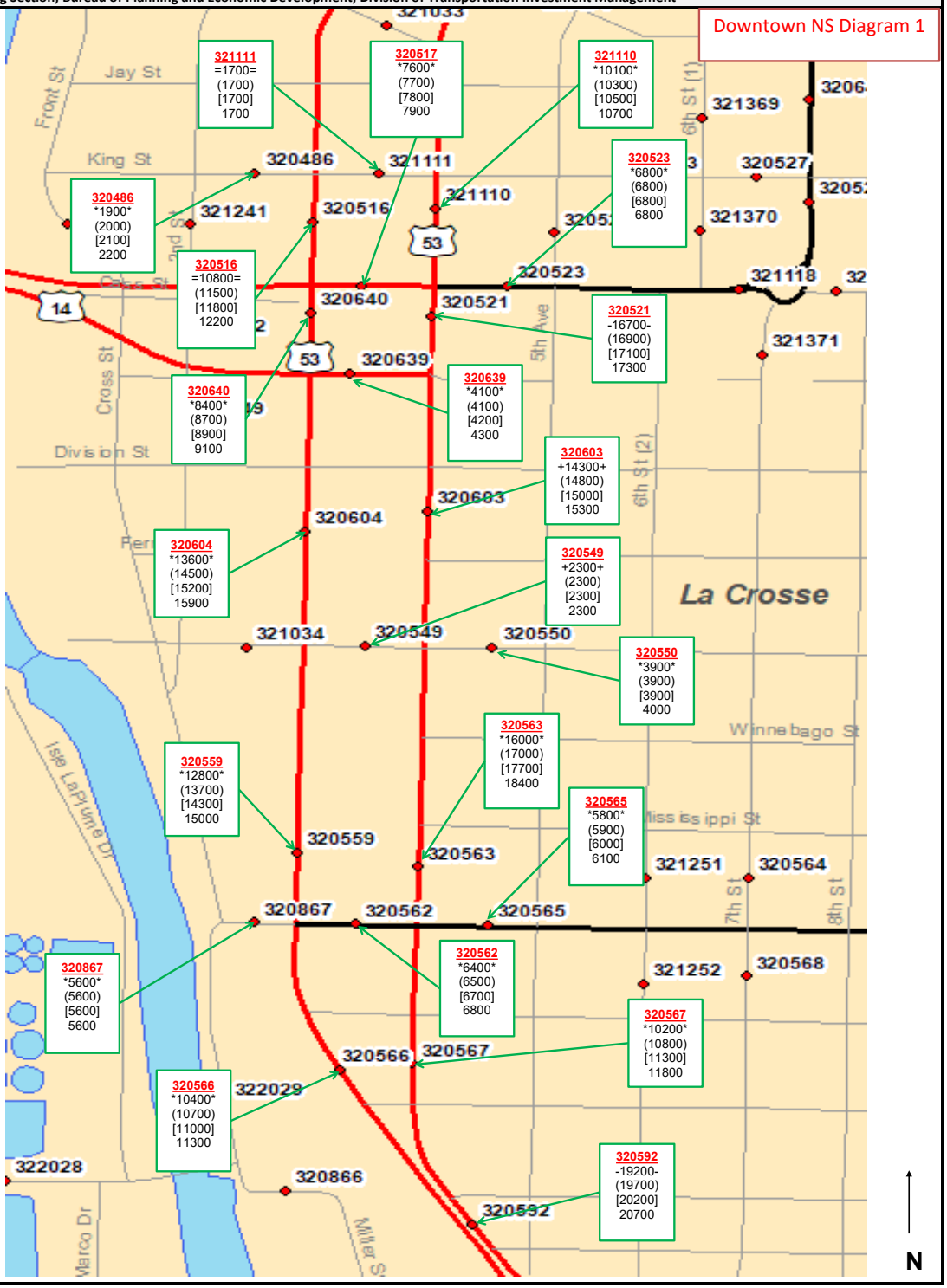

Traffic Forecasting Section; Bureau of Planning and Economic Development; Division of Transportation Investment Management

WisDOT TRAFFIC FORECAST REPORT

PROJECT ID(S):	1630-08-00
ROUTE(S):	USH 53
Region/COUNTY(IES):	SW/La Crosse
LOCATION:	Downtown Segment
COMPLETED:	02/23/2021

Developed By: Miao Zhang
Phone: (608) 266 - 7995
E-Mail: miao.zhang@dot.wi.gov

NOTES ON THE FORECAST:

1. This projection assumes that no major new traffic generators will be added to the development already included in the 2010/2040 La Crosse Regional Travel Demand Model.

2. Vehicle classification data and design values (K factors, directional splits, and percent trucks in design hours) are available here: http://wisconsindot.gov/Pages/projects/data-plan/traf-fore/default.aspx

3. US53, US14 and STH 16 are Factor Group II (Urban-Other) roadways (indicating low to moderate fluctuation in traffic from a seasonal perspective).

4. The 2010/2040 La Crosse Regional Travel Demand Model was used to complete this forecast. The Traffic Analysis Forecasting Information System output was used as a comparison tool to check against the model output. Adjustments were made as needed.

5. Roadway improvements coded within the existing plus committed (E+C) network of the 2010/2040 La Crose Regional Travel Demand Model were assumed to be in place for the purposes of developing this forecast.

Site(s)	**321021**	320464	320468
Routes(s)	**USH 53**	**USH 53**	**USH 53**
Volume(s)	29220	14180	12240
Site Growth %	0.15%	0.39%	0.22%

Site(s)	**320467**	320490	321117
Routes(s)	**STH 16**	**USH 53**	**USH 53**
Volume(s)	8790	11030	10500
Site Growth %	0.07%	0.24%	0.18%

SITE ID = Colored, **bolded**, and underlined

Symbol	Count	Symbol	Forecast
-000-	2019 Count	(000)	2030 AADT
000	2017 Count	[000]	2040 AADT
+000+	2014 Count	000	2050 AADT
=000=	2011 Count		
%000%	2008 Count		

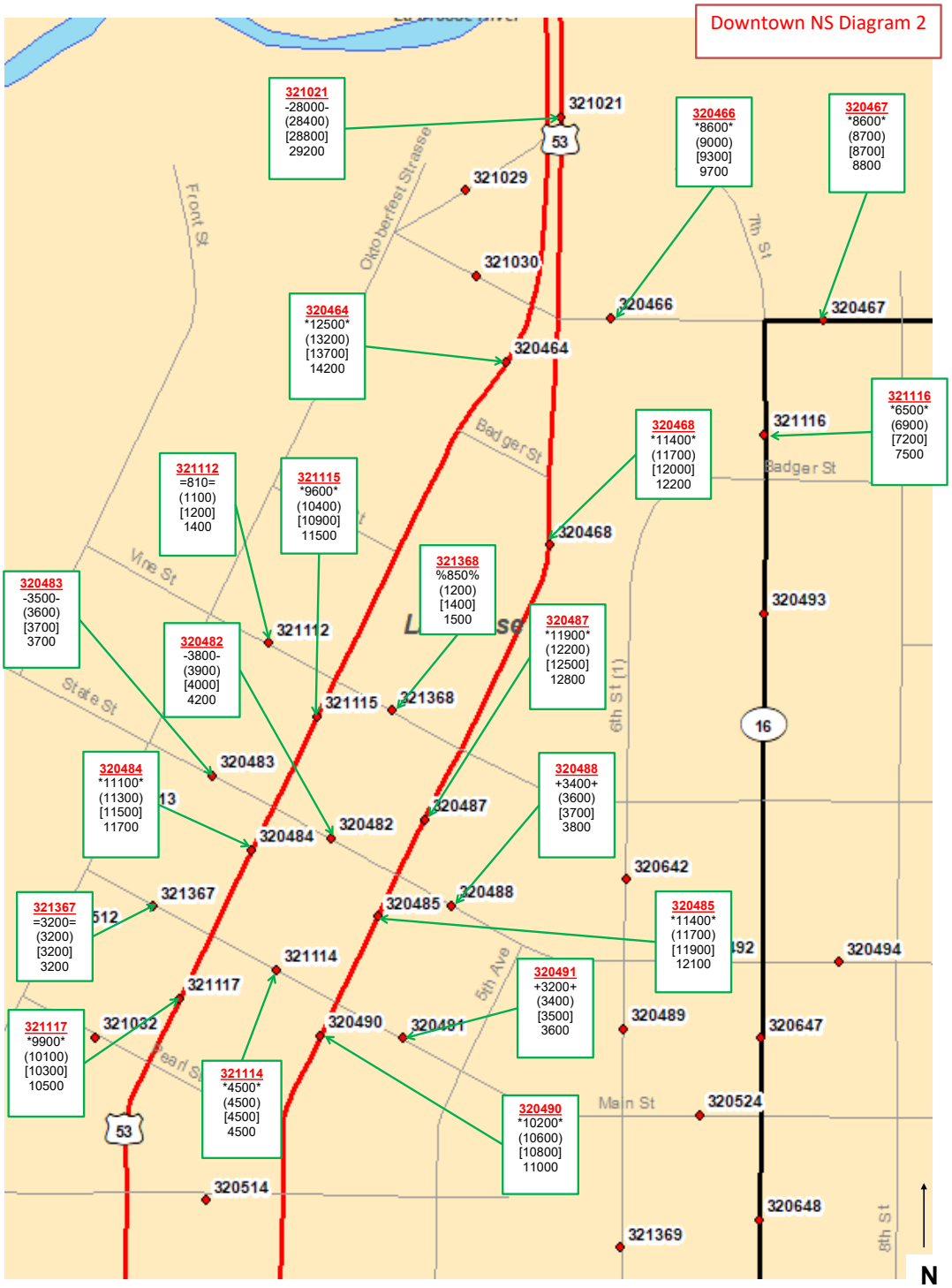

WisDOT Bureau of Planning & Economic Development
Traffic Forecasting Section
Forecast by: Miao Zhang
Phone: (608) 266 - 7995
Email: miao.zhang@dot.wi.gov

Projected AM Design Hour Traffic Volumes

Indicates roundabout

Design Hour: 7:00-8:00am

Forecast Completed: 4/12/2021

Project Description

Project ID(s): 1630-08-00
Route(s): USH 53
Region/COUNTY(IES): SW/La Crosse
Location: US 53 (Copeland Ave) & La Crosse St

Design Hour Turning Movement Data

Note: 2019 count was modified with 2015 count and StreetLight Data.

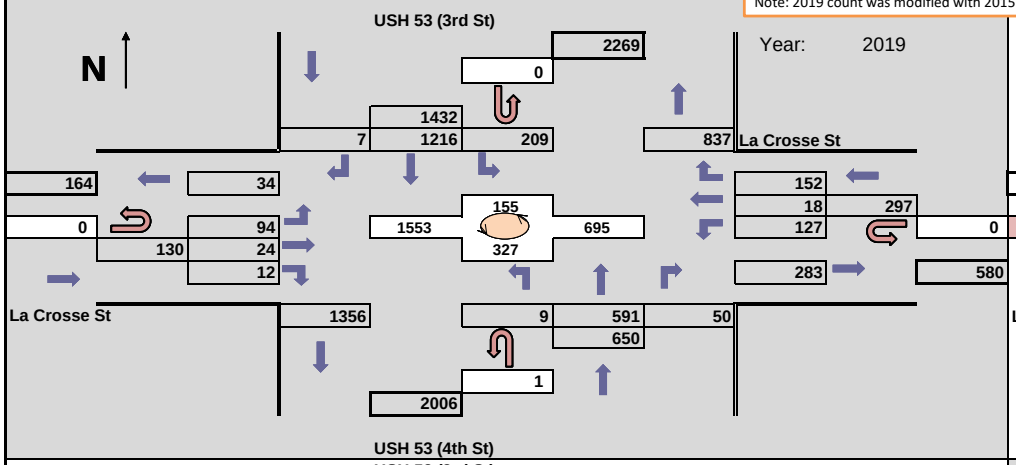

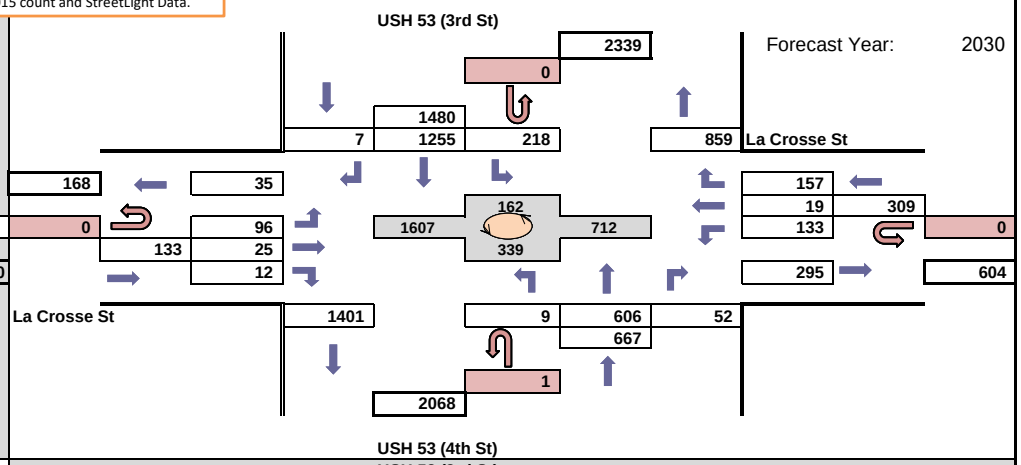

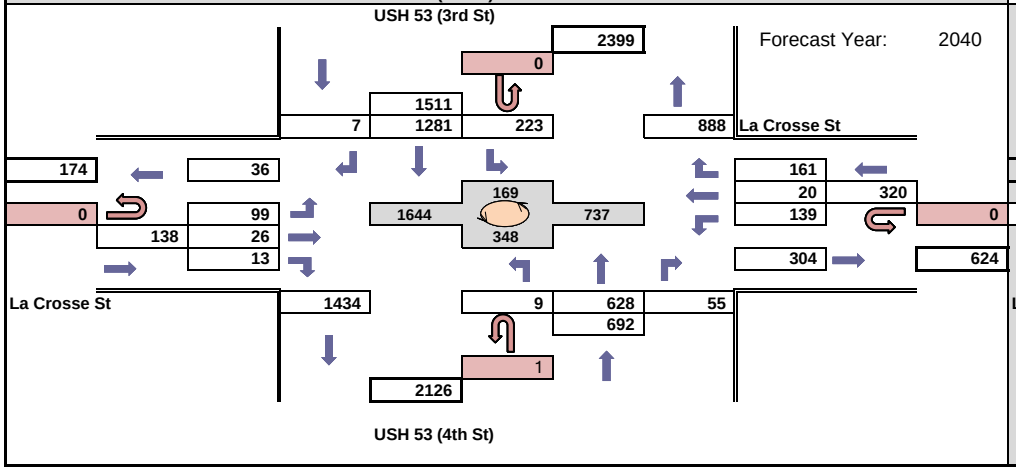

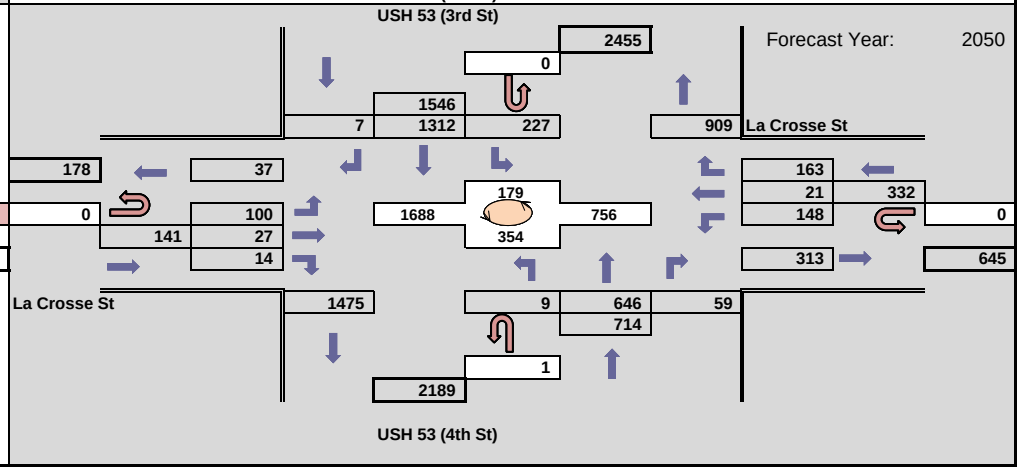

WisDOT Bureau of Planning & Economic Development
Traffic Forecasting Section
Forecast by: Miao Zhang
Phone: (608) 266 - 7995
Email: miao.zhang@dot.wi.gov

Projected PM Design Hour Traffic Volumes

Indicates roundabout

Design Hour: 4:15-5:15pm

Forecast Completed: 4/12/2021

Project Description

Project ID(s): 1630-08-00
Route(s): USH 53
Region/COUNTY(IES): SW/La Crosse
Location: US 53 (Copeland Ave) & La Crosse St

Design Hour Turning Movement Data

Note: 2019 count was modified with 2015 count and StreetLight Data.

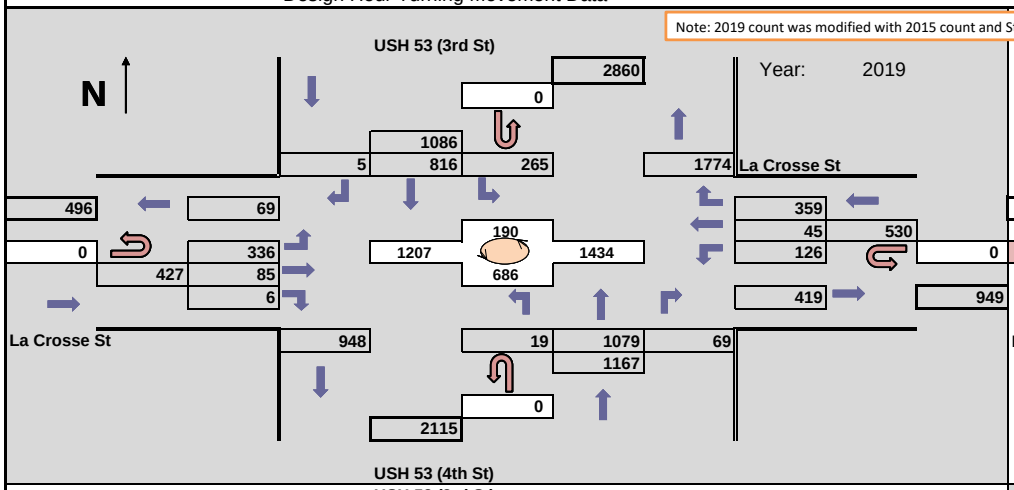

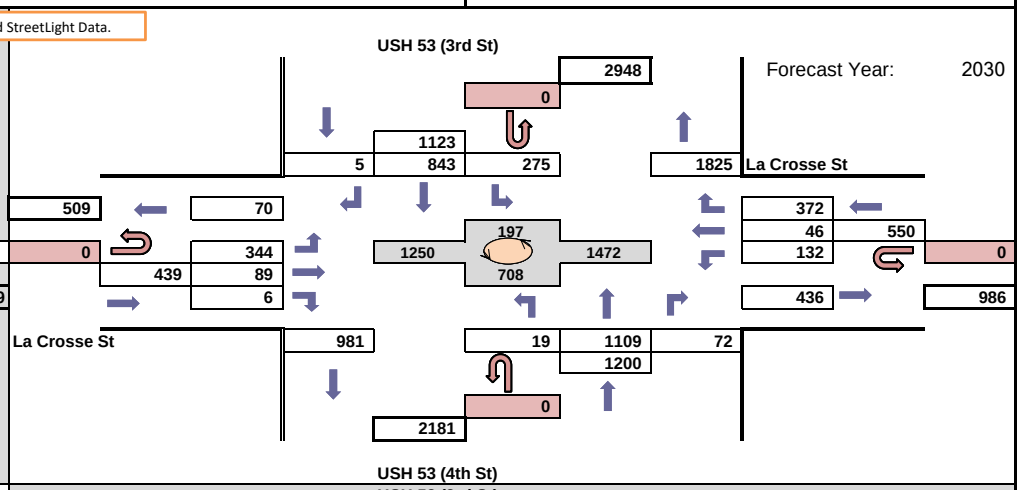

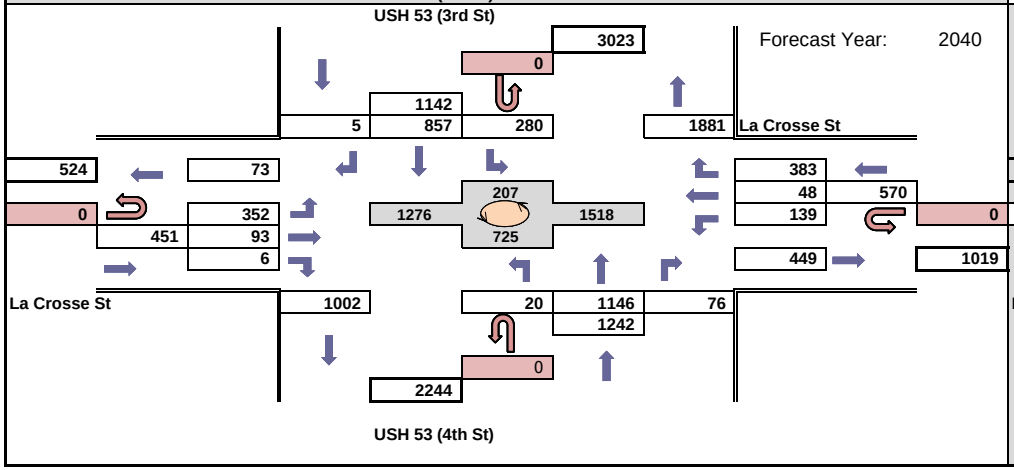

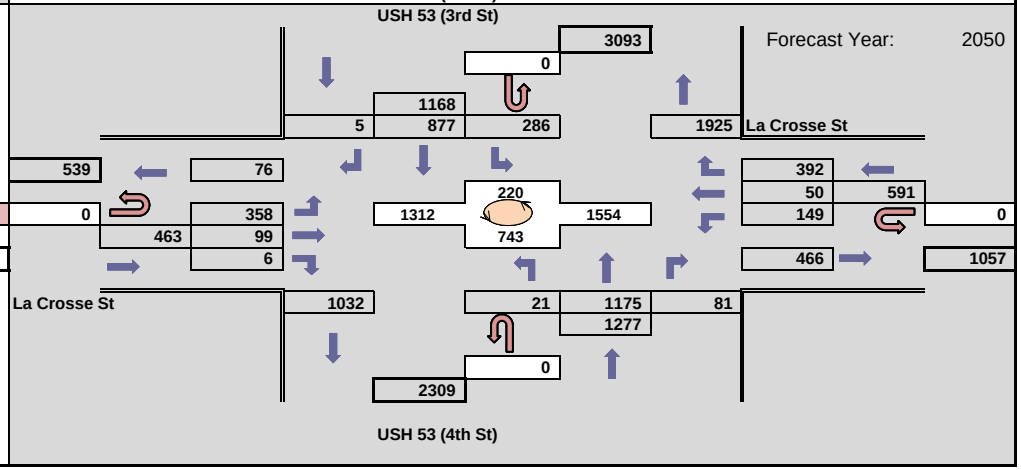

WisDOT Bureau of Planning & Economic Development
Traffic Forecasting Section
Forecast by: Miao Zhang
Phone: (608) 266 - 7995
Email: miao.zhang@dot.wi.gov

Projected AM Design Hour Traffic Volumes

Indicates roundabout

Design Hour: 7:15-8:15am

Forecast Completed: 2/23/2021

Project Description

Project ID(s): 1630-08-00
Route(s): US 53
Region/COUNTY(IES): SW/La Crosse
Location: US 53 SB & Vine St.

Design Hour Turning Movement Data

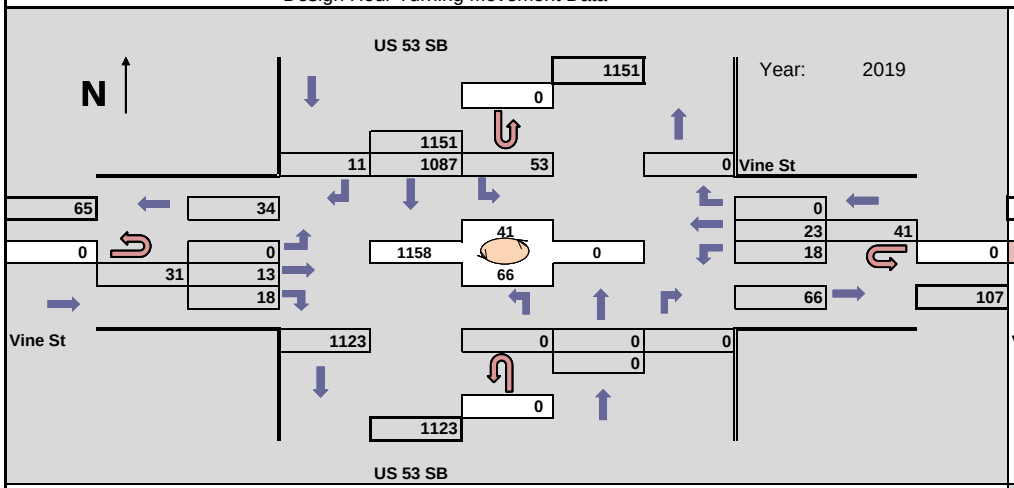

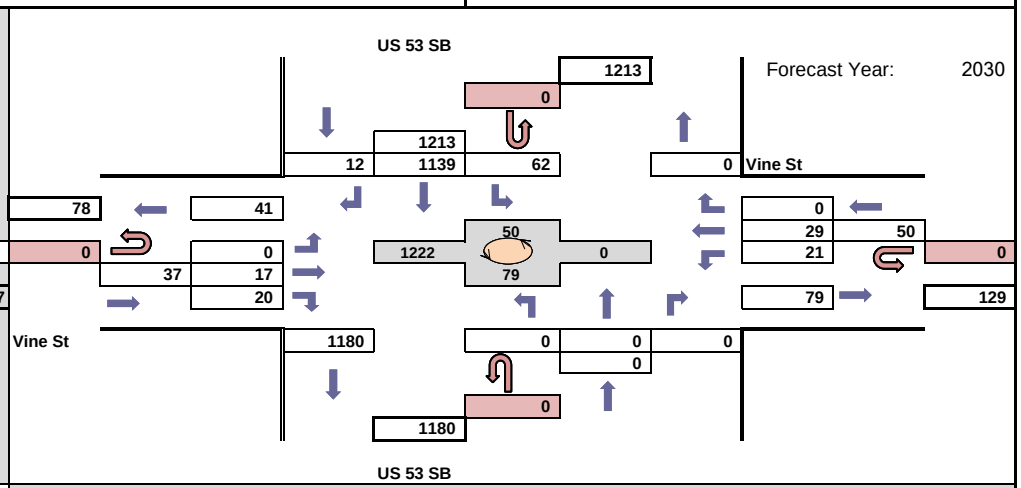

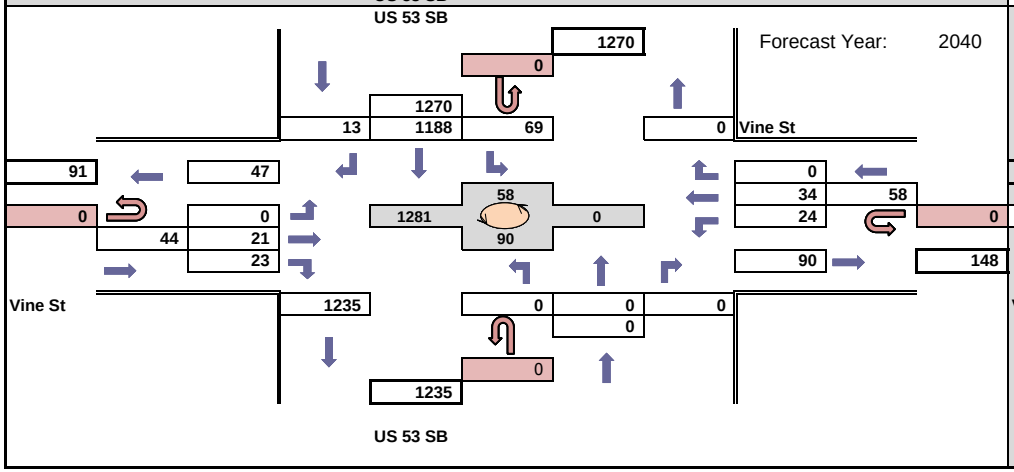

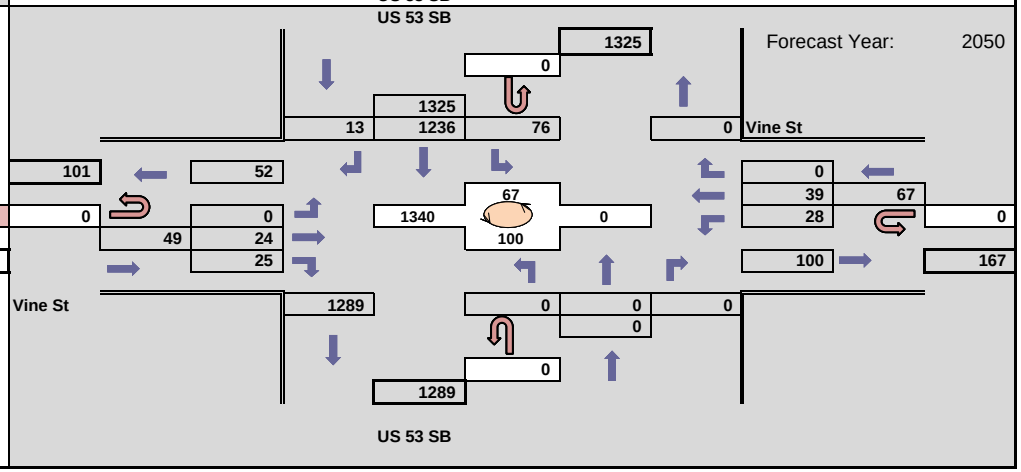

WisDOT Bureau of Planning & Economic Development
Traffic Forecasting Section
Forecast by: Miao Zhang
Phone: (608) 266 - 7995
Email: miao.zhang@dot.wi.gov

Projected PM Design Hour Traffic Volumes

Indicates roundabout

Design Hour: 4:15-5:15pm

Forecast Completed: 2/23/2021

Project Description

Project ID(s): 1630-08-00
Route(s): US 53
Region/COUNTY(IES): SW/La Crosse
Location: US 53 SB & Vine St.

Design Hour Turning Movement Data

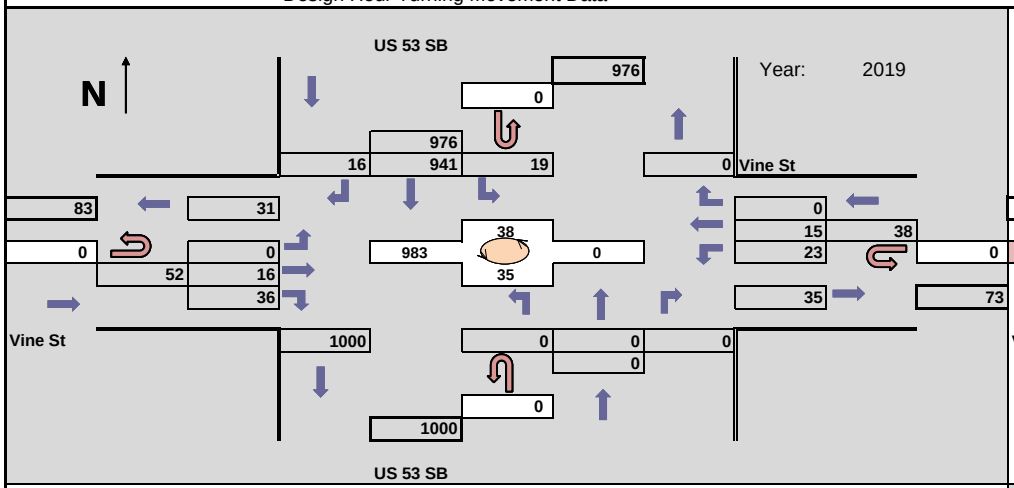

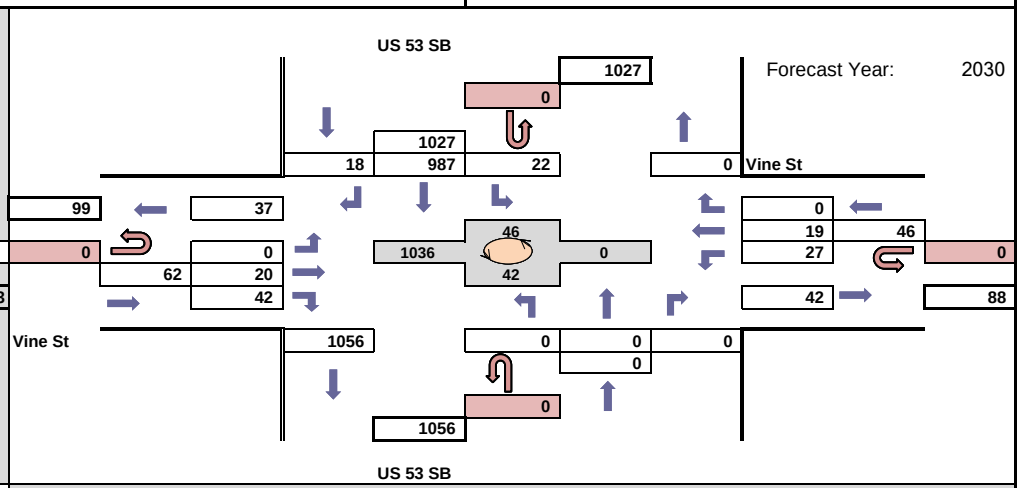

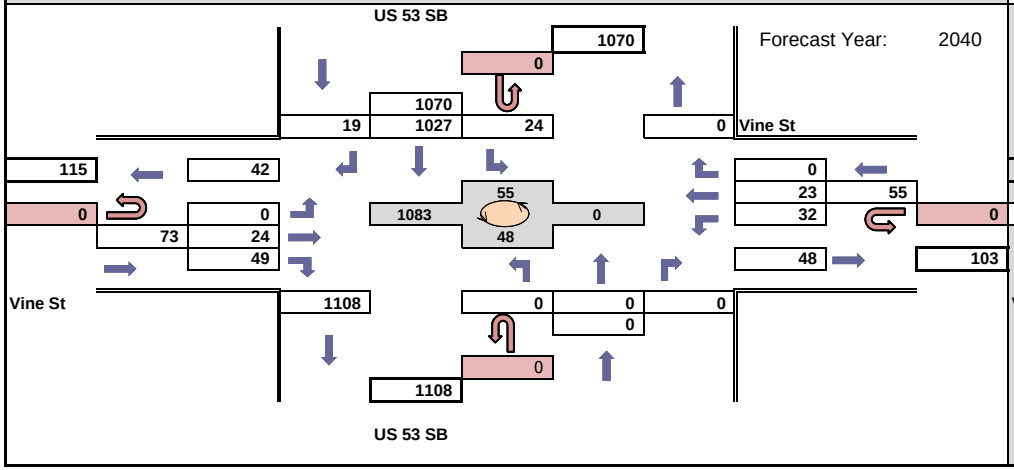

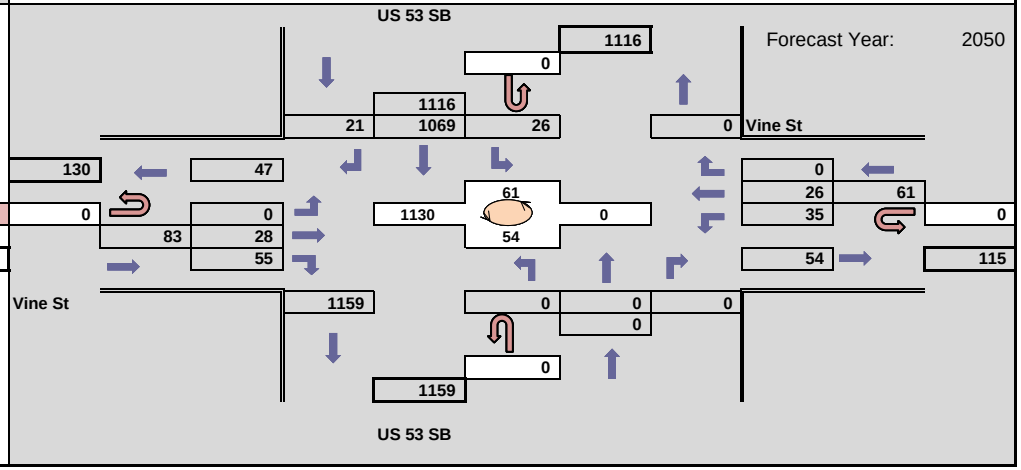

WisDOT Bureau of Planning & Economic Development
Traffic Forecasting Section
Forecast by: Miao Zhang
Phone: (608) 266 - 7995
Email: miao.zhang@dot.wi.gov

Projected AM Design Hour Traffic Volumes

Indicates roundabout

Design Hour: 7:00-8:00am

Forecast Completed: 2/23/2021

Project Description

Project ID(s): 1630-08-00
Route(s): US 53
Region/COUNTY(IES): SW/La Crosse
Location: US 53 NB (4th St) & Vine St

Design Hour Turning Movement Data

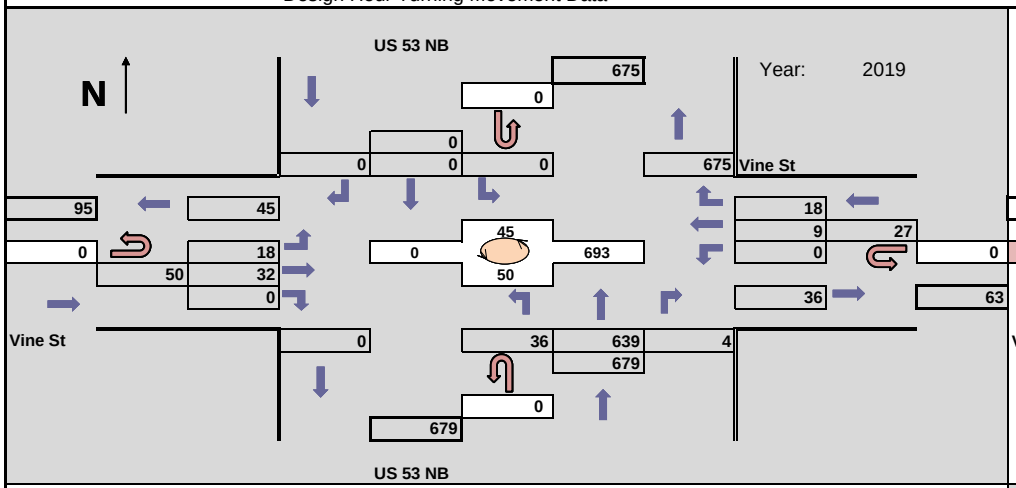

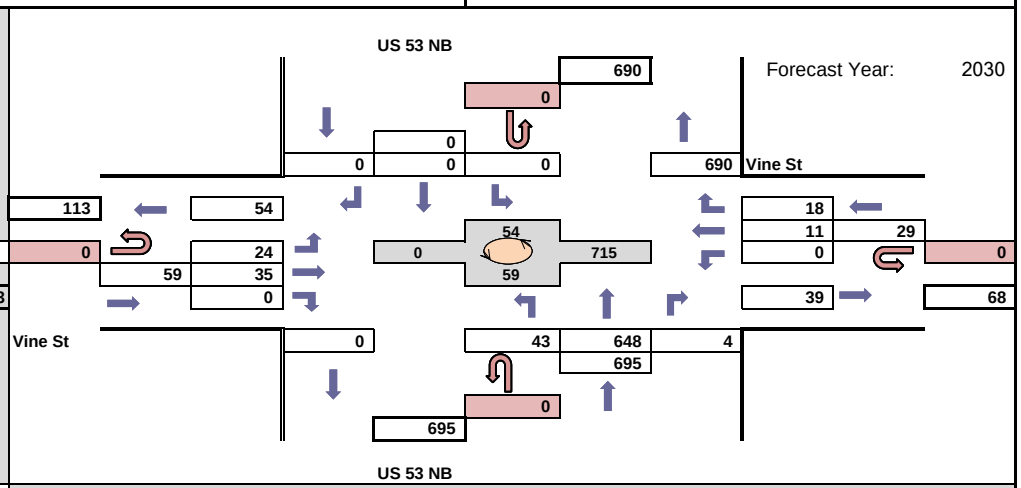

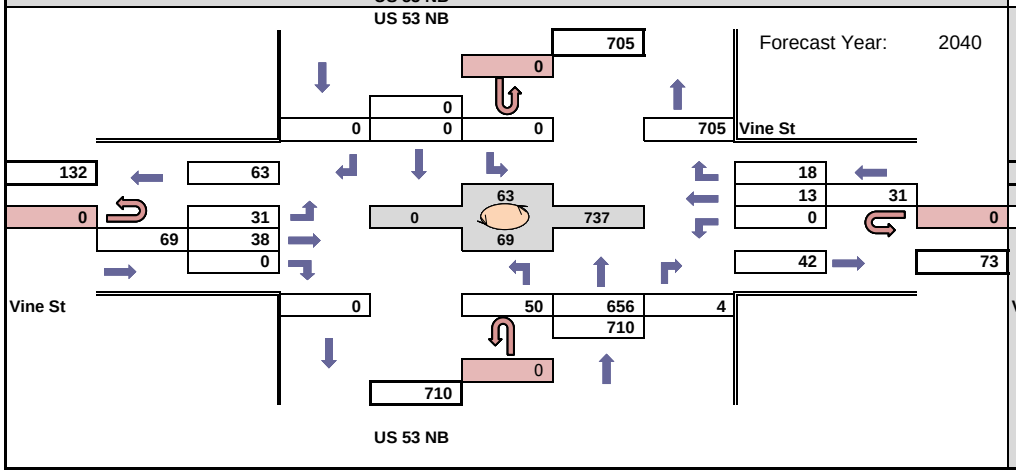

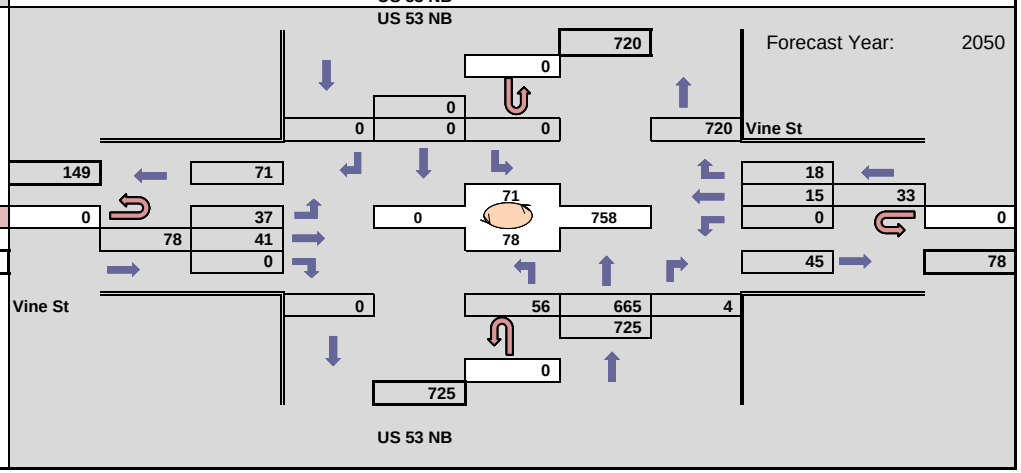

WisDOT Bureau of Planning & Economic Development
Traffic Forecasting Section
Forecast by: Miao Zhang
Phone: (608) 266 - 7995
Email: miao.zhang@dot.wi.gov

Projected PM Design Hour Traffic Volumes

Indicates roundabout

Design Hour: 4:15-5:15pm

Forecast Completed: 2/23/2021

Project Description

Project ID(s): 1630-08-00
Route(s): US 53
Region/COUNTY(IES): SW/La Crosse
Location: US 53 NB (4th St) & Vine St

Design Hour Turning Movement Data

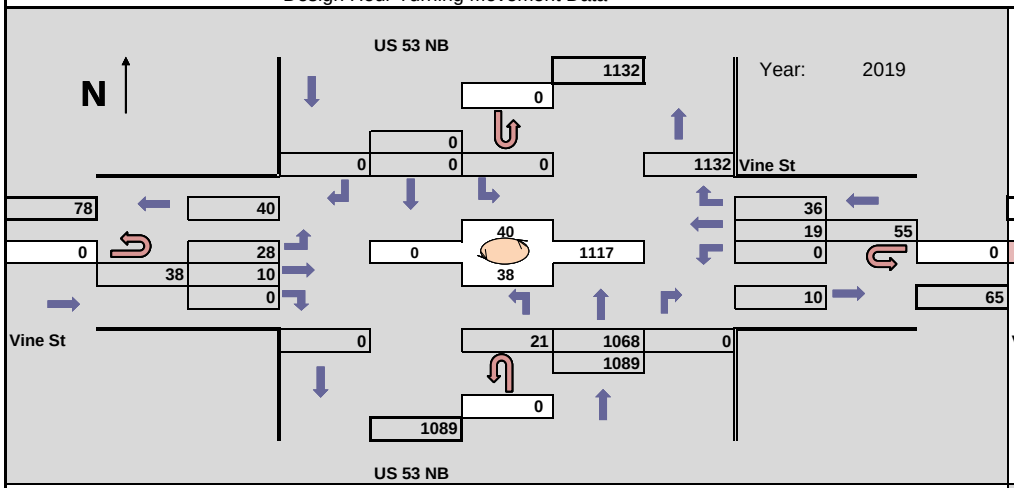

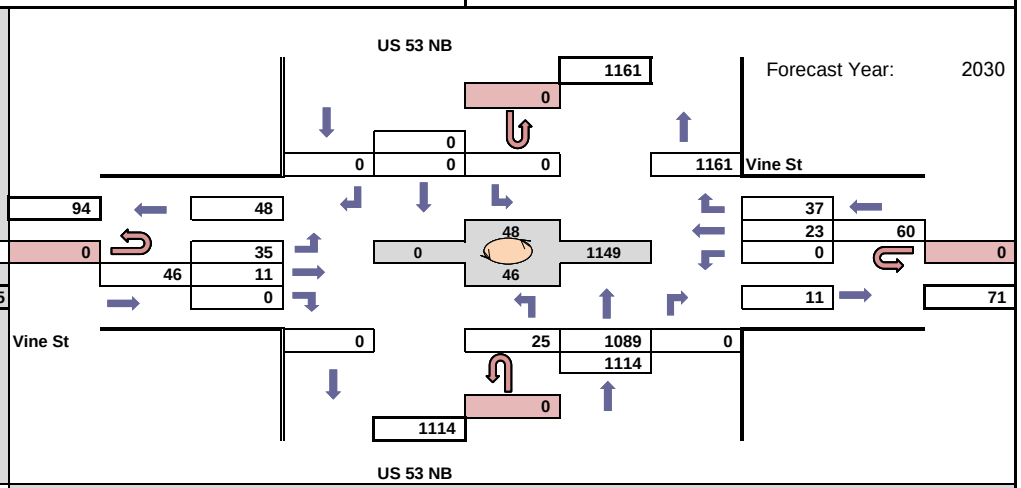

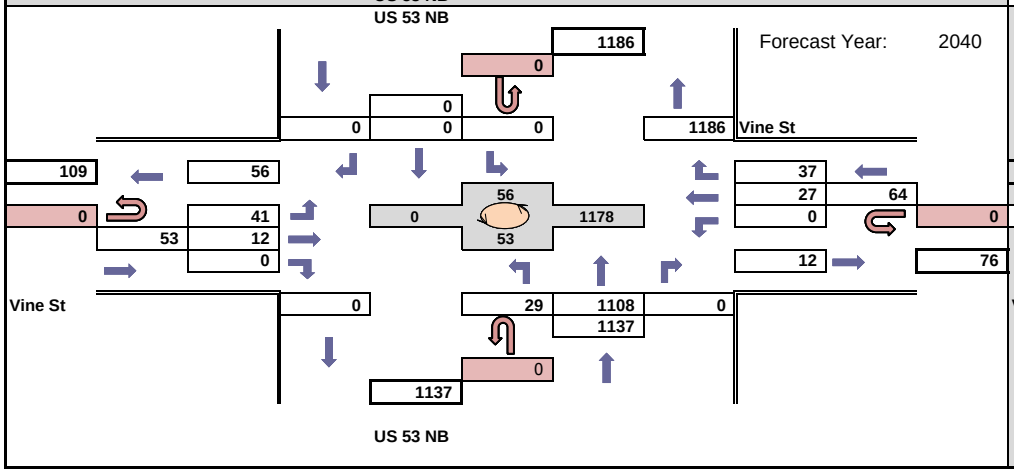

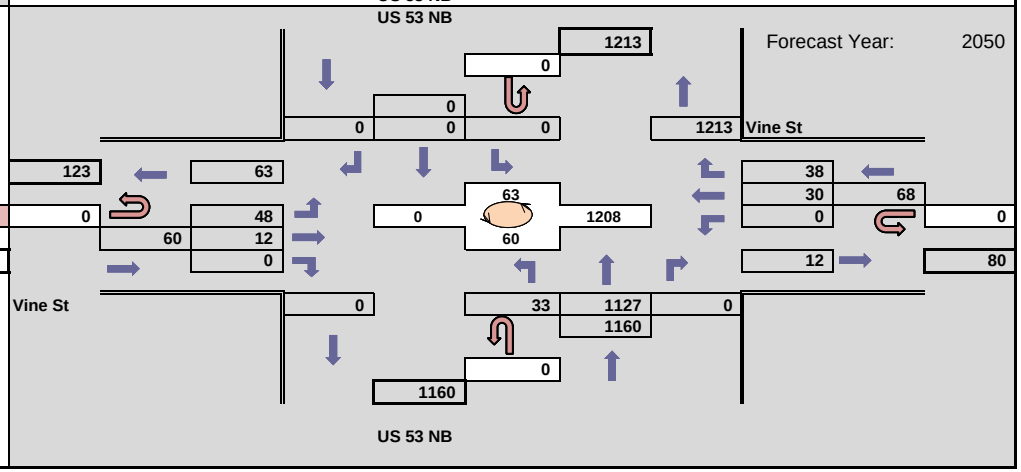

WisDOT Bureau of Planning & Economic Development
Traffic Forecasting Section
Forecast by: Miao Zhang
Phone: (608) 266 - 7995
Email: miao.zhang@dot.wi.gov

Projected AM Design Hour Traffic Volumes

Indicates roundabout

Design Hour: 7:00-8:00am

Forecast Completed: 2/23/2021

Project Description

Project ID(s): 1630-08-00
Route(s): US 53
Region/COUNTY(IES): SW/La Crosse
Location: US 53 SB (3rd St) & State St

Design Hour Turning Movement Data

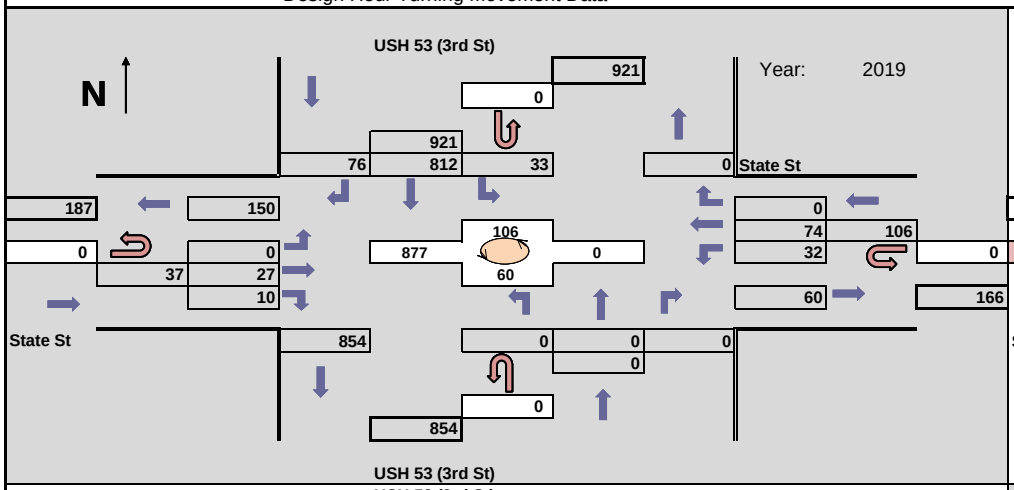

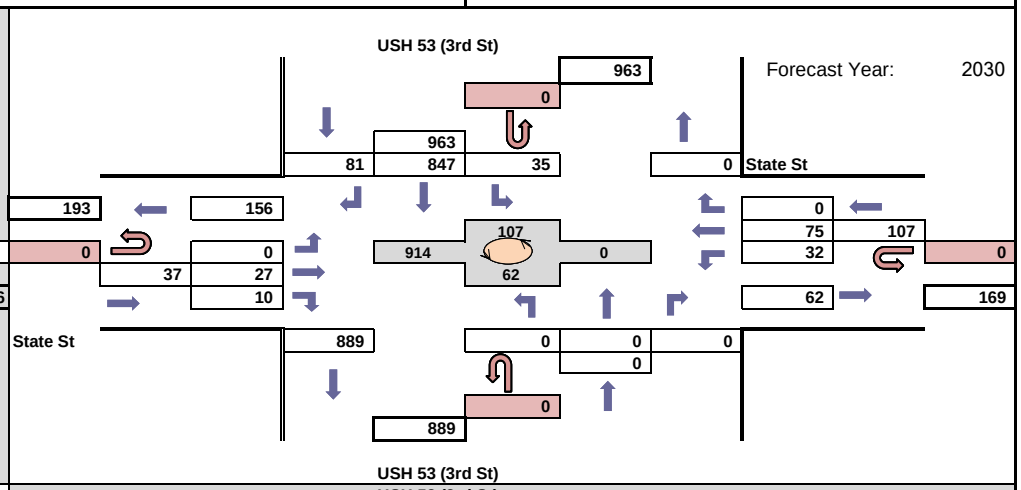

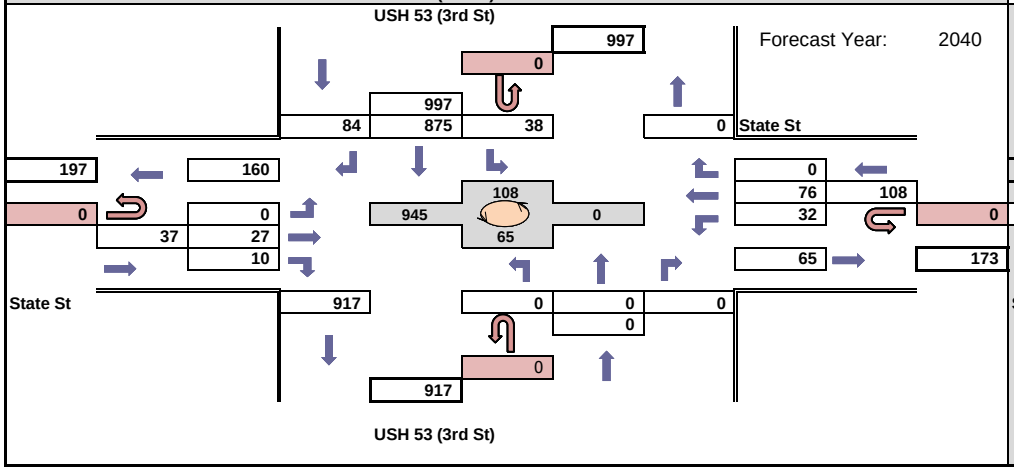

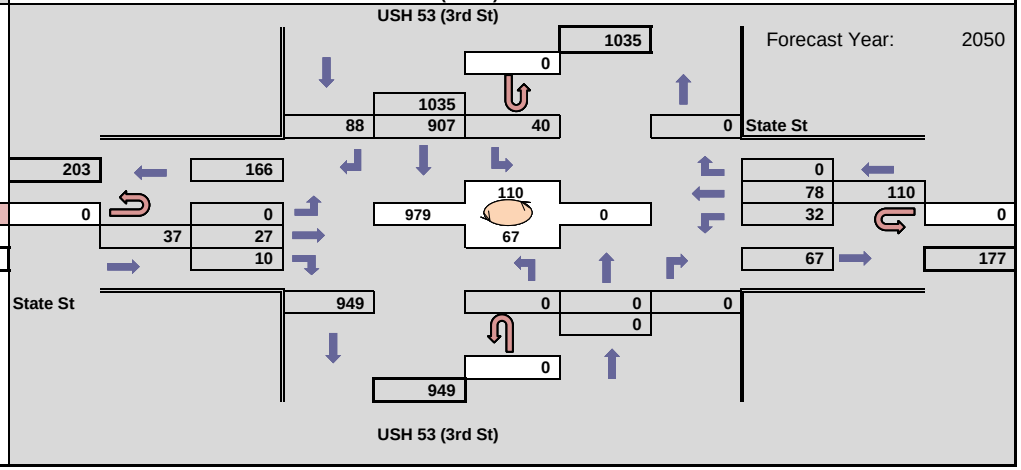

WisDOT Bureau of Planning & Economic Development
Traffic Forecasting Section
Forecast by: Miao Zhang
Phone: (608) 266 - 7995
Email: miao.zhang@dot.wi.gov

Projected PM Design Hour Traffic Volumes

Indicates roundabout

Design Hour: 4:15-5:15pm

Forecast Completed: 2/23/2021

Project Description

Project ID(s): 1630-08-00
Route(s): US 53
Region/COUNTY(IES): SW/La Crosse
Location: US 53 SB (3rd St) & State St

Design Hour Turning Movement Data

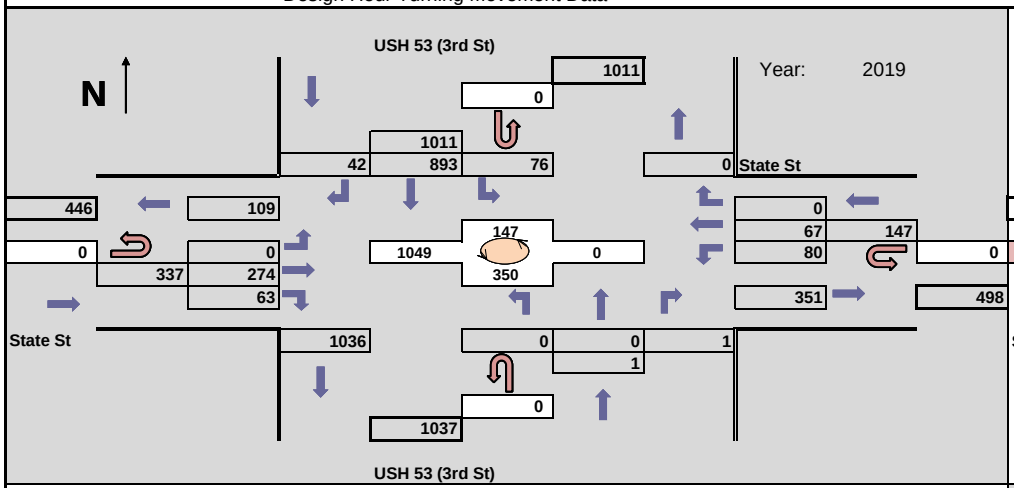

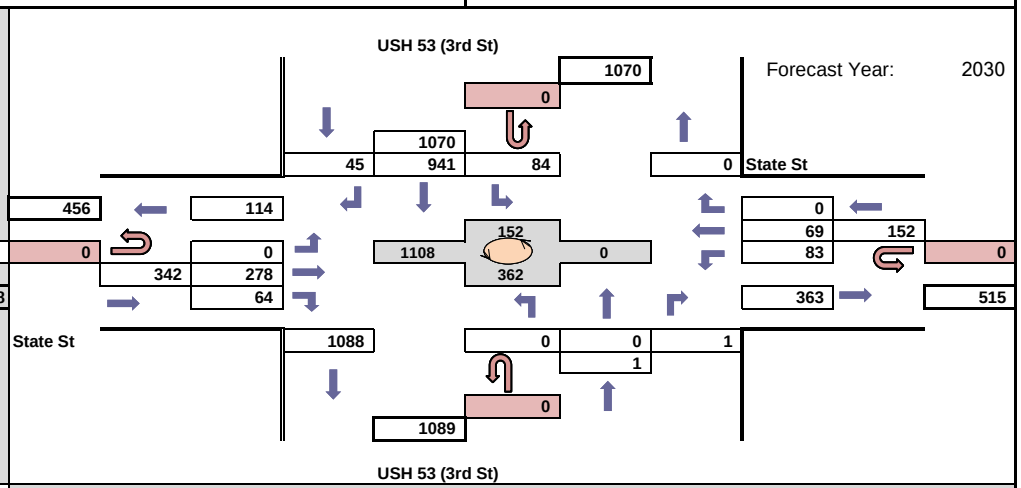

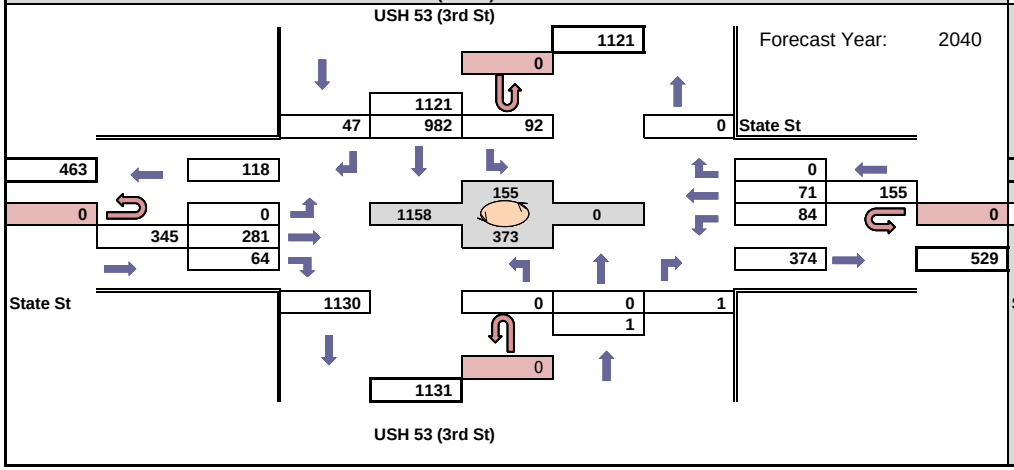

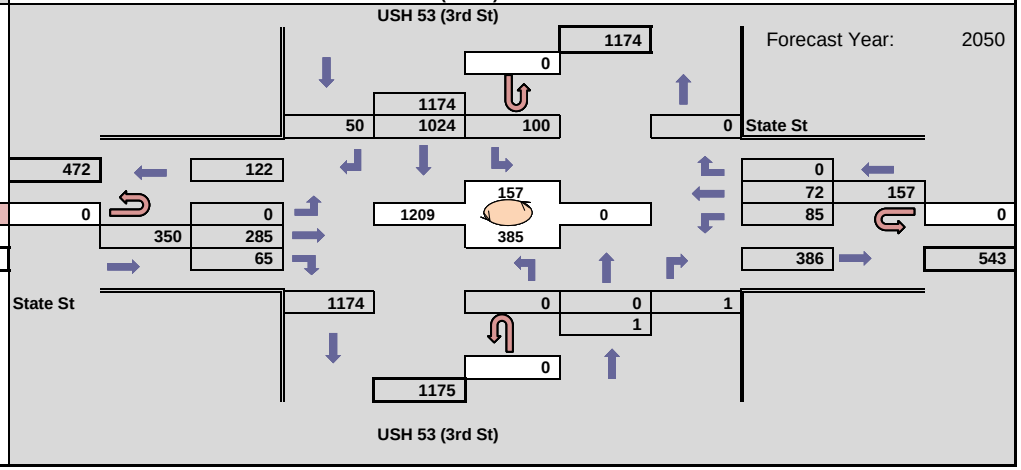

WisDOT Bureau of Planning & Economic Development
Traffic Forecasting Section
Forecast by: Miao Zhang
Phone: (608) 266 - 7995
Email: miao.zhang@dot.wi.gov

Projected AM Design Hour Traffic Volumes

Indicates roundabout

Design Hour: 7:00-8:00am

Forecast Completed: 2/23/2021

Project Description

Project ID(s): 1630-08-00
Route(s): US 53
Region/COUNTY(IES): SW/La Crosse
Location: US 53 NB (4th St) & State St

Design Hour Turning Movement Data

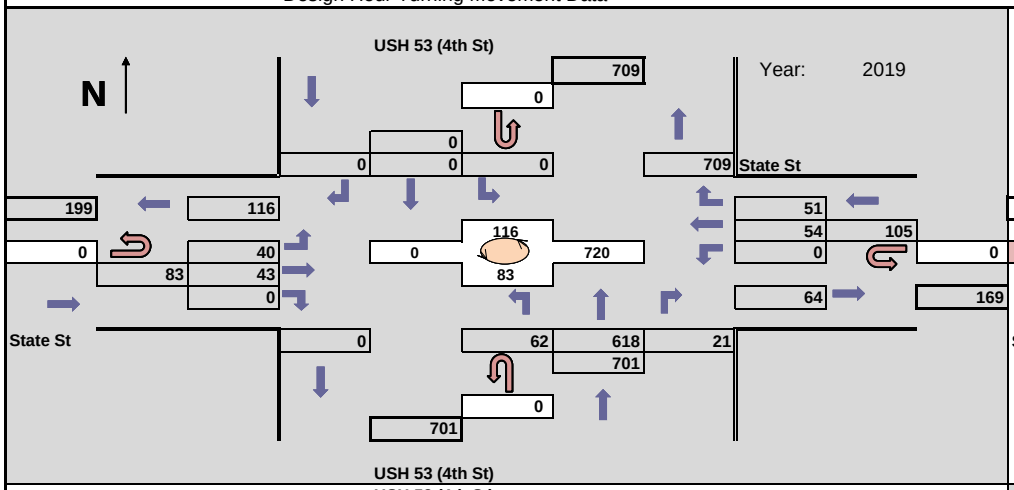

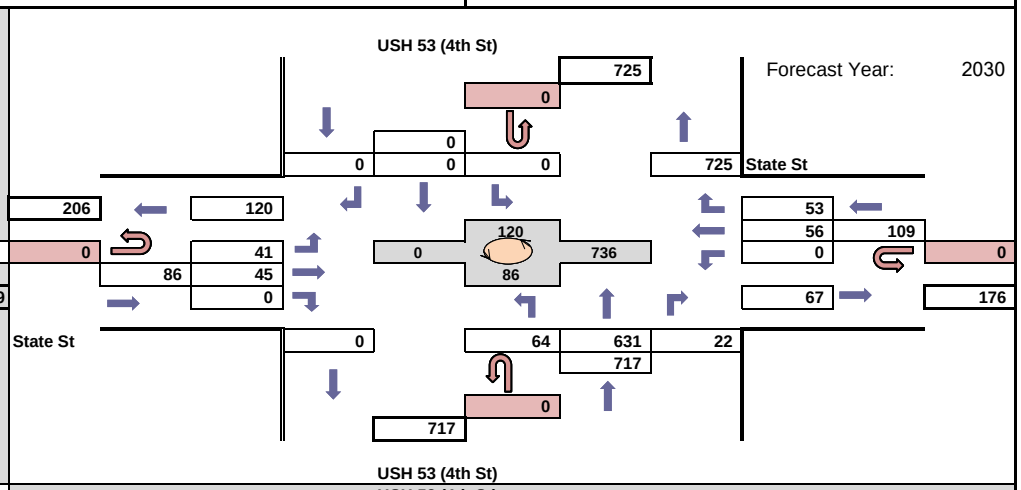

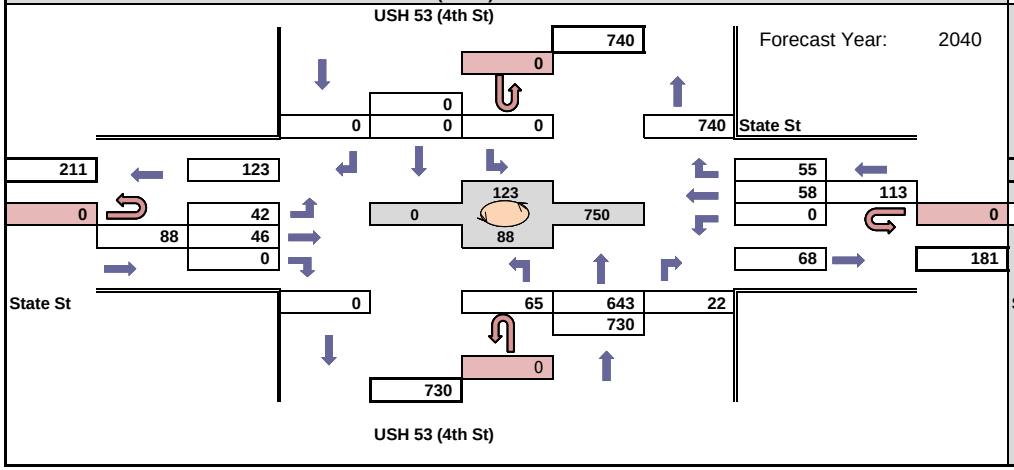

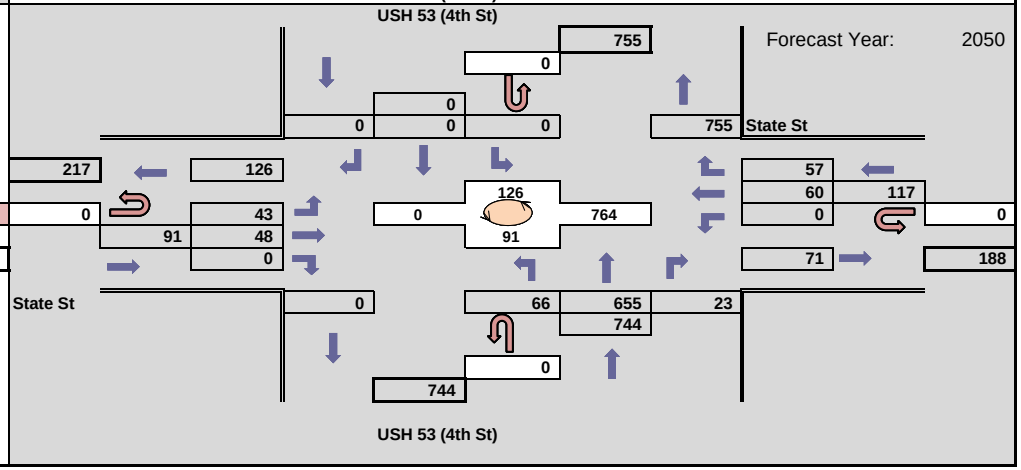

WisDOT Bureau of Planning & Economic Development
Traffic Forecasting Section
Forecast by: Miao Zhang
Phone: (608) 266 - 7995
Email: miao.zhang@dot.wi.gov

Projected PM Design Hour Traffic Volumes

Indicates roundabout

Design Hour: 4:15-5:15pm

Forecast Completed: 2/23/2021

Project Description

Project ID(s): 1630-08-00
Route(s): US 53
Region/COUNTY(IES): SW/La Crosse
Location: US 53 NB (4th St) & State St

Design Hour Turning Movement Data

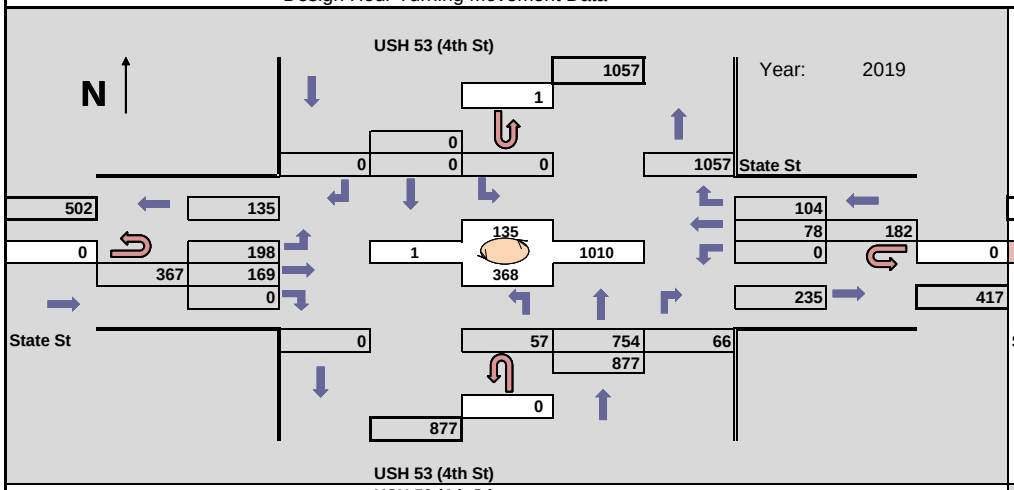

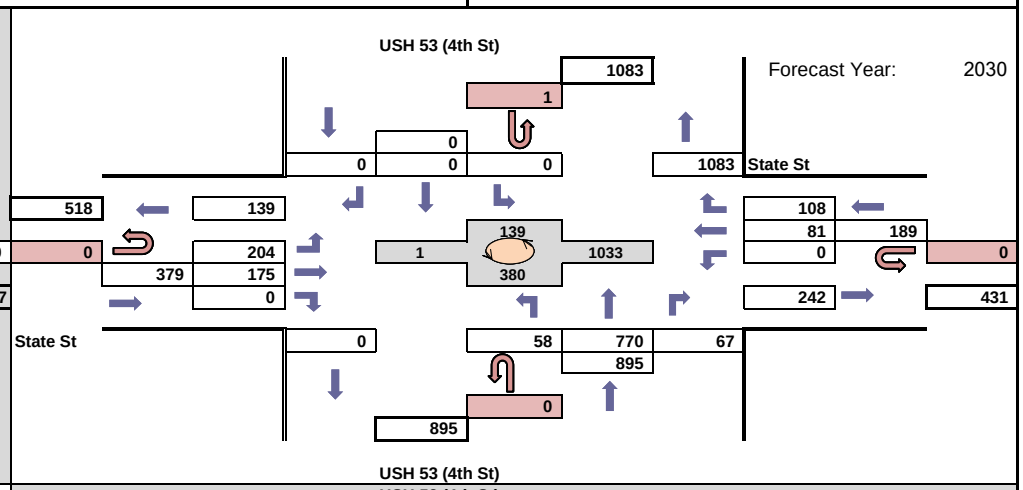

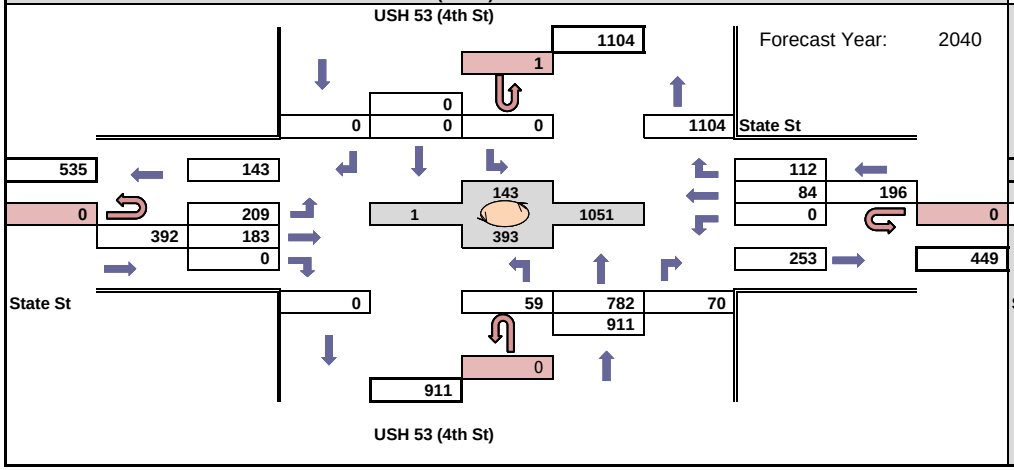

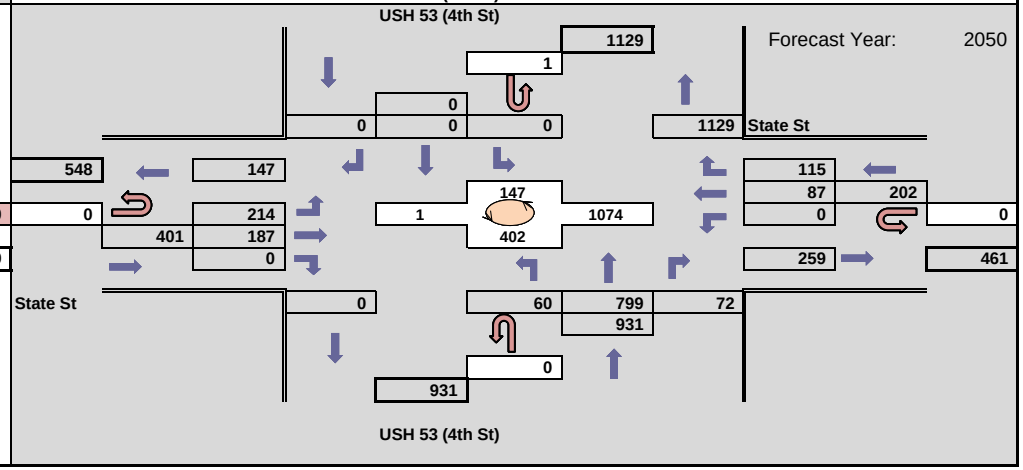

WisDOT Bureau of Planning & Economic Development
Traffic Forecasting Section
Forecast by: Miao Zhang
Phone: (608) 266 - 7995
Email: miao.zhang@dot.wi.gov

Projected AM Design Hour Traffic Volumes

Indicates roundabout

Design Hour: 7:00-8:00am

Forecast Completed: 2/23/2021

Project Description

Project ID(s): 1630-08-00
Route(s): US 53
Region/COUNTY(IES): SW/La Crosse
Location: US 53 SB (3rd St) & Main St

Design Hour Turning Movement Data

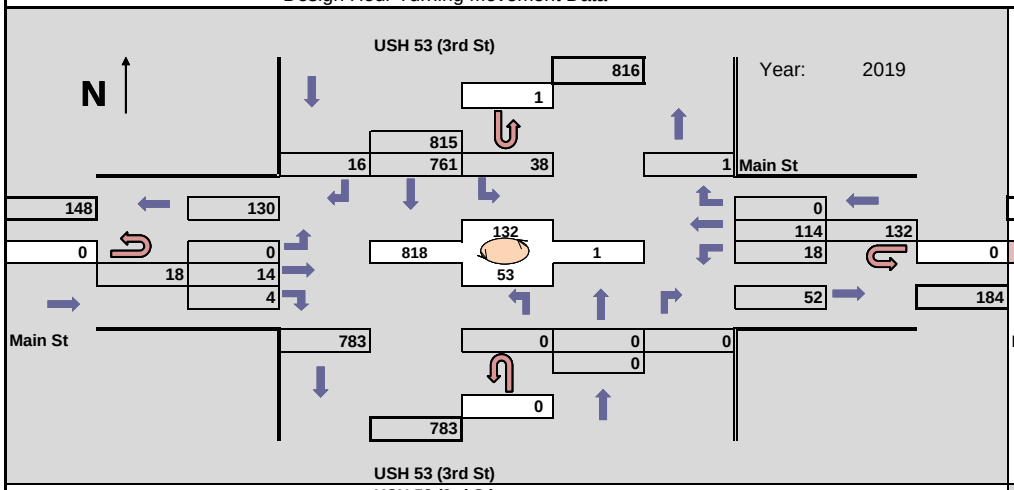

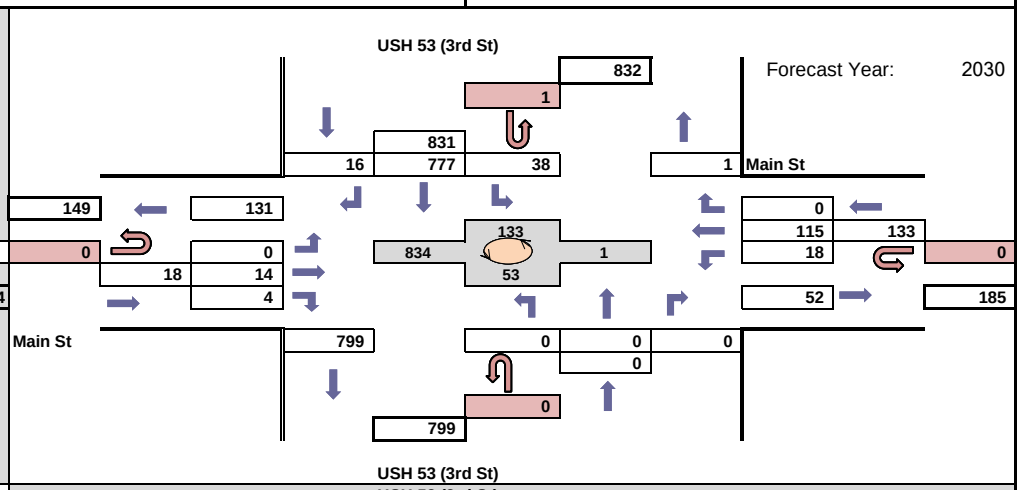

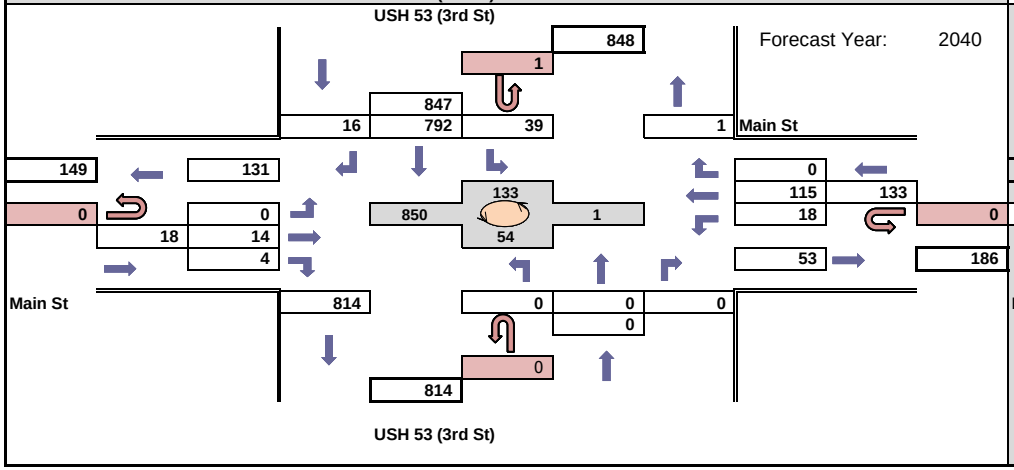

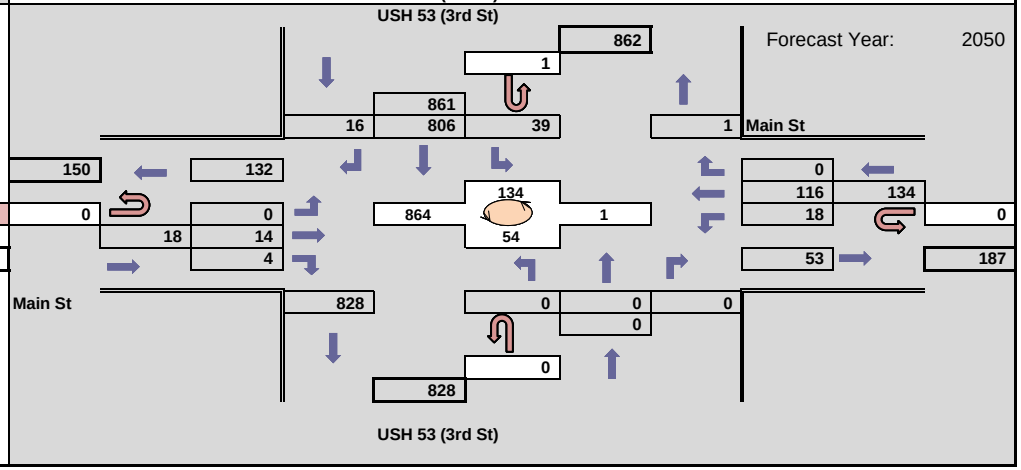

WisDOT Bureau of Planning & Economic Development
Traffic Forecasting Section
Forecast by: Miao Zhang
Phone: (608) 266 - 7995
Email: miao.zhang@dot.wi.gov

Projected PM Design Hour Traffic Volumes

Indicates roundabout

Design Hour: 4:15-5:15pm

Forecast Completed: 2/23/2021

Project Description

Project ID(s): 1630-08-00
Route(s): US 53
Region/COUNTY(IES): SW/La Crosse
Location: US 53 SB (3rd St) & Main St

Design Hour Turning Movement Data

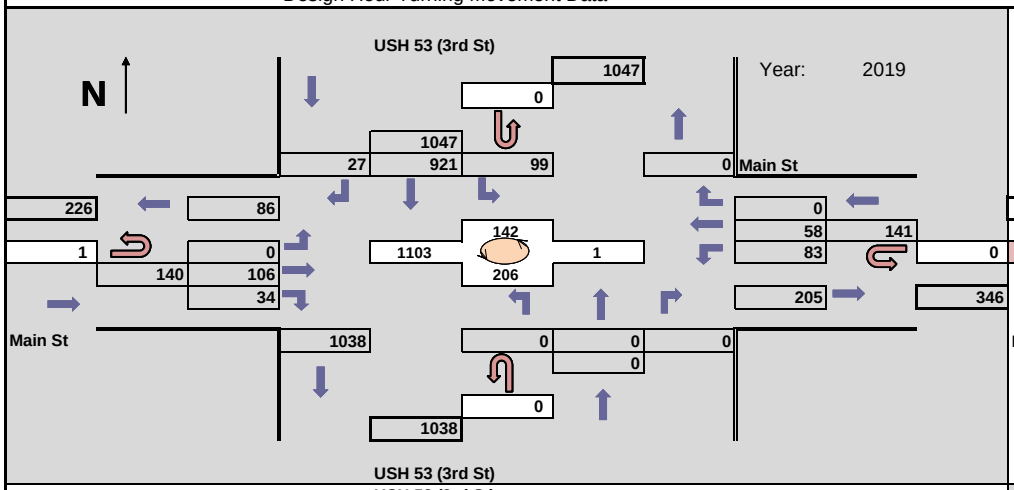

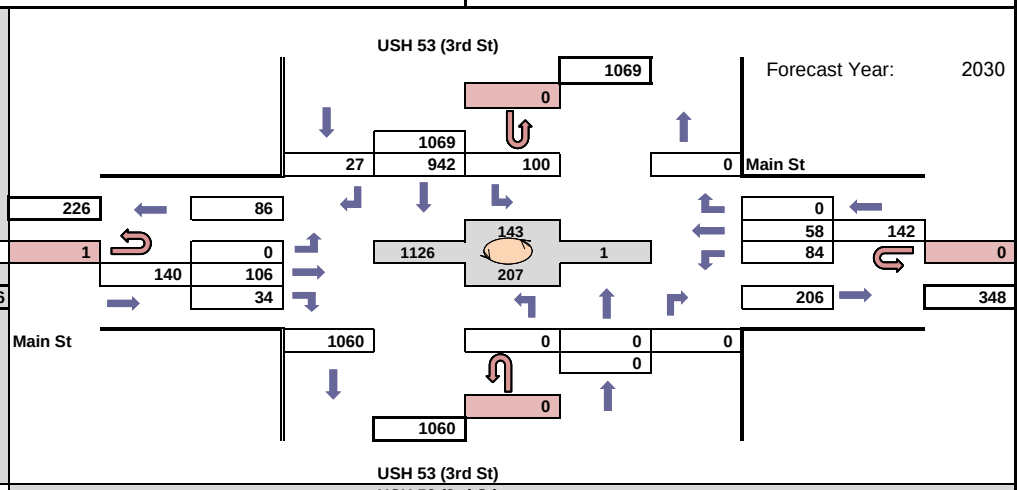

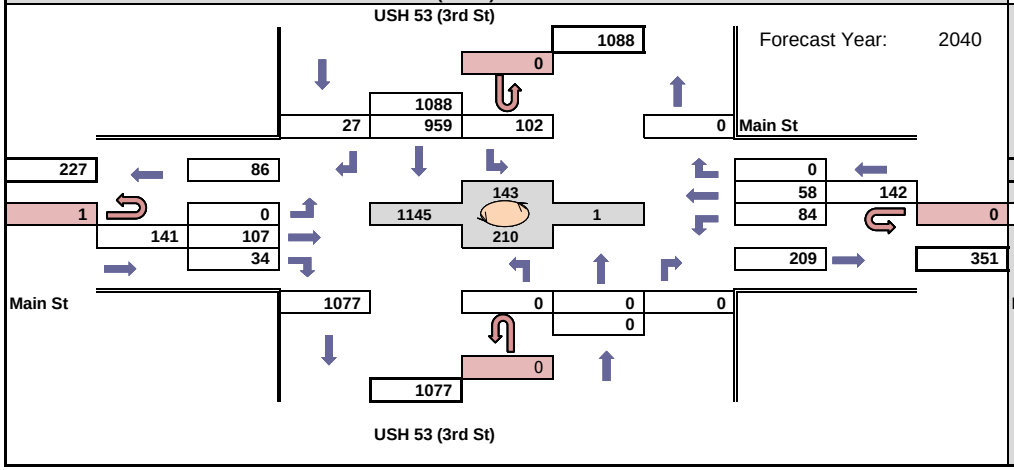

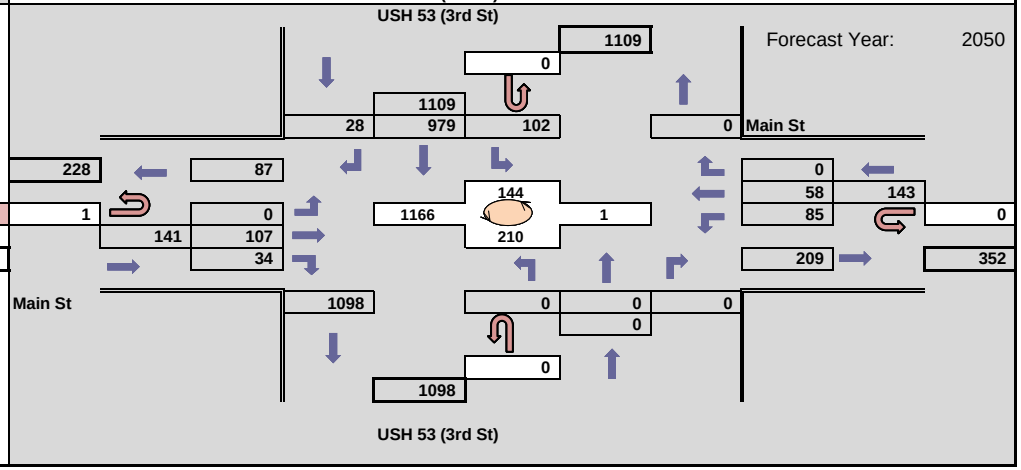

WisDOT Bureau of Planning & Economic Development
Traffic Forecasting Section
Forecast by: Miao Zhang
Phone: (608) 266 - 7995
Email: miao.zhang@dot.wi.gov

Projected AM Design Hour Traffic Volumes

Indicates roundabout

Design Hour: 7:00-8:00am

Forecast Completed: 2/23/2021

Project Description

Project ID(s): 1630-08-00
Route(s): US 53
Region/COUNTY(IES): SW/La Crosse
Location: US 53 NB (4th St) & Main St

Design Hour Turning Movement Data

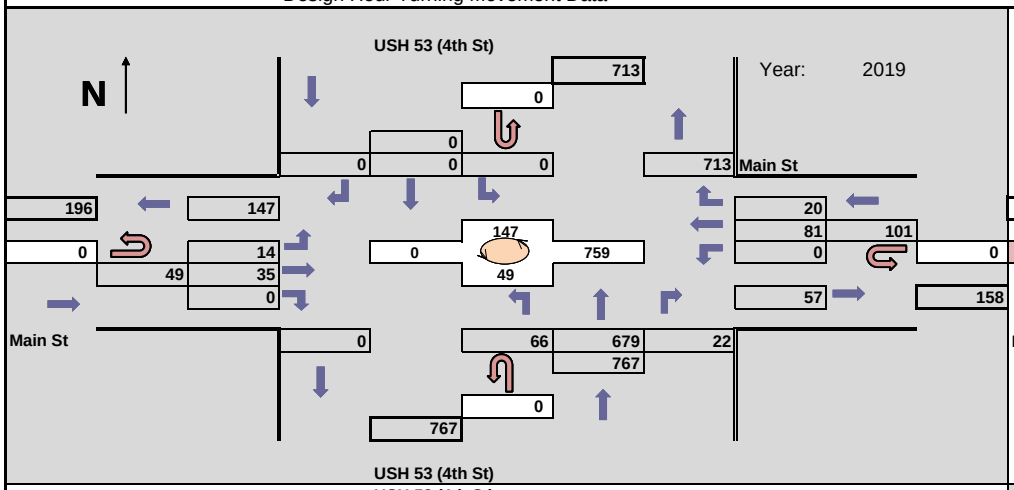

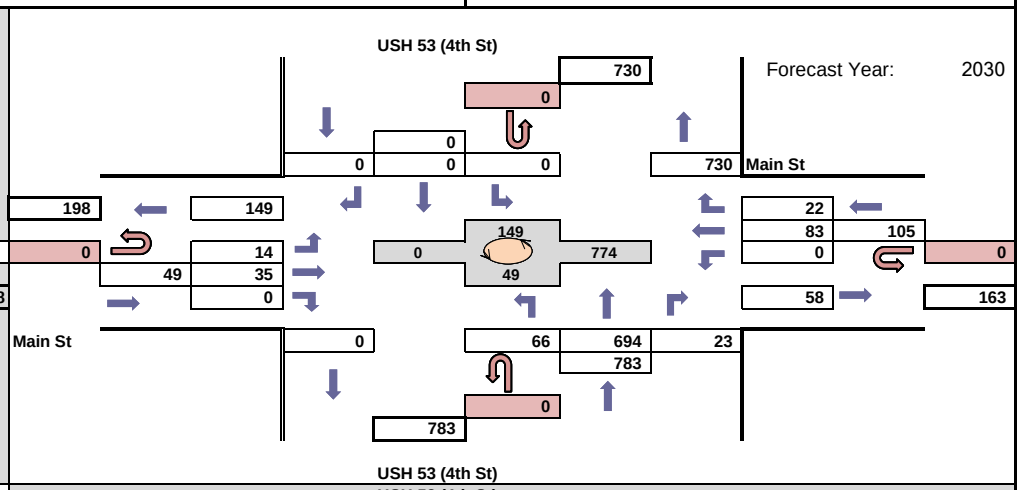

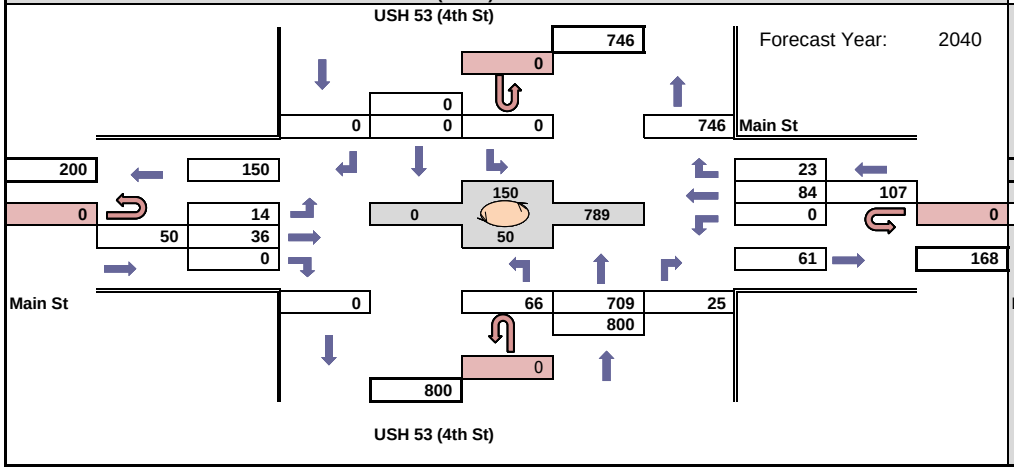

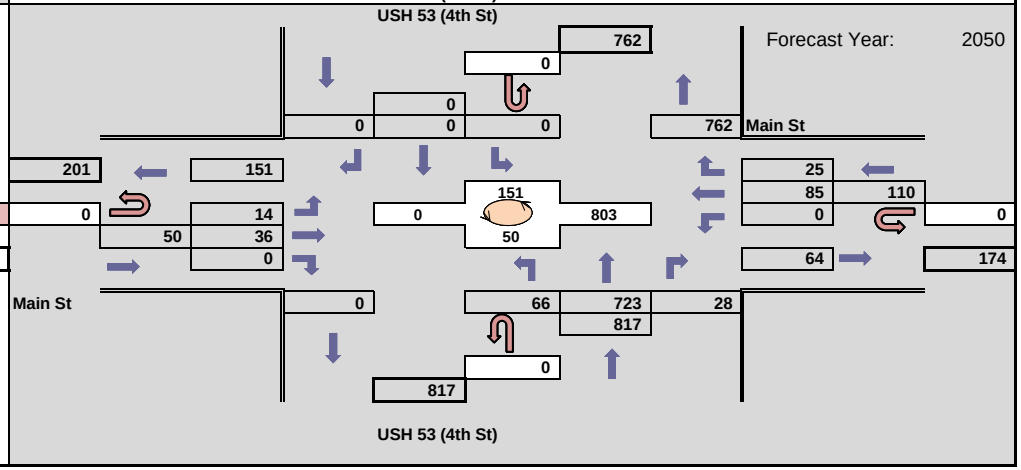

WisDOT Bureau of Planning & Economic Development
Traffic Forecasting Section
Forecast by: Miao Zhang
Phone: (608) 266 - 7995
Email: miao.zhang@dot.wi.gov

Projected PM Design Hour Traffic Volumes

Indicates roundabout

Design Hour: 4:15-5:15pm

Forecast Completed: 2/23/2021

Project Description

Project ID(s): 1630-08-00
Route(s): US 53
Region/COUNTY(IES): SW/La Crosse
Location: US 53 NB (4th St) & Main St

Design Hour Turning Movement Data

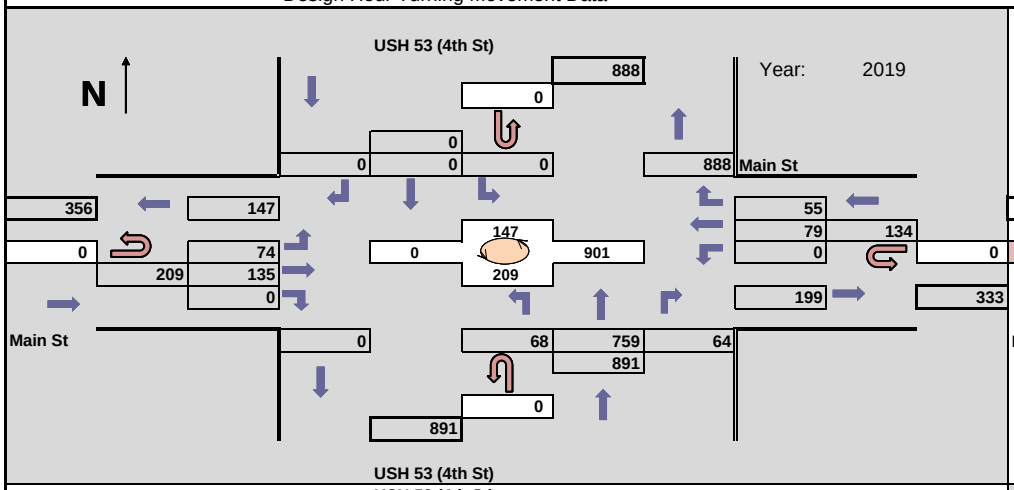

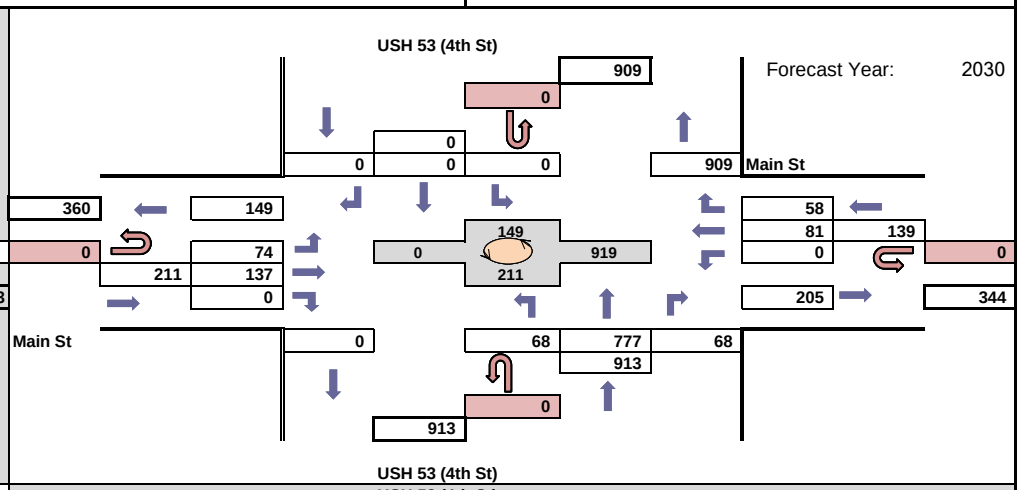

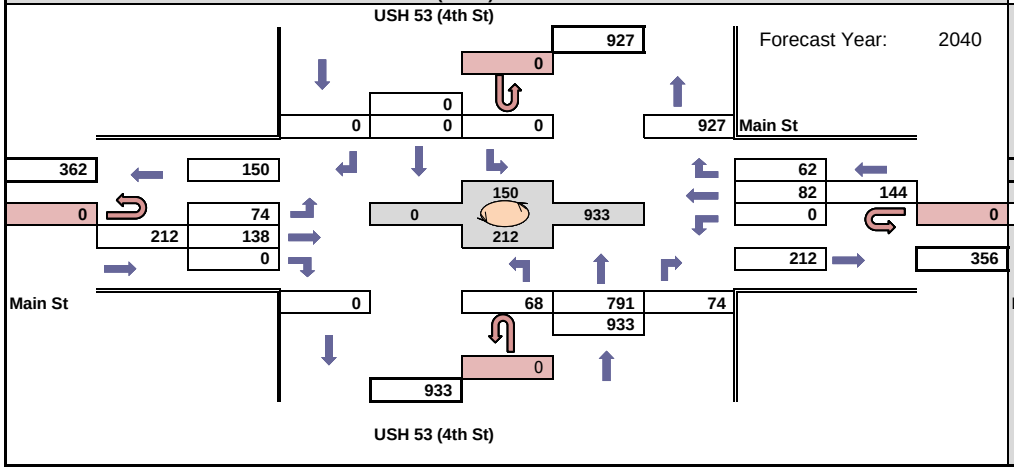

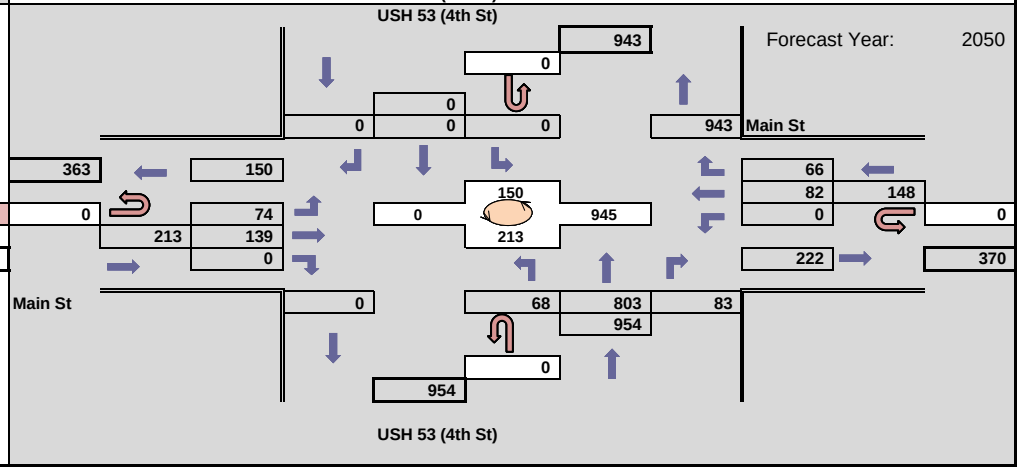

WisDOT Bureau of Planning & Economic Development
Traffic Forecasting Section
Forecast by: Miao Zhang
Phone: (608) 266 - 7995
Email: miao.zhang@dot.wi.gov

Projected AM Design Hour Traffic Volumes

Indicates roundabout

Design Hour: 7:00-8:00am

Forecast Completed: 2/23/2021

Project Description

Project ID(s): 1630-08-00
Route(s): US 53
Region/COUNTY(IES): SW/La Crosse
Location: US 53 NB (4th St) & Jay St

Design Hour Turning Movement Data

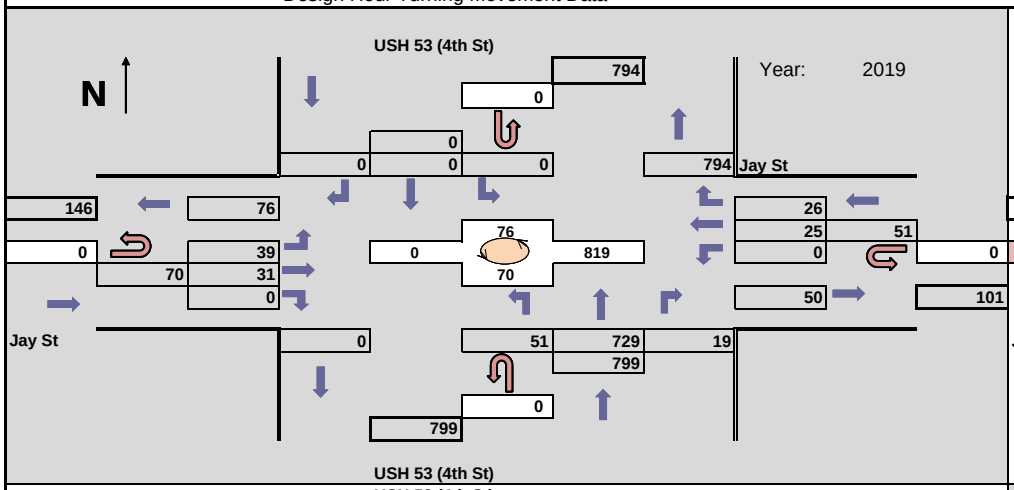

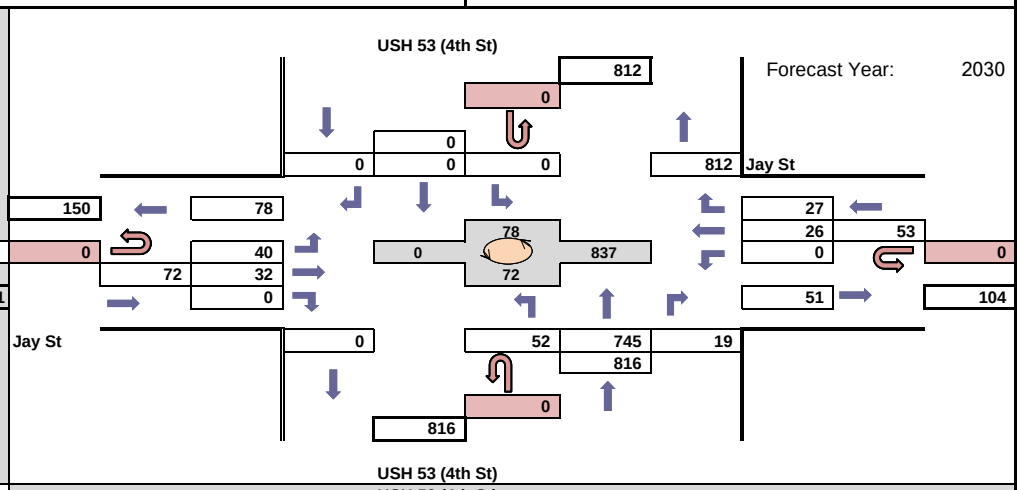

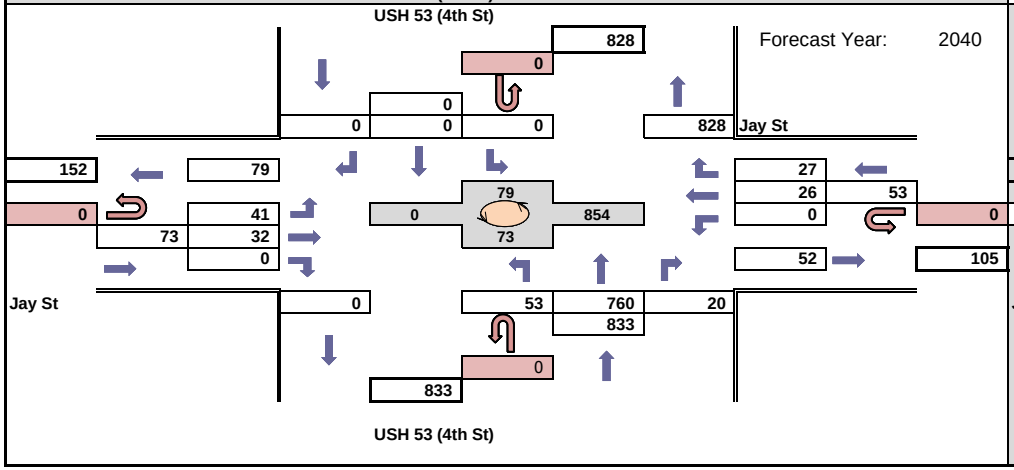

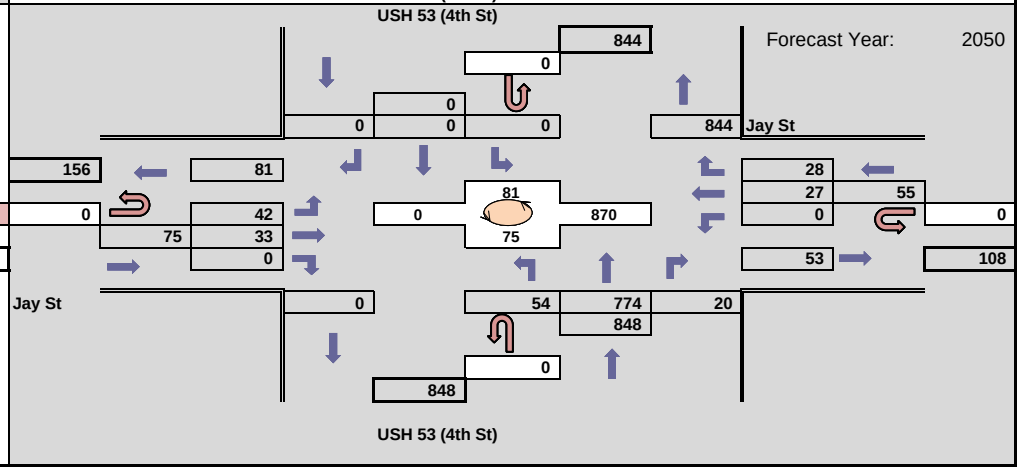

WisDOT Bureau of Planning & Economic Development
Traffic Forecasting Section
Forecast by: Miao Zhang
Phone: (608) 266 - 7995
Email: miao.zhang@dot.wi.gov

Projected PM Design Hour Traffic Volumes

Indicates roundabout

Design Hour: 4:15-5:15pm

Forecast Completed: 2/23/2021

Project Description

Project ID(s): 1630-08-00
Route(s): US 53
Region/COUNTY(IES): SW/La Crosse
Location: US 53 NB (4th St) & Jay St

Design Hour Turning Movement Data

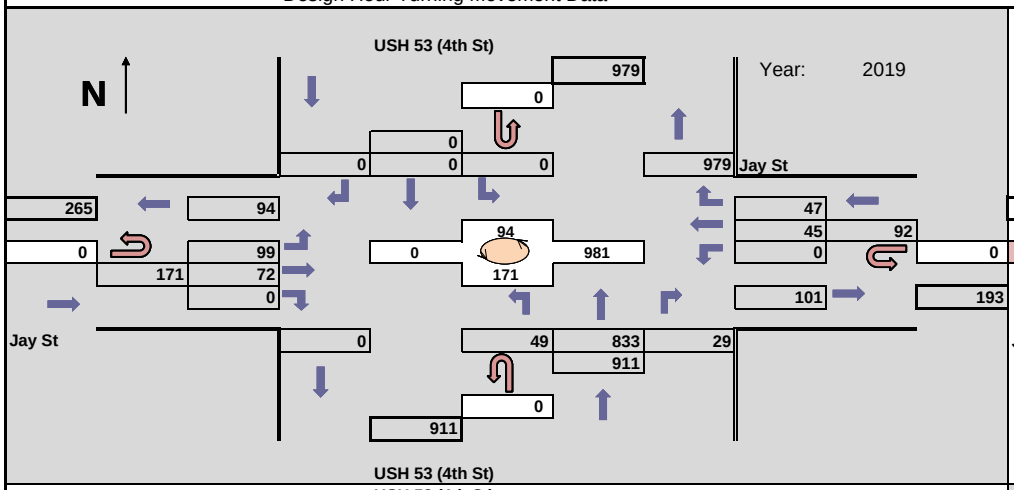

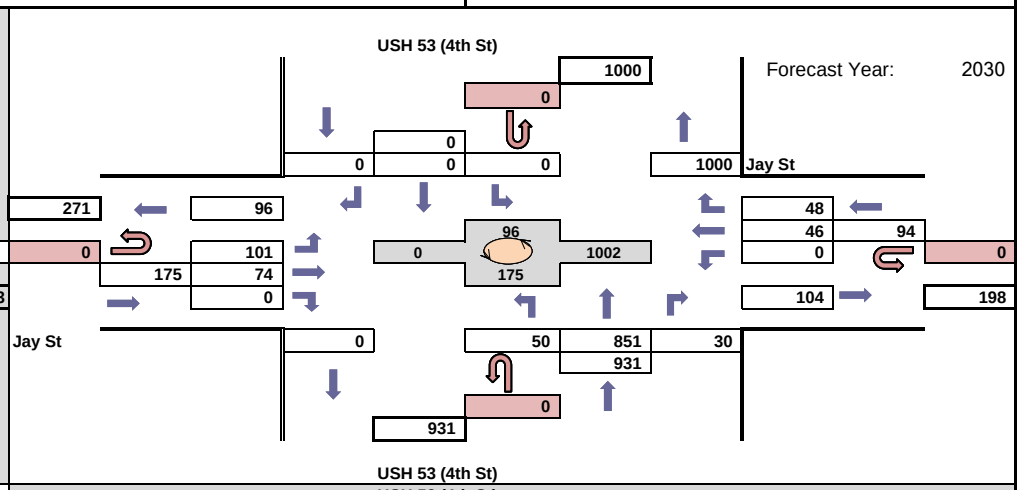

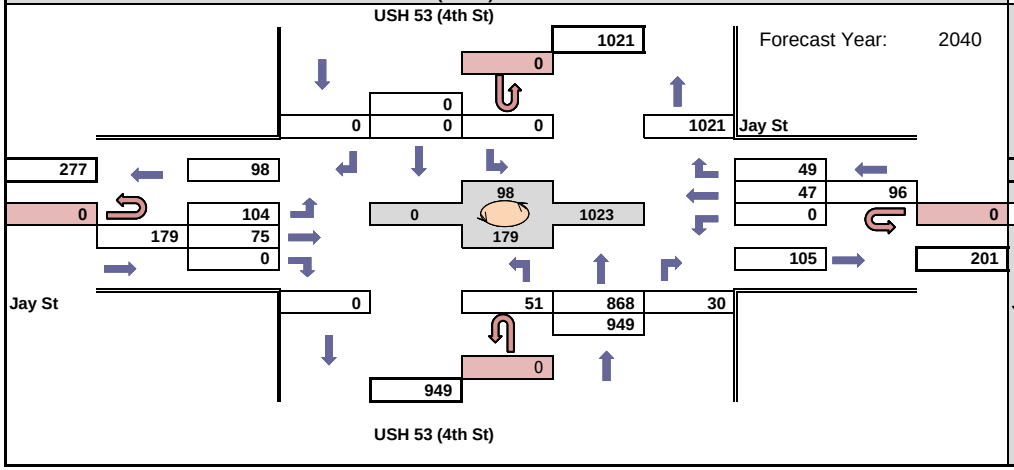

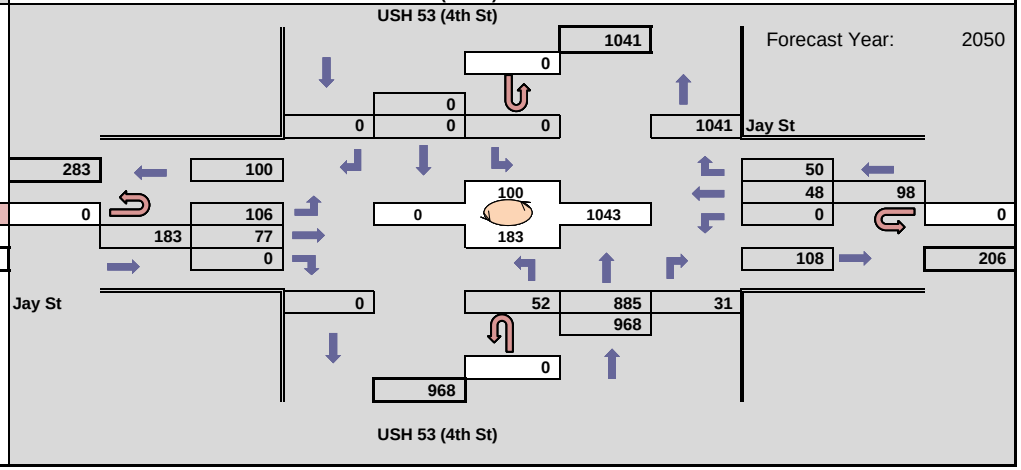

WisDOT Bureau of Planning & Economic Development
Traffic Forecasting Section
Forecast by: Miao Zhang
Phone: (608) 266 - 7995
Email: miao.zhang@dot.wi.gov

Projected AM Design Hour Traffic Volumes

Indicates roundabout

Design Hour: 7:00-8:00am

Forecast Completed: 2/23/2021

Project Description

Project ID(s): 1630-08-00
Route(s): US 53
Region/COUNTY(IES): SW/La Crosse
Location: US 53 SB (3rd St) & Jay St

Design Hour Turning Movement Data

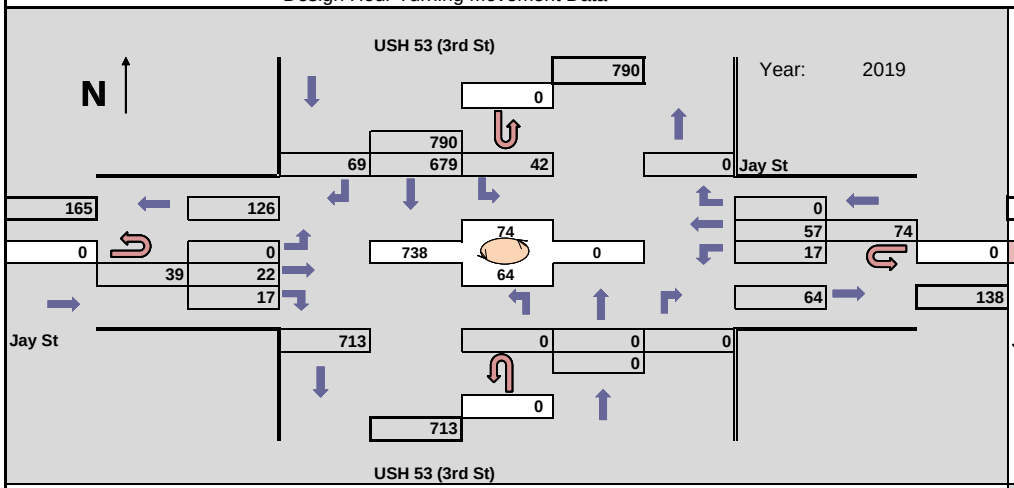

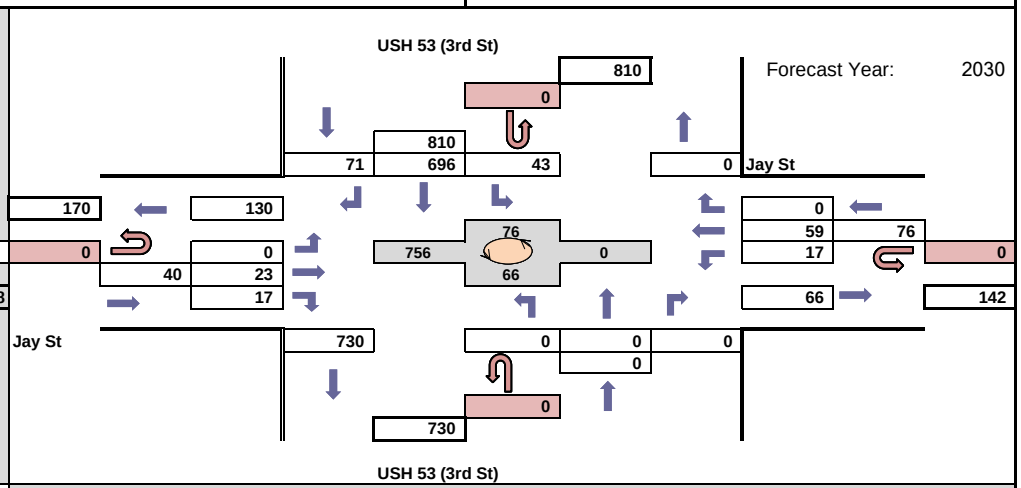

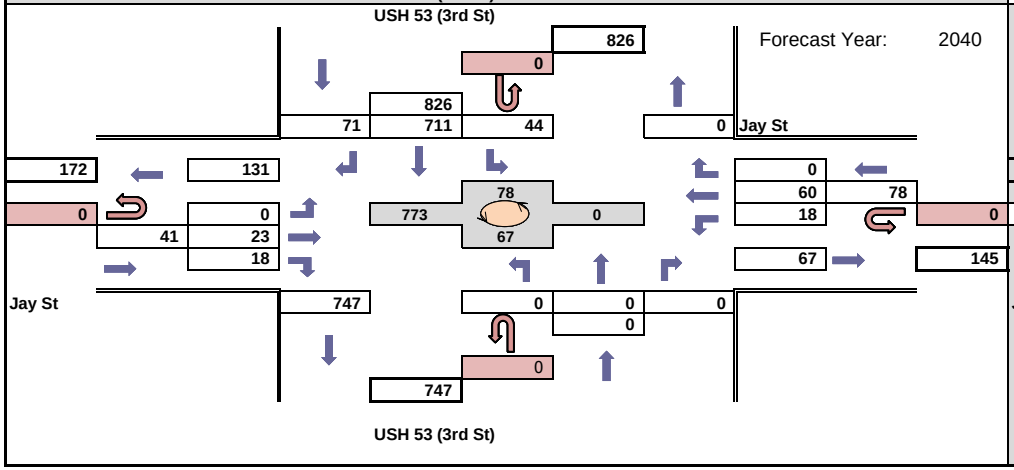

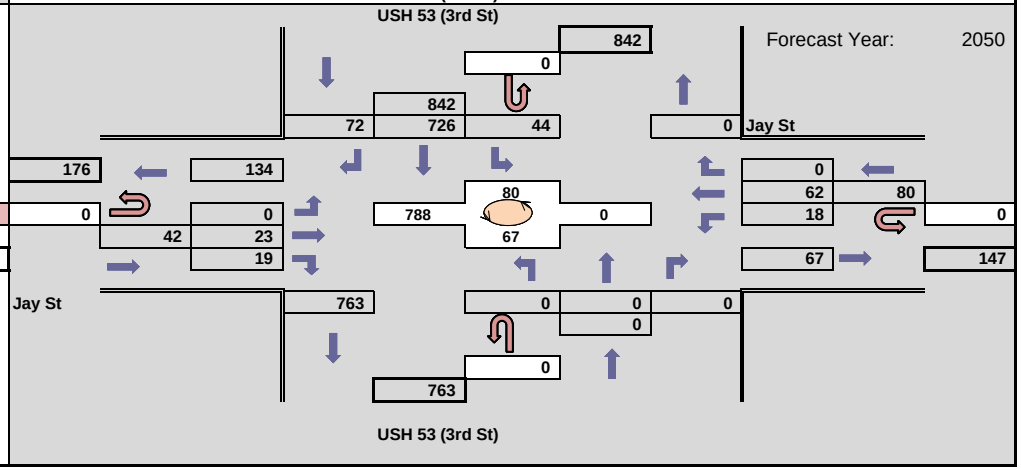

WisDOT Bureau of Planning & Economic Development
Traffic Forecasting Section
Forecast by: Miao Zhang
Phone: (608) 266 - 7995
Email: miao.zhang@dot.wi.gov

Projected PM Design Hour Traffic Volumes

Indicates roundabout

Design Hour: 4:15-5:15pm

Forecast Completed: 2/23/2021

Project Description

Project ID(s): 1630-08-00
Route(s): US 53
Region/COUNTY(IES): SW/La Crosse
Location: US 53 SB (3rd St) & Jay St

Design Hour Turning Movement Data

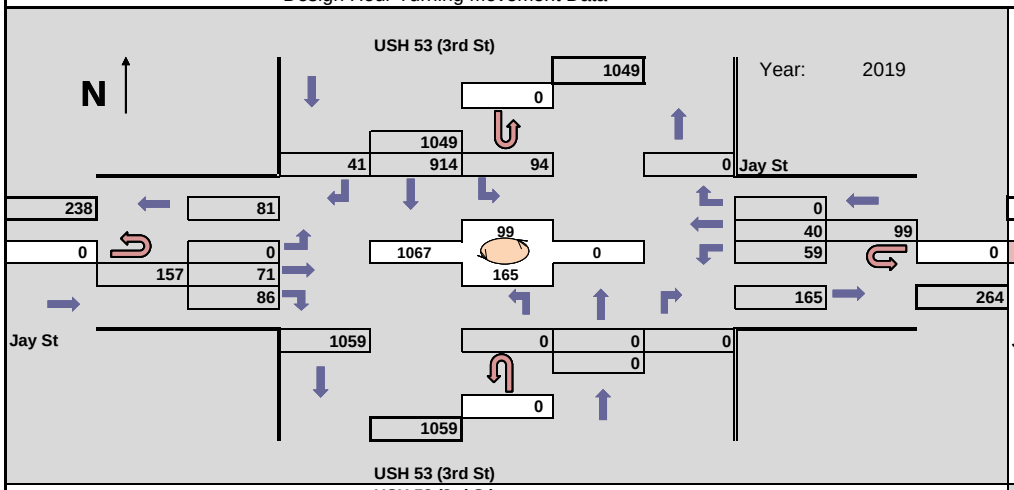

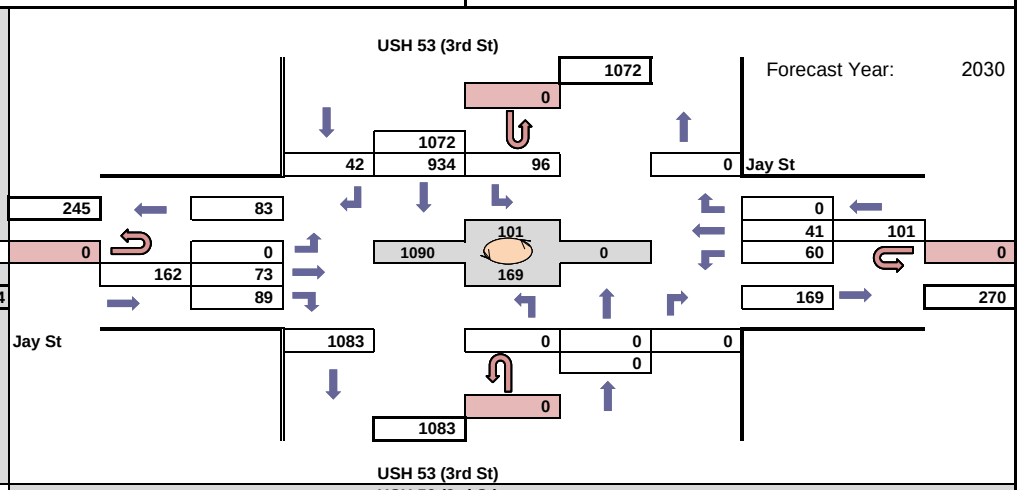

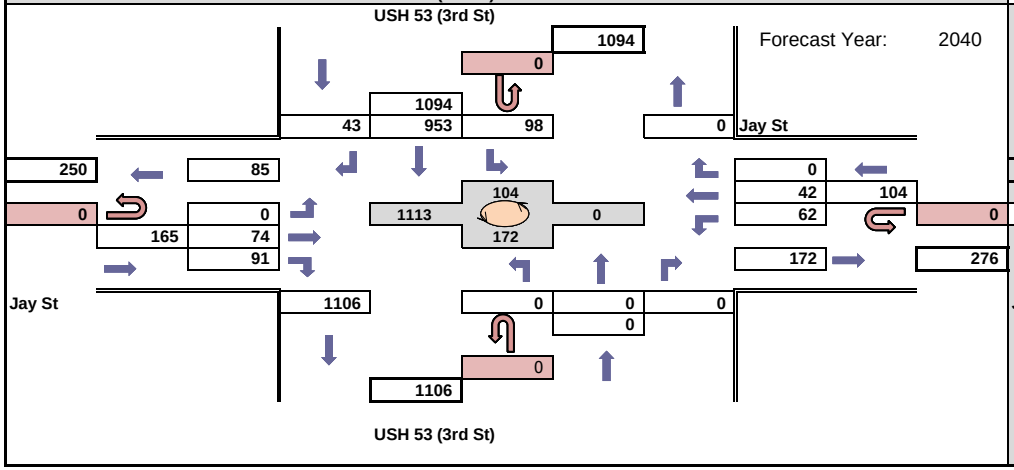

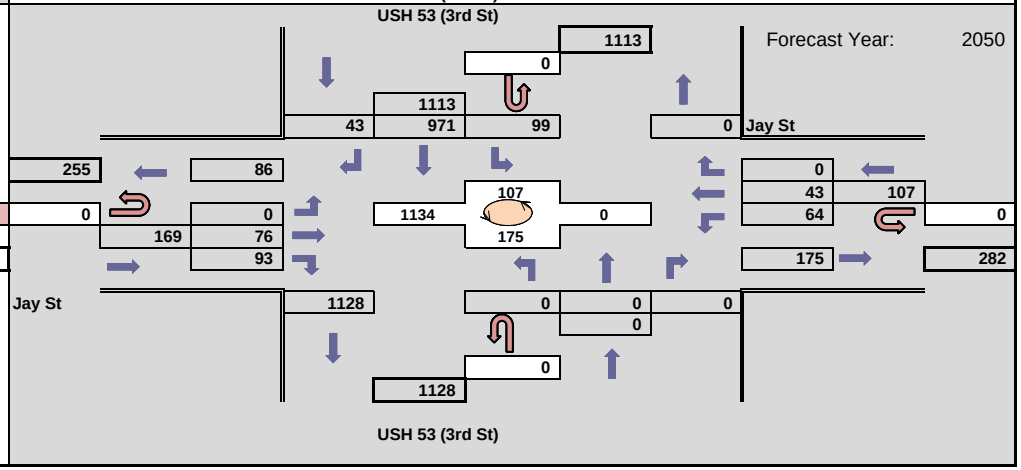

WisDOT Bureau of Planning & Economic Development
Traffic Forecasting Section
Forecast by: Miao Zhang
Phone: (608) 266 - 7995
Email: miao.zhang@dot.wi.gov

Projected AM Design Hour Traffic Volumes

Indicates roundabout

Design Hour: 7:00-8:00am

Forecast Completed: 2/23/2021

Project Description

Project ID(s): 1630-08-00
Route(s): US 53
Region/COUNTY(IES): SW/La Crosse
Location: US 53 NB (4th St) & King St

Design Hour Turning Movement Data

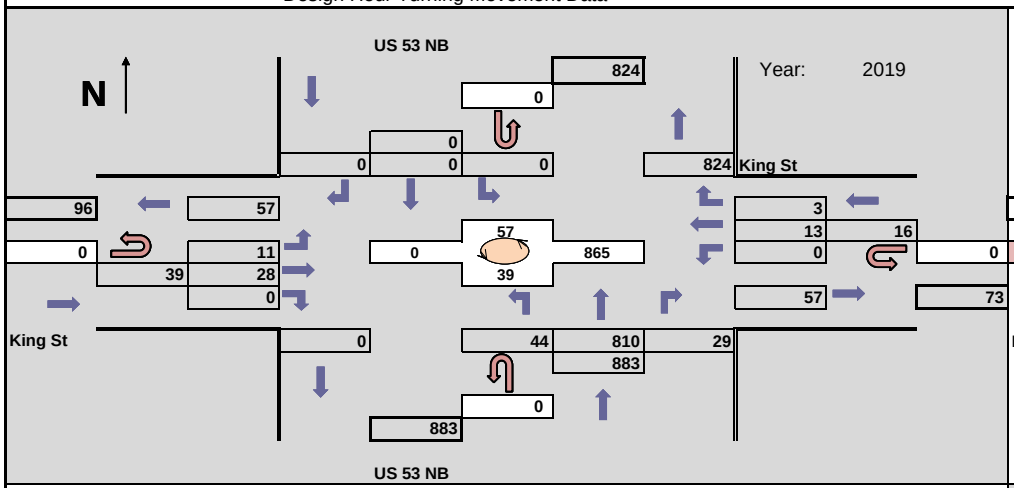

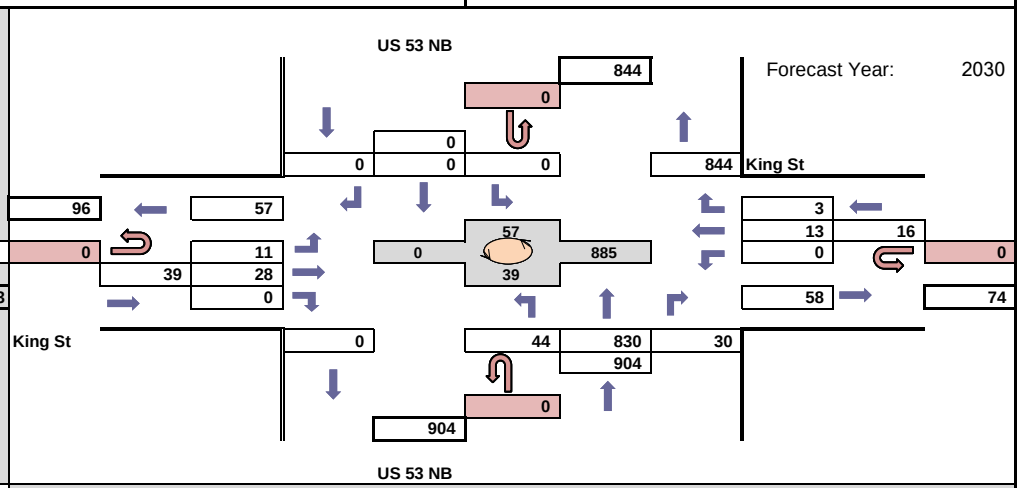

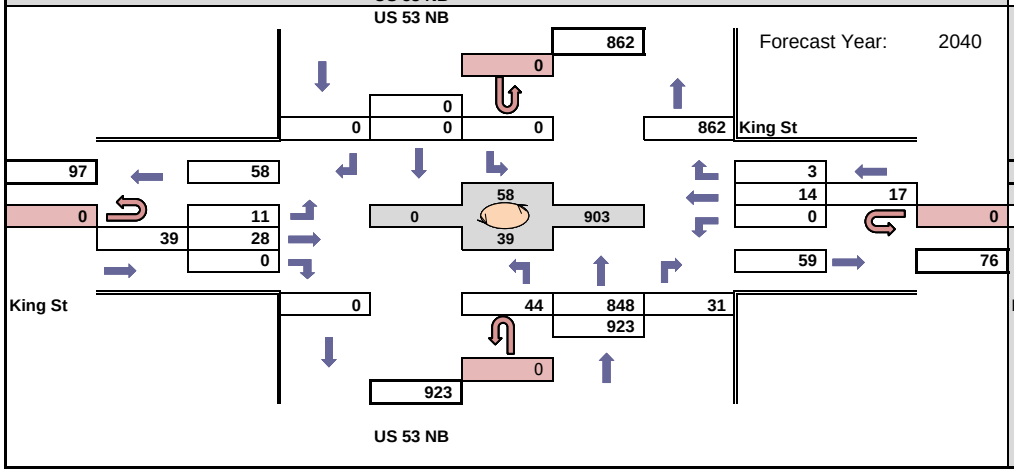

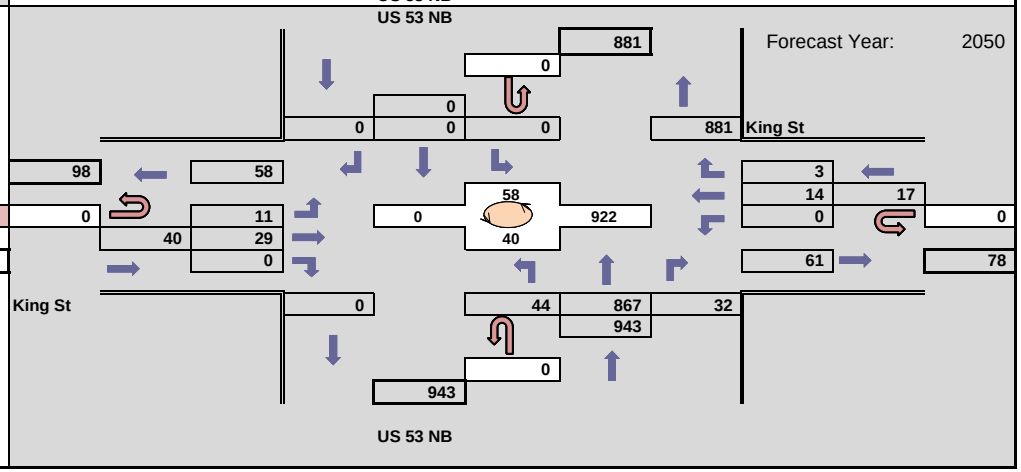

WisDOT Bureau of Planning & Economic Development
Traffic Forecasting Section
Forecast by: Miao Zhang
Phone: (608) 266 - 7995
Email: miao.zhang@dot.wi.gov

Projected PM Design Hour Traffic Volumes

Indicates roundabout

Design Hour: 4:15-5:15pm

Forecast Completed: 2/23/2021

Project Description

Project ID(s): 1630-08-00
Route(s): US 53
Region/COUNTY(IES): SW/La Crosse
Location: US 53 NB (4th St) & King St

Design Hour Turning Movement Data

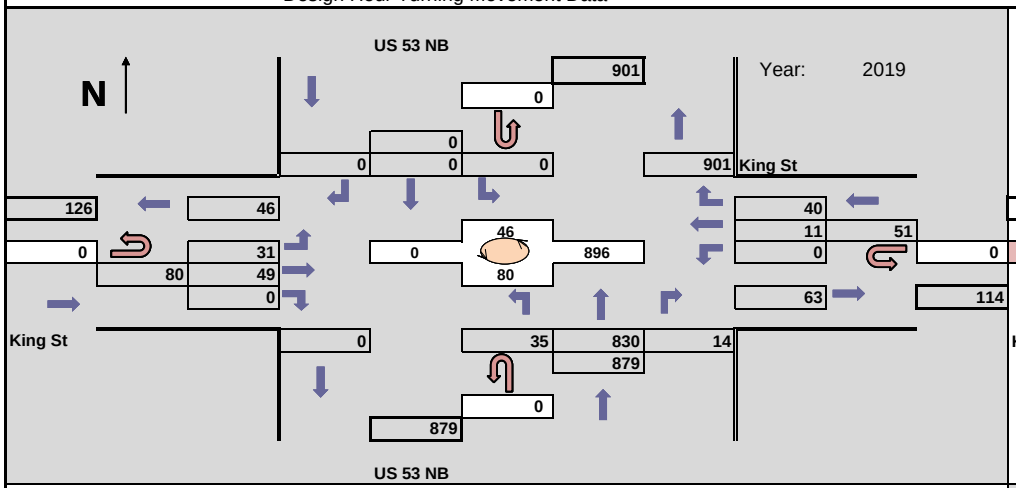

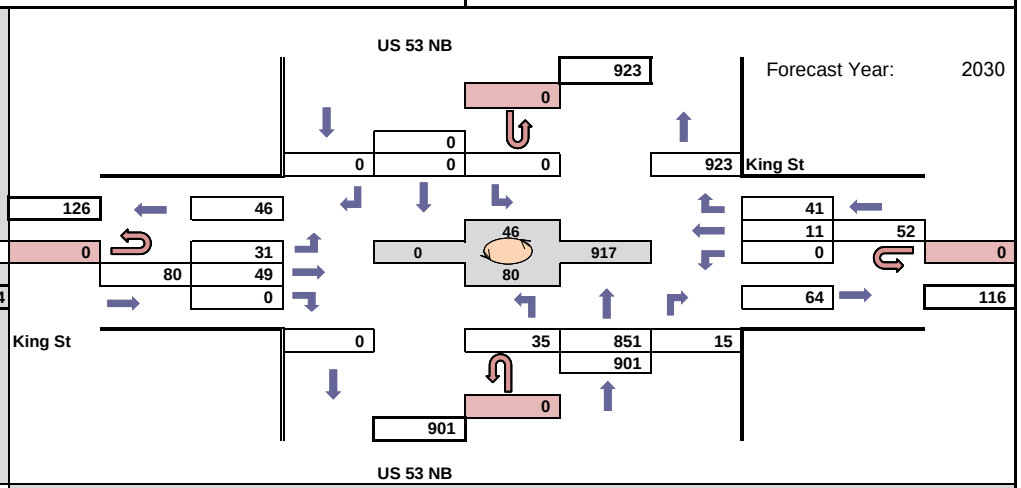

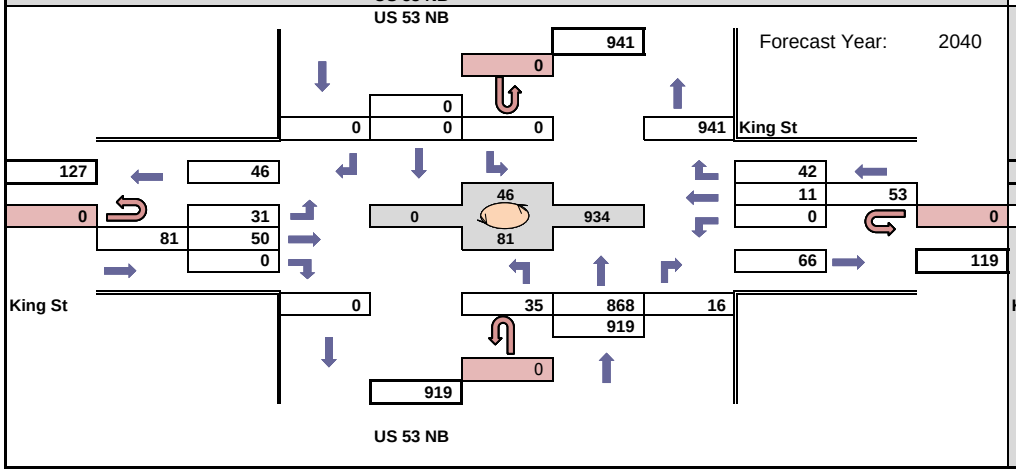

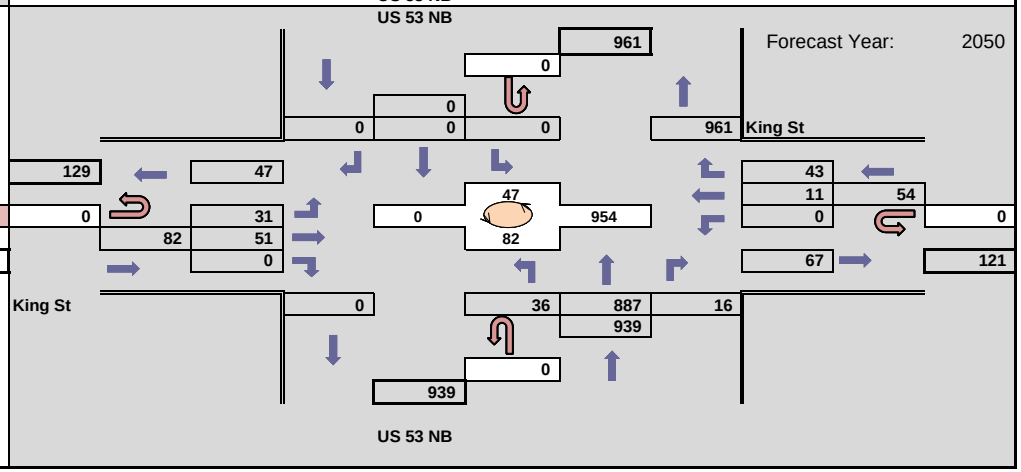

WisDOT Bureau of Planning & Economic Development
Traffic Forecasting Section
Forecast by: Miao Zhang
Phone: (608) 266 - 7995
Email: miao.zhang@dot.wi.gov

Projected AM Design Hour Traffic Volumes

Indicates roundabout

Design Hour: 7:00-8:00am

Forecast Completed: 2/23/2021

Project Description

Project ID(s): 1630-08-00
Route(s): US 53
Region/COUNTY(IES): SW/La Crosse
Location: US 53 SB (3rd St) & King St

Design Hour Turning Movement Data

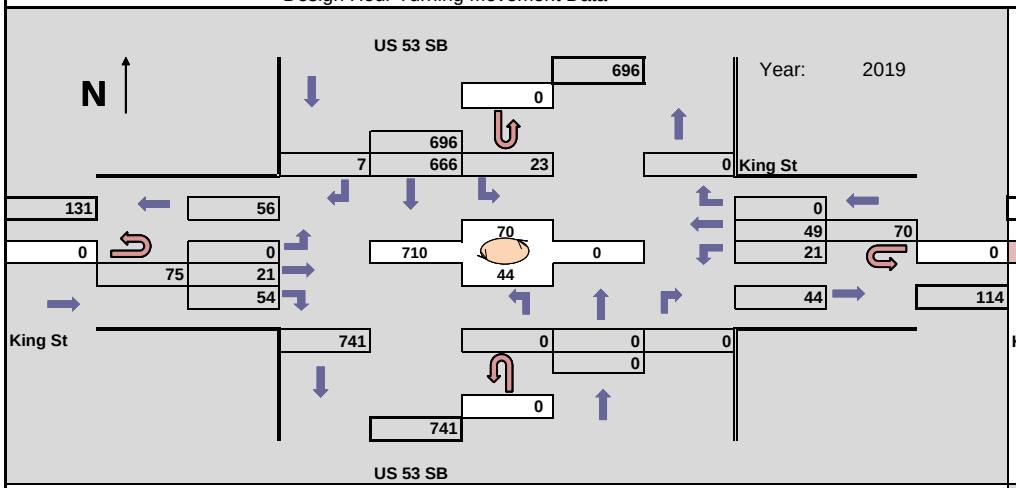

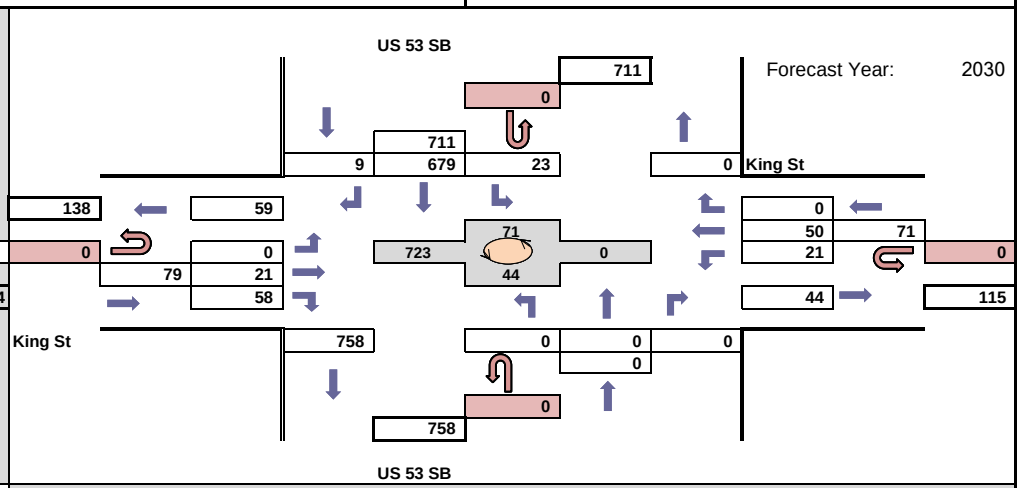

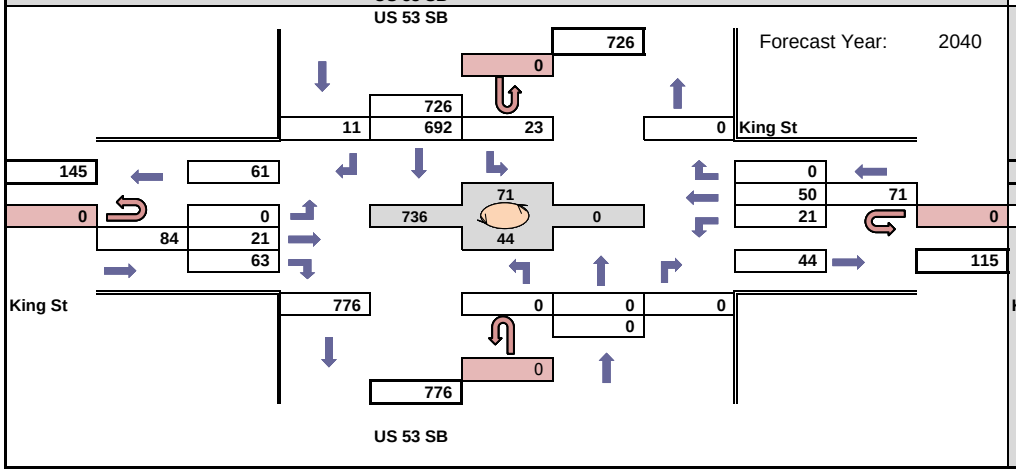

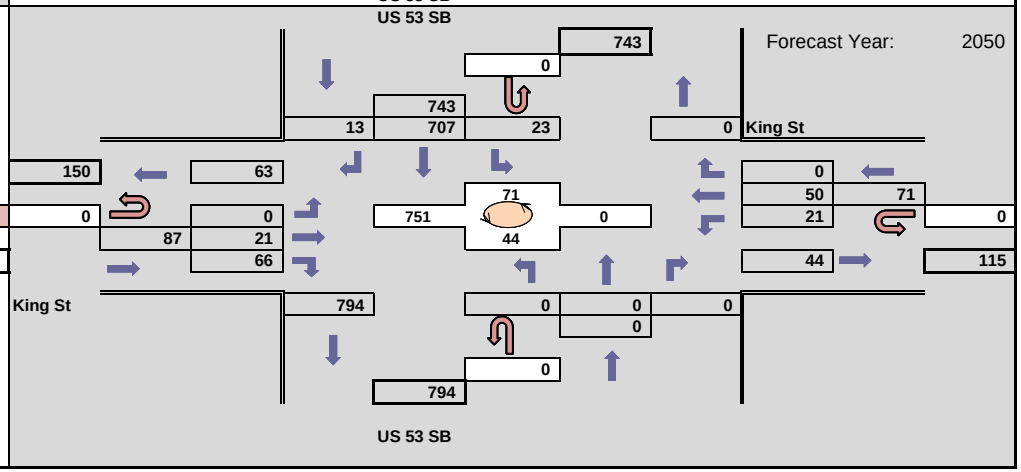

WisDOT Bureau of Planning & Economic Development
Traffic Forecasting Section
Forecast by: Miao Zhang
Phone: (608) 266 - 7995
Email: miao.zhang@dot.wi.gov

Projected PM Design Hour Traffic Volumes

Indicates roundabout

Design Hour: 4:15-5:15pm

Forecast Completed: 2/23/2021

Project Description

Project ID(s): 1630-08-00
Route(s): US 53
Region/COUNTY(IES): SW/La Crosse
Location: US 53 SB (3rd St) & King St

Design Hour Turning Movement Data

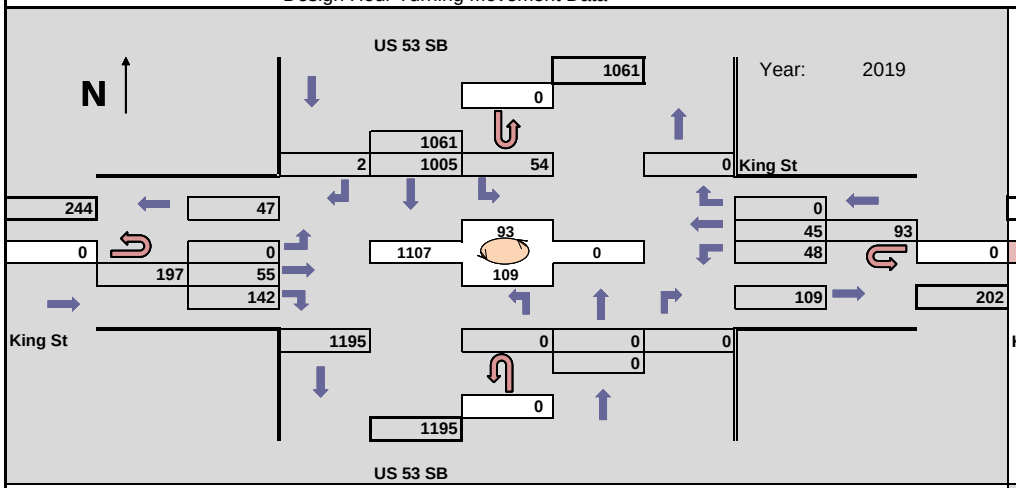

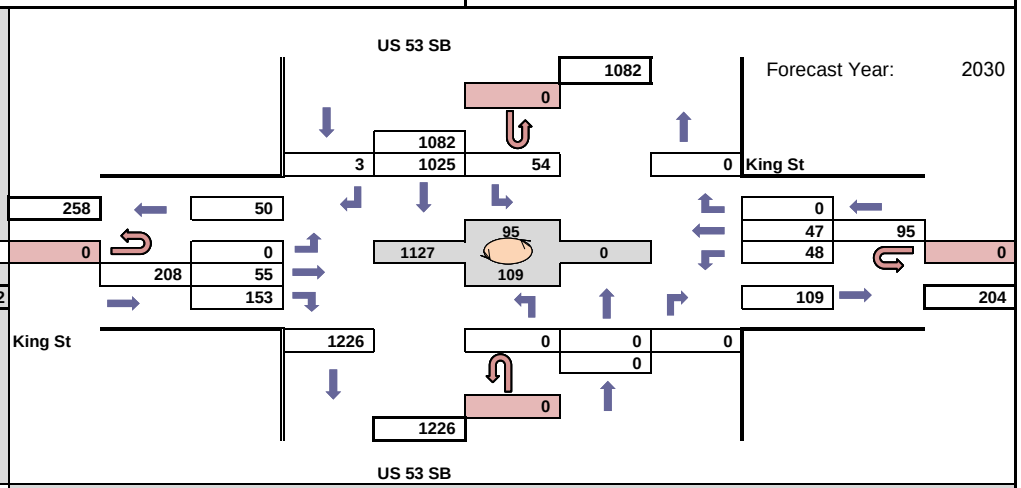

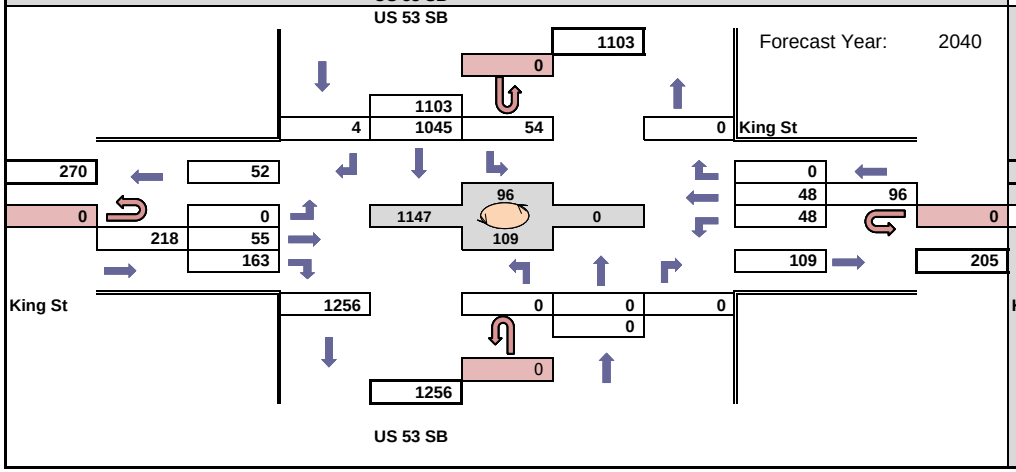

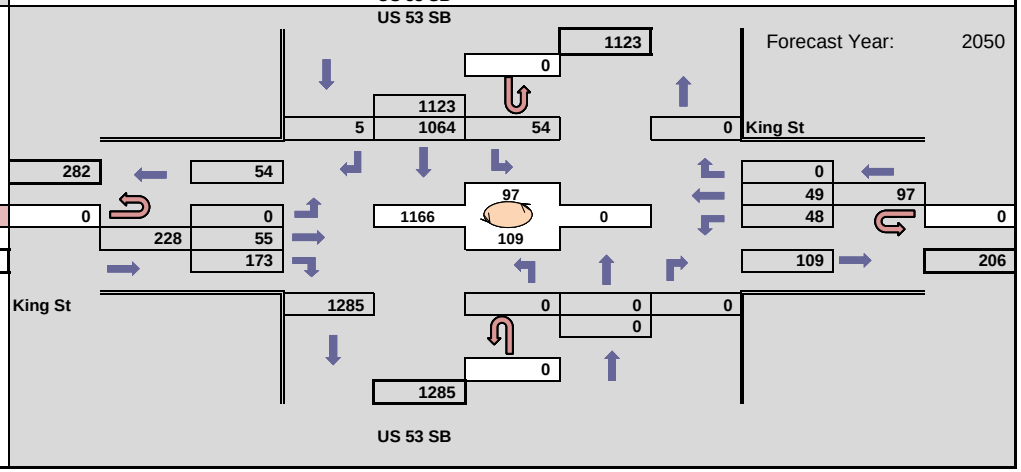

WisDOT Bureau of Planning & Economic Development
Traffic Forecasting Section
Forecast by: Miao Zhang
Phone: (608) 266 - 7995
Email: miao.zhang@dot.wi.gov

Projected AM Design Hour Traffic Volumes

Indicates roundabout

Design Hour: 7:00-8:00am

Forecast Completed: 2/23/2021

Project Description

Project ID(s): 1630-08-00
Route(s): US 53
Region/COUNTY(IES): SW/La Crosse
Location: US 53 NB (4th St) & US 14 WB (Cass St)

Design Hour Turning Movement Data

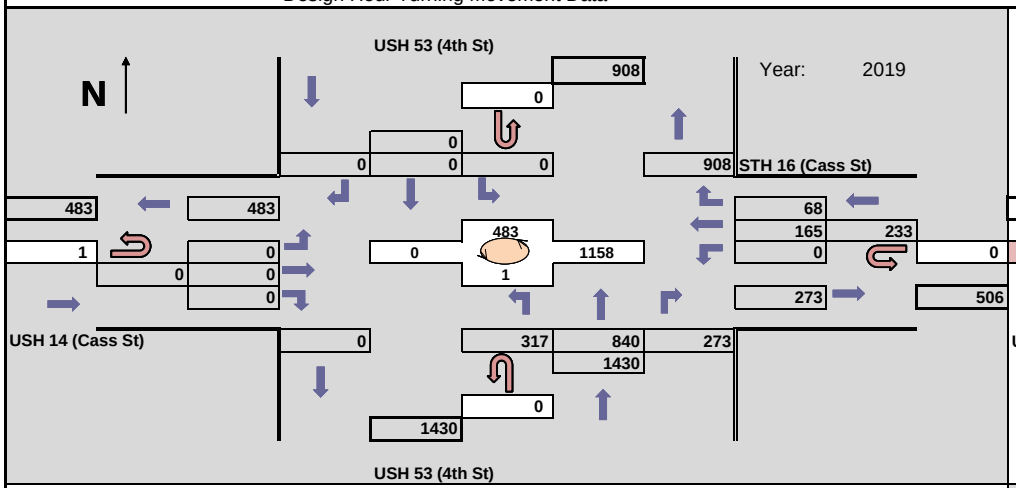

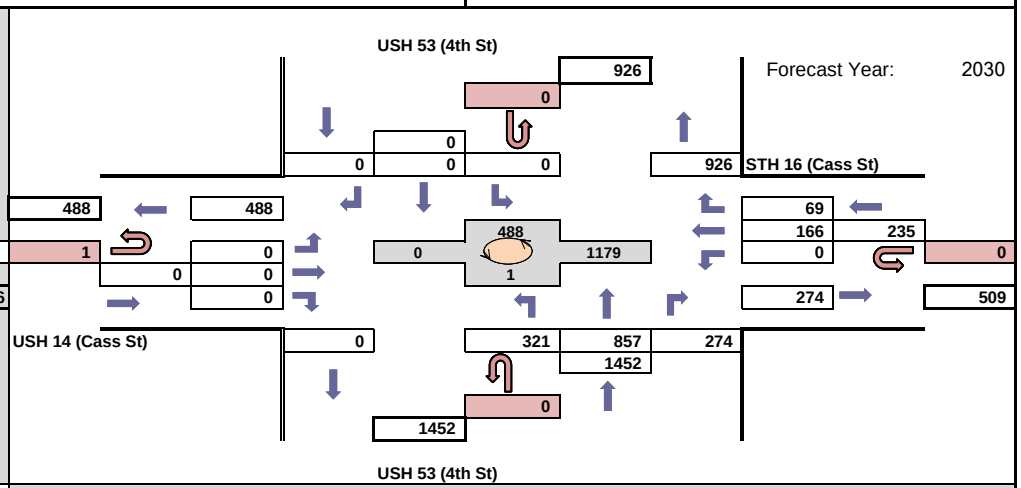

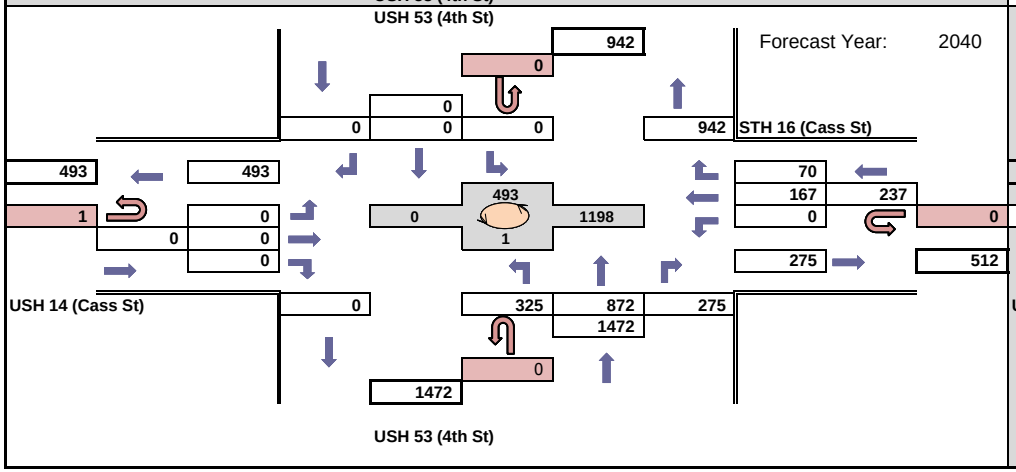

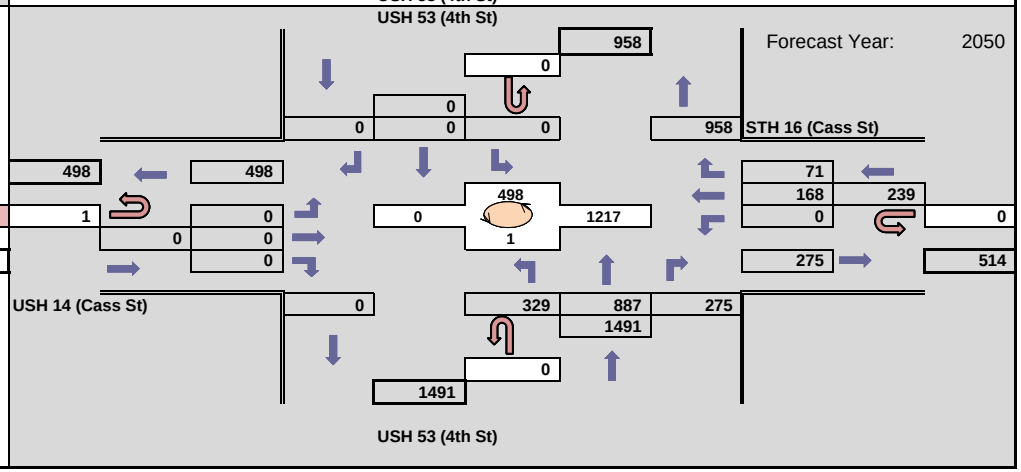

WisDOT Bureau of Planning & Economic Development
Traffic Forecasting Section
Forecast by: Miao Zhang
Phone: (608) 266 - 7995
Email: miao.zhang@dot.wi.gov

Projected PM Design Hour Traffic Volumes

Indicates roundabout

Design Hour: 4:15-5:15pm

Forecast Completed: 2/23/2021

Project Description

Project ID(s): 1630-08-00
Route(s): US 53
Region/COUNTY(IES): SW/La Crosse
Location: US 53 NB (4th St) & US 14 WB (Cass St)

Design Hour Turning Movement Data

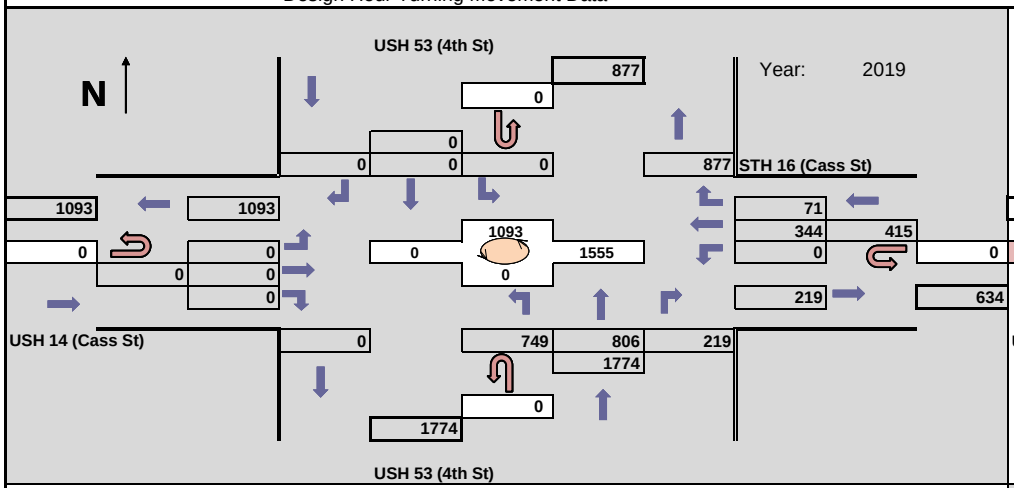

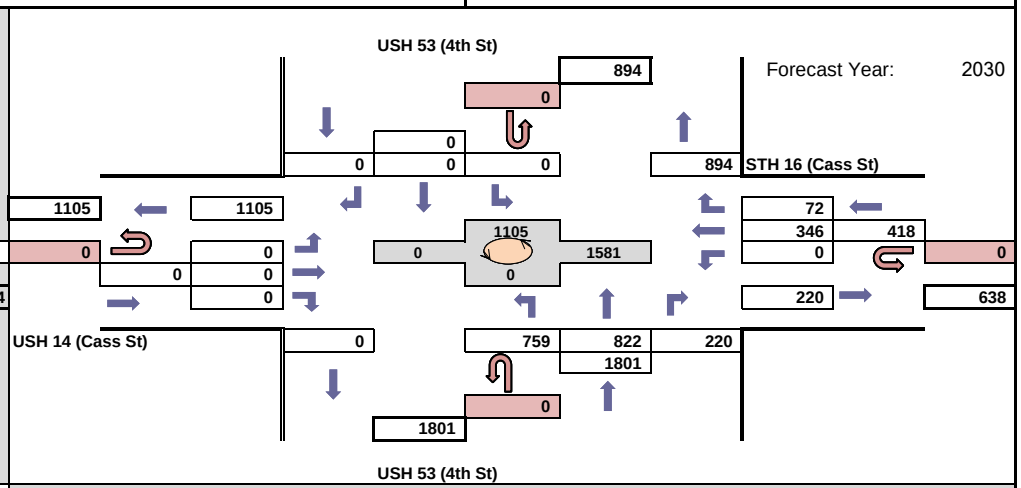

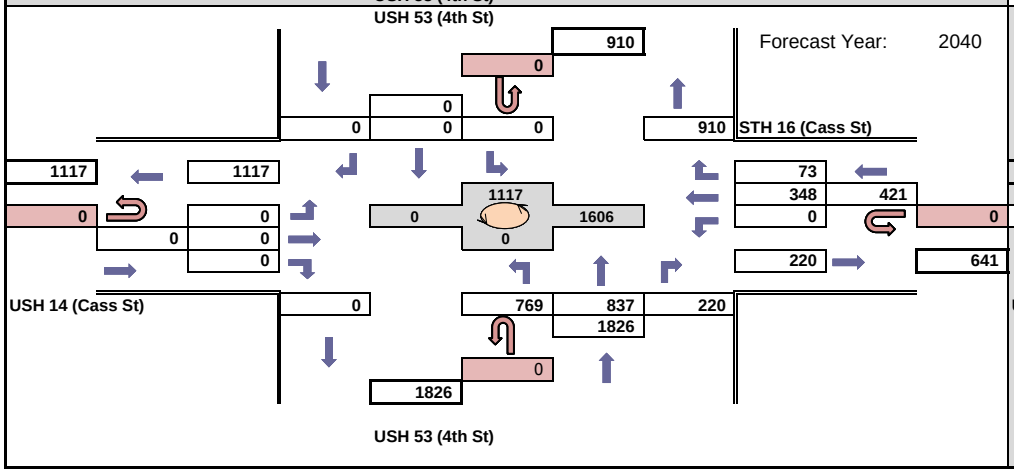

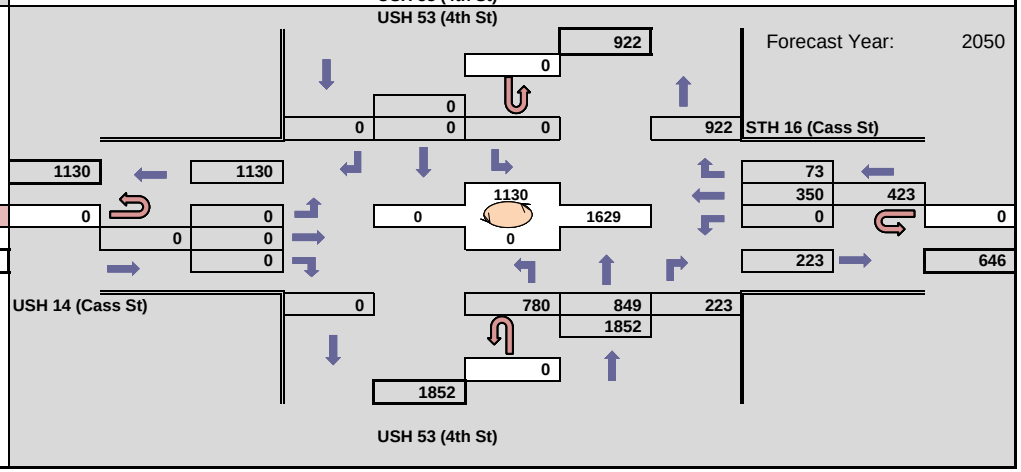

WisDOT Bureau of Planning & Economic Development
Traffic Forecasting Section
Forecast by: Miao Zhang
Phone: (608) 266 - 7995
Email: miao.zhang@dot.wi.gov

Projected AM Design Hour Traffic Volumes

Indicates roundabout

Design Hour: 7:00-8:00am

Forecast Completed: 2/23/2021

Project Description

Project ID(s): 1630-08-00
Route(s): US 53
Region/COUNTY(IES): SW/La Crosse
Location: US 53 SB (3rd St) & US 14 WB (Cass St)

Design Hour Turning Movement Data

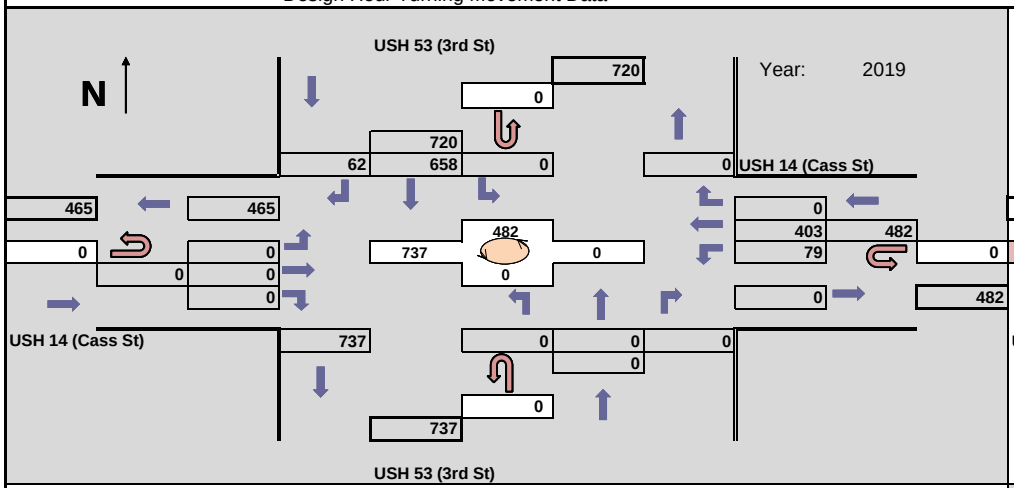

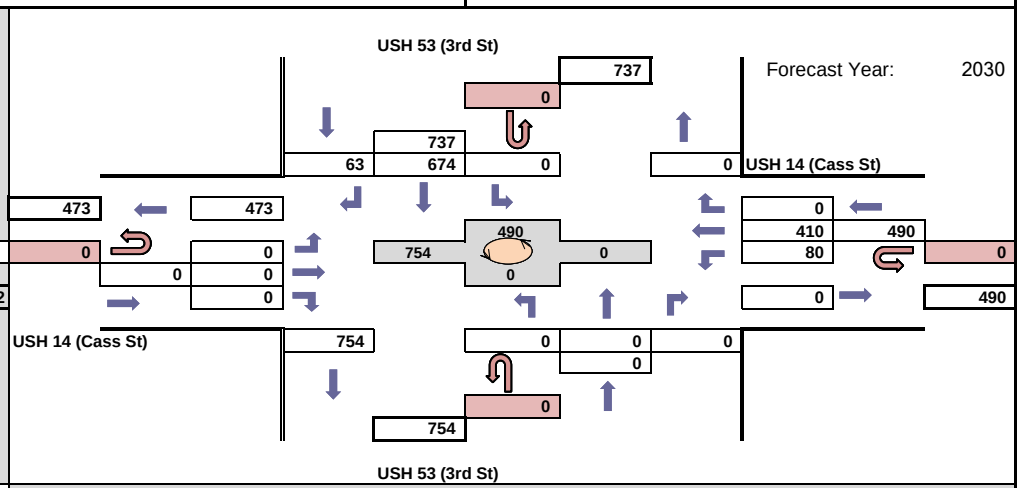

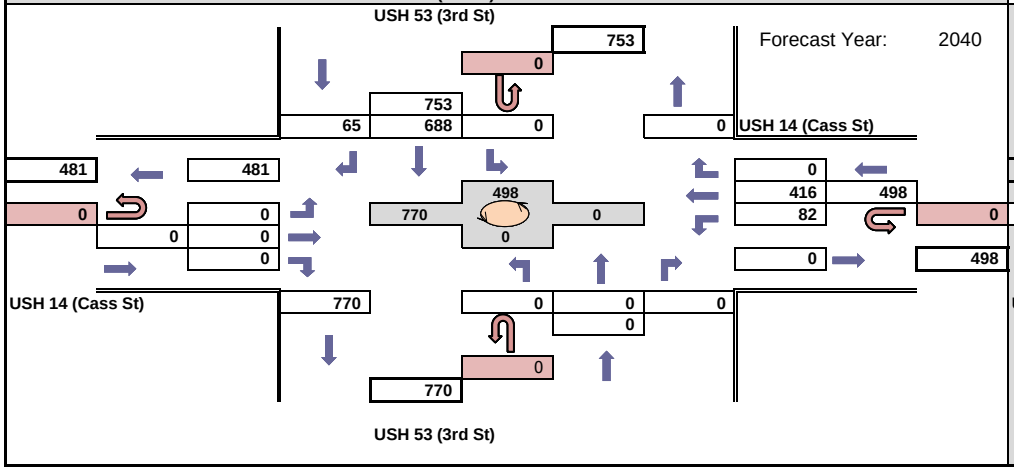

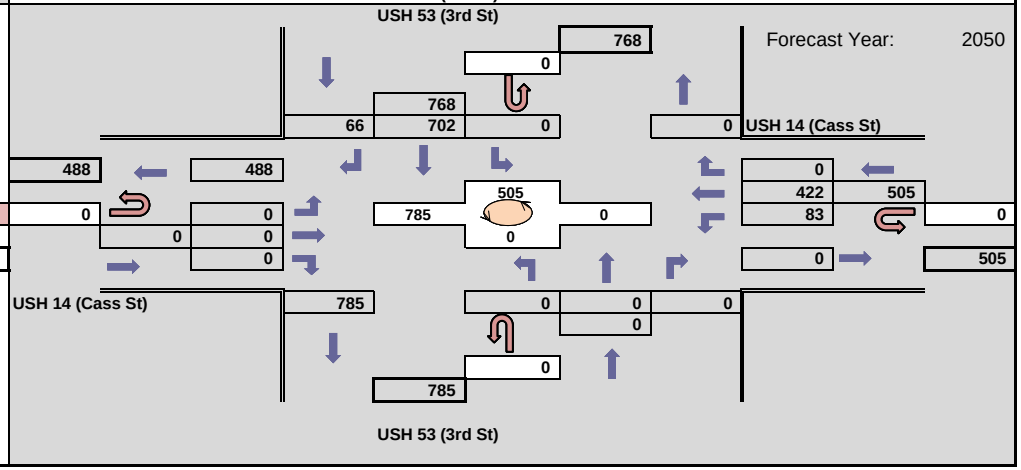

WisDOT Bureau of Planning & Economic Development
Traffic Forecasting Section
Forecast by: Miao Zhang
Phone: (608) 266 - 7995
Email: miao.zhang@dot.wi.gov

Projected PM Design Hour Traffic Volumes

Indicates roundabout

Design Hour: 4:15-5:15pm

Forecast Completed: 2/23/2021

Project Description

Project ID(s): 1630-08-00
Route(s): US 53
Region/COUNTY(IES): SW/La Crosse
Location: US 53 SB (3rd St) & US 14 WB (Cass St)

Design Hour Turning Movement Data

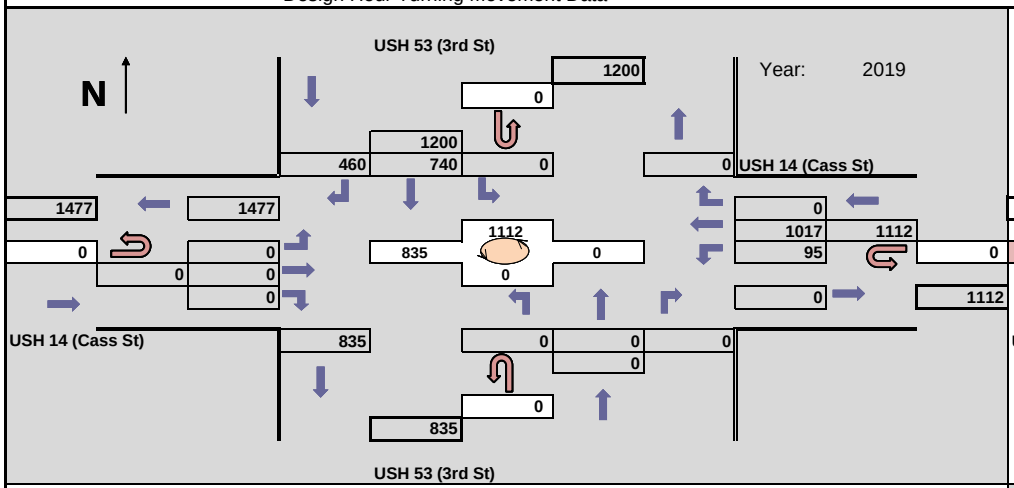

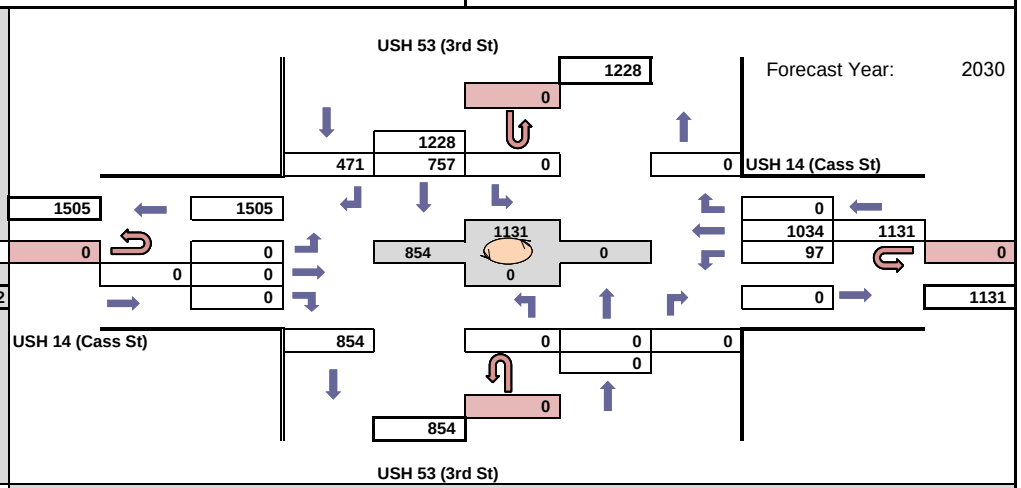

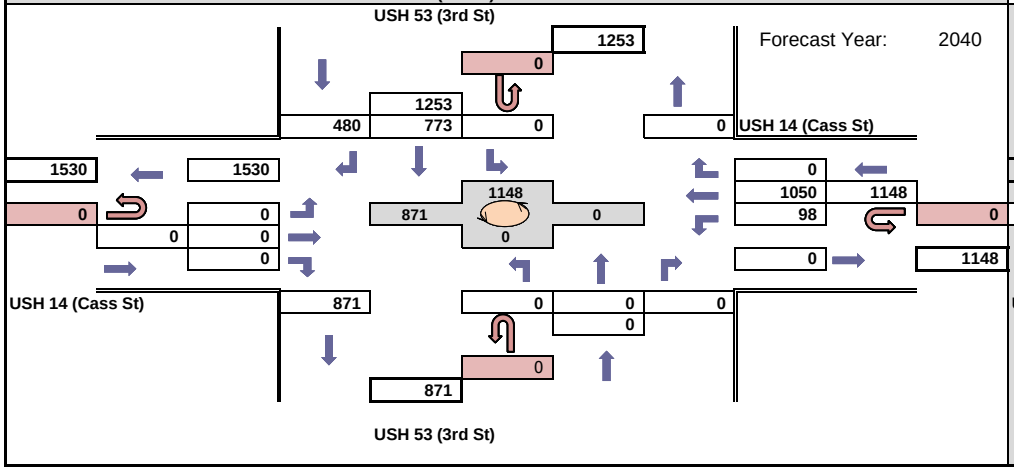

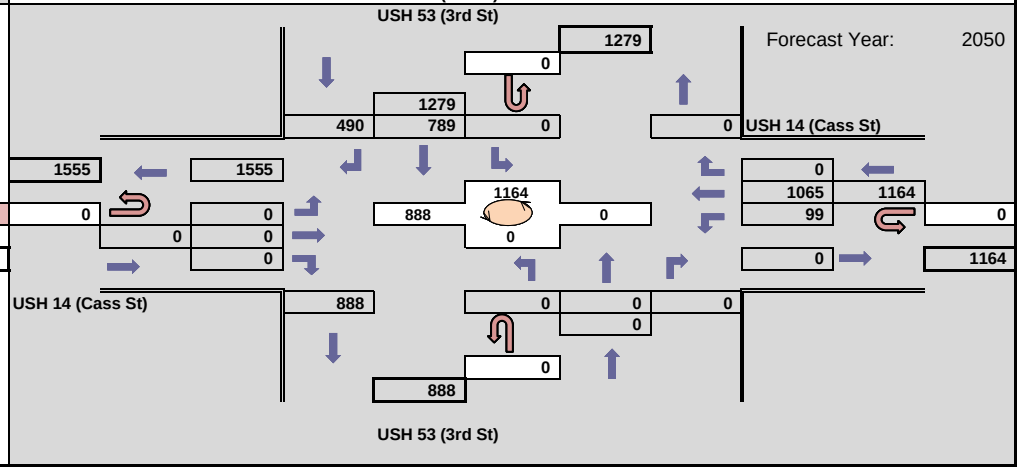

WisDOT Bureau of Planning & Economic Development
Traffic Forecasting Section
Forecast by: Miao Zhang
Phone: (608) 266 - 7995
Email: miao.zhang@dot.wi.gov

Projected AM Design Hour Traffic Volumes

Indicates roundabout

Design Hour: 7:00-8:00am

Forecast Completed: 2/23/2021

Project Description

Project ID(s): 1630-08-00
Route(s): US 53
Region/COUNTY(IES): SW/La Crosse
Location: US 53 NB (4th St) & US 14 EB (Cameron Ave)

Design Hour Turning Movement Data

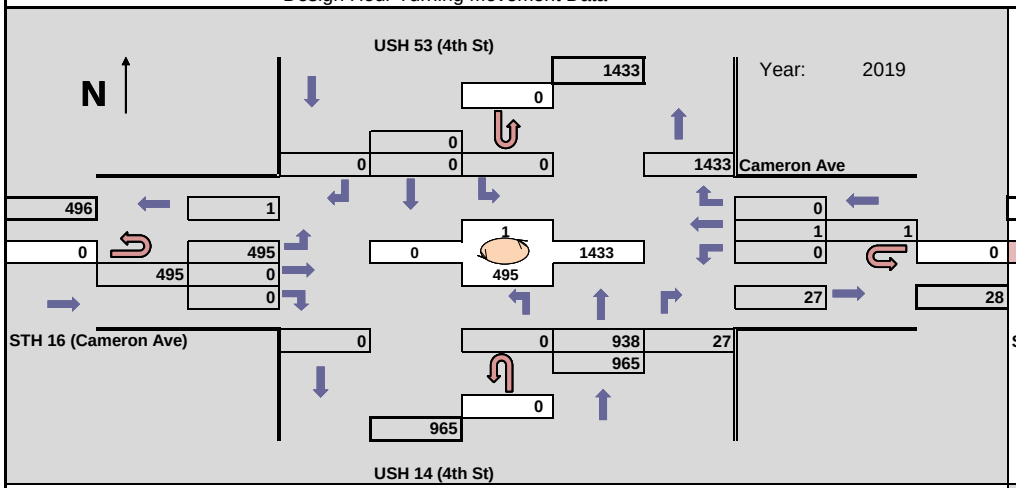

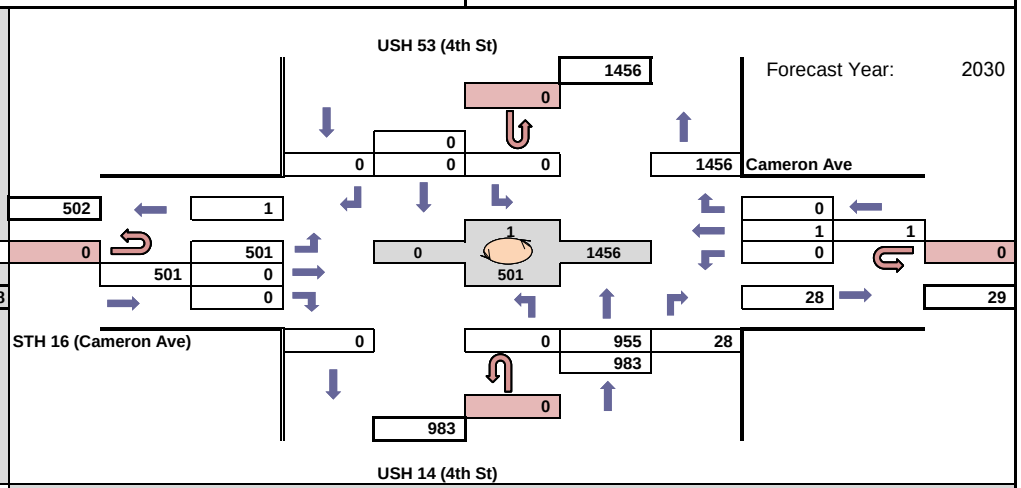

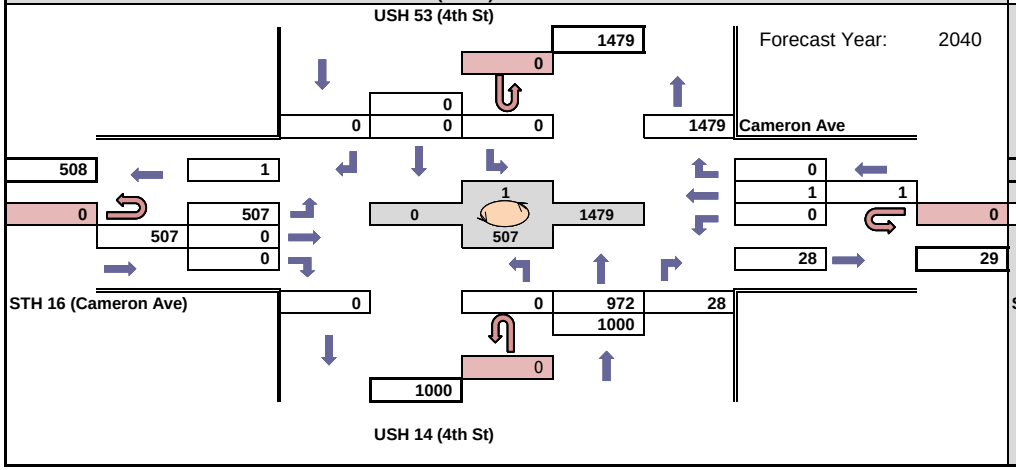

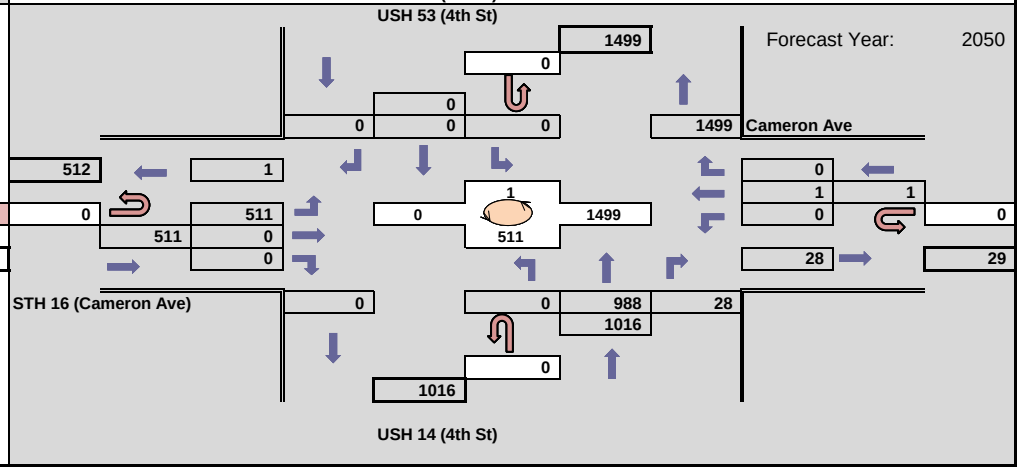

WisDOT Bureau of Planning & Economic Development
Traffic Forecasting Section
Forecast by: Miao Zhang
Phone: (608) 266 - 7995
Email: miao.zhang@dot.wi.gov

Projected PM Design Hour Traffic Volumes

Indicates roundabout

Design Hour: 4:15-5:15pm

Forecast Completed: 2/23/2021

Project Description

Project ID(s): 1630-08-00
Route(s): US 53
Region/COUNTY(IES): SW/La Crosse
Location: US 53 NB (4th St) & US 14 EB (Cameron Ave)

Design Hour Turning Movement Data

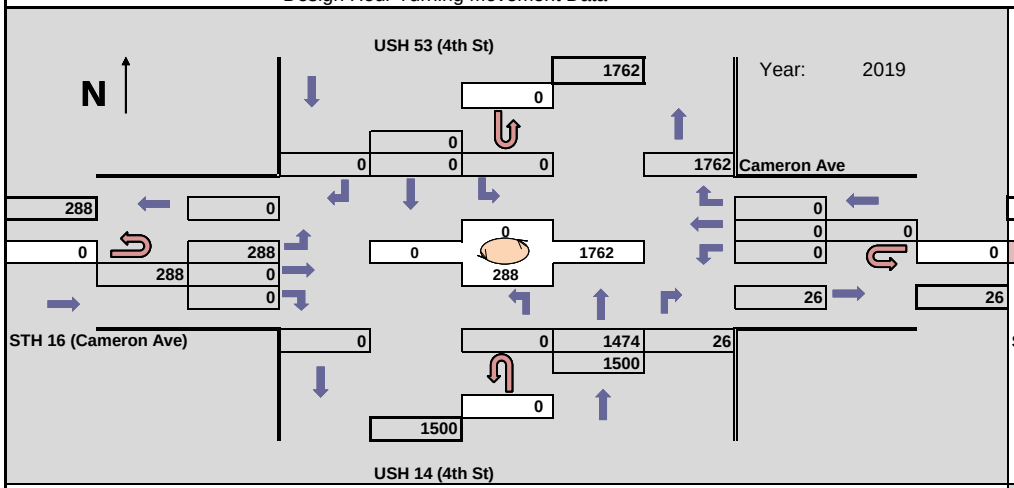

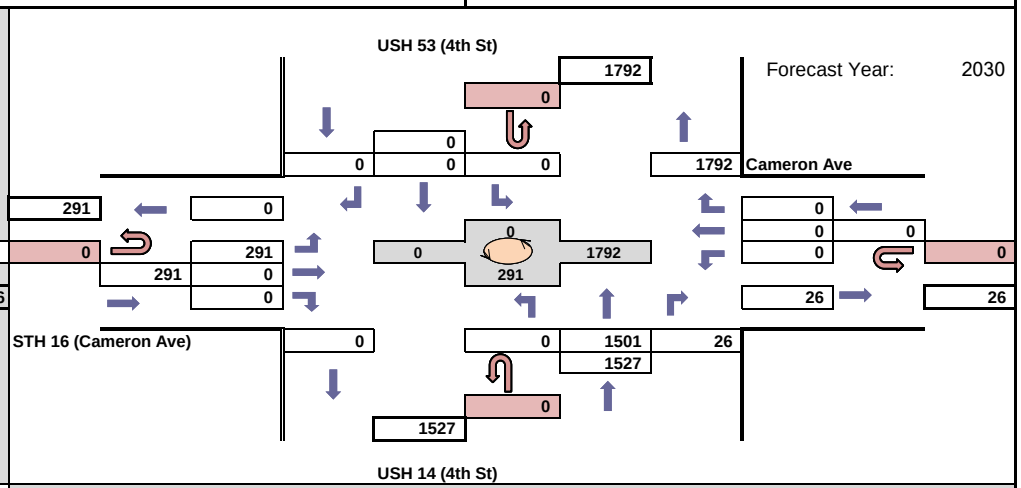

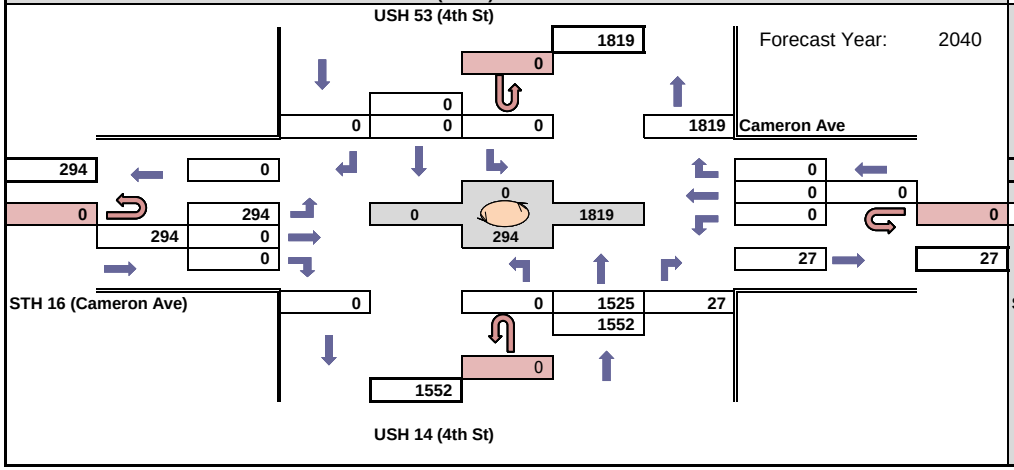

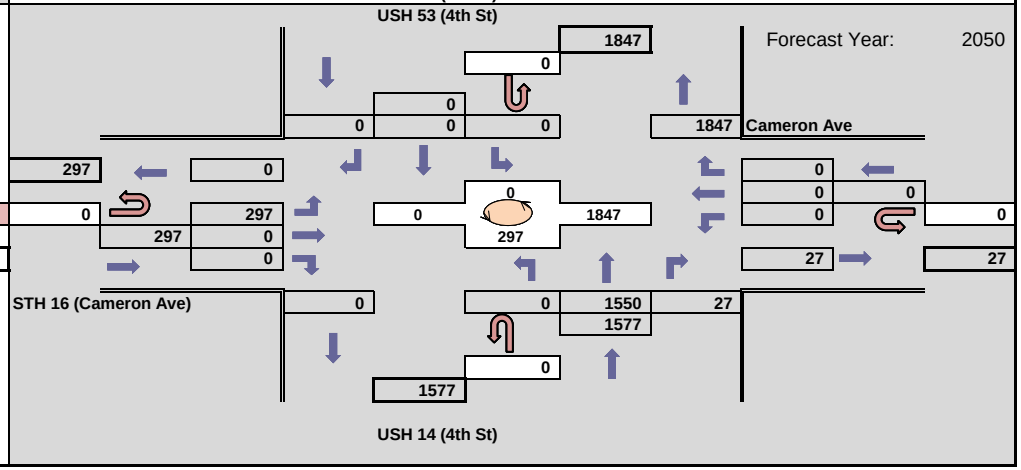

WisDOT Bureau of Planning & Economic Development
Traffic Forecasting Section
Forecast by: Miao Zhang
Phone: (608) 266 - 7995
Email: miao.zhang@dot.wi.gov

Projected AM Design Hour Traffic Volumes

Indicates roundabout

Design Hour: 7:00-8:00am

Forecast Completed: 2/23/2021

Project Description

Project ID(s): 1630-08-00
Route(s): US 53
Region/COUNTY(IES): SW/La Crosse
Location: US 53 SB (3rd St) & US 14 EB (Cameron Ave)

Design Hour Turning Movement Data

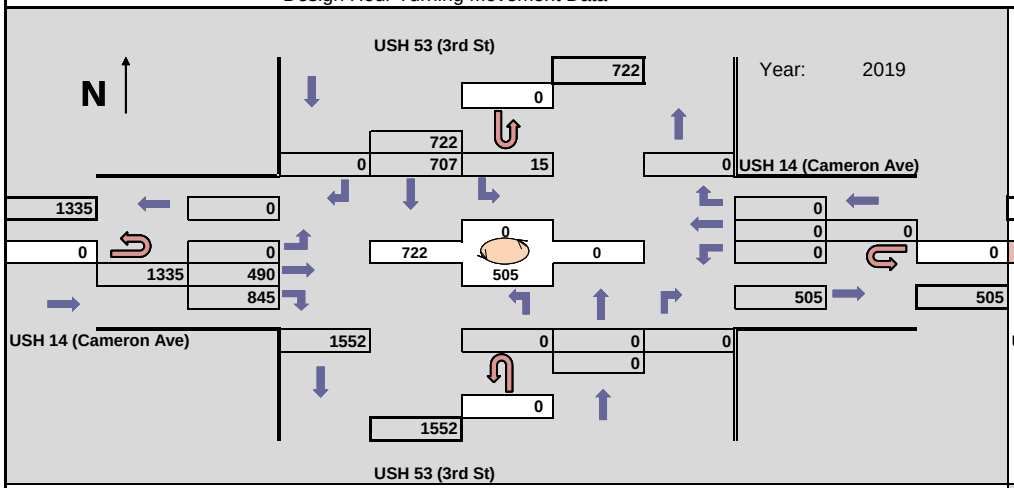

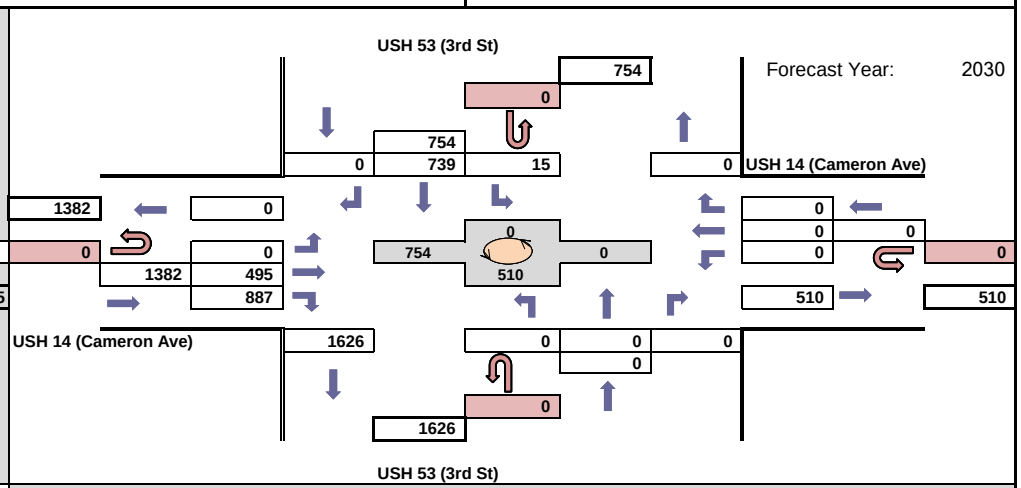

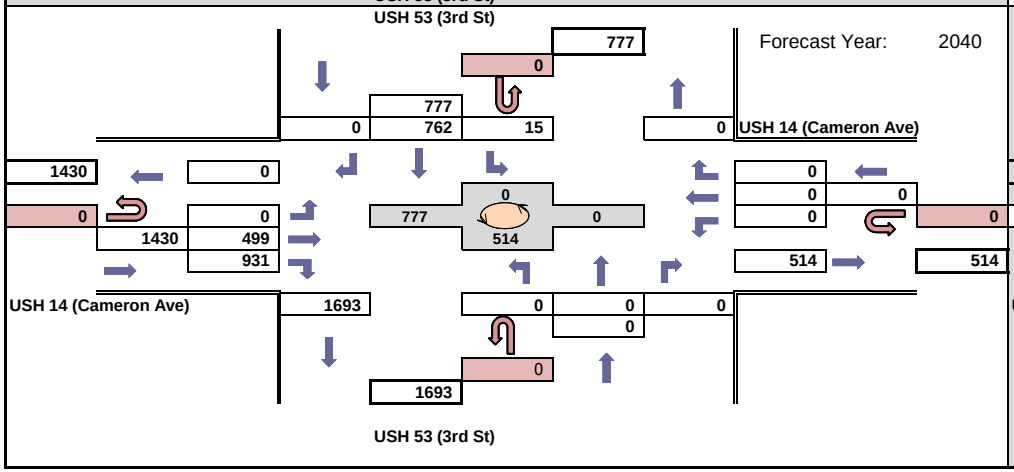

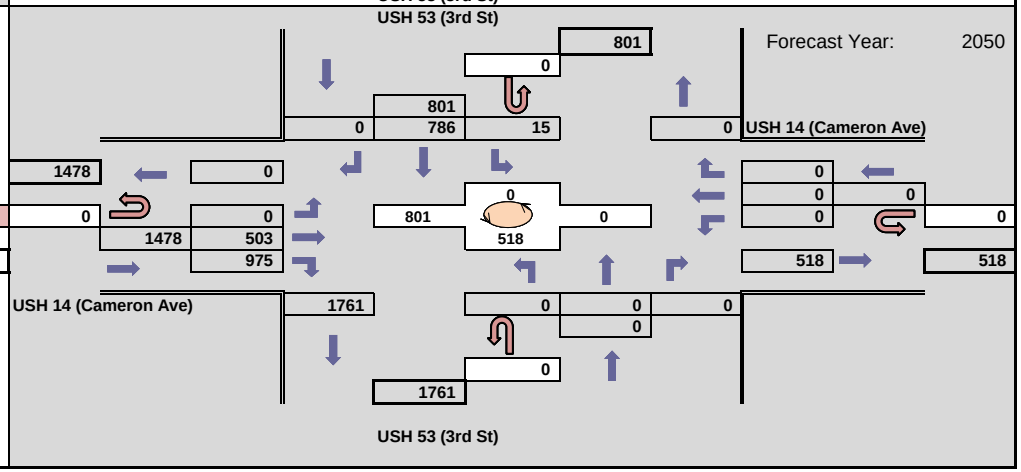

WisDOT Bureau of Planning & Economic Development
Traffic Forecasting Section
Forecast by: Miao Zhang
Phone: (608) 266 - 7995
Email: miao.zhang@dot.wi.gov

Projected PM Design Hour Traffic Volumes

Indicates roundabout

Design Hour: 4:15-5:15pm

Forecast Completed: 2/23/2021

Project Description

Project ID(s): 1630-08-00
Route(s): US 53
Region/COUNTY(IES): SW/La Crosse
Location: US 53 SB (3rd St) & US 14 EB (Cameron Ave)

Design Hour Turning Movement Data

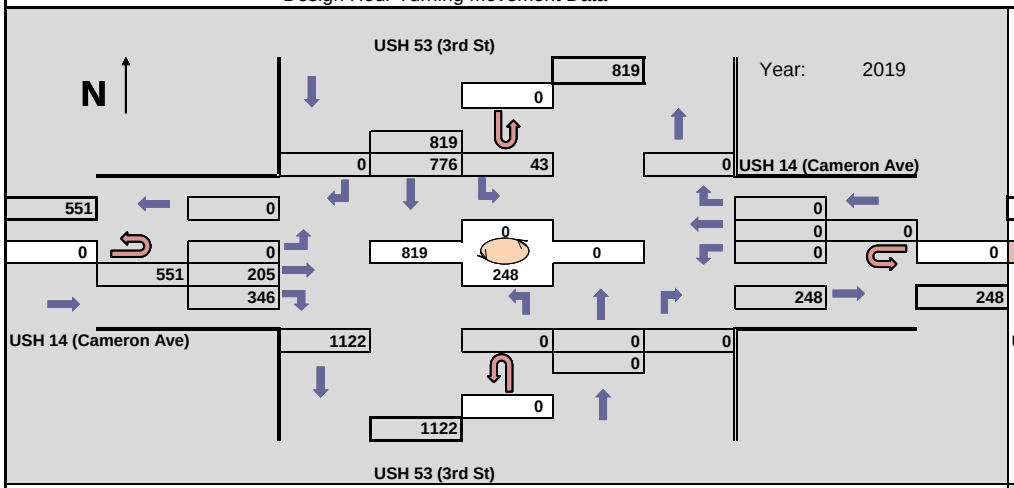

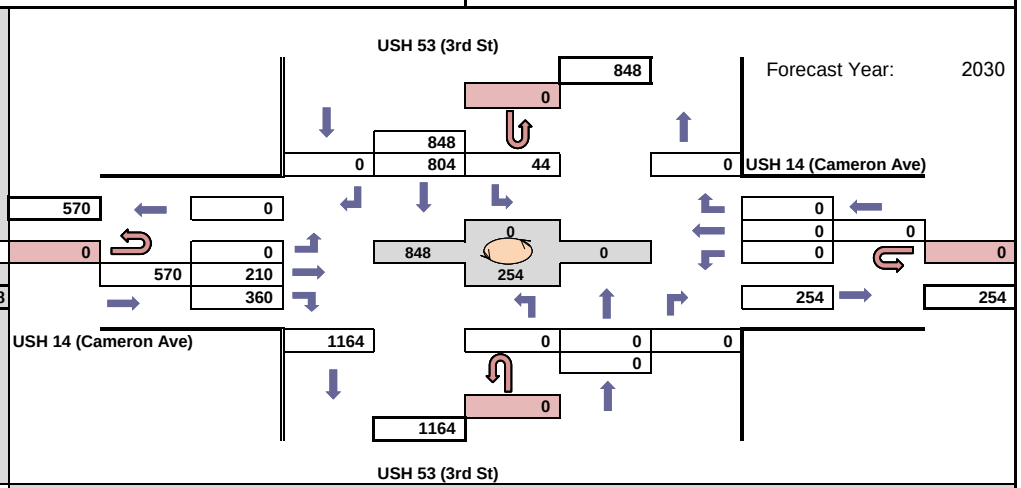

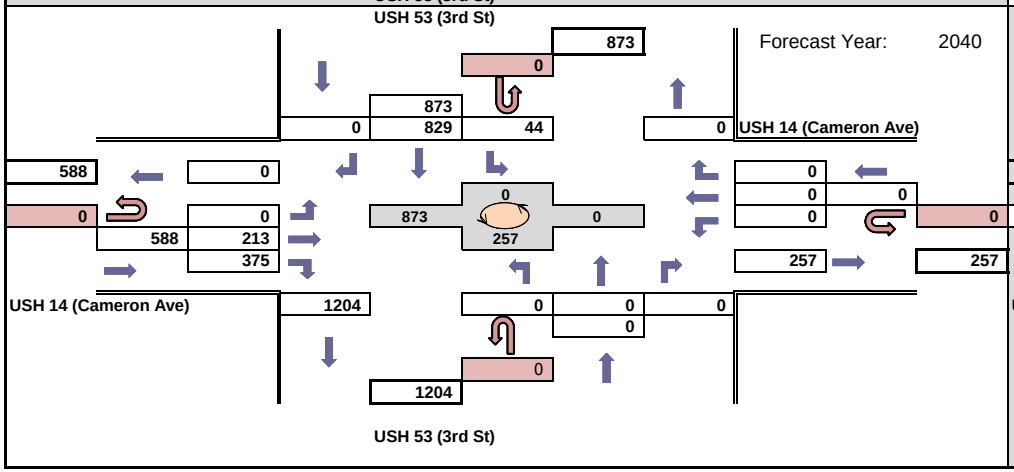

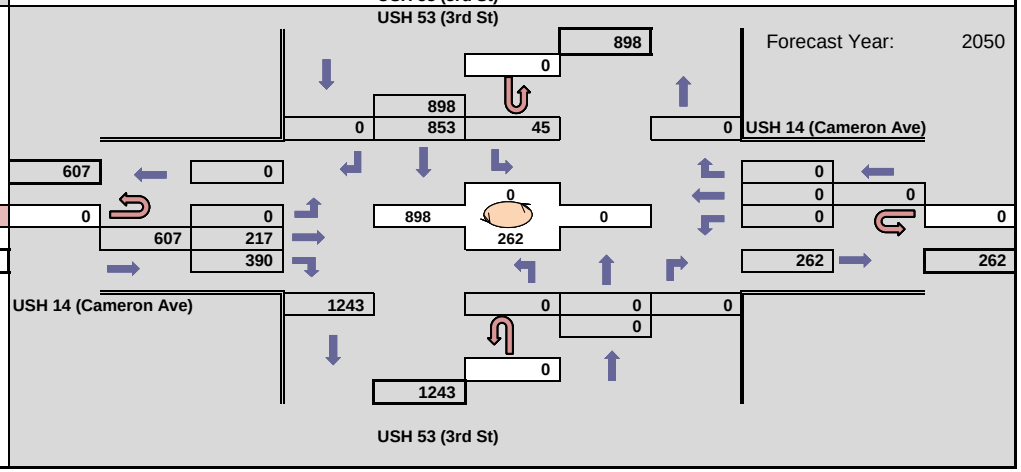

WisDOT Bureau of Planning & Economic Development
Traffic Forecasting Section
Forecast by: Miao Zhang
Phone: (608) 266 - 7995
Email: miao.zhang@dot.wi.gov

Projected AM Design Hour Traffic Volumes

Indicates roundabout

Design Hour: 7:00-8:00am

Forecast Completed: 2/23/2021

Project Description

Project ID(s): 1630-08-00
Route(s): US 14
Region/COUNTY(IES): SW/La Crosse
Location: US 14 SB (3rd St) & Market St

Design Hour Turning Movement Data

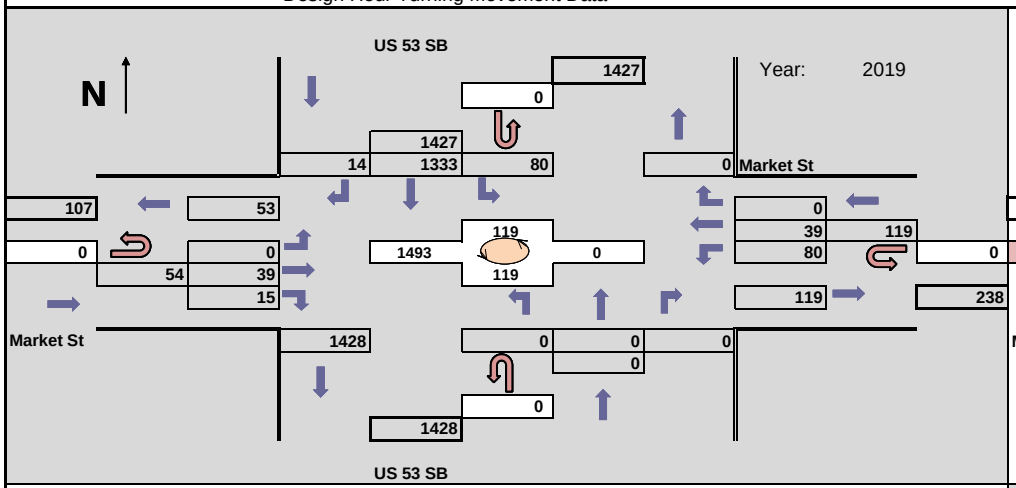

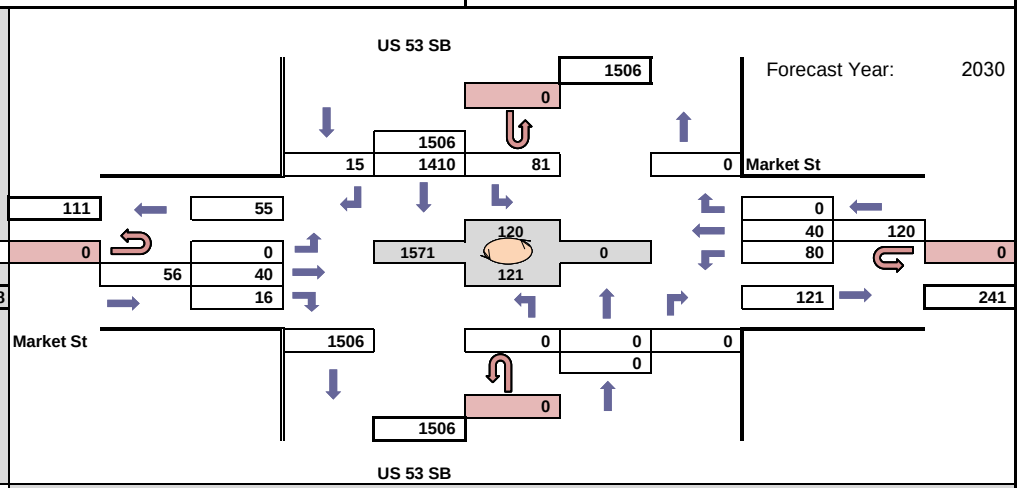

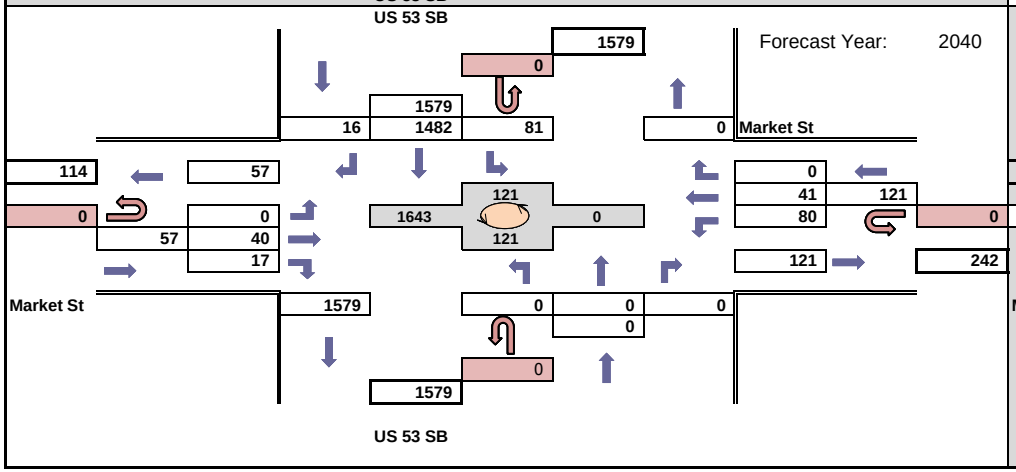

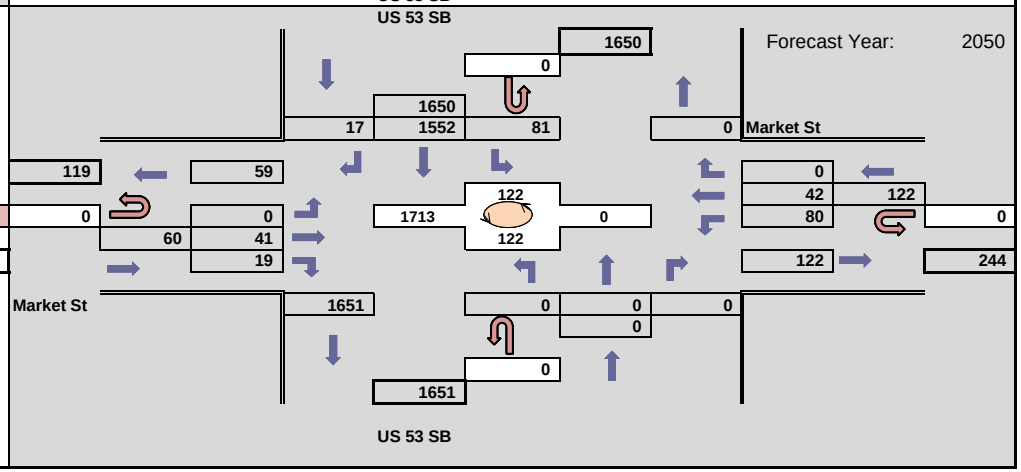

WisDOT Bureau of Planning & Economic Development
Traffic Forecasting Section
Forecast by: Miao Zhang
Phone: (608) 266 - 7995
Email: miao.zhang@dot.wi.gov

Projected PM Design Hour Traffic Volumes

Indicates roundabout

Design Hour: 4:15-5:15pm

Forecast Completed: 2/23/2021

Project Description

Project ID(s): 1630-08-00
Route(s): US 14
Region/COUNTY(IES): SW/La Crosse
Location: US 14 SB (3rd St) & Market St

Design Hour Turning Movement Data

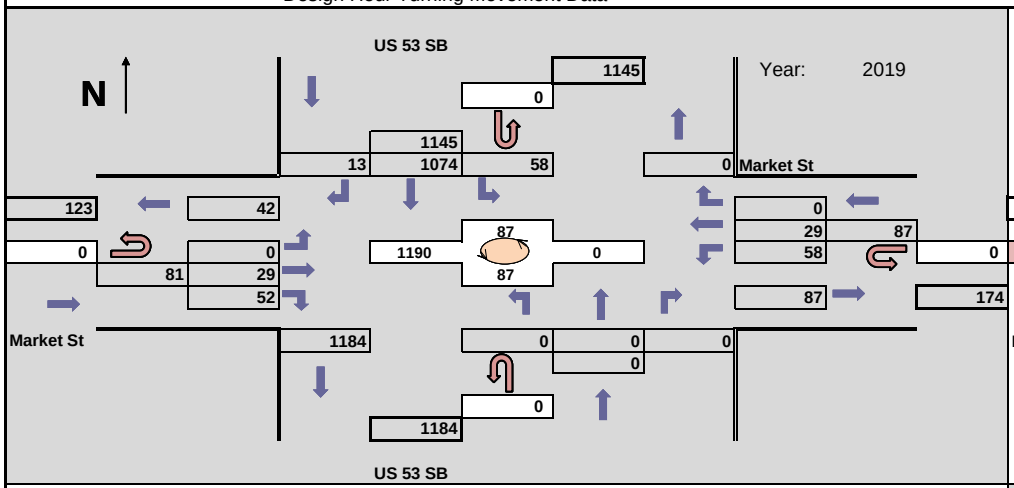

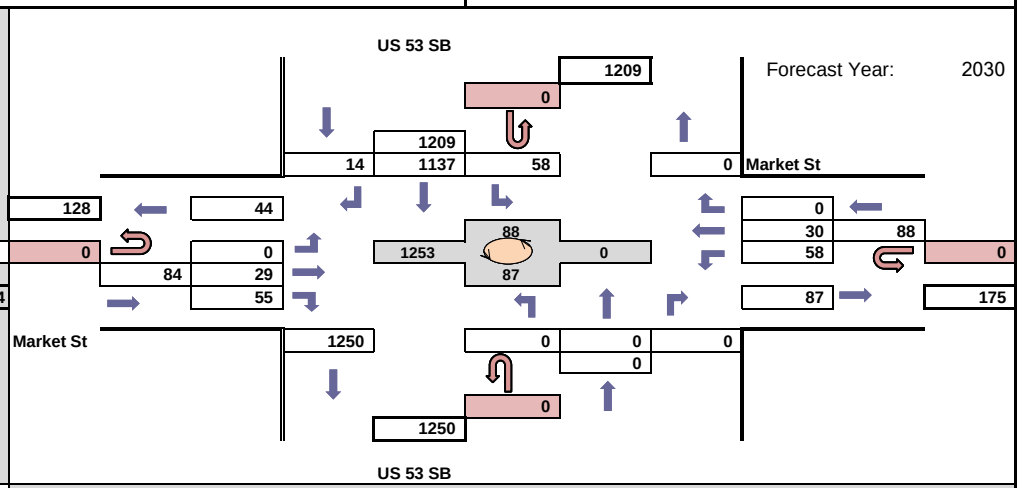

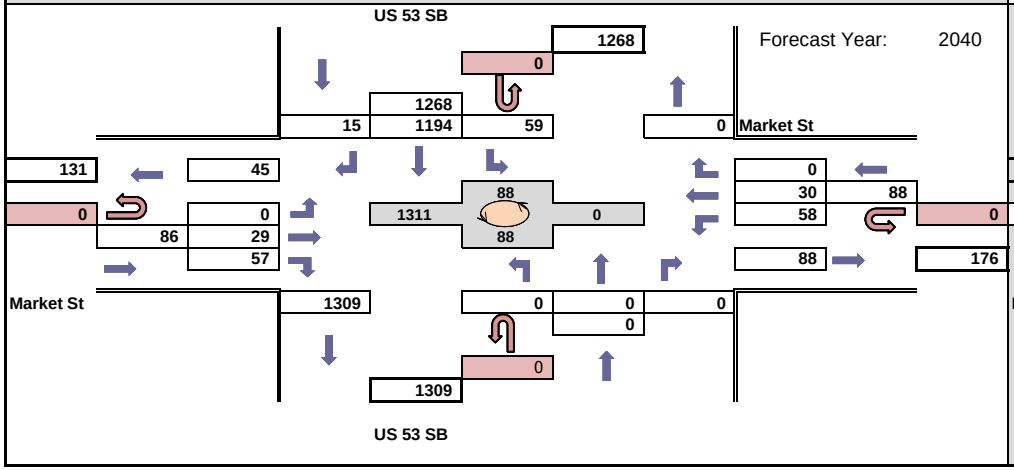

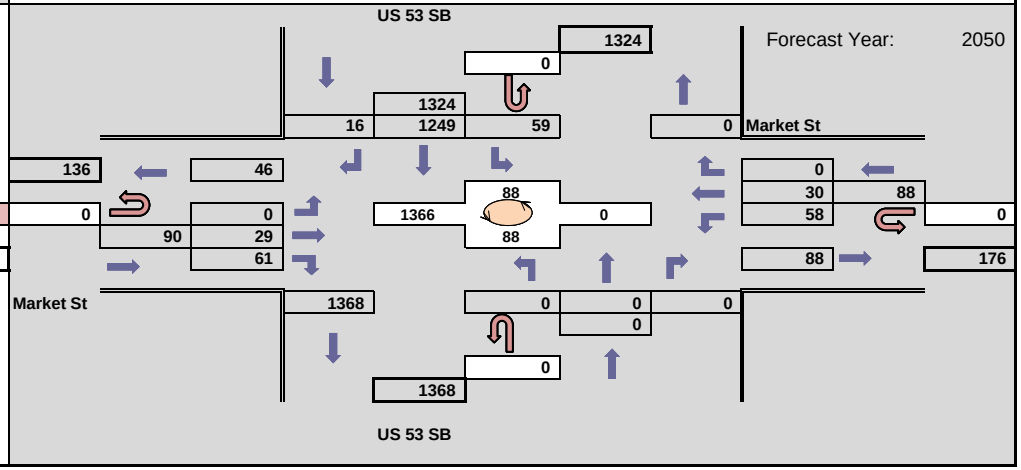

WisDOT Bureau of Planning & Economic Development
Traffic Forecasting Section
Forecast by: Miao Zhang
Phone: (608) 266 - 7995
Email: miao.zhang@dot.wi.gov

Projected AM Design Hour Traffic Volumes

Indicates roundabout

Design Hour: 7:00-8:00am

Forecast Completed: 2/23/2021

Project Description

Project ID(s): 1630-08-00
Route(s): US 14
Region/COUNTY(IES): SW/La Crosse
Location: US 14 NB (4th St) & Market St

Design Hour Turning Movement Data

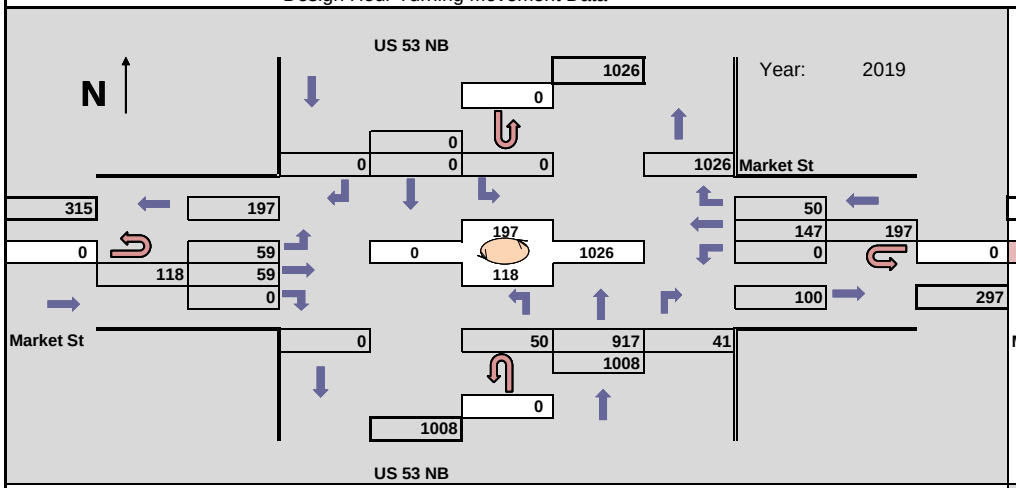

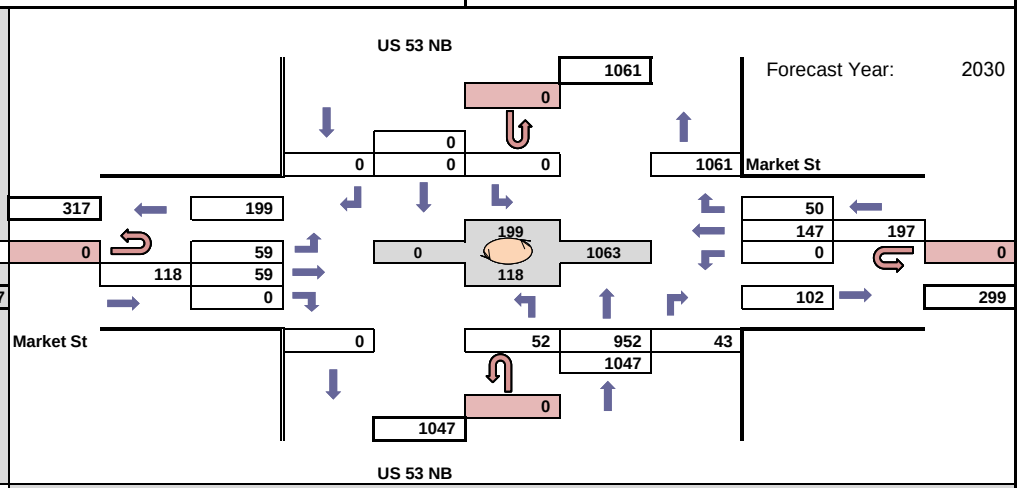

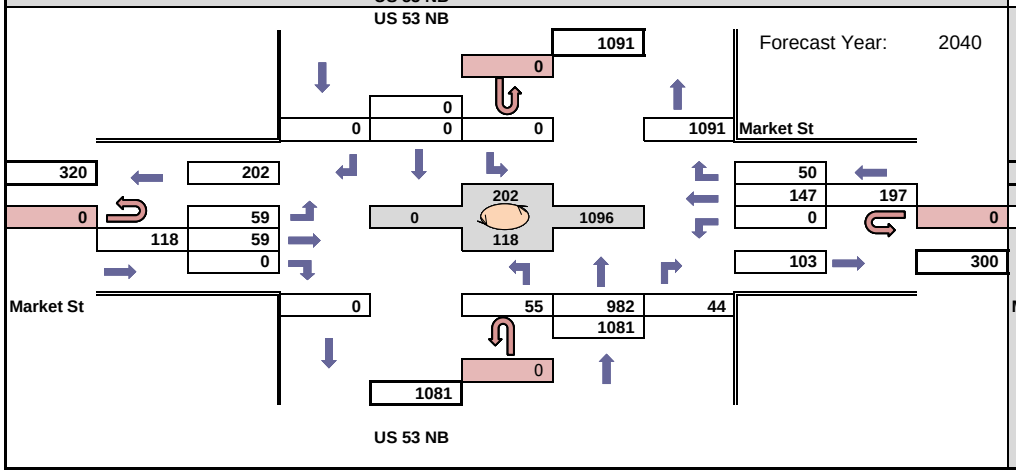

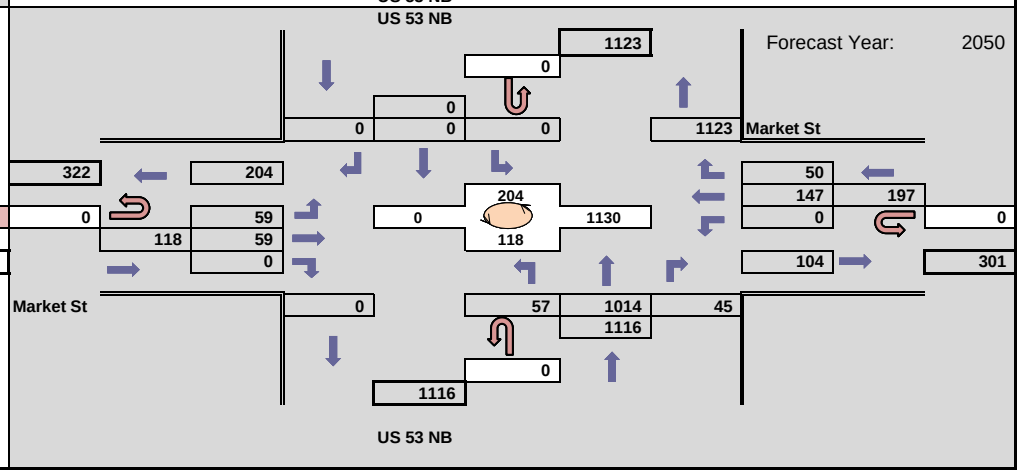

WisDOT Bureau of Planning & Economic Development
Traffic Forecasting Section
Forecast by: Miao Zhang
Phone: (608) 266 - 7995
Email: miao.zhang@dot.wi.gov

Projected PM Design Hour Traffic Volumes

Indicates roundabout

Design Hour: 4:15-5:15pm

Forecast Completed: 2/23/2021

Project Description

Project ID(s): 1630-08-00
Route(s): US 14
Region/COUNTY(IES): SW/La Crosse
Location: US 14 NB (4th St) & Market St

Design Hour Turning Movement Data

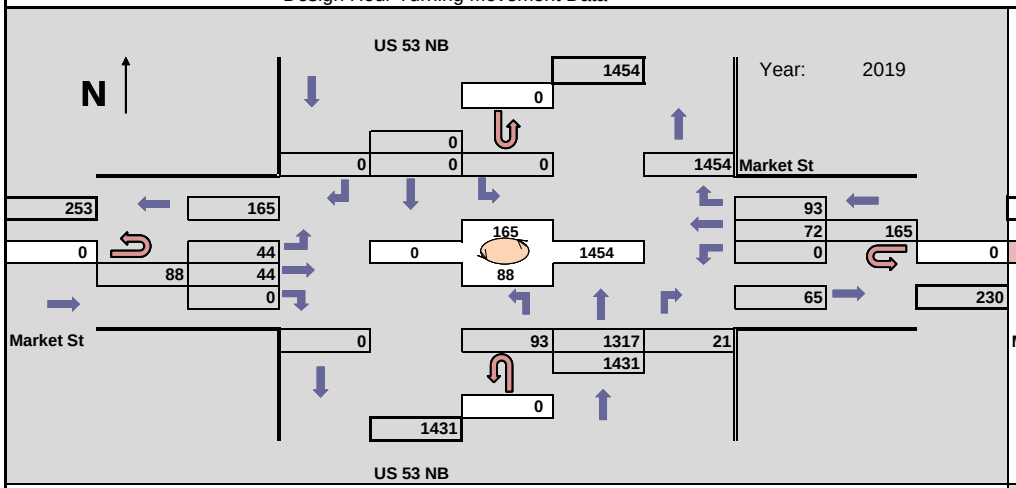

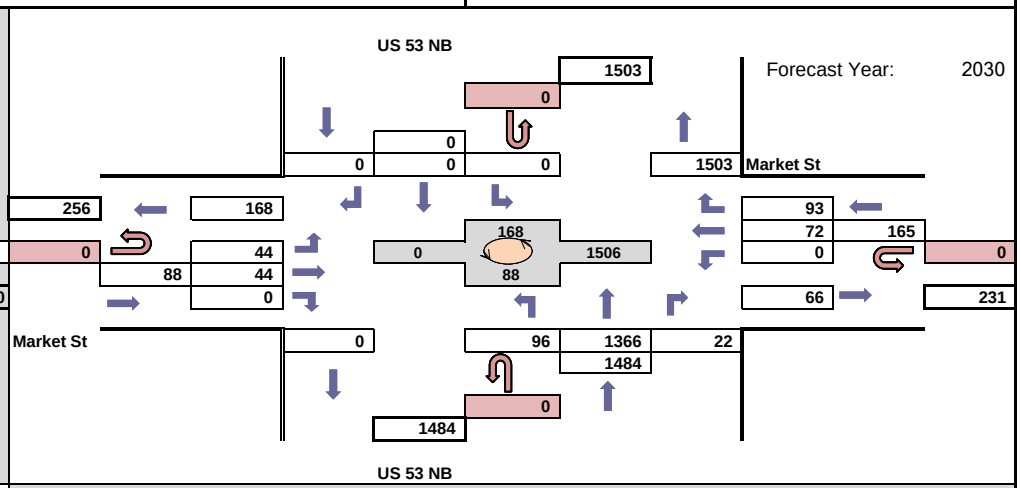

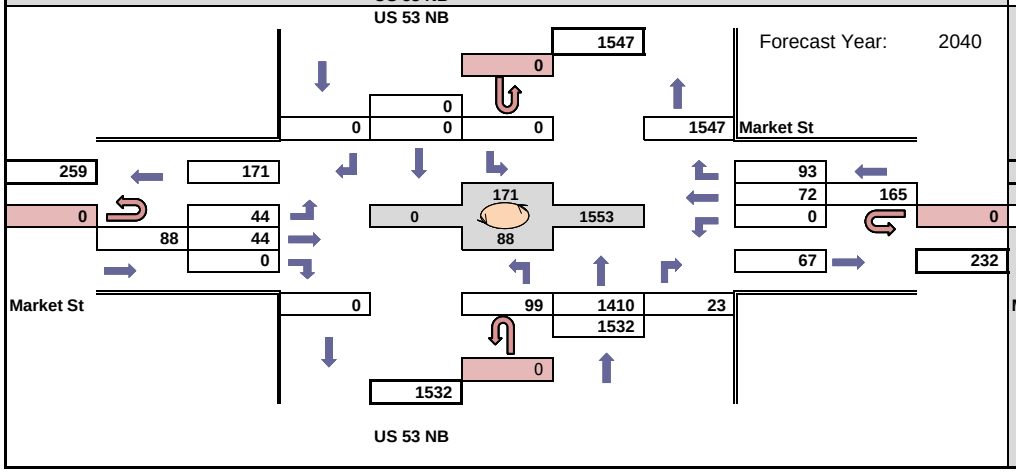

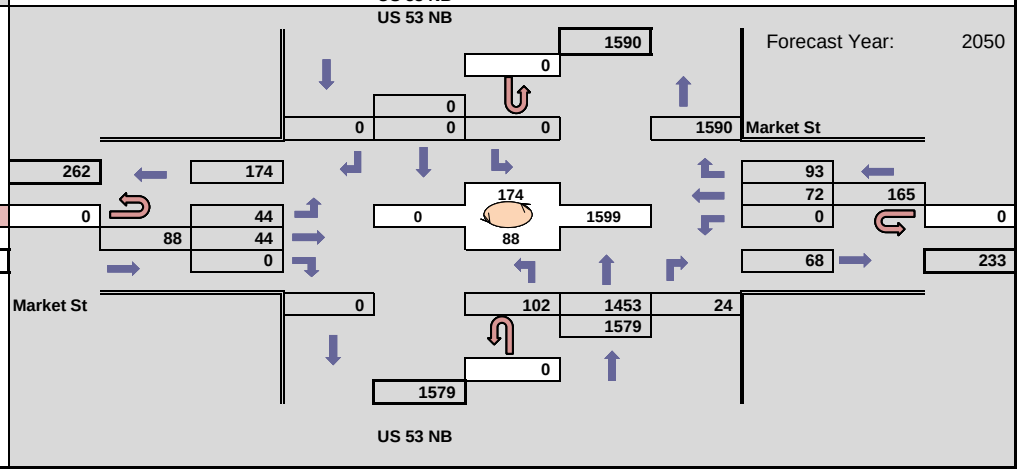

WisDOT Bureau of Planning & Economic Development
Traffic Forecasting Section
Forecast by: Miao Zhang
Phone: (608) 266 - 7995
Email: miao.zhang@dot.wi.gov

Projected AM Design Hour Traffic Volumes

Indicates roundabout

Design Hour: 7:00-8:00am

Forecast Completed: 2/23/2021

Project Description

Project ID(s): 1630-08-00
Route(s): US 14
Region/COUNTY(IES): SW/La Crosse
Location: US 14 SB (3rd St) & WIS 33 (Jackson St)

Design Hour Turning Movement Data

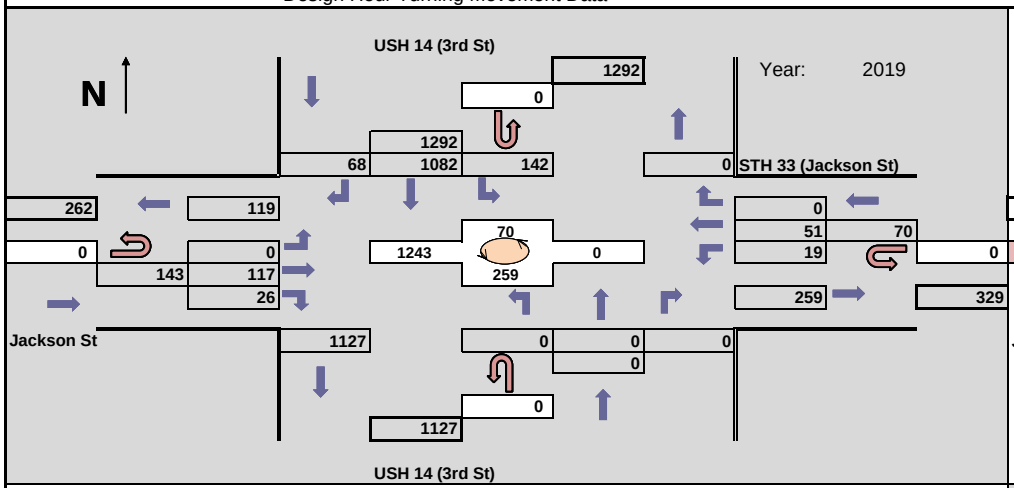

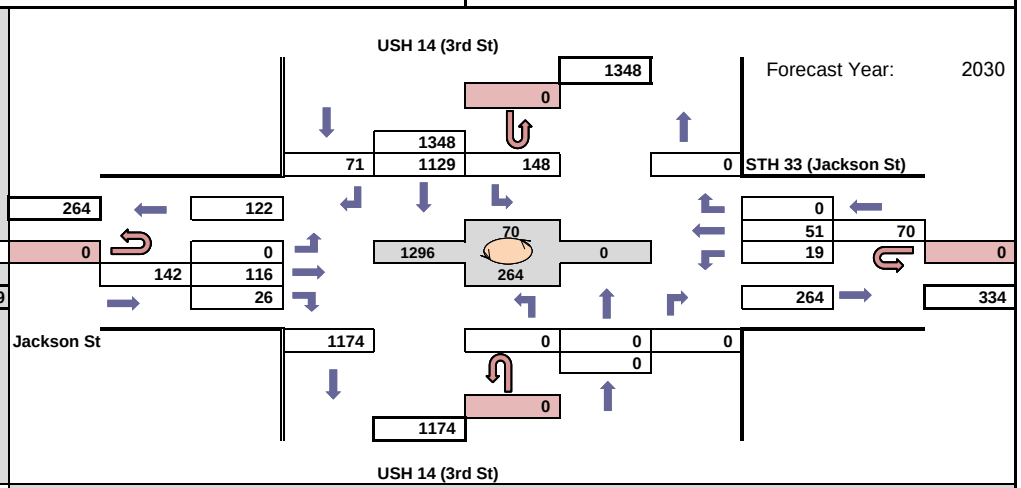

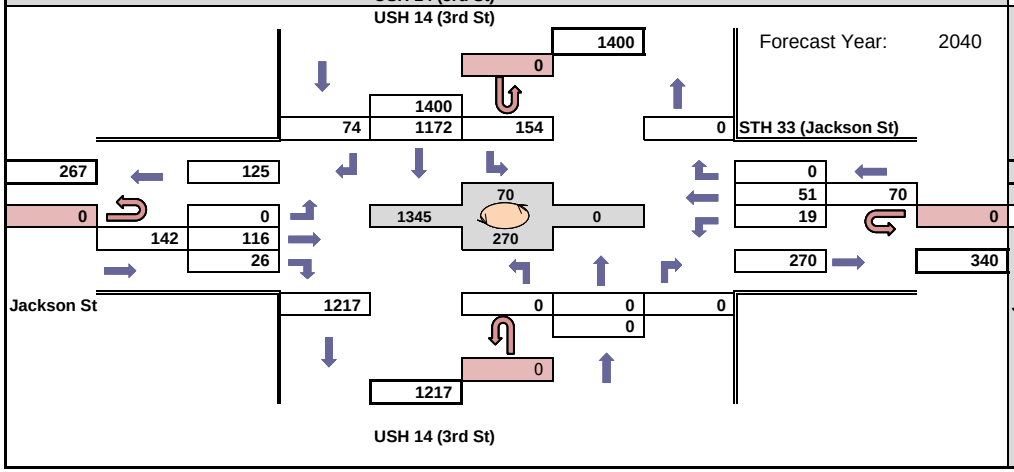

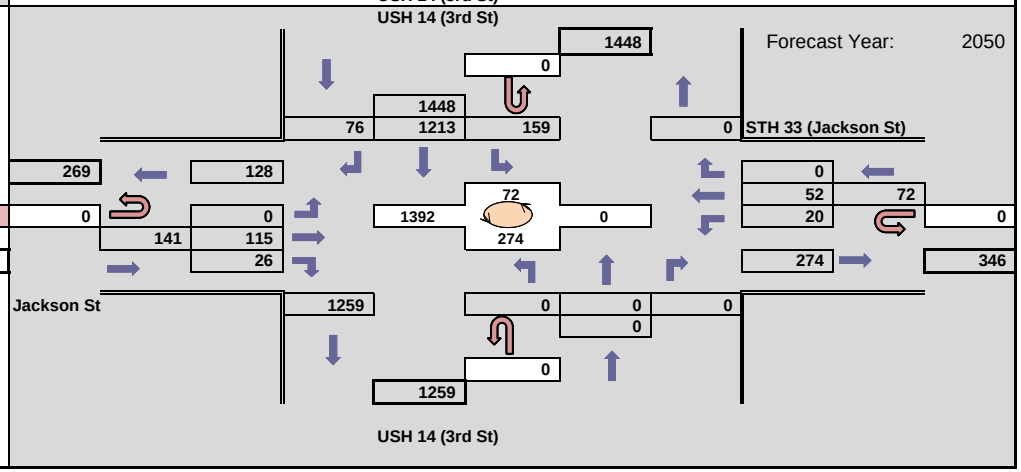

WisDOT Bureau of Planning & Economic Development
Traffic Forecasting Section
Forecast by: Miao Zhang
Phone: (608) 266 - 7995
Email: miao.zhang@dot.wi.gov

Projected PM Design Hour Traffic Volumes

Indicates roundabout

Design Hour: 4:15-5:15pm

Forecast Completed: 2/23/2021

Project Description

Project ID(s): 1630-08-00
Route(s): US 14
Region/COUNTY(IES): SW/La Crosse
Location: US 14 SB (3rd St) & WIS 33 (Jackson St)

Design Hour Turning Movement Data

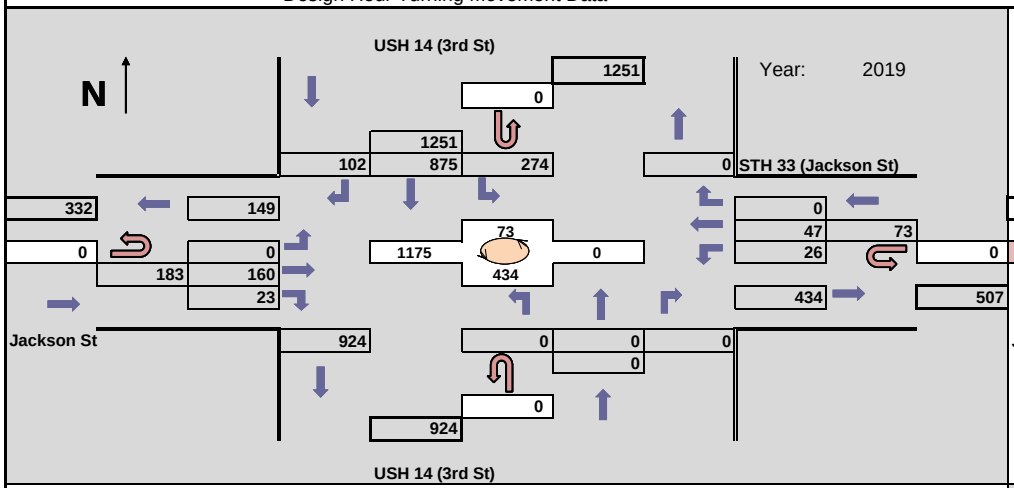

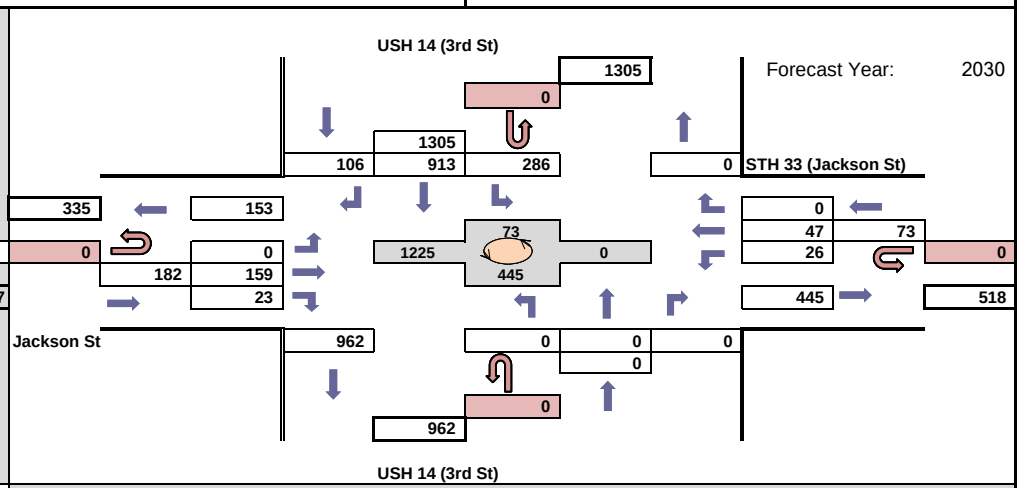

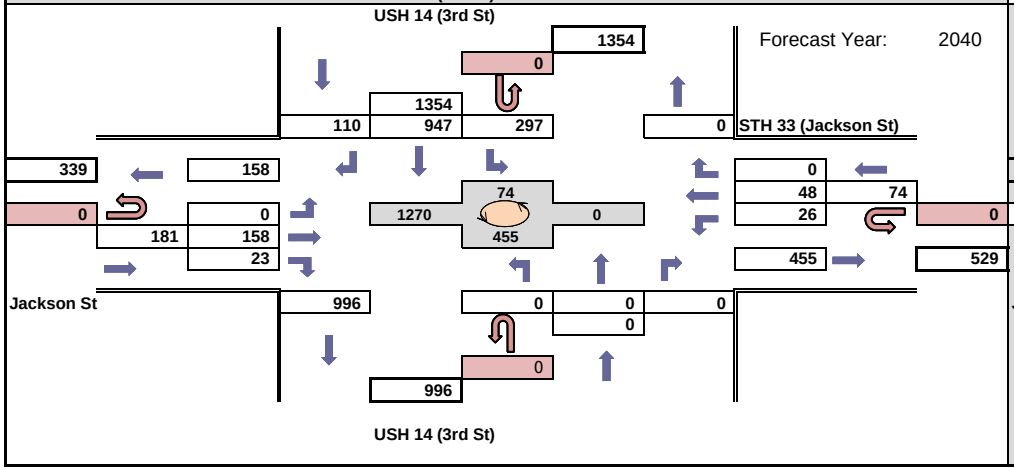

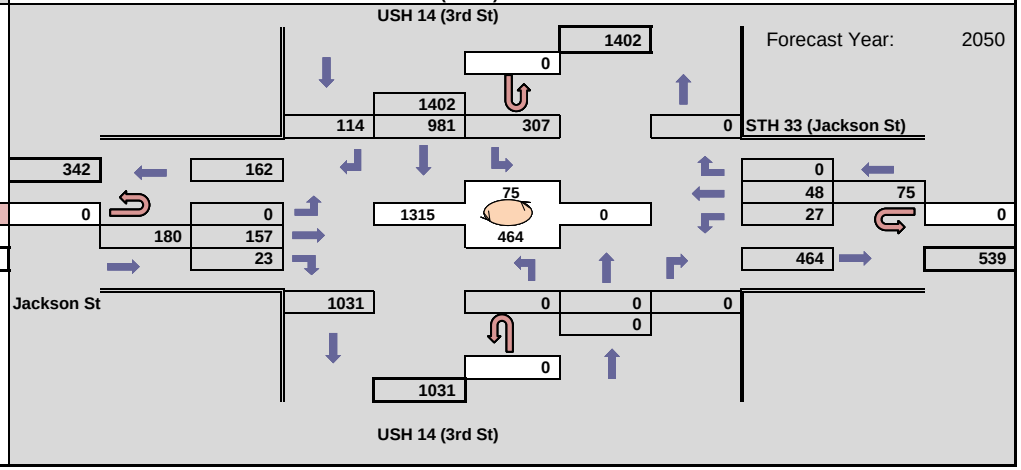

WisDOT Bureau of Planning & Economic Development
Traffic Forecasting Section
Forecast by: Miao Zhang
Phone: (608) 266 - 7995
Email: miao.zhang@dot.wi.gov

Projected AM Design Hour Traffic Volumes

Indicates roundabout

Design Hour: 7:00-8:00am

Forecast Completed: 2/23/2021

Project Description

Project ID(s): 1630-08-00
Route(s): US 14
Region/COUNTY(IES): SW/La Crosse
Location: US 14 NB (4th St) & WIS 33 (Jackson St)

Design Hour Turning Movement Data

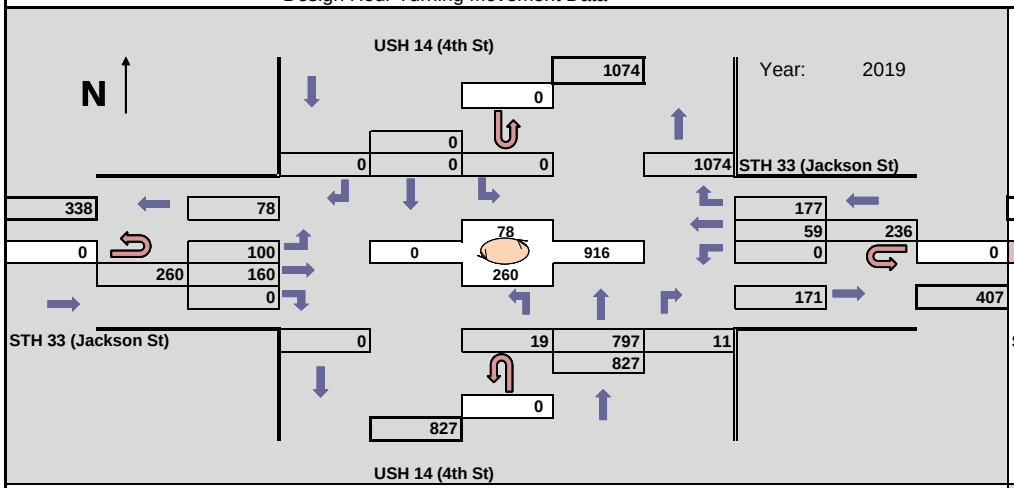

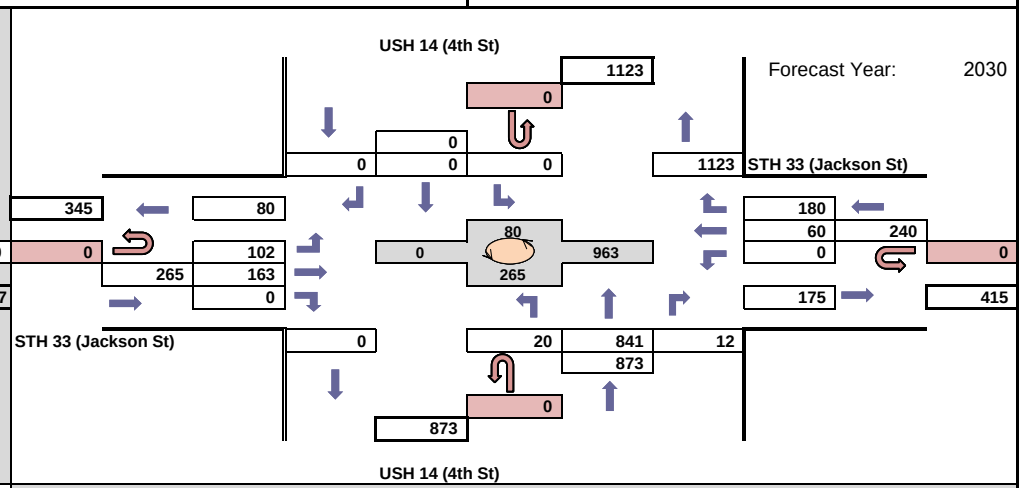

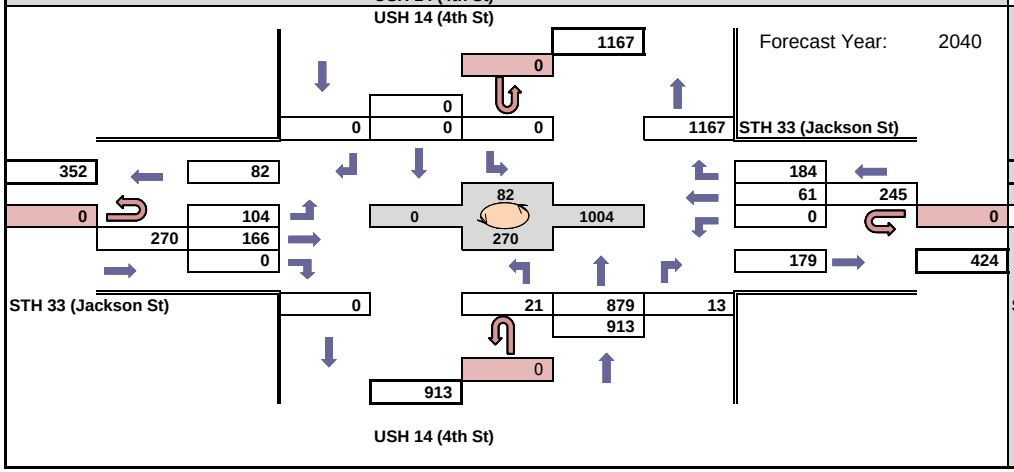

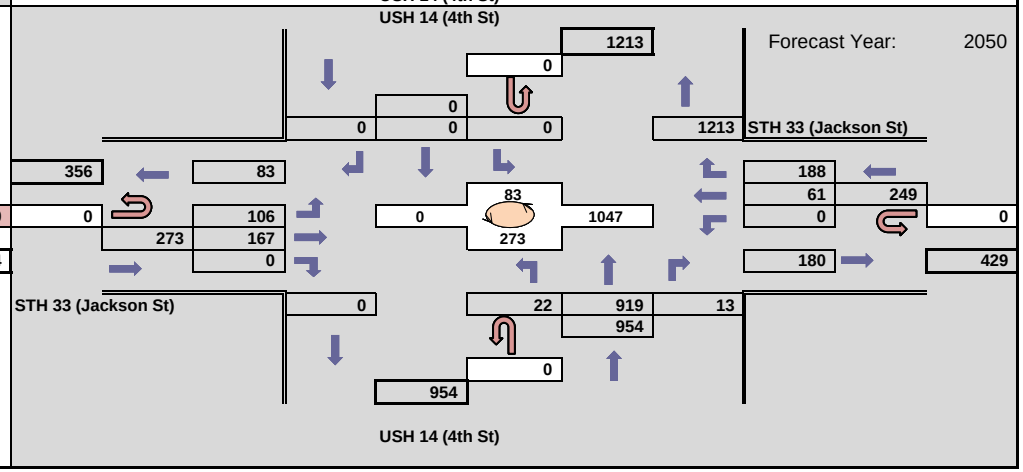

WisDOT Bureau of Planning & Economic Development
Traffic Forecasting Section
Forecast by: Miao Zhang
Phone: (608) 266 - 7995
Email: miao.zhang@dot.wi.gov

Projected PM Design Hour Traffic Volumes

Indicates roundabout

Design Hour: 4:15-5:15pm

Forecast Completed: 2/23/2021

Project Description

Project ID(s): 1630-08-00
Route(s): US 14
Region/COUNTY(IES): SW/La Crosse
Location: US 14 NB (4th St) & WIS 33 (Jackson St)

Design Hour Turning Movement Data

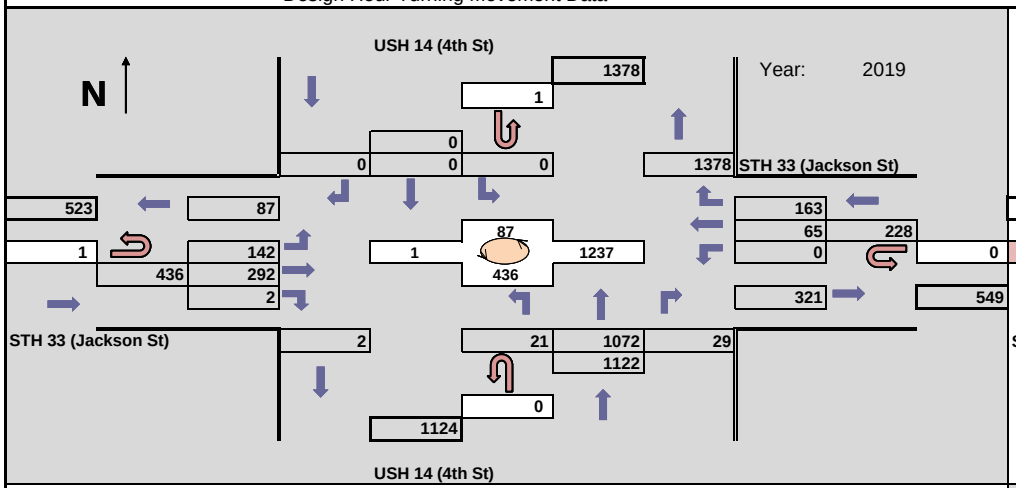

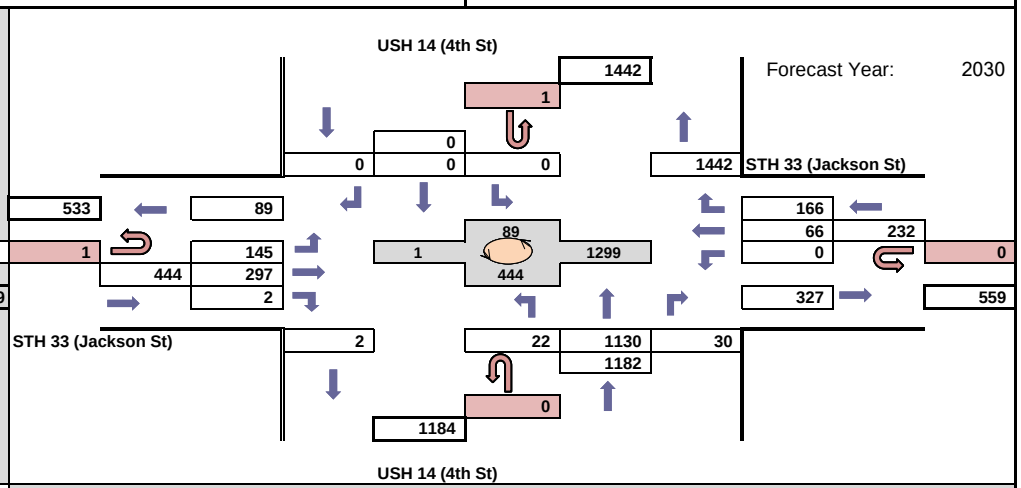

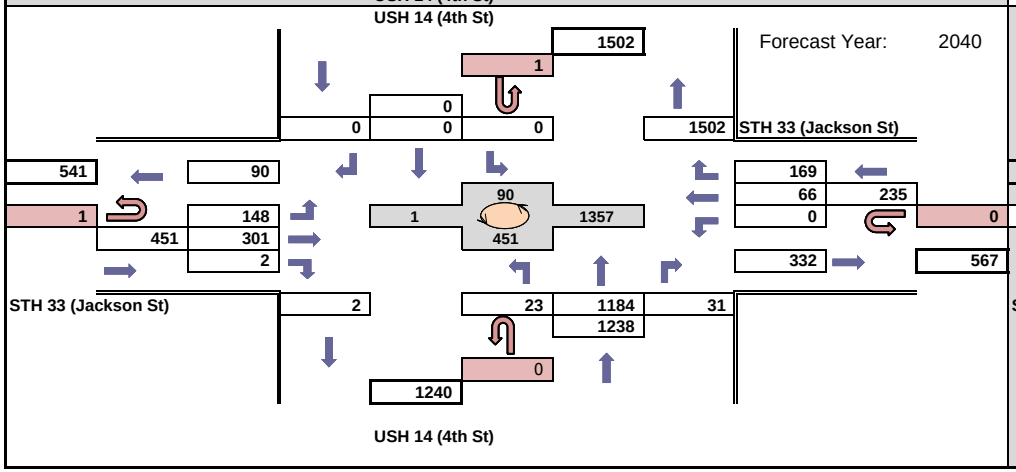

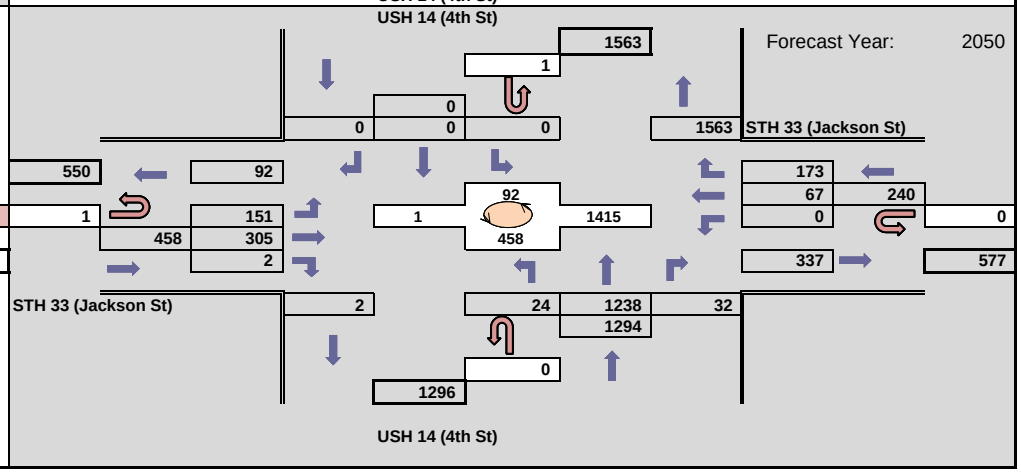

WisDOT TRAFFIC FORECAST REPORT	Region/COUNTY(IES): SW/La Crosse	Developed by: Miao Zhang
PROJECT ID(S): 1630-08-00	LOCATION: US 14 Segment	Phone: (608) 266-7995
ROUTE(S): USH 14	COMPLETED: 02/23/2021	
Traffic Forecasting Section; Bureau of Planning and Economic Development; Division of Transportation Investment Management		E-Mail: miao.zhang@dot.wi.gov

Site(s)	Route(s)	Volume(s)	Site Growth %
320592	USH 14	20720	0.26%
320595	USH 14	19460	0.38%
320629	USH 14	32460	0.37%

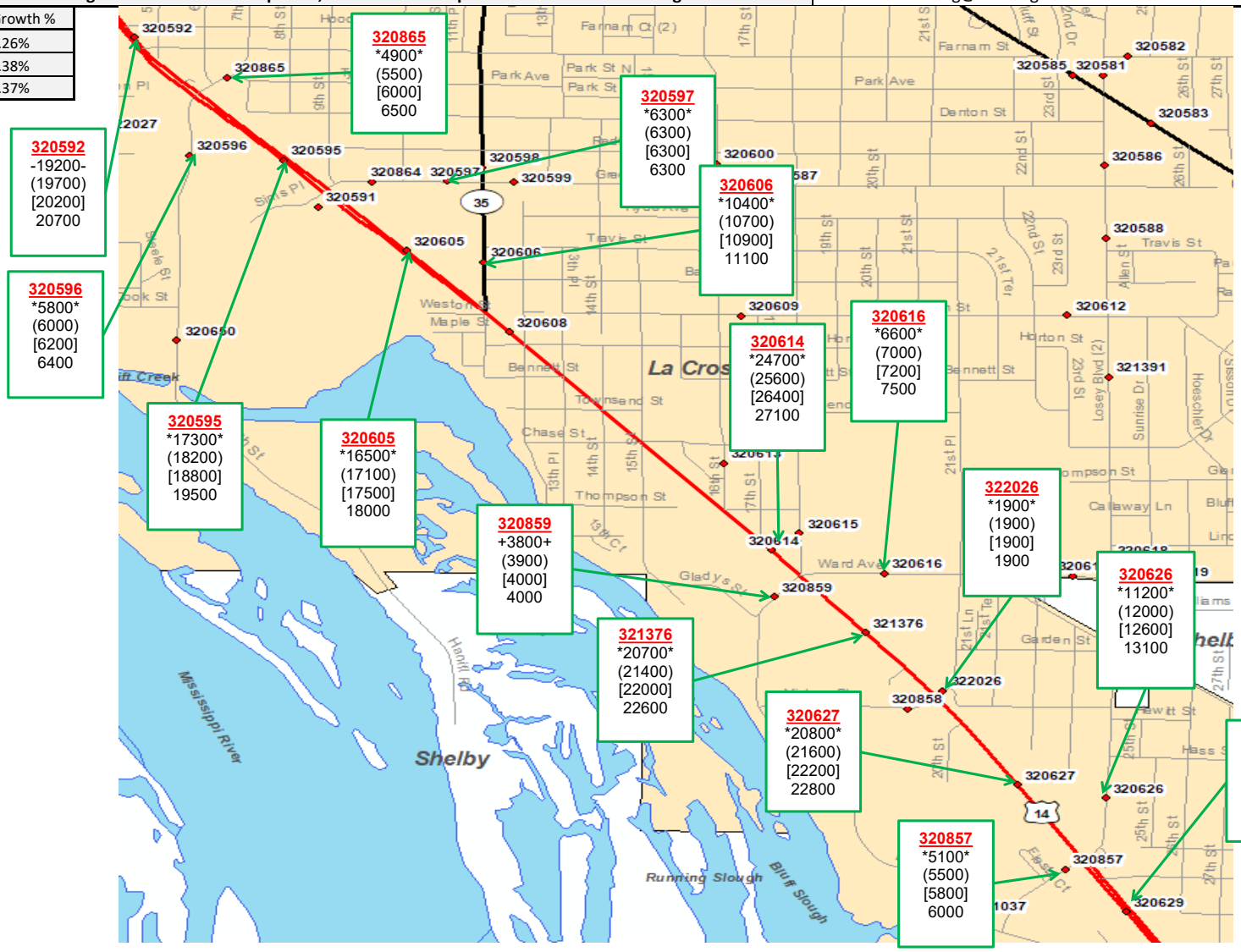

SITE ID = Colored, **bolded**, and underlined

Symbol	Count	Symbol	Forecast
-000-	2019 Count	(000)	2030 AADT
000	2017 Count	[000]	2040 AADT
+000+	2011 Count	000	2050 AADT

NOTES ON THE FORECAST:

1. This projection assumes that no major new traffic generators will be added to the development already included in the 2010/2040 La Crosse Regional Travel Demand Model.
2. Vehicle classification data and design values (K factors, directional splits, and percent trucks in design hours) are available here: http://wisconsindot.gov/Pages/projects/data-plan/traf-fore/default.aspx
3. USH 14 is a Factor Group II (Urban-Other) roadways (indicating low to moderate fluctuation in traffic from a seasonal perspective).
4. The 2010/2040 La Crosse Regional Travel Demand Model was used to complete this forecast. The Traffic Analysis Forecasting Information System output was used as a comparison tool to check against the model output. Adjustments were made as needed.
5. Roadway improvements coded within the existing plus committed (E+C) network of the 2010/2040 La Crosse Regional Travel Demand Model were assumed to be in place for the purposes of developing this forecast.

WisDOT Bureau of Planning & Economic Development
Traffic Forecasting Section
Forecast by: Miao Zhang
Phone: (608) 266 - 7995
Email: miao.zhang@dot.wi.gov

Projected AM Design Hour Traffic Volumes

Indicates roundabout

Design Hour: 7:00-8:00am

Forecast Completed: 2/23/2021

Project Description

Project ID(s): 1630-08-00
Route(s): US 14
Region/COUNTY(IES): SW/La Crosse
Location: US 14 (South Ave) & 7th St

Design Hour Turning Movement Data

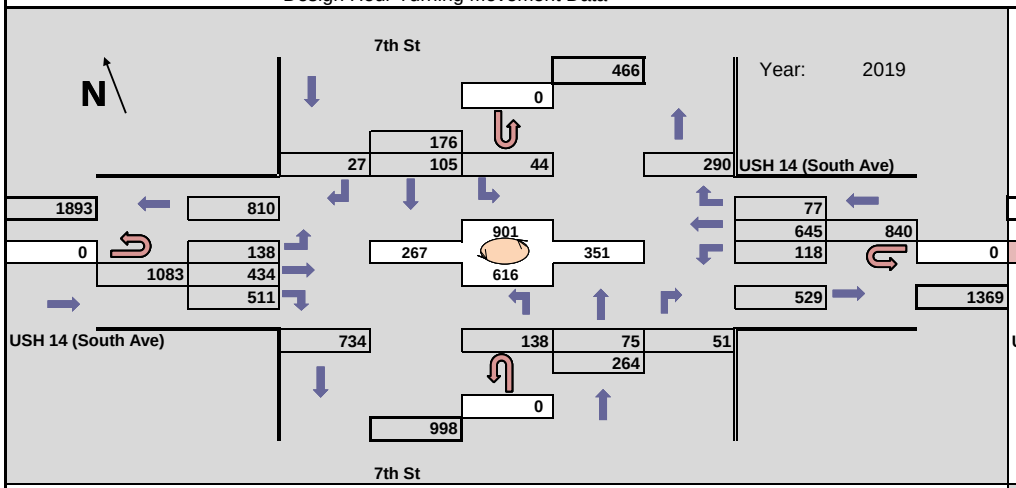

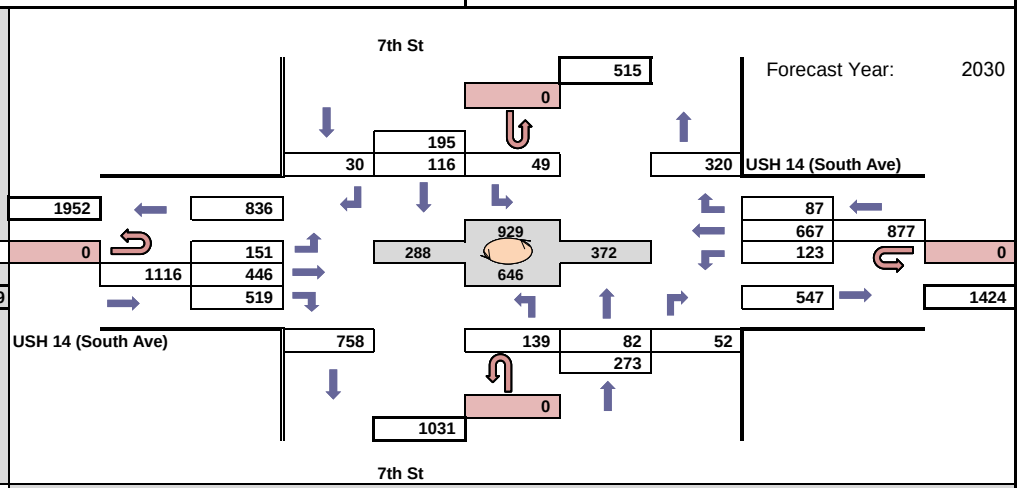

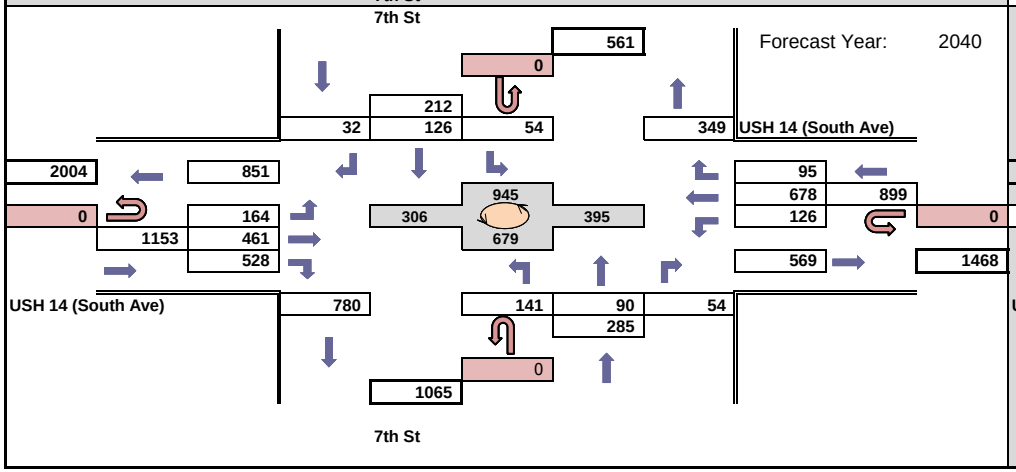

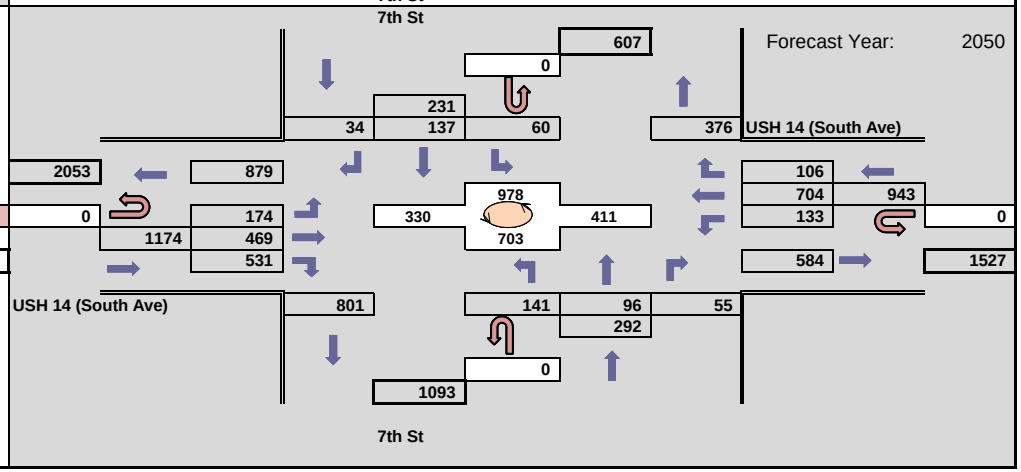

WisDOT Bureau of Planning & Economic Development
Traffic Forecasting Section
Forecast by: Miao Zhang
Phone: (608) 266 - 7995
Email: miao.zhang@dot.wi.gov

Projected PM Design Hour Traffic Volumes

Indicates roundabout

Design Hour: 4:00-5:00pm

Forecast Completed: 2/23/2021

Project Description

Project ID(s): 1630-08-00
Route(s): US 14
Region/COUNTY(IES): SW/La Crosse
Location: US 14 (South Ave) & 7th St

Design Hour Turning Movement Data

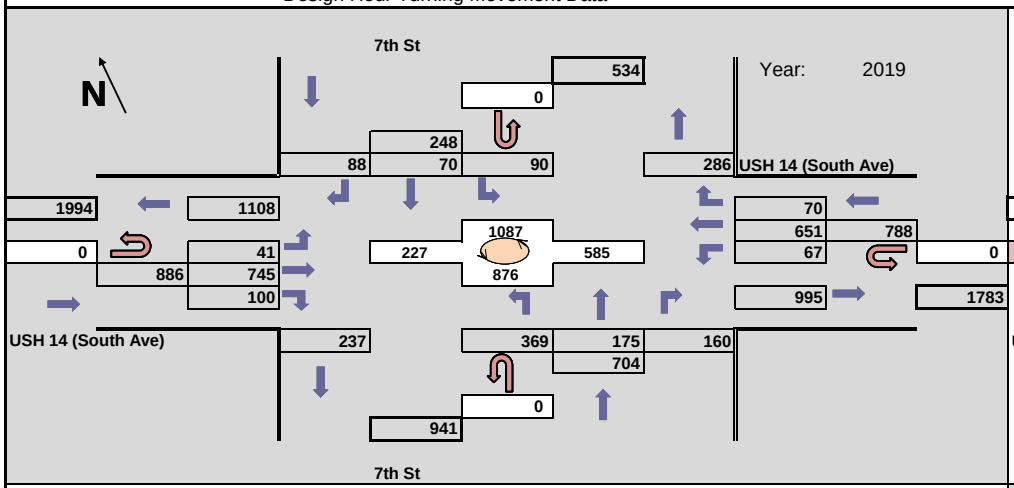

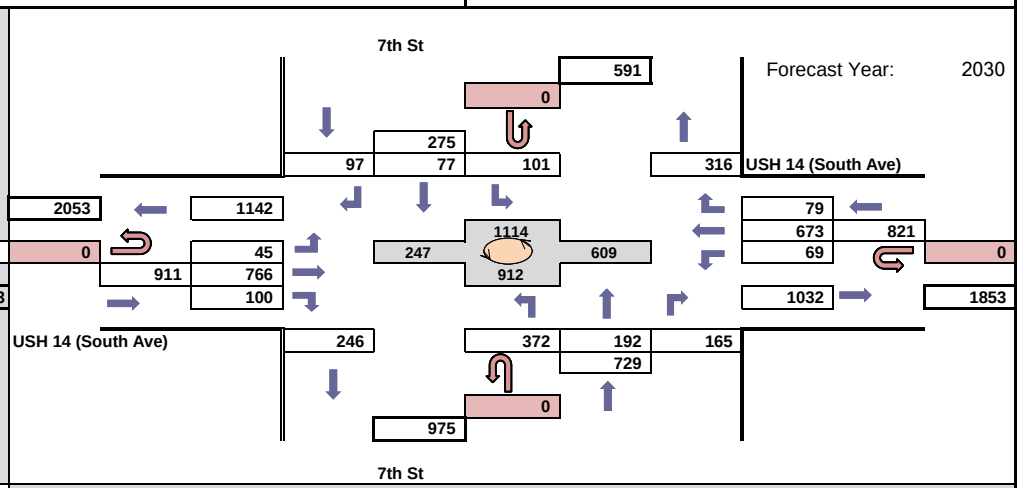

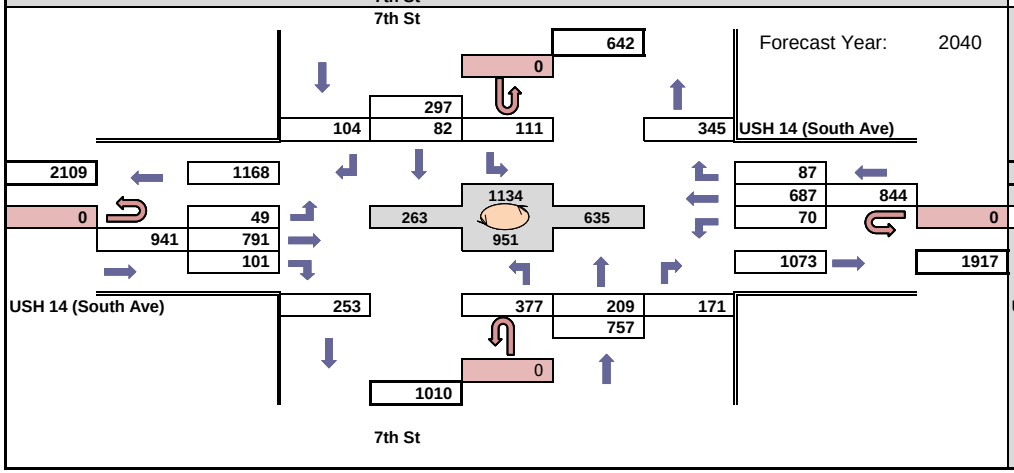

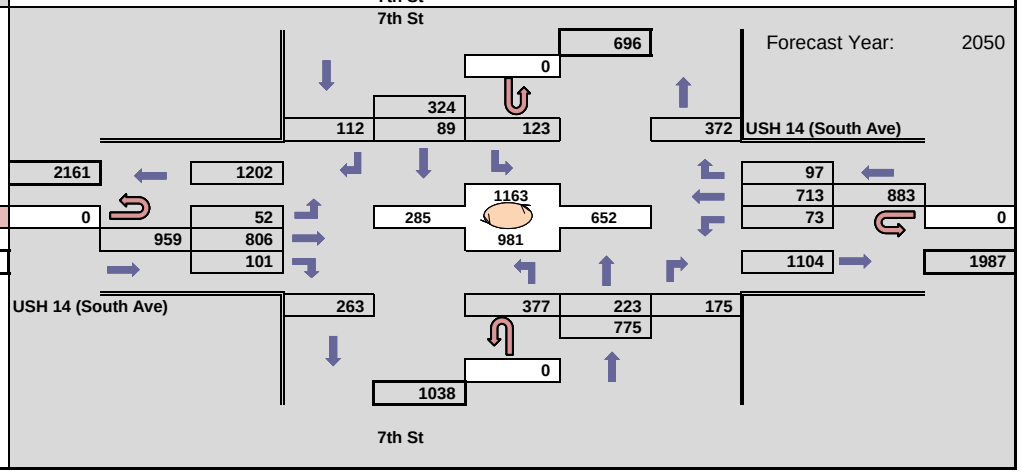

WisDOT Bureau of Planning & Economic Development
Traffic Forecasting Section
Forecast by: Miao Zhang
Phone: (608) 266 - 7995
Email: miao.zhang@dot.wi.gov

Projected AM Design Hour Traffic Volumes

Indicates roundabout

Design Hour: 7:00-8:00am

Forecast Completed: 2/23/2021

Project Description

Project ID(s): 1630-08-00
Route(s): US 14
Region/COUNTY(IES): SW/La Crosse
Location: US 14 (South Ave) & Green Bay St

Design Hour Turning Movement Data

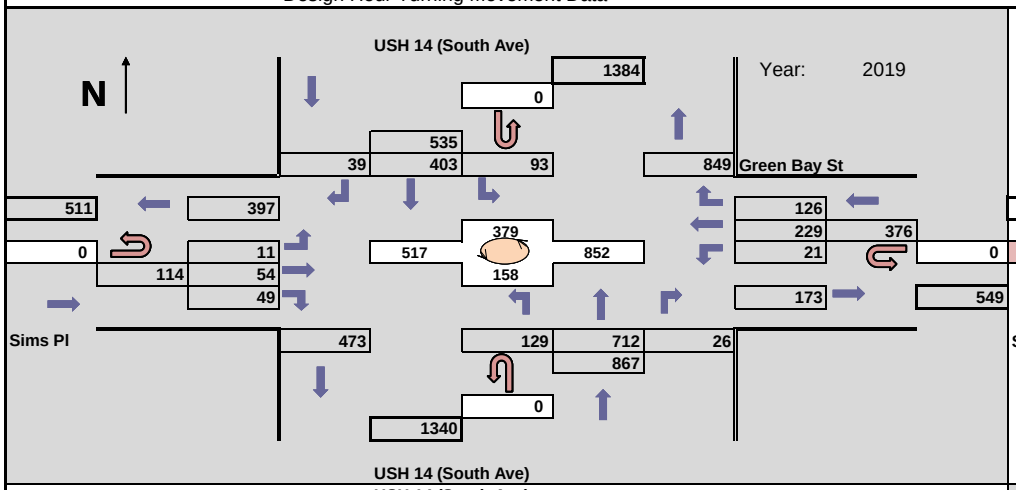

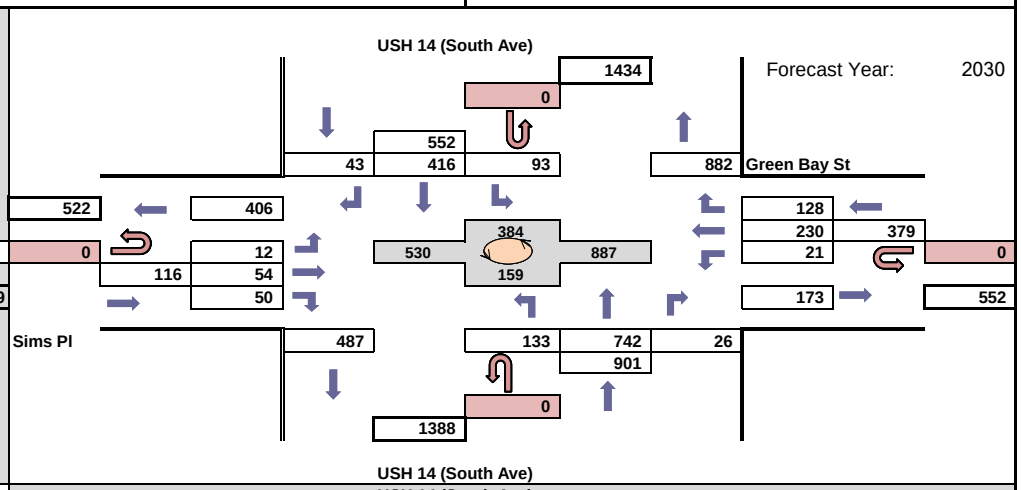

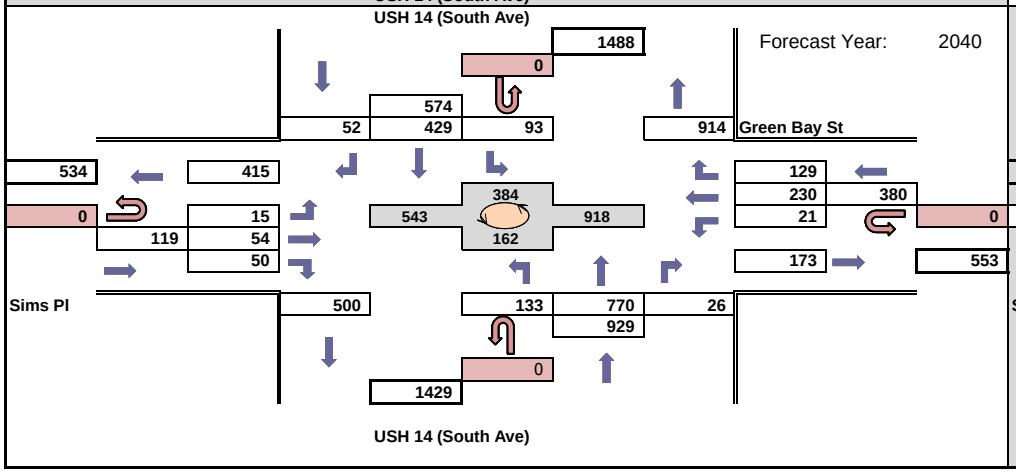

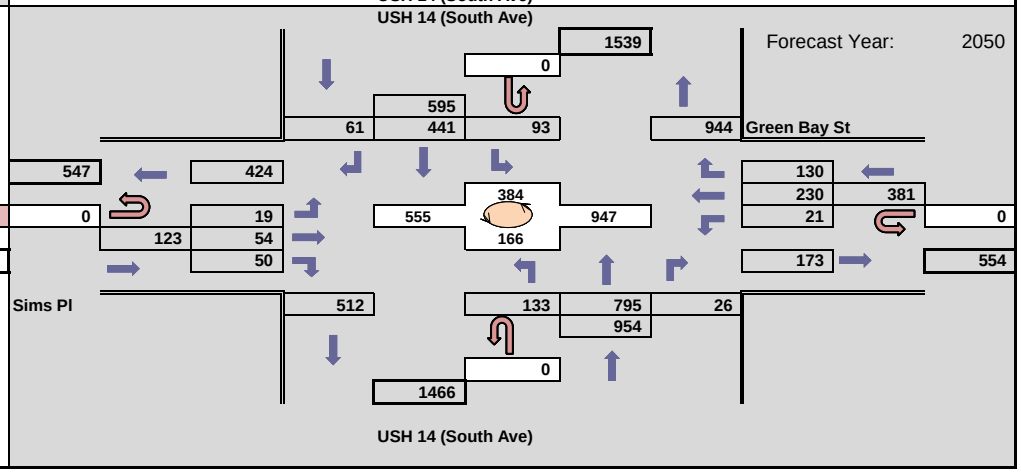

WisDOT Bureau of Planning & Economic Development
Traffic Forecasting Section
Forecast by: Miao Zhang
Phone: (608) 266 - 7995
Email: miao.zhang@dot.wi.gov

Projected PM Design Hour Traffic Volumes

Indicates roundabout

Design Hour: 4:00-5:00pm

Forecast Completed: 2/23/2021

Project Description

Project ID(s): 1630-08-00
Route(s): US 14
Region/COUNTY(IES): SW/La Crosse
Location: US 14 (South Ave) & Green Bay St

Design Hour Turning Movement Data

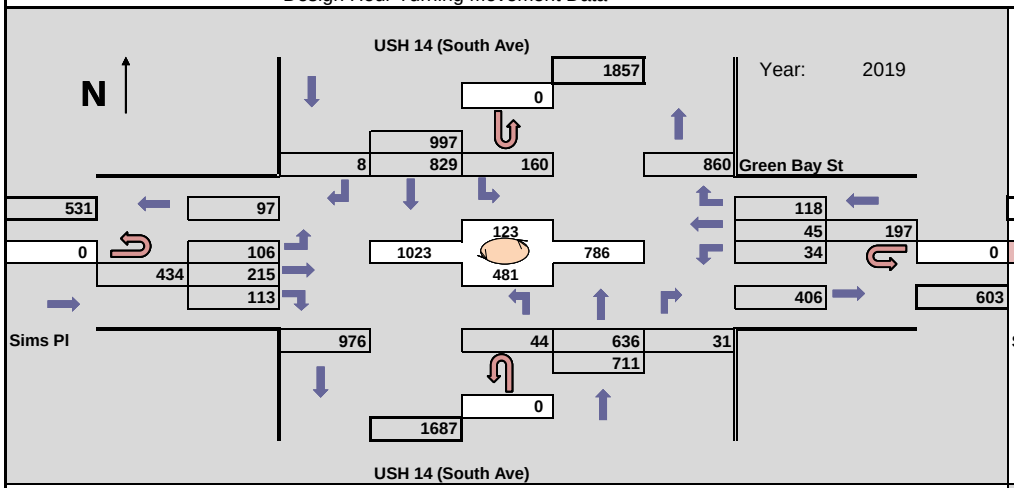

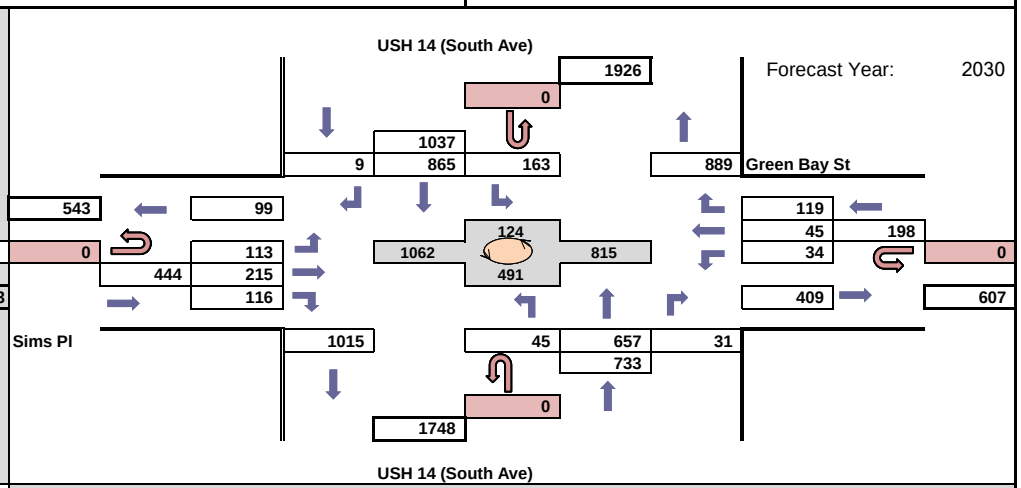

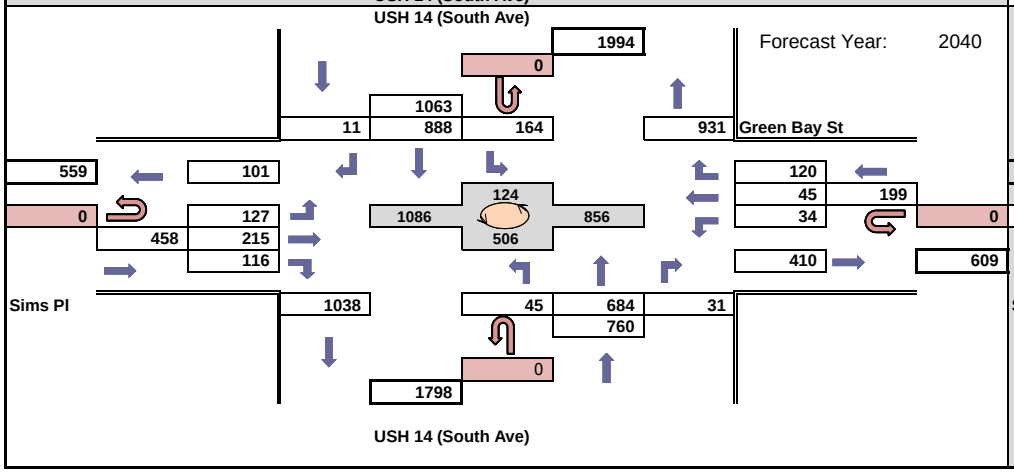

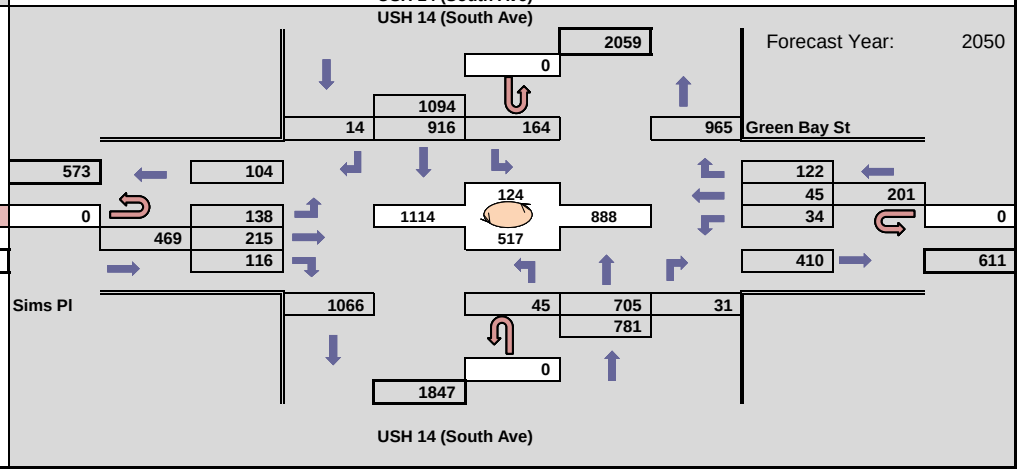

WisDOT Bureau of Planning & Economic Development
Traffic Forecasting Section
Forecast by: Miao Zhang
Phone: (608) 266 - 7995
Email: miao.zhang@dot.wi.gov

Projected AM Design Hour Traffic Volumes

Indicates roundabout

Design Hour: 7:00-8:00am

Forecast Completed: 2/25/2021

Project Description

Project ID(s): 1630-08-00
Route(s): US 14
Region/COUNTY(IES): SW/La Crosse
Location: US14(South Ave) & STH35(West Ave)

Design Hour Turning Movement Data

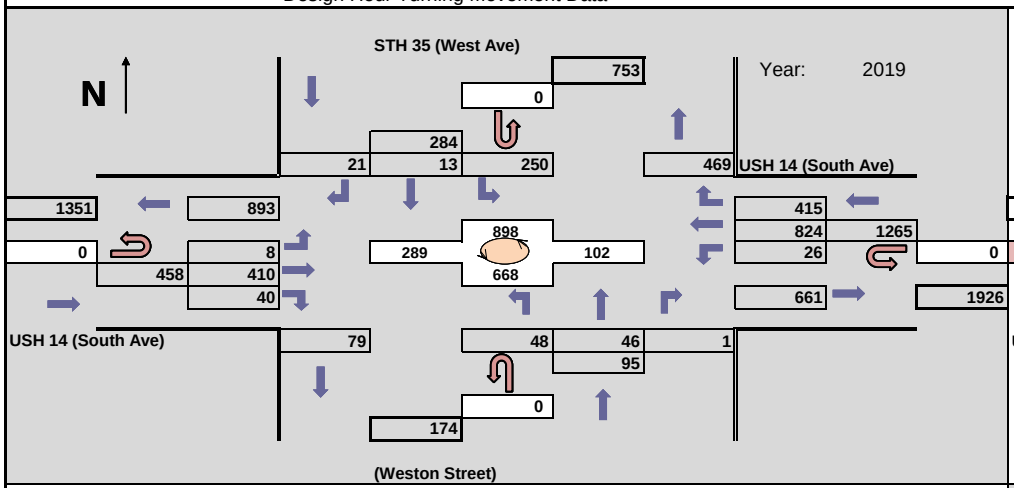

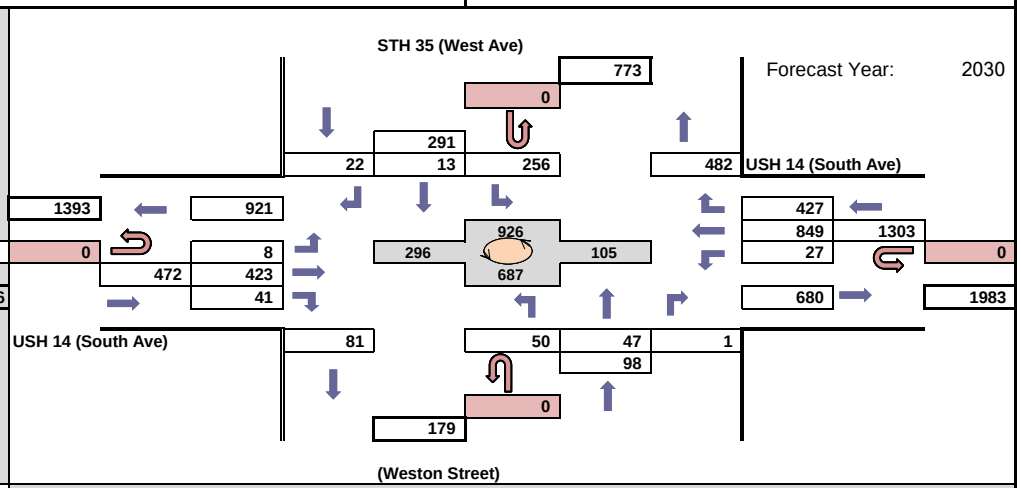

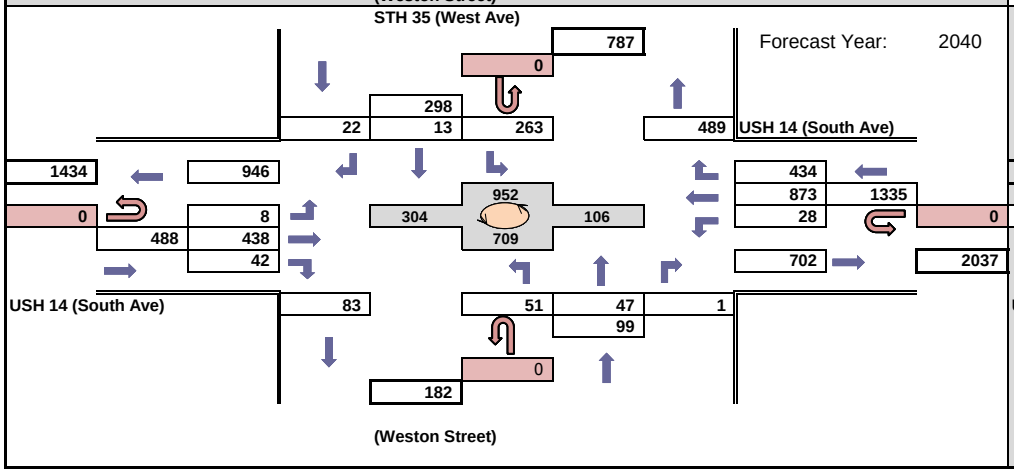

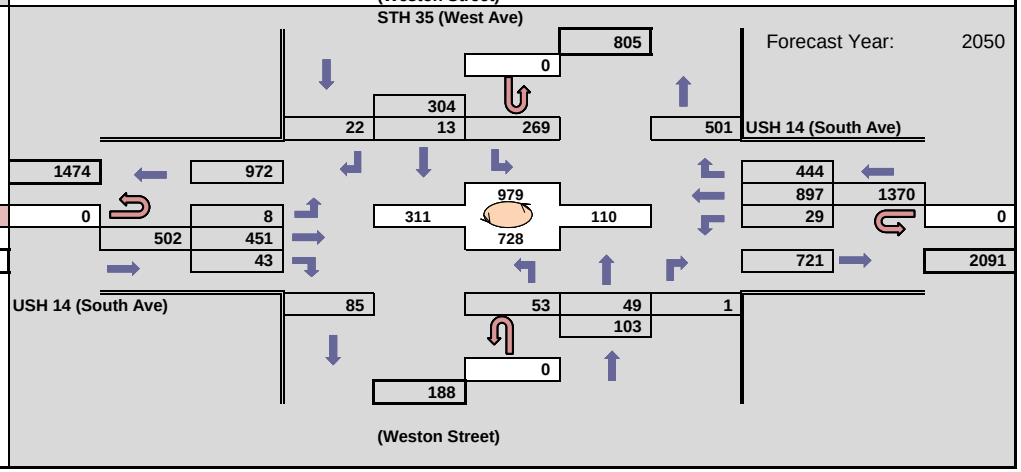

WisDOT Bureau of Planning & Economic Development
Traffic Forecasting Section
Forecast by: Miao Zhang
Phone: (608) 266 - 7995
Email: miao.zhang@dot.wi.gov

Projected AM Design Hour Traffic Volumes

Indicates roundabout

Design Hour: 7:00-8:00am

Forecast Completed: 2/25/2021

Project Description

Project ID(s): 1630-08-00
Route(s): US 14
Region/COUNTY(IES): SW/La Crosse
Location: US14(South Ave) & West Ave

Design Hour Turning Movement Data

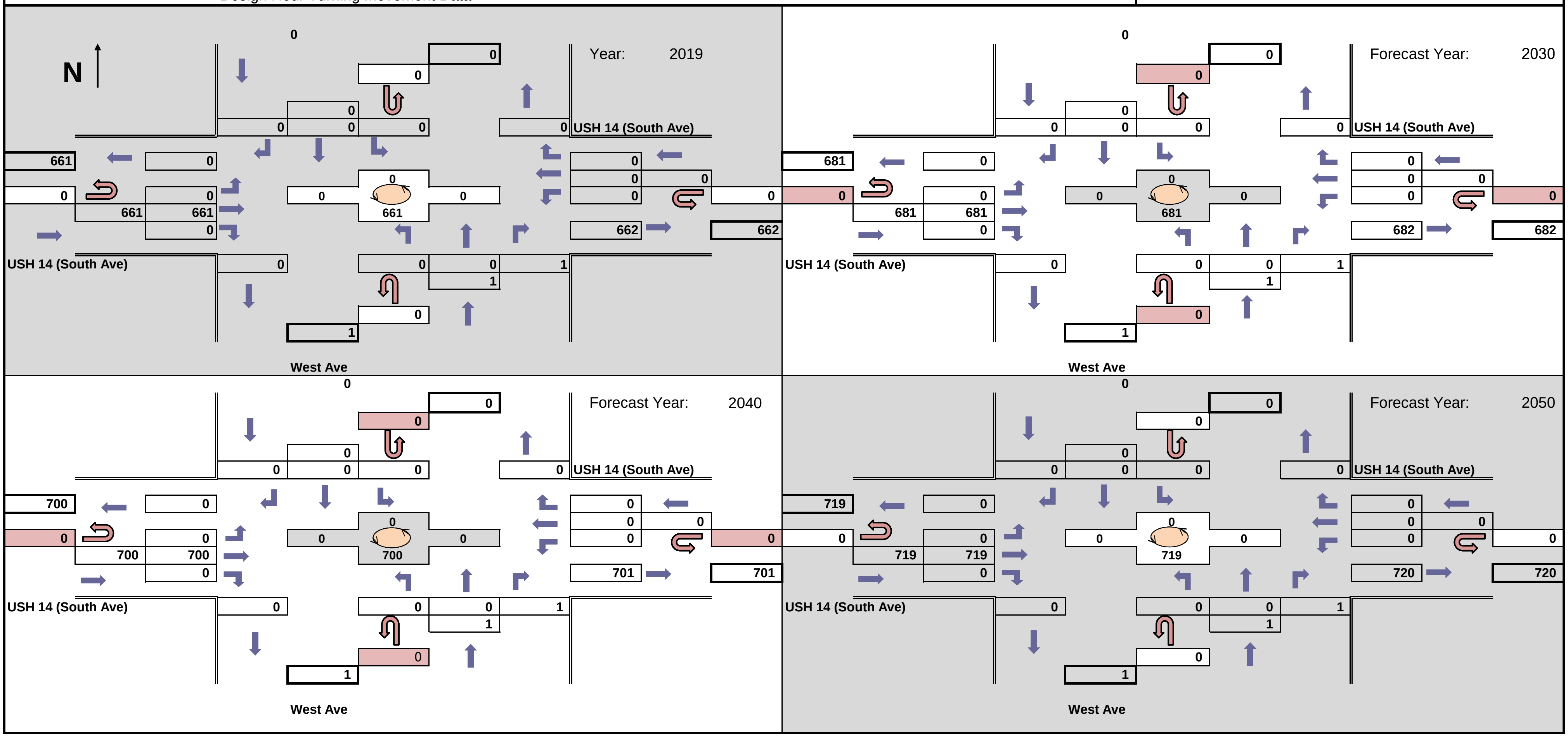

WisDOT Bureau of Planning & Economic Development
Traffic Forecasting Section
Forecast by: Miao Zhang
Phone: (608) 266 - 7995
Email: miao.zhang@dot.wi.gov

Projected PM Design Hour Traffic Volumes

Indicates roundabout

Design Hour: 4:00-5:00pm

Forecast Completed: 2/25/2021

Project Description

Project ID(s): 1630-08-00
Route(s): US 14
Region/COUNTY(IES): SW/La Crosse
Location: US14(South Ave) & STH35(West Ave)

Design Hour Turning Movement Data

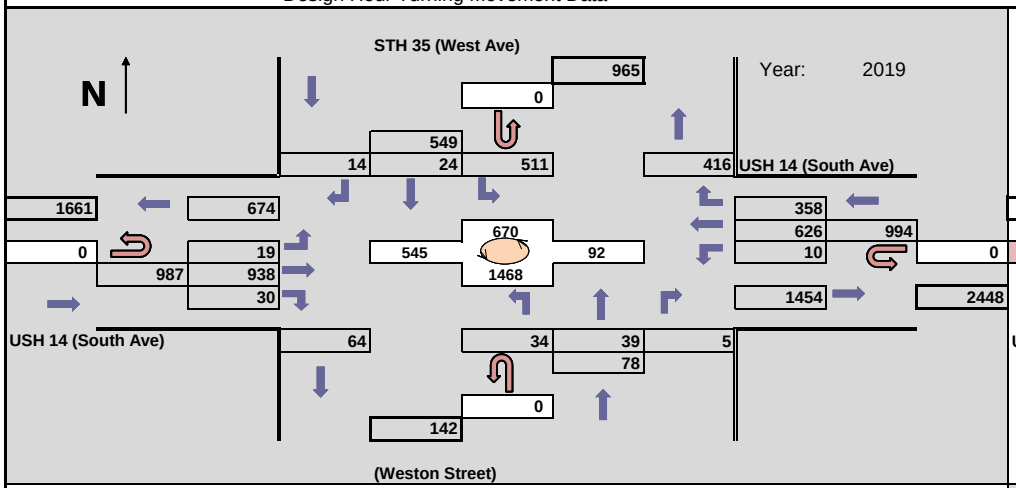

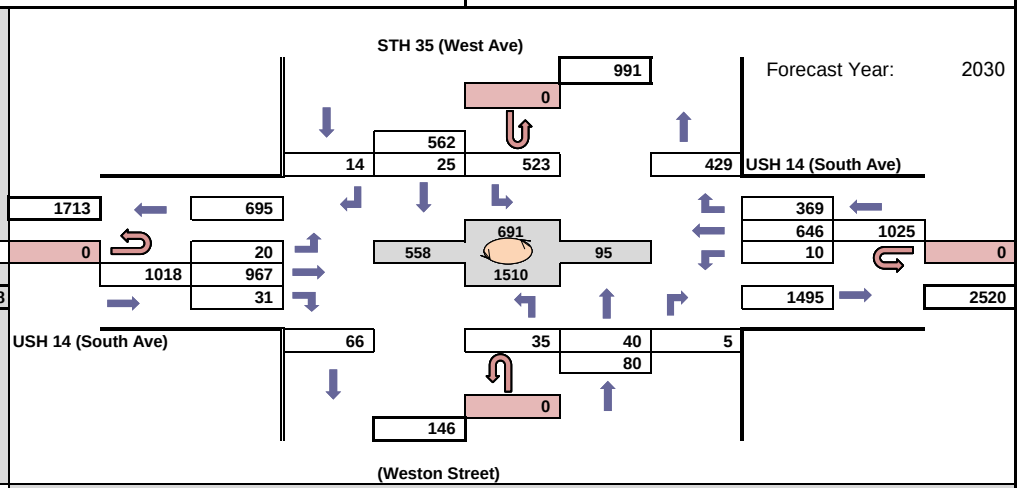

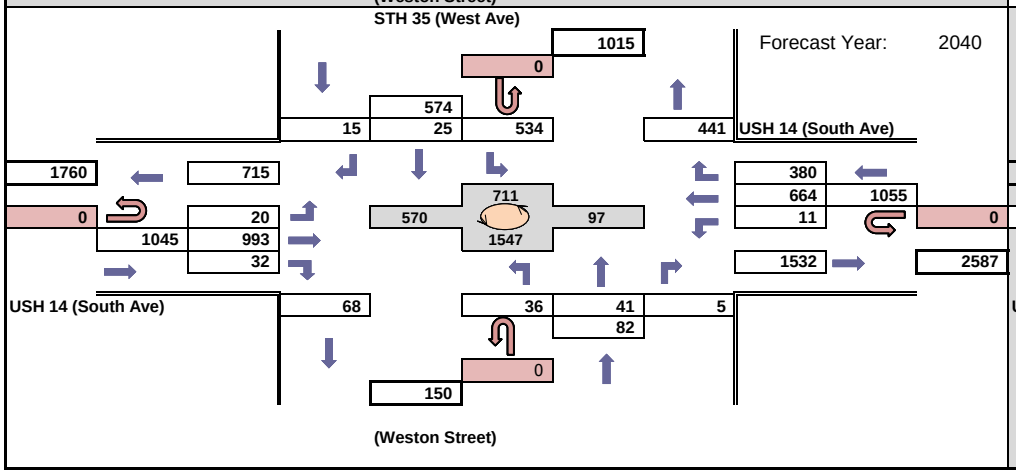

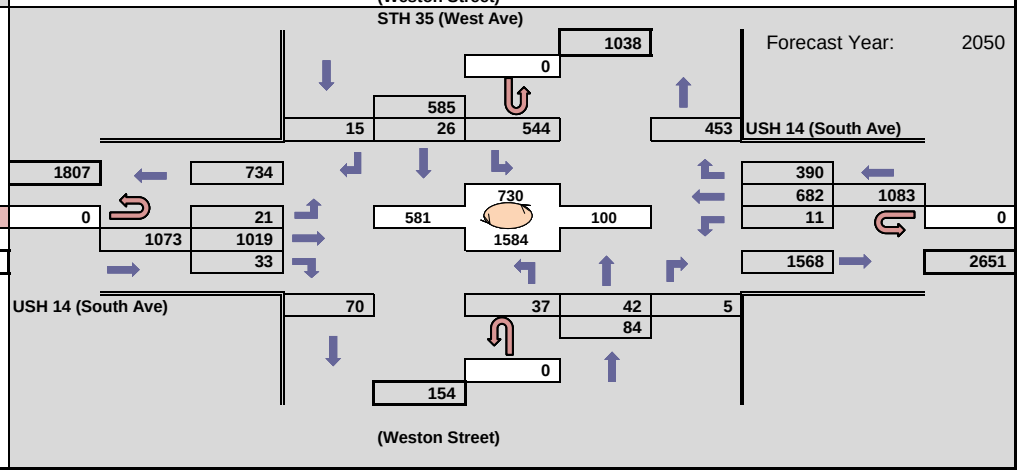

WisDOT Bureau of Planning & Economic Development
Traffic Forecasting Section
Forecast by: Miao Zhang
Phone: (608) 266 - 7995
Email: miao.zhang@dot.wi.gov

Projected PM Design Hour Traffic Volumes

Indicates roundabout

Design Hour: 4:00-5:00pm

Forecast Completed: 2/25/2021

Project Description

Project ID(s): 1630-08-00
Route(s): US 14
Region/COUNTY(IES): SW/La Crosse
Location: US14(South Ave) & West Ave

Design Hour Turning Movement Data

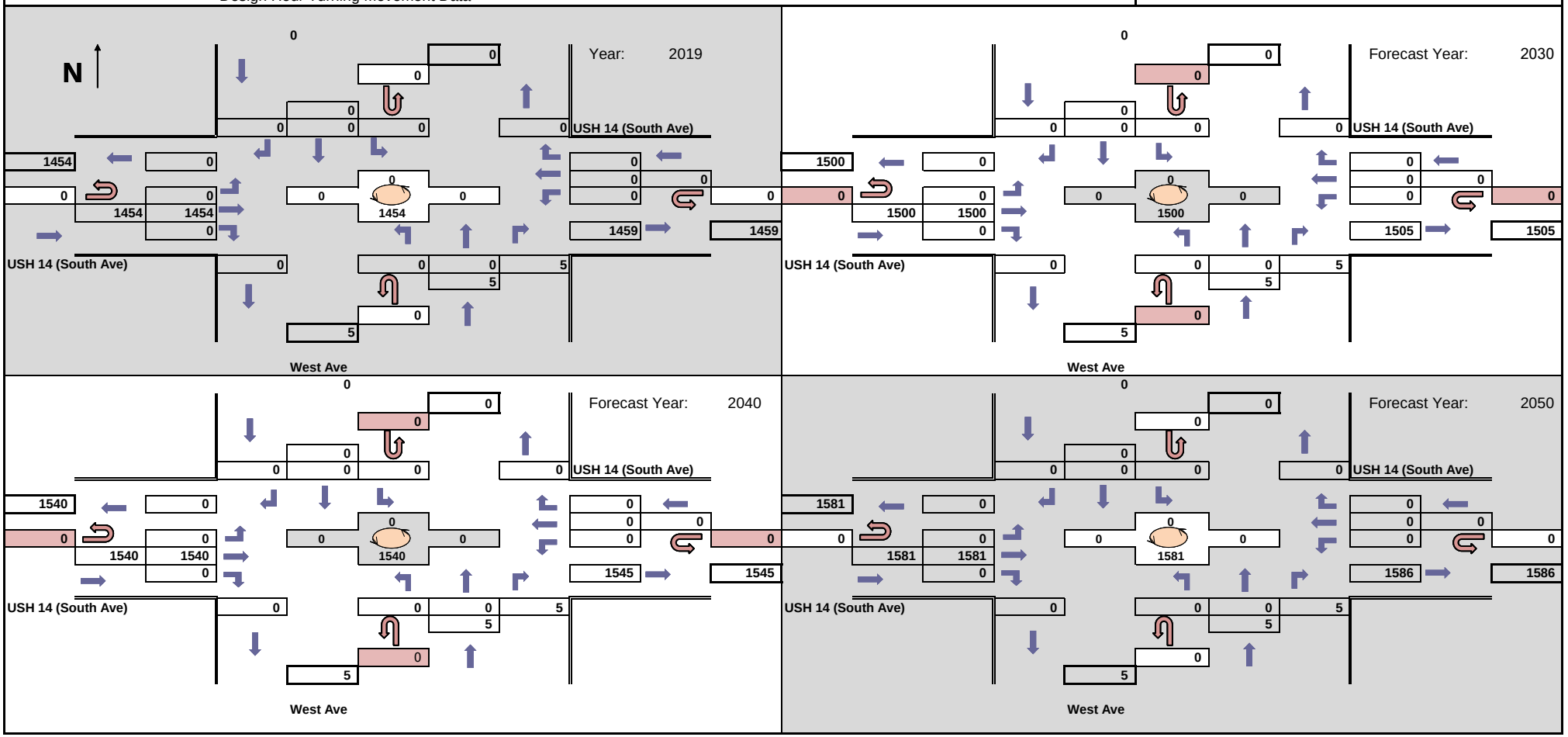

WisDOT Bureau of Planning & Economic Development
Traffic Forecasting Section
Forecast by: Miao Zhang
Phone: (608) 266 - 7995
Email: miao.zhang@dot.wi.gov

Projected AM Design Hour Traffic Volumes

Indicates roundabout

Design Hour: 7:00-8:00am

Forecast Completed: 2/25/2021

Project Description

Project ID(s): 1630-08-00
Route(s): US 14
Region/COUNTY(IES): SW/La Crosse
Location: US 14 (South Ave) & 16th St / Thompson St

Design Hour Turning Movement Data

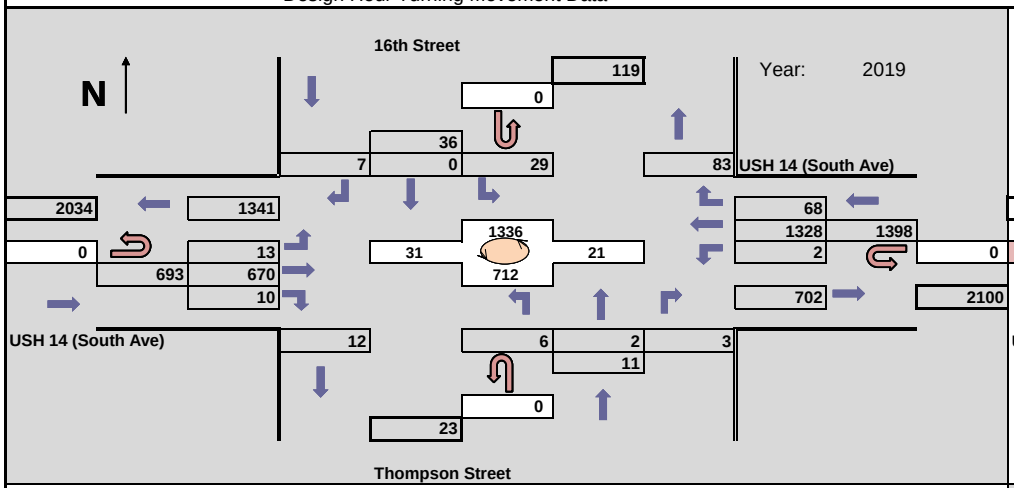

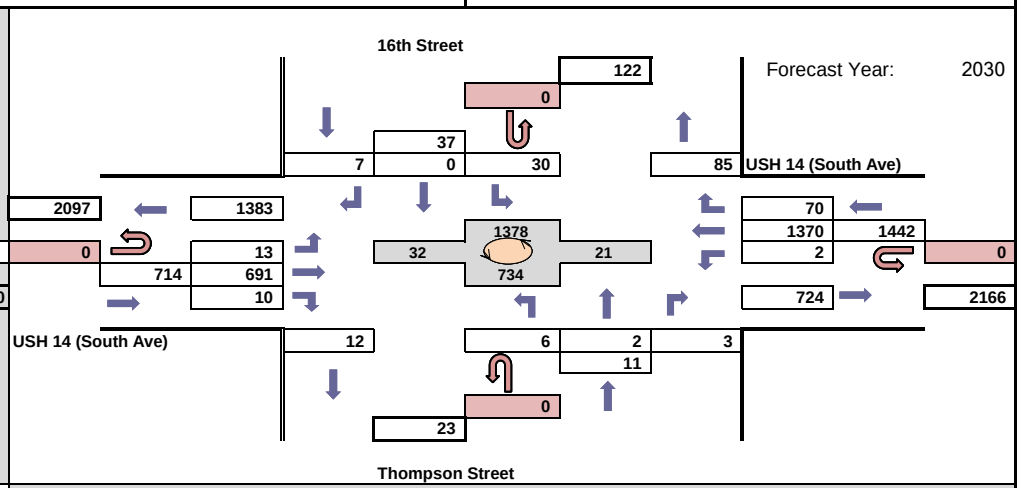

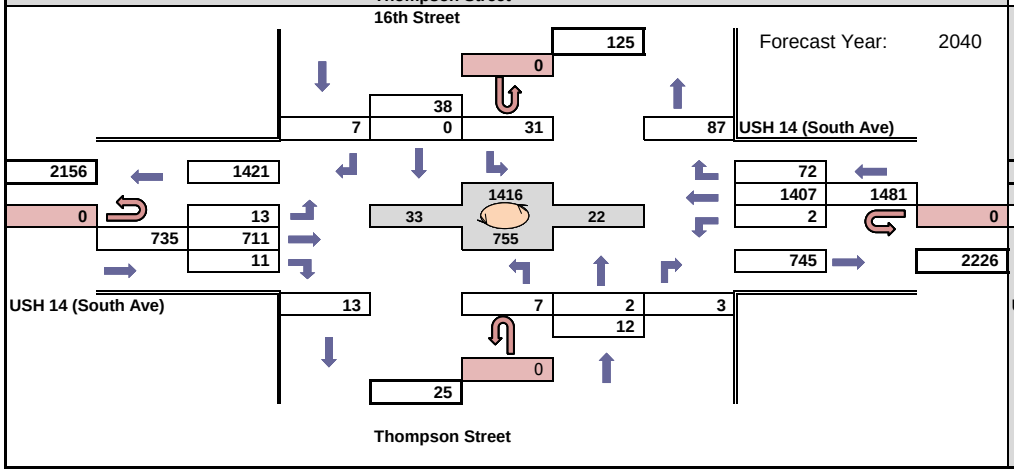

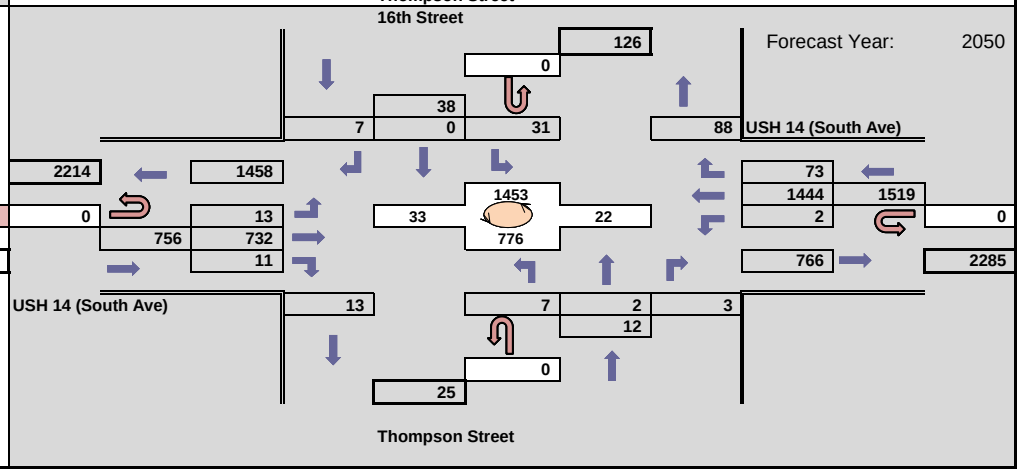

WisDOT Bureau of Planning & Economic Development
Traffic Forecasting Section
Forecast by: Miao Zhang
Phone: (608) 266 - 7995
Email: miao.zhang@dot.wi.gov

Projected PM Design Hour Traffic Volumes

Indicates roundabout

Design Hour: 4:00-5:00pm

Forecast Completed: 2/25/2021

Project Description

Project ID(s): 1630-08-00
Route(s): US 14
Region/COUNTY(IES): SW/La Crosse
Location: US 14 (South Ave) & 16th St / Thompson St

Design Hour Turning Movement Data

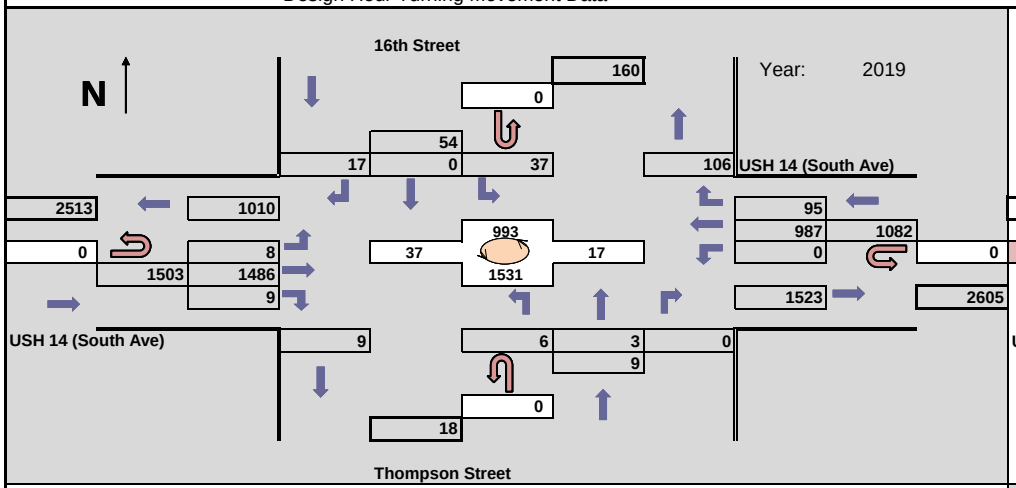

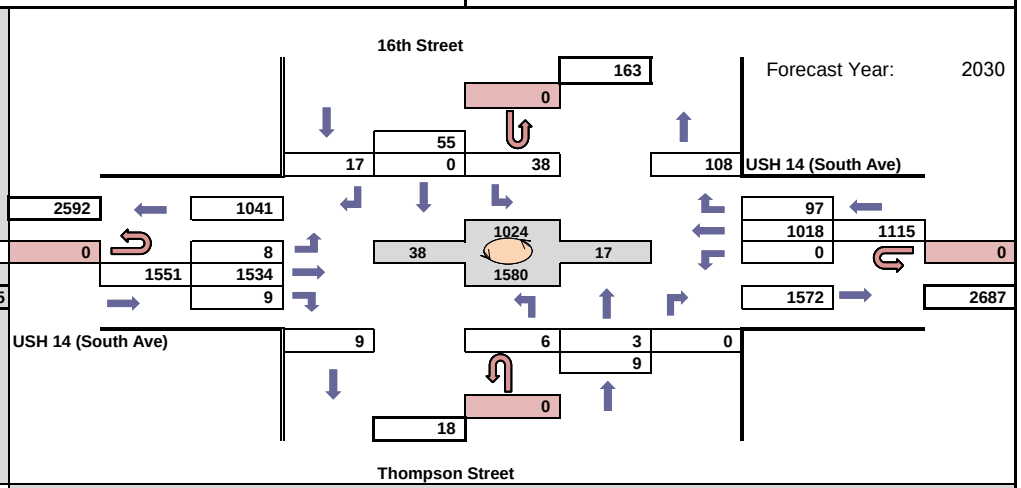

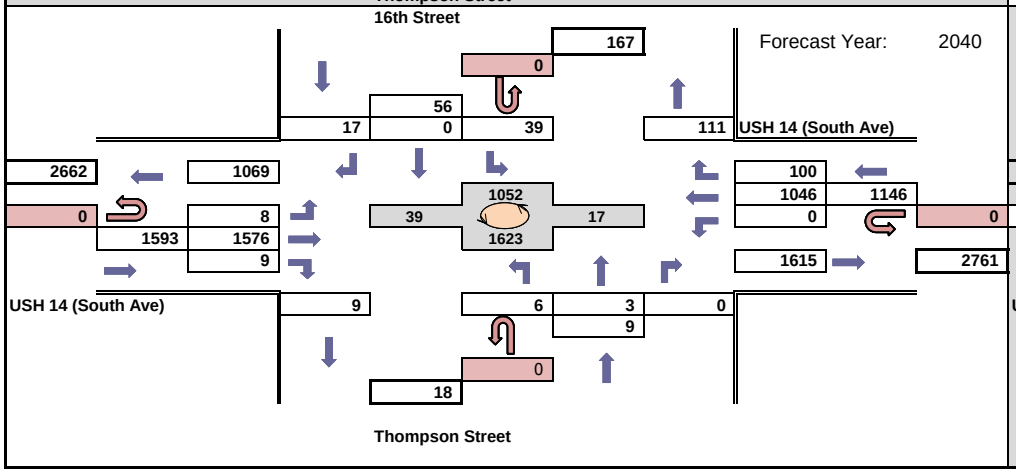

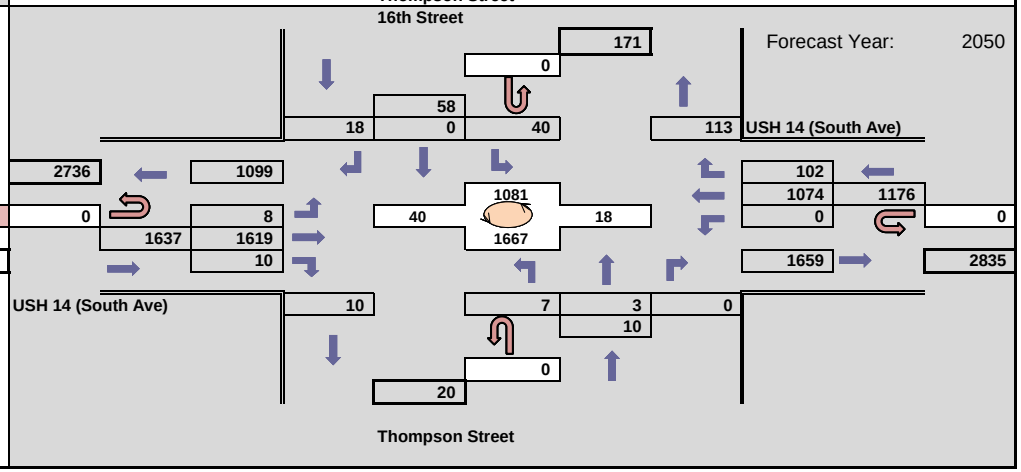

WisDOT Bureau of Planning & Economic Development
Traffic Forecasting Section
Forecast by: Miao Zhang
Phone: (608) 266 - 7995
Email: miao.zhang@dot.wi.gov

Projected AM Design Hour Traffic Volumes

Indicates roundabout

Design Hour: 7:00-8:00am

Forecast Completed: 2/25/2021

Project Description

Project ID(s): 1630-08-00
Route(s): US 14
Region/COUNTY(IES): SW/La Crosse
Location: US 14 (South Ave) & Ward Ave

Design Hour Turning Movement Data

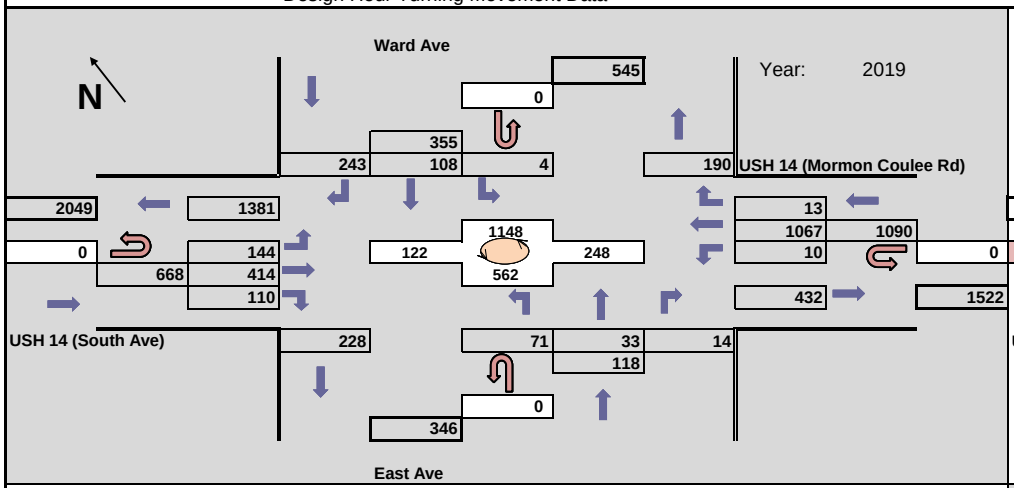

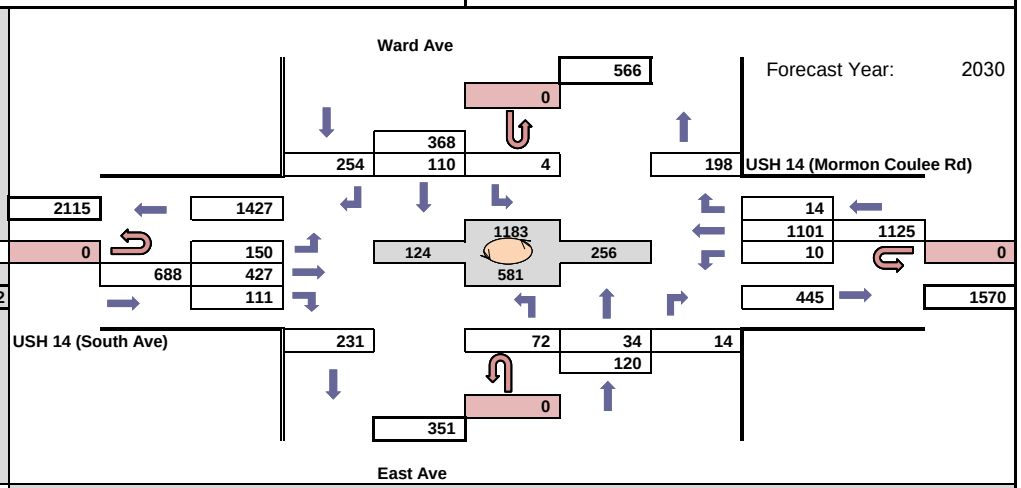

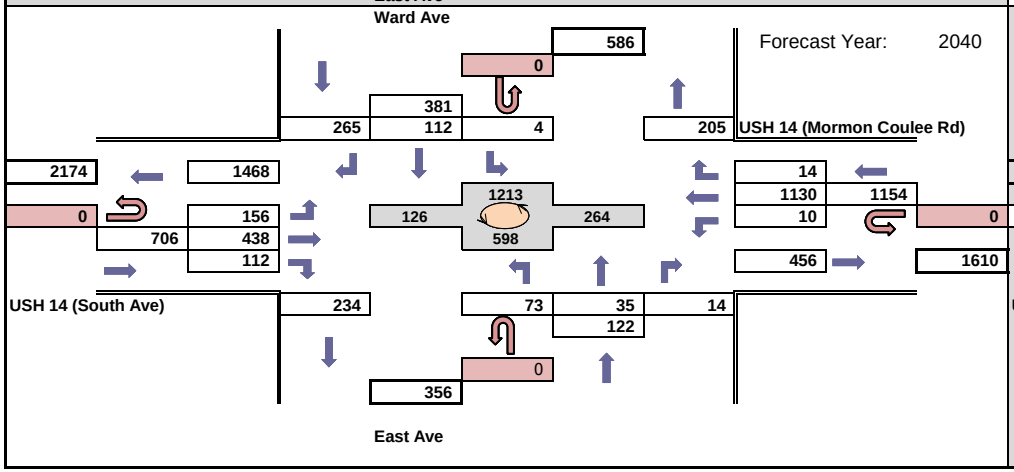

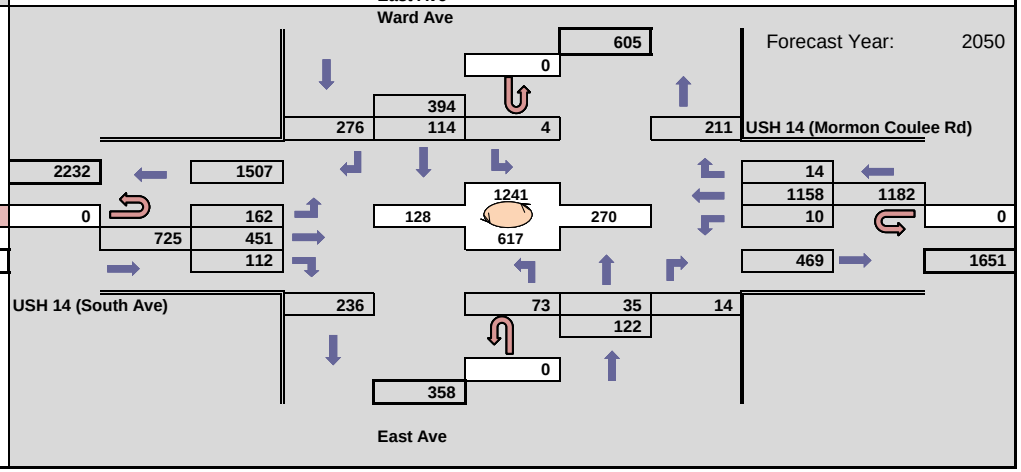

WisDOT Bureau of Planning & Economic Development
Traffic Forecasting Section
Forecast by: Miao Zhang
Phone: (608) 266 - 7995
Email: miao.zhang@dot.wi.gov

Projected AM Design Hour Traffic Volumes

Indicates roundabout

Design Hour: 7:00-8:00am

Forecast Completed: 2/25/2021

Project Description

Project ID(s): 1630-08-00
Route(s): US 14
Region/COUNTY(IES): SW/La Crosse
Location: US 14 (South Ave) & East Ave

Design Hour Turning Movement Data

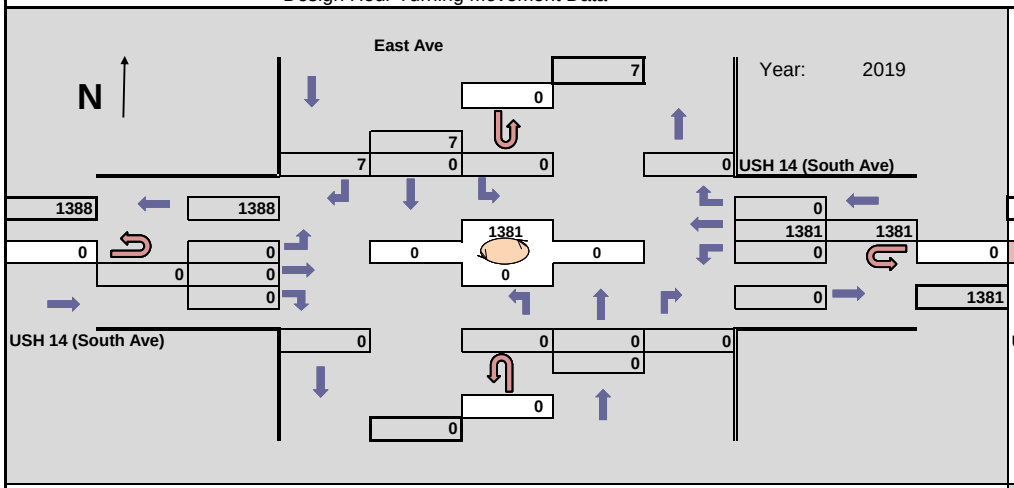

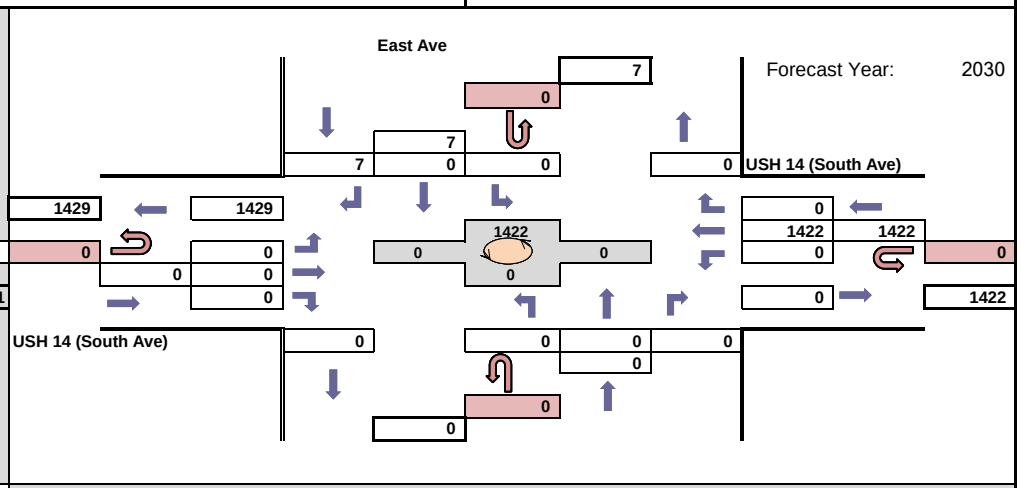

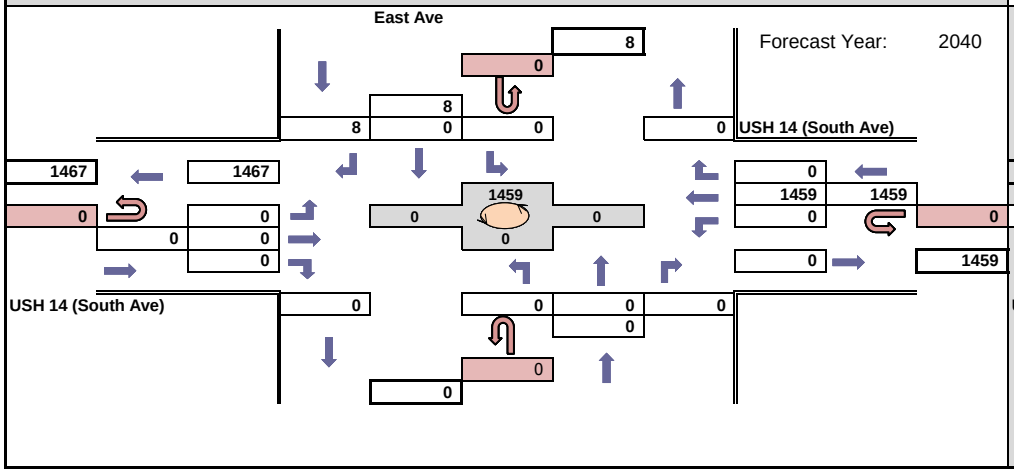

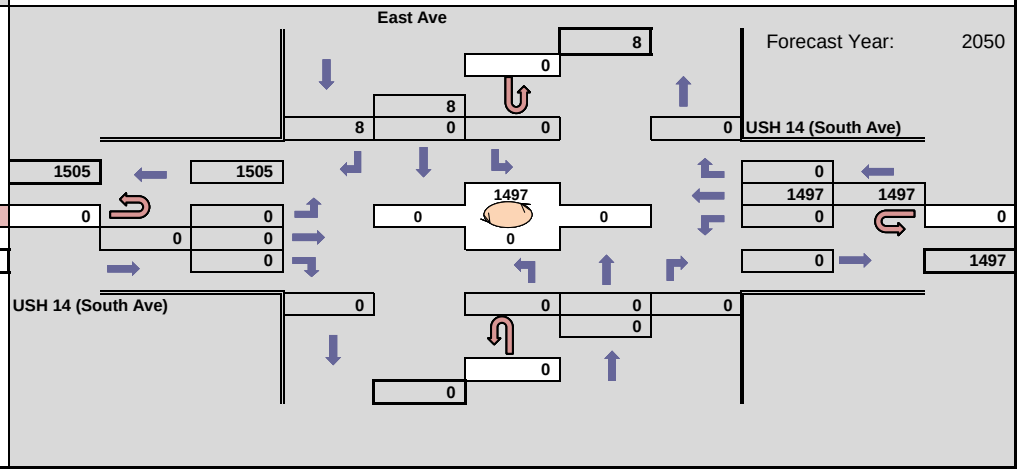

WisDOT Bureau of Planning & Economic Development
Traffic Forecasting Section
Forecast by: Miao Zhang
Phone: (608) 266 - 7995
Email: miao.zhang@dot.wi.gov

Projected PM Design Hour Traffic Volumes

Indicates roundabout

Design Hour: 4:00-5:00pm

Forecast Completed: 2/25/2021

Project Description

Project ID(s): 1630-08-00
Route(s): US 14
Region/COUNTY(IES): SW/La Crosse
Location: US 14 (South Ave) & Ward Ave

Design Hour Turning Movement Data

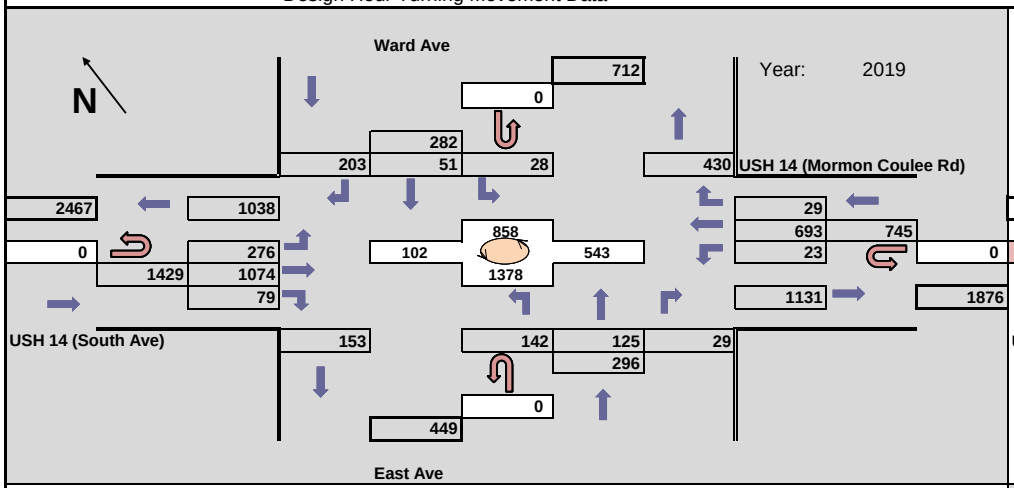

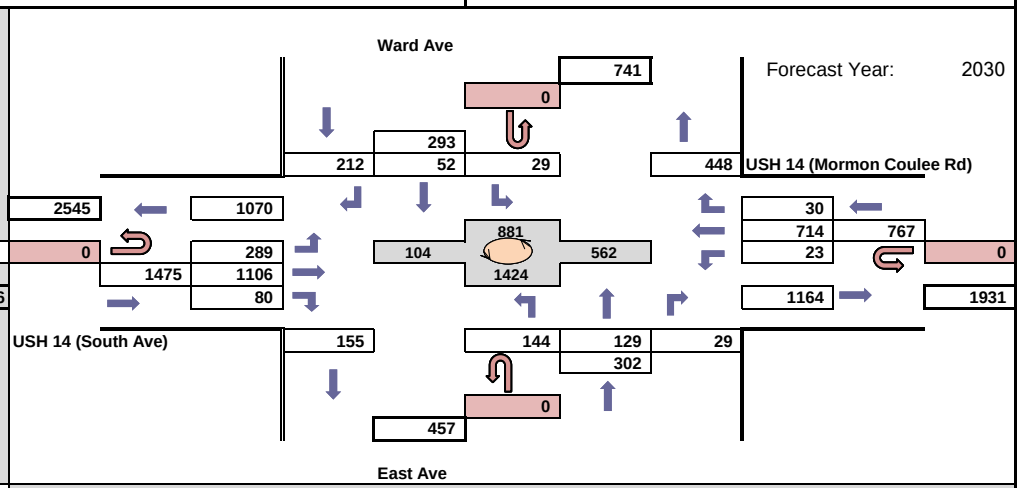

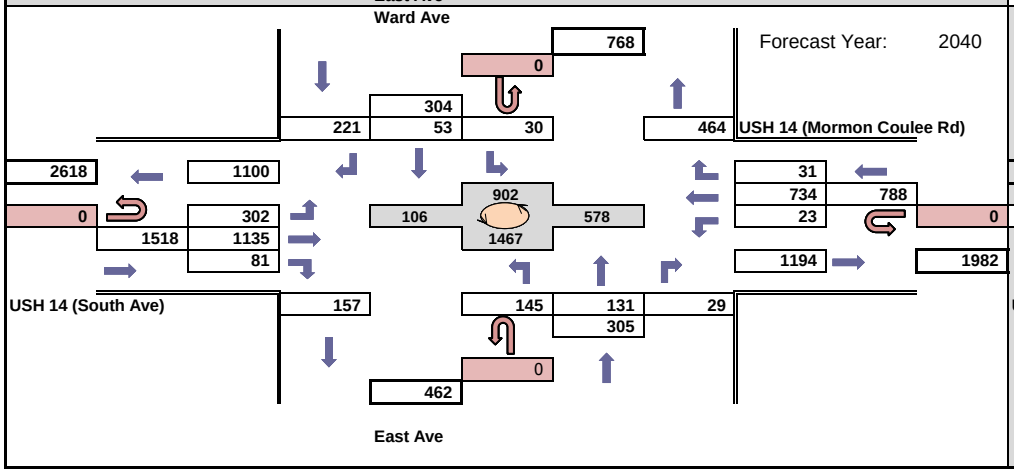

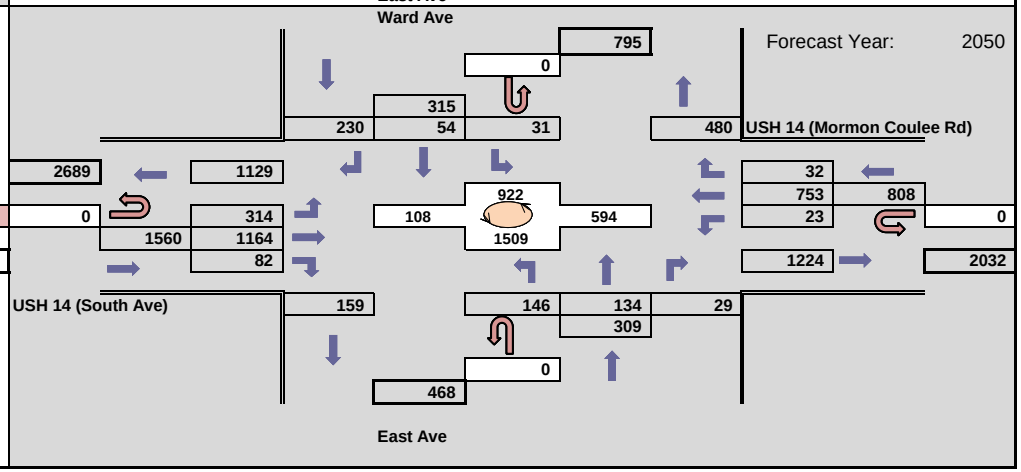

WisDOT Bureau of Planning & Economic Development
Traffic Forecasting Section
Forecast by: Miao Zhang
Phone: (608) 266 - 7995
Email: miao.zhang@dot.wi.gov

Projected PM Design Hour Traffic Volumes

Indicates roundabout

Design Hour: 4:00-5:00pm

Forecast Completed: 2/25/2021

Project Description

Project ID(s): 1630-08-00
Route(s): US 14
Region/COUNTY(IES): SW/La Crosse
Location: US 14 (South Ave) & East Ave

Design Hour Turning Movement Data

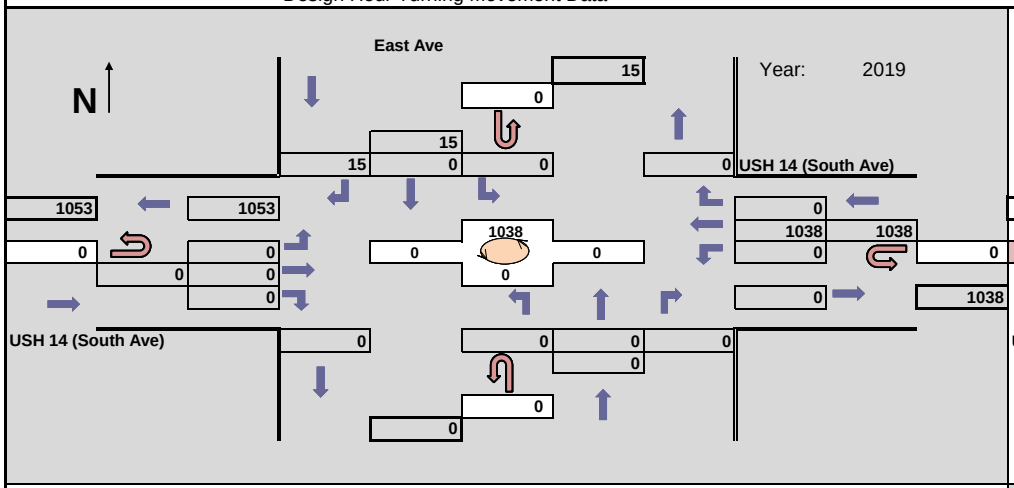

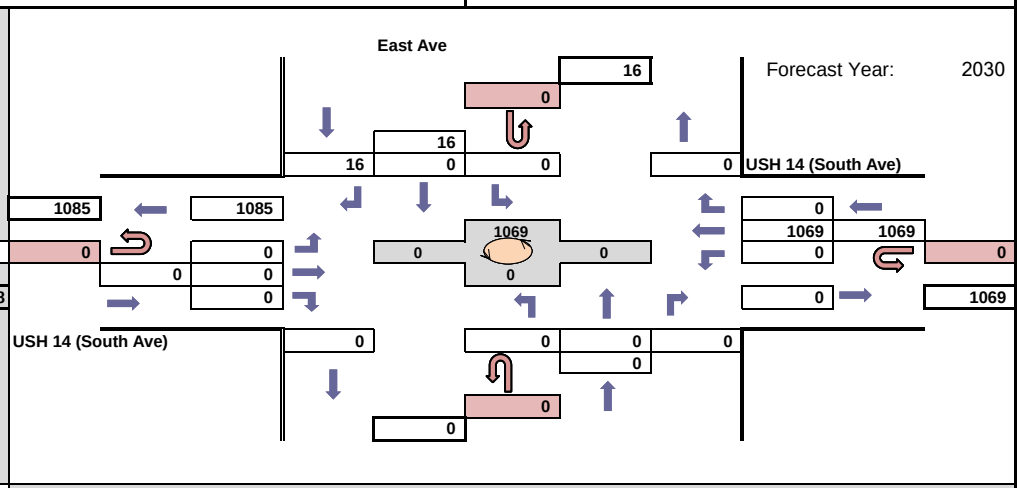

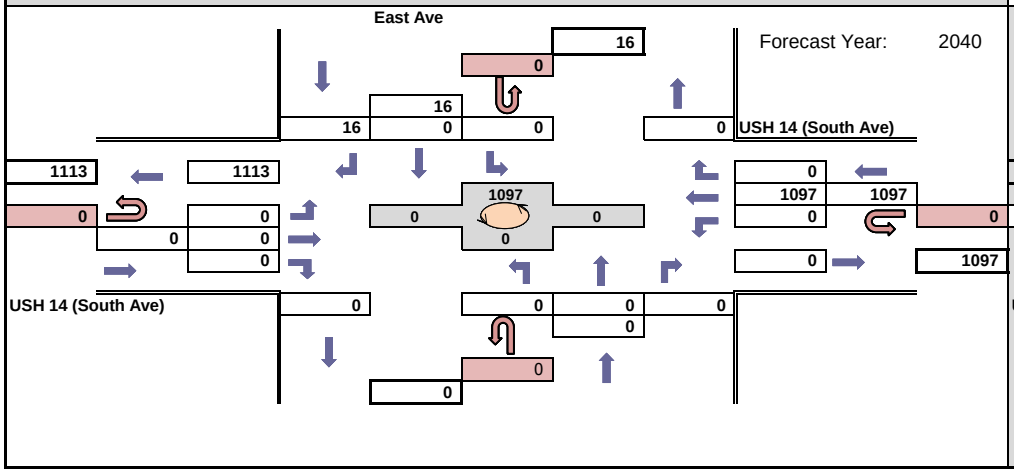

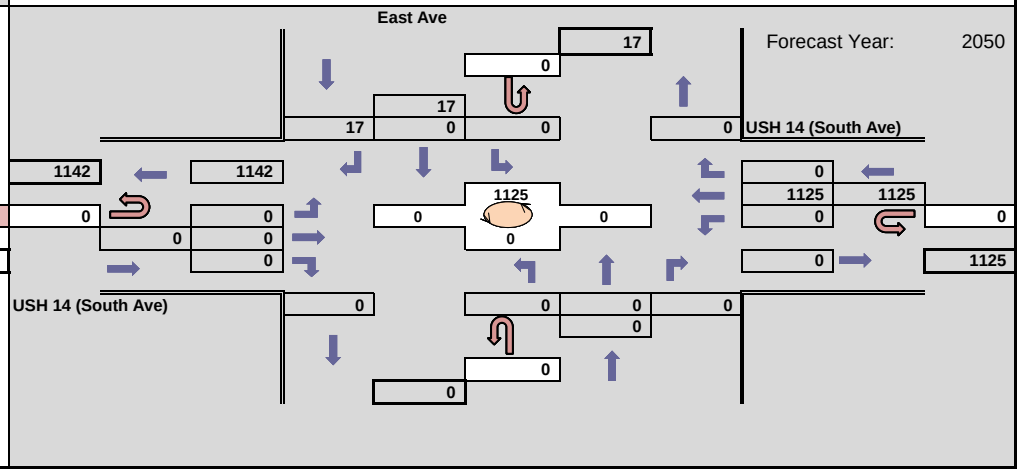

WisDOT Bureau of Planning & Economic Development
Traffic Forecasting Section
Forecast by: Miao Zhang
Phone: (608) 266 - 7995
Email: miao.zhang@dot.wi.gov

Projected AM Design Hour Traffic Volumes

Indicates roundabout

Design Hour: 7:00-8:00am

Forecast Completed: 2/23/2021

Project Description

Project ID(s): 1630-08-00
Route(s): US 14
Region/COUNTY(IES): SW/La Crosse
Location: US 14 & 21st St / Victory St

Design Hour Turning Movement Data

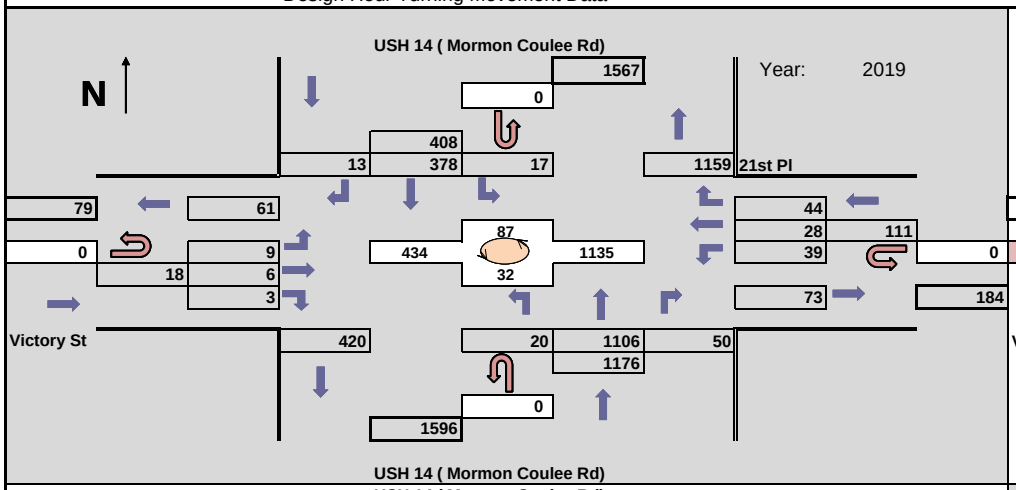

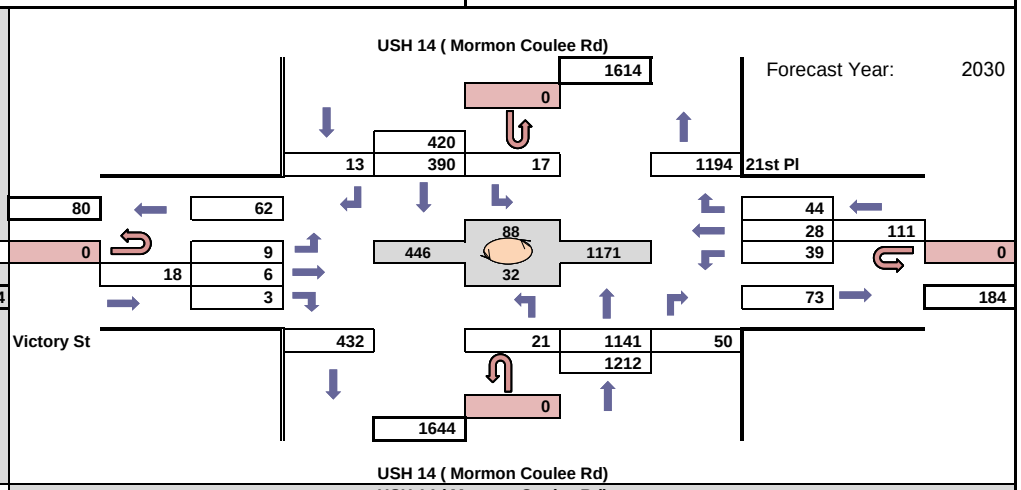

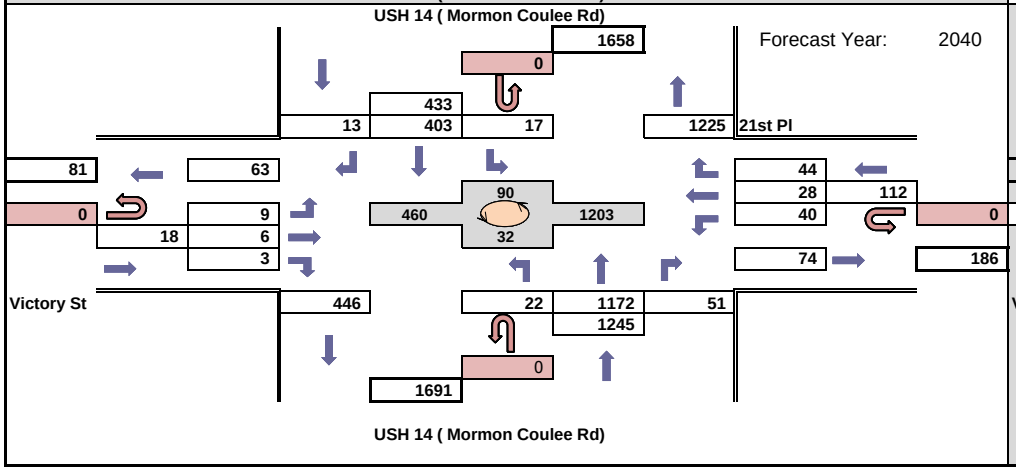

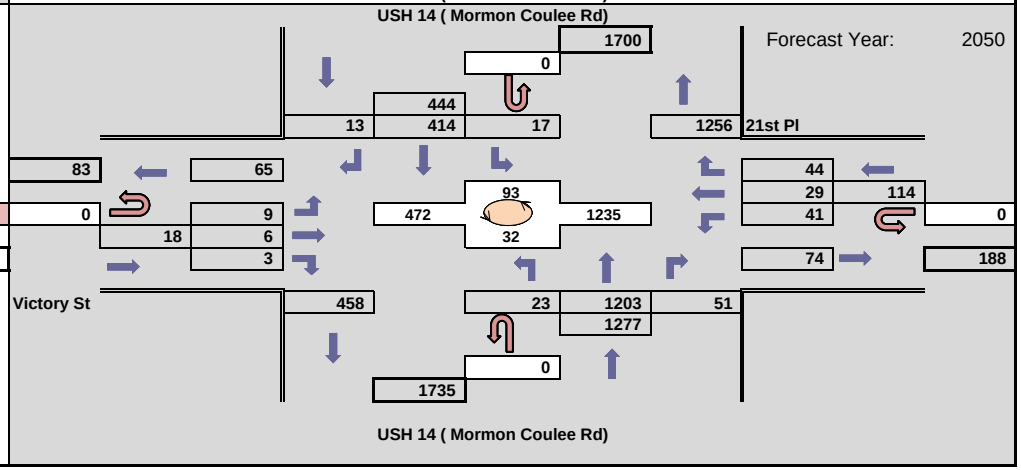

WisDOT Bureau of Planning & Economic Development
Traffic Forecasting Section
Forecast by: Miao Zhang
Phone: (608) 266 - 7995
Email: miao.zhang@dot.wi.gov

Projected PM Design Hour Traffic Volumes

Indicates roundabout

Design Hour: 4:00-5:00pm

Forecast Completed: 2/23/2021

Project Description

Project ID(s): 1630-08-00
Route(s): US 14
Region/COUNTY(IES): SW/La Crosse
Location: US 14 & 21st St / Victory St

Design Hour Turning Movement Data

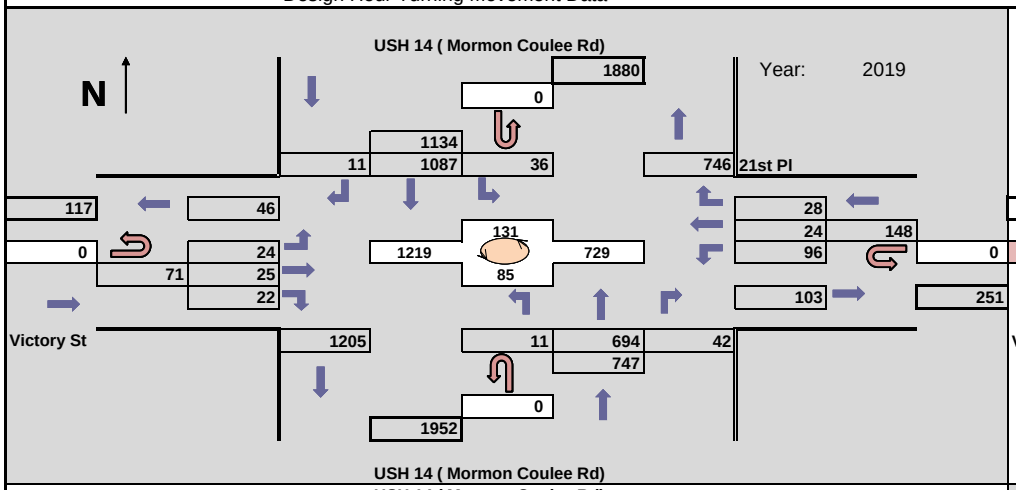

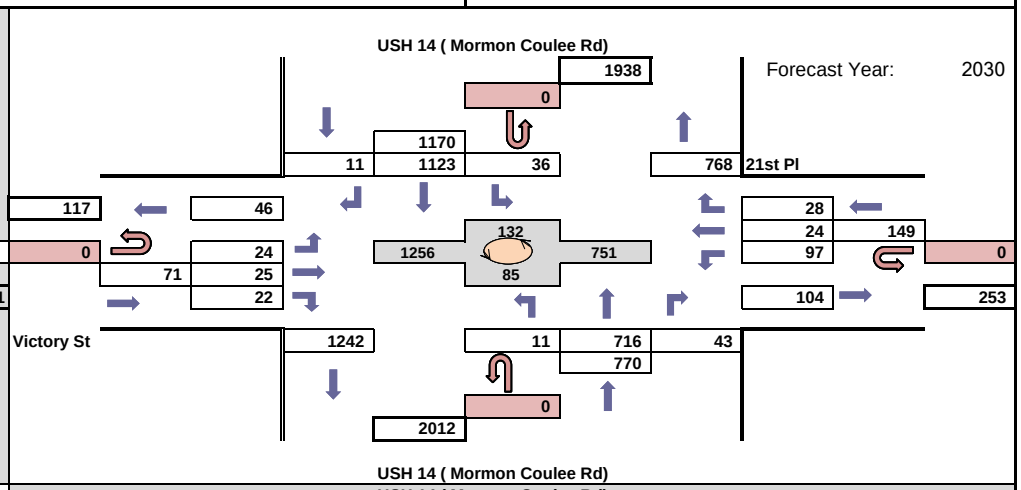

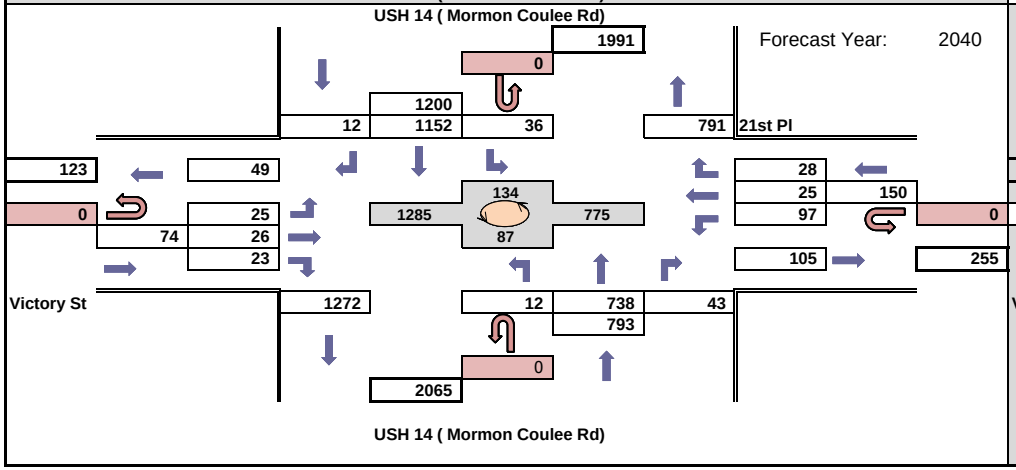

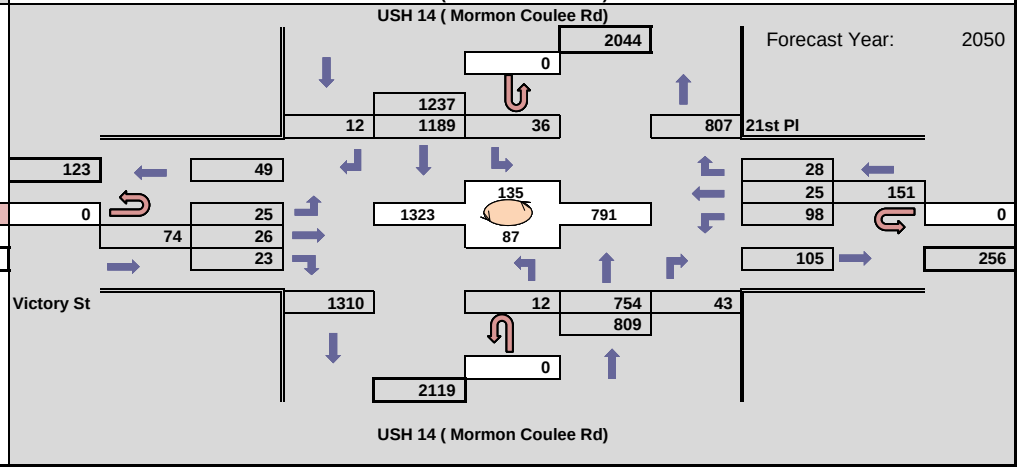

WisDOT Bureau of Planning & Economic Development
Traffic Forecasting Section
Forecast by: Miao Zhang
Phone: (608) 266 - 7995
Email: miao.zhang@dot.wi.gov

Projected AM Design Hour Traffic Volumes

Indicates roundabout

Design Hour: 7:00-8:00am

Forecast Completed: 2/23/2021

Project Description

Project ID(s): 1630-08-00
Route(s): US 14
Region/COUNTY(IES): SW/La Crosse
Location: US 14 (Mormon Coulee Rd) & Losey Blvd

Design Hour Turning Movement Data

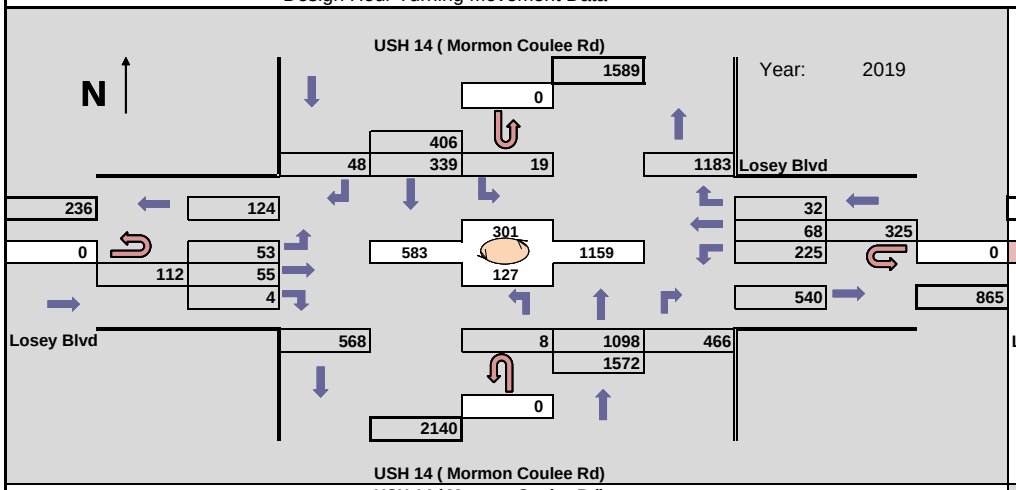

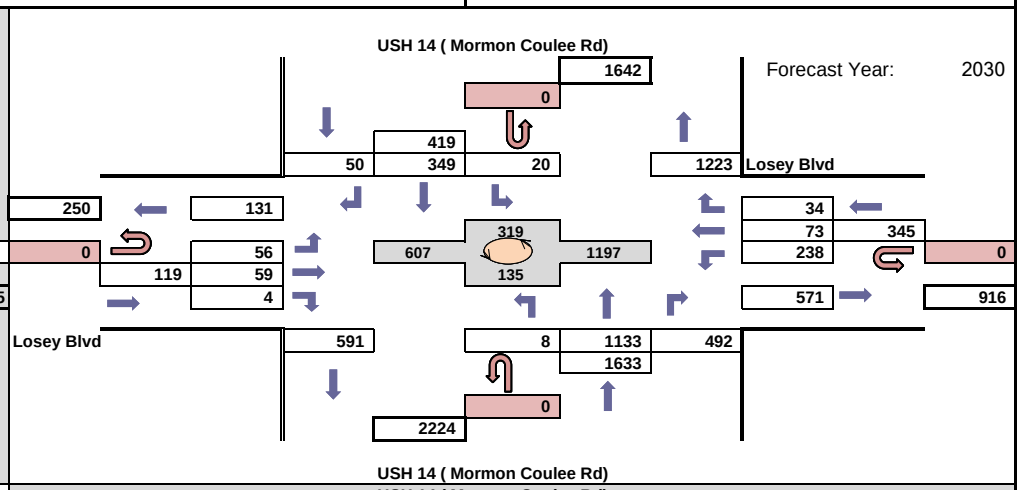

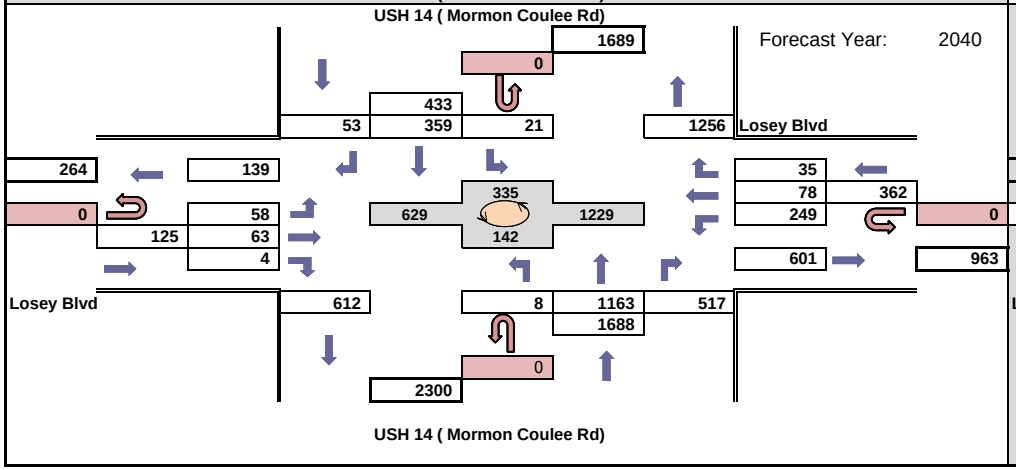

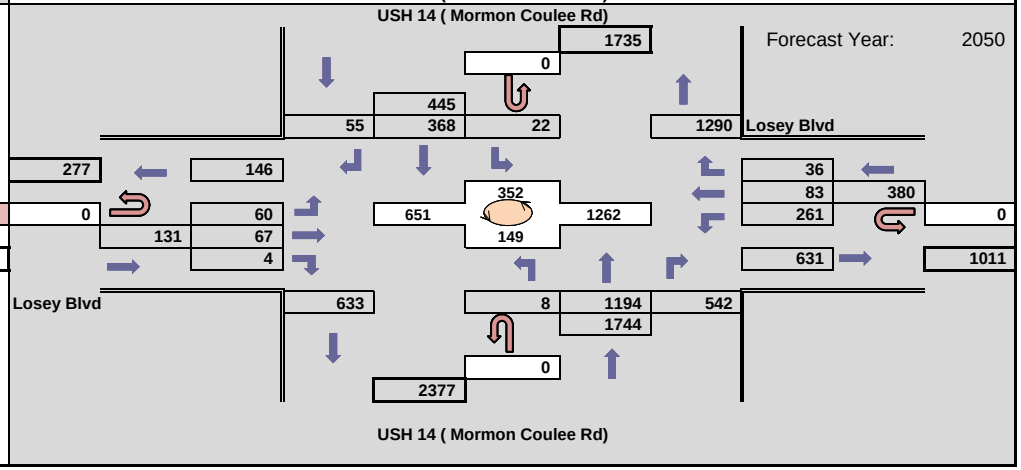

WisDOT Bureau of Planning & Economic Development
Traffic Forecasting Section
Forecast by: Miao Zhang
Phone: (608) 266 - 7995
Email: miao.zhang@dot.wi.gov

Projected PM Design Hour Traffic Volumes

Indicates roundabout

Design Hour: 4:00-5:00pm

Forecast Completed: 2/23/2021

Project Description

Project ID(s): 1630-08-00
Route(s): US 14
Region/COUNTY(IES): SW/La Crosse
Location: US 14 (Mormon Coulee Rd) & Losey Blvd

Design Hour Turning Movement Data

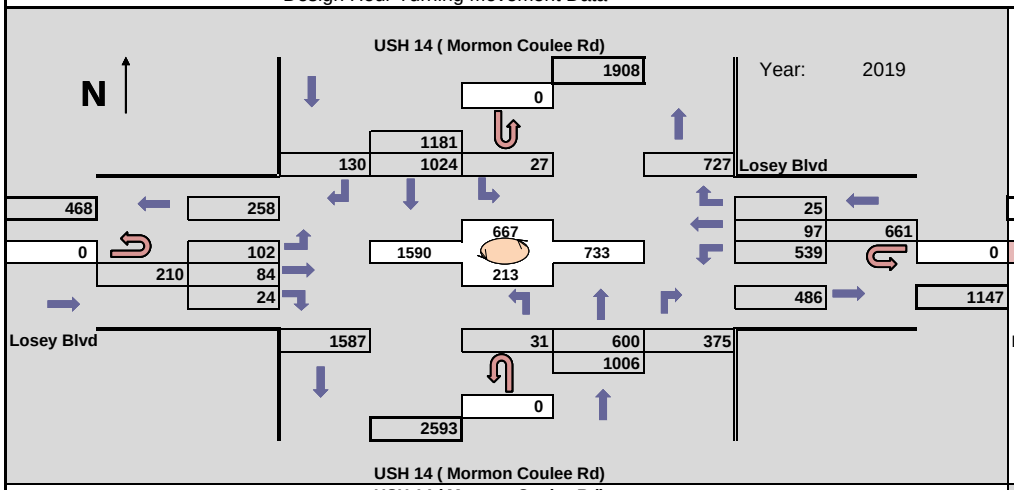

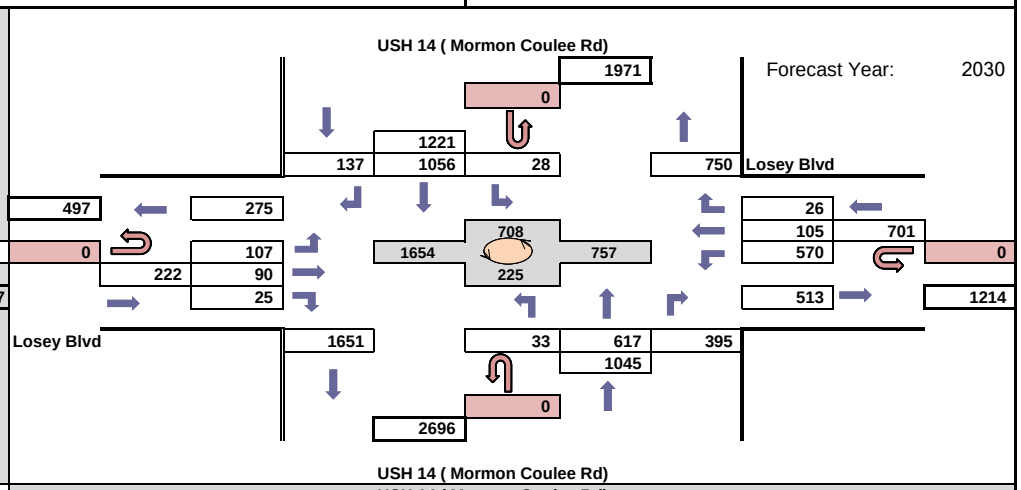

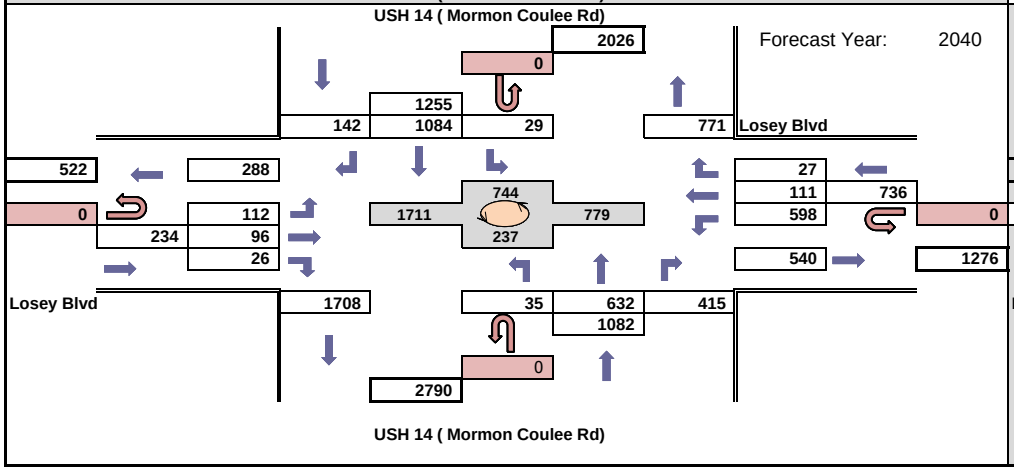

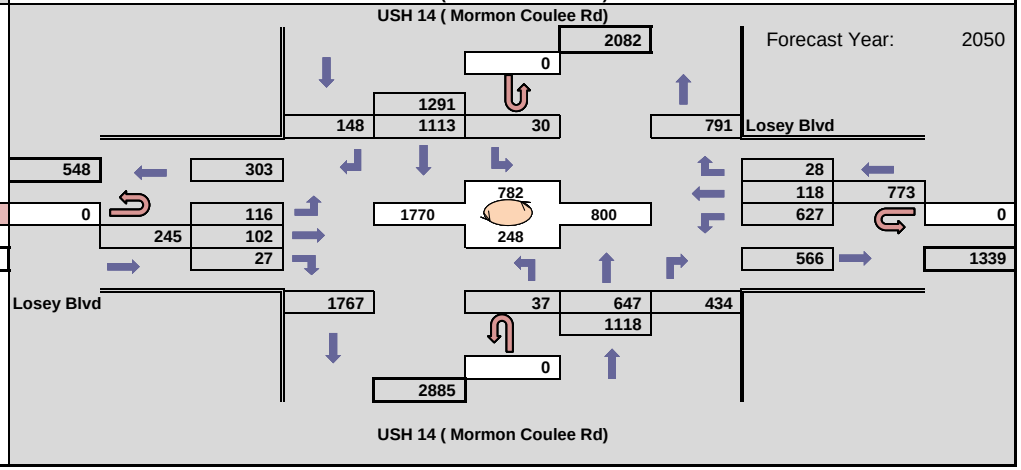

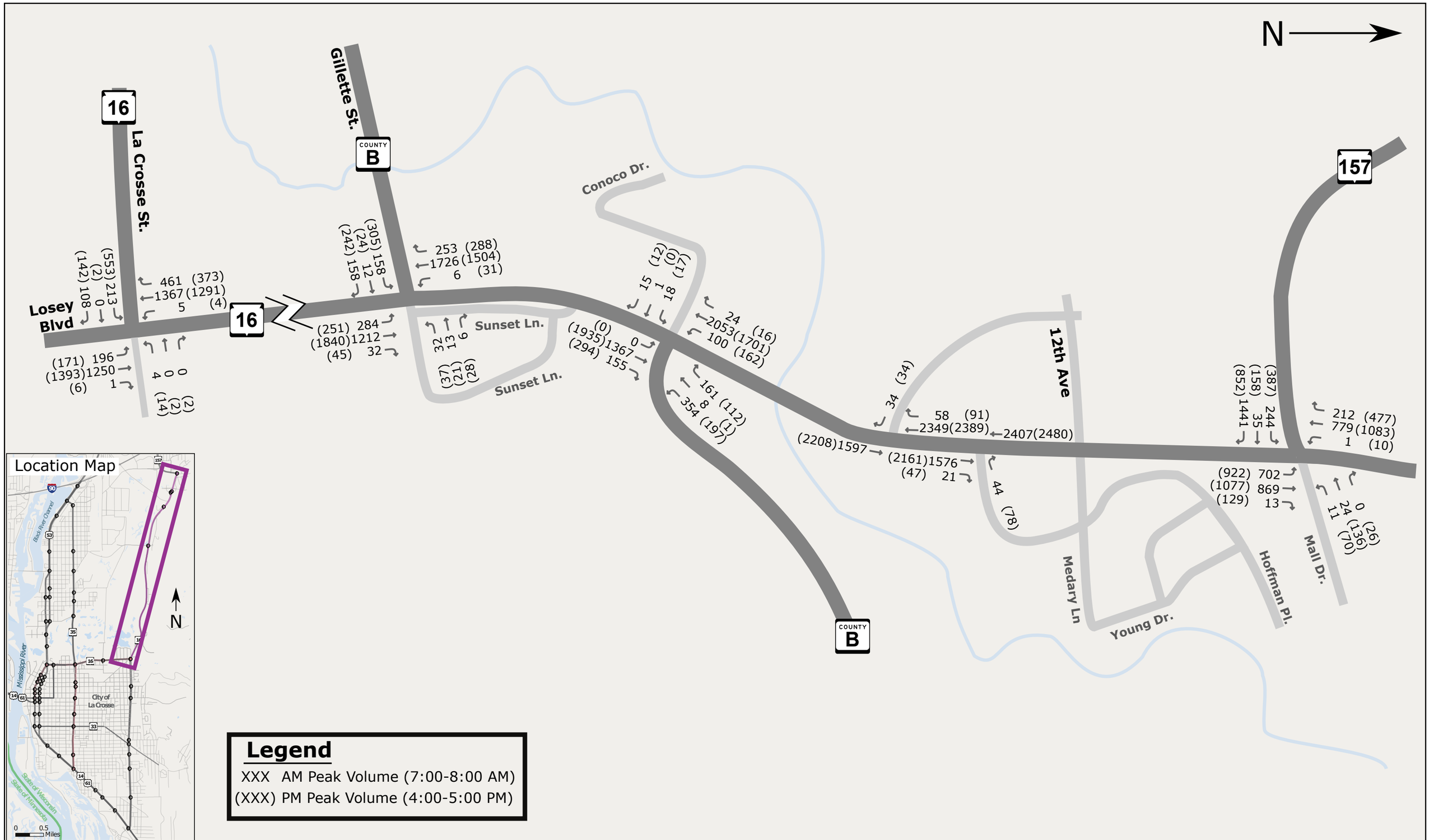

Legend

XXX AM Peak Volume (7:00-8:00 AM)

(XXX) PM Peak Volume (4:00-5:00 PM)

Design Year Turning Movement Traffic Volumes
WIS 16 Segment
La Crosse Safety and Operations Study

December 2021

WisDOT ID: 1630-08-00

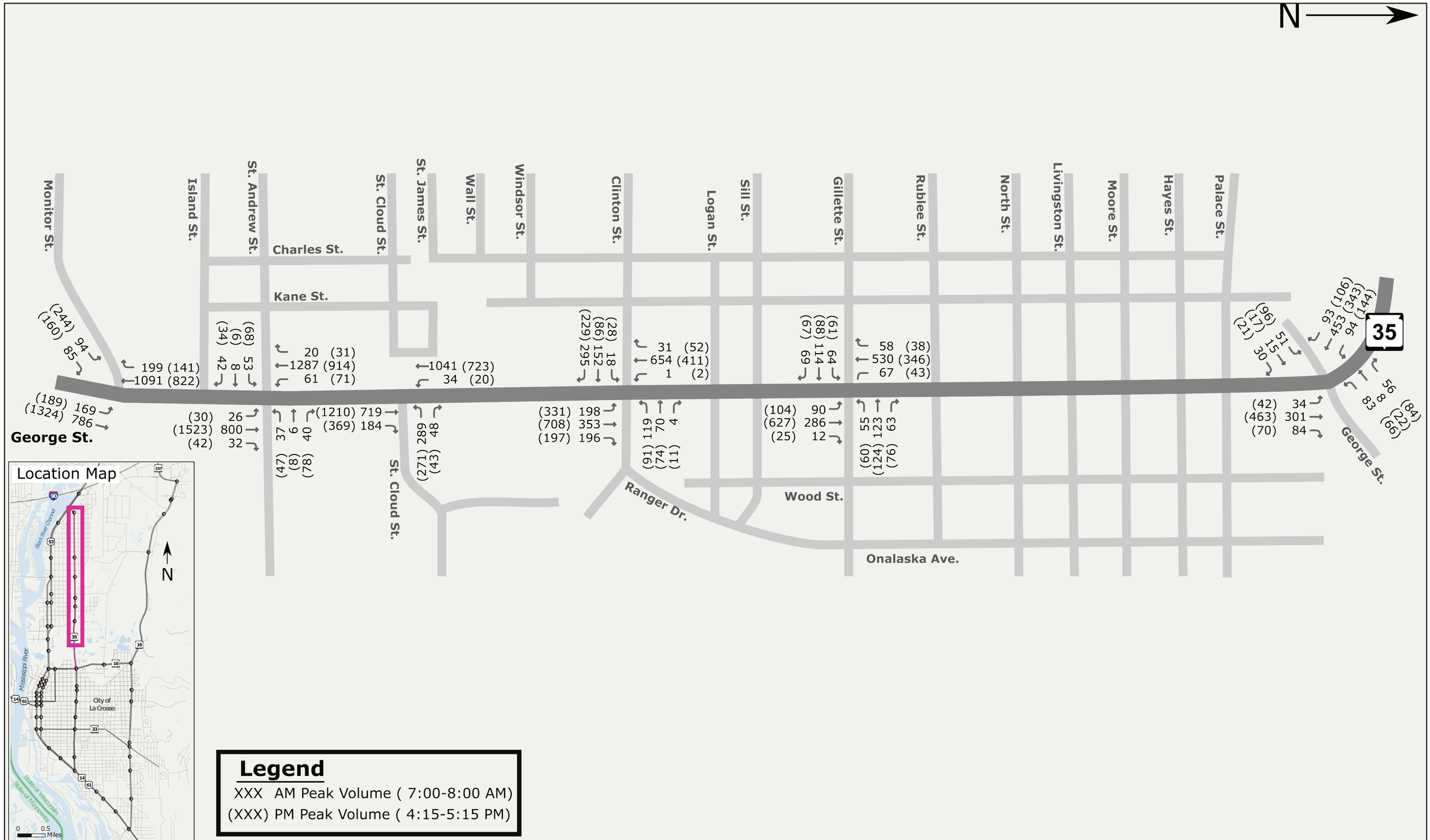

Legend

XXX AM Peak Volume (7:00-8:00 AM)

(XXX) PM Peak Volume (4:15-5:15 PM)

Design Year Turning Movement Traffic Volumes
WIS 35 (George Street / Lang Drive) Segment
La Crosse Safety and Operations Study

March 2021
WisDOT ID: 1630-08-00

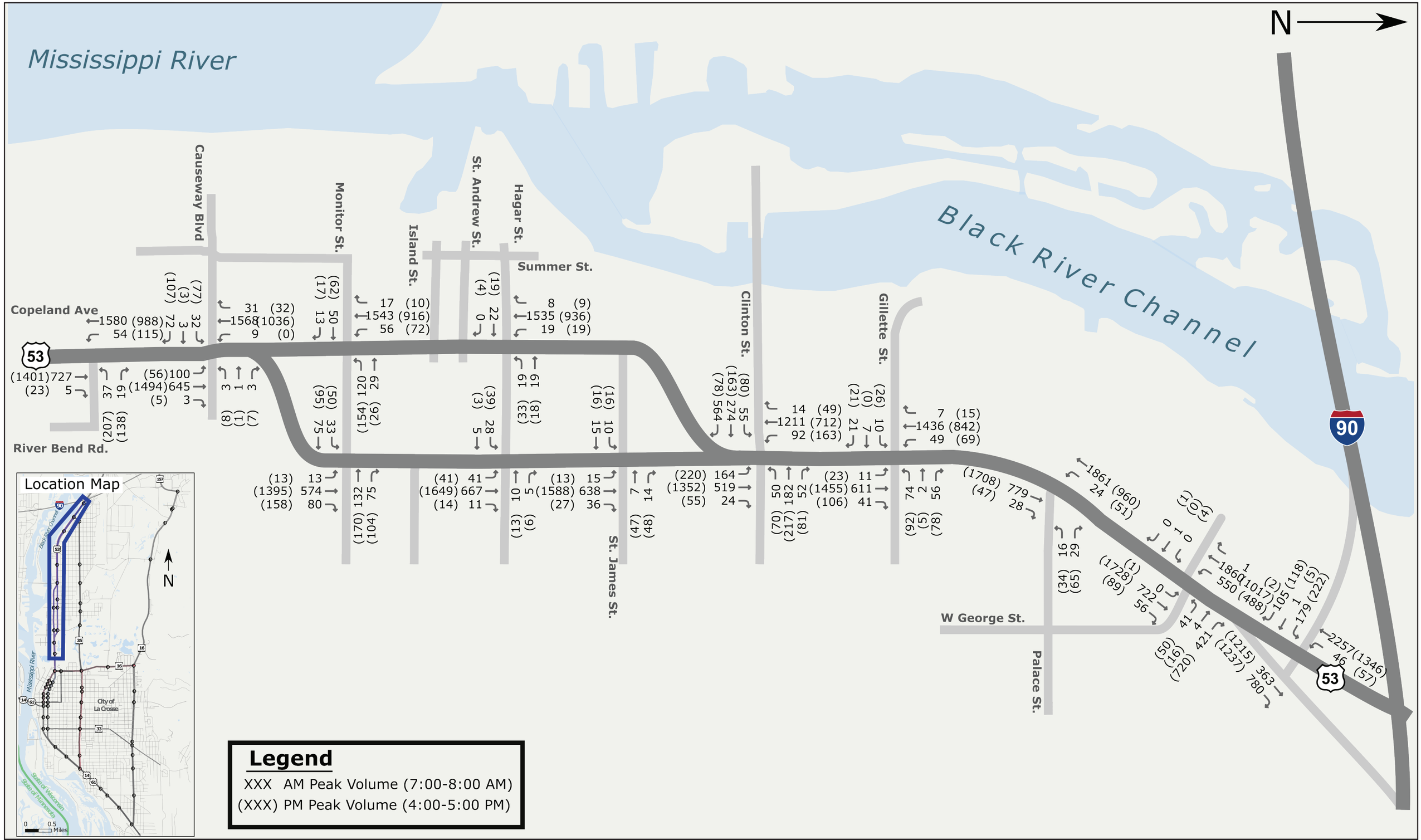

Legend

XXX AM Peak Volume (7:00-8:00 AM)

(XXX) PM Peak Volume (4:00-5:00 PM)

Design Year Turning Movement Traffic Volumes
US 53 (Rose Street / Copeland Avenue) Segment
La Crosse Safety and Operations Study

March 2021

WisDOT ID: 1630-08-00

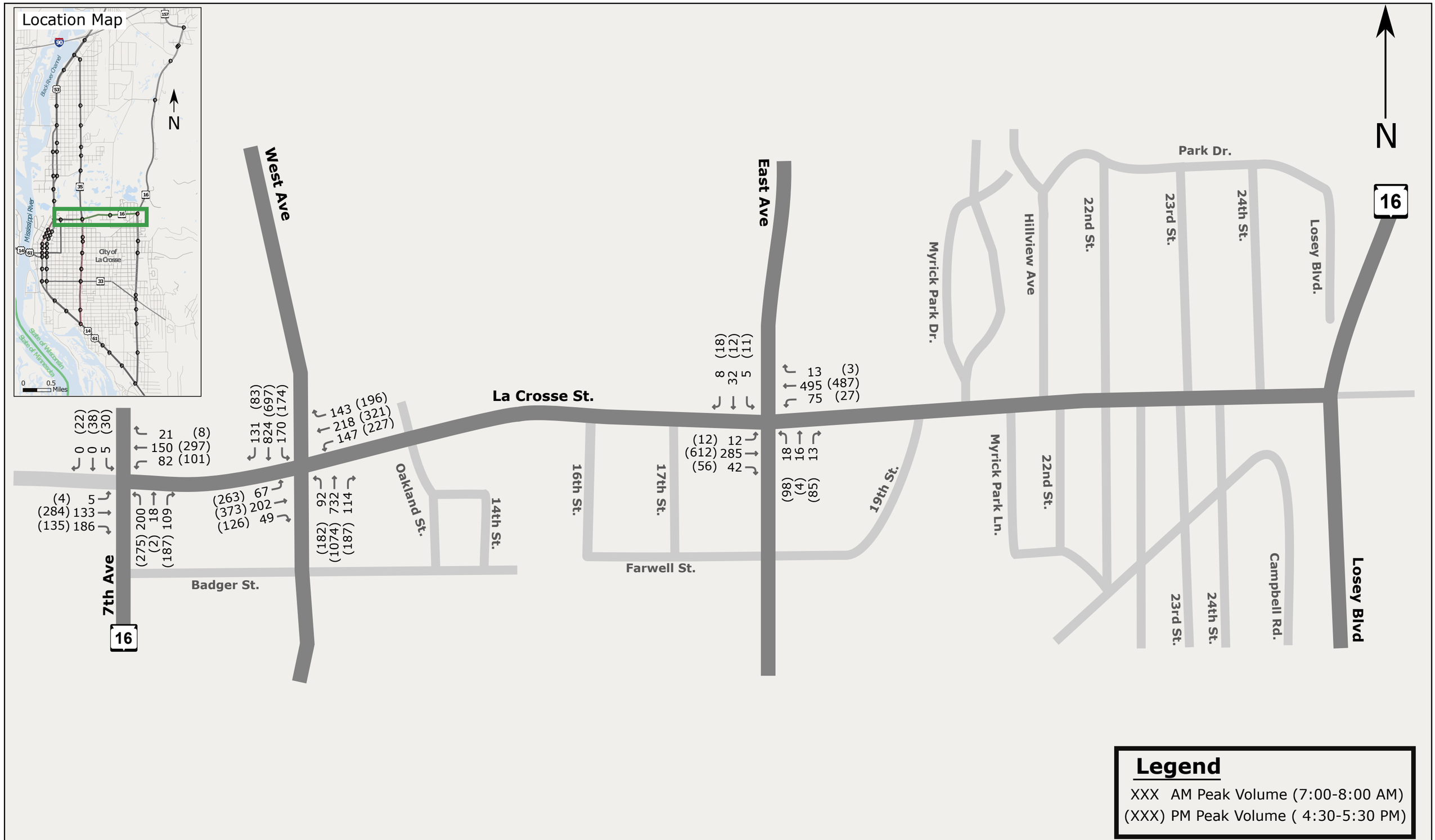

Design Year Turning Movement Traffic Volumes
WIS 16 (La Crosse Street) Segment
La Crosse Safety and Operations Study

December 2021
WisDOT ID: 1630-08-00

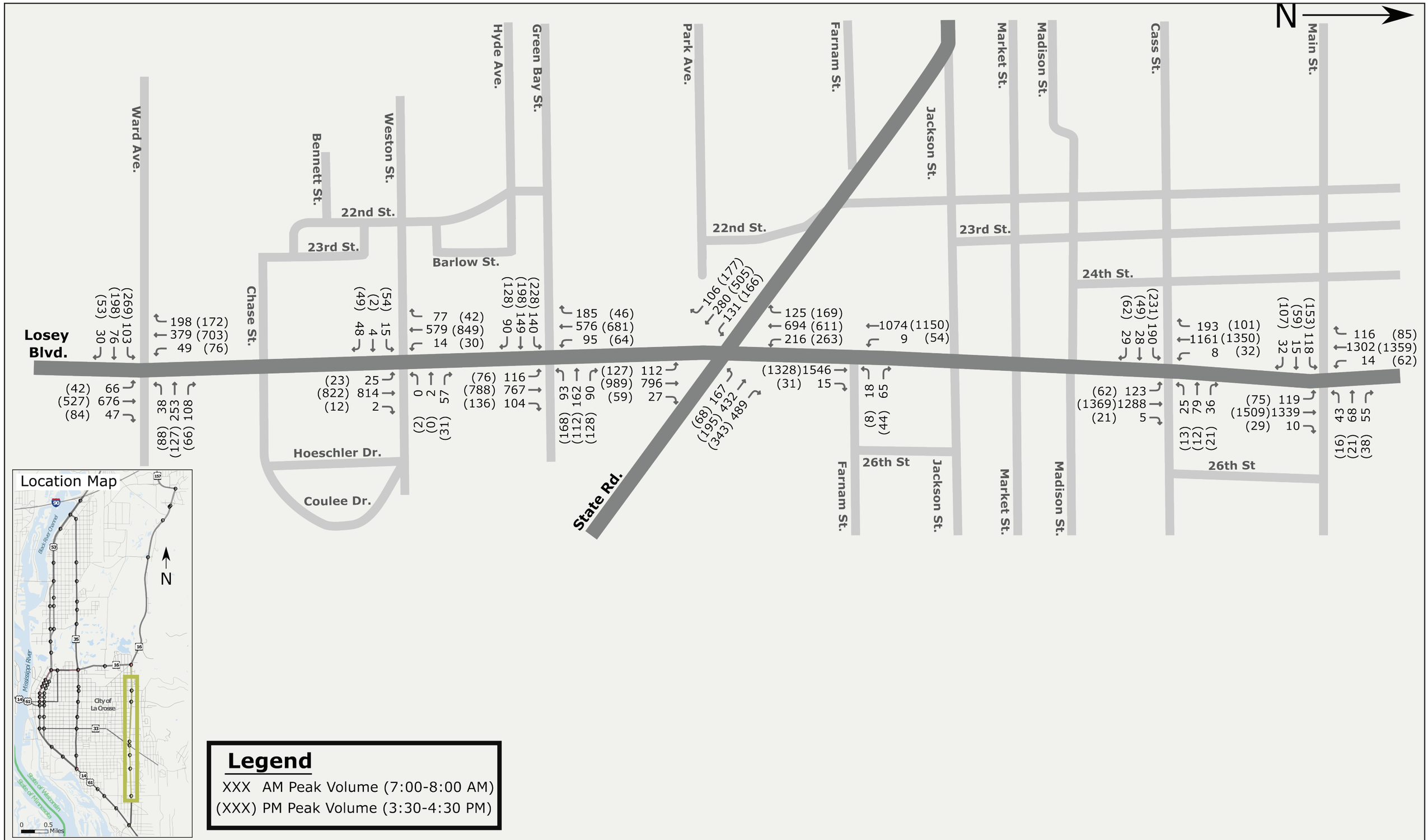

Design Year Turning Movement Traffic Volumes
Losey Boulevard Segment
La Crosse Safety and Operations Study

March 2021
WisDOT ID: 1630-08-00

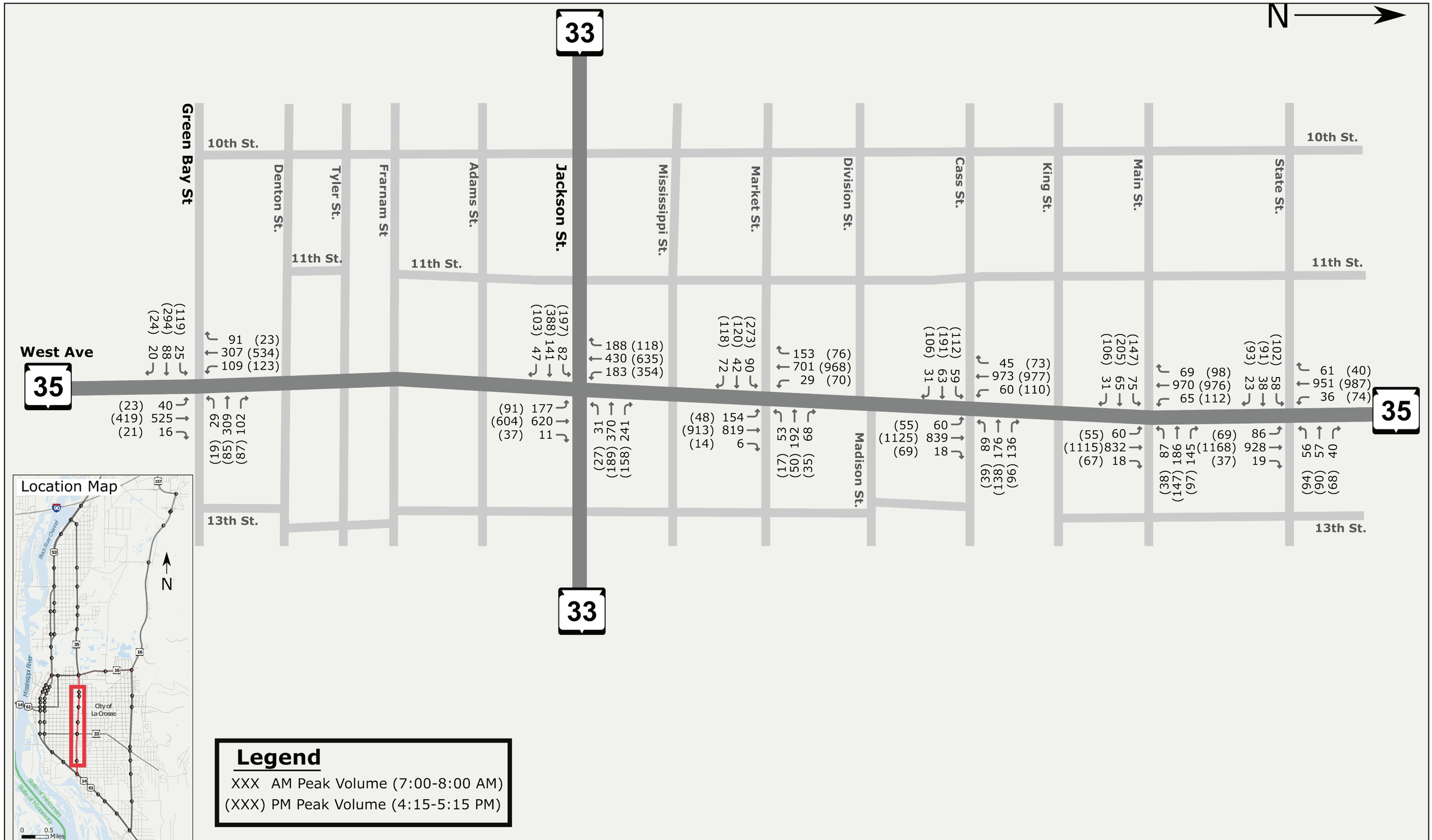

Design Year Turning Movement Traffic Volumes
WIS 35 (West Avenue) Segment
La Crosse Safety and Operations Study

March 2021
WisDOT ID: 1630-08-00

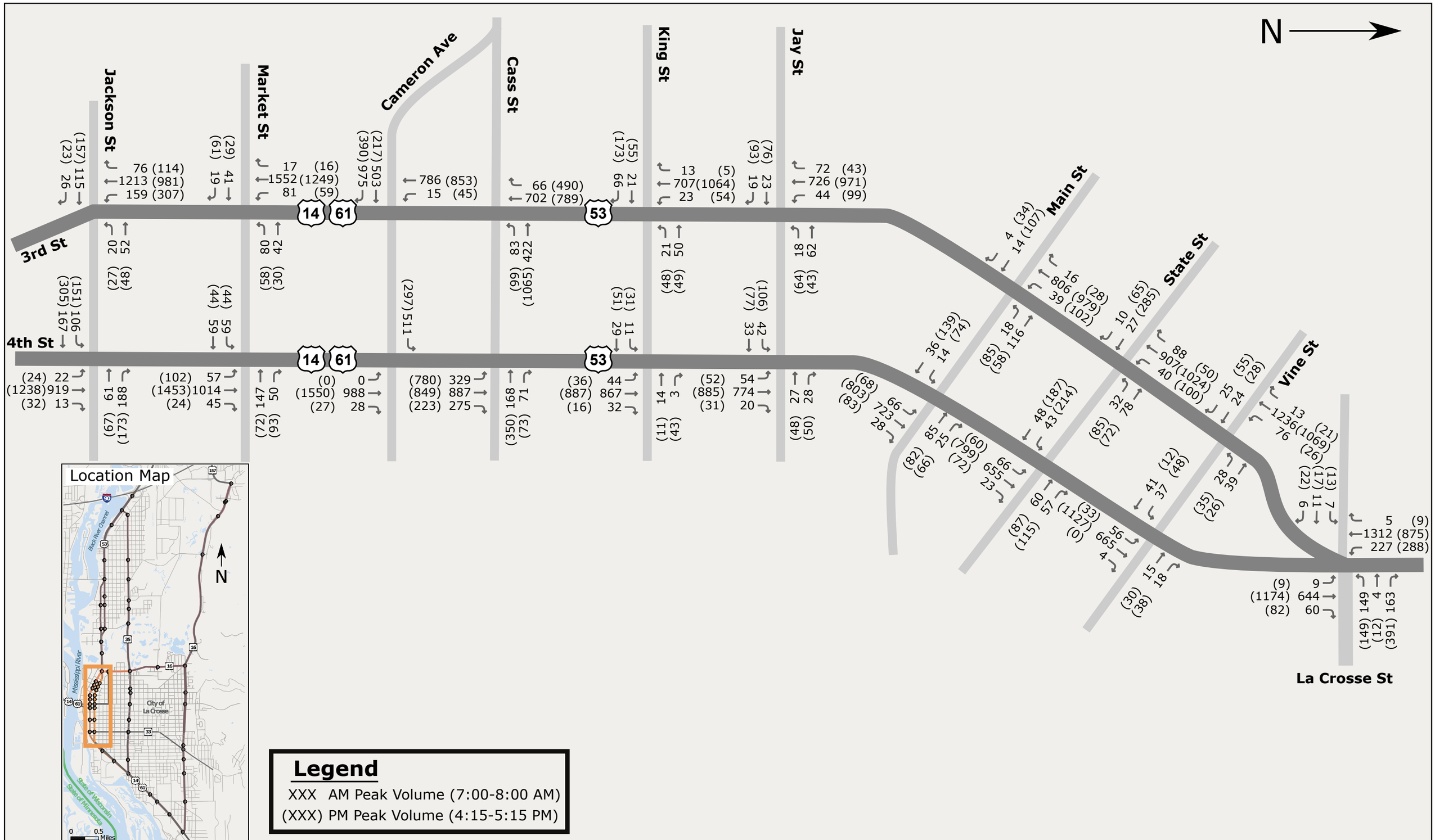

Design Year Turning Movement Traffic Volumes
Downtown Segment
La Crosse Safety and Operations Study

December 2021
WisDOT ID: 1630-08-00

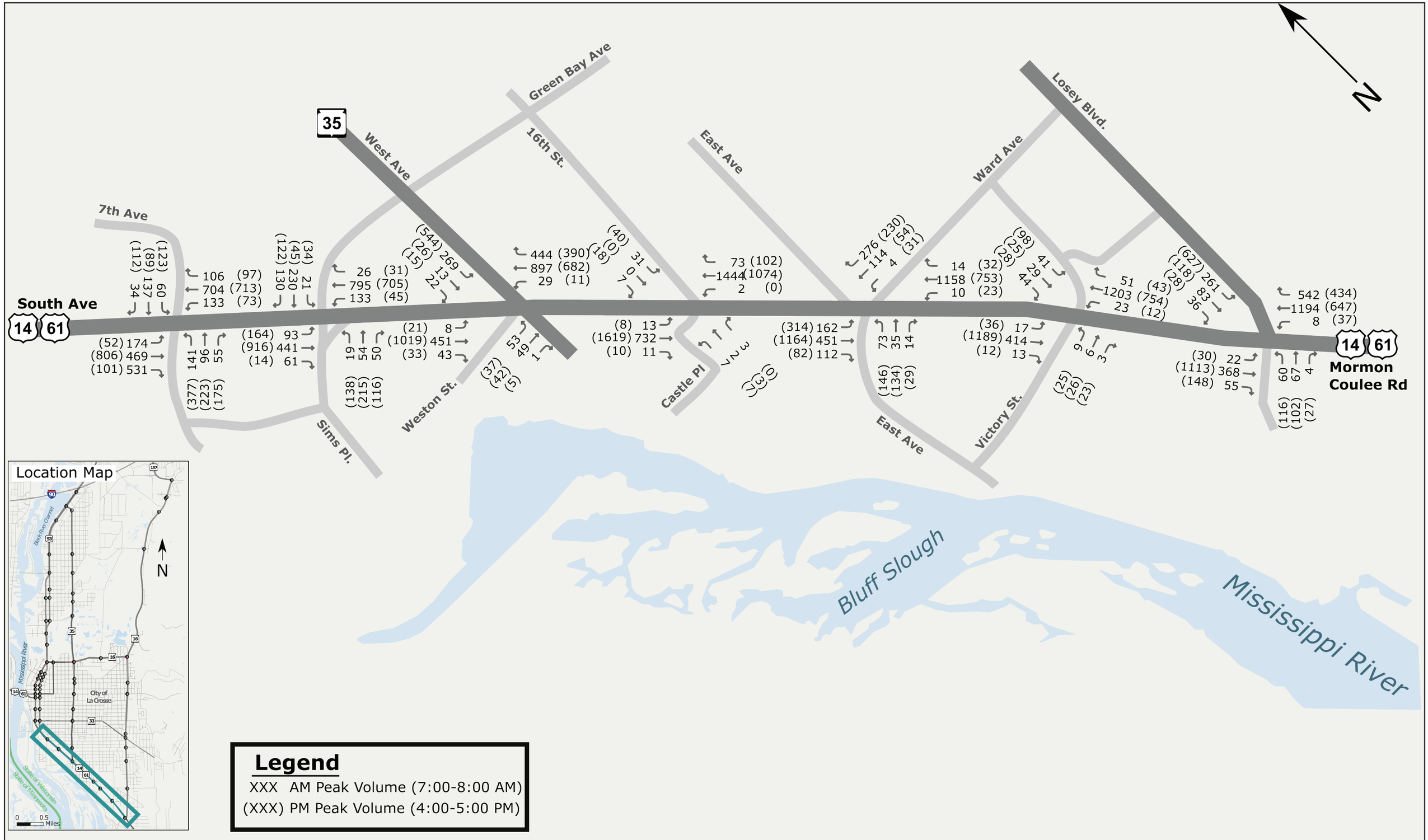

Design Year Turning Movement Traffic Volumes
US 14/61 (South Avenue / Mormon Coulee Road) Segment
La Crosse Safety and Operations Study

March 2021
WisDOT ID: 1630-08-00

HCM 6th Signalized Intersection Summary
1: STH 16 & STH 157/Mall Driveway

12/14/2021

Movement	EBL	EBT	EBR	WBL	WBT	WBR	NBL	NBT	NBR	SBL	SBT	SBR
Lane Configurations												
Traffic Volume (veh/h)	244	35	1441	11	24	0	702	869	13	1	779	212
Future Volume (veh/h)	244	35	1441	11	24	0	702	869	13	1	779	212
Initial Q (Qb), veh	0	0	0	0	0	0	0	0	0	0	0	0
Ped-Bike Adj(A_pbT)	1.00		1.00	1.00		1.00	1.00		1.00	1.00		1.00
Parking Bus, Adj	1.00	1.00	1.00	1.00	1.00	1.00	1.00	1.00	1.00	1.00	1.00	1.00
Work Zone On Approach		No			No			No			No	
Adj Sat Flow, veh/h/ln	1723	1792	1723	1723	1772	1723	1723	1880	1723	1792	1870	1723
Adj Flow Rate, veh/h	260	37	0	12	26	0	747	924	9	1	829	140
Peak Hour Factor	0.94	0.94	0.94	0.94	0.94	0.94	0.94	0.94	0.94	0.94	0.94	0.94
Percent Heavy Veh, %	2	2	2	2	2	2	2	2	2	2	2	2
Cap, veh/h	503	219		220	169	0	856	2094	856	122	1367	689
Arrive On Green	0.09	0.12	0.00	0.01	0.05	0.00	0.27	0.59	0.59	0.07	0.38	0.38
Sat Flow, veh/h	3183	1792	1460	1641	3455	0	3183	3572	1460	1706	3554	1460
Grp Volume(v), veh/h	260	37	0	12	26	0	747	924	9	1	829	140
Grp Sat Flow(s),veh/h/ln	1591	1792	1460	1641	1683	0	1591	1786	1460	1706	1777	1460
Q Serve(g_s), s	10.0	2.4	0.0	0.8	1.0	0.0	29.1	18.8	0.2	0.1	24.3	7.3
Cycle Q Clear(g_c), s	10.0	2.4	0.0	0.8	1.0	0.0	29.1	18.8	0.2	0.1	24.3	7.3
Prop In Lane	1.00		1.00	1.00		0.00	1.00		1.00	1.00		1.00
Lane Grp Cap(c), veh/h	503	219		220	169	0	856	2094	856	122	1367	689
V/C Ratio(X)	0.52	0.17		0.05	0.15	0.00	0.87	0.44	0.01	0.01	0.61	0.20
Avail Cap(c_a), veh/h	503	219		325	207	0	972	2094	856	122	1367	689
HCM Platoon Ratio	1.00	1.00	1.00	1.00	1.00	1.00	1.00	1.00	1.00	1.00	1.00	1.00
Upstream Filter(I)	1.00	1.00	0.00	1.00	1.00	0.00	1.00	1.00	1.00	1.00	1.00	1.00
Uniform Delay (d), s/veh	52.7	51.2	0.0	48.9	59.1	0.0	45.4	15.0	6.0	56.1	32.1	20.1
Incr Delay (d2), s/veh	0.4	0.1	0.0	0.0	0.2	0.0	7.4	0.7	0.0	0.0	2.0	0.7
Initial Q Delay(d3),s/veh	0.0	0.0	0.0	0.0	0.0	0.0	0.0	0.0	0.0	0.0	0.0	0.0
%ile BackOfQ(90%),veh/ln	6.5	2.0	0.0	0.6	0.7	0.0	16.5	10.8	0.2	0.1	14.6	4.7
Unsig. Movement Delay, s/veh												
LnGrp Delay(d),s/veh	53.1	51.3	0.0	49.0	59.2	0.0	52.8	15.7	6.0	56.1	34.1	20.7
LnGrp LOS	D	D		D	E	A	D	B	A	E	C	C
Approach Vol, veh/h		297	A		38			1680			970	
Approach Delay, s/veh		52.9			56.0			32.1			32.2	
Approach LOS		D			E			C			C	

Timer - Assigned Phs	1	2	3	4	5	6	7	8
Phs Duration (G+Y+Rc), s	41.2	56.2	18.0	14.5	15.5	82.0	8.7	23.9
Change Period (Y+Rc), s	6.3	* 6.2	* 6.7	8.0	6.2	* 5.8	6.9	8.0
Max Green Setting (Gmax), s	39.7	* 44	* 11	8.0	7.8	* 76	10.1	9.0
Max Q Clear Time (g_c+I1), s	31.1	26.3	12.0	3.0	2.1	20.8	2.8	4.4
Green Ext Time (p_c), s	3.8	11.2	0.0	0.0	0.0	22.6	0.0	0.0

Intersection Summary	
HCM 6th Ctrl Delay	34.5
HCM 6th LOS	C

Notes

* HCM 6th computational engine requires equal clearance times for the phases crossing the barrier.

Unsignalized Delay for [EBR] is excluded from calculations of the approach delay and intersection delay.

HCM 6th Signalized Intersection Summary
1: STH 16 & STH 157/Mall Driveway

12/14/2021

Movement	EBL	EBT	EBR	WBL	WBT	WBR	NBL	NBT	NBR	SBL	SBT	SBR
Lane Configurations												
Traffic Volume (veh/h)	387	158	852	70	136	26	922	1077	129	10	1083	477
Future Volume (veh/h)	387	158	852	70	136	26	922	1077	129	10	1083	477
Initial Q (Qb), veh	0	0	0	0	0	0	0	0	0	0	0	0
Ped-Bike Adj(A_pbT)	1.00		1.00	1.00		1.00	1.00		1.00	1.00		1.00
Parking Bus, Adj	1.00	1.00	1.00	1.00	1.00	1.00	1.00	1.00	1.00	1.00	1.00	1.00
Work Zone On Approach		No			No			No			No	
Adj Sat Flow, veh/h/ln	1723	1792	1723	1723	1772	1723	1723	1880	1723	1792	1870	1723
Adj Flow Rate, veh/h	395	161	0	71	139	27	941	1099	82	10	1105	302
Peak Hour Factor	0.98	0.98	0.98	0.98	0.98	0.98	0.98	0.98	0.98	0.98	0.98	0.98
Percent Heavy Veh, %	2	2	2	2	2	2	2	2	2	2	2	2
Cap, veh/h	570	274		212	180	34	953	2159	882	19	1122	662
Arrive On Green	0.14	0.15	0.00	0.05	0.06	0.06	0.30	0.60	0.60	0.01	0.32	0.32
Sat Flow, veh/h	3183	1792	1460	1641	2823	536	3183	3572	1460	1706	3554	1460
Grp Volume(v), veh/h	395	161	0	71	82	84	941	1099	82	10	1105	302
Grp Sat Flow(s),veh/h/ln	1591	1792	1460	1641	1683	1675	1591	1786	1460	1706	1777	1460
Q Serve(g_s), s	16.5	12.2	0.0	5.3	7.0	7.3	42.9	25.7	3.4	0.9	45.1	20.8
Cycle Q Clear(g_c), s	16.5	12.2	0.0	5.3	7.0	7.3	42.9	25.7	3.4	0.9	45.1	20.8
Prop In Lane	1.00		1.00	1.00		0.32	1.00		1.00	1.00		1.00
Lane Grp Cap(c), veh/h	570	274		212	107	107	953	2159	882	19	1122	662
V/C Ratio(X)	0.69	0.59		0.34	0.76	0.79	0.99	0.51	0.09	0.51	0.99	0.46
Avail Cap(c_a), veh/h	661	274		337	127	126	953	2159	882	79	1122	662
HCM Platoon Ratio	1.00	1.00	1.00	1.00	1.00	1.00	1.00	1.00	1.00	1.00	1.00	1.00
Upstream Filter(I)	1.00	1.00	0.00	1.00	1.00	1.00	1.00	1.00	1.00	1.00	1.00	1.00
Uniform Delay (d), s/veh	53.4	57.6	0.0	49.4	67.3	67.4	50.9	16.5	12.1	71.8	49.6	27.5
Incr Delay (d2), s/veh	1.8	2.3	0.0	0.3	16.1	20.5	26.0	0.9	0.2	7.5	23.5	2.3
Initial Q Delay(d3),s/veh	0.0	0.0	0.0	0.0	0.0	0.0	0.0	0.0	0.0	0.0	0.0	0.0
%ile BackOfQ(90%),veh/ln	10.1	8.8	0.0	3.9	5.9	6.2	25.8	14.2	2.1	0.7	29.2	11.2
Unsig. Movement Delay, s/veh												
LnGrp Delay(d),s/veh	55.2	59.8	0.0	49.7	83.4	87.9	76.9	17.4	12.3	79.3	73.1	29.7
LnGrp LOS	E	E		D	F	F	E	B	B	E	E	C
Approach Vol, veh/h		556	A		237			2122			1417	
Approach Delay, s/veh		56.5			74.9			43.6			63.9	
Approach LOS		E			E			D			E	

Timer - Assigned Phs	1	2	3	4	5	6	7	8
Phs Duration (G+Y+Rc), s	50.0	51.9	26.8	17.3	7.9	94.0	13.8	30.3
Change Period (Y+Rc), s	6.3	5.8	* 6.7	8.0	* 6.2	5.8	6.9	8.0
Max Green Setting (Gmax), s	43.7	40.2	* 24	11.0	* 6.8	77.2	18.1	17.0
Max Q Clear Time (g_c+I1), s	44.9	47.1	18.5	9.3	2.9	27.7	7.3	14.2
Green Ext Time (p_c), s	0.0	0.0	1.6	0.0	0.0	26.0	0.0	0.3

Intersection Summary	
HCM 6th Ctrl Delay	53.6
HCM 6th LOS	D

Notes

* HCM 6th computational engine requires equal clearance times for the phases crossing the barrier.

Unsignalized Delay for [EBR] is excluded from calculations of the approach delay and intersection delay.

Movement	EBL	EBT	EBR	WBL	WBT	WBR	NEL	NET	NER	SWL	SWT	SWR
Lane Configurations												
Traffic Volume (veh/h)	179	1	36	0	0	0	0	363	0	46	2257	0
Future Volume (veh/h)	179	1	36	0	0	0	0	363	0	46	2257	0
Initial Q (Qb), veh	0	0	0				0	0	0	0	0	0
Ped-Bike Adj(A_pbT)	1.00		1.00				1.00		1.00	1.00		1.00
Parking Bus, Adj	1.00	1.00	1.00				1.00	1.00	1.00	1.00	1.00	1.00
Work Zone On Approach		No						No			No	
Adj Sat Flow, veh/h/ln	1723	1811	1723				0	1772	0	1723	1831	0
Adj Flow Rate, veh/h	203	1	41				0	412	0	52	2565	0
Peak Hour Factor	0.88	0.88	0.88				0.88	0.88	0.88	0.88	0.88	0.88
Percent Heavy Veh, %	2	2	2				0	2	0	2	2	0
Cap, veh/h	261	1	222				0	2097	0	690	3584	0
Arrive On Green	0.15	0.15	0.15				0.00	0.62	0.00	0.04	0.72	0.00
Sat Flow, veh/h	1717	8	1460				0	3544	0	1641	5163	0
Grp Volume(v), veh/h	204	0	41				0	412	0	52	2565	0
Grp Sat Flow(s),veh/h/ln	1725	0	1460				0	1683	0	1641	1666	0
Q Serve(g_s), s	11.4	0.0	2.5				0.0	5.3	0.0	1.1	29.8	0.0
Cycle Q Clear(g_c), s	11.4	0.0	2.5				0.0	5.3	0.0	1.1	29.8	0.0
Prop In Lane	1.00		1.00				0.00		0.00	1.00		0.00
Lane Grp Cap(c), veh/h	262	0	222				0	2097	0	690	3584	0
V/C Ratio(X)	0.78	0.00	0.18				0.00	0.20	0.00	0.08	0.72	0.00
Avail Cap(c_a), veh/h	464	0	393				0	2097	0	732	3584	0
HCM Platoon Ratio	1.00	1.00	1.00				1.00	1.00	1.00	1.00	1.00	1.00
Upstream Filter(I)	1.00	0.00	1.00				0.00	1.00	0.00	1.00	1.00	0.00
Uniform Delay (d), s/veh	40.8	0.0	37.0				0.0	8.1	0.0	6.1	8.2	0.0
Incr Delay (d2), s/veh	1.9	0.0	0.1				0.0	0.2	0.0	0.0	1.3	0.0
Initial Q Delay(d3),s/veh	0.0	0.0	0.0				0.0	0.0	0.0	0.0	0.0	0.0
%ile BackOfQ(90%),veh/ln	7.6	0.0	3.8				0.0	3.1	0.0	0.6	12.1	0.0
Unsig. Movement Delay, s/veh												
LnGrp Delay(d),s/veh	42.7	0.0	37.1				0.0	8.3	0.0	6.1	9.5	0.0
LnGrp LOS	D	A	D				A	A	A	A	A	A
Approach Vol, veh/h		245						412			2617	
Approach Delay, s/veh		41.7						8.3			9.4	
Approach LOS		D						A			A	

Timer - Assigned Phs		2		4	5	6
Phs Duration (G+Y+Rc), s		77.7		22.3	9.4	68.3
Change Period (Y+Rc), s		6.0		7.1	5.6	6.0
Max Green Setting (Gmax), s		60.0		26.9	6.4	48.0
Max Q Clear Time (g_c+I1), s		31.8		13.4	3.1	7.3
Green Ext Time (p_c), s		28.1		1.8	0.0	10.6

Intersection Summary		
HCM 6th Ctrl Delay		11.7
HCM 6th LOS		B

Notes

User approved pedestrian interval to be less than phase max green.

Movement	EBL	EBT	EBR	WBL	WBT	WBR	NEL	NET	NER	SWL	SWT	SWR
Lane Configurations												
Traffic Volume (veh/h)	222	5	41	0	0	0	0	1215	0	57	1346	0
Future Volume (veh/h)	222	5	41	0	0	0	0	1215	0	57	1346	0
Initial Q (Qb), veh	0	0	0				0	0	0	0	0	0
Ped-Bike Adj(A_pbT)	1.00		1.00				1.00		1.00	1.00		1.00
Parking Bus, Adj	1.00	1.00	1.00				1.00	1.00	1.00	1.00	1.00	1.00
Work Zone On Approach		No						No			No	
Adj Sat Flow, veh/h/ln	1723	1811	1723				0	1772	0	1723	1831	0
Adj Flow Rate, veh/h	267	6	49				0	1464	0	69	1622	0
Peak Hour Factor	0.83	0.83	0.83				0.83	0.83	0.83	0.83	0.83	0.83
Percent Heavy Veh, %	2	2	2				0	2	0	2	2	0
Cap, veh/h	328	7	284				0	1877	0	231	3316	0
Arrive On Green	0.19	0.19	0.19				0.00	0.56	0.00	0.05	0.66	0.00
Sat Flow, veh/h	1689	38	1460				0	3544	0	1641	5163	0
Grp Volume(v), veh/h	273	0	49				0	1464	0	69	1622	0
Grp Sat Flow(s),veh/h/ln	1727	0	1460				0	1683	0	1641	1666	0
Q Serve(g_s), s	13.9	0.0	2.6				0.0	31.3	0.0	1.6	14.9	0.0
Cycle Q Clear(g_c), s	13.9	0.0	2.6				0.0	31.3	0.0	1.6	14.9	0.0
Prop In Lane	0.98		1.00				0.00		0.00	1.00		0.00
Lane Grp Cap(c), veh/h	335	0	284				0	1877	0	231	3316	0
V/C Ratio(X)	0.81	0.00	0.17				0.00	0.78	0.00	0.30	0.49	0.00
Avail Cap(c_a), veh/h	467	0	395				0	1877	0	307	3316	0
HCM Platoon Ratio	1.00	1.00	1.00				1.00	1.00	1.00	1.00	1.00	1.00
Upstream Filter(I)	1.00	0.00	1.00				0.00	1.00	0.00	1.00	1.00	0.00
Uniform Delay (d), s/veh	35.5	0.0	30.9				0.0	15.9	0.0	14.2	7.7	0.0
Incr Delay (d2), s/veh	5.2	0.0	0.1				0.0	3.3	0.0	0.3	0.5	0.0
Initial Q Delay(d3),s/veh	0.0	0.0	0.0				0.0	0.0	0.0	0.0	0.0	0.0
%ile BackOfQ(90%),veh/ln	9.1	0.0	4.1				0.0	15.5	0.0	0.9	7.0	0.0
Unsig. Movement Delay, s/veh												
LnGrp Delay(d),s/veh	40.7	0.0	31.0				0.0	19.2	0.0	14.4	8.2	0.0
LnGrp LOS	D	A	C				A	B	A	B	A	A
Approach Vol, veh/h		322						1464			1691	
Approach Delay, s/veh		39.2						19.2			8.5	
Approach LOS		D						B			A	

Timer - Assigned Phs		2		4	5	6
Phs Duration (G+Y+Rc), s		67.0		25.0	9.7	57.3
Change Period (Y+Rc), s		6.0		7.1	5.6	6.0
Max Green Setting (Gmax), s		54.0		24.9	8.4	40.0
Max Q Clear Time (g_c+I1), s		16.9		15.9	3.6	33.3
Green Ext Time (p_c), s		34.2		2.0	0.0	6.5

Intersection Summary	
HCM 6th Ctrl Delay	15.9
HCM 6th LOS	B

Notes

User approved pedestrian interval to be less than phase max green.

Intersection	
Int Delay, s/veh	0.2

Movement	WBL	WBR	NBT	NBR	SBL	SBT
Lane Configurations		↱	↑↑	↱		↑↑↑
Traffic Vol, veh/h	0	44	1576	21	0	2407
Future Vol, veh/h	0	44	1576	21	0	2407
Conflicting Peds, #/hr	0	0	0	0	0	0
Sign Control	Stop	Stop	Free	Free	Free	Free
RT Channelized	-	Stop	-	Free	-	None
Storage Length	-	0	-	-	-	-
Veh in Median Storage, #	0	-	0	-	-	0
Grade, %	0	-	0	-	-	0
Peak Hour Factor	92	92	92	92	92	92
Heavy Vehicles, %	2	2	2	2	2	2
Mvmt Flow	0	48	1713	23	0	2616

Major/Minor	Minor1		Major1		Major2	
Conflicting Flow All	-	857	0	-	-	-
Stage 1	-	-	-	-	-	-
Stage 2	-	-	-	-	-	-
Critical Hdwy	-	6.94	-	-	-	-
Critical Hdwy Stg 1	-	-	-	-	-	-
Critical Hdwy Stg 2	-	-	-	-	-	-
Follow-up Hdwy	-	3.32	-	-	-	-
Pot Cap-1 Maneuver	0	301	-	0	0	-
Stage 1	0	-	-	0	0	-
Stage 2	0	-	-	0	0	-
Platoon blocked, %			-			-
Mov Cap-1 Maneuver	-	301	-	-	-	-
Mov Cap-2 Maneuver	-	-	-	-	-	-
Stage 1	-	-	-	-	-	-
Stage 2	-	-	-	-	-	-

Approach	WB	NB	SB
HCM Control Delay, s	19.2	0	0
HCM LOS	C		

Minor Lane/Major Mvmt	NBT	WBLn1	SBT
Capacity (veh/h)	-	301	-
HCM Lane V/C Ratio	-	0.159	-
HCM Control Delay (s)	-	19.2	-
HCM Lane LOS	-	C	-
HCM 95th %tile Q(veh)	-	0.6	-

Intersection	
Int Delay, s/veh	0.7

Movement	WBL	WBR	NBT	NBR	SBL	SBT
Lane Configurations		↱	↑↑	↱		↑↑↑
Traffic Vol, veh/h	0	78	2161	47	0	2480
Future Vol, veh/h	0	78	2161	47	0	2480
Conflicting Peds, #/hr	0	0	0	0	0	0
Sign Control	Stop	Stop	Free	Free	Free	Free
RT Channelized	-	Stop	-	Free	-	None
Storage Length	-	0	-	-	-	-
Veh in Median Storage, #	0	-	0	-	-	0
Grade, %	0	-	0	-	-	0
Peak Hour Factor	92	92	92	92	92	92
Heavy Vehicles, %	2	2	2	2	2	2
Mvmt Flow	0	85	2349	51	0	2696

Major/Minor	Minor1		Major1		Major2	
Conflicting Flow All	-	1175	0	-	-	-
Stage 1	-	-	-	-	-	-
Stage 2	-	-	-	-	-	-
Critical Hdwy	-	6.94	-	-	-	-
Critical Hdwy Stg 1	-	-	-	-	-	-
Critical Hdwy Stg 2	-	-	-	-	-	-
Follow-up Hdwy	-	3.32	-	-	-	-
Pot Cap-1 Maneuver	0	184	-	0	0	-
Stage 1	0	-	-	0	0	-
Stage 2	0	-	-	0	0	-
Platoon blocked, %			-			-
Mov Cap-1 Maneuver	-	184	-	-	-	-
Mov Cap-2 Maneuver	-	-	-	-	-	-
Stage 1	-	-	-	-	-	-
Stage 2	-	-	-	-	-	-

Approach	WB	NB	SB
HCM Control Delay, s	40.3	0	0
HCM LOS	E		

Minor Lane/Major Mvmt	NBT	WBLn1	SBT
Capacity (veh/h)	-	184	-
HCM Lane V/C Ratio	-	0.461	-
HCM Control Delay (s)	-	40.3	-
HCM Lane LOS	-	E	-
HCM 95th %tile Q(veh)	-	2.2	-

Intersection	
Int Delay, s/veh	0.3

Movement	EBL	EBR	NBL	NBT	SBT	SBR
Lane Configurations		↱		↑↑↑	↑↑	↱
Traffic Vol, veh/h	0	34	0	1597	2349	58
Future Vol, veh/h	0	34	0	1597	2349	58
Conflicting Peds, #/hr	0	0	0	0	0	0
Sign Control	Stop	Stop	Free	Free	Free	Free
RT Channelized	-	Stop	-	None	-	Free
Storage Length	-	0	-	-	-	0
Veh in Median Storage, #	0	-	-	0	0	-
Grade, %	0	-	-	0	0	-
Peak Hour Factor	92	92	92	92	92	92
Heavy Vehicles, %	2	2	2	2	2	2
Mvmt Flow	0	37	0	1736	2553	63

Major/Minor	Minor2		Major1		Major2	
Conflicting Flow All	-	1277	-	0	-	0
Stage 1	-	-	-	-	-	-
Stage 2	-	-	-	-	-	-
Critical Hdwy	-	6.94	-	-	-	-
Critical Hdwy Stg 1	-	-	-	-	-	-
Critical Hdwy Stg 2	-	-	-	-	-	-
Follow-up Hdwy	-	3.32	-	-	-	-
Pot Cap-1 Maneuver	0	157	0	-	-	0
Stage 1	0	-	0	-	-	0
Stage 2	0	-	0	-	-	0
Platoon blocked, %				-	-	
Mov Cap-1 Maneuver	-	157	-	-	-	-
Mov Cap-2 Maneuver	-	-	-	-	-	-
Stage 1	-	-	-	-	-	-
Stage 2	-	-	-	-	-	-

Approach	EB	NB	SB
HCM Control Delay, s	34.9	0	0
HCM LOS	D		

Minor Lane/Major Mvmt	NBT	EBLn1	SBT
Capacity (veh/h)	-	157	-
HCM Lane V/C Ratio	-	0.235	-
HCM Control Delay (s)	-	34.9	-
HCM Lane LOS	-	D	-
HCM 95th %tile Q(veh)	-	0.9	-

Intersection	
Int Delay, s/veh	0.3

Movement	EBL	EBR	NBL	NBT	SBT	SBR
Lane Configurations		↱		↑↑↑	↑↑	↱
Traffic Vol, veh/h	0	34	0	2208	2389	91
Future Vol, veh/h	0	34	0	2208	2389	91
Conflicting Peds, #/hr	0	0	0	0	0	0
Sign Control	Stop	Stop	Free	Free	Free	Free
RT Channelized	-	Stop	-	None	-	Free
Storage Length	-	0	-	-	-	0
Veh in Median Storage, #	0	-	-	0	0	-
Grade, %	0	-	-	0	0	-
Peak Hour Factor	92	92	92	92	92	92
Heavy Vehicles, %	2	2	2	2	2	2
Mvmt Flow	0	37	0	2400	2597	99

Major/Minor	Minor2		Major1		Major2	
Conflicting Flow All	-	1299	-	0	-	0
Stage 1	-	-	-	-	-	-
Stage 2	-	-	-	-	-	-
Critical Hdwy	-	6.94	-	-	-	-
Critical Hdwy Stg 1	-	-	-	-	-	-
Critical Hdwy Stg 2	-	-	-	-	-	-
Follow-up Hdwy	-	3.32	-	-	-	-
Pot Cap-1 Maneuver	0	152	0	-	-	0
Stage 1	0	-	0	-	-	0
Stage 2	0	-	0	-	-	0
Platoon blocked, %				-	-	
Mov Cap-1 Maneuver	-	152	-	-	-	-
Mov Cap-2 Maneuver	-	-	-	-	-	-
Stage 1	-	-	-	-	-	-
Stage 2	-	-	-	-	-	-

Approach	EB	NB	SB
HCM Control Delay, s	36.1	0	0
HCM LOS	E		

Minor Lane/Major Mvmt	NBT	EBLn1	SBT
Capacity (veh/h)	-	152	-
HCM Lane V/C Ratio	-	0.243	-
HCM Control Delay (s)	-	36.1	-
HCM Lane LOS	-	E	-
HCM 95th %tile Q(veh)	-	0.9	-

Movement	NBL	NBT	NBR	SBL	SBT	SBR	SEL	SET	SER	NWL	NWT	NWR
Lane Configurations												
Traffic Volume (veh/h)	0	722	56	550	1860	1	0	1	0	41	4	421
Future Volume (veh/h)	0	722	56	550	1860	1	0	1	0	41	4	421
Initial Q (Qb), veh	0	0	0	0	0	0	0	0	0	0	0	0
Ped-Bike Adj(A_pbT)	1.00		1.00	1.00		1.00	1.00		1.00	1.00		1.00
Parking Bus, Adj	1.00	1.00	1.00	1.00	1.00	1.00	1.00	1.00	1.00	1.00	1.00	1.00
Work Zone On Approach		No			No			No			No	
Adj Sat Flow, veh/h/ln	1723	1841	1723	1723	1831	1723	1723	1723	1723	1723	1723	1723
Adj Flow Rate, veh/h	0	785	38	598	2022	1	0	1	0	45	4	320
Peak Hour Factor	0.92	0.92	0.92	0.92	0.92	0.92	0.92	0.92	0.92	0.92	0.92	0.92
Percent Heavy Veh, %	2	2	2	2	2	2	2	2	2	2	2	2
Cap, veh/h	183	2119	616	789	2052	1	0	2	0	123	11	845
Arrive On Green	0.00	0.42	0.42	0.25	0.57	0.57	0.00	0.00	0.00	0.08	0.08	0.08
Sat Flow, veh/h	1641	5025	1460	3183	3568	2	0	1723	0	1513	134	2569
Grp Volume(v), veh/h	0	785	38	598	986	1037	0	1	0	49	0	320
Grp Sat Flow(s),veh/h/ln	1641	1675	1460	1591	1739	1831	0	1723	0	1647	0	1285
Q Serve(g_s), s	0.0	10.7	1.5	17.4	55.6	55.6	0.0	0.1	0.0	2.8	0.0	8.1
Cycle Q Clear(g_c), s	0.0	10.7	1.5	17.4	55.6	55.6	0.0	0.1	0.0	2.8	0.0	8.1
Prop In Lane	1.00		1.00	1.00		0.00	0.00		0.00	0.92		1.00
Lane Grp Cap(c), veh/h	183	2119	616	789	1000	1053	0	2	0	133	0	845
V/C Ratio(X)	0.00	0.37	0.06	0.76	0.99	0.99	0.00	0.42	0.00	0.37	0.00	0.38
Avail Cap(c_a), veh/h	183	2119	616	789	1000	1053	0	93	0	133	0	845
HCM Platoon Ratio	1.00	1.00	1.00	1.00	1.00	1.00	1.00	1.00	1.00	1.00	1.00	1.00
Upstream Filter(I)	0.00	1.00	1.00	1.00	1.00	1.00	0.00	1.00	0.00	0.99	0.00	0.99
Uniform Delay (d), s/veh	0.0	19.8	17.2	34.8	20.8	20.8	0.0	49.9	0.0	43.5	0.0	25.7
Incr Delay (d2), s/veh	0.0	0.5	0.2	6.7	25.2	24.5	0.0	39.0	0.0	0.6	0.0	0.1
Initial Q Delay(d3),s/veh	0.0	0.0	0.0	0.0	0.0	0.0	0.0	0.0	0.0	0.0	0.0	0.0
%ile BackOfQ(90%),veh/ln	0.0	6.6	1.0	10.6	32.8	34.1	0.0	0.1	0.0	2.1	0.0	5.1
Unsig. Movement Delay, s/veh												
LnGrp Delay(d),s/veh	0.0	20.3	17.4	41.5	46.0	45.3	0.0	88.9	0.0	44.1	0.0	25.8
LnGrp LOS	A	C	B	D	D	D	A	F	A	D	A	C
Approach Vol, veh/h		823			2621			1			369	
Approach Delay, s/veh		20.2			44.7			88.9			28.3	
Approach LOS		C			D			F			C	

Timer - Assigned Phs	1	2		4	5	6		8
Phs Duration (G+Y+Rc), s	17.3	63.0		5.7	32.0	48.3		14.0
Change Period (Y+Rc), s	6.1	5.5		* 5.6	7.2	* 6.1		5.9
Max Green Setting (Gmax), s	5.9	57.5		* 5.4	24.8	* 38		8.1
Max Q Clear Time (g_c+I1), s	0.0	57.6		2.1	19.4	12.7		10.1
Green Ext Time (p_c), s	0.0	0.0		0.0	0.7	15.2		0.0

Intersection Summary	
HCM 6th Ctrl Delay	37.8
HCM 6th LOS	D

Notes

User approved pedestrian interval to be less than phase max green.

* HCM 6th computational engine requires equal clearance times for the phases crossing the barrier.

Movement	NBL	NBT	NBR	SBL	SBT	SBR	SEL	SET	SER	NWL	NWT	NWR
Lane Configurations												
Traffic Volume (veh/h)	1	1728	89	488	1017	2	4	0	1	50	16	720
Future Volume (veh/h)	1	1728	89	488	1017	2	4	0	1	50	16	720
Initial Q (Qb), veh	0	0	0	0	0	0	0	0	0	0	0	0
Ped-Bike Adj(A_pbT)	1.00		1.00	1.00		1.00	1.00		1.00	1.00		1.00
Parking Bus, Adj	1.00	1.00	1.00	1.00	1.00	1.00	1.00	1.00	1.00	1.00	1.00	1.00
Work Zone On Approach		No			No			No			No	
Adj Sat Flow, veh/h/ln	1723	1841	1723	1723	1831	1723	1723	1723	1723	1723	1723	1723
Adj Flow Rate, veh/h	1	1800	57	508	1059	2	4	0	1	52	17	525
Peak Hour Factor	0.96	0.96	0.96	0.96	0.96	0.96	0.96	0.96	0.96	0.96	0.96	0.96
Percent Heavy Veh, %	2	2	2	2	2	2	2	2	2	2	2	2
Cap, veh/h	191	2169	630	512	1762	3	8	0	2	165	54	751
Arrive On Green	0.12	0.43	0.43	0.16	0.49	0.49	0.01	0.00	0.01	0.13	0.13	0.13
Sat Flow, veh/h	1641	5025	1460	3183	3562	7	1281	0	320	1251	409	2569
Grp Volume(v), veh/h	1	1800	57	508	517	544	5	0	0	69	0	525
Grp Sat Flow(s),veh/h/ln	1641	1675	1460	1591	1739	1830	1601	0	0	1660	0	1285
Q Serve(g_s), s	0.0	29.2	2.1	14.7	19.7	19.7	0.3	0.0	0.0	3.5	0.0	12.1
Cycle Q Clear(g_c), s	0.0	29.2	2.1	14.7	19.7	19.7	0.3	0.0	0.0	3.5	0.0	12.1
Prop In Lane	1.00		1.00	1.00		0.00	0.80		0.20	0.75		1.00
Lane Grp Cap(c), veh/h	191	2169	630	512	860	905	10	0	0	218	0	751
V/C Ratio(X)	0.01	0.83	0.09	0.99	0.60	0.60	0.48	0.00	0.00	0.32	0.00	0.70
Avail Cap(c_a), veh/h	191	2169	630	512	860	905	94	0	0	218	0	751
HCM Platoon Ratio	1.00	1.00	1.00	1.00	1.00	1.00	1.00	1.00	1.00	1.00	1.00	1.00
Upstream Filter(I)	1.00	1.00	1.00	1.00	1.00	1.00	1.00	0.00	0.00	0.98	0.00	0.98
Uniform Delay (d), s/veh	35.9	23.2	15.5	38.5	16.7	16.7	45.5	0.0	0.0	36.2	0.0	28.9
Incr Delay (d2), s/veh	0.0	3.9	0.3	37.9	3.1	2.9	12.1	0.0	0.0	0.3	0.0	2.4
Initial Q Delay(d3),s/veh	0.0	0.0	0.0	0.0	0.0	0.0	0.0	0.0	0.0	0.0	0.0	0.0
%ile BackOfQ(90%),veh/ln	0.0	15.5	1.3	11.8	11.3	11.8	0.3	0.0	0.0	2.6	0.0	8.3
Unsig. Movement Delay, s/veh												
LnGrp Delay(d),s/veh	35.9	27.0	15.8	76.4	19.8	19.7	57.6	0.0	0.0	36.5	0.0	31.3
LnGrp LOS	D	C	B	E	B	B	E	A	A	D	A	C
Approach Vol, veh/h		1858			1569			5			594	
Approach Delay, s/veh		26.7			38.1			57.6			31.9	
Approach LOS		C			D			E			C	

Timer - Assigned Phs	1	2		4	5	6		8
Phs Duration (G+Y+Rc), s	16.8	51.0		6.2	22.0	45.8		18.0
Change Period (Y+Rc), s	6.1	5.5		* 5.6	7.2	* 6.1		5.9
Max Green Setting (Gmax), s	5.9	45.5		* 5.4	14.8	* 36		12.1
Max Q Clear Time (g_c+I1), s	2.0	21.7		2.3	16.7	31.2		14.1
Green Ext Time (p_c), s	0.0	18.9		0.0	0.0	4.3		0.0

Intersection Summary	
HCM 6th Ctrl Delay	31.9
HCM 6th LOS	C

Notes

User approved pedestrian interval to be less than phase max green.

* HCM 6th computational engine requires equal clearance times for the phases crossing the barrier.

Lane Group	NBL	NBT	NBR	SBL	SBT	SBR	NEL	NET	NER	SWL	SWT	SWR
Lane Configurations												
Traffic Volume (vph)	34	301	84	94	453	93	51	15	30	83	8	56
Future Volume (vph)	34	301	84	94	453	93	51	15	30	83	8	56
Ideal Flow (vphpl)	1750	1750	1750	1750	1750	1750	1750	1750	1750	1750	1750	1750
Storage Length (ft)	160		30	200		150	0		100	0		100
Storage Lanes	1		1	1		1	0		1	0		1
Taper Length (ft)	75			75			25			25		
Lane Util. Factor	1.00	0.95	1.00	1.00	0.95	1.00	1.00	1.00	1.00	1.00	1.00	1.00
Frt			0.850			0.850			0.850			0.850
Flt Protected	0.950			0.950				0.963			0.957	
Satd. Flow (prot)	1630	3260	1458	1630	3260	1458	0	1652	1458	0	1642	1458
Flt Permitted	0.472			0.554				0.739			0.795	
Satd. Flow (perm)	810	3260	1458	950	3260	1458	0	1268	1458	0	1364	1458
Right Turn on Red			No			No			No			No
Satd. Flow (RTOR)												
Link Speed (mph)		25			25			25			25	
Link Distance (ft)		361			637			364			335	
Travel Time (s)		9.8			17.4			9.9			9.1	
Peak Hour Factor	0.92	0.92	0.92	0.92	0.92	0.92	0.92	0.92	0.92	0.92	0.92	0.92
Growth Factor	100%	100%	100%	100%	100%	100%	100%	100%	62%	100%	100%	62%
Adj. Flow (vph)	37	327	91	102	492	101	55	16	20	90	9	38
Shared Lane Traffic (%)												
Lane Group Flow (vph)	37	327	91	102	492	101	0	71	20	0	99	38
Enter Blocked Intersection	No	No	No	No	No	No	No	No	No	No	No	No
Lane Alignment	Left	Left	Right	Left	Left	Right	Left	Left	Right	Left	Left	Right
Median Width(ft)		20			20			0			0	
Link Offset(ft)		0			0			0			0	
Crosswalk Width(ft)		16			16			16			16	
Two way Left Turn Lane												
Headway Factor	1.11	1.11	1.11	1.11	1.11	1.11	1.11	1.11	1.11	1.11	1.11	1.11
Turning Speed (mph)	15		9	15		9	15		9	15		9
Number of Detectors	1	1	0	1	1	0	1	1	1	1	1	1
Detector Template							Left			Left		
Leading Detector (ft)	50	186	0	50	186	0	20	50	50	20	50	50
Trailing Detector (ft)	0	180	0	0	180	0	0	0	0	0	0	0
Detector 1 Position(ft)	0	180	0	0	180	0	0	0	0	0	0	0
Detector 1 Size(ft)	50	6	20	50	6	20	20	50	50	20	50	50
Detector 1 Type	Cl+Ex	Cl+Ex	Cl+Ex	Cl+Ex	Cl+Ex	Cl+Ex	Cl+Ex	Cl+Ex	Cl+Ex	Cl+Ex	Cl+Ex	Cl+Ex
Detector 1 Channel												
Detector 1 Extend (s)	0.0	0.0	0.0	0.0	0.0	0.0	0.0	0.0	0.0	0.0	0.0	0.0
Detector 1 Queue (s)	0.0	0.0	0.0	0.0	0.0	0.0	0.0	0.0	0.0	0.0	0.0	0.0
Detector 1 Delay (s)	0.0	0.0	0.0	0.0	0.0	0.0	0.0	0.0	0.0	0.0	0.0	0.0
Turn Type	D.P+P	NA	Perm	D.P+P	NA	Perm	Perm	NA	Perm	Perm	NA	Perm
Protected Phases	1	6		5	2			8			4	
Permitted Phases	2		6	6		2	8		8	4		4
Detector Phase	1	6	6	5	2	2	8	8	8	4	4	4
Switch Phase												
Minimum Initial (s)	5.0	15.0	15.0	5.0	15.0	15.0	8.0	8.0	8.0	8.0	8.0	8.0
Minimum Split (s)	10.2	20.6	20.6	10.2	20.6	20.6	13.9	13.9	13.9	13.9	13.9	13.9

Lane Group	NBL	NBT	NBR	SBL	SBT	SBR	NEL	NET	NER	SWL	SWT	SWR
Total Split (s)	11.0	20.0	20.0	11.0	20.0	20.0	14.0	14.0	14.0	14.0	14.0	14.0
Total Split (%)	24.4%	44.4%	44.4%	24.4%	44.4%	44.4%	31.1%	31.1%	31.1%	31.1%	31.1%	31.1%
Maximum Green (s)	5.8	14.4	14.4	5.8	14.4	14.4	8.1	8.1	8.1	8.1	8.1	8.1
Yellow Time (s)	3.0	3.4	3.4	3.0	3.4	3.4	3.4	3.4	3.4	3.4	3.4	3.4
All-Red Time (s)	2.2	2.2	2.2	2.2	2.2	2.2	2.5	2.5	2.5	2.5	2.5	2.5
Lost Time Adjust (s)	0.0	0.0	0.0	0.0	0.0	0.0		0.0	0.0		0.0	0.0
Total Lost Time (s)	5.2	5.6	5.6	5.2	5.6	5.6		5.9	5.9		5.9	5.9
Lead/Lag	Lead	Lag	Lag	Lead	Lag	Lag						
Lead-Lag Optimize?	Yes	Yes	Yes	Yes	Yes	Yes						
Vehicle Extension (s)	1.5	2.5	2.5	1.5	2.5	2.5	1.5	1.5	1.5	1.5	1.5	1.5
Recall Mode	None	C-Max	C-Max	None	C-Max	C-Max	None	None	None	None	None	None
Act Effct Green (s)	29.3	26.8	26.8	28.3	29.1	29.1		8.0	8.0		8.0	8.0
Actuated g/C Ratio	0.65	0.60	0.60	0.63	0.65	0.65		0.18	0.18		0.18	0.18
v/c Ratio	0.06	0.17	0.10	0.15	0.23	0.11		0.31	0.08		0.41	0.15
Control Delay	4.6	9.4	10.7	4.9	8.1	9.2		20.4	16.3		22.1	17.2
Queue Delay	0.0	0.0	0.0	0.0	0.0	0.0		0.0	0.0		0.0	0.0
Total Delay	4.6	9.4	10.7	4.9	8.1	9.2		20.4	16.3		22.1	17.2
LOS	A	A	B	A	A	A		C	B		C	B
Approach Delay		9.3			7.8			19.5			20.7	
Approach LOS		A			A			B			C	
Queue Length 50th (ft)	3	31	16	10	28	10		16	4		23	8
Queue Length 95th (ft)	11	57	41	24	83	44		44	17		57	27
Internal Link Dist (ft)		281			557			284			255	
Turn Bay Length (ft)	160		30	200		150			100			100
Base Capacity (vph)	638	1940	867	687	2109	943		228	262		245	262
Starvation Cap Reductn	0	0	0	0	0	0		0	0		0	0
Spillback Cap Reductn	0	0	0	0	0	0		0	0		0	0
Storage Cap Reductn	0	0	0	0	0	0		0	0		0	0
Reduced v/c Ratio	0.06	0.17	0.10	0.15	0.23	0.11		0.31	0.08		0.40	0.15

Intersection Summary	
Area Type:	Other
Cycle Length: 45	
Actuated Cycle Length: 45	
Offset: 16 (36%), Referenced to phase 2:NBSB and 6:NBSB, Start of 1st Green	
Natural Cycle: 45	
Control Type: Actuated-Coordinated	
Maximum v/c Ratio: 0.41	
Intersection Signal Delay: 10.4	Intersection LOS: B
Intersection Capacity Utilization 44.2%	ICU Level of Service A
Analysis Period (min) 15	

Splits and Phases: 6: George St & STH 35 (George St)/STH 35

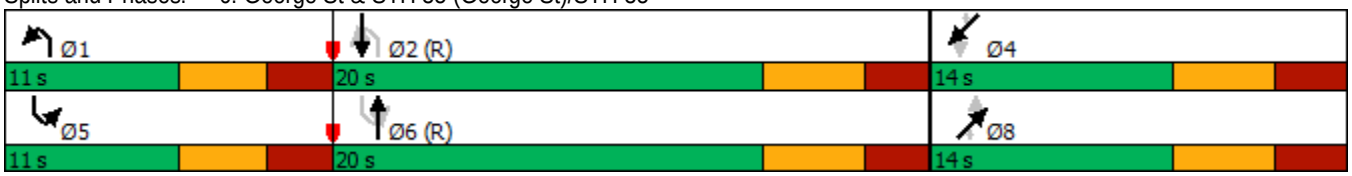

Lane Group	NBL	NBT	NBR	SBL	SBT	SBR	NEL	NET	NER	SWL	SWT	SWR
Lane Configurations												
Traffic Volume (vph)	42	463	70	144	343	106	96	17	21	66	22	84
Future Volume (vph)	42	463	70	144	343	106	96	17	21	66	22	84
Ideal Flow (vphpl)	1750	1750	1750	1750	1750	1750	1750	1750	1750	1750	1750	1750
Storage Length (ft)	160		30	200		150	0		100	0		100
Storage Lanes	1		1	1		1	0		1	0		1
Taper Length (ft)	75			75			25			25		
Lane Util. Factor	1.00	0.95	1.00	1.00	0.95	1.00	1.00	1.00	1.00	1.00	1.00	1.00
Frt			0.850			0.850			0.850			0.850
Flt Protected	0.950			0.950				0.959			0.964	
Satd. Flow (prot)	1630	3260	1458	1630	3260	1458	0	1645	1458	0	1654	1458
Flt Permitted	0.530			0.460				0.691			0.702	
Satd. Flow (perm)	909	3260	1458	789	3260	1458	0	1186	1458	0	1204	1458
Right Turn on Red			No			No			No			No
Satd. Flow (RTOR)												
Link Speed (mph)		25			25			25			25	
Link Distance (ft)		361			637			364			335	
Travel Time (s)		9.8			17.4			9.9			9.1	
Peak Hour Factor	0.92	0.92	0.92	0.92	0.92	0.92	0.92	0.92	0.92	0.92	0.92	0.92
Growth Factor	100%	100%	100%	100%	100%	100%	100%	100%	62%	100%	100%	62%
Adj. Flow (vph)	46	503	76	157	373	115	104	18	14	72	24	57
Shared Lane Traffic (%)												
Lane Group Flow (vph)	46	503	76	157	373	115	0	122	14	0	96	57
Enter Blocked Intersection	No	No	No	No	No	No	No	No	No	No	No	No
Lane Alignment	Left	Left	Right	Left	Left	Right	Left	Left	Right	Left	Left	Right
Median Width(ft)		20			20			0			0	
Link Offset(ft)		0			0			0			0	
Crosswalk Width(ft)		16			16			16			16	
Two way Left Turn Lane												
Headway Factor	1.11	1.11	1.11	1.11	1.11	1.11	1.11	1.11	1.11	1.11	1.11	1.11
Turning Speed (mph)	15		9	15		9	15		9	15		9
Number of Detectors	1	1	0	1	1	0	1	1	1	1	1	1
Detector Template							Left			Left		
Leading Detector (ft)	50	186	0	50	186	0	20	50	50	20	50	50
Trailing Detector (ft)	0	180	0	0	180	0	0	0	0	0	0	0
Detector 1 Position(ft)	0	180	0	0	180	0	0	0	0	0	0	0
Detector 1 Size(ft)	50	6	20	50	6	20	20	50	50	20	50	50
Detector 1 Type	Cl+Ex	Cl+Ex	Cl+Ex	Cl+Ex	Cl+Ex	Cl+Ex	Cl+Ex	Cl+Ex	Cl+Ex	Cl+Ex	Cl+Ex	Cl+Ex
Detector 1 Channel												
Detector 1 Extend (s)	0.0	0.0	0.0	0.0	0.0	0.0	0.0	0.0	0.0	0.0	0.0	0.0
Detector 1 Queue (s)	0.0	0.0	0.0	0.0	0.0	0.0	0.0	0.0	0.0	0.0	0.0	0.0
Detector 1 Delay (s)	0.0	0.0	0.0	0.0	0.0	0.0	0.0	0.0	0.0	0.0	0.0	0.0
Turn Type	D.P+P	NA	Perm	D.P+P	NA	Perm	Perm	NA	Perm	Perm	NA	Perm
Protected Phases	1	6		5	2			8			4	
Permitted Phases	2		6	6		2	8		8	4		4
Detector Phase	1	6	6	5	2	2	8	8	8	4	4	4
Switch Phase												
Minimum Initial (s)	5.0	15.0	15.0	5.0	15.0	15.0	8.0	8.0	8.0	8.0	8.0	8.0
Minimum Split (s)	10.2	23.6	23.6	10.2	20.6	20.6	33.9	33.9	33.9	33.9	33.9	33.9

Lanes, Volumes, Timings
6: George St & STH 35 (George St)/STH 35

03/10/2021

Lane Group	NBL	NBT	NBR	SBL	SBT	SBR	NEL	NET	NER	SWL	SWT	SWR
Total Split (s)	13.0	46.0	46.0	14.0	47.0	47.0	32.0	32.0	32.0	32.0	32.0	32.0
Total Split (%)	14.1%	50.0%	50.0%	15.2%	51.1%	51.1%	34.8%	34.8%	34.8%	34.8%	34.8%	34.8%
Maximum Green (s)	7.8	40.4	40.4	8.8	41.4	41.4	26.1	26.1	26.1	26.1	26.1	26.1
Yellow Time (s)	3.0	3.4	3.4	3.0	3.4	3.4	3.4	3.4	3.4	3.4	3.4	3.4
All-Red Time (s)	2.2	2.2	2.2	2.2	2.2	2.2	2.5	2.5	2.5	2.5	2.5	2.5
Lost Time Adjust (s)	0.0	0.0	0.0	0.0	0.0	0.0		0.0	0.0		0.0	0.0
Total Lost Time (s)	5.2	5.6	5.6	5.2	5.6	5.6		5.9	5.9		5.9	5.9
Lead/Lag	Lead	Lag	Lag	Lead	Lag	Lag						
Lead-Lag Optimize?	Yes	Yes	Yes	Yes	Yes	Yes						
Vehicle Extension (s)	1.5	2.5	2.5	1.5	2.5	2.5	1.5	1.5	1.5	1.5	1.5	1.5
Recall Mode	None	C-Max	C-Max	None	C-Max	C-Max	None	None	None	None	None	None
Walk Time (s)		5.0	5.0		5.0	5.0	5.0	5.0	5.0	5.0	5.0	5.0
Flash Dont Walk (s)		13.0	13.0		10.0	10.0	23.0	23.0	23.0	23.0	23.0	23.0
Pedestrian Calls (#/hr)		0	0		0	0	0	0	0	0	0	0
Act Effct Green (s)	64.1	54.7	54.7	62.0	60.5	60.5		13.7	13.7		13.7	13.7
Actuated g/C Ratio	0.70	0.59	0.59	0.67	0.66	0.66		0.15	0.15		0.15	0.15
v/c Ratio	0.07	0.26	0.09	0.26	0.17	0.12		0.69	0.06		0.54	0.26
Control Delay	4.8	10.5	10.3	3.1	1.4	1.6		56.3	31.2		46.0	35.7
Queue Delay	0.0	0.0	0.0	0.0	0.0	0.0		0.0	0.0		0.0	0.0
Total Delay	4.8	10.5	10.3	3.1	1.4	1.6		56.3	31.2		46.0	35.7
LOS	A	B	B	A	A	A		E	C		D	D
Approach Delay		10.0			1.8			53.7			42.2	
Approach LOS		B			A			D			D	
Queue Length 50th (ft)	6	66	17	5	7	5		69	7		53	30
Queue Length 95th (ft)	20	123	47	m31	11	m7		118	23		95	61
Internal Link Dist (ft)		281			557			284			255	
Turn Bay Length (ft)	160		30	200		150			100			100
Base Capacity (vph)	708	1936	866	631	2142	957		336	413		341	413
Starvation Cap Reductn	0	0	0	0	0	0		0	0		0	0
Spillback Cap Reductn	0	0	0	0	0	0		0	0		0	0
Storage Cap Reductn	0	0	0	0	0	0		0	0		0	0
Reduced v/c Ratio	0.06	0.26	0.09	0.25	0.17	0.12		0.36	0.03		0.28	0.14

Intersection Summary

Area Type: Other
Cycle Length: 92
Actuated Cycle Length: 92
Offset: 14 (15%), Referenced to phase 2:NBSB and 6:NBSB, Start of 1st Green
Natural Cycle: 70
Control Type: Actuated-Coordinated
Maximum v/c Ratio: 0.69
Intersection Signal Delay: 13.6 Intersection LOS: B
Intersection Capacity Utilization 49.9% ICU Level of Service A
Analysis Period (min) 15

m Volume for 95th percentile queue is metered by upstream signal.

Splits and Phases: 6: George St & STH 35 (George St)/STH 35

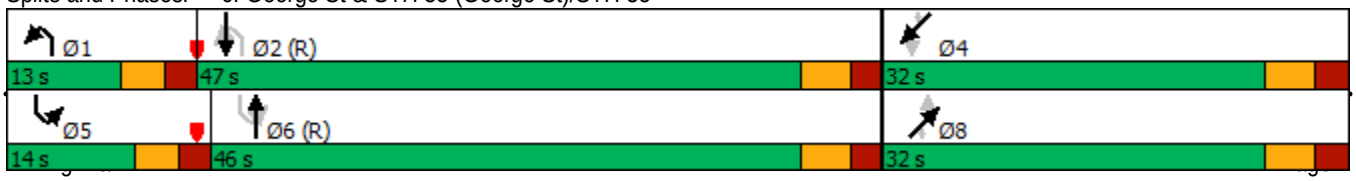

Movement	EBL	EBT	EBR	WBL	WBT	WBR	NBL	NBT	NBR	SBL	SBT	SBR
Lane Configurations												
Traffic Volume (veh/h)	18	1	15	354	8	161	0	1367	155	100	2053	24
Future Volume (veh/h)	18	1	15	354	8	161	0	1367	155	100	2053	24
Initial Q (Qb), veh	0	0	0	0	0	0	0	0	0	0	0	0
Ped-Bike Adj(A_pbT)	1.00		1.00	1.00		1.00	1.00		1.00	1.00		1.00
Parking Bus, Adj	1.00	1.00	1.00	1.00	1.00	1.00	1.00	1.00	1.00	1.00	1.00	1.00
Work Zone On Approach		No			No			No			No	
Adj Sat Flow, veh/h/ln	1723	1723	1723	1723	1772	1723	1792	1870	1723	1792	1870	1723
Adj Flow Rate, veh/h	21	1	11	413	0	115	0	1571	110	115	2360	17
Peak Hour Factor	0.87	0.87	0.87	0.87	0.87	0.87	0.87	0.87	0.87	0.87	0.87	0.87
Percent Heavy Veh, %	2	2	2	2	2	2	2	2	2	2	2	2
Cap, veh/h	50	2	47	495	0	220	220	1899	780	138	1728	710
Arrive On Green	0.03	0.03	0.03	0.15	0.00	0.15	0.00	0.53	0.53	0.08	0.49	0.49
Sat Flow, veh/h	1569	75	1460	3281	0	1460	1706	3554	1460	1706	3554	1460
Grp Volume(v), veh/h	22	0	11	413	0	115	0	1571	110	115	2360	17
Grp Sat Flow(s),veh/h/ln	1644	0	1460	1641	0	1460	1706	1777	1460	1706	1777	1460
Q Serve(g_s), s	1.7	0.0	1.0	15.9	0.0	9.4	0.0	48.0	4.9	8.6	63.2	0.8
Cycle Q Clear(g_c), s	1.7	0.0	1.0	15.9	0.0	9.4	0.0	48.0	4.9	8.6	63.2	0.8
Prop In Lane	0.95		1.00	1.00		1.00	1.00		1.00	1.00		1.00
Lane Grp Cap(c), veh/h	53	0	47	495	0	220	220	1899	780	138	1728	710
V/C Ratio(X)	0.42	0.00	0.23	0.83	0.00	0.52	0.00	0.83	0.14	0.83	1.37	0.02
Avail Cap(c_a), veh/h	105	0	93	659	0	293	220	1899	780	226	1728	710
HCM Platoon Ratio	1.00	1.00	1.00	1.00	1.00	1.00	1.00	1.00	1.00	1.00	1.00	1.00
Upstream Filter(I)	1.00	0.00	1.00	1.00	0.00	1.00	0.00	1.00	1.00	1.00	1.00	1.00
Uniform Delay (d), s/veh	61.7	0.0	61.4	53.6	0.0	50.9	0.0	25.3	15.2	58.9	33.4	17.4
Incr Delay (d2), s/veh	1.9	0.0	0.9	5.3	0.0	0.7	0.0	4.3	0.4	5.8	168.5	0.1
Initial Q Delay(d3),s/veh	0.0	0.0	0.0	0.0	0.0	0.0	0.0	0.0	0.0	0.0	0.0	0.0
%ile BackOfQ(90%),veh/ln	1.3	0.0	0.7	10.2	0.0	5.9	0.0	25.5	3.0	6.4	93.1	0.5
Unsig. Movement Delay, s/veh												
LnGrp Delay(d),s/veh	63.6	0.0	62.3	58.9	0.0	51.6	0.0	29.6	15.6	64.7	201.9	17.4
LnGrp LOS	E	A	E	E	A	D	A	C	B	E	F	B
Approach Vol, veh/h		33			528			1681			2492	
Approach Delay, s/veh		63.2			57.3			28.6			194.3	
Approach LOS		E			E			C			F	

Timer - Assigned Phs	1	2		4	5	6		8				
Phs Duration (G+Y+Rc), s	22.6	69.0		27.5	16.3	75.3		10.9				
Change Period (Y+Rc), s	5.8	* 5.8		* 7.9	* 5.8	5.8		6.7				
Max Green Setting (Gmax), s	6.2	* 63		* 26	* 17	52.2		8.3				
Max Q Clear Time (g_c+I1), s	0.0	65.2		17.9	10.6	50.0		3.7				
Green Ext Time (p_c), s	0.0	0.0		1.7	0.1	2.2		0.0				

Intersection Summary	
HCM 6th Ctrl Delay	119.3
HCM 6th LOS	F

Notes

User approved volume balancing among the lanes for turning movement.

* HCM 6th computational engine requires equal clearance times for the phases crossing the barrier.

Movement	EBL	EBT	EBR	WBL	WBT	WBR	NBL	NBT	NBR	SBL	SBT	SBR
Lane Configurations												
Traffic Volume (veh/h)	17	0	12	197	1	112	0	1935	294	162	1701	16
Future Volume (veh/h)	17	0	12	197	1	112	0	1935	294	162	1701	16
Initial Q (Qb), veh	0	0	0	0	0	0	0	0	0	0	0	0
Ped-Bike Adj(A_pbT)	1.00		1.00	1.00		1.00	1.00		1.00	1.00		1.00
Parking Bus, Adj	1.00	1.00	1.00	1.00	1.00	1.00	1.00	1.00	1.00	1.00	1.00	1.00
Work Zone On Approach		No			No			No			No	
Adj Sat Flow, veh/h/ln	1723	1723	1723	1723	1772	1723	1792	1870	1723	1792	1870	1723
Adj Flow Rate, veh/h	18	0	8	208	0	73	0	2037	192	171	1791	10
Peak Hour Factor	0.95	0.95	0.95	0.95	0.95	0.95	0.95	0.95	0.95	0.95	0.95	0.95
Percent Heavy Veh, %	2	2	2	2	2	2	2	2	2	2	2	2
Cap, veh/h	44	0	39	256	0	114	167	2141	880	193	2195	902
Arrive On Green	0.03	0.00	0.03	0.08	0.00	0.08	0.00	0.60	0.60	0.11	0.62	0.62
Sat Flow, veh/h	1641	0	1460	3281	0	1460	1706	3554	1460	1706	3554	1460
Grp Volume(v), veh/h	18	0	8	208	0	73	0	2037	192	171	1791	10
Grp Sat Flow(s),veh/h/ln	1641	0	1460	1641	0	1460	1706	1777	1460	1706	1777	1460
Q Serve(g_s), s	1.6	0.0	0.8	9.1	0.0	7.1	0.0	77.9	8.8	14.4	56.7	0.4
Cycle Q Clear(g_c), s	1.6	0.0	0.8	9.1	0.0	7.1	0.0	77.9	8.8	14.4	56.7	0.4
Prop In Lane	1.00		1.00	1.00		1.00	1.00		1.00	1.00		1.00
Lane Grp Cap(c), veh/h	44	0	39	256	0	114	167	2141	880	193	2195	902
V/C Ratio(X)	0.41	0.00	0.20	0.81	0.00	0.64	0.00	0.95	0.22	0.88	0.82	0.01
Avail Cap(c_a), veh/h	105	0	93	294	0	131	167	2141	880	306	2195	902
HCM Platoon Ratio	1.00	1.00	1.00	1.00	1.00	1.00	1.00	1.00	1.00	1.00	1.00	1.00
Upstream Filter(I)	1.00	0.00	1.00	1.00	0.00	1.00	0.00	1.00	1.00	1.00	1.00	1.00
Uniform Delay (d), s/veh	69.9	0.0	69.5	66.3	0.0	65.3	0.0	27.0	13.3	63.8	21.5	10.7
Incr Delay (d2), s/veh	2.3	0.0	0.9	12.3	0.0	5.1	0.0	10.9	0.6	11.0	3.5	0.0
Initial Q Delay(d3),s/veh	0.0	0.0	0.0	0.0	0.0	0.0	0.0	0.0	0.0	0.0	0.0	0.0
%ile BackOfQ(90%),veh/ln	1.3	0.0	0.6	6.9	0.0	5.0	0.0	40.6	5.1	10.1	28.7	0.2
Unsig. Movement Delay, s/veh												
LnGrp Delay(d),s/veh	72.2	0.0	70.5	78.6	0.0	70.4	0.0	38.0	13.8	74.8	25.0	10.8
LnGrp LOS	E	A	E	E	A	E	A	D	B	E	C	B
Approach Vol, veh/h		26			281			2229			1972	
Approach Delay, s/veh		71.6			76.5			35.9			29.2	
Approach LOS		E			E			D			C	

Timer - Assigned Phs	1	2		4	5	6		8
Phs Duration (G+Y+Rc), s	20.1	96.0		19.3	22.3	93.8		10.6
Change Period (Y+Rc), s	5.8	* 5.8		* 7.9	* 5.8	5.8		6.7
Max Green Setting (Gmax), s	7.2	* 90		* 13	* 26	71.2		9.3
Max Q Clear Time (g_c+I1), s	0.0	58.7		11.1	16.4	79.9		3.6
Green Ext Time (p_c), s	0.0	30.5		0.3	0.1	0.0		0.0

Intersection Summary	
HCM 6th Ctrl Delay	35.7
HCM 6th LOS	D

Notes

User approved volume balancing among the lanes for turning movement.

* HCM 6th computational engine requires equal clearance times for the phases crossing the barrier.

Movement	WBL	WBR	NET	NER	SWL	SWT
Lane Configurations						
Traffic Volume (veh/h)	16	29	779	28	24	1861
Future Volume (veh/h)	16	29	779	28	24	1861
Initial Q (Qb), veh	0	0	0	0	0	0
Ped-Bike Adj(A_pbT)	1.00	1.00		1.00	1.00	
Parking Bus, Adj	1.00	1.00	1.00	1.00	1.00	1.00
Work Zone On Approach	No		No			No
Adj Sat Flow, veh/h/ln	1723	1792	1811	1723	1723	1811
Adj Flow Rate, veh/h	17	0	847	19	26	2023
Peak Hour Factor	0.92	0.92	0.92	0.92	0.92	0.92
Percent Heavy Veh, %	2	2	2	2	2	2
Cap, veh/h	49		2630	1116	553	2915
Arrive On Green	0.03	0.00	0.76	0.76	0.03	0.85
Sat Flow, veh/h	1641	1518	3532	1460	1641	3532
Grp Volume(v), veh/h	17	0	847	19	26	2023
Grp Sat Flow(s),veh/h/ln	1641	1518	1721	1460	1641	1721
Q Serve(g_s), s	1.0	0.0	7.7	0.3	0.3	21.8
Cycle Q Clear(g_c), s	1.0	0.0	7.7	0.3	0.3	21.8
Prop In Lane	1.00	1.00		1.00	1.00	
Lane Grp Cap(c), veh/h	49		2630	1116	553	2915
V/C Ratio(X)	0.34		0.32	0.02	0.05	0.69
Avail Cap(c_a), veh/h	136		2630	1116	598	2915
HCM Platoon Ratio	1.00	1.00	1.00	1.00	1.00	1.00
Upstream Filter(I)	1.00	0.00	1.00	1.00	1.00	1.00
Uniform Delay (d), s/veh	47.5	0.0	3.7	2.8	2.6	2.8
Incr Delay (d2), s/veh	1.5	0.0	0.3	0.0	0.0	1.4
Initial Q Delay(d3),s/veh	0.0	0.0	0.0	0.0	0.0	0.0
%ile BackOfQ(90%),veh/ln	0.8	0.0	3.4	0.1	0.1	5.0
Unsig. Movement Delay, s/veh						
LnGrp Delay(d),s/veh	49.0	0.0	4.0	2.8	2.6	4.2
LnGrp LOS	D		A	A	A	A
Approach Vol, veh/h	17	A	866			2049
Approach Delay, s/veh	49.0		4.0			4.2
Approach LOS	D		A			A

Timer - Assigned Phs		2			5	6	8
Phs Duration (G+Y+Rc), s		91.3			8.3	83.0	8.7
Change Period (Y+Rc), s		6.6			5.7	6.6	5.7
Max Green Setting (Gmax), s		79.4			5.3	68.4	8.3
Max Q Clear Time (g_c+I1), s		23.8			2.3	9.7	3.0
Green Ext Time (p_c), s		54.2			0.0	28.6	0.0

Intersection Summary	
HCM 6th Ctrl Delay	4.4
HCM 6th LOS	A

Notes

Unsignalized Delay for [WBR] is excluded from calculations of the approach delay and intersection delay.

Movement	WBL	WBR	NET	NER	SWL	SWT
Lane Configurations						
Traffic Volume (veh/h)	34	65	1708	47	51	960
Future Volume (veh/h)	34	65	1708	47	51	960
Initial Q (Qb), veh	0	0	0	0	0	0
Ped-Bike Adj(A_pbT)	1.00	1.00		1.00	1.00	
Parking Bus, Adj	1.00	1.00	1.00	1.00	1.00	1.00
Work Zone On Approach	No		No			No
Adj Sat Flow, veh/h/ln	1723	1792	1811	1723	1723	1811
Adj Flow Rate, veh/h	35	0	1779	30	53	1000
Peak Hour Factor	0.96	0.96	0.96	0.96	0.96	0.96
Percent Heavy Veh, %	2	2	2	2	2	2
Cap, veh/h	84		2452	1040	250	2804
Arrive On Green	0.05	0.00	0.71	0.71	0.04	0.81
Sat Flow, veh/h	1641	1518	3532	1460	1641	3532
Grp Volume(v), veh/h	35	0	1779	30	53	1000
Grp Sat Flow(s),veh/h/ln	1641	1518	1721	1460	1641	1721
Q Serve(g_s), s	1.9	0.0	28.3	0.6	0.8	7.0
Cycle Q Clear(g_c), s	1.9	0.0	28.3	0.6	0.8	7.0
Prop In Lane	1.00	1.00		1.00	1.00	
Lane Grp Cap(c), veh/h	84		2452	1040	250	2804
V/C Ratio(X)	0.41		0.73	0.03	0.21	0.36
Avail Cap(c_a), veh/h	166		2452	1040	296	2804
HCM Platoon Ratio	1.00	1.00	1.00	1.00	1.00	1.00
Upstream Filter(I)	1.00	0.00	1.00	1.00	1.00	1.00
Uniform Delay (d), s/veh	42.3	0.0	7.9	3.9	8.4	2.2
Incr Delay (d2), s/veh	1.2	0.0	1.9	0.1	0.2	0.4
Initial Q Delay(d3),s/veh	0.0	0.0	0.0	0.0	0.0	0.0
%ile BackOfQ(90%),veh/ln	1.4	0.0	11.7	0.2	0.6	2.0
Unsig. Movement Delay, s/veh						
LnGrp Delay(d),s/veh	43.5	0.0	9.8	3.9	8.5	2.6
LnGrp LOS	D		A	A	A	A
Approach Vol, veh/h	35	A	1809			1053
Approach Delay, s/veh	43.5		9.7			2.9
Approach LOS	D		A			A

Timer - Assigned Phs		2			5	6	8
Phs Duration (G+Y+Rc), s		81.6			9.4	72.2	10.4
Change Period (Y+Rc), s		6.6			5.7	6.6	5.7
Max Green Setting (Gmax), s		70.4			6.3	58.4	9.3
Max Q Clear Time (g_c+I1), s		9.0			2.8	30.3	3.9
Green Ext Time (p_c), s		36.5			0.0	27.2	0.0

Intersection Summary	
HCM 6th Ctrl Delay	7.6
HCM 6th LOS	A

Notes

Unsignalized Delay for [WBR] is excluded from calculations of the approach delay and intersection delay.

Movement	EBL	EBT	EBR	WBL	WBT	WBR	NBL	NBT	NBR	SBL	SBT	SBR
Lane Configurations												
Traffic Volume (veh/h)	158	12	158	32	13	6	284	1212	32	6	1726	253
Future Volume (veh/h)	158	12	158	32	13	6	284	1212	32	6	1726	253
Initial Q (Qb), veh	0	0	0	0	0	0	0	0	0	0	0	0
Ped-Bike Adj(A_pbT)	1.00		1.00	1.00		1.00	1.00		1.00	1.00		1.00
Parking Bus, Adj	1.00	1.00	1.00	1.00	1.00	1.00	1.00	1.00	1.00	1.00	1.00	1.00
Work Zone On Approach		No			No			No			No	
Adj Sat Flow, veh/h/ln	1723	1811	1792	1723	1723	1723	1723	1880	1723	1777	1856	1709
Adj Flow Rate, veh/h	183	0	108	35	14	7	312	1332	22	7	1897	172
Peak Hour Factor	0.91	0.91	0.91	0.91	0.91	0.91	0.91	0.91	0.91	0.91	0.91	0.91
Percent Heavy Veh, %	2	2	2	2	2	2	2	2	2	3	3	3
Cap, veh/h	234	0	306	55	36	18	413	2299	940	65	1958	908
Arrive On Green	0.07	0.00	0.07	0.03	0.03	0.03	0.13	0.64	0.64	0.04	0.56	0.56
Sat Flow, veh/h	3281	0	1518	1641	1083	542	3183	3572	1460	1693	3526	1448
Grp Volume(v), veh/h	183	0	108	35	0	21	312	1332	22	7	1897	172
Grp Sat Flow(s),veh/h/ln	1641	0	1518	1641	0	1625	1591	1786	1460	1693	1763	1448
Q Serve(g_s), s	7.1	0.0	0.0	2.7	0.0	1.6	12.3	27.5	0.7	0.5	67.3	6.5
Cycle Q Clear(g_c), s	7.1	0.0	0.0	2.7	0.0	1.6	12.3	27.5	0.7	0.5	67.3	6.5
Prop In Lane	1.00		1.00	1.00		0.33	1.00		1.00	1.00		1.00
Lane Grp Cap(c), veh/h	234	0	306	55	0	54	413	2299	940	65	1958	908
V/C Ratio(X)	0.78	0.00	0.35	0.64	0.00	0.39	0.76	0.58	0.02	0.11	0.97	0.19
Avail Cap(c_a), veh/h	300	0	336	91	0	90	413	2299	940	76	1958	908
HCM Platoon Ratio	1.00	1.00	1.00	1.00	1.00	1.00	1.00	1.00	1.00	1.00	1.00	1.00
Upstream Filter(I)	1.00	0.00	1.00	1.00	0.00	1.00	1.00	1.00	1.00	1.00	1.00	1.00
Uniform Delay (d), s/veh	59.4	0.0	44.6	62.1	0.0	61.5	54.6	13.2	8.4	60.3	27.8	10.3
Incr Delay (d2), s/veh	7.1	0.0	0.3	4.5	0.0	1.7	7.0	1.1	0.0	0.3	14.2	0.5
Initial Q Delay(d3),s/veh	0.0	0.0	0.0	0.0	0.0	0.0	0.0	0.0	0.0	0.0	0.0	0.0
%ile BackOfQ(90%),veh/ln	5.4	0.0	5.3	2.2	0.0	1.3	8.1	14.3	0.4	0.4	36.5	4.6
Unsig. Movement Delay, s/veh												
LnGrp Delay(d),s/veh	66.5	0.0	44.9	66.6	0.0	63.2	61.5	14.2	8.4	60.6	42.0	10.7
LnGrp LOS	E	A	D	E	A	E	E	B	A	E	D	B
Approach Vol, veh/h		291			56			1666			2076	
Approach Delay, s/veh		58.5			65.3			23.0			39.5	
Approach LOS		E			E			C			D	

Timer - Assigned Phs	1	2		4	5	6		8
Phs Duration (G+Y+Rc), s	23.5	78.0		17.4	11.2	90.3		11.1
Change Period (Y+Rc), s	6.6	* 5.8		* 8.1	* 6.2	* 6.6		6.8
Max Green Setting (Gmax), s	11.4	* 72		* 12	* 5.8	* 78		7.2
Max Q Clear Time (g_c+I1), s	14.3	69.3		9.1	2.5	29.5		4.7
Green Ext Time (p_c), s	0.0	2.9		0.2	0.0	40.5		0.0

Intersection Summary	
HCM 6th Ctrl Delay	34.5
HCM 6th LOS	C

Notes

User approved volume balancing among the lanes for turning movement.

* HCM 6th computational engine requires equal clearance times for the phases crossing the barrier.

Movement	EBL	EBT	EBR	WBL	WBT	WBR	NBL	NBT	NBR	SBL	SBT	SBR
Lane Configurations												
Traffic Volume (veh/h)	305	24	242	37	21	28	251	1840	45	31	1504	288
Future Volume (veh/h)	305	24	242	37	21	28	251	1840	45	31	1504	288
Initial Q (Qb), veh	0	0	0	0	0	0	0	0	0	0	0	0
Ped-Bike Adj(A_pbT)	1.00		1.00	1.00		1.00	1.00		1.00	1.00		1.00
Parking Bus, Adj	1.00	1.00	1.00	1.00	1.00	1.00	1.00	1.00	1.00	1.00	1.00	1.00
Work Zone On Approach		No			No			No			No	
Adj Sat Flow, veh/h/ln	1723	1811	1792	1723	1723	1723	1723	1880	1723	1806	1885	1736
Adj Flow Rate, veh/h	347	0	161	40	23	30	270	1978	30	33	1617	192
Peak Hour Factor	0.93	0.93	0.93	0.93	0.93	0.93	0.93	0.93	0.93	0.93	0.93	0.93
Percent Heavy Veh, %	2	2	2	2	2	2	2	2	2	1	1	1
Cap, veh/h	515	0	445	76	31	41	433	2047	836	59	1698	928
Arrive On Green	0.16	0.00	0.16	0.05	0.05	0.05	0.14	0.57	0.57	0.03	0.47	0.47
Sat Flow, veh/h	3281	0	1518	1641	678	885	3183	3572	1460	1720	3582	1471
Grp Volume(v), veh/h	347	0	161	40	0	53	270	1978	30	33	1617	192
Grp Sat Flow(s),veh/h/ln	1641	0	1518	1641	0	1563	1591	1786	1460	1720	1791	1471
Q Serve(g_s), s	14.6	0.0	0.0	3.5	0.0	4.9	11.7	77.4	1.3	2.8	63.2	8.1
Cycle Q Clear(g_c), s	14.6	0.0	0.0	3.5	0.0	4.9	11.7	77.4	1.3	2.8	63.2	8.1
Prop In Lane	1.00		1.00	1.00		0.57	1.00		1.00	1.00		1.00
Lane Grp Cap(c), veh/h	515	0	445	76	0	72	433	2047	836	59	1698	928
V/C Ratio(X)	0.67	0.00	0.36	0.53	0.00	0.73	0.62	0.97	0.04	0.56	0.95	0.21
Avail Cap(c_a), veh/h	515	0	445	103	0	99	433	2047	836	80	1698	928
HCM Platoon Ratio	1.00	1.00	1.00	1.00	1.00	1.00	1.00	1.00	1.00	1.00	1.00	1.00
Upstream Filter(I)	1.00	0.00	1.00	1.00	0.00	1.00	1.00	1.00	1.00	1.00	1.00	1.00
Uniform Delay (d), s/veh	58.0	0.0	40.8	68.1	0.0	68.7	59.6	29.8	13.6	69.4	36.8	11.4
Incr Delay (d2), s/veh	6.9	0.0	2.3	2.1	0.0	9.5	2.1	13.4	0.1	3.1	13.2	0.5
Initial Q Delay(d3),s/veh	0.0	0.0	0.0	0.0	0.0	0.0	0.0	0.0	0.0	0.0	0.0	0.0
%ile BackOfQ(90%),veh/ln	9.7	0.0	7.8	2.7	0.0	3.9	7.6	41.8	0.8	2.2	36.2	6.6
Unsig. Movement Delay, s/veh												
LnGrp Delay(d),s/veh	64.9	0.0	43.1	70.2	0.0	78.2	61.7	43.2	13.7	72.5	50.0	11.9
LnGrp LOS	E	A	D	E	A	E	E	D	B	E	D	B
Approach Vol, veh/h		508			93			2278			1842	
Approach Delay, s/veh		58.0			74.8			45.0			46.4	
Approach LOS		E			E			D			D	

Timer - Assigned Phs	1	2		4	5	6		8
Phs Duration (G+Y+Rc), s	26.4	75.0		31.0	11.2	90.2		13.6
Change Period (Y+Rc), s	6.6	* 5.8		* 8.1	* 6.2	* 6.6		6.8
Max Green Setting (Gmax), s	17.4	* 69		* 23	* 6.8	* 80		9.2
Max Q Clear Time (g_c+I1), s	13.7	65.2		16.6	4.8	79.4		6.9
Green Ext Time (p_c), s	0.2	3.9		0.6	0.0	0.8		0.0

Intersection Summary	
HCM 6th Ctrl Delay	47.6
HCM 6th LOS	D

Notes

User approved volume balancing among the lanes for turning movement.

* HCM 6th computational engine requires equal clearance times for the phases crossing the barrier.

Movement	EBL	EBT	EBR	WBL	WBT	WBR	NBL	NBT	NBR	SBL	SBT	SBR
Lane Configurations												
Traffic Volume (veh/h)	64	114	69	55	123	63	90	286	12	67	530	58
Future Volume (veh/h)	64	114	69	55	123	63	90	286	12	67	530	58
Initial Q (Qb), veh	0	0	0	0	0	0	0	0	0	0	0	0
Ped-Bike Adj(A_pbT)	1.00		1.00	1.00		1.00	1.00		1.00	1.00		1.00
Parking Bus, Adj	1.00	1.00	1.00	1.00	1.00	1.00	1.00	1.00	1.00	1.00	1.00	1.00
Work Zone On Approach		No			No			No			No	
Adj Sat Flow, veh/h/ln	1641	1575	1641	1654	1588	1654	1695	1628	1695	1723	1654	1723
Adj Flow Rate, veh/h	70	125	76	60	135	69	99	314	13	74	582	64
Peak Hour Factor	0.91	0.91	0.91	0.91	0.91	0.91	0.91	0.91	0.91	0.91	0.91	0.91
Percent Heavy Veh, %	8	8	8	7	7	7	4	4	4	2	2	2
Cap, veh/h	248	165	101	248	175	89	294	726	30	553	674	74
Arrive On Green	0.05	0.18	0.18	0.05	0.18	0.18	0.06	0.47	0.47	0.06	0.46	0.46
Sat Flow, veh/h	1563	917	558	1576	991	506	1615	1552	64	1641	1464	161
Grp Volume(v), veh/h	70	0	201	60	0	204	99	0	327	74	0	646
Grp Sat Flow(s),veh/h/ln	1563	0	1475	1576	0	1497	1615	0	1616	1641	0	1625
Q Serve(g_s), s	2.4	0.0	8.5	2.0	0.0	8.5	2.0	0.0	8.8	1.5	0.0	23.3
Cycle Q Clear(g_c), s	2.4	0.0	8.5	2.0	0.0	8.5	2.0	0.0	8.8	1.5	0.0	23.3
Prop In Lane	1.00		0.38	1.00		0.34	1.00		0.04	1.00		0.10
Lane Grp Cap(c), veh/h	248	0	266	248	0	264	294	0	756	553	0	749
V/C Ratio(X)	0.28	0.00	0.76	0.24	0.00	0.77	0.34	0.00	0.43	0.13	0.00	0.86
Avail Cap(c_a), veh/h	878	0	1351	649	0	1372	339	0	1481	611	0	1489
HCM Platoon Ratio	1.00	1.00	1.00	1.00	1.00	1.00	1.00	1.00	1.00	1.00	1.00	1.00
Upstream Filter(I)	1.00	0.00	1.00	1.00	0.00	1.00	1.00	0.00	1.00	1.00	0.00	1.00
Uniform Delay (d), s/veh	20.9	0.0	25.5	20.9	0.0	25.7	12.6	0.0	11.6	8.6	0.0	15.8
Incr Delay (d2), s/veh	0.2	0.0	1.7	0.2	0.0	1.8	0.2	0.0	0.3	0.0	0.0	2.3
Initial Q Delay(d3),s/veh	0.0	0.0	0.0	0.0	0.0	0.0	0.0	0.0	0.0	0.0	0.0	0.0
%ile BackOfQ(90%),veh/ln	1.5	0.0	5.2	1.3	0.0	5.3	1.2	0.0	5.1	0.9	0.0	11.8
Unsig. Movement Delay, s/veh												
LnGrp Delay(d),s/veh	21.1	0.0	27.1	21.1	0.0	27.6	12.9	0.0	11.9	8.6	0.0	18.1
LnGrp LOS	C	A	C	C	A	C	B	A	B	A	A	B
Approach Vol, veh/h		271			264			426			720	
Approach Delay, s/veh		25.6			26.1			12.1			17.2	
Approach LOS		C			C			B			B	

Timer - Assigned Phs	1	2	3	4	5	6	7	8
Phs Duration (G+Y+Rc), s	7.2	35.2	6.3	16.8	6.7	35.6	6.6	16.5
Change Period (Y+Rc), s	3.0	5.0	3.0	5.0	3.0	5.0	3.0	5.0
Max Green Setting (Gmax), s	6.0	60.0	20.0	60.0	6.0	60.0	30.0	60.0
Max Q Clear Time (g_c+I1), s	4.0	25.3	4.0	10.5	3.5	10.8	4.4	10.5
Green Ext Time (p_c), s	0.1	4.9	0.1	1.0	0.0	2.8	0.2	1.0

Intersection Summary	
HCM 6th Ctrl Delay	18.6
HCM 6th LOS	B

Movement	EBL	EBT	EBR	WBL	WBT	WBR	NBL	NBT	NBR	SBL	SBT	SBR
Lane Configurations												
Traffic Volume (veh/h)	61	88	67	60	124	76	104	627	25	43	346	38
Future Volume (veh/h)	61	88	67	60	124	76	104	627	25	43	346	38
Initial Q (Qb), veh	0	0	0	0	0	0	0	0	0	0	0	0
Ped-Bike Adj(A_pbT)	1.00		1.00	1.00		1.00	1.00		1.00	1.00		1.00
Parking Bus, Adj	1.00	1.00	1.00	1.00	1.00	1.00	1.00	1.00	1.00	1.00	1.00	1.00
Work Zone On Approach		No			No			No			No	
Adj Sat Flow, veh/h/ln	1682	1614	1682	1695	1628	1695	1723	1654	1723	1709	1641	1709
Adj Flow Rate, veh/h	68	98	74	67	138	84	116	697	28	48	384	42
Peak Hour Factor	0.90	0.90	0.90	0.90	0.90	0.90	0.90	0.90	0.90	0.90	0.90	0.90
Percent Heavy Veh, %	5	5	5	4	4	4	2	2	2	3	3	3
Cap, veh/h	225	155	117	268	172	105	495	807	32	256	716	78
Arrive On Green	0.05	0.18	0.18	0.05	0.18	0.18	0.06	0.51	0.51	0.04	0.49	0.49
Sat Flow, veh/h	1602	854	645	1615	947	577	1641	1579	63	1628	1453	159
Grp Volume(v), veh/h	68	0	172	67	0	222	116	0	725	48	0	426
Grp Sat Flow(s),veh/h/ln	1602	0	1498	1615	0	1524	1641	0	1642	1628	0	1612
Q Serve(g_s), s	2.5	0.0	7.9	2.5	0.0	10.4	2.5	0.0	28.8	1.1	0.0	13.6
Cycle Q Clear(g_c), s	2.5	0.0	7.9	2.5	0.0	10.4	2.5	0.0	28.8	1.1	0.0	13.6
Prop In Lane	1.00		0.43	1.00		0.38	1.00		0.04	1.00		0.10
Lane Grp Cap(c), veh/h	225	0	272	268	0	277	495	0	840	256	0	794
V/C Ratio(X)	0.30	0.00	0.63	0.25	0.00	0.80	0.23	0.00	0.86	0.19	0.00	0.54
Avail Cap(c_a), veh/h	788	0	1205	620	0	1225	527	0	1321	318	0	1296
HCM Platoon Ratio	1.00	1.00	1.00	1.00	1.00	1.00	1.00	1.00	1.00	1.00	1.00	1.00
Upstream Filter(I)	1.00	0.00	1.00	1.00	0.00	1.00	1.00	0.00	1.00	1.00	0.00	1.00
Uniform Delay (d), s/veh	23.7	0.0	28.2	23.4	0.0	29.3	9.3	0.0	16.0	13.7	0.0	13.1
Incr Delay (d2), s/veh	0.3	0.0	0.9	0.2	0.0	2.1	0.1	0.0	3.1	0.1	0.0	0.4
Initial Q Delay(d3),s/veh	0.0	0.0	0.0	0.0	0.0	0.0	0.0	0.0	0.0	0.0	0.0	0.0
%ile BackOfQ(90%),veh/ln	1.7	0.0	5.0	1.7	0.0	6.4	1.5	0.0	14.5	0.6	0.0	7.4
Unsig. Movement Delay, s/veh												
LnGrp Delay(d),s/veh	24.0	0.0	29.1	23.6	0.0	31.3	9.4	0.0	19.1	13.9	0.0	13.5
LnGrp LOS	C	A	C	C	A	C	A	A	B	B	A	B
Approach Vol, veh/h		240			289			841			474	
Approach Delay, s/veh		27.7			29.5			17.8			13.5	
Approach LOS		C			C			B			B	

Timer - Assigned Phs	1	2	3	4	5	6	7	8
Phs Duration (G+Y+Rc), s	7.5	41.7	6.8	18.6	6.2	43.1	6.8	18.5
Change Period (Y+Rc), s	3.0	5.0	3.0	5.0	3.0	5.0	3.0	5.0
Max Green Setting (Gmax), s	6.0	60.0	20.0	60.0	6.0	60.0	30.0	60.0
Max Q Clear Time (g_c+I1), s	4.5	15.6	4.5	9.9	3.1	30.8	4.5	12.4
Green Ext Time (p_c), s	0.1	2.9	0.2	0.9	0.0	7.3	0.2	1.1

Intersection Summary	
HCM 6th Ctrl Delay	19.8
HCM 6th LOS	B

Lane Group	EBL	EBT	EBR	WBL	WBT	WBR	NBL	NBT	NBR	SBL	SBT	SBR
Lane Configurations												
Traffic Volume (vph)	10	7	21	74	2	56	11	611	41	49	1436	7
Future Volume (vph)	10	7	21	74	2	56	11	611	41	49	1436	7
Ideal Flow (vphpl)	1750	1750	1750	1750	1750	1750	1750	1785	1750	1750	1765	1750
Lane Width (ft)	12	16	12	11	12	12	11	12	12	11	12	12
Storage Length (ft)	0		0	60		0	80		100	130		0
Storage Lanes	0		0	1		0	1		1	1		0
Taper Length (ft)	25			75			75			75		
Lane Util. Factor	1.00	1.00	1.00	1.00	1.00	1.00	1.00	0.95	1.00	1.00	0.95	0.95
Frt		0.927			0.856				0.850		0.999	
Flt Protected		0.987		0.950			0.950			0.950		
Satd. Flow (prot)	0	1779	0	1448	1350	0	1488	3140	1377	1560	3253	0
Flt Permitted		0.906		0.856			0.088			0.335		
Satd. Flow (perm)	0	1633	0	1305	1350	0	138	3140	1377	550	3253	0
Right Turn on Red			No			No			No			No
Satd. Flow (RTOR)												
Link Speed (mph)		25			25			30			30	
Link Distance (ft)		243			383			1518			1538	
Travel Time (s)		6.6			10.4			34.5			35.0	
Peak Hour Factor	0.80	0.80	0.80	0.80	0.80	0.80	0.80	0.80	0.80	0.80	0.80	0.80
Growth Factor	100%	100%	100%	100%	100%	100%	100%	100%	62%	100%	100%	100%
Heavy Vehicles (%)	2%	2%	2%	11%	11%	11%	8%	8%	8%	3%	3%	3%
Adj. Flow (vph)	13	9	26	93	3	70	14	764	32	61	1795	9
Shared Lane Traffic (%)												
Lane Group Flow (vph)	0	48	0	93	73	0	14	764	32	61	1804	0
Enter Blocked Intersection	No	No	No	No	No	No	No	No	No	No	No	No
Lane Alignment	Left	Left	Right	Left	Left	Right	Left	Left	Right	Left	Left	Right
Median Width(ft)		11			11			11			11	
Link Offset(ft)		0			0			0			0	
Crosswalk Width(ft)		16			16			16			16	
Two way Left Turn Lane								Yes			Yes	
Headway Factor	1.11	0.95	1.11	1.16	1.11	1.11	1.16	1.08	1.11	1.16	1.10	1.11
Turning Speed (mph)	15		9	15		9	15		9	15		9
Number of Detectors	2	1		2	2		1	1	0	1	1	
Detector Template												
Leading Detector (ft)	98	30		106	106		30	146	0	30	146	
Trailing Detector (ft)	0	0		0	0		0	140	0	0	140	
Detector 1 Position(ft)	0	0		0	0		0	140	0	0	140	
Detector 1 Size(ft)	6	30		30	30		30	6	6	30	6	
Detector 1 Type	Cl+Ex	Cl+Ex		Cl+Ex	Cl+Ex		Cl+Ex	Cl+Ex	Cl+Ex	Cl+Ex	Cl+Ex	
Detector 1 Channel												
Detector 1 Extend (s)	0.0	0.0		0.0	0.0		0.0	0.0	0.0	0.0	0.0	
Detector 1 Queue (s)	0.0	0.0		0.0	0.0		0.0	0.0	0.0	0.0	0.0	
Detector 1 Delay (s)	0.0	0.0		0.0	0.0		0.0	0.0	0.0	0.0	0.0	
Detector 2 Position(ft)	92			100	100							
Detector 2 Size(ft)	6			6	6							
Detector 2 Type	Cl+Ex			Extend	Extend							
Detector 2 Channel												
Detector 2 Extend (s)	0.0			2.5	2.5							

Lane Group	EBL	EBT	EBR	WBL	WBT	WBR	NBL	NBT	NBR	SBL	SBT	SBR
Turn Type	Perm	NA		Perm	NA		pm+pt	NA	Perm	pm+pt	NA	
Protected Phases		4			8		1	6		5	2	
Permitted Phases	4			8			6		6	2		
Detector Phase	4	4		8	8		1	6	6	5	2	
Switch Phase												
Minimum Initial (s)	10.0	10.0		10.0	10.0		5.0	20.0	20.0	5.0	20.0	
Minimum Split (s)	44.0	44.0		44.0	44.0		8.0	29.0	29.0	8.0	29.0	
Total Split (s)	30.0	30.0		30.0	30.0		12.0	58.0	58.0	12.0	58.0	
Total Split (%)	30.0%	30.0%		30.0%	30.0%		12.0%	58.0%	58.0%	12.0%	58.0%	
Maximum Green (s)	25.0	25.0		25.0	25.0		9.0	53.0	53.0	9.0	53.0	
Yellow Time (s)	3.5	3.5		3.5	3.5		3.0	3.5	3.5	3.0	3.5	
All-Red Time (s)	1.5	1.5		1.5	1.5		0.0	1.5	1.5	0.0	1.5	
Lost Time Adjust (s)		0.0		0.0	0.0		0.0	0.0	0.0	0.0	0.0	
Total Lost Time (s)		5.0		5.0	5.0		3.0	5.0	5.0	3.0	5.0	
Lead/Lag							Lead	Lag	Lag	Lead	Lag	
Lead-Lag Optimize?							Yes	Yes	Yes	Yes	Yes	
Vehicle Extension (s)	1.5	1.5		1.5	1.5		1.5	5.0	5.0	1.5	5.0	
Minimum Gap (s)	1.0	1.0		1.0	1.0		1.0	2.0	2.0	1.0	2.0	
Time Before Reduce (s)	10.0	10.0		10.0	10.0		0.0	20.0	20.0	0.0	20.0	
Time To Reduce (s)	10.0	10.0		10.0	10.0		0.0	10.0	10.0	0.0	10.0	
Recall Mode	None	None		None	None		None	C-Max	C-Max	None	C-Max	
Walk Time (s)	13.0	13.0		13.0	13.0			8.0	8.0		8.0	
Flash Dont Walk (s)	26.0	26.0		26.0	26.0			16.0	16.0		16.0	
Pedestrian Calls (#/hr)	0	0		0	0			0	0		0	
Act Effct Green (s)		13.3		13.3	13.3		79.0	74.0	74.0	80.8	77.5	
Actuated g/C Ratio		0.13		0.13	0.13		0.79	0.74	0.74	0.81	0.78	
v/c Ratio		0.22		0.54	0.41		0.08	0.33	0.03	0.12	0.72	
Control Delay		39.7		51.2	45.5		3.2	4.0	3.1	0.5	3.1	
Queue Delay		0.0		0.0	0.0		0.0	0.0	0.0	0.0	0.0	
Total Delay		39.7		51.2	45.5		3.2	4.0	3.1	0.5	3.1	
LOS		D		D	D		A	A	A	A	A	
Approach Delay		39.7			48.7			3.9			3.0	
Approach LOS		D			D			A			A	
Queue Length 50th (ft)		28		57	44		1	24	2	0	2	
Queue Length 95th (ft)		51		88	72		m3	86	m6	m0	95	
Internal Link Dist (ft)		163			303			1438			1458	
Turn Bay Length (ft)				60			80		100	130		
Base Capacity (vph)		408		326	337		234	2324	1019	540	2521	
Starvation Cap Reductn		0		0	0		0	0	0	0	0	
Spillback Cap Reductn		0		0	0		0	0	0	0	0	
Storage Cap Reductn		0		0	0		0	0	0	0	0	
Reduced v/c Ratio		0.12		0.29	0.22		0.06	0.33	0.03	0.11	0.72	

Intersection Summary

Area Type: Other
Cycle Length: 100
Actuated Cycle Length: 100
Offset: 33 (33%), Referenced to phase 2:SBTL and 6:NBTL, Start of 1st Green
Natural Cycle: 125

Control Type: Actuated-Coordinated	
Maximum v/c Ratio: 0.72	
Intersection Signal Delay: 6.5	Intersection LOS: A
Intersection Capacity Utilization 63.7%	ICU Level of Service B
Analysis Period (min) 15	

m Volume for 95th percentile queue is metered by upstream signal.

Splits and Phases: 11: USH 53 (Rose St) & Gillette Street

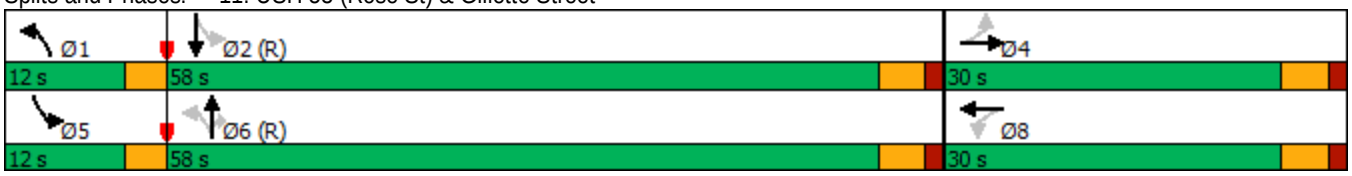

Lane Group	EBL	EBT	EBR	WBL	WBT	WBR	NBL	NBT	NBR	SBL	SBT	SBR
Lane Configurations												
Traffic Volume (vph)	26	0	21	92	5	78	23	1455	106	69	842	15
Future Volume (vph)	26	0	21	92	5	78	23	1455	106	69	842	15
Ideal Flow (vphpl)	1750	1750	1750	1750	1750	1750	1750	1785	1750	1750	1765	1750
Lane Width (ft)	12	16	12	11	12	12	11	12	12	11	12	12
Storage Length (ft)	0		0	60		0	80		100	130		0
Storage Lanes	0		0	1		0	1		1	1		0
Taper Length (ft)	25			75			75			75		
Lane Util. Factor	1.00	1.00	1.00	1.00	1.00	1.00	1.00	0.95	1.00	1.00	0.95	0.95
Frt		0.941			0.859				0.850		0.997	
Flt Protected		0.973		0.950			0.950			0.950		
Satd. Flow (prot)	0	1780	0	1448	1354	0	1488	3140	1377	1560	3246	0
Flt Permitted		0.797		0.794			0.234			0.065		
Satd. Flow (perm)	0	1458	0	1210	1354	0	367	3140	1377	107	3246	0
Right Turn on Red			No			No			No			No
Satd. Flow (RTOR)												
Link Speed (mph)		25			25			30			30	
Link Distance (ft)		243			383			1518			1538	
Travel Time (s)		6.6			10.4			34.5			35.0	
Peak Hour Factor	0.80	0.80	0.80	0.80	0.80	0.80	0.80	0.80	0.80	0.80	0.80	0.80
Growth Factor	100%	100%	100%	100%	100%	100%	100%	100%	62%	100%	100%	100%
Heavy Vehicles (%)	2%	2%	2%	11%	11%	11%	8%	8%	8%	3%	3%	3%
Adj. Flow (vph)	33	0	26	115	6	98	29	1819	82	86	1053	19
Shared Lane Traffic (%)												
Lane Group Flow (vph)	0	59	0	115	104	0	29	1819	82	86	1072	0
Enter Blocked Intersection	No	No	No	No	No	No	No	No	No	No	No	No
Lane Alignment	Left	Left	Right	Left	Left	Right	Left	Left	Right	Left	Left	Right
Median Width(ft)		11			11			11			11	
Link Offset(ft)		0			0			0			0	
Crosswalk Width(ft)		16			16			16			16	
Two way Left Turn Lane								Yes			Yes	
Headway Factor	1.11	0.95	1.11	1.16	1.11	1.11	1.16	1.08	1.11	1.16	1.10	1.11
Turning Speed (mph)	15		9	15		9	15		9	15		9
Number of Detectors	2	1		2	2		1	1	0	1	1	
Detector Template												
Leading Detector (ft)	98	30		106	106		30	146	0	30	146	
Trailing Detector (ft)	0	0		0	0		0	140	0	0	140	
Detector 1 Position(ft)	0	0		0	0		0	140	0	0	140	
Detector 1 Size(ft)	6	30		30	30		30	6	6	30	6	
Detector 1 Type	Cl+Ex	Cl+Ex		Cl+Ex	Cl+Ex		Cl+Ex	Cl+Ex	Cl+Ex	Cl+Ex	Cl+Ex	
Detector 1 Channel												
Detector 1 Extend (s)	0.0	0.0		0.0	0.0		0.0	0.0	0.0	0.0	0.0	
Detector 1 Queue (s)	0.0	0.0		0.0	0.0		0.0	0.0	0.0	0.0	0.0	
Detector 1 Delay (s)	0.0	0.0		0.0	0.0		0.0	0.0	0.0	0.0	0.0	
Detector 2 Position(ft)	92			100	100							
Detector 2 Size(ft)	6			6	6							
Detector 2 Type	Cl+Ex			Extend	Extend							
Detector 2 Channel												
Detector 2 Extend (s)	0.0			2.5	2.5							

Lane Group	EBL	EBT	EBR	WBL	WBT	WBR	NBL	NBT	NBR	SBL	SBT	SBR
Turn Type	Perm	NA		Perm	NA		pm+pt	NA	Perm	pm+pt	NA	
Protected Phases		4			8		1	6		5	2	
Permitted Phases	4			8			6		6	2		
Detector Phase	4	4		8	8		1	6	6	5	2	
Switch Phase												
Minimum Initial (s)	10.0	10.0		10.0	10.0		5.0	20.0	20.0	5.0	20.0	
Minimum Split (s)	44.0	44.0		44.0	44.0		8.0	29.0	29.0	8.0	29.0	
Total Split (s)	44.0	44.0		44.0	44.0		11.0	37.0	37.0	11.0	37.0	
Total Split (%)	47.8%	47.8%		47.8%	47.8%		12.0%	40.2%	40.2%	12.0%	40.2%	
Maximum Green (s)	39.0	39.0		39.0	39.0		8.0	32.0	32.0	8.0	32.0	
Yellow Time (s)	3.5	3.5		3.5	3.5		3.0	3.5	3.5	3.0	3.5	
All-Red Time (s)	1.5	1.5		1.5	1.5		0.0	1.5	1.5	0.0	1.5	
Lost Time Adjust (s)		0.0		0.0	0.0		0.0	0.0	0.0	0.0	0.0	
Total Lost Time (s)		5.0		5.0	5.0		3.0	5.0	5.0	3.0	5.0	
Lead/Lag							Lead	Lag	Lag	Lead	Lag	
Lead-Lag Optimize?							Yes	Yes	Yes	Yes	Yes	
Vehicle Extension (s)	1.5	1.5		1.5	1.5		1.5	5.0	5.0	1.5	5.0	
Minimum Gap (s)	1.0	1.0		1.0	1.0		1.0	2.0	2.0	1.0	2.0	
Time Before Reduce (s)	10.0	10.0		10.0	10.0		0.0	20.0	20.0	0.0	20.0	
Time To Reduce (s)	10.0	10.0		10.0	10.0		0.0	10.0	10.0	0.0	10.0	
Recall Mode	None	None		None	None		None	C-Max	C-Max	None	C-Max	
Walk Time (s)	13.0	13.0		13.0	13.0			8.0	8.0		8.0	
Flash Dont Walk (s)	26.0	26.0		26.0	26.0			16.0	16.0		16.0	
Pedestrian Calls (#/hr)	0	0		0	0			0	0		0	
Act Effct Green (s)		14.6		14.6	14.6		66.4	60.3	60.3	68.2	62.5	
Actuated g/C Ratio		0.16		0.16	0.16		0.72	0.66	0.66	0.74	0.68	
v/c Ratio		0.26		0.60	0.49		0.09	0.88	0.09	0.51	0.49	
Control Delay		34.8		48.3	41.8		1.7	16.9	2.6	27.8	7.2	
Queue Delay		0.0		0.0	0.0		0.0	0.0	0.0	0.0	0.0	
Total Delay		34.8		48.3	41.8		1.7	16.9	2.6	27.8	7.2	
LOS		C		D	D		A	B	A	C	A	
Approach Delay		34.8			45.2			16.0			8.7	
Approach LOS		C			D			B			A	
Queue Length 50th (ft)		31		64	57		1	548	5	8	104	
Queue Length 95th (ft)		53		95	85		m2	#627	m7	35	199	
Internal Link Dist (ft)		163			303			1438			1458	
Turn Bay Length (ft)				60			80		100	130		
Base Capacity (vph)		618		512	573		371	2059	903	206	2206	
Starvation Cap Reductn		0		0	0		0	0	0	0	0	
Spillback Cap Reductn		0		0	0		0	0	0	0	0	
Storage Cap Reductn		0		0	0		0	0	0	0	0	
Reduced v/c Ratio		0.10		0.22	0.18		0.08	0.88	0.09	0.42	0.49	

Intersection Summary

Area Type: Other
Cycle Length: 92
Actuated Cycle Length: 92
Offset: 40 (43%), Referenced to phase 2:SBTL and 6:NBTL, Start of 1st Green
Natural Cycle: 125

Control Type: Actuated-Coordinated	
Maximum v/c Ratio: 0.88	
Intersection Signal Delay: 15.7	Intersection LOS: B
Intersection Capacity Utilization 68.3%	ICU Level of Service C
Analysis Period (min) 15	

95th percentile volume exceeds capacity, queue may be longer.
Queue shown is maximum after two cycles.
m Volume for 95th percentile queue is metered by upstream signal.

Splits and Phases: 11: USH 53 (Rose St) & Gillette Street

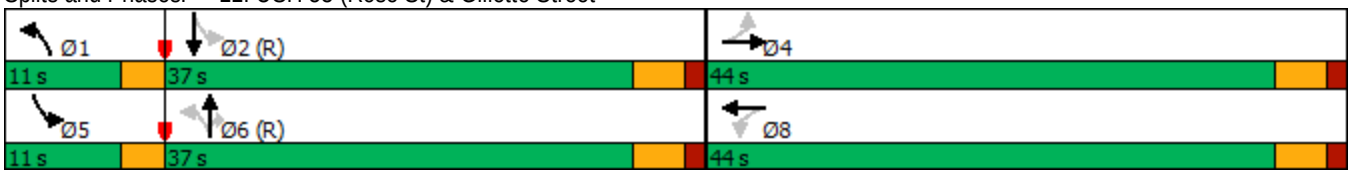

Movement	EBL	EBT	EBR	WBL	WBT	WBR	NBL	NBT	NBR	SBL	SBT	SBR
Lane Configurations												
Traffic Volume (veh/h)	55	274	564	50	182	52	164	519	24	92	1211	14
Future Volume (veh/h)	55	274	564	50	182	52	164	519	24	92	1211	14
Initial Q (Qb), veh	0	0	0	0	0	0	0	0	0	0	0	0
Ped-Bike Adj(A_pbT)	1.00		1.00	1.00		1.00	1.00		1.00	1.00		1.00
Parking Bus, Adj	1.00	1.00	1.00	1.00	1.00	1.00	1.00	1.00	1.00	1.00	1.00	1.00
Work Zone On Approach		No			No			No			No	
Adj Sat Flow, veh/h/ln	1723	1737	1723	1723	1723	1723	1723	1737	1723	1723	1723	1723
Adj Flow Rate, veh/h	60	301	384	55	200	57	180	570	26	101	1331	15
Peak Hour Factor	0.91	0.91	0.91	0.91	0.91	0.91	0.91	0.91	0.91	0.91	0.91	0.91
Percent Heavy Veh, %	2	2	2	2	2	2	2	2	2	2	2	2
Cap, veh/h	225	469	394	161	348	99	272	1778	81	524	1763	20
Arrive On Green	0.27	0.27	0.27	0.27	0.27	0.27	0.07	0.55	0.55	0.05	0.53	0.53
Sat Flow, veh/h	1123	1737	1460	757	1289	367	1641	3215	146	1641	3315	37
Grp Volume(v), veh/h	60	301	384	55	0	257	180	292	304	101	657	689
Grp Sat Flow(s),veh/h/ln	1123	1737	1460	757	0	1657	1641	1651	1711	1641	1637	1716
Q Serve(g_s), s	4.9	15.3	26.1	6.9	0.0	13.4	4.8	9.6	9.6	2.8	31.4	31.4
Cycle Q Clear(g_c), s	18.3	15.3	26.1	22.2	0.0	13.4	4.8	9.6	9.6	2.8	31.4	31.4
Prop In Lane	1.00		1.00	1.00		0.22	1.00		0.09	1.00		0.02
Lane Grp Cap(c), veh/h	225	469	394	161	0	447	272	913	946	524	870	913
V/C Ratio(X)	0.27	0.64	0.97	0.34	0.00	0.57	0.66	0.32	0.32	0.19	0.75	0.76
Avail Cap(c_a), veh/h	225	469	394	161	0	447	341	913	946	595	870	913
HCM Platoon Ratio	1.00	1.00	1.00	1.00	1.00	1.00	1.00	1.00	1.00	1.00	1.00	1.00
Upstream Filter(I)	1.00	1.00	1.00	1.00	0.00	1.00	1.00	1.00	1.00	1.00	1.00	1.00
Uniform Delay (d), s/veh	39.4	32.2	36.2	42.0	0.0	31.5	17.9	12.1	12.1	9.8	18.3	18.3
Incr Delay (d2), s/veh	0.2	2.3	38.2	0.5	0.0	1.2	1.7	0.9	0.9	0.1	6.0	5.8
Initial Q Delay(d3),s/veh	0.0	0.0	0.0	0.0	0.0	0.0	0.0	0.0	0.0	0.0	0.0	0.0
%ile BackOfQ(90%),veh/ln	2.4	9.9	17.9	2.3	0.0	8.4	3.8	6.0	6.2	1.7	17.1	17.8
Unsig. Movement Delay, s/veh												
LnGrp Delay(d),s/veh	39.7	34.5	74.4	42.5	0.0	32.7	19.6	13.1	13.0	9.8	24.3	24.1
LnGrp LOS	D	C	E	D	A	C	B	B	B	A	C	C
Approach Vol, veh/h		745			312			776			1447	
Approach Delay, s/veh		55.5			34.4			14.6			23.2	
Approach LOS		E			C			B			C	

Timer - Assigned Phs	1	2		4	5	6		8				
Phs Duration (G+Y+Rc), s	9.8	58.2		32.0	7.7	60.3		32.0				
Change Period (Y+Rc), s	3.0	5.0		5.0	3.0	5.0		5.0				
Max Green Setting (Gmax), s	11.0	49.0		27.0	9.0	51.0		27.0				
Max Q Clear Time (g_c+I1), s	6.8	0.0		28.1	4.8	11.6		24.2				
Green Ext Time (p_c), s	0.1	0.0		0.0	0.0	10.4		0.3				

Intersection Summary		
HCM 6th Ctrl Delay		29.6
HCM 6th LOS		C

Movement	EBL	EBT	EBR	WBL	WBT	WBR	NBL	NBT	NBR	SBL	SBT	SBR
Lane Configurations												
Traffic Volume (veh/h)	80	163	78	70	217	81	220	1352	55	163	712	49
Future Volume (veh/h)	80	163	78	70	217	81	220	1352	55	163	712	49
Initial Q (Qb), veh	0	0	0	0	0	0	0	0	0	0	0	0
Ped-Bike Adj(A_pbT)	1.00		1.00	1.00		1.00	1.00		1.00	1.00		1.00
Parking Bus, Adj	1.00	1.00	1.00	1.00	1.00	1.00	1.00	1.00	1.00	1.00	1.00	1.00
Work Zone On Approach		No			No			No			No	
Adj Sat Flow, veh/h/ln	1723	1737	1723	1723	1723	1723	1723	1737	1723	1723	1723	1723
Adj Flow Rate, veh/h	87	177	53	76	236	88	239	1470	60	177	774	53
Peak Hour Factor	0.92	0.92	0.92	0.92	0.92	0.92	0.92	0.92	0.92	0.92	0.92	0.92
Percent Heavy Veh, %	2	2	2	2	2	2	2	2	2	2	2	2
Cap, veh/h	189	489	411	309	337	126	439	1621	66	231	1501	103
Arrive On Green	0.28	0.28	0.28	0.28	0.28	0.28	0.09	0.50	0.50	0.08	0.48	0.48
Sat Flow, veh/h	1056	1737	1460	1151	1196	446	1641	3233	132	1641	3108	213
Grp Volume(v), veh/h	87	177	53	76	0	324	239	749	781	177	407	420
Grp Sat Flow(s),veh/h/ln	1056	1737	1460	1151	0	1642	1641	1651	1714	1641	1637	1684
Q Serve(g_s), s	7.4	7.5	2.5	5.2	0.0	16.2	6.5	38.1	38.4	4.9	15.8	15.8
Cycle Q Clear(g_c), s	23.6	7.5	2.5	12.7	0.0	16.2	6.5	38.1	38.4	4.9	15.8	15.8
Prop In Lane	1.00		1.00	1.00		0.27	1.00		0.08	1.00		0.13
Lane Grp Cap(c), veh/h	189	489	411	309	0	463	439	828	859	231	790	813
V/C Ratio(X)	0.46	0.36	0.13	0.25	0.00	0.70	0.54	0.91	0.91	0.77	0.52	0.52
Avail Cap(c_a), veh/h	225	548	460	347	0	518	588	828	859	410	790	813
HCM Platoon Ratio	1.00	1.00	1.00	1.00	1.00	1.00	1.00	1.00	1.00	1.00	1.00	1.00
Upstream Filter(I)	1.00	1.00	1.00	1.00	0.00	1.00	1.00	1.00	1.00	1.00	1.00	1.00
Uniform Delay (d), s/veh	40.1	26.4	24.6	31.5	0.0	29.6	11.6	20.9	21.0	20.2	16.4	16.4
Incr Delay (d2), s/veh	0.6	0.2	0.1	0.2	0.0	2.8	0.4	15.3	15.3	2.0	2.4	2.3
Initial Q Delay(d3),s/veh	0.0	0.0	0.0	0.0	0.0	0.0	0.0	0.0	0.0	0.0	0.0	0.0
%ile BackOfQ(90%),veh/ln	3.5	5.3	1.5	2.6	0.0	9.9	4.0	22.3	23.2	3.2	9.3	9.5
Unsig. Movement Delay, s/veh												
LnGrp Delay(d),s/veh	40.8	26.6	24.7	31.7	0.0	32.3	12.0	36.2	36.3	22.2	18.8	18.7
LnGrp LOS	D	C	C	C	A	C	B	D	D	C	B	B
Approach Vol, veh/h		317			400			1769			1004	
Approach Delay, s/veh		30.2			32.2			33.0			19.4	
Approach LOS		C			C			C			B	

Timer - Assigned Phs	1	2		4	5	6		8
Phs Duration (G+Y+Rc), s	11.7	49.4		30.9	10.0	51.1		30.9
Change Period (Y+Rc), s	3.0	5.0		5.0	3.0	5.0		5.0
Max Green Setting (Gmax), s	17.0	33.0		29.0	17.0	33.0		29.0
Max Q Clear Time (g_c+I1), s	8.5	0.0		25.6	6.9	40.4		18.2
Green Ext Time (p_c), s	0.2	0.0		0.3	0.1	0.0		0.8

Intersection Summary	
HCM 6th Ctrl Delay	28.7
HCM 6th LOS	C

Movement	EBL	EBT	EBR	WBL	WBT	WBR	NBL	NBT	NBR	SBL	SBT	SBR
Lane Configurations												
Traffic Volume (veh/h)	18	152	295	119	70	4	198	353	196	1	654	31
Future Volume (veh/h)	18	152	295	119	70	4	198	353	196	1	654	31
Initial Q (Qb), veh	0	0	0	0	0	0	0	0	0	0	0	0
Ped-Bike Adj(A_pbT)	1.00		1.00	1.00		1.00	1.00		1.00	1.00		1.00
Parking Bus, Adj	1.00	1.00	1.00	1.00	1.00	1.00	1.00	1.00	1.00	1.00	1.00	1.00
Work Zone On Approach		No			No			No			No	
Adj Sat Flow, veh/h/ln	1695	1695	1628	1682	1682	1614	1695	1695	1695	1636	1636	1636
Adj Flow Rate, veh/h	21	177	213	138	81	3	230	410	141	1	760	36
Peak Hour Factor	0.86	0.86	0.86	0.86	0.86	0.86	0.86	0.86	0.86	0.86	0.86	0.86
Percent Heavy Veh, %	4	4	4	5	5	5	4	4	4	2	2	2
Cap, veh/h	36	300	274	168	99	224	283	1523	680	40	1140	54
Arrive On Green	0.20	0.20	0.20	0.16	0.16	0.16	0.05	0.47	0.47	0.39	0.39	0.39
Sat Flow, veh/h	179	1508	1379	1027	603	1368	1615	3221	1437	0	2959	140
Grp Volume(v), veh/h	198	0	213	219	0	3	230	410	141	421	0	376
Grp Sat Flow(s),veh/h/ln	1686	0	1379	1630	0	1368	1615	1611	1437	1635	0	1463
Q Serve(g_s), s	9.7	0.0	13.4	11.8	0.0	0.2	5.0	7.0	5.2	0.0	0.0	19.4
Cycle Q Clear(g_c), s	9.7	0.0	13.4	11.8	0.0	0.2	5.0	7.0	5.2	19.4	0.0	19.4
Prop In Lane	0.11		1.00	0.63		1.00	1.00		1.00	0.00		0.10
Lane Grp Cap(c), veh/h	336	0	274	267	0	224	283	1523	680	670	0	564
V/C Ratio(X)	0.59	0.00	0.78	0.82	0.00	0.01	0.81	0.27	0.21	0.63	0.00	0.67
Avail Cap(c_a), veh/h	647	0	529	625	0	525	283	1588	708	845	0	721
HCM Platoon Ratio	1.00	1.00	1.00	1.00	1.00	1.00	1.00	1.00	1.00	1.00	1.00	1.00
Upstream Filter(I)	1.00	0.00	1.00	1.00	0.00	1.00	1.00	1.00	1.00	1.00	0.00	1.00
Uniform Delay (d), s/veh	33.2	0.0	34.6	36.9	0.0	32.0	26.4	14.5	14.1	23.2	0.0	23.2
Incr Delay (d2), s/veh	1.7	0.0	4.7	6.2	0.0	0.0	16.6	0.2	0.3	2.1	0.0	3.1
Initial Q Delay(d3),s/veh	0.0	0.0	0.0	0.0	0.0	0.0	0.0	0.0	0.0	0.0	0.0	0.0
%ile BackOfQ(90%),veh/ln	6.7	0.0	7.6	8.1	0.0	0.1	6.9	4.5	3.1	11.3	0.0	10.4
Unsig. Movement Delay, s/veh												
LnGrp Delay(d),s/veh	34.8	0.0	39.3	43.1	0.0	32.0	43.1	14.7	14.4	25.3	0.0	26.3
LnGrp LOS	C	A	D	D	A	C	D	B	B	C	A	C
Approach Vol, veh/h		411			222			781			797	
Approach Delay, s/veh		37.2			42.9			23.0			25.8	
Approach LOS		D			D			C			C	

Timer - Assigned Phs	1	2		4		6		8
Phs Duration (G+Y+Rc), s	8.0	40.2		20.0		48.2		23.2
Change Period (Y+Rc), s	3.0	5.0		5.0		5.0		5.0
Max Green Setting (Gmax), s	5.0	45.0		35.0		45.0		35.0
Max Q Clear Time (g_c+I1), s	7.0	21.4		13.8		9.0		15.4
Green Ext Time (p_c), s	0.0	13.7		1.2		6.5		2.8

Intersection Summary	
HCM 6th Ctrl Delay	28.6
HCM 6th LOS	C

Movement	EBL	EBT	EBR	WBL	WBT	WBR	NBL	NBT	NBR	SBL	SBT	SBR
Lane Configurations												
Traffic Volume (veh/h)	28	86	229	91	74	11	331	708	197	2	411	52
Future Volume (veh/h)	28	86	229	91	74	11	331	708	197	2	411	52
Initial Q (Qb), veh	0	0	0	0	0	0	0	0	0	0	0	0
Ped-Bike Adj(A_pbT)	1.00		1.00	1.00		1.00	1.00		1.00	1.00		1.00
Parking Bus, Adj	1.00	1.00	1.00	1.00	1.00	1.00	1.00	1.00	1.00	1.00	1.00	1.00
Work Zone On Approach		No			No			No			No	
Adj Sat Flow, veh/h/ln	1723	1723	1654	1723	1723	1654	1709	1709	1709	1622	1622	1622
Adj Flow Rate, veh/h	31	95	156	100	81	7	364	778	134	2	452	57
Peak Hour Factor	0.91	0.91	0.91	0.91	0.91	0.91	0.91	0.91	0.91	0.91	0.91	0.91
Percent Heavy Veh, %	2	2	2	2	2	2	3	3	3	3	3	3
Cap, veh/h	69	212	232	138	112	209	408	1475	658	57	891	111
Arrive On Green	0.17	0.17	0.17	0.15	0.15	0.15	0.08	0.45	0.45	0.33	0.33	0.33
Sat Flow, veh/h	419	1283	1402	926	750	1402	1628	3247	1448	2	2695	337
Grp Volume(v), veh/h	126	0	156	181	0	7	364	778	134	272	0	239
Grp Sat Flow(s),veh/h/ln	1702	0	1402	1676	0	1402	1628	1624	1448	1619	0	1416
Q Serve(g_s), s	4.3	0.0	6.8	6.7	0.0	0.3	5.0	11.1	3.6	0.0	0.0	8.8
Cycle Q Clear(g_c), s	4.3	0.0	6.8	6.7	0.0	0.3	5.0	11.1	3.6	8.7	0.0	8.8
Prop In Lane	0.25		1.00	0.55		1.00	1.00		1.00	0.01		0.24
Lane Grp Cap(c), veh/h	281	0	232	250	0	209	408	1475	658	591	0	468
V/C Ratio(X)	0.45	0.00	0.67	0.72	0.00	0.03	0.89	0.53	0.20	0.46	0.00	0.51
Avail Cap(c_a), veh/h	919	0	757	905	0	757	408	2255	1006	1173	0	983
HCM Platoon Ratio	1.00	1.00	1.00	1.00	1.00	1.00	1.00	1.00	1.00	1.00	1.00	1.00
Upstream Filter(I)	1.00	0.00	1.00	1.00	0.00	1.00	1.00	1.00	1.00	1.00	0.00	1.00
Uniform Delay (d), s/veh	24.4	0.0	25.4	26.3	0.0	23.6	20.5	12.7	10.6	17.4	0.0	17.5
Incr Delay (d2), s/veh	1.1	0.0	3.4	4.0	0.0	0.1	21.2	0.6	0.3	1.2	0.0	1.8
Initial Q Delay(d3),s/veh	0.0	0.0	0.0	0.0	0.0	0.0	0.0	0.0	0.0	0.0	0.0	0.0
%ile BackOfQ(90%),veh/ln	3.2	0.0	4.3	5.0	0.0	0.2	8.7	6.1	1.9	5.6	0.0	5.1
Unsig. Movement Delay, s/veh												
LnGrp Delay(d),s/veh	25.5	0.0	28.8	30.3	0.0	23.6	41.6	13.3	11.0	18.6	0.0	19.3
LnGrp LOS	C	A	C	C	A	C	D	B	B	B	A	B
Approach Vol, veh/h		282			188			1276			511	
Approach Delay, s/veh		27.3			30.0			21.2			19.0	
Approach LOS		C			C			C			B	

Timer - Assigned Phs	1	2		4		6		8
Phs Duration (G+Y+Rc), s	8.0	26.4		14.7		34.4		15.7
Change Period (Y+Rc), s	3.0	5.0		5.0		5.0		5.0
Max Green Setting (Gmax), s	5.0	45.0		35.0		45.0		35.0
Max Q Clear Time (g_c+I1), s	7.0	10.8		8.7		13.1		8.8
Green Ext Time (p_c), s	0.0	10.6		1.0		14.8		2.0

Intersection Summary			
HCM 6th Ctrl Delay			22.2
HCM 6th LOS			C

Movement	EBL	EBT	EBR	WBL	WBT	WBR	NBL	NBT	NBR	SBL	SBT	SBR
Lane Configurations												
Traffic Volume (veh/h)	10	15	0	0	7	14	15	638	36	0	0	0
Future Volume (veh/h)	10	15	0	0	7	14	15	638	36	0	0	0
Initial Q (Qb), veh	0	0	0	0	0	0	0	0	0			
Ped-Bike Adj(A_pbT)	1.00		1.00	1.00		1.00	1.00		1.00			
Parking Bus, Adj	1.00	1.00	1.00	1.00	1.00	1.00	1.00	1.00	1.00			
Work Zone On Approach		No			No			No				
Adj Sat Flow, veh/h/ln	1723	1654	0	0	1654	1654	1723	1723	1723			
Adj Flow Rate, veh/h	11	16	0	0	8	9	16	693	39			
Peak Hour Factor	0.92	0.92	0.92	0.92	0.92	0.92	0.92	0.92	0.92			
Percent Heavy Veh, %	2	2	0	0	2	2	2	2	2			
Cap, veh/h	284	83	0	0	83	71	43	1931	114			
Arrive On Green	0.05	0.05	0.00	0.00	0.05	0.05	0.61	0.61	0.61			
Sat Flow, veh/h	1396	1654	0	0	1654	1402	70	3152	186			
Grp Volume(v), veh/h	11	16	0	0	8	9	395	0	353			
Grp Sat Flow(s),veh/h/ln	1396	1654	0	0	1654	1402	1719	0	1689			
Q Serve(g_s), s	0.2	0.3	0.0	0.0	0.2	0.2	3.8	0.0	3.3			
Cycle Q Clear(g_c), s	0.4	0.3	0.0	0.0	0.2	0.2	3.8	0.0	3.3			
Prop In Lane	1.00		0.00	0.00		1.00	0.04		0.11			
Lane Grp Cap(c), veh/h	284	83	0	0	83	71	1053	0	1035			
V/C Ratio(X)	0.04	0.19	0.00	0.00	0.10	0.13	0.37	0.00	0.34			
Avail Cap(c_a), veh/h	1497	1520	0	0	1520	1288	1527	0	1501			
HCM Platoon Ratio	1.00	1.00	1.00	1.00	1.00	1.00	1.00	1.00	1.00			
Upstream Filter(I)	1.00	1.00	0.00	0.00	1.00	1.00	1.00	0.00	1.00			
Uniform Delay (d), s/veh	15.0	14.9	0.0	0.0	14.8	14.8	3.2	0.0	3.1			
Incr Delay (d2), s/veh	0.1	1.1	0.0	0.0	0.5	0.8	0.2	0.0	0.2			
Initial Q Delay(d3),s/veh	0.0	0.0	0.0	0.0	0.0	0.0	0.0	0.0	0.0			
%ile BackOfQ(90%),veh/ln	0.1	0.2	0.0	0.0	0.1	0.1	0.7	0.0	0.6			
Unsig. Movement Delay, s/veh												
LnGrp Delay(d),s/veh	15.0	16.0	0.0	0.0	15.3	15.6	3.4	0.0	3.3			
LnGrp LOS	B	B	A	A	B	B	A	A	A			
Approach Vol, veh/h		27			17			748				
Approach Delay, s/veh		15.6			15.5			3.3				
Approach LOS		B			B			A				

Timer - Assigned Phs		2		4				8				
Phs Duration (G+Y+Rc), s		26.0		6.6				6.6				
Change Period (Y+Rc), s		6.0		5.0				5.0				
Max Green Setting (Gmax), s		29.0		30.0				30.0				
Max Q Clear Time (g_c+I1), s		5.8		2.4				2.2				
Green Ext Time (p_c), s		7.1		0.1				0.0				

Intersection Summary	
HCM 6th Ctrl Delay	4.0
HCM 6th LOS	A

Notes

User approved pedestrian interval to be less than phase max green.

Movement	EBL	EBT	EBR	WBL	WBT	WBR	NBL	NBT	NBR	SBL	SBT	SBR
Lane Configurations												
Traffic Volume (veh/h)	16	16	0	0	47	48	13	1588	27	0	0	0
Future Volume (veh/h)	16	16	0	0	47	48	13	1588	27	0	0	0
Initial Q (Qb), veh	0	0	0	0	0	0	0	0	0			
Ped-Bike Adj(A_pbT)	1.00		1.00	1.00		1.00	1.00		1.00			
Parking Bus, Adj	1.00	1.00	1.00	1.00	1.00	1.00	1.00	1.00	1.00			
Work Zone On Approach		No			No			No				
Adj Sat Flow, veh/h/ln	1723	1654	0	0	1654	1654	1723	1723	1723			
Adj Flow Rate, veh/h	17	17	0	0	51	32	14	1726	29			
Peak Hour Factor	0.92	0.92	0.92	0.92	0.92	0.92	0.92	0.92	0.92			
Percent Heavy Veh, %	2	2	0	0	2	2	2	2	2			
Cap, veh/h	120	102	0	0	102	86	21	2742	48			
Arrive On Green	0.06	0.06	0.00	0.00	0.06	0.06	0.82	0.82	0.82			
Sat Flow, veh/h	1315	1654	0	0	1654	1402	26	3349	59			
Grp Volume(v), veh/h	17	17	0	0	51	32	927	0	842			
Grp Sat Flow(s),veh/h/ln	1315	1654	0	0	1654	1402	1721	0	1712			
Q Serve(g_s), s	1.2	0.9	0.0	0.0	2.7	2.0	19.5	0.0	16.1			
Cycle Q Clear(g_c), s	3.9	0.9	0.0	0.0	2.7	2.0	19.5	0.0	16.1			
Prop In Lane	1.00		0.00	0.00		1.00	0.02		0.03			
Lane Grp Cap(c), veh/h	120	102	0	0	102	86	1409	0	1402			
V/C Ratio(X)	0.14	0.17	0.00	0.00	0.50	0.37	0.66	0.00	0.60			
Avail Cap(c_a), veh/h	425	485	0	0	485	411	1409	0	1402			
HCM Platoon Ratio	1.00	1.00	1.00	1.00	1.00	1.00	1.00	1.00	1.00			
Upstream Filter(I)	1.00	1.00	0.00	0.00	1.00	1.00	1.00	0.00	1.00			
Uniform Delay (d), s/veh	43.7	40.9	0.0	0.0	41.8	41.4	3.3	0.0	3.0			
Incr Delay (d2), s/veh	0.5	0.8	0.0	0.0	3.7	2.6	2.4	0.0	1.9			
Initial Q Delay(d3),s/veh	0.0	0.0	0.0	0.0	0.0	0.0	0.0	0.0	0.0			
%ile BackOfQ(90%),veh/ln	0.7	0.7	0.0	0.0	2.2	1.4	7.1	0.0	6.1			
Unsig. Movement Delay, s/veh												
LnGrp Delay(d),s/veh	44.2	41.7	0.0	0.0	45.5	44.1	5.7	0.0	4.9			
LnGrp LOS	D	D	A	A	D	D	A	A	A			
Approach Vol, veh/h		34			83			1769				
Approach Delay, s/veh		42.9			45.0			5.3				
Approach LOS		D			D			A				

Timer - Assigned Phs		2		4				8				
Phs Duration (G+Y+Rc), s		81.3		10.7				10.7				
Change Period (Y+Rc), s		6.0		5.0				5.0				
Max Green Setting (Gmax), s		54.0		27.0				27.0				
Max Q Clear Time (g_c+I1), s		21.5		5.9				4.7				
Green Ext Time (p_c), s		24.2		0.1				0.3				

Intersection Summary												
HCM 6th Ctrl Delay			7.7									
HCM 6th LOS			A									

Movement	WBL	WBR	NBT	NBR	SBL	SBT
Lane Configurations						
Traffic Volume (veh/h)	289	48	719	184	34	1041
Future Volume (veh/h)	289	48	719	184	34	1041
Initial Q (Qb), veh	0	0	0	0	0	0
Ped-Bike Adj(A_pbT)	1.00	1.00		1.00	1.00	
Parking Bus, Adj	1.00	1.00	1.00	1.00	1.00	1.00
Work Zone On Approach	No		No			No
Adj Sat Flow, veh/h/ln	1513	1513	1609	1609	1622	1622
Adj Flow Rate, veh/h	375	0	808	128	38	1170
Peak Hour Factor	0.89	0.89	0.89	0.89	0.89	0.89
Percent Heavy Veh, %	11	11	4	4	3	3
Cap, veh/h	556	247	1775	1055	405	2040
Arrive On Green	0.19	0.00	0.58	0.58	0.04	0.66
Sat Flow, veh/h	2882	1282	3137	1363	1545	3163
Grp Volume(v), veh/h	375	0	808	128	38	1170
Grp Sat Flow(s),veh/h/ln	1441	1282	1528	1363	1545	1541
Q Serve(g_s), s	8.3	0.0	10.4	1.6	0.6	14.2
Cycle Q Clear(g_c), s	8.3	0.0	10.4	1.6	0.6	14.2
Prop In Lane	1.00	1.00		1.00	1.00	
Lane Grp Cap(c), veh/h	556	247	1775	1055	405	2040
V/C Ratio(X)	0.67	0.00	0.46	0.12	0.09	0.57
Avail Cap(c_a), veh/h	1465	652	2884	1550	796	2909
HCM Platoon Ratio	1.00	1.00	1.00	1.00	1.00	1.00
Upstream Filter(I)	1.00	0.00	1.00	1.00	1.00	1.00
Uniform Delay (d), s/veh	25.8	0.0	8.2	1.9	5.6	6.3
Incr Delay (d2), s/veh	1.4	0.0	0.4	0.1	0.0	0.5
Initial Q Delay(d3),s/veh	0.0	0.0	0.0	0.0	0.0	0.0
%ile BackOfQ(90%),veh/ln	5.0	0.0	5.1	1.4	0.3	5.9
Unsig. Movement Delay, s/veh						
LnGrp Delay(d),s/veh	27.2	0.0	8.6	2.1	5.6	6.9
LnGrp LOS	C	A	A	A	A	A
Approach Vol, veh/h	375		936			1208
Approach Delay, s/veh	27.2		7.7			6.9
Approach LOS	C		A			A

Timer - Assigned Phs		2		4	5	6
Phs Duration (G+Y+Rc), s		50.6		18.3	5.6	45.0
Change Period (Y+Rc), s		5.0		5.0	3.0	5.0
Max Green Setting (Gmax), s		65.0		35.0	20.0	65.0
Max Q Clear Time (g_c+I1), s		16.2		10.3	2.6	12.4
Green Ext Time (p_c), s		28.2		3.0	0.0	21.3

Intersection Summary	
HCM 6th Ctrl Delay	10.2
HCM 6th LOS	B

Notes

User approved volume balancing among the lanes for turning movement.

Movement	WBL	WBR	NBT	NBR	SBL	SBT
Lane Configurations						
Traffic Volume (veh/h)	271	43	1210	369	20	723
Future Volume (veh/h)	271	43	1210	369	20	723
Initial Q (Qb), veh	0	0	0	0	0	0
Ped-Bike Adj(A_pbT)	1.00	1.00		1.00	1.00	
Parking Bus, Adj	1.00	1.00	1.00	1.00	1.00	1.00
Work Zone On Approach	No		No			No
Adj Sat Flow, veh/h/ln	1595	1595	1636	1636	1636	1636
Adj Flow Rate, veh/h	331	0	1287	243	21	769
Peak Hour Factor	0.94	0.94	0.94	0.94	0.94	0.94
Percent Heavy Veh, %	5	5	2	2	2	2
Cap, veh/h	480	213	2059	1137	260	2243
Arrive On Green	0.16	0.00	0.66	0.66	0.02	0.72
Sat Flow, veh/h	3038	1352	3190	1386	1558	3190
Grp Volume(v), veh/h	331	0	1287	243	21	769
Grp Sat Flow(s),veh/h/ln	1519	1352	1554	1386	1558	1554
Q Serve(g_s), s	8.5	0.0	19.8	3.2	0.3	7.6
Cycle Q Clear(g_c), s	8.5	0.0	19.8	3.2	0.3	7.6
Prop In Lane	1.00	1.00		1.00	1.00	
Lane Grp Cap(c), veh/h	480	213	2059	1137	260	2243
V/C Ratio(X)	0.69	0.00	0.63	0.21	0.08	0.34
Avail Cap(c_a), veh/h	1281	570	2435	1305	599	2435
HCM Platoon Ratio	1.00	1.00	1.00	1.00	1.00	1.00
Upstream Filter(I)	1.00	0.00	1.00	1.00	1.00	1.00
Uniform Delay (d), s/veh	33.0	0.0	8.1	1.6	6.6	4.3
Incr Delay (d2), s/veh	1.8	0.0	0.7	0.2	0.0	0.2
Initial Q Delay(d3),s/veh	0.0	0.0	0.0	0.0	0.0	0.0
%ile BackOfQ(90%),veh/ln	5.5	0.0	8.6	2.7	0.2	3.4
Unsig. Movement Delay, s/veh						
LnGrp Delay(d),s/veh	34.8	0.0	8.8	1.8	6.7	4.5
LnGrp LOS	C	A	A	A	A	A
Approach Vol, veh/h	331		1530			790
Approach Delay, s/veh	34.8		7.7			4.5
Approach LOS	C		A			A

Timer - Assigned Phs		2		4	5	6
Phs Duration (G+Y+Rc), s		64.9		18.1	4.9	60.0
Change Period (Y+Rc), s		5.0		5.0	3.0	5.0
Max Green Setting (Gmax), s		65.0		35.0	20.0	65.0
Max Q Clear Time (g_c+I1), s		9.6		10.5	2.3	21.8
Green Ext Time (p_c), s		17.0		2.6	0.0	33.2

Intersection Summary	
HCM 6th Ctrl Delay	10.1
HCM 6th LOS	B

Notes

User approved volume balancing among the lanes for turning movement.

Intersection	
Int Delay, s/veh	0.9

Movement	EBL	EBT	EBR	WBL	WBT	WBR	NBL	NBT	NBR	SBL	SBT	SBR
Lane Configurations												
Traffic Vol, veh/h	28	5	0	0	10	5	41	667	11	0	0	0
Future Vol, veh/h	28	5	0	0	10	5	41	667	11	0	0	0
Conflicting Peds, #/hr	0	0	0	0	0	0	0	0	0	0	0	0
Sign Control	Stop	Stop	Stop	Stop	Stop	Stop	Free	Free	Free	Free	Free	Free
RT Channelized	-	-	None	-	-	None	-	-	None	-	-	None
Storage Length	-	-	-	-	-	-	-	-	-	-	-	-
Veh in Median Storage, #	-	0	-	-	0	-	-	0	-	-	0	-
Grade, %	-	0	-	-	0	-	-	0	-	-	0	-
Peak Hour Factor	92	92	92	92	92	92	92	92	92	92	92	92
Heavy Vehicles, %	2	2	2	2	2	2	2	2	2	2	2	2
Mvmt Flow	30	5	0	0	11	5	45	725	12	0	0	0

Major/Minor	Minor2			Minor1			Major1		
Conflicting Flow All	458	827	-	-	821	369	0	0	0
Stage 1	0	0	-	-	821	-	-	-	-
Stage 2	458	827	-	-	0	-	-	-	-
Critical Hdwy	7.54	6.54	-	-	6.54	6.94	4.14	-	-
Critical Hdwy Stg 1	-	-	-	-	5.54	-	-	-	-
Critical Hdwy Stg 2	6.54	5.54	-	-	-	-	-	-	-
Follow-up Hdwy	3.52	4.02	-	-	4.02	3.32	2.22	-	-
Pot Cap-1 Maneuver	486	305	0	0	308	628	-	-	-
Stage 1	-	-	0	0	387	-	-	-	-
Stage 2	552	384	0	0	-	-	-	-	-
Platoon blocked, %								-	-
Mov Cap-1 Maneuver	469	305	-	-	308	628	-	-	-
Mov Cap-2 Maneuver	469	305	-	-	308	-	-	-	-
Stage 1	-	-	-	-	387	-	-	-	-
Stage 2	532	384	-	-	-	-	-	-	-

Approach	EB	WB	NB
HCM Control Delay, s	14	15.1	
HCM LOS	B	C	

Minor Lane/Major Mvmt	NBL	NBT	NBR	EBLn1	WBLn1
Capacity (veh/h)	-	-	-	434	371
HCM Lane V/C Ratio	-	-	-	0.083	0.044
HCM Control Delay (s)	-	-	-	14	15.1
HCM Lane LOS	-	-	-	B	C
HCM 95th %tile Q(veh)	-	-	-	0.3	0.1

Intersection	
Int Delay, s/veh	1.5

Movement	EBL	EBT	EBR	WBL	WBT	WBR	NBL	NBT	NBR	SBL	SBT	SBR
Lane Configurations												
Traffic Vol, veh/h	39	3	0	0	13	6	41	1649	14	0	0	0
Future Vol, veh/h	39	3	0	0	13	6	41	1649	14	0	0	0
Conflicting Peds, #/hr	0	0	0	0	0	0	0	0	0	0	0	0
Sign Control	Stop	Stop	Stop	Stop	Stop	Stop	Free	Free	Free	Free	Free	Free
RT Channelized	-	-	None	-	-	None	-	-	None	-	-	None
Storage Length	-	-	-	-	-	-	-	-	-	-	-	-
Veh in Median Storage, #	-	0	-	-	0	-	-	0	-	-	0	-
Grade, %	-	0	-	-	0	-	-	0	-	-	0	-
Peak Hour Factor	92	92	92	92	92	92	92	92	92	92	92	92
Heavy Vehicles, %	2	2	2	2	2	2	2	2	2	2	2	2
Mvmt Flow	42	3	0	0	14	7	45	1792	15	0	0	0

Major/Minor	Minor2			Minor1			Major1		
Conflicting Flow All	993	1897	-	-	1890	904	0	0	0
Stage 1	0	0	-	-	1890	-	-	-	-
Stage 2	993	1897	-	-	0	-	-	-	-
Critical Hdwy	7.54	6.54	-	-	6.54	6.94	4.14	-	-
Critical Hdwy Stg 1	-	-	-	-	5.54	-	-	-	-
Critical Hdwy Stg 2	6.54	5.54	-	-	-	-	-	-	-
Follow-up Hdwy	3.52	4.02	-	-	4.02	3.32	2.22	-	-
Pot Cap-1 Maneuver	200	69	0	0	69	280	-	-	-
Stage 1	-	-	0	0	117	-	-	-	-
Stage 2	263	116	0	0	-	-	-	-	-
Platoon blocked, %								-	-
Mov Cap-1 Maneuver	165	69	-	-	69	280	-	-	-
Mov Cap-2 Maneuver	165	69	-	-	69	-	-	-	-
Stage 1	-	-	-	-	117	-	-	-	-
Stage 2	226	116	-	-	-	-	-	-	-

Approach	EB	WB	NB
HCM Control Delay, s	39.2	55.8	
HCM LOS	E	F	

Minor Lane/Major Mvmt	NBL	NBT	NBR	EBLn1	WBLn1
Capacity (veh/h)	-	-	-	150	91
HCM Lane V/C Ratio	-	-	-	0.304	0.227
HCM Control Delay (s)	-	-	-	39.2	55.8
HCM Lane LOS	-	-	-	E	F
HCM 95th %tile Q(veh)	-	-	-	1.2	0.8

Intersection	
Int Delay, s/veh	2

Movement	EBL	EBT	EBR	WBL	WBT	WBR	NBL	NBT	NBR	SBL	SBT	SBR
Lane Configurations												
Traffic Vol, veh/h	0	22	0	19	19	0	0	0	0	19	1535	8
Future Vol, veh/h	0	22	0	19	19	0	0	0	0	19	1535	8
Conflicting Peds, #/hr	0	0	0	0	0	0	0	0	0	0	0	0
Sign Control	Stop	Stop	Stop	Stop	Stop	Stop	Free	Free	Free	Free	Free	Free
RT Channelized	-	-	None	-	-	None	-	-	None	-	-	None
Storage Length	-	-	-	-	-	-	-	-	-	-	-	-
Veh in Median Storage, #	-	0	-	-	0	-	-	0	-	-	0	-
Grade, %	-	0	-	-	0	-	-	0	-	-	0	-
Peak Hour Factor	92	92	92	92	92	92	92	92	92	92	92	92
Heavy Vehicles, %	2	2	2	2	2	2	2	2	2	2	2	2
Mvmt Flow	0	24	0	21	21	0	0	0	0	21	1668	9

Major/Minor	Minor2			Minor1					Major2		
Conflicting Flow All	-	1715	839	888	1719	-			0	0	0
Stage 1	-	1715	-	0	0	-			-	-	-
Stage 2	-	0	-	888	1719	-			-	-	-
Critical Hdwy	-	6.54	6.94	7.54	6.54	-			4.14	-	-
Critical Hdwy Stg 1	-	5.54	-	-	-	-			-	-	-
Critical Hdwy Stg 2	-	-	-	6.54	5.54	-			-	-	-
Follow-up Hdwy	-	4.02	3.32	3.52	4.02	-			2.22	-	-
Pot Cap-1 Maneuver	0	89	309	238	89	0			-	-	-
Stage 1	0	144	-	-	-	0			-	-	-
Stage 2	0	-	-	305	143	0			-	-	-
Platoon blocked, %										-	-
Mov Cap-1 Maneuver	-	89	309	188	89	-			-	-	-
Mov Cap-2 Maneuver	-	89	-	188	89	-			-	-	-
Stage 1	-	144	-	-	-	-			-	-	-
Stage 2	-	-	-	254	143	-			-	-	-

Approach	EB	WB	SB
HCM Control Delay, s	59.7	49.4	
HCM LOS	F	E	

Minor Lane/Major Mvmt	EBLn1	WBLn1	SBL	SBT	SBR
Capacity (veh/h)	89	121	-	-	-
HCM Lane V/C Ratio	0.269	0.341	-	-	-
HCM Control Delay (s)	59.7	49.4	-	-	-
HCM Lane LOS	F	E	-	-	-
HCM 95th %tile Q(veh)	1	1.4	-	-	-

Intersection	
Int Delay, s/veh	1.4

Movement	EBL	EBT	EBR	WBL	WBT	WBR	NBL	NBT	NBR	SBL	SBT	SBR
Lane Configurations												
Traffic Vol, veh/h	0	19	4	33	18	0	0	0	0	19	936	9
Future Vol, veh/h	0	19	4	33	18	0	0	0	0	19	936	9
Conflicting Peds, #/hr	0	0	0	0	0	0	0	0	0	0	0	0
Sign Control	Stop	Stop	Stop	Stop	Stop	Stop	Free	Free	Free	Free	Free	Free
RT Channelized	-	-	None	-	-	None	-	-	None	-	-	None
Storage Length	-	-	-	-	-	-	-	-	-	-	-	-
Veh in Median Storage, #	-	0	-	-	0	-	-	0	-	-	0	-
Grade, %	-	0	-	-	0	-	-	0	-	-	0	-
Peak Hour Factor	92	92	92	92	92	92	92	92	92	92	92	92
Heavy Vehicles, %	2	2	2	2	2	2	2	2	2	2	2	2
Mvmt Flow	0	21	4	36	20	0	0	0	0	21	1017	10

Major/Minor	Minor2			Minor1					Major2		
Conflicting Flow All	-	1064	514	561	1069	-			0	0	0
Stage 1	-	1064	-	0	0	-			-	-	-
Stage 2	-	0	-	561	1069	-			-	-	-
Critical Hdwy	-	6.54	6.94	7.54	6.54	-			4.14	-	-
Critical Hdwy Stg 1	-	5.54	-	-	-	-			-	-	-
Critical Hdwy Stg 2	-	-	-	6.54	5.54	-			-	-	-
Follow-up Hdwy	-	4.02	3.32	3.52	4.02	-			2.22	-	-
Pot Cap-1 Maneuver	0	221	505	410	220	0			-	-	-
Stage 1	0	298	-	-	-	0			-	-	-
Stage 2	0	-	-	480	296	0			-	-	-
Platoon blocked, %										-	-
Mov Cap-1 Maneuver	-	221	505	377	220	-			-	-	-
Mov Cap-2 Maneuver	-	221	-	377	220	-			-	-	-
Stage 1	-	298	-	-	-	-			-	-	-
Stage 2	-	-	-	443	296	-			-	-	-

Approach	EB	WB	SB
HCM Control Delay, s	21.4	19.6	
HCM LOS	C	C	

Minor Lane/Major Mvmt	EBLn1	WBLn1	SBL	SBT	SBR
Capacity (veh/h)	245	301	-	-	-
HCM Lane V/C Ratio	0.102	0.184	-	-	-
HCM Control Delay (s)	21.4	19.6	-	-	-
HCM Lane LOS	C	C	-	-	-
HCM 95th %tile Q(veh)	0.3	0.7	-	-	-

Movement	EBL	EBT	EBR	WBL	WBT	WBR	NBL	NBT	NBR	SBL	SBT	SBR
Lane Configurations												
Traffic Volume (veh/h)	53	8	42	37	6	40	26	800	32	61	1287	20
Future Volume (veh/h)	53	8	42	37	6	40	26	800	32	61	1287	20
Initial Q (Qb), veh	0	0	0	0	0	0	0	0	0	0	0	0
Ped-Bike Adj(A_pbT)	1.00		1.00	1.00		1.00	1.00		1.00	1.00		1.00
Parking Bus, Adj	1.00	1.00	1.00	1.00	1.00	1.00	1.00	1.00	1.00	1.00	1.00	1.00
Work Zone On Approach		No			No			No			No	
Adj Sat Flow, veh/h/ln	1627	1627	1627	1709	1709	1709	1695	1695	1695	1695	1695	1695
Adj Flow Rate, veh/h	58	9	46	41	7	44	29	879	22	67	1414	22
Peak Hour Factor	0.91	0.91	0.91	0.91	0.91	0.91	0.91	0.91	0.91	0.91	0.91	0.91
Percent Heavy Veh, %	9	9	9	3	3	3	4	4	4	4	4	4
Cap, veh/h	293	38	193	295	33	209	259	1750	780	439	1843	29
Arrive On Green	0.16	0.16	0.16	0.16	0.16	0.16	0.03	0.54	0.54	0.06	0.57	0.57
Sat Flow, veh/h	1279	231	1183	1338	203	1276	1615	3221	1437	1615	3246	50
Grp Volume(v), veh/h	58	0	55	41	0	51	29	879	22	67	701	735
Grp Sat Flow(s),veh/h/ln	1279	0	1414	1338	0	1479	1615	1611	1437	1615	1611	1686
Q Serve(g_s), s	2.4	0.0	2.0	1.6	0.0	1.8	0.5	10.1	0.4	1.0	19.7	19.7
Cycle Q Clear(g_c), s	4.2	0.0	2.0	3.6	0.0	1.8	0.5	10.1	0.4	1.0	19.7	19.7
Prop In Lane	1.00		0.84	1.00		0.86	1.00		1.00	1.00		0.03
Lane Grp Cap(c), veh/h	293	0	231	295	0	242	259	1750	780	439	914	957
V/C Ratio(X)	0.20	0.00	0.24	0.14	0.00	0.21	0.11	0.50	0.03	0.15	0.77	0.77
Avail Cap(c_a), veh/h	733	0	718	756	0	751	754	1908	851	895	954	999
HCM Platoon Ratio	1.00	1.00	1.00	1.00	1.00	1.00	1.00	1.00	1.00	1.00	1.00	1.00
Upstream Filter(I)	1.00	0.00	1.00	1.00	0.00	1.00	1.00	1.00	1.00	1.00	1.00	1.00
Uniform Delay (d), s/veh	23.2	0.0	21.5	23.1	0.0	21.4	8.5	8.5	6.3	5.8	9.8	9.8
Incr Delay (d2), s/veh	0.3	0.0	0.5	0.2	0.0	0.4	0.1	0.3	0.0	0.1	3.8	3.7
Initial Q Delay(d3),s/veh	0.0	0.0	0.0	0.0	0.0	0.0	0.0	0.0	0.0	0.0	0.0	0.0
%ile BackOfQ(90%),veh/ln	1.3	0.0	1.2	0.9	0.0	1.1	0.2	5.0	0.2	0.5	9.4	9.7
Unsig. Movement Delay, s/veh												
LnGrp Delay(d),s/veh	23.6	0.0	22.0	23.3	0.0	21.8	8.6	8.8	6.3	5.9	13.6	13.5
LnGrp LOS	C	A	C	C	A	C	A	A	A	A	B	B
Approach Vol, veh/h		113			92			930			1503	
Approach Delay, s/veh		22.8			22.5			8.7			13.2	
Approach LOS		C			C			A			B	

Timer - Assigned Phs	1	2		4	5	6		8				
Phs Duration (G+Y+Rc), s	4.9	39.0		15.2	6.3	37.6		15.2				
Change Period (Y+Rc), s	3.0	5.5		5.5	3.0	5.5		5.5				
Max Green Setting (Gmax), s	20.0	35.0		30.0	20.0	35.0		30.0				
Max Q Clear Time (g_c+I1), s	2.5	21.7		5.6	3.0	12.1		6.2				
Green Ext Time (p_c), s	0.0	11.8		0.4	0.1	14.1		0.5				

Intersection Summary			
HCM 6th Ctrl Delay			12.3
HCM 6th LOS			B

Movement	EBL	EBT	EBR	WBL	WBT	WBR	NBL	NBT	NBR	SBL	SBT	SBR
Lane Configurations												
Traffic Volume (veh/h)	68	6	34	47	8	78	30	1523	42	71	914	31
Future Volume (veh/h)	68	6	34	47	8	78	30	1523	42	71	914	31
Initial Q (Qb), veh	0	0	0	0	0	0	0	0	0	0	0	0
Ped-Bike Adj(A_pbT)	1.00		1.00	1.00		1.00	1.00		1.00	1.00		1.00
Parking Bus, Adj	1.00	1.00	1.00	1.00	1.00	1.00	1.00	1.00	1.00	1.00	1.00	1.00
Work Zone On Approach		No			No			No			No	
Adj Sat Flow, veh/h/ln	1750	1750	1750	1709	1709	1709	1723	1723	1723	1723	1723	1723
Adj Flow Rate, veh/h	71	6	35	49	8	81	31	1586	27	74	952	32
Peak Hour Factor	0.96	0.96	0.96	0.96	0.96	0.96	0.96	0.96	0.96	0.96	0.96	0.96
Percent Heavy Veh, %	0	0	0	3	3	3	2	2	2	2	2	2
Cap, veh/h	255	35	206	299	21	212	404	1827	815	256	1883	63
Arrive On Green	0.16	0.16	0.16	0.16	0.16	0.16	0.03	0.56	0.56	0.06	0.58	0.58
Sat Flow, veh/h	1329	222	1295	1355	132	1336	1641	3273	1460	1641	3231	109
Grp Volume(v), veh/h	71	0	41	49	0	89	31	1586	27	74	482	502
Grp Sat Flow(s),veh/h/ln	1329	0	1517	1355	0	1468	1641	1637	1460	1641	1637	1703
Q Serve(g_s), s	3.1	0.0	1.5	2.0	0.0	3.4	0.5	25.8	0.5	1.1	10.8	10.8
Cycle Q Clear(g_c), s	6.5	0.0	1.5	3.5	0.0	3.4	0.5	25.8	0.5	1.1	10.8	10.8
Prop In Lane	1.00		0.85	1.00		0.91	1.00		1.00	1.00		0.06
Lane Grp Cap(c), veh/h	255	0	241	299	0	233	404	1827	815	256	954	993
V/C Ratio(X)	0.28	0.00	0.17	0.16	0.00	0.38	0.08	0.87	0.03	0.29	0.51	0.51
Avail Cap(c_a), veh/h	685	0	732	738	0	709	877	1843	822	688	954	993
HCM Platoon Ratio	1.00	1.00	1.00	1.00	1.00	1.00	1.00	1.00	1.00	1.00	1.00	1.00
Upstream Filter(I)	1.00	0.00	1.00	1.00	0.00	1.00	1.00	1.00	1.00	1.00	1.00	1.00
Uniform Delay (d), s/veh	26.3	0.0	22.6	24.1	0.0	23.4	6.0	11.8	6.2	11.9	7.7	7.7
Incr Delay (d2), s/veh	0.6	0.0	0.3	0.3	0.0	1.0	0.0	4.8	0.0	0.2	0.5	0.5
Initial Q Delay(d3),s/veh	0.0	0.0	0.0	0.0	0.0	0.0	0.0	0.0	0.0	0.0	0.0	0.0
%ile BackOfQ(90%),veh/ln	1.8	0.0	0.9	1.2	0.0	2.1	0.2	12.3	0.2	0.8	5.4	5.5
Unsig. Movement Delay, s/veh												
LnGrp Delay(d),s/veh	26.9	0.0	22.9	24.4	0.0	24.4	6.1	16.6	6.2	12.1	8.2	8.2
LnGrp LOS	C	A	C	C	A	C	A	B	A	B	A	A
Approach Vol, veh/h		112			138			1644			1058	
Approach Delay, s/veh		25.5			24.4			16.3			8.5	
Approach LOS		C			C			B			A	

Timer - Assigned Phs	1	2		4	5	6		8				
Phs Duration (G+Y+Rc), s	5.1	41.7		15.4	6.6	40.2		15.4				
Change Period (Y+Rc), s	3.0	5.5		5.5	3.0	5.5		5.5				
Max Green Setting (Gmax), s	20.0	35.0		30.0	20.0	35.0		30.0				
Max Q Clear Time (g_c+I1), s	2.5	12.8		5.5	3.1	27.8		8.5				
Green Ext Time (p_c), s	0.0	14.0		0.7	0.1	6.9		0.4				

Intersection Summary			
HCM 6th Ctrl Delay			14.2
HCM 6th LOS			B

Movement	EBL	EBR	NBL	NBT	SBT	SBR
Lane Configurations						
Traffic Volume (veh/h)	94	85	169	786	1091	199
Future Volume (veh/h)	94	85	169	786	1091	199
Initial Q (Qb), veh	0	0	0	0	0	0
Ped-Bike Adj(A_pbT)	1.00	1.00	1.00			1.00
Parking Bus, Adj	1.00	1.00	1.00	1.00	1.00	1.00
Work Zone On Approach	No			No	No	
Adj Sat Flow, veh/h/ln	1654	1654	1709	1709	1695	1695
Adj Flow Rate, veh/h	104	59	188	873	1212	137
Peak Hour Factor	0.90	0.90	0.90	0.90	0.90	0.90
Percent Heavy Veh, %	7	7	3	3	4	4
Cap, veh/h	172	153	384	2226	1746	779
Arrive On Green	0.11	0.11	0.09	0.69	0.54	0.54
Sat Flow, veh/h	1576	1402	1628	3333	3306	1437
Grp Volume(v), veh/h	104	59	188	873	1212	137
Grp Sat Flow(s),veh/h/ln	1576	1402	1628	1624	1611	1437
Q Serve(g_s), s	3.4	2.1	2.3	6.2	14.8	2.6
Cycle Q Clear(g_c), s	3.4	2.1	2.3	6.2	14.8	2.6
Prop In Lane	1.00	1.00	1.00			1.00
Lane Grp Cap(c), veh/h	172	153	384	2226	1746	779
V/C Ratio(X)	0.60	0.39	0.49	0.39	0.69	0.18
Avail Cap(c_a), veh/h	882	785	848	2226	2104	938
HCM Platoon Ratio	1.00	1.00	1.00	1.00	1.00	1.00
Upstream Filter(I)	1.00	1.00	1.00	1.00	1.00	1.00
Uniform Delay (d), s/veh	22.8	22.2	8.3	3.6	9.0	6.2
Incr Delay (d2), s/veh	3.4	1.6	0.4	0.2	1.0	0.2
Initial Q Delay(d3),s/veh	0.0	0.0	0.0	0.0	0.0	0.0
%ile BackOfQ(90%),veh/ln	2.4	1.3	1.1	1.8	6.6	1.1
Unsig. Movement Delay, s/veh						
LnGrp Delay(d),s/veh	26.2	23.8	8.7	3.8	10.0	6.4
LnGrp LOS	C	C	A	A	A	A
Approach Vol, veh/h	163			1061	1349	
Approach Delay, s/veh	25.3			4.7	9.6	
Approach LOS	C			A	A	

Timer - Assigned Phs	1	2				6	8
Phs Duration (G+Y+Rc), s	7.7	34.5				42.2	11.4
Change Period (Y+Rc), s	3.0	5.5				5.5	5.5
Max Green Setting (Gmax), s	20.0	35.0				35.0	30.0
Max Q Clear Time (g_c+I1), s	4.3	16.8				8.2	5.4
Green Ext Time (p_c), s	0.3	12.2				13.4	1.0

Intersection Summary	
HCM 6th Ctrl Delay	8.6
HCM 6th LOS	A

Notes

User approved pedestrian interval to be less than phase max green.

Movement	EBL	EBT	EBR	WBL	WBT	WBR	NBL	NBT	NBR	SBL	SBT	SBR
Lane Configurations												
Traffic Volume (veh/h)	244	0	160	0	0	0	189	1324	0	0	822	141
Future Volume (veh/h)	244	0	160	0	0	0	189	1324	0	0	822	141
Initial Q (Qb), veh	0	0	0				0	0	0	0	0	0
Ped-Bike Adj(A_pbT)	1.00		1.00				1.00		1.00	1.00		1.00
Parking Bus, Adj	1.00	1.00	1.00				1.00	1.00	1.00	1.00	1.00	1.00
Work Zone On Approach		No						No			No	
Adj Sat Flow, veh/h/ln	1709	0	1709				1723	1723	0	0	1723	1723
Adj Flow Rate, veh/h	252	0	102				195	1365	0	0	847	90
Peak Hour Factor	0.97	0.92	0.97				0.97	0.97	0.92	0.92	0.97	0.97
Percent Heavy Veh, %	3	0	3				2	2	0	0	2	2
Cap, veh/h	360	0	320				425	1899	0	0	1412	630
Arrive On Green	0.22	0.00	0.22				0.09	0.58	0.00	0.00	0.43	0.43
Sat Flow, veh/h	1628	0	1448				1641	3359	0	0	3359	1460
Grp Volume(v), veh/h	252	0	102				195	1365	0	0	847	90
Grp Sat Flow(s),veh/h/ln	1628	0	1448				1641	1637	0	0	1637	1460
Q Serve(g_s), s	7.9	0.0	3.3				3.3	16.6	0.0	0.0	11.0	2.1
Cycle Q Clear(g_c), s	7.9	0.0	3.3				3.3	16.6	0.0	0.0	11.0	2.1
Prop In Lane	1.00		1.00				1.00		0.00	0.00		1.00
Lane Grp Cap(c), veh/h	360	0	320				425	1899	0	0	1412	630
V/C Ratio(X)	0.70	0.00	0.32				0.46	0.72	0.00	0.00	0.60	0.14
Avail Cap(c_a), veh/h	882	0	785				862	2069	0	0	2069	923
HCM Platoon Ratio	1.00	1.00	1.00				1.00	1.00	1.00	1.00	1.00	1.00
Upstream Filter(I)	1.00	0.00	1.00				1.00	1.00	0.00	0.00	1.00	1.00
Uniform Delay (d), s/veh	19.9	0.0	18.1				8.3	8.4	0.0	0.0	12.1	9.5
Incr Delay (d2), s/veh	2.5	0.0	0.6				0.3	1.3	0.0	0.0	0.6	0.1
Initial Q Delay(d3),s/veh	0.0	0.0	0.0				0.0	0.0	0.0	0.0	0.0	0.0
%ile BackOfQ(90%),veh/ln	5.3	0.0	1.9				1.5	6.9	0.0	0.0	5.8	1.1
Unsig. Movement Delay, s/veh												
LnGrp Delay(d),s/veh	22.4	0.0	18.6				8.6	9.6	0.0	0.0	12.7	9.7
LnGrp LOS	C	A	B				A	A	A	A	B	A
Approach Vol, veh/h		354						1560			937	
Approach Delay, s/veh		21.3						9.5			12.4	
Approach LOS		C						A			B	

Timer - Assigned Phs	1	2				6		8				
Phs Duration (G+Y+Rc), s	8.3	29.4				37.6		17.7				
Change Period (Y+Rc), s	3.0	5.5				5.5		5.5				
Max Green Setting (Gmax), s	20.0	35.0				35.0		30.0				
Max Q Clear Time (g_c+I1), s	5.3	13.0				18.6		9.9				
Green Ext Time (p_c), s	0.3	9.7				13.5		2.4				

Intersection Summary	
HCM 6th Ctrl Delay	11.9
HCM 6th LOS	B

Notes

User approved pedestrian interval to be less than phase max green.

Movement	EBL	EBT	EBR	WBL	WBT	WBR	NBL	NBT	NBR	SBL	SBT	SBR
Lane Configurations												
Traffic Volume (veh/h)	0	50	13	120	29	0	0	0	0	56	1543	17
Future Volume (veh/h)	0	50	13	120	29	0	0	0	0	56	1543	17
Initial Q (Qb), veh	0	0	0	0	0	0				0	0	0
Ped-Bike Adj(A_pbT)	1.00		1.00	1.00		1.00				1.00		1.00
Parking Bus, Adj	1.00	1.00	1.00	1.00	1.00	1.00				1.00	1.00	1.00
Work Zone On Approach		No			No						No	
Adj Sat Flow, veh/h/ln	0	1559	1559	1600	1600	0				1723	1723	1723
Adj Flow Rate, veh/h	0	59	15	141	34	0				66	1815	20
Peak Hour Factor	0.85	0.85	0.85	0.85	0.85	0.85				0.85	0.85	0.85
Percent Heavy Veh, %	0	14	14	11	11	0				2	2	2
Cap, veh/h	0	296	75	377	395	0				67	1922	22
Arrive On Green	0.00	0.25	0.25	0.25	0.25	0.00				0.59	0.59	0.59
Sat Flow, veh/h	0	1199	305	1231	1600	0				114	3281	38
Grp Volume(v), veh/h	0	0	74	141	34	0				995	0	906
Grp Sat Flow(s),veh/h/ln	0	0	1504	1231	1600	0				1717	0	1716
Q Serve(g_s), s	0.0	0.0	2.3	6.1	1.0	0.0				34.1	0.0	27.7
Cycle Q Clear(g_c), s	0.0	0.0	2.3	8.4	1.0	0.0				34.1	0.0	27.7
Prop In Lane	0.00		0.20	1.00		0.00				0.07		0.02
Lane Grp Cap(c), veh/h	0	0	371	377	395	0				1006	0	1005
V/C Ratio(X)	0.00	0.00	0.20	0.37	0.09	0.00				0.99	0.00	0.90
Avail Cap(c_a), veh/h	0	0	881	794	937	0				1006	0	1005
HCM Platoon Ratio	1.00	1.00	1.00	1.00	1.00	1.00				1.00	1.00	1.00
Upstream Filter(I)	0.00	0.00	1.00	1.00	1.00	0.00				1.00	0.00	1.00
Uniform Delay (d), s/veh	0.0	0.0	17.8	21.2	17.3	0.0				12.2	0.0	10.9
Incr Delay (d2), s/veh	0.0	0.0	0.6	1.3	0.2	0.0				25.9	0.0	11.6
Initial Q Delay(d3),s/veh	0.0	0.0	0.0	0.0	0.0	0.0				0.0	0.0	0.0
%ile BackOfQ(90%),veh/ln	0.0	0.0	1.5	3.3	0.7	0.0				21.9	0.0	15.1
Unsig. Movement Delay, s/veh												
LnGrp Delay(d),s/veh	0.0	0.0	18.4	22.5	17.5	0.0				38.1	0.0	22.4
LnGrp LOS	A	A	B	C	B	A				D	A	C
Approach Vol, veh/h		74			175						1901	
Approach Delay, s/veh		18.4			21.5						30.6	
Approach LOS		B			C						C	

Timer - Assigned Phs		4		6		8						
Phs Duration (G+Y+Rc), s		19.8		40.0		19.8						
Change Period (Y+Rc), s		5.0		5.0		5.0						
Max Green Setting (Gmax), s		35.0		35.0		35.0						
Max Q Clear Time (g_c+I1), s		4.3		36.1		10.4						
Green Ext Time (p_c), s		0.7		0.0		1.4						

Intersection Summary	
HCM 6th Ctrl Delay	29.5
HCM 6th LOS	C

Movement	EBL	EBT	EBR	WBL	WBT	WBR	NBL	NBT	NBR	SBL	SBT	SBR
Lane Configurations												
Traffic Volume (veh/h)	0	62	17	154	26	0	0	0	0	72	916	10
Future Volume (veh/h)	0	62	17	154	26	0	0	0	0	72	916	10
Initial Q (Qb), veh	0	0	0	0	0	0				0	0	0
Ped-Bike Adj(A_pbT)	1.00		1.00	1.00		1.00				1.00		1.00
Parking Bus, Adj	1.00	1.00	1.00	1.00	1.00	1.00				1.00	1.00	1.00
Work Zone On Approach		No			No						No	
Adj Sat Flow, veh/h/ln	0	1682	1682	1668	1668	0				1709	1709	1709
Adj Flow Rate, veh/h	0	65	18	162	27	0				76	964	11
Peak Hour Factor	0.95	0.95	0.95	0.95	0.95	0.95				0.95	0.95	0.95
Percent Heavy Veh, %	0	5	5	6	6	0				3	3	3
Cap, veh/h	0	366	101	461	482	0				121	1608	19
Arrive On Green	0.00	0.29	0.29	0.29	0.29	0.00				0.51	0.51	0.51
Sat Flow, veh/h	0	1268	351	1273	1668	0				235	3128	37
Grp Volume(v), veh/h	0	0	83	162	27	0				549	0	502
Grp Sat Flow(s),veh/h/ln	0	0	1619	1273	1668	0				1697	0	1702
Q Serve(g_s), s	0.0	0.0	2.0	5.5	0.6	0.0				11.8	0.0	10.3
Cycle Q Clear(g_c), s	0.0	0.0	2.0	7.5	0.6	0.0				11.8	0.0	10.3
Prop In Lane	0.00		0.22	1.00		0.00				0.14		0.02
Lane Grp Cap(c), veh/h	0	0	468	461	482	0				872	0	875
V/C Ratio(X)	0.00	0.00	0.18	0.35	0.06	0.00				0.63	0.00	0.57
Avail Cap(c_a), veh/h	0	0	1116	971	1150	0				1170	0	1173
HCM Platoon Ratio	1.00	1.00	1.00	1.00	1.00	1.00				1.00	1.00	1.00
Upstream Filter(I)	0.00	0.00	1.00	1.00	1.00	0.00				1.00	0.00	1.00
Uniform Delay (d), s/veh	0.0	0.0	13.5	16.3	13.0	0.0				8.9	0.0	8.5
Incr Delay (d2), s/veh	0.0	0.0	0.4	1.0	0.1	0.0				1.6	0.0	1.3
Initial Q Delay(d3),s/veh	0.0	0.0	0.0	0.0	0.0	0.0				0.0	0.0	0.0
%ile BackOfQ(90%),veh/ln	0.0	0.0	1.2	2.9	0.4	0.0				6.0	0.0	5.4
Unsig. Movement Delay, s/veh												
LnGrp Delay(d),s/veh	0.0	0.0	13.9	17.3	13.1	0.0				10.5	0.0	9.8
LnGrp LOS	A	A	B	B	B	A				B	A	A
Approach Vol, veh/h		83			189						1051	
Approach Delay, s/veh		13.9			16.7						10.1	
Approach LOS		B			B						B	

Timer - Assigned Phs		4		6		8						
Phs Duration (G+Y+Rc), s		19.7		31.1		19.7						
Change Period (Y+Rc), s		5.0		5.0		5.0						
Max Green Setting (Gmax), s		35.0		35.0		35.0						
Max Q Clear Time (g_c+I1), s		4.0		13.8		9.5						
Green Ext Time (p_c), s		0.8		12.3		1.5						

Intersection Summary												
HCM 6th Ctrl Delay			11.3									
HCM 6th LOS			B									

Movement	EBL	EBT	EBR	WBL	WBT	WBR	NBL	NBT	NBR	SBL	SBT	SBR
Lane Configurations												
Traffic Volume (veh/h)	33	75	0	0	132	75	13	574	80	0	0	0
Future Volume (veh/h)	33	75	0	0	132	75	13	574	80	0	0	0
Initial Q (Qb), veh	0	0	0	0	0	0	0	0	0			
Ped-Bike Adj(A_pbT)	1.00		1.00	1.00		1.00	1.00		1.00			
Parking Bus, Adj	1.00	1.00	1.00	1.00	1.00	1.00	1.00	1.00	1.00			
Work Zone On Approach		No			No			No				
Adj Sat Flow, veh/h/ln	1668	1668	0	0	1709	1709	1695	1695	1695			
Adj Flow Rate, veh/h	39	88	0	0	155	88	15	675	94			
Peak Hour Factor	0.85	0.85	0.85	0.85	0.85	0.85	0.85	0.85	0.85			
Percent Heavy Veh, %	6	6	0	0	3	3	4	4	4			
Cap, veh/h	342	345	0	0	422	227	32	1499	220			
Arrive On Green	0.21	0.21	0.00	0.00	0.21	0.21	0.53	0.53	0.53			
Sat Flow, veh/h	1101	1668	0	0	2123	1097	61	2835	417			
Grp Volume(v), veh/h	39	88	0	0	122	121	419	0	365			
Grp Sat Flow(s),veh/h/ln	1101	1668	0	0	1624	1512	1692	0	1620			
Q Serve(g_s), s	1.2	1.7	0.0	0.0	2.4	2.6	5.9	0.0	5.2			
Cycle Q Clear(g_c), s	3.8	1.7	0.0	0.0	2.4	2.6	5.9	0.0	5.2			
Prop In Lane	1.00		0.00	0.00		0.73	0.04		0.26			
Lane Grp Cap(c), veh/h	342	345	0	0	336	313	895	0	857			
V/C Ratio(X)	0.11	0.25	0.00	0.00	0.36	0.39	0.47	0.00	0.43			
Avail Cap(c_a), veh/h	1278	1763	0	0	1716	1598	2684	0	2570			
HCM Platoon Ratio	1.00	1.00	1.00	1.00	1.00	1.00	1.00	1.00	1.00			
Upstream Filter(I)	1.00	1.00	0.00	0.00	1.00	1.00	1.00	0.00	1.00			
Uniform Delay (d), s/veh	14.6	12.6	0.0	0.0	12.9	12.9	5.6	0.0	5.4			
Incr Delay (d2), s/veh	0.1	0.1	0.0	0.0	0.2	0.3	0.4	0.0	0.3			
Initial Q Delay(d3),s/veh	0.0	0.0	0.0	0.0	0.0	0.0	0.0	0.0	0.0			
%ile BackOfQ(90%),veh/ln	0.5	1.0	0.0	0.0	1.4	1.4	2.2	0.0	1.9			
Unsig. Movement Delay, s/veh												
LnGrp Delay(d),s/veh	14.6	12.7	0.0	0.0	13.1	13.2	6.0	0.0	5.8			
LnGrp LOS	B	B	A	A	B	B	A	A	A			
Approach Vol, veh/h		127			243			784				
Approach Delay, s/veh		13.3			13.2			5.9				
Approach LOS		B			B			A				

Timer - Assigned Phs		2		4				8				
Phs Duration (G+Y+Rc), s		25.0		12.8				12.8				
Change Period (Y+Rc), s		5.0		5.0				5.0				
Max Green Setting (Gmax), s		60.0		40.0				40.0				
Max Q Clear Time (g_c+I1), s		7.9		5.8				4.6				
Green Ext Time (p_c), s		11.2		0.6				1.8				

Intersection Summary	
HCM 6th Ctrl Delay	8.2
HCM 6th LOS	A

Movement	EBL	EBT	EBR	WBL	WBT	WBR	NBL	NBT	NBR	SBL	SBT	SBR
Lane Configurations												
Traffic Volume (veh/h)	50	95	0	0	170	104	13	1395	158	0	0	0
Future Volume (veh/h)	50	95	0	0	170	104	13	1395	158	0	0	0
Initial Q (Qb), veh	0	0	0	0	0	0	0	0	0			
Ped-Bike Adj(A_pbT)	1.00		1.00	1.00		1.00	1.00		1.00			
Parking Bus, Adj	1.00	1.00	1.00	1.00	1.00	1.00	1.00	1.00	1.00			
Work Zone On Approach		No			No			No				
Adj Sat Flow, veh/h/ln	1682	1682	0	0	1682	1682	1723	1723	1723			
Adj Flow Rate, veh/h	52	98	0	0	175	107	13	1438	163			
Peak Hour Factor	0.97	0.97	0.97	0.97	0.97	0.97	0.97	0.97	0.97			
Percent Heavy Veh, %	5	5	0	0	5	5	2	2	2			
Cap, veh/h	189	286	0	0	331	192	18	2074	246			
Arrive On Green	0.17	0.17	0.00	0.00	0.17	0.17	0.69	0.69	0.69			
Sat Flow, veh/h	1071	1682	0	0	2030	1130	26	2998	356			
Grp Volume(v), veh/h	52	98	0	0	142	140	854	0	760			
Grp Sat Flow(s),veh/h/ln	1071	1682	0	0	1598	1478	1721	0	1659			
Q Serve(g_s), s	3.4	3.7	0.0	0.0	5.9	6.3	22.0	0.0	18.9			
Cycle Q Clear(g_c), s	9.7	3.7	0.0	0.0	5.9	6.3	22.0	0.0	18.9			
Prop In Lane	1.00		0.00	0.00		0.76	0.02		0.21			
Lane Grp Cap(c), veh/h	189	286	0	0	272	252	1191	0	1147			
V/C Ratio(X)	0.28	0.34	0.00	0.00	0.52	0.56	0.72	0.00	0.66			
Avail Cap(c_a), veh/h	598	929	0	0	883	817	1427	0	1375			
HCM Platoon Ratio	1.00	1.00	1.00	1.00	1.00	1.00	1.00	1.00	1.00			
Upstream Filter(I)	1.00	1.00	0.00	0.00	1.00	1.00	1.00	0.00	1.00			
Uniform Delay (d), s/veh	32.0	26.5	0.0	0.0	27.3	27.5	6.8	0.0	6.4			
Incr Delay (d2), s/veh	0.3	0.3	0.0	0.0	0.6	0.7	1.4	0.0	0.9			
Initial Q Delay(d3),s/veh	0.0	0.0	0.0	0.0	0.0	0.0	0.0	0.0	0.0			
%ile BackOfQ(90%),veh/ln	1.6	2.7	0.0	0.0	4.0	4.0	9.3	0.0	7.8			
Unsig. Movement Delay, s/veh												
LnGrp Delay(d),s/veh	32.2	26.7	0.0	0.0	27.9	28.2	8.2	0.0	7.3			
LnGrp LOS	C	C	A	A	C	C	A	A	A			
Approach Vol, veh/h		150			282			1614				
Approach Delay, s/veh		28.6			28.1			7.8				
Approach LOS		C			C			A				

Timer - Assigned Phs		2		4				8				
Phs Duration (G+Y+Rc), s		55.1		17.3				17.3				
Change Period (Y+Rc), s		5.0		5.0				5.0				
Max Green Setting (Gmax), s		60.0		40.0				40.0				
Max Q Clear Time (g_c+I1), s		24.0		11.7				8.3				
Green Ext Time (p_c), s		26.1		0.7				2.1				

Intersection Summary												
HCM 6th Ctrl Delay			12.1									
HCM 6th LOS			B									

Lane Group	EBL	EBT	EBR	WBL	WBT	WBR	NBL	NBT	NBR	SBL	SBT	SBR
Lane Configurations												
Traffic Volume (vph)	32	3	72	3	1	3	100	645	3	9	1568	31
Future Volume (vph)	32	3	72	3	1	3	100	645	3	9	1568	31
Ideal Flow (vphpl)	1750	1750	1750	1750	1750	1750	1750	1765	1750	1750	1765	1750
Lane Width (ft)	12	12	12	12	12	12	9	12	12	9	12	12
Storage Length (ft)	0		0	0		0	100		0	100		0
Storage Lanes	0		1	0		0	1		0	1		0
Taper Length (ft)	25			25			75			75		
Lane Util. Factor	1.00	1.00	1.00	1.00	1.00	1.00	1.00	0.95	0.95	1.00	0.95	0.95
Frt			0.850		0.942			0.999			0.997	
Flt Protected		0.956			0.979		0.950			0.950		
Satd. Flow (prot)	0	1442	1282	0	1614	0	1425	3191	0	1453	3246	0
Flt Permitted		0.742			0.911		0.060			0.375		
Satd. Flow (perm)	0	1119	1282	0	1502	0	90	3191	0	573	3246	0
Right Turn on Red			No			No			No			No
Satd. Flow (RTOR)												
Link Speed (mph)		25			25			30			30	
Link Distance (ft)		374			210			478			465	
Travel Time (s)		10.2			5.7			10.9			10.6	
Peak Hour Factor	0.89	0.89	0.89	0.89	0.89	0.89	0.89	0.89	0.89	0.89	0.89	0.89
Growth Factor	100%	100%	62%	100%	100%	100%	100%	100%	100%	100%	100%	100%
Heavy Vehicles (%)	16%	16%	16%	0%	0%	0%	5%	5%	5%	3%	3%	3%
Adj. Flow (vph)	36	3	50	3	1	3	112	725	3	10	1762	35
Shared Lane Traffic (%)												
Lane Group Flow (vph)	0	39	50	0	7	0	112	728	0	10	1797	0
Enter Blocked Intersection	No	No	No	No	No	No	No	No	No	No	No	No
Lane Alignment	Left	Left	Right	Left	Left	Right	Left	Left	Right	Left	Left	Right
Median Width(ft)		0			0			14			14	
Link Offset(ft)		0			0			0			0	
Crosswalk Width(ft)		16			16			16			16	
Two way Left Turn Lane								Yes			Yes	
Headway Factor	1.11	1.11	1.11	1.11	1.11	1.11	1.27	1.10	1.11	1.27	1.10	1.11
Turning Speed (mph)	15		9	15		9	15		9	15		9
Number of Detectors	1	2	2	1	1		1	2		1	2	
Detector Template	Left			Left								
Leading Detector (ft)	20	106	106	20	30		30	183		30	183	
Trailing Detector (ft)	0	0	0	0	0		0	80		0	80	
Detector 1 Position(ft)	0	0	0	0	0		0	80		0	80	
Detector 1 Size(ft)	20	30	30	20	30		30	3		30	3	
Detector 1 Type	Cl+Ex	Cl+Ex	Cl+Ex	Cl+Ex	Cl+Ex		Cl+Ex	Cl+Ex		Cl+Ex	Cl+Ex	
Detector 1 Channel												
Detector 1 Extend (s)	0.0	0.0	0.0	0.0	0.0		0.0	0.0		0.0	0.0	
Detector 1 Queue (s)	0.0	0.0	0.0	0.0	0.0		0.0	0.0		0.0	0.0	
Detector 1 Delay (s)	0.0	2.0	10.0	0.0	10.0		0.0	0.0		0.0	0.0	
Detector 2 Position(ft)		100	100					180			180	
Detector 2 Size(ft)		6	6					3			3	
Detector 2 Type		Extend	Extend					Cl+Ex			Cl+Ex	
Detector 2 Channel												
Detector 2 Extend (s)		2.5	2.5					0.0			0.0	

Lane Group	EBL	EBT	EBR	WBL	WBT	WBR	NBL	NBT	NBR	SBL	SBT	SBR
Turn Type	Perm	NA	Perm	Perm	NA		pm+pt	NA		pm+pt	NA	
Protected Phases		4			8		5	2		1	6	
Permitted Phases	4		4	8			2			6		
Detector Phase	4	4	4	8	8		5	2		1	6	
Switch Phase												
Minimum Initial (s)	10.0	10.0	10.0	10.0	10.0		5.0	30.0		5.0	30.0	
Minimum Split (s)	34.5	34.5	34.5	34.5	34.5		9.5	35.0		8.0	35.0	
Total Split (s)	34.5	34.5	34.5	34.5	34.5		23.0	65.0		23.0	65.0	
Total Split (%)	28.2%	28.2%	28.2%	28.2%	28.2%		18.8%	53.1%		18.8%	53.1%	
Maximum Green (s)	30.0	30.0	30.0	30.0	30.0		20.0	60.0		20.0	60.0	
Yellow Time (s)	3.0	3.0	3.0	3.0	3.0		3.0	3.5		3.0	3.5	
All-Red Time (s)	1.5	1.5	1.5	1.5	1.5		0.0	1.5		0.0	1.5	
Lost Time Adjust (s)		0.0	0.0		0.0		0.0	0.0		0.0	0.0	
Total Lost Time (s)		4.5	4.5		4.5		3.0	5.0		3.0	5.0	
Lead/Lag							Lead	Lag		Lead	Lag	
Lead-Lag Optimize?							Yes	Yes		Yes	Yes	
Vehicle Extension (s)	1.5	1.5	1.5	1.5	1.5		3.0	2.5		3.0	2.5	
Minimum Gap (s)	1.0	1.0	1.0	1.0	1.0		1.0	2.0		1.0	2.0	
Time Before Reduce (s)	15.0	15.0	15.0	15.0	15.0		0.0	10.0		0.0	10.0	
Time To Reduce (s)	15.0	15.0	15.0	15.0	15.0		10.0	10.0		10.0	10.0	
Recall Mode	None	None	None	None	None		None	Min		None	Min	
Walk Time (s)	10.0	10.0	10.0	10.0	10.0			10.0			10.0	
Flash Dont Walk (s)	20.0	20.0	20.0	20.0	20.0			14.0			14.0	
Pedestrian Calls (#/hr)	0	0	0	4	4			3			1	
Act Effct Green (s)		13.4	13.4		13.4		80.6	78.2		71.8	64.0	
Actuated g/C Ratio		0.14	0.14		0.14		0.82	0.79		0.73	0.65	
v/c Ratio		0.26	0.29		0.03		0.49	0.29		0.02	0.85	
Control Delay		42.5	42.6		36.8		23.1	5.4		4.7	22.0	
Queue Delay		0.0	0.0		0.0		0.0	0.0		0.0	0.0	
Total Delay		42.5	42.6		36.8		23.1	5.4		4.7	22.0	
LOS		D	D		D		C	A		A	C	
Approach Delay		42.6			36.8			7.7			21.9	
Approach LOS		D			D			A			C	
Queue Length 50th (ft)		22	28		4		20	46		1	402	
Queue Length 95th (ft)		55	65		17		95	185		8	#976	
Internal Link Dist (ft)		294			130			398			385	
Turn Bay Length (ft)							100			100		
Base Capacity (vph)		345	395		463		348	2535		648	2112	
Starvation Cap Reductn		0	0		0		0	0		0	0	
Spillback Cap Reductn		0	0		0		0	0		0	0	
Storage Cap Reductn		0	0		0		0	0		0	0	
Reduced v/c Ratio		0.11	0.13		0.02		0.32	0.29		0.02	0.85	

Intersection Summary	
Area Type:	Other
Cycle Length: 122.5	
Actuated Cycle Length: 98.4	
Natural Cycle: 100	
Control Type: Actuated-Uncoordinated	

Maximum v/c Ratio: 0.85	
Intersection Signal Delay: 18.3	Intersection LOS: B
Intersection Capacity Utilization 76.1%	ICU Level of Service D
Analysis Period (min) 15	

95th percentile volume exceeds capacity, queue may be longer.
Queue shown is maximum after two cycles.

Splits and Phases: 22: USH 53 (Copeland Ave) & Causeway Blvd

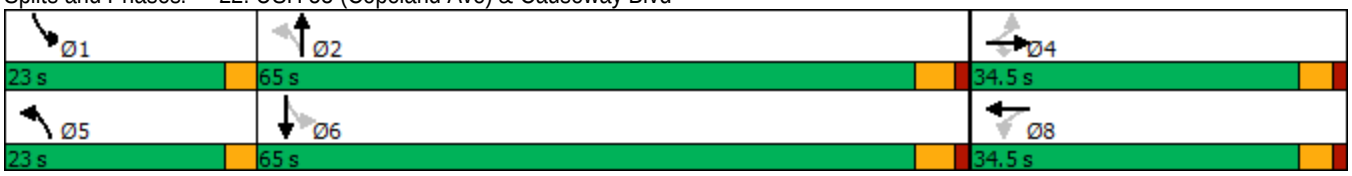

Lane Group	EBL	EBT	EBR	WBL	WBT	WBR	NBL	NBT	NBR	SBL	SBT	SBR
Lane Configurations												
Traffic Volume (vph)	77	3	107	8	1	7	56	1494	5	0	1036	32
Future Volume (vph)	77	3	107	8	1	7	56	1494	5	0	1036	32
Ideal Flow (vphpl)	1750	1750	1750	1750	1750	1750	1750	1765	1750	1750	1765	1750
Lane Width (ft)	12	12	12	12	12	12	9	12	12	9	12	12
Storage Length (ft)	0		0	0		0	100		0	100		0
Storage Lanes	0		1	0		0	1		0	1		0
Taper Length (ft)	25			25			75			75		
Lane Util. Factor	1.00	1.00	1.00	1.00	1.00	1.00	1.00	0.95	0.95	1.00	0.95	0.95
Frt			0.850		0.958						0.996	
Flt Protected		0.954			0.970		0.950					
Satd. Flow (prot)	0	1605	1430	0	1626	0	1481	3320	0	1529	3243	0
Flt Permitted		0.725			0.868		0.169					
Satd. Flow (perm)	0	1220	1430	0	1455	0	264	3320	0	1529	3243	0
Right Turn on Red			No			No			No			No
Satd. Flow (RTOR)												
Link Speed (mph)		25			25			30			30	
Link Distance (ft)		374			210			478			465	
Travel Time (s)		10.2			5.7			10.9			10.6	
Peak Hour Factor	0.97	0.97	0.97	0.97	0.97	0.97	0.97	0.97	0.97	0.97	0.97	0.97
Growth Factor	100%	100%	100%	100%	100%	62%	100%	100%	100%	100%	100%	100%
Heavy Vehicles (%)	4%	4%	4%	0%	0%	0%	1%	1%	1%	3%	3%	3%
Adj. Flow (vph)	79	3	110	8	1	4	58	1540	5	0	1068	33
Shared Lane Traffic (%)												
Lane Group Flow (vph)	0	82	110	0	13	0	58	1545	0	0	1101	0
Enter Blocked Intersection	No	No	No	No	No	No	No	No	No	No	No	No
Lane Alignment	Left	Left	Right	Left	Left	Right	Left	Left	Right	Left	Left	Right
Median Width(ft)		0			0			14			14	
Link Offset(ft)		0			0			0			0	
Crosswalk Width(ft)		16			16			16			16	
Two way Left Turn Lane								Yes			Yes	
Headway Factor	1.11	1.11	1.11	1.11	1.11	1.11	1.27	1.10	1.11	1.27	1.10	1.11
Turning Speed (mph)	15		9	15		9	15		9	15		9
Number of Detectors	1	2	2	1	1		1	2		1	2	
Detector Template	Left			Left								
Leading Detector (ft)	20	106	106	20	30		30	183		30	183	
Trailing Detector (ft)	0	0	0	0	0		0	80		0	80	
Detector 1 Position(ft)	0	0	0	0	0		0	80		0	80	
Detector 1 Size(ft)	20	30	30	20	30		30	3		30	3	
Detector 1 Type	Cl+Ex	Cl+Ex	Cl+Ex	Cl+Ex	Cl+Ex		Cl+Ex	Cl+Ex		Cl+Ex	Cl+Ex	
Detector 1 Channel												
Detector 1 Extend (s)	0.0	0.0	0.0	0.0	0.0		0.0	0.0		0.0	0.0	
Detector 1 Queue (s)	0.0	0.0	0.0	0.0	0.0		0.0	0.0		0.0	0.0	
Detector 1 Delay (s)	0.0	2.0	10.0	0.0	10.0		0.0	0.0		0.0	0.0	
Detector 2 Position(ft)		100	100					180			180	
Detector 2 Size(ft)		6	6					3			3	
Detector 2 Type		Extend	Extend					Cl+Ex			Cl+Ex	
Detector 2 Channel												
Detector 2 Extend (s)		2.5	2.5					0.0			0.0	

Lane Group	EBL	EBT	EBR	WBL	WBT	WBR	NBL	NBT	NBR	SBL	SBT	SBR
Turn Type	Perm	NA	Perm	Perm	NA		pm+pt	NA		pm+pt	NA	
Protected Phases		4			8		5	2		1	6	
Permitted Phases	4		4	8			2			6		
Detector Phase	4	4	4	8	8		5	2		1	6	
Switch Phase												
Minimum Initial (s)	10.0	10.0	10.0	10.0	10.0		5.0	30.0		5.0	30.0	
Minimum Split (s)	34.5	34.5	34.5	34.5	34.5		9.5	35.0		8.0	35.0	
Total Split (s)	34.5	34.5	34.5	34.5	34.5		23.0	65.0		23.0	65.0	
Total Split (%)	28.2%	28.2%	28.2%	28.2%	28.2%		18.8%	53.1%		18.8%	53.1%	
Maximum Green (s)	30.0	30.0	30.0	30.0	30.0		20.0	60.0		20.0	60.0	
Yellow Time (s)	3.0	3.0	3.0	3.0	3.0		3.0	3.5		3.0	3.5	
All-Red Time (s)	1.5	1.5	1.5	1.5	1.5		0.0	1.5		0.0	1.5	
Lost Time Adjust (s)		0.0	0.0		0.0		0.0	0.0		0.0	0.0	
Total Lost Time (s)		4.5	4.5		4.5		3.0	5.0		3.0	5.0	
Lead/Lag							Lead	Lag		Lead	Lag	
Lead-Lag Optimize?							Yes	Yes		Yes	Yes	
Vehicle Extension (s)	1.5	1.5	1.5	1.5	1.5		3.0	2.5		3.0	2.5	
Minimum Gap (s)	1.0	1.0	1.0	1.0	1.0		1.0	2.0		1.0	2.0	
Time Before Reduce (s)	15.0	15.0	15.0	15.0	15.0		0.0	10.0		0.0	10.0	
Time To Reduce (s)	15.0	15.0	15.0	15.0	15.0		10.0	10.0		10.0	10.0	
Recall Mode	None	None	None	None	None		None	Min		None	Min	
Walk Time (s)	10.0	10.0	10.0	10.0	10.0			10.0			10.0	
Flash Dont Walk (s)	20.0	20.0	20.0	20.0	20.0			14.0			14.0	
Pedestrian Calls (#/hr)	1	1	1	1	1			9			2	
Act Effct Green (s)		13.6	13.6		13.6		45.5	43.4			35.1	
Actuated g/C Ratio		0.20	0.20		0.20		0.68	0.65			0.52	
v/c Ratio		0.33	0.38		0.04		0.19	0.72			0.65	
Control Delay		28.0	28.4		23.3		6.1	11.0			15.4	
Queue Delay		0.0	0.0		0.0		0.0	0.0			0.0	
Total Delay		28.0	28.4		23.3		6.1	11.0			15.4	
LOS		C	C		C		A	B			B	
Approach Delay		28.2			23.3			10.9			15.4	
Approach LOS		C			C			B			B	
Queue Length 50th (ft)		27	36		4		5	142			144	
Queue Length 95th (ft)		78	98		20		29	448			353	
Internal Link Dist (ft)		294			130			398			385	
Turn Bay Length (ft)							100					
Base Capacity (vph)		573	671		683		560	3024			2953	
Starvation Cap Reductn		0	0		0		0	0			0	
Spillback Cap Reductn		0	0		0		0	0			0	
Storage Cap Reductn		0	0		0		0	0			0	
Reduced v/c Ratio		0.14	0.16		0.02		0.10	0.51			0.37	

Intersection Summary	
Area Type:	Other
Cycle Length: 122.5	
Actuated Cycle Length: 66.9	
Natural Cycle: 90	
Control Type: Actuated-Uncoordinated	

Maximum v/c Ratio: 0.72	
Intersection Signal Delay: 13.8	Intersection LOS: B
Intersection Capacity Utilization 66.8%	ICU Level of Service C
Analysis Period (min) 15	

Splits and Phases: 22: USH 53 (Copeland Ave) & Causeway Blvd

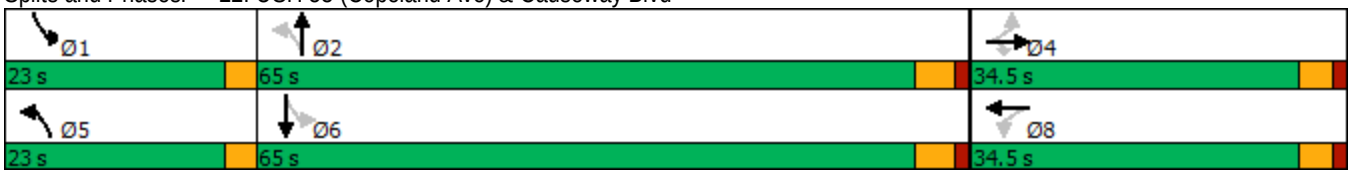

Movement	WBL	WBR	NBT	NBR	SBL	SBT
Lane Configurations						
Traffic Volume (veh/h)	37	19	727	5	54	1580
Future Volume (veh/h)	37	19	727	5	54	1580
Initial Q (Qb), veh	0	0	0	0	0	0
Ped-Bike Adj(A_pbT)	1.00	1.00		1.00	1.00	
Parking Bus, Adj	1.00	1.00	1.00	1.00	1.00	1.00
Work Zone On Approach	No		No			No
Adj Sat Flow, veh/h/ln	1641	1641	1682	1682	1709	1724
Adj Flow Rate, veh/h	43	14	836	6	62	1816
Peak Hour Factor	0.87	0.87	0.87	0.87	0.87	0.87
Percent Heavy Veh, %	8	8	5	5	3	3
Cap, veh/h	247	220	1500	11	488	2168
Arrive On Green	0.16	0.16	0.46	0.46	0.11	0.66
Sat Flow, veh/h	1563	1391	3336	23	1628	3361
Grp Volume(v), veh/h	43	14	411	431	62	1816
Grp Sat Flow(s),veh/h/ln	1563	1391	1598	1678	1628	1638
Q Serve(g_s), s	1.3	0.5	10.4	10.4	0.9	23.4
Cycle Q Clear(g_c), s	1.3	0.5	10.4	10.4	0.9	23.4
Prop In Lane	1.00	1.00		0.01	1.00	
Lane Grp Cap(c), veh/h	247	220	737	774	488	2168
V/C Ratio(X)	0.17	0.06	0.56	0.56	0.13	0.84
Avail Cap(c_a), veh/h	703	626	1006	1057	1040	2168
HCM Platoon Ratio	1.00	1.00	1.00	1.00	1.00	1.00
Upstream Filter(I)	1.00	1.00	1.00	1.00	1.00	1.00
Uniform Delay (d), s/veh	20.3	19.9	10.9	10.9	6.0	7.1
Incr Delay (d2), s/veh	0.7	0.3	1.4	1.3	0.2	3.4
Initial Q Delay(d3),s/veh	0.0	0.0	0.0	0.0	0.0	0.0
%ile BackOfQ(90%),veh/ln	0.9	0.3	5.6	5.8	0.4	8.8
Unsig. Movement Delay, s/veh						
LnGrp Delay(d),s/veh	21.0	20.2	12.3	12.2	6.1	10.5
LnGrp LOS	C	C	B	B	A	B
Approach Vol, veh/h	57		842			1878
Approach Delay, s/veh	20.8		12.2			10.4
Approach LOS	C		B			B

Timer - Assigned Phs		2			5	6		8
Phs Duration (G+Y+Rc), s		41.8			11.2	30.6		13.8
Change Period (Y+Rc), s		5.0			5.0	5.0		5.0
Max Green Setting (Gmax), s		35.0			25.0	35.0		25.0
Max Q Clear Time (g_c+I1), s		25.4			2.9	12.4		3.3
Green Ext Time (p_c), s		9.4			0.3	13.3		0.3

Intersection Summary	
HCM 6th Ctrl Delay	11.1
HCM 6th LOS	B

Movement	WBL	WBR	NBT	NBR	SBL	SBT
Lane Configurations						
Traffic Volume (veh/h)	207	138	1401	23	115	988
Future Volume (veh/h)	207	138	1401	23	115	988
Initial Q (Qb), veh	0	0	0	0	0	0
Ped-Bike Adj(A_pbT)	1.00	1.00		1.00	1.00	
Parking Bus, Adj	1.00	1.00	1.00	1.00	1.00	1.00
Work Zone On Approach	No		No			No
Adj Sat Flow, veh/h/ln	1750	1750	1736	1736	1723	1737
Adj Flow Rate, veh/h	209	86	1415	23	116	998
Peak Hour Factor	0.99	0.99	0.99	0.99	0.99	0.99
Percent Heavy Veh, %	0	0	1	1	2	2
Cap, veh/h	338	301	1566	25	328	2185
Arrive On Green	0.20	0.20	0.47	0.47	0.12	0.66
Sat Flow, veh/h	1667	1483	3409	54	1641	3388
Grp Volume(v), veh/h	209	86	702	736	116	998
Grp Sat Flow(s),veh/h/ln	1667	1483	1650	1727	1641	1651
Q Serve(g_s), s	8.4	3.6	28.9	29.0	2.1	10.8
Cycle Q Clear(g_c), s	8.4	3.6	28.9	29.0	2.1	10.8
Prop In Lane	1.00	1.00		0.03	1.00	
Lane Grp Cap(c), veh/h	338	301	777	814	328	2185
V/C Ratio(X)	0.62	0.29	0.90	0.90	0.35	0.46
Avail Cap(c_a), veh/h	564	502	782	818	682	2185
HCM Platoon Ratio	1.00	1.00	1.00	1.00	1.00	1.00
Upstream Filter(I)	1.00	1.00	1.00	1.00	1.00	1.00
Uniform Delay (d), s/veh	26.8	24.9	18.0	18.0	14.1	6.0
Incr Delay (d2), s/veh	3.9	1.1	14.4	14.0	0.9	0.3
Initial Q Delay(d3),s/veh	0.0	0.0	0.0	0.0	0.0	0.0
%ile BackOfQ(90%),veh/ln	6.0	2.4	17.4	18.1	1.7	5.2
Unsig. Movement Delay, s/veh						
LnGrp Delay(d),s/veh	30.8	26.0	32.4	32.0	15.1	6.4
LnGrp LOS	C	C	C	C	B	A
Approach Vol, veh/h	295		1438			1114
Approach Delay, s/veh	29.4		32.2			7.3
Approach LOS	C		C			A

Timer - Assigned Phs		2			5	6	8
Phs Duration (G+Y+Rc), s		53.9			14.1	39.8	20.0
Change Period (Y+Rc), s		5.0			5.0	5.0	5.0
Max Green Setting (Gmax), s		35.0			25.0	35.0	25.0
Max Q Clear Time (g_c+I1), s		12.8			4.1	31.0	10.4
Green Ext Time (p_c), s		15.5			0.6	3.8	1.8

Intersection Summary	
HCM 6th Ctrl Delay	22.2
HCM 6th LOS	C

Movement	EBL	EBT	EBR	WBL	WBT	WBR	NBL	NBT	NBR	SBL	SBT	SBR
Lane Configurations												
Traffic Volume (veh/h)	213	0	108	4	0	0	196	1250	1	5	1367	461
Future Volume (veh/h)	213	0	108	4	0	0	196	1250	1	5	1367	461
Initial Q (Qb), veh	0	0	0	0	0	0	0	0	0	0	0	0
Ped-Bike Adj(A_pbT)	1.00		1.00	1.00		1.00	1.00		1.00	1.00		1.00
Parking Bus, Adj	1.00	1.00	1.00	1.00	1.00	1.00	1.00	1.00	1.00	1.00	1.00	1.00
Work Zone On Approach		No			No			No			No	
Adj Sat Flow, veh/h/ln	1695	1695	1763	1750	1750	1750	1723	1723	1723	1709	1816	1709
Adj Flow Rate, veh/h	234	0	74	4	0	0	215	1374	1	5	1502	314
Peak Hour Factor	0.91	0.91	0.91	0.91	0.91	0.91	0.91	0.91	0.91	0.91	0.91	0.91
Percent Heavy Veh, %	4	4	4	0	0	0	2	2	2	3	3	3
Cap, veh/h	384	0	178	9	0	0	268	2250	2	257	2089	1049
Arrive On Green	0.12	0.00	0.12	0.01	0.00	0.00	0.07	0.67	0.67	0.01	0.61	0.61
Sat Flow, veh/h	3229	0	1494	1667	0	0	1641	3356	2	1628	3451	1448
Grp Volume(v), veh/h	234	0	74	4	0	0	215	670	705	5	1502	314
Grp Sat Flow(s),veh/h/ln	1615	0	1494	1667	0	0	1641	1637	1722	1628	1726	1448
Q Serve(g_s), s	6.8	0.0	4.5	0.2	0.0	0.0	4.5	22.4	22.4	0.1	29.8	7.5
Cycle Q Clear(g_c), s	6.8	0.0	4.5	0.2	0.0	0.0	4.5	22.4	22.4	0.1	29.8	7.5
Prop In Lane	1.00		1.00	1.00		0.00	1.00		0.00	1.00		1.00
Lane Grp Cap(c), veh/h	384	0	178	9	0	0	268	1097	1155	257	2089	1049
V/C Ratio(X)	0.61	0.00	0.42	0.46	0.00	0.00	0.80	0.61	0.61	0.02	0.72	0.30
Avail Cap(c_a), veh/h	1317	0	609	510	0	0	486	1097	1155	578	2111	1058
HCM Platoon Ratio	1.00	1.00	1.00	1.00	1.00	1.00	1.00	1.00	1.00	1.00	1.00	1.00
Upstream Filter(I)	1.00	0.00	1.00	1.00	0.00	0.00	1.00	1.00	1.00	1.00	1.00	1.00
Uniform Delay (d), s/veh	41.0	0.0	40.0	48.6	0.0	0.0	19.0	9.0	9.0	8.7	13.5	4.8
Incr Delay (d2), s/veh	2.2	0.0	2.2	44.8	0.0	0.0	5.5	2.1	2.0	0.0	1.9	0.6
Initial Q Delay(d3),s/veh	0.0	0.0	0.0	0.0	0.0	0.0	0.0	0.0	0.0	0.0	0.0	0.0
%ile BackOfQ(90%),veh/ln	5.0	0.0	3.2	0.4	0.0	0.0	5.9	11.4	11.9	0.1	14.6	5.4
Unsig. Movement Delay, s/veh												
LnGrp Delay(d),s/veh	43.2	0.0	42.2	93.4	0.0	0.0	24.5	11.1	11.0	8.8	15.4	5.3
LnGrp LOS	D	A	D	F	A	A	C	B	B	A	B	A
Approach Vol, veh/h		308			4			1590			1821	
Approach Delay, s/veh		43.0			93.4			12.9			13.7	
Approach LOS		D			F			B			B	

Timer - Assigned Phs	1	2		4	5	6		8				
Phs Duration (G+Y+Rc), s	3.6	71.3		17.2	10.0	64.9		6.0				
Change Period (Y+Rc), s	3.0	5.5		5.5	3.0	5.5		5.5				
Max Green Setting (Gmax), s	20.0	60.0		40.0	20.0	60.0		30.0				
Max Q Clear Time (g_c+I1), s	2.1	24.4		8.8	6.5	31.8		2.2				
Green Ext Time (p_c), s	0.0	34.2		2.9	0.6	27.5		0.0				

Intersection Summary	
HCM 6th Ctrl Delay	15.9
HCM 6th LOS	B

Notes

User approved volume balancing among the lanes for turning movement.

Movement	EBL	EBT	EBR	WBL	WBT	WBR	NBL	NBT	NBR	SBL	SBT	SBR
Lane Configurations												
Traffic Volume (veh/h)	553	2	142	14	2	2	171	1393	6	4	1291	373
Future Volume (veh/h)	553	2	142	14	2	2	171	1393	6	4	1291	373
Initial Q (Qb), veh	0	0	0	0	0	0	0	0	0	0	0	0
Ped-Bike Adj(A_pbT)	1.00		1.00	1.00		1.00	1.00		1.00	1.00		1.00
Parking Bus, Adj	1.00	1.00	1.00	1.00	1.00	1.00	1.00	1.00	1.00	1.00	1.00	1.00
Work Zone On Approach		No			No			No			No	
Adj Sat Flow, veh/h/ln	1750	1750	1820	1750	1750	1750	1723	1723	1723	1736	1845	1736
Adj Flow Rate, veh/h	615	0	98	16	2	2	190	1548	7	4	1434	257
Peak Hour Factor	0.90	0.90	0.90	0.90	0.90	0.90	0.90	0.90	0.90	0.90	0.90	0.90
Percent Heavy Veh, %	0	0	0	0	0	0	2	2	2	1	1	1
Cap, veh/h	804	0	372	27	3	3	227	1903	9	135	1756	1092
Arrive On Green	0.24	0.00	0.24	0.02	0.02	0.02	0.07	0.57	0.57	0.01	0.50	0.50
Sat Flow, veh/h	3333	0	1542	1323	165	165	1641	3341	15	1654	3506	1471
Grp Volume(v), veh/h	615	0	98	20	0	0	190	758	797	4	1434	257
Grp Sat Flow(s),veh/h/ln	1667	0	1542	1654	0	0	1641	1637	1720	1654	1753	1471
Q Serve(g_s), s	20.4	0.0	6.1	1.4	0.0	0.0	6.4	44.2	44.3	0.1	41.1	6.5
Cycle Q Clear(g_c), s	20.4	0.0	6.1	1.4	0.0	0.0	6.4	44.2	44.3	0.1	41.1	6.5
Prop In Lane	1.00		1.00	0.80		0.10	1.00		0.01	1.00		1.00
Lane Grp Cap(c), veh/h	804	0	372	34	0	0	227	932	979	135	1756	1092
V/C Ratio(X)	0.76	0.00	0.26	0.60	0.00	0.00	0.84	0.81	0.81	0.03	0.82	0.24
Avail Cap(c_a), veh/h	1119	0	518	417	0	0	381	932	979	404	1766	1096
HCM Platoon Ratio	1.00	1.00	1.00	1.00	1.00	1.00	1.00	1.00	1.00	1.00	1.00	1.00
Upstream Filter(I)	1.00	0.00	1.00	1.00	0.00	0.00	1.00	1.00	1.00	1.00	1.00	1.00
Uniform Delay (d), s/veh	42.0	0.0	36.6	57.9	0.0	0.0	25.0	20.6	20.6	20.1	25.1	4.8
Incr Delay (d2), s/veh	2.7	0.0	0.5	21.7	0.0	0.0	8.0	7.1	6.8	0.1	4.0	0.4
Initial Q Delay(d3),s/veh	0.0	0.0	0.0	0.0	0.0	0.0	0.0	0.0	0.0	0.0	0.0	0.0
%ile BackOfQ(90%),veh/ln	12.5	0.0	4.3	1.4	0.0	0.0	5.6	23.6	24.7	0.1	22.2	6.8
Unsig. Movement Delay, s/veh												
LnGrp Delay(d),s/veh	44.7	0.0	37.1	79.5	0.0	0.0	33.0	27.7	27.4	20.2	29.1	5.2
LnGrp LOS	D	A	D	E	A	A	C	C	C	C	C	A
Approach Vol, veh/h		713			20			1745			1695	
Approach Delay, s/veh		43.7			79.5			28.1			25.5	
Approach LOS		D			E			C			C	

Timer - Assigned Phs	1	2		4	5	6		8				
Phs Duration (G+Y+Rc), s	3.6	73.3		34.2	11.8	65.1		7.9				
Change Period (Y+Rc), s	3.0	5.5		5.5	3.0	5.5		5.5				
Max Green Setting (Gmax), s	20.0	60.0		40.0	20.0	60.0		30.0				
Max Q Clear Time (g_c+I1), s	2.1	46.3		22.4	8.4	43.1		3.4				
Green Ext Time (p_c), s	0.0	13.6		6.3	0.4	16.5		0.0				

Intersection Summary			
HCM 6th Ctrl Delay			30.0
HCM 6th LOS			C

Notes

User approved volume balancing among the lanes for turning movement.

Movement	EBL	EBT	EBR	WBL	WBT	WBR	NBL	NBT	NBR	SBL	SBT	SBR
Lane Configurations												
Traffic Volume (veh/h)	12	285	42	75	495	13	18	16	13	5	32	8
Future Volume (veh/h)	12	285	42	75	495	13	18	16	13	5	32	8
Initial Q (Qb), veh	0	0	0	0	0	0	0	0	0	0	0	0
Ped-Bike Adj(A_pbT)	1.00		1.00	1.00		1.00	1.00		1.00	1.00		1.00
Parking Bus, Adj	1.00	1.00	1.00	1.00	1.00	1.00	1.00	1.00	1.00	1.00	1.00	1.00
Work Zone On Approach		No			No			No			No	
Adj Sat Flow, veh/h/ln	1695	1695	1695	1736	1736	1736	1641	1641	1641	1510	1510	1573
Adj Flow Rate, veh/h	15	356	52	94	619	16	22	20	10	6	40	10
Peak Hour Factor	0.80	0.80	0.80	0.80	0.80	0.80	0.80	0.80	0.80	0.80	0.80	0.80
Percent Heavy Veh, %	4	4	4	1	1	1	8	8	8	13	13	13
Cap, veh/h	536	1057	154	721	1231	32	35	32	59	64	52	13
Arrive On Green	0.73	0.73	0.73	0.73	0.73	0.73	0.04	0.04	0.04	0.04	0.04	0.04
Sat Flow, veh/h	780	1446	211	985	1685	44	838	761	1391	1438	1166	291
Grp Volume(v), veh/h	15	0	408	94	0	635	42	0	10	6	0	50
Grp Sat Flow(s),veh/h/ln	780	0	1657	985	0	1729	1599	0	1391	1438	0	1457
Q Serve(g_s), s	0.7	0.0	7.2	3.1	0.0	12.8	2.1	0.0	0.6	0.3	0.0	2.8
Cycle Q Clear(g_c), s	13.5	0.0	7.2	10.3	0.0	12.8	2.1	0.0	0.6	0.3	0.0	2.8
Prop In Lane	1.00		0.13	1.00		0.03	0.52		1.00	1.00		0.20
Lane Grp Cap(c), veh/h	536	0	1211	721	0	1263	68	0	59	64	0	65
V/C Ratio(X)	0.03	0.00	0.34	0.13	0.00	0.50	0.62	0.00	0.17	0.09	0.00	0.77
Avail Cap(c_a), veh/h	583	0	1312	781	0	1368	682	0	593	525	0	532
HCM Platoon Ratio	1.00	1.00	1.00	1.00	1.00	1.00	1.00	1.00	1.00	1.00	1.00	1.00
Upstream Filter(I)	1.00	0.00	1.00	1.00	0.00	1.00	1.00	0.00	1.00	1.00	0.00	1.00
Uniform Delay (d), s/veh	7.6	0.0	3.9	5.8	0.0	4.7	38.7	0.0	37.9	37.7	0.0	38.8
Incr Delay (d2), s/veh	0.0	0.0	0.3	0.2	0.0	0.7	9.0	0.0	1.3	0.6	0.0	17.7
Initial Q Delay(d3),s/veh	0.0	0.0	0.0	0.0	0.0	0.0	0.0	0.0	0.0	0.0	0.0	0.0
%ile BackOfQ(90%),veh/ln	0.2	0.0	3.6	1.1	0.0	6.2	1.8	0.0	0.4	0.2	0.0	2.4
Unsig. Movement Delay, s/veh												
LnGrp Delay(d),s/veh	7.6	0.0	4.3	6.0	0.0	5.4	47.6	0.0	39.3	38.3	0.0	56.5
LnGrp LOS	A	A	A	A	A	A	D	A	D	D	A	E
Approach Vol, veh/h		423			729			52			56	
Approach Delay, s/veh		4.4			5.4			46.0			54.5	
Approach LOS		A			A			D			D	

Timer - Assigned Phs		2		4		6		8				
Phs Duration (G+Y+Rc), s		65.0		8.5		65.0		8.6				
Change Period (Y+Rc), s		5.0		5.0		5.0		5.0				
Max Green Setting (Gmax), s		65.0		35.0		65.0		30.0				
Max Q Clear Time (g_c+I1), s		15.5		4.1		14.8		4.8				
Green Ext Time (p_c), s		10.2		0.3		19.5		0.3				

Intersection Summary			
HCM 6th Ctrl Delay			9.0
HCM 6th LOS			A

Movement	EBL	EBT	EBR	WBL	WBT	WBR	NBL	NBT	NBR	SBL	SBT	SBR
Lane Configurations												
Traffic Volume (veh/h)	12	612	56	27	487	3	98	4	85	11	12	18
Future Volume (veh/h)	12	612	56	27	487	3	98	4	85	11	12	18
Initial Q (Qb), veh	0	0	0	0	0	0	0	0	0	0	0	0
Ped-Bike Adj(A_pbT)	1.00		1.00	1.00		1.00	1.00		1.00	1.00		1.00
Parking Bus, Adj	1.00	1.00	1.00	1.00	1.00	1.00	1.00	1.00	1.00	1.00	1.00	1.00
Work Zone On Approach		No			No			No			No	
Adj Sat Flow, veh/h/ln	1736	1736	1736	1736	1736	1736	1723	1723	1723	1680	1680	1750
Adj Flow Rate, veh/h	13	680	62	30	541	3	109	4	59	12	13	20
Peak Hour Factor	0.90	0.90	0.90	0.90	0.90	0.90	0.90	0.90	0.90	0.90	0.90	0.90
Percent Heavy Veh, %	1	1	1	1	1	1	2	2	2	0	0	0
Cap, veh/h	531	1032	94	381	1135	6	165	6	152	65	24	37
Arrive On Green	0.66	0.66	0.66	0.66	0.66	0.66	0.10	0.10	0.10	0.04	0.04	0.04
Sat Flow, veh/h	869	1568	143	723	1725	10	1585	58	1460	1600	597	918
Grp Volume(v), veh/h	13	0	742	30	0	544	113	0	59	12	0	33
Grp Sat Flow(s),veh/h/ln	869	0	1711	723	0	1735	1643	0	1460	1600	0	1515
Q Serve(g_s), s	0.6	0.0	19.9	2.0	0.0	11.9	5.0	0.0	2.9	0.6	0.0	1.6
Cycle Q Clear(g_c), s	12.4	0.0	19.9	21.9	0.0	11.9	5.0	0.0	2.9	0.6	0.0	1.6
Prop In Lane	1.00		0.08	1.00		0.01	0.96		1.00	1.00		0.61
Lane Grp Cap(c), veh/h	531	0	1126	381	0	1141	171	0	152	65	0	61
V/C Ratio(X)	0.02	0.00	0.66	0.08	0.00	0.48	0.66	0.00	0.39	0.19	0.00	0.54
Avail Cap(c_a), veh/h	702	0	1463	524	0	1484	757	0	672	632	0	598
HCM Platoon Ratio	1.00	1.00	1.00	1.00	1.00	1.00	1.00	1.00	1.00	1.00	1.00	1.00
Upstream Filter(I)	1.00	0.00	1.00	1.00	0.00	1.00	1.00	0.00	1.00	1.00	0.00	1.00
Uniform Delay (d), s/veh	9.6	0.0	7.8	14.5	0.0	6.5	32.7	0.0	31.8	35.3	0.0	35.8
Incr Delay (d2), s/veh	0.0	0.0	1.4	0.2	0.0	0.7	4.3	0.0	1.6	1.4	0.0	7.2
Initial Q Delay(d3),s/veh	0.0	0.0	0.0	0.0	0.0	0.0	0.0	0.0	0.0	0.0	0.0	0.0
%ile BackOfQ(90%),veh/ln	0.2	0.0	9.6	0.6	0.0	6.3	3.9	0.0	1.9	0.4	0.0	1.3
Unsig. Movement Delay, s/veh												
LnGrp Delay(d),s/veh	9.6	0.0	9.3	14.6	0.0	7.1	37.0	0.0	33.4	36.6	0.0	43.0
LnGrp LOS	A	A	A	B	A	A	D	A	C	D	A	D
Approach Vol, veh/h		755			574			172			45	
Approach Delay, s/veh		9.3			7.5			35.8			41.3	
Approach LOS		A			A			D			D	

Timer - Assigned Phs		2		4		6		8				
Phs Duration (G+Y+Rc), s		55.0		12.9		55.0		8.1				
Change Period (Y+Rc), s		5.0		5.0		5.0		5.0				
Max Green Setting (Gmax), s		65.0		35.0		65.0		30.0				
Max Q Clear Time (g_c+I1), s		21.9		7.0		23.9		3.6				
Green Ext Time (p_c), s		21.3		1.1		14.0		0.2				

Intersection Summary	
HCM 6th Ctrl Delay	12.5
HCM 6th LOS	B

Movement	EBL	EBT	EBR	WBL	WBT	WBR	NBL	NBT	NBR	SBL	SBT	SBR
Lane Configurations												
Traffic Volume (veh/h)	67	202	49	147	218	143	92	732	114	170	824	131
Future Volume (veh/h)	67	202	49	147	218	143	92	732	114	170	824	131
Initial Q (Qb), veh	0	0	0	0	0	0	0	0	0	0	0	0
Ped-Bike Adj(A_pbT)	1.00		1.00	1.00		1.00	1.00		1.00	1.00		1.00
Parking Bus, Adj	1.00	1.00	1.00	1.00	1.00	1.00	1.00	1.00	1.00	1.00	1.00	1.00
Work Zone On Approach		No			No			No			No	
Adj Sat Flow, veh/h/ln	1709	1709	1777	1723	1723	1723	1709	1709	1777	1709	1709	1777
Adj Flow Rate, veh/h	76	230	56	167	248	101	105	832	130	193	936	149
Peak Hour Factor	0.88	0.88	0.88	0.88	0.88	0.88	0.88	0.88	0.88	0.88	0.88	0.88
Percent Heavy Veh, %	3	3	3	2	2	2	3	3	3	3	3	3
Cap, veh/h	232	318	76	301	342	290	307	1379	215	370	1452	231
Arrive On Green	0.05	0.15	0.15	0.10	0.20	0.20	0.05	0.49	0.49	0.08	0.52	0.52
Sat Flow, veh/h	1628	2171	521	1641	1723	1460	1628	2814	440	1628	2806	446
Grp Volume(v), veh/h	76	112	174	167	248	101	105	480	482	193	541	544
Grp Sat Flow(s),veh/h/ln	1628	1077	1615	1641	1723	1460	1628	1624	1630	1628	1624	1629
Q Serve(g_s), s	3.5	8.9	9.2	7.4	12.0	5.3	2.8	19.1	19.1	5.0	21.6	21.6
Cycle Q Clear(g_c), s	3.5	8.9	9.2	7.4	12.0	5.3	2.8	19.1	19.1	5.0	21.6	21.6
Prop In Lane	1.00		0.32	1.00		1.00	1.00		0.27	1.00		0.27
Lane Grp Cap(c), veh/h	232	158	237	301	342	290	307	796	799	370	840	843
V/C Ratio(X)	0.33	0.71	0.73	0.56	0.73	0.35	0.34	0.60	0.60	0.52	0.64	0.64
Avail Cap(c_a), veh/h	693	723	1085	680	964	817	587	1182	1186	605	1182	1185
HCM Platoon Ratio	1.00	1.00	1.00	1.00	1.00	1.00	1.00	1.00	1.00	1.00	1.00	1.00
Upstream Filter(I)	1.00	1.00	1.00	1.00	1.00	1.00	1.00	1.00	1.00	1.00	1.00	1.00
Uniform Delay (d), s/veh	30.4	36.3	36.4	27.0	33.5	30.8	12.6	16.5	16.5	12.2	15.6	15.6
Incr Delay (d2), s/veh	0.3	2.2	1.7	0.6	1.1	0.3	0.2	1.2	1.2	0.4	1.4	1.4
Initial Q Delay(d3),s/veh	0.0	0.0	0.0	0.0	0.0	0.0	0.0	0.0	0.0	0.0	0.0	0.0
%ile BackOfQ(90%),veh/ln	2.5	4.4	6.2	5.1	8.0	3.4	1.8	10.5	10.5	2.9	11.0	11.1
Unsig. Movement Delay, s/veh												
LnGrp Delay(d),s/veh	30.7	38.6	38.1	27.6	34.6	31.1	12.8	17.7	17.7	12.7	17.0	17.0
LnGrp LOS	C	D	D	C	C	C	B	B	B	B	B	B
Approach Vol, veh/h		362			516			1067			1278	
Approach Delay, s/veh		36.7			31.7			17.2			16.3	
Approach LOS		D			C			B			B	

Timer - Assigned Phs	1	2	3	4	5	6	7	8
Phs Duration (G+Y+Rc), s	10.1	48.8	12.4	18.1	7.6	51.2	7.7	22.7
Change Period (Y+Rc), s	3.0	5.0	3.0	5.0	3.0	5.0	3.0	5.0
Max Green Setting (Gmax), s	20.0	65.0	30.0	60.0	20.0	65.0	30.0	50.0
Max Q Clear Time (g_c+I1), s	7.0	21.1	9.4	11.2	4.8	23.6	5.5	14.0
Green Ext Time (p_c), s	0.2	22.0	0.2	1.9	0.1	22.7	0.1	1.7

Intersection Summary	
HCM 6th Ctrl Delay	21.4
HCM 6th LOS	C

Movement	EBL	EBT	EBR	WBL	WBT	WBR	NBL	NBT	NBR	SBL	SBT	SBR
Lane Configurations												
Traffic Volume (veh/h)	263	373	126	227	321	196	182	1074	187	174	697	83
Future Volume (veh/h)	263	373	126	227	321	196	182	1074	187	174	697	83
Initial Q (Qb), veh	0	0	0	0	0	0	0	0	0	0	0	0
Ped-Bike Adj(A_pbT)	1.00		1.00	1.00		1.00	1.00		1.00	1.00		1.00
Parking Bus, Adj	1.00	1.00	1.00	1.00	1.00	1.00	1.00	1.00	1.00	1.00	1.00	1.00
Work Zone On Approach		No			No			No			No	
Adj Sat Flow, veh/h/ln	1750	1750	1820	1709	1709	1709	1723	1723	1792	1750	1750	1820
Adj Flow Rate, veh/h	268	381	129	232	328	124	186	1096	191	178	711	85
Peak Hour Factor	0.98	0.98	0.98	0.98	0.98	0.98	0.98	0.98	0.98	0.98	0.98	0.98
Percent Heavy Veh, %	0	0	0	3	3	3	2	2	2	0	0	0
Cap, veh/h	317	489	164	313	372	316	366	1240	215	216	1318	157
Arrive On Green	0.14	0.23	0.23	0.13	0.22	0.22	0.08	0.44	0.44	0.07	0.44	0.44
Sat Flow, veh/h	1667	2119	711	1628	1709	1448	1641	2788	484	1667	2991	357
Grp Volume(v), veh/h	268	216	294	232	328	124	186	642	645	178	395	401
Grp Sat Flow(s),veh/h/ln	1667	1208	1622	1628	1709	1448	1641	1637	1636	1667	1663	1686
Q Serve(g_s), s	15.7	21.4	21.8	14.0	23.7	9.4	7.9	45.8	46.2	7.4	22.3	22.3
Cycle Q Clear(g_c), s	15.7	21.4	21.8	14.0	23.7	9.4	7.9	45.8	46.2	7.4	22.3	22.3
Prop In Lane	1.00		0.44	1.00		1.00	1.00		0.30	1.00		0.21
Lane Grp Cap(c), veh/h	317	278	374	313	372	316	366	728	727	216	733	743
V/C Ratio(X)	0.84	0.77	0.79	0.74	0.88	0.39	0.51	0.88	0.89	0.82	0.54	0.54
Avail Cap(c_a), veh/h	322	416	558	351	602	510	456	743	742	262	733	743
HCM Platoon Ratio	1.00	1.00	1.00	1.00	1.00	1.00	1.00	1.00	1.00	1.00	1.00	1.00
Upstream Filter(I)	1.00	1.00	1.00	1.00	1.00	1.00	1.00	1.00	1.00	1.00	1.00	1.00
Uniform Delay (d), s/veh	34.0	46.1	46.2	34.3	48.4	42.8	19.4	32.4	32.5	28.2	26.2	26.2
Incr Delay (d2), s/veh	17.2	2.5	2.3	5.8	5.3	0.3	0.4	12.4	12.9	13.7	1.2	1.2
Initial Q Delay(d3),s/veh	0.0	0.0	0.0	0.0	0.0	0.0	0.0	0.0	0.0	0.0	0.0	0.0
%ile BackOfQ(90%),veh/ln	11.5	10.0	13.0	9.2	14.9	5.8	5.3	26.3	26.6	6.1	12.7	12.9
Unsig. Movement Delay, s/veh												
LnGrp Delay(d),s/veh	51.2	48.5	48.5	40.1	53.7	43.1	19.8	44.8	45.4	41.8	27.4	27.4
LnGrp LOS	D	D	D	D	D	D	B	D	D	D	C	C
Approach Vol, veh/h		778			684			1473			974	
Approach Delay, s/veh		49.4			47.2			41.9			30.0	
Approach LOS		D			D			D			C	

Timer - Assigned Phs	1	2	3	4	5	6	7	8
Phs Duration (G+Y+Rc), s	12.5	61.8	19.0	34.5	13.0	61.3	20.7	32.9
Change Period (Y+Rc), s	3.0	5.0	3.0	5.0	3.0	5.0	3.0	5.0
Max Green Setting (Gmax), s	13.0	58.0	19.0	44.0	17.0	54.0	18.0	45.0
Max Q Clear Time (g_c+I1), s	9.4	48.2	16.0	23.8	9.9	24.3	17.7	25.7
Green Ext Time (p_c), s	0.1	8.6	0.1	3.2	0.1	13.0	0.0	2.1

Intersection Summary	
HCM 6th Ctrl Delay	41.4
HCM 6th LOS	D

Movement	EBL	EBT	EBR	WBL	WBT	WBR	NBL	NBT	NBR	SBL	SBT	SBR
Lane Configurations												
Traffic Volume (veh/h)	100	27	14	148	21	163	9	646	59	227	1312	7
Future Volume (veh/h)	100	27	14	148	21	163	9	646	59	227	1312	7
Initial Q (Qb), veh	0	0	0	0	0	0	0	0	0	0	0	0
Ped-Bike Adj(A_pbT)	1.00		1.00	1.00		1.00	1.00		1.00	1.00		1.00
Parking Bus, Adj	1.00	1.00	1.00	1.00	1.00	1.00	1.00	1.00	1.00	1.00	1.00	1.00
Work Zone On Approach		No			No			No			No	
Adj Sat Flow, veh/h/ln	1514	1514	1514	1563	1563	1563	1514	1514	1514	1526	1539	1526
Adj Flow Rate, veh/h	116	31	16	172	24	118	10	751	69	264	1526	8
Peak Hour Factor	0.86	0.86	0.86	0.86	0.86	0.86	0.86	0.86	0.86	0.86	0.86	0.86
Percent Heavy Veh, %	5	5	5	1	1	1	5	5	5	4	4	4
Cap, veh/h	268	72	37	292	163	138	17	1176	108	286	1892	10
Arrive On Green	0.09	0.08	0.08	0.12	0.10	0.10	0.01	0.44	0.44	0.20	0.63	0.63
Sat Flow, veh/h	1441	941	486	1488	1563	1324	1441	2663	245	1453	2982	16
Grp Volume(v), veh/h	116	0	47	172	24	118	10	405	415	264	748	786
Grp Sat Flow(s),veh/h/ln	1441	0	1426	1488	1563	1324	1441	1438	1470	1453	1462	1536
Q Serve(g_s), s	9.3	0.0	4.0	13.2	1.8	11.2	0.9	28.0	28.0	22.8	48.9	48.9
Cycle Q Clear(g_c), s	9.3	0.0	4.0	13.2	1.8	11.2	0.9	28.0	28.0	22.8	48.9	48.9
Prop In Lane	1.00		0.34	1.00		1.00	1.00		0.17	1.00		0.01
Lane Grp Cap(c), veh/h	268	0	109	292	163	138	17	635	649	286	928	975
V/C Ratio(X)	0.43	0.00	0.43	0.59	0.15	0.85	0.59	0.64	0.64	0.92	0.81	0.81
Avail Cap(c_a), veh/h	479	0	385	351	300	254	181	834	852	398	1077	1131
HCM Platoon Ratio	1.00	1.00	1.00	1.00	1.00	1.00	1.00	1.00	1.00	1.00	1.00	1.00
Upstream Filter(I)	1.00	0.00	1.00	1.00	1.00	1.00	1.00	1.00	1.00	1.00	1.00	1.00
Uniform Delay (d), s/veh	48.4	0.0	56.3	45.7	52.0	56.2	62.8	27.7	27.7	50.3	17.5	17.5
Incr Delay (d2), s/veh	0.8	0.0	1.0	1.9	0.2	5.6	11.7	0.9	0.9	19.6	3.9	3.7
Initial Q Delay(d3),s/veh	0.0	0.0	0.0	0.0	0.0	0.0	0.0	0.0	0.0	0.0	0.0	0.0
%ile BackOfQ(90%),veh/ln	5.8	0.0	2.7	8.0	1.3	6.5	0.7	13.8	14.1	13.8	21.6	22.5
Unsig. Movement Delay, s/veh												
LnGrp Delay(d),s/veh	49.2	0.0	57.3	47.6	52.1	61.8	74.5	28.6	28.6	69.9	21.3	21.2
LnGrp LOS	D	A	E	D	D	E	E	C	C	E	C	C
Approach Vol, veh/h		163			314			830			1798	
Approach Delay, s/veh		51.5			53.2			29.2			28.4	
Approach LOS		D			D			C			C	

Timer - Assigned Phs	1	2	3	4	5	6	7	8
Phs Duration (G+Y+Rc), s	5.5	87.0	16.3	18.8	30.1	62.4	19.9	15.2
Change Period (Y+Rc), s	4.0	6.0	5.0	5.5	5.0	6.0	4.5	5.5
Max Green Setting (Gmax), s	16.0	94.0	30.0	24.5	35.0	74.0	20.5	34.5
Max Q Clear Time (g_c+I1), s	2.9	50.9	11.3	13.2	24.8	30.0	15.2	6.0
Green Ext Time (p_c), s	0.0	30.1	0.2	0.2	0.3	14.1	0.2	0.1

Intersection Summary	
HCM 6th Ctrl Delay	32.3
HCM 6th LOS	C

Movement	EBL	EBT	EBR	WBL	WBT	WBR	NBL	NBT	NBR	SBL	SBT	SBR
Lane Configurations												
Traffic Volume (veh/h)	358	99	6	149	50	392	21	1175	81	286	877	5
Future Volume (veh/h)	358	99	6	149	50	392	21	1175	81	286	877	5
Initial Q (Qb), veh	0	0	0	0	0	0	0	0	0	0	0	0
Ped-Bike Adj(A_pbT)	1.00		1.00	1.00		1.00	1.00		1.00	1.00		1.00
Parking Bus, Adj	1.00	1.00	1.00	1.00	1.00	1.00	1.00	1.00	1.00	1.00	1.00	1.00
Work Zone On Approach		No			No			No			No	
Adj Sat Flow, veh/h/ln	1575	1575	1575	1575	1575	1575	1563	1563	1563	1550	1550	1550
Adj Flow Rate, veh/h	365	101	6	152	51	248	21	1199	83	292	895	5
Peak Hour Factor	0.98	0.98	0.98	0.98	0.98	0.98	0.98	0.98	0.98	0.98	0.98	0.98
Percent Heavy Veh, %	0	0	0	0	0	0	1	1	1	2	2	2
Cap, veh/h	384	293	17	342	209	177	27	1127	78	279	1732	10
Arrive On Green	0.16	0.20	0.20	0.10	0.13	0.13	0.02	0.40	0.40	0.19	0.58	0.58
Sat Flow, veh/h	1500	1472	87	1500	1575	1335	1488	2817	195	1477	3004	17
Grp Volume(v), veh/h	365	0	107	152	51	248	21	631	651	292	439	461
Grp Sat Flow(s),veh/h/ln	1500	0	1559	1500	1575	1335	1488	1485	1528	1477	1473	1547
Q Serve(g_s), s	30.0	0.0	10.9	16.1	5.4	24.5	2.6	74.0	74.0	35.0	33.2	33.2
Cycle Q Clear(g_c), s	30.0	0.0	10.9	16.1	5.4	24.5	2.6	74.0	74.0	35.0	33.2	33.2
Prop In Lane	1.00		0.06	1.00		1.00	1.00		0.13	1.00		0.01
Lane Grp Cap(c), veh/h	384	0	311	342	209	177	27	594	611	279	850	892
V/C Ratio(X)	0.95	0.00	0.34	0.44	0.24	1.40	0.79	1.06	1.07	1.05	0.52	0.52
Avail Cap(c_a), veh/h	384	0	311	361	209	177	129	594	611	279	850	892
HCM Platoon Ratio	1.00	1.00	1.00	1.00	1.00	1.00	1.00	1.00	1.00	1.00	1.00	1.00
Upstream Filter(I)	1.00	0.00	1.00	1.00	1.00	1.00	1.00	1.00	1.00	1.00	1.00	1.00
Uniform Delay (d), s/veh	62.2	0.0	63.7	61.0	72.0	80.2	90.5	55.5	55.5	75.0	23.6	23.6
Incr Delay (d2), s/veh	33.0	0.0	0.2	0.9	0.2	211.7	17.3	54.7	55.0	66.2	0.5	0.5
Initial Q Delay(d3),s/veh	0.0	0.0	0.0	0.0	0.0	0.0	0.0	0.0	0.0	0.0	0.0	0.0
%ile BackOfQ(90%),veh/ln	12.6	0.0	7.1	9.5	4.0	27.9	2.1	46.7	48.1	24.6	16.3	17.0
Unsig. Movement Delay, s/veh												
LnGrp Delay(d),s/veh	95.2	0.0	63.9	61.9	72.2	292.0	107.8	110.2	110.5	141.2	24.1	24.1
LnGrp LOS	F	A	E	E	E	F	F	F	F	F	C	C
Approach Vol, veh/h		472			451			1303			1192	
Approach Delay, s/veh		88.1			189.6			110.3			52.8	
Approach LOS		F			F			F			D	

Timer - Assigned Phs	1	2	3	4	5	6	7	8
Phs Duration (G+Y+Rc), s	7.3	112.7	35.0	30.0	40.0	80.0	22.6	42.4
Change Period (Y+Rc), s	4.0	6.0	5.0	5.5	5.0	6.0	4.5	5.5
Max Green Setting (Gmax), s	16.0	94.0	30.0	24.5	35.0	74.0	20.5	34.5
Max Q Clear Time (g_c+I1), s	4.6	35.2	32.0	26.5	37.0	76.0	18.1	12.9
Green Ext Time (p_c), s	0.0	15.8	0.0	0.0	0.0	0.0	0.1	0.4

Intersection Summary	
HCM 6th Ctrl Delay	97.6
HCM 6th LOS	F

Intersection	
Intersection Delay, s/veh	11.6
Intersection LOS	B

Movement	EBL	EBT	EBR	WBL	WBT	WBR	NBL	NBT	NBR	SBL	SBT	SBR
Lane Configurations												
Traffic Vol, veh/h	5	133	186	82	150	21	200	18	109	5	0	0
Future Vol, veh/h	5	133	186	82	150	21	200	18	109	5	0	0
Peak Hour Factor	0.92	0.92	0.92	0.92	0.92	0.92	0.92	0.92	0.92	0.92	0.92	0.92
Heavy Vehicles, %	2	2	2	2	2	2	2	2	2	2	2	2
Mvmt Flow	5	145	202	89	163	23	217	20	118	5	0	0
Number of Lanes	0	1	1	0	2	0	0	1	1	0	1	0

Approach	EB	WB	NB	SB
Opposing Approach	WB	EB	SB	NB
Opposing Lanes	2	2	1	2
Conflicting Approach Left	SB	NB	EB	WB
Conflicting Lanes Left	1	2	2	2
Conflicting Approach Right	NB	SB	WB	EB
Conflicting Lanes Right	2	1	2	2
HCM Control Delay	10.6	11.2	12.8	10.2
HCM LOS	B	B	B	B

Lane	NBLn1	NBLn2	EBLn1	EBLn2	WBLn1	WBLn2	SBLn1
Vol Left, %	92%	0%	4%	0%	52%	0%	100%
Vol Thru, %	8%	0%	96%	0%	48%	78%	0%
Vol Right, %	0%	100%	0%	100%	0%	22%	0%
Sign Control	Stop	Stop	Stop	Stop	Stop	Stop	Stop
Traffic Vol by Lane	218	109	138	186	157	96	5
LT Vol	200	0	5	0	82	0	5
Through Vol	18	0	133	0	75	75	0
RT Vol	0	109	0	186	0	21	0
Lane Flow Rate	237	118	150	202	171	104	5
Geometry Grp	7	7	7	7	7	7	6
Degree of Util (X)	0.438	0.18	0.253	0.3	0.302	0.173	0.011
Departure Headway (Hd)	6.65	5.479	6.07	5.342	6.379	5.959	7.069
Convergence, Y/N	Yes	Yes	Yes	Yes	Yes	Yes	Yes
Cap	543	655	591	673	563	601	505
Service Time	4.384	3.213	3.807	3.079	4.12	3.7	5.123
HCM Lane V/C Ratio	0.436	0.18	0.254	0.3	0.304	0.173	0.01
HCM Control Delay	14.5	9.4	10.9	10.4	11.9	10	10.2
HCM Lane LOS	B	A	B	B	B	A	B
HCM 95th-tile Q	2.2	0.7	1	1.3	1.3	0.6	0

Intersection	
Intersection Delay, s/veh	19.6
Intersection LOS	C

Movement	EBL	EBT	EBR	WBL	WBT	WBR	NBL	NBT	NBR	SBL	SBT	SBR
Lane Configurations												
Traffic Vol, veh/h	4	284	135	101	297	8	275	2	187	30	38	22
Future Vol, veh/h	4	284	135	101	297	8	275	2	187	30	38	22
Peak Hour Factor	0.92	0.92	0.92	0.92	0.92	0.92	0.92	0.92	0.92	0.92	0.92	0.92
Heavy Vehicles, %	2	2	2	2	2	2	2	2	2	2	2	2
Mvmt Flow	4	309	147	110	323	9	299	2	203	33	41	24
Number of Lanes	0	1	1	0	2	0	0	1	1	0	1	0

Approach	EB	WB	NB	SB
Opposing Approach	WB	EB	SB	NB
Opposing Lanes	2	2	1	2
Conflicting Approach Left	SB	NB	EB	WB
Conflicting Lanes Left	1	2	2	2
Conflicting Approach Right	NB	SB	WB	EB
Conflicting Lanes Right	2	1	2	2
HCM Control Delay	20	18.5	21.1	14.2
HCM LOS	C	C	C	B

Lane	NBLn1	NBLn2	EBLn1	EBLn2	WBLn1	WBLn2	SBLn1
Vol Left, %	99%	0%	1%	0%	40%	0%	33%
Vol Thru, %	1%	0%	99%	0%	60%	95%	42%
Vol Right, %	0%	100%	0%	100%	0%	5%	24%
Sign Control	Stop	Stop	Stop	Stop	Stop	Stop	Stop
Traffic Vol by Lane	277	187	288	135	250	157	90
LT Vol	275	0	4	0	101	0	30
Through Vol	2	0	284	0	149	149	38
RT Vol	0	187	0	135	0	8	22
Lane Flow Rate	301	203	313	147	271	170	98
Geometry Grp	7	7	7	7	7	7	6
Degree of Util (X)	0.674	0.386	0.657	0.278	0.585	0.355	0.232
Departure Headway (Hd)	8.054	6.828	7.556	6.828	7.767	7.522	8.529
Convergence, Y/N	Yes	Yes	Yes	Yes	Yes	Yes	Yes
Cap	449	526	479	525	464	478	420
Service Time	5.806	4.579	5.312	4.584	5.524	5.279	6.602
HCM Lane V/C Ratio	0.67	0.386	0.653	0.28	0.584	0.356	0.233
HCM Control Delay	26	13.8	23.7	12.2	21	14.4	14.2
HCM Lane LOS	D	B	C	B	C	B	B
HCM 95th-tile Q	4.9	1.8	4.7	1.1	3.7	1.6	0.9

Intersection	
Int Delay, s/veh	3.7

Movement	EBL	EBT	EBR	WBL	WBT	WBR	NBL	NBT	NBR	SBL	SBT	SBR
Lane Configurations												
Traffic Vol, veh/h	0	24	25	28	39	0	0	0	0	76	1236	13
Future Vol, veh/h	0	24	25	28	39	0	0	0	0	76	1236	13
Conflicting Peds, #/hr	0	0	0	0	0	0	0	0	0	0	0	0
Sign Control	Stop	Stop	Stop	Stop	Stop	Stop	Free	Free	Free	Free	Free	Free
RT Channelized	-	-	None	-	-	None	-	-	None	-	-	None
Storage Length	-	-	-	-	-	-	-	-	-	-	-	-
Veh in Median Storage, #	-	0	-	-	0	-	-	0	-	-	0	-
Grade, %	-	0	-	-	0	-	-	0	-	-	0	-
Peak Hour Factor	92	92	92	92	92	92	92	92	92	92	92	92
Heavy Vehicles, %	2	2	2	2	2	2	2	2	2	2	2	2
Mvmt Flow	0	26	27	30	42	0	0	0	0	83	1343	14

Major/Minor	Minor2			Minor1					Major2		
Conflicting Flow All	-	1516	679	851	1523	-			0	0	0
Stage 1	-	1516	-	0	0	-			-	-	-
Stage 2	-	0	-	851	1523	-			-	-	-
Critical Hdwy	-	6.54	6.94	7.54	6.54	-			4.14	-	-
Critical Hdwy Stg 1	-	5.54	-	-	-	-			-	-	-
Critical Hdwy Stg 2	-	-	-	6.54	5.54	-			-	-	-
Follow-up Hdwy	-	4.02	3.32	3.52	4.02	-			2.22	-	-
Pot Cap-1 Maneuver	0	118	394	253	117	0			-	-	-
Stage 1	0	180	-	-	-	0			-	-	-
Stage 2	0	-	-	321	179	0			-	-	-
Platoon blocked, %										-	-
Mov Cap-1 Maneuver	-	118	394	195	117	-			-	-	-
Mov Cap-2 Maneuver	-	118	-	195	117	-			-	-	-
Stage 1	-	180	-	-	-	-			-	-	-
Stage 2	-	-	-	256	179	-			-	-	-

Approach	EB	WB	SB
HCM Control Delay, s	32.3	55.7	
HCM LOS	D	F	

Minor Lane/Major Mvmt	EBLn1	WBLn1	SBL	SBT	SBR
Capacity (veh/h)	184	140	-	-	-
HCM Lane V/C Ratio	0.289	0.52	-	-	-
HCM Control Delay (s)	32.3	55.7	-	-	-
HCM Lane LOS	D	F	-	-	-
HCM 95th %tile Q(veh)	1.1	2.5	-	-	-

Intersection	
Int Delay, s/veh	2.9

Movement	EBL	EBT	EBR	WBL	WBT	WBR	NBL	NBT	NBR	SBL	SBT	SBR
Lane Configurations												
Traffic Vol, veh/h	0	28	55	35	26	0	0	0	0	26	1069	21
Future Vol, veh/h	0	28	55	35	26	0	0	0	0	26	1069	21
Conflicting Peds, #/hr	0	0	0	0	0	0	0	0	0	0	0	0
Sign Control	Stop	Stop	Stop	Stop	Stop	Stop	Free	Free	Free	Free	Free	Free
RT Channelized	-	-	None	-	-	None	-	-	None	-	-	None
Storage Length	-	-	-	-	-	-	-	-	-	-	-	-
Veh in Median Storage, #	-	0	-	-	0	-	-	0	-	-	0	-
Grade, %	-	0	-	-	0	-	-	0	-	-	0	-
Peak Hour Factor	92	92	92	92	92	92	92	92	92	92	92	92
Heavy Vehicles, %	2	2	2	2	2	2	2	2	2	2	2	2
Mvmt Flow	0	30	60	38	28	0	0	0	0	28	1162	23

Major/Minor	Minor2			Minor1					Major2		
Conflicting Flow All	-	1230	593	652	1241	-			0	0	0
Stage 1	-	1230	-	0	0	-			-	-	-
Stage 2	-	0	-	652	1241	-			-	-	-
Critical Hdwy	-	6.54	6.94	7.54	6.54	-			4.14	-	-
Critical Hdwy Stg 1	-	5.54	-	-	-	-			-	-	-
Critical Hdwy Stg 2	-	-	-	6.54	5.54	-			-	-	-
Follow-up Hdwy	-	4.02	3.32	3.52	4.02	-			2.22	-	-
Pot Cap-1 Maneuver	0	176	449	353	174	0			-	-	-
Stage 1	0	248	-	-	-	0			-	-	-
Stage 2	0	-	-	423	245	0			-	-	-
Platoon blocked, %										-	-
Mov Cap-1 Maneuver	-	176	449	265	174	-			-	-	-
Mov Cap-2 Maneuver	-	176	-	265	174	-			-	-	-
Stage 1	-	248	-	-	-	-			-	-	-
Stage 2	-	-	-	322	245	-			-	-	-

Approach	EB	WB	SB
HCM Control Delay, s	22.5	28.7	
HCM LOS	C	D	

Minor Lane/Major Mvmt	EBLn1	WBLn1	SBL	SBT	SBR
Capacity (veh/h)	295	217	-	-	-
HCM Lane V/C Ratio	0.306	0.306	-	-	-
HCM Control Delay (s)	22.5	28.7	-	-	-
HCM Lane LOS	C	D	-	-	-
HCM 95th %tile Q(veh)	1.3	1.2	-	-	-

Intersection	
Int Delay, s/veh	2.3

Movement	EBL	EBT	EBR	WBL	WBT	WBR	NBL	NBT	NBR	SBL	SBT	SBR
Lane Configurations												
Traffic Vol, veh/h	37	41	0	0	15	18	56	665	4	0	0	0
Future Vol, veh/h	37	41	0	0	15	18	56	665	4	0	0	0
Conflicting Peds, #/hr	0	0	0	0	0	0	0	0	0	0	0	0
Sign Control	Stop	Stop	Stop	Stop	Stop	Stop	Free	Free	Free	Free	Free	Free
RT Channelized	-	-	None	-	-	None	-	-	None	-	-	None
Storage Length	-	-	-	-	-	-	70	-	70	-	-	-
Veh in Median Storage, #	-	0	-	-	0	-	-	0	-	1081	511	936	-
Grade, %	-	0	-	-	0	-	-	0	-	-	0	-
Peak Hour Factor	92	92	92	92	92	92	92	92	92	92	92	92
Heavy Vehicles, %	2	2	2	2	2	2	2	2	2	2	2	2
Mvmt Flow	40	45	0	0	16	20	61	723	4	0	0	0

Major/Minor	Minor2			Minor1			Major1		
Conflicting Flow All	492	849	-	-	845	362	0	0	0
Stage 1	0	0	-	-	845	-	-	-	-
Stage 2	492	849	-	-	0	-	-	-	-
Critical Hdwy	7.54	6.54	-	-	6.54	6.94	4.14	-	-
Critical Hdwy Stg 1	-	-	-	-	5.54	-	-	-	-
Critical Hdwy Stg 2	6.54	5.54	-	-	-	-	-	-	-
Follow-up Hdwy	3.52	4.02	-	-	4.02	3.32	2.22	-	-
Pot Cap-1 Maneuver	460	296	0	0	298	635	-	-	-
Stage 1	-	-	0	0	377	-	-	-	-
Stage 2	527	375	0	0	-	-	-	-	-
Platoon blocked, %								-	-
Mov Cap-1 Maneuver	427	296	-	-	298	635	-	-	-
Mov Cap-2 Maneuver	427	296	-	-	298	-	-	-	-
Stage 1	-	-	-	-	377	-	-	-	-
Stage 2	489	375	-	-	-	-	-	-	-

Approach	EB	WB	NB
HCM Control Delay, s	18.7	14.4	
HCM LOS	C	B	

Minor Lane/Major Mvmt	NBL	NBT	NBR	EBLn1	WBLn1
Capacity (veh/h)	-	-	-	346	419
HCM Lane V/C Ratio	-	-	-	0.245	0.086
HCM Control Delay (s)	-	-	-	18.7	14.4
HCM Lane LOS	-	-	-	C	B
HCM 95th %tile Q(veh)	-	-	-	0.9	0.3

Intersection	
Int Delay, s/veh	2.6

Movement	EBL	EBT	EBR	WBL	WBT	WBR	NBL	NBT	NBR	SBL	SBT	SBR
Lane Configurations												
Traffic Vol, veh/h	48	12	0	0	30	38	33	1127	0	0	0	0
Future Vol, veh/h	48	12	0	0	30	38	33	1127	0	0	0	0
Conflicting Peds, #/hr	0	0	0	0	0	0	0	0	0	0	0	0
Sign Control	Stop	Stop	Stop	Stop	Stop	Stop	Free	Free	Free	Free	Free	Free
RT Channelized	-	-	None	-	-	None	-	-	None	-	-	None
Storage Length	-	-	-	-	-	-	70	-	70	-	-	-
Veh in Median Storage, #	-	0	-	-	0	-	-	0	-	1081	511	936	-
Grade, %	-	0	-	-	0	-	-	0	-	-	0	-
Peak Hour Factor	92	92	92	92	92	92	92	92	92	92	92	92
Heavy Vehicles, %	2	2	2	2	2	2	2	2	2	2	2	2
Mvmt Flow	52	13	0	0	33	41	36	1225	0	0	0	0

Major/Minor	Minor2			Minor1			Major1		
Conflicting Flow All	701	1297	-	-	1297	613	0	0	0
Stage 1	0	0	-	-	1297	-	-	-	-
Stage 2	701	1297	-	-	0	-	-	-	-
Critical Hdwy	7.54	6.54	-	-	6.54	6.94	4.14	-	-
Critical Hdwy Stg 1	-	-	-	-	5.54	-	-	-	-
Critical Hdwy Stg 2	6.54	5.54	-	-	-	-	-	-	-
Follow-up Hdwy	3.52	4.02	-	-	4.02	3.32	2.22	-	-
Pot Cap-1 Maneuver	325	161	0	0	161	435	-	-	-
Stage 1	-	-	0	0	230	-	-	-	-
Stage 2	395	230	0	0	-	-	-	-	-
Platoon blocked, %								-	-
Mov Cap-1 Maneuver	248	161	-	-	161	435	-	-	-
Mov Cap-2 Maneuver	248	161	-	-	161	-	-	-	-
Stage 1	-	-	-	-	230	-	-	-	-
Stage 2	307	230	-	-	-	-	-	-	-

Approach	EB	WB	NB
HCM Control Delay, s	27.5	25.6	
HCM LOS	D	D	

Minor Lane/Major Mvmt	NBL	NBT	NBR	EBLn1	WBLn1
Capacity (veh/h)	-	-	-	224	248
HCM Lane V/C Ratio	-	-	-	0.291	0.298
HCM Control Delay (s)	-	-	-	27.5	25.6
HCM Lane LOS	-	-	-	D	D
HCM 95th %tile Q(veh)	-	-	-	1.2	1.2

Movement	EBL	EBT	EBR	WBL	WBT	WBR	NBL	NBT	NBR	SBL	SBT	SBR
Lane Configurations												
Traffic Volume (veh/h)	0	27	10	32	78	0	0	0	0	40	907	88
Future Volume (veh/h)	0	27	10	32	78	0	0	0	0	40	907	88
Initial Q (Qb), veh	0	0	0	0	0	0				0	0	0
Ped-Bike Adj(A_pbT)	1.00		1.00	1.00		1.00				1.00		1.00
Parking Bus, Adj	1.00	1.00	1.00	1.00	1.00	1.00				1.00	1.00	1.00
Work Zone On Approach		No			No						No	
Adj Sat Flow, veh/h/ln	0	1403	1347	1526	1465	0				1538	1538	1600
Adj Flow Rate, veh/h	0	31	7	36	89	0				45	1031	100
Peak Hour Factor	0.88	0.88	0.88	0.88	0.88	0.88				0.88	0.88	0.88
Percent Heavy Veh, %	0	14	14	4	4	0				3	3	3
Cap, veh/h	0	601	489	607	628	0				628	1153	112
Arrive On Green	0.00	0.43	0.43	0.14	0.14	0.00				0.43	0.43	0.43
Sat Flow, veh/h	0	1403	1141	1213	1465	0				1465	2691	261
Grp Volume(v), veh/h	0	31	7	36	89	0				45	560	571
Grp Sat Flow(s),veh/h/ln	0	1403	1141	1213	1465	0				1465	1461	1491
Q Serve(g_s), s	0.0	0.9	0.2	1.8	3.7	0.0				1.3	24.8	24.9
Cycle Q Clear(g_c), s	0.0	0.9	0.2	2.7	3.7	0.0				1.3	24.8	24.9
Prop In Lane	0.00		1.00	1.00		0.00				1.00		0.17
Lane Grp Cap(c), veh/h	0	601	489	607	628	0				628	626	639
V/C Ratio(X)	0.00	0.05	0.01	0.06	0.14	0.00				0.07	0.89	0.89
Avail Cap(c_a), veh/h	0	601	489	607	628	0				628	626	639
HCM Platoon Ratio	1.00	1.00	1.00	0.33	0.33	1.00				1.00	1.00	1.00
Upstream Filter(I)	0.00	1.00	1.00	1.00	1.00	0.00				1.00	1.00	1.00
Uniform Delay (d), s/veh	0.0	11.7	11.5	18.7	18.8	0.0				11.8	18.5	18.5
Incr Delay (d2), s/veh	0.0	0.2	0.1	0.2	0.5	0.0				0.2	17.6	17.4
Initial Q Delay(d3),s/veh	0.0	0.0	0.0	0.0	0.0	0.0				0.0	0.0	0.0
%ile BackOfQ(90%),veh/ln	0.0	0.5	0.1	0.9	2.4	0.0				0.8	14.9	15.1
Unsig. Movement Delay, s/veh												
LnGrp Delay(d),s/veh	0.0	11.8	11.6	18.9	19.2	0.0				12.0	36.1	36.0
LnGrp LOS	A	B	B	B	B	A				B	D	D
Approach Vol, veh/h		38			125						1176	
Approach Delay, s/veh		11.8			19.1						35.1	
Approach LOS		B			B						D	

Timer - Assigned Phs			4		6		8					
Phs Duration (G+Y+Rc), s			35.0		35.0		35.0					
Change Period (Y+Rc), s			5.0		5.0		5.0					
Max Green Setting (Gmax), s			30.0		30.0		30.0					
Max Q Clear Time (g_c+I1), s			2.9		26.9		5.7					
Green Ext Time (p_c), s			0.1		2.6		0.4					

Intersection Summary												
HCM 6th Ctrl Delay			33.0									
HCM 6th LOS			C									

Movement	EBL	EBT	EBR	WBL	WBT	WBR	NBL	NBT	NBR	SBL	SBT	SBR
Lane Configurations												
Traffic Volume (veh/h)	0	285	65	85	72	0	0	0	0	100	1024	50
Future Volume (veh/h)	0	285	65	85	72	0	0	0	0	100	1024	50
Initial Q (Qb), veh	0	0	0	0	0	0				0	0	0
Ped-Bike Adj(A_pbT)	1.00		1.00	1.00		1.00				1.00		1.00
Parking Bus, Adj	1.00	1.00	1.00	1.00	1.00	1.00				1.00	1.00	1.00
Work Zone On Approach		No			No						No	
Adj Sat Flow, veh/h/ln	0	1575	1512	1563	1500	0				1550	1550	1612
Adj Flow Rate, veh/h	0	317	72	94	80	0				111	1138	56
Peak Hour Factor	0.90	0.90	0.90	0.90	0.90	0.90				0.90	0.90	0.90
Percent Heavy Veh, %	0	0	0	1	1	0				2	2	2
Cap, veh/h	0	630	513	327	600	0				675	1306	64
Arrive On Green	0.00	0.40	0.40	0.40	0.40	0.00				0.46	0.46	0.46
Sat Flow, veh/h	0	1575	1281	902	1500	0				1477	2857	141
Grp Volume(v), veh/h	0	317	72	94	80	0				111	586	608
Grp Sat Flow(s),veh/h/ln	0	1575	1281	902	1500	0				1477	1473	1525
Q Serve(g_s), s	0.0	10.6	2.5	6.1	2.4	0.0				3.1	25.1	25.2
Cycle Q Clear(g_c), s	0.0	10.6	2.5	16.7	2.4	0.0				3.1	25.1	25.2
Prop In Lane	0.00		1.00	1.00		0.00				1.00		0.09
Lane Grp Cap(c), veh/h	0	630	513	327	600	0				675	673	697
V/C Ratio(X)	0.00	0.50	0.14	0.29	0.13	0.00				0.16	0.87	0.87
Avail Cap(c_a), veh/h	0	630	513	327	600	0				675	673	697
HCM Platoon Ratio	1.00	1.00	1.00	1.00	1.00	1.00				1.00	1.00	1.00
Upstream Filter(I)	0.00	1.00	1.00	1.00	1.00	0.00				1.00	1.00	1.00
Uniform Delay (d), s/veh	0.0	15.8	13.4	22.0	13.3	0.0				11.2	17.1	17.1
Incr Delay (d2), s/veh	0.0	2.9	0.6	2.2	0.5	0.0				0.5	14.4	14.1
Initial Q Delay(d3),s/veh	0.0	0.0	0.0	0.0	0.0	0.0				0.0	0.0	0.0
%ile BackOfQ(90%),veh/ln	0.0	6.6	1.4	2.6	1.5	0.0				1.9	14.5	14.9
Unsig. Movement Delay, s/veh												
LnGrp Delay(d),s/veh	0.0	18.6	13.9	24.2	13.8	0.0				11.7	31.6	31.2
LnGrp LOS	A	B	B	C	B	A				B	C	C
Approach Vol, veh/h		389			174						1305	
Approach Delay, s/veh		17.8			19.4						29.7	
Approach LOS		B			B						C	

Timer - Assigned Phs		4		6		8						
Phs Duration (G+Y+Rc), s		33.0		37.0		33.0						
Change Period (Y+Rc), s		5.0		5.0		5.0						
Max Green Setting (Gmax), s		28.0		32.0		28.0						
Max Q Clear Time (g_c+I1), s		12.6		27.2		18.7						
Green Ext Time (p_c), s		1.2		4.1		0.5						

Intersection Summary												
HCM 6th Ctrl Delay			26.3									
HCM 6th LOS			C									

Movement	EBL	EBT	EBR	WBL	WBT	WBR	NBL	NBT	NBR	SBL	SBT	SBR
Lane Configurations												
Traffic Volume (veh/h)	43	48	0	0	60	57	66	655	23	0	0	0
Future Volume (veh/h)	43	48	0	0	60	57	66	655	23	0	0	0
Initial Q (Qb), veh	0	0	0	0	0	0	0	0	0			
Ped-Bike Adj(A_pbT)	1.00		1.00	1.00		1.00	1.00		1.00			
Parking Bus, Adj	1.00	1.00	1.00	1.00	1.00	1.00	1.00	1.00	1.00			
Work Zone On Approach		No			No			No				
Adj Sat Flow, veh/h/ln	1501	1501	0	0	1514	1514	1465	1526	1465			
Adj Flow Rate, veh/h	47	53	0	0	66	39	73	720	16			
Peak Hour Factor	0.91	0.91	0.91	0.91	0.91	0.91	0.91	0.91	0.91			
Percent Heavy Veh, %	6	6	0	0	5	5	4	4	4			
Cap, veh/h	471	536	0	0	541	458	698	1450	621			
Arrive On Green	0.36	0.36	0.00	0.00	0.36	0.36	0.17	0.17	0.17			
Sat Flow, veh/h	1123	1501	0	0	1514	1283	1395	2899	1241			
Grp Volume(v), veh/h	47	53	0	0	66	39	73	720	16			
Grp Sat Flow(s),veh/h/ln	1123	1501	0	0	1514	1283	1395	1450	1241			
Q Serve(g_s), s	2.1	1.6	0.0	0.0	2.1	1.4	3.1	15.8	0.8			
Cycle Q Clear(g_c), s	4.1	1.6	0.0	0.0	2.1	1.4	3.1	15.8	0.8			
Prop In Lane	1.00		0.00	0.00		1.00	1.00		1.00			
Lane Grp Cap(c), veh/h	471	536	0	0	541	458	698	1450	621			
V/C Ratio(X)	0.10	0.10	0.00	0.00	0.12	0.09	0.10	0.50	0.03			
Avail Cap(c_a), veh/h	471	536	0	0	541	458	698	1450	621			
HCM Platoon Ratio	1.00	1.00	1.00	1.00	1.00	1.00	0.33	0.33	0.33			
Upstream Filter(I)	1.00	1.00	0.00	0.00	1.00	1.00	1.00	1.00	1.00			
Uniform Delay (d), s/veh	16.5	15.0	0.0	0.0	15.1	14.9	15.9	21.2	14.9			
Incr Delay (d2), s/veh	0.4	0.4	0.0	0.0	0.5	0.4	0.3	1.2	0.1			
Initial Q Delay(d3),s/veh	0.0	0.0	0.0	0.0	0.0	0.0	0.0	0.0	0.0			
%ile BackOfQ(90%),veh/ln	1.0	1.1	0.0	0.0	1.3	0.8	1.8	9.5	0.4			
Unsig. Movement Delay, s/veh												
LnGrp Delay(d),s/veh	16.9	15.4	0.0	0.0	15.6	15.3	16.2	22.4	15.0			
LnGrp LOS	B	B	A	A	B	B	B	C	B			
Approach Vol, veh/h		100			105			809				
Approach Delay, s/veh		16.1			15.5			21.7				
Approach LOS		B			B			C				
Timer - Assigned Phs		2		4				8				
Phs Duration (G+Y+Rc), s		40.0		30.0				30.0				
Change Period (Y+Rc), s		5.0		5.0				5.0				
Max Green Setting (Gmax), s		35.0		25.0				25.0				
Max Q Clear Time (g_c+I1), s		17.8		6.1				4.1				
Green Ext Time (p_c), s		8.4		0.3				0.3				
Intersection Summary												
HCM 6th Ctrl Delay			20.5									
HCM 6th LOS			C									

Movement	EBL	EBT	EBR	WBL	WBT	WBR	NBL	NBT	NBR	SBL	SBT	SBR
Lane Configurations												
Traffic Volume (veh/h)	214	187	0	0	87	115	60	799	72	0	0	0
Future Volume (veh/h)	214	187	0	0	87	115	60	799	72	0	0	0
Initial Q (Qb), veh	0	0	0	0	0	0	0	0	0			
Ped-Bike Adj(A_pbT)	1.00		1.00	1.00		1.00	1.00		1.00			
Parking Bus, Adj	1.00	1.00	1.00	1.00	1.00	1.00	1.00	1.00	1.00			
Work Zone On Approach		No			No			No				
Adj Sat Flow, veh/h/ln	1575	1575	0	0	1563	1563	1488	1550	1488			
Adj Flow Rate, veh/h	225	197	0	0	92	75	63	841	47			
Peak Hour Factor	0.95	0.95	0.95	0.95	0.95	0.95	0.95	0.95	0.95			
Percent Heavy Veh, %	0	0	0	0	1	1	2	2	2			
Cap, veh/h	456	562	0	0	558	473	709	1473	631			
Arrive On Green	0.12	0.12	0.00	0.00	0.36	0.36	0.17	0.17	0.17			
Sat Flow, veh/h	1114	1575	0	0	1563	1324	1418	2946	1261			
Grp Volume(v), veh/h	225	197	0	0	92	75	63	841	47			
Grp Sat Flow(s),veh/h/ln	1114	1575	0	0	1563	1324	1418	1473	1261			
Q Serve(g_s), s	13.6	8.1	0.0	0.0	2.8	2.7	2.6	18.4	2.2			
Cycle Q Clear(g_c), s	16.4	8.1	0.0	0.0	2.8	2.7	2.6	18.4	2.2			
Prop In Lane	1.00		0.00	0.00		1.00	1.00		1.00			
Lane Grp Cap(c), veh/h	456	563	0	0	558	473	709	1473	631			
V/C Ratio(X)	0.49	0.35	0.00	0.00	0.16	0.16	0.09	0.57	0.07			
Avail Cap(c_a), veh/h	456	563	0	0	558	473	709	1473	631			
HCM Platoon Ratio	0.33	0.33	1.00	1.00	1.00	1.00	0.33	0.33	0.33			
Upstream Filter(I)	1.00	1.00	0.00	0.00	1.00	1.00	1.00	1.00	1.00			
Uniform Delay (d), s/veh	28.4	23.4	0.0	0.0	15.4	15.3	15.7	22.3	15.5			
Incr Delay (d2), s/veh	3.8	1.7	0.0	0.0	0.6	0.7	0.2	1.6	0.2			
Initial Q Delay(d3),s/veh	0.0	0.0	0.0	0.0	0.0	0.0	0.0	0.0	0.0			
%ile BackOfQ(90%),veh/ln	7.2	5.9	0.0	0.0	1.9	1.6	1.5	11.0	1.1			
Unsig. Movement Delay, s/veh												
LnGrp Delay(d),s/veh	32.2	25.1	0.0	0.0	16.0	16.0	16.0	23.9	15.8			
LnGrp LOS	C	C	A	A	B	B	B	C	B			
Approach Vol, veh/h		422			167			951				
Approach Delay, s/veh		28.9			16.0			23.0				
Approach LOS		C			B			C				
Timer - Assigned Phs		2		4				8				
Phs Duration (G+Y+Rc), s		40.0		30.0				30.0				
Change Period (Y+Rc), s		5.0		5.0				5.0				
Max Green Setting (Gmax), s		35.0		25.0				25.0				
Max Q Clear Time (g_c+I1), s		20.4		18.4				4.8				
Green Ext Time (p_c), s		8.7		1.0				0.5				
Intersection Summary												
HCM 6th Ctrl Delay			23.9									
HCM 6th LOS			C									

Movement	EBL	EBT	EBR	WBL	WBT	WBR	NBL	NBT	NBR	SBL	SBT	SBR
Lane Configurations												
Traffic Volume (veh/h)	0	14	4	18	116	0	0	0	0	39	806	16
Future Volume (veh/h)	0	14	4	18	116	0	0	0	0	39	806	16
Initial Q (Qb), veh	0	0	0	0	0	0				0	0	0
Ped-Bike Adj(A_pbT)	1.00		1.00	1.00		1.00				1.00		1.00
Parking Bus, Adj	1.00	1.00	1.00	1.00	1.00	1.00				1.00	1.00	1.00
Work Zone On Approach		No			No						No	
Adj Sat Flow, veh/h/ln	0	1440	1440	1538	1538	0				1538	1538	1538
Adj Flow Rate, veh/h	0	15	4	20	127	0				43	886	18
Peak Hour Factor	0.91	0.91	0.91	0.91	0.91	0.91				0.91	0.91	0.91
Percent Heavy Veh, %	0	11	11	3	3	0				3	3	3
Cap, veh/h	0	485	129	115	611	0				55	1187	25
Arrive On Green	0.00	0.44	0.44	0.89	0.89	0.00				0.14	0.14	0.14
Sat Flow, veh/h	0	1095	292	128	1380	0				133	2865	61
Grp Volume(v), veh/h	0	0	19	147	0	0				496	0	451
Grp Sat Flow(s),veh/h/ln	0	0	1387	1508	0	0				1532	0	1527
Q Serve(g_s), s	0.0	0.0	0.5	0.0	0.0	0.0				21.9	0.0	19.7
Cycle Q Clear(g_c), s	0.0	0.0	0.5	0.9	0.0	0.0				21.9	0.0	19.7
Prop In Lane	0.00		0.21	0.14		0.00				0.09		0.04
Lane Grp Cap(c), veh/h	0	0	614	726	0	0				634	0	633
V/C Ratio(X)	0.00	0.00	0.03	0.20	0.00	0.00				0.78	0.00	0.71
Avail Cap(c_a), veh/h	0	0	614	726	0	0				634	0	633
HCM Platoon Ratio	1.00	1.00	1.00	2.00	2.00	1.00				0.33	0.33	0.33
Upstream Filter(I)	0.00	0.00	1.00	1.00	0.00	0.00				1.00	0.00	1.00
Uniform Delay (d), s/veh	0.0	0.0	11.0	2.3	0.0	0.0				27.2	0.0	26.2
Incr Delay (d2), s/veh	0.0	0.0	0.1	0.6	0.0	0.0				9.3	0.0	6.7
Initial Q Delay(d3),s/veh	0.0	0.0	0.0	0.0	0.0	0.0				0.0	0.0	0.0
%ile BackOfQ(90%),veh/ln	0.0	0.0	0.3	0.7	0.0	0.0				14.6	0.0	13.0
Unsig. Movement Delay, s/veh												
LnGrp Delay(d),s/veh	0.0	0.0	11.1	2.9	0.0	0.0				36.5	0.0	32.9
LnGrp LOS	A	A	B	A	A	A				D	A	C
Approach Vol, veh/h		19			147						947	
Approach Delay, s/veh		11.1			2.9						34.8	
Approach LOS		B			A						C	

Timer - Assigned Phs		4		6		8						
Phs Duration (G+Y+Rc), s		36.0		34.0		36.0						
Change Period (Y+Rc), s		5.0		5.0		5.0						
Max Green Setting (Gmax), s		31.0		29.0		31.0						
Max Q Clear Time (g_c+I1), s		2.5		23.9		2.9						
Green Ext Time (p_c), s		0.0		3.6		0.4						

Intersection Summary												
HCM 6th Ctrl Delay			30.2									
HCM 6th LOS			C									

Movement	EBL	EBT	EBR	WBL	WBT	WBR	NBL	NBT	NBR	SBL	SBT	SBR
Lane Configurations												
Traffic Volume (veh/h)	0	107	34	85	58	0	0	0	0	102	979	28
Future Volume (veh/h)	0	107	34	85	58	0	0	0	0	102	979	28
Initial Q (Qb), veh	0	0	0	0	0	0				0	0	0
Ped-Bike Adj(A_pbT)	1.00		1.00	1.00		1.00				1.00		1.00
Parking Bus, Adj	1.00	1.00	1.00	1.00	1.00	1.00				1.00	1.00	1.00
Work Zone On Approach		No			No						No	
Adj Sat Flow, veh/h/ln	0	1563	1563	1575	1575	0				1563	1563	1563
Adj Flow Rate, veh/h	0	114	36	90	62	0				109	1041	30
Peak Hour Factor	0.94	0.94	0.94	0.94	0.94	0.94				0.94	0.94	0.94
Percent Heavy Veh, %	0	1	1	0	0	0				1	1	1
Cap, veh/h	0	488	154	358	221	0				117	1175	35
Arrive On Green	0.00	0.43	0.43	0.43	0.43	0.00				0.14	0.14	0.14
Sat Flow, veh/h	0	1138	360	645	516	0				273	2741	83
Grp Volume(v), veh/h	0	0	150	152	0	0				618	0	562
Grp Sat Flow(s),veh/h/ln	0	0	1498	1161	0	0				1549	0	1548
Q Serve(g_s), s	0.0	0.0	4.5	4.1	0.0	0.0				27.6	0.0	24.8
Cycle Q Clear(g_c), s	0.0	0.0	4.5	8.5	0.0	0.0				27.6	0.0	24.8
Prop In Lane	0.00		0.24	0.59		0.00				0.18		0.05
Lane Grp Cap(c), veh/h	0	0	642	579	0	0				664	0	663
V/C Ratio(X)	0.00	0.00	0.23	0.26	0.00	0.00				0.93	0.00	0.85
Avail Cap(c_a), veh/h	0	0	642	579	0	0				664	0	663
HCM Platoon Ratio	1.00	1.00	1.00	1.00	1.00	1.00				0.33	0.33	0.33
Upstream Filter(I)	0.00	0.00	1.00	1.00	0.00	0.00				1.00	0.00	1.00
Uniform Delay (d), s/veh	0.0	0.0	12.7	14.2	0.0	0.0				29.0	0.0	27.8
Incr Delay (d2), s/veh	0.0	0.0	0.9	1.1	0.0	0.0				21.6	0.0	12.7
Initial Q Delay(d3),s/veh	0.0	0.0	0.0	0.0	0.0	0.0				0.0	0.0	0.0
%ile BackOfQ(90%),veh/ln	0.0	0.0	2.8	3.2	0.0	0.0				20.2	0.0	16.9
Unsig. Movement Delay, s/veh												
LnGrp Delay(d),s/veh	0.0	0.0	13.6	15.3	0.0	0.0				50.6	0.0	40.5
LnGrp LOS	A	A	B	B	A	A				D	A	D
Approach Vol, veh/h		150			152						1180	
Approach Delay, s/veh		13.6			15.3						45.8	
Approach LOS		B			B						D	

Timer - Assigned Phs		4		6		8						
Phs Duration (G+Y+Rc), s		35.0		35.0		35.0						
Change Period (Y+Rc), s		5.0		5.0		5.0						
Max Green Setting (Gmax), s		30.0		30.0		30.0						
Max Q Clear Time (g_c+I1), s		6.5		29.6		10.5						
Green Ext Time (p_c), s		0.4		0.3		0.4						

Intersection Summary	
HCM 6th Ctrl Delay	39.4
HCM 6th LOS	D

Notes

User approved pedestrian interval to be less than phase max green.

Movement	EBL	EBT	EBR	WBL	WBT	WBR	NBL	NBT	NBR	SBL	SBT	SBR
Lane Configurations												
Traffic Volume (veh/h)	58	38	23	56	57	40	86	928	19	36	951	61
Future Volume (veh/h)	58	38	23	56	57	40	86	928	19	36	951	61
Initial Q (Qb), veh	0	0	0	0	0	0	0	0	0	0	0	0
Ped-Bike Adj(A_pbT)	1.00		1.00	1.00		1.00	1.00		1.00	1.00		1.00
Parking Bus, Adj	1.00	1.00	1.00	1.00	1.00	1.00	1.00	1.00	1.00	1.00	1.00	1.00
Work Zone On Approach		No			No			No			No	
Adj Sat Flow, veh/h/ln	1682	1614	1682	1736	1667	1736	1695	1695	1695	1695	1695	1695
Adj Flow Rate, veh/h	64	42	26	62	63	44	96	1031	21	40	1057	68
Peak Hour Factor	0.90	0.90	0.90	0.90	0.90	0.90	0.90	0.90	0.90	0.90	0.90	0.90
Percent Heavy Veh, %	5	5	5	1	1	1	4	4	4	4	4	4
Cap, veh/h	472	320	198	522	313	219	231	1660	34	374	1580	102
Arrive On Green	0.34	0.34	0.34	0.34	0.34	0.34	1.00	1.00	1.00	0.51	0.51	0.51
Sat Flow, veh/h	1256	933	578	1344	914	638	493	3228	66	528	3073	198
Grp Volume(v), veh/h	64	0	68	62	0	107	96	514	538	40	554	571
Grp Sat Flow(s),veh/h/ln	1256	0	1511	1344	0	1552	493	1611	1684	528	1611	1660
Q Serve(g_s), s	2.7	0.0	2.2	2.3	0.0	3.4	10.9	0.0	0.0	2.8	17.8	17.8
Cycle Q Clear(g_c), s	6.1	0.0	2.2	4.5	0.0	3.4	28.7	0.0	0.0	2.8	17.8	17.8
Prop In Lane	1.00		0.38	1.00		0.41	1.00		0.04	1.00		0.12
Lane Grp Cap(c), veh/h	472	0	518	522	0	532	231	828	866	374	828	854
V/C Ratio(X)	0.14	0.00	0.13	0.12	0.00	0.20	0.42	0.62	0.62	0.11	0.67	0.67
Avail Cap(c_a), veh/h	472	0	518	522	0	532	231	828	866	374	828	854
HCM Platoon Ratio	1.00	1.00	1.00	1.00	1.00	1.00	2.00	2.00	2.00	1.00	1.00	1.00
Upstream Filter(I)	1.00	0.00	1.00	1.00	0.00	1.00	0.72	0.72	0.72	0.64	0.64	0.64
Uniform Delay (d), s/veh	18.4	0.0	15.8	17.4	0.0	16.2	7.1	0.0	0.0	8.9	12.6	12.6
Incr Delay (d2), s/veh	0.6	0.0	0.5	0.5	0.0	0.8	3.9	2.5	2.4	0.4	2.8	2.7
Initial Q Delay(d3),s/veh	0.0	0.0	0.0	0.0	0.0	0.0	0.0	0.0	0.0	0.0	0.0	0.0
%ile BackOfQ(90%),veh/ln	1.5	0.0	1.4	1.4	0.0	2.3	1.7	1.0	1.0	0.6	8.9	9.1
Unsig. Movement Delay, s/veh												
LnGrp Delay(d),s/veh	19.0	0.0	16.4	17.8	0.0	17.1	11.1	2.5	2.4	9.3	15.3	15.3
LnGrp LOS	B	A	B	B	A	B	B	A	A	A	B	B
Approach Vol, veh/h		132			169			1148			1165	
Approach Delay, s/veh		17.6			17.4			3.2			15.1	
Approach LOS		B			B			A			B	

Timer - Assigned Phs		2		4		6		8				
Phs Duration (G+Y+Rc), s		41.0		29.0		41.0		29.0				
Change Period (Y+Rc), s		5.0		5.0		5.0		5.0				
Max Green Setting (Gmax), s		36.0		24.0		36.0		24.0				
Max Q Clear Time (g_c+I1), s		4.8		8.1		30.7		6.5				
Green Ext Time (p_c), s		0.3		0.9		0.2		1.4				

Intersection Summary												
HCM 6th Ctrl Delay			10.1									
HCM 6th LOS			B									

Movement	EBL	EBT	EBR	WBL	WBT	WBR	NBL	NBT	NBR	SBL	SBT	SBR
Lane Configurations												
Traffic Volume (veh/h)	102	91	93	94	90	68	69	1168	37	74	987	40
Future Volume (veh/h)	102	91	93	94	90	68	69	1168	37	74	987	40
Initial Q (Qb), veh	0	0	0	0	0	0	0	0	0	0	0	0
Ped-Bike Adj(A_pbT)	1.00		1.00	1.00		1.00	1.00		1.00	1.00		1.00
Parking Bus, Adj	1.00	1.00	1.00	1.00	1.00	1.00	1.00	1.00	1.00	1.00	1.00	1.00
Work Zone On Approach		No			No			No			No	
Adj Sat Flow, veh/h/ln	1736	1667	1736	1709	1641	1709	1723	1723	1723	1736	1736	1736
Adj Flow Rate, veh/h	105	94	96	97	93	70	71	1204	38	76	1018	41
Peak Hour Factor	0.97	0.97	0.97	0.97	0.97	0.97	0.97	0.97	0.97	0.97	0.97	0.97
Percent Heavy Veh, %	1	1	1	3	3	3	2	2	2	1	1	1
Cap, veh/h	391	246	251	361	282	213	273	1781	56	338	1778	72
Arrive On Green	0.32	0.32	0.32	0.32	0.32	0.32	1.00	1.00	1.00	0.55	0.55	0.55
Sat Flow, veh/h	1233	756	772	1184	869	654	533	3239	102	451	3232	130
Grp Volume(v), veh/h	105	0	190	97	0	163	71	608	634	76	519	540
Grp Sat Flow(s),veh/h/ln	1233	0	1528	1184	0	1523	533	1637	1704	451	1650	1713
Q Serve(g_s), s	5.6	0.0	7.7	5.5	0.0	6.5	5.3	0.0	0.0	7.3	16.5	16.6
Cycle Q Clear(g_c), s	12.1	0.0	7.7	13.2	0.0	6.5	21.8	0.0	0.0	7.3	16.5	16.6
Prop In Lane	1.00		0.51	1.00		0.43	1.00		0.06	1.00		0.08
Lane Grp Cap(c), veh/h	391	0	497	361	0	495	273	900	937	338	907	942
V/C Ratio(X)	0.27	0.00	0.38	0.27	0.00	0.33	0.26	0.68	0.68	0.22	0.57	0.57
Avail Cap(c_a), veh/h	391	0	497	361	0	495	273	900	937	338	907	942
HCM Platoon Ratio	1.00	1.00	1.00	1.00	1.00	1.00	2.00	2.00	2.00	1.00	1.00	1.00
Upstream Filter(I)	1.00	0.00	1.00	1.00	0.00	1.00	0.52	0.52	0.52	0.68	0.68	0.68
Uniform Delay (d), s/veh	25.0	0.0	20.8	25.9	0.0	20.4	4.1	0.0	0.0	9.7	11.8	11.8
Incr Delay (d2), s/veh	1.7	0.0	2.2	1.8	0.0	1.8	1.2	2.1	2.1	1.0	1.8	1.7
Initial Q Delay(d3),s/veh	0.0	0.0	0.0	0.0	0.0	0.0	0.0	0.0	0.0	0.0	0.0	0.0
%ile BackOfQ(90%),veh/ln	3.2	0.0	5.2	3.1	0.0	4.5	0.8	1.0	1.0	1.4	8.6	8.9
Unsig. Movement Delay, s/veh												
LnGrp Delay(d),s/veh	26.7	0.0	23.0	27.7	0.0	22.2	5.3	2.1	2.1	10.8	13.6	13.5
LnGrp LOS	C	A	C	C	A	C	A	A	A	B	B	B
Approach Vol, veh/h		295			260			1313			1135	
Approach Delay, s/veh		24.3			24.2			2.3			13.4	
Approach LOS		C			C			A			B	

Timer - Assigned Phs		2		4		6		8				
Phs Duration (G+Y+Rc), s		49.0		31.0		49.0		31.0				
Change Period (Y+Rc), s		5.0		5.0		5.0		5.0				
Max Green Setting (Gmax), s		44.0		26.0		44.0		26.0				
Max Q Clear Time (g_c+I1), s		9.3		14.1		23.8		15.2				
Green Ext Time (p_c), s		0.3		2.2		0.3		1.8				

Intersection Summary												
HCM 6th Ctrl Delay			10.5									
HCM 6th LOS			B									

Movement	EBL	EBT	EBR	WBL	WBT	WBR	NBL	NBT	NBR	SBL	SBT	SBR
Lane Configurations												
Traffic Volume (veh/h)	14	36	0	0	85	25	66	723	28	0	0	0
Future Volume (veh/h)	14	36	0	0	85	25	66	723	28	0	0	0
Initial Q (Qb), veh	0	0	0	0	0	0	0	0	0			
Ped-Bike Adj(A_pbT)	1.00		1.00	1.00		1.00	1.00		1.00			
Parking Bus, Adj	1.00	1.00	1.00	1.00	1.00	1.00	1.00	1.00	1.00			
Work Zone On Approach		No			No			No				
Adj Sat Flow, veh/h/ln	1501	1441	0	0	1477	1538	1465	1526	1465			
Adj Flow Rate, veh/h	18	47	0	0	110	20	86	939	23			
Peak Hour Factor	0.77	0.77	0.77	0.77	0.77	0.77	0.77	0.77	0.77			
Percent Heavy Veh, %	6	6	0	0	3	3	4	4	4			
Cap, veh/h	438	515	0	0	527	466	698	1450	621			
Arrive On Green	0.36	0.36	0.00	0.00	0.36	0.36	0.50	0.50	0.50			
Sat Flow, veh/h	1098	1441	0	0	1477	1304	1395	2899	1241			
Grp Volume(v), veh/h	18	47	0	0	110	20	86	939	23			
Grp Sat Flow(s),veh/h/ln	1098	1441	0	0	1477	1304	1395	1450	1241			
Q Serve(g_s), s	0.8	1.5	0.0	0.0	3.6	0.7	2.3	16.8	0.7			
Cycle Q Clear(g_c), s	4.4	1.5	0.0	0.0	3.6	0.7	2.3	16.8	0.7			
Prop In Lane	1.00		0.00	0.00		1.00	1.00		1.00			
Lane Grp Cap(c), veh/h	438	515	0	0	527	466	698	1450	621			
V/C Ratio(X)	0.04	0.09	0.00	0.00	0.21	0.04	0.12	0.65	0.04			
Avail Cap(c_a), veh/h	438	515	0	0	527	466	698	1450	621			
HCM Platoon Ratio	1.00	1.00	1.00	1.00	1.00	1.00	1.00	1.00	1.00			
Upstream Filter(I)	1.00	1.00	0.00	0.00	1.00	1.00	1.00	1.00	1.00			
Uniform Delay (d), s/veh	17.2	15.0	0.0	0.0	15.6	14.7	9.3	12.9	8.9			
Incr Delay (d2), s/veh	0.2	0.4	0.0	0.0	0.9	0.2	0.4	2.3	0.1			
Initial Q Delay(d3),s/veh	0.0	0.0	0.0	0.0	0.0	0.0	0.0	0.0	0.0			
%ile BackOfQ(90%),veh/ln	0.4	0.9	0.0	0.0	2.3	0.4	1.3	8.3	0.3			
Unsig. Movement Delay, s/veh												
LnGrp Delay(d),s/veh	17.3	15.3	0.0	0.0	16.5	14.9	9.7	15.2	9.0			
LnGrp LOS	B	B	A	A	B	B	A	B	A			
Approach Vol, veh/h		65			130			1048				
Approach Delay, s/veh		15.9			16.3			14.6				
Approach LOS		B			B			B				

Timer - Assigned Phs		2		4				8				
Phs Duration (G+Y+Rc), s		40.0		30.0				30.0				
Change Period (Y+Rc), s		5.0		5.0				5.0				
Max Green Setting (Gmax), s		35.0		25.0				25.0				
Max Q Clear Time (g_c+I1), s		18.8		6.4				5.6				
Green Ext Time (p_c), s		10.3		0.1				0.3				

Intersection Summary	
HCM 6th Ctrl Delay	14.8
HCM 6th LOS	B

Movement	EBL	EBT	EBR	WBL	WBT	WBR	NBL	NBT	NBR	SBL	SBT	SBR
Lane Configurations												
Traffic Volume (veh/h)	74	139	0	0	82	66	68	803	83	0	0	0
Future Volume (veh/h)	74	139	0	0	82	66	68	803	83	0	0	0
Initial Q (Qb), veh	0	0	0	0	0	0	0	0	0			
Ped-Bike Adj(A_pbT)	1.00		1.00	1.00		1.00	1.00		1.00			
Parking Bus, Adj	1.00	1.00	1.00	1.00	1.00	1.00	1.00	1.00	1.00			
Work Zone On Approach		No			No			No				
Adj Sat Flow, veh/h/ln	1563	1500	0	0	1512	1575	1488	1550	1488			
Adj Flow Rate, veh/h	76	143	0	0	85	42	70	828	53			
Peak Hour Factor	0.97	0.97	0.97	0.97	0.97	0.97	0.97	0.97	0.97			
Percent Heavy Veh, %	1	1	0	0	0	0	2	2	2			
Cap, veh/h	468	536	0	0	540	477	709	1473	631			
Arrive On Green	0.71	0.71	0.00	0.00	0.36	0.36	0.50	0.50	0.50			
Sat Flow, veh/h	1146	1500	0	0	1512	1335	1418	2946	1261			
Grp Volume(v), veh/h	76	143	0	0	85	42	70	828	53			
Grp Sat Flow(s),veh/h/ln	1146	1500	0	0	1512	1335	1418	1473	1261			
Q Serve(g_s), s	1.9	2.4	0.0	0.0	2.7	1.5	1.8	13.7	1.5			
Cycle Q Clear(g_c), s	4.6	2.4	0.0	0.0	2.7	1.5	1.8	13.7	1.5			
Prop In Lane	1.00		0.00	0.00		1.00	1.00		1.00			
Lane Grp Cap(c), veh/h	468	536	0	0	540	477	709	1473	631			
V/C Ratio(X)	0.16	0.27	0.00	0.00	0.16	0.09	0.10	0.56	0.08			
Avail Cap(c_a), veh/h	468	536	0	0	540	477	709	1473	631			
HCM Platoon Ratio	2.00	2.00	1.00	1.00	1.00	1.00	1.00	1.00	1.00			
Upstream Filter(I)	1.00	1.00	0.00	0.00	1.00	1.00	1.00	1.00	1.00			
Uniform Delay (d), s/veh	7.6	6.8	0.0	0.0	15.3	14.9	9.2	12.2	9.1			
Incr Delay (d2), s/veh	0.7	1.2	0.0	0.0	0.6	0.4	0.3	1.6	0.3			
Initial Q Delay(d3),s/veh	0.0	0.0	0.0	0.0	0.0	0.0	0.0	0.0	0.0			
%ile BackOfQ(90%),veh/ln	0.8	1.5	0.0	0.0	1.8	0.9	1.0	7.1	0.8			
Unsig. Movement Delay, s/veh												
LnGrp Delay(d),s/veh	8.4	8.0	0.0	0.0	15.9	15.3	9.5	13.7	9.4			
LnGrp LOS	A	A	A	A	B	B	A	B	A			
Approach Vol, veh/h		219			127			951				
Approach Delay, s/veh		8.1			15.7			13.2				
Approach LOS		A			B			B				
Timer - Assigned Phs		2		4				8				
Phs Duration (G+Y+Rc), s		40.0		30.0				30.0				
Change Period (Y+Rc), s		5.0		5.0				5.0				
Max Green Setting (Gmax), s		35.0		25.0				25.0				
Max Q Clear Time (g_c+I1), s		15.7		6.6				4.7				
Green Ext Time (p_c), s		10.6		0.7				0.3				
Intersection Summary												
HCM 6th Ctrl Delay			12.6									
HCM 6th LOS			B									

Movement	EBL	EBT	EBR	WBL	WBT	WBR	NBL	NBT	NBR	SBL	SBT	SBR
Lane Configurations												
Traffic Volume (veh/h)	118	15	32	43	68	55	119	1339	10	14	1302	116
Future Volume (veh/h)	118	15	32	43	68	55	119	1339	10	14	1302	116
Initial Q (Qb), veh	0	0	0	0	0	0	0	0	0	0	0	0
Ped-Bike Adj(A_pbT)	1.00		1.00	1.00		1.00	1.00		1.00	1.00		1.00
Parking Bus, Adj	1.00	1.00	1.00	1.00	1.00	1.00	1.00	1.00	1.00	1.00	1.00	1.00
Work Zone On Approach		No			No			No			No	
Adj Sat Flow, veh/h/ln	1736	1667	1736	1709	1709	1709	1723	1723	1723	1695	1695	1695
Adj Flow Rate, veh/h	134	17	36	49	77	62	135	1522	11	16	1480	132
Peak Hour Factor	0.88	0.88	0.88	0.88	0.88	0.88	0.88	0.88	0.88	0.88	0.88	0.88
Percent Heavy Veh, %	1	1	1	3	3	3	2	2	2	4	4	4
Cap, veh/h	227	98	207	301	180	145	217	2148	16	210	1841	163
Arrive On Green	0.20	0.20	0.20	0.20	0.20	0.20	0.05	0.64	0.64	0.02	0.62	0.62
Sat Flow, veh/h	1260	476	1009	1341	876	706	1641	3331	24	1615	2993	265
Grp Volume(v), veh/h	134	0	53	49	0	139	135	747	786	16	792	820
Grp Sat Flow(s),veh/h/ln	1260	0	1485	1341	0	1582	1641	1637	1718	1615	1611	1648
Q Serve(g_s), s	11.3	0.0	3.2	3.4	0.0	8.4	3.1	32.6	32.7	0.4	40.7	41.7
Cycle Q Clear(g_c), s	19.7	0.0	3.2	6.6	0.0	8.4	3.1	32.6	32.7	0.4	40.7	41.7
Prop In Lane	1.00		0.68	1.00		0.45	1.00		0.01	1.00		0.16
Lane Grp Cap(c), veh/h	227	0	304	301	0	324	217	1055	1108	210	991	1013
V/C Ratio(X)	0.59	0.00	0.17	0.16	0.00	0.43	0.62	0.71	0.71	0.08	0.80	0.81
Avail Cap(c_a), veh/h	431	0	544	517	0	579	440	1055	1108	477	1032	1056
HCM Platoon Ratio	1.00	1.00	1.00	1.00	1.00	1.00	1.00	1.00	1.00	1.00	1.00	1.00
Upstream Filter(I)	1.00	0.00	1.00	1.00	0.00	1.00	1.00	1.00	1.00	1.00	1.00	1.00
Uniform Delay (d), s/veh	46.5	0.0	35.8	38.6	0.0	37.9	21.0	12.7	12.7	11.6	15.9	16.1
Incr Delay (d2), s/veh	2.2	0.0	0.2	0.2	0.0	0.8	1.1	2.8	2.7	0.1	5.1	5.4
Initial Q Delay(d3),s/veh	0.0	0.0	0.0	0.0	0.0	0.0	0.0	0.0	0.0	0.0	0.0	0.0
%ile BackOfQ(90%),veh/ln	6.2	0.0	2.2	2.1	0.0	5.7	4.1	16.4	17.1	0.3	20.5	21.4
Unsig. Movement Delay, s/veh												
LnGrp Delay(d),s/veh	48.7	0.0	36.1	38.8	0.0	38.7	22.1	15.5	15.4	11.7	21.1	21.5
LnGrp LOS	D	A	D	D	A	D	C	B	B	B	C	C
Approach Vol, veh/h		187			188			1668			1628	
Approach Delay, s/veh		45.1			38.7			16.0			21.2	
Approach LOS		D			D			B			C	

Timer - Assigned Phs	1	2		4	5	6		8
Phs Duration (G+Y+Rc), s	4.9	76.0		28.4	8.2	72.7		28.4
Change Period (Y+Rc), s	3.0	5.5		6.0	3.0	5.5		6.0
Max Green Setting (Gmax), s	20.0	70.0		40.0	20.0	70.0		40.0
Max Q Clear Time (g_c+I1), s	2.4	34.7		21.7	5.1	43.7		10.4
Green Ext Time (p_c), s	0.0	29.5		0.7	0.1	23.5		0.8

Intersection Summary		
HCM 6th Ctrl Delay		20.9
HCM 6th LOS		C

Movement	EBL	EBT	EBR	WBL	WBT	WBR	NBL	NBT	NBR	SBL	SBT	SBR
Lane Configurations												
Traffic Volume (veh/h)	153	59	107	16	21	38	75	1509	29	62	1359	85
Future Volume (veh/h)	153	59	107	16	21	38	75	1509	29	62	1359	85
Initial Q (Qb), veh	0	0	0	0	0	0	0	0	0	0	0	0
Ped-Bike Adj(A_pbT)	1.00		1.00	1.00		1.00	1.00		1.00	1.00		1.00
Parking Bus, Adj	1.00	1.00	1.00	1.00	1.00	1.00	1.00	1.00	1.00	1.00	1.00	1.00
Work Zone On Approach		No			No			No			No	
Adj Sat Flow, veh/h/ln	1750	1680	1750	1723	1723	1723	1709	1709	1709	1723	1723	1723
Adj Flow Rate, veh/h	158	61	110	16	22	39	77	1556	30	64	1401	88
Peak Hour Factor	0.97	0.97	0.97	0.97	0.97	0.97	0.97	0.97	0.97	0.97	0.97	0.97
Percent Heavy Veh, %	0	0	0	2	2	2	3	3	3	2	2	2
Cap, veh/h	269	96	174	161	100	177	260	2078	40	236	1987	124
Arrive On Green	0.18	0.18	0.18	0.18	0.18	0.18	0.04	0.64	0.64	0.04	0.64	0.64
Sat Flow, veh/h	1363	537	969	1214	557	988	1628	3259	63	1641	3128	196
Grp Volume(v), veh/h	158	0	171	16	0	61	77	774	812	64	731	758
Grp Sat Flow(s),veh/h/ln	1363	0	1506	1214	0	1545	1628	1624	1698	1641	1637	1687
Q Serve(g_s), s	11.5	0.0	10.8	1.3	0.0	3.5	1.6	33.8	34.0	1.3	30.1	30.4
Cycle Q Clear(g_c), s	14.9	0.0	10.8	12.0	0.0	3.5	1.6	33.8	34.0	1.3	30.1	30.4
Prop In Lane	1.00		0.64	1.00		0.64	1.00		0.04	1.00		0.12
Lane Grp Cap(c), veh/h	269	0	270	161	0	277	260	1035	1083	236	1040	1072
V/C Ratio(X)	0.59	0.00	0.63	0.10	0.00	0.22	0.30	0.75	0.75	0.27	0.70	0.71
Avail Cap(c_a), veh/h	557	0	589	417	0	604	507	1111	1162	490	1120	1155
HCM Platoon Ratio	1.00	1.00	1.00	1.00	1.00	1.00	1.00	1.00	1.00	1.00	1.00	1.00
Upstream Filter(I)	1.00	0.00	1.00	1.00	0.00	1.00	1.00	1.00	1.00	1.00	1.00	1.00
Uniform Delay (d), s/veh	42.2	0.0	38.8	44.4	0.0	35.8	11.3	12.8	12.9	12.5	12.3	12.4
Incr Delay (d2), s/veh	1.8	0.0	2.2	0.2	0.0	0.4	0.2	3.4	3.3	0.2	2.5	2.5
Initial Q Delay(d3),s/veh	0.0	0.0	0.0	0.0	0.0	0.0	0.0	0.0	0.0	0.0	0.0	0.0
%ile BackOfQ(90%),veh/ln	6.6	0.0	6.8	0.7	0.0	2.4	1.1	16.7	17.4	1.0	15.2	15.7
Unsig. Movement Delay, s/veh												
LnGrp Delay(d),s/veh	44.1	0.0	41.0	44.6	0.0	36.2	11.6	16.2	16.1	12.7	14.8	14.9
LnGrp LOS	D	A	D	D	A	D	B	B	B	B	B	B
Approach Vol, veh/h		329			77			1663			1553	
Approach Delay, s/veh		42.5			38.0			16.0			14.8	
Approach LOS		D			D			B			B	

Timer - Assigned Phs	1	2		4	5	6		8				
Phs Duration (G+Y+Rc), s	7.2	70.7		24.4	7.4	70.5		24.4				
Change Period (Y+Rc), s	3.0	5.5		6.0	3.0	5.5		6.0				
Max Green Setting (Gmax), s	20.0	70.0		40.0	20.0	70.0		40.0				
Max Q Clear Time (g_c+I1), s	3.3	36.0		16.9	3.6	32.4		14.0				
Green Ext Time (p_c), s	0.1	29.3		1.5	0.1	30.5		0.3				

Intersection Summary			
HCM 6th Ctrl Delay			18.3
HCM 6th LOS			B

Movement	EBL	EBT	EBR	WBL	WBT	WBR	NBL	NBT	NBR	SBL	SBT	SBR
Lane Configurations												
Traffic Volume (veh/h)	75	65	31	87	186	145	60	832	18	65	970	69
Future Volume (veh/h)	75	65	31	87	186	145	60	832	18	65	970	69
Initial Q (Qb), veh	0	0	0	0	0	0	0	0	0	0	0	0
Ped-Bike Adj(A_pbT)	1.00		1.00	1.00		1.00	1.00		1.00	1.00		1.00
Parking Bus, Adj	1.00	1.00	1.00	1.00	1.00	1.00	1.00	1.00	1.00	1.00	1.00	1.00
Work Zone On Approach		No			No			No			No	
Adj Sat Flow, veh/h/ln	1709	1709	1709	1736	1736	1806	1695	1695	1695	1709	1709	1777
Adj Flow Rate, veh/h	83	72	34	97	207	161	67	924	20	72	1078	77
Peak Hour Factor	0.90	0.90	0.90	0.90	0.90	0.90	0.90	0.90	0.90	0.90	0.90	0.90
Percent Heavy Veh, %	3	3	3	1	1	1	4	4	4	3	3	3
Cap, veh/h	243	531	236	382	439	325	435	1669	36	495	1597	114
Arrive On Green	0.24	0.24	0.24	0.24	0.24	0.24	0.10	1.00	1.00	0.11	1.00	1.00
Sat Flow, veh/h	1006	2187	971	1298	1808	1337	1615	3224	70	1628	3074	219
Grp Volume(v), veh/h	83	52	54	97	188	180	67	462	482	72	569	586
Grp Sat Flow(s),veh/h/ln	1006	1624	1534	1298	1650	1496	1615	1611	1683	1628	1624	1670
Q Serve(g_s), s	5.4	1.8	1.9	4.4	6.8	7.3	1.3	0.0	0.0	1.4	0.0	0.0
Cycle Q Clear(g_c), s	12.7	1.8	1.9	6.4	6.8	7.3	1.3	0.0	0.0	1.4	0.0	0.0
Prop In Lane	1.00		0.63	1.00		0.89	1.00		0.04	1.00		0.13
Lane Grp Cap(c), veh/h	243	394	373	382	401	363	435	834	871	495	843	867
V/C Ratio(X)	0.34	0.13	0.14	0.25	0.47	0.50	0.15	0.55	0.55	0.15	0.67	0.68
Avail Cap(c_a), veh/h	344	557	526	512	566	513	535	834	871	594	843	867
HCM Platoon Ratio	1.00	1.00	1.00	1.00	1.00	1.00	2.00	2.00	2.00	2.00	2.00	2.00
Upstream Filter(I)	1.00	1.00	1.00	1.00	1.00	1.00	0.71	0.71	0.71	0.70	0.70	0.70
Uniform Delay (d), s/veh	28.3	20.7	20.8	23.3	22.6	22.8	6.4	0.0	0.0	6.3	0.0	0.0
Incr Delay (d2), s/veh	1.8	0.3	0.4	0.7	1.8	2.2	0.2	1.9	1.8	0.1	3.0	3.0
Initial Q Delay(d3),s/veh	0.0	0.0	0.0	0.0	0.0	0.0	0.0	0.0	0.0	0.0	0.0	0.0
%ile BackOfQ(90%),veh/ln	2.5	1.2	1.3	2.5	4.9	4.8	0.7	0.8	0.8	0.7	1.3	1.3
Unsig. Movement Delay, s/veh												
LnGrp Delay(d),s/veh	30.0	21.1	21.2	24.0	24.5	25.0	6.6	1.9	1.8	6.5	3.0	3.0
LnGrp LOS	C	C	C	C	C	C	A	A	A	A	A	A
Approach Vol, veh/h		189			465			1011			1227	
Approach Delay, s/veh		25.0			24.6			2.2			3.2	
Approach LOS		C			C			A			A	

Timer - Assigned Phs	1	2		4	5	6		8
Phs Duration (G+Y+Rc), s	6.6	41.4		22.0	6.8	41.2		22.0
Change Period (Y+Rc), s	3.0	5.0		5.0	3.0	5.0		5.0
Max Green Setting (Gmax), s	8.0	25.0		24.0	8.0	25.0		24.0
Max Q Clear Time (g_c+I1), s	3.3	0.0		14.7	3.4	0.0		9.3
Green Ext Time (p_c), s	0.1	0.0		1.1	0.1	0.0		4.2

Intersection Summary	
HCM 6th Ctrl Delay	7.7
HCM 6th LOS	A

Movement	EBL	EBT	EBR	WBL	WBT	WBR	NBL	NBT	NBR	SBL	SBT	SBR
Lane Configurations												
Traffic Volume (veh/h)	147	205	106	38	147	97	55	1115	67	112	976	98
Future Volume (veh/h)	147	205	106	38	147	97	55	1115	67	112	976	98
Initial Q (Qb), veh	0	0	0	0	0	0	0	0	0	0	0	0
Ped-Bike Adj(A_pbT)	1.00		1.00	1.00		1.00	1.00		1.00	1.00		1.00
Parking Bus, Adj	1.00	1.00	1.00	1.00	1.00	1.00	1.00	1.00	1.00	1.00	1.00	1.00
Work Zone On Approach		No			No			No			No	
Adj Sat Flow, veh/h/ln	1736	1736	1736	1723	1723	1792	1723	1723	1723	1736	1736	1806
Adj Flow Rate, veh/h	153	214	110	40	153	101	57	1161	70	117	1017	102
Peak Hour Factor	0.96	0.96	0.96	0.96	0.96	0.96	0.96	0.96	0.96	0.96	0.96	0.96
Percent Heavy Veh, %	1	1	1	2	2	2	2	2	2	1	1	1
Cap, veh/h	304	548	271	269	497	309	427	1641	99	297	1624	163
Arrive On Green	0.26	0.26	0.26	0.26	0.26	0.26	0.04	0.52	0.52	0.12	1.00	1.00
Sat Flow, veh/h	1135	2138	1058	1056	1938	1205	1641	3136	189	1654	3028	304
Grp Volume(v), veh/h	153	163	161	40	128	126	57	605	626	117	554	565
Grp Sat Flow(s),veh/h/ln	1135	1650	1546	1056	1637	1506	1641	1637	1689	1654	1650	1682
Q Serve(g_s), s	10.1	6.5	6.9	2.6	5.0	5.4	1.2	22.4	22.4	2.6	0.0	0.0
Cycle Q Clear(g_c), s	15.6	6.5	6.9	9.5	5.0	5.4	1.2	22.4	22.4	2.6	0.0	0.0
Prop In Lane	1.00		0.68	1.00		0.80	1.00		0.11	1.00		0.18
Lane Grp Cap(c), veh/h	304	423	396	269	419	386	427	857	884	297	885	902
V/C Ratio(X)	0.50	0.39	0.41	0.15	0.30	0.33	0.13	0.71	0.71	0.39	0.63	0.63
Avail Cap(c_a), veh/h	382	536	502	342	532	489	559	857	884	408	885	902
HCM Platoon Ratio	1.00	1.00	1.00	1.00	1.00	1.00	1.00	1.00	1.00	2.00	2.00	2.00
Upstream Filter(I)	1.00	1.00	1.00	1.00	1.00	1.00	0.49	0.49	0.49	0.80	0.80	0.80
Uniform Delay (d), s/veh	30.5	24.6	24.7	28.6	24.0	24.2	7.7	14.4	14.4	11.0	0.0	0.0
Incr Delay (d2), s/veh	2.8	1.2	1.4	0.5	0.9	1.0	0.1	2.4	2.4	1.0	2.7	2.6
Initial Q Delay(d3),s/veh	0.0	0.0	0.0	0.0	0.0	0.0	0.0	0.0	0.0	0.0	0.0	0.0
%ile BackOfQ(90%),veh/ln	5.2	4.7	4.7	1.3	3.6	3.6	0.8	10.8	11.1	1.5	1.2	1.2
Unsig. Movement Delay, s/veh												
LnGrp Delay(d),s/veh	33.2	25.8	26.1	29.2	24.9	25.2	7.8	16.9	16.8	12.0	2.7	2.6
LnGrp LOS	C	C	C	C	C	C	A	B	B	B	A	A
Approach Vol, veh/h		477			294			1288			1236	
Approach Delay, s/veh		28.3			25.6			16.4			3.5	
Approach LOS		C			C			B			A	

Timer - Assigned Phs	1	2		4	5	6		8
Phs Duration (G+Y+Rc), s	6.6	47.9		25.5	7.6	46.9		25.5
Change Period (Y+Rc), s	3.0	5.0		5.0	3.0	5.0		5.0
Max Green Setting (Gmax), s	10.0	31.0		26.0	10.0	31.0		26.0
Max Q Clear Time (g_c+I1), s	3.2	0.0		17.6	4.6	0.0		11.5
Green Ext Time (p_c), s	0.1	0.0		2.9	0.2	0.0		2.6

Intersection Summary		
HCM 6th Ctrl Delay		14.1
HCM 6th LOS		B

Movement	EBL	EBT	EBR	WBL	WBT	WBR	NBL	NBT	NBR	SBL	SBT	SBR
Lane Configurations												
Traffic Volume (veh/h)	42	33	0	0	27	28	54	774	20	0	0	0
Future Volume (veh/h)	42	33	0	0	27	28	54	774	20	0	0	0
Initial Q (Qb), veh	0	0	0	0	0	0	0	0	0			
Ped-Bike Adj(A_pbT)	1.00		1.00	1.00		1.00	1.00		1.00			
Parking Bus, Adj	1.00	1.00	1.00	1.00	1.00	1.00	1.00	1.00	1.00			
Work Zone On Approach		No			No			No				
Adj Sat Flow, veh/h/ln	1317	1317	0	0	1501	1441	1465	1526	1526			
Adj Flow Rate, veh/h	54	42	0	0	35	22	69	992	16			
Peak Hour Factor	0.78	0.78	0.78	0.78	0.78	0.78	0.78	0.78	0.78			
Percent Heavy Veh, %	21	21	0	0	6	6	4	4	4			
Cap, veh/h	455	470	0	0	536	436	698	1450	647			
Arrive On Green	0.36	0.36	0.00	0.00	0.36	0.36	0.17	0.17	0.17			
Sat Flow, veh/h	1029	1317	0	0	1501	1221	1395	2899	1293			
Grp Volume(v), veh/h	54	42	0	0	35	22	69	992	16			
Grp Sat Flow(s),veh/h/ln	1029	1317	0	0	1501	1221	1395	1450	1293			
Q Serve(g_s), s	2.6	1.5	0.0	0.0	1.1	0.8	2.9	22.5	0.7			
Cycle Q Clear(g_c), s	3.6	1.5	0.0	0.0	1.1	0.8	2.9	22.5	0.7			
Prop In Lane	1.00		0.00	0.00		1.00	1.00		1.00			
Lane Grp Cap(c), veh/h	455	470	0	0	536	436	698	1450	647			
V/C Ratio(X)	0.12	0.09	0.00	0.00	0.07	0.05	0.10	0.68	0.02			
Avail Cap(c_a), veh/h	455	470	0	0	536	436	698	1450	647			
HCM Platoon Ratio	1.00	1.00	1.00	1.00	1.00	1.00	0.33	0.33	0.33			
Upstream Filter(I)	1.00	1.00	0.00	0.00	1.00	1.00	1.00	1.00	1.00			
Uniform Delay (d), s/veh	16.0	14.9	0.0	0.0	14.8	14.7	15.8	24.0	14.9			
Incr Delay (d2), s/veh	0.5	0.4	0.0	0.0	0.2	0.2	0.3	2.6	0.1			
Initial Q Delay(d3),s/veh	0.0	0.0	0.0	0.0	0.0	0.0	0.0	0.0	0.0			
%ile BackOfQ(90%),veh/ln	1.2	0.9	0.0	0.0	0.7	0.4	1.7	13.0	0.4			
Unsig. Movement Delay, s/veh												
LnGrp Delay(d),s/veh	16.5	15.3	0.0	0.0	15.0	14.9	16.1	26.7	15.0			
LnGrp LOS	B	B	A	A	B	B	B	C	B			
Approach Vol, veh/h		96			57			1077				
Approach Delay, s/veh		16.0			15.0			25.8				
Approach LOS		B			B			C				

Timer - Assigned Phs		2		4				8				
Phs Duration (G+Y+Rc), s		40.0		30.0				30.0				
Change Period (Y+Rc), s		5.0		5.0				5.0				
Max Green Setting (Gmax), s		35.0		25.0				25.0				
Max Q Clear Time (g_c+I1), s		24.5		5.6				3.1				
Green Ext Time (p_c), s		7.4		0.3				0.1				

Intersection Summary												
HCM 6th Ctrl Delay			24.6									
HCM 6th LOS			C									

Movement	EBL	EBT	EBR	WBL	WBT	WBR	NBL	NBT	NBR	SBL	SBT	SBR
Lane Configurations												
Traffic Volume (veh/h)	106	77	0	0	48	50	52	885	31	0	0	0
Future Volume (veh/h)	106	77	0	0	48	50	52	885	31	0	0	0
Initial Q (Qb), veh	0	0	0	0	0	0	0	0	0			
Ped-Bike Adj(A_pbT)	1.00		1.00	1.00		1.00	1.00		1.00			
Parking Bus, Adj	1.00	1.00	1.00	1.00	1.00	1.00	1.00	1.00	1.00			
Work Zone On Approach		No			No			No				
Adj Sat Flow, veh/h/ln	1514	1514	0	0	1526	1465	1488	1550	1550			
Adj Flow Rate, veh/h	110	80	0	0	50	32	54	922	20			
Peak Hour Factor	0.96	0.96	0.96	0.96	0.96	0.96	0.96	0.96	0.96			
Percent Heavy Veh, %	5	5	0	0	4	4	2	2	2			
Cap, veh/h	491	541	0	0	545	443	709	1473	657			
Arrive On Green	0.12	0.12	0.00	0.00	0.36	0.36	0.17	0.17	0.17			
Sat Flow, veh/h	1156	1514	0	0	1526	1241	1418	2946	1314			
Grp Volume(v), veh/h	110	80	0	0	50	32	54	922	20			
Grp Sat Flow(s),veh/h/ln	1156	1514	0	0	1526	1241	1418	1473	1314			
Q Serve(g_s), s	6.1	3.3	0.0	0.0	1.5	1.2	2.3	20.4	0.9			
Cycle Q Clear(g_c), s	7.6	3.3	0.0	0.0	1.5	1.2	2.3	20.4	0.9			
Prop In Lane	1.00		0.00	0.00		1.00	1.00		1.00			
Lane Grp Cap(c), veh/h	491	541	0	0	545	443	709	1473	657			
V/C Ratio(X)	0.22	0.15	0.00	0.00	0.09	0.07	0.08	0.63	0.03			
Avail Cap(c_a), veh/h	491	541	0	0	545	443	709	1473	657			
HCM Platoon Ratio	0.33	0.33	1.00	1.00	1.00	1.00	0.33	0.33	0.33			
Upstream Filter(I)	1.00	1.00	0.00	0.00	1.00	1.00	1.00	1.00	1.00			
Uniform Delay (d), s/veh	23.9	21.3	0.0	0.0	15.0	14.8	15.6	23.1	15.0			
Incr Delay (d2), s/veh	1.1	0.6	0.0	0.0	0.3	0.3	0.2	2.0	0.1			
Initial Q Delay(d3),s/veh	0.0	0.0	0.0	0.0	0.0	0.0	0.0	0.0	0.0			
%ile BackOfQ(90%),veh/ln	3.5	2.2	0.0	0.0	1.0	0.7	1.3	12.0	0.5			
Unsig. Movement Delay, s/veh												
LnGrp Delay(d),s/veh	25.0	21.9	0.0	0.0	15.3	15.2	15.8	25.2	15.1			
LnGrp LOS	C	C	A	A	B	B	B	C	B			
Approach Vol, veh/h		190			82			996				
Approach Delay, s/veh		23.7			15.2			24.4				
Approach LOS		C			B			C				

Timer - Assigned Phs		2		4				8				
Phs Duration (G+Y+Rc), s		40.0		30.0				30.0				
Change Period (Y+Rc), s		5.0		5.0				5.0				
Max Green Setting (Gmax), s		35.0		25.0				25.0				
Max Q Clear Time (g_c+I1), s		22.4		9.6				3.5				
Green Ext Time (p_c), s		8.2		0.6				0.2				

Intersection Summary												
HCM 6th Ctrl Delay			23.7									
HCM 6th LOS			C									

Movement	EBL	EBT	EBR	WBL	WBT	WBR	NBL	NBT	NBR	SBL	SBT	SBR
Lane Configurations												
Traffic Volume (veh/h)	0	23	19	18	62	0	0	0	0	44	726	72
Future Volume (veh/h)	0	23	19	18	62	0	0	0	0	44	726	72
Initial Q (Qb), veh	0	0	0	0	0	0				0	0	0
Ped-Bike Adj(A_pbT)	1.00		1.00	1.00		1.00				1.00		1.00
Parking Bus, Adj	1.00	1.00	1.00	1.00	1.00	1.00				1.00	1.00	1.00
Work Zone On Approach		No			No						No	
Adj Sat Flow, veh/h/ln	0	1452	1394	1514	1514	0				1538	1538	1538
Adj Flow Rate, veh/h	0	26	13	20	70	0				49	816	81
Peak Hour Factor	0.89	0.89	0.89	0.89	0.89	0.89				0.89	0.89	0.89
Percent Heavy Veh, %	0	10	10	5	5	0				3	3	3
Cap, veh/h	0	581	473	159	484	0				68	1188	124
Arrive On Green	0.00	0.40	0.40	0.40	0.40	0.00				0.46	0.46	0.46
Sat Flow, veh/h	0	1452	1181	241	1210	0				149	2599	272
Grp Volume(v), veh/h	0	26	13	90	0	0				502	0	444
Grp Sat Flow(s),veh/h/ln	0	1452	1181	1451	0	0				1531	0	1489
Q Serve(g_s), s	0.0	0.8	0.5	0.0	0.0	0.0				18.5	0.0	16.2
Cycle Q Clear(g_c), s	0.0	0.8	0.5	2.7	0.0	0.0				18.5	0.0	16.2
Prop In Lane	0.00		1.00	0.22		0.00				0.10		0.18
Lane Grp Cap(c), veh/h	0	581	473	643	0	0				700	0	681
V/C Ratio(X)	0.00	0.04	0.03	0.14	0.00	0.00				0.72	0.00	0.65
Avail Cap(c_a), veh/h	0	581	473	643	0	0				700	0	681
HCM Platoon Ratio	1.00	1.00	1.00	1.00	1.00	1.00				1.00	1.00	1.00
Upstream Filter(I)	0.00	1.00	1.00	1.00	0.00	0.00				1.00	0.00	1.00
Uniform Delay (d), s/veh	0.0	12.8	12.7	13.4	0.0	0.0				15.3	0.0	14.7
Incr Delay (d2), s/veh	0.0	0.1	0.1	0.5	0.0	0.0				6.2	0.0	4.8
Initial Q Delay(d3),s/veh	0.0	0.0	0.0	0.0	0.0	0.0				0.0	0.0	0.0
%ile BackOfQ(90%),veh/ln	0.0	0.5	0.2	1.7	0.0	0.0				10.5	0.0	9.0
Unsig. Movement Delay, s/veh												
LnGrp Delay(d),s/veh	0.0	13.0	12.8	13.9	0.0	0.0				21.6	0.0	19.5
LnGrp LOS	A	B	B	B	A	A				C	A	B
Approach Vol, veh/h		39			90						946	
Approach Delay, s/veh		12.9			13.9						20.6	
Approach LOS		B			B						C	

Timer - Assigned Phs		4		6		8						
Phs Duration (G+Y+Rc), s		33.0		37.0		33.0						
Change Period (Y+Rc), s		5.0		5.0		5.0						
Max Green Setting (Gmax), s		28.0		32.0		28.0						
Max Q Clear Time (g_c+I1), s		2.8		0.0		4.7						
Green Ext Time (p_c), s		0.1		0.0		0.2						

Intersection Summary												
HCM 6th Ctrl Delay			19.8									
HCM 6th LOS			B									

Movement	EBL	EBT	EBR	WBL	WBT	WBR	NBL	NBT	NBR	SBL	SBT	SBR
Lane Configurations												
Traffic Volume (veh/h)	0	76	93	64	43	0	0	0	0	99	971	43
Future Volume (veh/h)	0	76	93	64	43	0	0	0	0	99	971	43
Initial Q (Qb), veh	0	0	0	0	0	0				0	0	0
Ped-Bike Adj(A_pbT)	1.00		1.00	1.00		1.00				1.00		1.00
Parking Bus, Adj	1.00	1.00	1.00	1.00	1.00	1.00				1.00	1.00	1.00
Work Zone On Approach		No			No						No	
Adj Sat Flow, veh/h/ln	0	1563	1500	1514	1514	0				1550	1550	1550
Adj Flow Rate, veh/h	0	79	60	67	45	0				103	1011	45
Peak Hour Factor	0.96	0.96	0.96	0.96	0.96	0.96				0.96	0.96	0.96
Percent Heavy Veh, %	0	1	1	5	5	0				2	2	2
Cap, veh/h	0	670	545	376	226	0				112	1149	54
Arrive On Green	0.00	0.43	0.43	0.43	0.43	0.00				0.43	0.43	0.43
Sat Flow, veh/h	0	1563	1271	686	528	0				260	2680	125
Grp Volume(v), veh/h	0	79	60	112	0	0				609	0	550
Grp Sat Flow(s),veh/h/ln	0	1563	1271	1214	0	0				1537	0	1528
Q Serve(g_s), s	0.0	2.1	2.0	2.4	0.0	0.0				26.2	0.0	22.5
Cycle Q Clear(g_c), s	0.0	2.1	2.0	4.5	0.0	0.0				26.2	0.0	22.5
Prop In Lane	0.00		1.00	0.60		0.00				0.17		0.08
Lane Grp Cap(c), veh/h	0	670	545	603	0	0				659	0	655
V/C Ratio(X)	0.00	0.12	0.11	0.19	0.00	0.00				0.92	0.00	0.84
Avail Cap(c_a), veh/h	0	670	545	603	0	0				659	0	655
HCM Platoon Ratio	1.00	1.00	1.00	1.00	1.00	1.00				1.00	1.00	1.00
Upstream Filter(I)	0.00	1.00	1.00	1.00	0.00	0.00				1.00	0.00	1.00
Uniform Delay (d), s/veh	0.0	12.0	12.0	12.7	0.0	0.0				18.9	0.0	17.9
Incr Delay (d2), s/veh	0.0	0.4	0.4	0.7	0.0	0.0				20.6	0.0	12.4
Initial Q Delay(d3),s/veh	0.0	0.0	0.0	0.0	0.0	0.0				0.0	0.0	0.0
%ile BackOfQ(90%),veh/ln	0.0	1.4	1.1	2.1	0.0	0.0				16.8	0.0	13.5
Unsig. Movement Delay, s/veh												
LnGrp Delay(d),s/veh	0.0	12.4	12.4	13.4	0.0	0.0				39.5	0.0	30.2
LnGrp LOS	A	B	B	B	A	A				D	A	C
Approach Vol, veh/h		139			112						1159	
Approach Delay, s/veh		12.4			13.4						35.1	
Approach LOS		B			B						D	

Timer - Assigned Phs		4		6		8						
Phs Duration (G+Y+Rc), s		35.0		35.0		35.0						
Change Period (Y+Rc), s		5.0		5.0		5.0						
Max Green Setting (Gmax), s		30.0		30.0		30.0						
Max Q Clear Time (g_c+I1), s		4.1		0.0		6.5						
Green Ext Time (p_c), s		0.4		0.0		0.3						

Intersection Summary												
HCM 6th Ctrl Delay			31.2									
HCM 6th LOS			C									

Intersection	
Int Delay, s/veh	1.2

Movement	EBL	EBT	EBR	WBL	WBT	WBR	NBL	NBT	NBR	SBL	SBT	SBR
Lane Configurations												
Traffic Vol, veh/h	11	29	0	0	14	3	44	867	32	0	0	0
Future Vol, veh/h	11	29	0	0	14	3	44	867	32	0	0	0
Conflicting Peds, #/hr	0	0	0	0	0	0	0	0	0	0	0	0
Sign Control	Stop	Stop	Stop	Stop	Stop	Stop	Free	Free	Free	Free	Free	Free
RT Channelized	-	-	None	-	-	None	-	-	None	-	-	None
Storage Length	-	-	-	-	-	-	50	-	75	-	-	-
Veh in Median Storage, #	-	0	-	-	0	-	-	0	-	1081	921	536	-
Grade, %	-	0	-	-	0	-	-	0	-	-	0	-
Peak Hour Factor	92	92	92	92	92	92	92	92	92	92	92	92
Heavy Vehicles, %	2	2	2	2	2	2	2	2	2	2	2	2
Mvmt Flow	12	32	0	0	15	3	48	942	35	0	0	0

Major/Minor	Minor2			Minor1			Major1		
Conflicting Flow All	575	1073	-	-	1038	471	0	0	0
Stage 1	0	0	-	-	1038	-	-	-	-
Stage 2	575	1073	-	-	0	-	-	-	-
Critical Hdwy	7.54	6.54	-	-	6.54	6.94	4.14	-	-
Critical Hdwy Stg 1	-	-	-	-	5.54	-	-	-	-
Critical Hdwy Stg 2	6.54	5.54	-	-	-	-	-	-	-
Follow-up Hdwy	3.52	4.02	-	-	4.02	3.32	2.22	-	-
Pot Cap-1 Maneuver	401	219	0	0	229	539	-	-	-
Stage 1	-	-	0	0	306	-	-	-	-
Stage 2	470	295	0	0	-	-	-	-	-
Platoon blocked, %								-	-
Mov Cap-1 Maneuver	378	219	-	-	229	539	-	-	-
Mov Cap-2 Maneuver	378	219	-	-	229	-	-	-	-
Stage 1	-	-	-	-	306	-	-	-	-
Stage 2	444	295	-	-	-	-	-	-	-

Approach	EB	WB	NB
HCM Control Delay, s	22.6	20.2	
HCM LOS	C	C	

Minor Lane/Major Mvmt	NBL	NBT	NBR	EBLn1	WBLn1
Capacity (veh/h)	-	-	-	248	255
HCM Lane V/C Ratio	-	-	-	0.175	0.072
HCM Control Delay (s)	-	-	-	22.6	20.2
HCM Lane LOS	-	-	-	C	C
HCM 95th %tile Q(veh)	-	-	-	0.6	0.2

Intersection	
Int Delay, s/veh	2.7

Movement	EBL	EBT	EBR	WBL	WBT	WBR	NBL	NBT	NBR	SBL	SBT	SBR
Lane Configurations												
Traffic Vol, veh/h	31	51	0	0	11	43	36	887	16	0	0	0
Future Vol, veh/h	31	51	0	0	11	43	36	887	16	0	0	0
Conflicting Peds, #/hr	0	0	0	0	0	0	0	0	0	0	0	0
Sign Control	Stop	Stop	Stop	Stop	Stop	Stop	Free	Free	Free	Free	Free	Free
RT Channelized	-	-	None	-	-	None	-	-	None	-	-	None
Storage Length	-	-	-	-	-	-	50	-	75	-	-	-
Veh in Median Storage, #	-	0	-	-	0	-	-	0	-	1081	921	536 -
Grade, %	-	0	-	-	0	-	-	0	-	-	0	-
Peak Hour Factor	92	92	92	92	92	92	92	92	92	92	92	92
Heavy Vehicles, %	2	2	2	2	2	2	2	2	2	2	2	2
Mvmt Flow	34	55	0	0	12	47	39	964	17	0	0	0

Major/Minor	Minor2			Minor1			Major1		
Conflicting Flow All	566	1059	-	-	1042	482	0	0	0
Stage 1	0	0	-	-	1042	-	-	-	-
Stage 2	566	1059	-	-	0	-	-	-	-
Critical Hdwy	7.54	6.54	-	-	6.54	6.94	4.14	-	-
Critical Hdwy Stg 1	-	-	-	-	5.54	-	-	-	-
Critical Hdwy Stg 2	6.54	5.54	-	-	-	-	-	-	-
Follow-up Hdwy	3.52	4.02	-	-	4.02	3.32	2.22	-	-
Pot Cap-1 Maneuver	407	223	0	0	228	530	-	-	-
Stage 1	-	-	0	0	305	-	-	-	-
Stage 2	476	299	0	0	-	-	-	-	-
Platoon blocked, %								-	-
Mov Cap-1 Maneuver	356	223	-	-	228	530	-	-	-
Mov Cap-2 Maneuver	356	223	-	-	228	-	-	-	-
Stage 1	-	-	-	-	305	-	-	-	-
Stage 2	417	299	-	-	-	-	-	-	-

Approach	EB	WB	NB
HCM Control Delay, s	25.9	15	
HCM LOS	D	C	

Minor Lane/Major Mvmt	NBL	NBT	NBR	EBLn1	WBLn1
Capacity (veh/h)	-	-	-	260	417
HCM Lane V/C Ratio	-	-	-	0.343	0.141
HCM Control Delay (s)	-	-	-	25.9	15
HCM Lane LOS	-	-	-	D	C
HCM 95th %tile Q(veh)	-	-	-	1.5	0.5

Intersection	
Int Delay, s/veh	2.6

Movement	EBL	EBT	EBR	WBL	WBT	WBR	NBL	NBT	NBR	SBL	SBT	SBR
Lane Configurations												
Traffic Vol, veh/h	0	21	66	21	50	0	0	0	0	23	707	13
Future Vol, veh/h	0	21	66	21	50	0	0	0	0	23	707	13
Conflicting Peds, #/hr	0	0	0	0	0	0	0	0	0	0	0	0
Sign Control	Stop	Stop	Stop	Stop	Stop	Stop	Free	Free	Free	Free	Free	Free
RT Channelized	-	-	None	-	-	None	-	-	None	-	-	None
Storage Length	-	-	-	-	-	-	-	-	-	-	-	-
Veh in Median Storage, #	-	1	-	-	1	-	-	0	-	-	0	-
Grade, %	-	0	-	-	0	-	-	0	-	-	0	-
Peak Hour Factor	92	92	92	92	92	92	92	92	92	92	92	92
Heavy Vehicles, %	2	2	2	2	2	2	2	2	2	2	2	2
Mvmt Flow	0	23	72	23	54	0	0	0	0	25	768	14

Major/Minor	Minor2			Minor1					Major2		
Conflicting Flow All	-	825	391	446	832	-			0	0	0
Stage 1	-	825	-	0	0	-			-	-	-
Stage 2	-	0	-	446	832	-			-	-	-
Critical Hdwy	-	6.54	6.94	7.54	6.54	-			4.14	-	-
Critical Hdwy Stg 1	-	5.54	-	-	-	-			-	-	-
Critical Hdwy Stg 2	-	-	-	6.54	5.54	-			-	-	-
Follow-up Hdwy	-	4.02	3.32	3.52	4.02	-			2.22	-	-
Pot Cap-1 Maneuver	0	306	608	496	303	0			-	-	-
Stage 1	0	385	-	-	-	0			-	-	-
Stage 2	0	-	-	561	382	0			-	-	-
Platoon blocked, %										-	-
Mov Cap-1 Maneuver	-	306	608	417	303	-			-	-	-
Mov Cap-2 Maneuver	-	374	-	430	374	-			-	-	-
Stage 1	-	385	-	-	-	-			-	-	-
Stage 2	-	-	-	465	382	-			-	-	-

Approach	EB	WB	SB
HCM Control Delay, s	13.3	16.5	
HCM LOS	B	C	

Minor Lane/Major Mvmt	EBLn1	WBLn1	SBL	SBT	SBR
Capacity (veh/h)	528	389	-	-	-
HCM Lane V/C Ratio	0.179	0.198	-	-	-
HCM Control Delay (s)	13.3	16.5	-	-	-
HCM Lane LOS	B	C	-	-	-
HCM 95th %tile Q(veh)	0.6	0.7	-	-	-

Intersection	
Int Delay, s/veh	7.8

Movement	EBL	EBT	EBR	WBL	WBT	WBR	NBL	NBT	NBR	SBL	SBT	SBR
Lane Configurations												
Traffic Vol, veh/h	0	55	173	48	49	0	0	0	0	54	1064	5
Future Vol, veh/h	0	55	173	48	49	0	0	0	0	54	1064	5
Conflicting Peds, #/hr	0	0	0	0	0	0	0	0	0	0	0	0
Sign Control	Stop	Stop	Stop	Stop	Stop	Stop	Free	Free	Free	Free	Free	Free
RT Channelized	-	-	None	-	-	None	-	-	None	-	-	None
Storage Length	-	-	-	-	-	-	-	-	-	-	-	-
Veh in Median Storage, #	-	1	-	-	1	-	-	0	-	-	0	-
Grade, %	-	0	-	-	0	-	-	0	-	-	0	-
Peak Hour Factor	92	92	92	92	92	92	92	92	92	92	92	92
Heavy Vehicles, %	2	2	2	2	2	2	2	2	2	2	2	2
Mvmt Flow	0	60	188	52	53	0	0	0	0	59	1157	5

Major/Minor	Minor2			Minor1					Major2		
Conflicting Flow All	-	1278	581	727	1280	-			0	0	0
Stage 1	-	1278	-	0	0	-			-	-	-
Stage 2	-	0	-	727	1280	-			-	-	-
Critical Hdwy	-	6.54	6.94	7.54	6.54	-			4.14	-	-
Critical Hdwy Stg 1	-	5.54	-	-	-	-			-	-	-
Critical Hdwy Stg 2	-	-	-	6.54	5.54	-			-	-	-
Follow-up Hdwy	-	4.02	3.32	3.52	4.02	-			2.22	-	-
Pot Cap-1 Maneuver	0	165	457	312	165	0			-	-	-
Stage 1	0	235	-	-	-	0			-	-	-
Stage 2	0	-	-	381	235	0			-	-	-
Platoon blocked, %										-	-
Mov Cap-1 Maneuver	-	165	457	149	165	-			-	-	-
Mov Cap-2 Maneuver	-	243	-	155	261	-			-	-	-
Stage 1	-	235	-	-	-	-			-	-	-
Stage 2	-	-	-	167	235	-			-	-	-

Approach	EB	WB	SB
HCM Control Delay, s	31.1	43.3	
HCM LOS	D	E	

Minor Lane/Major Mvmt	EBLn1	WBLn1	SBL	SBT	SBR
Capacity (veh/h)	377	195	-	-	-
HCM Lane V/C Ratio	0.657	0.541	-	-	-
HCM Control Delay (s)	31.1	43.3	-	-	-
HCM Lane LOS	D	E	-	-	-
HCM 95th %tile Q(veh)	4.5	2.8	-	-	-

Movement	EBL	EBT	EBR	WBL	WBT	WBR	NBL	NBT	NBR	SBL	SBT	SBR
Lane Configurations												
Traffic Volume (veh/h)	190	28	29	25	79	36	123	1288	5	8	1161	193
Future Volume (veh/h)	190	28	29	25	79	36	123	1288	5	8	1161	193
Initial Q (Qb), veh	0	0	0	0	0	0	0	0	0	0	0	0
Ped-Bike Adj(A_pbT)	1.00		1.00	1.00		1.00	1.00		1.00	1.00		1.00
Parking Bus, Adj	1.00	1.00	1.00	1.00	1.00	1.00	1.00	1.00	1.00	1.00	1.00	1.00
Work Zone On Approach		No			No			No			No	
Adj Sat Flow, veh/h/ln	1667	1667	1736	1736	1736	1736	1723	1723	1723	1682	1682	1682
Adj Flow Rate, veh/h	218	32	33	29	91	41	141	1480	6	9	1334	222
Peak Hour Factor	0.87	0.87	0.87	0.87	0.87	0.87	0.87	0.87	0.87	0.87	0.87	0.87
Percent Heavy Veh, %	1	1	1	1	1	1	2	2	2	5	5	5
Cap, veh/h	345	176	181	90	240	96	218	1998	8	198	1514	249
Arrive On Green	0.23	0.23	0.23	0.23	0.23	0.23	0.06	0.60	0.60	0.01	0.55	0.55
Sat Flow, veh/h	1217	752	775	173	1029	411	1641	3343	14	1602	2746	452
Grp Volume(v), veh/h	218	0	65	161	0	0	141	724	762	9	771	785
Grp Sat Flow(s),veh/h/ln	1217	0	1527	1612	0	0	1641	1637	1720	1602	1598	1600
Q Serve(g_s), s	9.3	0.0	2.9	0.0	0.0	0.0	3.0	27.4	27.4	0.2	35.9	37.1
Cycle Q Clear(g_c), s	16.4	0.0	2.9	7.1	0.0	0.0	3.0	27.4	27.4	0.2	35.9	37.1
Prop In Lane	1.00		0.51	0.18		0.25	1.00		0.01	1.00		0.28
Lane Grp Cap(c), veh/h	345	0	357	426	0	0	218	978	1028	198	881	883
V/C Ratio(X)	0.63	0.00	0.18	0.38	0.00	0.00	0.65	0.74	0.74	0.05	0.87	0.89
Avail Cap(c_a), veh/h	628	0	712	794	0	0	697	978	1028	740	931	932
HCM Platoon Ratio	1.00	1.00	1.00	1.00	1.00	1.00	1.00	1.00	1.00	1.00	1.00	1.00
Upstream Filter(I)	1.00	0.00	1.00	1.00	0.00	0.00	1.00	1.00	1.00	1.00	1.00	1.00
Uniform Delay (d), s/veh	32.0	0.0	26.3	27.9	0.0	0.0	19.1	12.5	12.5	11.5	16.7	17.0
Incr Delay (d2), s/veh	1.9	0.0	0.2	0.6	0.0	0.0	1.2	3.0	2.9	0.0	9.0	10.3
Initial Q Delay(d3),s/veh	0.0	0.0	0.0	0.0	0.0	0.0	0.0	0.0	0.0	0.0	0.0	0.0
%ile BackOfQ(90%),veh/ln	7.1	0.0	1.9	5.0	0.0	0.0	2.9	13.9	14.4	0.1	19.0	19.8
Unsig. Movement Delay, s/veh												
LnGrp Delay(d),s/veh	33.9	0.0	26.6	28.5	0.0	0.0	20.3	15.5	15.4	11.6	25.7	27.3
LnGrp LOS	C	A	C	C	A	A	C	B	B	B	C	C
Approach Vol, veh/h		283			161			1627			1565	
Approach Delay, s/veh		32.2			28.5			15.9			26.4	
Approach LOS		C			C			B			C	

Timer - Assigned Phs	1	2		4	5	6		8
Phs Duration (G+Y+Rc), s	4.0	56.8		25.1	7.9	52.8		25.1
Change Period (Y+Rc), s	3.0	5.5		5.0	3.0	5.5		5.0
Max Green Setting (Gmax), s	30.0	50.0		40.0	30.0	50.0		40.0
Max Q Clear Time (g_c+I1), s	2.2	29.4		18.4	5.0	39.1		9.1
Green Ext Time (p_c), s	0.0	16.5		1.7	0.1	8.2		0.9

Intersection Summary		
HCM 6th Ctrl Delay		22.2
HCM 6th LOS		C

Movement	EBL	EBT	EBR	WBL	WBT	WBR	NBL	NBT	NBR	SBL	SBT	SBR
Lane Configurations												
Traffic Volume (veh/h)	231	49	62	13	12	21	62	1369	21	32	1350	101
Future Volume (veh/h)	231	49	62	13	12	21	62	1369	21	32	1350	101
Initial Q (Qb), veh	0	0	0	0	0	0	0	0	0	0	0	0
Ped-Bike Adj(A_pbT)	1.00		1.00	1.00		1.00	1.00		1.00	1.00		1.00
Parking Bus, Adj	1.00	1.00	1.00	1.00	1.00	1.00	1.00	1.00	1.00	1.00	1.00	1.00
Work Zone On Approach		No			No			No			No	
Adj Sat Flow, veh/h/ln	1680	1680	1750	1750	1750	1750	1709	1709	1709	1723	1723	1723
Adj Flow Rate, veh/h	238	51	64	13	12	22	64	1411	22	33	1392	104
Peak Hour Factor	0.97	0.97	0.97	0.97	0.97	0.97	0.97	0.97	0.97	0.97	0.97	0.97
Percent Heavy Veh, %	0	0	0	0	0	0	3	3	3	2	2	2
Cap, veh/h	393	148	185	123	113	155	238	1884	29	239	1730	129
Arrive On Green	0.22	0.22	0.22	0.22	0.22	0.22	0.05	0.58	0.58	0.03	0.56	0.56
Sat Flow, veh/h	1341	677	850	292	517	712	1628	3272	51	1641	3088	230
Grp Volume(v), veh/h	238	0	115	47	0	0	64	700	733	33	735	761
Grp Sat Flow(s),veh/h/ln	1341	0	1527	1520	0	0	1628	1624	1700	1641	1637	1681
Q Serve(g_s), s	10.3	0.0	5.0	0.0	0.0	0.0	1.2	25.0	25.1	0.7	27.9	28.3
Cycle Q Clear(g_c), s	12.6	0.0	5.0	1.8	0.0	0.0	1.2	25.0	25.1	0.7	27.9	28.3
Prop In Lane	1.00		0.56	0.28		0.47	1.00		0.03	1.00		0.14
Lane Grp Cap(c), veh/h	393	0	333	391	0	0	238	935	978	239	917	942
V/C Ratio(X)	0.61	0.00	0.35	0.12	0.00	0.00	0.27	0.75	0.75	0.14	0.80	0.81
Avail Cap(c_a), veh/h	789	0	784	828	0	0	786	1042	1091	817	1051	1079
HCM Platoon Ratio	1.00	1.00	1.00	1.00	1.00	1.00	1.00	1.00	1.00	1.00	1.00	1.00
Upstream Filter(I)	1.00	0.00	1.00	1.00	0.00	0.00	1.00	1.00	1.00	1.00	1.00	1.00
Uniform Delay (d), s/veh	28.6	0.0	25.7	24.5	0.0	0.0	12.7	12.3	12.3	10.7	13.7	13.8
Incr Delay (d2), s/veh	1.5	0.0	0.6	0.1	0.0	0.0	0.2	2.7	2.6	0.1	4.0	4.1
Initial Q Delay(d3),s/veh	0.0	0.0	0.0	0.0	0.0	0.0	0.0	0.0	0.0	0.0	0.0	0.0
%ile BackOfQ(90%),veh/ln	6.9	0.0	3.3	1.3	0.0	0.0	0.8	12.5	13.0	0.4	14.3	14.8
Unsig. Movement Delay, s/veh												
LnGrp Delay(d),s/veh	30.1	0.0	26.4	24.7	0.0	0.0	13.0	15.0	15.0	10.8	17.7	17.9
LnGrp LOS	C	A	C	C	A	A	B	B	B	B	B	B
Approach Vol, veh/h		353			47			1497			1529	
Approach Delay, s/veh		28.9			24.7			14.9			17.6	
Approach LOS		C			C			B			B	

Timer - Assigned Phs	1	2		4	5	6		8
Phs Duration (G+Y+Rc), s	5.6	50.3		21.9	6.8	49.1		21.9
Change Period (Y+Rc), s	3.0	5.5		5.0	3.0	5.5		5.0
Max Green Setting (Gmax), s	30.0	50.0		40.0	30.0	50.0		40.0
Max Q Clear Time (g_c+I1), s	2.7	27.1		14.6	3.2	30.3		3.8
Green Ext Time (p_c), s	0.0	17.6		2.1	0.1	12.4		0.2

Intersection Summary	
HCM 6th Ctrl Delay	17.7
HCM 6th LOS	B

Movement	EBL	EBT	EBR	WBL	WBT	WBR	NBL	NBT	NBR	SBL	SBT	SBR
Lane Configurations												
Traffic Volume (veh/h)	0	0	0	0	168	71	329	887	275	0	0	0
Future Volume (veh/h)	0	0	0	0	168	71	329	887	275	0	0	0
Initial Q (Qb), veh				0	0	0	0	0	0			
Ped-Bike Adj(A_pbT)				1.00		1.00	1.00		1.00			
Parking Bus, Adj				1.00	1.00	1.00	1.00	1.00	1.00			
Work Zone On Approach					No			No				
Adj Sat Flow, veh/h/ln				0	1514	1514	1526	1526	1526			
Adj Flow Rate, veh/h				0	205	87	401	1082	208			
Peak Hour Factor				0.82	0.82	0.82	0.82	0.82	0.82			
Percent Heavy Veh, %				0	5	5	4	4	4			
Cap, veh/h				0	853	349	726	1308	554			
Arrive On Green				0.00	0.43	0.43	0.14	0.14	0.14			
Sat Flow, veh/h				0	2065	815	1453	3052	1293			
Grp Volume(v), veh/h				0	146	146	401	1082	208			
Grp Sat Flow(s),veh/h/ln				0	1438	1367	1453	1526	1293			
Q Serve(g_s), s				0.0	4.5	4.8	18.2	24.1	10.2			
Cycle Q Clear(g_c), s				0.0	4.5	4.8	18.2	24.1	10.2			
Prop In Lane				0.00		0.60	1.00		1.00			
Lane Grp Cap(c), veh/h				0	616	586	726	1308	554			
V/C Ratio(X)				0.00	0.24	0.25	0.55	0.83	0.38			
Avail Cap(c_a), veh/h				0	616	586	726	1308	554			
HCM Platoon Ratio				1.00	1.00	1.00	0.33	0.33	0.33			
Upstream Filter(I)				0.00	1.00	1.00	1.00	1.00	1.00			
Uniform Delay (d), s/veh				0.0	12.7	12.8	25.0	27.5	21.6			
Incr Delay (d2), s/veh				0.0	0.9	1.0	3.0	6.1	1.9			
Initial Q Delay(d3),s/veh				0.0	0.0	0.0	0.0	0.0	0.0			
%ile BackOfQ(90%),veh/ln				0.0	2.7	2.8	11.1	15.0	6.3			
Unsig. Movement Delay, s/veh												
LnGrp Delay(d),s/veh				0.0	13.6	13.8	28.0	33.6	23.5			
LnGrp LOS				A	B	B	C	C	C			
Approach Vol, veh/h					292			1691				
Approach Delay, s/veh					13.7			31.1				
Approach LOS					B			C				

Timer - Assigned Phs						6		8				
Phs Duration (G+Y+Rc), s						35.0		35.0				
Change Period (Y+Rc), s						5.0		5.0				
Max Green Setting (Gmax), s						30.0		30.0				
Max Q Clear Time (g_c+I1), s						26.1		6.8				
Green Ext Time (p_c), s						3.6		1.0				

Intersection Summary	
HCM 6th Ctrl Delay	28.5
HCM 6th LOS	C

Notes

User approved volume balancing among the lanes for turning movement.

Movement	EBL	EBT	EBR	WBL	WBT	WBR	NBL	NBT	NBR	SBL	SBT	SBR
Lane Configurations												
Traffic Volume (veh/h)	0	0	0	0	350	73	780	849	223	0	0	0
Future Volume (veh/h)	0	0	0	0	350	73	780	849	223	0	0	0
Initial Q (Qb), veh				0	0	0	0	0	0			
Ped-Bike Adj(A_pbT)				1.00		1.00	1.00		1.00			
Parking Bus, Adj				1.00	1.00	1.00	1.00	1.00	1.00			
Work Zone On Approach					No			No				
Adj Sat Flow, veh/h/ln				0	1550	1550	1563	1563	1563			
Adj Flow Rate, veh/h				0	365	76	565	1229	144			
Peak Hour Factor				0.96	0.96	0.96	0.96	0.96	0.96			
Percent Heavy Veh, %				0	2	2	1	1	1			
Cap, veh/h				0	938	193	804	1473	624			
Arrive On Green				0.00	0.39	0.39	0.16	0.16	0.16			
Sat Flow, veh/h				0	2510	501	1488	3125	1324			
Grp Volume(v), veh/h				0	220	221	565	1229	144			
Grp Sat Flow(s),veh/h/ln				0	1473	1460	1488	1563	1324			
Q Serve(g_s), s				0.0	7.5	7.7	25.7	26.7	6.7			
Cycle Q Clear(g_c), s				0.0	7.5	7.7	25.7	26.7	6.7			
Prop In Lane				0.00		0.34	1.00		1.00			
Lane Grp Cap(c), veh/h				0	568	563	804	1473	624			
V/C Ratio(X)				0.00	0.39	0.39	0.70	0.83	0.23			
Avail Cap(c_a), veh/h				0	568	563	804	1473	624			
HCM Platoon Ratio				1.00	1.00	1.00	0.33	0.33	0.33			
Upstream Filter(I)				0.00	1.00	1.00	1.00	1.00	1.00			
Uniform Delay (d), s/veh				0.0	15.5	15.6	26.5	26.9	18.4			
Incr Delay (d2), s/veh				0.0	2.0	2.1	5.1	5.7	0.9			
Initial Q Delay(d3),s/veh				0.0	0.0	0.0	0.0	0.0	0.0			
%ile BackOfQ(90%),veh/ln				0.0	4.8	4.9	15.4	16.6	4.1			
Unsig. Movement Delay, s/veh												
LnGrp Delay(d),s/veh				0.0	17.5	17.6	31.5	32.6	19.3			
LnGrp LOS				A	B	B	C	C	B			
Approach Vol, veh/h					441			1938				
Approach Delay, s/veh					17.6			31.3				
Approach LOS					B			C				

Timer - Assigned Phs						6		8				
Phs Duration (G+Y+Rc), s						38.0		32.0				
Change Period (Y+Rc), s						5.0		5.0				
Max Green Setting (Gmax), s						33.0		27.0				
Max Q Clear Time (g_c+I1), s						28.7		9.7				
Green Ext Time (p_c), s						4.1		1.4				

Intersection Summary	
HCM 6th Ctrl Delay	28.8
HCM 6th LOS	C

Notes

User approved volume balancing among the lanes for turning movement.

Movement	EBL	EBT	EBR	WBL	WBT	WBR	NBL	NBT	NBR	SBL	SBT	SBR
Lane Configurations												
Traffic Volume (veh/h)	0	0	0	83	422	0	0	0	0	0	702	66
Future Volume (veh/h)	0	0	0	83	422	0	0	0	0	0	702	66
Initial Q (Qb), veh				0	0	0				0	0	0
Ped-Bike Adj(A_pbT)				1.00		1.00				1.00		1.00
Parking Bus, Adj				1.00	1.00	1.00				1.00	1.00	1.00
Work Zone On Approach					No						No	
Adj Sat Flow, veh/h/ln				1514	1514	0				0	1526	1526
Adj Flow Rate, veh/h				90	459	0				0	763	44
Peak Hour Factor				0.92	0.92	0.92				0.92	0.92	0.92
Percent Heavy Veh, %				5	5	0				0	4	4
Cap, veh/h				741	1341	0				0	1201	536
Arrive On Green				0.15	0.15	0.00				0.00	0.14	0.14
Sat Flow, veh/h				1441	3027	0				0	2975	1293
Grp Volume(v), veh/h				90	459	0				0	763	44
Grp Sat Flow(s),veh/h/ln				1441	1514	0				0	1450	1293
Q Serve(g_s), s				3.8	9.5	0.0				0.0	17.4	2.1
Cycle Q Clear(g_c), s				3.8	9.5	0.0				0.0	17.4	2.1
Prop In Lane				1.00		0.00				0.00		1.00
Lane Grp Cap(c), veh/h				741	1341	0				0	1201	536
V/C Ratio(X)				0.12	0.34	0.00				0.00	0.64	0.08
Avail Cap(c_a), veh/h				741	1341	0				0	1201	536
HCM Platoon Ratio				0.33	0.33	1.00				1.00	0.33	0.33
Upstream Filter(I)				1.00	1.00	0.00				0.00	1.00	1.00
Uniform Delay (d), s/veh				18.3	20.7	0.0				0.0	25.2	18.6
Incr Delay (d2), s/veh				0.3	0.7	0.0				0.0	2.6	0.3
Initial Q Delay(d3),s/veh				0.0	0.0	0.0				0.0	0.0	0.0
%ile BackOfQ(90%),veh/ln				2.4	6.4	0.0				0.0	10.5	1.2
Unsig. Movement Delay, s/veh												
LnGrp Delay(d),s/veh				18.6	21.4	0.0				0.0	27.8	18.9
LnGrp LOS				B	C	A				A	C	B
Approach Vol, veh/h					549						807	
Approach Delay, s/veh					21.0						27.3	
Approach LOS					C						C	

Timer - Assigned Phs	2	8
Phs Duration (G+Y+Rc), s	34.0	36.0
Change Period (Y+Rc), s	5.0	5.0
Max Green Setting (Gmax), s	29.0	31.0
Max Q Clear Time (g_c+I1), s	19.4	11.5
Green Ext Time (p_c), s	5.6	2.0

Intersection Summary	
HCM 6th Ctrl Delay	24.7
HCM 6th LOS	C

Notes

User approved volume balancing among the lanes for turning movement.

Movement	EBL	EBT	EBR	WBL	WBT	WBR	NBL	NBT	NBR	SBL	SBT	SBR
Lane Configurations												
Traffic Volume (veh/h)	0	0	0	99	1065	0	0	0	0	0	789	490
Future Volume (veh/h)	0	0	0	99	1065	0	0	0	0	0	789	490
Initial Q (Qb), veh				0	0	0				0	0	0
Ped-Bike Adj(A_pbT)				1.00		1.00				1.00		1.00
Parking Bus, Adj				1.00	1.00	1.00				1.00	1.00	1.00
Work Zone On Approach					No						No	
Adj Sat Flow, veh/h/ln				1563	1563	0				0	1563	1563
Adj Flow Rate, veh/h				105	1133	0				0	839	323
Peak Hour Factor				0.94	0.94	0.94				0.94	0.94	0.94
Percent Heavy Veh, %				1	1	0				0	1	1
Cap, veh/h				847	1563	0				0	1060	473
Arrive On Green				0.17	0.17	0.00				0.00	0.12	0.12
Sat Flow, veh/h				1488	3125	0				0	3047	1324
Grp Volume(v), veh/h				105	1133	0				0	839	323
Grp Sat Flow(s),veh/h/ln				1488	1563	0				0	1485	1324
Q Serve(g_s), s				4.2	24.1	0.0				0.0	19.2	16.4
Cycle Q Clear(g_c), s				4.2	24.1	0.0				0.0	19.2	16.4
Prop In Lane				1.00		0.00				0.00		1.00
Lane Grp Cap(c), veh/h				847	1563	0				0	1060	473
V/C Ratio(X)				0.12	0.73	0.00				0.00	0.79	0.68
Avail Cap(c_a), veh/h				847	1563	0				0	1060	473
HCM Platoon Ratio				0.33	0.33	1.00				1.00	0.33	0.33
Upstream Filter(I)				1.00	1.00	0.00				0.00	1.00	1.00
Uniform Delay (d), s/veh				16.4	24.7	0.0				0.0	28.3	27.1
Incr Delay (d2), s/veh				0.3	3.0	0.0				0.0	6.0	7.8
Initial Q Delay(d3),s/veh				0.0	0.0	0.0				0.0	0.0	0.0
%ile BackOfQ(90%),veh/ln				2.6	14.7	0.0				0.0	12.1	10.1
Unsig. Movement Delay, s/veh												
LnGrp Delay(d),s/veh				16.7	27.6	0.0				0.0	34.4	34.8
LnGrp LOS				B	C	A				A	C	C
Approach Vol, veh/h					1238						1162	
Approach Delay, s/veh					26.7						34.5	
Approach LOS					C						C	

Timer - Assigned Phs	2	8
Phs Duration (G+Y+Rc), s	30.0	40.0
Change Period (Y+Rc), s	5.0	5.0
Max Green Setting (Gmax), s	25.0	35.0
Max Q Clear Time (g_c+I1), s	21.2	26.1
Green Ext Time (p_c), s	3.1	3.8

Intersection Summary	
HCM 6th Ctrl Delay	30.5
HCM 6th LOS	C

Notes

User approved volume balancing among the lanes for turning movement.

Movement	EBL	EBT	EBR	WBL	WBT	WBR	NBL	NBT	NBR	SBL	SBT	SBR
Lane Configurations												
Traffic Volume (veh/h)	59	63	31	89	176	136	60	839	18	60	973	45
Future Volume (veh/h)	59	63	31	89	176	136	60	839	18	60	973	45
Initial Q (Qb), veh	0	0	0	0	0	0	0	0	0	0	0	0
Ped-Bike Adj(A_pbT)	1.00		1.00	1.00		1.00	1.00		1.00	1.00		1.00
Parking Bus, Adj	1.00	1.00	1.00	1.00	1.00	1.00	1.00	1.00	1.00	1.00	1.00	1.00
Work Zone On Approach		No			No			No			No	
Adj Sat Flow, veh/h/ln	1709	1709	1709	1736	1736	1736	1695	1695	1695	1709	1709	1709
Adj Flow Rate, veh/h	66	70	34	99	196	151	67	932	20	67	1081	50
Peak Hour Factor	0.90	0.90	0.90	0.90	0.90	0.90	0.90	0.90	0.90	0.90	0.90	0.90
Percent Heavy Veh, %	3	3	3	1	1	1	4	4	4	3	3	3
Cap, veh/h	205	319	155	421	267	206	276	1558	33	347	1527	71
Arrive On Green	0.29	0.29	0.29	0.29	0.29	0.29	0.05	0.48	0.48	0.03	0.32	0.32
Sat Flow, veh/h	1026	1086	528	1300	910	701	1615	3224	69	1628	3160	146
Grp Volume(v), veh/h	66	0	104	99	0	347	67	466	486	67	555	576
Grp Sat Flow(s),veh/h/ln	1026	0	1614	1300	0	1610	1615	1611	1683	1628	1624	1683
Q Serve(g_s), s	4.3	0.0	3.4	4.4	0.0	13.6	1.4	14.7	14.7	1.4	21.0	21.0
Cycle Q Clear(g_c), s	17.9	0.0	3.4	7.8	0.0	13.6	1.4	14.7	14.7	1.4	21.0	21.0
Prop In Lane	1.00		0.33	1.00		0.44	1.00		0.04	1.00		0.09
Lane Grp Cap(c), veh/h	205	0	474	421	0	472	276	778	813	347	784	813
V/C Ratio(X)	0.32	0.00	0.22	0.24	0.00	0.73	0.24	0.60	0.60	0.19	0.71	0.71
Avail Cap(c_a), veh/h	263	0	565	495	0	564	377	778	813	565	784	813
HCM Platoon Ratio	1.00	1.00	1.00	1.00	1.00	1.00	1.00	1.00	1.00	0.67	0.67	0.67
Upstream Filter(I)	1.00	0.00	1.00	1.00	0.00	1.00	1.00	1.00	1.00	0.61	0.61	0.61
Uniform Delay (d), s/veh	30.3	0.0	18.7	21.6	0.0	22.3	11.5	13.2	13.2	9.8	19.3	19.3
Incr Delay (d2), s/veh	1.9	0.0	0.5	0.6	0.0	5.9	0.6	3.4	3.2	0.2	3.3	3.2
Initial Q Delay(d3),s/veh	0.0	0.0	0.0	0.0	0.0	0.0	0.0	0.0	0.0	0.0	0.0	0.0
%ile BackOfQ(90%),veh/ln	2.1	0.0	2.3	2.4	0.0	8.7	0.9	8.6	8.9	0.8	11.9	12.2
Unsig. Movement Delay, s/veh												
LnGrp Delay(d),s/veh	32.3	0.0	19.2	22.2	0.0	28.2	12.2	16.5	16.4	10.0	22.6	22.5
LnGrp LOS	C	A	B	C	A	C	B	B	B	B	C	C
Approach Vol, veh/h		170			446			1019			1198	
Approach Delay, s/veh		24.3			26.8			16.2			21.9	
Approach LOS		C			C			B			C	

Timer - Assigned Phs	1	2		4	5	6		8
Phs Duration (G+Y+Rc), s	6.6	38.3		25.0	6.6	38.3		25.0
Change Period (Y+Rc), s	3.0	4.5		4.5	3.0	4.5		4.5
Max Green Setting (Gmax), s	8.0	25.5		24.5	13.0	20.5		24.5
Max Q Clear Time (g_c+I1), s	3.4	0.0		19.9	3.4	0.0		15.6
Green Ext Time (p_c), s	0.1	0.0		0.6	0.1	0.0		3.2

Intersection Summary	
HCM 6th Ctrl Delay	20.8
HCM 6th LOS	C

Movement	EBL	EBT	EBR	WBL	WBT	WBR	NBL	NBT	NBR	SBL	SBT	SBR
Lane Configurations												
Traffic Volume (veh/h)	112	191	106	39	138	96	55	1125	69	110	977	73
Future Volume (veh/h)	112	191	106	39	138	96	55	1125	69	110	977	73
Initial Q (Qb), veh	0	0	0	0	0	0	0	0	0	0	0	0
Ped-Bike Adj(A_pbT)	1.00		1.00	1.00		1.00	1.00		1.00	1.00		1.00
Parking Bus, Adj	1.00	1.00	1.00	1.00	1.00	1.00	1.00	1.00	1.00	1.00	1.00	1.00
Work Zone On Approach		No			No			No			No	
Adj Sat Flow, veh/h/ln	1736	1736	1736	1723	1723	1723	1723	1723	1723	1736	1736	1736
Adj Flow Rate, veh/h	117	199	110	41	144	100	57	1172	72	115	1018	76
Peak Hour Factor	0.96	0.96	0.96	0.96	0.96	0.96	0.96	0.96	0.96	0.96	0.96	0.96
Percent Heavy Veh, %	1	1	1	2	2	2	2	2	2	1	1	1
Cap, veh/h	263	294	163	210	265	184	315	1604	98	285	1633	122
Arrive On Green	0.28	0.28	0.28	0.28	0.28	0.28	0.04	0.51	0.51	0.06	0.52	0.52
Sat Flow, veh/h	1145	1051	581	1070	947	658	1641	3132	192	1654	3112	232
Grp Volume(v), veh/h	117	0	309	41	0	244	57	612	632	115	540	554
Grp Sat Flow(s),veh/h/ln	1145	0	1632	1070	0	1604	1641	1637	1688	1654	1650	1695
Q Serve(g_s), s	7.7	0.0	13.5	2.8	0.0	10.3	1.3	23.3	23.4	2.6	18.5	18.5
Cycle Q Clear(g_c), s	18.1	0.0	13.5	16.3	0.0	10.3	1.3	23.3	23.4	2.6	18.5	18.5
Prop In Lane	1.00		0.36	1.00		0.41	1.00		0.11	1.00		0.14
Lane Grp Cap(c), veh/h	263	0	457	210	0	450	315	838	865	285	866	889
V/C Ratio(X)	0.44	0.00	0.68	0.20	0.00	0.54	0.18	0.73	0.73	0.40	0.62	0.62
Avail Cap(c_a), veh/h	321	0	541	265	0	531	406	838	865	458	866	889
HCM Platoon Ratio	1.00	1.00	1.00	1.00	1.00	1.00	1.00	1.00	1.00	1.00	1.00	1.00
Upstream Filter(I)	1.00	0.00	1.00	1.00	0.00	1.00	1.00	1.00	1.00	0.69	0.69	0.69
Uniform Delay (d), s/veh	32.1	0.0	25.6	32.8	0.0	24.4	10.3	15.2	15.2	12.5	13.4	13.4
Incr Delay (d2), s/veh	2.5	0.0	4.3	1.0	0.0	2.2	0.4	5.6	5.4	0.9	2.3	2.3
Initial Q Delay(d3),s/veh	0.0	0.0	0.0	0.0	0.0	0.0	0.0	0.0	0.0	0.0	0.0	0.0
%ile BackOfQ(90%),veh/ln	4.1	0.0	8.7	1.4	0.0	6.7	0.8	13.2	13.5	1.7	9.7	9.9
Unsig. Movement Delay, s/veh												
LnGrp Delay(d),s/veh	34.6	0.0	29.9	33.8	0.0	26.6	10.7	20.8	20.6	13.4	15.8	15.7
LnGrp LOS	C	A	C	C	A	C	B	C	C	B	B	B
Approach Vol, veh/h		426			285			1301			1209	
Approach Delay, s/veh		31.2			27.6			20.3			15.5	
Approach LOS		C			C			C			B	

Timer - Assigned Phs	1	2		4	5	6		8
Phs Duration (G+Y+Rc), s	6.6	46.5		26.9	7.6	45.5		26.9
Change Period (Y+Rc), s	3.0	4.5		4.5	3.0	4.5		4.5
Max Green Setting (Gmax), s	8.0	33.5		26.5	13.0	28.5		26.5
Max Q Clear Time (g_c+I1), s	3.3	0.0		20.1	4.6	0.0		18.3
Green Ext Time (p_c), s	0.1	0.0		2.4	0.3	0.0		1.8

Intersection Summary			
HCM 6th Ctrl Delay			20.6
HCM 6th LOS			C

Lane Group	EBL	EBT	EBR	WBL	WBT	WBR	NBL	NBT	NBR	SBL	SBT	SBR
Lane Configurations												
Traffic Volume (vph)	511	0	0	0	0	0	0	988	28	0	0	0
Future Volume (vph)	511	0	0	0	0	0	0	988	28	0	0	0
Ideal Flow (vphpl)	1750	1750	1750	1750	1750	1750	1750	1750	1750	1750	1750	1750
Lane Width (ft)	12	12	12	12	12	12	12	12	10	12	12	12
Storage Length (ft)	0		0	0		0	0		120	0		0
Storage Lanes	2		0	0		0	0		1	0		0
Taper Length (ft)	25			25			25			25		
Lane Util. Factor	0.97	1.00	1.00	1.00	1.00	1.00	1.00	0.86	0.86	1.00	1.00	1.00
Frt								0.997				
Flt Protected	0.950											
Satd. Flow (prot)	2874	0	0	0	0	0	0	5145	0	0	0	0
Flt Permitted	0.950											
Satd. Flow (perm)	2874	0	0	0	0	0	0	5145	0	0	0	0
Right Turn on Red	No		No			No			No			No
Satd. Flow (RTOR)												
Link Speed (mph)		30			25			25			25	
Link Distance (ft)		401			501			1124			373	
Travel Time (s)		9.1			13.7			30.7			10.2	
Peak Hour Factor	0.81	0.81	0.81	0.81	0.81	0.81	0.81	0.81	0.81	0.81	0.81	0.81
Growth Factor	100%	100%	100%	100%	100%	100%	100%	100%	62%	100%	100%	100%
Heavy Vehicles (%)	1%	1%	1%	2%	2%	2%	5%	5%	5%	2%	2%	2%
Adj. Flow (vph)	631	0	0	0	0	0	0	1220	21	0	0	0
Shared Lane Traffic (%)												
Lane Group Flow (vph)	631	0	0	0	0	0	0	1241	0	0	0	0
Enter Blocked Intersection	No	No	No	No	No	No	No	No	No	No	No	No
Lane Alignment	Left	Left	L NA	Left	Left	Right	Left	Left	Right	Left	Left	Right
Median Width(ft)		24			24			0			0	
Link Offset(ft)		0			0			0			0	
Crosswalk Width(ft)		16			16			16			16	
Two way Left Turn Lane												
Headway Factor	1.27	1.27	1.27	1.27	1.27	1.27	1.27	1.27	1.38	1.27	1.27	1.27
Turning Speed (mph)	15		9	15		9	15		9	15		9
Turn Type	Prot							NA				
Protected Phases	7							2				
Permitted Phases												
Minimum Split (s)	36.0							30.0				
Total Split (s)	36.0							34.0				
Total Split (%)	51.4%							48.6%				
Maximum Green (s)	31.0							29.0				
Yellow Time (s)	3.0							3.0				
All-Red Time (s)	2.0							2.0				
Lost Time Adjust (s)	0.0							0.0				
Total Lost Time (s)	5.0							5.0				
Lead/Lag												
Lead-Lag Optimize?												
Walk Time (s)	17.0											
Flash Dont Walk (s)	14.0											
Pedestrian Calls (#/hr)	6											

Lane Group	EBL	EBT	EBR	WBL	WBT	WBR	NBL	NBT	NBR	SBL	SBT	SBR
Act Effct Green (s)	31.0							29.0				
Actuated g/C Ratio	0.44							0.41				
v/c Ratio	0.50							0.58				
Control Delay	9.1							17.2				
Queue Delay	0.0							0.0				
Total Delay	9.1							17.2				
LOS	A							B				
Approach Delay		9.1						17.2				
Approach LOS		A						B				
Queue Length 50th (ft)	39							115				
Queue Length 95th (ft)	46							128				
Internal Link Dist (ft)		321			421			1044			293	
Turn Bay Length (ft)												
Base Capacity (vph)	1272							2131				
Starvation Cap Reductn	0							0				
Spillback Cap Reductn	0							68				
Storage Cap Reductn	0							0				
Reduced v/c Ratio	0.50							0.60				

Intersection Summary

Area Type: CBD
Cycle Length: 70
Actuated Cycle Length: 70
Offset: 2 (3%), Referenced to phase 2:NBT and 6:, Start of 1st Green
Natural Cycle: 70
Control Type: Pretimed
Maximum v/c Ratio: 0.58
Intersection Signal Delay: 14.5 Intersection LOS: B
Intersection Capacity Utilization 133.9% ICU Level of Service H
Analysis Period (min) 15

Splits and Phases: 46: USH 14/61 NB (4th St) & Cameron Ave

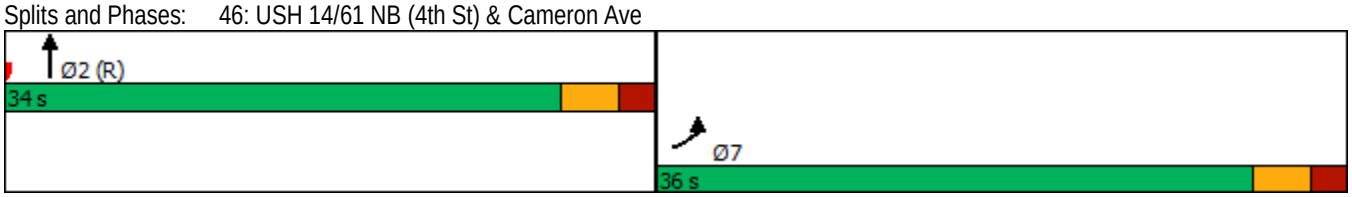

Lane Group	EBL	EBT	EBR	WBL	WBT	WBR	NBL	NBT	NBR	SBL	SBT	SBR
Lane Configurations												
Traffic Volume (vph)	297	0	0	0	0	0	0	1550	27	0	0	0
Future Volume (vph)	297	0	0	0	0	0	0	1550	27	0	0	0
Ideal Flow (vphpl)	1750	1750	1750	1750	1750	1750	1750	1750	1750	1750	1750	1750
Lane Width (ft)	12	12	12	12	12	12	12	12	10	12	12	12
Storage Length (ft)	0		0	0		0	0		120	0		0
Storage Lanes	2		0	0		0	0		1	0		0
Taper Length (ft)	25			25			25			25		
Lane Util. Factor	0.97	1.00	1.00	1.00	1.00	1.00	1.00	0.86	0.86	1.00	1.00	1.00
Frt								0.998				
Flt Protected	0.950											
Satd. Flow (prot)	2874	0	0	0	0	0	0	5354	0	0	0	0
Flt Permitted	0.950											
Satd. Flow (perm)	2874	0	0	0	0	0	0	5354	0	0	0	0
Right Turn on Red	No		No			No			No			No
Satd. Flow (RTOR)												
Link Speed (mph)		30			25			25			25	
Link Distance (ft)		401			501			1124			373	
Travel Time (s)		9.1			13.7			30.7			10.2	
Peak Hour Factor	0.97	0.97	0.97	0.97	0.97	0.97	0.97	0.97	0.97	0.97	0.97	0.97
Growth Factor	100%	100%	100%	100%	100%	100%	100%	100%	62%	100%	100%	100%
Heavy Vehicles (%)	1%	1%	1%	2%	2%	2%	1%	1%	1%	2%	2%	2%
Adj. Flow (vph)	306	0	0	0	0	0	0	1598	17	0	0	0
Shared Lane Traffic (%)												
Lane Group Flow (vph)	306	0	0	0	0	0	0	1615	0	0	0	0
Enter Blocked Intersection	No	No	No	No	No	No	No	No	No	No	No	No
Lane Alignment	Left	Left	L NA	Left	Left	Right	Left	Left	Right	Left	Left	Right
Median Width(ft)		24			24			0			0	
Link Offset(ft)		0			0			0			0	
Crosswalk Width(ft)		16			16			16			16	
Two way Left Turn Lane												
Headway Factor	1.27	1.27	1.27	1.27	1.27	1.27	1.27	1.27	1.38	1.27	1.27	1.27
Turning Speed (mph)	15		9	15		9	15		9	15		9
Turn Type	Prot							NA				
Protected Phases	7							2				
Permitted Phases												
Minimum Split (s)	36.0							30.0				
Total Split (s)	36.0							34.0				
Total Split (%)	51.4%							48.6%				
Maximum Green (s)	31.0							29.0				
Yellow Time (s)	3.0							3.0				
All-Red Time (s)	2.0							2.0				
Lost Time Adjust (s)	0.0							0.0				
Total Lost Time (s)	5.0							5.0				
Lead/Lag												
Lead-Lag Optimize?												
Walk Time (s)	17.0											
Flash Dont Walk (s)	14.0											
Pedestrian Calls (#/hr)	2											

Lane Group	EBL	EBT	EBR	WBL	WBT	WBR	NBL	NBT	NBR	SBL	SBT	SBR
Act Effct Green (s)	31.0							29.0				
Actuated g/C Ratio	0.44							0.41				
v/c Ratio	0.24							0.73				
Control Delay	8.9							19.6				
Queue Delay	0.0							0.0				
Total Delay	8.9							19.6				
LOS	A							B				
Approach Delay		8.9						19.6				
Approach LOS		A						B				
Queue Length 50th (ft)	25							163				
Queue Length 95th (ft)	37							204				
Internal Link Dist (ft)		321			421			1044			293	
Turn Bay Length (ft)												
Base Capacity (vph)	1272							2218				
Starvation Cap Reductn	0							0				
Spillback Cap Reductn	0							29				
Storage Cap Reductn	0							0				
Reduced v/c Ratio	0.24							0.74				

Intersection Summary

Area Type: CBD
Cycle Length: 70
Actuated Cycle Length: 70
Offset: 2 (3%), Referenced to phase 2:NBT and 6:, Start of 1st Green
Natural Cycle: 70
Control Type: Pretimed
Maximum v/c Ratio: 0.73
Intersection Signal Delay: 17.9 Intersection LOS: B
Intersection Capacity Utilization 97.5% ICU Level of Service F
Analysis Period (min) 15

Splits and Phases: 46: USH 14/61 NB (4th St) & Cameron Ave

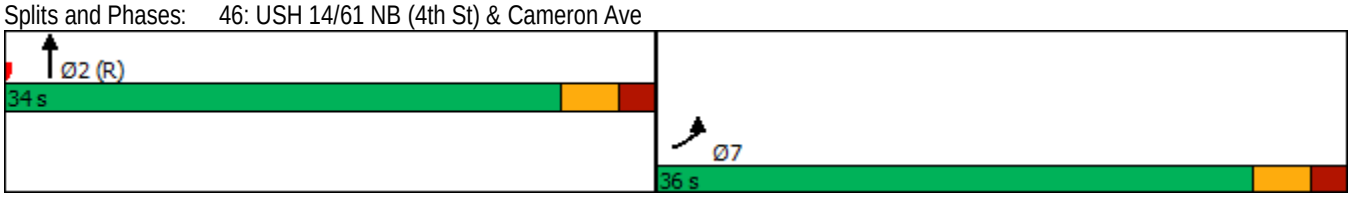

Movement	EBL	EBT	EBR	WBL	WBT	WBR	NBL	NBT	NBR	SBL	SBT	SBR
Lane Configurations												
Traffic Volume (veh/h)	0	503	975	0	0	0	0	0	0	15	786	0
Future Volume (veh/h)	0	503	975	0	0	0	0	0	0	15	786	0
Initial Q (Qb), veh	0	0	0							0	0	0
Ped-Bike Adj(A_pbT)	1.00		1.00							1.00		1.00
Parking Bus, Adj	1.00	1.00	1.00							1.00	1.00	1.00
Work Zone On Approach		No									No	
Adj Sat Flow, veh/h/ln	0	1550	1550							1538	1538	0
Adj Flow Rate, veh/h	0	606	1175							18	947	0
Peak Hour Factor	0.83	0.83	0.83							0.83	0.83	0.83
Percent Heavy Veh, %	0	2	2							3	3	0
Cap, veh/h	0	1515	676							605	1002	0
Arrive On Green	0.00	0.51	0.51							0.11	0.11	0.00
Sat Flow, veh/h	0	3023	1314							1465	2999	0
Grp Volume(v), veh/h	0	606	1175							18	947	0
Grp Sat Flow(s),veh/h/ln	0	1473	1314							1465	1461	0
Q Serve(g_s), s	0.0	8.8	36.0							0.8	22.5	0.0
Cycle Q Clear(g_c), s	0.0	8.8	36.0							0.8	22.5	0.0
Prop In Lane	0.00		1.00							1.00		0.00
Lane Grp Cap(c), veh/h	0	1515	676							605	1002	0
V/C Ratio(X)	0.00	0.40	1.74							0.03	0.95	0.00
Avail Cap(c_a), veh/h	0	1515	676							605	1002	0
HCM Platoon Ratio	1.00	1.00	1.00							0.33	0.33	1.00
Upstream Filter(I)	0.00	1.00	1.00							1.00	1.00	0.00
Uniform Delay (d), s/veh	0.0	10.4	17.0							20.7	30.4	0.0
Incr Delay (d2), s/veh	0.0	0.8	338.6							0.1	17.9	0.0
Initial Q Delay(d3),s/veh	0.0	0.0	0.0							0.0	0.0	0.0
%ile BackOfQ(90%),veh/ln	0.0	4.9	112.7							0.5	15.4	0.0
Unsig. Movement Delay, s/veh												
LnGrp Delay(d),s/veh	0.0	11.2	355.6							20.8	48.3	0.0
LnGrp LOS	A	B	F							C	D	A
Approach Vol, veh/h		1781									965	
Approach Delay, s/veh		238.4									47.8	
Approach LOS		F									D	

Timer - Assigned Phs		2		4
Phs Duration (G+Y+Rc), s		29.0		41.0
Change Period (Y+Rc), s		5.0		5.0
Max Green Setting (Gmax), s		24.0		36.0
Max Q Clear Time (g_c+I1), s		24.5		38.0
Green Ext Time (p_c), s		0.0		0.0

Intersection Summary		
HCM 6th Ctrl Delay		171.4
HCM 6th LOS		F

Movement	EBL	EBT	EBR	WBL	WBT	WBR	NBL	NBT	NBR	SBL	SBT	SBR
Lane Configurations												
Traffic Volume (veh/h)	0	217	390	0	0	0	0	0	0	45	853	0
Future Volume (veh/h)	0	217	390	0	0	0	0	0	0	45	853	0
Initial Q (Qb), veh	0	0	0							0	0	0
Ped-Bike Adj(A_pbT)	1.00		1.00							1.00		1.00
Parking Bus, Adj	1.00	1.00	1.00							1.00	1.00	1.00
Work Zone On Approach		No									No	
Adj Sat Flow, veh/h/ln	0	1538	1538							1550	1550	0
Adj Flow Rate, veh/h	0	231	415							48	907	0
Peak Hour Factor	0.94	0.94	0.94							0.94	0.94	0.94
Percent Heavy Veh, %	0	3	3							2	2	0
Cap, veh/h	0	1294	577							715	1220	0
Arrive On Green	0.00	0.44	0.44							0.14	0.14	0.00
Sat Flow, veh/h	0	2999	1304							1477	3023	0
Grp Volume(v), veh/h	0	231	415							48	907	0
Grp Sat Flow(s),veh/h/ln	0	1461	1304							1477	1473	0
Q Serve(g_s), s	0.0	3.3	18.2							2.0	20.7	0.0
Cycle Q Clear(g_c), s	0.0	3.3	18.2							2.0	20.7	0.0
Prop In Lane	0.00		1.00							1.00		0.00
Lane Grp Cap(c), veh/h	0	1294	577							715	1220	0
V/C Ratio(X)	0.00	0.18	0.72							0.07	0.74	0.00
Avail Cap(c_a), veh/h	0	1294	577							715	1220	0
HCM Platoon Ratio	1.00	1.00	1.00							0.33	0.33	1.00
Upstream Filter(I)	0.00	1.00	1.00							1.00	1.00	0.00
Uniform Delay (d), s/veh	0.0	11.8	15.9							18.6	26.6	0.0
Incr Delay (d2), s/veh	0.0	0.3	7.5							0.2	4.1	0.0
Initial Q Delay(d3),s/veh	0.0	0.0	0.0							0.0	0.0	0.0
%ile BackOfQ(90%),veh/ln	0.0	1.9	9.4							1.2	12.5	0.0
Unsig. Movement Delay, s/veh												
LnGrp Delay(d),s/veh	0.0	12.1	23.5							18.7	30.8	0.0
LnGrp LOS	A	B	C							B	C	A
Approach Vol, veh/h		646									955	
Approach Delay, s/veh		19.4									30.2	
Approach LOS		B									C	

Timer - Assigned Phs		2		4
Phs Duration (G+Y+Rc), s		34.0		36.0
Change Period (Y+Rc), s		5.0		5.0
Max Green Setting (Gmax), s		29.0		31.0
Max Q Clear Time (g_c+I1), s		22.7		20.2
Green Ext Time (p_c), s		4.4		2.1

Intersection Summary			
HCM 6th Ctrl Delay			25.8
HCM 6th LOS			C

Intersection	
Int Delay, s/veh	32.9

Movement	EBL	EBT	EBR	WBL	WBT	WBR	NBL	NBT	NBR	SBL	SBT	SBR
Lane Configurations												
Traffic Vol, veh/h	0	41	19	80	42	0	0	0	0	81	1552	17
Future Vol, veh/h	0	41	19	80	42	0	0	0	0	81	1552	17
Conflicting Peds, #/hr	0	0	0	0	0	0	0	0	0	0	0	0
Sign Control	Stop	Stop	Stop	Stop	Stop	Stop	Free	Free	Free	Free	Free	Free
RT Channelized	-	-	None	-	-	None	-	-	None	-	-	None
Storage Length	-	-	-	-	-	-	-	-	-	-	-	-
Veh in Median Storage, #	-	0	-	-	0	-	-	0	-	-	0	-
Grade, %	-	0	-	-	0	-	-	0	-	-	0	-
Peak Hour Factor	92	92	92	92	92	92	92	92	92	92	92	92
Heavy Vehicles, %	2	2	2	2	2	2	2	2	2	2	2	2
Mvmt Flow	0	45	21	87	46	0	0	0	0	88	1687	18

Major/Minor	Minor2			Minor1					Major2		
Conflicting Flow All	-	1872	853	1042	1881	-			0	0	0
Stage 1	-	1872	-	0	0	-			-	-	-
Stage 2	-	0	-	1042	1881	-			-	-	-
Critical Hdwy	-	6.54	6.94	7.54	6.54	-			4.14	-	-
Critical Hdwy Stg 1	-	5.54	-	-	-	-			-	-	-
Critical Hdwy Stg 2	-	-	-	6.54	5.54	-			-	-	-
Follow-up Hdwy	-	4.02	3.32	3.52	4.02	-			2.22	-	-
Pot Cap-1 Maneuver	0	71	302	184	70	0			-	-	-
Stage 1	0	120	-	-	-	0			-	-	-
Stage 2	0	-	-	246	119	0			-	-	-
Platoon blocked, %										-	-
Mov Cap-1 Maneuver	-	71	302	~ 85	70	-			-	-	-
Mov Cap-2 Maneuver	-	71	-	~ 85	70	-			-	-	-
Stage 1	-	120	-	-	-	-			-	-	-
Stage 2	-	-	-	144	119	-			-	-	-

Approach	EB	WB	SB
HCM Control Delay, s	103.6	$ 443.5	
HCM LOS	F	F	

Minor Lane/Major Mvmt	EBLn1	WBLn1	SBL	SBT	SBR
Capacity (veh/h)	94	79	-	-	-
HCM Lane V/C Ratio	0.694	1.679	-	-	-
HCM Control Delay (s)	103.6	$ 443.5	-	-	-
HCM Lane LOS	F	F	-	-	-
HCM 95th %tile Q(veh)	3.5	11.2	-	-	-

Notes

~: Volume exceeds capacity $: Delay exceeds 300s +: Computation Not Defined *: All major volume in platoon

Intersection	
Int Delay, s/veh	5.6

Movement	EBL	EBT	EBR	WBL	WBT	WBR	NBL	NBT	NBR	SBL	SBT	SBR
Lane Configurations												
Traffic Vol, veh/h	0	29	61	58	30	0	0	0	0	59	1249	16
Future Vol, veh/h	0	29	61	58	30	0	0	0	0	59	1249	16
Conflicting Peds, #/hr	0	0	0	0	0	0	0	0	0	0	0	0
Sign Control	Stop	Stop	Stop	Stop	Stop	Stop	Free	Free	Free	Free	Free	Free
RT Channelized	-	-	None	-	-	None	-	-	None	-	-	None
Storage Length	-	-	-	-	-	-	-	-	-	-	-	-
Veh in Median Storage, #	-	0	-	-	0	-	-	0	-	-	0	-
Grade, %	-	0	-	-	0	-	-	0	-	-	0	-
Peak Hour Factor	92	92	92	92	92	92	92	92	92	92	92	92
Heavy Vehicles, %	2	2	2	2	2	2	2	2	2	2	2	2
Mvmt Flow	0	32	66	63	33	0	0	0	0	64	1358	17

Major/Minor	Minor2			Minor1					Major2		
Conflicting Flow All	-	1495	688	823	1503	-			0	0	0
Stage 1	-	1495	-	0	0	-			-	-	-
Stage 2	-	0	-	823	1503	-			-	-	-
Critical Hdwy	-	6.54	6.94	7.54	6.54	-			4.14	-	-
Critical Hdwy Stg 1	-	5.54	-	-	-	-			-	-	-
Critical Hdwy Stg 2	-	-	-	6.54	5.54	-			-	-	-
Follow-up Hdwy	-	4.02	3.32	3.52	4.02	-			2.22	-	-
Pot Cap-1 Maneuver	0	122	389	266	120	0			-	-	-
Stage 1	0	185	-	-	-	0			-	-	-
Stage 2	0	-	-	334	183	0			-	-	-
Platoon blocked, %										-	-
Mov Cap-1 Maneuver	-	122	389	177	120	-			-	-	-
Mov Cap-2 Maneuver	-	122	-	177	120	-			-	-	-
Stage 1	-	185	-	-	-	-			-	-	-
Stage 2	-	-	-	230	183	-			-	-	-

Approach	EB	WB	SB
HCM Control Delay, s	32.2	62.2	
HCM LOS	D	F	

Minor Lane/Major Mvmt	EBLn1	WBLn1	SBL	SBT	SBR
Capacity (veh/h)	228	152	-	-	-
HCM Lane V/C Ratio	0.429	0.629	-	-	-
HCM Control Delay (s)	32.2	62.2	-	-	-
HCM Lane LOS	D	F	-	-	-
HCM 95th %tile Q(veh)	2	3.4	-	-	-

Intersection	
Int Delay, s/veh	45.3

Movement	EBL	EBT	EBR	WBL	WBT	WBR	NBL	NBT	NBR	SBL	SBT	SBR
Lane Configurations												
Traffic Vol, veh/h	59	59	0	0	147	50	57	1014	45	0	0	0
Future Vol, veh/h	59	59	0	0	147	50	57	1014	45	0	0	0
Conflicting Peds, #/hr	0	0	0	0	0	0	0	0	0	0	0	0
Sign Control	Stop	Stop	Stop	Stop	Stop	Stop	Free	Free	Free	Free	Free	Free
RT Channelized	-	-	None	-	-	None	-	-	None	-	-	None
Storage Length	-	-	-	-	-	-	-	-	-	-	-	-
Veh in Median Storage, #	-	0	-	-	0	-	-	0	-	-	0	-
Grade, %	-	0	-	-	0	-	-	0	-	-	0	-
Peak Hour Factor	92	92	92	92	92	92	92	92	92	92	92	92
Heavy Vehicles, %	2	2	2	2	2	2	2	2	2	2	2	2
Mvmt Flow	64	64	0	0	160	54	62	1102	49	0	0	0

Major/Minor	Minor2			Minor1			Major1		
Conflicting Flow All	645	1275	-	-	1251	576	0	0	0
Stage 1	0	0	-	-	1251	-	-	-	-
Stage 2	645	1275	-	-	0	-	-	-	-
Critical Hdwy	6.44	6.54	-	-	6.54	7.14	5.34	-	-
Critical Hdwy Stg 1	-	-	-	-	5.54	-	-	-	-
Critical Hdwy Stg 2	6.74	5.54	-	-	-	-	-	-	-
Follow-up Hdwy	3.82	4.02	-	-	4.02	3.92	3.12	-	-
Pot Cap-1 Maneuver	410	166	0	0	171	394	-	-	-
Stage 1	-	-	0	0	242	-	-	-	-
Stage 2	389	236	0	0	-	-	-	-	-
Platoon blocked, %								-	-
Mov Cap-1 Maneuver	~ 62	166	-	-	171	394	-	-	-
Mov Cap-2 Maneuver	~ 62	166	-	-	171	-	-	-	-
Stage 1	-	-	-	-	242	-	-	-	-
Stage 2	114	236	-	-	-	-	-	-	-

Approach	EB	WB	NB
HCM Control Delay, s	$ 327.2	133.4	
HCM LOS	F	F	

Minor Lane/Major Mvmt	NBL	NBT	NBR	EBLn1	WBLn1
Capacity (veh/h)	-	-	-	90	200
HCM Lane V/C Ratio	-	-	-	1.425	1.071
HCM Control Delay (s)	-	-	-	$ 327.2	133.4
HCM Lane LOS	-	-	-	F	F
HCM 95th %tile Q(veh)	-	-	-	9.7	9.9

Notes

~: Volume exceeds capacity $: Delay exceeds 300s +: Computation Not Defined *: All major volume in platoon

Intersection	
Int Delay, s/veh	118.8

Movement	EBL	EBT	EBR	WBL	WBT	WBR	NBL	NBT	NBR	SBL	SBT	SBR
Lane Configurations												
Traffic Vol, veh/h	44	44	0	0	72	93	102	1443	24	0	0	0
Future Vol, veh/h	44	44	0	0	72	93	102	1443	24	0	0	0
Conflicting Peds, #/hr	0	0	0	0	0	0	0	0	0	0	0	0
Sign Control	Stop	Stop	Stop	Stop	Stop	Stop	Free	Free	Free	Free	Free	Free
RT Channelized	-	-	None	-	-	None	-	-	None	-	-	None
Storage Length	-	-	-	-	-	-	-	-	-	-	-	-
Veh in Median Storage, #	-	0	-	-	0	-	-	0	-	-	0	-
Grade, %	-	0	-	-	0	-	-	0	-	-	0	-
Peak Hour Factor	92	92	92	92	92	92	92	92	92	92	92	92
Heavy Vehicles, %	2	2	2	2	2	2	2	2	2	2	2	2
Mvmt Flow	48	48	0	0	78	101	111	1568	26	0	0	0

Major/Minor	Minor2			Minor1			Major1		
Conflicting Flow All	888	1816	-	-	1803	797	0	0	0
Stage 1	0	0	-	-	1803	-	-	-	-
Stage 2	888	1816	-	-	0	-	-	-	-
Critical Hdwy	6.44	6.54	-	-	6.54	7.14	5.34	-	-
Critical Hdwy Stg 1	-	-	-	-	5.54	-	-	-	-
Critical Hdwy Stg 2	6.74	5.54	-	-	-	-	-	-	-
Follow-up Hdwy	3.82	4.02	-	-	4.02	3.92	3.12	-	-
Pot Cap-1 Maneuver	297	77	0	0	79	283	-	-	-
Stage 1	-	-	0	0	130	-	-	-	-
Stage 2	276	128	0	0	-	-	-	-	-
Platoon blocked, %								-	-
Mov Cap-1 Maneuver	~ 12	77	-	-	79	283	-	-	-
Mov Cap-2 Maneuver	~ 12	77	-	-	79	-	-	-	-
Stage 1	-	-	-	-	130	-	-	-	-
Stage 2	71	128	-	-	-	-	-	-	-

Approach	EB	WB	NB
HCM Control Delay,$	1971.8	260.7	
HCM LOS	F	F	

Minor Lane/Major Mvmt	NBL	NBT	NBR	EBLn1	WBLn1
Capacity (veh/h)	-	-	-	21	133
HCM Lane V/C Ratio	-	-	-	4.555	1.348
HCM Control Delay (s)	-	-	$	1971.8	260.7
HCM Lane LOS	-	-	-	F	F
HCM 95th %tile Q(veh)	-	-	-	12.3	11.6

Notes

~: Volume exceeds capacity $: Delay exceeds 300s +: Computation Not Defined *: All major volume in platoon

Movement	EBL	EBT	EBR	WBL	WBT	WBR	NBL	NBT	NBR	SBL	SBT	SBR
Lane Configurations												
Traffic Volume (veh/h)	90	42	72	53	192	68	154	819	6	29	701	153
Future Volume (veh/h)	90	42	72	53	192	68	154	819	6	29	701	153
Initial Q (Qb), veh	0	0	0	0	0	0	0	0	0	0	0	0
Ped-Bike Adj(A_pbT)	1.00		1.00	1.00		1.00	1.00		1.00	1.00		1.00
Parking Bus, Adj	1.00	1.00	1.00	1.00	1.00	1.00	1.00	1.00	1.00	1.00	1.00	1.00
Work Zone On Approach		No			No			No			No	
Adj Sat Flow, veh/h/ln	1682	1682	1682	1723	1723	1723	1695	1695	1695	1695	1695	1695
Adj Flow Rate, veh/h	101	47	50	60	216	76	173	920	7	33	788	172
Peak Hour Factor	0.89	0.89	0.89	0.89	0.89	0.89	0.89	0.89	0.89	0.89	0.89	0.89
Percent Heavy Veh, %	5	5	5	2	2	2	4	4	4	4	4	4
Cap, veh/h	240	478	405	445	346	122	368	1673	13	433	1218	266
Arrive On Green	0.28	0.28	0.28	0.28	0.28	0.28	0.16	1.00	1.00	0.03	0.46	0.46
Sat Flow, veh/h	1061	1682	1425	1298	1217	428	1615	3277	25	1615	2629	574
Grp Volume(v), veh/h	101	47	50	60	0	292	173	452	475	33	483	477
Grp Sat Flow(s),veh/h/ln	1061	1682	1425	1298	0	1646	1615	1611	1691	1615	1611	1592
Q Serve(g_s), s	6.4	1.4	1.8	2.5	0.0	10.8	3.7	0.0	0.0	0.7	16.1	16.1
Cycle Q Clear(g_c), s	17.2	1.4	1.8	3.9	0.0	10.8	3.7	0.0	0.0	0.7	16.1	16.1
Prop In Lane	1.00		1.00	1.00		0.26	1.00		0.01	1.00		0.36
Lane Grp Cap(c), veh/h	240	478	405	445	0	468	368	822	863	433	746	738
V/C Ratio(X)	0.42	0.10	0.12	0.13	0.00	0.62	0.47	0.55	0.55	0.08	0.65	0.65
Avail Cap(c_a), veh/h	310	589	499	531	0	576	422	822	863	678	746	738
HCM Platoon Ratio	1.00	1.00	1.00	1.00	1.00	1.00	2.00	2.00	2.00	1.00	1.00	1.00
Upstream Filter(I)	1.00	1.00	1.00	1.00	0.00	1.00	0.75	0.75	0.75	1.00	1.00	1.00
Uniform Delay (d), s/veh	29.3	18.5	18.6	19.9	0.0	21.8	9.5	0.0	0.0	9.0	14.4	14.4
Incr Delay (d2), s/veh	2.5	0.2	0.3	0.3	0.0	3.0	1.0	2.0	1.9	0.1	4.3	4.4
Initial Q Delay(d3),s/veh	0.0	0.0	0.0	0.0	0.0	0.0	0.0	0.0	0.0	0.0	0.0	0.0
%ile BackOfQ(90%),veh/ln	3.2	1.0	1.1	1.4	0.0	7.1	1.9	0.8	0.8	0.5	9.4	9.4
Unsig. Movement Delay, s/veh												
LnGrp Delay(d),s/veh	31.8	18.6	18.9	20.2	0.0	24.8	10.5	2.0	1.9	9.1	18.7	18.7
LnGrp LOS	C	B	B	C	A	C	B	A	A	A	B	B
Approach Vol, veh/h		198			352			1100			993	
Approach Delay, s/veh		25.4			24.0			3.3			18.4	
Approach LOS		C			C			A			B	

Timer - Assigned Phs	1	2		4	5	6		8				
Phs Duration (G+Y+Rc), s	8.7	36.9		24.4	5.4	40.2		24.4				
Change Period (Y+Rc), s	3.0	4.5		4.5	3.0	4.5		4.5				
Max Green Setting (Gmax), s	8.0	25.5		24.5	13.0	20.5		24.5				
Max Q Clear Time (g_c+I1), s	5.7	0.0		19.2	2.7	0.0		12.8				
Green Ext Time (p_c), s	0.2	0.0		0.7	0.0	0.0		2.8				

Intersection Summary												
HCM 6th Ctrl Delay			13.4									
HCM 6th LOS			B									

Movement	EBL	EBT	EBR	WBL	WBT	WBR	NBL	NBT	NBR	SBL	SBT	SBR
Lane Configurations												
Traffic Volume (veh/h)	273	120	118	17	50	35	48	913	14	70	968	76
Future Volume (veh/h)	273	120	118	17	50	35	48	913	14	70	968	76
Initial Q (Qb), veh	0	0	0	0	0	0	0	0	0	0	0	0
Ped-Bike Adj(A_pbT)	1.00		1.00	1.00		1.00	1.00		1.00	1.00		1.00
Parking Bus, Adj	1.00	1.00	1.00	1.00	1.00	1.00	1.00	1.00	1.00	1.00	1.00	1.00
Work Zone On Approach		No			No			No			No	
Adj Sat Flow, veh/h/ln	1750	1750	1750	1736	1736	1736	1723	1723	1723	1736	1736	1736
Adj Flow Rate, veh/h	294	129	79	18	54	38	52	982	15	75	1041	82
Peak Hour Factor	0.93	0.93	0.93	0.93	0.93	0.93	0.93	0.93	0.93	0.93	0.93	0.93
Percent Heavy Veh, %	0	0	0	1	1	1	2	2	2	1	1	1
Cap, veh/h	429	522	443	377	283	199	291	1652	25	459	1576	124
Arrive On Green	0.30	0.30	0.30	0.30	0.30	0.30	0.09	1.00	1.00	0.05	0.51	0.51
Sat Flow, veh/h	1325	1750	1483	1183	949	668	1641	3300	50	1654	3098	244
Grp Volume(v), veh/h	294	129	79	18	0	92	52	487	510	75	554	569
Grp Sat Flow(s),veh/h/ln	1325	1750	1483	1183	0	1616	1641	1637	1714	1654	1650	1692
Q Serve(g_s), s	17.0	4.5	3.2	0.9	0.0	3.4	1.2	0.0	0.0	1.7	19.9	19.9
Cycle Q Clear(g_c), s	20.4	4.5	3.2	5.4	0.0	3.4	1.2	0.0	0.0	1.7	19.9	19.9
Prop In Lane	1.00		1.00	1.00		0.41	1.00		0.03	1.00		0.14
Lane Grp Cap(c), veh/h	429	522	443	377	0	483	291	820	858	459	839	861
V/C Ratio(X)	0.68	0.25	0.18	0.05	0.00	0.19	0.18	0.59	0.59	0.16	0.66	0.66
Avail Cap(c_a), veh/h	473	580	491	416	0	535	384	820	858	644	839	861
HCM Platoon Ratio	1.00	1.00	1.00	1.00	1.00	1.00	2.00	2.00	2.00	1.00	1.00	1.00
Upstream Filter(I)	1.00	1.00	1.00	1.00	0.00	1.00	0.83	0.83	0.83	1.00	1.00	1.00
Uniform Delay (d), s/veh	28.4	21.2	20.8	23.3	0.0	20.9	10.7	0.0	0.0	8.4	14.5	14.5
Incr Delay (d2), s/veh	5.2	0.5	0.4	0.1	0.0	0.4	0.3	2.6	2.5	0.2	4.1	4.0
Initial Q Delay(d3),s/veh	0.0	0.0	0.0	0.0	0.0	0.0	0.0	0.0	0.0	0.0	0.0	0.0
%ile BackOfQ(90%),veh/ln	9.0	3.4	2.0	0.5	0.0	2.4	0.7	1.1	1.1	1.1	11.4	11.7
Unsig. Movement Delay, s/veh												
LnGrp Delay(d),s/veh	33.6	21.8	21.2	23.4	0.0	21.3	11.0	2.6	2.5	8.7	18.6	18.5
LnGrp LOS	C	C	C	C	A	C	B	A	A	A	B	B
Approach Vol, veh/h		502			110			1049			1198	
Approach Delay, s/veh		28.6			21.6			3.0			17.9	
Approach LOS		C			C			A			B	

Timer - Assigned Phs	1	2		4	5	6		8				
Phs Duration (G+Y+Rc), s	6.4	45.2		28.4	7.1	44.6		28.4				
Change Period (Y+Rc), s	3.0	4.5		4.5	3.0	4.5		4.5				
Max Green Setting (Gmax), s	8.0	33.5		26.5	13.0	28.5		26.5				
Max Q Clear Time (g_c+I1), s	3.2	0.0		22.4	3.7	0.0		7.4				
Green Ext Time (p_c), s	0.1	0.0		1.5	0.2	0.0		0.9				

Intersection Summary			
HCM 6th Ctrl Delay			14.5
HCM 6th LOS			B

Movement	EBL	EBT	EBR	WBL	WBT	WBR	NBL	NBT	NBR	SBL	SBT	SBR
Lane Configurations												
Traffic Volume (veh/h)	0	115	26	20	52	0	0	0	0	159	1213	76
Future Volume (veh/h)	0	115	26	20	52	0	0	0	0	159	1213	76
Initial Q (Qb), veh	0	0	0	0	0	0				0	0	0
Ped-Bike Adj(A_pbT)	1.00		1.00	1.00		1.00				1.00		1.00
Parking Bus, Adj	1.00	1.00	1.00	1.00	1.00	1.00				1.00	1.00	1.00
Work Zone On Approach		No			No						No	
Adj Sat Flow, veh/h/ln	0	1477	1477	1627	1627	0				1709	1709	1709
Adj Flow Rate, veh/h	0	124	17	22	56	0				171	1304	51
Peak Hour Factor	0.93	0.93	0.93	0.93	0.93	0.93				0.93	0.93	0.93
Percent Heavy Veh, %	0	20	20	9	9	0				3	3	3
Cap, veh/h	0	195	166	203	215	0				1095	2184	974
Arrive On Green	0.00	0.13	0.13	0.13	0.13	0.00				0.67	0.67	0.67
Sat Flow, veh/h	0	1477	1252	1178	1627	0				1628	3247	1448
Grp Volume(v), veh/h	0	124	17	22	56	0				171	1304	51
Grp Sat Flow(s),veh/h/ln	0	1477	1252	1178	1627	0				1628	1624	1448
Q Serve(g_s), s	0.0	4.1	0.6	0.9	1.6	0.0				2.0	11.3	0.6
Cycle Q Clear(g_c), s	0.0	4.1	0.6	5.0	1.6	0.0				2.0	11.3	0.6
Prop In Lane	0.00		1.00	1.00		0.00				1.00		1.00
Lane Grp Cap(c), veh/h	0	195	166	203	215	0				1095	2184	974
V/C Ratio(X)	0.00	0.63	0.10	0.11	0.26	0.00				0.16	0.60	0.05
Avail Cap(c_a), veh/h	0	720	610	621	793	0				1746	3484	1554
HCM Platoon Ratio	1.00	1.00	1.00	1.00	1.00	1.00				1.00	1.00	1.00
Upstream Filter(I)	0.00	1.00	1.00	1.00	1.00	0.00				1.00	1.00	1.00
Uniform Delay (d), s/veh	0.0	21.1	19.6	23.4	20.0	0.0				3.1	4.6	2.8
Incr Delay (d2), s/veh	0.0	1.3	0.1	0.1	0.2	0.0				0.1	0.3	0.0
Initial Q Delay(d3),s/veh	0.0	0.0	0.0	0.0	0.0	0.0				0.0	0.0	0.0
%ile BackOfQ(90%),veh/ln	0.0	2.5	0.3	0.4	1.0	0.0				0.7	4.1	0.2
Unsig. Movement Delay, s/veh												
LnGrp Delay(d),s/veh	0.0	22.3	19.7	23.5	20.2	0.0				3.1	4.9	2.9
LnGrp LOS	A	C	B	C	C	A				A	A	A
Approach Vol, veh/h		141			78						1526	
Approach Delay, s/veh		22.0			21.2						4.6	
Approach LOS		C			C						A	

Timer - Assigned Phs		2		4				8				
Phs Duration (G+Y+Rc), s		39.5		11.8				11.8				
Change Period (Y+Rc), s		5.0		5.0				5.0				
Max Green Setting (Gmax), s		55.0		25.0				25.0				
Max Q Clear Time (g_c+I1), s		13.3		6.1				7.0				
Green Ext Time (p_c), s		21.2		0.2				0.1				

Intersection Summary	
HCM 6th Ctrl Delay	6.7
HCM 6th LOS	A

Movement	EBL	EBT	EBR	WBL	WBT	WBR	NBL	NBT	NBR	SBL	SBT	SBR
Lane Configurations												
Traffic Volume (veh/h)	0	157	23	27	48	0	0	0	0	307	981	114
Future Volume (veh/h)	0	157	23	27	48	0	0	0	0	307	981	114
Initial Q (Qb), veh	0	0	0	0	0	0				0	0	0
Ped-Bike Adj(A_pbT)	1.00		1.00	1.00		1.00				1.00		1.00
Parking Bus, Adj	1.00	1.00	1.00	1.00	1.00	1.00				1.00	1.00	1.00
Work Zone On Approach		No			No						No	
Adj Sat Flow, veh/h/ln	0	1736	1736	1695	1695	0				1723	1723	1723
Adj Flow Rate, veh/h	0	169	15	29	52	0				330	1055	76
Peak Hour Factor	0.93	0.93	0.93	0.93	0.93	0.93				0.93	0.93	0.93
Percent Heavy Veh, %	0	1	1	4	4	0				2	2	2
Cap, veh/h	0	268	227	227	262	0				1041	2076	926
Arrive On Green	0.00	0.15	0.15	0.15	0.15	0.00				0.63	0.63	0.63
Sat Flow, veh/h	0	1736	1471	1181	1695	0				1641	3273	1460
Grp Volume(v), veh/h	0	169	15	29	52	0				330	1055	76
Grp Sat Flow(s),veh/h/ln	0	1736	1471	1181	1695	0				1641	1637	1460
Q Serve(g_s), s	0.0	4.3	0.4	1.1	1.3	0.0				4.4	8.2	1.0
Cycle Q Clear(g_c), s	0.0	4.3	0.4	5.4	1.3	0.0				4.4	8.2	1.0
Prop In Lane	0.00		1.00	1.00		0.00				1.00		1.00
Lane Grp Cap(c), veh/h	0	268	227	227	262	0				1041	2076	926
V/C Ratio(X)	0.00	0.63	0.07	0.13	0.20	0.00				0.32	0.51	0.08
Avail Cap(c_a), veh/h	0	917	777	668	896	0				1907	3804	1697
HCM Platoon Ratio	1.00	1.00	1.00	1.00	1.00	1.00				1.00	1.00	1.00
Upstream Filter(I)	0.00	1.00	1.00	1.00	1.00	0.00				1.00	1.00	1.00
Uniform Delay (d), s/veh	0.0	18.7	17.1	21.3	17.5	0.0				4.0	4.7	3.3
Incr Delay (d2), s/veh	0.0	0.9	0.0	0.1	0.1	0.0				0.2	0.2	0.0
Initial Q Delay(d3),s/veh	0.0	0.0	0.0	0.0	0.0	0.0				0.0	0.0	0.0
%ile BackOfQ(90%),veh/ln	0.0	3.0	0.2	0.5	0.8	0.0				1.7	3.1	0.3
Unsig. Movement Delay, s/veh												
LnGrp Delay(d),s/veh	0.0	19.7	17.1	21.4	17.6	0.0				4.1	4.9	3.4
LnGrp LOS	A	B	B	C	B	A				A	A	A
Approach Vol, veh/h		184			81						1461	
Approach Delay, s/veh		19.5			19.0						4.6	
Approach LOS		B			B						A	

Timer - Assigned Phs		2		4				8				
Phs Duration (G+Y+Rc), s		35.0		12.3				12.3				
Change Period (Y+Rc), s		5.0		5.0				5.0				
Max Green Setting (Gmax), s		55.0		25.0				25.0				
Max Q Clear Time (g_c+I1), s		10.2		6.3				7.4				
Green Ext Time (p_c), s		19.8		0.3				0.1				

Intersection Summary												
HCM 6th Ctrl Delay			6.9									
HCM 6th LOS			A									

Movement	EBL	EBT	EBR	WBL	WBT	WBR	NBL	NBT	NBR	SBL	SBT	SBR
Lane Configurations												
Traffic Volume (veh/h)	106	167	0	0	61	188	22	919	13	0	0	0
Future Volume (veh/h)	106	167	0	0	61	188	22	919	13	0	0	0
Initial Q (Qb), veh	0	0	0	0	0	0	0	0	0			
Ped-Bike Adj(A_pbT)	1.00		1.00	1.00		1.00	1.00		1.00			
Parking Bus, Adj	1.00	1.00	1.00	1.00	1.00	1.00	1.00	1.00	1.00			
Work Zone On Approach		No			No			No				
Adj Sat Flow, veh/h/ln	1641	1641	0	0	1709	1709	1709	1709	1709			
Adj Flow Rate, veh/h	119	188	0	0	69	211	25	1033	15			
Peak Hour Factor	0.89	0.89	0.89	0.89	0.89	0.89	0.89	0.89	0.89			
Percent Heavy Veh, %	8	8	0	0	3	3	3	3	3			
Cap, veh/h	298	522	0	0	118	361	55	2405	36			
Arrive On Green	0.32	0.32	0.00	0.00	0.32	0.32	0.50	0.50	0.50			
Sat Flow, veh/h	1047	1641	0	0	371	1134	109	4775	72			
Grp Volume(v), veh/h	119	188	0	0	0	280	392	326	355			
Grp Sat Flow(s),veh/h/ln	1047	1641	0	0	0	1505	1704	1555	1696			
Q Serve(g_s), s	6.0	5.0	0.0	0.0	0.0	8.7	8.3	7.4	7.4			
Cycle Q Clear(g_c), s	14.8	5.0	0.0	0.0	0.0	8.7	8.3	7.4	7.4			
Prop In Lane	1.00		0.00	0.00		0.75	0.06		0.04			
Lane Grp Cap(c), veh/h	298	522	0	0	0	479	858	783	854			
V/C Ratio(X)	0.40	0.36	0.00	0.00	0.00	0.58	0.46	0.42	0.42			
Avail Cap(c_a), veh/h	431	731	0	0	0	670	1669	1524	1662			
HCM Platoon Ratio	1.00	1.00	1.00	1.00	1.00	1.00	1.00	1.00	1.00			
Upstream Filter(I)	1.00	1.00	0.00	0.00	0.00	1.00	1.00	1.00	1.00			
Uniform Delay (d), s/veh	22.2	14.7	0.0	0.0	0.0	16.0	9.0	8.7	8.7			
Incr Delay (d2), s/veh	1.2	0.6	0.0	0.0	0.0	1.6	0.5	0.5	0.5			
Initial Q Delay(d3),s/veh	0.0	0.0	0.0	0.0	0.0	0.0	0.0	0.0	0.0			
%ile BackOfQ(90%),veh/ln	2.7	3.2	0.0	0.0	0.0	5.2	4.8	4.0	4.3			
Unsig. Movement Delay, s/veh												
LnGrp Delay(d),s/veh	23.4	15.3	0.0	0.0	0.0	17.6	9.5	9.2	9.2			
LnGrp LOS	C	B	A	A	A	B	A	A	A			
Approach Vol, veh/h		307			280			1073				
Approach Delay, s/veh		18.5			17.6			9.3				
Approach LOS		B			B			A				

Timer - Assigned Phs				4		6		8				
Phs Duration (G+Y+Rc), s				22.9		33.3		22.9				
Change Period (Y+Rc), s				5.0		5.0		5.0				
Max Green Setting (Gmax), s				25.0		55.0		25.0				
Max Q Clear Time (g_c+I1), s				16.8		10.3		10.7				
Green Ext Time (p_c), s				1.1		17.9		1.3				

Intersection Summary												
HCM 6th Ctrl Delay			12.4									
HCM 6th LOS			B									

Movement	EBL	EBT	EBR	WBL	WBT	WBR	NBL	NBT	NBR	SBL	SBT	SBR
Lane Configurations												
Traffic Volume (veh/h)	151	305	0	0	67	173	24	1238	32	0	0	0
Future Volume (veh/h)	151	305	0	0	67	173	24	1238	32	0	0	0
Initial Q (Qb), veh	0	0	0	0	0	0	0	0	0			
Ped-Bike Adj(A_pbT)	1.00		1.00	1.00		1.00	1.00		1.00			
Parking Bus, Adj	1.00	1.00	1.00	1.00	1.00	1.00	1.00	1.00	1.00			
Work Zone On Approach		No			No			No				
Adj Sat Flow, veh/h/ln	1736	1736	0	0	1736	1736	1736	1736	1736			
Adj Flow Rate, veh/h	180	363	0	0	80	206	29	1474	38			
Peak Hour Factor	0.84	0.84	0.84	0.84	0.84	0.84	0.84	0.84	0.84			
Percent Heavy Veh, %	1	1	0	0	1	1	1	1	1			
Cap, veh/h	270	551	0	0	137	352	49	2670	71			
Arrive On Green	0.32	0.32	0.00	0.00	0.32	0.32	0.56	0.56	0.56			
Sat Flow, veh/h	1102	1736	0	0	430	1107	89	4808	128			
Grp Volume(v), veh/h	180	363	0	0	0	286	564	469	508			
Grp Sat Flow(s),veh/h/ln	1102	1736	0	0	0	1537	1732	1580	1713			
Q Serve(g_s), s	12.7	14.2	0.0	0.0	0.0	12.3	16.9	14.8	14.8			
Cycle Q Clear(g_c), s	25.0	14.2	0.0	0.0	0.0	12.3	16.9	14.8	14.8			
Prop In Lane	1.00		0.00	0.00		0.72	0.05		0.07			
Lane Grp Cap(c), veh/h	270	551	0	0	0	488	962	877	951			
V/C Ratio(X)	0.67	0.66	0.00	0.00	0.00	0.59	0.59	0.53	0.53			
Avail Cap(c_a), veh/h	270	551	0	0	0	488	1210	1104	1197			
HCM Platoon Ratio	1.00	1.00	1.00	1.00	1.00	1.00	1.00	1.00	1.00			
Upstream Filter(I)	1.00	1.00	0.00	0.00	0.00	1.00	1.00	1.00	1.00			
Uniform Delay (d), s/veh	33.1	23.2	0.0	0.0	0.0	22.5	11.5	11.1	11.1			
Incr Delay (d2), s/veh	6.9	3.2	0.0	0.0	0.0	2.2	0.8	0.7	0.7			
Initial Q Delay(d3),s/veh	0.0	0.0	0.0	0.0	0.0	0.0	0.0	0.0	0.0			
%ile BackOfQ(90%),veh/ln	6.4	9.3	0.0	0.0	0.0	7.4	9.3	7.7	8.2			
Unsig. Movement Delay, s/veh												
LnGrp Delay(d),s/veh	40.0	26.4	0.0	0.0	0.0	24.7	12.4	11.8	11.7			
LnGrp LOS	D	C	A	A	A	C	B	B	B			
Approach Vol, veh/h		543			286			1541				
Approach Delay, s/veh		30.9			24.7			12.0				
Approach LOS		C			C			B				

Timer - Assigned Phs				4		6		8				
Phs Duration (G+Y+Rc), s				30.0		48.7		30.0				
Change Period (Y+Rc), s				5.0		5.0		5.0				
Max Green Setting (Gmax), s				25.0		55.0		25.0				
Max Q Clear Time (g_c+I1), s				27.0		18.9		14.3				
Green Ext Time (p_c), s				0.0		24.8		1.2				

Intersection Summary												
HCM 6th Ctrl Delay			17.9									
HCM 6th LOS			B									

Movement	EBL	EBT	EBR	WBL	WBT	WBR	NBL	NBT	NBR	SBL	SBT	SBR
Lane Configurations												
Traffic Volume (veh/h)	82	141	47	31	370	241	177	620	11	183	430	188
Future Volume (veh/h)	82	141	47	31	370	241	177	620	11	183	430	188
Initial Q (Qb), veh	0	0	0	0	0	0	0	0	0	0	0	0
Ped-Bike Adj(A_pbT)	1.00		1.00	1.00		1.00	1.00		1.00	1.00		1.00
Parking Bus, Adj	1.00	1.00	1.00	1.00	1.00	1.00	1.00	1.00	1.00	1.00	1.00	1.00
Work Zone On Approach		No			No			No			No	
Adj Sat Flow, veh/h/ln	1682	1682	1682	1723	1723	1723	1709	1709	1709	1695	1695	1695
Adj Flow Rate, veh/h	93	160	53	35	420	274	201	705	12	208	489	214
Peak Hour Factor	0.88	0.88	0.88	0.88	0.88	0.88	0.88	0.88	0.88	0.88	0.88	0.88
Percent Heavy Veh, %	5	5	5	2	2	2	3	3	3	4	4	4
Cap, veh/h	178	415	137	80	554	501	388	1198	20	411	795	346
Arrive On Green	0.34	0.34	0.34	0.34	0.34	0.34	0.11	0.37	0.37	0.03	0.12	0.12
Sat Flow, veh/h	732	1209	401	73	1615	1460	1628	3267	56	1615	2184	950
Grp Volume(v), veh/h	93	0	213	455	0	274	201	350	367	208	360	343
Grp Sat Flow(s),veh/h/ln	732	0	1610	1688	0	1460	1628	1624	1699	1615	1611	1524
Q Serve(g_s), s	7.2	0.0	7.0	6.5	0.0	10.6	5.2	12.2	12.2	5.4	14.9	15.0
Cycle Q Clear(g_c), s	24.0	0.0	7.0	16.8	0.0	10.6	5.2	12.2	12.2	5.4	14.9	15.0
Prop In Lane	1.00		0.25	0.08		1.00	1.00		0.03	1.00		0.62
Lane Grp Cap(c), veh/h	178	0	552	634	0	501	388	596	623	411	586	555
V/C Ratio(X)	0.52	0.00	0.39	0.72	0.00	0.55	0.52	0.59	0.59	0.51	0.61	0.62
Avail Cap(c_a), veh/h	178	0	552	634	0	501	516	596	623	427	586	555
HCM Platoon Ratio	1.00	1.00	1.00	1.00	1.00	1.00	1.00	1.00	1.00	0.33	0.33	0.33
Upstream Filter(I)	1.00	0.00	1.00	1.00	0.00	1.00	1.00	1.00	1.00	0.63	0.63	0.63
Uniform Delay (d), s/veh	32.1	0.0	17.4	20.6	0.0	18.6	13.4	17.9	17.9	13.8	26.1	26.2
Incr Delay (d2), s/veh	5.3	0.0	0.9	4.8	0.0	2.2	1.5	4.2	4.0	0.9	3.0	3.2
Initial Q Delay(d3),s/veh	0.0	0.0	0.0	0.0	0.0	0.0	0.0	0.0	0.0	0.0	0.0	0.0
%ile BackOfQ(90%),veh/ln	3.3	0.0	4.7	10.5	0.0	6.2	3.4	7.9	8.1	3.6	9.5	9.1
Unsig. Movement Delay, s/veh												
LnGrp Delay(d),s/veh	37.4	0.0	18.4	25.4	0.0	20.8	14.9	22.1	21.9	14.7	29.1	29.4
LnGrp LOS	D	A	B	C	A	C	B	C	C	B	C	C
Approach Vol, veh/h		306			729			918			911	
Approach Delay, s/veh		24.1			23.7			20.5			25.9	
Approach LOS		C			C			C			C	

Timer - Assigned Phs	1	2		4	5	6		8
Phs Duration (G+Y+Rc), s	10.5	30.5		29.0	10.3	30.7		29.0
Change Period (Y+Rc), s	3.0	5.0		5.0	3.0	5.0		5.0
Max Green Setting (Gmax), s	13.0	20.0		24.0	8.0	25.0		24.0
Max Q Clear Time (g_c+I1), s	7.2	0.0		26.0	7.4	0.0		18.8
Green Ext Time (p_c), s	0.5	0.0		0.0	0.1	0.0		2.6

Intersection Summary	
HCM 6th Ctrl Delay	23.4
HCM 6th LOS	C

Movement	EBL	EBT	EBR	WBL	WBT	WBR	NBL	NBT	NBR	SBL	SBT	SBR
Lane Configurations												
Traffic Volume (veh/h)	197	388	103	27	189	158	91	604	37	354	635	118
Future Volume (veh/h)	197	388	103	27	189	158	91	604	37	354	635	118
Initial Q (Qb), veh	0	0	0	0	0	0	0	0	0	0	0	0
Ped-Bike Adj(A_pbT)	1.00		1.00	1.00		1.00	1.00		1.00	1.00		1.00
Parking Bus, Adj	1.00	1.00	1.00	1.00	1.00	1.00	1.00	1.00	1.00	1.00	1.00	1.00
Work Zone On Approach		No			No			No			No	
Adj Sat Flow, veh/h/ln	1736	1736	1736	1723	1723	1723	1723	1723	1723	1736	1736	1736
Adj Flow Rate, veh/h	207	408	108	28	199	166	96	636	39	373	668	124
Peak Hour Factor	0.95	0.95	0.95	0.95	0.95	0.95	0.95	0.95	0.95	0.95	0.95	0.95
Percent Heavy Veh, %	1	1	1	2	2	2	2	2	2	1	1	1
Cap, veh/h	107	447	118	59	311	493	332	1253	77	445	1236	229
Arrive On Green	0.34	0.34	0.34	0.34	0.34	0.34	0.06	0.40	0.40	0.03	0.15	0.15
Sat Flow, veh/h	1025	1323	350	24	922	1460	1641	3133	192	1654	2778	515
Grp Volume(v), veh/h	207	0	516	227	0	166	96	332	343	373	396	396
Grp Sat Flow(s),veh/h/ln	1025	0	1673	946	0	1460	1641	1637	1688	1654	1650	1644
Q Serve(g_s), s	1.3	0.0	23.6	2.0	0.0	6.8	2.7	12.2	12.2	8.0	17.8	17.8
Cycle Q Clear(g_c), s	27.0	0.0	23.6	25.7	0.0	6.8	2.7	12.2	12.2	8.0	17.8	17.8
Prop In Lane	1.00		0.21	0.12		1.00	1.00		0.11	1.00		0.31
Lane Grp Cap(c), veh/h	107	0	565	370	0	493	332	655	675	445	734	731
V/C Ratio(X)	1.93	0.00	0.91	0.61	0.00	0.34	0.29	0.51	0.51	0.84	0.54	0.54
Avail Cap(c_a), veh/h	107	0	565	370	0	493	508	655	675	445	734	731
HCM Platoon Ratio	1.00	1.00	1.00	1.00	1.00	1.00	1.00	1.00	1.00	0.33	0.33	0.33
Upstream Filter(I)	1.00	0.00	1.00	1.00	0.00	1.00	1.00	1.00	1.00	0.69	0.69	0.69
Uniform Delay (d), s/veh	39.9	0.0	25.4	21.2	0.0	19.8	14.1	18.1	18.1	18.3	26.5	26.6
Incr Delay (d2), s/veh	452.6	0.0	20.2	4.4	0.0	0.9	0.7	2.8	2.7	9.8	2.0	2.0
Initial Q Delay(d3),s/veh	0.0	0.0	0.0	0.0	0.0	0.0	0.0	0.0	0.0	0.0	0.0	0.0
%ile BackOfQ(90%),veh/ln	26.4	0.0	16.6	6.0	0.0	4.3	1.8	7.8	8.0	6.2	11.2	11.2
Unsig. Movement Delay, s/veh												
LnGrp Delay(d),s/veh	492.5	0.0	45.5	25.7	0.0	20.7	14.8	20.9	20.8	28.1	28.5	28.5
LnGrp LOS	F	A	D	C	A	C	B	C	C	C	C	C
Approach Vol, veh/h		723			393			771			1165	
Approach Delay, s/veh		173.5			23.5			20.1			28.4	
Approach LOS		F			C			C			C	

Timer - Assigned Phs	1	2		4	5	6		8
Phs Duration (G+Y+Rc), s	7.4	40.6		32.0	11.0	37.0		32.0
Change Period (Y+Rc), s	3.0	5.0		5.0	3.0	5.0		5.0
Max Green Setting (Gmax), s	13.0	27.0		27.0	8.0	32.0		27.0
Max Q Clear Time (g_c+I1), s	4.7	0.0		29.0	10.0	0.0		27.7
Green Ext Time (p_c), s	0.2	0.0		0.0	0.0	0.0		0.0

Intersection Summary	
HCM 6th Ctrl Delay	60.0
HCM 6th LOS	E

Intersection	
Int Delay, s/veh	0.8

Movement	WBL	WBR	NBT	NBR	SBL	SBT
Lane Configurations						
Traffic Vol, veh/h	18	65	1546	15	9	1074
Future Vol, veh/h	18	65	1546	15	9	1074
Conflicting Peds, #/hr	0	0	0	0	0	0
Sign Control	Stop	Stop	Free	Free	Free	Free
RT Channelized	-	None	-	None	-	None
Storage Length	0	80	-	-	90	-
Veh in Median Storage, #	1	-	0	-	-	0
Grade, %	0	-	0	-	-	0
Peak Hour Factor	92	92	92	92	92	92
Heavy Vehicles, %	2	2	2	2	2	2
Mvmt Flow	20	71	1680	16	10	1167

Major/Minor	Minor1		Major1		Major2	
Conflicting Flow All	2292	848	0	0	1696	0
Stage 1	1688	-	-	-	-	-
Stage 2	604	-	-	-	-	-
Critical Hdwy	6.84	6.94	-	-	4.14	-
Critical Hdwy Stg 1	5.84	-	-	-	-	-
Critical Hdwy Stg 2	5.84	-	-	-	-	-
Follow-up Hdwy	3.52	3.32	-	-	2.22	-
Pot Cap-1 Maneuver	33	305	-	-	372	-
Stage 1	135	-	-	-	-	-
Stage 2	508	-	-	-	-	-
Platoon blocked, %			-	-		-
Mov Cap-1 Maneuver	32	305	-	-	372	-
Mov Cap-2 Maneuver	106	-	-	-	-	-
Stage 1	135	-	-	-	-	-
Stage 2	494	-	-	-	-	-

Approach	WB	NB	SB
HCM Control Delay, s	26	0	0.1
HCM LOS	D		

Minor Lane/Major Mvmt	NBT	NBR	WBLn1	WBLn2	SBL	SBT
Capacity (veh/h)	-	-	106	305	372	-
HCM Lane V/C Ratio	-	-	0.185	0.232	0.026	-
HCM Control Delay (s)	-	-	46.5	20.3	14.9	-
HCM Lane LOS	-	-	E	C	B	-
HCM 95th %tile Q(veh)	-	-	0.6	0.9	0.1	-

Intersection	
Int Delay, s/veh	0.7

Movement	WBL	WBR	NBT	NBR	SBL	SBT
Lane Configurations						
Traffic Vol, veh/h	8	44	1328	31	54	1150
Future Vol, veh/h	8	44	1328	31	54	1150
Conflicting Peds, #/hr	0	0	0	0	0	0
Sign Control	Stop	Stop	Free	Free	Free	Free
RT Channelized	-	None	-	None	-	None
Storage Length	0	80	-	-	90	-
Veh in Median Storage, #	1	-	0	-	-	0
Grade, %	0	-	0	-	-	0
Peak Hour Factor	92	92	92	92	92	92
Heavy Vehicles, %	2	2	2	2	2	2
Mvmt Flow	9	48	1443	34	59	1250

Major/Minor	Minor1		Major1		Major2	
Conflicting Flow All	2203	739	0	0	1477	0
Stage 1	1460	-	-	-	-	-
Stage 2	743	-	-	-	-	-
Critical Hdwy	6.84	6.94	-	-	4.14	-
Critical Hdwy Stg 1	5.84	-	-	-	-	-
Critical Hdwy Stg 2	5.84	-	-	-	-	-
Follow-up Hdwy	3.52	3.32	-	-	2.22	-
Pot Cap-1 Maneuver	38	360	-	-	452	-
Stage 1	180	-	-	-	-	-
Stage 2	431	-	-	-	-	-
Platoon blocked, %			-	-		-
Mov Cap-1 Maneuver	33	360	-	-	452	-
Mov Cap-2 Maneuver	124	-	-	-	-	-
Stage 1	180	-	-	-	-	-
Stage 2	375	-	-	-	-	-

Approach	WB	NB	SB
HCM Control Delay, s	19.5	0	0.6
HCM LOS	C		

Minor Lane/Major Mvmt	NBT	NBR	WBLn1	WBLn2	SBL	SBT
Capacity (veh/h)	-	-	124	360	452	-
HCM Lane V/C Ratio	-	-	0.07	0.133	0.13	-
HCM Control Delay (s)	-	-	36.2	16.5	14.2	-
HCM Lane LOS	-	-	E	C	B	-
HCM 95th %tile Q(veh)	-	-	0.2	0.5	0.4	-

Movement	EBL	EBT	EBR	WBL	WBT	WBR	NBL	NBT	NBR	SBL	SBT	SBR
Lane Configurations												
Traffic Volume (veh/h)	131	280	106	167	432	489	112	796	27	216	694	125
Future Volume (veh/h)	131	280	106	167	432	489	112	796	27	216	694	125
Initial Q (Qb), veh	0	0	0	0	0	0	0	0	0	0	0	0
Ped-Bike Adj(A_pbT)	1.00		1.00	1.00		1.00	1.00		1.00	1.00		1.00
Parking Bus, Adj	1.00	1.00	1.00	1.00	1.00	1.00	1.00	1.00	1.00	1.00	1.00	1.00
Work Zone On Approach		No			No			No			No	
Adj Sat Flow, veh/h/ln	1723	1723	1723	1736	1736	1736	1695	1695	1695	1682	1682	1682
Adj Flow Rate, veh/h	164	318	75	190	491	556	127	905	31	245	789	142
Peak Hour Factor	0.80	0.88	0.88	0.88	0.88	0.88	0.88	0.88	0.88	0.88	0.88	0.88
Percent Heavy Veh, %	2	2	2	1	1	1	4	4	4	5	5	5
Cap, veh/h	221	495	420	357	482	430	247	982	34	289	969	174
Arrive On Green	0.09	0.29	0.29	0.09	0.29	0.29	0.07	0.31	0.31	0.12	0.36	0.36
Sat Flow, veh/h	1641	1723	1460	1654	1650	1471	1615	3178	109	1602	2705	487
Grp Volume(v), veh/h	164	318	75	190	491	556	127	459	477	245	466	465
Grp Sat Flow(s),veh/h/ln	1641	1723	1460	1654	1650	1471	1615	1611	1676	1602	1598	1594
Q Serve(g_s), s	6.6	15.4	3.7	7.7	28.0	28.0	5.1	26.3	26.3	9.5	25.3	25.3
Cycle Q Clear(g_c), s	6.6	15.4	3.7	7.7	28.0	28.0	5.1	26.3	26.3	9.5	25.3	25.3
Prop In Lane	1.00		1.00	1.00		1.00	1.00		0.06	1.00		0.31
Lane Grp Cap(c), veh/h	221	495	420	357	482	430	247	498	518	289	572	571
V/C Ratio(X)	0.74	0.64	0.18	0.53	1.02	1.29	0.51	0.92	0.92	0.85	0.81	0.81
Avail Cap(c_a), veh/h	229	504	427	357	482	430	384	505	525	346	572	571
HCM Platoon Ratio	1.00	1.00	1.00	1.00	1.00	1.00	1.00	1.00	1.00	1.00	1.00	1.00
Upstream Filter(I)	1.00	1.00	1.00	1.00	1.00	1.00	1.00	1.00	1.00	1.00	1.00	1.00
Uniform Delay (d), s/veh	24.6	29.8	25.6	22.2	33.9	33.9	22.7	32.0	32.0	22.1	27.8	27.8
Incr Delay (d2), s/veh	10.2	2.7	0.2	0.8	45.6	147.9	0.6	22.3	21.7	13.3	8.8	8.9
Initial Q Delay(d3),s/veh	0.0	0.0	0.0	0.0	0.0	0.0	0.0	0.0	0.0	0.0	0.0	0.0
%ile BackOfQ(90%),veh/ln	5.4	10.0	2.4	5.3	22.7	39.4	3.5	17.8	18.3	7.2	15.1	15.1
Unsig. Movement Delay, s/veh												
LnGrp Delay(d),s/veh	34.8	32.5	25.8	23.0	79.4	181.8	23.3	54.3	53.6	35.4	36.7	36.7
LnGrp LOS	C	C	C	C	F	F	C	D	D	D	D	D
Approach Vol, veh/h		557			1237			1063			1176	
Approach Delay, s/veh		32.3			116.8			50.3			36.4	
Approach LOS		C			F			D			D	

Timer - Assigned Phs	1	2	3	4	5	6	7	8
Phs Duration (G+Y+Rc), s	14.6	35.6	12.0	33.5	9.9	40.3	11.5	34.0
Change Period (Y+Rc), s	3.0	6.0	3.0	6.0	3.0	6.0	3.0	6.0
Max Green Setting (Gmax), s	15.0	30.0	9.0	28.0	15.0	30.0	9.0	28.0
Max Q Clear Time (g_c+I1), s	11.5	28.3	9.7	17.4	7.1	27.3	8.6	30.0
Green Ext Time (p_c), s	0.2	1.2	0.0	1.0	0.1	2.0	0.0	0.0

Intersection Summary	
HCM 6th Ctrl Delay	64.1
HCM 6th LOS	E

Movement	EBL	EBT	EBR	WBL	WBT	WBR	NBL	NBT	NBR	SBL	SBT	SBR
Lane Configurations												
Traffic Volume (veh/h)	166	505	177	68	195	343	127	989	59	263	611	169
Future Volume (veh/h)	166	505	177	68	195	343	127	989	59	263	611	169
Initial Q (Qb), veh	0	0	0	0	0	0	0	0	0	0	0	0
Ped-Bike Adj(A_pbT)	1.00		1.00	1.00		1.00	1.00		1.00	1.00		1.00
Parking Bus, Adj	1.00	1.00	1.00	1.00	1.00	1.00	1.00	1.00	1.00	1.00	1.00	1.00
Work Zone On Approach		No			No			No			No	
Adj Sat Flow, veh/h/ln	1736	1736	1736	1709	1709	1709	1695	1695	1695	1709	1709	1709
Adj Flow Rate, veh/h	171	521	113	70	201	354	131	1020	61	271	630	174
Peak Hour Factor	0.97	0.97	0.97	0.97	0.97	0.97	0.97	0.97	0.97	0.97	0.97	0.97
Percent Heavy Veh, %	1	1	1	3	3	3	4	4	4	3	3	3
Cap, veh/h	227	536	454	141	434	387	329	1191	71	294	1111	306
Arrive On Green	0.09	0.31	0.31	0.05	0.27	0.27	0.06	0.39	0.39	0.12	0.44	0.44
Sat Flow, veh/h	1654	1736	1471	1628	1624	1448	1615	3088	185	1628	2514	693
Grp Volume(v), veh/h	171	521	113	70	201	354	131	532	549	271	406	398
Grp Sat Flow(s),veh/h/ln	1654	1736	1471	1628	1624	1448	1615	1611	1662	1628	1624	1584
Q Serve(g_s), s	9.4	38.4	7.4	4.0	13.4	30.7	6.3	39.2	39.3	13.4	24.1	24.2
Cycle Q Clear(g_c), s	9.4	38.4	7.4	4.0	13.4	30.7	6.3	39.2	39.3	13.4	24.1	24.2
Prop In Lane	1.00		1.00	1.00		1.00	1.00		0.11	1.00		0.44
Lane Grp Cap(c), veh/h	227	536	454	141	434	387	329	621	641	294	717	700
V/C Ratio(X)	0.75	0.97	0.25	0.50	0.46	0.91	0.40	0.86	0.86	0.92	0.57	0.57
Avail Cap(c_a), veh/h	235	536	454	179	464	414	363	672	693	337	777	758
HCM Platoon Ratio	1.00	1.00	1.00	1.00	1.00	1.00	1.00	1.00	1.00	1.00	1.00	1.00
Upstream Filter(I)	1.00	1.00	1.00	1.00	1.00	1.00	1.00	1.00	1.00	1.00	1.00	1.00
Uniform Delay (d), s/veh	33.5	44.2	33.5	36.4	39.7	46.0	22.7	36.5	36.5	30.3	26.9	26.9
Incr Delay (d2), s/veh	11.0	31.6	0.3	1.0	0.8	23.7	0.3	10.1	9.8	26.4	0.8	0.9
Initial Q Delay(d3),s/veh	0.0	0.0	0.0	0.0	0.0	0.0	0.0	0.0	0.0	0.0	0.0	0.0
%ile BackOfQ(90%),veh/ln	7.2	27.1	4.9	3.0	8.5	18.4	4.4	22.5	23.1	10.8	13.6	13.3
Unsig. Movement Delay, s/veh												
LnGrp Delay(d),s/veh	44.4	75.8	33.8	37.4	40.4	69.7	23.0	46.6	46.3	56.7	27.7	27.8
LnGrp LOS	D	E	C	D	D	E	C	D	D	E	C	C
Approach Vol, veh/h		805			625			1212			1075	
Approach Delay, s/veh		63.2			56.7			43.9			35.1	
Approach LOS		E			E			D			D	

Timer - Assigned Phs	1	2	3	4	5	6	7	8
Phs Duration (G+Y+Rc), s	18.6	55.9	9.0	46.0	11.3	63.2	14.4	40.6
Change Period (Y+Rc), s	3.0	6.0	3.0	6.0	3.0	6.0	3.0	6.0
Max Green Setting (Gmax), s	19.0	54.0	9.0	40.0	11.0	62.0	12.0	37.0
Max Q Clear Time (g_c+I1), s	15.4	41.3	6.0	40.4	8.3	26.2	11.4	32.7
Green Ext Time (p_c), s	0.2	8.7	0.0	0.0	0.0	11.9	0.0	0.9

Intersection Summary	
HCM 6th Ctrl Delay	47.7
HCM 6th LOS	D

Movement	SEL	SET	SER	NWL	NWT	NWR	NEL	NET	NER	SWL	SWT	SWR
Lane Configurations												
Traffic Volume (veh/h)	174	469	531	133	704	106	141	96	55	60	137	34
Future Volume (veh/h)	174	469	531	133	704	106	141	96	55	60	137	34
Initial Q (Qb), veh	0	0	0	0	0	0	0	0	0	0	0	0
Ped-Bike Adj(A_pbT)	1.00		1.00	1.00		1.00	1.00		1.00	1.00		1.00
Parking Bus, Adj	1.00	1.00	1.00	1.00	1.00	1.00	1.00	1.00	1.00	1.00	1.00	1.00
Work Zone On Approach		No			No			No			No	
Adj Sat Flow, veh/h/ln	1709	1743	1709	1709	1743	1709	1695	1710	1695	1709	1724	1709
Adj Flow Rate, veh/h	185	499	350	141	749	70	150	102	59	64	146	36
Peak Hour Factor	0.94	0.94	0.94	0.94	0.94	0.94	0.94	0.94	0.94	0.94	0.94	0.94
Percent Heavy Veh, %	3	3	3	3	3	3	4	4	4	3	3	3
Cap, veh/h	450	1637	716	472	1598	699	342	307	166	342	335	80
Arrive On Green	0.09	0.49	0.49	0.07	0.48	0.48	0.10	0.15	0.15	0.08	0.13	0.13
Sat Flow, veh/h	1628	3312	1448	1628	3312	1448	1615	2035	1101	1628	2620	628
Grp Volume(v), veh/h	185	499	350	141	749	70	150	80	81	64	90	92
Grp Sat Flow(s),veh/h/ln	1628	1656	1448	1628	1656	1448	1615	1624	1512	1628	1638	1611
Q Serve(g_s), s	4.3	7.0	12.6	3.3	11.8	2.1	6.1	3.4	3.8	2.5	4.0	4.1
Cycle Q Clear(g_c), s	4.3	7.0	12.6	3.3	11.8	2.1	6.1	3.4	3.8	2.5	4.0	4.1
Prop In Lane	1.00		1.00	1.00		1.00	1.00		0.73	1.00		0.39
Lane Grp Cap(c), veh/h	450	1637	716	472	1598	699	342	245	228	342	209	206
V/C Ratio(X)	0.41	0.30	0.49	0.30	0.47	0.10	0.44	0.33	0.35	0.19	0.43	0.45
Avail Cap(c_a), veh/h	728	2540	1111	769	2540	1111	593	831	773	633	837	823
HCM Platoon Ratio	1.00	1.00	1.00	1.00	1.00	1.00	1.00	1.00	1.00	1.00	1.00	1.00
Upstream Filter(I)	1.00	1.00	1.00	1.00	1.00	1.00	1.00	1.00	1.00	1.00	1.00	1.00
Uniform Delay (d), s/veh	9.5	11.8	13.2	8.7	13.5	11.0	25.2	29.7	29.8	25.8	31.5	31.6
Incr Delay (d2), s/veh	0.6	0.5	2.4	0.7	1.0	0.3	0.3	1.1	1.3	0.1	2.0	2.2
Initial Q Delay(d3),s/veh	0.0	0.0	0.0	0.0	0.0	0.0	0.0	0.0	0.0	0.0	0.0	0.0
%ile BackOfQ(90%),veh/ln	2.6	4.5	6.8	2.0	6.9	1.2	4.1	2.5	2.5	1.7	3.0	3.1
Unsig. Movement Delay, s/veh												
LnGrp Delay(d),s/veh	10.1	12.3	15.6	9.5	14.5	11.3	25.5	30.8	31.1	25.9	33.5	33.7
LnGrp LOS	B	B	B	A	B	B	C	C	C	C	C	C
Approach Vol, veh/h		1034			960			311			246	
Approach Delay, s/veh		13.0			13.6			28.3			31.6	
Approach LOS		B			B			C			C	

Timer - Assigned Phs	1	2	3	4	5	6	7	8
Phs Duration (G+Y+Rc), s	8.7	43.7	10.8	15.0	9.7	42.7	9.0	16.8
Change Period (Y+Rc), s	3.0	5.0	3.0	5.0	3.0	5.0	3.0	5.0
Max Green Setting (Gmax), s	20.0	60.0	20.0	40.0	20.0	60.0	20.0	40.0
Max Q Clear Time (g_c+I1), s	5.3	9.0	8.1	6.1	6.3	13.8	4.5	5.8
Green Ext Time (p_c), s	0.7	10.1	0.0	2.4	0.5	23.9	0.0	2.1

Intersection Summary	
HCM 6th Ctrl Delay	16.9
HCM 6th LOS	B

Notes

User approved pedestrian interval to be less than phase max green.

Movement	SEL	SET	SER	NWL	NWT	NWR	NEL	NET	NER	SWL	SWT	SWR
Lane Configurations												
Traffic Volume (veh/h)	52	806	101	73	713	97	377	223	175	123	89	112
Future Volume (veh/h)	52	806	101	73	713	97	377	223	175	123	89	112
Initial Q (Qb), veh	0	0	0	0	0	0	0	0	0	0	0	0
Ped-Bike Adj(A_pbT)	1.00		1.00	1.00		1.00	1.00		1.00	1.00		1.00
Parking Bus, Adj	1.00	1.00	1.00	1.00	1.00	1.00	1.00	1.00	1.00	1.00	1.00	1.00
Work Zone On Approach		No			No			No			No	
Adj Sat Flow, veh/h/ln	1736	1771	1736	1736	1771	1736	1736	1751	1736	1709	1724	1709
Adj Flow Rate, veh/h	58	896	70	81	792	67	419	248	194	137	99	124
Peak Hour Factor	0.90	0.90	0.90	0.90	0.90	0.90	0.90	0.90	0.90	0.90	0.90	0.90
Percent Heavy Veh, %	1	1	1	1	1	1	1	1	1	3	3	3
Cap, veh/h	339	1576	689	306	1592	696	457	432	325	323	213	190
Arrive On Green	0.04	0.47	0.47	0.04	0.47	0.47	0.20	0.24	0.24	0.09	0.13	0.13
Sat Flow, veh/h	1654	3365	1471	1654	3365	1471	1654	1809	1361	1628	1638	1461
Grp Volume(v), veh/h	58	896	70	81	792	67	419	227	215	137	99	124
Grp Sat Flow(s),veh/h/ln	1654	1683	1471	1654	1683	1471	1654	1664	1506	1628	1638	1461
Q Serve(g_s), s	1.8	19.5	2.7	2.5	16.4	2.5	20.0	12.1	12.8	7.2	5.6	8.1
Cycle Q Clear(g_c), s	1.8	19.5	2.7	2.5	16.4	2.5	20.0	12.1	12.8	7.2	5.6	8.1
Prop In Lane	1.00		1.00	1.00		1.00	1.00		0.90	1.00		1.00
Lane Grp Cap(c), veh/h	339	1576	689	306	1592	696	457	397	360	323	213	190
V/C Ratio(X)	0.17	0.57	0.10	0.26	0.50	0.10	0.92	0.57	0.60	0.42	0.46	0.65
Avail Cap(c_a), veh/h	601	2002	875	561	2002	875	457	660	597	500	650	579
HCM Platoon Ratio	1.00	1.00	1.00	1.00	1.00	1.00	1.00	1.00	1.00	1.00	1.00	1.00
Upstream Filter(I)	1.00	1.00	1.00	1.00	1.00	1.00	1.00	1.00	1.00	1.00	1.00	1.00
Uniform Delay (d), s/veh	14.0	19.4	15.0	14.8	18.3	14.7	30.4	33.8	34.1	33.5	40.6	41.7
Incr Delay (d2), s/veh	0.2	1.5	0.3	1.0	1.1	0.3	22.8	1.8	2.3	0.3	2.2	5.3
Initial Q Delay(d3),s/veh	0.0	0.0	0.0	0.0	0.0	0.0	0.0	0.0	0.0	0.0	0.0	0.0
%ile BackOfQ(90%),veh/ln	1.2	11.2	1.7	1.8	9.6	1.6	15.8	7.9	7.7	5.0	4.3	5.5
Unsig. Movement Delay, s/veh												
LnGrp Delay(d),s/veh	14.3	20.9	15.3	15.7	19.4	14.9	53.2	35.7	36.3	33.8	42.8	47.0
LnGrp LOS	B	C	B	B	B	B	D	D	D	C	D	D
Approach Vol, veh/h		1024			940			861			360	
Approach Delay, s/veh		20.2			18.8			44.4			40.8	
Approach LOS		C			B			D			D	

Timer - Assigned Phs	1	2	3	4	5	6	7	8
Phs Duration (G+Y+Rc), s	7.5	52.2	23.0	18.1	7.0	52.7	12.1	29.1
Change Period (Y+Rc), s	3.0	5.0	3.0	5.0	3.0	5.0	3.0	5.0
Max Green Setting (Gmax), s	20.0	60.0	20.0	40.0	20.0	60.0	20.0	40.0
Max Q Clear Time (g_c+I1), s	4.5	21.5	22.0	10.1	3.8	18.4	9.2	14.8
Green Ext Time (p_c), s	0.4	25.8	0.0	3.0	0.1	24.0	0.0	6.0

Intersection Summary	
HCM 6th Ctrl Delay	28.6
HCM 6th LOS	C

Notes

User approved pedestrian interval to be less than phase max green.

Movement	EBL	EBT	EBR	WBL	WBT	WBR	NBL	NBT	NBR	SBL	SBT	SBR
Lane Configurations												
Traffic Volume (veh/h)	140	149	90	93	162	90	116	767	104	95	576	185
Future Volume (veh/h)	140	149	90	93	162	90	116	767	104	95	576	185
Initial Q (Qb), veh	0	0	0	0	0	0	0	0	0	0	0	0
Ped-Bike Adj(A_pbT)	1.00		1.00	1.00		1.00	1.00		1.00	1.00		1.00
Parking Bus, Adj	1.00	1.00	1.00	1.00	1.00	1.00	1.00	1.00	1.00	1.00	1.00	1.00
Work Zone On Approach		No			No			No			No	
Adj Sat Flow, veh/h/ln	1695	1628	1695	1654	1654	1723	1695	1695	1695	1682	1682	1682
Adj Flow Rate, veh/h	157	167	101	104	182	101	130	862	117	107	647	208
Peak Hour Factor	0.89	0.89	0.89	0.89	0.89	0.89	0.89	0.89	0.89	0.89	0.89	0.89
Percent Heavy Veh, %	4	4	4	2	2	2	4	4	4	5	5	5
Cap, veh/h	301	234	141	297	218	121	320	1165	158	279	949	305
Arrive On Green	0.10	0.25	0.25	0.07	0.22	0.22	0.07	0.41	0.41	0.06	0.40	0.40
Sat Flow, veh/h	1615	950	574	1575	999	555	1615	2850	387	1602	2378	764
Grp Volume(v), veh/h	157	0	268	104	0	283	130	487	492	107	435	420
Grp Sat Flow(s),veh/h/ln	1615	0	1524	1575	0	1554	1615	1611	1626	1602	1598	1544
Q Serve(g_s), s	5.4	0.0	11.9	3.7	0.0	12.9	3.4	19.0	19.0	2.9	16.6	16.7
Cycle Q Clear(g_c), s	5.4	0.0	11.9	3.7	0.0	12.9	3.4	19.0	19.0	2.9	16.6	16.7
Prop In Lane	1.00		0.38	1.00		0.36	1.00		0.24	1.00		0.49
Lane Grp Cap(c), veh/h	301	0	375	297	0	339	320	659	665	279	638	616
V/C Ratio(X)	0.52	0.00	0.71	0.35	0.00	0.83	0.41	0.74	0.74	0.38	0.68	0.68
Avail Cap(c_a), veh/h	581	0	1131	613	0	1153	644	1304	1316	615	1293	1250
HCM Platoon Ratio	1.00	1.00	1.00	1.00	1.00	1.00	1.00	1.00	1.00	1.00	1.00	1.00
Upstream Filter(I)	1.00	0.00	1.00	1.00	0.00	1.00	1.00	1.00	1.00	1.00	1.00	1.00
Uniform Delay (d), s/veh	20.0	0.0	25.6	20.9	0.0	27.7	13.7	18.6	18.6	14.4	18.4	18.4
Incr Delay (d2), s/veh	0.5	0.0	2.5	0.3	0.0	5.4	0.3	1.2	1.2	0.3	1.0	1.0
Initial Q Delay(d3),s/veh	0.0	0.0	0.0	0.0	0.0	0.0	0.0	0.0	0.0	0.0	0.0	0.0
%ile BackOfQ(90%),veh/ln	3.6	0.0	7.1	2.4	0.0	8.1	2.1	10.2	10.3	1.8	9.1	8.9
Unsig. Movement Delay, s/veh												
LnGrp Delay(d),s/veh	20.5	0.0	28.1	21.1	0.0	33.0	14.0	19.8	19.8	14.7	19.3	19.4
LnGrp LOS	C	A	C	C	A	C	B	B	B	B	B	B
Approach Vol, veh/h		425			387			1109			962	
Approach Delay, s/veh		25.3			29.8			19.1			18.8	
Approach LOS		C			C			B			B	

Timer - Assigned Phs	1	2	3	4	5	6	7	8
Phs Duration (G+Y+Rc), s	8.2	34.6	8.1	23.2	7.4	35.3	10.2	21.2
Change Period (Y+Rc), s	3.0	5.0	3.0	5.0	3.0	5.0	3.0	5.0
Max Green Setting (Gmax), s	20.0	60.0	20.0	55.0	20.0	60.0	20.0	55.0
Max Q Clear Time (g_c+I1), s	5.4	18.7	5.7	13.9	4.9	21.0	7.4	14.9
Green Ext Time (p_c), s	0.1	7.9	0.1	1.2	0.1	9.3	0.1	1.3

Intersection Summary	
HCM 6th Ctrl Delay	21.4
HCM 6th LOS	C

Movement	EBL	EBT	EBR	WBL	WBT	WBR	NBL	NBT	NBR	SBL	SBT	SBR
Lane Configurations												
Traffic Volume (veh/h)	228	198	128	168	112	128	76	788	136	64	681	46
Future Volume (veh/h)	228	198	128	168	112	128	76	788	136	64	681	46
Initial Q (Qb), veh	0	0	0	0	0	0	0	0	0	0	0	0
Ped-Bike Adj(A_pbT)	1.00		1.00	1.00		1.00	1.00		1.00	1.00		1.00
Parking Bus, Adj	1.00	1.00	1.00	1.00	1.00	1.00	1.00	1.00	1.00	1.00	1.00	1.00
Work Zone On Approach		No			No			No			No	
Adj Sat Flow, veh/h/ln	1736	1667	1736	1667	1667	1736	1695	1695	1695	1709	1709	1709
Adj Flow Rate, veh/h	238	206	133	175	117	133	79	821	142	67	709	48
Peak Hour Factor	0.96	0.96	0.96	0.96	0.96	0.96	0.96	0.96	0.96	0.96	0.96	0.96
Percent Heavy Veh, %	1	1	1	1	1	1	4	4	4	3	3	3
Cap, veh/h	393	239	154	303	162	184	318	1084	187	246	1208	82
Arrive On Green	0.13	0.25	0.25	0.11	0.23	0.23	0.05	0.39	0.39	0.05	0.39	0.39
Sat Flow, veh/h	1654	946	611	1588	712	809	1615	2746	475	1628	3086	209
Grp Volume(v), veh/h	238	0	339	175	0	250	79	482	481	67	373	384
Grp Sat Flow(s),veh/h/ln	1654	0	1557	1588	0	1521	1615	1611	1610	1628	1624	1671
Q Serve(g_s), s	8.5	0.0	16.8	6.7	0.0	12.3	2.3	20.9	20.9	1.9	14.7	14.7
Cycle Q Clear(g_c), s	8.5	0.0	16.8	6.7	0.0	12.3	2.3	20.9	20.9	1.9	14.7	14.7
Prop In Lane	1.00		0.39	1.00		0.53	1.00		0.29	1.00		0.12
Lane Grp Cap(c), veh/h	393	0	393	303	0	346	318	636	636	246	636	654
V/C Ratio(X)	0.61	0.00	0.86	0.58	0.00	0.72	0.25	0.76	0.76	0.27	0.59	0.59
Avail Cap(c_a), veh/h	584	0	1060	527	0	1036	635	1196	1196	571	1206	1241
HCM Platoon Ratio	1.00	1.00	1.00	1.00	1.00	1.00	1.00	1.00	1.00	1.00	1.00	1.00
Upstream Filter(I)	1.00	0.00	1.00	1.00	0.00	1.00	1.00	1.00	1.00	1.00	1.00	1.00
Uniform Delay (d), s/veh	20.0	0.0	28.9	21.8	0.0	28.9	14.7	21.1	21.1	16.2	19.4	19.4
Incr Delay (d2), s/veh	0.6	0.0	5.7	0.6	0.0	2.9	0.1	1.4	1.4	0.2	0.6	0.6
Initial Q Delay(d3),s/veh	0.0	0.0	0.0	0.0	0.0	0.0	0.0	0.0	0.0	0.0	0.0	0.0
%ile BackOfQ(90%),veh/ln	5.5	0.0	10.1	4.4	0.0	7.4	1.5	11.3	11.3	1.3	8.4	8.6
Unsig. Movement Delay, s/veh												
LnGrp Delay(d),s/veh	20.6	0.0	34.6	22.4	0.0	31.8	14.8	22.5	22.5	16.4	20.1	20.0
LnGrp LOS	C	A	C	C	A	C	B	C	C	B	C	C
Approach Vol, veh/h		577			425			1042			824	
Approach Delay, s/veh		28.8			27.9			21.9			19.8	
Approach LOS		C			C			C			B	

Timer - Assigned Phs	1	2	3	4	5	6	7	8
Phs Duration (G+Y+Rc), s	7.2	36.6	11.6	25.4	6.9	36.9	13.7	23.4
Change Period (Y+Rc), s	3.0	5.0	3.0	5.0	3.0	5.0	3.0	5.0
Max Green Setting (Gmax), s	20.0	60.0	20.0	55.0	20.0	60.0	20.0	55.0
Max Q Clear Time (g_c+I1), s	4.3	16.7	8.7	18.8	3.9	22.9	10.5	14.3
Green Ext Time (p_c), s	0.1	6.5	0.1	1.6	0.0	9.0	0.2	1.2

Intersection Summary	
HCM 6th Ctrl Delay	23.6
HCM 6th LOS	C

Movement	EBL	EBT	EBR	WBL	WBT	WBR	NBL	NBT	NBR	SBL	SBT	SBR
Lane Configurations												
Traffic Volume (veh/h)	25	88	20	29	309	102	40	525	16	109	307	91
Future Volume (veh/h)	25	88	20	29	309	102	40	525	16	109	307	91
Initial Q (Qb), veh	0	0	0	0	0	0	0	0	0	0	0	0
Ped-Bike Adj(A_pbT)	1.00		1.00	1.00		1.00	1.00		1.00	1.00		1.00
Parking Bus, Adj	1.00	1.00	1.00	1.00	1.00	1.00	1.00	1.00	1.00	1.00	1.00	1.00
Work Zone On Approach		No			No			No			No	
Adj Sat Flow, veh/h/ln	1600	1664	1600	1695	1763	1695	1695	1695	1695	1682	1682	1682
Adj Flow Rate, veh/h	27	96	22	32	336	111	43	571	17	118	334	99
Peak Hour Factor	0.92	0.92	0.92	0.92	0.92	0.92	0.92	0.92	0.92	0.92	0.92	0.92
Percent Heavy Veh, %	11	11	11	4	4	4	4	4	4	5	5	5
Cap, veh/h	158	407	93	424	394	130	522	1403	42	462	1129	330
Arrive On Green	0.31	0.31	0.31	0.31	0.31	0.31	0.04	0.44	0.44	0.06	0.46	0.46
Sat Flow, veh/h	876	1310	300	1254	1269	419	1615	3194	95	1602	2439	712
Grp Volume(v), veh/h	27	0	118	32	0	447	43	288	300	118	217	216
Grp Sat Flow(s),veh/h/ln	876	0	1610	1254	0	1688	1615	1611	1678	1602	1598	1554
Q Serve(g_s), s	2.1	0.0	3.8	1.4	0.0	17.4	1.0	8.5	8.6	2.7	5.9	6.1
Cycle Q Clear(g_c), s	19.5	0.0	3.8	5.2	0.0	17.4	1.0	8.5	8.6	2.7	5.9	6.1
Prop In Lane	1.00		0.19	1.00		0.25	1.00		0.06	1.00		0.46
Lane Grp Cap(c), veh/h	158	0	500	424	0	525	522	708	737	462	740	719
V/C Ratio(X)	0.17	0.00	0.24	0.08	0.00	0.85	0.08	0.41	0.41	0.26	0.29	0.30
Avail Cap(c_a), veh/h	186	0	552	464	0	579	687	708	737	588	740	719
HCM Platoon Ratio	1.00	1.00	1.00	1.00	1.00	1.00	1.00	1.00	1.00	1.00	1.00	1.00
Upstream Filter(I)	1.00	0.00	1.00	1.00	0.00	1.00	1.00	1.00	1.00	1.00	1.00	1.00
Uniform Delay (d), s/veh	31.7	0.0	17.9	19.9	0.0	22.6	9.9	13.4	13.4	9.7	11.7	11.7
Incr Delay (d2), s/veh	1.1	0.0	0.5	0.2	0.0	12.6	0.1	1.7	1.7	0.4	1.0	1.1
Initial Q Delay(d3),s/veh	0.0	0.0	0.0	0.0	0.0	0.0	0.0	0.0	0.0	0.0	0.0	0.0
%ile BackOfQ(90%),veh/ln	0.9	0.0	2.6	0.7	0.0	12.1	0.6	5.5	5.7	1.6	3.9	3.9
Unsig. Movement Delay, s/veh												
LnGrp Delay(d),s/veh	32.8	0.0	18.5	20.0	0.0	35.2	10.0	15.1	15.1	10.1	12.7	12.8
LnGrp LOS	C	A	B	C	A	D	A	B	B	B	B	B
Approach Vol, veh/h		145			479			631			551	
Approach Delay, s/veh		21.1			34.2			14.8			12.2	
Approach LOS		C			C			B			B	

Timer - Assigned Phs	1	2		4	5	6		8
Phs Duration (G+Y+Rc), s	5.8	37.4		26.8	7.5	35.7		26.8
Change Period (Y+Rc), s	3.0	5.0		5.0	3.0	5.0		5.0
Max Green Setting (Gmax), s	10.0	23.0		24.0	10.0	23.0		24.0
Max Q Clear Time (g_c+I1), s	3.0	0.0		21.5	4.7	0.0		19.4
Green Ext Time (p_c), s	0.1	0.0		0.3	0.2	0.0		2.0

Intersection Summary		
HCM 6th Ctrl Delay		19.6
HCM 6th LOS		B

Movement	EBL	EBT	EBR	WBL	WBT	WBR	NBL	NBT	NBR	SBL	SBT	SBR
Lane Configurations												
Traffic Volume (veh/h)	119	294	24	19	85	87	23	419	21	123	534	23
Future Volume (veh/h)	119	294	24	19	85	87	23	419	21	123	534	23
Initial Q (Qb), veh	0	0	0	0	0	0	0	0	0	0	0	0
Ped-Bike Adj(A_pbT)	1.00		1.00	1.00		1.00	1.00		1.00	1.00		1.00
Parking Bus, Adj	1.00	1.00	1.00	1.00	1.00	1.00	1.00	1.00	1.00	1.00	1.00	1.00
Work Zone On Approach		No			No			No			No	
Adj Sat Flow, veh/h/ln	1736	1806	1736	1709	1777	1709	1709	1709	1709	1736	1736	1736
Adj Flow Rate, veh/h	134	330	27	21	96	98	26	471	24	138	600	26
Peak Hour Factor	0.89	0.89	0.89	0.89	0.89	0.89	0.89	0.89	0.89	0.89	0.89	0.89
Percent Heavy Veh, %	1	1	1	3	3	3	3	3	3	1	1	1
Cap, veh/h	292	440	36	175	216	220	482	1597	81	576	1748	76
Arrive On Green	0.27	0.27	0.27	0.27	0.27	0.27	0.03	0.51	0.51	0.06	0.54	0.54
Sat Flow, veh/h	1198	1647	135	1016	806	823	1628	3144	160	1654	3221	139
Grp Volume(v), veh/h	134	0	357	21	0	194	26	243	252	138	307	319
Grp Sat Flow(s),veh/h/ln	1198	0	1782	1016	0	1629	1628	1624	1680	1654	1650	1711
Q Serve(g_s), s	8.4	0.0	14.7	1.5	0.0	7.9	0.6	6.9	7.0	3.0	8.4	8.4
Cycle Q Clear(g_c), s	16.3	0.0	14.7	16.2	0.0	7.9	0.6	6.9	7.0	3.0	8.4	8.4
Prop In Lane	1.00		0.08	1.00		0.51	1.00		0.10	1.00		0.08
Lane Grp Cap(c), veh/h	292	0	476	175	0	436	482	825	854	576	895	929
V/C Ratio(X)	0.46	0.00	0.75	0.12	0.00	0.45	0.05	0.29	0.30	0.24	0.34	0.34
Avail Cap(c_a), veh/h	361	0	579	234	0	530	641	825	854	680	895	929
HCM Platoon Ratio	1.00	1.00	1.00	1.00	1.00	1.00	1.00	1.00	1.00	1.00	1.00	1.00
Upstream Filter(I)	1.00	0.00	1.00	1.00	0.00	1.00	1.00	1.00	1.00	1.00	1.00	1.00
Uniform Delay (d), s/veh	31.1	0.0	26.9	34.3	0.0	24.4	9.0	11.4	11.4	7.8	10.3	10.3
Incr Delay (d2), s/veh	2.4	0.0	6.3	0.6	0.0	1.5	0.1	0.9	0.9	0.3	1.0	1.0
Initial Q Delay(d3),s/veh	0.0	0.0	0.0	0.0	0.0	0.0	0.0	0.0	0.0	0.0	0.0	0.0
%ile BackOfQ(90%),veh/ln	4.6	0.0	10.3	0.7	0.0	5.5	0.4	4.6	4.7	1.8	5.3	5.5
Unsig. Movement Delay, s/veh												
LnGrp Delay(d),s/veh	33.6	0.0	33.1	34.9	0.0	25.9	9.0	12.3	12.3	8.1	11.3	11.3
LnGrp LOS	C	A	C	C	A	C	A	B	B	A	B	B
Approach Vol, veh/h		491			215			521			764	
Approach Delay, s/veh		33.3			26.8			12.1			10.7	
Approach LOS		C			C			B			B	

Timer - Assigned Phs	1	2		4	5	6		8				
Phs Duration (G+Y+Rc), s	5.2	48.4		26.4	8.0	45.6		26.4				
Change Period (Y+Rc), s	3.0	5.0		5.0	3.0	5.0		5.0				
Max Green Setting (Gmax), s	10.0	31.0		26.0	10.0	31.0		26.0				
Max Q Clear Time (g_c+I1), s	2.6	0.0		18.3	5.0	0.0		18.2				
Green Ext Time (p_c), s	0.0	0.0		3.1	0.2	0.0		1.3				

Intersection Summary			
HCM 6th Ctrl Delay			18.4
HCM 6th LOS			B

Movement	SEL	SET	SER	NWL	NWT	NWR	NEL	NET	NER	SWL	SWT	SWR
Lane Configurations												
Traffic Volume (veh/h)	93	441	61	133	795	26	19	54	50	21	230	130
Future Volume (veh/h)	93	441	61	133	795	26	19	54	50	21	230	130
Initial Q (Qb), veh	0	0	0	0	0	0	0	0	0	0	0	0
Ped-Bike Adj(A_pbT)	1.00		1.00	1.00		1.00	1.00		1.00	1.00		1.00
Parking Bus, Adj	1.00	1.00	1.00	1.00	1.00	1.00	1.00	1.00	1.00	1.00	1.00	1.00
Work Zone On Approach		No			No			No			No	
Adj Sat Flow, veh/h/ln	1654	1669	1654	1695	1710	1695	1600	1600	1664	1695	1695	1695
Adj Flow Rate, veh/h	104	496	69	149	893	29	21	61	0	24	258	91
Peak Hour Factor	0.89	0.89	0.89	0.89	0.89	0.89	0.89	0.89	0.89	0.89	0.89	0.89
Percent Heavy Veh, %	7	7	7	4	4	4	11	11	11	4	4	4
Cap, veh/h	349	1222	169	504	1474	48	220	350		396	376	319
Arrive On Green	0.06	0.44	0.44	0.08	0.46	0.46	0.02	0.22	0.00	0.03	0.22	0.22
Sat Flow, veh/h	1576	2797	387	1615	3211	104	1524	1600	1410	1615	1695	1437
Grp Volume(v), veh/h	104	280	285	149	452	470	21	61	0	24	258	91
Grp Sat Flow(s),veh/h/ln	1576	1585	1599	1615	1624	1691	1524	1600	1410	1615	1695	1437
Q Serve(g_s), s	2.4	8.3	8.4	3.3	14.3	14.3	0.7	2.1	0.0	0.8	9.6	3.6
Cycle Q Clear(g_c), s	2.4	8.3	8.4	3.3	14.3	14.3	0.7	2.1	0.0	0.8	9.6	3.6
Prop In Lane	1.00		0.24	1.00		0.06	1.00		1.00	1.00		1.00
Lane Grp Cap(c), veh/h	349	693	699	504	746	776	220	350		396	376	319
V/C Ratio(X)	0.30	0.40	0.41	0.30	0.61	0.61	0.10	0.17		0.06	0.69	0.29
Avail Cap(c_a), veh/h	708	1382	1394	836	1416	1474	626	930		822	985	835
HCM Platoon Ratio	1.00	1.00	1.00	1.00	1.00	1.00	1.00	1.00	1.00	1.00	1.00	1.00
Upstream Filter(I)	1.00	1.00	1.00	1.00	1.00	1.00	1.00	1.00	0.00	1.00	1.00	1.00
Uniform Delay (d), s/veh	10.7	13.2	13.3	9.1	14.0	14.0	20.7	21.8	0.0	19.9	24.6	22.3
Incr Delay (d2), s/veh	0.5	0.4	0.4	0.3	0.8	0.8	0.2	0.3	0.0	0.1	3.2	0.7
Initial Q Delay(d3),s/veh	0.0	0.0	0.0	0.0	0.0	0.0	0.0	0.0	0.0	0.0	0.0	0.0
%ile BackOfQ(90%),veh/ln	1.4	4.9	4.9	1.9	7.6	7.9	0.5	1.5	0.0	0.5	6.6	2.2
Unsig. Movement Delay, s/veh												
LnGrp Delay(d),s/veh	11.1	13.6	13.6	9.4	14.7	14.7	20.8	22.2	0.0	20.0	27.7	22.9
LnGrp LOS	B	B	B	A	B	B	C	C		B	C	C
Approach Vol, veh/h		669			1071			82	A		373	
Approach Delay, s/veh		13.2			14.0			21.8			26.1	
Approach LOS		B			B			C			C	

Timer - Assigned Phs	1	2	3	4	5	6	7	8
Phs Duration (G+Y+Rc), s	7.3	36.6	4.8	20.1	8.8	35.1	4.7	20.3
Change Period (Y+Rc), s	3.0	5.0	3.0	5.0	3.0	5.0	3.0	5.0
Max Green Setting (Gmax), s	20.0	60.0	20.0	40.0	20.0	60.0	20.0	40.0
Max Q Clear Time (g_c+I1), s	4.4	16.3	2.8	4.1	5.3	10.4	2.7	11.6
Green Ext Time (p_c), s	0.6	15.2	0.0	0.6	0.9	8.3	0.0	3.6

Intersection Summary	
HCM 6th Ctrl Delay	16.1
HCM 6th LOS	B

Notes

User approved pedestrian interval to be less than phase max green.

Unsignalized Delay for [NER] is excluded from calculations of the approach delay and intersection delay.

Movement	SEL	SET	SER	NWL	NWT	NWR	NEL	NET	NER	SWL	SWT	SWR
Lane Configurations												
Traffic Volume (veh/h)	164	916	14	45	705	31	138	215	116	34	45	122
Future Volume (veh/h)	164	916	14	45	705	31	138	215	116	34	45	122
Initial Q (Qb), veh	0	0	0	0	0	0	0	0	0	0	0	0
Ped-Bike Adj(A_pbT)	1.00		1.00	1.00		1.00	1.00		1.00	1.00		1.00
Parking Bus, Adj	1.00	1.00	1.00	1.00	1.00	1.00	1.00	1.00	1.00	1.00	1.00	1.00
Work Zone On Approach		No			No			No			No	
Adj Sat Flow, veh/h/ln	1723	1737	1723	1723	1737	1723	1723	1723	1792	1709	1709	1709
Adj Flow Rate, veh/h	178	996	15	49	766	34	150	234	0	37	49	82
Peak Hour Factor	0.92	0.92	0.92	0.92	0.92	0.92	0.92	0.92	0.92	0.92	0.92	0.92
Percent Heavy Veh, %	2	2	2	2	2	2	2	2	2	3	3	3
Cap, veh/h	435	1626	24	324	1409	63	413	354		253	241	204
Arrive On Green	0.09	0.49	0.49	0.04	0.44	0.44	0.10	0.21	0.00	0.04	0.14	0.14
Sat Flow, veh/h	1641	3329	50	1641	3219	143	1641	1723	1518	1628	1709	1448
Grp Volume(v), veh/h	178	494	517	49	393	407	150	234	0	37	49	82
Grp Sat Flow(s),veh/h/ln	1641	1651	1728	1641	1651	1712	1641	1723	1518	1628	1709	1448
Q Serve(g_s), s	3.8	15.5	15.5	1.1	12.4	12.4	5.2	8.8	0.0	1.4	1.8	3.7
Cycle Q Clear(g_c), s	3.8	15.5	15.5	1.1	12.4	12.4	5.2	8.8	0.0	1.4	1.8	3.7
Prop In Lane	1.00		0.03	1.00		0.08	1.00		1.00	1.00		1.00
Lane Grp Cap(c), veh/h	435	806	844	324	723	749	413	354		253	241	204
V/C Ratio(X)	0.41	0.61	0.61	0.15	0.54	0.54	0.36	0.66		0.15	0.20	0.40
Avail Cap(c_a), veh/h	743	1398	1464	715	1398	1450	711	973		653	965	818
HCM Platoon Ratio	1.00	1.00	1.00	1.00	1.00	1.00	1.00	1.00	1.00	1.00	1.00	1.00
Upstream Filter(I)	1.00	1.00	1.00	1.00	1.00	1.00	1.00	1.00	0.00	1.00	1.00	1.00
Uniform Delay (d), s/veh	9.7	13.2	13.2	10.9	14.7	14.7	20.9	25.9	0.0	24.6	26.9	27.7
Incr Delay (d2), s/veh	0.6	0.8	0.7	0.2	0.6	0.6	0.5	3.0	0.0	0.3	0.6	1.8
Initial Q Delay(d3),s/veh	0.0	0.0	0.0	0.0	0.0	0.0	0.0	0.0	0.0	0.0	0.0	0.0
%ile BackOfQ(90%),veh/ln	2.2	8.2	8.5	0.7	7.0	7.2	3.6	6.3	0.0	1.0	1.4	2.4
Unsig. Movement Delay, s/veh												
LnGrp Delay(d),s/veh	10.3	14.0	14.0	11.1	15.3	15.3	21.4	28.9	0.0	24.9	27.5	29.5
LnGrp LOS	B	B	B	B	B	B	C	C		C	C	C
Approach Vol, veh/h		1189			849			384	A		168	
Approach Delay, s/veh		13.4			15.1			25.9			27.9	
Approach LOS		B			B			C			C	

Timer - Assigned Phs	1	2	3	4	5	6	7	8
Phs Duration (G+Y+Rc), s	9.7	36.0	5.6	19.6	6.1	39.6	10.1	15.0
Change Period (Y+Rc), s	3.0	5.0	3.0	5.0	3.0	5.0	3.0	5.0
Max Green Setting (Gmax), s	20.0	60.0	20.0	40.0	20.0	60.0	20.0	40.0
Max Q Clear Time (g_c+I1), s	5.8	14.4	3.4	10.8	3.1	17.5	7.2	5.7
Green Ext Time (p_c), s	1.1	12.7	0.1	2.7	0.2	17.1	0.3	1.0

Intersection Summary	
HCM 6th Ctrl Delay	16.8
HCM 6th LOS	B

Notes

User approved pedestrian interval to be less than phase max green.

Unsignalized Delay for [NER] is excluded from calculations of the approach delay and intersection delay.

Intersection	
Int Delay, s/veh	1.3

Movement	EBL	EBT	EBR	WBL	WBT	WBR	NBL	NBT	NBR	SBL	SBT	SBR
Lane Configurations												
Traffic Vol, veh/h	15	4	48	0	2	57	25	814	2	14	579	77
Future Vol, veh/h	15	4	48	0	2	57	25	814	2	14	579	77
Conflicting Peds, #/hr	0	0	0	0	0	0	0	0	0	0	0	0
Sign Control	Stop	Stop	Stop	Stop	Stop	Stop	Free	Free	Free	Free	Free	Free
RT Channelized	-	-	None	-	-	None	-	-	None	-	-	None
Storage Length	-	-	-	-	-	-	50	-	-	70	-	-
Veh in Median Storage, #	-	1	-	-	1	-	-	0	-	-	0	-
Grade, %	-	0	-	-	0	-	-	0	-	-	0	-
Peak Hour Factor	92	92	92	92	92	92	92	92	92	92	92	92
Heavy Vehicles, %	2	2	2	2	2	2	2	2	2	2	2	2
Mvmt Flow	16	4	52	0	2	62	27	885	2	15	629	84

Major/Minor	Minor2			Minor1			Major1			Major2		
Conflicting Flow All	1199	1642	357	1287	1683	444	713	0	0	887	0	0
Stage 1	701	701	-	940	940	-	-	-	-	-	-	-
Stage 2	498	941	-	347	743	-	-	-	-	-	-	-
Critical Hdwy	7.54	6.54	6.94	7.54	6.54	6.94	4.14	-	-	4.14	-	-
Critical Hdwy Stg 1	6.54	5.54	-	6.54	5.54	-	-	-	-	-	-	-
Critical Hdwy Stg 2	6.54	5.54	-	6.54	5.54	-	-	-	-	-	-	-
Follow-up Hdwy	3.52	4.02	3.32	3.52	4.02	3.32	2.22	-	-	2.22	-	-
Pot Cap-1 Maneuver	141	99	639	121	93	561	883	-	-	759	-	-
Stage 1	395	439	-	283	340	-	-	-	-	-	-	-
Stage 2	523	340	-	642	420	-	-	-	-	-	-	-
Platoon blocked, %								-	-		-	-
Mov Cap-1 Maneuver	120	94	639	105	88	561	883	-	-	759	-	-
Mov Cap-2 Maneuver	240	207	-	207	202	-	-	-	-	-	-	-
Stage 1	383	430	-	274	329	-	-	-	-	-	-	-
Stage 2	448	329	-	572	412	-	-	-	-	-	-	-

Approach	EB	WB	NB	SB
HCM Control Delay, s	15.2	12.7	0.3	0.2
HCM LOS	C	B		

Minor Lane/Major Mvmt	NBL	NBT	NBR	EBLn1	WBLn1	SBL	SBT	SBR
Capacity (veh/h)	883	-	-	427	529	759	-	-
HCM Lane V/C Ratio	0.031	-	-	0.171	0.121	0.02	-	-
HCM Control Delay (s)	9.2	-	-	15.2	12.7	9.8	-	-
HCM Lane LOS	A	-	-	C	B	A	-	-
HCM 95th %tile Q(veh)	0.1	-	-	0.6	0.4	0.1	-	-

Intersection	
Int Delay, s/veh	2.2

Movement	EBL	EBT	EBR	WBL	WBT	WBR	NBL	NBT	NBR	SBL	SBT	SBR
Lane Configurations												
Traffic Vol, veh/h	54	2	49	2	0	31	23	822	12	30	849	42
Future Vol, veh/h	54	2	49	2	0	31	23	822	12	30	849	42
Conflicting Peds, #/hr	0	0	0	0	0	0	0	0	0	0	0	0
Sign Control	Stop	Stop	Stop	Stop	Stop	Stop	Free	Free	Free	Free	Free	Free
RT Channelized	-	-	None	-	-	None	-	-	None	-	-	None
Storage Length	-	-	-	-	-	-	50	-	-	70	-	-
Veh in Median Storage, #	-	1	-	-	1	-	-	0	-	-	0	-
Grade, %	-	0	-	-	0	-	-	0	-	-	0	-
Peak Hour Factor	92	92	92	92	92	92	92	92	92	92	92	92
Heavy Vehicles, %	2	2	2	2	2	2	2	2	2	2	2	2
Mvmt Flow	59	2	53	2	0	34	25	893	13	33	923	46

Major/Minor	Minor2			Minor1			Major1			Major2		
Conflicting Flow All	1509	1968	485	1479	1985	453	969	0	0	906	0	0
Stage 1	1012	1012	-	950	950	-	-	-	-	-	-	-
Stage 2	497	956	-	529	1035	-	-	-	-	-	-	-
Critical Hdwy	7.54	6.54	6.94	7.54	6.54	6.94	4.14	-	-	4.14	-	-
Critical Hdwy Stg 1	6.54	5.54	-	6.54	5.54	-	-	-	-	-	-	-
Critical Hdwy Stg 2	6.54	5.54	-	6.54	5.54	-	-	-	-	-	-	-
Follow-up Hdwy	3.52	4.02	3.32	3.52	4.02	3.32	2.22	-	-	2.22	-	-
Pot Cap-1 Maneuver	83	62	528	87	61	554	707	-	-	747	-	-
Stage 1	256	315	-	280	337	-	-	-	-	-	-	-
Stage 2	523	335	-	501	307	-	-	-	-	-	-	-
Platoon blocked, %								-	-		-	-
Mov Cap-1 Maneuver	73	57	528	73	56	554	707	-	-	747	-	-
Mov Cap-2 Maneuver	174	161	-	179	159	-	-	-	-	-	-	-
Stage 1	247	301	-	270	325	-	-	-	-	-	-	-
Stage 2	474	323	-	427	293	-	-	-	-	-	-	-

Approach	EB	WB	NB	SB
HCM Control Delay, s	30.4	12.9	0.3	0.3
HCM LOS	D	B		

Minor Lane/Major Mvmt	NBL	NBT	NBR	EBLn1	WBLn1	SBL	SBT	SBR
Capacity (veh/h)	707	-	-	253	492	747	-	-
HCM Lane V/C Ratio	0.035	-	-	0.451	0.073	0.044	-	-
HCM Control Delay (s)	10.3	-	-	30.4	12.9	10	-	-
HCM Lane LOS	B	-	-	D	B	B	-	-
HCM 95th %tile Q(veh)	0.1	-	-	2.2	0.2	0.1	-	-

HCS 2010 Roundabout Report

General Information

Analyst	AECOM
Agency or Co.	WisDOT
Date Performed	1/5/2021
Analysis Year	2050
Time Period	No-Build AM Peak
Project Description	1630-08-00 La Crosse Safety & Ops Study

Site Information

Intersection	61. USH 14/61 (South Ave) & STH 35 (West Ave) / Weston St
E/W Street Name	USH 14/61 (South Ave)
N/S Street Name	STH 35 (West Ave) / Weston St
Analysis Time Period (hrs)	0.25
Peak Hour Factor	0.86
Jurisdiction	WisDOT

Volume Adjustment and Site Characteristics

Approach	EB				WB				NB				SB			
Movement	U	L	T	R	U	L	T	R	U	L	T	R	U	L	T	R
Number of Lanes (N)	0	0	2	0	0	0	2	0	0	0	1	0	0	1	1	0
Lane Assignment	LT		TR		LT		TR				LTR		L		LTR	
Volume (V), veh/h	0	8	451	43	0	29	897	444	0	53	49	1	0	269	13	32
Percent Heavy Vehicles, %	8	8	8	8	3	3	3	3	0	0	0	0	1	1	1	1
Flow Rate (vPCE) pc/h	0	10	566	54	0	35	1074	532	0	62	57	1	0	316	15	38
Right-Turn Bypass	None				None				None				None			
Conflicting Lanes	2				1				2				2			
Pedestrians Crossing	0				0				0				0			

Critical and Follow-Up Headway Adjustment

Approach	EB			WB			NB			SB		
Movement	Left	Right	Bypass	Left	Right	Bypass	Left	Right	Bypass	Left	Right	Bypass
Critical Headway (sec)	4.6000	4.3000		4.7000	4.4000			4.8000		4.6000	4.3000	
Follow-Up Headway (sec)	2.6000	2.6000		2.5000	2.5000			2.6000		2.6000	2.6000	

Flow Computations, Capacity and v/c Ratios

Approach	EB			WB			NB			SB		
Movement	Left	Right	Bypass	Left	Right	Bypass	Left	Right	Bypass	Left	Right	Bypass
Entry Flow (Ve), pc/h	296	334		771	870			120		196	173	
Entry Volume veh/h	274	309		749	844			120		194	172	
Circulating Flow (Vc), pc/h	366			129			892			1171		
Exiting Flow (Vex), pc/h	883			1174			599			104		
Capacity (cPCE), pc/h	990	1021		1273	1286			582		473	522	
Capacity (c), veh/h	917	945		1235	1249			582		469	517	
v/c Ratio (X)	0.30	0.33		0.61	0.68			0.21		0.41	0.33	

Delay and Level of Service

Approach	EB			WB			NB			SB		
Movement	Left	Right	Bypass	Left	Right	Bypass	Left	Right	Bypass	Left	Right	Bypass
Lane Control Delay (d), s/veh	7.1	7.3		10.3	12.1			8.8		15.1	12.1	
Lane LOS	A	A		B	B			A		C	B	
95% Queue	1.3	1.4		4.3	5.6			0.8		2.0	1.4	
Approach Delay, s/veh	7.2			11.2			8.8			13.6		
Approach LOS	A			B			A			B		
Intersection Delay, s/veh / LOS	10.6						B					

Copyright © 2021 University of Florida. All Rights Reserved.

HCS 2010 Roundabout Report

General Information

Analyst	AECOM
Agency or Co.	WisDOT
Date Performed	1/5/2021
Analysis Year	2050
Time Period	No-Build PM Peak
Project Description	1630-08-00 La Crosse Safety & Ops Study

Site Information

Intersection	61. USH 14/61 (South Ave) & STH 35 (West Ave) / Weston St
E/W Street Name	USH 14/61 (South Ave)
N/S Street Name	STH 35 (West Ave) / Weston St
Analysis Time Period (hrs)	0.25
Peak Hour Factor	0.94
Jurisdiction	WisDOT

Volume Adjustment and Site Characteristics

Approach	EB				WB				NB				SB			
Movement	U	L	T	R	U	L	T	R	U	L	T	R	U	L	T	R
Number of Lanes (N)	0	0	2	0	0	0	2	0	0	0	1	0	0	1	1	0
Lane Assignment	LT		TR		LT		TR				LTR		L		LTR	
Volume (V), veh/h	0	21	1019	33	0	11	682	39	0	37	42	5	0	544	26	15
Percent Heavy Vehicles, %	0	0	0	0	2	2	2	2	0	0	0	0	0	0	0	0
Flow Rate (vPCE) pc/h	0	22	1084	35	0	12	740	42	0	39	45	5	0	579	28	16
Right-Turn Bypass	None				None				None				None			
Conflicting Lanes	2				1				2				2			
Pedestrians Crossing	0				0				0				0			

Critical and Follow-Up Headway Adjustment

Approach	EB			WB			NB			SB		
Movement	Left	Right	Bypass	Left	Right	Bypass	Left	Right	Bypass	Left	Right	Bypass
Critical Headway (sec)	4.6000	4.3000		4.7000	4.4000			4.8000		4.6000	4.3000	
Follow-Up Headway (sec)	2.6000	2.6000		2.5000	2.5000			2.6000		2.6000	2.6000	

Flow Computations, Capacity and v/c Ratios

Approach	EB			WB			NB			SB		
Movement	Left	Right	Bypass	Left	Right	Bypass	Left	Right	Bypass	Left	Right	Bypass
Entry Flow (Ve), pc/h	536	605		373	421			89		330	293	
Entry Volume veh/h	536	605		366	413			89		330	293	
Circulating Flow (Vc), pc/h	619			106			1685			791		
Exiting Flow (Vex), pc/h	1668			795			109			75		
Capacity (cPCE), pc/h	785	827		1301	1312			269		671	716	
Capacity (c), veh/h	785	827		1275	1287			269		671	716	
v/c Ratio (X)	0.68	0.73		0.29	0.32			0.33		0.49	0.41	

Delay and Level of Service

Approach	EB			WB			NB			SB		
Movement	Left	Right	Bypass	Left	Right	Bypass	Left	Right	Bypass	Left	Right	Bypass
Lane Control Delay (d), s/veh	17.3	18.9		5.4	5.7			21.5		12.9	10.5	
Lane LOS	C	C		A	A			C		B	B	
95% Queue	5.5	6.6		1.2	1.4			1.4		2.7	2.0	
Approach Delay, s/veh	18.1			5.6			21.5			11.8		
Approach LOS	C			A			C			B		
Intersection Delay, s/veh / LOS	13.0						B					

Copyright © 2021 University of Florida. All Rights Reserved.

HCS 2010 Roundabout Report

General Information

Analyst	AECOM
Agency or Co.	WisDOT
Date Performed	1/5/2021
Analysis Year	2050
Time Period	No-Build AM Peak
Project Description	1630-08-00 La Crosse Safety & Ops Study

Site Information

Intersection	62. USH 14/61 (South Ave) & 16th St / Castle Pl
E/W Street Name	USH 14/61 (South Ave)
N/S Street Name	16th St / Castle Pl
Analysis Time Period (hrs)	0.25
Peak Hour Factor	0.92
Jurisdiction	WisDOT

Volume Adjustment and Site Characteristics

Approach	EB				WB				NB				SB			
Movement	U	L	T	R	U	L	T	R	U	L	T	R	U	L	T	R
Number of Lanes (N)	0	0	2	0	0	0	2	0	0	0	1	0	0	0	1	0
Lane Assignment	LT		TR		LT		TR				LTR				LTR	
Volume (V), veh/h	0	11	732	13	0	2	1444	73	0	7	2	3	0	31	0	7
Percent Heavy Vehicles, %	2	2	2	2	2	2	2	2	2	2	2	2	2	2	2	2
Flow Rate (vPCE) pc/h	0	12	812	14	0	2	1601	81	0	8	2	3	0	34	0	8
Right-Turn Bypass	None				None				None				None			
Conflicting Lanes	1				1				2				2			
Pedestrians Crossing	0				0				0				0			

Critical and Follow-Up Headway Adjustment

Approach	EB			WB			NB			SB		
Movement	Left	Right	Bypass	Left	Right	Bypass	Left	Right	Bypass	Left	Right	Bypass
Critical Headway (sec)	4.7000	4.4000		4.7000	4.4000			4.8000			4.8000	
Follow-Up Headway (sec)	2.5000	2.5000		2.5000	2.5000			2.6000			2.6000	

Flow Computations, Capacity and v/c Ratios

Approach	EB			WB			NB			SB		
Movement	Left	Right	Bypass	Left	Right	Bypass	Left	Right	Bypass	Left	Right	Bypass
Entry Flow (Ve), pc/h	394	444		791	893			13			42	
Entry Volume veh/h	386	435		776	875			13			41	
Circulating Flow (Vc), pc/h	36			22			858			1611		
Exiting Flow (Vex), pc/h	849			1617			95			16		
Capacity (cPCE), pc/h	1391	1395		1410	1413			601			289	
Capacity (c), veh/h	1364	1368		1382	1385			589			283	
v/c Ratio (X)	0.28	0.32		0.56	0.63			0.02			0.15	

Delay and Level of Service

Approach	EB			WB			NB			SB		
Movement	Left	Right	Bypass	Left	Right	Bypass	Left	Right	Bypass	Left	Right	Bypass
Lane Control Delay (d), s/veh	5.1	5.4		8.7	10.1			6.4			15.6	
Lane LOS	A	A		A	B			A			C	
95% Queue	1.2	1.4		3.7	4.8			0.1			0.5	
Approach Delay, s/veh	5.3			9.4			6.4			15.6		
Approach LOS	A			A			A			C		
Intersection Delay, s/veh / LOS	8.2						A					

Copyright © 2021 University of Florida. All Rights Reserved.

HCS 2010 Roundabout Report

General Information

Analyst	AECOM
Agency or Co.	WisDOT
Date Performed	1/5/2021
Analysis Year	2050
Time Period	No-Build PM Peak
Project Description	1630-08-00 La Crosse Safety & Ops Study

Site Information

Intersection	62. USH 14/61 (South Ave) & 16th St / Castle Pl
E/W Street Name	USH 14/61 (South Ave)
N/S Street Name	16th St / Castle Pl
Analysis Time Period (hrs)	0.25
Peak Hour Factor	0.92
Jurisdiction	WisDOT

Volume Adjustment and Site Characteristics

Approach	EB				WB				NB				SB			
Movement	U	L	T	R	U	L	T	R	U	L	T	R	U	L	T	R
Number of Lanes (N)	0	0	2	0	0	0	2	0	0	0	1	0	0	0	1	0
Lane Assignment	LT		TR		LT		TR				LTR				LTR	
Volume (V), veh/h	0	8	1619	10	0	0	1074	102	0	7	3	0	0	40	0	18
Percent Heavy Vehicles, %	2	2	2	2	2	2	2	2	2	2	2	2	2	2	2	2
Flow Rate (vPCE) pc/h	0	9	1795	11	0	0	1191	113	0	8	3	0	0	44	0	20
Right-Turn Bypass	None				None				None				None			
Conflicting Lanes	1				1				2				2			
Pedestrians Crossing	0				0				0				0			

Critical and Follow-Up Headway Adjustment

Approach	EB			WB			NB			SB		
Movement	Left	Right	Bypass	Left	Right	Bypass	Left	Right	Bypass	Left	Right	Bypass
Critical Headway (sec)	4.7000	4.4000		4.7000	4.4000			4.8000			4.8000	
Follow-Up Headway (sec)	2.5000	2.5000		2.5000	2.5000			2.6000			2.6000	

Flow Computations, Capacity and v/c Ratios

Approach	EB			WB			NB			SB		
Movement	Left	Right	Bypass	Left	Right	Bypass	Left	Right	Bypass	Left	Right	Bypass
Entry Flow (Ve), pc/h	853	962		613	691			11			64	
Entry Volume veh/h	836	943		601	678			11			63	
Circulating Flow (Vc), pc/h	44			20			1848			1199		
Exiting Flow (Vex), pc/h	1839			1219			125			11		
Capacity (cPCE), pc/h	1381	1386		1413	1415			230			432	
Capacity (c), veh/h	1353	1358		1385	1387			225			423	
v/c Ratio (X)	0.62	0.69		0.43	0.49			0.05			0.15	

Delay and Level of Service

Approach	EB			WB			NB			SB		
Movement	Left	Right	Bypass	Left	Right	Bypass	Left	Right	Bypass	Left	Right	Bypass
Lane Control Delay (d), s/veh	9.9	11.9		6.7	7.5			17.0			10.7	
Lane LOS	A	B		A	A			C			B	
95% Queue	4.5	6.1		2.2	2.8			0.2			0.5	
Approach Delay, s/veh	11.0			7.1			17.0			10.7		
Approach LOS	B			A			C			B		
Intersection Delay, s/veh / LOS	9.4						A					

Copyright © 2021 University of Florida. All Rights Reserved.

HCS 2010 Roundabout Report

General Information

Analyst	AECOM
Agency or Co.	WisDOT
Date Performed	1/5/2021
Analysis Year	2050
Time Period	No-Build AM Peak
Project Description	1630-08-00 La Crosse Safety & Ops Study

Site Information

Intersection	63. USH 14/61 (South Ave) & Ward Ave / East Ave
E/W Street Name	USH 14/61 (South Ave)
N/S Street Name	Ward Ave / East Ave
Analysis Time Period (hrs)	0.25
Peak Hour Factor	0.86
Jurisdiction	WisDOT

Volume Adjustment and Site Characteristics

Approach	EB				WB				NB				SB			
Movement	U	L	T	R	U	L	T	R	U	L	T	R	U	L	T	R
Number of Lanes (N)	0	0	2	0	0	0	2	0	0	1	1	0	0	0	1	1
Lane Assignment	LT		TR		LT		TR		L		LTR		LT		R	
Volume (V), veh/h	0	162	451	112	0	10	1158	14	0	73	35	14	0	4	114	276
Percent Heavy Vehicles, %	7	7	7	7	2	2	2	2	4	4	4	4	4	4	4	4
Flow Rate (vPCE) pc/h	0	202	561	139	0	12	1373	17	0	88	42	17	0	5	138	334
Right-Turn Bypass	None				None				None				None			
Conflicting Lanes	1				2				2				2			
Pedestrians Crossing	0				0				0				0			

Critical and Follow-Up Headway Adjustment

Approach	EB			WB			NB			SB		
Movement	Left	Right	Bypass	Left	Right	Bypass	Left	Right	Bypass	Left	Right	Bypass
Critical Headway (sec)	4.7000	4.4000		4.6000	4.3000		4.6000	4.3000		4.6000	4.3000	
Follow-Up Headway (sec)	2.5000	2.5000		2.6000	2.6000		2.6000	2.6000		2.6000	2.6000	

Flow Computations, Capacity and v/c Ratios

Approach	EB			WB			NB			SB		
Movement	Left	Right	Bypass	Left	Right	Bypass	Left	Right	Bypass	Left	Right	Bypass
Entry Flow (Ve), pc/h	424	478		659	743		78	69		143	334	
Entry Volume veh/h	396	447		646	728		75	66		138	321	
Circulating Flow (Vc), pc/h	155			332			768			1473		
Exiting Flow (Vex), pc/h	583			1795			261			289		
Capacity (cPCE), pc/h	1241	1257		1021	1050		685	730		359	406	
Capacity (c), veh/h	1160	1175		1001	1029		658	702		345	390	
v/c Ratio (X)	0.34	0.38		0.65	0.71		0.11	0.09		0.40	0.82	

Delay and Level of Service

Approach	EB			WB			NB			SB		
Movement	Left	Right	Bypass	Left	Right	Bypass	Left	Right	Bypass	Left	Right	Bypass
Lane Control Delay (d), s/veh	6.4	6.8		13.1	15.0		6.7	6.1		19.2	44.3	
Lane LOS	A	A		B	C		A	A		C	E	
95% Queue	1.5	1.8		4.9	6.2		0.4	0.3		1.9	7.5	
Approach Delay, s/veh	6.6			14.1			6.5			36.8		
Approach LOS	A			B			A			E		
Intersection Delay, s/veh / LOS	15.2						C					

Copyright © 2021 University of Florida. All Rights Reserved.

HCS 2010 Roundabout Report

General Information

Analyst	AECOM
Agency or Co.	WisDOT
Date Performed	1/5/2021
Analysis Year	2050
Time Period	No-Build PM Peak
Project Description	1630-08-00 La Crosse Safety & Ops Study

Site Information

Intersection	63. USH 14/61 (South Ave) & Ward Ave / East Ave
E/W Street Name	USH 14/61 (South Ave)
N/S Street Name	Ward Ave / East Ave
Analysis Time Period (hrs)	0.25
Peak Hour Factor	0.88
Jurisdiction	WisDOT

Volume Adjustment and Site Characteristics

Approach	EB				WB				NB				SB			
Movement	U	L	T	R	U	L	T	R	U	L	T	R	U	L	T	R
Number of Lanes (N)	0	0	2	0	0	0	2	0	0	1	1	0	0	0	1	1
Lane Assignment	LT		TR		LT		TR		L		LTR		LT		R	
Volume (V), veh/h	0	314	1164	82	0	23	753	32	0	146	134	29	0	31	54	230
Percent Heavy Vehicles, %	0	0	0	0	2	2	2	2	0	0	0	0	3	3	3	3
Flow Rate (vPCE) pc/h	0	357	1323	93	0	27	873	37	0	166	152	33	0	36	63	269
Right-Turn Bypass	None				None				None				None			
Conflicting Lanes	1				2				2				2			
Pedestrians Crossing	0				0				0				0			

Critical and Follow-Up Headway Adjustment

Approach	EB			WB			NB			SB		
Movement	Left	Right	Bypass	Left	Right	Bypass	Left	Right	Bypass	Left	Right	Bypass
Critical Headway (sec)	4.7000	4.4000		4.6000	4.3000		4.6000	4.3000		4.6000	4.3000	
Follow-Up Headway (sec)	2.5000	2.5000		2.6000	2.6000		2.6000	2.6000		2.6000	2.6000	

Flow Computations, Capacity and v/c Ratios

Approach	EB			WB			NB			SB		
Movement	Left	Right	Bypass	Left	Right	Bypass	Left	Right	Bypass	Left	Right	Bypass
Entry Flow (Ve), pc/h	833	940		440	497		166	185		99	269	
Entry Volume veh/h	833	940		432	487		166	185		96	261	
Circulating Flow (Vc), pc/h	126			675			1716			1066		
Exiting Flow (Vex), pc/h	1392			1308			546			183		
Capacity (cPCE), pc/h	1276	1290		746	789		287	331		521	570	
Capacity (c), veh/h	1276	1290		731	773		287	331		506	553	
v/c Ratio (X)	0.65	0.73		0.59	0.63		0.58	0.56		0.19	0.47	

Delay and Level of Service

Approach	EB			WB			NB			SB		
Movement	Left	Right	Bypass	Left	Right	Bypass	Left	Right	Bypass	Left	Right	Bypass
Lane Control Delay (d), s/veh	11.2	13.5		14.7	15.4		31.3	26.6		9.7	14.6	
Lane LOS	B	B		B	C		D	D		A	B	
95% Queue	5.2	7.0		3.9	4.5		3.4	3.2		0.7	2.5	
Approach Delay, s/veh	12.4			15.1			28.8			13.3		
Approach LOS	B			C			D			B		
Intersection Delay, s/veh / LOS	14.9						B					

Copyright © 2021 University of Florida. All Rights Reserved.

Movement	EBL	EBT	EBR	WBL	WBT	WBR	NBL	NBT	NBR	SBL	SBT	SBR
Lane Configurations												
Traffic Volume (veh/h)	103	76	30	38	253	108	66	676	47	49	379	198
Future Volume (veh/h)	103	76	30	38	253	108	66	676	47	49	379	198
Initial Q (Qb), veh	0	0	0	0	0	0	0	0	0	0	0	0
Ped-Bike Adj(A_pbT)	1.00		1.00	1.00		1.00	1.00		1.00	1.00		1.00
Parking Bus, Adj	1.00	1.00	1.00	1.00	1.00	1.00	1.00	1.00	1.00	1.00	1.00	1.00
Work Zone On Approach		No			No			No			No	
Adj Sat Flow, veh/h/ln	1682	1682	1682	1695	1763	1695	1628	1695	1695	1668	1668	1668
Adj Flow Rate, veh/h	111	82	32	41	272	116	71	727	51	53	408	132
Peak Hour Factor	0.93	0.93	0.93	0.93	0.93	0.93	0.93	0.93	0.93	0.93	0.93	0.93
Percent Heavy Veh, %	5	5	5	4	4	4	4	4	4	6	6	6
Cap, veh/h	245	309	121	463	300	128	467	1143	80	352	1145	511
Arrive On Green	0.08	0.27	0.27	0.06	0.26	0.26	0.10	0.37	0.37	0.09	0.36	0.36
Sat Flow, veh/h	1602	1151	449	1615	1173	500	1550	3053	214	1589	3169	1414
Grp Volume(v), veh/h	111	0	114	41	0	388	71	383	395	53	408	132
Grp Sat Flow(s),veh/h/ln	1602	0	1601	1615	0	1673	1550	1611	1657	1589	1585	1414
Q Serve(g_s), s	3.9	0.0	4.4	1.4	0.0	17.5	2.0	15.2	15.2	1.5	7.3	5.1
Cycle Q Clear(g_c), s	3.9	0.0	4.4	1.4	0.0	17.5	2.0	15.2	15.2	1.5	7.3	5.1
Prop In Lane	1.00		0.28	1.00		0.30	1.00		0.13	1.00		1.00
Lane Grp Cap(c), veh/h	245	0	429	463	0	429	467	603	620	352	1145	511
V/C Ratio(X)	0.45	0.00	0.27	0.09	0.00	0.91	0.15	0.64	0.64	0.15	0.36	0.26
Avail Cap(c_a), veh/h	535	0	925	878	0	967	809	1241	1277	825	2443	1090
HCM Platoon Ratio	1.00	1.00	1.00	1.00	1.00	1.00	1.00	1.00	1.00	1.00	1.00	1.00
Upstream Filter(I)	1.00	0.00	1.00	1.00	0.00	1.00	1.00	1.00	1.00	1.00	1.00	1.00
Uniform Delay (d), s/veh	20.9	0.0	22.4	18.5	0.0	28.0	12.2	20.0	20.0	13.6	18.2	17.5
Incr Delay (d2), s/veh	0.5	0.0	0.1	0.0	0.0	3.0	0.1	1.1	1.1	0.1	0.2	0.3
Initial Q Delay(d3),s/veh	0.0	0.0	0.0	0.0	0.0	0.0	0.0	0.0	0.0	0.0	0.0	0.0
%ile BackOfQ(90%),veh/ln	2.6	0.0	2.9	0.9	0.0	10.6	1.2	8.7	8.9	0.9	4.7	3.0
Unsig. Movement Delay, s/veh												
LnGrp Delay(d),s/veh	21.3	0.0	22.6	18.6	0.0	31.0	12.2	21.1	21.1	13.7	18.4	17.8
LnGrp LOS	C	A	C	B	A	C	B	C	C	B	B	B
Approach Vol, veh/h		225			429			849			593	
Approach Delay, s/veh		22.0			29.9			20.4			17.9	
Approach LOS		C			C			C			B	

Timer - Assigned Phs	1	2	3	4	5	6	7	8
Phs Duration (G+Y+Rc), s	9.8	34.2	8.9	24.9	10.8	33.1	8.0	25.9
Change Period (Y+Rc), s	3.0	5.0	3.0	5.0	3.0	5.0	3.0	5.0
Max Green Setting (Gmax), s	30.0	60.0	20.0	45.0	25.0	60.0	25.0	45.0
Max Q Clear Time (g_c+I1), s	3.5	17.2	5.9	19.5	4.0	9.3	3.4	6.4
Green Ext Time (p_c), s	0.0	11.9	0.1	0.5	0.1	4.4	0.0	0.1

Intersection Summary	
HCM 6th Ctrl Delay	21.8
HCM 6th LOS	C

Movement	EBL	EBT	EBR	WBL	WBT	WBR	NBL	NBT	NBR	SBL	SBT	SBR
Lane Configurations												
Traffic Volume (veh/h)	269	198	53	88	127	66	42	527	84	76	703	172
Future Volume (veh/h)	269	198	53	88	127	66	42	527	84	76	703	172
Initial Q (Qb), veh	0	0	0	0	0	0	0	0	0	0	0	0
Ped-Bike Adj(A_pbT)	1.00		1.00	1.00		1.00	1.00		1.00	1.00		1.00
Parking Bus, Adj	1.00	1.00	1.00	1.00	1.00	1.00	1.00	1.00	1.00	1.00	1.00	1.00
Work Zone On Approach		No			No			No			No	
Adj Sat Flow, veh/h/ln	1723	1723	1723	1723	1792	1723	1614	1682	1682	1723	1723	1723
Adj Flow Rate, veh/h	306	225	60	100	144	75	48	599	95	86	799	121
Peak Hour Factor	0.88	0.88	0.88	0.88	0.88	0.88	0.88	0.88	0.88	0.88	0.88	0.88
Percent Heavy Veh, %	2	2	2	2	2	2	5	5	5	2	2	2
Cap, veh/h	416	332	89	328	171	89	323	973	154	402	1237	552
Arrive On Green	0.18	0.25	0.25	0.08	0.15	0.15	0.08	0.35	0.35	0.11	0.38	0.38
Sat Flow, veh/h	1641	1310	349	1641	1110	578	1538	2763	437	1641	3273	1460
Grp Volume(v), veh/h	306	0	285	100	0	219	48	346	348	86	799	121
Grp Sat Flow(s),veh/h/ln	1641	0	1660	1641	0	1688	1538	1598	1603	1641	1637	1460
Q Serve(g_s), s	11.3	0.0	11.9	3.8	0.0	9.7	1.4	13.8	13.8	2.2	15.4	4.3
Cycle Q Clear(g_c), s	11.3	0.0	11.9	3.8	0.0	9.7	1.4	13.8	13.8	2.2	15.4	4.3
Prop In Lane	1.00		0.21	1.00		0.34	1.00		0.27	1.00		1.00
Lane Grp Cap(c), veh/h	416	0	421	328	0	260	323	562	564	402	1237	552
V/C Ratio(X)	0.74	0.00	0.68	0.30	0.00	0.84	0.15	0.61	0.62	0.21	0.65	0.22
Avail Cap(c_a), veh/h	553	0	972	735	0	988	695	1247	1251	863	2555	1140
HCM Platoon Ratio	1.00	1.00	1.00	1.00	1.00	1.00	1.00	1.00	1.00	1.00	1.00	1.00
Upstream Filter(I)	1.00	0.00	1.00	1.00	0.00	1.00	1.00	1.00	1.00	1.00	1.00	1.00
Uniform Delay (d), s/veh	20.7	0.0	25.9	24.3	0.0	31.6	13.9	20.6	20.6	12.8	19.7	16.2
Incr Delay (d2), s/veh	2.1	0.0	0.7	0.2	0.0	2.9	0.1	1.1	1.1	0.1	0.6	0.2
Initial Q Delay(d3),s/veh	0.0	0.0	0.0	0.0	0.0	0.0	0.0	0.0	0.0	0.0	0.0	0.0
%ile BackOfQ(90%),veh/ln	7.1	0.0	7.4	2.7	0.0	6.7	0.8	8.0	8.0	1.4	8.8	2.6
Unsig. Movement Delay, s/veh												
LnGrp Delay(d),s/veh	22.8	0.0	26.6	24.5	0.0	34.5	14.0	21.7	21.7	12.9	20.2	16.4
LnGrp LOS	C	A	C	C	A	C	B	C	C	B	C	B
Approach Vol, veh/h		591			319			742			1006	
Approach Delay, s/veh		24.6			31.3			21.2			19.2	
Approach LOS		C			C			C			B	

Timer - Assigned Phs	1	2	3	4	5	6	7	8
Phs Duration (G+Y+Rc), s	11.4	32.1	16.6	16.8	9.4	34.0	8.9	24.5
Change Period (Y+Rc), s	3.0	5.0	3.0	5.0	3.0	5.0	3.0	5.0
Max Green Setting (Gmax), s	30.0	60.0	20.0	45.0	25.0	60.0	25.0	45.0
Max Q Clear Time (g_c+I1), s	4.2	15.8	13.3	11.7	3.4	17.4	5.8	13.9
Green Ext Time (p_c), s	0.1	10.4	0.2	0.2	0.0	11.6	0.1	0.3

Intersection Summary	
HCM 6th Ctrl Delay	22.4
HCM 6th LOS	C

Lane Group	SEL	SET	SER	NWL	NWT	NWR	NEL	NET	NER	SWL	SWT	SWR
Lane Configurations												
Traffic Volume (vph)	17	414	13	23	1203	51	9	6	3	41	29	44
Future Volume (vph)	17	414	13	23	1203	51	9	6	3	41	29	44
Ideal Flow (vphpl)	1750	1840	1750	1750	1840	1750	1750	1750	1750	1750	1750	1750
Lane Width (ft)	10	12	12	10	12	12	11	12	11	12	10	12
Storage Length (ft)	130		0	130		0	0		110	0		130
Storage Lanes	1		0	1		0	0		1	0		1
Taper Length (ft)	75			75			25			25		
Lane Util. Factor	1.00	0.95	0.95	1.00	0.95	0.95	1.00	1.00	1.00	1.00	1.00	1.00
Frt		0.995			0.994				0.850			0.850
Flt Protected	0.950			0.950				0.971			0.972	
Satd. Flow (prot)	1398	3134	0	1521	3407	0	0	1699	1438	0	1541	1444
Flt Permitted	0.149			0.462				0.797			0.810	
Satd. Flow (perm)	219	3134	0	740	3407	0	0	1395	1438	0	1284	1444
Right Turn on Red			No			No			No			No
Satd. Flow (RTOR)												
Link Speed (mph)		35			35			30			30	
Link Distance (ft)		308			430			275			279	
Travel Time (s)		6.0			8.4			6.3			6.3	
Peak Hour Factor	0.86	0.86	0.86	0.86	0.86	0.86	0.86	0.86	0.86	0.86	0.86	0.86
Growth Factor	100%	100%	100%	100%	100%	100%	100%	100%	62%	100%	100%	62%
Heavy Vehicles (%)	11%	11%	11%	2%	2%	2%	0%	0%	0%	3%	3%	3%
Adj. Flow (vph)	20	481	15	27	1399	59	10	7	2	48	34	32
Shared Lane Traffic (%)												
Lane Group Flow (vph)	20	496	0	27	1458	0	0	17	2	0	82	32
Enter Blocked Intersection	No	No	No	No	No	No	No	No	No	No	No	No
Lane Alignment	Left	Left	Right	Left	Left	Right	Left	Left	Right	Left	Left	Right
Median Width(ft)		20			20			0			0	
Link Offset(ft)		0			0			0			0	
Crosswalk Width(ft)		16			16			16			16	
Two way Left Turn Lane												
Headway Factor	1.21	1.04	1.11	1.21	1.04	1.11	1.16	1.11	1.16	1.11	1.21	1.11
Turning Speed (mph)	15		9	15		9	15		9	15		9
Number of Detectors	1	2		1	2		2	2	2	1	2	2
Detector Template										Left		
Leading Detector (ft)	25	303		25	303		118	156	303	20	128	128
Trailing Detector (ft)	0	150		0	150		0	0	150	0	0	0
Detector 1 Position(ft)	0	150		0	150		0	0	150	0	0	0
Detector 1 Size(ft)	25	3		25	3		30	6	3	20	30	30
Detector 1 Type	Cl+Ex	Cl+Ex		Cl+Ex	Cl+Ex		Cl+Ex	Cl+Ex	Cl+Ex	Cl+Ex	Cl+Ex	Cl+Ex
Detector 1 Channel												
Detector 1 Extend (s)	0.0	0.0		0.0	0.0		0.0	0.0	0.0	0.0	0.0	0.0
Detector 1 Queue (s)	0.0	0.0		0.0	0.0		0.0	0.0	0.0	0.0	0.0	0.0
Detector 1 Delay (s)	0.0	0.0		0.0	0.0		2.0	0.0	10.0	0.0	2.0	10.0
Detector 2 Position(ft)		300			300		115	150	300		125	125
Detector 2 Size(ft)		3			3		3	6	3		3	3
Detector 2 Type		Extend			Extend		Extend	Cl+Ex	Extend		Extend	Extend
Detector 2 Channel												
Detector 2 Extend (s)		0.0			0.0		2.5	0.0	2.5		2.5	2.5

Lane Group	SEL	SET	SER	NWL	NWT	NWR	NEL	NET	NER	SWL	SWT	SWR
Turn Type	pm+pt	NA		pm+pt	NA		Perm	NA	Perm	Perm	NA	Perm
Protected Phases	1	6		5	2			4			8	
Permitted Phases	6			2			4		4	8		8
Detector Phase	1	6		5	2		4	4	4	8	8	8
Switch Phase												
Minimum Initial (s)	5.0	19.0		5.0	19.0		10.0	10.0	10.0	10.0	10.0	10.0
Minimum Split (s)	8.0	38.0		8.0	38.0		33.0	33.0	33.0	33.0	33.0	33.0
Total Split (s)	15.0	57.0		15.0	57.0		38.0	38.0	38.0	38.0	38.0	38.0
Total Split (%)	13.6%	51.8%		13.6%	51.8%		34.5%	34.5%	34.5%	34.5%	34.5%	34.5%
Maximum Green (s)	12.0	51.0		12.0	51.0		32.0	32.0	32.0	32.0	32.0	32.0
Yellow Time (s)	3.0	4.0		3.0	4.0		4.0	4.0	4.0	4.0	4.0	4.0
All-Red Time (s)	0.0	2.0		0.0	2.0		2.0	2.0	2.0	2.0	2.0	2.0
Lost Time Adjust (s)	0.0	0.0		0.0	0.0			0.0	0.0		0.0	0.0
Total Lost Time (s)	3.0	6.0		3.0	6.0			6.0	6.0		6.0	6.0
Lead/Lag	Lead	Lag		Lead	Lag							
Lead-Lag Optimize?	Yes	Yes		Yes	Yes							
Vehicle Extension (s)	4.0	4.0		4.0	4.0		3.0	3.0	3.0	3.0	3.0	3.0
Recall Mode	None	C-Max		None	C-Max		None	None	None	None	None	None
Walk Time (s)		10.0			10.0		10.0	10.0	10.0	10.0	10.0	10.0
Flash Dont Walk (s)		22.0			22.0		17.0	17.0	17.0	17.0	17.0	17.0
Pedestrian Calls (#/hr)		0			0		0	0	0	0	0	0
Act Effct Green (s)	89.5	83.5		90.2	85.5			12.8	12.8		12.8	12.8
Actuated g/C Ratio	0.81	0.76		0.82	0.78			0.12	0.12		0.12	0.12
v/c Ratio	0.08	0.21		0.04	0.55			0.10	0.01		0.55	0.19
Control Delay	3.5	6.0		0.3	3.8			43.1	40.5		59.1	45.1
Queue Delay	0.0	0.0		0.0	0.0			0.0	0.0		0.0	0.0
Total Delay	3.5	6.0		0.3	3.8			43.1	40.5		59.1	45.1
LOS	A	A		A	A			D	D		E	D
Approach Delay		5.9			3.7			42.8			55.2	
Approach LOS		A			A			D			E	
Queue Length 50th (ft)	2	60		0	6			11	1		56	21
Queue Length 95th (ft)	8	94		m0	116			30	8		97	46
Internal Link Dist (ft)		228			350			195			199	
Turn Bay Length (ft)	130			130					110			130
Base Capacity (vph)	310	2378		700	2647			405	418		373	420
Starvation Cap Reductn	0	0		0	0			0	0		0	0
Spillback Cap Reductn	0	0		0	0			0	0		0	0
Storage Cap Reductn	0	0		0	0			0	0		0	0
Reduced v/c Ratio	0.06	0.21		0.04	0.55			0.04	0.00		0.22	0.08

Intersection Summary

Area Type: Other
Cycle Length: 110
Actuated Cycle Length: 110
Offset: 96 (87%), Referenced to phase 2:NWTL and 6:SETL, Start of 1st Green
Natural Cycle: 80
Control Type: Actuated-Coordinated
Maximum v/c Ratio: 0.55
Intersection Signal Delay: 7.3 Intersection LOS: A

Intersection Capacity Utilization 67.7% ICU Level of Service C

Analysis Period (min) 15

m Volume for 95th percentile queue is metered by upstream signal.

Splits and Phases: 65: Victory St/21st Pl & USH 14/61 (Mormon Coulee Rd)

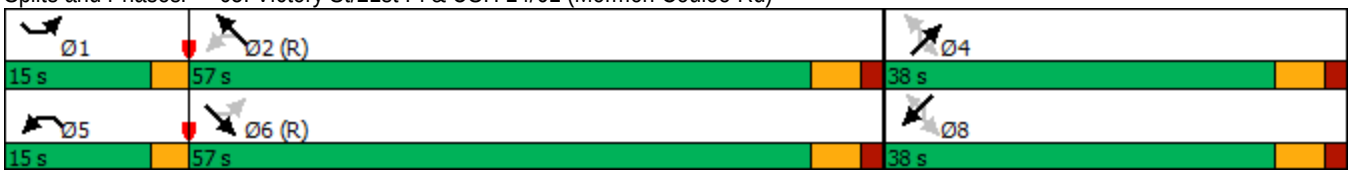

Lane Group	SEL	SET	SER	NWL	NWT	NWR	NEL	NET	NER	SWL	SWT	SWR
Lane Configurations												
Traffic Volume (vph)	36	1189	12	12	754	43	25	26	23	98	25	28
Future Volume (vph)	36	1189	12	12	754	43	25	26	23	98	25	28
Ideal Flow (vphpl)	1750	1840	1750	1750	1840	1750	1750	1750	1750	1750	1750	1750
Lane Width (ft)	10	12	12	10	12	12	11	12	11	12	10	12
Storage Length (ft)	130		0	130		0	0		110	0		130
Storage Lanes	1		0	1		0	0		1	0		1
Taper Length (ft)	75			75			25			25		
Lane Util. Factor	1.00	0.95	0.95	1.00	0.95	0.95	1.00	1.00	1.00	1.00	1.00	1.00
Frt		0.999			0.992				0.850			0.850
Flt Protected	0.950			0.950				0.976			0.962	
Satd. Flow (prot)	1521	3424	0	1521	3400	0	0	1708	1438	0	1511	1430
Flt Permitted	0.302			0.193				0.811			0.734	
Satd. Flow (perm)	484	3424	0	309	3400	0	0	1419	1438	0	1153	1430
Right Turn on Red			No			No			No			No
Satd. Flow (RTOR)												
Link Speed (mph)		35			35			30			30	
Link Distance (ft)		308			430			325			297	
Travel Time (s)		6.0			8.4			7.4			6.8	
Peak Hour Factor	0.97	0.97	0.97	0.97	0.97	0.97	0.97	0.97	0.97	0.97	0.97	0.97
Growth Factor	100%	100%	100%	100%	100%	100%	100%	100%	62%	100%	100%	62%
Heavy Vehicles (%)	2%	2%	2%	2%	2%	2%	0%	0%	0%	4%	4%	4%
Adj. Flow (vph)	37	1226	12	12	777	44	26	27	15	101	26	18
Shared Lane Traffic (%)												
Lane Group Flow (vph)	37	1238	0	12	821	0	0	53	15	0	127	18
Enter Blocked Intersection	No	No	No	No	No	No	No	No	No	No	No	No
Lane Alignment	Left	Left	Right	Left	Left	Right	Left	Left	Right	Left	Left	Right
Median Width(ft)		20			20			0			0	
Link Offset(ft)		0			0			0			0	
Crosswalk Width(ft)		16			16			16			16	
Two way Left Turn Lane												
Headway Factor	1.21	1.04	1.11	1.21	1.04	1.11	1.16	1.11	1.16	1.11	1.21	1.11
Turning Speed (mph)	15		9	15		9	15		9	15		9
Number of Detectors	1	2		1	2		2	2	2	1	2	2
Detector Template										Left		
Leading Detector (ft)	25	303		25	303		118	156	303	20	128	128
Trailing Detector (ft)	0	150		0	150		0	0	150	0	0	0
Detector 1 Position(ft)	0	150		0	150		0	0	150	0	0	0
Detector 1 Size(ft)	25	3		25	3		30	6	3	20	30	30
Detector 1 Type	Cl+Ex	Cl+Ex		Cl+Ex	Cl+Ex		Cl+Ex	Cl+Ex	Cl+Ex	Cl+Ex	Cl+Ex	Cl+Ex
Detector 1 Channel												
Detector 1 Extend (s)	0.0	0.0		0.0	0.0		0.0	0.0	0.0	0.0	0.0	0.0
Detector 1 Queue (s)	0.0	0.0		0.0	0.0		0.0	0.0	0.0	0.0	0.0	0.0
Detector 1 Delay (s)	0.0	0.0		0.0	0.0		2.0	0.0	10.0	0.0	2.0	10.0
Detector 2 Position(ft)		300			300		115	150	300		125	125
Detector 2 Size(ft)		3			3		3	6	3		3	3
Detector 2 Type		Extend			Extend		Extend	Cl+Ex	Extend		Extend	Extend
Detector 2 Channel												
Detector 2 Extend (s)		0.0			0.0		2.5	0.0	2.5		2.5	2.5

Lane Group	SEL	SET	SER	NWL	NWT	NWR	NEL	NET	NER	SWL	SWT	SWR
Turn Type	pm+pt	NA		pm+pt	NA		Perm	NA	Perm	Perm	NA	Perm
Protected Phases	1	6		5	2			4			8	
Permitted Phases	6			2			4		4	8		8
Detector Phase	1	6		5	2		4	4	4	8	8	8
Switch Phase												
Minimum Initial (s)	5.0	19.0		5.0	19.0		10.0	10.0	10.0	10.0	10.0	10.0
Minimum Split (s)	8.0	38.0		8.0	38.0		33.0	33.0	33.0	33.0	33.0	33.0
Total Split (s)	16.0	53.0		16.0	53.0		41.0	41.0	41.0	41.0	41.0	41.0
Total Split (%)	14.5%	48.2%		14.5%	48.2%		37.3%	37.3%	37.3%	37.3%	37.3%	37.3%
Maximum Green (s)	13.0	47.0		13.0	47.0		35.0	35.0	35.0	35.0	35.0	35.0
Yellow Time (s)	3.0	4.0		3.0	4.0		4.0	4.0	4.0	4.0	4.0	4.0
All-Red Time (s)	0.0	2.0		0.0	2.0		2.0	2.0	2.0	2.0	2.0	2.0
Lost Time Adjust (s)	0.0	0.0		0.0	0.0			0.0	0.0		0.0	0.0
Total Lost Time (s)	3.0	6.0		3.0	6.0			6.0	6.0		6.0	6.0
Lead/Lag	Lead	Lag		Lead	Lag							
Lead-Lag Optimize?	Yes	Yes		Yes	Yes							
Vehicle Extension (s)	4.0	4.0		4.0	4.0		3.0	3.0	3.0	3.0	3.0	3.0
Recall Mode	None	C-Max		None	C-Max		None	None	None	None	None	None
Walk Time (s)		10.0			10.0		10.0	10.0	10.0	10.0	10.0	10.0
Flash Dont Walk (s)		22.0			22.0		17.0	17.0	17.0	17.0	17.0	17.0
Pedestrian Calls (#/hr)		3			0		2	2	2	1	1	1
Act Effct Green (s)	82.7	78.0		80.8	73.7			17.9	17.9		17.9	17.9
Actuated g/C Ratio	0.75	0.71		0.73	0.67			0.16	0.16		0.16	0.16
v/c Ratio	0.09	0.51		0.04	0.36			0.23	0.06		0.68	0.08
Control Delay	5.1	9.8		3.4	9.2			39.7	35.7		60.0	36.1
Queue Delay	0.0	0.0		0.0	0.0			0.0	0.0		0.0	0.0
Total Delay	5.1	9.8		3.4	9.2			39.7	35.7		60.0	36.1
LOS	A	A		A	A			D	D		E	D
Approach Delay		9.7			9.1			38.8			57.0	
Approach LOS		A			A			D			E	
Queue Length 50th (ft)	5	166		1	50			33	9		86	11
Queue Length 95th (ft)	19	380		m0	380			64	25		137	29
Internal Link Dist (ft)		228			350			245			217	
Turn Bay Length (ft)	130			130					110			130
Base Capacity (vph)	488	2429		376	2277			451	457		366	455
Starvation Cap Reductn	0	0		0	0			0	0		0	0
Spillback Cap Reductn	0	0		0	0			0	0		0	0
Storage Cap Reductn	0	0		0	0			0	0		0	0
Reduced v/c Ratio	0.08	0.51		0.03	0.36			0.12	0.03		0.35	0.04

Intersection Summary

Area Type: Other
Cycle Length: 110
Actuated Cycle Length: 110
Offset: 38 (35%), Referenced to phase 2:NWTL and 6:SETL, Start of 1st Green
Natural Cycle: 80
Control Type: Actuated-Coordinated
Maximum v/c Ratio: 0.68
Intersection Signal Delay: 13.3 Intersection LOS: B

Intersection Capacity Utilization 66.0% ICU Level of Service C

Analysis Period (min) 15

m Volume for 95th percentile queue is metered by upstream signal.

Splits and Phases: 65: Victory St/21st Pl & USH 14/61 (Mormon Coulee Rd)

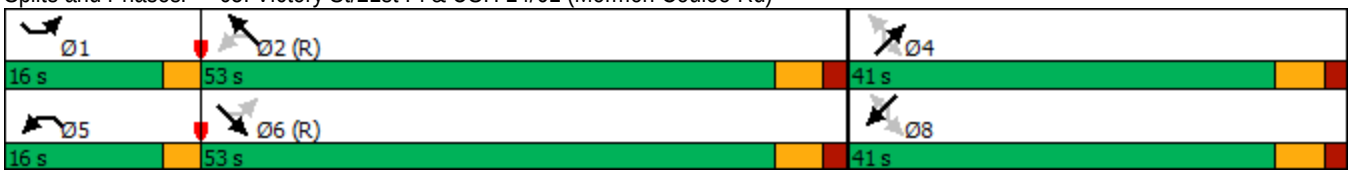

Movement	EBL	EBT	EBR	WBL	WBT	WBR	NBL	NBT	NBR	SBL	SBT	SBR
Lane Configurations												
Traffic Volume (veh/h)	60	67	4	261	83	36	8	1194	542	22	368	55
Future Volume (veh/h)	60	67	4	261	83	36	8	1194	542	22	368	55
Initial Q (Qb), veh	0	0	0	0	0	0	0	0	0	0	0	0
Ped-Bike Adj(A_pbT)	1.00		1.00	1.00		1.00	1.00		1.00	1.00		1.00
Parking Bus, Adj	1.00	1.00	1.00	1.00	1.00	1.00	1.00	1.00	1.00	1.00	1.00	1.00
Work Zone On Approach		No			No			No			No	
Adj Sat Flow, veh/h/ln	1668	1668	1668	1641	1641	1641	1723	1831	1723	1627	1729	1627
Adj Flow Rate, veh/h	68	76	5	297	94	41	9	1357	382	25	418	39
Peak Hour Factor	0.88	0.88	0.88	0.88	0.88	0.88	0.88	0.88	0.88	0.88	0.88	0.88
Percent Heavy Veh, %	6	6	6	8	8	8	2	2	2	9	9	9
Cap, veh/h	129	245	16	470	163	71	554	1925	1028	173	1862	782
Arrive On Green	0.08	0.08	0.08	0.15	0.15	0.15	0.01	0.55	0.55	0.02	0.57	0.57
Sat Flow, veh/h	1589	3021	197	3125	1083	472	1641	3479	1460	1550	3286	1379
Grp Volume(v), veh/h	68	40	41	297	0	135	9	1357	382	25	418	39
Grp Sat Flow(s),veh/h/ln	1589	1585	1633	1563	0	1556	1641	1739	1460	1550	1643	1379
Q Serve(g_s), s	4.5	2.6	2.6	9.8	0.0	8.9	0.3	31.4	11.5	0.8	6.9	1.4
Cycle Q Clear(g_c), s	4.5	2.6	2.6	9.8	0.0	8.9	0.3	31.4	11.5	0.8	6.9	1.4
Prop In Lane	1.00		0.12	1.00		0.30	1.00		1.00	1.00		1.00
Lane Grp Cap(c), veh/h	129	128	132	470	0	234	554	1925	1028	173	1862	782
V/C Ratio(X)	0.53	0.31	0.31	0.63	0.00	0.58	0.02	0.70	0.37	0.14	0.22	0.05
Avail Cap(c_a), veh/h	173	173	178	909	0	453	715	1925	1028	305	1862	782
HCM Platoon Ratio	1.00	1.00	1.00	1.00	1.00	1.00	1.00	1.00	1.00	1.00	1.00	1.00
Upstream Filter(I)	1.00	1.00	1.00	1.00	0.00	1.00	1.00	1.00	1.00	1.00	1.00	1.00
Uniform Delay (d), s/veh	48.5	47.6	47.7	43.9	0.0	43.5	10.6	18.0	6.5	14.9	11.8	10.6
Incr Delay (d2), s/veh	3.3	1.3	1.3	1.4	0.0	2.2	0.0	2.2	1.0	0.4	0.3	0.1
Initial Q Delay(d3),s/veh	0.0	0.0	0.0	0.0	0.0	0.0	0.0	0.0	0.0	0.0	0.0	0.0
%ile BackOfQ(90%),veh/ln	3.5	1.9	2.0	6.4	0.0	6.0	0.2	16.8	8.8	0.5	4.5	0.8
Unsig. Movement Delay, s/veh												
LnGrp Delay(d),s/veh	51.9	49.0	49.0	45.3	0.0	45.7	10.6	20.2	7.6	15.3	12.1	10.7
LnGrp LOS	D	D	D	D	A	D	B	C	A	B	B	B
Approach Vol, veh/h		149			432			1748			482	
Approach Delay, s/veh		50.3			45.4			17.4			12.2	
Approach LOS		D			D			B			B	

Timer - Assigned Phs	1	2		4	5	6		8				
Phs Duration (G+Y+Rc), s	4.2	68.3		22.5	5.7	66.9		14.9				
Change Period (Y+Rc), s	3.0	6.0		6.0	3.0	6.0		6.0				
Max Green Setting (Gmax), s	12.0	33.0		32.0	12.0	33.0		12.0				
Max Q Clear Time (g_c+I1), s	2.3	8.9		11.8	2.8	33.4		6.5				
Green Ext Time (p_c), s	0.0	7.8		4.7	0.0	0.0		0.5				

Intersection Summary	
HCM 6th Ctrl Delay	22.5
HCM 6th LOS	C

Notes

User approved volume balancing among the lanes for turning movement.

Movement	EBL	EBT	EBR	WBL	WBT	WBR	NBL	NBT	NBR	SBL	SBT	SBR
Lane Configurations												
Traffic Volume (veh/h)	116	102	27	627	118	28	37	647	434	30	1113	148
Future Volume (veh/h)	116	102	27	627	118	28	37	647	434	30	1113	148
Initial Q (Qb), veh	0	0	0	0	0	0	0	0	0	0	0	0
Ped-Bike Adj(A_pbT)	1.00		1.00	1.00		1.00	1.00		1.00	1.00		1.00
Parking Bus, Adj	1.00	1.00	1.00	1.00	1.00	1.00	1.00	1.00	1.00	1.00	1.00	1.00
Work Zone On Approach		No			No			No			No	
Adj Sat Flow, veh/h/ln	1736	1736	1736	1723	1723	1723	1709	1816	1709	1723	1831	1723
Adj Flow Rate, veh/h	121	106	28	653	123	29	39	674	280	31	1159	96
Peak Hour Factor	0.96	0.96	0.96	0.96	0.96	0.96	0.96	0.96	0.96	0.96	0.96	0.96
Percent Heavy Veh, %	1	1	1	2	2	2	3	3	3	2	2	2
Cap, veh/h	170	268	68	832	342	81	175	1466	982	279	1464	615
Arrive On Green	0.10	0.10	0.10	0.25	0.25	0.25	0.03	0.42	0.42	0.03	0.42	0.42
Sat Flow, veh/h	1654	2601	665	3281	1348	318	1628	3451	1448	1641	3479	1460
Grp Volume(v), veh/h	121	66	68	653	0	152	39	674	280	31	1159	96
Grp Sat Flow(s),veh/h/ln	1654	1650	1617	1641	0	1666	1628	1726	1448	1641	1739	1460
Q Serve(g_s), s	7.8	4.1	4.3	20.4	0.0	8.2	1.5	15.4	8.5	1.2	31.8	4.5
Cycle Q Clear(g_c), s	7.8	4.1	4.3	20.4	0.0	8.2	1.5	15.4	8.5	1.2	31.8	4.5
Prop In Lane	1.00		0.41	1.00		0.19	1.00		1.00	1.00		1.00
Lane Grp Cap(c), veh/h	170	170	166	832	0	422	175	1466	982	279	1464	615
V/C Ratio(X)	0.71	0.39	0.41	0.78	0.00	0.36	0.22	0.46	0.29	0.11	0.79	0.16
Avail Cap(c_a), veh/h	286	285	279	955	0	485	212	1466	982	323	1464	615
HCM Platoon Ratio	1.00	1.00	1.00	1.00	1.00	1.00	1.00	1.00	1.00	1.00	1.00	1.00
Upstream Filter(I)	1.00	1.00	1.00	1.00	0.00	1.00	1.00	1.00	1.00	1.00	1.00	1.00
Uniform Delay (d), s/veh	47.8	46.1	46.2	38.3	0.0	33.7	21.9	22.6	7.1	18.1	27.7	19.7
Incr Delay (d2), s/veh	5.4	1.4	1.6	3.8	0.0	0.5	0.6	1.0	0.7	0.2	4.5	0.5
Initial Q Delay(d3),s/veh	0.0	0.0	0.0	0.0	0.0	0.0	0.0	0.0	0.0	0.0	0.0	0.0
%ile BackOfQ(90%),veh/ln	5.9	3.2	3.3	12.4	0.0	5.8	1.0	9.5	8.1	0.8	18.3	2.9
Unsig. Movement Delay, s/veh												
LnGrp Delay(d),s/veh	53.1	47.5	47.8	42.1	0.0	34.2	22.6	23.7	7.8	18.3	32.1	20.3
LnGrp LOS	D	D	D	D	A	C	C	C	A	B	C	C
Approach Vol, veh/h		255			805			993			1286	
Approach Delay, s/veh		50.3			40.6			19.1			30.9	
Approach LOS		D			D			B			C	

Timer - Assigned Phs	1	2		4	5	6		8				
Phs Duration (G+Y+Rc), s	6.5	52.3		33.9	6.1	52.7		17.3				
Change Period (Y+Rc), s	3.0	6.0		6.0	3.0	6.0		6.0				
Max Green Setting (Gmax), s	6.0	32.0		32.0	6.0	32.0		19.0				
Max Q Clear Time (g_c+I1), s	3.5	33.8		22.4	3.2	17.4		9.8				
Green Ext Time (p_c), s	0.0	0.0		5.5	0.0	8.1		1.5				

Intersection Summary	
HCM 6th Ctrl Delay	31.2
HCM 6th LOS	C

Notes

User approved volume balancing among the lanes for turning movement.

Appendix 4: Safety Certification Worksheets

Safety Certification Worksheet

WIS 16 Segment

Analyst:	Salomonsen, Derek	**Design ID:**	1630-08-00
Agency:	AECOM	**Highway:**	WIS 16
Date of Analysis:	2020-08-05	**Project Title:**	La Crosse Study
Meta Manager Version:	2019-10	**Project Description:**	La Crosse Street to WIS 157
Meta Manager Crash Years:	2014-2018	**Worksheet ID:**	2

System Screening - Sites of Promise									Crash Vetting - Sites of Promise	Contributing Geometric Analysis	
See FDM 11-38-10.2 for guidance									See FDM 11-38-10.3 for guidance	See FDM 11-38-10.4 for guidance	
Segment Crashes											
Direction	**PDP ID**	**From RP**	**From RP Description**	**To RP**	**To RP Description**	**Length** (PDP_Mile)	**Crash Rate Flag** (RATEFLAG) (Insert value if ≥ 1.0)	**KAB Crash Rate Flag** (MMGR_KAB_CRSH_RT) (Insert value if ≥ 1.00)	**Summarize the contributing factors for ALL crashes in the flagged segment.**	**Which geometric features contribute to the type and severity of the crashes?**	**Possible Countermeasures for Safety Mitigation Process**
WB	3405	016W006D020	END OF TWLTL	016W005M000	LOSEY BLVD N	0.12	2.2024	1.7832	Total segment crashes after vetting: 13 92% Rear end - Congestion - quques from La Crosse St. signal - Inattentive driving and following too close	92% Rear end -Lack of capacity during peak hours	**Improve capacity through signal timing modifications or adding lanes. Otherwise improve capacity on other N/S routes See countermeasures for WIS 16 & L aCrosse St intersection
EB	3113	016E005M000	LOSEY BLVD N	016E005M012	END OF TWLTL	0.12	-	-	-	-	-
WB	3404	016W007M000	S VISTA CT	016W006D020	END OF TWLTL	0.96	-	-	-	-	-
EB	3114	016E005M012	END OF TWLTL	016E007M000	S VISTA CT	0.96	-	-	-	-	-
WB	3403	016W009D000	COUNTY B (S JCT)	016W007M000	S VISTA CT	0.99	-	-	-	-	-
EB	3115	016E007M000	S VISTA CT	016E009D000	COUNTY B (S JCT)	0.99	1.0113	1.1695	Total segment crashes after vetting: 24 75% Rear end - Congestion - queues from County B/Gilette St. signal - Inattentive driving and following too close 8% sideswipe - Weather related	75% Rear end -Lack of capacity during peak hours	See countermeasures for WIS 16 & County B/Gilette St intersection.
WB	3402	016W011T000	COUNTY B (N JCT)	016W009D000	COUNTY B (S JCT)	0.74	1.501	1.2092	Total segment crashes after vetting: 35 89% Rear end - Congestion - queues from Count B/Gilette St. signal - Inattentive driving and following too close 11% Sideswipe - Improper lane merge	89% Rear end -Lack of capacity during peak hours	See countermeasures for WIS 16 & County B/Gilette St intersection
EB	3116	016E009D000	COUNTY B (S JCT)	016E011T000	COUNTY B (N JCT)	0.76	1.7874	1.2892	Total segment crashes after vetting: 38 89% Rear end - Congestion - queues from Conoco Dr. signal - Inattentive driving and following too close	89% Rear end -Lack of capacity during peak hours	see countermeasures for WIS 16 & County B/Conoco Dr intersection
WB	3401	016W012M004	12TH AVE	016W011T000	COUNTY B (N JCT)	0.31	1.4581	-	Total segment crashes after vetting: 11 45% Rear end - Congestion - queues from Conoco Dr. signal 27% Lane Departure on bridge over railroad - Weather related	45% Rear end -Lack of capacity during peak hours Curvature on bridge over railroad	See countermeasures for segment PDP ID 3116. Pavement improvement, including friction treatment on bridge over railroad.
EB	3117	016E011T000	COUNTY B (N JCT)	016E011T031	FROM WIS 16 EB 12TH AVE	0.31	1.2886	1.3128	Total segment crashes after vetting: 14 57% Rear end - Congestion - queues from WIS 157 signal 43% Lane Departure on bridge over railroad - Weather related	57% Rear end -Lack of capacity during peak hours Curvature on bridge over railroad	See countermeasures for WIS 16 & WIS 157 intersection Pavement improvement, including friction treatment on bridge over railroad
WB	3400	016W014M045	WIS 157	016W012M004	12TH AVE	0.58	2.3995	1.1266	Total segment crashes after vetting: 17 59% Rear end - Congestion and following too close	59% Rear end -Lack of capacity during peak hours	-
EB	3118	016E011T031	FROM WIS 16 EB 12TH AVE	016E013K000	WIS 157 E&W	0.34	1.0457	-	Total segment crashes after vetting: 13 77% Rear end - Congestion - queues from WIS 157 signal - Inattentive driving, and following too close	77% Rear end -Lack of capacity during peak hours	See countermeasures for WIS 16 & WIS 157 intersection
Intersection Crashes											
Project Intersection Number	**INT_ID**	**Intersection Name** (IX_NAME)	**Crashes From Screening**	**Crashes After Vetting**	**LOSS** (TOTAL)	**PSI** (TOTAL)	**LOSS** (KABC)	**PSI** (KABC)	**Summarize the contributing factors for ALL crashes in the flagged intersection.**	**Which geometric features contribute to the type and severity of the crashes?**	**Possible Countermeasures for Safety Mitigation Process**
9	IX_32_02666	WIS 16 & Gillette St	104	119	LOSS 4	45.34	LOSS 4	8.43	70% Rear end on WIS 16 - Congestion, inattentive driving, following too close, signal visibility 9% Rear end on County B/Gillette St -Inattentive driving 9% Run off road - Weather related	9% Rear end on County B/Gilette St. - EB Channelized right turn causes sight distance issues due to swopping radius 2 Bike crashes - Bikes using sidewalks and crosswalks	Install monotubes to achieve one signal head per lane with retroreflective backplates Improve signal timing and/or coordinate signals Install high visibility crosswalks Remove right turn channelization on County B/Gillette St.
1	IX_32_03005	WIS 16 & WIS 157	99	100	LOSS 4	33.07	LOSS 3	5.13	48% Rear end on WIS 16 - Congestion, inattentive driving, following too close, signal visibility 12% Rear end on WIS 157 - inattentive driving, following too close, signal visibility 6% Left turn on WIS 157/mall entrance - WB right turn vs EB left turn, RTOR issue/inattentive driving	15% Sideswipe - EB right turn has short merge just south of intersection 12% Rear end on WIS 157 - Channelized free-flow right turn with small radius 1 Bike crash - Bike used sidewalk and crosswalk	Install monotubes to achieve one signal head per lane with retroreflective backplates Improve signal timing and/or coordinate signals Install high visibility crosswalk on east leg improve channelized right turn on WIS 157 and include dedicated signals with overlap phasing
7	IX_32_02842 (Not Flagged)	WIS 16 & Conoco Dr	0	67	LOSS 3	5.25	LOSS 2	-5.82	Note that there are additional crashes that are due to this intersections queues that extend south. See Sunset Ln intersection for more information. '66% Rear end on WIS 16 - Congestion, inattentive driving, following too close, signal visibility 6% Angle - WB RTOR hit NB thru, vision issue for RTOR	10% of crashes were caused by the skew on the County B (East) approach of the intersection and resulte din sideswipe, lane departure, or rear end crashes 6% Angle -Possible sight distance issues with NB right turns blocking the WB RTOR movement 3 Bike crashes -Bikes used sidewalk and crosswalk	Install monotubes to achieve one signal head per lane with retroreflective backplates, including improving signal timing and/or coordinate.' Improve intersection angle for the east leg Install high visibility crosswalks
-	IX_32_02404	WIS 16 & Quarry Rd	50	46	LOSS 4	30.63	LOSS 4	7.47	91% Rear end on WIS 16 - Congestion - queues are from La Crosse St. signal	-	Install monotubes to achieve one signal head per lane with retroreflective backplates at the WIS 16 & La Crosse St. intersection approaches Install queue warning system for SB WIS 16 approaching La Crosse St. Imporve signal timing and/or coordinate signals at WIS 16 & La Crosse St intersection

Intersection Crashes

Project Intersection Number	INT_ID	Intersection Name (IX_NAME)	Crashes From Screening	Crashes After Vetting	LOSS (TOTAL)	PSI (TOTAL)	LOSS (KABC)	PSI (KABC)	Summarize the contributing factors for ALL crashes in the flagged intersection.	Which geometric features contribute to the type and severity of the crashes?	Possible Countermeasures for Safety Mitigation Process
-	IX_32_02815	WIS 16 & Sunset Ln	38	35	LOSS 4	23.19	LOSS 4	5.88	71% Rear end on WIS 16 - Congestion - queues are from County B/Conoco Dr. 9% Angle - WB right turn FTY vs NB thru 6% Left turn on WIS 16 - SB left turn FTY to NB thru	71% Rear end on WIS 16 - Close proximity to County B/Conoco Dr. signal intersection.	Restrict access to right-in/right-out or fully close access at this end of Sunset Ln. Imporve signal timing and/or coordinate signals at WIS 16 & County B/Conoco Dr. intersection
-	IX_32_02414	WIS 16 & Bluff Pass Rd	23	17	LOSS 4	10.92	LOSS 3	1.79	71% Rear end on WIS 16 - Congestion - queues are from La Crosse St. signal 18% Lane departure - Weather related 12% Head on collisions - Weather related	71% Rear end on WIS 16 - Lack of NB right turn lane	Install queue warning system for SB WIS 16 approaching La Crosse St. Imporve signal timing and/or coordinate signals at WIS 16 & La Crosse St intersection Install NB right turn lane
24	IX_32_02384 (Not Flagged)	WIS 16 & La Crosse St	0	16	LOSS 2	-39.36	LOSS 1	-18.29	Note that there are additional crashes that are due to this intersections queues that extend north. See Quarry Rd and Bluff Pass Rd intersections for more information. 50% Rear end on WIS 16/Losey Blvd - Congestion, following too close, signal visibility 25% Rear end on La Crosse St - Inattentive driving	13% Sideswipe -SB channelized right turn and small merge on La Crosse St 1 Bike crash - Bike used sidewalk and crosswalk	Install monotubes at the WIS 16 & La Crosse St signal to achieve one signal head per lane with retroreflective backlplates, including improving signal timing and/or coordinate. Improve merge on La Crosse St for SB right turn or remove channelization Install high visibility crosswalks at the WIS 16 & La Crosse St intersection.
4	IX_32_02915	WIS 16 (SB) & 12th Ave	21	3	LOSS 4	10.11	LOSS 2	-0.45	100% lane departure - Weather	-	-
3		WIS 16 (NB) & Medary Ln		2					1 Lane departure crash - Weather	1 Rear end on Medary Ln ramp - Channelized right turn lane	-

*Only intersections with 15 or more crashes were included. An intersection with less than 15 crashes was included if it was a flagged intersection AND a project intersection.
** Countermeasures that apply to entire corridor.

Legend
Flagged Intersection
Non-Flagged Intersection

Safety Certification Worksheet

WIS 35 (Lang Dr, George St) Segment

Analyst: Salomonsen, Derek
Agency: AECOM
Date of Analysis: 2020-08-05
Meta Manager Version: 2019-10
Meta Manager Crash Years: 2014-2018

Design ID: 1630-08-00
Highway: WIS 35
Project Title: La Crosse Study
Project Description: WIS 16 to US 53
Worksheet ID: 7

System Screening - Sites of Promise									Crash Vetting - Sites of Promise	Contributing Geometric Analysis	
See FDM 11-38-10.2 for guidance									See FDM 11-38-10.3 for guidance	See FDM 11-38-10.4 for guidance	
Segments: Meta-Manager											
Direction	**PDP ID**	**From RP**	**From RP Description**	**To RP**	**To RP Description**	**Length** (PDP_Mile)	**Crash Rate Flag** (RATEFLAG) (Insert value if ≥ 1.0)	**KAB Crash Rate Flag** (MMGR_KAB_CRSH_RT) (Insert value if ≥ 1.00)	**Summarize the contributing factors for ALL crashes in the flagged segment.**	**Which geometric features contribute to the type and severity of the crashes?**	**Possible Countermeasures for Safety Mitigation Process**
NB & SB	7395	035N117 000	WIS 16 EB	035N118D000	S OF MONITOR ST	0.76	-	-	-	-	-
NB & SB	7396	035N118D000	S OF MONITOR ST	035N118D010	MONITOR ST	0.1	-	-	-	-	-
NB	7397	035N118D010	MONITOR ST	035N118D054	SAINT CLOUD ST	0.44	1.1433	-	Total crashes after vetting: 9 33% Angle - FTY out of Menards and Kwik Trip driveways, in close proximity to nearby intersections 33% Rear ends - Inattentive Driving, congestion -5 Additional rear end crashes at intersections due to inattentive driving or congestion 33% Sideswipe - Unsafe lane change, closely spaced intersections and driveways 1 Pedestrian crash at Hagar St and 1 at St. Andrews St - Vehicle FTY to ped in crosswalk	1 Bike crash at St Andrew St intersection - Turning vehicle FTY to bike using sidewalk and crosswalk	Provide a raised median to restrict driveway access to WIS 35 to right-in/right-out only Install monotubes to achieve one signal head per lane with retroreflective backplates at the St. Cloud and St. Andrew St intersections Improve signal timing/coordination along corrridors to reduce congestion Install high visibility crosswalks
SB	7833	035S119G017	SAINT CLOUD ST	035S119G058	MONITOR ST	0.41	1.0817	1.7582	Total crashes after vetting: 17 53% Angle - FTY out of Menards and Kwik Trip driveways, in close proximity to nearby intersections 35% Rear ends - Inattentive Driving, following too close, congestion	-	Install bike lanes
NB & SB	7398	035N118D054	SAINT CLOUD ST	035N119G021	CLINTON ST	0.36	-	-	-	-	-
NB & SB	7399	035N119G021	CLINTON ST	035N120A000	GILLETTE ST	0.36	1.5034	1.3347	Total crashes after vetting: 26 73% Rear ends - Inattentive, congestion, following too close 27% Sideswipe - Unsafe lane change, unclear and confusing lane assignments 3 Additional Angle crashes at Logan St - Side road FTY to thru traffic, ran stop sign 1 Pedestrian crash - SB vehicle FTY to peds in crosswalk	1 Bike crash at Logan St - Bike FTY to WIS 35 thru traffic 3 Additional Angle crashes at Logan St - Possible sight distance issue	Improve signal timing/coordination at the Gillette St and Clinton St intersections to reduce congestion Insall advanced signing for NB lane assignments or reduce to a single lane with added bike lanes Convert one SB thru lane at the Clinton St intersection to a left turn lane Install high visibility crosswalks at Logan St Eliminate parking near Logan St intersection
NB & SB	7400	035N120A000	GILLETTE ST	035N121 000	PALACE ST	0.61	2.9213	3.6429	Total crashes after vetting: 30 77% Rear ends on WIS 35 - Following too close, inattentive driving 3 Pedestrian crashes - Ped illegal crossing at unmarked crosswalk	77% Rear ends on WIS 35 - Parked vehicles narrow roadway - 5 crashes involved vehicles stopping in thru traffic to turn left into a driveway - 11 Additional crashes involved vehicles stopping at uncontrolled intersection to make a left turn (Gohres St, Livingston St, Moore St, Rublee St, Hayes St) 1 Bike crash at Livingston St - Bike FTY to WIS 35 thru traffic 1 Bike crash at Moore St - Vehicle FTY to bike using sidewalk and crosswalk	Convert to 3-lane typical section to include TWLTL Imrpove signal timing/coordination at WIS 35 & Gillette St Install bike lanes Install high visibility crosswalks
NB & SB	7401	035N121 000	PALACE ST	035N121 009	CUNNINGHAM ST	0.09	-	2.3405	Total crashes after vetting: 3 - 5 additional crashes reassigned to Palace St intersection 100% Rear end on WIS 35 - Congestion	3 Angle crashes at Palace St - Possible sight ditance issues for west approach	Improve signal timing/coordination to north and south of this segment Improve sight distance issue at Palace St, building in SW quadrant is likely main issue
NB & SB	7402	035N121 009	CUNNINGHAM ST	035N121 016	GEORGE ST N	0.07	-	2.7326	Total crashes after vetting: 1 (no crash trends) - 8 Crashes assigned to Cunningham St intersection (No trends) 1 Pedestrian crash at Cunningham St - Turning vehicle FTY to ped in crosswalk	-	Install high visibility crosswalks
NB	7403	035N121 016	GEORGE ST N	035N121D000	US 53 NB	0.17	5.7555	1.9074	Total crashes after vetting: 25 36% Angle - Failed to yield out of driveways 32% Sideswipe - Entering traffic from driveways, overtaking vehicles turning into driveways, congestion	36% Angle - Lack of turn lanes at driveways 32% Sideswipe - Lack of turn lanes at driveways	Reduce driveway access, or restrict access to right-in/right-out only with a raised median
SB	7832	035S121D000	US 53 NB	035S121D016	GEORGE ST N	0.16	-	-	-	-	-
Intersections: Intersection Network Screening											
Project Intersection Number	**INT_ID**	**Intersection Name** (IX_NAME)	**Crashes From Screening**	**Crashes After Vetting**	**LOSS** (TOTAL)	**PSI** (TOTAL)	**LOSS** (KABC)	**PSI** (KABC)	**Summarize the contributing factors for ALL crashes in the flagged intersection.**	**Which geometric features contribute to the type and severity of the crashes?**	**Possible Countermeasures for Safety Mitigation Process**
10	IX_32_02657 (Not Flagged)	WIS 35 & Gillette St	0	37	LOSS 3	12.90	LOSS 3	1.25	32% Angle - Inattentive driving, ran red lights (7/10 ran red on WIS 35), signal visibility 27% Rear End on WIS 35 - Inattentive driving, congestion, lane assignment confusion	22% Left turn from WIS 35 - 7/8 involved NB left turn FTY to SB thru traffic, sight distance issue due to negative offset turn lanes on WIS 35 11% Crashes involving semis - Insufficient right turn radius for semis	Install monotubes to achieve one signal head per lane with retroreflective backplates Adjust radii for intersection quadrants to accommodate trucks (SE & NE) Adjust lane widths to accommodate neatural or positive offset left turn lanes
13	IX_32_02586 (Not Flagged)	WIS 35 & Clinton St	0	34	LOSS 2	-0.78	LOSS 2	-2.88	29% Rear End on WIS 35 - Inattentive driving, weather, signal visibility, congestion 15% Angle - Inattentive driving, ran red lights (2/5 ran red on WIS 35), signal visibility	26% Lane Departure - Insufficient right turn radius for NB and WB right turning semis, drunk driving, hit and run with median traffic signal (possible confusion with WIS 35 going from undivided to divided with median) 5 Bike crashes - Turning vehicle FTY to bike using sidewalk and crosswalk, blind spot with St. Paul St. and overhead bridge	Install monotubes to achieve one signal head per lane with retroreflective backplates Adjust radii for intersection quadrants to accommodate trucks (SE and NE) Convert one SB thru lane to SB left turn lane No RTOR for EB right turn Install high visibility crosswalks Install bike lanes

Intersections: Intersection Network Screening

Project Intersection Number	INT_ID	Intersection Name (IX_NAME)	Crashes From Screening	Crashes After Vetting	LOSS (TOTAL)	PSI (TOTAL)	LOSS (KABC)	PSI (KABC)	Summarize the contributing factors for ALL crashes in the flagged intersection.	Which geometric features contribute to the type and severity of the crashes?	Possible Countermeasures for Safety Mitigation Process
19	IX_32_02437 (Not Flagged)	WIS 35 & Monitor St	0	16	LOSS 2	-6.29	LOSS 2	-0.82	31% Left turn from WIS 35 - signal visibility, sight distance issues - 3 crashes involved NB left turn FTY - 2 crashes involved SB thru ran red lights 25% Read End on WIS 35 - Inattentive driving, signal visibility, congestion 13% Lane Departure - Drunk driving	2 Bike crashes - 1 crash included bike in crosswalk FTY to traffic - 1 crash included vehicle FTY to bike using sidewalk and crosswalk	Install monotubes to achieve one signal head per lane with retroreflective backplates Install high visibility crosswalks Install bike lanes
6	IX_32_02864	WIS 35 & George St	17	13	LOSS 4	5.07	LOSS 2	-0.59	23% Rear End on George St -Inattentive driving, congestion 23% Angle - Inattentive driving	23% Rear End on George St - Intersetion skew attribute to right turn rear end 1 crash occurred due to the very close Kwik Trip driveway just north of the intersection on WIS 35 38% of crashes seem to be due to the curvature on WIS 35 or confusion with the intersection in general	The recent traffic signal that was installed here, including monotubes, will improve angle crashes. The Channelized right turn on George St (north leg) was also removed with this improvement and one Kwik trip driveway was removed Eliminate confusion by closing north leg of intersection completely

*Only intersections with 15 or more crashes were included. An intersection with less than 15 crashes was included if it was a flagged intersection AND a project intersection.

Legend
Flagged Intersection
Non-Flagged Intersection

Safety Certification Worksheet

US 53 (Rose St, Copeland Ave) Segment

Analyst: Salomonsen, Derek
Agency: AECOM
Date of Analysis: 2020-08-05
Meta Manager Version: 2019-10
Meta Manager Crash Years: 2014-2018

Design ID: 1630-08-00
Highway: US 53
Project Title: La Crosse Study
Project Description: La Crosse Street to I-39
Worksheet ID: 5

System Screening - Sites of Promise									Crash Vetting - Sites of Promise	Contributing Geometric Analysis	
See FDM 11-38-10.2 for guidance									See FDM 11-38-10.3 for guidance	See FDM 11-38-10.4 for guidance	
Segment Crashes											
Direction	**PDP ID**	**From RP**	**From RP Description**	**To RP**	**To RP Description**	**Length** (PDP_Mile)	**Crash Rate Flag** (RATEFLAG) (Insert value if ≥ 1.0)	**KAB Crash Rate Flag** (MMGR_KAB_CRSH_RT) (Insert value if ≥ 1.00)	**Summarize the contributing factors for ALL crashes in the flagged segment.**	**Which geometric features contribute to the type and severity of the crashes?**	**Possible Countermeasures for Safety Mitigation Process**
NB	11389	053N003K000	LA CROSSE ST	053N003K009	2ND ST	0.09	2.8516	-	Total segment crashes after vetting: 4 (no crash trends) - Majority of crashes were assigned to La Crosse St intersection, see below for additional information	2 Bike crashes at 2nd St - Bike traveling against traffic in the travel lanes - Right turn vehicle FTY to bike in crosswalk	Install bike lanes along US 53 or install high visibilty crosswalks on side streets
SB	11872	053S004M070	2ND ST	053S003K000	LA CROSSE ST	0.07	-	-	-	-	-
NB	11390	053N003K009	2ND ST	053N003K055	CAUSEWAY BLVD	0.46	-	1.0678	Total segment crashes after vetting: 12 83% Rear end crashes - Following too close, inattentive driving	83% Rear end crashes - Slowing for driveway South of Candlewood Suites, lack of turn lane 1 Bike crash south of River Bend Rd - Vehicle FTY to bike in mid-block crosswalk 2 Bike crashes at driveway to Candlewood Suites -Bikes used sidewalk and crosswalk and existing vehicle hit them	Install high visibility crosswalks at the mid-block crossing south of Riverbend Rd and at side roads/driveways
SB	11871	053S004M024	CAUSEWAY BLVD	053S004M070	2ND ST	0.46	-	-	-	-	-
NB	11391	053N003K055	CAUSEWAY BLVD	053N003K064	NB/SB SPLIT	0.09	1.634	2.2816	Total segment crashes after vetting: 3 - 6 crashes assigned to Causeway Blvd intersection 2 Segment crashes and 2 intersection crashes at Causeway Blvd were rear ends on US 53 -Inattentive driving 1 Pedestrian crash at Causeway Blvd	2 Bike crashes at Causeway Blvd - Bikes used sidewalk/crosswalk	Install monotubes to achieve one signal head per lane with retrreflective backplates at the Causeway Blvd intersection Install bike lanes or high visibility crosswalks on the side roads
SB	11870	053S004M014	NB/SB SPLIT	053S004M024	CAUSEWAY BLVD	0.1	-	-	-	-	-
NB	11392	053N003K064	NB/SB SPLIT	053N004M000	MONITOR ST	0.15	-	-	-	-	-
SB	11869	053S004M000	MONITOR ST	053S004M014	NB/SB SPLIT	0.14	1.3398	-	Total segment crashes after vetting: 3 (no crash trends) - Majority of crashes were assigned to Monitor St intersection, see below for additional information	1 Bike crash at Buchner Pl - Right turning vehicle FTY to bike in crosswalk	Install bike lanes on US 53 or install high visibility crosswalks
NB	11393	053N004M000	MONITOR ST	053N005G029	ST JAMES ST	0.59	-	-	-	-	-
SB	11868	053S005G012	CAR ST	053S004M000	MONITOR ST	0.11	-	-	-	-	-
SB	11867	053S005T049	HAGAR ST	053S005G012	CAR ST	0.32	-	-	-	-	-
NB	11394	053N005G029	ST JAMES ST	053N005G044	WINDSOR ST	0.15	-	-	-	-	-
NB	11395	053N005G044	WINDSOR ST	053N005T000	CLINTON ST	0.16	1.4138	-	Total segment crashes: 18 89% Rear ends - Inattentive driving, following too closely - Queues from the Clinton St signal	-	See recommendations for the US 53 & Clinton St intersection below.
SB	11866	053S005T000	CLINTON ST	053S005T049	HAGAR ST	0.49	1.1395	-	Total segment crashes: 21 52% Rear end crashes - Inattentive driving 42% Sideswipe - Attempting to turn left from right lane	52% Rear end crashes - 2 crashes deviated from lane into parked vehicles - 2 crashes occurred on horizontal curve near Windsor St	Install signing to address lane assignments along one-way US 53 Add pavement marking for parking stalls so drivers understand their lane width
NB	11396	053N005T000	CLINTON ST	053N005T034	GILLETTE ST	0.34	-	-	-	-	-
SB	11865	053S007K067	GILLETTE ST	053S005T000	CLINTON ST	0.34	1.2483	1.1222	'Total Segment Crashes: 23 30% Rear end crashes - Distracted driver, following too close 20% Sideswipe - Improper lane change, Inattentive driving 3 Pedestrian crashes at the Logan St crossing of US 53 - 2 NB and 1 SB vehicle FTY to ped in crosswalk, lack of traffic control and vehicle gaps during peak hours	39% Angle Crashes - All driveway related crashes, 5 crashes occurred at Kwik Trip driveway due to sight distance issues. Vehicle making a right turn into Kwik Trip blocked view of exiting vehicle and didn't see other SB vehicles 30% Rear end crashes - Slowing for right turns at Kwik Trip driveway, lack of turn lanes 2 left turn crashes at Gold St due to NB left turning vehicle FTY to SB thru traffic, minimal storage and queues extend from Clinton St signal 1 Bike crash and pedestrian crash at driveway (Perkins) - Vehicle exiting FTY to ped/bike in crosswalk 3 Pedestrian crashes at the Logan St crossing of US 53 - Large intersection distance to cross US 53, lack of ped refugee islands 1 Bike and 1 Pedestrian crash at Sill St -Lack of crosswalk across US 53 and lack of refugee islands	Include SB right turn lanes at Logan St and Gold St Eliminate Kiwk Trip driveay to US 53 or restrict to right-in/right-out access, extend median from Clinton St north of Kwik Trip driveway to restrict access at Gold St to right-in/right-out only Install high visibility crosswalks Install crosswalk crossing US 53 near Sill St, including refugee island Install RRFB or high visibility crosswalk for the crossing of US 53 at Logan St , including refugee island
NB	11397	053N005T034	GILLETTE ST	053N005T070	LIVINGSTON ST	0.36	-	-	-	-	-
SB	11864	053S007K032	LIVINGSTON ST	053S007K067	GILLETTE ST	0.35	-	-	-	-	-
NB	11398	053N005T070	LIVINGSTON ST	053N007K000	PALACE ST	0.31	-	-	-	-	-
SB	11863	053S007K000	PALACE ST	053S007K032	LIVINGSTON ST	0.32	-	-	-	-	-
NB	11399	053N007K000	PALACE ST	053N008 000	WIS 33 NB BEGIN CONCURR	0.32	-	-	-	-	-
SB	11862	053S008 000	WIS 33 NB BEGIN CONCURR	053S007K000	PALACE ST	0.32	-	-	-	-	-
NB	11400	053N008 000	WIS 33 NB BEGIN CONCURR	053N008H000	WIS 35 NB END CONCURR	0.27	1.1243	1.1054	Total segment crashes after vetting: 9 - Majority of crashes were assigned to US 53 & WIS 35 intersection, see below for addiitonal information	1 Bike crash at Walgreens driveway -Exiting vehicle FTY to bike using sidewalk and crosswalk	The newly completed I-90 & US 53 interchnage design added wider shoulders and sidewalk north of WIS 35 to accommodate bikes
SB	11861	053S008P000	WIS 35 SB BEGIN CONCURR	053S008 000	WIS 33 NB BEGIN CONCURR	0.58	-	1.1078	-	-	-
Intersection Crashes											
Project Intersection Number	**INT_ID**	**Intersection Name** (IX_NAME)	**Crashes From Screening**	**Crashes After Vetting**	**LOSS** (TOTAL)	**PSI** (TOTAL)	**LOSS** (KABC)	**PSI** (KABC)	**Summarize the contributing factors for ALL crashes in the flagged intersection.**	**Which geometric features contribute to the type and severity of the crashes?**	**Possible Countermeasures for Safety Mitigation Process**
27	IX_32_02358 (Not Flagged)	US 53 & La Crosse St	0	67	LOSS 3	20.07	LOSS 2	-6.23	40% Rear ends on US 53 -Inattentive driving, following too close, signal visibility, congestion - Included 3 crashes that were a near-miss for a bike/ped 12% Rear ends on La Crosse St - Inattentive driving, following too close 10% Angle - Inattentive driving, ran red lights, signal visibility 3 Pedestrian crashes - Vehicles FTY to ped in crosswalk, 2 included turning vehicles, signal visibility, visibility issues seeing pedestrians/crosswalks	15% Lane Departure - Trucks take SB right turn, even though it is signed to be a prohibited movement 1 Bike crash - Bike used sidewalk and crosswalk	Install monotubes to achieve one signal head per lane with retroreflective backplates Improve signing for SB right turn restrictions, or improve radius in NW quadrant or skew on west leg to allow truck turning movements. Install bike lanes Install high visibility crosswalks

Intersection Crashes											
Project Intersection Number	**INT_ID**	**Intersection Name** (IX_NAME)	**Crashes From Screening**	**Crashes After Vetting**	**LOSS** (TOTAL)	**PSI** (TOTAL)	**LOSS** (KABC)	**PSI** (KABC)	**Summarize the contributing factors for ALL crashes in the flagged intersection.**	**Which geometric features contribute to the type and severity of the crashes?**	**Possible Countermeasures for Safety Mitigation Process**
12	IX_32_02594 (Not Flagged)	US 53 & Clinton St	0	47	LOSS 3	12.43	LOSS 3	1.57	48% Rear ends on US 53 - inattentive driving, following too close, signal visibility, congestion 1 Pedestrian crash - Turning vehicle FTY to ped in crosswalk	12% Left turn from US 53 - Negative offset left turn lanes	Install monotubes to achieve one signal head per lane with retroreflective backplates Improve left turn offset on US 53 Install high visiblity crosswalks
5	IX_32_02884 Not Flagged	US 53 & WIS 35	0	58	No data due to recent intersection improvements				40% Rear ends on WIS 35 -Inattentive driving, signal visibility, congestion 38% Rear ends on US 53 - Inattentive driving, weather 9% Left turn from US 53 - Inattentive driving, ran red lights, sight distance issues	40% Rear ends on WIS 35 -WB channelized right turn, driving looking over their shoulder	Monotubes were installed with the new signal project at this intersection. No right turn on red for the WB right turn movement
20	IX_32_02435 Not Flagged	US 53 SB & Monitor St	0	23	LOSS 2	-3.60	LOSS 2	-4.54	26% Left turn from Monitor St - WB left turn FTY to EB thru due to inattentive driving. 22% Angle - Inattentive driving, ran red lights, signal visibility, 4/5 include E vs S vehicles 17% Rear ends on US 53 - Inattentive driving, signal visibility, congestion 13% Sideswipe - Lef tturn from right lane due to inattentive driving	26% Lef turn from Monitor St - confusing lane layout for west leg, one approach lane into 2 departure lanes US 53 being a one-way road likely contributes to sideswipe crashes. 1 Bike crash - Bike used sidewalk and crosswalk and FTY to signal indication	Install monotubes to achieve one signal head per lane with retroreflective backplates Change lane layout on West leg to have 2 eastbound lanes and 1 westbound lane, will likely require a left turn only lane on the east leg Install high visibility crosswalk or install bike lanes on US 53
23	IX_32_02408 Not Flagged	US 53 & Riverbend Rd (North)	0	20	LOSS 3	1.19	LOSS 2	-3.62	55% Rear ends on US 53 - Inattentive driving, following too close, signal visibility, congestion 20% Angle - Inattentive driving, ran red lights 1 Pedestrian crash - Ped FTY to signal indication	-	Install monotubes to achieve one signal head per lane with retroreflective backplates Install high visibility crosswalks
-	IX_32_02512	US 53 SB & Saint Cloud St	22	15	LOSS 4	10.55	LOSS 3	1.43	40% Sideswipe - Left turns from right lane due to inattentive driving 27% Left turn from Saint Cloud St - WB left turn FTY to EB thru vehicle due to inattentive driving	US 53 being a one-way road likely contributes to sideswipe crashes. Additionally, vehicles making a WB left turn are likely focused on SB traffic and not recognize EB thru traffic.	Install signing to address lane assignments along one-way US 53 Installation of a traffic signal would likely eliminate the sideroad left turn crashes
17	IX_32_02495	US 53 SB & Hagar St	17	10	LOSS 4	6.49	LOSS 4	2.71	70% Sideswipe - Left turns from right lane due to inattentive driving 20% Angle - WB left turn FTY to EB thru vehicle due to inattentive driving	US 53 being a one-way road likely contributes to sideswipe crashes. Additionally, vehicles making a WB left turn are likely focused on SB traffic and not recognize EB thru traffic.	Install signing to address lane assignments along one-way US 53 Installation of a traffic signal would likely eliminate the sideroad left turn crashes

*Only intersections with 15 or more crashes were included. An intersection with less than 15 crashes was included if it was a flagged intersection AND a project intersection.

Legend
Flagged Intersection
Non-Flagged Intersection

Safety Certification Worksheet

WIS 16 (La Crosse St) Segment

Analyst: Salomonsen, Derek
Agency: AECOM
Date of Analysis: 2020-08-05
Meta Manager Version: 2019-10
Meta Manager Crash Years: 2014-2018

Design ID: 1630-08-00
Highway: WIS 16
Project Title: La Crosse Study
Project Description: 7th St to Losey Blvd
Worksheet ID: 1

System Screening - Sites of Promise									Crash Vetting - Sites of Promise	Contributing Geometric Analysis	
See FDM 11-38-10.2 for guidance									See FDM 11-38-10.3 for guidance	See FDM 11-38-10.4 for guidance	
Segment Crashes											
Direction	**PDP ID**	**From RP**	**From RP Description**	**To RP**	**To RP Description**	**Length** (PDP_Mile)	**Crash Rate Flag** (RATEFLAG) (Insert value if ≥ 1.0)	**KAB Crash Rate Flag** (MMGR_KAB_CRSH_RT) (Insert value if ≥ 1.00)	**Summarize the contributing factors for ALL crashes in the flagged segment.**	**Which geometric features contribute to the type and severity of the crashes?**	**Possible Countermeasures for Safety Mitigation Process**
EB & WB	3106	016E004 038	LA CROSSE ST	016E004 067	11TH ST N	0.29	3.0744	1.038	Total segment crashes after vetting: 23 35% Rear ends on WIS 16 - Inattentive driving, following too close 17% Sideswipe - Parked vehicles along WIS 16 9 crashes were assigned to the 7th St intersection - 4/5 crashes were rear ends on EB WIS 16 due to inattentive driving	43% Angle crases - possible sight distance issues at alley driveways An additional 5 angle crashes occurred at 9th St and 10th St intersections - Possible sight distance issues with parked vehicles 35% Rear ends on WIS 16 - Lack of turn lanes	Restrict more curb from parking near intersections and alleys Construct turn lanes or restripe for TWLTL Restrict access to alley driveways
EB & WB	3107	016E004 067	11TH ST N	016E005 000	WIS 35 NB	0.09	8.7878	3.3034	Total segment crashes after vetting: 3 (No crash trends) - Majority of crashes in this segment were assigned to intersections at 12th St or the WIS 35 signal, see below for additional information.	-	-
EB & WB	3108	016E005 000	WIS 35 NB	016E005 010	OAKLAND ST	0.1	6.2525	2.7779	Total segment crashes after vetting: 2 (No crash trends) - Majority of crashes in this segment were assigned to the WIS 35 signal or Oakland St, see below for additional information.	-	-
EB & WB	3109	016E005 010	OAKLAND ST	016E005D042	24TH ST N	0.83	3.0095	1.7069	Total segment crashes after vetting: 42 90% Rear ends on WIS 16 - Inattentive driving, following too close 5% Lane Departure - Weather 5% Sideswipe - Vehicles crossed centerline	90% Rear ends on WIS 16 - Lack of turn lanes An additional 39 rear end crashes were assigned to intersections along this segment, 16th St (4), 17th St (1), 22nd St (7), 23rd St (8), Hillview Ave (11), Myrick Park Dr (8) - 19/39 included vehicles slowwing to turn onto side roads, lack of turn lanes - 8/39 were near-miss crashes with a pedestrian crossing WIS 16, 4 occurred at Hillview Ave	WisDOT's programmed improvements include adding a TWLTL and bike lanes along this portion of WIS 16. This will address many of the rear end and sideswipe crashes. The programmed improvement includes installing additional ped crossings and ped refuge islands
EB & WB	3110	016E005D042	24TH ST N	016E005D045	WIS 16 WB	0.03	4.9293	1.604	Total segment crashes after vetting: 2 (No crash trends) - Majority of crashes in this segment were assigned to the WIS 16 & 24th St intersections	-	WisDOT's programmed improvements include restricting access to right-in/right-out for both 24th St intersections. This will address rear end crashes (5/10) seen at 24th Street intersection due to turning movements.
WB	3407	016W005M002	LOSEY BLVD N	016W005M005	LOSEY BLVD N	0.03	-	-	-	-	-
EB	3111	016E005D045	WIS 16 WB	016E005D048	LOSEY BLVD N	0.03	1.3715	1.9595	Total segment crashes after vetting: 0 - All crashes were assigned to WIS 16 & La Crosse St. intersection, see WIS 16 - La Crosse St to WIS 157 for additional details	-	See Recommendations in WIS 16 - La Crosse St to WIS 157 for more details.
WB	3406	016W005M000	LOSEY BLVD N	016W005M002	LOSEY BLVD N	0.02	-	-	-	-	-
EB	3112	016E005D048	LOSEY BLVD N	016E005M000	LOSEY BLVD N	0.02	3.4921	1.112	Total segment crashes after vetting: 0 - All crashes were assigned to WIS 16 & La Crosse St. intersection, see WIS 16 - La Crosse St to WIS 157 for additional details	-	See recommendation above and in WIS 16 - La Crosse St to WIS 157 for more details
Intersection Crashes											
Project Intersection Number	**INT_ID**	**Intersection Name** (IX_NAME)	**Crashes From Screening**	**Crashes After Vetting**	**LOSS** (TOTAL)	**PSI** (TOTAL)	**LOSS** (KABC)	**PSI** (KABC)	**Summarize the contributing factors for ALL crashes in the flagged intersection.**	**Which geometric features contribute to the type and severity of the crashes?**	**Possible Countermeasures for Safety Mitigation Process**
26	IX_32_02357	WIS 16 & WIS 35	80	83	LOSS 4	29.13	LOSS 3	5.72	27% Rear ends on WIS 16 - Inatenttive driving, following too close, signal visibility, congestion 29% Rear ends on WIS 35 - Inattentive driving, following too close 12% Lane departure crashes - Weather 5 pedestrian crashes -Vehicle FTY, 3 include turning vehicle, signal visibility, visibility of pedestrians crossing WIS 16 from vehicles turning off of WIS 35	10% Sideswipe crashes - South approach, busy driveways in close proximity to intersection (Kwik Trip). 11% Left turn crashes - Negative offset turn lanes	Install monotube arms on all intersection approaches to achieve one signal head per lane with retroreflective backplates Improve left turn lane offsets on WIS 16 and WIS 35. Install high visibility crosswalks Close driveways near interseciton and divert traffic to other roads
25	IX_32_02367 (Not Flagged)	WIS 16 & East Ave	0	43	LOSS 3	4.04	LOSS 3	0.72	86% Rear ends on WIS 16 - Inattentive driving and following too close, signal visibility, congestion 9% Lane Departure - Weather 1 Pedestrian crash - Ped FTY to signal indication	9% Lane Departure - City bus right turn issues, result in hitting signals 1 Bike crash - Bike used sidewalk and crosswalk	Install monotube arms at the WIS 16 & East Ave intersection to achieve one signal head per lane with retroreflective backplates Install high visibility crosswalks Include bike lanes at the East Ave intersection. Improve intersection radii or widen intersection to accommodate city buses.
-	IX_32_02352	WIS 16 & 12th St	44	32	LOSS 4	27.73	LOSS 4	4.14	31% Left turn from WIS 16 to 12th St - Queues/congestion from WIS 16 & WIS 35 signal 34% Rear ends on WIS 16 - Queues/congestion from WIS 16 & WIS 35 signal	25% Angle - Difficult gaps and sight distance issues due to queues and turning vehciles at the WIS 16 & WIS 35 signal 2 Bike crashes - Bike used sidewalk and crosswalk	Extend median along WIS 16 to restrict this intersection to right-in/right-out. Install bike facilities along WIS 16 west of WIS 35.
-	IX_32_02362	WIS 16 & Oakland St	19	15	LOSS 4	9.56	LOSS 4	2.79	47% Rear ends on WIS 16 - Near-miss crashes involving a pedestrian 20% Angle - Possible sight distance issues for sideroad, queues/congestion from WIS 16 & WIS 35 signal	1 Pedestrian Crash - Uncontrolled pedestrian crossing 1 Bike crash - Bike used sidewalk and crosswalk	The planned WisDOT improvement project includes RRFBs being installed at this intersection Install high visibility crosswalks Provide larger pedestrian refuge islands when crossing WIS 16.

*Only intersections with 15 or more crashes were included. An intersection with less than 15 crashes was included if it was a flagged intersection AND a project intersection.

Legend
Flagged Intersection
Non-Flagged Intersection

Safety Certification Worksheet

Losey Blvd Segment

Analyst:	Salomonsen, Derek	**Design ID:**	1630-08-00
Agency:	AECOM	**Highway:**	Losey Blvd
Date of Analysis:	2020-08-05	**Project Title:**	La Crosse Study
Meta Manager Version:	2019-10	**Project Description:**	US 14 to WIS 16/La Crosse Street
Meta Manager Crash Years:	2014-2018	**Worksheet ID:**	9

System Screening - Sites of Promise									Crash Vetting - Sites of Promise	Contributing Geometric Analysis	
See FDM 11-38-10.2 for guidance									See FDM 11-38-10.3 for guidance	See FDM 11-38-10.4 for guidance	
Segments: Meta-Manager											
Direction	**PDP ID**	**From RP Description**	**To RP Description**	**Length** (PDP_Mile)	**Crash Rate**	**Crash Rate UCL**	**KAB Crash Rate**	**KAB Crash Rate UCL**	**Summarize the contributing factors for ALL crashes in the flagged segment.**	**Which geometric features contribute to the type and severity of the crashes?**	**Possible Countermeasures for Safety Mitigation Process**
EB & WB	-	US 14	WARD AVE	0.5	430.53	531.39	39.14	81.17	This segment was not flagged since neither the crash rate or KAB crash rate exceeded the UCL	9 Bike crashes - All included vehicles FTY to bikes on sidewalk and crosswalk. 5 included a turning vehicle	Install high visibility crosswalks and bike lanes on Losey Blvd
EB & WB	-	WARD AVE	WIS 33	0.9	508.24	501.48	60.50	70.64	Total crashes after screening: 29 34% Rear ends - Congestion, Inattentive driving, following too close 32% Sideswipes - Unsafe lane changes due to inattentive driving 25% Lane Departure - Inattentive driving 2 Angle crashes at the Denton St intersection 2 Angle crashes at the Redfield St intersection - queues from the WIS 33 or Green Bay St signals extend through these intersections and negative offset left turn lanes 1 Pedestrian crash at Travis St - Vehicle FTY to ped crossing Losey Blvd - 3 additional near-miss crashes that resulted in rear end on Losey Blvd 1 Pedestrian crash at Redfield St - Vehicle FTY to ped crossing Losey Blvd, multilane threat due to queues from Green Bay St	2 Left turn crashes at the Redfield St intersection - Negative offset left turn lanes 1 Bike crash at Denton St (more in intersections below) - Turning vehicle FTY to bike using sidewalk and crosswalk	Close the median between Green Bay St and WIS 33. Conver the Redfield St and Denton St intersection to right-in/right-out access only and provide large ped refugee islands on Losey Blvd Install high visibility crosswalks and bike lanes on Losey Blvd
EB & WB	-	WIS 33	LA CROSSE ST	1.5	300.54	488.47	38.70	66.07	This segment was not flagged since neither the crash rate or KAB crash rate exceeded the UCL	-	-
Intersections: Intersection Network Screening											
Project Intersection Number	**INT_ID**	**Intersection Name** (IX_NAME)	**Crashes From Screening**	**Crashes After Vetting**	**LOSS** (TOTAL)	**PSI** (TOTAL)	**LOSS** (KABC)	**PSI** (KABC)	**Summarize the contributing factors for ALL crashes in the flagged intersection.**	**Which geometric features contribute to the type and severity of the crashes?**	**Possible Countermeasures for Safety Mitigation Process**
57	Not Flagged	Losey Blvd & Green Bay St	0	51	N/A	N/A	N/A	N/A	55% Rear End on Losey Blvd - Inattentive driving, following too close, signal visibility, congestion 18% Angle - Failed to yield, ran red light from various directions, signal visibility 1 Pedestrian crash -Ped FTY to signal indication	6% Left turn from Losey Blvd -sight distance issues with neutral offset left turn lanes 1 Bike crash - Bike used sidewalk and crosswalk	Ithis intersection installed monotubes with signal heads per lane sometime during the crash analysis period. Install signals heads with retroreflective backplates Improve left turn offset on Losey Blvd Install high visibility crosswalks
55	Not Flagged	Losey Blvd & WIS 33	0	35	N/A	N/A	N/A	N/A	34% Rear End on Losey Blvd - Congestion, Inattentive driving, following too close, signal visibility 20% Rear End on WIS 33 - Inattentive driving, signal visibility 3 Pedestrian crashes - all included vehicles FTY to ped on east leg of intersection	2 crashes were due to subway driveway just south of intersection 1 Bike crash	Install monotubes on all approaches to achieve one signal head per lane with retroreflective backplates Improve signal timing/coordination through Green Bay St and STH 33 signals to reduce congestion Install high visibility crosswalks and bike lanes on Losey Blvd
64	Not Flagged	Losey Blvd & Ward Ave	0	13	N/A	N/A	N/A	N/A	23% Rear end on Ward Ave - Inattentive driving 15% Rear end on Losey Blvd - Inattentive driving, signal visilbility, congestion	23% Lane departure - Semis taking a EB/WB left turn are hitting signal w/ trailers 1 Bike crash - Bike used sidewalk and crosswalk	Install monotubes on all approaches to achieve one signal head per lane with retroreflective backplates Install high visibility crosswalks and bike lanes on Losey Blvd
60	Not Flagged	Losey Blvd & Weston St	0	9	N/A	N/A	N/A	N/A	56% Angle - 3 crashes included an EB thru vehicle FTY to SB traffic, 1 crash involved WB right turn FTY to NB traffic	Possible sight distance issues cause angle crashes due to large trees near intersection '1 Bike crash - Bike used sidewalk and crosswalk	Remove trees near intersection Install high visibility crosswalks

*Only intersections with 15 or more crashes were included. An intersection with less than 15 crashes was included if it was a project intersection.

Legend
Flagged Intersection
Non-Flagged Intersection

L

Safety Certification Worksheet

WIS 35 (West Ave) Segment

Analyst:	Salomonsen, Derek	**Design ID:**	1630-08-00
Agency:	AECOM	**Highway:**	WIS 35
Date of Analysis:	2020-08-05	**Project Title:**	La Crosse Study
Meta Manager Version:	2019-10	**Project Description:**	US 14 to WIS 16
Meta Manager Crash Years:	2014-2018	**Worksheet ID:**	7

System Screening - Sites of Promise									Crash Vetting - Sites of Promise	Contributing Geometric Analysis	
See FDM 11-38-10.2 for guidance									See FDM 11-38-10.3 for guidance	See FDM 11-38-10.4 for guidance	
Segment Crashes											
Direction	**PDP ID**	**From RP**	**From RP Description**	**To RP**	**To RP Description**	**Length** (PDP_Mile)	**Crash Rate Flag** (RATEFLAG) (Insert value if ≥ 1.0)	**KAB Crash Rate Flag** (MMGR_KAB_CRSH_RT) (Insert value if ≥ 1.00)	**Summarize the contributing factors for ALL crashes in the flagged segment.**	**Which geometric features contribute to the type and severity of the crashes?**	**Possible Countermeasures for Safety Mitigation Process**
NB & SB	7383	035N114 000	US 14 EB	035N114 026	GREEN BAY ST	0.26	-	-	-	-	-
NB & SB	7384	035N114 026	GREEN BAY ST	035N114 063	ADAMS ST	0.37	1.3318	1.8526	Total crashes after vetting: 3 (no crash trends) - Crashes assigned to Green Bay St intersection, see below for additional information - 9 Crashes assigned to Farnam St intersection, 4/9 were angle crashes where WB FTY to WIS 35 thru traffic - 7 Crashes assigned to Denton St intersection, 3/7 were angle crashes where EB FTY to WIS 35 thru traffic	2 Bike crashes at Denton St - Vehicles FTY to bike using sidewalk and crosswalk 1 Bike crash at Park Ave - Turning vehicle FTY to bike using sidkewalk and crosswalk Possible sight distance issues at Denton St and Farnam St intersections based on the angle crashes.	Improve sight distance at Denton Stand Farnam St intersection Install high visibility crosswalks along segment Install bike lanes
NB & SB	7385	035N114 063	ADAMS ST	035N114 066	JOHNSON ST	0.03	1.7177	-	-		
NB	7386	035N114 066	JOHNSON ST	035N115 000	WIS 33 EB	0.1	1.8762	1.3935	Total crashes after vetting: 3 (no crash trends) - 7 Crashes assigned to Adams St intersection, 4 crashes were due to vehicles stopping in thru lanes to turn left onto Adams St causing rear ends or sideswipe crashes	1 Bike crash at Johnson St - Vehicle FTY to bike using sidewakl and crosswalk	Convert WIS 35, south of WIS 33, to a 3-lane typical section to include a TWLTL Install high visibility crosswalks Install bike lanes
SB	7841	035S115 000	WIS 33 EB	035S115 009	JOHNSON ST	0.09	-	-	-	-	-
NB	7387	035N115 000	WIS 33 EB	035N115 022	MARKET ST	0.22	-	-	-	-	-
SB	7840	035S116 049	MARKET ST	035S115 000	WIS 33 EB	0.22	1.0877	-	Total crashes after vetting: 5 60% Rear ends - Congested traffic, inattentive driving	-	Improve signal timing/coordination ibetween WIS 33 and Market St signals
NB	7388	035N115 022	MARKET ST	035N115 031	FERRY ST	0.09	1.9927	-	Total crashes after vetting: 1 (no crash trends) - Majority crashes assigned to Market St intersection, see below for additional information	-	-
SB	7839	035S116 040	FERRY ST	035S116 049	MARKET ST	0.09	2.0876	1.0369	Total crashes after vetting: 1 (no crash trends) - Majority of crashes assigned to Main St and State St intersections, see below for additional information	-	-
NB & SB	7389	035N115 031	FERRY ST	035N115 044	CAMERON AVE	0.13	-	-	-	-	-
NB	7390	035N115 044	CAMERON AVE	035N115 050	CASS ST	0.06	1.3436	-	Total crashes after vetting: 1 (no crash trends due to small segment)	-	-
SB	7838	035S116 021	CASS ST	035S116 027	CAMERON AVE	0.06	-	-	-	-	-
NB	7391	035N115 050	CASS ST	035N115 059	KING ST	0.09	1.0176	-	Total crashes after vetting: 1 (no crash trends) - Majority of crashes assigned to Cass St intersection, see below for additional information	-	-
SB	7837	035S116 012	KING ST	035S116 021	CASS ST	0.09	3.3582	2.2024	Total crashes after vetting: 6 -Majority of crashes assigned to Pine St or Vine St intersections, see below for additional information 100% Rear ends - Congested traffic, following too close, inattentive driving	-	-
NB	7392	035N115 059	KING ST	035N116 000	MAIN ST	0.12	1.032	-	Total crashes after vetting: 2 (no crash trends) - Crashes assigned to King St intersection 10 crashes at WIS 35 & King St intersection - 40% Angle (3/4 side road FTY to WIS thru traffic) - 20% Left turn from WIS 35	10 crashes at WIS 35 & King St intersection - 20% Left turn from WIS 35 (NB sight distance issue due to negative offset turn lanes)	A planned WisDOT project includes closing the median through the King St intersection
SB	7836	035S116 000	MAIN ST	035S116 012	KING ST	0.12	1.5876	2.6668	Total crashes after vetting: 1 (no crash trends) - Crashes reassigned to Pine St and Badger St intersections, see below for additional information	-	-
NB	7393	035N116 000	MAIN ST	035N116 007	STATE ST	0.07	2.0806	1.3582	Total crashes after vetting: 0 (no crash trends) - Crashes reassigned to Main St and State St intersections, see below for additional information	-	-
SB	7835	035S117 033	STATE ST	035S116 000	MAIN ST	0.07	1.3004	1.3582	Total crashes after vetting: 6 50% rear ends - Following too close, congestion	1 Bike crash - Vehicle exiting alley FTY to bike using sidewalk	Improve signal timing/coordination at Main St and State St signals 'Install bike lanes
NB	7394	035N116 007	STATE ST	035N117 000	WIS 16 EB	0.33	2.6262	2.4163	Total crashes after vetting: 4 - Majority crashes assigned to Vine St, Badger St, State St, and Pine St intersections, see below for additional information 75% Rear end on WIS 35 - Congestion, inattentive driving	-	Improve signal timing/coordination at State St and La Crosse St/WIS 16 signals
SB	7834	035S117 000	WIS 16 EB	035S117 033	STATE ST	0.33	1.7705	1.6728	Total crashes after vetting: 2 (no crash trends) - Crashes reassigned to Hagar St, Monito Str, St Andrew St intersections, see the WIS 35 - WIS 16 to US 53 table for more information	-	-
Intersection Crashes											
Project Intersection Number	**INT_ID**	**Intersection Name** (IX_NAME)	**Crashes From Screening**	**Crashes After Vetting**	**LOSS** (TOTAL)	**PSI** (TOTAL)	**LOSS** (KABC)	**PSI** (KABC)	**Summarize the contributing factors for ALL crashes in the flagged intersection.**	**Which geometric features contribute to the type and severity of the crashes?**	**Possible Countermeasures for Safety Mitigation Process**
53	IX_32_01928	WIS 35 & WIS 33	77	72	LOSS 4	30.17	LOSS 4	6.14	28% Rear end on WIS 35 and 14% Rear end on WIS 33 - Inattentive driving, signal visibility, congestion 13% Angle - Inattentive driving, ran red light (5/9 WB ran red) 11% Sideswipe on WIS 33 - Unsafe lane change, inattentive driving 1 Pedestrian crash - Vehicle FTY to ped in crosswalk	11% Sideswipe on WIS 33 - Possible unclear lane assignments on WIS 33, or overtaking turning vehicles stopped in thru lanes '14% Rear end on WIS 33 - No dedicated turn lanes 10% Left turn from WIS 35 - Sight distance issue with negative offset turn lane, 6/7 included SB Left turns FTY to NB 10% Left turn from WIS 33 - Sight distance issue with negative offset turn lane, 5/7 included WB Left turns FTY to NB 3 Bike crashes - Vehicle FTY to bike using sidewalk and crosswalk	Install monotubes to achieve one signal head per lane with retroreflective backplates on all approaches Install bike lanes Install high visibility crosswalks Improve left turn lane offset on WIS 35 Add designated left turn lanes on WIS 33
34	IX_32_02241	WIS 35 & State St	65	47	LOSS 4	27.09	LOSS 4	7.54	66% Rear end on WIS 35 - Following too close, inattentive driving,s ignal visibility, congestion - 7/31 crashes involved a near-miss with a ped in a crosswalk 11% Angle - Inattentive driving, ran red light (4/5 NB ran red), signal visibility 2 Pedestrian crashes - Vehicle FTY to ped in crosswalks, signal visibility	66% Rear end on WIS 35 - Lack of right turn lanes (5/7 SB right turn stopped for ped in crosswalk) 1 Bike crash - Vehicle FTY to bike using sidewalk and crosswalk	Install monotubes to achieve one signal head per lane with retroreflective backplates Add dedicated right turn lanes on WIS 35 Install bike lanes Install high visibility crosswalks

Intersection Crashes											
Project Intersection Number	**INT_ID**	**Intersection Name** (IX_NAME)	**Crashes From Screening**	**Crashes After Vetting**	**LOSS** (TOTAL)	**PSI** (TOTAL)	**LOSS** (KABC)	**PSI** (KABC)	**Summarize the contributing factors for ALL crashes in the flagged intersection.**	**Which geometric features contribute to the type and severity of the crashes?**	**Possible Countermeasures for Safety Mitigation Process**
45	IX_32_02128 (Not Flagged)	WIS 35 & Cass St	0	39	LOSS 2	-6.27	LOSS 2	-0.20	41% Rear End on WIS 35 - Following too close, inattentive driving, signal visibility, congestion - 3 crashes involved near-miss with ped 23% Angle - Inattentive driving, ran red light (5/7 ran red on WIS 35) 18% Rear End on Main St - Inattentive driving, all west leg 1 Pedestrian crash - Turning vehicle FTY to ped in crosswalk	41% Rear End on WIS 35 - near-miss ped crashes invovled right turning vehicles, lack of turn lane	Install monotubes to achieve one signal head per lane with retroreflective backplates install dedicated right turn lanes Install high visibility crosswalks
37	IX_32_02210 (Not Flagged)	WIS 35 & Main St	0	27	LOSS 2	-9.92	LOSS 2	-5.67	44% Rear End on WIS 35 - Following too close, inattentive driving, signal visibility, congestion 1 Pedestrian crash - Turning vehicle FTY to ped in crosswalk	3 Bike crashes - Turning vehicle FTY to bike using sidewalk and crosswalk	Install monotubes to achieve one signal head per lane with retroreflective backplates Install high visibility crosswalks Install bike lanes
N/A	IX_32_02324	WIS 35 & Badger St	37	24	LOSS 4	22.54	LOSS 4	7.27	63% Rear end on WIS 35 - Inattentive/ following - 10/15 crashes involved near-miss with ped/bike crossing WIS 35, lack of traffic control 2 Pedestrian crashes - Vehicle FTY to ped in crosswalk crossing WIS 35	4 Bike crashes - Vehicle FTY to bike in crosswalk (3/4 were crossing WIS 35) Near-miss ped crashes due to lack of vehicle gaps in peak hours and its close proximity to the WIS 16 & WIS 35 signalized intersection	Install RRFB ped signal, including overhead signals Install high visibility crosswalks Install bike lanes
N/A	IX_32_02272	WIS 35 & Vine St	23	22	LOSS 4	11.05	LOSS 3	0.59	50% Rear end - Inattentive driving, following too close, congestion - 7/11 crashes involved near-miss with ped/bike crossing WIS 35 1 Pedestrian crash - Vehicle FTY to ped crossing WIS 35	36% Angle - Vine St traffic FTY to WIS 35 thru traffic, wide intersection with thru vehicles blocking other thru vehicles, few gaps Near-miss ped crashes due to lack of vehicle gaps in peak hours and a large crossing with no pedestrian refuge islands	Install traffic signal, including monotubes to achieve one signal head per lane with retroreflective backplates If a signal isn't warranted, consider extending the median through the intersection to restrict Vine St to right-in/right-out only with larger ped reugee islands and RRFB ped signals Install high visibility crosswalks Install bike lanes
N/A	IX_32_02303	WIS 35 & Pine St	23	20	LOSS 4	11.05	LOSS 4	3.93	80% Rear end - Inattentive driving - 11/16 crashes involved near-miss with peds crossing WIS 35, signal visibility, congestion 1 Pedestrian crash - Vehicle FTY to ped in crosswalk crossing WIS 35, signal visibility	2 Bike crashes - Vehicles FTY to bikes using sidewalk and crosswalk	Install RRFB ped signal, including overhead signals Install high visibility crosswalks Install bike lanes
58	IX_32_01677 (Not Flagged)	WIS 35 & Green Bay St	0	19	LOSS 2	-7.84	LOSS 2	-1.55	37% Angle - Inattentive driving, ran red lights (5/8 SB ran red), signal visibility 42% Rear end on WIS 35 - Following too close, inattentive driving, signal visibility, congestion 1 Pedestrian crash - Vehicle FTY to ped in crosswalk	NB queues extend over rail crossing on south leg of intersection 1 Bike crash - Turning vehicle FTY to bike using sidewalk and crosswalk	Install monotubes to achieve one signal head per lane with retroreflective backplates Install high visibility crosswalks Install bike lanes
50	IX_32_02005 (Not Flagged)	WIS 35 & Market St	0	17	LOSS 2	-5.88	LOSS 2	-2.24	29% Angle - Inattentive driving, ran red lights (all NB ran red), signal visibility 18 % Rear End on WIS 35 - Inattentive driving, following too close, signal visibility, congestion	IS 35 (W	Install monotubes to achieve one signal head per lane with retroreflective backplates Install high visibility crosswalks Install bike lanes

*Only intersections with 15 or more crashes were included. An intersection with less than 15 crashes was included if it was a flagged intersection AND a project intersection.

Legend
Flagged Intersection
Non-Flagged Intersection

Safety Certification Worksheet

Downtown Segment

Analyst:	Salomonsen, Derek	**Design ID:**	1630-08-00
Agency:	AECOM	**Highway:**	US 14/53 NB - HOOD ST TO LA CROSSE ST
Date of Analysis:	2020-08-05	**Project Title:**	USH 14/61 - IH-90
Meta Manager Version:	2019-10	**Project Description:**	USH 14/61 NLY TO IH-90
Meta Manager Crash Years:	2014-2018	**Worksheet ID:**	3

System Screening - Sites of Promise									Crash Vetting - Sites of Promise	Contributing Geometric Analysis	
See FDM 11-38-10.2 for guidance									See FDM 11-38-10.3 for guidance	See FDM 11-38-10.4 for guidance	
Direction	**PDP ID**	**From RP**	**From RP Description**	**To RP**	**To RP Description**	**Length** (PDP_Mile)	**Crash Rate Flag** (RATEFLAG) (Insert value if ≥ 1.0)	**KAB Crash Rate Flag** (MMGR_KAB_CRSH_RT) (Insert value if ≥ 1.00)	**Summarize the contributing factors for ALL crashes in the flagged segment.**	**Which geometric features contribute to the type and severity of the crashes?**	**Possible Countermeasures for Safety Mitigation Process**
Segment Crashes											
NB	3055	014W010 082	HOOD ST	014W007 000	WIS 33 E&W	0.2	-	-	-	-	-
NB	3056	014W007 000	WIS 33 E&W	014W007 022	MARKET ST	0.22	-	-	1 Pedestrian crash at WIS 33 - Turning Vehicle FTY to ped in crosswalk	-	Install high visibility crosswalks at WIS 33 intersection
NB	3057	014W007 022	MARKET ST	014W007 036	DIVISION ST	0.14	1.2332	-	Total segment crashes after vetting: 6 67% Sideswipe - Inattentive driving, closely spaced intersections	13 Additional crashes were assigned to the US 53 NB & Market St intersection -Sight distnace issue at US 53 NB & Market St intersection, 8/13 crashes were angle at t his intersection	Install traffic signal at US 53 & Market St since sight distances cannot be improved in the SW quadrant Install overhead street name signs
NB	3058	014W007 036	DIVISION ST	014W006M000	US 14 WB	0.07	1.8429	-	Total segment crashes after vetting: 1 (No trends) - 14 crashes were assigned to the US 53 NB & Division St intersection 9/14 Division St intersection crashes were angle - Congestion, ran stop signs, inattentive driving	9/14 Division St intersection crashes were angle - Possible sight distance issues on Division St	Improve intersection sight distance at Division St in SW quadrant by having car dealership relocate show vehicles and remove parking on east side of US 53 near Division St
NB	3059	014W006M000	US 14 EB	014W006 000	US 53 NB	0.07	2.6594	1.5967	Total segment crashes after vetting: 3 - All crashes involved the driveway to Honda Motorworks - Majority of crashes were assigned to the US 53 NB & Cameron Ave intersection, see below for additional information	-	Remove access to Honda Motorworks on US 53, access avaialble on Cass st and Cameron Ave
NB	11384	053N002G000	US 14 WB	053N002G009	KING ST	0.09	1.629	-	Total segment crashes after vetting: 6 50% Rear end on US 53 - Inattentive driving, congestion	-	Improve signal timing/coordination along US 53 NB
NB	11385	053N002G009	KING ST	053N002M000	MAIN ST	0.17	3.8211	2.5183	Total segment crashes after vetting: 22 23% Rear end on US 53 - Inattentive driving, congestion 10 Additional crashes were assigned to the Pearl St intersection - 3/10 Near-miss pedestrian crashes due to a ped crossing US 53, large distance to cross US 53 with traffic control - 6/10 Sideswipe, inattentive driving, left turn from incorrect lane	68% Sideswipe - Horizontal curve at Pearl St intersection - Parked vehicles on horizontal curve 23% Rear end on US 53 - Parked vehicles on horizontal curve Pearl St intersection crashes are likely due to US 53 being a one-way road and the horizontal curve 1 Pedestrian crash while ped was entering parked vehicle near horizontal curve Near-miss ped crashes potentially due to sight distance issues due to parking and the crossing being located on a horizontal curve	Improve signal timing/coordination along US 53 NB Remove parking near Pearl St intersection Install pavement marking for parking
NB	11386	053N002M000	MAIN ST	053N002M007	STATE ST	0.07	3.6391	1.1432	Total segment crashes after vetting: 13 69% Sideswipe - Unsafe lane change, closely spaced intersections, inattentive driving	69% Sideswipe - Parked vehicles 31% Rear end on US 53 - Parked vehicles	Remove parking near Pearl St intersection Install pavement marking for parking Install overhead street name signs
NB	11387	053N002M007	STATE ST	053N002M021	VINE ST	0.14	3.3002	1.6282	Total segment crashes after vetting: 11 55% Sideswipe - Unsafe lane change, closely spaced intersections, inattentive driving	36% Rear end on US 53 - Parked vehicles	Install pavement marking for parking Install overhead street name signs
NB	11388	053N002M021	VINE ST	053N003K000	LA CROSSE ST	0.15	4.1015	3.5116	Total segment crashes after vetting: 13 54% Sideswipe - Unsafe lane change, closely spaced intersetions, inattentive driving 31% Rear end on US 53 - following too close, 1 near-miss with ped in mid-block crossing near Pine St	-	Remove one of the mid-block crossings near Pine St
Intersection Crashes											
Project Intersection Number	**INT_ID**	**Intersection Name** (IX_NAME)	**Crashes From Screening**	**Crashes After Vetting**	**LOSS** (TOTAL)	**PSI** (TOTAL)	**LOSS** (KABC)	**PSI** (KABC)	**Summarize the contributing factors for ALL crashes in the flagged intersection.**	**Which geometric features contribute to the type and severity of the crashes?**	**Possible Countermeasures for Safety Mitigation Process**
38	IX_32_02188	US 53 NB & Jay St	28	26	LOSS 4	10.92	LOSS 4	2.15	38% Sideswipe - Wrong-way driving, turning left from incorrect lane, inattentive driving 27% Rear End on US 53 - Inattentive driving, following too close, signal visibility 12% Angle - Inattentive driving, signal visibility, ran red lights (2/3 ran red on US 53) 3 Pedestrian crashes - Turning vehicles FTY to ped in crosswalk	US 53 being a one-way road likely caused confusion on lane assigned causing the sideswipe crashes 3 Pedestrian crashes - Possible sight distance issue for side road turning vehicles when peds cross north crossing of US 53	Install monotubes to achieve one signal head per lane with retroreflective backplates Install overhead signing for turn lane assignments and street name signs Install high visibility crosswalks
30	IX_32_02285	US 53 NB & Vine St	34	24	LOSS 4	20.83	LOSS 4	3.91	42% Rear end on US 53 - 8/10 of these crashes were near-miss with a pedestrian crossing US 53 - Following too close 21% Sideswipe - Left turn from incorrect lane, inattentive driving 2 Pedestrian crashes - Vehicle FTY to ped in crosswalk, large distance to cross US 53 without traffic control	13% Angle - Sight distance issue for west approach on Vine St 1 Bike crash - Bike on road/shoulder drifted into vehicle 2 Pedestrian crashes & Near-miss crashes - Possible sight distance issue for south crossing of US 53, lack of vehicle gaps during peak hour periods	Install a traffic signal with monotubes to achieve one signal head per lane with retroflective backplates If a signal is not warranted, install RRFB ped signals with high visibility crosswalks Install overhead signing for turn lane assignments and street name signs Install bike lanes
32	IX_32_02253	US 53 NB & State St	33	21	LOSS 4	9.51	LOSS 2	-0.25	29% Angle - Inattentive driving, signal visibility, ran red lights (4/6 ran red on US 53) 24% Rear End on US 53 - Following too close, congestion, signal visibility 19% Rear End on State St - Following too close 19% Sideswipe - Left turn from incorrect lane, inattentive driving	US 53 being a one-way road likely caused confusion on lane assigned causing the sideswipe crashes	Install monotubes to achieve one signal head per lane with retroreflective backplates Potentially improve signal timing/coordination Install overhead signing for turn lane assignments and street name signs
46	IX_32_02100 (Not Flagged)	US 53 NB & Cameron Ave	0	21	LOSS 3	8.45	LOSS 2	-0.25	62% Angle - Inattentive driving, signal visibility, ran red lights (12/13 ran red on US 53) 19% Rear End on US 53 - Inattentive driving, signal visibility	19% Lane Departure - Insufficient turning movement for trucks, left turns from Cameron hit signal in NW quadrant	Install monotubes to achieve one signal head per lane with retroreflective backplates Install new signing to have trucks use the right most turn lane on Cameron Ave, or improve turning radius in NW quadrant

Intersection Crashes											
Project Intersection Number	**INT_ID**	**Intersection Name** (IX_NAME)	**Crashes From Screening**	**Crashes After Vetting**	**LOSS** (TOTAL)	**PSI** (TOTAL)	**LOSS** (KABC)	**PSI** (KABC)	**Summarize the contributing factors for ALL crashes in the flagged intersection.**	**Which geometric features contribute to the type and severity of the crashes?**	**Possible Countermeasures for Safety Mitigation Process**
40	IX_32_02176	US 53 NB & King St	39	19	LOSS 4	23.29	LOSS 4	5.91	32% Angle - Congestion, ran stop signs on King St 26% Sideswipe - Left turn from incorrect lane, inattentive driving 1 Pedestrian crash and 2 near-miss pedestrian crashes - Turning vehicle FTY to ped in crosswalk, and following too close for near-miss crashes, large distance to cross US 53 without traffic control	32% Angle - Sight distance issue for west approach on King St 2 Bike crashes - King St vehicles FTY to bike using sidewalk and crosswalk 1 Pedestrian crash and 2 near-miss pedestrian crashes - Lack of vehicle gaps during peak hours	Improve signal timing/coordination at US 53 & Jay St signal Install overhead signing for turn lane assignments and street name signs Install high visibility crosswalks Improve intersection sight distance in SW quadrant by having car dealership relocate show vehicles
35	IX_32_02224	US 53 NB & Main St	35	18	LOSS 4	9.57	LOSS 2	-0.73	39% Sideswipe - Left turn from incorrect lane, inattentive driving 17% Angle - Inattentive driving, signal visibility, ran red lights (1/3 ran red on US 53) 17% Rear End on US 53 - Following too close, signal visibility 1 Pedestrian crash - Turning vehicle FTY to ped in crosswalk	2 Bike crash - Turning vehicle FTY to bike using sidewalk and crosswalk	Install monotubes to achieve one signal head per lane with retroreflective backplates Install overhead signing for turn lane assignments and street name signs Install high visibility crosswalks
N/A	IX_32_02334	US 53 NB & Badger St	20	16	LOSS 4	11.26	LOSS 4	2.08	75% Sideswipe - Turning left from incorrect lane, inattentive driving 2 Near-miss pedestrian crashes - Following too close, inattentive driving	1 Bike crash - Turning vehicle FTY to bike using sidewalk and crosswalk	Install overhead signing for turn lane assignments and street name signs Install high visibility crosswalks with RRFB ped signals

*Only intersections with 15 or more crashes were included. An intersection with less than 15 crashes was included if it was a flagged intersection AND a project intersection.

Legend
Flagged Intersection
Non-Flagged Intersection

Safety Certification Worksheet

Downtown Segment

Analyst:	Salomonsen, Derek	**Design ID:**	1630-08-00
Agency:	AECOM	**Highway:**	US 14/61 and US 53 (3rd St)
Date of Analysis:	2020-08-05	**Project Title:**	La Crosse Study
Meta Manager Version:	2019-10	**Project Description:**	La Crosse St to Hood St
Meta Manager Crash Years:	2014-2018	**Worksheet ID:**	4

System Screening - Sites of Promise									Crash Vetting - Sites of Promise	Contributing Geometric Analysis	
See FDM 11-38-10.2 for guidance									See FDM 11-38-10.3 for guidance	See FDM 11-38-10.4 for guidance	
Segment Crashes											
Direction	**PDP ID**	**From RP**	**From RP Description**	**To RP**	**To RP Description**	**Length** (PDP_Mile)	**Crash Rate Flag** (RATEFLAG) (Insert value if ≥ 1.0)	**KAB Crash Rate Flag** (MMGR_KAB_CRSH_RT) (Insert value if ≥ 1.00)	**Summarize the contributing factors for ALL crashes in the flagged segment.**	**Which geometric features contribute to the type and severity of the crashes?**	**Possible Countermeasures for Safety Mitigation Process**
SB	11873	053S003K000	LA CROSSE ST	053S003K029	STATE ST	0.29	1.3747	-	Total segment crashes after vetting: 11 55% Rear end on US 53 - Inattentive driving 36% Sideswipe - Unsafe lane change, closely spaced intersections	36% Sideswipe - Parked vehicles	Consider removing some parking to provide marked turn lanes, could remove parking on one side of street to accommodate bike lanes/turn lanes provide pavement markings for parking Install overhead street name signs and lane assignment signs Install bike lanes Install high visibility crosswalks If not installing turn lanes, consider installing pedestrian curb bump-outs
SB	11874	053S003K029	STATE ST	053S002M000	MAIN ST	0.07	4.0586	1.1676	Total segment crashes after vetting: 7 71% Sideswipe - Unsafe lane change, closely spaced intersections	71% Sideswipe - Parked vehicles	
SB	11875	053S002M000	MAIN ST	053S001D000	US 14 WB	0.29	4.8811	3.9967	Total segment crashes after vetting: 40 52% Rear end on US 53 - Inattentive driving, congestion 40% Sideswipe - Inattentive driving, unsafe lane change, closely spaced intersections	52% Rear end on US 53 - Parked vehicles 40% Sideswipe - Parked vehicles	
SB	11876	053S001D000	US 14 WB	053S001A000	CAMERON AVE	0.07	1.3896	-	Total segment crashes after vetting: 3 (No trends) - Majority of crashes were assigned to the US 14/Cameron Ave intersection, see below for additional information	1 Bike crash at Cass St - Bike using crosswalk FTY to vehicle	
SB	2690	014E005M000	CAMERON AVE	014E005M007	DIVISION ST	0.07	2.488	3.0153	Total segment crashes after vetting: 1 (No trends) - Majority of crashes were assigned to the US 14/Cameron Ave intersection, see below for additional information	-	
SB	2691	014E005M007	DIVISION ST	014E005M021	MARKET ST	0.14	1.0975	-	Total segment crashes after vetting: 3 - Majority of crashes were assigned to the Market St intersection, see below for additional information 100% Sideswipe - unsafe lane change, closely spaced intersections 11 Crashes were assigned to the Division St intersection - 9/11 Sideswipe crashes, mainly due to turning left from incorrect lane, inattentive driving	1 Bike crash at Division St - Bike failed to stop at side road stop sign	
SB	2692	014E005M021	MARKET ST	014E007 000	WIS 33 EB	0.21	1.3792	-	Total segment crashes after vetting: 12 50% Sideswipe - unsafe lane change, closely spaced intersections 42% Rear end on US 53 - Inattentie driving, near-miss crashes with ped crossing US 53 (2)	50% Sideswipe -Parked vehicles 42% Rear end on US 53 -Parked vehicles	
SB	2693	014E007 000	WIS 33 EB	014E007 023	HOOD ST	0.23	1.215	-	Total segment crashes after vetting: 6 (no trends) - Majority of crashes were assigned to the Jackson St intersection, see below for additional details	-	
Intersection Crashes											
Project Intersection Number	**INT_ID**	**Intersection Name** (IX_NAME)	**Crashes From Screening**	**Crashes After Vetting**	**LOSS** (TOTAL)	**PSI** (TOTAL)	**LOSS** (KABC)	**PSI** (KABC)	**Summarize the contributing factors for ALL crashes in the flagged intersection.**	**Which geometric features contribute to the type and severity of the crashes?**	**Possible Countermeasures for Safety Mitigation Process**
47	IX_32_02101	US 14/Cameron Ave & US 53	47	45	LOSS 3	10.73	LOSS 4	6.02	47% Angle - Inattentive driving, signal visibility, ran red lights 20% Sideswipe - Turning left from incorrect lane, inattentive driving	17% Rear Ends on US 14/Cameron Ave -All crashes occurred in the EB channelized right turn US 14/53 being a one-way road likely caused confusion on lane assigned causing the sideswipe crashes	Install monotubes to achieve one signal head per lane with retroreflective backplates for US 53 and for US 14 Removed EB channelized right turn Install overhed signing for lane assignments and street name signs
39	IX_32_02189	US 53 SB & Jay St	56	34	LOSS 4	33.02	LOSS 4	4.26	35% Sideswipe - Turning left from incorrect lane, unsafe lane change, inattentive driving 26% Rear Ends of US 53 - Inattentive driving, signal visibility 9% Angle - Inattentive driving, 2/3 SB ran red lights, signal visibility 3 Pedestrian crashes - Vehicle FTY to ped in crosswalk, 2 included turning vehicles, signal visibility	US 53 being a one-way road likely caused confusion on lane assigned causing the sideswipe crashes 3 Pedestrian crashes - Possible sight distance issues	Install monotubes to achieve one signal head per lane with retroreflective backplates Install overhead signing for left turn lane assignment and street name signs Install high visibility crosswalks
33	IX_32_02248	US 53 SB & Main St	67	30	LOSS 4	35.90	LOSS 4	3.62	33% Rear Ends on US 53 - Inattentive driving, following too close, signal visibility 33% Sideswipe -Turning left from incorrect lane, inattentive driving 2 Pedestrian crashes - Vehicle FTY to ped in crosswalk, 1 included turning vehicle	US 14/53 being a one-way road likely caused confusion on lane assigned causing the sideswipe crashes	Install monotubes to achieve one signal head per lane with retroreflective backplates Install overhead signing for left turn lane assignment and street name signs Install high visibility crosswalks
48	IX_32_02015	US 14 & Market St	28	26	LOSS 4	9.12	LOSS 2	-1.83	46% Sideswipe -Turning left from incorrect lane, inattentive driving 19% Lane Departure - Weather, drunk driving	8% Angle - Sight distance issue for side road 8% Rear End on US 53 - Vehicles slowed to turn, lack of turn lanes US 14/53 being a one-way road likely caused confusion on lane assigned causing the sideswipe crashes 1 Bike crash - Vehcle FTY to bike using sidewalk and crosswalk	Install traffic signal with monotubes to achieve one signal head per lane with retroreflective backplates Install pavement markings for right/left turn lanes Install overhead signing for turn lane assignment and street name signs Install high visibility crosswalks Install bike lanes
51	IX_32_01939 (Not Flagged)	US 14 SB & Jackson St	0	21	LOSS 3	2.00	LOSS 2	-0.80	48% Sideswipe -Turning left from incorrect lane, inattentive driving 33% Angle - Inattentive driving, signal visibility, ran red lights (50/50 SB vs WB)	US 14/53 being a one-way road likely caused confusion on lane assigned causing the sideswipe crashes	Install monotubes to achieve one signal head per lane with retroreflective backplates Install overhead signing for left turn lane assignment and street name signs
N/A	IX_32_02221	US 53 SB & Pearl St	36	19	LOSS 4	22.35	LOSS 4	2.81	47% Rear end on US 53 - inattentive driving, 7/9 crashes were near-miss with a ped crossing US 53, lack of traffic control 5 Pedestrian crashes - Vehicle FTY to ped in crosswalk, 2 on US 53 and 3 on Pearl St, lack of traffic control at a major ped crossing for the La Crosse Center, signal visibility	1 Bike crash - Vehicle FTY to bike using sidewalk and crosswalk Near-miss pedestrian crashes may be caused by possible sight distance issues	Install traffic signal with monotubes to achieve one signal head per lane, or pedestrian signals (RRFB) Install high visibility crosswalks Install bike lanes

Intersection Crashes											
Project Intersection Number	**INT_ID**	**Intersection Name** (IX_NAME)	**Crashes From Screening**	**Crashes After Vetting**	**LOSS** (TOTAL)	**PSI** (TOTAL)	**LOSS** (KABC)	**PSI** (KABC)	**Summarize the contributing factors for ALL crashes in the flagged intersection.**	**Which geometric features contribute to the type and severity of the crashes?**	**Possible Countermeasures for Safety Mitigation Process**
41	IX_32_02177	US 53 SB & King St	23	16	LOSS 4	9.53	LOSS 2	-0.31	44% Sideswipe - Turning left from incorrect lane, inattentive driving	38% Angle - Sight distance issues, buildings for east approach, and parked vehicles for west approach US 14/53 being a one-way road likely caused confusion on lane assigned causing the sideswipe crashes	Install traffic signal with monotubes to achieve one signal head per lane with retroreflective backplates Install overhead signing for left turn lane assignment and street name signs
31	IX_32_02278 (Not Flagged)	US 53 SB & State St	0	15	LOSS 3	8.95	LOSS 2	-1.19	60% Rear Ends - Congestions,Inattentive driving, following too close, signal visibility	1 Bike crash - Vehicle FTY to bike using sidewalk and crosswalk	Install monotubes to achieve one signal head per lane with retroreflective backplates Install bike lanes Install high visibility crosswalks
29	IX_32_02291	US 53 SB & Vine St	14	6	LOSS 4	4.88	LOSS 2	-0.81	67% Rear End on US 53 - Inattentive driving, congestion - Congestion due to State St signal, see recommendations for this intersection above	-	Install pavement markings for right/left turn lanes

*Only intersections with 15 or more crashes were included. An intersection with less than 15 crashes was included if it was a flagged intersection AND a project intersection.

Legend
Flagged Intersection
Non-Flagged Intersection

Safety Certification Worksheet

US 14/61 (South Ave, Mormon Coulee Rd) Segment

Analyst:	Salomonsen, Derek	**Design ID:**	1630-08-00
Agency:	AECOM	**Highway:**	US 14
Date of Analysis:	2020-08-05	**Project Title:**	La Crosse Study
Meta Manager Version:	2019-10	**Project Description:**	Hood St to Losey Blvd
Meta Manager Crash Years:	2014-2018	**Worksheet ID:**	6

System Screening - Sites of Promise									Crash Vetting - Sites of Promise	Contributing Geometric Analysis	
See FDM 11-38-10.2 for guidance									See FDM 11-38-10.3 for guidance	See FDM 11-38-10.4 for guidance	
Segment Crashes											
Direction	**PDP ID**	**From RP**	**From RP Description**	**To RP**	**To RP Description**	**Length** (PDP_Mile)	**Crash Rate Flag** (RATEFLAG) (Insert value if ≥ 1.0)	**KAB Crash Rate Flag** (MMGR_KAB_CRSH_RT) (Insert value if ≥ 1.00)	**Summarize the contributing factors for ALL crashes in the flagged segment.**	**Which geometric features contribute to the type and severity of the crashes?**	**Possible Countermeasures for Safety Mitigation Process**
WB	3054	014W010 076	FARNAM ST	014W010 082	HOOD ST	0.06	-	-	-	-	-
EB	2694	014E007 023	HOOD ST	014E007 031	FARNAM ST	0.08	-	-	-	-	-
WB	3053	014W010 050	HOSPITAL XWALK	014W010 076	FARNAM ST	0.26	1.4863	1.679	Total crashes after vetting: 0 - All crashes reassigned to US 14 & 7th St intersection, see below for additional information	-	-
EB	2695	014E007 031	FARNAM ST	014E007 042	7TH ST	0.11	-	-	-	-	-
EB	2696	014E007 042	7TH ST	014E007 055	HOSPITAL XWAL	0.13	1.623	-	Total crashes after vetting: 3 (no crash trends) - Majority of crashes reassigned to US 14 & 7th St intersection, see below for additional information 1 Pedestrian crash - Ped crossed illegally near 7th St	-	Install high visibility crosswalk Convert RRFB to be overhead for better visibility
WB	3052	014W010 034	GREEN BAY ST	014W010 050	HOSPITAL XWAL	0.16	-	1.2078	Total crashes after vetting: 7 86% Rear end on US 14 - All crashes were near-miss pedestrian crashes at the hosiptal mid-block crosswalk, inattentive driving, potential signal visibility of RRFB	1 Bike crash at Green Bay St - Turning vehicle FTY to bike using sidewalk and crosswalk	Install high visibility crosswalk Convert RRFB to be overhead for better visibility
EB	2697	014E007 055	HOSPITAL XWAL	014E007 072	SIMS PL	0.17	-	-	-	-	-
WB	3051	014W010 025	US 14 EB (BEGIN DIVIDED)	014W010 034	GREEN BAY ST	0.09	1.1042	2.736	Total crashes after vetting: 2 2 additional crashes occurred at Green Bay St. Both segment and Green Bay St crashes were rear end on US 14 due to congestion	-	Install monotubes to achieve one signal head per lane with retroreflective backplates at Green Bay St intersection
EB	2698	014E007 072	SIMS PL	014E007 081	S OF GREEN BAY ST	0.09	-	-	-	-	-
EB & WB	2699	014E007 081	S OF GREEN BAY ST	014E010 000	WIS 35 NB	0.24	-	-	-	-	-
EB & WB	2700	014E010 000	WIS 35 NB	014E010 055	16TH ST S	0.55	-	-	-	1 bike crash at 15th St - Turning vehicle FTY to bike using sidewalk and crosswalk	Install high visibility crosswalks along US 14 Install bike lanes
EB & WB	2701	014E010 055	16TH ST S	014E010 062	17TH ST	0.07	1.0342	-	Total crashes after screening: 7 86% Rear ends - Inattentive driving	86% Rear ends - Lack of left turn lanes into driveways 9 Additional crashes reassigned to 16th St intersection - 56% Left turn from US 14	The WisDOT planned improvement for US 14 includes restricting access at the driveways between 16th St and 17th St to right-in/right-out, and the 16th St intersection will be converted to a 4-leg roundabout.
WB	3049	014W011A000	EAST AVE	014W011A010	17TH ST	0.1	-	-	-	-	-
EB	2702	014E010 062	17TH ST	014E011A000	EAST AVE	0.1	1.8241	-	Total crashes after vetting: 12 67% Rear ends - Inattentive driving 17% Sideswipe - Inattentive driving	67% Rear ends - Lack of left turn lanes	The WisDOT planned improvement for US 14 includes restricting access between 17th St and Ward Ave to only be right-in/right-out and converting the Ward Ave intersection to a roundabout
WB	3048	014W011T039	VICTORY ST	014W011A000	EAST AVE	0.32	-	-	-	-	-
EB	2703	014E011A000	EAST AVE	014E011A032	VICTORY ST	0.32	1.8997	1.0699	Total crashes after vetting: 23 48% Rear ends - Inattentive driving, congestion 26% Sideswipe - Inattentive driving, unsafe lane change 17% Angle - Vehicles FTY when existing driveways	48% Rear ends - Slowing for right turn into driveways, lack of turn lanes - Lack of capacity during peak hours 1 Bike crash - Bike crossed US 14 at unmarked location and not at an intersection	Restrict access to right-in/right-out at driveways between Ward Ave and Victory St, and allow for bid-block crossings for peds and bikes, or close some access and redirect traffic to adjacent roads
WB	3047	014W011T000	LOSEY BLVD	014W011T039	VICTORY ST	0.39	-	-	1 Pedestrian crash at near Losey Blvd - Ped crossed US 14 at an illegal/unmarked crosswalk	-	-
EB	2704	014E011A032	VICTORY ST	014E011T000	LOSEY BLVD	0.39	-	-	-	-	-
Intersection Crashes											
Project Intersection Number	**INT_ID**	**Intersection Name** (IX_NAME)	**Crashes From Screening**	**Crashes After Vetting**	**LOSS** (TOTAL)	**PSI** (TOTAL)	**LOSS** (KABC)	**PSI** (KABC)	**Summarize the contributing factors for ALL crashes in the flagged intersection.**	**Which geometric features contribute to the type and severity of the crashes?**	**Possible Countermeasures for Safety Mitigation Process**
61	IX_32_01572	US 14 & WIS 35 / West Ave S	50	44	LOSS 4	20.43	LOSS 4	3.34	45% Rear End on US 14 - Inattentive driving, following too close, congestion during peak hours, signal visibility 14% Rear End on WIS 35 - Inattentive driving 14 Sideswipe - Inattentive driving, weather 11% Angle - Running red light due to inattentive driving, 3 crashes involved NB vehicles that ran a red light 9% Lane Departure - Weather related	7% Left turn from WIS 35/West Ave - Left turn FTY to thru vehicles due to confusing intersection and slight offset to north and south legs The intersection angle and the intersection having 5 legs likely contributes to angle and left turn crashes seen at this location	WisDOT has a planned improvement to convert this intersection to a roundabout and convert it to a 4-legged
63	IX_32_01407 (Not Flagged)	US 14 & Ward Ave	0	33	LOSS 3	7.65	LOSS 2	-2.84	39% Rear end on US 14 - Inattentive driving, signal visibility - 3 invovled a near-miss with a ped/bke on a side road crosswalk 12% Lane departure - Weather	9% Left turn from US 14 - All involved a SB left turn FTY to NB thru traffic, possible sight distance issues with opposing left turns 9% Left turn from East Ave - all invovled a EB left turn FTY to WB thru/rght turn, possible sight distance issue due to intersection angle 9% Sideswipe - WB right turners take turn too wide and hit NB thru or WB thru vehicles due to intersection angle *1 Bike crash - SB left turn FTY to bike using sidewalk and crosswalk	WisDOT has a planned improvement to convert this intersection to a roundabout with larger ped refuge islands for bikes to use
56	IX_32_01744 (Not Flagged)	US 14 & 7th St	0	33	LOSS 2	-3.68	LOSS 2	-4.06	33% Rear end on US 14 - Inattentive driving, following too close, signal visibility 15% Lane Departure - Weather 1 Pedestrian crash - Ped FTY to signal indication	21% Sideswipe - Intersection angle, 4 crashes involved RTOR and hitting thru traffic that has the r/w - 12% Left turn from US 14 - Possible sight distance issues with opposing left turns and horizontal curve to north, 3 included SB left turn FTY to NB traffic 9% Angle - All NB vehicles that ran red light, possible sight distance issues due to intersection angle	Improve intersection angle to improve sight distances or convert intersection to a roundabout Install monotubes to achieve one signal head per lane with retroreflective backplates Install high visibility crosswalks
-	IX_32_01542	US 14 & 13th St / Horton St	30	17	LOSS 4	14.28	LOSS 4	4.11	35% Rear End on US 14 - Inattentive driving, following too close 35% Angle - Failed to yield - Weather related 1 Pedestrian crash - Vehicle FTY to ped in unmarked crosswalk	35% Rear End on US 14 - lack of turn lanes on US 14 *35% Angle - Sight distance issues due to intersection angle, intersection confusion due to it being a 6 legged intersection 12% LT from US 14 - Sight distance issue, both crashes invovled a SB left turn blocking the view of a NB left turn	The WisDOT planned improvement for US 14 includes restricting access at this intersection to right-in/right-out and will include a marked croswalk crossing US 14 with a ped refuge island

*Only intersections with 15 or more crashes were included. An intersection with less than 15 crashes was included if it was a flagged intersection AND a project intersection.

Legend
Flagged Intersection
Non-Flagged Intersection

Appendix 5: WiSAMS/FIIPS Duplicate Work Action Review

WiSAMS/FIIPS Duplicate Work Actions Review

Str	Feat On	Feat Und	Year	Work Action	FIIPS/WiSAMS	Duplicate WA?
B320032	STH 35-GEORGE ST	CMSTPP RR	2035	(03)OVERLAY DECK - CONCRETE (Rehab); Rule ID 22	WiSAMS	No
B320062	STH 35-LANG DR	LA CROSSE RIVER	2047	(03)OVERLAY DECK - CONCRETE (Rehab); Rule ID 22	WiSAMS	No
B320086	USH 53 SB - COPELAND AVE	CMSTPP RR	2021	(03)OVERLAY DECK - CONCRETE (Rehab); Rule ID 22	WiSAMS	Yes; keep both
B320086	USH 53 SB - COPELAND AVE	CMSTPP RR	2038	(03)OVERLAY DECK - CONCRETE (Rehab); Rule ID 24	WiSAMS	Yes; keep both
B320098	STH 16	BNSF RR	2021	(97)REPLACE DECK / THIN POLYMER OVERLAY; Rule ID 62	WiSAMS	Delete per BOS recommendation
B320098	STH 16	BNSF RR	2027	(07)PAINT; Rule ID 55	WiSAMS	Keep
B320098	STH 16	BNSF RR	2030	(03)OVERLAY DECK - CONCRETE (Rehab); Rule ID 24	WiSAMS	Add WA per email with BOS after deck replacement WA deleted.
B320100	STH 16	MILLER COULEE/PED. TRAIL	2038	(91)REPLACE STRUCTURE; Rule ID 30	WiSAMS	No
B320111	STH 16 WB	CMSTP&P RR	2025	(58)OVERLAY DECK - CONCRETE / NEW JOINTS	FIIPS	Keep
B320111	STH 16 WB	CMSTP&P RR	2025	(97)REPLACE DECK / THIN POLYMER OVERLAY; Rule ID 62	WiSAMS	Delete per BOS recommendation
B320115	STH 16 EB	CP RR	2031	(08)REPLACE SUPERSTRUCTURE; Rule ID 11	WiSAMS	Delete; keep FIIPS replacment
B320115	STH 16 EB	CP RR	2024	(91)REPLACE STRUCTURE	FIIPS	Keep
B320118	USH 53-COPELAND AVE	LA CROSSE RIVER	2040	(03)OVERLAY DECK - CONCRETE (Rehab); Rule ID 22	WiSAMS	No
B320213	STH 16 EB	12TH AVE	2036	(77)OVERLAY DECK - THIN POLYMER; Rule ID 58	WiSAMS	No
B320214	STH 16 WB	12TH AVE	2035	(77)OVERLAY DECK - THIN POLYMER; Rule ID 58	WiSAMS	Yes; keep both
B320214	STH 16 WB	12TH AVE	2050	(77)OVERLAY DECK - THIN POLYMER; Rule ID 58	WiSAMS	Yes; keep both
C320254	STH 16	DRAINAGE WAY	2036	(91)REPLACE STRUCTURE; Rule ID 30	WiSAMS	No
C320256	STH 16	DRAINAGE WAY	2036	(91)REPLACE STRUCTURE; Rule ID 30	WiSAMS	No

WiSAMS Recommendations based on GPR: WiSAMS also uses ground penetration radar (GPR) data when available to determine work actions. BOS reviewed the WiSAMS data and recommended that the deck and superstructure replacement work actions recommended by WiSAMS on three bridges be removed. These deck and superstructure replacement recommendations were triggered by GPR data and BOS did not feel the structures warranted this rehabilitation. In one case, for B-32-98, a concrete overlay work action was added based on existing structure data and discussion with BOS.

Appendix 6: Traffic Impacts of Future Projects

Traffic Impacts of Future Projects

La Crosse Safety Operations Study
1630-08-00

PROJECT SEGMENT	FROM - TO	EXISTING ROADWAY	NOTABLE CONSTRAINTS	ANTICIPATED TRAFFIC CONTROL	TRAFFIC IMPACTS
WI 16	LA CROSSE ST TO WI 157	(LA CROSSE ST - CTH B/GILLETTE ST) 4 LANE W/TWLTL, HMA SURFACE EXCEPT FOR NEAR THE LA CROSSE ST INTERSECTION WHERE IT IS CONCRETE PAVEMENT AND RAISED MEDIAN, C&G BOTH SIDES WITH MOUNTABLE C&G IN MEDIAN ALONG TWLTL, CSW/HMA PATH ALONG EAST SIDE OF ROADWAY AND MOSTLY ADJACENT TO BACK OF CURB, NO PARKING EITHER SIDE	- BUS ROUTE FROM CTH B TO WI 157, INCLUDING WHAT APPEARS TO BE A COUPLE PULLOUTS ALONG NB FOR STOPS (?) - BRIDGE OVER RXR ABOUT 1/3 MILE NORTH OF LA CROSSE ST - BRIDGE OVER LA CROSSE RIVER/GREAT RIVER STATE PARK TRAIL/RXR - BRIDGE OVER 12TH AVE S	1) SINGLE LANE CLOSURES - Working on 1 lane at a time and shifting traffic around as needed to allow enough room in work zone. Might need some temporary pavement (likely in median areas) to shift traffic.	WIS 16 is operating near capacity, so even single lane closures will likely cause congestion on US 53 and WIS 16.
		(CTH B/GILLETTE ST - BRIDGE OVER LA CROSSE RIVER) 4 LANE DIVIIDED, RAISED MEDIAN, HMA SURFACE (LIKELY OVERLAY OF CONCRETE PAVEMENT) NO PARKING, C&G BOTH SIDE AND ALONG MEDIAN, CSW/HMA PATH W/GRASS TERRACE ALONG EAST SIDE			
		(BRIDGE OVER LA CROSS RIVER - WI 157) 4 LANE DIVIDED, RAISED MEDIAN CONCRETE PAVEMENT (HMA OVERLAY NEAR WI 157 INTERSECTION), NO PARKING, C&G BOTH SIDES AND ALONG MEDIAN, CSW/HMA PATH W/GRASS TERRACE ALONG EAST SIDE EXCEPT FOR A STRETCH NEAR THE BRIDGE OVER 12TH AVE S		2) FULL CLOSURE W/DETOUR - Truck detour would use US 53 & I-90.	A full closure of WIS 16 would definitely overload US 53 and WIS 35
		FOR THIS ENTIRE SEGMENT THERE IS A FUTURE IMPROVEMENT IDENTIFIED IN FIGURES 24 & 26 IN EXISTING CONDITIONS MEMO BUT I CAN'T FIND ANY PLANS FOR THIS IN OUR SYSTEM.			
WI 35 (LANG DR, GEORGE STREET)	WI 16/LA CROSSE ST TO US 53	(WI 16/LA CROSSE ST - MONITOR ST) 4 LANE UNDIVIDED, NO PARKING, HMA SURFACE, C&G BOTH SIDES, CSW W/PAVED TERRACE BOTH SIDES. EXCEPTION CSW ADJACENT TO C&G ON BRIDGE ACROSS LA CROSSE RIVER AND NORTH TO MONITOR ST WHERE THERE IS ALSO CONCRETE PAVEMENT.	- BUS ROUTE	1) SINGLE LANE CLOSURES - Working on 1 lane at a time and shifting traffic around as needed to allow enough room in work zone. On-street parking would not be allowed.	Forecasted AADT on this segment (10,000 - 26,000) indicate a single lane closure, preferrably with turn lanes, might be feasible if some diversion occurred.
		(MONITOR - ST CLOUD ST) 4 LANE DIVIDED WITH TWLTL, CONCRETE PAVEMENT TRAVEL LANES AND HMA SURFACE TWLTL, NO PARKING, C&G BOTH SIDES, CSW W/PAVED TERRACE BOTH SIDES. EXCEPTION: WEST SIDE FROM HAGAR - ST CLOUD ST HAS GRASS TERRACE.	- BUS ROUTE		
		(ST CLOUD ST - CLINTON ST) 4 LANE UNDIVIDED, NO PARKING, CONCRETE PAVEMENT, C&G BOTH SIDES, CSW ADJOINING C&G BOTH SIDES. OVER RXR THERE IS CONCRETE PARAPET ON EAST SIDE BEHIND CSW, GUARDRAIL/CONCRETE PARAPET ON WEST SIDE BEHIND CSW.	- BUS ROUTE		
		(CLINTON ST - GILLETTE ST) UNDIVIDED, 2 NB LANES, 1 SB LANE W/PARKING, HMA SURFACE, C&G BOTH SIDES, CSW BOTH SIDES WITH MINIMAL PAVED TERRACE	- BUS ROUTE	2) FULL CLOSURE W/DETOUR - Detour would use US 53 and WI 16/La Crosse Street.	Only alt routes from N to S are US 53 and WIS 16. May overload those routes if closed.
		(GILLETTE ST - CUNNINGHAM ST) 2 LANE UNDIVIDED W/PARKING ALONG BOTH SIDES, HMA SURFACE, C&G BOTH SIDES, CSW BOTH SIDES WITH MINIMAL PAVED TERRACE SOUTHERN END AND GRASS TERRACE NORTHERN END	- BUS ROUTE BETWEEN HAYES STREET AND PALACE STREET		
		(CUNNINGHAM ST - US 53) 4 LANE DIVIDED, CONCRETE PAVEMENT, RAISED MEDIAN, C&G BOTH SIDES AND MEDIAN, CSW BOTH SIDES W/GRASS TERRACE			
US 53 (ROSE STREET/COPELAND AVENUE)	2ND ST N TO ROSE/COPELAND SPLIT	(2ND ST N - ROSE/COPELAND SPLIT) 4 LANE DIVIDED WITH A MIX OF TWLTL AND RAISED MEDIAN, C&G BOTH SIDES, CSW BOTH SIDES (MOSTLY WITH GRASS TERRACE LT & PAVED TERRACE RT))	- BRIDGE CROSSING OVER LA CROSSE RIVER - BUS ROUTE	1) SINGLE LANE CLOSURES - Working on 1 lane at a time and shifting traffic around as needed to allow enough room in work zone.	Forecasted AADT on this segment (30,000) indicate single lane closures will likely not be feasible unless substantial diversion occurred.
				2) FULL CLOSURE W/DETOUR - Detour would use WI 35 and either Cass Street or WI 16/La Crosse St to get around/through the construction.	Forecasted AADT on this segment (30,000) indicate a full closure may not be feasible without overloading WIS 35 and WIS 16.
	SOUTH SPLIT TO CLINTON (NB ON ROSE ST)	(SPLIT - MONITOR ST) TWO LANE ONE WAY, CONCRETE PAVEMENT WITH WIDENED SHOULDERS, C&G BOTH SIDES, CSW RT	- BRIDGE CROSSING OVER RXR BETWEEN GOULD & HAGAR WITH MINIMAL EXTRA WIDTH - BUS ROUTE FROM SOUTH SPLIT TO ST. CLOUD ST.	1) SINGLE LANE CLOSURES - Working on 1 lane at a time and shifting traffic around as needed to allow enough room in work zone. On-street parking would not be allowed. Width could get tight at approaches near RXR overpasses.	One-way forecasted AADT (13,000) indicates single lane closures may be feasible, but it would be preferable if two lanes can remain open. Perhaps using parking lane as a through lane?
		(MONITOR ST - GOULD ST) TWO LANE ONE WAY, CONCRETE PAVEMENT WITH WIDENED SHOULDERS/PARKING BOTH SIDES, C&G BOTH SIDES, CSW BOTH SIDES WITH GRASS TERRACE			
		(GOULD ST - HAGAR ST) OVERPASS OVER RXR, TWO LANE ONE WAY, CONCRETE PAVEMENT, CONCRETE BARRIER LEFT, CSW ADJOINING C&G RT WITH CONCRETE BARRIER BEHIND CSW			
		(HAGAR ST - ST. JAMES ST) TWO LANE ONE WAY, CONCRETE PAVEMENT, C&G BOTH SIDES, PARKING BOTH SIDES, CSW BOTH SIDES WITH PAVED TERRACE LT AND GRASS TERRACE RT		2) FULL CLOSURE W/DETOUR - Detour would use WI 35 and either Cass Street or WI 16/La Crosse St to get around/through the construction. Alternatively, Use Copeland Ave as a two-way road while Rose St is under construction.	Given the one-way AADT (13,000), full closure without converting Copeland Ave to a two-way road may not be feasible without overloading WIS 35 and WIS 16.
		(ST JAMES ST - WINDSOR ST) TWO LANE ONE WAY, CONCRETE PAVEMENT, C&G BOTH SIDES, PARKING BOTH SIDES, CSW W/GRASS TERRACE BOTH SIDES			
		(WINDSOR ST - CLINTON) THREE LANE ONE WAY, CONCRETE PAVEMENT, C&G BOTH SIDES, PARKING ON RT ONLY, CSW W/GRASS TERRACE RT SIDE ONLY			
	SOUTH SPLIT TO CLINTON (SB ON COPELAND AVE)	(SPLIT - MONITOR) TWO LANE ONE WAY, CONCRETE PAVEMENT,	- BRIDGE CROSSING OVER RXR BETWEEN CAR & ST ANDREW WITH MINIMAL EXTRA WIDTH - BUS ROUTE FROM SOUTH SPLIT TO ST. JAMES ST.	1) SINGLE LANE CLOSURES - Working on 1 lane at a time and shifting traffic around as needed to allow enough room in work zone. On-street parking would not be allowed. Width could get tight at approaches near RXR overpasses.	One-way forecasted AADT (13,000) indicates single lane closures may be feasible, but it would be preferable if two lanes can remain open. Perhaps using parking lane as a through lane?
		(MONITOR - CAR) TWO LANE ONE WAY, CONCRETE PAVEMENT, PARKING ALONG WEST SIDE, C&G BOTH SIDES, CSW W/GRASS TERRACE BOTH SIDES			
		(CAR ST - ST ANDREW ST) OVERPASS OVER RXR, TWO LANE ONE WAY, CONCRETE PAVEMENT, CONCRETE BARRIER EAST SIDE, CSW WITH PAVED TERRACE OR ADJOINING C&G WEST SIDE WITH GUARDRAIL OR CONCRETE BARRIER BEHIND CSW			
		(ST ANDREW ST - HAGAR ST) TWO LANE ONE WAY W/PARKING OR WIDENED SHOULDERS BOTH SIDES, C&G BOTH SIDES, CSW W/PAVED TERRACE BOTH SIDES, CONCRETE PAVEMENT SWITCHES TO HMA SURFACE MID-BLOCK		2) FULL CLOSURE W/DETOUR - Detour would use WI 35 and either Cass Street or WI 16/La Crosse St to get around/through the construction. Alternatively, Use Rose St as a two-way road while Copeland Ave is under construction.	Given the one-way AADT (13,000), full closure without converting Rose St to a two-way road may not be feasible without overloading WIS 35 and WIS 16.
		(HAGAR ST - WINDSOR ST) TWO LANE ONE WAY W/ PARKING OR WIDENED SHOULDERS BOTH SIDES, HMA SURFACE, C&G BOTH SIDES, CSW W/GRASS TERRACE BOTH SIDES			
		(WINDSOR ST - CLINTON) TWO LANE ONE WAY, HMA SURFACE, C&G BOTH SIDES, NO PARKING BUT WIDENED SHOULDER ON WEST SIDE, CSW W/GRASS TERRACE WEST SIDE ONLY			

PROJECT SEGMENT	FROM - TO	EXISTING ROADWAY	NOTABLE CONSTRAINTS	ANTICIPATED TRAFFIC CONTROL	TRAFFIC IMPACTS
US 53 (ROSE STREET/COPELAND AVENUE)	CLINTON TO I-90	(CLINTON - LIVINGSTON) 4 LANE DIVIDED WITH MOSTLY TWLTL, CONCRETE PAVEMENT WITH WIDENED SHOULDER OR PARKING ON BOTH OUTSIDES, C&G BOTH SIDES, CSW BOTH SIDES WITH NARROW TERRACE THAT IS BOTH PAVED AND GRASS	- BUS ROUTE	1) SINGLE LANE CLOSURES - Working on 1 lane at a time and shifting traffic around as needed to allow enough room in work zone. On-street parking would not be allowed. Width could get tight at approaches near RXR overpasses.	Will likely need to keep open between WIS 35 and IH 90 (this stretch was just reconstructed, so that shouldn't be a concern). Between Clinton and WIS 35, the forecasted AADT on this segment (26,000 - 30,000) indicate single lane closures will likely not be feasible unless substantial diversion occurred. The parallel route in this stretch is WIS 35 (George St), which is a two-lane road.
		(LIVINGSTON - I-90) 4 LANE DIVIDED, RAISED MEDIAN, BIKE LANES BOTH SIDES, CONCRETE PAVEMENT, C&G BOTH SIDES & MEDIAN, CSW EAST SIDE W/GRASS TERRACE, HMA PATH WEST SIDE W/GRASS MEDIAN. EVENTUALLY TURNS INTO 6 LANE DIVIDED NEAR WI 35 INTERSECTION			
WI 16 (LA CROSSE STREET)	7TH ST N TO LOSEY BLVD	(7TH ST N - 8TH PL) 2 LANE UNDIVIDED W/PARKING ON BOTH SIDES, CONCRETE PAVEMENT, C&G BOTH SIDES, CSW ADJOINING C&G ON NORTH SIDE, CSW W/GRASS TERRACE ON SOUTH SIDE	- BUS ROUTE	1) SINGLE LANE CLOSURES - Working on 1 lane at a time and shifting traffic around as needed to allow enough room in work zone. On-street parking would not be allowed. This option would not be possible for the existing Oakland - Losey segment due to limited widths to shift traffic, however the planned improvements include a TWLTL that would likely allow enough width in the future except for the 700' section with raise median.	Should work from AADT perspective. Losey Blvd and WIS 35 intersections will be a challenge.
		(8TH PL - 10TH ST) 2 LANE UNDIVIDED W/PARKING ON BOTH SIDES, CONCRETE PAVEMENT, C&G BOTH SIDES, CSW WITH NARROW TERRACE BOTH SIDES	- BUS ROUTE		
		(10TH ST - 11TH ST) 2 LANE UNDIVIDED W/PARKING ON BOTH SIDES, CONCRETE	- BUS ROUTE		
		(11TH ST - OAKLAND ST) 4 LANE UNDIVIDED EXCEPT FOR AREAS OF RAISED MEDIAN AT THE WI 35 INTERSECTION, NO PARKING ON EITHER SIDE, CONCRETE PAVEMENT EXCEPT FOR SWITCH TO HMA JUST WEST OF OAKLAND ST, C&G BOTH SIDES, CSW ADJOINING C&G OR WITH NARROW TERRACE ON BOTH SIDES	- BUS ROUTE	2) FULL CLOSURE W/DETOUR - Truck detour would use US 53 & I-90. Local traffic would likely use Losey Blvd and Main/Cass St	Should work. Will substantially increase traffic on Main St, Cass St, and other local streets
		(OAKLAND ST - LOSEY BLVD) 2 LANE UNDIVIDED WITH BIKE LANES ON BOTH SIDES, HMA SURFACE EXCEPT FOR CONCRETE PAVEMENT AT LOSEY INTERSECTION APPROACH, C&G BOTH SIDES, CSW BOTH SIDES WITH GRASS TERRACE	- NOT ENOUGH WIDTH TO SHIFT TRAFFIC FOR LANE CLOSURES - BUS ROUTE FROM OAKLANE TO EAST AVE N - UW LACROSSE CAMPUS		
		PLANNED IMPROVEMENT (OAKLAND ST - LOSEY BLVD): 2 LANE DIVIDED W/TWLTL AND ONE 700' SECTION WITH RAISED MEDIAN	- RAISED MEDIAN WOULD BE AN ISSUE FOR AVAILABLE WIDTH FOR TRAFFIC STAGING		
LOSEY BOULEVARD	US 14/61 TO WI 16	(US 14/61 - DIAGONAL RD) 4 LANE UNDIVIDED, HMA SURFACE, NO DESIGNATED PARKING, C&G BOTH BOTH SIDES, CSW W/GRASS TERRACE BOTH SIDES	- BUS ROUTES BETWEEN US 14/61 AND MISSISSIPPI ST - AT GRADE RXR CROSSING NEAR DIAGONAL RD - A FEW RAISED MEDIANS FOR PED CROSSINGS OR AT INTERSECTIONS FOR SIGNALS	1) SINGLE LANE CLOSURES - Working on 1 lane at a time and shifting traffic around as needed to allow enough room in work zone. Might need some temporary pavement in raised median areas) to shift traffic.	Forecasted AADT on this segment (12,000 - 32,000) indicates a single lane closure, preferrably with turn lanes, might be feasible, but would likely require substantial diversion.
		(DIAGONAL RD - WARD AVE) 4 LANE UNDIVIDED, CONCRETE PAVEMENT, NO DESIGNATED PARKING, C&G BOTH BOTH SIDES, CSW ADJOINING BACK OF CURB BOTH SIDES			
		(WARD AVE - GREEN BAY ST) 4 LANE W/TWLTL, HMA SURFACE (EXCEPT FOR CONCRETE NEAR WARD AVE INTERSECTION), NO DESIGNATED PARKING, C&G BOTH BOTH SIDES, CSW W/GRASS TERRACE BOTH SIDES			
		(GREEN BAY ST - FARNAM ST) 4 LANE DIVIDED W/RAISED MEDIAN, HMA SURFACE (EXCEPT FOR CONCRETE NEAR WARD AVE INTERSECTION, NO DESIGNATED PARKING, C&G BOTH BOTH SIDES, CSW W/GRASS TERRACE BOTH SIDES		2) FULL CLOSURE W/DETOUR - Truck detour would use US 14/61, WI 35, and WI 16, although local traffic will likely find their way around the work zone.	A full closure would likely overload a single detour route, but given the high number of potential "non-official" detour routes, this might be feasible.
		(FARNAM ST - LOSEY CT) 4 LANE W/TWLTL, HMA SURFACE, NO DESIGNATED PARKING, C&G BOTH BOTH SIDES, CSW W/GRASS TERRACE BOTH SIDES			
		(LOSEY CT - WI 16) 4 LANE DIVIDED W/RAISED MEDIAN, CONCRETE PAVEMENT, NO DESIGNATED PARKING, C&G BOTH SIDE AND ALONG MEDIAN, CSW W/GRASS TERRACE BOTH SIDES			
WI 35 (WEST AVENUE)	SOUTH AVE TO WI 16/LA CROSSE ST	(SOUTH AVE - GREEN BAY ST) 4 LANE UNDIVIDED, HMA SURFACE, C&G BOTH SIDES, CSW BOTH SIDES W/PAVED TERRACE, NO PARKING	- AT-GRADE RXR CROSSING NEAR BARLOW ST & NEAR GREEN BAY ST - BUS ROUTE	1) SINGLE LANE CLOSURES - Working on 1 lane at a time and shifting traffic around as needed to allow enough room in work zone. On-street parking would not be allowed.	Forecasted AADT on this segment (11,000 - 26,000) indicate a single lane closure, preferrably with turn lanes, might be feasible if some diversion occurred.
		(GREEN BAY ST - REDFIELD ST) 4 LANE UNDIVIDED, CONCRETE PAVEMENT, C&G BOTH SIDES, CSW BOTH SIDES W/PAVED TERRACE, NO/MINIMAL PARKING			
		(REDFIELD ST - JOHNSON) 4 LANE UNDIVIDED, HMA SURFACE, C&G BOTH SIDES, CSW BOTH SIDE W/GRASS TERRACE, NO/MINIMAL PARKING		2) FULL CLOSURE W/DETOUR - Detour would use US 14/61 and WI 16/La Crosse Street.	May be feasible if traffic disperses between US 14/61/53, Losey Blvd, and other City streets
		(JOHNSON - WI 16/LA CROSSE) 4 LANE DIVIDED (EXCEPT UNDIVIDED FERRY-CAMERON) WITH RAISED MEDIAN, CONCRETE PAVEMENT, C&G BOTH SIDES, CSW BOTH SIDES W/NO TERRACE SOUTH OF WI 33 AND GRASS TERRACE NORTH OF WI 33, NO/MINIMAL PARKING	- STREET LIGHTING IN RAISED MEDIAN NORTH OF CASS ST - BUS ROUTE BETWEEN STATE STREET AND WI 16/LA CROSSE STREET		

PROJECT SEGMENT	FROM - TO	EXISTING ROADWAY	NOTABLE CONSTRAINTS	ANTICIPATED TRAFFIC CONTROL	TRAFFIC IMPACTS
DOWNTOWN	HOOD ST TO 2ND ST N (NB ON 4TH ST)	(HOOD - ADAMS) TWO LANE ONE-WAY, CONCRETE PAVEMENT, C&G BOTH SIDES, CSW ADJACENT TO RT C&G	IN THE TWO LANE SEGMENT NORTH OF CASS STREET THE EXISTING ON-STREET PARKING WOULD LIKELY BE NOT ALLOWED DURING CONSTRUCTION	1) SINGLE LANE CLOSURES - Working on 1 lane at a time and shifting traffic around as needed to allow enough room in work zone. On-street parking would not be allowed in 2 lane segment north of Cass Street.	One-way forecasted AADT (10,000 to 17,000) indicates single lane closures may be feasible, but it would be preferable if two lanes can remain open. Perhaps using parking lane as a through lane?
		(ADAMS - CASS) THREE LANE ONE-WAY + PARKING ON RIGHT, CONCRETE PAVEMENT, C&G BOTH SIDES, CSW BOTH SIDES (MOSTLY WITH GRASS TERRACE EXCEPT FOR A FEW AREAS ADJOINING BUSINESSES WHERE IT WIDENS/ADJOINS BACK OF CURB		2) FULL CLOSURE W/DETOUR - Likely break the segment into two pieces with Cass Street being the dividing line between the two. Detour would use WI 35 and either Cass Street or WI 16/La Crosse St to get around/through the construction.	One-way forecasted AADT (10,000 to 17,000) indicates a full closure with detour may be feasible if 3rd Street could be converted to a two-way street.
		(CASS - 2ND ST N) TWO LANE ONE-WAY, HMA SURFACE, PARKING ON BOTH SIDES (IN GENERAL - SOME LOCATIONS RESTRICT PARKING BUT STILL HAVE A WIDENED SHOULDER AREA), C&G BOTH SIDES, CSW BOTH SIDES W/PAVED TERRACE FOR THIS SEGMENT THERE IS A FUTURE IMPROVEMENT IDENTIFIED IN FIGURES 24 & 26 IN EXISTING CONDITIONS MEMO BUT I CAN'T FIND ANY PLANS FOR THIS IN OUR SYSTEM.	MULTIPLE BUS ROUTES BETWEEN DIVISION ST AND 2ND ST N, INCLUDING A TRANSIT CENTER DOWNTOWN NEAR JAY STREET		
	HOOD ST TO 2ND ST N (SB ON 3RD ST)	(HOOD - WI 33/JACKSON) TWO LANE ONE-WAY, CONCRETE PAVEMENT, C&G BOTH SIDES, CSW ADJACENT TO RT C&G, CSW W/GRASS TERRACE ALONG LT C&G, NO PARKING FROM HOOD TO ADAMS, ONE SIDE PARKING FROM ADAMS TO WI 33/JACKSON.	EXISTING ON-STREET PARKING WOULD LIKELY BE NOT ALLOWED DURING CONSTRUCTION	1) SINGLE LANE CLOSURES - Working on 1 lane at a time and shifting traffic around as needed to allow enough room in work zone. On-street parking would not be allowed.	One-way forecasted AADT (10,000 to 14,000) indicates single lane closures may be feasible, but it would be preferable if two lanes can remain open. Perhaps using parking lane as a through lane?
		(WI 33/JACKSON - 2ND ST N) TWO LANE ONE-WAY, HMA SURFACE, PARKING ON BOTH SIDES (IN GENERAL - SOME LOCATIONS RESTRICT PARKING BUT STILL HAVE A WIDENED SHOULDER AREA), C&G BOTH SIDES, CSW BOTH SIDES W/PAVED TERRACE FOR THIS SEGMENT BETWEEN WI 16/CASS AND 2ND ST NORTH THERE IS A FUTURE IMPROVEMENT IDENTIFIED IN FIGURES 24 & 26 IN EXISTING CONDITIONS MEMO BUT I CAN'T FIND ANY PLANS FOR THIS IN OUR SYSTEM.	MULTIPLE BUS ROUTES BETWEEN DIVISION ST AND 2ND ST N, INCLUDING A TRANSIT CENTER DOWNTOWN NEAR JAY STREET	2) FULL CLOSURE W/DETOUR - Likely break the segment into two pieces with WI 16/Cameron Ave being the dividing line between the two. Detour would use a combination of WI 35 and La Crosse Stree/WI 16 and Cass Street depending on destination.	One-way forecasted AADT (10,000 to 14,000) indicates a full closure with detour may be feasible if 4th Street could be converted to a two-way street.
US 14/61 (SOUTH AVENUE, MORMON COULEE ROAD)	FROM LOSEY BLVD TO HOOD ST	4 LANE + TWLTL (LOSEY - EAST AVE/WARD AVE)	RXR CROSSING JUST SE OF GREEN BAY ST	1) SINGLE LANE CLOSURES - Existing 2 lanes each direction reduced to 1 lane each direction. Using crossovers/bidirectional traffic would make construction faster and better quality but temp signals would be needed. Otherwise working on 1 lane at a time with shifting traffic around as needed to allow enough room in work zone. Would not be able to work on WB & EB at same time in tighter areas.	Forecasted AADT on this segment (18,000 - 27,000) indicate a single lane closure, preferrably with turn lanes, might be feasible if some diversion occurred.
		4 LANE UNDIVIDED (EAST AVE/WARD AVE - RXR CROSSING), ALSO SEE PLANNED IMPROVEMENT BELOW	VARIOUS SIGNALIZED INTERSECTIONS	2) FULL CLOSURE BOTH DIRECTIONS W/DETOUR - use Losey/WI 33 for detour. Detour route would need to be evaluated for turning movements, signal timing, traffic backups, etc.	Forecasted AADT on this segment (18,000 - 27,000) indicate a full closure with detour is likely to overwhelm the detour route
		4 LANE DIVIDED W/NARROW RAISED MEDIAN (RXR CROSSING - HOOD ST)	STREET LIGHTING IN MEDIAN (FARNAM ST - HOOD ST)	3) HALF CLOSURE (ONE DIRECTION) W/DIRECTIONAL DETOUR - i.e. close WB only and detour them via NB Losey and WB WI 33, then close EB only and detour them via EB WI 33 and SB Losey. Similar issues as #2 above.	Forecasted AADT on this segment (18,000 - 27,000) indicate a half closure with detour may work, depending on the routing of the directional detour.
		CONCRETE THRU LANES (HMA TWLTL FROM LOSEY BLVD - WARD AVE)	BUS ROUTE FROM WARD AVE TO WI 35/WEST AVE		
		C&G BOTH SIDES			
		SIDEWALK ABUTTING (OR CLOSE TO) CURB BOTH SIDES			
		OCCASIONAL RAISED MEDIANS AT INTERSECTIONS			
		PLANNED IMPROVEMENT (EAST AVE/WARD AVE - RXR CROSSING): 4 LANE DIVIDED W/NARROW RAISED MEDIAN AND 3 ROUNDABOUTS			