PROPOSED IMPROVEMENT
WIS 50 (MAIN ST)
FOREST STREET TO GRAND GENEVA WAY
PROJECT ID: 3170-09-70/71
CITY OF LAKE GENEVA
WALWORTH COUNTY

THURSDAY, MARCH 19, 2026

SCALE, FEET 0 100 200

ON STREET PARKING SUMMARY

Region	Segment	Existing				Proposed			
		Normal	*ADA*	*Motorcycle*	*Total*	*Normal*	*ADA*	*Motorcycle*	*Total*
1	Maxwell to Warren	38	1	0	39	27	2	0	29
	Warren to Madison	30	0	0	30	27	2	0	29
	Madison to Cook	20	2	4	26	19	1	4	24
Subtotal 1					95				82
2	Cook to Broad	43	3	3	49	37	2	4	43
	Broad to Center	46	2	0	48	40	2	1	43
Subtotal 2					97				86
3	Center to Wells	11	0	0	11	10	0	0	10
Subtotal 3					11				10
TOTAL		188	8	7	203	160	9	9	178

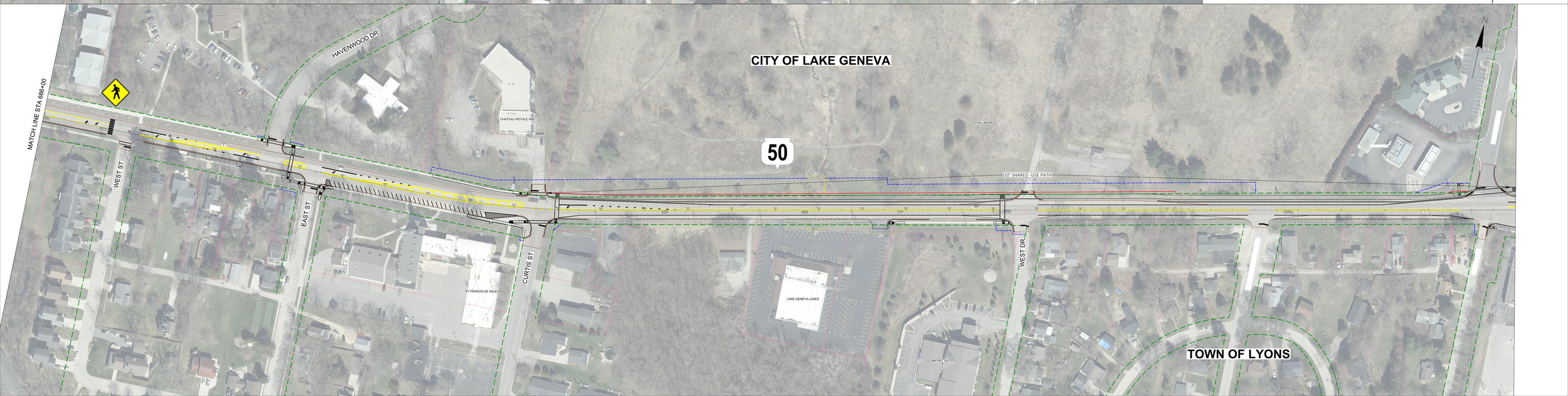

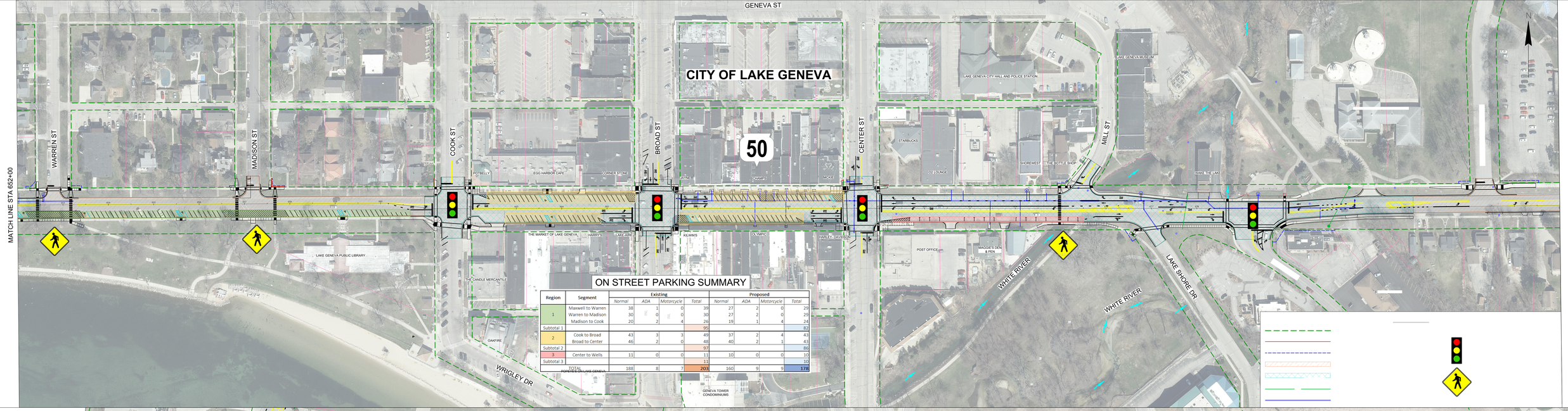

ON STREET PARKING SUMMARY

Region	Segment	Existing				Proposed			
		Normal	*ADA*	*Motorcycle*	*Total*	*Normal*	*ADA*	*Motorcycle*	*Total*
1	Maxwell to Warren	38	1	0	39	27	2	0	29
	Warren to Madison	30	0	0	30	27	2	0	29
	Madison to Cook	20	2	4	26	19	1	4	24
Subtotal 1					95				82
2	Cook to Broad	43	3	3	49	37	2	4	43
	Broad to Center	46	2	0	48	40	2	1	43
Subtotal 2					97				86
3	Center to Wells	11	0	0	11	10	0	0	10
Subtotal 3					11				10
TOTAL		188	8	7	203	160	9	9	178

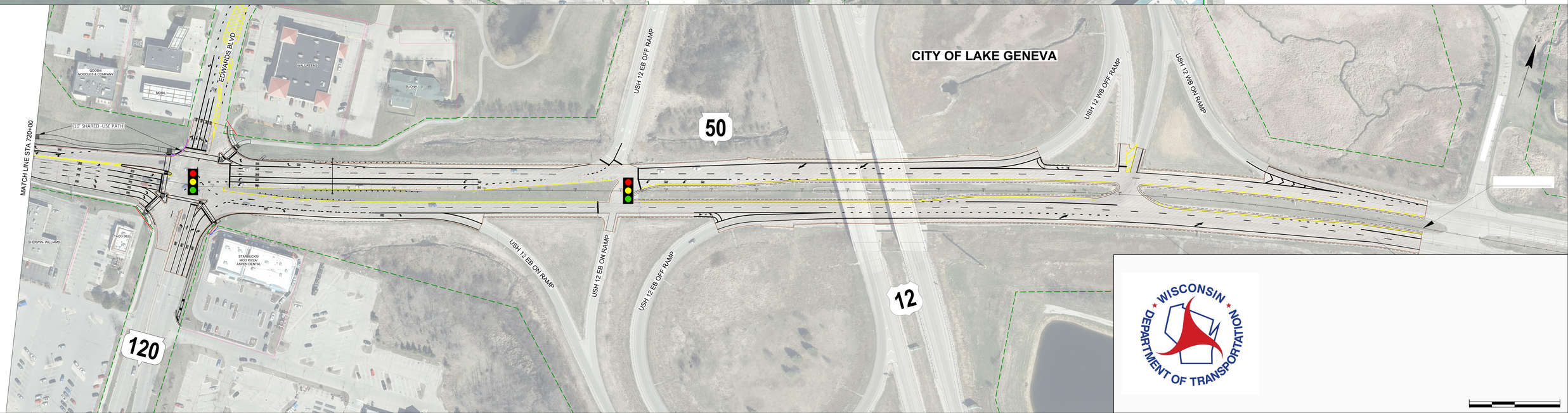

WISCONSIN DEPARTMENT OF TRANSPORTATION

PROJECT NO: 3170-09-70/71	HWY: STH 50	COUNTY: WALWORTH	CONSTRUCTION OPERATIONS OVERVIEW BY SEGMENTS AND YEARS	SHEET	E

FILE NAME : X:\BM1-3943 STH 50 LAKE GENEVA\02_COMMUNICATIONS\01_MEETINGS\02_EXTERNAL\260319_PIM #2\EXHIBITS\STAGING CONCEPTS-OVERVIEW.DWG
LAYOUT NAME - Staging Concept Overview
PLOT DATE : 3/19/2026 11:10 AM PLOT BY : VALBON LATIFI PLOT NAME : PLOT SCALE : 1 IN:500 FT

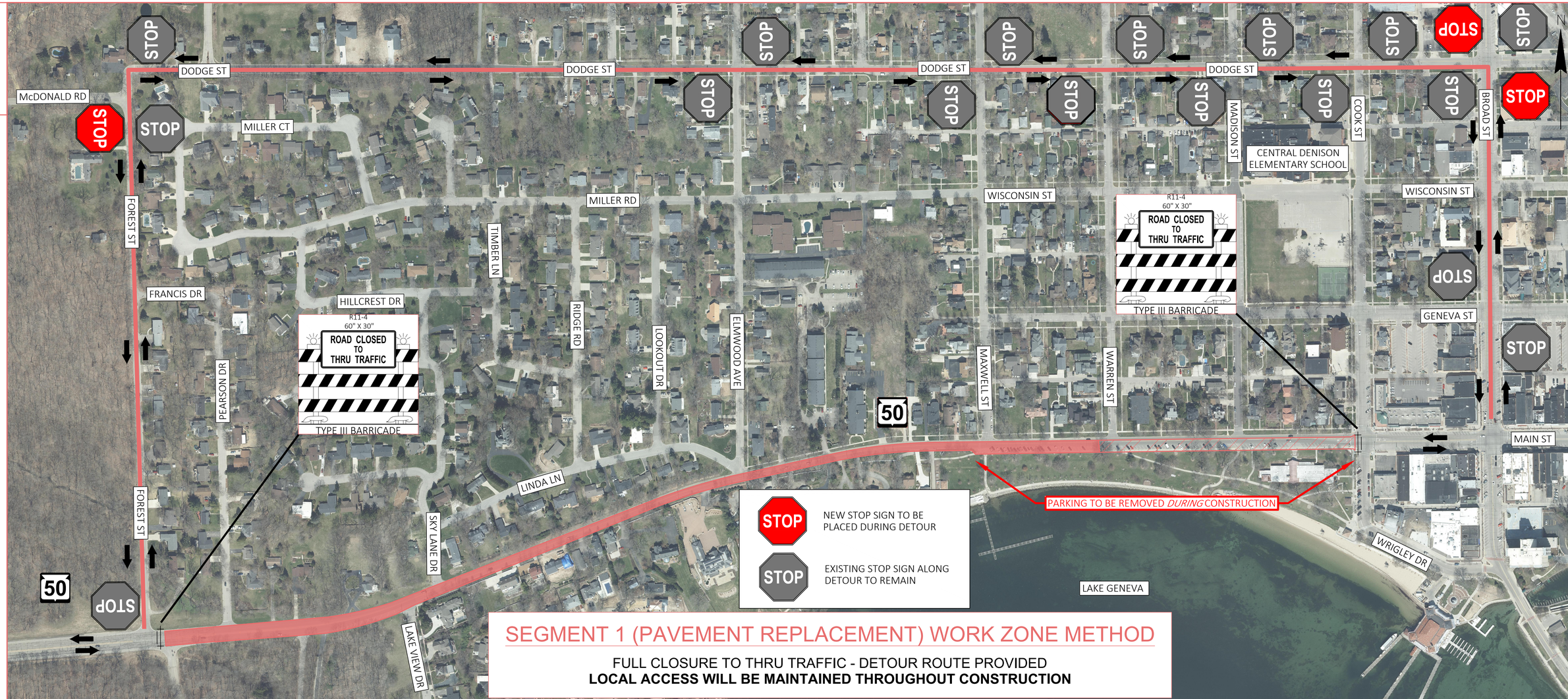

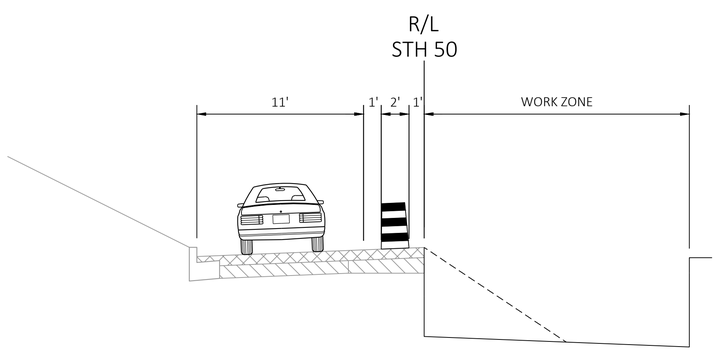

FIRST STAGE
STH 50
LAKE VIEW DR TO COOK ST

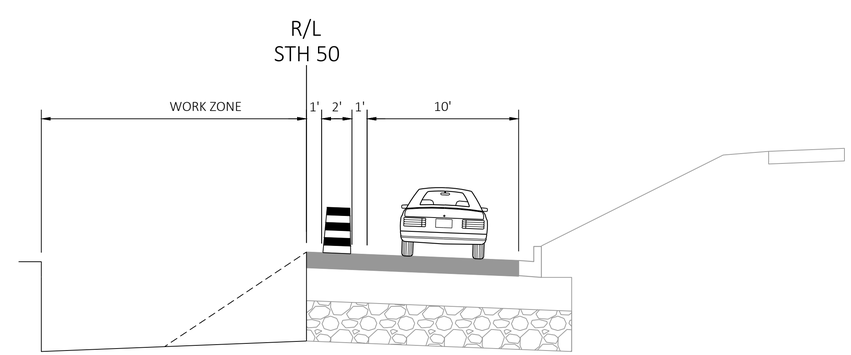

SECOND STAGE
STH 50
LAKE VIEW DR TO COOK ST

PROJECT NO: 3170-09-70/71	HWY: STH 50	COUNTY: WALWORTH	TRAFFIC STAGING CONCEPT OVERVIEW - SEGMENT 1	SHEET	E

FILE NAME : X:\BM1-3943 STH 50 LAKE GENEVA\02_COMMUNICATIONS\01_MEETINGS\02_EXTERNAL\260319_PIM #2\EXHIBITS\SEG 1.DWG
LAYOUT NAME - Segment 1-Overview and Staging Typical
PLOT DATE : 3/18/2026 5:19 PM PLOT BY : VALBON LATIFI PLOT NAME : PLOT SCALE : 1 IN:350 FT

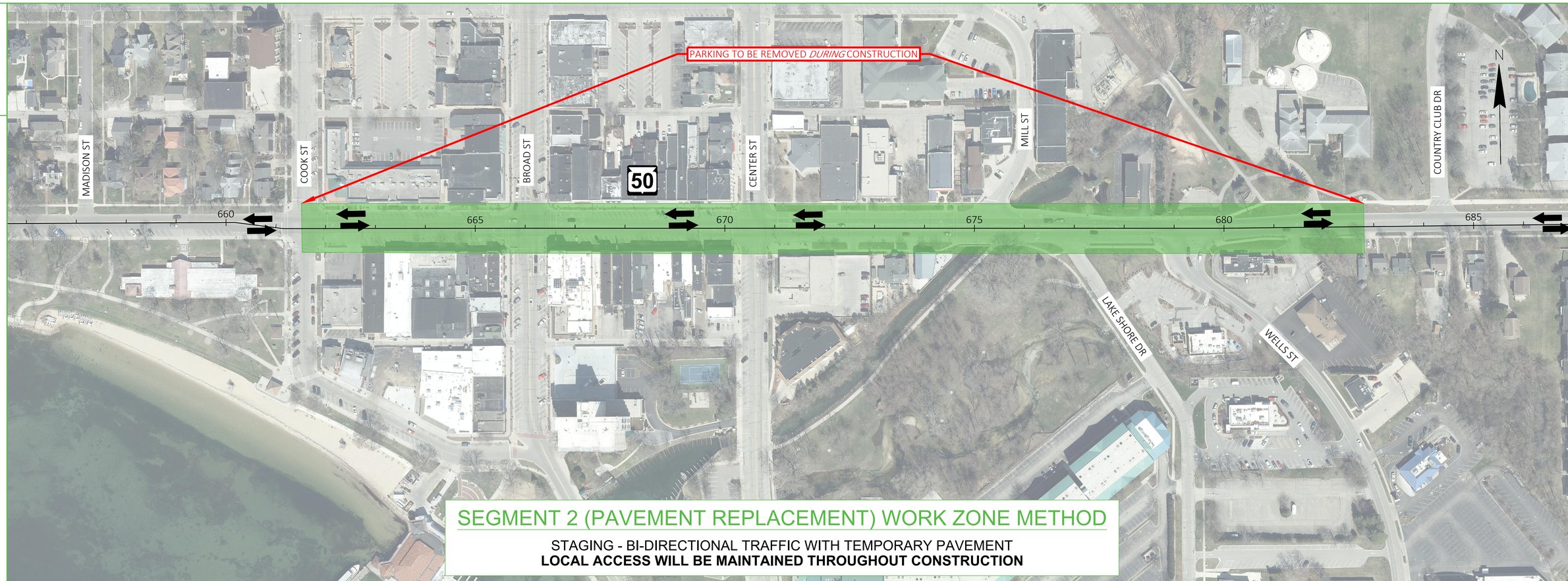

SEGMENT 2 (PAVEMENT REPLACEMENT) WORK ZONE METHOD

STAGING - BI-DIRECTIONAL TRAFFIC WITH TEMPORARY PAVEMENT

LOCAL ACCESS WILL BE MAINTAINED THROUGHOUT CONSTRUCTION

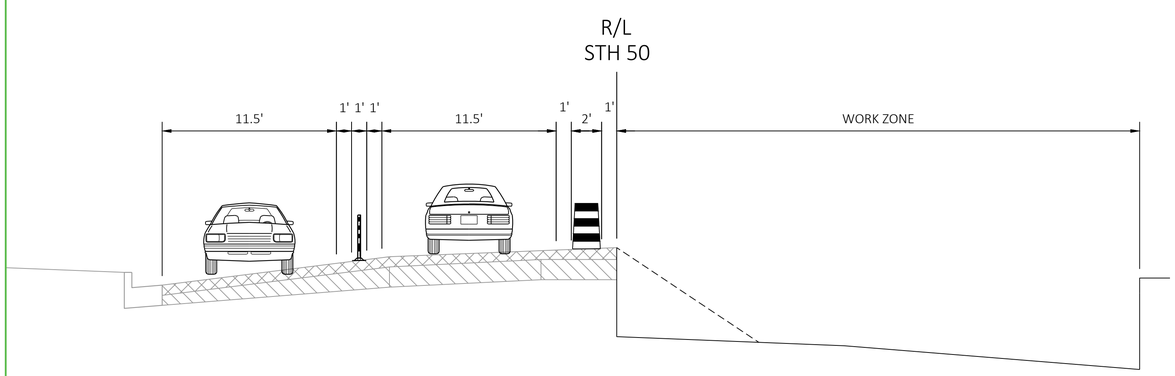

BIDIRECTIONAL TRAFFIC
STH 50
COOK ST TO CENTER ST

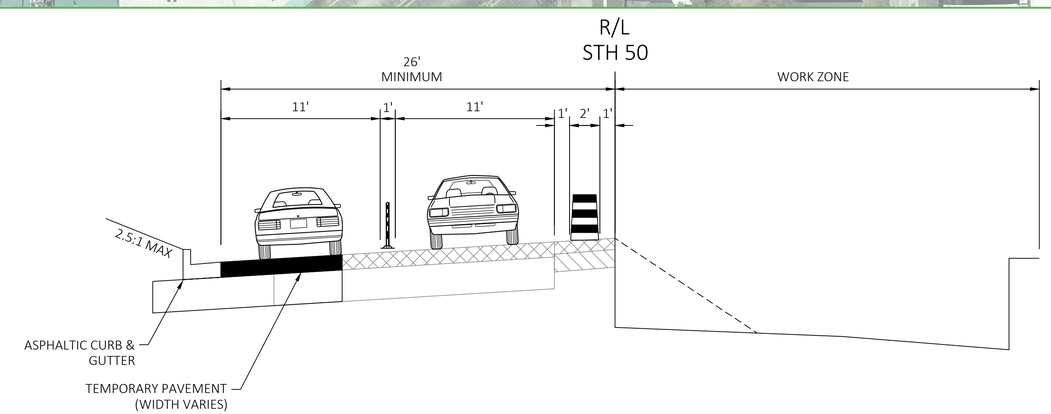

BIDIRECTIONAL TRAFFIC
STH 50
LAKESHORE DR TO END OF SEGMENT 2

PROJECT NO: 3170-09-70/71	HWY: STH 50	COUNTY: WALWORTH	TRAFFIC STAGING CONCEPT OVERVIEW - SEGMENT 2	SHEET	E

FILE NAME : X:\BM1-3943 STH 50 LAKE GENEVA\02_COMMUNICATIONS\01_MEETINGS\02_EXTERNAL\260319_PIM #2\EXHIBITS\SEG 2.DWG
LAYOUT NAME - Segment 2-Overview and Staging Typical
PLOT DATE : 3/18/2026 5:19 PM PLOT BY : VALBON LATIFI PLOT NAME : PLOT SCALE : 1 IN:200 FT

WISDOT/CADDS SHEET 42

2

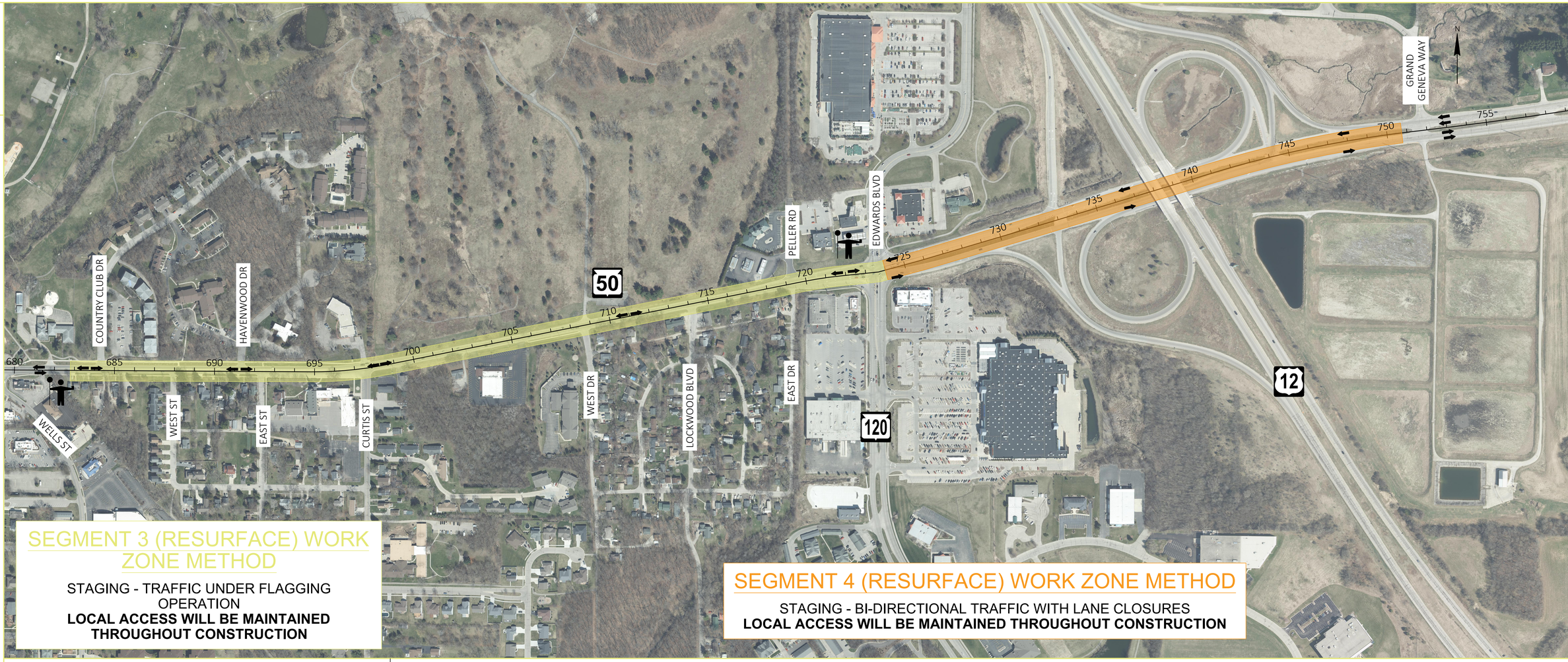

SEGMENT 3 (RESURFACE) WORK ZONE METHOD

STAGING - TRAFFIC UNDER FLAGGING OPERATION

LOCAL ACCESS WILL BE MAINTAINED THROUGHOUT CONSTRUCTION

SEGMENT 4 (RESURFACE) WORK ZONE METHOD

STAGING - BI-DIRECTIONAL TRAFFIC WITH LANE CLOSURES

LOCAL ACCESS WILL BE MAINTAINED THROUGHOUT CONSTRUCTION

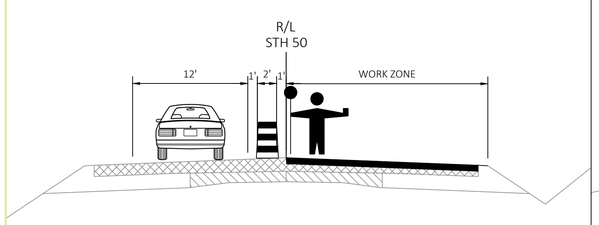

UNIDIRECTIONAL TRAFFIC
STH 50
COUNTRY CLUB DR TO STH 120/EDWARDS BLVD

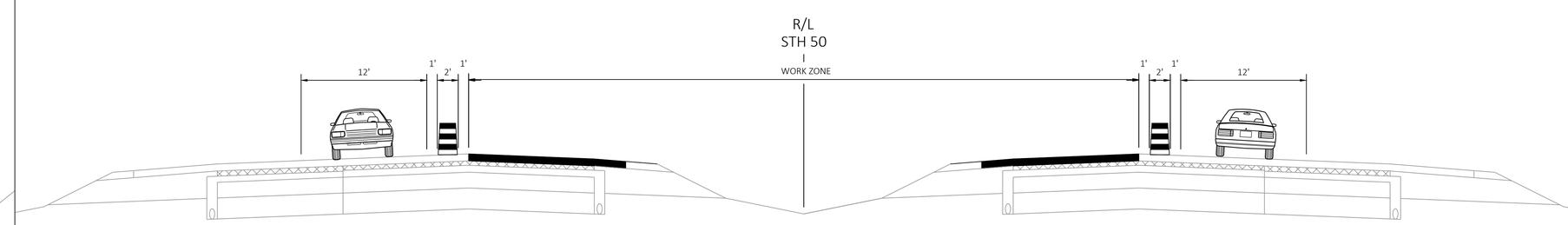

BIDIRECTIONAL TRAFFIC
STH 50
STH 120/EDWARDS BLVD TO GRAND GENEVA WAY

PROJECT NO: 3170-09-70/71	HWY: STH 50	COUNTY: WALWORTH	TRAFFIC STAGING OVERVIEW - SEGMENTS 3 & 4	SHEET	E

FILE NAME : X:\BM1-3943 STH 50 LAKE GENEVA\02_COMMUNICATIONS\01_MEETINGS\02_EXTERNAL\260319_PIM #2\EXHIBITS\SEG 3 AND 4.DWG
LAYOUT NAME - Segment 3&4-Overview and Staging Typical

PLOT DATE : 3/18/2026 5:20 PM PLOT BY : VALBON LATIFI PLOT NAME : PLOT SCALE : 1 IN:500 FT

WISDOT/CADDS SHEET 42

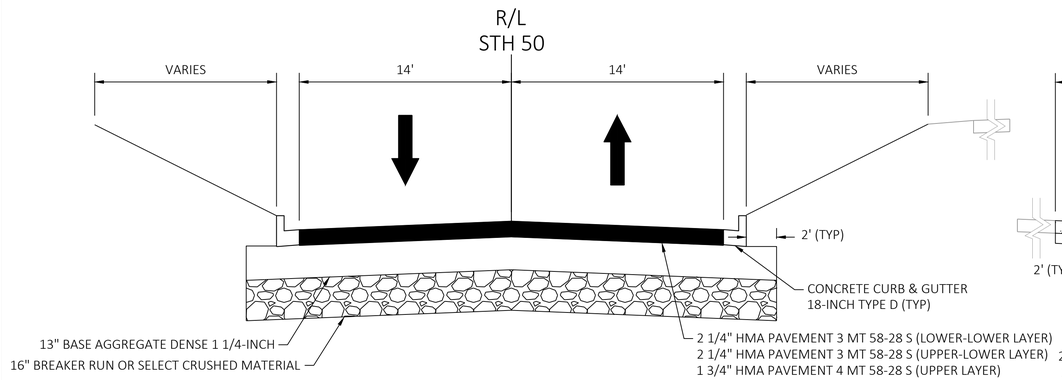

FINISHED TYPICAL SECTION
SEGMENT 1

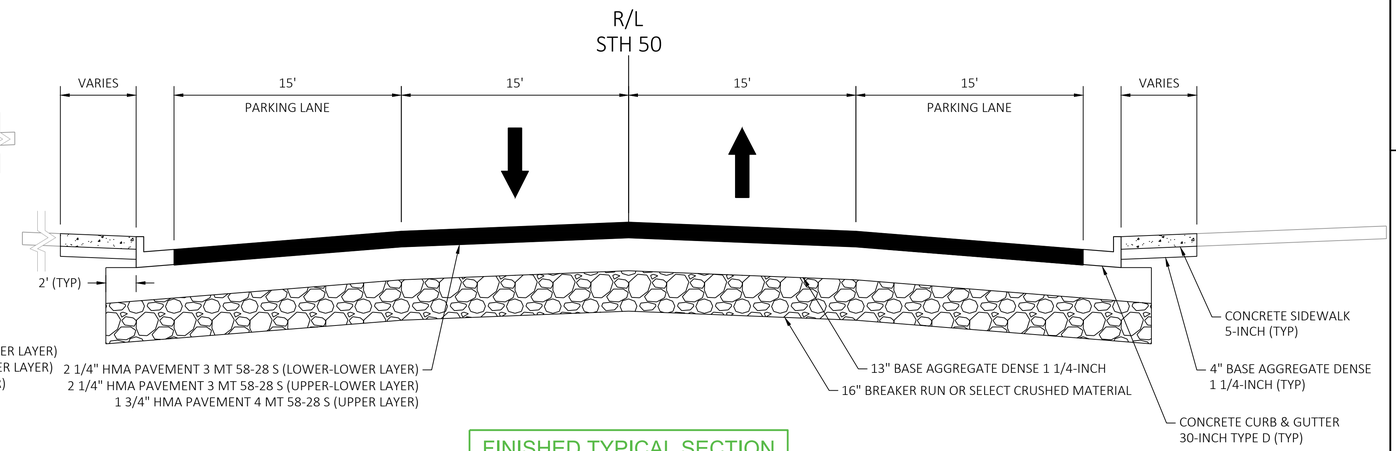

FINISHED TYPICAL SECTION
SEGMENT 2 (COOK ST TO CENTER ST)

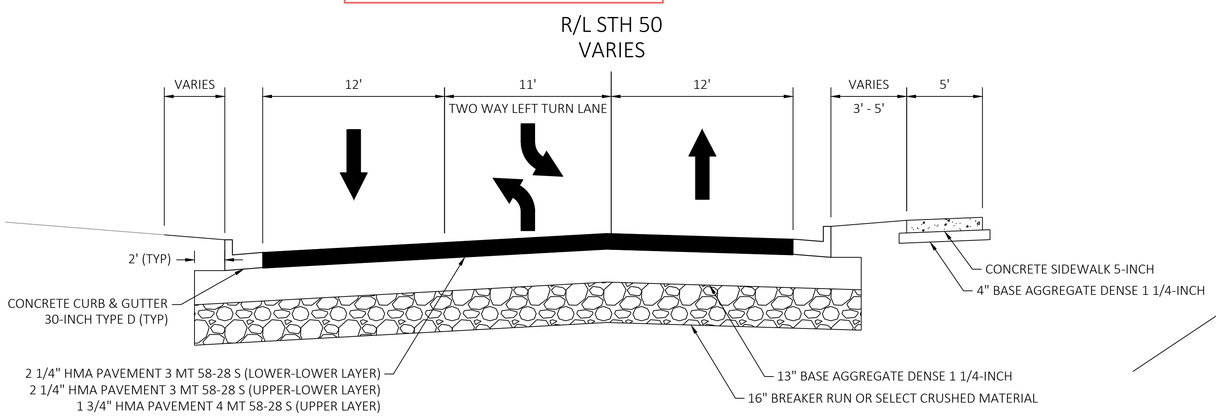

FINISHED TYPICAL SECTION
SEGMENT 2 (MILL ST TO WELLS ST)

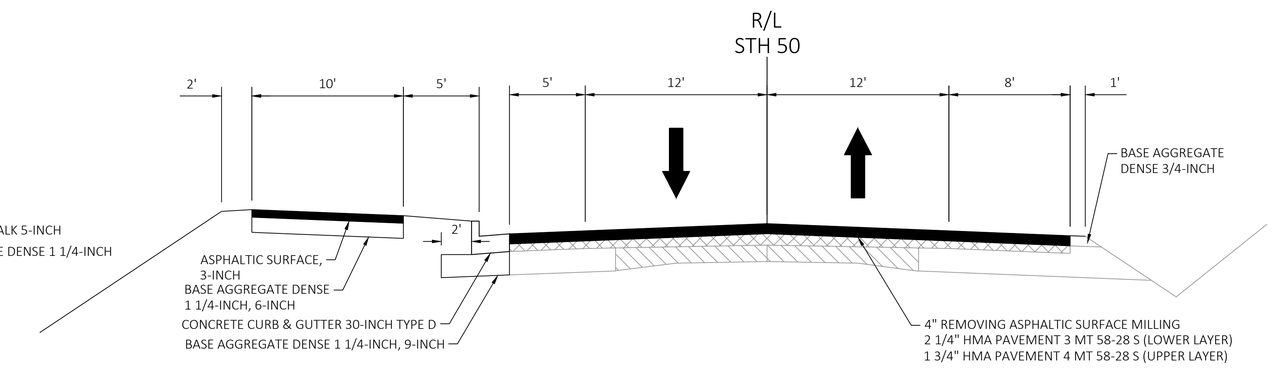

FINISHED TYPICAL SECTION
SEGMENT 3

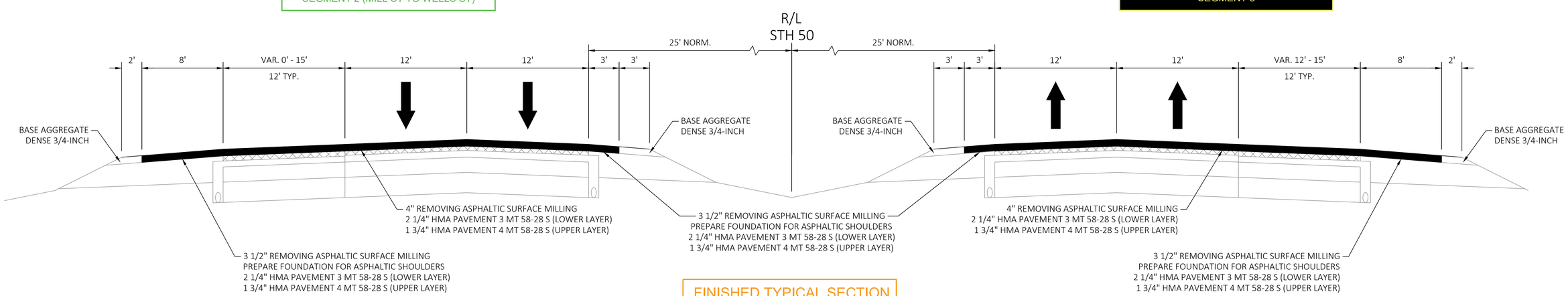

FINISHED TYPICAL SECTION
SEGMENT 4

PROJECT NO: 3170-09-70/71	HWY: STH 50	COUNTY: WALWORTH	FINISHED TYPICAL SECTIONS - SEGMENTS 1 TO 4	SHEET	E

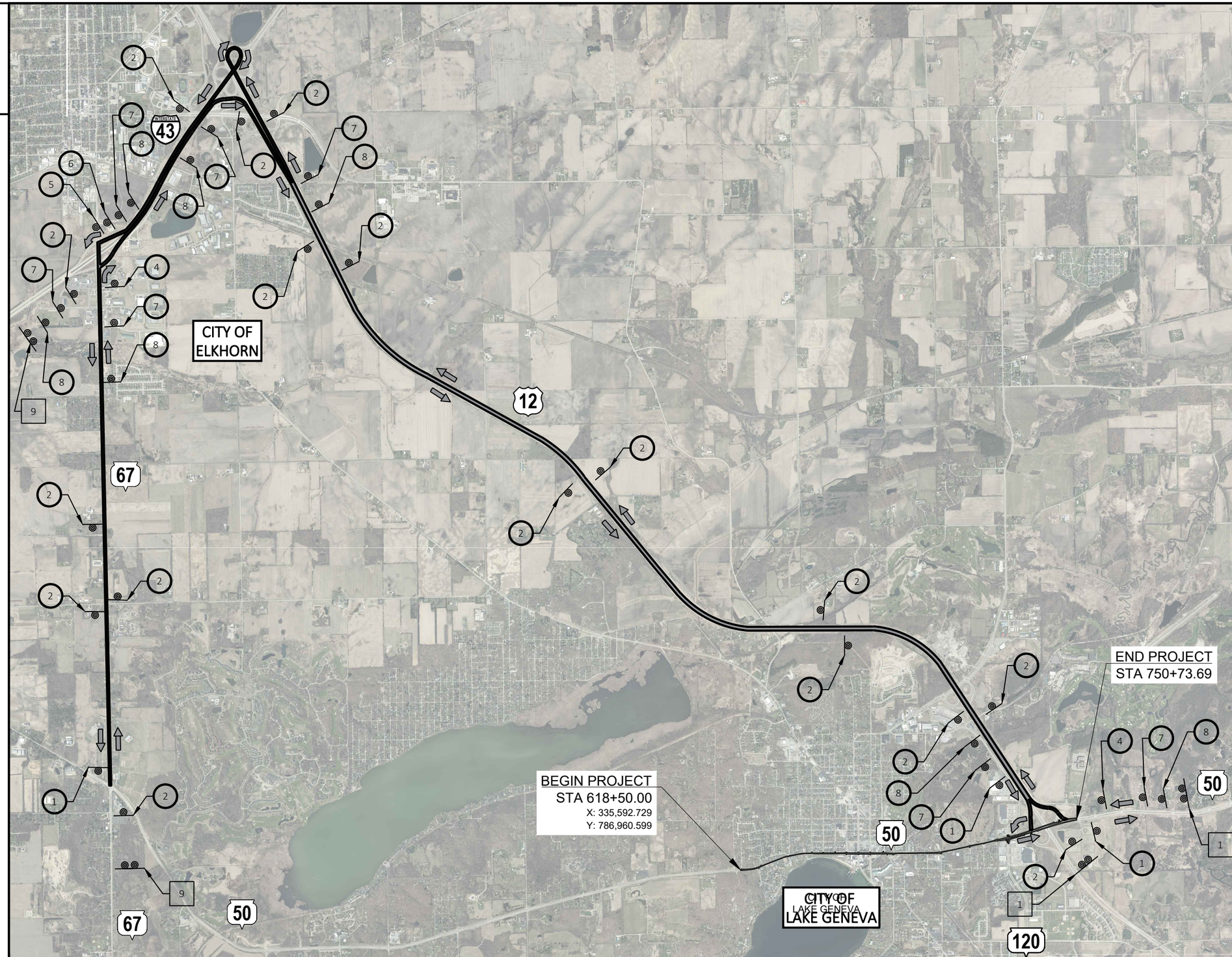

GENERAL NOTES FOR DETOUR SIGNING

THE EXACT LOCATION AND SPACING OF ALL SIGNS AND DEVICES SHALL BE ADJUSTED TO FIT FIELD CONDITIONS.

ALL SIGNS INAPPROPRIATE TO THE TRAFFIC CONTROL ZONE SHALL BE COVERED AS SPECIFIED IN THE PLANS AND/ OR AS DIRECTED BY THE ENGINEER. PAID UNDER THE ITEM "TRAFFIC CONTROL COVERING SIGNS TYPE II"

THE ERECTION AND PLACEMENT OF SIGNS SHALL BE IN ACCORDANCE WITH THE MANUAL OF UNIFORM TRAFFIC CONTROL DEVICES

DETOUR SIGNING SHALL BE PERFORMED BY THE CONTRACTOR

NOTES

1. USE SIZE 5 SIGNS ON FREEWAY.
2. USE SIZE 3 SIGNS ON RAMPS AND HIGHWAYS.
3. FOR SIGN ASSEMBLIES PLACED ON DIVIDED HIGHWAYS, EXCEPT FOR DIRECTIONAL ARROWS, PLACE ASSEMBLIES ON BOTH LEFT AND RIGHT SHOULDERS.

LEGEND

PROPOSED SIGN AND SIGN SUPPORT

DETOUR ROUTE

WORK ZONE

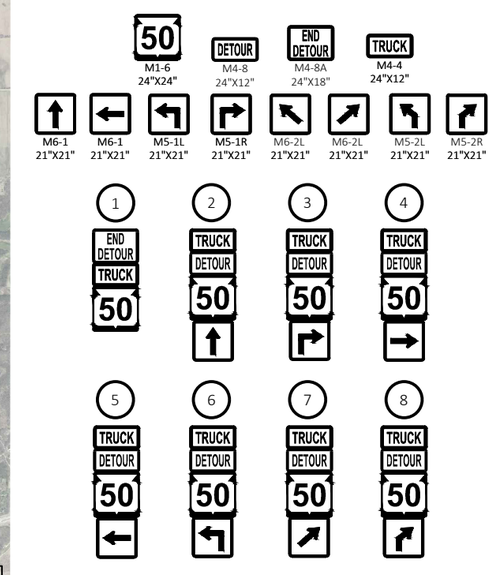

9 FMS

ROADWORK

STH 50

(STH 67 - HWY 12)

TRUCKS FOLLOW DETOUR

PROJECT NO: 3170-09-70/71	HWY: STH 50	COUNTY: WALWORTH	DETOUR - OSOW AND THRU TRAFFIC ROUTE	SHEET	E

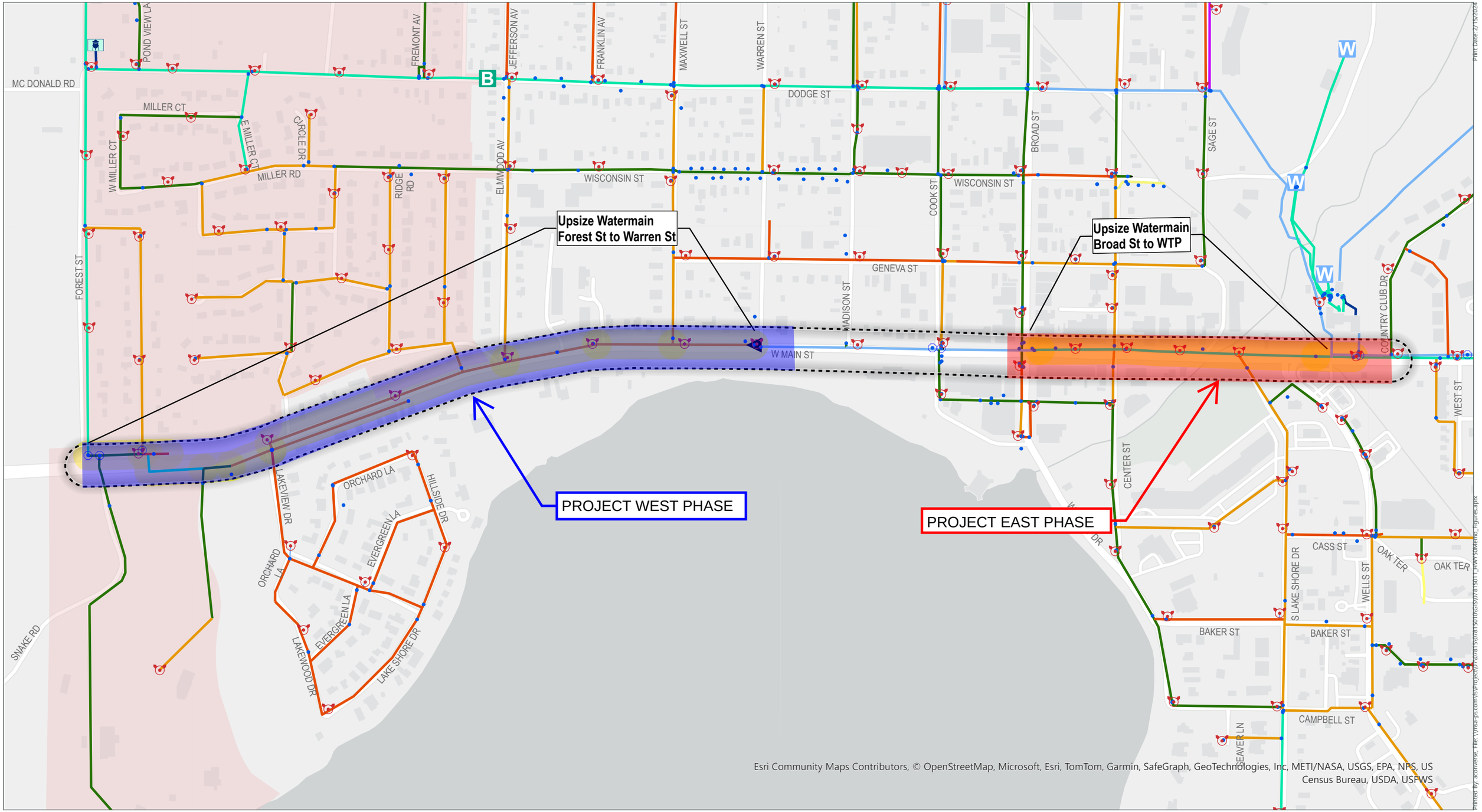

MSA

HWY 50 Corridor
Watermains to Upsize
Dodge High Pressure Zone
Main, 16"
Main, 14"
Main, 12"
Main, 10"
Main, 8"
Main, 6"
Main, 4"
Main, 2"
Main, 1.25"
Main, Unknown Size
Hydrant Lead
Valve
Air Release
Valve Manhole
Hydrants
Booster Station
Water Tower
Well

0 225 450 Feet

Existing Water System

W Main St/ HWY50

Lake Geneva

Walworth County, WI

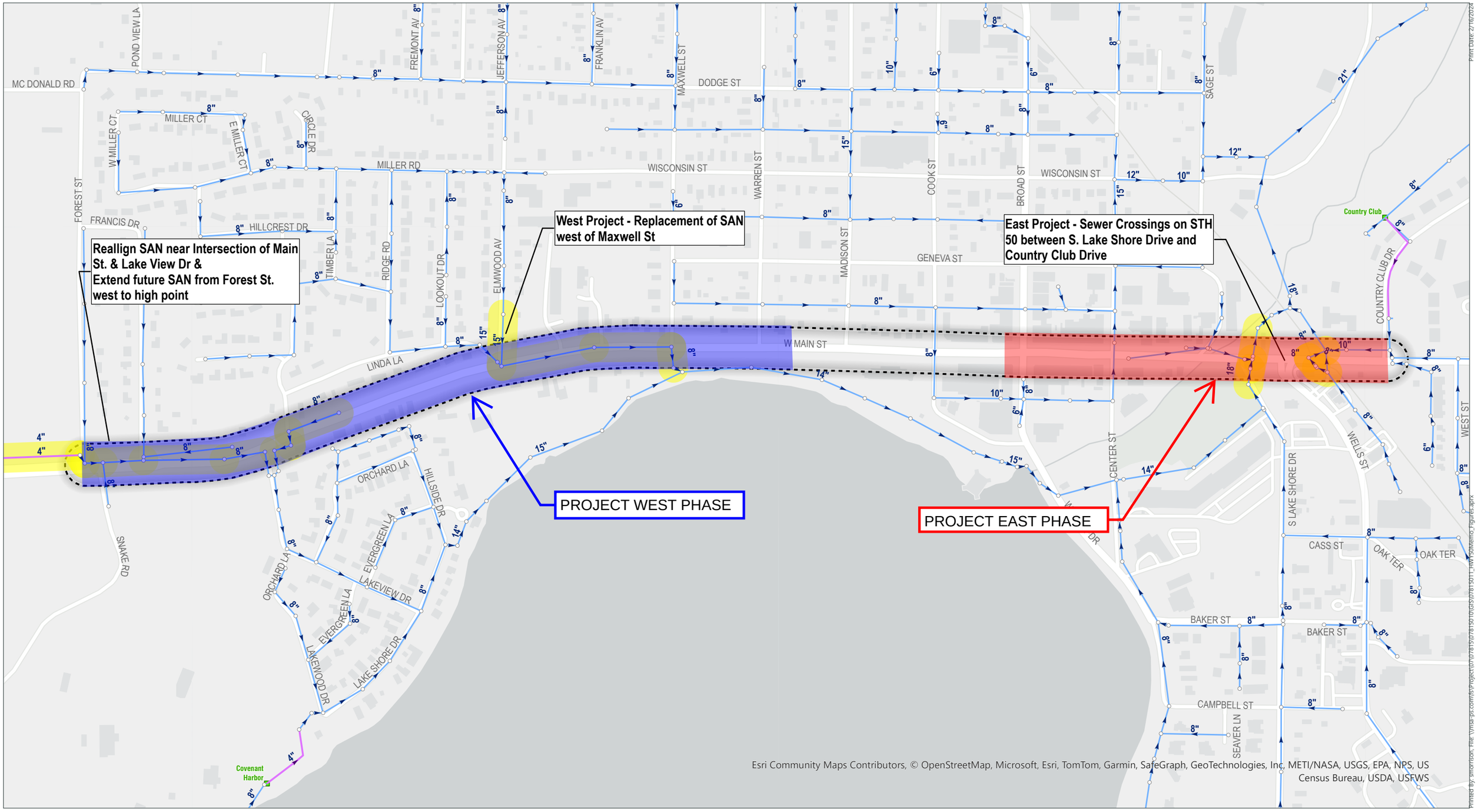

MSA

HWY 50 Corridor
Manhole
Lift Station
Force Main
Gravity Main
Sanitary Sewer Mains to Improve

0 225 450 Feet

Existing Sanitary System

W Main St/ HWY50

Lake Geneva
Walworth County, WI