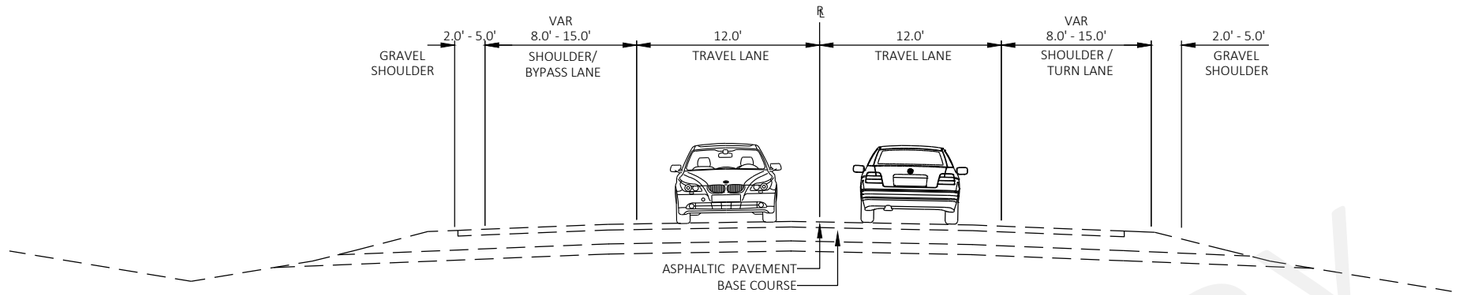

TYPICAL EXISTING SECTION

WIS 35
LA CROSSE CO LINE TO SUNNYSIDE DRIVE

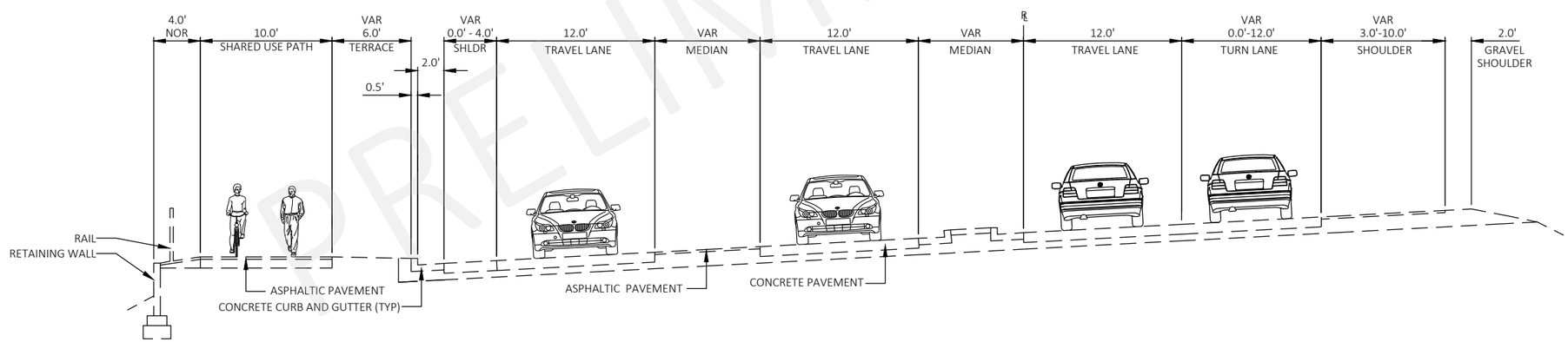

TYPICAL EXISTING SECTION

WIS 35
SUNNYSIDE DRIVE TO US 14/US 61

PRELIMINARY

WIS 35
LA CROSSE CO LINE TO GARNER PLACE
LA CROSSE COUNTY

STATE ID's 5163-07-02
PUBLIC INVOLVEMENT MEETING #2
FEBRUARY 6, 2020

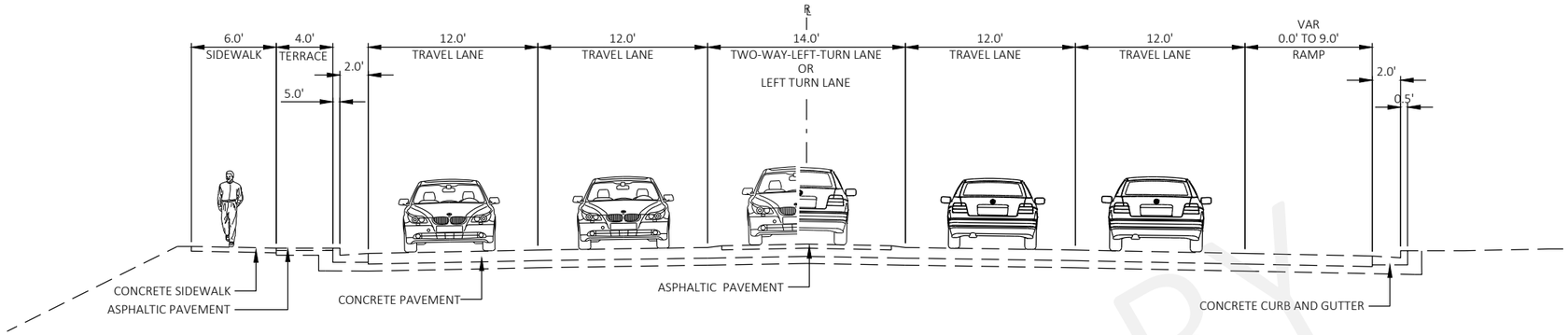

TYPICAL EXISTING SECTION
WIS 35
NORTH OF US 14/US 61

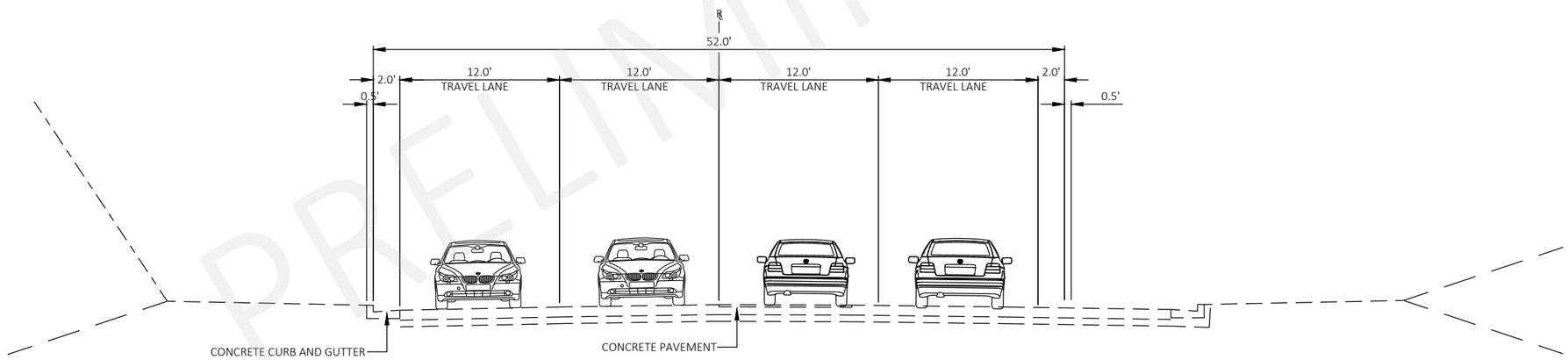

TYPICAL EXISTING SECTION
US 14/US 61

PRELIMINARY

WIS 35
LA CROSSE CO LINE TO GARNER PLACE
LA CROSSE COUNTY

STATE ID's 5163-07-02
PUBLIC INVOLVEMENT MEETING #2
FEBRUARY 6, 2020

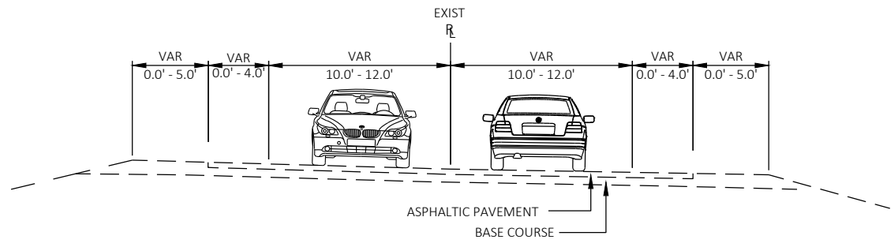

TYPICAL EXISTING SECTION

COUNTY GI

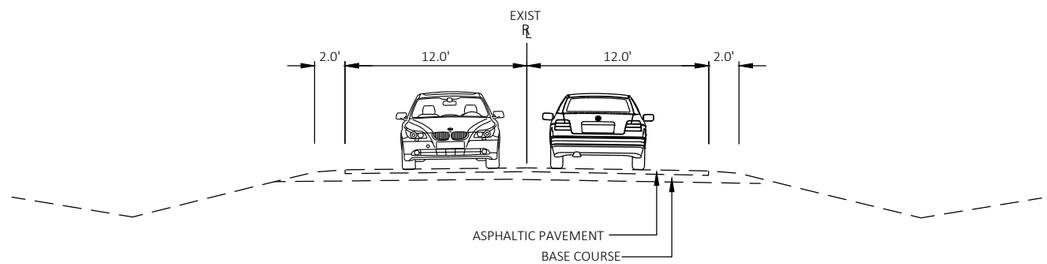

TYPICAL EXISTING SECTION

COUNTY K

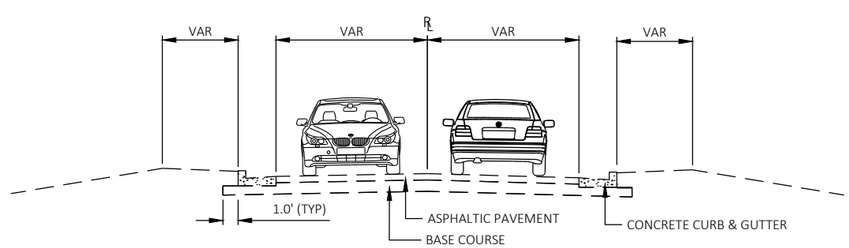

TYPICAL EXISTING SECTION - SIDE ROADS

CALVERT RD
FIRECLAY CT
GARNER PL
OLD TOWN HALL RD
RIVERVIEW DR

WIS 35
LA CROSSE CO LINE TO GARNER PLACE
LA CROSSE COUNTY

STATE ID's 5163-07-02
PUBLIC INVOLVEMENT MEETING #2
FEBRUARY 6, 2020

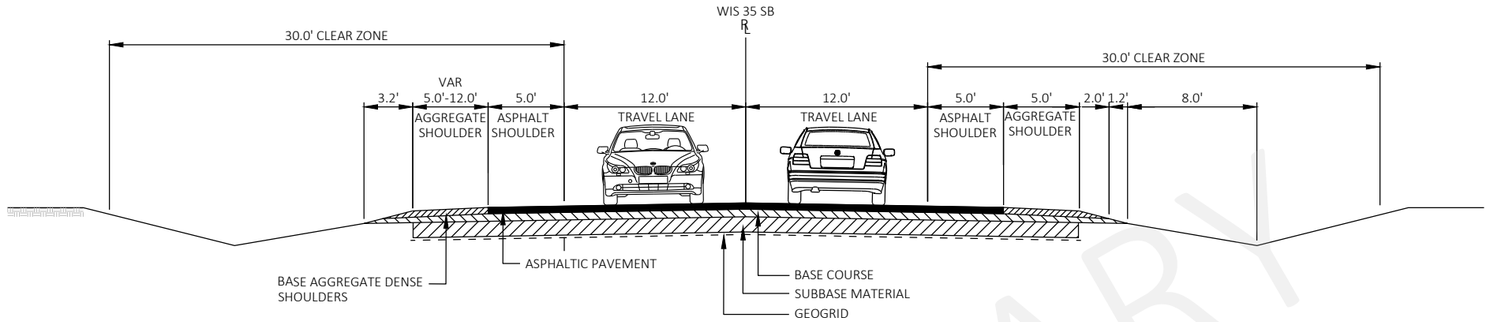

TYPICAL FINISHED SECTION

WIS 35

LA CROSSE CO LINE TO COUNTY K

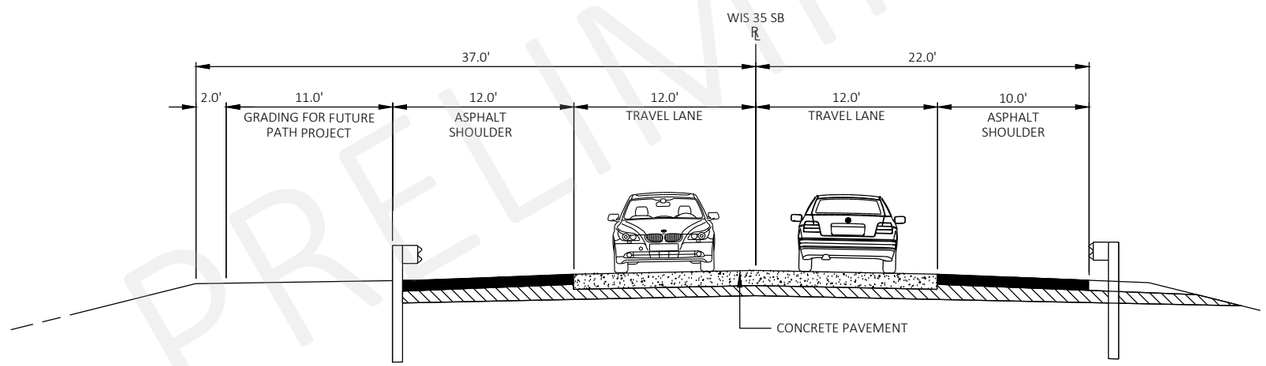

TYPICAL FINISHED SECTION

WIS 35

BEAMGUARD BY BRIDGE OVER MORMON CREEK

PRELIMINARY

WIS 35

LA CROSSE CO LINE TO GARNER PLACE

LA CROSSE COUNTY

STATE ID's 5163-07-02
PUBLIC INVOLVEMENT MEETING #2
FEBRUARY 6, 2020

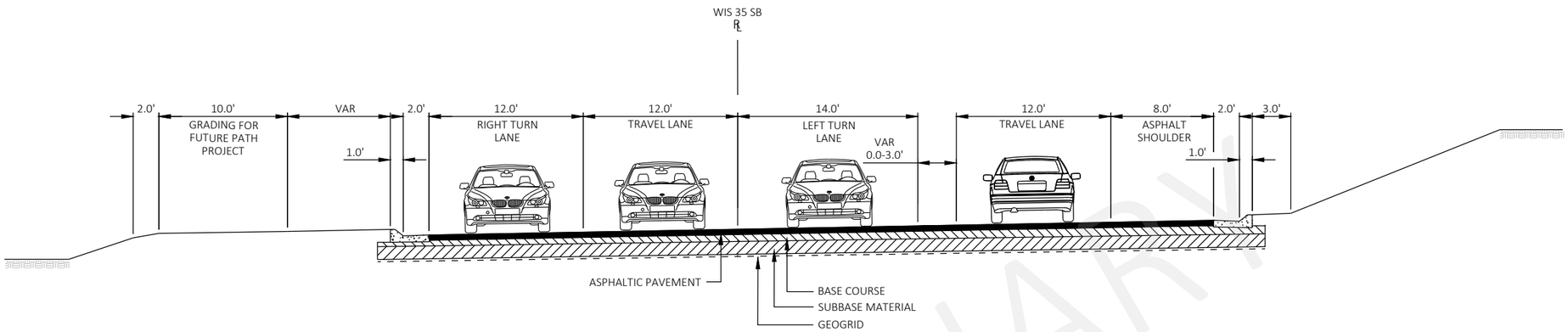

TYPICAL FINISHED SECTION

WIS 35
TURN LANES AT COUNTY K

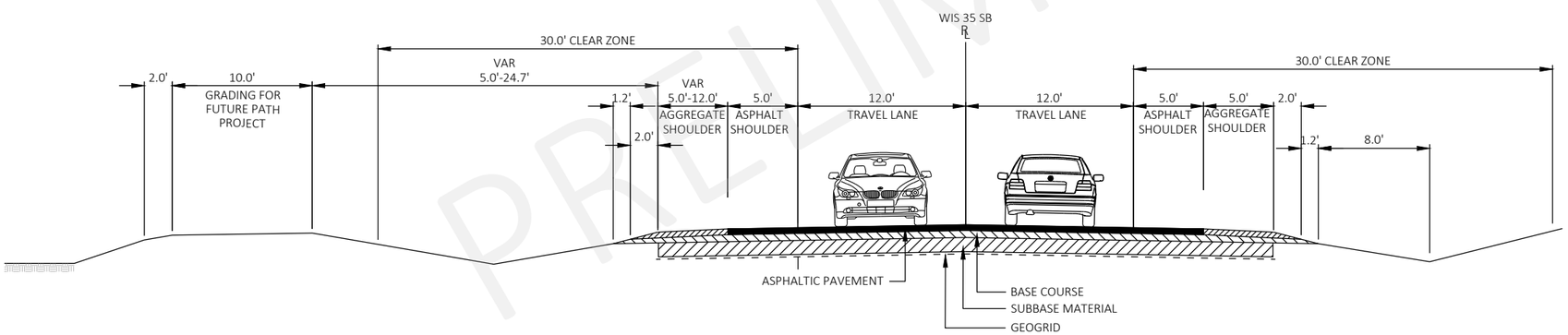

TYPICAL FINISHED SECTION

WIS 35
COUNTY K TO SUNNYSIDE DR

PRELIMINARY

WIS 35
LA CROSSE CO LINE TO GARNER PLACE
LA CROSSE COUNTY

STATE ID's 5163-07-02
PUBLIC INVOLVEMENT MEETING #2
FEBRUARY 6, 2020

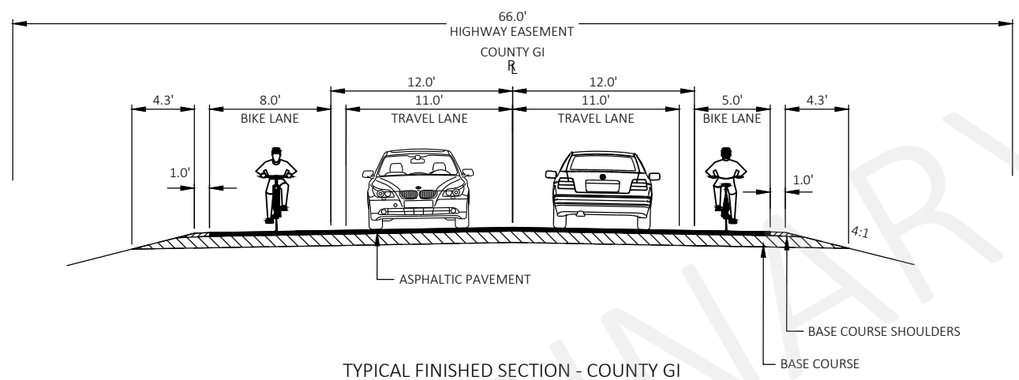

TYPICAL FINISHED SECTION - COUNTY GI

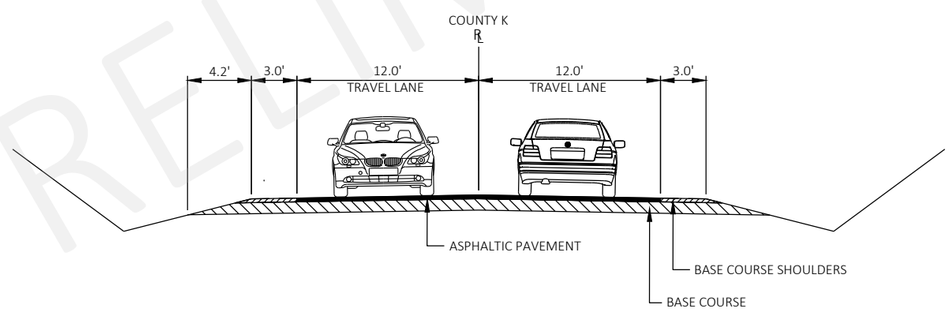

TYPICAL FINISHED SECTION - COUNTY K

PRELIMINARY

WIS 35
LA CROSSE CO LINE TO GARNER PLACE
LA CROSSE COUNTY

STATE ID's 5163-07-02
PUBLIC INVOLVEMENT MEETING #2
FEBRUARY 6, 2020

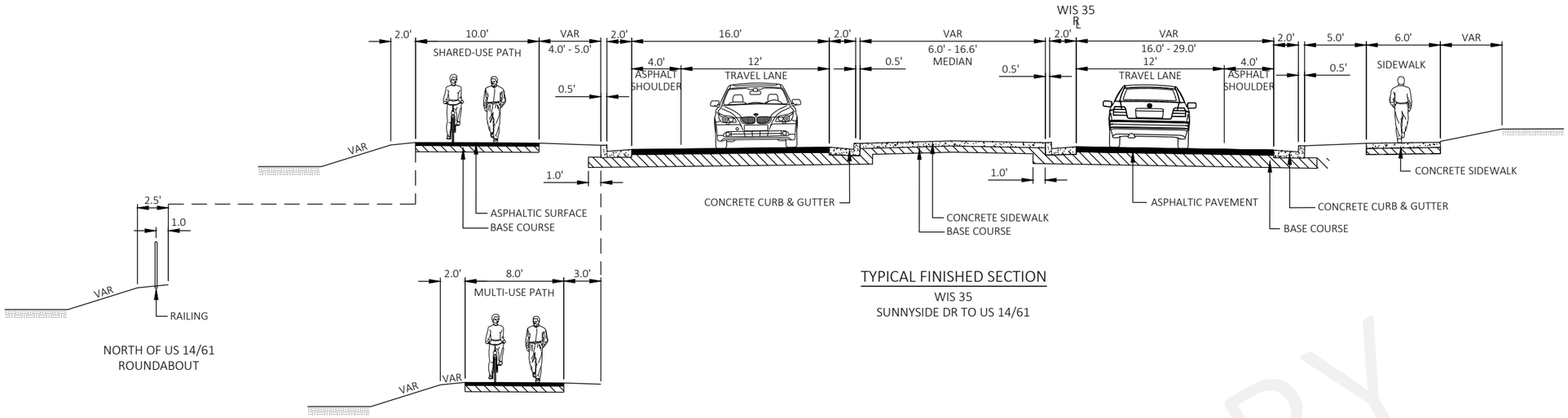

TYPICAL FINISHED SECTION

WIS 35
SUNNYSIDE DR TO US 14/61

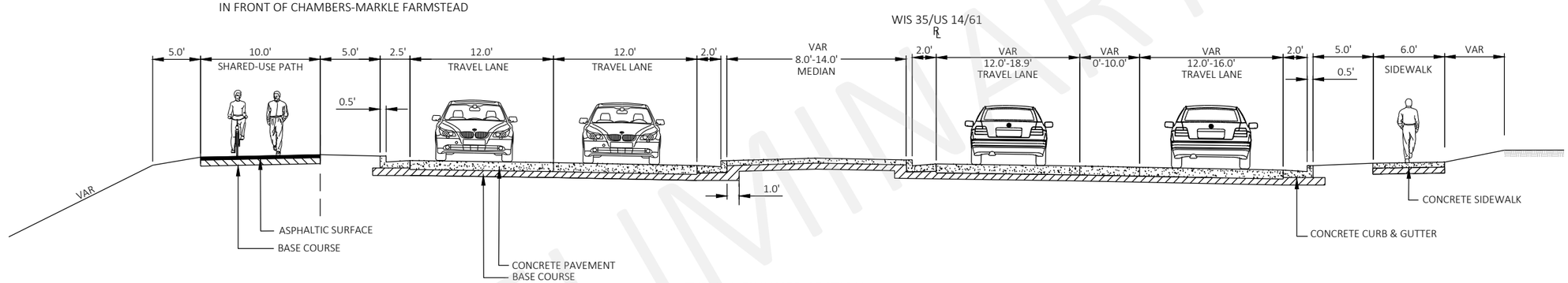

TYPICAL FINISHED SECTION

WIS 35/US 14/61
US 14/61 TO S OF CALVERT RD

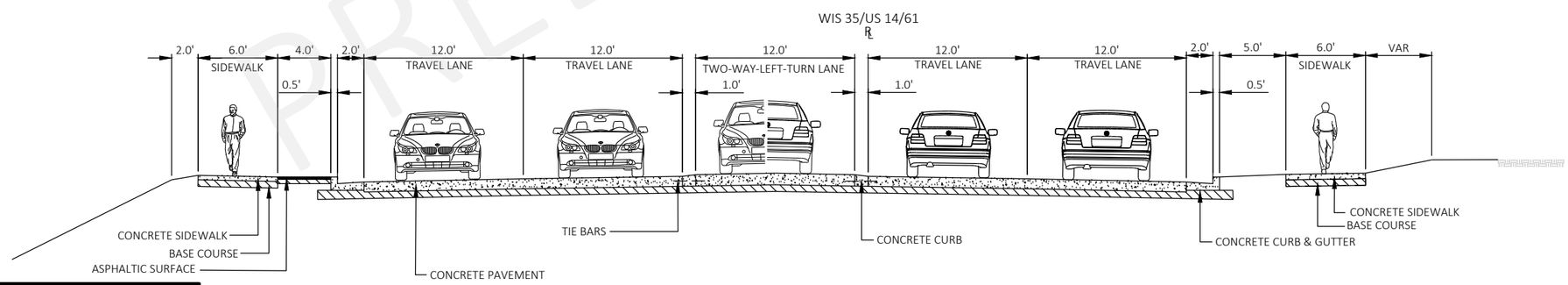

TYPICAL FINISHED SECTION

WIS 35/US 14/61
S OF CALVERT RD TO ZION RD

PRELIMINARY

WIS 35
LA CROSSE CO LINE TO GARNER PLACE
LA CROSSE COUNTY

STATE ID's 5163-07-02
PUBLIC INVOLVEMENT MEETING #2
FEBRUARY 6, 2020

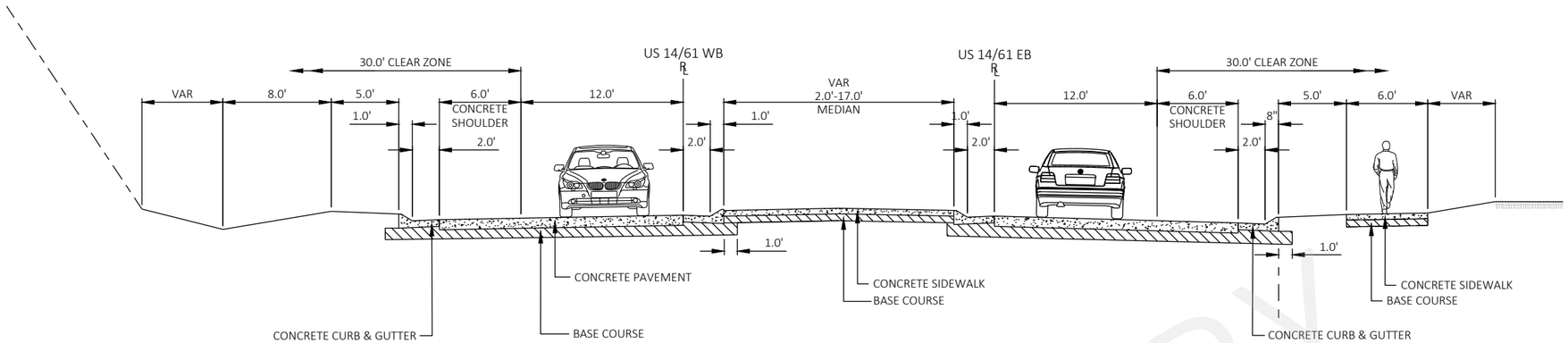

TYPICAL FINISHED SECTION

US 14/61

WIS 35/US 14/61 TO FIRECLAY CT

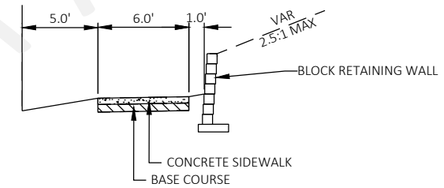

RETAINING WALL SOUTH OF FIRECLAY CT

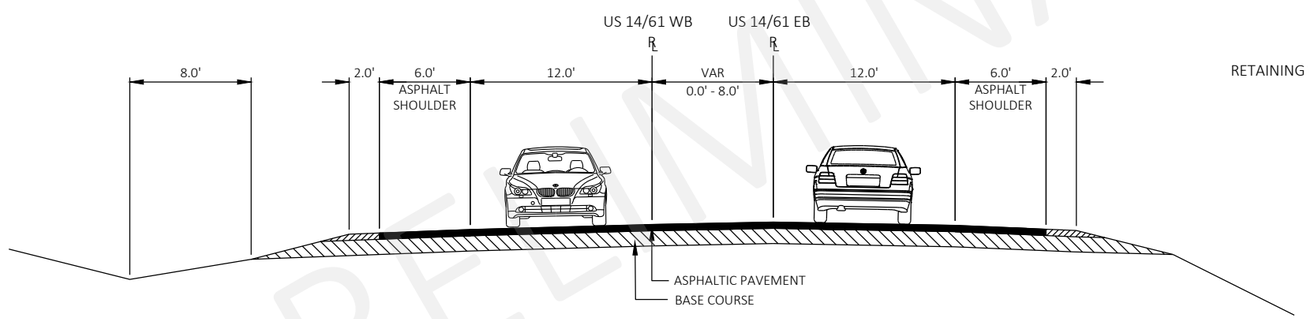

TYPICAL FINISHED SECTION

US 14/61

FIRECLAY CT TO EAST PROJECT LIMITS

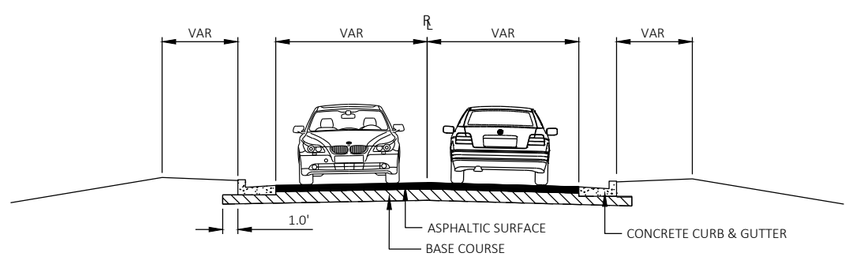

TYPICAL FINISHED SECTION - SIDE ROADS

CALVERT RD
FIRECLAY CT
GARNER PL
OLD TOWN HALL RD
RIVERVIEW DR

WIS 35
LA CROSSE CO LINE TO GARNER PLACE
LA CROSSE COUNTY

STATE ID's 5163-07-02
PUBLIC INVOLVEMENT MEETING #2
FEBRUARY 6, 2020

PRELIMINARY