Procedures, Cost and Effectiveness for Deteriorated Bridge Substructure Repair

Baolin Wan, Christopher M. Foley, Steven W. Ainge, and Christie Nguyen

Department of Civil, Construction and Environmental Engineering
Marquette University

WisDOT ID no. 0092-11-08
March, 2013

Research & Library Unit

Wisconsin Highway Research Program

WISCONSIN DOT
PUTTING RESEARCH TO WORK

Technical Report Documentation Page

1. Report No. WHRP 0092-11-08	2. Government Accession No	3. Recipient's Catalog No
4. Title and Subtitle Procedures, Cost and Effectiveness for Deteriorated Bridge Substructure Repair		5. Report Date March 2013 6. Performing Organization Code Wisconsin Highway Research Program
7. Authors Baolin Wan, Christopher M. Foley, Steven W. Ainge, and Christie Nguyen		8. Performing Organization Report No.
9. Performing Organization Name and Address Department of Civil, Construction and Environmental Engineering Marquette University 1515 W. Wisconsin Ave. Milwaukee, WI 53233		10. Work Unit No. (TRAIS) 11. Contract or Grant No. WisDOT SPR# 0092-11-08
12. Sponsoring Agency Name and Address Wisconsin Department of Transportation Division of Business Services Research Coordination Section 4802 Sheboygan Ave. Rm 104 Madison, WI 53707		13. Type of Report and Period Covered Final Report, 2010-2012 14. Sponsoring Agency Code
15. Supplementary Notes		

16. Abstract

Deterioration of bridge substructures has been a serious concern throughout Wisconsin. Concrete, steel and timber components all require distinct repair methods which not only address the true cause of the deterioration, but also protect the component from future damage. In order to determine common repair practices and their success rates, the research team surveyed maintenance engineers throughout the United States to determine successful and reliable substructure repair techniques. The survey indicated that concrete surface repair is the most common repair technique, and was also viewed as the most unreliable. The survey results indicated that the most reliable repair technique for scour was the correct sizing and use of riprap. Eight bridges were visited throughout the Southeast and Southwest regions of WisDOT. These bridges were documented, both for their typical deterioration and unique repair methods. Various methods and procedures of repairing concrete, timber and steel substructures, and countering scour were summarized and discussed. Decision matrices were created to compare different repair methods based on their unit costs and estimated service life. A repair manual including detailed and drawing and procedures of 72 different repair methods was created for use by WisDOT personnel.

17. Key Words bridge substructure, deterioration, repair, cost, service life, concrete, timber, steel, scour		18. Distribution Statement No restriction. This document is available to the public through the National Technical Information Service 5285 Port Royal Road Springfield VA 22161	
19. Security Classif.(of this report) Unclassified	19. Security Classif. (of this page) Unclassified	20. No. of Pages 406	21. Price

Form DOT F 1700.7 (8-72) Reproduction of completed page authorized

DISCLAIMER

This research was funded through the Wisconsin Highway Research Program by the Wisconsin Department of Transportation and the Federal Highway Administration under Project 0092-11-08. The contents of this report reflect the views of the authors who are responsible for the facts and accuracy of the data presented herein. The contents do not necessarily reflect the official views of the Wisconsin Department of Transportation or the Federal Highway Administration at the time of publication.

This document is disseminated under the sponsorship of the Department of Transportation in the interest of information exchange. The United States Government assumes no liability for its contents or use thereof. This report does not constitute a standard, specification or regulation.

The United States Government does not endorse products or manufacturers. Trade and manufacturers' names appear in this report only because they are considered essential to the object of the document.

Table of Contents

ACKNOWLEDGEMENTS ..... **v**
EXECUTIVE SUMMARY ..... **vi**
Chapter 1 Maintenance Engineer Survey **1**
1.1 Southeast Region 2
1.2 Southwest Region 3
1.3 Northwest Region 8
1.4 North Central Region 9
1.5 Northeast Region 11
1.6 Other States Surveyed 12
1.7 Concluding Remarks 44
1.8 References 45
Chapter 2 Common Wisconsin Substructure Deterioration **67**
2.1 Bridge B-40-0115 67
2.2 Bridge B-40-0226 70
2.3 Bridge B-40-0494 72
2.4 Bridge B-40-0189 73
2.5 Bridge B-40-0122 74
2.6 Bridges B-40-0129 and B-40-0130 75
2.7 Bridge B-13-0008 77
2.8 Bridge B-11-0024 78
2.9 Concluding Remarks 79
2.10 References 81
Chapter 3 Concrete Substructures **103**
3.1 General Repairs 105
3.2 Concrete Pile Repair 115
3.3 Concrete Pier Repair 120
3.4 Concrete Abutment and Wingwall Repair 124
3.5 Concrete Bridge Seat Repair 128
3.6 Concluding Remarks 130
3.7 References 131
Chapter 4 Timber Substructures **147**

4.1 Timber Pile Repair 148
4.2 Supplemental Piles 153
4.3 Timber Sway Bracing Repair 155
4.4 Timber Sill Abutment Repair 155
4.5 Timber Corbel Repair 156
4.6 Concluding Remarks 157
4.7 References 157
Chapter 5 Steel Substructures 171
5.1 Adding Metal to Steel H-Piles 172
5.2 Pile Jacket 173
5.3 Concrete Encasement 175
5.4 Corrosion Protection 175
5.5 Concluding Remarks 177
5.6 References 178
Chapter 6 Scour Countermeasures 185
6.1 Piles 185
6.2 Piers 186
6.3 Abutments 196
6.4 Bank Slope 202
6.5 River Stabilization 204
6.6 Concluding Remarks 206
6.7 References 207
Chapter 7 Summary, Conclusions, Recommendations and Future Research 221
7.1 Summary 221
7.2 Conclusions 225
7.3 Recommendations and Future Research 227
Appendix A Maintenance Engineer Survey Results A-1
Appendix B Bridge Substructure Repair Manual B-1

ACKNOWLEDGEMENTS

The authors would like to thank the engineers through the United States who responded the survey for this project. Their input is extremely important for the success of this study. The authors also acknowledge the support and help from many individuals at the Wisconsin Department of Transportation including David Babler, Travis McDaniel and William Oliva.

EXECUTIVE SUMMARY

Deterioration of bridge substructures has been a serious concern throughout Wisconsin. Concrete, steel and timber members all require distinct repair methods which not only address the true cause of the deterioration, but also protect the member from future damage. Degradation of bridge substructure members in Wisconsin has been caused by deicing chemicals, the cycle of wetting and drying, scour, erosion, improper design and many other damaging processes. Utilizing repair techniques that merely address the effect of the deterioration has proven costly and unreliable. Understanding the relationship between cost and service life of modern repair methods can help maintenance engineers make informed decisions that will maximize efficacy.

The objectives of this research project were to gain a better and more current understanding of the deterioration and damage of bridge substructures; explore both assessment and repair strategies for bridge substructures subjected to either damage or deterioration; and develop a guidebook for assessment and repair of substructures that would be utilized by WisDOT personnel. The research also aimed to gather information regarding prices and service life for common repair techniques in order to make effective comparisons between rehabilitation methods.

In order to determine common repair practices and their success rates, the research team surveyed maintenance engineers throughout the United States. The survey, composed of nine questions, was sent to 90 maintenance engineers and generated a response rate of 30%. The survey responses are included as Appendix A of the report. It was determined from the survey that concrete surface repair is the most common repair

technique, and is also viewed as the most unreliable. It was identified as the least effective repair, accounting for 40% of the responses. The most reliable repair was the correct sizing and use of riprap. Unique and successful repair techniques were also collected from the survey. The use of sacrificial anodes, concrete armor units and concrete encasements were reported for their effective nature. The survey gave the research team a guide for the state of practice and estimated longevity of bridge substructure repairs.

The research team visited 8 bridges throughout the Southeast and Southwest regions of WisDOT. These bridges were documented, both for their typical deteriorations and unique repair methods. Through these bridges, it was determined that the damage caused by deicing chemicals is extensive and varying. Expansion joint degradation has accounted for a large portion of deterioration throughout Wisconsin's infrastructure. Bridges were visited where pier caps and bridge seats were directly below an expansion joint. These members typically showed signs of spalling and reinforcement corrosion due to chloride intrusion. Deicing chemicals embedded within snowpack on concrete columns was also observed to cause a large portion of the observed deterioration. Repairs that were witnessed during the bridge visits were concrete column encasements, concrete pier cap encasements, concrete surface repairs, sprayed-on concrete repairs, sacrificial anode repairs, and fiber reinforced polymer (FRP) repairs. Documentation indicating how long these repairs had been in place gave the research team an estimate for longevity of repairs in Wisconsin.

Throughout the research, it was discovered that concrete repairs are the most common throughout Wisconsin. The current repair procedures for concrete only address

the effect of the deterioration, but not the cause. Concrete surface repairs are frequently conducted without addressing what caused the steel reinforcement to corrode and result in delamination. When chlorides are allowed to remain in the existing concrete, or are allowed to continue entering the concrete, the steel reinforcement corrosion will continue to occur. Chloride extraction processes, cathodic protection and expansion joint maintenance are all useful tools to prevent steel reinforcement corrosion. Repairs are also available which not only replace section loss but also incorporate a barrier to prevent further chloride intrusion, such as fiberglass jacketing and fiber wrapping.

Timber repairs that were researched involved the repair of individual timber piles and timber sway bracing. A number of solutions are available which can replace a deteriorated portion of a pile, and possibly protect it from further attack. Pile posting, pile restoration and pile shimming all incorporate a new piece of treated timber in the repair. These methods are cost effective, but will be subjected to the same deterioration as the original pile since it is being replaced with the same material. Concrete jacketing, pile augmentation and PVC wrapping are methods which leave the existing pile in its deteriorated state, but replace the section loss with concrete and usually provide a watertight seal. While these three methods are typically more expensive than a typical timber replacement, they provide a level of protection against future deterioration. Several other solutions are available to strengthen a timber pile bent, such as adding piles, repairing sway bracing or creating sway bracing.

Since the only substructure member that is composed out of steel is piles, there is not a wide range of options for steel substructure repair. Steel piles typically experience section loss at the waterline from the continual wetting and drying of the member. This

can usually be rectified by adding steel to the cross section by welding or bolting. Further protection against deterioration can be provided if a concrete encasement is also incorporated for the repair. Fiberglass jackets that are form fitted to the specific H-pile can be utilized for the repair, and have the unique advantage of not requiring dewatering. If corrosion is a serious concern for H-piles, sacrificial anodes can be combined with any of the mentioned repairs in order to create further protection.

There are a wide variety of options available to reduce and repair scour on bridge substructures. The repairs were separated into distinct categories to further differentiate them. Structural repairs are designated as repairs which increase bearing of the existing foundation, which could be accomplished by extending the footing below the scour line or underpinning the existing foundation. Armoring techniques are repairs which place a barrier to prevent erosion of the substrate. Armoring techniques included in the report are riprap, partially grouted riprap, sheet piles with riprap, concrete armor units, sacrificial piles, collars, gabion mattresses, grout filled mattresses and articulating concrete blocks. The appropriate design and placement procedures are included in Appendix B. Both the structural repairs and armoring techniques can be utilized on piers or abutments when the conditions are appropriate. As a means of reducing the erosive capacity of the water, a river stabilization method can also be utilized. River stabilization methods that were researched are bank barbs, engineered log jams and check dams. While the techniques are different for the three methods, they all attempt to reduce the energy and velocity of the river prior to it reaching the bridge substructure. Depending on how much material has been removed due to scour; a structural repair, armoring technique or river stabilization may be utilized.

A repair manual, included as Appendix B, was created for use by WisDOT personnel when determining the most appropriate course of action for a specific method of deterioration. Repairs were identified not only by which material was experiencing degradation, but also by which element of the substructure was deteriorated. The four main categories for repairs are concrete, timber, steel and scour. Since scour can affect multiple portions of a bridge substructure, and a large amount of research has been done on scour repairs, it was given its own section of the manual. Drawings are provided for each repair, indicating how it should be conducted and which specific member upon which it should be placed. Three separate decision matrices were also created to be used in addition to the repair manual. The decision matrices cover concrete, scour and piles. Timber, steel and concrete piles were all placed within one matrix since timber and steel are typically only used for piles on existing bridge substructures. The decision matrix should highlight when a repair is most appropriate to be utilized, and then the repair manual can give further detail on how the specific repair should be conducted.

Chapter 1 Maintenance Engineer Survey

The first activity undertaken in this research effort was to generate a survey to be sent to maintenance engineers around the United States and within the Wisconsin Department of Transportation regions. This survey allowed the research team to determine common repair practices among maintenance engineers in Wisconsin and other states.

The survey was composed of nine questions, which were designed to determine the common deterioration issues that occur and the common repair techniques that are utilized throughout the different WisDOT regions and different states. The survey, included as Figure 1.1, was sent to 35 maintenance engineers throughout WisDOT. Of the 35 sent out, 11 different people responded, for a response percentage of 31.4%. The responses were then categorized by material to analyze levels of required rehabilitation. The state of Wisconsin has roughly 13,600 bridges throughout its roadways (WisDOT 2011). Figure 1.2 is a pie chart that depicts the percentage of deterioration for each material based on the responses that were received.

Concrete substructure members represent the vast majority of issues that were reported through the questionnaire. The General Issues category labeled in the pie chart refer to nonspecific deterioration issues such as scour and leaking expansion joints, which did not imply a specific material. Since concrete deterioration involved such a large portion of the responses, it was categorized to represent the specific issues that were reported. Figure 1.3 provides a breakdown of the concrete deterioration that was

reported. It can be seen from the chart that cracking and spalling make up the majority of the deterioration issues seen.

The results of this survey were also separated by region to show what issues are common from one WisDOT region to another. The regions of WisDOT are portrayed in Figure 1.4. Given that some of the regions only provided a few responses, the results may not be as representative as those provided for the entire state. The full collection of all responses received is included in Appendix A.

1.1 Southeast Region

The Southeast Region of WisDOT provided two responses to the survey that was distributed. From these responses it was determined that three major issues are present throughout the region. These three issues are cracking, delamination and rotted timber piles. The percentage of how often each of these deterioration issues was reported is depicted in Figure 1.5. Delamination accounts for the largest classification of deterioration in the Southeast region.

The common repair technique that was reported for the delaminated concrete was a simple concrete surface repair. This repair method consists of removing the concrete to a depth of 1-inch below the reinforcing steel, or to sound concrete, and replacing it with a similar concrete. This method was reported as being rather unreliable, with a vast range for the longevity of the repair. It was mentioned that some repairs have lasted less than one year (supposedly due to not following the manufacturer's specifications), while others have lasted for more than twenty years.

Concrete encasement has been successfully done on several bridges in the Southeast Region with fairly successful results. When the research team spent a day documenting common repair practices (discussed in following chapter), the concrete encasement method was observed on several bridges. The survey respondents noted that concrete encasement tends to produce fairly widespread cracking within the first five years after the repair, presumably due to the shrinking of the new concrete.

For the rotted timber piles, the repair method reported in the survey responses was reinforced concrete encasement. The concrete encasement is intended to protect the timber pile from further deterioration. The downside of this process is that the timber pile can no longer be visually inspected. If deterioration continues after the pile is encased, the warning signs will not be obvious for the inspection team.

The Southeast region reported that taking no action was preferred for hairline cracks that appeared on concrete substructure members. Epoxy injection was deemed as not cost effective, even though it is being used more frequently throughout the Southeast Region. Epoxy injection is used frequently because it helps to provide a barrier against chloride intrusion. In the Southeast region, many of the hairline cracks may not be large enough or appropriately placed to warrant the use of epoxy injection. If there is no direct threat of chlorides causing reinforcement corrosion, taking no action is an understandably viable option.

1.2 Southwest Region

The Southwest Region of WisDOT provided four responses to the survey. The deterioration issues that were documented were slightly more widespread due to the

increased number of responses. A graphic representation of these responses can be seen in Figure 1.6. Fifty percent of the deterioration issues that were described in the survey were reported as a result of cracking and subsequent spalling.

Concrete surface repair was listed as the most common repair technique, and the least effective, throughout the Southwest Region. Another solution presented was to simply clean the exposed rebar and paint it with epoxy in order to prevent further corrosion. Both of these methods were only deemed as moderately effective since corrosion can continue if the cause of corrosion is not eliminated. If corrosion continues, it was felt to cause both of these repair methods to fail over time.

Concrete jacketing has also been frequently utilized throughout the Southwest Region. This repair technique has provided very positive results throughout the region. It was documented that the repair has lasted 25-30 years before it ultimately failed. There was some concern regarding chlorides attacking the concrete jacket instead of the original concrete, which could cause the reinforcement embedded within the jacket to corrode. Regardless, this action may slow down the corrosion of the reinforcement within the original concrete member.

The use of shotcrete on spalled concrete was one of the more common repair techniques mentioned in the survey responses. Some concern was mentioned regarding the adhesion of the shotcrete to the existing concrete. The ability to replace deteriorated concrete with a similar concrete was viewed as the method that would provide the most adhesion between the two materials.

Fiber wrapping of cracked and spalled concrete columns was generally stated to be the most effective repair throughout the region. An example of a fiber wrapped

column can be seen in Figure 1.7. This particular repair was completed in the Southwest Region. Fiber wrap was reported to be a long lasting repair, due to the fact that it confines the concrete and provides a protective layer to prevent new chlorides from penetrating the concrete. It was also mentioned that fiber wrap has a much higher initial cost than simple surface repairs, although the estimated life of a fiber wrap repair seems to greatly exceed that of a surface repair.

Rotted timber piles were also mentioned as a frequent deterioration issue throughout the Southwest Region. Three separate repair methods of encasing timber members were included in the survey responses.

The use of a steel collar to surround and strengthen a timber pile was implemented within the Southwest region. This specific example of the steel collar was for Bridge B-52-0624 in Richland County. This bridge was constructed in 1940 and was 110.8 feet long. It was a steel deck girder bridge that rested on timber pilings. The pier drawing is shown in Figure 1.8. The diameter of the treated timber piles varied between 11 and 13 inches. It can also be seen in Figure 1.8 that Bridge B52-0624 was over a river, which was the cause of the pile deterioration. Due to the age and deterioration present throughout the structure, this bridge was ultimately replaced in 2008. This means that the steel collar was in place for less than five years on this particular bridge. Despite the repairs, the last inspection in 2008 rated the pilings at either a Condition State 2 or 3. Condition State 2 for timber members indicates that splitting, cracking or crushing may exist but it does not affect the serviceability. Condition State 3 indicates that this deterioration has caused the member to lose strength. Seventeen of the piles were rated as a 2 and seven of the piles were rated as a 3.

A detailed drawing of this repair method is included as Figure 1.9. As expected, the deteriorated area of the wood piles is located at the water line. The collar is composed of a 14-inch cast in place (CIP) pile shell and four L$3\frac{1}{2}" \times 3\frac{1}{2}" \times \frac{3}{8}"$. The C.I.P. pile shell was cut in half in order to be placed around the pile. An angle was affixed to each end of the shell and high strength bolts were used for the connections. A $\frac{3}{4}" \times 10"$ threaded rod was used to connect the angles to one another. Five of these rods were used on each side, with a spacing of 6-inches. High strength hex-bolts measuring $\frac{3}{4}" \times 2"$ were used to connect the angles to the pile shell with a spacing of 6-inches. The total length of the steel collar was 3-feet, with all surfaces coated in zinc based paint. Since the bridge was replaced within five years of the collar placement, the effectiveness and life of the repair on this particular bridge cannot be determined unless five years is taken as the repair method's longevity.

The last inspection of the bridge stated that the timber piles were swollen at the water line and experiencing section loss. While the steel collar will help to protect the timber pile from additional deterioration, it does not mitigate any deterioration that was already occurring within the timber.

The second repair method that was described in the survey responses for repairing timber members was encasing the timber columns in a concrete wall in order to prevent further deterioration and add strength to the columns. This repair has been completed on several bridges throughout the Southwest Region. Bridge B-12-0559 is in Crawford County on STH 35. It was constructed in 1938 and is a steel deck girder bridge. A schematic of the timber pile bents of the bridge when it was built is included as Figure 1.10. The piles had experienced section loss at the water line and required repair. In

addition to the section loss, the piles were weathered, cracked and splitting. The pile condition before the repair is shown in Figure 1.11. The cracking of the timber sway bracing is evident in the photo, in addition to apparent section loss at the waterline.

A concrete pier wall was constructed in 2010 in order to encase the timber columns. Figure 1.12 depicts the new pier wall with the timber columns. Additionally, the sway bracing was removed because the pier wall made it unnecessary. The timber columns were not replaced and weathering can still be seen on the visible portions of the columns. The pier wall is intended to protect the timber columns from the deterioration caused by exposure to water. This particular wall has not been in service long enough to gauge the effectiveness of the repair method.

Bridge B-12-0705 is in Crawford County, Wisconsin on STH 131 over Kickapoo River. It was built in 1941 and is 49 feet long. The bridge is a steel deck girder which is supported by timber columns. Figure 1.13 shows the bridge condition when it was initially built in 1941. The timber pile bents with sway bracing can be seen in the photo. A detailed drawing of the bent is included as Figure 1.14. In the drawing it can be seen that there are 7 timber piles with spacing of $4' - 6\frac{1}{2}"$. In an inspection from 2007, it was noted that 6 out of the 7 columns at the pile bent were 50% decayed or rotted with splits. Due to the extensive nature of the deterioration, a pier wall was constructed in 2008 in order to encase the timber piles. The new concrete pier wall is pictured in Figure 1.15. It can be seen that the timber sway bracing was partially left in place for this bridge. The detailed drawing for the new pier wall is included as Figure 2.16. The new pier wall is 2-feet thick and 33-feet long. It provides a 2.5-inch clear cover for the steel reinforcement. The deteriorated areas of the timber piles were removed with a saw cut and the exposed

wood was treated with a preservative to prevent further deterioration. When the repair was inspected in 2011, it was discovered that all of the piles were solid and no rot was observed. Due to the recent nature of this repair, it is premature to define longevity for the repair. Currently, the new pier wall is protecting the timber piles and preventing damage from occurring at the waterline.

The third method that was described for repairing timber deterioration in the Southwest region's responses involved encasing the individual timber piles in concrete. This method is similar to the creation of a pier wall, but only repairs the timber piles that are damaged as opposed to encasing all of the timber piles in one bent. Prior to the creation of the pier wall for Bridge B-12-0705, one of the timber piles had been encased. The lone timber pile encasement can be seen in Figure 1.17. Corrugated metal pipe had been filled with concrete in order to effectively encase the pile. It was discovered that the bottom of the corrugated metal pipe was hollow when it was inspected in 2007, which was more than ten years after its initial construction. This pile was eventually encased with the pier wall documented in Figure 1.15.

1.3 Northwest Region

The Northwest Region provided two responses to the survey. The major issues described were concrete cracking, concrete spalling, corrosion reinforcement and settlement. A graphical representation of the responses is shown in Figure 1.18. The chart indicates that 83% of the problems described could be associated with reinforcement corrosion. The responses highlighted the importance of early detection of

substructure deterioration problems. If a problem is discovered early on, and is rectified before it spreads, it can make the repair much simpler and less invasive.

Concrete surface repair was again listed as one of the most common restorations completed in the Northwest Region. This technique is frequently used on abutments and piers in order to repair cracks and spalls. The importance of removing all of the damaged concrete down to sound concrete was stressed. According to the responses, the estimated life of this method in this region ranges from 5 to 10 years, and was deemed the least effective repair.

Settlement was another frequent problem in the Northeast Region. Wing walls, abutments and piers have been observed to settle throughout the region. Replacing the wing walls was mentioned as a very effective solution in rectifying the settlement issue. The high cost of the repair method was an important consideration in the choice of restoration technique. There is a belief that replacing the wing walls lasts longer than simply propping them up and supporting them with a deadman wall or brackets.

1.4 North Central Region

The North Central Region provided one response to the distributed survey. The graphical representation of the issues that were mentioned in this response is included in Figure 1.19. Deterioration of piles at the ground line and at the water line was mentioned for both timber and steel piles. Concrete pier walls were also noted for the varying types of deterioration that they experience. When the bridge spans over water, a number of new issues appear for concrete pier walls. If the concrete was originally poured underwater, issues such as voids, spalling, inadequate consolidation and undermining

have been observed by the maintenance engineers. These deteriorations have required unique repairs be implemented throughout the North Central Region.

The most common repair techniques that were mentioned for the North Central Region involve the rehabilitation of pilings. If the deterioration issue is above the waterline, there is a separate method in use for both steel and concrete. If the pile is a steel member, the corrosion has most likely caused section loss. This is combatted by either welding or bolting additional steel members along the deteriorated sections of the pile. If it is a concrete member, a simple concrete surface repair is typically completed. This involves removing the deteriorated concrete down to sound concrete and replacing with new concrete, ideally of a similar type.

If the deterioration has occurred below the waterline, different action must be taken due to the weakening caused by frequent exposure to moisture. Concrete jacketing, or encapsulation, is the preferred method of repair for these members. This can be a difficult repair to complete if there is not enough room to place the forms because then the concrete must be poured underwater. Due to these issues, the repair is most effective and reliable if the substructure units can be dewatered prior to the rehabilitative effort. Predictably, the dewatering of the substructure can be quite costly if it is necessary.

The most effective repair technique that was mentioned for the North Central Region was the use of preplaced concrete aggregate repairs for underwater rehabilitation. This process involves placing graded aggregate into water tight forms, then pumping in grout in order to fill the gaps between the aggregate. This method is effective for underwater repairs since it does not require dewatering, and has an increased strength when compared to typical concrete repairs (J.F. Brennan 2012). An example of a

completed repair using this method can be seen in Figure 1.20. As with the other regions throughout Wisconsin, the North Central Region reported that concrete surface repair, or concrete patching, was the least reliable repair and was only viewed as a temporary solution.

1.5 Northeast Region

The Northeast Region provided two responses to the survey. The graphical representation of the issues that were reported is included as Figure 1.21. The major concerns were reinforcement corrosion, spalling, scour and erosion. The erosion that was noted in the Northeast region was primarily located under and around abutments. Piers were documented as the main location for scour related problems. The scour issues were typically detected using a boat with a depth finder and survey rod. The concrete deterioration was inspected using a hammer for sounding.

As with the other WisDOT regions, concrete surface repair was the most common repair for substructures in the Northeast region. The procedure mentioned in the Northeast region involved saw cutting to a depth of 1-inch and removing the deteriorated concrete. The section is then patched either by hand placement or spraying with a fast setting concrete. The region reported that this repair typically lasts only 2 to 5 years. It was also noted that the restoration can be effective and long lasting if the reinforcement and sound concrete are properly prepared.

The use of riprap for a scour repair was rated as one of the most effective repairs that have been done in the Northeast Region. Most of the repair methods were described as temporary and marginally effective, with the exception of the riprap repair for scour.

The use of riprap helps to stabilize the area around the scour hole and their use has been noted to be very effective throughout the region.

1.6 Other States Surveyed

The survey was also distributed to engineers within other state DOTs. This was done in order to determine common practice throughout the United States. The survey was sent out to members of 17 different state DOTs. A map of those states surveyed is included in Figure 1.22. The blue states indicate the locations where the survey was distributed. The survey was limited primarily to Midwest states, in an attempt to contact areas with similar climates as Wisconsin. The survey provides the opportunity to obtain unique solutions to deterioration problems from different states based upon how they went about repairing damaged substructure elements. This survey provided additional information regarding specialized state practices that could be added to the research that was completed using published repair manuals. Not all of the states that were surveyed provided responses.

Figure 1.23 is a map of which states responded to the survey, which are represented by the red states. The number inside each state indicates the number of responses received from that state. The response percentage for all of the states, excluding Wisconsin, was 29.8%. The number of Wisconsin responses is slightly higher than other states due to the assistance of WisDOT in providing the appropriate contact information. However, the percentage of responses within Wisconsin was 31.4%, just slightly higher than that acquired by the other states. It should be noted that due to the difficulty of obtaining contact information for engineers throughout the country, the

results are by no means definitive and may only represent region specific issues not throughout a state.

1.6.1 Illinois

Illinois provided two responses to the survey. Since Illinois and Wisconsin share a border, many of the problems reported by Illinois maintenance engineers directly correlated with those reported by Wisconsin engineers. All of the substructure issues that were mentioned by the Illinois maintenance engineers dealt with concrete members. A breakdown of the reported deterioration issues in Illinois is depicted in Figure 1.24. Most of the concerns are associated with reinforcement corrosion, due to the utilization of road salt. Abutments and piers were observed to have deterioration when there was an adjacent roadway where road salt was applied. It was also noted that many of the substructure elements in Illinois have been deteriorating due to leaking expansion joints located above the member.

The most common repair technique in Illinois was the formed concrete repair. As in Wisconsin, the effectiveness of this repair was questioned. It was reported that, while the repair is effective for a short period, there is a high failure rate within 5 to 10 years of the repair. The success of this repair is highly dependent upon whether the true cause of the deterioration had been addressed. If the source of the chloride contamination is identified and remedied, then the effectiveness of the repair becomes much more reliable. If the reinforcement continues to corrode, delamination and spalling will result and ultimately cause the repair to fail.

The use of shotcrete was mentioned throughout Illinois because of its cost effective nature and the ease with which it can be applied over large portions of the structure. The problems noted with shotcrete repairs indicate that adequate bonding between the shotcrete and existing concrete is not achieved. This problem has also been observed with formed concrete repairs, but appears to be less frequent as the formed concrete repairs are rated as more durable. The shotcrete (or sprayed-on concrete) repair method is also favored for areas where there are accessibility issues. It was noted that riprap proved to be a reliable solution for scour issues, and no problems were recorded for this repair type.

1.6.2 Indiana

Indiana provided 6 responses to the survey, which was the second highest concentration of responses after the state of Wisconsin. In order to manage and understand the responses that were created, several different graphical representations of the results were created. As in Wisconsin, the majority of deterioration issues reported from Indiana dealt with concrete substructure members.

Figure 1.25 represents how the responses related to the different construction materials. It can be appreciated from this image that concrete repairs accounted for 50% of the reported rehabilitative efforts throughout Indiana. Due to the vast amount of responses that noted repairs to concrete members, it became necessary to further categorize the concrete deterioration that typically occurs throughout Indiana. Figure 1.26 indicates how often the different deterioration conditions of concrete were mentioned in relation to one another. It can be noted that reinforcement corrosion causes

the majority of deterioration in concrete members. Reinforcement corrosion alone accounted for 17% of the responses that were received. Reinforcement corrosion can lead to delamination, spalling and eventually reinforcement exposure. If all of these responses are assumed to be results of reinforcement corrosion, then the reinforcement corrosion accounts for 67% of the issues that were reported through the survey. The other deterioration that was noted in concrete was cracking, crushing and general concrete deterioration. These failures could have also been results of reinforcement corrosion, but are not as directly identifiable as delamination and spalling.

The Indiana maintenance engineers reported several general deterioration issues. The general deterioration problems are not material specific in their description and could be applicable to any number of bridges throughout the Midwest. As seen in Figure 1.26, the general deterioration that was described in the surveys accounted for 33% of the deterioration issues that were reported.

Given that the general deterioration accounted for a large portion of the responses, a chart was created to show how frequently each response occurred. Figure 1.27 provides a graphical representation of the responses that were received. Scour was the most common response, representing 50% of the responses in the general deterioration category. Erosion, leaking joints, collision damage and settlement were also mentioned in the surveys, and represented the other 50% of the responses. Leaking joints, while not representing a very large portion of the responses, was seen as a very important deterioration issue. Leaking joints allow the chlorides from de-icing chemicals to reach substructure members. These chlorides are very detrimental to the reinforcement steel embedded within the concrete, frequently causing corrosion. Since reinforcement

corrosion can cause a number of other deteriorations, leaking joints may be much more detrimental than the 12% of responses initially indicates.

There were several repair methods that were stated to be the most common repair for concrete members throughout Indiana. One of the techniques mentioned was the use of sprayed-on hydraulic concrete (sometimes referred to as shotcrete in this report). This was a particularly common repair due to that the hydraulic concrete could be used on many elements effectively. The repair is typically conducted after all loose concrete is removed to a depth of sound concrete. A reinforcement mat is then anchor bolted to the member (typically a pier) to enhance the strength of the repair. Once the mat is in place, the hydraulic concrete is sprayed over the mat. This repair method was rated as moderately effective since it was not observed to have a very long life.

Another repair method that was documented for its frequent use throughout Indiana on concrete members was a hand placed concrete surface repair. Multiple surveys concluded that this repair technique was cosmetic in nature and did not provide any structural benefit. The repairs are only completed to cover the spalled concrete and cover the reinforcement. Since the cause of the reinforcement corrosion is not addressed with this repair method, the newly placed concrete will eventually delaminate and spall.

The third repair method for concrete substructure members that was considered common among the maintenance engineers of Indiana involved the use of cathodic protection to prevent reinforcement corrosion. Sacrificial anode pucks can be placed within a common concrete surface repair in order to stop the reinforcement corrosion. This repair was seen as effective by the maintenance engineers given that it addressed the root cause of the delamination and spalling, instead of simply covering the deteriorated

members. It was reported that this repair can last up to 20 years if the anode pucks are correctly wired to the reinforcement.

In Indiana, cathodic repair is usually repeated in 20 year intervals, since the original anode should have disintegrated by then. If the anode lasts the full 20 years, this will prevent any reinforcement corrosion from occurring during that twenty-year period. It was reported that the use of cathodic protection systems are not well known and many designers are not aware that they are an option for repairs. Despite the general lack of knowledge on the products, both zinc anodes and cathodic protection systems have been frequently used throughout Indiana and have been considered successful.

The three most common repair techniques for deteriorated timber substructure members in Indiana were to replace the deteriorated timber members, encase the timber members in a concrete jacket, or to replace the entire structure. Since the use of timber as a material is not common in modern roadway construction, many of the bridges that have timber pilings are scheduled to be replaced. When the timber piles start to experience structural deterioration, it is often more logical to update and replace the entire bridge than to provide temporary repairs to the outdated and deficient members. The timber pile encasement method is documented in Figure 1.17, where the concrete was poured inside a corrugated pipe. While this repair helps to protect the timber piling, it also prevents future visual inspection of parts of the timber member. If deterioration of the member were to continue, it would be very difficult to observe deterioration during inspections. The consensus among Indiana maintenance engineers was that the amount of work required for the repairs was not justified, since many of the timber bridges are becoming structurally deficient.

The most common repair for steel substructure members in Indiana involves the use of a jacket. Steel and concrete jackets have both been used frequently throughout Indiana for deteriorated steel piling. These repairs have yielded a positive result as short term repairs, but are not intended to be in place for long durations. The steel jacket approach involves welding steel onto the existing member in order to counteract the section loss and strengthen the member. The specific steel shape that is utilized will be a result of the existing steel pile shape. The concrete encasement is similar to the method that was followed for the timber piles. As with the timber pile repair, this covers the original member and makes it very difficult to visually identify additional pile deterioration and section loss.

The consensus among Indiana's maintenance engineers was that a proper program of maintenance and repair was the best and most effective way of implementing repairs. If certain portions of the bridge are replaced on a regular basis, the deterioration may not occur as frequently. Indiana attempts to replace expansion joints and slabs at least every 20 years. Proper joint maintenance is extremely important, since many substructure problems are most often caused by leaking joints. Leaking joints can negatively affect almost every portion of a bridge substructure, which is why they should be monitored and replaced frequently. Proper inspection will also ensure that any issues that arise will be noticed before deterioration starts to threaten the structural integrity of the substructure.

Two repairs were identified as the most effective throughout Indiana. The use of riprap for scour repairs and the use of sacrificial anodes for concrete patch repair were both documented as cost effective, long lasting repairs. Provided that riprap is placed correctly, it has yielded very successful results throughout Indiana. If a footing or piling

is exposed, Indiana relies on the use of riprap to repair the substructure. They typically use sheet piling and place large riprap around the exposed member in order to protect it. This repair has proven to have a long life and holds very well, but it can be difficult to place which can prevent its use in many situations.

Sacrificial anodes have also been utilized quite effectively throughout Indiana. The applicability of a sacrificial zinc anode system is dependent upon the existing chloride levels within the concrete member. Zinc anodes are most effective when placed in a relatively low chloride environment. Indiana has experienced much success with repairs of this type, which also rely on good quality patch material. It has been observed that using concrete similar to the base concrete material is the most helpful for concrete patch repairs.

If the existing chloride levels within the concrete are too high for the sacrificial zinc anode system to be effective, Indiana typically utilizes one of two options. The first option is that the bridge is used without any repair being made, and achieving the longest service life possible without repairs before the bridge needs to be completely replaced. Depending on the age and condition of the other elements, this may be a more cost effective alternative. The second option that Indiana utilizes is the use of an impressed current cathodic protection system. This is the most comprehensive corrosion control choice and is very successful in mitigating the expansion of corrosion. This system relies upon an induced current and has a rather high initial cost. If the chloride levels within the existing concrete are concentrated enough to reduce the usefulness of sacrificial anodes, and the rest of the bridge is still structurally sound, this option is feasible.

Indiana has observed the use of an impressed current cathodic protection system to be cost effective if it is combined with chloride extraction and the rest of the bridge is structurally sufficient to have an extended service life. For Bridge 12-64-5413B in Indiana, both a cathodic protection system and a sacrificial anode system were utilized for the bridge repairs. These structures are two twin 6-span bridges on U.S. 12 over Burns Ditch River in Porter County, Indiana. The bridges are prestressed concrete girder bridges that are 285 feet long. Figure 1.28 shows how the impressed cathodic protection system was utilized for piers 3, 4 and 5 on the structure. It can be seen in the figure that the impressed cathodic system relies upon the use of a mesh anode embedded within the concrete. This mesh was placed continuously around the pier in order to provide full protection. The concrete used to embed the mesh was Class A, which is the concrete typically used for piers and bents of bridges in Indiana. The electrical resistivity of the concrete is crucial for this type of repair and was limited to less than 15,000 ohm-cm at 28 days. Epoxy mortars and bonding agents were not permitted to be used on this project so as to not affect the resistivity requirement. The mesh anode was tack welded to a current distribution bar, which helped to ensure that the impressed current travelled throughout the entire mesh anode.

The important distinction between these two bridge repairs was that with the impressed current cathodic protection system, the anode mesh was not allowed to be in contact with the rebar, whereas the sacrificial anode relied upon direct contact with the steel reinforcement for its effectiveness. The sacrificial anodes for these bridges were used on the girders, but still have relevance to substructure repairs. Figure 1.29 shows how the zinc anodes were placed and how much protection was necessary to facilitate an

effective repair. Since the anodes were being placed on prestressed girders for this bridge, no concrete was allowed to be removed in order to make the connection between anode and reinforcement. This requirement made the placement and sizing of the anodes more difficult than it would typically be for substructure members.

Depending on the placement of the anode, the required amount of zinc per foot of length can vary depending on the amount of steel that needs to be protected. For the anodes that were installed 6 inches on center on the end of the web of the girder, 1.2 pounds of zinc per foot of length of anode was required since it was protecting a larger area of reinforcement. Where concrete had spalled off of the girder and anodes were being installed intermittently, only 0.25 pounds of zinc per foot of length of anode was required. The amount of anodes required is typically calculated using tables provided by specific manufacturers. These anodes are applicable to substructure repairs, and would typically be easier to install, since concrete can be removed on most substructure elements in order to embed the anodes. For the sacrificial anode repair, electrical continuity is crucial for corrosion protection and only electrical resistance welding is allowed to connect the old and new steel reinforcement.

Three separate repair methods were identified as the least effective throughout Indiana. The simple concrete surface repair was again identified as an inconsistent and unreliable repair. The use of sprayed hydraulic concrete was cited as having a short repair life. Also, the use of a silicone membrane to seal joints has been observed to have an extremely short service life. While the joints are not substructure members, they are frequently the cause of substructure deterioration, and the correct maintenance and repair of these members could prevent many of the issues that typically arise.

Concrete patching has been noted as an ineffective repair in many of the states that were surveyed. Indiana noted that if concrete is patched without addressing the cause of the deterioration, the patch becomes extremely unreliable. If the spalling is caused by corrosion, and the chloride intrusion is not addressed, then the deterioration can often resume and even increase the rate at which it occurs after the new concrete is placed.

A lack of adhesion between the patch and the existing member has been documented in Indiana and is believed to be the result of improper cleaning of the base material. Concrete surface repair typically covers up the problem instead of fixing it, and does nothing to stop the deterioration from occurring. Many of the maintenance engineers in Indiana view concrete surface repair as solely a cosmetic repair. They have not noticed any structural benefit from the repair and the inconsistency of the repair life has made it unreliable.

The sprayed on hydraulic concrete repair was one of the more common repairs completed throughout Indiana. Some of the maintenance engineers believed that this was the least effective, while others did not identify the repair as being particularly unreliable. After the hydraulic concrete was applied, additional cracking was noted on some of the repairs. This cracking allowed water to penetrate through the newly placed concrete repair. Since this repair method is typically used as a surface repair to protect steel reinforcement from the environment, frequent cracking disrupts the protection. There is reasonable concern that chlorides will enter through the cracks in the hydraulic concrete and continue to corrode the reinforcing steel. As the reinforcing steel corrodes, the repair will begin to delaminate and eventually spall.

Since joint maintenance has a direct result on substructure members, the repairs that are commonly completed on joints need to be considered as a means of preventing substructure damage. The quick and cost effective solution of using a silicone membrane as a joint sealer has been noticed for its relatively short repair life. Maintenance engineers have observed this repair failing within 5 to 10 years of the original placement. The preferred solution for this problem in Indiana is to use a stainless steel expansion joint that relies upon steel anchors for attachment. It has been observed that the stainless steel expansion joint will last at least as long as the overlay, about 20 years. Despite the higher cost of the stainless steel expansion joint, this repair may be the most cost effective since it will cause less substructure deterioration due to its longevity.

1.6.3 Kentucky

The state of Kentucky provided one response to the survey. This response identified scour as the major issue maintenance engineers must rectify. Scour can cause a variety of other structural issues that need to be addressed, such as exposure of foundation elements, undermining of the foundations and settlement. These deterioration issues are typically discovered using sounding rods, but Kentucky is currently investigating the use of the dispersive wave method, sonar and side imaging sonar as a means of more effectively discovering scour problems. Side imaging sonar provides a visual picture of the condition of the foundation and streambed and if the resolution of the images is increased, it can be a very useful tool for maintenance engineers.

There are two common solutions to scour problems used throughout Kentucky. The first solution, and the most widely incorporated, is the use of riprap. Kentucky

follows the guidelines put forth by the Federal Highway Administration (FHWA) when deciding how to most effectively combat the scour issues. The FHWA publishes a decision matrix in the document entitled “Bridge Scour and Stream Instability Countermeasures: Experience, Selection, and Design Guidance” (FHWA 2009). This decision matrix is known as HEC 23 and provides a list of which solutions are most appropriate for given conditions. The installation experience by state is also provided, so it can be known which states are well versed in the given repair method.

Riprap is suitable for a wide number of scenarios and can be partially or fully grouted depending on the severity of the scour. A good example of how Kentucky combats scour can be seen in Figure 1.30. The structure is bridge 002B00021N on KY 585 in Allen County. For this particular bridge, the use of a geotextile fabric and riprap was relied upon to protect the substructure from scour. The riprap was placed at a minimum of 3 feet thick at a 2:1 slope along the existing ground line. The riprap was extended 15 feet into the streambed and the geotextile fabric was placed 10 feet into the streambed. The previous repair represents the common use of riprap throughout Kentucky and one of the more common solutions for scour throughout the states that were surveyed.

The second solution to scour conditions that Kentucky has used in the past involves precast concrete. The specific product that Kentucky is familiar with is known as A-jacks. This product, seen in Figure 1.31, is precast concrete with a complex shape that helps it lock into place with other A-jacks or riprap. This product is used in Kentucky since it is a more effective solution than the use of riprap alone. The initial cost of the A-jack system has prevented it from becoming a common repair throughout

the United States. If the scour issues are severe enough, then the A-jack system becomes cost-effective. The use of A-jacks is viewed in Kentucky as a permanent solution to scour problems. No deterioration or further scour issues have been noticed once the A-jacks have been placed along the waterline. According to the HEC-23 guidelines the use of interlocking articulated blocks, such as the A-jack system, is well suited for local scour issues around abutments and piers, floodplain and channel contraction scour, lateral stream instability, and overtopping flow of approach embankments. The wide varieties of applications for the precast concrete blocks make them a convenient and reliable solution in Kentucky despite the initial investment that is required.

If scour is severe enough that it has undermined portions of a bridge substructure, then Kentucky relies upon more invasive measures than the use of riprap or A-jacks. A good example of the solutions to these problems can be seen in the rehabilitation for Bridge 090B00100N which carries KY 84 over the Rolling Fork River Slough. A detailed drawing of the structure is shown in Figure 1.32. Due to the scour that occurred, the bent wall of Bent 2 of this structure was undermined a maximum of 13.5 feet. This undermining exposed the steel HP 12x53 piles and required a rather immediate rehabilitative effort. Kentucky's proposed repair plan involved installing a cofferdam upriver of the structure, excavating a channel to bedrock around the two bents, and placing a 2 foot thick concrete footing on the bedrock. The HP 12x53 piles were encased in the new Class A concrete that extends the bent wall to the footing. This concrete encasement of the steel piles and the new concrete footing can be seen in Figure 1.33. Epoxy coated steel reinforcement with a clear cover of 1.5 inches were placed within the concrete surrounding the HP 12x53 piles. The new footing on the bedrock will provide

stability for the piles and the concrete encasement will help prevent pile deterioration from occurring. This repair procedure is much more costly than the use of riprap or A-jacks. Since this bridge was experiencing a severe scour situation, this new footing construction appeared to be the best option available to Kentucky at the time.

1.6.4 Minnesota

The state of Minnesota provided one response to the survey. Minnesota deals with a wide variety of deterioration issues that are a result of its severe winter climate. Abutment tipping is a common problem within Minnesota's infrastructure. The abutments contract when the temperature decreases and material has fallen into the voids created by this contraction. When the abutment eventually expands back to its full size, the material that has settled causes the abutment to tip and place rotational forces on the superstructure.

Another problem that is a result of the cold winters in Minnesota is the deterioration of concrete columns. If the rebar cages are placed too close to the surface of the concrete, the column will deteriorate due to chlorides from road salt reaching the steel reinforcement. Minnesota has also encountered problems that are not a direct result of the climate. Scour has occurred on many bridges throughout Minnesota. It appears that the scour is a result of contractors being allowed to build haul roads out into river beds upstream or downstream of the bridge. Once these roads are constructed, Minnesota has had difficulty recovering the original quality of the river. They have no ideal solution to solve the problems that the haul roads create. Another typical problem that Minnesota has encountered with bridges spanning over rivers is the deterioration of the bents. Steel

bents have been observed to corrode and have experienced section loss at the waterline. Timber bents commonly rot at the soil or waterline. Since the majority of the timber bridges in Minnesota are more than 50 years, old the timber pier caps frequently crush and the abutments tip. The abutments are believed to be tipping because the timber piles were not battered when they were placed, and the hydraulic and soil pressure from the roadway act on the abutment.

One of the most common repair techniques in Minnesota addresses concrete columns. When there is minor deterioration present on the column, the loose concrete is chipped away, the steel reinforcement is cleaned by sandblasting, a rust preventer and bonding agent is applied, then either concrete or sprayed hydraulic concrete is applied to the surface. If the deterioration on the concrete column is severe, forms are used in order to increase the amount of concrete cover protecting the reinforcing steel.

Minnesota uses a preventative maintenance method in order to protect the concrete columns before deterioration begins. For concrete columns that are in snow splash zones, a special surface finish is applied to the concrete. The surface finish that Minnesota utilizes is applied within 5 years of the initial bridge construction. The finish needs to be applied relatively soon after construction so chlorides are prevented from reaching the steel reinforcement as much as possible. Due to the severe winter climate that Minnesota experiences, the surface finish only lasts between 4 and 5 years.

Two repairs were identified as the most effective in the state of Minnesota. The first repair that Minnesota has had success with is the use of riprap and filter fabric for scour. The placement and selection of the riprap and filter fabric is designed for the specific deterioration that the bridge is experiencing. The ability to change the repair

based on the bridge conditions has made this repair very successful throughout Minnesota. The second repair that has been noted in Minnesota for its reliability is also the restoration that was mentioned as the most common fix for concrete columns. The concrete repair properly cleans the reinforcing steel, ensures adequate bonding and mitigates any new chlorides from entering the concrete. When this repair is properly conducted, it rectifies the aforementioned issues, which commonly cause further concrete member deterioration, and it has proven to be very reliable for the state.

The least effective repair for the state of Minnesota is the inappropriate utilization of special surface finishes. Surface finished typically incorporated within Minnesota are silane based penetrating concrete sealers that are sprayed on to prevent water and chlorides from entering the concrete. In order for the sealer to be effective, the concrete must become completely saturated with the chemical. Minnesota has attempted to use surface finishes after advanced deterioration has been noticed in the concrete columns. This repair does nothing to strengthen the column and does not adequately address the cause of deterioration. The deterioration of the concrete columns is usually caused by chlorides corroding the reinforcement steel. While surface finishes help to prevent new chlorides from entering the column, they do not remove existing chlorides from the column. Since there will still be chlorides within the concrete, the reinforcement deterioration will continue, and as the concrete begins to crack and spall, more chlorides will be allowed into the concrete. This continued deterioration has proven to engineers within Minnesota that surface finishes are only viable if the concrete is in relatively good condition.

1.6.5 Missouri

The state of Missouri provided one response to the survey. Missouri deals with many substructure issues that are a result of leaking expansion devices. The deterioration is primarily located on beam caps and columns, which is a result of road salts leaking through the expansion devices. These substructure components, typically concrete, display a wide variety of deterioration issues. The issues that maintenance engineers have observed as a result of leaking expansion devices are cracking, delamination, spalling, and leaching. The other deterioration that is becoming increasingly common in Missouri is section loss of piling. The pilings beneath bents and abutments have both been observed to suffer from section loss. The section loss of steel pilings is a growing issue for Missouri.

The most common repair type in Missouri is the use of a concrete patch. Concrete patches are used for a wide variety of members and situations in Missouri. If the deterioration is in an area where critical bearing support is required, then Missouri relies upon the use of formed repairs. These repairs have been noted for their long life and reliability compared to the other patching options. When the area of deterioration is not bearing critical, then Missouri will use unformed repairs or rely upon hydraulic sprayed concrete. These repairs are not ideal, since they are not seen as effective or long-lasting. The last patch repair that is used in Missouri is an epoxy sealer. Epoxy sealers are used in areas where the repair is more cosmetic and not necessarily structurally required.

The most effective repair in Missouri is the use of a penetrating epoxy sealer. This sealer is used to seal off cracks and is a type of preventive maintenance that

Missouri relies upon to stave off further deterioration. When concrete substructure members are observed to crack, they are thoroughly cleaned and the penetrating epoxy sealer is applied. This sealer will prevent any future road salt or water from entering the crack. This repair has a rather short life and needs to be resealed every 5 to 7 years. If the repair is not constantly maintained, then chlorides will have an open path to reach the reinforcement steel. The epoxy sealer prevents the need for a more invasive and expensive repair. If it is appropriately placed and maintained, the penetrating epoxy sealer has proven to be cost-effective and reliable for the state of Missouri.

The least effective repair that Missouri has encountered involved the use of sprayed hydraulic concrete or unformed concrete repairs. Missouri typically utilizes this repair method when the damaged member is overhead. When damage occurs on overhead members, it can be very difficult to place formwork. The lack of accessibility makes the use of sprayed hydraulic concrete common for these repairs. The problem that Missouri has noticed with these repairs is that there is not enough adequate bonding between the old and new concrete. The new concrete does not have anything to grab on to, and has to rely on the bond that exists between new and old concrete. Given that the restoration is typically overhead, a failure of this repair could potentially be disastrous.

1.6.6 New York

The state of New York provided one response to the survey that was distributed. The response came from Albany, New York. The most typical problem that appears in this part of New York is reinforcement corrosion. This reinforcement corrosion has been observed to be a result of chloride intrusion. The chlorides are most likely a result of the

road salt that is used throughout the winter. The reinforcement corrosion can contribute to many other types of deterioration such as cracking, delamination and spalling. New York's Department of Transportation has identified that chloride intrusion is the cause of the vast majority of their deterioration issues.

There are two repair techniques that were identified as the most frequent repairs completed in New York. The first technique that was mentioned as common in New York was the simple formed concrete repair. This repair consists of building formwork around the existing concrete member and pouring in concrete. This is the method that New York relies upon for large repairs because of the increased bonding that it offers. The second repair technique that is common in New York is the use of low volume shotcrete. The use of this repair technique is applicable to many situations that are encountered in this region. Shotcrete is much quicker than a formed concrete repair, but it requires an experienced operator to ensure that the repair is done correctly. There has been some difficulty in New York when trying to use this technique for large repairs, and therefore it is not considered suitable for larger areas.

The most effective repair technique in New York is a specific application of the formed concrete repair. After the deteriorated concrete is removed and the surface is adequately cleaned, the concrete is poured inside the formwork. The most reliable way to conduct this repair is to use concrete that is the same mix as the original concrete used to construct the member. New York has observed that replacing concrete with the same concrete mix produces much more reliable results than using a different type of concrete. Another important step in this repair is to prevent future deterioration from occurring.

The typical cause of substructure deterioration in New York is leaking expansion

joints. Leaking joints allow chlorides from road salts to enter the concrete and corrode the reinforcing steel. The first step in protecting the substructure from future damage is to stop the joint from leaking, typically done by replacing the expansion joint. After the joint is repaired, New York's Department of Transportation usually seals the concrete with an impermeable water barrier, such as silane. Silane is applied to the substructure concrete members throughout New York because it prevents foreign materials, specifically chlorides, from entering the concrete and causing damage to the steel reinforcement. The maintenance engineers in New York have noticed that this is the best way to keep chlorides from attacking the reinforcement, and provides the longest repair life for concrete members.

The least effective repair technique in New York is the option to take no action. Typically minor deterioration may not be seen as requiring repair. The maintenance engineers within New York have noticed that minor deterioration issues typically allow more severe deterioration to occur. A small crack in a concrete member will allow more chlorides to enter within the concrete. These chlorides can cause reinforcement corrosion, which will lead to delamination, spalling and further cracking. New York has recognized that ignoring a small problem will lead to much larger deterioration issues in the future. It is much more cost-effective for New York to fix problems before a massive repair project is required. Proper and frequent inspections are a necessity in order to document minor deterioration before it becomes severe deterioration.

1.6.7 Ohio

The state of Ohio provided one response to the survey. Through this response it was observed that the Ohio Department of Transportation deals with a wide variety of deterioration issues. One issue that Ohio has documented is the cracking of concrete substructure members on various bridges. Cracking has resulted in further types of deterioration and is important to address. Spalling of concrete underneath the bearing masonry plate has also been observed throughout Ohio's infrastructure. This concrete deterioration is most likely a result of leaking from expansion joints or the use of poor quality concrete (ODOT 2012). The delamination and spalling on stub abutments was another problem observed in Ohio, which could be a result of leaking expansion joints.

The Ohio maintenance engineers have also observed section loss and corrosion holes in steel piling at the waterline. The Ohio Department of Transportation determined that section loss caused by the continual wetting and drying of steel and the inability to clean and paint the steel effectively at the waterline are significant issues leading to deterioration (ODOT 2012).

The last substructure deterioration scenario that was observed throughout Ohio was settlement. Settlement can be caused by a variety of issues, and the chosen repair needs to address the true cause of the deterioration. Observing and documenting the deterioration is a crucial step in Ohio's bridge maintenance. Every bridge throughout Ohio is inspected on an annual basis to observe deterioration.

The most common repair that is done throughout Ohio is a simple concrete patch repair. This repair is most effective if the concrete is replaced with the same mix of concrete as the original material. This repair was only seen as reliable if the drainage is

diverted away from the substructure member and the corrosion is cleaned off of the steel. Addressing the root cause of the concrete deterioration helps increase the life of the repair.

1.6.8 Oklahoma

The state of Oklahoma provided one response to the survey. This response mentioned that there are six different deterioration problems that commonly occur throughout Oklahoma. These common deterioration problems are corrosion, traffic or debris impact, scour, rot, infestation and steel section loss. Oklahoma has a variety of materials that commonly experience deterioration. Many of the deterioration problems that Oklahoma encounters are on bridges that span over rivers.

Given that there are many different types of deterioration on Oklahoma bridges, there are also many different repairs that are considered common throughout the state. The first repair that is commonly performed in Oklahoma is the use of shotcrete. The maintenance engineers within Oklahoma see the use of this type of repair as an effective option for the short term. The repair life for shotcrete is not very long, but it can be placed relatively fast and can easily cover cosmetic issues. Another common repair is the use of a Fiber Reinforced Polymer (FRP) wrap with shotcrete. The combination of these two repairs increases the estimated repair life compared to the use of shotcrete without any additional products. This method has been quite effective throughout Oklahoma since the FRP wrap holds the shotcrete in place and protects the concrete from chloride intrusion.

The use of timber pile splints is another common repair in Oklahoma. Timber pile splints are viewed as an effective short term repair. A timber pile encasement is a longer term repair that is also effective. Oklahoma has used several different materials to encase the timber piles, including the use of glass fiber reinforced polymer (GFRP). If the deterioration is severe enough, then the state has replaced both steel and timber piles on several bridges. This is an effective long term repair since it completely removes the deteriorated element. The last repair that Oklahoma maintenance engineers frequently encounter is concrete encasement of a concrete column. In order to make this repair effective and long lasting, Oklahoma typically relies upon mild steel reinforcement and sacrificial anodes. The sacrificial anodes help to prevent corrosion from occurring on the reinforcement of the original concrete column, which extends the life of the repair.

The Oklahoma maintenance engineers have observed several successful encasement repairs throughout the state. Two variations of encasement have been used on concrete substructure members in Oklahoma. The first method that has proven to be successful is the use of shotcrete and a fiber reinforced polymer (FRP) wrap. The shotcrete is used to replace all of the concrete that has deteriorated, and the FRP wrap keeps the shotcrete in place. The FRP wrap has the added benefit of protecting the concrete member from any additional chloride intrusion. Since shotcrete has been identified in other states as having poor adhesion, the confinement provided by the FRP wrap provides a solution to this frequently documented problem. The second method of repair that Oklahoma uses for concrete substructure members is a specialized concrete encasement. When a concrete member is encased in concrete, sacrificial anodes or inhibitors are embedded within the concrete. An example of this repair performed on a

pier cap is shown in Figure 1.34. In the figure, the anodes are wired to the steel reinforcement and spaced based upon a manufacturers spacing table. These anodes provide an added amount of protection for the steel reinforcement and extend the life of the repair by reducing steel corrosion.

The least effective repair that was observed in Oklahoma was the use of shotcrete without any other product. Shrinkage cracks frequently occur in these types of repairs. Water and chlorides from road salt penetrate through these cracks and cause the repairs to spall. The repair frequently fails because it does not address the cause of the deterioration. The chlorides that are already embedded within the concrete and reinforcement will continue to cause corrosion and severely shorten the life of the repair. This deterioration, combined with the fact that shotcrete has poor adhesion, has made the repair very unreliable. When shotcrete is used with other elements, such as FRP, it becomes more reliable and a longer lasting repair. Oklahoma has not had success using shotcrete as a standalone repair.

1.6.9 Tennessee

The state of Tennessee provided one response to the survey. The majority of deterioration problems in Tennessee are caused by leaking expansion joints or inadequate concrete cover being placed around the reinforcement steel. Both of these problems can affect multiple substructure members and cause various forms of deterioration. In Tennessee these problems have been observed to cause reinforcement corrosion which has led to cracking and spalling of various substructure elements. The maintenance engineers within Tennessee have also observed that pier cap damage is a common

problem. Corroded and seized steel expansion bearings which pull on the anchor bolts cast into the concrete substructure are thought to be the cause of the deterioration. The last type of deterioration that is common in Tennessee is section loss of steel piles. This problem has been observed in the areas where steel piles are in contact with the ground line.

There are several repairs that are commonly conducted throughout the state of Tennessee. A simple concrete surface repair appeared to be the most frequent. Tennessee typically removes the deteriorated concrete, cleans the steel reinforcement, and then places new concrete. Another common repair throughout Tennessee is the use of riprap for scour conditions. This has been a successful tool in Tennessee for fighting scour. For specific scour deterioration that is around a footing, Tennessee has used a seal footing combined with riprap to effectively treat scour. The use of a steel shell has also been a common repair in the state of Tennessee.

If a concrete column has had deterioration issues, then after completing a concrete surface repair, Tennessee will encase the column in a steel shell. The steel shell will provide an additional level of confinement for the repair. Since many of the simple concrete surface repairs and shotcrete repairs have been reported as having inadequate adhesion, the steel collar will help to keep the new concrete in place. The added benefit of the shell is that it will provide an extra barrier to prevent chlorides from entering the concrete and attacking the steel reinforcement. A somewhat similar approach is taken to repair steel pile bents in Tennessee. Tennessee maintenance engineers have observed steel piles to experience deterioration at the ground line. In order to protect the steel piles from further section loss, Tennessee usually casts a concrete collar around the steel pile

bent at the ground line. This repair has been successful for Tennessee and is considered common practice among the state maintenance engineers.

The most effective approach to fixing deterioration problems in Tennessee has been to ensure that the cause of the deterioration is addressed. If a concrete member is spalling due to corrosion reinforcement, the most effective approach is to verify what is causing the corrosion. If this corrosion is caused by a leaking joint, then Tennessee will repair the leaking joint and the spalled concrete. A repair can be made much more reliable if both the cause and effect of the deterioration are addressed.

The least effective repair that Tennessee has attempted is when the cause of the deterioration is not adequately addressed. As with the most effective repair procedures, identifying the root cause of deterioration is crucial to a repair's life in Tennessee. Preventing the cause of deterioration from occurring will lengthen a repair life and make the repairs as cost-effective as possible.

1.6.10 Virginia

The state of Virginia provided one response to the survey. Through this response it was determined that Virginia experiences many of the same deterioration problems as Wisconsin. The cause of the deterioration problems in Virginia can be attributed to salt water exposure, whereas the same damage in Wisconsin is caused by road salt application. Once the chlorides from the salt sources penetrate the concrete, the resulting deterioration is very similar. Virginia maintenance engineers have identified a problem of salt scaling occurring on concrete substructure members. This salt scaling has been observed as a result of salt and water leaking through expansion joints and salt water

exposure to multiple substructure elements. Both of these sources of chlorides have also contributed to steel reinforcement corrosion. Once the corrosion of the reinforcement begins, a new variety of deterioration issues, such as delamination and spalling, will occur on the substructure members.

There are several common repairs that Virginia's maintenance engineers have relied upon for substructure members. Virginia frequently relies upon the use of shotcrete to repair concrete substructure members. Good workmanship was identified as a necessity for this repair to be effective. The proper design and application of the shotcrete repair is also important in order to ensure that Virginia is utilizing the best repair option for the deteriorated member. Virginia has also relied upon the use of self-consolidating concrete for several of their concrete repairs, and has found it to be relatively reliable. The use of pier jackets has been thoroughly utilized throughout Virginia, but has had questionable results due to the salt water. The salt water provides a constant source of chlorides that will attack steel members that are in contact with the substance. This becomes a serious consideration when Virginia's engineers select appropriate repairs for substructure members. The last repair that was mentioned in the surveys as being common practice in Virginia was the implementation of a galvanic cathodic protection system. The engineers within Virginia have also found that when salt is completely removed from concrete members, the repairs have much better longevity. Galvanic cathodic protection systems have been used on salt contaminated concrete throughout Virginia and have produced very positive results.

The most effective repair technique that was described for Virginia was a concrete surface repair that utilized shotcrete in conjunction with cathodic protection systems.

The procedure for this repair involves removing deteriorated concrete, cleaning steel and surrounding concrete, and lastly placing shotcrete. If chloride contamination is an issue on the concrete member, then Virginia will apply a cathodic protection system before applying the shotcrete. This repair is currently the most effective option in Virginia because it addresses the cause of the deterioration. The proper surface preparation is a crucial element in this repair because it removes many of the chlorides that caused the original deterioration. The cathodic protection system is placed in the concrete members that have severe amounts of chlorides, and will provide continued protection once the repair is completed. This repair is successful for Virginia because it stops the current deterioration and attempts to prevent future deterioration from sacrificing the integrity of the repair.

The least successful repair that has been utilized in Virginia involves placing jackets around piers. The maintenance engineers in Virginia have observed that this repair has an extremely short service life. The relatively quick failure of this repair is believed to be a result of the fact that the repair covers up the deterioration. This repair appears to have more of an aesthetic result than any structural value in the current way that it is being completed. The corrosion of the reinforcement in the pier had a tendency to continue after the repair was completed. The concrete that had been contaminated with chlorides was never removed, so there was nothing to stop the deterioration from continuing. The ongoing deterioration, combined with the fact that there was no longer an option of visually inspecting the original member, have made this repair questionable for further use within Virginia.

1.6.11 Washington

The state of Washington provided one response to the survey. Through this response it was determined that Washington has several unique deterioration issues. During a time period ranging from the 1930's to 1956, there were many creosote treated timber bridges constructed within Washington. Many of these bridges are still standing and have provided unique issues for the maintenance engineers within Washington. The timber caps of these structures frequently need to be replaced or encapsulated. When the timber piles have deteriorated to the point that repair is required, the state will typically remove a portion of the pile and replace it with steel. The next issue that frequently occurs in Washington bridges is scour. Due to the wide variety of scour concerns that the Washington maintenance engineers have encountered, there are several different solutions. The repair options are to utilize riprap to protect the piers, to use barbs to redirect the flow, and to use engineered log jams to protect the abutments. Since Washington has bridges that extend over salt water, protecting steel from chloride attack has been a serious concern. In order to protect concrete piles and columns, the concrete members are typically encased with either a grouted steel jacket or a fiberglass jacket. Both of these repairs are intended to act as a barrier between the steel reinforcement and the salt water, but will also frequently prevent further visual inspections from occurring on the deteriorated member. The rest of the problems that Washington maintenance engineers typically have to address are related to spalling concrete. Washington implements a simple concrete patching procedure to address spalls, and has had no further deterioration issues.

The most common repair that is conducted in Washington is repair of deteriorated timber caps and piles. Due to environmental regulations, Washington can no longer utilize creosote treated timber for repairs. Steel has been implemented as a means of encapsulating the damaged timber cap without introducing dangerous toxins into the water. This repair procedure has been effective because the old cap does not need to be removed and the bridge does not need to be jacked for any part of the rehabilitative process. Since timber piles can no longer be replaced in kind, Washington now relies upon the use of 12 inch diameter round steel piling. This meets the environmental regulations and does not require Washington to construct temporary bents for the repair. The use of steel piling in place of treated timber has been quite successful for Washington, and it is believed that the steel members last much longer than their timber counterparts.

There are several repairs throughout Washington that have been identified for being successful. Scour is a major issue in Washington, so the maintenance engineers have spent time determining the best repair methods for various situations. The proper sizing of riprap is crucial for many of the scour repairs in Washington. Many of the scour holes that occur are filled with properly sized riprap. When the piers need to be protected, Washington has used barbs to redirect the water flow away from the piers. If the piers are located along a bank, then an engineered log jam is utilized. Engineered log jams are seen as an environmentally friendly way to protect the piers without relying upon riprap. On rare occasions, check dams have been used in streams as a weapon against scour.

Another frequent problem for substructure members in Washington is cracking of concrete. The typical repair for concrete cracking is epoxy injection. There have been no issues with this repair in Washington and it appears to be a cost-effective option. Due to the salt water that many bridges encounter, concrete spalling is a major deterioration problem. The spalls are typically patched after being thoroughly cleaned and treated. If the spall is on a pile in salt water, then Washington maintenance engineers will usually design a jacket. Steel and fiberglass jackets have been utilized in order to protect the steel reinforcement from chlorides. If there is a steel member that has experienced corrosion, then Washington's engineers typically have two options. If the deterioration is relatively mild, then the steel can be cleaned and painted. If there is severe deterioration or section loss present, then the steel member is often replaced. This is a much more costly procedure, so it is important that the deterioration is documented at an early stage.

There are two repairs that were identified as the least successful throughout Washington. When riprap of the incorrect size is used, it can be an extremely ineffective repair. Washington's engineers have attempted using riprap that was too small for the force of the flow and have found that it will be washed out very quickly. The relatively immediate failure of this repair makes it crucial to select the correct size of riprap before it is placed. Another ineffective repair that has given Washington problems is the use of check dams. Check dams have been constructed using rock that was not hard enough. This has also resulted in a fast deterioration. Both of these repairs could be successful if they are designed correctly. Washington's engineers have had successful versions of these repairs, but the achievement is primarily reliant upon the decisions made during the design of the repair.

1.7 Concluding Remarks

In order to better understand the results from the distributed survey, the most and least effective repair responses from each state were compiled. The repair that was identified as the most effective was the use of riprap to combat scour. Through the survey, 21% of the respondents indicated that riprap was the most effective and reliable repair. The graphical breakdown of the responses is included in Figure 1.35. There were 12 different repairs that were mentioned for their effective nature throughout the survey. The repairs ranked in order of how often they were mentioned are: riprap, concrete surface repair, concrete encasement, FRP wrap, sacrificial anode embedment, shotcrete, penetrating epoxy sealer, steel collars on a timber member, concrete encasement of timber members, pier wall construction around timber members, replacing wing walls, and preplaced concrete aggregate.

The effectiveness of any given repair is often dependent upon the conditions in which it is utilized. Many of the repairs that were mentioned for their effective nature were also identified as the least effective repair. Concrete surface repair was the most mentioned ineffective repair, and accounted for 40% of the responses. As identified in many of the survey responses the concrete surface repair has a high failure rate. This was believed to be a result of poor adhesion between the patch and the base material. Not addressing the true cause of the deterioration proved to be extremely detrimental to the life of the repair. Many times corrosion would continue after the repair was completed and would cause the concrete to delaminate and spall. Several survey responses identified the concrete surface repair as a cosmetic repair and did not see it offering any structural benefit to the bridge.

Figure 1.36 displays how often repairs were identified for their ineffective nature. The repairs listed in order of how often they were mentioned are: concrete surface repair, shotcrete, taking no action, penetrating epoxy sealer, concrete encasement of timber members, silicone membrane joint sealers, inappropriate use of surface finishes, check dams, and incorrectly sized riprap. Concrete surface repair and shotcrete were mentioned frequently in both the most and least effective categories. Both of these repairs were mentioned much more frequently for their ineffective nature than for being effective repairs. The appropriate use and selection of materials may help increase the perceived efficacy of a given repair method. For example, several states noted the poor bonding between concrete and sprayed hydraulic concrete, indicating that it may not be an appropriate choice for an overhead repair. When bond to the existing concrete is considered, Virginia has experienced better performance with a self-consolidating concrete than with sprayed hydraulic concrete.

Many of the repairs were noted for failing because the true cause of the deterioration was not adequately addressed. Some of the repairs fix the effect of the deterioration, but fail to restore the member to its original state. If the deterioration is not prevented, then it will continue and cause the repair to fail. The adequate selection and design of repairs are critical to ensuring that they have a long service life. Understanding the sequence of events that leads to visual deterioration will help maintenance engineers select the most appropriate repair for any given problem.

1.8 References

Concrete Repairs-Preplaced Aggregate Concrete (PAC). *J.F. Brennan.* Retrieved March 28, 2012 from the World Wide Web: http://www.jfbrennan.com/ConcreteRepairsPAC.html

FHWA (2009), Bridge Scour and Stream Instability Countermeasures: Experience, Selection, and Design Guidance. 3rd Ed. FHWA-NHI-09-111 HEC 23.

ODOT (2012), *ODOT On-line Bridge Maintenance Manual*, http://www.dot.state.oh.us/Divisions/HighwayOps/Structures/bridge%20operations%20and%20maintenance/PreventiveMaintenanceManual/Pages/default.aspx , last access on February 1, 2012.

Plans and Projects: Bridges. *Wisconsin Department of Transportation.* Retrieved March 28, 2012 from the World Wide Web: http://www.dot.wisconsin.gov/projects/bridges/

Repair and Strengthening of Bridge Substructures
WHRP Project 0092-11-08

Name:
Email Address:
DOT State:
DOT Region:

The survey questions are contained in the following. Please feel free to type in your response to the questions and provide as much detail as deemed necessary.

1. What are the typical substructure deterioration problems that you have encountered?

2. What investigation methods do you use to identify sources of substructure deterioration? For example, what method or sensor is used to identify scour?

3. Are there any novel NDE methods to detect substructure deterioration that you are aware of that you would like the research team to investigate for applicability in Wisconsin?

4. What techniques have you commonly used or seen for repair of deteriorated or damaged substructures? How effective are they in your opinion? What are the positive and negative aspects of the technique(s)?

5. Based on your experience, what do you feel has been the most effective repair technique for a specific problem (*i.e.* scour, concrete cracking, concrete spalling, steel corrosion)?

6. What have been the least effective in your experience? What has been the source(s) of the lack of effectiveness?

7. Do you have plans and specifications for a substructure repair project that has been completed? If so, could you please provide a project ID and source for obtaining this information. The information of cost of one repair technique relative to another will be very helpful to the research team.

8. Are there any general or specialty contractors you have worked with in the past on substructure deterioration and repair projects that you suggest the research team contact?

9. Are you aware of any online maintenance manuals that would be relevant to this project? If so, could you provide a link or instructions on how to access them below?

Figure 1.1 Survey Questions

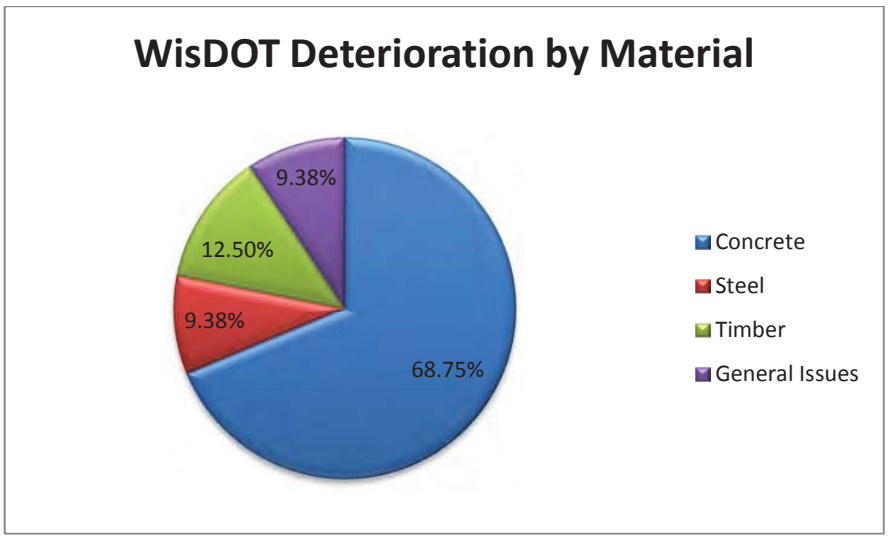

Figure 1.2 Total WisDOT Response Results

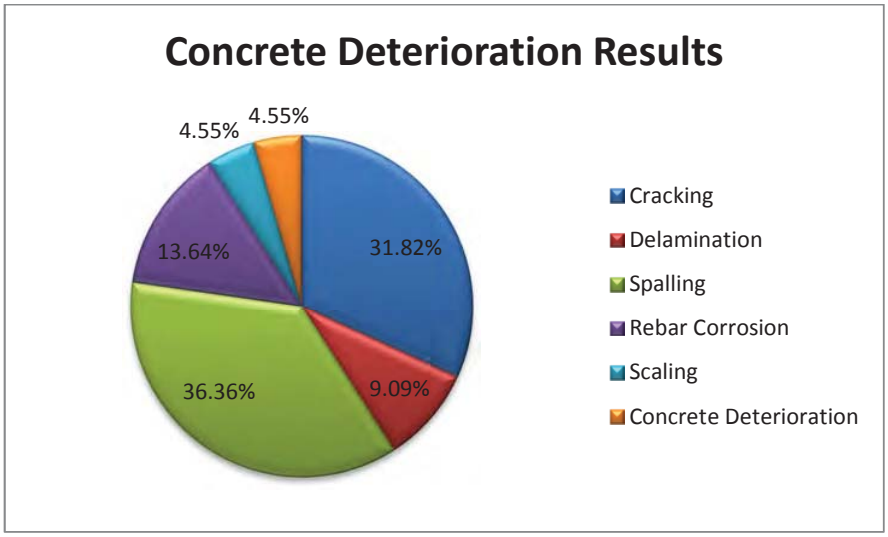

Figure 1.3 WisDOT Concrete Response Results

Figure 1.4 Map of WisDOT Regions

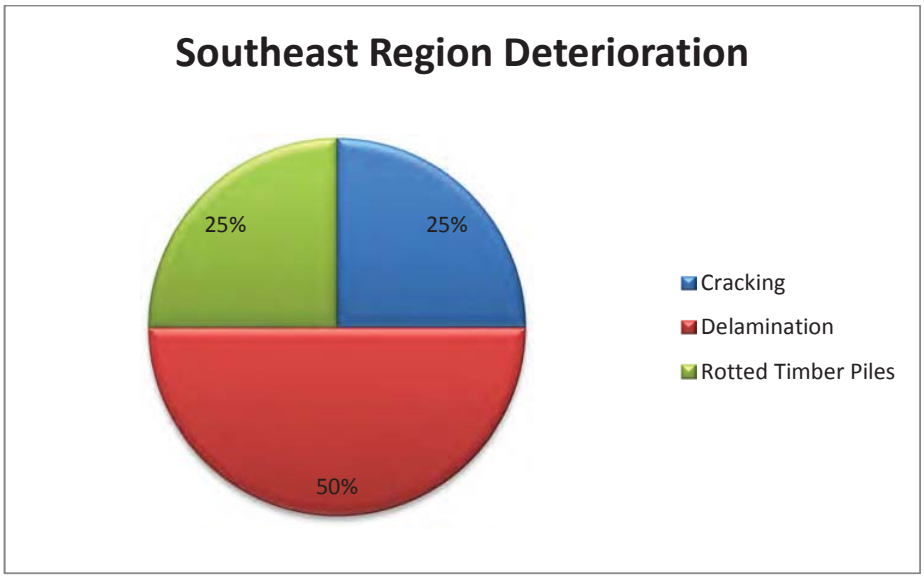

Figure 1.5 Southeast Region Response Results

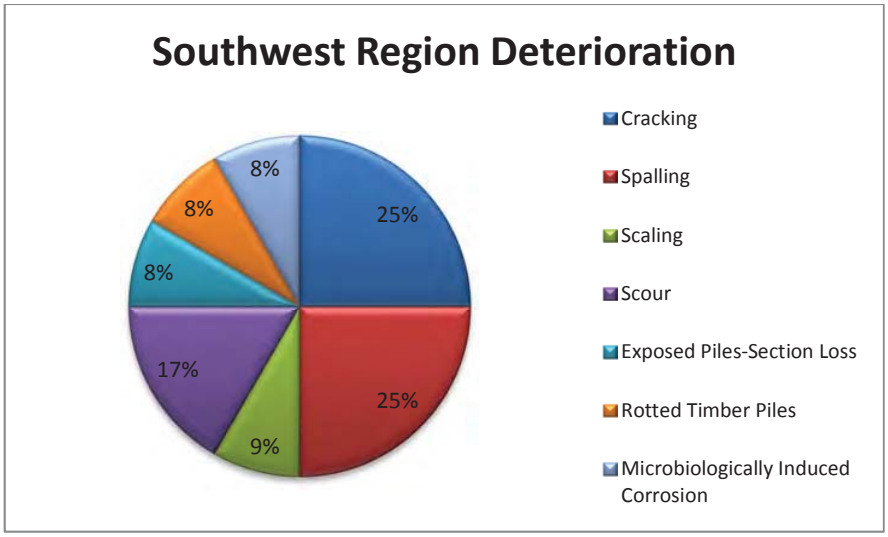

Figure 1.6 Southwest Deterioration Results

Figure 1.7 FRP Column Repair

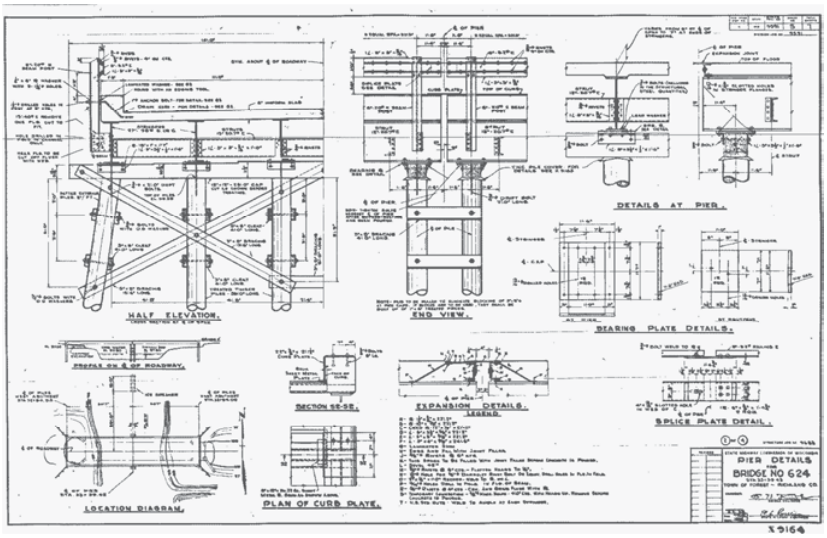

Figure 1.8 Bridge B52-0624 Pier Details (WisDOT 2011)

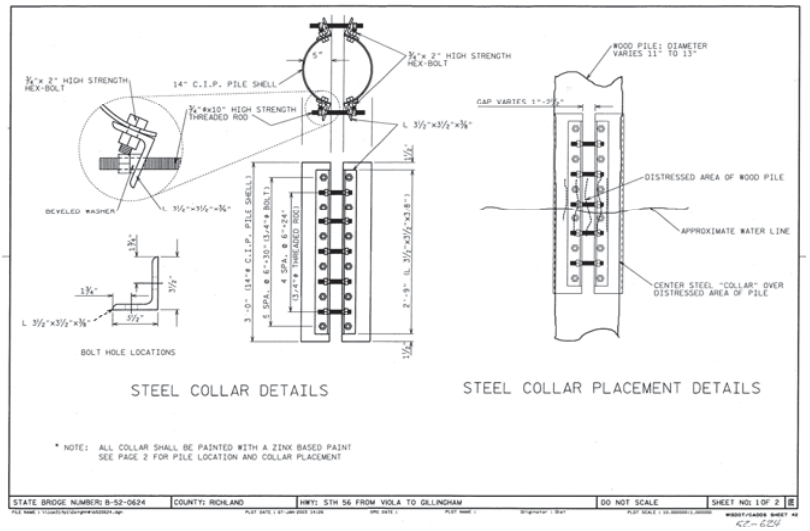

Figure 1.9 Steel Collar on a Timber Column (A. Johnson personal communication, September 26, 2011)

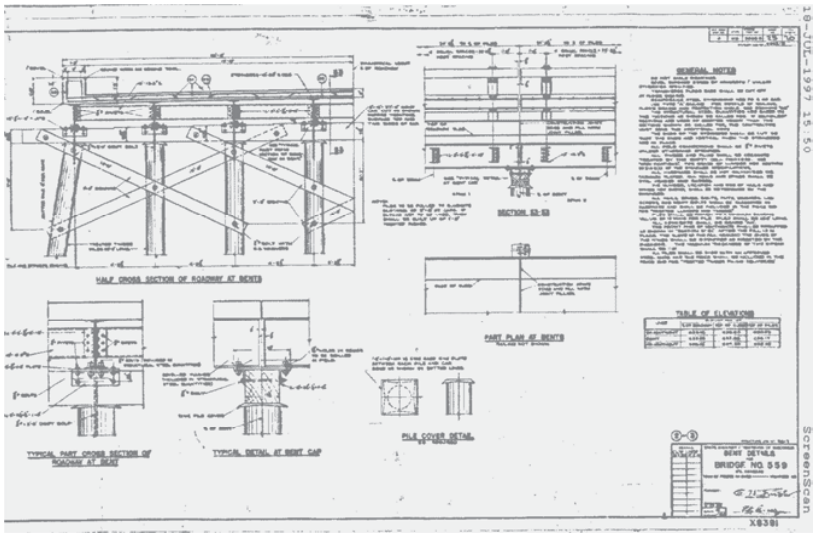

Figure 1.10 Bridge B12-0559 Bent Details (WisDOT 2011)

Figure 1.11 Bridge B12-0559 Pile Bent before Repairs (A. Johnson personal communication, September 26, 2011)

Figure 1.12 Bridge B12-0559 Pier Wall Encasing Timber Piles (A. Johnson personal communication, September 26, 2011)

Figure 1.13 Bridge B12-0705 Photo after Construction (WisDOT 2011)

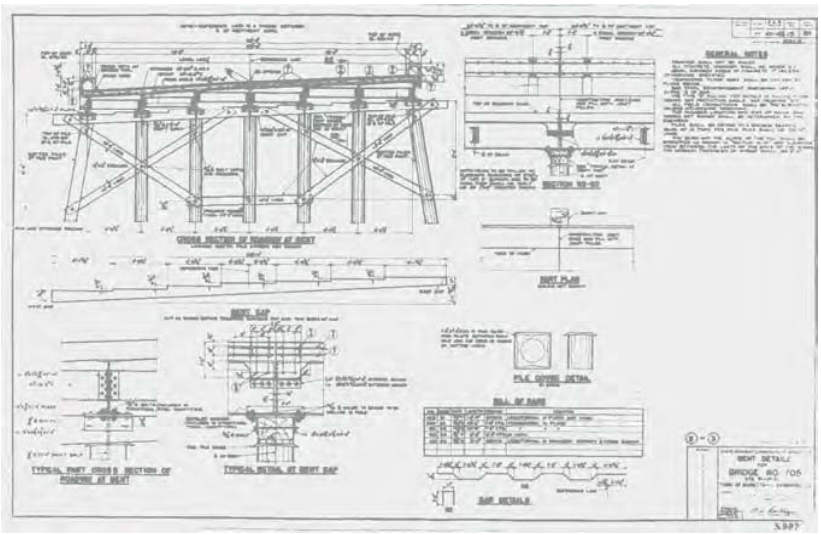

Figure 1.14 Bridge B12-705 Bent Details (WisDOT 2011)

Figure 1.15 Bridge B12-0705 Pier Wall Encasing Timber Piles (A. Johnson personal communication, September 26, 2011)

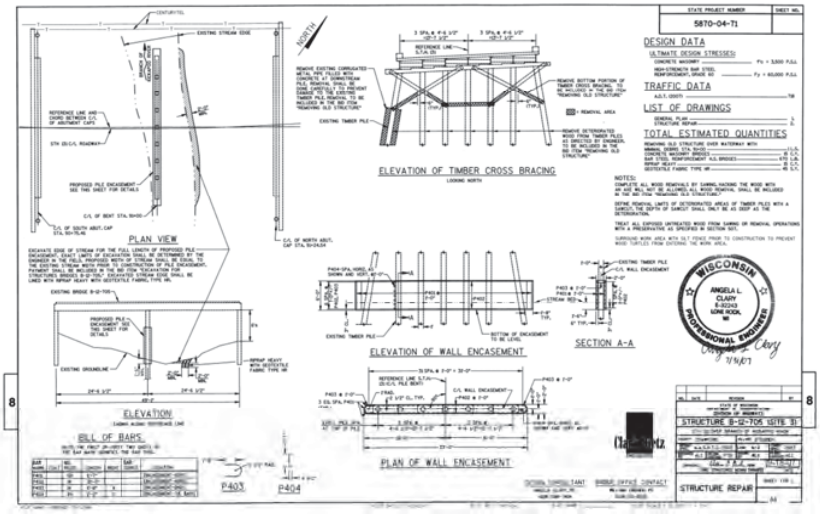

Figure 1.16 Bridge B12-0705 Pier Wall Construction Details (WisDOT 2011)

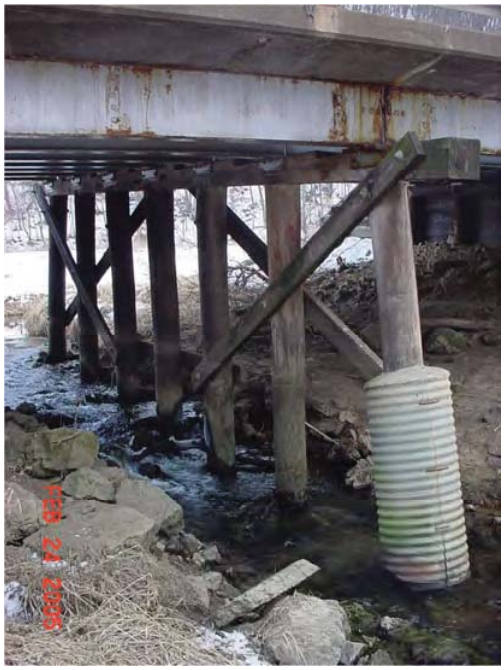

Figure 1.17 Bridge B12-0705 Timber Pile Encasement (A. Johnson personal communication, September 26, 2011)

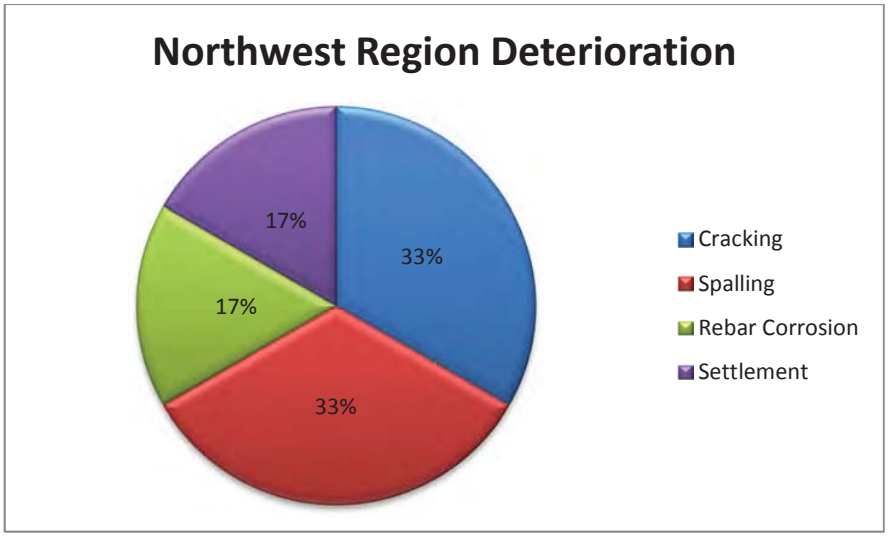

Figure 1.18 Northwest Region Response Results

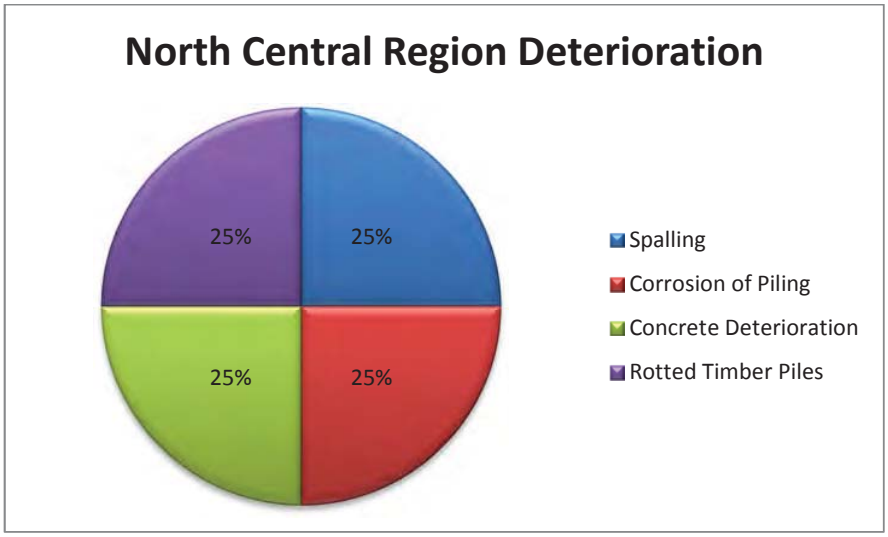

Figure 1.19 North Central Region Response Results

Figure 1.20 Preplaced Aggregate Concrete Repair (JF Brennan 2011)

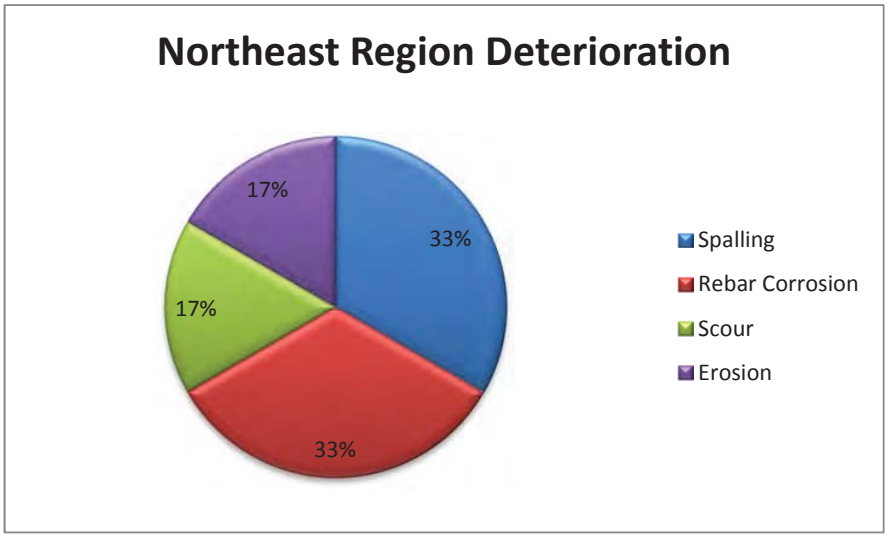

Figure 1.21 Northeast Region Response Results

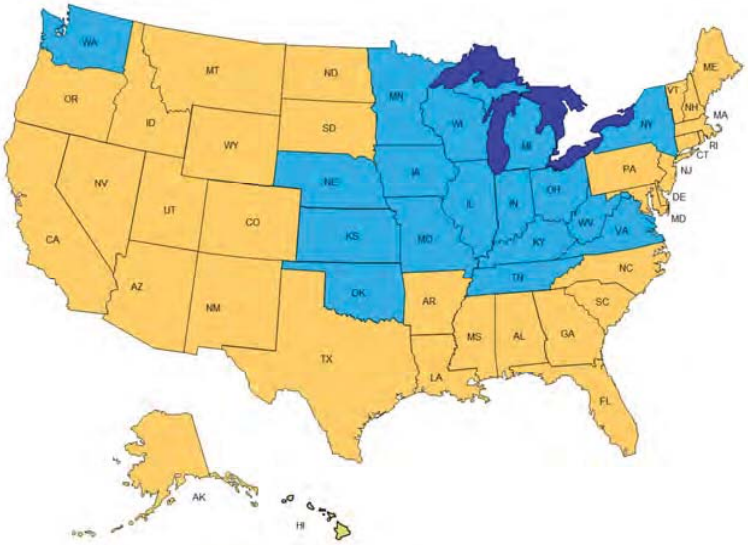

Figure 1.22 Map of Surveyed States

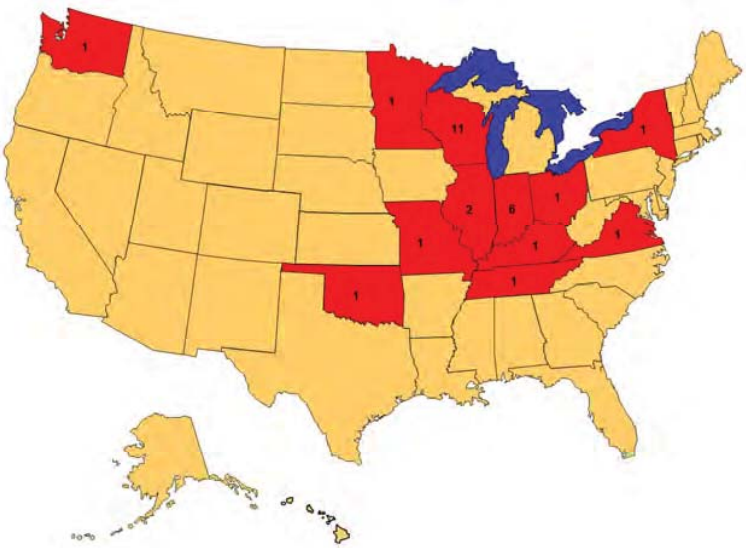

Figure 1.23 Map of States that Responded

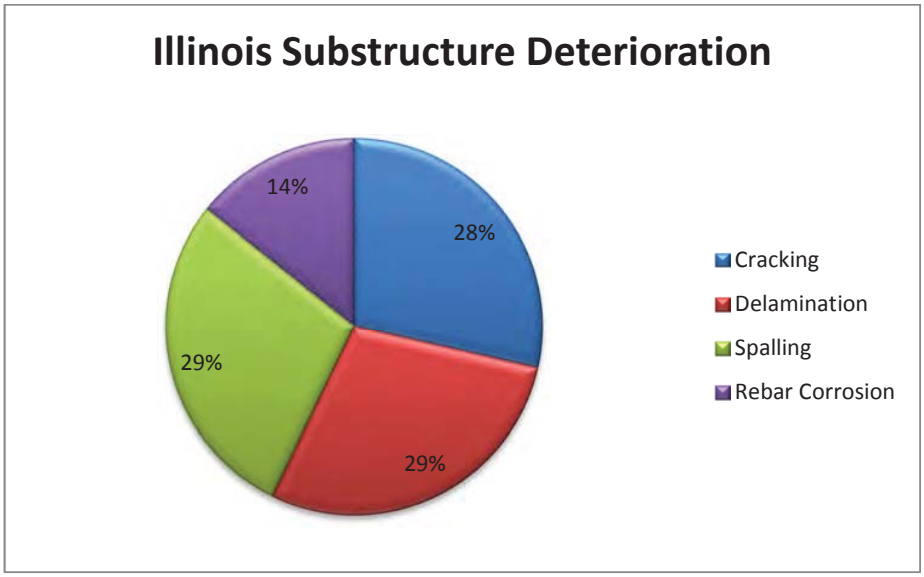

Figure 1.24 Illinois Response Results

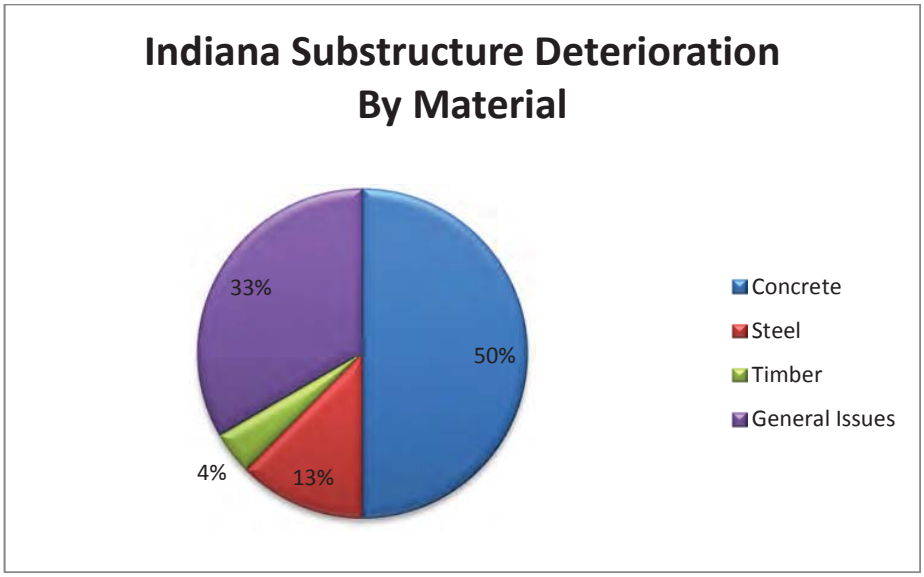

Figure 1.25 Indiana Response Results by Material

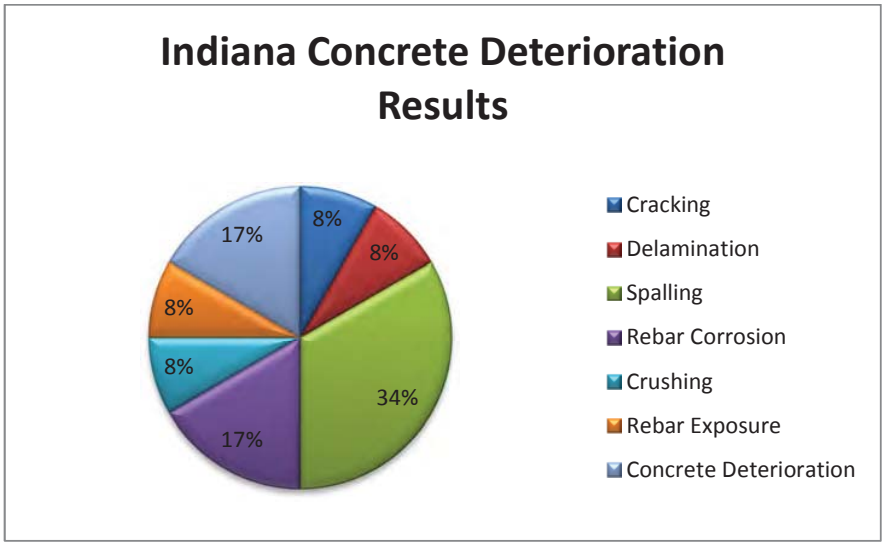

Figure 1.26 Indiana Response Results for Concrete

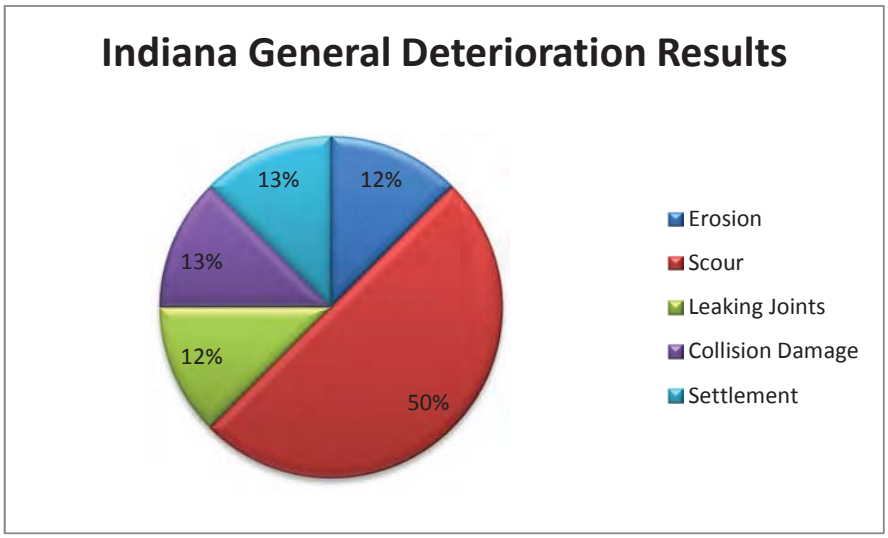

Figure 1.27 Indiana General Response Results

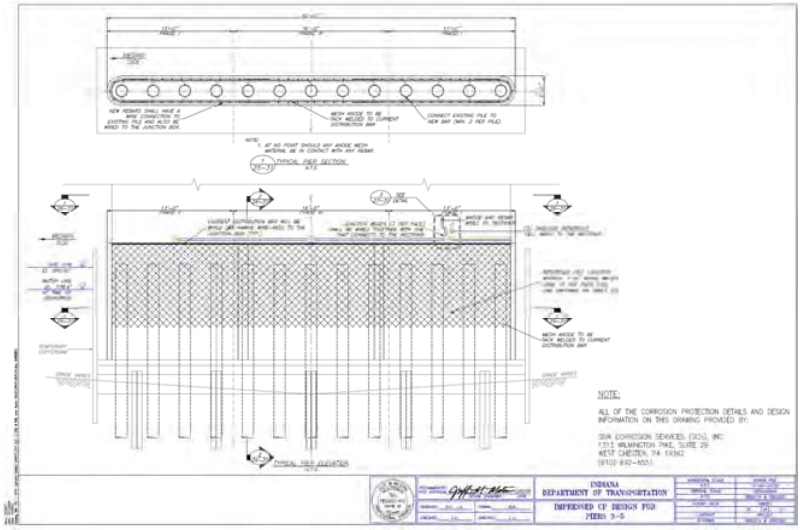

Figure 1.28 Indiana Impressed Cathodic Protection System Design (INDOT 2011)

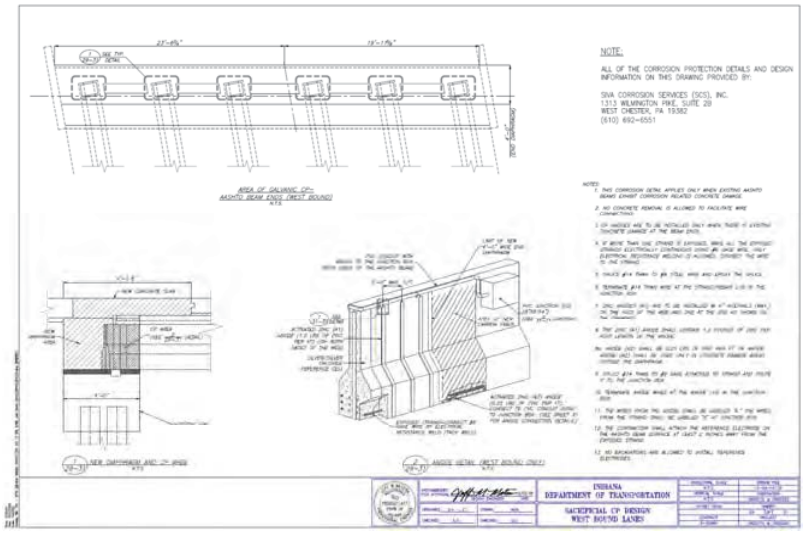

Figure 1.29 Indiana Sacrificial Anode System Design (INDOT 2011)

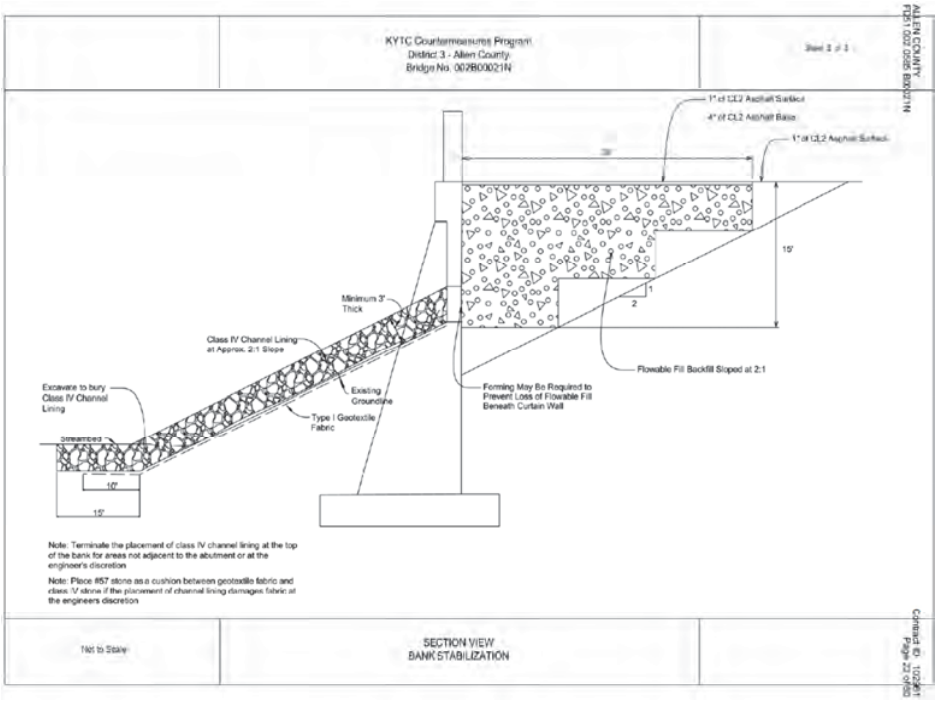

Figure 1.30 Kentucky Scour Countermeasures (Kentucky Transportation Cabinet 2011)

Figure 1.31 A-jack Precast Concrete (Poseidon Alliance Ltd. 2011)

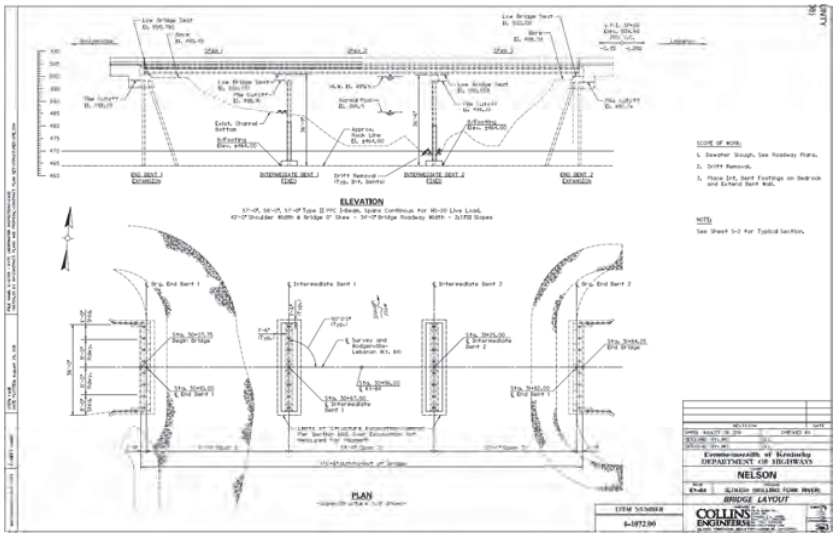

Figure 1.32 Kentucky Bridge 090B00100N Plan (Kentucky Transportation Cabinet 2011)

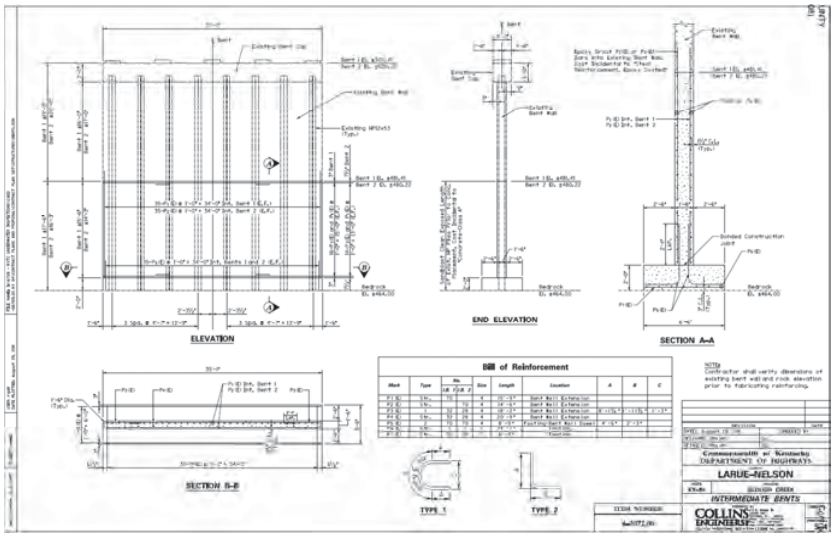

Figure 1.33 Kentucky Bridge 090B00100N Footing and Pile Encasement (Kentucky Transportation Cabinet 2011)

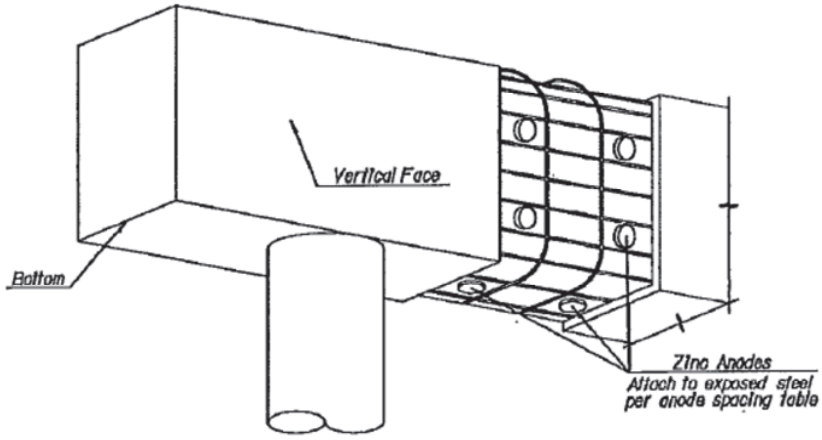

ZINC ANODE PLACEMENT

Figure 1.34 Oklahoma Sacrificial Anode Placement (ODOT 2011)

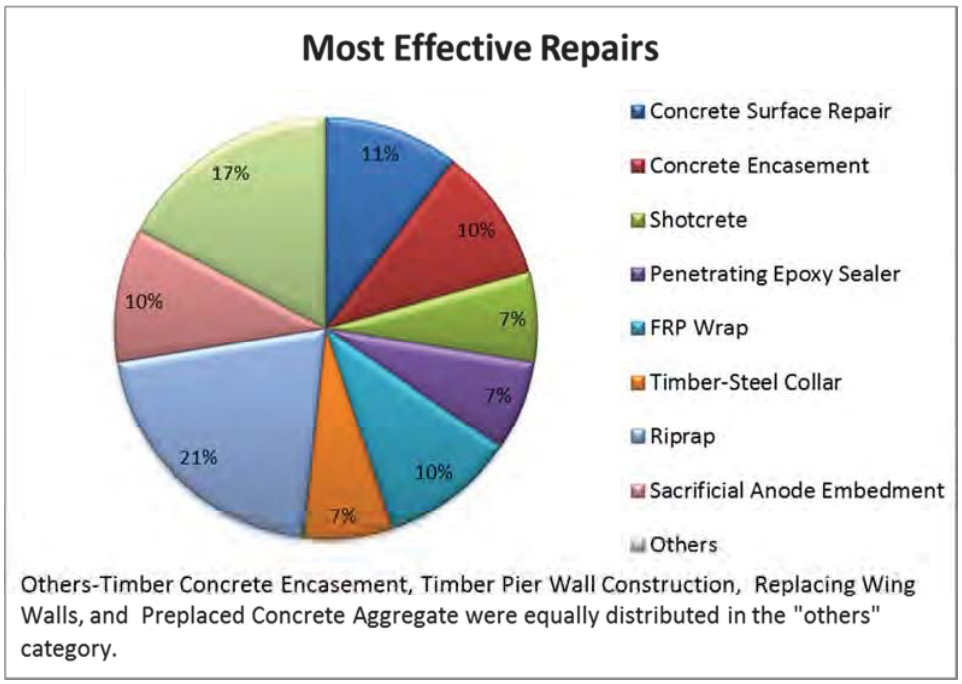

Figure 1.35 Most Frequently Identified Effective Repairs

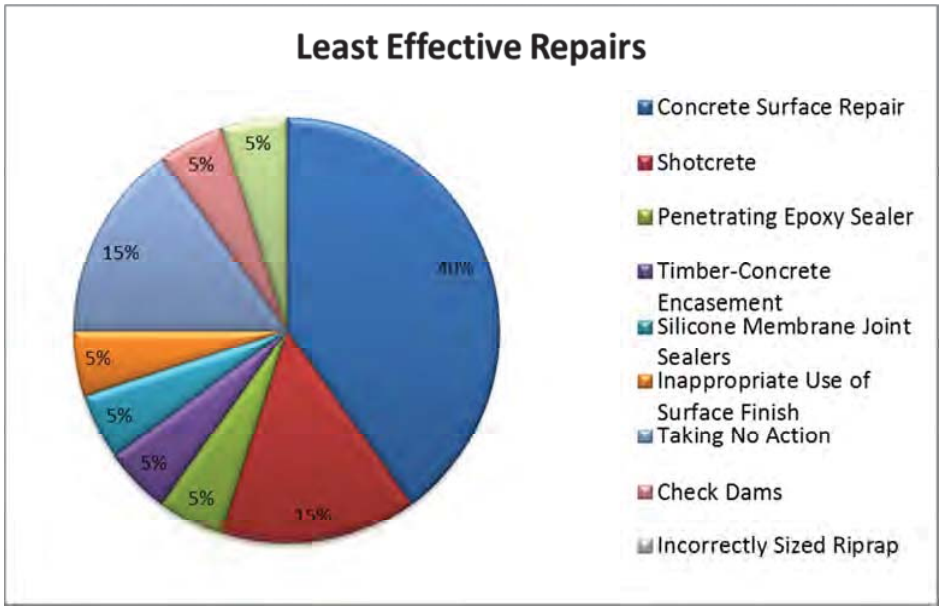

Figure 1.36 Most Frequently Identified Ineffective Repairs

This page has been intentionally left blank.

Chapter 2 Common Wisconsin Substructure Deterioration

The research team made several trips to bridges in Wisconsin where substructure deterioration was present to document the various types of deterioration that the Southeast and Southwest regions of WisDOT typically encounter. WisDOT regional maintenance engineers provided tours for the research team and provided much of the information included regarding the inspected bridge substructures. Many of the issues seen in these tours appear to be fairly widespread throughout the rest of the state as confirmed by the results of the survey that was distributed to the maintenance engineers discussed in the previous chapter. These site visits were important to document the deterioration problems and to observe the effectiveness of certain repair techniques employed. The present chapter will outline these site visits and summarize substructure deterioration scenarios often encountered.

2.1 Bridge B-40-0115

The first bridge visited was B-40-0115. This bridge supports IH-43 in the city of Glendale in Milwaukee County. It was constructed over a railroad, which has since been removed. The bridge is 1,468 feet long and consists of 12 spans. This bridge was constructed in 1962 and has started experiencing deterioration on multiple substructure elements. WisDOT personnel stated that this bridge has the most severe substructure rehabilitation needs of any of the bridges in Milwaukee County. According to a sufficiency rating calculation from the inspection, the substructure rating is 4. A rating of

4 indicates that the substructure is in poor condition, experiencing advanced section loss, deterioration, spalling or scour. Many of the reasons that the substructure was rated so low can be seen in the documentation provided.

The north slope embankment for bridge B-40-0115 is composed of concrete blocks or tiles. It is currently identified as experiencing major deterioration. Portions of the slope embankment have collapsed as evidenced by Figures 2.1 and 2.2. The slope embankment failure was caused by erosion of the soil beneath the concrete blocks. The erosion was approximately 2-4 feet deep and covered a 10-foot by 30-foot plan area. According to an inspection from March 16, 2011, a spalled median barrier wall was thought to instigate the erosion. The spalled median barrier wall allowed runoff from the bridge deck to land on the slope protection, causing the subsequent erosion of the slope embankment. The recommended repair from the inspection was to fill in the missing subgrade beneath the tiles/blocks and replace the damaged portions of the slope embankment, since the spalled median barrier had previously been repaired. Erosion issues were noted throughout several of the other bridges that were visited, but to a much lesser extent.

The abutments for bridge B-40-0115 are sill-type abutments and have experienced deterioration issues mostly due to road deicing chemicals leaking through the damaged expansion joint in the superstructure. Sill abutments are common throughout Wisconsin's infrastructure network because they are the least expensive and easiest to construct abutment types (WisDOT 2010). The chloride intrusion has also caused rebar corrosion, as evidenced by the cracking and spalling that are seen in Figures 2.3 and 2.4. Figure 2.3 shows the horizontal cracks that exist at the beam seat of the north abutment.

Figure 2.4 shows the delamination and exposed reinforcement that is also occurring at multiple beam seats at the north abutment.

The common repair technique used for this issue was concrete patching since it was not a critical repair. Most of the substructure issues that bridge B-40-0115 is experiencing are related to pier column and pier cap deterioration, and there is approximately $1,000,000 worth of substructure work necessary to repair all of the issues that are present in this structure. Since there is no roadway present beneath the structure, almost all of the deterioration occurs due to water and chlorides from road salt applied to the roadway above penetrating through the concrete bridge deck and traveling through the expansion joints in the bridge superstructure.

Pier cap deterioration was fairly widespread throughout the structure and can be seen in Figures 2.5 and 2.6. In Figure 2.5 chlorides penetrated through the entire pier cap and caused delamination on the bottom reinforcement. Figure 2.6 shows the result of corrosion of the reinforcement on the side of a pier cap. In addition to the delamination that was widespread on the concrete caps, there was heavy rust staining present as noted in Figure 2.7.

There are 88 pier columns in Bridge B-40-0115, with a typical diameter of three feet. The pier columns have severe deterioration due to reinforcement corrosion. There is extensive delamination present that exposes the reinforcement. Figure 2.8 provides a visual of one of the delaminations, which occurred on the lower half of Column 6 at Pier 1. As evidenced by the heavy rust staining and cracking on the top of the column, this deterioration was most likely due to a leaking expansion joint in the bridge

superstructure. A more detailed image of this particular column is provided in Figure 2.9.

There are 650 feet of concrete pier walls in Bridge B-40-0115. These pier walls are experiencing severe delamination and cracking. The delamination has caused spalling for many of the pier walls. The spalling shown in Figure 2.10 is typical of what the pier walls are experiencing throughout the bridge. Figure 2.10 displays one of the more advanced stages of deterioration present on the pier walls.

Bridge B-40-0115 has also experienced several repairs on deteriorated substructure members. Figure 2.11 shows a successful repair over the entire length of a column. The age of this particular repair was unknown since it was not documented. The repair showed no signs of deterioration and appeared to be sound. Figure 2.12 shows a patch repair on a column and pier cap. The patches were not observed to have any deterioration at the time of the inspection.

2.2 Bridge B-40-0226

Bridge B-40-0226 carries Ryan Road over IH-94 in the city of Oak Creek in Milwaukee County. It is 210 feet long with a deck width of 49.5 feet. The bridge substructure was given a Substructure Rating of 5 from an inspection on 10-06-2011. A rating of 5 indicates that the substructure is in fair condition. Fair condition indicates that all of the primary structural elements are sound, but some contain minor section loss, cracking, spalling or scour (WisDOT 2003). The bridge was built in 1965 and the most recent inspection recommended that the bridge should be replaced by 2014. The abutment is a sill abutment resting on 12-inch timber pilings.

The west sill abutment has experienced several deterioration issues that were noted in the most recent inspection. The north end of the west sill abutment backwall has experienced cracking, which is documented in Figure 2.13. A second smaller cracking condition is documented in the inspection report. Figure 2.13 also illustrates spalling of the abutment between the girders, resulting in exposed reinforcement. The exposing of the reinforcement provides visual evidence of the corrosion. This corrosion is most likely a result of the failure in the strip seal expansion joint above the abutment. Since the abutment is protected from the elements, the documented deterioration of the expansion joint in the most recent inspection is the most likely reason for corrosion to be forming on the reinforcement.

The pier columns in bridge B-40-0226 have deterioration issues that are typical in the southeastern region of WisDOT. Figure 2.14 shows the delamination and vertical cracking on the pier column. The delamination has exposed a small amount of steel reinforcement near the bottom of the column. The deterioration normally occurs on this portion of the column resulting from application of de-icing chemicals. As snowplows pass, snow is thrown against the column and packed, providing a condition for chemically saturated snow to adhere to the surface of the pier column. The extended amount of time that the snow pack has been allowed to stay on the face of the column is what has greatly accelerated the corrosion of the reinforcement.

The slope embankment of bridge B-40-0226 is rated in Condition State 3, indicating major deterioration. It is composed of concrete blocks that are experiencing undermining, cracking, and heaving at the toe. Some of these issues can be seen in Figure 2.15, which displays the undermining of some of the slope embankment. The

settlement of the slope protection can also be seen in that figure. The east slope, while not pictured, displays many of the same characteristics as the west end.

2.3 Bridge B-40-0494

Bridge B-40-0494 is a haunched slab bridge 110 feet in length located in Milwaukee, Wisconsin. The bridge was constructed in 1977 and experiences an average daily traffic volume of 12,800 vehicles. This particular bridge was visited and documented to observe repairs that were performed in 2007. The repairs were on the underside of the bridge deck, but the repair techniques employed for the bridge deck repair are certainly applicable to substructure elements (e.g. pier caps, pier columns).

The underside of the bridge deck was repaired using sacrificial anodes and spray-on concrete. Figures 2.16 and 2.17 illustrate locations that were repaired using this method. The repair is four years old at the time of this report and it is still rated in a good condition state based on the last inspection report. Some new spalling has occurred on other sections of the underside of the deck. Figure 2.18 is included to show the typical condition the concrete was in before the sacrificial anodes and spray-on concrete were applied.

Since the concrete was spalling over a roadway, it was necessary to ensure that loose concrete would not fall on passing traffic. The use of sacrificial anodes keeps the reinforcement from corroding, and causing delamination above the roadway. This bridge will be replaced and the repair technique using spray-on concrete and sacrificial anodes is intended to be in place and last until the new bridge is constructed. In other words, the

repair technique that was employed is intended to extend the service life of the existing bridge until the new superstructure can be constructed.

2.4 Bridge B-40-0189

Bridge B-40-0189 is a haunched slab bridge in Milwaukee on USH 45 (northbound lanes). It experiences an average daily traffic volume of 20,400 vehicles. The bridge was constructed in 1966 and is 114.5 feet in length. This bridge was visited to document the repairs that were performed on the substructure. Concrete encasements were added to all of the pier columns for this structure in 1993. At the time of the site visit, these repairs were 18 years old. The most recent inspection rated the entire substructure as a 5, indicating fair condition.

Encasements on multiple pier columns can be seen in Figure 2.19. Every pier column for Bridge B-40-0189 was encased when the work was done in 1993. Despite the age of the repair, the encasement is still structurally sound. As noted in the latest inspection, there are a few fine to medium cracks on pier 2, with some delamination. An example of this cracking can be seen in Figure 2.20. Though there is cracking and some delamination, there was no visual evidence of spalling and no exposed reinforcement. The detail for the column encasements can be seen in Figure 2.21. It can be noted that epoxy coated 6 inch by 6 inch 10 gauge woven wire fabric was used for the encasement. The encasement increased the diameter of the pier column by one foot and three-inch concrete cover was utilized. Seven of the eight pier columns were given a condition state rating of 2 out of 4, indicating that were was minor cracking, but there was no visual evidence of rebar corrosion.

Bridge B-40-0188 is the bridge directly above B-40-0189, and one of the pier columns for this bridge was also encased. There are fine to medium, horizontal and vertical cracks in the encasement, which were noted in the most recent inspection. The cracking on this encasement is facing the roadway, which is an indicator that the damage was most likely caused by snow pack and spray saturated with de-icing chemicals being thrown onto the pier columns during snow removal operations. Figure 2.22 shows the location of the pier column encasement, and where the cracking occurs, while Figure 2.23 shows the closer view of the cracking that is occurring on the encasement. It can also be seen in Figure 2.22 that the only pier column that needed to be encased for this pier, is also the only pier column that is near a roadway. This provides a further indication that de-icing chemicals in the spray and snow pack were the cause of the deterioration.

2.5 Bridge B-40-0122

Bridge B-40-0122 is a prestressed concrete deck girder bridge in the city of West Allis, Wisconsin. It was built in 1961 and has undergone multiple repairs since its initial construction. The bridge's replacement is scheduled for 2014. The structure is 200 feet long and spans over IH 894-USH 45. The bridge was inspected on August 25, 2011 and the substructure was rated as a 6. A Substructure Rating of 6 indicates that the substructure is in satisfactory condition, with only minor deterioration presents (WisDOT 2003). Bridge B-40-0122 has several typical deterioration issues and repairs.

The reinforced concrete pier columns have typical deterioration that faces the roadway passing beneath the bridge. Figure 2.24 shows the horizontal and vertical cracking that is present on the pier columns. According to the most recent inspection,

there is also delamination present. All of the cracking that is seen in the figure exists on a previously patched section of the column. This indicates a failure of the chosen repair method.

There is also extensive pier cap patching on the structure. Some of the patching on the pier cap still appears sound as seen in Figure 2.25. However, the inspection noted that there are large areas experiencing delamination and extensive medium sized cracks in the repaired sections of the pier cap. A section of the repair has spalled as a result of the widespread delamination that the pier cap is experiencing. This failure can be seen in Figure 2.26. The right side of the pier cap in the photo has spalled concrete, while the left side has a long crack running along the length of the concrete patch. The patch that was added to this particular pier cap is clearly deteriorating as evidenced by the cracks and delamination noted in the inspection report.

2.6 Bridges B-40-0129 and B-40-0130

Bridges B-40-0129 and B-40-0130 are prestressed concrete deck girder bridges located in the city of Wauwatosa, Wisconsin. The bridges are 214 feet long and experience an average daily traffic volume of 9,900 vehicles each. The bridges were originally constructed in 1961, and the substructures have undergone several rehabilitative efforts starting in 2006. According to the most recent inspection, the substructures were both rated as a 5, and both bridges are scheduled to be replaced in 2012.

Bridges B-40-0129 and B-40-0130 were included in this inspection because of the unique repair that was performed on the pier caps. In 2006 the pier caps for piers 1, 2

and 3 of bridge B-40-0130 and pier cap for pier 1 of bridge B-40-0129 were encased in concrete. Five inches of concrete was added on every side of the previously mentioned pier caps. The drawing of the pier cap encasements is included in Figure 2.27. The reinforcement and concrete that was added for bridge B-40-0129 was similar to bridge B-40-0130. Figure 2.28 depicts the pier cap for pier 3 of bridge B-40-0130. The addition of concrete can be seen on the underside of the pier cap. Even though the repairs are only five years old, they are already showing signs of deterioration. There is hairline cracking on the bottom and fascia of all four encased pier caps, evidenced by Figure 2.29. Delamination must also be occurring, as spalling was noted on the encasement for pier 3 of bridge B40-130. The spalling and exposed reinforcement can be seen in Figure 2.30.

In addition to the repairs that both bridges have undergone, there are several typical deterioration issues that are still present. Bridge B-40-0129 is experiencing erosion at its east concrete slope protection. This can be seen in Figure 2.31, where several sections of settlement are present. Pier 3 of bridge B-40-0130 is directly beneath a joint, which is causing multiple deterioration issues. The leaking joint may be the cause of the spalling on the pier cap encasement that was noted, and it also may be the cause of the spalling on the concrete pier columns.

The spalling on these columns faces away from the roadway, indicating that the de-icing chemicals attacking the reinforcement may be coming from above. The spalling and exposed reinforcement on the pier column can be seen in Figure 2.32. The abutment for bridge B-40-0130 is a sill abutment and is also in need of rehabilitation. Figure 2.33 shows a severe crack in the east abutment at the south end. In addition to significant cracking at the abutment, there is delamination occurring and spalling with exposed

reinforcement. The spalling can be seen in Figure 2.34, with exposed reinforcement visible.

2.7 Bridge B-13-0008

Bridge B-13-0008 is a steel girder bridge located in Madison, Wisconsin. The bridge was constructed in 1949 and experiences an average daily traffic volume of 25,200 vehicles. The bridge is 686 feet long, with nine piers and two abutments. Pier 9 has experienced several advanced forms of deterioration, since it is located directly beneath a strip seal expansion joint. Poor expansion joint maintenance most likely allowed de-icing chemicals applied to the bridge deck surface to travel below the deck onto the pier cap. Passing plows causing snow pack on the side of the pier also likely caused some damage. Figure 2.35 shows pier 9 of the structure, where extensive alligator (map) cracking is present. At the center of the pier, spalled concrete and exposed reinforcement is visible. Both ends of the pier have large cracks that appear to show delaminated concrete. Figure 2.36 shows the heavy vertical crack at the east end of pier 9.

Direct evidence of the damage caused by the strip seal expansion joint can be seen in Figure 2.37. The top of the pier cap for pier 9 has extensive spalling and delamination. Exposed reinforcement is visible for almost the entire length of the pier cap, and large pieces of concrete are missing. The corrosion that is widespread throughout the reinforcement of the pier can be seen in Figure 2.38. Since this corrosion is occurring on the top of the pier cap, it is evident that the damage is caused by a deteriorated expansion joint. It can be seen in Figure 2.38 that the steel reinforcement has experienced section loss as a result of corrosion, and that large portions of the reinforcement are open to the

elements due to the spalled concrete. Due to the advanced deterioration of the piers that are located below expansion joints for bridge B-13-0008, the most recent inspection recommended that they all undergo fiber wrap surface repairs.

2.8 Bridge B-11-0024

Bridge B-11-0024 is a prestressed concrete girder bridge located in Arlington, Wisconsin within Columbia County. The bridge was constructed in 1961 and experiences an average daily traffic volume of 33,050 vehicles. The bridge is 139 feet long and was visited and documented as part of the present research effort since a fiber wrap repair was completed on multiple pier columns, girders and pier caps. The repair was conducted in 2011, a year before the research team documented the bridge. The effectiveness of this particular repair cannot be judged yet since it has not been in place very long; however, at the time of inspection the repair was still in very good condition.

Figure 2.39 shows the fiber wrapped pier cap, with fiber wrapped columns. It can be seen that some of the pier columns were only partially wrapped where deterioration was present. The entire surface of the pier cap was wrapped in FRP. Figure 2.40 shows how the different layers of FRP overlap on the edge of the pier cap. The current specification for Wisconsin FRP repairs (WisDOT 2005) requires that an edge lap of 12-inches be present for all FRP repairs. A closer view of the fiber wrapped column can be seen in Figure 2.41, where the different layers of FRP become visible. The coarseness of the fiber mesh can also be seen in Figure 2.41. Consistent with the concrete encasement repair method, some concern was noted regarding future inspection practices. The FRP

repair on the columns now makes it extremely difficult to know the status of the original concrete.

2.9 Concluding Remarks

The substructure deterioration in the Southeast and Southwest regions of Wisconsin documented by the research team is fairly representative of common problems experienced throughout Wisconsin's infrastructure. Deterioration of concrete elements, such as cracking and spalling, are some of the most common problems that maintenance engineers must address. The repairs shown in the previous sections only represent a small portion of the options that are available. Research was done to identify a broad range of repairs ranging from the common to the experimental.

Due to the limited number of bridge inspection trips made, many other common deterioration problems were not observed. For example, deterioration of pilings could not be documented due to accessibility issues. There was no opportunity to review scour repairs in the limited time available for the inspections. Despite their lack of attention in the previous sections, they are common problems and are addressed in other sections of this document. The repairs and deterioration problems documented previously should be seen as a representative example of some of the problems that are currently plaguing the bridge substructures throughout Wisconsin.

The greatest value of these site visits was seen in the ability to gauge repair longevity. Several instances of concrete surface repair were observed on different substructures. The majority of the concrete surface repairs that were encountered were

already experiencing some form of deterioration. Since records are not usually kept for these basic repairs, it is extremely difficult to estimate how long they remained effective.

Alternatively, the use of concrete encasements on pier columns was well documented. When the repair was visited it had been in service for eighteen years. No spalling or exposed reinforcement was present on the encasements but some delamination had been noted in the last inspection. This particular bridge would make it appear that concrete encasements on pier columns can have a service life upwards of twenty years. When the concrete encasement method was utilized on pier caps of a bridge in Southeastern Wisconsin, it was extremely less effective than when it was placed around pier columns in another bridge. The pier cap encasement that was observed had been in place for five years. At the time of the visit extensive cracking was present over the entire pier cap surface. Localized delamination, spalling, and exposed reinforcement were also observed.

Several repairs were observed during the site visits that were fairly young, but showed promising signs for estimated service life. The use of sacrificial anodes to prevent corrosion was observed four years after the repair had been conducted. At the time of the visit, the repair was still in sound condition with no delamination present. The sacrificial anodes were clearly working because other sections of the bridge had experienced reinforcement corrosion and spalling since the repair had been put in place. Sacrificial anodes are typically estimated to last fifteen years, which seems possible given the current lack of deterioration. An FRP repair was also observed even though it had been in place for only one year. At the time of the visit, the FRP wrapped columns and pier caps showed no signs of deterioration. The same repair was conducted on median

barriers and corrosion was evident through the FRP wrap after only three years. The actual FRP wrap is estimated to last up to 50 years, but the concrete inside may deteriorate much sooner. The use of a chloride extraction or sacrificial anodes can be combined with an FRP wrap to ensure that existing chlorides within the concrete do not continue to attack the steel reinforcement. This may be desirable since future inspection on the existing concrete becomes very difficult after the FRP wrap is placed.

2.10 References

WisDOT. (2003). *Bridge Inspection Pocket Manual*. Retrieved May 7, 2012 from the World Wide Web: on.dot.wi.gov/dtid_bos/extranet/structures/HSI/help/pm/Index.htm

WisDOT (2005) *Fiber Wrap Column Reinforcing*, Special Provisions Index, http://on.dot.wi.gov/dtid_bos/extranet/structures/specials/specials-index.htm, last access on February 24, 2012.

WisDOT. (2010). *LRFD Bridge Manual*. Retrieved May 7, 2012 from the World Wide Web: http://on.dot.wi.gov/dtid_bos/extranet/structures/LRFD/LRFDManualIndex.htm

Figure 2.1 B-40-0115 Slope Embankment Failure

Figure 2.2 B-40-0115 Slope Embankment Failure

Figure 2.3 B-40-0115 Cracking of Sill Abutment

Figure 2.4 B-40-0115 Spalling of Sill Abutment

Figure 2.5 B-40-0115 Pier Cap Spalling

Figure 2.6 B-40-0115 Pier Cap Spalling and Cracking

Figure 2.7 B-40-0115 Rust Staining on Pier Cap

Figure 2.8 B-40-0115 Pier Column Delamination

Figure 2.9 B-40-0115 Pier Column Delamination

Figure 2.10 B-40-0115 Pier Wall Delamination

Figure 2.11 B-40-0115 Full Column Repair

Figure 2.12 B-40-0115 Column and Pier Cap Patch Repair

Figure 2.13 B-40-0226 Abutment Shear Failure

Figure 2.14 B-40-0226 Pier Column Deterioration

Figure 2.15 B-40-0226 Undermining of Slope Embankment

Figure 2.16 B-40-0494 Sacrificial Anode Repair

Figure 2.17 B-40-0494 Sacrificial Anode Repair

Figure 2.18 B-40-0494 Spalling and Exposed Reinforcement

Figure 2.19 B-40-0189 Pier Column Encasement

Figure 2.20 B-40-0189 Pier Column Encasement Cracking

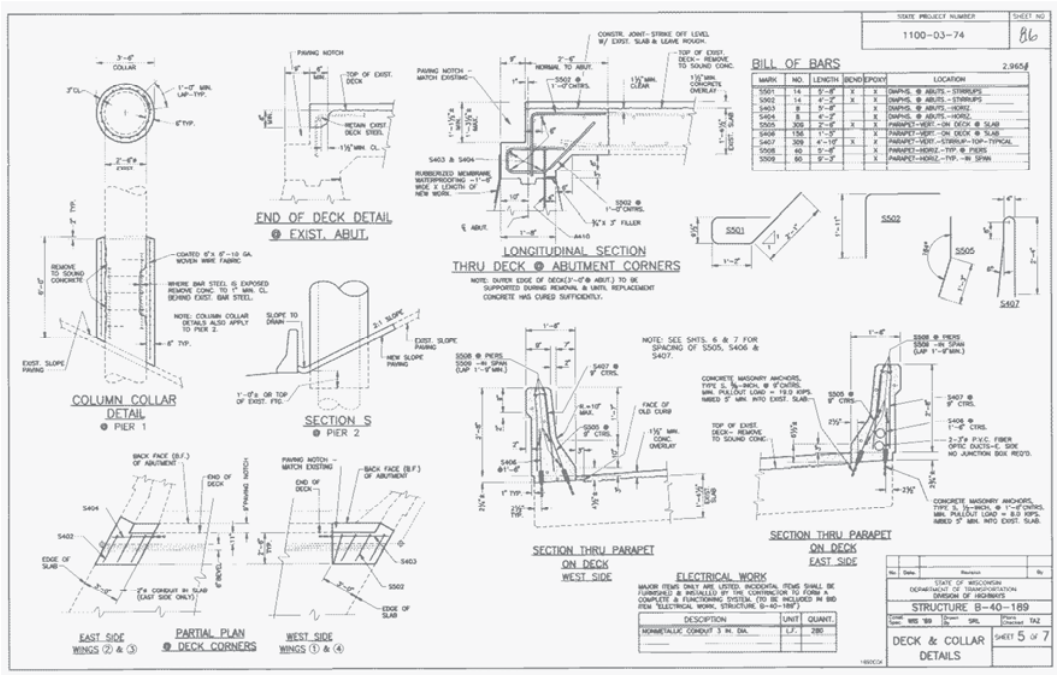

Figure 2.21 B-40-0189 Pier Column Encasement Details (WisDOT 2011)

Figure 2.22 Bridge B-40-0188 Pier Column Encasement Location

Figure 2.23 Bridge B-40-0188 Pier Column Encasement Cracking

Figure 2.24 Bridge B-40-0122 Concrete Pier Column Patch Cracking

Figure 2.25 Bridge B-40-0122 Concrete Pier Cap Patch

Figure 2.26 Bridge B-40-0122 Pier Cap Patch Failure

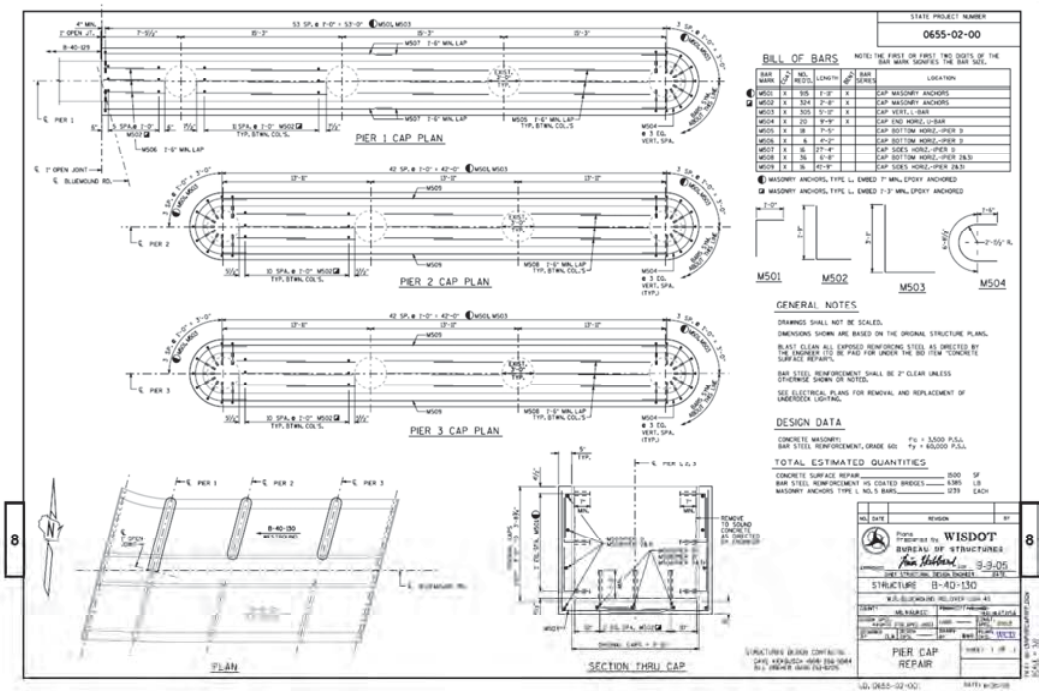

Figure 2.27 B-40-0130 Pier Cap Encasement Drawing (WisDOT 2011)

Figure 2.28 B-40-0130 Pier Cap Encasement

Figure 2.29 B-40-130 Cracking of Pier Cap Encasement

Figure 2.30 B-40-130 Spalling of Pier Cap Encasement

Figure 2.31 Bridge B-40-0129 Erosion of Slope Protection

Figure 2.32 Bridge B-40-0130 Pier Column Spalling

Figure 2.33 Bridge B-40-0130 Abutment Crack

Figure 2.34 B-40-0130 Abutment Spalling

Figure 2.35 B-13-0008 Pier Deterioration

Figure 2.36 B-13-0008 Pier Vertical Crack

Figure 2.37 B-13-0008 Pier Cap Spalling

Figure 2.38 B-13-0008 Steel Reinforcement Deterioration

Figure 2.39 Bridge B-11-0024 FRP Pier Repair

Figure 2.40 Bridge B-11-0024 Pier Cap FRP Layout

Figure 2.41 Bridge B-11-0024 Pier Column FRP Repair

Chapter 3 Concrete Substructures

Reinforced and prestressed concrete are widely used for bridge construction for both superstructures and substructures. Major sources of deterioration in concrete substructures include cracking and spalling. A pier with map cracks is shown in Figure 3.1. The cracking in substructures can be caused by vehicle/vessel impact, chemical reaction, construction error(s), corrosion of embedded reinforcement, design error(s), freezing and thawing, foundation movement, shrinkage, and temperature changes (Army and Air Force 1994). The corrosion of steel reinforcement can cause excessive cracking and spalling of concrete substructures as shown in Figure 3.2.

There are many methods for investigation and assessment of concrete substructures, including visual surveys, core drilling, laboratory tests (petrographic examination, chemical analysis, and physical analysis), nondestructive testing (rebound numbers, penetration resistance, ultrasonic pulse velocity, surface tapping, etc.), steel corrosion assessment, and load testing.

The following methods can be used to control the steel corrosion in reinforced or prestressed concrete substructures: remove and replace all chloride-contaminated concrete; reduce the concentration of, and change the distribution of, chloride ions by using electrochemical chloride extraction; stop or slow the ingress of future chloride ions by using a less permeable cementitious overlay composed of latex, silica fume, or fly ash-modified concretes; stop or slow the ingress of future chloride ions by using sealers, membranes, and waterproofing materials; repair cracks to prevent chloride ion contamination; apply barrier coatings on the reinforcing steel in the repair areas; apply

corrosion inhibitors in the repair or over the entire concrete element to either interfere with the corrosion process or modify the characteristics of the in-place concrete; and apply a cathodic protection system. Among all strategies and techniques, cathodic protection is the only technology that can directly stop further corrosion, even in the most corrosive environment, if designed, installed, and applied correctly (Sohanghpurwala 2009).

The large variety of cracking types prevents a single repair method for all concrete cracking problems. For active cracking, strengthening the structure is required to prevent further development of new cracks and propagation of existing cracks. For dormant cracking, simple sealing may solve the problem. Primary methods of spalling repair include removing the deteriorated concrete and replacing it with new concrete that has similar characteristics (Army and Air Force 1994). Concrete jackets and fiber-reinforced polymer (FRP) wrapping can be used to repair and strengthen the deteriorated concrete substructures. The details of these repair methods are discussed in following sections.

Repairs to concrete substructure members are notoriously unreliable and have a high failure rate. A study was conducted by Tilly (2011) in order to determine how effective concrete repairs are, and which repairs are the most reliable. Tilly surveyed engineers throughout Europe to collect the necessary repair data. Tilly found that the majority of concrete bridges require repair within the first 11 to 20 years of their service life (Tilly 2011). The success rates that Tilly encountered highlight the high failure rates that are encountered with concrete bridge repair. After all of the repairs were considered, only 50% were reported as successful, with a 25% failure rate (Tilly 2011). Tilly

discovered that 65% of the cracking repairs were successful, whereas only 25% of the freeze-thaw repairs were successful. Repairs ranked in order of effectiveness were restoration of strength, crack injection, cathodic protection, coatings, patches, and spray (Tilly 2011). Crack injection was mostly utilized where corrosion was still in the initial stages, and may have resulted in a higher result due to the minimal corrosion. Cementitious patches, the most common repair in Wisconsin, were found to only be 45% successful (Tilly 2011). The use of cathodic protection provided one of the more reliable repairs throughout Europe. Cathodic protection repairs were successful 60% of the time, which was 10% higher than the average repair success rate (Tilly 2011). The increased reliability of the cathodic protection repair may make the repair more desirable despite the initial increase in cost. Reliability of repairs is a very important concern, especially because the success rate of repairs decreases by 30% between 5 and 10 years after they are constructed (Tilly 2011).

3.1 General Repairs

There are a variety of repair methods that can be done on multiple substructure members. Concrete cracking can affect all substructure members. Different repair approaches can be taken depending upon which member is deteriorated, but most crack repairs are designed to be used for multiple bridge sections. Cathodic protection, simple surface repairs and sprayed-on concrete are typically conducted throughout bridge substructures. While the specific specification for these repairs may change depending on where they are located, the theory behind the repairs remains the same.

3.1.1 Concrete Cracking

Concrete cracking is a common problem for both substructures and superstructures. Cracking can be considered to be an important indicator of deterioration of concrete or possible steel reinforcement corrosion. Cracking can be due to variety of reasons including corrosion of reinforcement, sulfate attack, alkali aggregate reactivity, shrinkage, thermal and load effects, frost and salt attack, impact forces, overloading, or faulty construction (ARTC 2003). Not all cracks are considered to be structurally significant. In general, cracks up to 0.3mm in width have no adverse effect when reinforcement cover is adequate (ARTC 2003). However, cracks that are caused by severe deterioration are in need of removal and replacement of concrete and require repair methods other than crack repairs.

For repair purposes, there are two types of cracks that are of significance: dead and live cracks. Dead cracks are those that are inactive and do not move. Live cracks are those that are subject to movement due to applied loads and temperature changes. Inactive cracks can be repaired through epoxy injection, grouting, routing and sealing, drilling and plugging, stitching, adding reinforcement, and overlays and surface treatments. Active cracks can be repaired using flexible sealants (ARTC 2003). The detail procedures of these methods can be found in *Bridge Inspection, Maintenance, and Repair* (Army and Air Force 1994), *Bridge Repair Manual – RC 4300* (ARTC 2003), and *Maintenance Manual Volume 1Chapter H: Bridge* (CADOT 2006).

Determining the best course of action for cracking can be a difficult course of action. Depending upon the structural implications of the cracking and the width of the cracks, the deterioration may require different solutions. A flow chart for the decision

process for most cracks can be seen in Figure 3.3. Some sources believe that epoxy injection should only be utilized with cracks up to 1.0mm thick (Raina 1996). Other state transportation departments frequently use epoxy injection with cracks up to 1/8-inch thick (ODOT 2012). Epoxy injection typically costs around $10 per square foot and is expected to last 20 years (ODOT 2012). It was frequently reported throughout the survey that was distributed, that attempting to epoxy inject a crack, which was too large, provided no benefit to the structure.

Regardless of what material is selected to fill the crack, there are certain steps that should be taken during the repair. The crack injection should proceed as follows (Raina 1996). First, clean the cracks using high pressure air. Second, drill injection holes along the crack and use the high pressure air to clean the injection holes. Third, adhere nipples along the crack and cover the surface between the nipples with a liquid sealant. Fourth, mix the injection material and inject it through the nipples in ascending elevation. Lastly, re-injection of the material should be pursued if it is deemed necessary. A schematic of this procedure can be seen in Figure 3.4.

There are several other solutions to crack repair besides injection. Some of these methods are stitching, jacketing, external prestressing, and drilling and plugging. External prestressing is the only crack repair method that does not have direct applicability to substructure repair. While the other three crack repair methods are not common, they may prove useful for certain conditions and should still be mentioned.

Stitching is not frequently done on substructure members, but is still an option for certain types of deterioration. The reason that stitching is typically not conducted on substructure members is because when it is placed in compression, the stitching dogs

need to be encased in a concrete overlay to transfer the compressive force (Army and Air Force 1994). When a stitching system is applied, it does nothing to close the existing crack, but prevents the crack from spreading throughout the member (Army and Air Force 1994). Leaving the crack open would provide a path for chlorides to travel and corrode the reinforcement, necessitating a sealer in addition to the stitching repair. Stitching is installed by drilling holes at each end of the crack, then drilling holes on both sides of the crack. Once the holes are in place and cleaned, the dogs should be placed inside with a grout or epoxy (Army and Air Force 1994). The stitching repair method can be seen in Figure 3.5.

Jacketing is a possible crack repair method, due to the inherent protection that it provides for the existing member. Jacketing is usually reserved for more severe deterioration such as delamination and spalling. If a pier column has cracking throughout the length of the column that requires repair, then it may be more cost-effective to use a jacket to repair the column. Since many times the danger of cracking is the possibility of chlorides entering the concrete, the impermeable barrier created by many jackets will help to ensure that further deterioration and reinforcement corrosion do not occur.

Drilling and plugging is a crack repair method that is ideal for vertical cracks in abutments. This repair method requires a hole to be drilled down the entire length of the crack. The minimum diameter of the hole depends on the crack width, but is usually 2 to 2.5-inches in diameter (Raina 1996). After the hole is drilled it is grouted, which acts as a key that resists transverse movement of the section and prevents leakage through the crack (Army and Air Force 1994). An important concept of this repair method is that the

top of the crack must be accessible in order for the drilling to be carried out. Figure 3.6 shows how the repair should be conducted on an abutment.

3.1.2 Cathodic Protection Systems

Cathodic protection systems are the only existing technology that is capable of completely stopping corrosion of reinforcement within concrete. The high initial cost of cathodic protection systems has prevented the technology from becoming popular. If the lifecycle of the repair is considered, then cathodic protection systems start to appear much more feasible. Both sacrificial anodes and impressed current systems have been utilized on bridges throughout the United States and have yielded very positive results.

Galvanic Cathodic Systems

The corrosion of steel reinforcement can be very detrimental to the strength of concrete structures. Cathodic protection is the only existing technology that can directly stop further corrosion, even in the most corrosive environment (Sohanghpurwala 2009). Galvanic protection systems use sacrificial anodes, typically composed of zinc, which provide a protective current for the steel reinforcement (NYSDOT 2008). The typical composition of a zinc anode can be seen in Figure 3.7. The sacrificial anodes will provide less protection over time due to the corrosion of the anode, which is expected to last from 5 to 15 years (NYSDOT 2008). Figure 3.8 shows the application of sacrificial anodes on the reinforcing steel of a concrete column.

The following steps are recommended by the NYSDOT (2008) before a sacrificial anode system can be installed:

i. Galvanic anodes are not effective in materials with electrical resistivity greater than 15,000 ohm-cm. Polymer, fly ash and silica fume-based materials are not advisable to be used in conjunction with the anodes.
   a. More work will be required if there is an epoxy coating on the rebar.
   b. Galvanic anodes do not show any appreciable benefit when used with low volume shotcrete.

ii. Calculate the required number of anodes, depending on the density of the reinforcing steel, using manufacturer's specifications.

iii. Place the anodes to ensure sufficient connection between the anode and the reinforcing steel. Steel continuity and electrical connection between the tie wires need to be confirmed. Minimum concrete cover, ¾ in. for the anode, should never be violated, so the anode should be placed either beside or below the rebar

Figure 3.9 shows a schematic of the correct placement of the anode, as well as its desired effect. It can be seen in the figure that the anode protects the rebar that it is not in direct contact with, and prevent corrosion despite the chloride contamination.

Zinc Surface Spray

A relatively new product available to prevent steel reinforcement corrosion is a zinc surface spray. This spray is a galvanic form of protection and needs no outside power source. The metalized zinc attracts the chloride ions in place of the existing steel

reinforcement. The surface spray provides an additional benefit since the concrete does not need to be removed for placement, as is typical for sacrificial anode repairs. A galvanized steel threaded rod needs to be placed in the concrete in order to establish a connection to the steel reinforcement. Multiple threaded rods may be necessary if there is a large area being treated, in order to ensure that electrical continuity is maintained. This process typically costs between $22 and $27/S.F. and typically lasts between 10 and 20 years (Vector 2012).

Impressed Current Systems

Impressed current systems are typically utilized in extremely high corrosion environments. The installation is typically more invasive and expensive than galvanic anodes. The service life of these systems is expected to be longer than sacrificial anodes, and impressed current systems are capable of eliminating all on-going corrosion. Impressed current systems rely on continuous electrical contact between the installed members and require an outside source of electrical current.

Discrete Anodes

The use of discrete anodes is the more common implementation of impressed current cathodic protection. The installation process for discrete anodes is rather invasive, but the repair is estimated to last as much as 50 years (Vector 2011). The discrete anodes are usually connected by a titanium wire which will carry the current from the DC power supply. Due to the possible creation of hydrogen ions, which can have damaging effects on the steel reinforcement, a gas ventilation system needs to be

installed that will connect all of the anodes. An image of the correct installation and placement of the discrete anodes can be seen in Figure 3.10.

The installation of the discrete anodes is a multiple day procedure involving several distinct steps (Vector 2011). Holes must be predrilled into the existing concrete with special attention paid to spacing between anodes and existing steel reinforcement. A saw cut must be completed a minimum of 10mm into the concrete in order to provide room for the gas vent tube to be run between the anodes. A special high density, acid buffering grout should be placed into the drilled holes in order to secure the anodes. After the anodes have been placed and connected to the gas vent tube, the same grout is used to provide a protective surface cover. The power source should not be connected to the system until at least 4 days after the grout was placed.

Surface Mounted Tape

The use of a surface mounted titanium tape anode as an impressed current cathodic protection system has several advantaged over the typical discrete anodes. Since the system can adhere to the existing concrete, no drilling or saw cutting is required for placement. The surface mounted tape is identified as being directly applicable for bridge substructure repairs (Vector 2010). Since the surface mounted tape is an impressed current system, it is capable of eliminating on-going corrosion. While the material costs for the titanium tape anode may be slightly higher, the decreased installation cost and the estimated service life of 75 years make it a feasible repair (Vector 2010).

Before installation of the tape anode, the surface of the existing concrete must be sandblasted smooth and blown with compressed air. Once the tape is placed according to the manufacturer's specifications, the conductivity needs to remain continuous. Intercrossing tape anodes should be tack welded or connected with a conductive epoxy (Vector 2010). Figure 3.11 shows how a tape anode system is typically placed. The power source that supplies the impressed current can be seen in the photo. In order to ensure that the tape anode remains in place there are two common methods for securing it to the concrete surface. An FRP tape can be placed over the tape, with an aesthetic coating on top of the tape. Alternatively a polymer coating can be placed over the tape anode which will secure and protect the tape while providing an aesthetic appearance. Both of the possible installations can be seen in Figure 3.12.

Chloride Extraction

Chloride extraction is a chemical process that removes chloride ions from within the concrete. Chloride extraction is usually achieved by placing an anode mesh along the outside of the concrete member. This anode mesh is typically composed of either titanium or steel. Zinc does not need to be used for chloride extraction, since an impressed current is utilized to affect which element the chloride ions will travel towards. The power source will place a negative charge on the steel reinforcement within the concrete, and a positive charge on the anode mesh placed outside of the concrete. An electrolyte substance is typically sprayed on the surface of the concrete to provide a medium for the chloride ions to reach the anode mesh. The electrolyte needs to remain wet throughout the entire extraction process, so an irrigation system and coverings are

necessary. The repair usually costs between $35 and $50/S.F. and needs to be left in place for four to eight weeks. It is estimated that the process will have a 25 to 30 year service life.

3.1.3 Simple Surface Repair

From the survey that was distributed, the simple surface repair was identified as the most common repair conducted throughout Wisconsin's infrastructure. The responses also mentioned it as the least effective repair. The simple surface repair was mentioned 25% more for its ineffective nature than any other repair, which was shown in Figure 1.36. The concrete surface repair method utilized in Wisconsin removes all existing concrete to a depth of 1-inch below the reinforcing steel or to sound concrete. After the surface has been thoroughly cleaned, new concrete is placed. It is desirable that the new concrete be as similar to the existing concrete as possible. Maintenance engineers have observed poor bonding behavior if the two concrete types are not of adequately similar. If the area that needs to be repaired is large, then an encasement, jacket or FRP wrap may be desirable alternatives.

3.1.4 Sprayed-On Concrete Repair

The use of sprayed-on concrete throughout bridge substructures is frequently convenient when site access is limited. Sprayed-on concrete may be used for either forming new concrete or for creating a concrete encasement (Raina 1996). The results of the survey indicated that proper adhesion between sprayed-on concrete and the base concrete is often difficult to achieve. The reliability of this repair could be increased by

proper treatment of the existing concrete surface. The existing concrete should be sandblasted in preparation for the sprayed-on concrete. The base concrete should also be pre-moistened prior to application (Raina 1996). A proper construction sequence and procedure are crucial to ensure that sprayed-on concrete will be a strong and lasting repair.

3.2 Concrete Pile Repair

Depending upon the design of the bridge, it can be difficult to inspect most if not all of the pile. Due to the inability to observe deterioration when it begins, underpinning needs to be considered if complete bearing is lost before the pile can be adequately repaired. There are several solutions present if the pile still retains some of its cross section, but the most important concept is to address why the deterioration occurred. If the repair replaces cross section but does not consider the source of the deterioration, it will not be effective.

3.2.1 Pile Jackets

If a concrete pile is severely deteriorated and pile replacement is not viable, the deteriorated portion of the pile can be encased in new concrete using a fiberglass or steel form jacket (Wipf et al. 2003). Fiberglass jackets were extensively tested for use in the 1970's. They have been frequently used because they can be used on concrete, wood, or steel. Fiberglass jacket systems also do not require dewatering, are effective in all water types, work above and below the waterline, and involve relatively simple installation (Fox Industries/Simpson Strong Tie 2011). There are two common fiberglass pile repairs

that are conducted based on deterioration of the existing pile. If the section loss of the existing pile is less than 25%, then a 1/2” annular void is created between the pile and the fiberglass jacket. The void is then filled with moisture insensitive epoxy grout. Figure 3.13 shows how the epoxy grout can be poured into the void between the fiberglass jacket and the pile. If the section loss is greater than 25%, then a minimum 2” annular void is created between the fiberglass jacket and the pile. The bottom 6” and top 4” of the void are filled with the same moisture insensitive epoxy grout. The rest of the void is filled with a non-segregating cement grout (Fox Industries/Simpson Strong Tie 2011). The fiberglass jacket and moisture insensitive epoxy grout provide an impermeable barrier that will protect the cement grout. The basic construction procedure is listed below (Wipf et al. 2003):

1. Clean the surface (sandblast, water-jet blast or hard-wire brush) of the pile where the jacket is to be installed.
2. Install a reinforcing cage around the pile; use spacers to keep the reinforcement in place.
3. Place the forming jacket around the pile and seal the bottom of the form.
4. Pump the concrete into the form through the opening at the top.
5. Finish top portion of the repaired area, the top surface of the pile jacket should be sloped to allow runoff.

Figure 3.13 shows the construction method for pile jacketing and an example of a finished repair is shown in Figure 3.14.

The cost of a fiberglass pile repair is dependent on a number of factors. Since the section loss of the pile can change the procedure, the unit cost is highly dependent on

how much of the pile still remains. Depending on site conditions, if the piles that need repair are far apart, then the repair cost could be increased based on the need for more barges or work stations. The depth of deterioration on the pile will have a direct result on how large the fiberglass jacket needs to be for the repair to be most effective. An example of a common pile repair fiberglass jacket is the FX-70 manufactured by Fox Industries, which can be seen in Figure 3.14. Some of these fiberglass jackets have been in place for more than 20 years, without showing any sign of deterioration (Fox Industries/Simpson Strong Tie 2011). The cost range for installing a system of this type can be anywhere from $600 per linear foot to $1,200 per linear foot, depending upon the previously mentioned site conditions. Since the fiberglass jacket helps prevent future deterioration and corrosion, it may prove to be a very cost-effective repair. Figure 3.15 shows how the new reinforcement should be placed within the jacket in order to ensure adequate strength is achieved. The jacket is quite effective at protecting the existing pile from future deterioration, but prevents any future visual inspection from occurring. An example of how covered the existing piles can be is shown in Figure 3.16. Fiberglass jackets have been in place for anywhere from 20 to 40 years without showing signs of further deterioration.

3.2.2 FRP Wrapping for Concrete Piles

Fiber reinforced polymers (FRP) have long been used for the repair and retrofit of concrete structural elements. They are lightweight, have high strength and stiffness, include flexibility to fit any shape, and are also corrosion free. Therefore, they have been favored for conducting emergency bridge repairs where speed is of the essence (Sen

and Mullins 2007). Because of the resin, which can cure under water, FRPs can also be used to repair partially submerged substructure elements, such as corrosion-damaged concrete piles.

The first step in wrapping FRP to concrete piles is the surface preparation. A continuous and intimate contact between FRP and concrete surface is very important for the FRP wrapping technique. Therefore, depressions and voids on the concrete surface have to be patched using suitable material that is compatible with the concrete substrate (Sen and Mullins 2007). For non-circular piles, the corners of the piles need to be ground to a minimum of 3/4 in. radius to avoid stress concentration in the wrapping material (Sen and Mullins 2007). Before resin is applied to the pile, all surfaces that will be wrapped should be pressure washed to remove all dust and debris. After the surfaces are cleaned, FRP can be wrapped around the concrete pile by following the requirements of strength design and the manufacturer's procedures. Figure 3.17 shows FRP wrapping to retrofit a concrete pile.

Fratta and Pincheira (2008) finished a research project, which was sponsored by the Wisconsin Highway Research Program (WHRP), to study the effectiveness of the fiberglass wrapping in reducing the corrosion degradation rate of the columns for Wisconsin bridges. The research of Fratta and Pincheira (2008) focused on testing the further ingress of chloride ions after wrapping and no structural capacity effect of FRP wrapping on bridge columns were studied.

The specific provisions for application of FRP wrapping in Wisconsin are detailed by WisDOT in the special provisions (2005). The fabric should be a continuous woven filament, with a minimum ultimate tensile strength of 40 ksi, and a minimum of 1/8-inch

thick. Electrical glass fibers should be the primary fibers that compose the fabric. An epoxy resin should be utilized, and under no circumstances should a polyester resin be allowed as a substitute. All of the pier surfaces need to be adequately smoothed prior to installation of the fiber wrap. The pier surface must be completely dry, and coated with an approved sealer.

According to the special provisions (2005), the external weather conditions are important when the installation is being carried out. The temperature must be between 55 and 95 ^{o}F with a relative humidity less than 85%. The epoxy resin should be mixed and applied uniformly to the fiber wrap until it is saturated. The fiberwrap needs to be a minimum of one layer around the column. The fabric needs to be continuous and have edge laps of 6-inches, with end laps of 12-inches. After the fiber wrap has achieved adequate thickness around the column, it should be covered with a 15-mil thick coat of epoxy. After the epoxy is dry, epoxy paint should be applied in a minimum of two coats to protect the repair from UV radiation.

3.2.3 Pile-Underpinning with Mini Piles

When additional strength is required from the foundation, there are several options available. Mini piles can be utilized if the existing piles have deteriorated to the point where they can no longer support the existing load. If access to the existing piles is an issue, then adding new piling through the use of mini piles may be an effective treatment. Mini piles are typically rotary drilled through the structure that needs additional foundation strength. It is believed that the load will be transferred to the mini piles through concrete friction (Raina 1996). Mini piles can potentially require less work

than traditional underpinning because the construction of a needle beam is not required due to the friction interaction. Figure 3.18 shows how the mini piles could be placed to ensure maximum effectiveness. There needs to be a large enough contact area between the new mini piles and the existing footing so that the friction is large enough to transfer the loading.

3.2.4 Pile-Underpinning

Underpinning is a common solution that has been utilized to strengthen foundations that can no longer support the existing loads. Whether the existing piles are deteriorated or the footing needs to be strengthened, underpinning provides a reliable solution. New piles are constructed on either side of the existing footing, and a needle beam is placed below the existing footing. The needle beam then transfers the entire load from the footing to the newly constructed piles, as seen in Figure 3.19. Steel bearing plates or dry pack concrete should be used to make the connection between the existing footing and the needle beam (Raina 1996). The excavation required to successfully underpin the foundation make this repair somewhat cumbersome and expensive. It is also very likely that the bridge will need to be shut down, to reduce the loading in order for the repair to be carried out. Underpinning should be utilized only if the existing piles or foundation are not capable of being repaired by less invasive methods.

3.3 Concrete Pier Repair

Repair of concrete piers is one of the most frequent deterioration problems that must be addressed. Since piers are typically the substructure member placed closest to

adjacent roadways, they experience frequent deterioration. Chloride intrusion from road salt spray causes frequent reinforcement corrosion of concrete in pier caps and columns. Adequate repair procedures to fix spalled concrete and prevent future chloride intrusion are necessary to optimize bridge life.

3.3.1 Widening Concrete Piers

If the existing pier columns or pier caps are no longer structurally adequate, new columns and caps can be constructed to widen the existing pier for a wider bridge (Wipf et al. 2003). In this method, new footings are needed for the new pier columns. The surface of the existing columns is prepared for the new pier cap. Holes should be drilled through existing pier columns to provide reinforcement for the new pier cap, and the new pier columns are cast. Figure 3.20 shows the elevation and plan views of widening concrete piers for a bridge.

3.3.2 Pier Column Encasement

Pier column encasement is a common repair that has been conducted throughout Wisconsin's infrastructure. A good example of pier column encasement can be seen in Figure 2.19. Pier column encasements have become a desirable repair since they provide a larger amount of concrete cover for the steel reinforcement, while restoring some amount of strength of the deteriorated column. Since the repair has been completed frequently throughout Wisconsin, there are specific guidelines for the construction.

The installation procedures follow the special provision guidelines published by WisDOT (2005). All loose and delaminated concrete must be removed from the column

until sound concrete is encountered. The steel reinforcement that is exposed must be cleaned to remove all surface rust. A welded steel wire fabric should be installed that is an M55 in AASHTO designations. M55 is a plain steel welded wire fabric that is typically used for concrete reinforcement. Once the welded steel wire fabric is placed, the concrete encasement is placed around the new column. A protective surface treatment should be applied to protect the newly placed concrete.

3.3.3 Pier Column FRP Wrap

The procedure for using FRP to strengthen a pier column is very similar to that identified for piling and should adhere to the WisDOT special provisions. The key for achieving adequate strength with the FRP composite is to ensure that there exists an adequate overlap between joints. If there is not adequate overlap, it is very likely that the column would fail in the spot where the overlapping is insufficient. It is important to note that FRP confinement is much less effective for rectangular columns than circular columns because the confining pressure will not be evenly distributed (Jiang and Teng 2008). If a rectangular column is in need of an FRP repair, then the edges need to be rounded to ensure that there are no sharp protrusions that would make the repair ineffective.

3.3.4 Pier Column Jacketing

Pier column jacketing is a very similar procedure to that used for concrete piles. This particular repair is not completed as often as pile jacketing, primarily because jackets are designed for marine environments. Pier columns do not suffer the same water

based deterioration as piling, and therefore do not need jacket repairs as frequently. Jackets could be utilized for other scenarios, and are a good repair when the column has suffered significant section loss. It is much more common to use pier column encasement in Wisconsin than it is to use a jacket, presumably due to the added cost of a fiberglass jacket. The fiberglass jacket would provide an impermeable barrier that would help to prevent future corrosion from occurring. The encapsulation method still relies on permeable concrete, and cannot fully stop the invasion of chlorides. In traffic zones where salt spray is a leading cause of pier column deterioration, a fiberglass jacket would help to protect the reinforcement within the concrete columns.

3.3.5 Pier Cap Encasement

Concrete encasement of pier caps is a repair that has been conducted throughout the Southeast Region of WisDOT. Deteriorated expansion joints frequently result in pier cap deterioration. The deterioration is usually delamination and spalling, which require a concrete surface repair to be conducted. Since concrete already needs to be placed on the pier cap, the Southeast region has attempted to place additional concrete cover in order to protect the existing reinforcement. Figures 2.27-2.30 document a 6 year old concrete encasement that was done in Wisconsin. It can be seen that even though the repair is fairly young, there is extensive cracking and delamination present. Some spalling has already occurred on the newly placed concrete. Similar to column encasements, pier cap encasements eliminate the ability to perform further inspections on the original structure. In this particular case, the use of pier cap encasements seems to be not effective.

3.4 Concrete Abutment and Wingwall Repair

The most common form of abutment deterioration involves concrete damage caused by leaking expansion joints. Typical repair procedures for a leaking expansion joint involve replacing the expansion joint, cleaning the exposed reinforcement, and performing a simple concrete surface repair. There are also several less common abutment deterioration mechanisms that require much more invasive repair methods. If the abutment should lose stability for any number of reasons, immediate and permanent repair procedures need to be enacted.

3.4.1 Abutment Concrete Deterioration

Concrete abutments can be badly spalled and cracked resulting from debris impact, leakage through the abutment, water and chloride migration through joints, or poor quality concrete. Other possible sources are accidental loadings, chemical reactions, construction errors, corrosion, design errors, erosion, freezing and thawing, settlement and movement, shrinkage, and temperature changes (Army and Air Force 1994). In order to prevent moisture from reaching the reinforcement, and causing corrosion and future damage, badly spalled and cracked abutments need to be repaired.

If the bridge superstructure spans a river and the abutment is in the river bank, a cofferdam should be constructed (Figure 3.21) and all water should be pumped out. All deteriorated concrete is removed to expose the steel reinforcement of the abutment. It is recommended by Army and Air Force (1994) that the concrete should be cut down to the vertical and horizontal planes as shown in Figures 3.21c and 3.21d. New reinforcement mat and concrete are added to make the abutment 4 to 6 in. thicker. The newly placed

concrete will be at least 1 foot wider than the region of damage (Wipf et al. 2003), in all directions as shown in Figure 3.21. It is also important to ensure that any leaking joints are sealed before the new concrete is attached. The cost of this repair method is $45/LF based on ODOT Bridge Maintenance Manual and ODOT expected life of this repair is 15 years (ODOT 2012).

The typical steps used by the U.S. military for concrete abutment and wingwall repair are (Army and Air Force 1994):

- Excavate to set dowels and forms.
- Remove deteriorated concrete by chipping and blast cleaning.
- Drill and set tie screws and log studs to support formwork.
- Set reinforcing steel and forms.
- Apply epoxy-bonding agent to the concrete surface.
- Place concrete, cure and remove forms.
- Install erosion control materials as necessary.

Figure 3.22 shows the repair of deteriorated concrete abutment and Figure 3.23 shows the repair of broken or deteriorated wingwalls.

3.4.2 Concrete Abutment Stability

In addition to providing end support for the bridge deck, an abutment often acts as a retaining wall and is subject to horizontal earth pressures. These pressures coupled with the dynamic loading of vehicle traffic have the tendency to push out the abutment (Army and Air Force 1994). If the abutment is unstable, it may be shored or fixed. In order to fix an unstable abutment, a deadman or a pile anchor is placed approximately 3

feet on either side of bridge and about 60 to 100 feet from the face of the abutment as shown in Figure 3.24. A hole is drilled in the wing wall on both sides of the abutment and a beam is placed on the outside of the cap. A restraining rod or cable is run from the deadman through the hole in the wall and is connected to the beam. A tension force is applied to rod or cable to pull the abutment back to its original position and to hold it in place (Army and Air Force 1994). It is also common to drill new weep holes in the abutment wall in order to relieve some of the pressure behind the wall caused by soil saturation (Raina 1996).

3.4.3 Abutment Sliding

Typically, abutments are designed so that the vertical loading is large enough to impart a friction force between the abutment and the soil. If there are not enough vertical loads, and too much lateral earth pressure, then the abutment may be prone to sliding. While this particular form of abutment failure is not typical, it is still a possible problem if the correct conditions are met. The recommended repair procedure for this failure is to install a pile system that utilizes soldier beams with a sheet pile or tie back system (Raina 1996).

3.4.4 Abutment Settlement

Settlement can be a serious concern for all foundation elements within a bridge substructure. Abutment settlement can occur when the shearing resistance of the foundation material is not large enough to prevent soil rupture (Raina 1996). A large amount of abutment settlement can result in jammed deck joints, cracked slabs, shifted

bearings, cracking, rotating and sliding (Raina 1996). An excessive amount of settlement has the potential to collapse the entire structure, and highlights the need for an effective inspection program. Typical repair procedures for abutment settlement involve cement grouting and chemical grouting to increase the shearing resistance of the foundation material (Raina 1996). If the abutment is a stub type abutment, then the abutment can be made integral with the structure, which forces the structure to support the abutment. This procedure can cost $50,000 and is only estimated to last 15 years (ODOT 2012).

3.4.5 Abutment Slope-Failure

Abutment slope failure occurs when the soil lacks adequate cohesion, and the foundation is not set deep enough into the soil. Typically, when the loading applied at the embankment or the footing creates shear stresses that exceed the strength of the soil, slope-failure slides occur. Slope failures typically result in lateral movements of the embankment (Raina 1996). This particular failure can be seen in Figure 3.25. For the failure to occur, the imposed shear stresses must be greater than the soil shear strength. A typical repair procedure for this failure is the use of a tie-back system to anchor the abutment into the soil (Raina 1996). A successful repair for the slope-failure can be seen in Figure 3.26. It can be seen in the figure that the anchors are extended into bedrock, and a pile wall is created to prevent heaving at the toe of the abutment.

3.4.6 Tensile Cracking of Abutment Wall

If the abutment was designed incorrectly, it may prove to be structurally insufficient and produce tensile cracks along the length of the abutment. These cracks

have the potential to cause a complete failure of the abutment, and should be treated as a serious concern (Raina 1996). There are two possible solutions should the abutment prove to be inadequate for the lateral earth pressure. A wall of sheet piling can be placed behind the abutment in order to resist the majority of the lateral earth pressures (Raina 1996). Special attention should be paid to the sizing of the sheet piles, so they adequately protect the abutment. The other solution is to create a new wall in front of the existing abutment and installing a tie-back system that extends through the existing abutment (Raina 1996). Both solutions are effective, but accessibility may be the controlling factor when deciding which repair method should be implemented.

3.5 Concrete Bridge Seat Repair

Concrete bridge seats may be damaged due to deterioration of concrete, corrosion of the reinforcing bars, friction from the beam or bearing devices sliding directly on the seat, and the improper design of the seat which results in shear failure (Army and Air Force 1994). There are three major repair methods: abutment and cap seat repair, concrete cap extension, and beam saddle addition. The specific cause of the problems should be determined before choosing the proper repair method. For all of these methods, the superstructure of the bridge will be jacked up for repairing the seats. Therefore, a detailed plan of the jacking requirements should be made for repairing bridge seats.

3.5.1 Abutment and Cap Seat Repair

Repairing the cap seat at a bridge abutment requires lifting (or temporary shoring)

of the superstructure. In general, it is beneficial to saw cut around the concrete that is to be removed. Remove deteriorated concrete to the horizontal and vertical planes exposing sound concrete. Add any required reinforcing steel and construct necessary formwork. Apply bonding material, place concrete and replace bearings if necessary (Army and Air Force 1994). A typical repair of concrete bridge seats is shown in Figure 3.27.

3.5.2 Concrete Cap Extension

This repair restores adequate bearing for beams that are deteriorated or sheared at the point of bearing by anchoring an extension to the existing cap. The typical procedure involves locating and drilling holes to form a grid in the existing cap and install concrete anchors for subsequent bolting. A welded reinforcing steel grid is then anchored to the inside head of the anchor bolts. A form should be constructed around the reinforcing steel grid with acceptable cover around the sides of the bolts. Roofing paper should be placed against the bottom of the beam and concrete is pumped into the form (Army and Air Force 1994). A typical concrete cap extension is shown in Figure 3.28. The concept of extending caps has been done throughout the Midwest, when the correct deterioration conditions arise.

3.5.3 Beam Saddle Addition

The saddle restores bearing for beams and caps where they have deteriorated or been damaged in the bearing area (Army and Air Force 1994; Wipf et al. 2003). A structural steel saddle can be installed over the cap and under the beam to support the beam. The saddle should be designed to support appropriate loads and be sized

according to the actual width of beam and cap in the field. After the steel saddle members are fabricated, they should also be painted to prevent corrosion. The following procedure schematically outlined in Figure 3.29 has been recommended and followed (Army and Air Force 1994; Wipf et al. 2003):

- Prepare top of cap and beam for good bearing contact between saddle and concrete.
- Cut Neoprene bearing pads to cover areas of both the cap and the beam that is in contact with the saddle.
- Set saddle members at right angles to the cap.
- Install the saddle sections under the beam.
- Place bearing pads before fastening the two sets of saddle members to each other (see Figure 3.29).

3.6 Concluding Remarks

Concrete repairs are the most common repairs conducted throughout Wisconsin. Due to the wide application of concrete throughout bridge substructures, there are numerous possible forms of deterioration that could occur. Selecting the most appropriate repair for a substructure element based on its location and deterioration is crucial. Repairs that address the true cause of the deterioration should be implemented more often. Adequately dealing with chloride embedded concrete is necessary to increase the service life of both repairs and bridges.

3.7 References

Army and Air Force (1994), *Bridge Inspection, Maintenance, and Repair*, Joint Departments of the Army and Air Force, TM 5-600/AFJPAM 32-1088.

Australian Rail Track Corporation LTD. (ARTC) (2003), *Bridge Repair Manual – RC 4300*, 245pp.

CADOT (2006), *Maintenance Manual Volume 1Chapter H: Bridge*.

Fox Industries/Simpson Strong Tie. (2011). *Pile Restoration and Protection.* Baltimore: Author.

NYSDOT (2008), *Cathodic Protection Systems: Use of Sacrificial or Galvanic Anodes on In-Service Bridges*, pp. 24.

ODOT (2012), *ODOT On-line Bridge Maintenance Manual*, http://www.dot.state.oh.us/Divisions/HighwayOps/Structures/bridge%20operations%20and%20maintenance/PreventiveMaintenanceManual/Pages/default.aspx , last access on March 30, 2012.

Raina V.K. (1996). *Concrete Bridge: Inspection, Repair, Strengthening, Testing and Load Capacity Evaluation.* New York: McGraw-Hill.

Sohanghpurwala, A.A. (2009), *Cathodic Protection for Life Extension of Existing Reinforced Concrete Bridge Elements*, National Cooperative Highway Research Program (NCHRP) Synthesis 398, Transportation Research Board, Washington D.C., pp. 48.

Teng, J.G. and Jiang, T. (2008). Strengthening of Reinforced Concrete (RC) Columns with Fibre-Reinforced Polymer (FRP) Composites. In L.C. Holloway and J.G. Teng (Ed.), *Strengthening and Rehabilitation of Civil Infrastructure Using Fibre-Reinforced Polymer (FRP) Composites* (pp. 158-194). Boca Raton: CRC Press.

Tilly, G.P. (2011). Durability of Concrete Repairs. In M.C. Grantham (Ed.), *Concrete Repair: A practical guide* (pp. 231-247). New York: Taylor and Francis.

Vector Corrosion Technologies. (2010). *Vectrode Ti Tape Anode* [Brochure].

Vector Corrosion Technologies (2011). *Galvashield XP Product Line* [Brochure].

Vector Corrosion Technologies. (2011). *Ebonex* [Brochure].

Vector Corrosion Technologies. (2011). Galvanode ASZ+ [Brochure].

Wipf, T.J., Fanous,F.S., Klaiber, F.W., and Eapen, A.S. (2003), *Evaluation of Appropriate Maintenance, Repair and Rehabilitation Methods for Iowa Bridges*, Iowa Department of Transportation, Iowa DOT Project TR-429.

WisDOT (2005) *Fiber Wrap Column Reinforcing*, Special Provisions Index, http://on.dot.wi.gov/dtid_bos/extranet/structures/specials/specials-index.htm , last access on February 24, 2012.

WisDOT (2005) *Pier Column Encasement*, Special Provisions Index, http://on.dot.wi.gov/dtid_bos/extranet/structures/specials/specials-index.htm , last access on February 24, 2012.

Figure 3.1 Map cracking in a pier (Army and Air Force 1994)

Figure 3.2 Corrosion of a pier column (West et al. 1999)

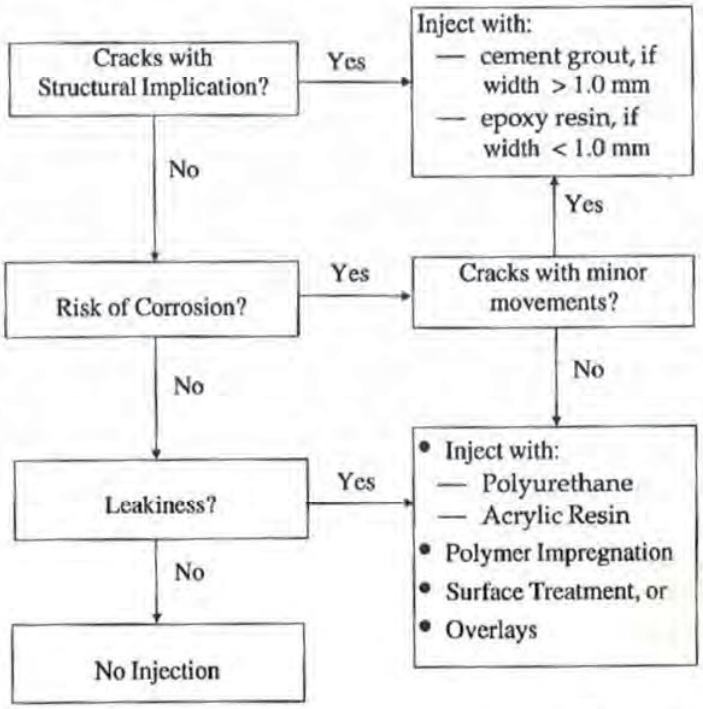

Figure 3.3 Crack Repair Decision Flow Chart (Raina 1996)

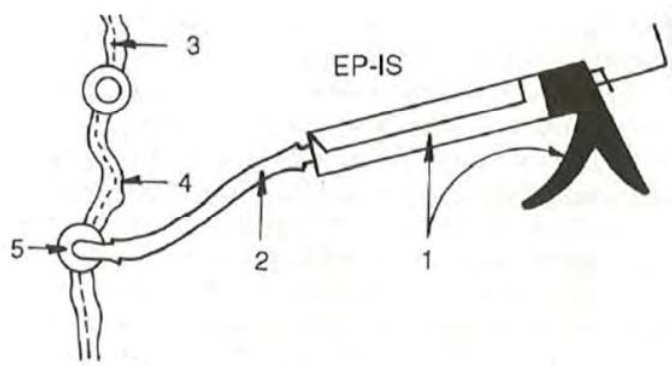

Fig. 6.9 Crack injection

1. Injection gun. 2. Plastic tube. 3. Crack. 4. Thixotropic compound.
5. Flanged injection nipple.

Figure 3.4 Crack Injection Diagram (Raina 1996)

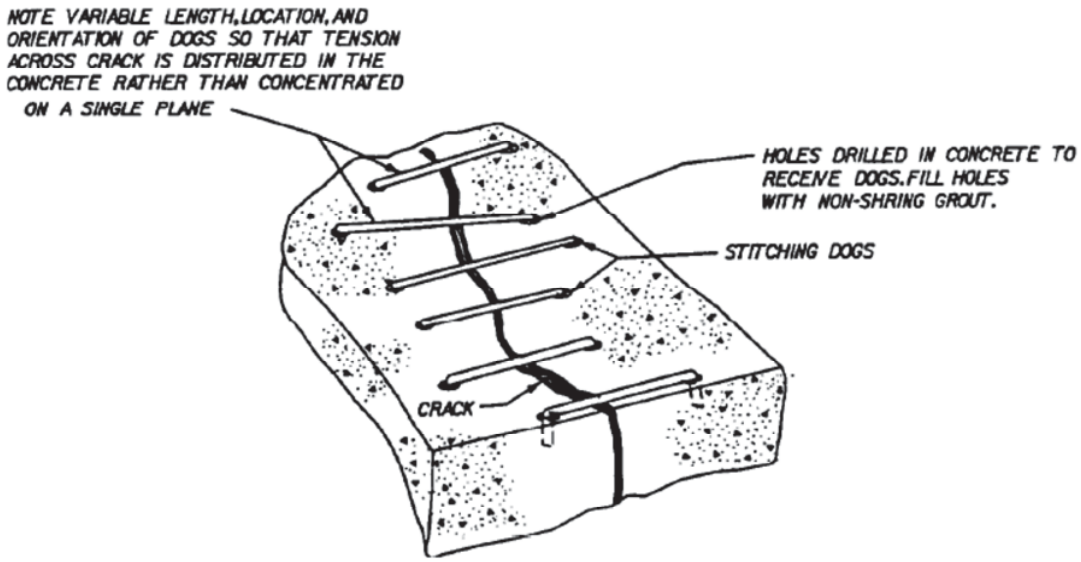

Figure 3.5 Stitching Crack Repair (Army and Air Force 1994)

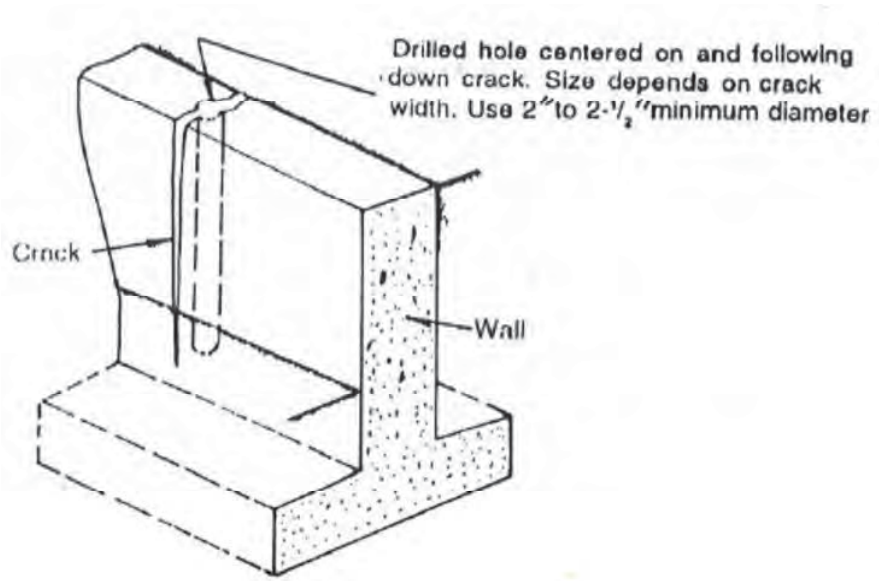

Figure 3.6 Drilling and Plugging Crack Repair (Raina 1996)

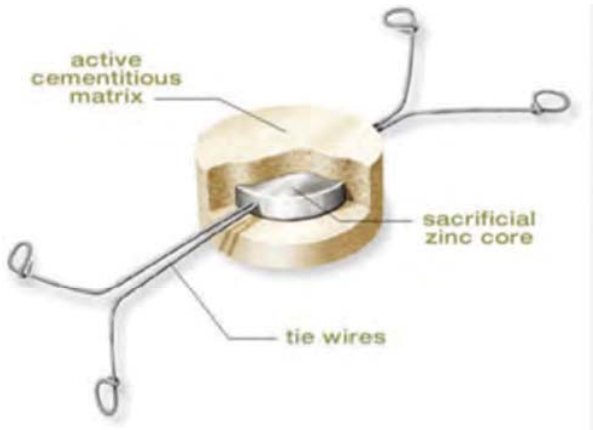

Figure 3.7 Zinc Anode Composition (NYSDOT 2008)

Figure 3.8 Sacrificial Anodes on Concrete Column (NYSDOT 2008)

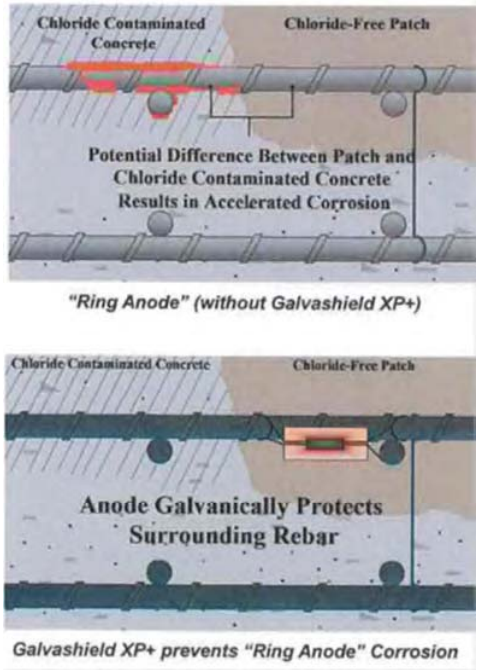

Figure 3.9 Sacrificial Zinc Anode Protection Placement (Vector *Galvashield* 2011)

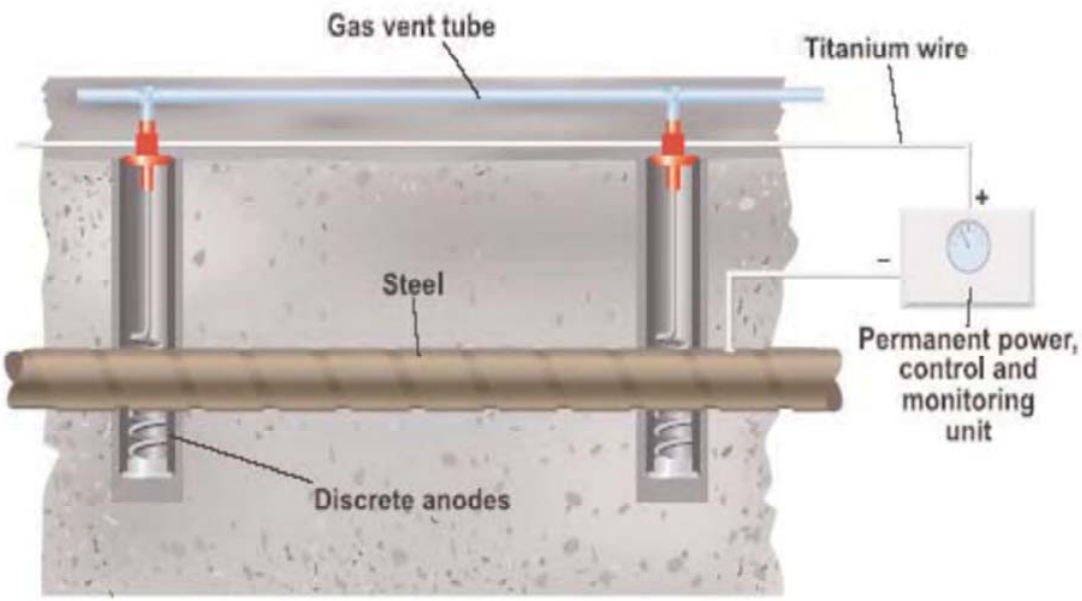

Figure 3.10 Impressed Current Discrete Anode Placement (Vector 2011)

Figure 3.11 Impressed Current Surface Mounted Tape Placement (Vector 2011)

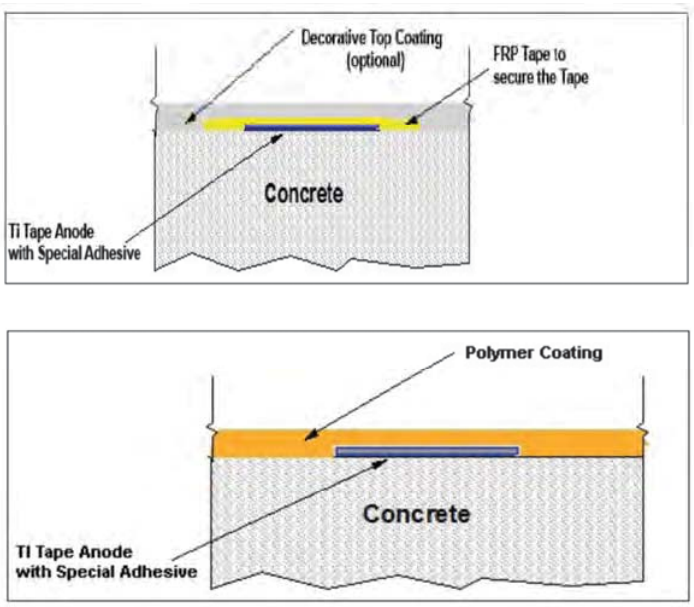

Figure 3.12 Proper Surface Mounting and Coating of Anode Tape (Vector 2011)

Figure 3.13 Fiberglass Jacket Pile Repair (Fox Industries/Simpson Strong Tie 2011)

Figure 3.14 Constructed Fiberglass Jacket Repair (Fox Industries/Simpson Strong Tie 2011)

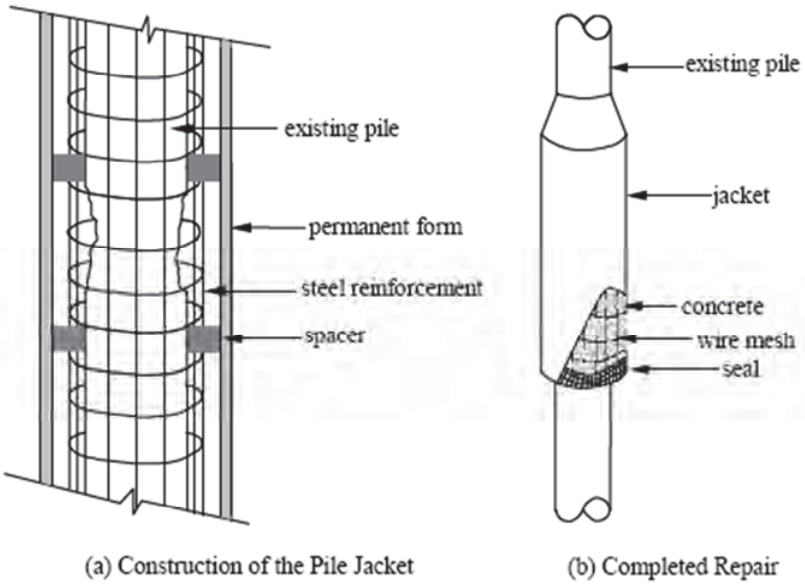

Figure 3.15 Pile jacketing (Wipf et al. 2003)

Figure 3.16 Jacketing of concrete piles (Wipf et al. 2003)

Figure 3.17 FRP wrapping on a concrete pile (Sen and Mullins 2007)

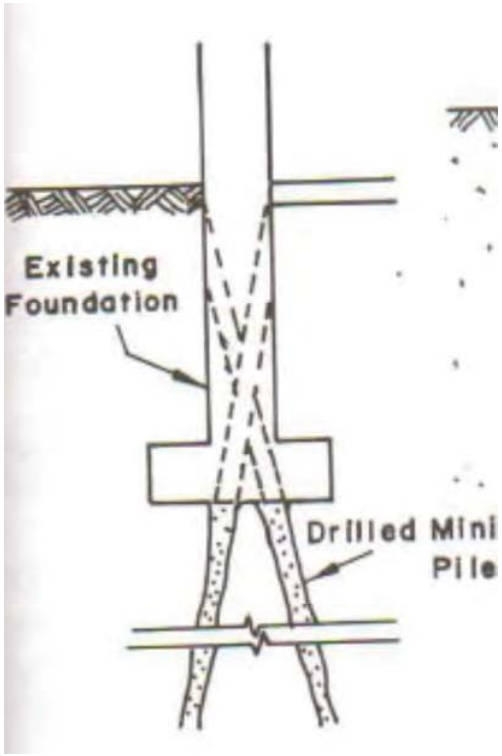

Figure 3.18 Mini Pile Installation (Raina 1996)

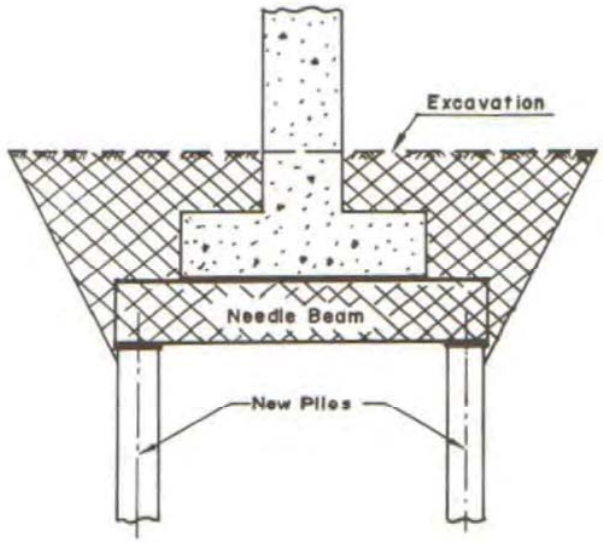

Figure 3.19 Underpinning with a Needle Beam (Raina 1996)

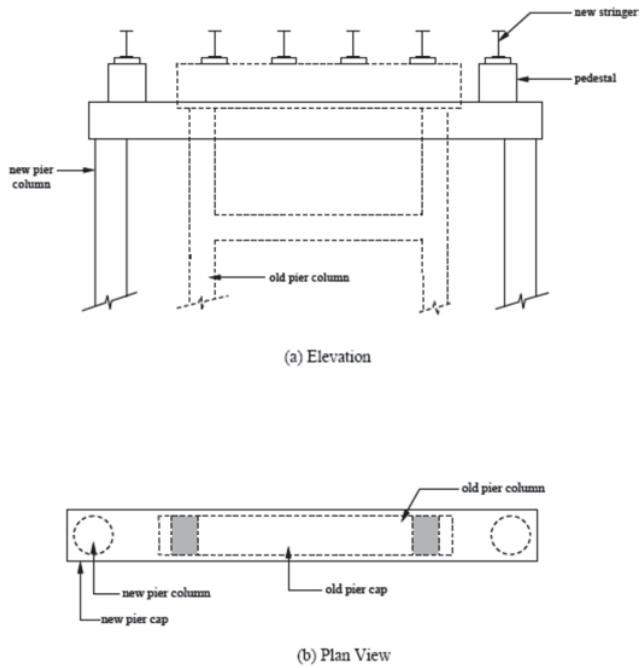

Figure 3.20 Widening concrete piers (Wipf et al. 2003)

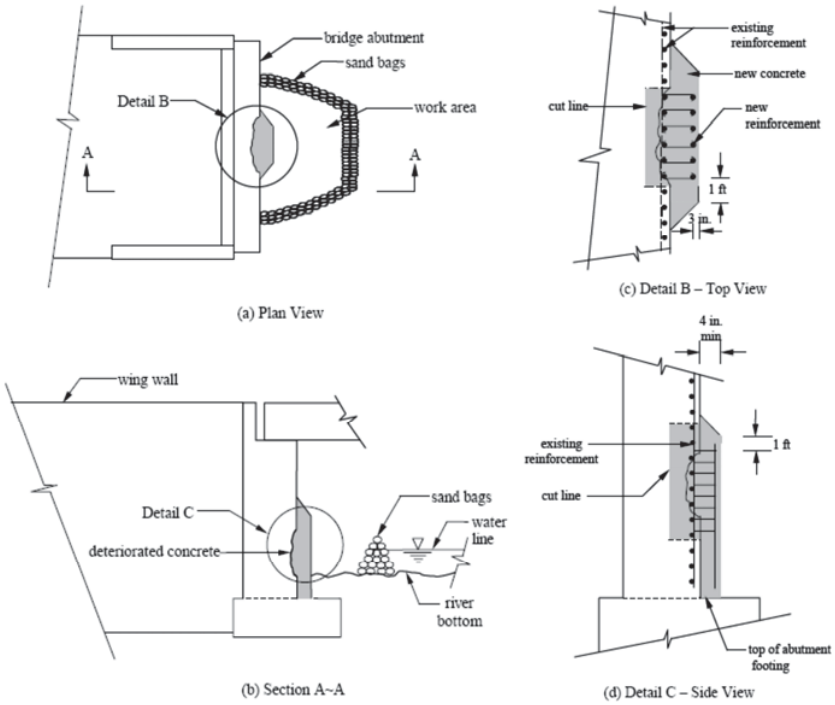

Figure 3.21 Repair of concrete abutments (Wipf et al. 2003)

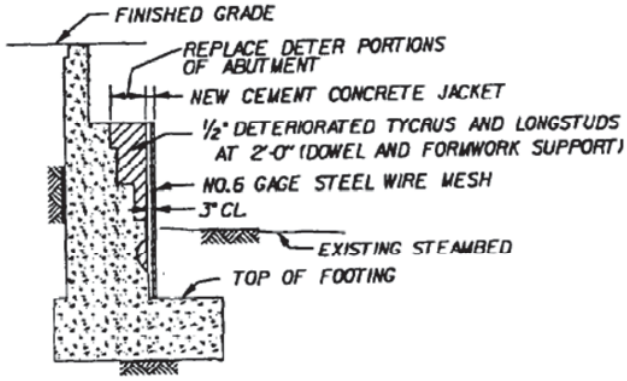

Figure 3.22 Repair of deteriorated abutments (Army and Air Force 1994)

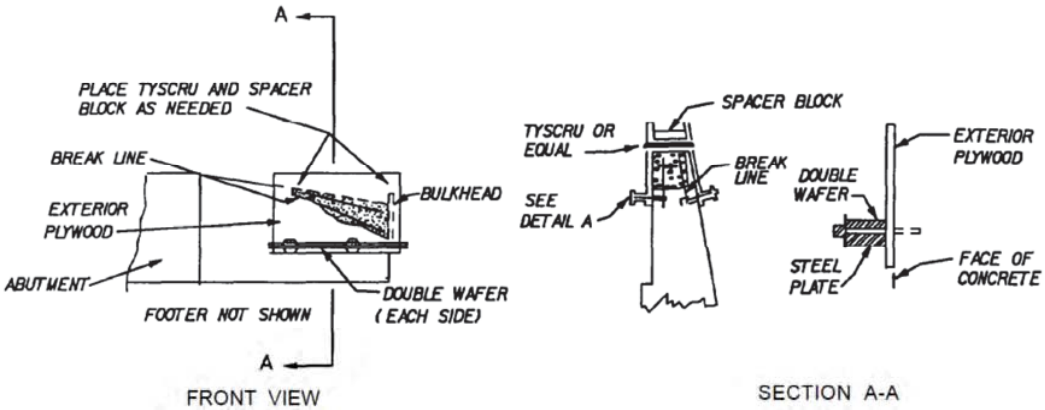

Figure 3.23 Repair of broken or deteriorated wingwalls (Army and Air Force 1994)

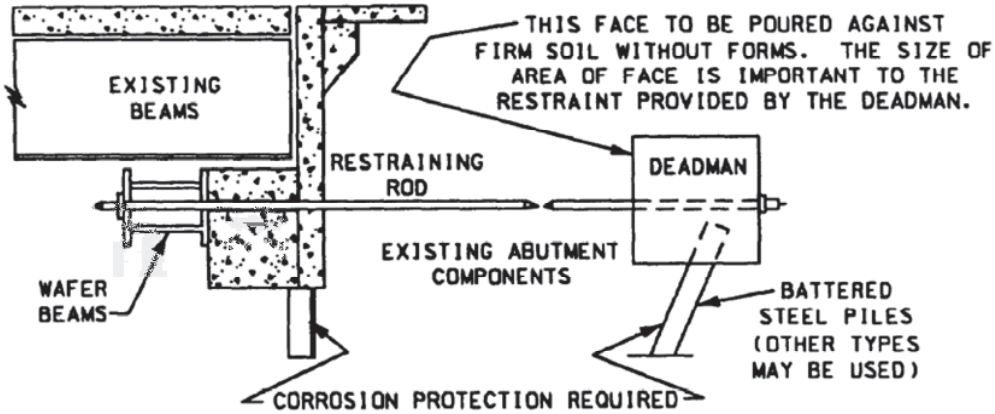

Figure 3.24 Abutment held in place with a deadman (Army and Air Force 1994)

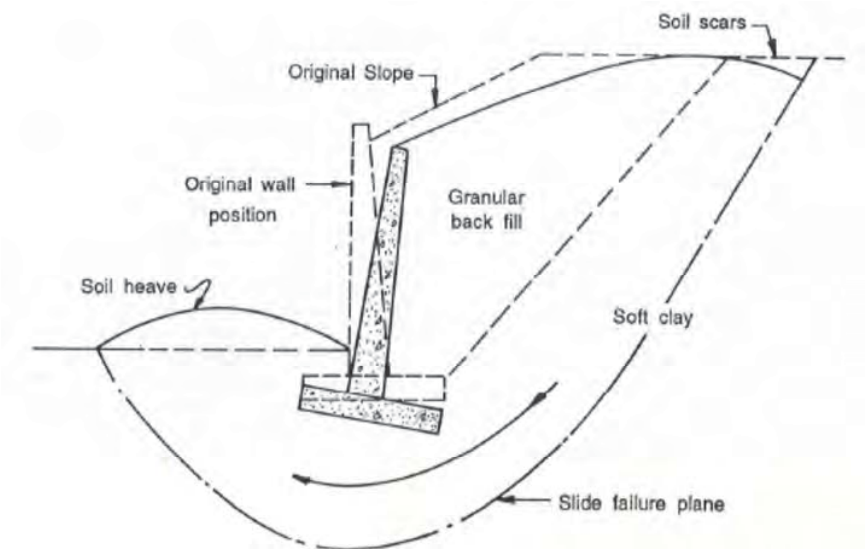

Figure 3.25 Abutment Slope Failure (Raina 1996)

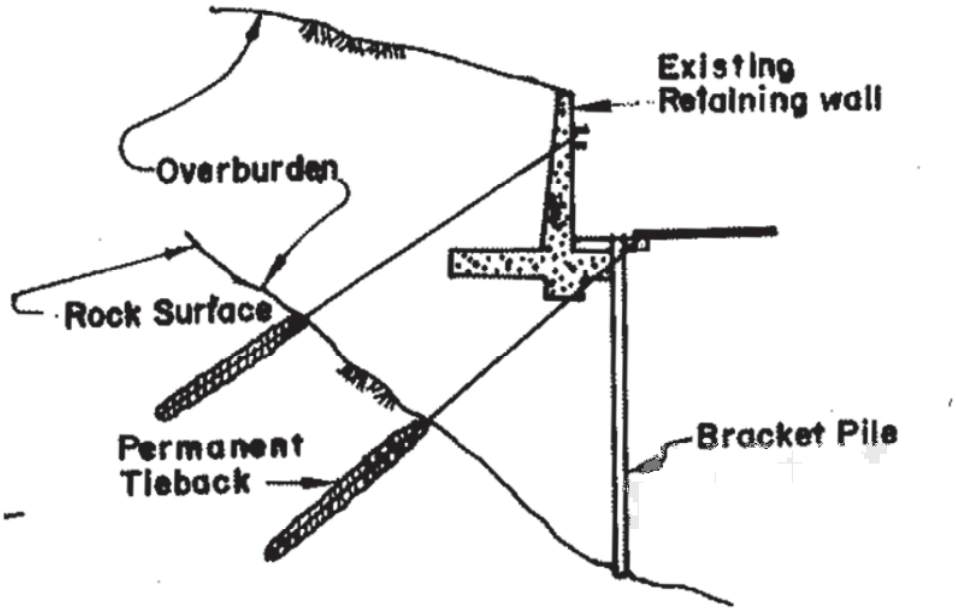

Figure 3.26 Slope Failure Repair (Raina 1996)

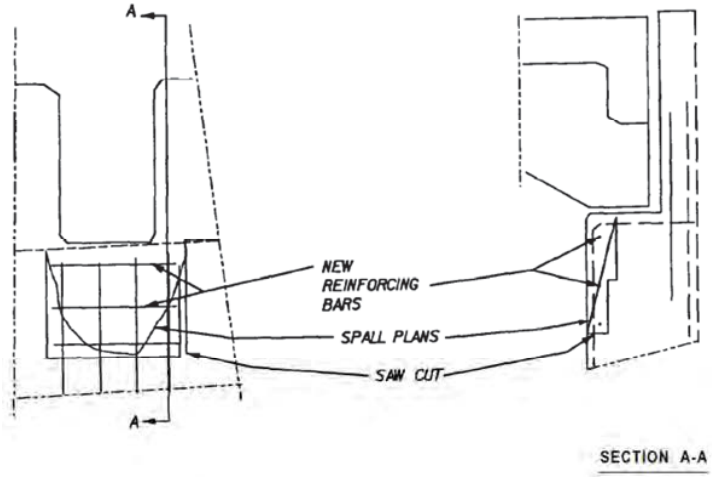

Figure 3.27 Typical repair of concrete bridge seats (Army and Air Force 1994)

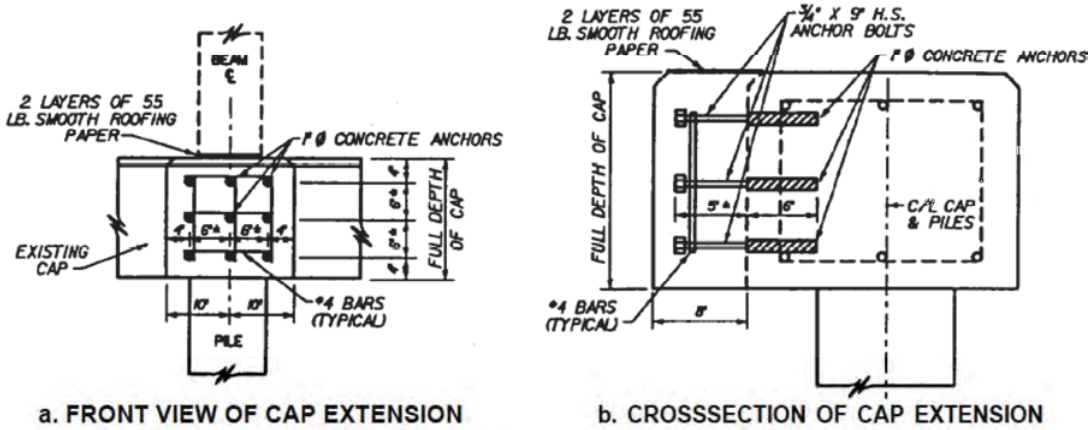

Figure 3.28 Typical concrete cap extension to increase bearing surface (Army and Air Force 1994)

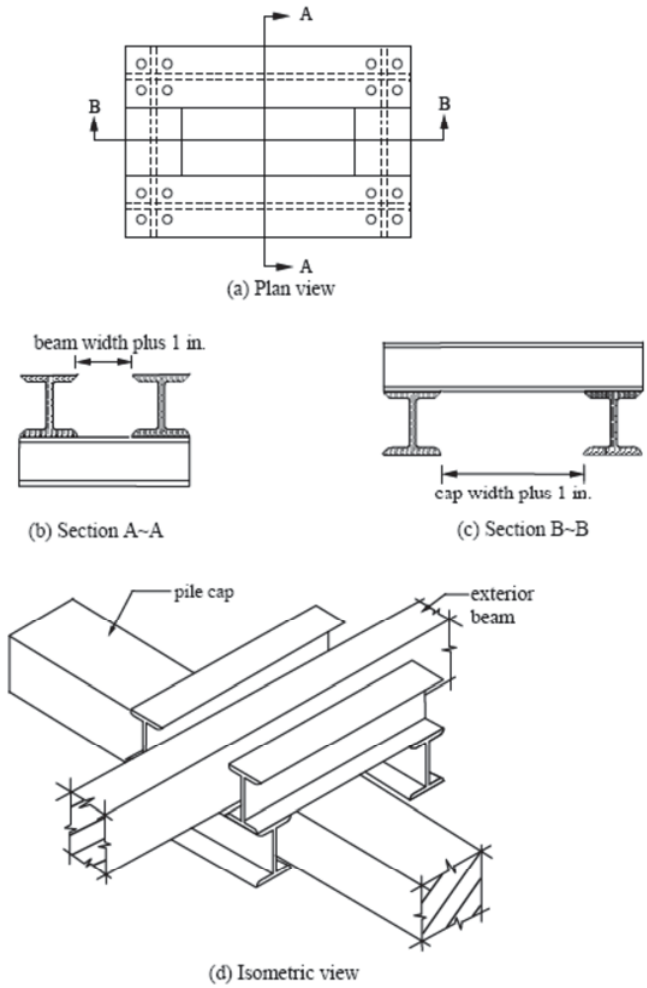

Figure 3.29 Installation of a beam saddle (Wipf et al. 2003)

Chapter 4 Timber Substructures

Timber is commonly used to build pier columns, pier caps, and piles in bridges. If it is properly treated or protected, timber is quite durable. However, it is not a durable material in all environments. When moisture exists, wood may suffer from fungi decay as shown in Figure 4.1. Fungus decay can be avoided only by treatment with appropriate preservative agents. Insects may seek food and/or shelter in timber substructure components and vermin tunnels are often found in timber substructure components. Other deterioration scenarios found in timber substructures include weathering and warping caused by repeated dimensional changes due to repeated wetting, chemical attack, fire, abrasion and mechanical wear, collision or overloading damage, and unplugged holes (Army and Air Force 1994).

A chipping hammer, an ice pick, and an increment borer (which is a tool that allows one to bore to different depths within the timber component using something like a drill bit) are the primary tools used for assessing wood deterioration. The most common repairs for timber structures are retrofitting timber connections, removing the damaged portion of the timber member and splicing in a new timber, and removing and replacing an entire element or component (Army and Air Force 1994). Deteriorated or damaged timber substructures can be repaired by a variety of methods as discussed in detail in following sections.

4.1 Timber Pile Repair

Moisture control and decay were noted as a major cause of deterioration in timber piles. Vermin tunneling and hollowing of the insides of the timber members can cause significant cross-section loss. This section loss can then reduce the strength of the member. Timber piles can decay or deteriorate to the point where they lose structural integrity. For a timber bent, typical deterioration points are the pile, cap and bracing as shown in Figure 4.2. The key to timber pile repair is that the existing piles must have good bearing (Army and Air Force 1994). The following sections of the review outline a variety of techniques that are often used to repair compromised piles in timber substructures.

4.1.1 Pile Posting

There have been cases where a timber pile's cross-section is completely compromised or damaged. A technique called pile posting is a very convenient technique for replacing entire segments of timber pile. A schematic illustrating the concept of pile posting and its implementation is shown in Figure 4.3. The entire deteriorated section of the timber pile is removed and the new section is placed with wedges to maintain a gap of 1/8 – 1/4 inch at both top and bottom. Where new and old sections meet, steep downward angled holes are bored and spaced 90 degrees apart. The perimeter of each joint is then sealed using epoxy gel, plastic film or tape. The boreholes are then used to fill the gaps at the joint with epoxy. Insertion of steel pins into the boreholes immediately following the epoxy placement effectively bonds the new pile segment to the existing pile (MnDOT 2011).

It should be noted that pile posting requires shoring mechanisms be present to temporarily support the timber pile's loading while a portion of the pile's length is being removed. This can make pile posting more expensive than other techniques. There are cases where the damaged location of the pile extends below the waterline. In these cases, it has been recommended that the pile be cut approximately 2 feet below the mud-line or the permanent moisture line and replaced with the new section (Army and Air Force 1994). Since the pile posting procedure replaces the existing pile with a similar timber element, continued deterioration may be a concern. If there is extensive insect activity, or environmental degradation, further protection should be investigated. An impervious barrier may be implemented in addition to the pile posting if further deterioration is a concern.

4.1.2 Concrete Jacketing

There may be situations where a significant length of timber pile needs to be replaced with subsequent splicing to an existing pile section. The posting procedure discussed previously could be used with a long section of pile in lieu of a short replacement section. However, concrete jacketing has also been proposed for replacing significant-length timber piles and even an entire timber pile to a location below the mud-line. The reinforced concrete jacket method has been recommended in situations when the timber pile has lost 15 to 50 percent of its cross-sectional area (Army and Air Force 1994). This simple procedure includes a reinforced concrete jacket with a minimum cover of 6 in. around the pile placed. This concrete jacket extends a distance above and below the splice region as shown in Figure 4.4.

The concrete jacket is very similar to the concrete encasement method used for concrete pier columns. If the concrete cracks and exposes the deteriorated section to environmental causes of decay, the pile could continue to deteriorate (MnDOT 2011). Since concrete deterioration and timber deterioration are caused by different substances, the concrete jacket offers a more redundant form of protection for timber members than for concrete members. For the timber member to continue to deteriorate, the concrete must crack, potentially from chloride intrusion, which does not pose as much of a threat to the timber member. The potential for both forms of deterioration to attack the repair is more unlikely than the chance of a simple pile posting deteriorating.

4.1.3 Pile Restoration

Pile restoration is a repair technique where only a wedge shaped portion of piling is replaced rather than the removal of the entire cross section (MnDOT 2011). In this case the deterioration is localized to a portion of the pile cross-section and only the damaged wedge section is removed. A replacement section is then fabricated using treated material. The replacement section is cut slightly smaller and is bonded to the existing section by applying epoxy to the surfaces of the new and old sections. A metal band is used to hold the new section in place while the epoxy cures, as shown in Figure 4.5, and subsequently removed.

4.1.4 Pile Augmentation

Pile augmentation is a mechanical repair method that strengthens members with additional material. Reinforcing steel gets placed around the pile in the area of

deterioration and the section is wrapped in a fiber reinforced plastic or fabric. The jacket is then filled with concrete. This repair is done in order to prevent further deterioration. The use of a reinforced concrete jacket for timber pile augmentation is shown in Figure 4.6. The deteriorated section is not removed when a reinforced concrete jacket is used to repair timber piles. There is some question with regard to the load transfer mechanisms present in the pile augmentation approach. For example, the flow of axial forces through the timber pile to the reinforced concrete jacket and back to the timber pile is questionable. This technique is recommended for inhibiting further deterioration of an existing pile when its load carrying capacity with the compromised cross-section remains sufficient.

Another method of pile augmentation involves the use of a fiberglass jacket. Similar to the aforementioned procedure, fiberglass jackets are placed around the existing pile and a special epoxy grout is poured inside. Many fiberglass jacket repairs do not require additional reinforcing steel since they provide adequate strength and protection for the existing timber pile. If the section loss is greater than 25%, then a steel reinforcing cage can be used with a cementitious grout in addition to the epoxy grout. The epoxy grout is placed at the top and bottom of the void to effectively resist all water penetration. The maximum allowable water absorption for a fiberglass jacket is 1% (Fox Industries/Simpson Strong Tie 2011). An additional benefit of utilizing fiberglass jackets is that the repair can frequently be accomplished without the need of dewatering (Fox Industries/Simpson Strong Tie 2011). Fiberglass jackets are filled with an epoxy grout that has average tensile bond strength of 345 psi between the grout and the jacket (Fox Industries/Simpson Strong Tie 2011). Figure 4.7 shows a deteriorated timber pile prior to

installation of a fiberglass jacket, and Figure 4.8 shows the same pile while the jacket is being installed. Costs are highly dependent upon site conditions and accessibility, but typical costs range from $600 per linear foot to $1,200 per linear foot (Fox Industries/Simpson Strong Tie 2011).

4.1.5 PVC Wrap

For a pile with 10 to 15% of section loss, a 30-mil (milli-inches) PVC sheet can be used to sheath the damaged section (Army and Air Force 1994). Using a PVC sheet, a half-round wood pole piece is attached to the vertical edge of the PVC sheet to help in the wrapping process. Creosote is typically used as a method of protecting timber piles because it slows deterioration. A pile with creosote bleeding from its surface must first be wrapped with a sheet of polyethylene film prior to installing the PVC wrap to prevent a reaction between the PVC and the creosote. Staple lengths of polyethylene foam, 1/2 by 3 inches, about 1 inch from the upper and lower horizontal edges of the sheet. Fit the pole pieces together with one inserted into a pocket attached to the bottom of the other pole. Roll the excess material onto the combined pole pieces and tighten around the pile with a special wrench (Army and Air Force 1994). The PVC wrap installation is shown in Figure 4.9.

4.1.6 FRP Wrap

The use of an FRP wrap for timber pile repair is very rare. While FRP wraps on timber piles are possible; there are more convenient solutions, such as a preformed fiberglass jacket. Since FRP wraps need to be embedded within the grout, they become

very difficult to place in a wet condition. There is also concern that the timber could cause tearing and deterioration of the FRP wrap if it is rough or splintered. Since this is not a common repair, following manufacturer's specifications as well as the WisDOT special provisions is essential.

4.1.7 Pile Shimming

If a bridge settles or bearing for the superstructure is lost due to the deterioration of timber piles in a region localized to that in direct contact with a timber pile cap, pile shimming can be used. In order to add shims, struts are placed adjacent to the pier and the stringers are jacked off the cap to an elevation 1/2 inch higher than desired. After the loads are removed from the piles, the decayed top parts of the piles are cut. A shim 1/4 inch less than the space between the cap and pile head is placed into position. Then the jacks are removed and the shim is nailed to the piles (Army and Air Force 1994; Wipf et al. 2003). Fish plates are also nailed across the repair as shown in Figure 4.10.

4.2 Supplemental Piles

If the necessary equipment is available, replacing a damaged pile may be easier than repairing it (AASHTO 2008). Replacing a damaged pile from above will likely require a hole to be cut in the bridge deck. The new pile is then driven through the hole. Therefore, the deck must be capable of supporting the necessary pile driving equipment, and repair of the roadway surface and deck will be needed. New piles will also likely need to be located at an angled or offset relative to the existing piles to allow for driving operations in the vicinity of existing substructure components. Replacement or

supplemental piles may be timber or steel shapes.

4.2.1 Steel Piles

In some cases, supplemental steel H-piles are added to strengthen a timber pile bent that has been weakened due to deterioration or excessive settlement (Wipf et al. 2003). The piles are driven to a level sufficiently below the pier cap to accommodate a new support beam, and then are welded or bolted to the support beams. The support beam must be fit snug against the pier cap. In some cases, shim plates may be used to provide uniform bearing between the top flange of the support beam and the bottom of the pier cap (Wipf et al. 2003). After new piles are in their positions, the holes in the deck should be repaired and patched in a suitable manner. A schematic drawing of how to properly add supplemental steel piles is shown in Figure 4.11. Figure 4.12 shows how an actual bridge substructure was repaired by adding supplemental steel piles and sufficient cross bracing. It can be seen in Figure 4.12 that a jacket would have been impossible to install around the deteriorated piles due to the proximity of the piling to the abutment. Supplementary steel piles were the best solution due to the constricting site conditions.

4.2.2 Timber Piles

Supplemental timber piles can also be installed under a sound pier cap to provide support after existing piles have deteriorated or settled out of position (Wipf et al. 2003). This repair involves a similar procedure as that for adding supplemental steel piles. The new timber pile is driven into its position through the hole in the deck, and then is cut off

so that there will be even bearing between the pile cap and the new support beams. The support beam is wedged into position on top of the new piles as shown in Figure 4.13. The deck holes are repaired after the new piles are installed.

4.3 Timber Sway Bracing Repair

If a timber bent becomes unstable due to deterioration or damage to timber diagonal bracing, it can be repaired by providing new sway bracing elements. If the original timber bent does not have sway bracing, a new sway bracing system or components can be installed using the following procedure (Wipf et al. 2003). Nails can be used to temporarily fasten the sway bracing to the timber piles. Holes can then be drilled through both the bracing and the piling. All holes should be treated with a hot oil preservative before installing the bolts. Placement and tightening of bolts with washers can then take place. If there is damaged or deteriorated sway bracing in the existing pile bent, the deteriorated or damaged bracing members are cut off at the pile nearest to the terminus. The new members are installed by using existing bolt holes in the piles where it is possible. If the sway bracing must be realigned, new holes in the piles are drilled. Both old and new holes should be treated with a hot oil preservative followed by a coating of hot tar (Wipf et al. 2003). Figure 4.14 shows the installation of timber pile sway bracing.

4.4 Timber Sill Abutment Repair

Timber sill (bench-type) abutments usually consist of logs stacked on top of one another to form a wall to transfer vertical loads from a bridge superstructure to a concrete

footing as shown in Figure 4.15. These particular abutment types are not common in the United States' infrastructure. However, they are included in this document for completeness. A timber sill abutment may become compromised as a result of differential vertical settlement and/or rotation. Furthermore, collapse due to rotting of the timber elements and the lateral earth pressure loads can occur (QGDMR 2005). The Queensland Government Department of Main Roads categorizes bridges as 5 different prioritization levels for maintenance purposes. In its *Timber Bridge Maintenance Manual*, only prioritization levels 3 to 5 are defined and they are summarized in Table 4.1. Based on the different prioritization levels, it has different responses for the timber sill abutment as shown in Table 4.2. The details of these repair activities can be found in the *Timber Bridge Maintenance Manual* (QGDMR 2005).

4.5 Timber Corbel Repair

A timber corbel is the support for the ends of the timber girders at piers, its main function is to transfer vertical and horizontal girder loads at headstock. Timber corbels are not common in the United States, but the repair techniques outlined here may have application in more common timber substructure systems. A timber corbel consists of round logs or sawn octagonal members as shown in Figure 4.16. It may fail by crushing or collapse with severe longitudinal splitting due to section loss from piping caused by insect or fungi attack. If excessive notching at headstock seating locations occurs, it may also fail due to bending (QGDMR 2005).

Once the timber corbel is damaged, it is typically replaced using the following procedure (QGDMR 2005):

- Properly shore overlying girder to remove all load from the corbel.
- Remove or cut out corbel/girder and corbel/headstock bolts. This will generally require lifting of kerbs (curbs) and overlying deck planks.
- Remove defective corbel.
- Install new corbel including drilling and bolt assembly. If existing bolt holes cannot be reused, a modified hold down to the headstock may be required.
- Remove jacks to transfer loads back on to corbel.
- Replace deck planks and kerbs (curbs).

4.6 Concluding Remarks

Timber members are only common in substructures as piles. While some bridges utilize timber for bent caps, sway bracing, abutments or corbels; these bridges are becoming less common. Repair procedures relevant to timber piles were given the most focus in order to keep the report relevant. There are a number of ways to protect a timber pile that has deteriorated at the mud line. Concrete encasements, fiberglass jackets, FRP wraps, PVC wraps and steel collars all provide viable options for protecting a deteriorated pile. Typically a cheaper, but less robust, alternative is to replace the deteriorated section of timber with a new treated section. Whichever process is selected, attention to the deterioration mechanism and construction procedure is essential.

4.7 References

AASHTO (2008), *AASHTO Maintenance Manual for Roadways and Bridges, 4th Edition*, American Association of State Highway and Transportation Officials (AASHTO), Washington, DC 20001.

Army and Air Force (1994), *Bridge Inspection, Maintenance, and Repair*, Joint Departments of the Army and Air Force, TM 5-600/AFJPAM 32-1088.

Fox Industries/Simpson Strong Tie. (2011). *Pile Restoration and Protection.* Baltimore: Author.

MnDOT (2011), *Maintenance and Rehabilitation of Timber Bridges*, MnDOT Timber Repair Manual, http://www.dot.state.mn.us/bridge/documentsformslinks/inspection/USFS-TimberBridgeManual/em7700_8_chapter14.pdf. last access on April 2, 2012.

Queensland Government Department of Main Roads (QGDMR) (2005), *Timber Bridge Maintenance Manual*, http://www.tmr.qld.gov.au/Business-and-industry/Technical-standards-and-publications/Timber-bridge-maintenance-manual.aspx, last access on April 2, 2012.

Wipf, T.J., Fanous,F.S., Klaiber, F.W., and Eapen, A.S. (2003), *Evaluation of Appropriate Maintenance, Repair and Rehabilitation Methods for Iowa Bridges*, Iowa Department of Transportation, Iowa DOT Project TR-429.

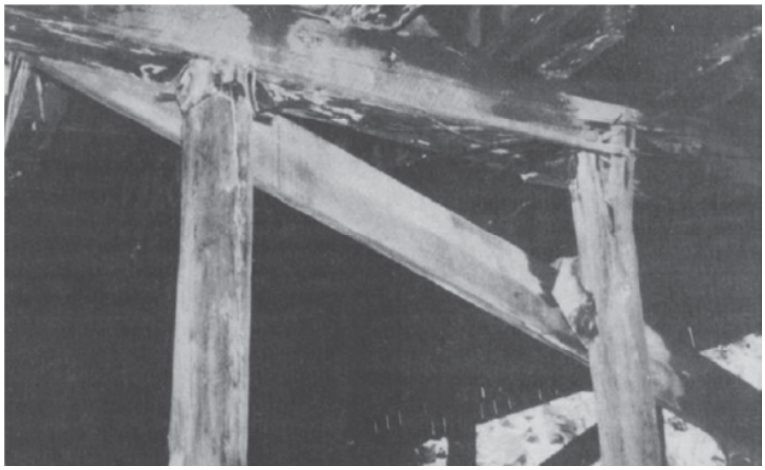

Figure 4.1 Wood decay in bent cap (Army and Air Force 1994)

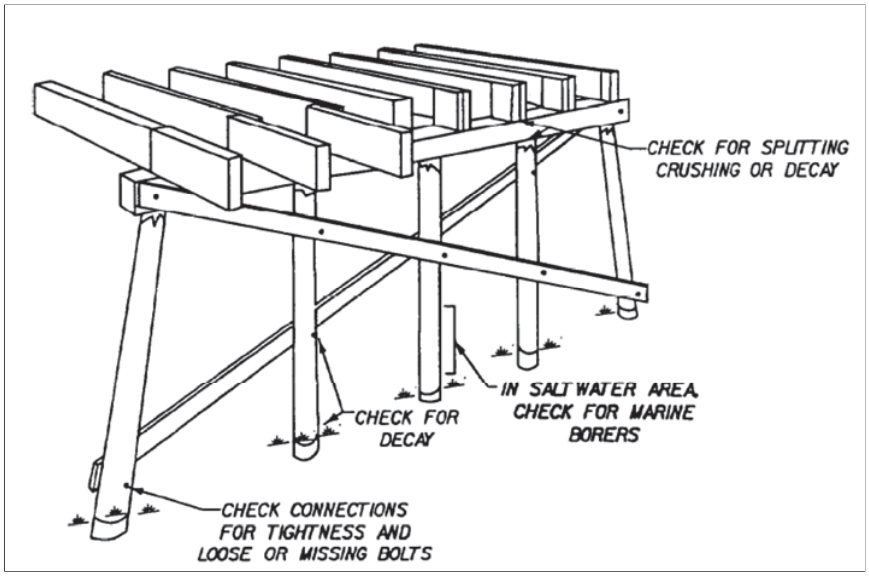

Figure 4.2 Timber bent check points (Army and Air Force 1994)

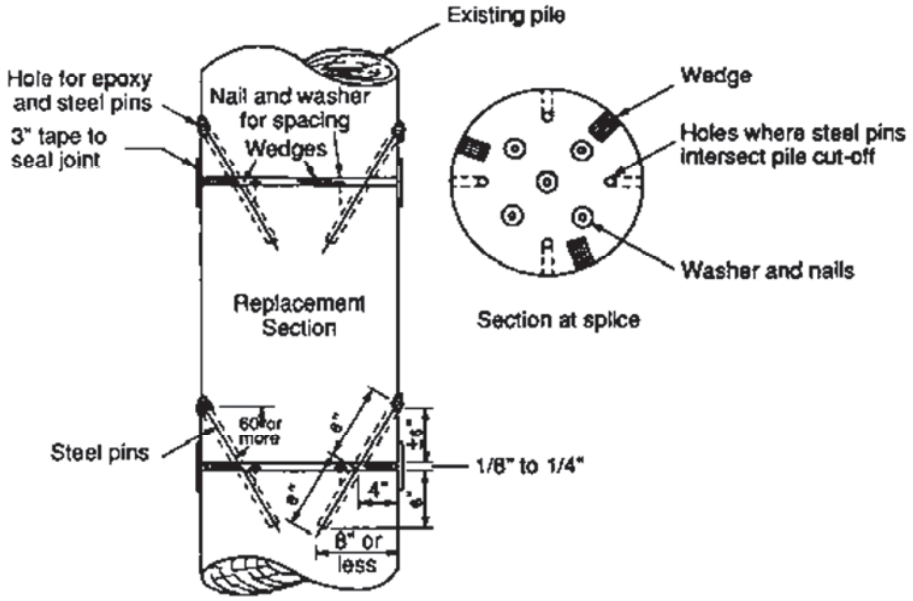

Figure 4.3 Timber pile posting (MnDOT 2011)

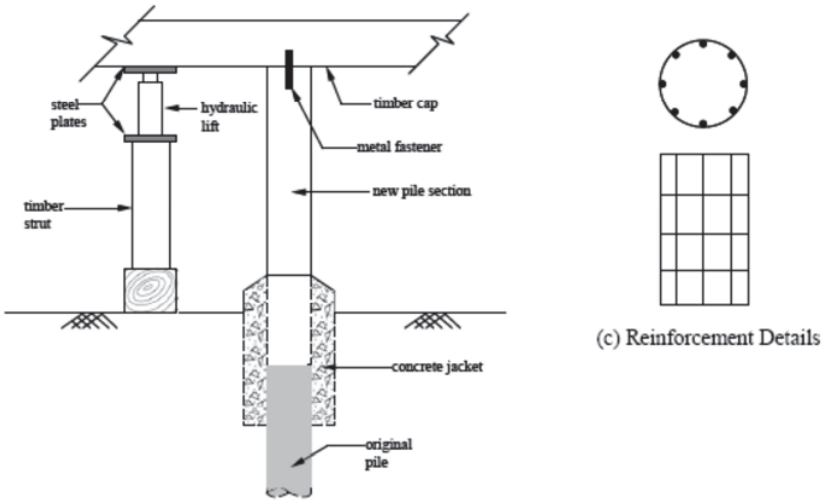

Figure 4.4 Timber pile replacement (Wipf et al. 2003)

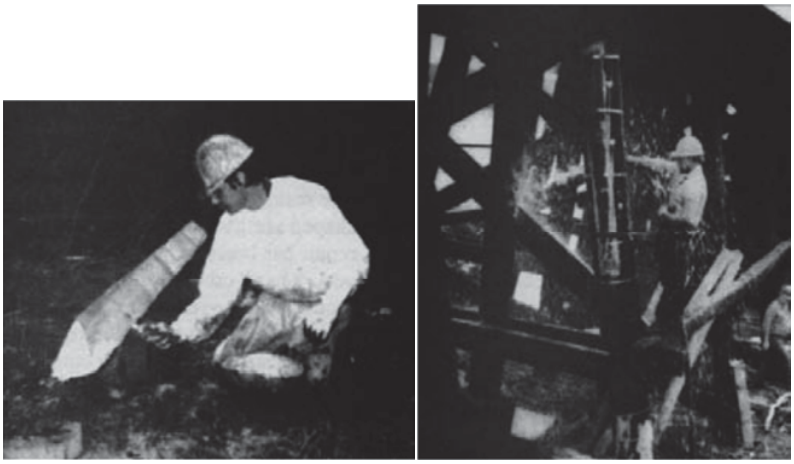

Figure 4.5 Timber pile restoration (MnDOT 2011)

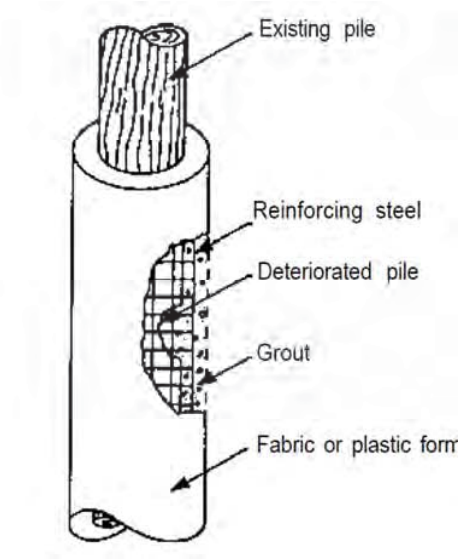

Figure 4.6 Reinforced concrete jacket for timber pile augmentation (MnDOT 2011)

Figure 4.7 Timber Pile Prior to Fiberglass Jacket Repair (Fox Industries/Simpson Strong Tie 2011)

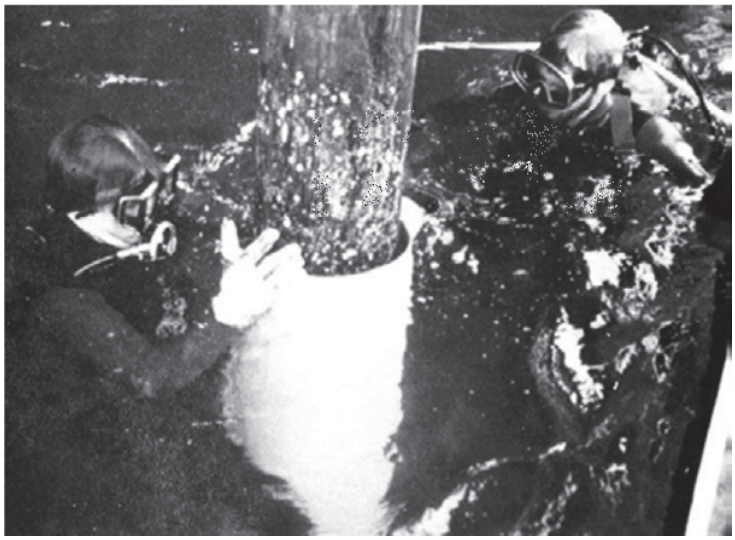

Figure 4.8 Fiberglass Jacket Installation (Fox Industries/Simpson Strong Tie 2011)

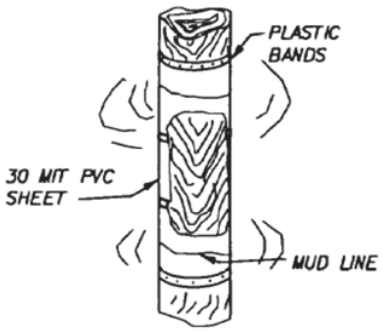

Figure 4.9 PVC wrap for timber pile augmentation (Army and Air Force 1994)

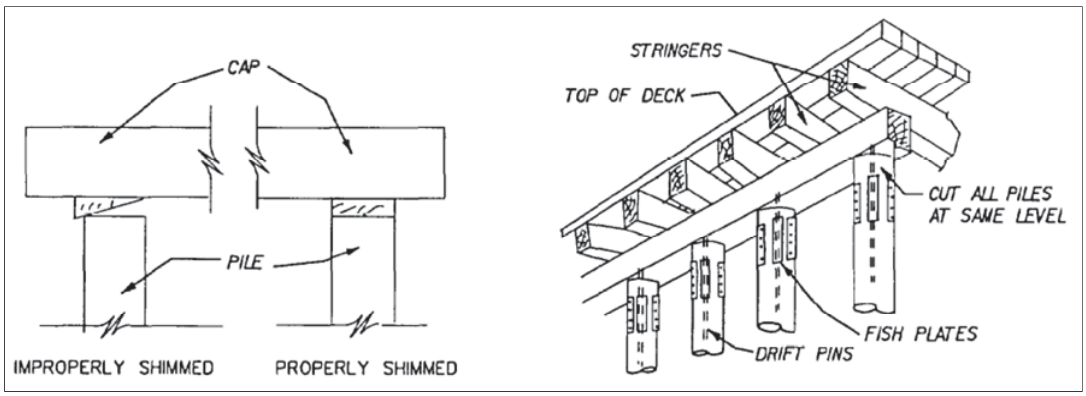

Figure 4.10 Shimming timber piles (Army and Air Force 1994)

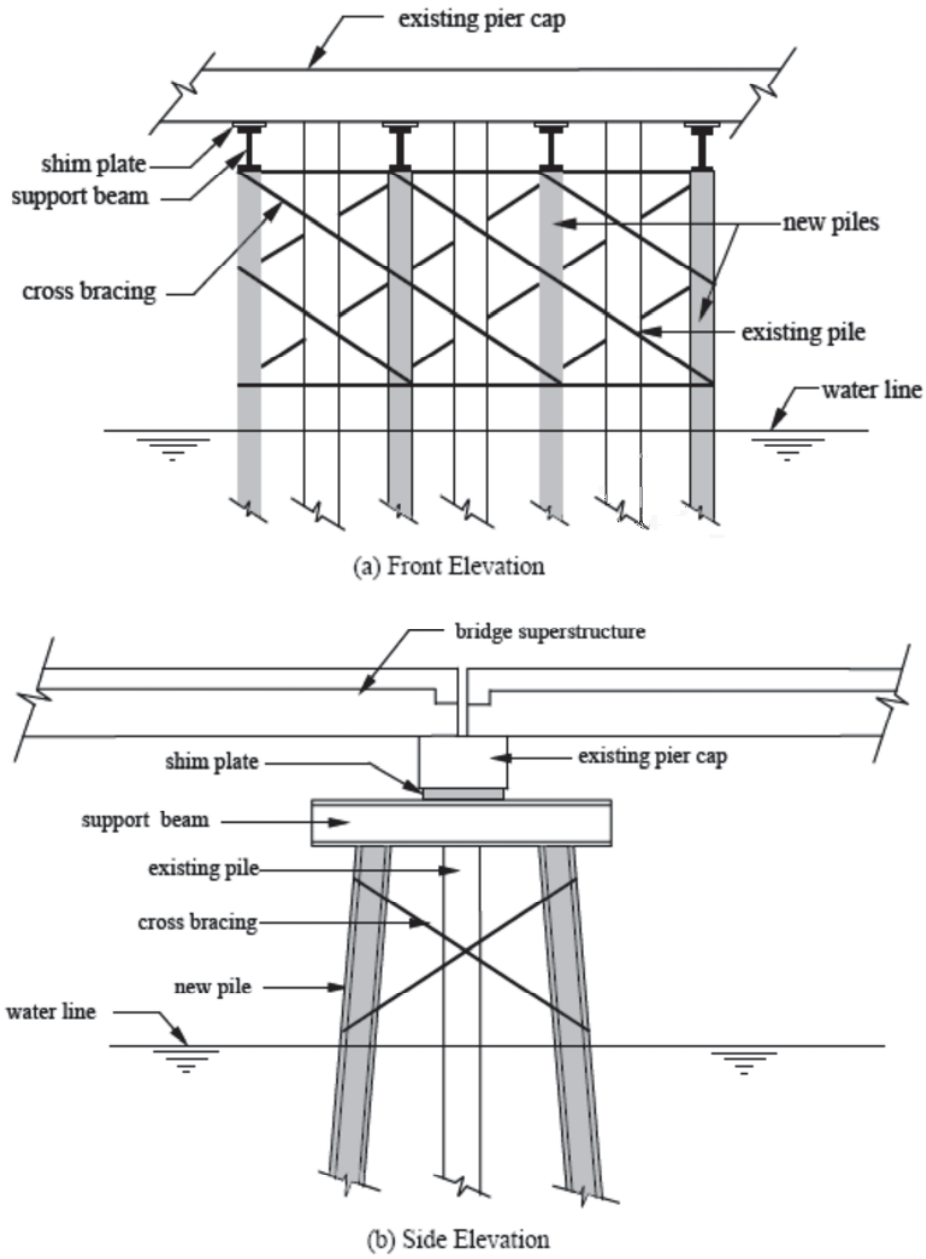

Figure 4.11 Adding supplemental steel piles (Wipf et al. 2003)

(a) Deteriorated Pile

(b) Strengthening by Addition of Supplementary Steel Piles

Figure 4.12 Example of addition of supplemental steel piles (Wipf et al. 2003)

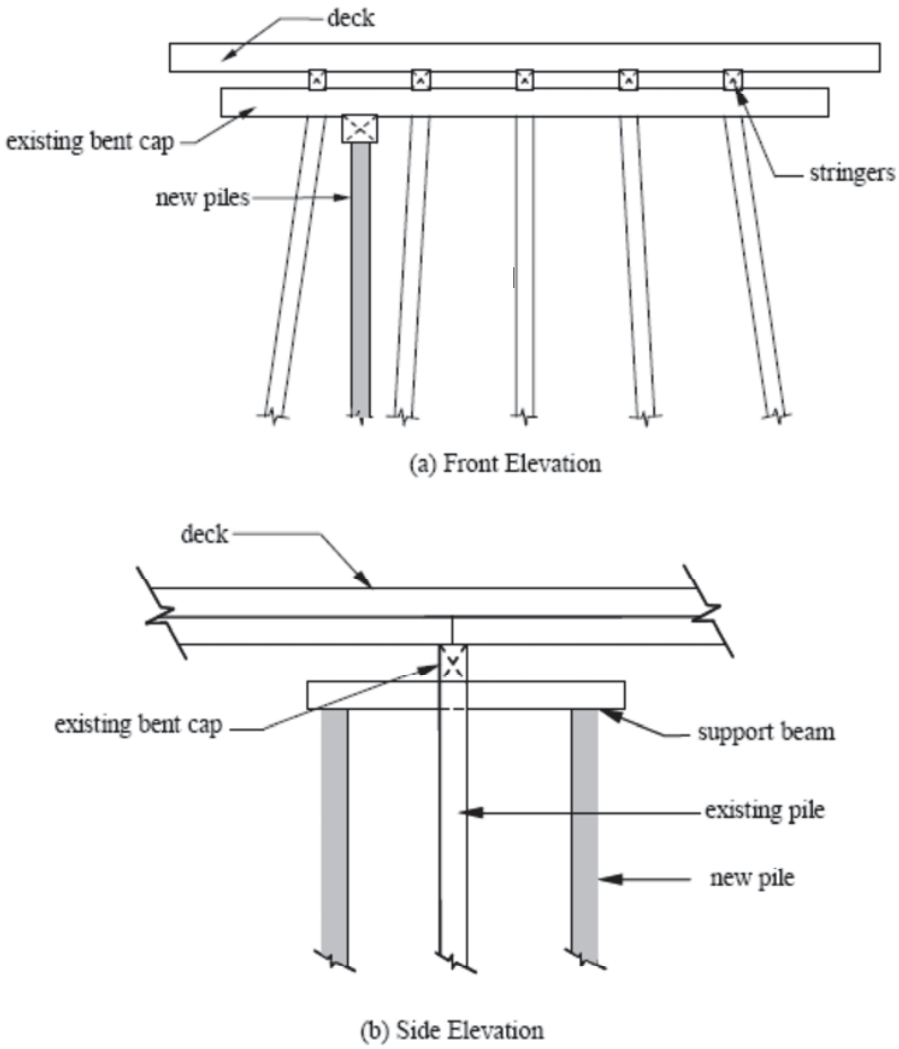

Figure 4.13 Pile bent strengthening with supplemental timber piles (Wipf et al. 2003)

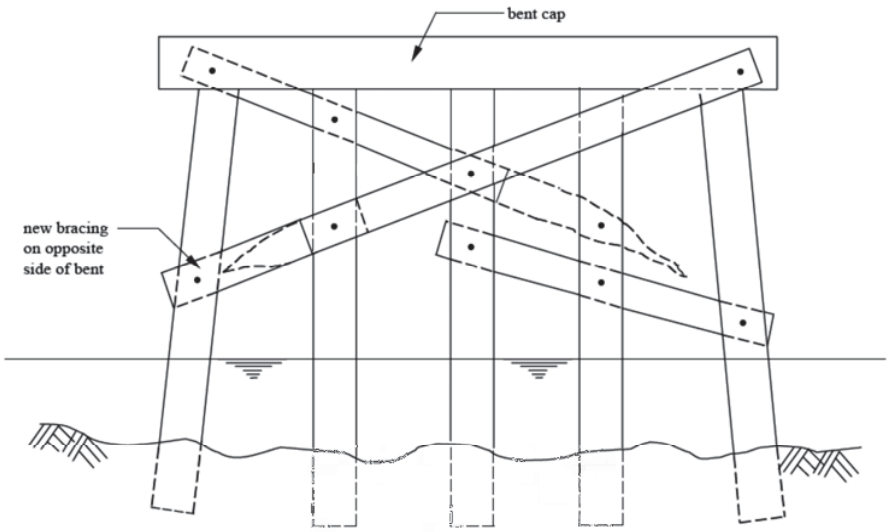

Figure 4.14 Installation and repair of timber pile sway bracing (Wipf et al. 2003)

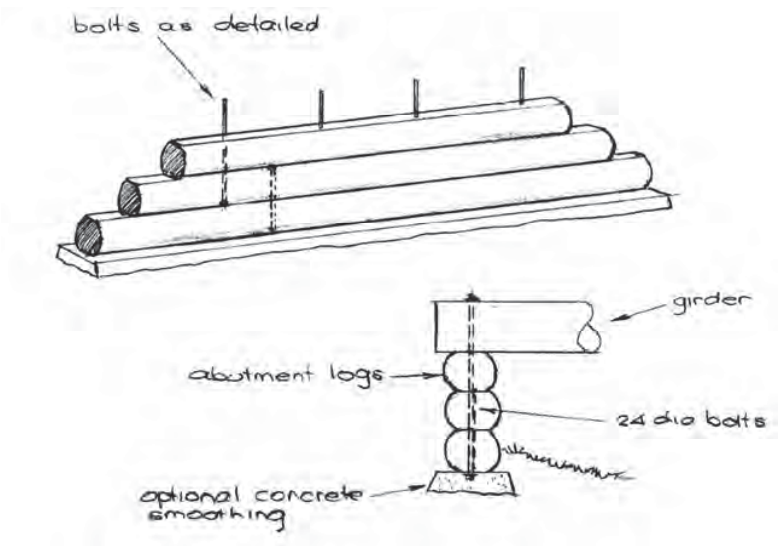

Figure 4.15 Timber sill abutment (QGDMR2005)

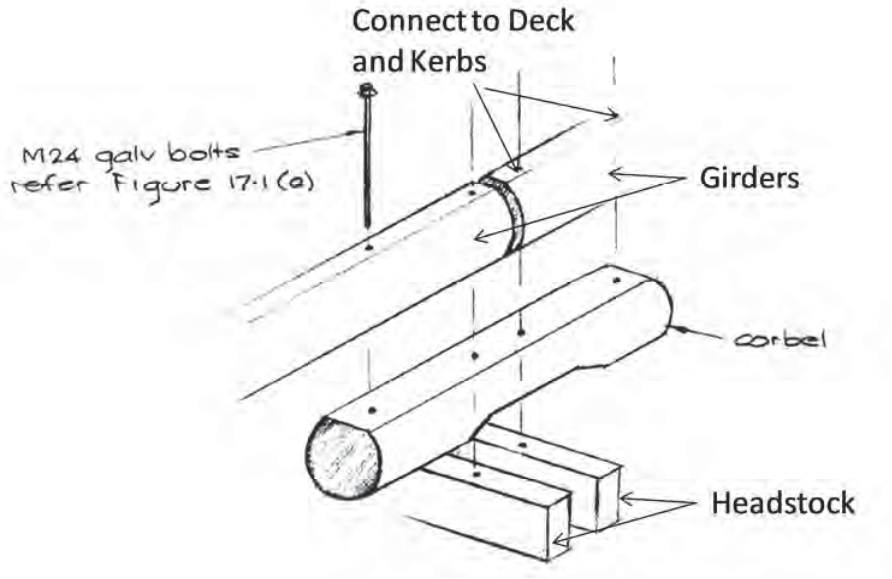

Figure 4.16 Timber corbel (QGDMR 2005)

Table 4.1 Condition Prioritization Levels (QGDMR2005)

Condition State	General Description
5	~unsafe "The structural integrity has been severely compromised and the structure must be taken out of service"
4	~Very Poor "identified serious defects that affect the structure's performance and integrity" • Signs of advance deterioration due to section loss, overstressing, or components are acting differently than intended.
3	~Poor "defects have been identified which are compromising the serviceability of structure" • Showing signs of deterioration due to loss of protective coatings and minor section loss

Table 4.2 Timber sill abutment repair (QGDMR2005)

Defect / Activity Matrix						
Component		Condit. State	Defect	Maintenance Category	Activities	
No.	Type				Action	No.
52T	Timber Sill Abutment	2	Moderate decay in logs	Programmed	Apply chemical preservatives to timber	100T1
		3	Heavy decay in logs	Programmed	Replace abutment log*	52T4
		3	Heavy termite attack in logs	Programmed	Replace abutment log*	52T4
		3	Settlement of logs	Programmed	Place / replace relieving props	100M10
		3	Loss of fill due to water wash or rotting	Programmed	Reinstate backfill	100M2
		3	Some road subsidence	Programmed	Reinstate backfill	100M2
		4	Severe decay in logs	Programmed	Replace abutment logs*	52T4
		4	Severe termite attack	Programmed	Replace abutment logs*	52T4
		4	Loss of embankment fill due to water wash or rotting	Programmed	Reinstate backfill	100M2
		4	Severe road subsidence	Programmed	Reinstate backfill	100M2

This Page Has Been Intentionally Left Blank

Chapter 5 Steel Substructures

Structural steel elements can be used for bents, columns, and piles for bridge substructures. The only common use of structural steel elements in a substructure is as piling. Since there is only one major element that structural steel is used for, there are minimal repair methods relating to steel substructures. The major deterioration of steel substructure components results from corrosion. Structural steel piles can also be susceptible to local buckling resulting from pile-driving operations (*e.g.* over driving). There have been reports of cracking and local buckling in structural steel substructure components as well (Army and Air Force 1994). Figure 5.1 shows a typical local buckling of a pile flange in an underwater location. The causes for the corrosive deterioration of steel substructures typically are exposure to air and moisture, industrial fumes, deicing agents, seawater, and saltwater-saturated mud. Other sources of deterioration are excessive thermal strains, overloading of the components, fatigue, stress concentrations, and fire (Army and Air Force 1994).

There are a wide variety of nondestructive test (NDT) methods that can be used to assess the deterioration of steel substructures, including visual examination. Dye penetration can be used to identify the location and extent of surface cracks and surface defects. Magnetic particle testing can be used to detect flaws in materials and welds, and radiography can be used to inspect steel members. A coupon can be cut from the steel substructure component and be tension tested in the laboratory to get accurate estimates for the material properties and therefore, be used to assess the capacity of the steel substructure.

The most common repair strategies for steel substructure components involve adding metal to strengthen cross sections that have been reduced by corrosion or vehicle impact. Welding or adding cover-plates to repair structural steel cracks caused by fatigue and vehicle loads is another approach. Steel connections can frequently be retrofitted as well (Army and Air Force 1994).

5.1 Adding Metal to Steel H-Piles

Steel H-piles may be damaged in the form of bent, torn, or cut flanges which may reduce the cross section, and hence the load-bearing capacity, of the pile (AASHTO 2008). In the section near the vicinity of a water line, steel H-piles may suffer from severe corrosion. When pile replacement is not practical, it may be strengthened with bolted channels as a temporary measure (Wipf et al. 2003; AASHTO 2008). The repair process often includes the following steps (AASHTO 2008):

1. Clean the damaged pile.
2. Locate the extreme limits of the deteriorated section. The repair channel section should have a length sufficiently longer than the distance between these limits.
3. Thoroughly clean the area to which the channel is to be bolted.
4. Clamp the channel section in place against the pile.
5. Locate and drill holes for high-strength bolts through the channel and the pile section.
6. Place bolts and secure the channel.
7. Remove the clamps.

8. If the pile repair is above the water, coat the entire area with a protective coating material.
9. For long-term rehabilitation, steel piles should be encased with a concrete jacket when practical.

Figure 5.2 includes a schematic illustrating an H-pile repaired with a bolted channel section.

A cover plate can also be welded to a deteriorated steel pile to strengthen it. The cover plate is heated after welding one end and then the expanded plate is welded into the place. As the plate cools and contracts, stresses will be added to the cover plate (Army and Air Force 1994). These residual stresses caused by welding should be carefully monitored to ensure no detrimental weld-induced distortion of the pile is generated. Figure 5.3 shows an H-pile repaired with a welded cover plate. ODOT estimates that installing the stiffener plates should cost around $10/L.F. (ODOT 2012).

5.2 Pile Jacket

Steel H-piles can be severely damaged due to corrosion caused by the continual wetting and drying of steel when steel is in contact with the ground. A concrete filled pile jacket can be added to steel members to increase strength and prevent future corrosion (Army and Air Force 1994). The encasement of the steel piles is accomplished by filling a suitable form with Portland-cement grout. After the concrete hardens, the form can remain in place as part of the jacket as shown in Figure 5.4. The integral jacket provides protection to steel piles above and below the water. The major steps of installing a pile jacket is listed in the following (Army and Air Force 1994):

1. Sandblast the surfaces to clean of oil, grease, dirt, and corrosion.
2. Place the pile jacket form around the pile.
3. Seal all joints with an epoxy bonding compound and seal the bottom of the form to the pile.
4. Brace and band the exterior of the form to hold the form in place. Dewater the form.
5. Fill the bottom 6 inches of the form with epoxy grout filler.
6. Fill the form to within 6 inches of the top with a Portland-cement grout filler.
7. Cap the form with a 6-inch fill of epoxy grout.
8. Slope the cap to allow water to run off.
9. Remove the external bracing and banding and clean off the form of any deposited material.

In addition to the round fiberglass forms that were detailed above, there are fiberglass forms that are specifically shaped for H-piles. Since these forms are designed more specifically for H piling, there are a few different specifications for the installation procedure. The void between the form and the piling will be much smaller due to the H-shaped jacket. The standard void should be about ¾-inches minimum, and thus should only be filled with the special epoxy grout (Fox Industries/Simpson Strong Tie 2011). The fiberglass forms are typically manufactured in two separate pieces that can be placed around the existing H-piling in a relatively easy fashion. Figure 5.5 shows how the fiberglass jackets could potentially be placed around the steel H-piling.

5.3 Concrete Encasement

Another viable option for steel H-piling strengthening is to encase the H-piles in concrete. This method is similar to the jacketing, but the formwork is not permanent, and only the concrete is left on the piling. This repair is typically cheaper than the use of a pile jacket because it relies upon standard materials. Since concrete is not as impermeable as the fiberglass jacket, it is less effective at keeping out moisture, but adds sufficient strength to the existing piling. The standard procedure to encase an H-pile in concrete is to clean the steel and encase it in concrete as least 2 feet below the ground or water line (ODOT 2012). Based on ODOT Bridge Maintenance Manual, the cost is $20/L.F. for concrete encasement. If stiffener plates are welded over deteriorated areas before concrete is placed, the cost will be $30/L.F. (ODOT 2012). The stiffener plates are usually only utilized if portions of the H-piling are completely rusted through. ODOT expected life of this repair is 20 years (ODOT 2012). Figure 5.6 shows how the repair can be conducted on a typical bridge with steel piling.

5.4 Corrosion Protection

Corrosion protection systems such as sacrificial anodes and impressed current systems can help to provide an effective means of reducing corrosion of a steel pile. There are several important factors that should be considered when selecting a corrosion protection system. Since sacrificial anodes will need to be welded onto the steel pile, access becomes a serious concern. In addition to access issues, the anodes will be visible and have the potential to be targets for vandalism if the protected portion of the pile is located above the ground line. Sacrificial anode jackets provide a means of covering the

anodes and reducing their visibility. These products are typically reserved for marine environments, but the corrosion protection, cross section recovery, and vandalism deterrence may make them appropriate for all environments.

5.4.1 Anodes

To prevent corrosion for new and repaired steel H-piles, the most important factor is to avoid exposure to water and soil. Therefore, painting and watertight encasement of steel members and joints is important for protecting steel piles from corrosion. Cathodic protection involves attaching zinc or aluminum anodes to the steel H-piles to abate corrosion of steel in salt or brackish water (Figure 5.7). Small zinc anodes are used when less than 8 linear feet of pile is exposed. Large zinc or aluminum anodes are used when greater than 8 linear feet of the pile is exposed (Army and Air Force 1994). The zinc anodes will corrode over time, and their protection of the steel pile will gradually decrease. Inspections can be extremely important for observing whether or not the anodes are still providing adequate protection for the member.

5.4.2 Anode Embedded Jacket

A relatively unique solution to H-pile corrosion incorporates both fiberglass jackets and sacrificial anodes. Fiberglass jackets are a desirable means of preventing corrosion because they inhibit chloride intrusion and provide a protective barrier for the piling. If the corrosion is severe, and chlorides cannot be completely removed from the piling, then zinc anodes can be embedded within the jacket to prevent further corrosion. An example of this product can be seen in Figure 5.8. The jacket is typically filled with a

cement-based grout to fill the void between pile and jacket (Vector Corrosion Technologies 2010). Since this repair incorporates two relatively unique repair methods, the cost should be expected to be higher than traditional repair methods. The estimated life of the repair can be anywhere from 10 to 35 years depending on how the jacket is designed (Vector Corrosion Technologies 2010). This specialized jacket is ideal for high chloride environments, and may only be applicable for such conditions depending upon the cost of the jacket. Since the anodes come preinstalled in the jacket, the length of the installation may be decreased when compared to a typical anode repair (Vector Corrosion Technologies 2010). Depending upon the number of piles that need to be repaired, this time savings may result in a significant cost savings for the project.

5.5 Concluding Remarks

The only common substructure member composed out of steel is pile. This limits the number of available repair methods. Steel piles typically experience section loss at the waterline from the continual wetting and drying of the member. This can typically be rectified by adding steel to the cross section by welding or bolting. Further protection against deterioration can be provided if a concrete encasement is also incorporated for the repair. Fiberglass jackets that are form fitted to the specific H-pile can be utilized for the repair, and have the unique advantage of not requiring dewatering. If corrosion is a serious concern for H-piles, sacrificial anodes can be combined with any of the included repairs in order to create further protection. Creating a protective barrier that will inhibit future deterioration is the main purpose of the majority of steel pile repairs.

5.6 References

AASHTO (2008), *AASHTO Maintenance Manual for Roadways and Bridges, 4th Edition*, American Association of State Highway and Transportation Officials (AASHTO), Washington, DC 20001.

Army and Air Force (1994), *Bridge Inspection, Maintenance, and Repair*, Joint Departments of the Army and Air Force, TM 5-600/AFJPAM 32-1088.

Avent, R.R. and Alawady, M. (2005), "Bridge Scour and Substructure Deterioration: Case Study", *ASCE Journal of Bridge Engineering*, Vol. 10, No. 3, p247-254.

Fox Industries/Simpson Strong Tie. (2011). *Pile Restoration and Protection.* Baltimore: Author.

ODOT (2012), *ODOT On-line Bridge Maintenance Manual*, http://www.dot.state.oh.us/Divisions/HighwayOps/Structures/bridge%20operations%20and%20maintenance/PreventiveMaintenanceManual/Pages/default.aspx , last access on February 1, 2012.

Vector Corrosion Technologies. (2010). *Vectrode Galvanode Jacket* [Brochure].

Wipf, T.J., Fanous,F.S., Klaiber, F.W., and Eapen, A.S. (2003), *Evaluation of Appropriate Maintenance, Repair and Rehabilitation Methods for Iowa Bridges*, Iowa Department of Transportation, Iowa DOT Project TR-429.

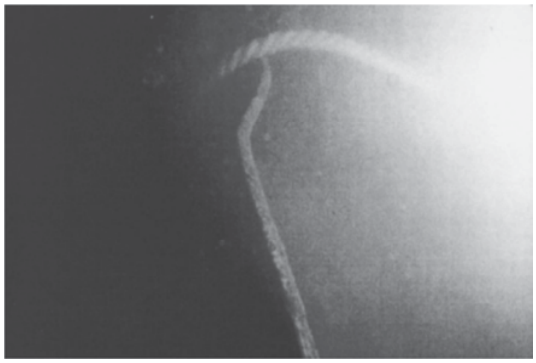

Figure 5.1 Underwater Picture of Local Buckling of Pile Flange (Avent and Alawady 2005)

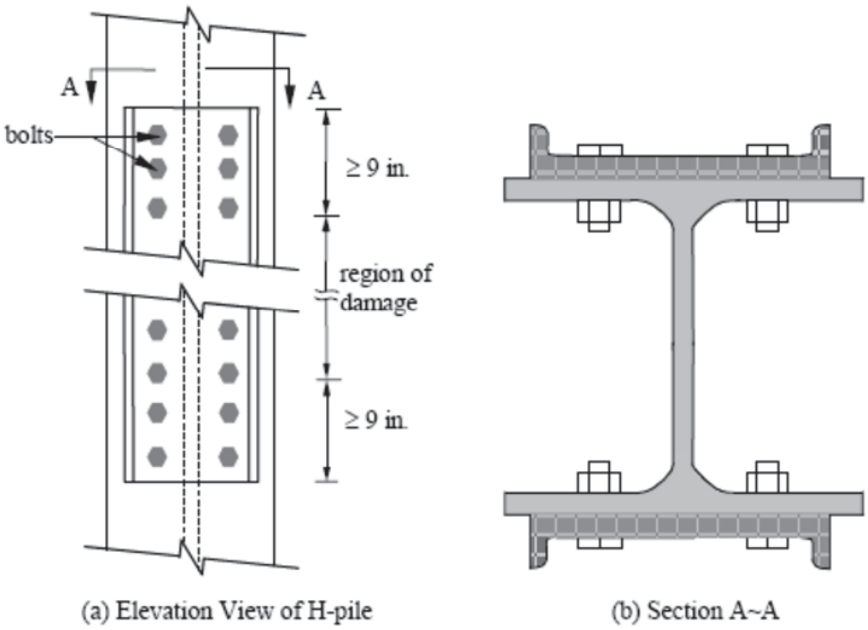

Figure 5.2 Repair of Steel H-piles with Bolted Channels (Wipf et al. 2003)

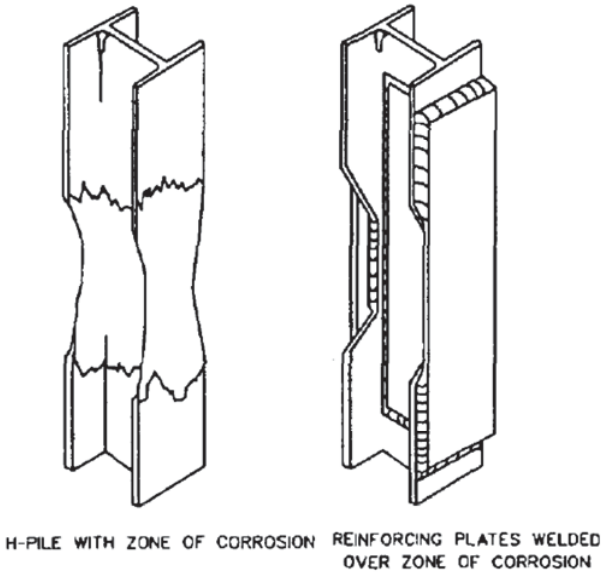

Figure 5.3 Repair of Steel H-piles with Welded Cover Plates (Army and Air Force 1994)

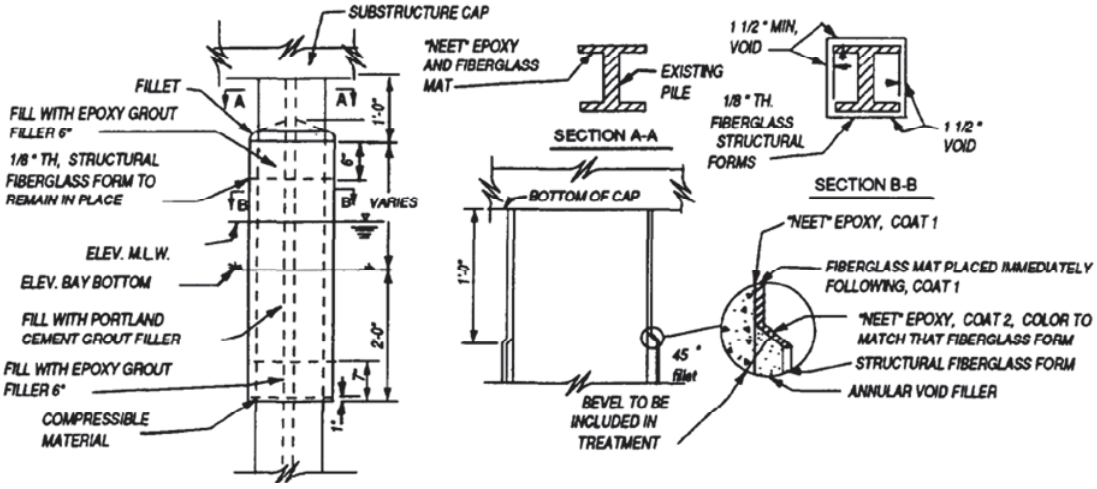

Figure 5.4 Integral Pile Jacket for Steel Piles (Army and Air Force 1994)

Figure 5.5 H-Shaped Fiberglass Jackets (Fox Industries/Simpson Strong Tie 2011)

Figure 5.6 Steel Pile Concrete Encasement (ODOT 2012)

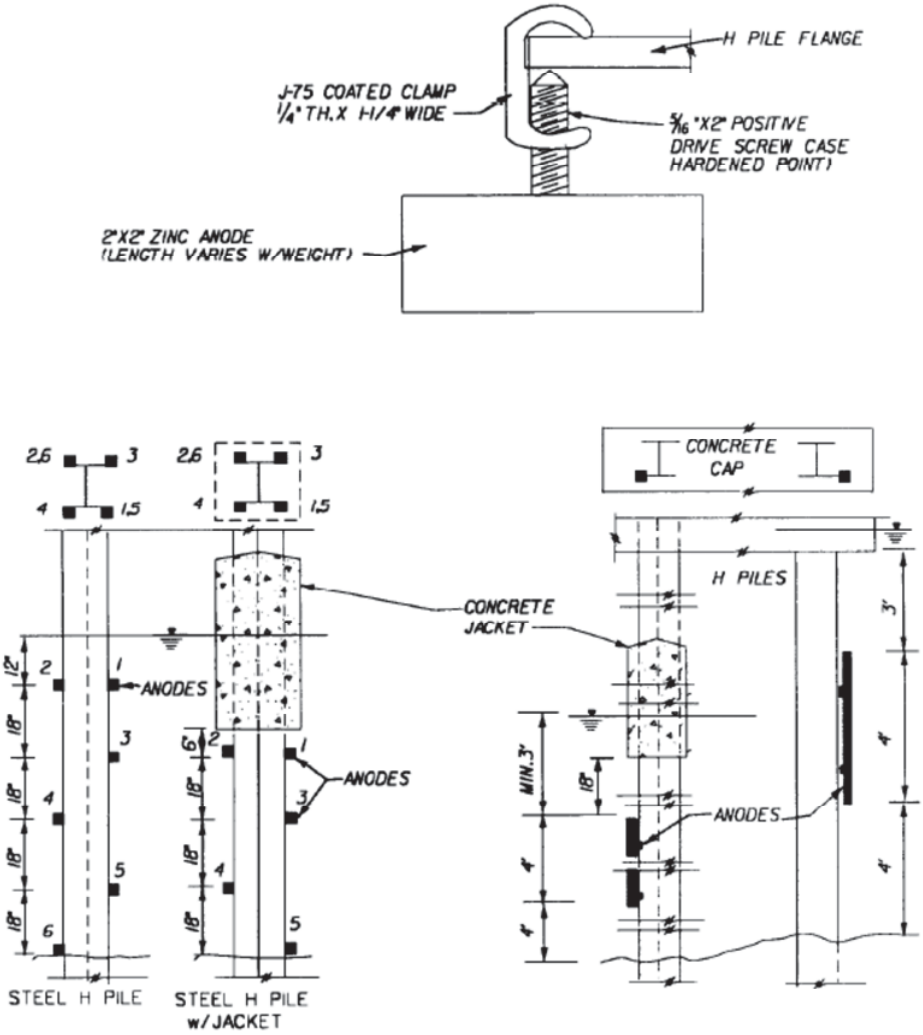

Figure 11-1. Anodes placed on steel H piles for corrosion protection

Figure 5.7 Anodes Placed on Steel H piles for Corrosion Protection (Army and Air Force 1994)

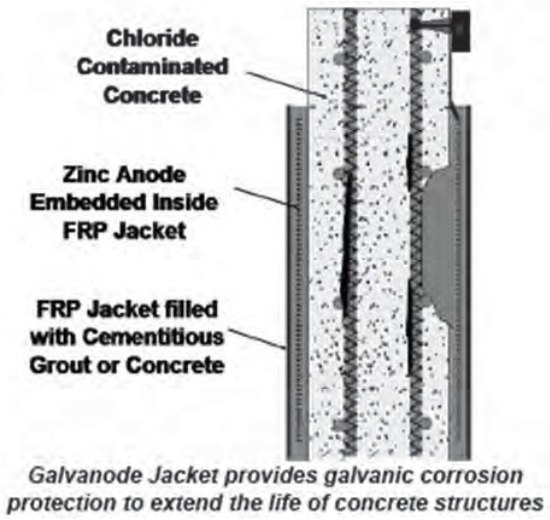

Figure 5.8 FRP Jacket with Embedded Anodes (Vector Corrosion Technologies 2010)

This Page Has Been Intentionally Left Blank

Chapter 6 Scour Countermeasures

Scour is the removal of geotechnical material, such as sand and rocks, from the near vicinity and beneath bridge abutments and/or piers. It can effectively reduce the bearing capacity of individual piles and pile groups, undermine pier and abutment footings, and cut into the bank. It is one of major reasons for bridge substructure failures. Therefore, when scour is detected in a bridge substructure, it must be addressed as soon as possible. Placing a tremie encasement around the bottom of the pier and injecting concrete or mortar into the encasement can make up the loss of bearing of the piles due to scour (Army and Air Force 1994) and is one method of substructure repair when scour is detected (Fitch 2003). Installation of riprap (if not already present from initial construction) is another common repair method to prevent further scour at bridge abutments. Some other countermeasure systems, such as partially grouted riprap and geocontainers, articulating concrete block systems, gabion mattresses, and grout-filled mattresses, can also be used to protect bridge piers from scour (Lagasse et al. 2007). There are also several river stabilization techniques that have been used to prevent future scour from occurring.

6.1 Piles

The excavation or removal of the soil foundation from beneath the substructure undermines the load carrying capacity of the bridge and can result in excessive settlement. A pier usually creates vertical and horizontal vortices in the water flow, which create a scour hole around the pier (Marek 2009). When scour reduces the

effective bearing of the piles of a pier, additional piles or a concrete footing can be added to the base of the pier to make up for the lost bearing.

When a concrete footing is added to the base of the pier, a tremie encasement is needed around the bottom of the pier as shown in Figure 6.1. The concrete will displace the water from within the encasement. The formwork or encasement can be removed after the concrete is cured. In order to improve the bond between the pile and the new footing, nails or spikes can be driven into timber piles. For steel piles, shear studs may be utilized, and rebar can be placed in drilled holes within the concrete piles to improve the bond (Army and Air Force 1994).

6.2 Piers

Piers are the most common location for scour to occur on bridge substructures. Since they are typically located in the middle of the river, vortices are created which remove the sediment around the bridge pier. The most common inspection technique for scour around piers utilizes rods to determine if there is a drop in streambed elevation in the vicinity of the pier. Due to the inexact nature of the inspection and the potential for failure of the bridge, scour critical substructures should be inspected frequently.

6.2.1 Pier Structural Repairs

When footings are undermined, the most common repair method is to fill the void beneath the foundation area with a concrete grout or crushed stone. To place grout, some type of formwork must be used to confine the grout (Army and Air Force 1994). When concrete grout is chosen as the repair material, three types of formwork are commonly

used. The three common types of formwork are tremie encasement, confinement walls, and flexible fabric.

Extended Footings

A tremie encasement is a steel, wood, or concrete form placed around the existing footing to re-establish the foundation as shown in Figure 6.1. The form allows the concrete grout to be pumped under the eroded footing and displace the water in the encasement through vents (Army and Air Force 1994). The larger footing will help to prevent future settlement, but is only suitable for relatively low scour depths (Agrawal 2005). Extended footings are an approved structural countermeasure for scour and are considered low maintenance (FHWA 2009).

Confinement walls are made of stone, sandbags, or bags filled with riprap. They are placed along the faces of the footing and extend through the mud layer of the river bottom as shown in Figure 6.2. The grout is injected into the cavity below the footing to push water out through the voids in the wall (Army and Air Force 1994). The voids in the walls are also filled with grout during this operation. Therefore, the walls are sealed after grout is cured.

The formwork can also be made by a closed bag of flexible fabric, such as canvas, nylon, etc., with grout injection ports as shown in Figure 6.3. Grout is pumped into the bag and it expands to fill the cavity. The injection port is then closed and fabric confines the grout until it is cured (Army and Air Force 1994).

Backfill

If the foundation element affected by scour is above the water, a good structural fill material can be compacted into the erosion cavity to fill the void. If the streambed is eroded below the base of the footing, the compacted fill will be extended on a slope of 2 to 1 from the current competent streambed to the base of the footing. Riprap should also be placed around the footing to prevent further scouring (Army and Air Force 1994). If the footing with scour is underwater, crushed stone is used as the fill material as shown in Figure 6.4. The size of stone should be big enough to resist the steam current in order to avoid being removed by the current.

Concrete Apron Wall

A concrete apron wall can be utilized as a permanent structural repair for piers that have experienced scour. For this repair, concrete walls are cast against the sides of the footing and extended down to bedrock. The extension down to bedrock gives the repair added strength, but also requires the use of a cofferdam and dewatering for the construction to proceed. A schematic of the repair is shown in Figure 6.5. It can be seen in the drawing that riprap is also utilized as another means of protection against future scour. This repair is desired for its permanent nature, and is applicable for most scour situations (Agrawal 2005).

Under-pinning

A relatively expensive solution to settlement caused by scour is to underpin the foundation of the pier. This is not a common practice throughout the United States, but

the low maintenance required after the repair is completed is preferable in some situations (FHWA 2009). The pier can be underpinned with preplaced aggregate and pressure grouting, C.I.P. concrete or concrete filled fiber bags (Agrawal 2005). The intent with this repair is to lower the foundation of the pier below the scour depth, thus reducing the likelihood that scour will reoccur on the structure. Since this repair requires work to be completed below the footing, the bridge must be closed to traffic while the work is being completed. The mandatory closure of the structure, and the fact that it is not appropriate for older masonry footings, decreases the usefulness of the repair for many bridges (Agrawal 2005). Despite the limitations on the repair method, it is used because it provides extensive repair for severe scour degradation.

Mini Piles

The use of mini piles to strengthen a pier footing is a specific form of underpinning. This process involves driving relatively short length piles through a footing to provide increased stability and strength. This repair has several benefits over traditional underpinning methods. Mini piles are a much quicker rehabilitation method than the typical attempts of extending the footing. The process involves drilling through the footing, pumping tremie grout in, adding reinforcement, injecting pressure grout, then removing the casing (Agrawal 2005). A schematic of the aforementioned procedure can be seen in Figure 6.6. The construction of the mini piles results in minimal vibration, and can be completed in areas where traditional pile driving would not be possible (Agrawal 2005). Mini piles are an expensive repair to implement, but can be useful if the correct site conditions are met.

6.2.2 Pier Scour Armoring

If the scour has not caused undermining of the pier footing to occur, then there are several other options available to protect the pier. A common technique throughout the United States is the use of correctly sized and placed riprap. Since riprap is relatively inexpensive, it has been used for a vast number of scour issues. Concrete armor units have been used throughout Kentucky and are seen as a longer lasting solution to scour than riprap. Concrete armor units are created in a variety of shapes that interlock to provide stability. They can be placed with other concrete armor units or with riprap and can protect bridge piers as well as bank slope protection. In addition to the armoring techniques that were mentioned, flow altering techniques have been used to protect against scour. Sacrificial piles have been noted for scour depth reductions, but have unique limitations on when they can be utilized. Placing collars around bridge piers has also reduced the scour that would typically be experienced.

Riprap

The most common solution to pier scour is the utilization of riprap. An important element in the installation of riprap is the use of a geotextile fabric. Geotextile fabrics limit substrate particle erosion from occurring, which could undermine the riprap (FHWA 2009). The geotextile fabric is typically only placed 2/3 of the distance that the riprap is placed from the pier (typically twice the pier width) (Lagasse et al. 2007). The correct size of the riprap is highly dependent on the velocity of the flow of the water. If the riprap is not adequately sized, then it will be washed out and provide no protection against scour. Since riprap is a flexible repair, if only a few stones are washed away, it

will not prove detrimental to the repair life (Lagasse et al. 2007). The ease of the repair makes it very desirable for common use.

Partially Grouted Riprap

The technical specifications for placement of partially grouted riprap are very similar to those for normal riprap. One of the main differences between partially grouted riprap and standard riprap is that smaller stones can be used for partially grouted riprap. Since the grout is used, the repair still has adequate stability without sacrificing flexibility (Lagasse et al. 2007). In addition to being able to use smaller stones, the partially grouted riprap does not need to cover as much area as the standard riprap. Partially grouted riprap is best utilized when placed one and a half times the pier width away from the pier (Lagasse et al. 2007). This could potentially result in a significant savings since standard riprap is placed up to twice the width of the pier away from the pier. The correct placement of partially grouted riprap is shown in Figure 6.7. It can be seen in the diagram that the top of the riprap should not go above the level of the bed, and should be placed on top of a geotextile filter.

Sheet Piles with Riprap

Sheet piles have frequently been combined with riprap to provide a permanent shield that will prevent water flow from causing scour on the pier foundation. The correct placement of sheet piles could effectively dewater the area around the pier. Since the sheet piles absorb most of the energy from the water flow, then scour will typically occur at the base of the sheet pile. Riprap is utilized as a means of preventing scour from

becoming a deterioration issue on the sheet piles. Due to the equipment required and possible site conditions, it is difficult to place the sheet piles effectively. In addition to placement issues, rust may be a concern if the water in contact with the sheet piles has high chloride content. The effectiveness of this repair is still under question. Some sources believe it is appropriate for high scour situations (Agrawal 2005), while others see it as only partially effective (FHWA 2009). Figure 6.8 displays how a cofferdam could be created using the steel sheet piles to protect the bridge pier. It can be seen in the photo that the sheet piles form a large protective ring around the bridge pier. If the site conditions are correct, then sheet piles and riprap can effectively protect a pier foundation from scour.

Concrete Armor Units

A relatively uncommon solution for pier scour protection is the use of concrete armor units. The Kentucky Department of Transportation has seen success using the A-Jacks® brand of concrete armor units. Figure 6.9 provides a schematic of several different types of concrete armor units that are available in the United States. The increased stability offered by concrete armor units have made them a viable option when the required riprap size is not possible or cost-effective to attain. Lab tests have shown that concrete armor units typically reduce scour between 70% and 95% (Lagasse et al. 2007). An added benefit of concrete armor units is the increased permeability when compared to other scour protection systems. The concrete armor units are sized based on the typical velocity of the river. A 2-foot large A-Jacks® armor unit can withstand a velocity of 22 feet per second and usually costs between $30 and $45 per unit. The

concrete armor units can also be made up to 96-inches tall and can cost as much as $2,250 per unit (Contech 2011). Figure 6.10 shows how the concrete armor units could be placed around a pier to provide scour protection. When the concrete armor units are placed around a pier, it is usually recommended that a geotextile fabric be used for the same purpose that it would be used for riprap (FHWA 2009). Like riprap, concrete armor units have been used to protect slope embankments and have been identified for their ability to dissipate the energy inherent in the water flow.

Sacrificial Piles

Sacrificial piles have been relied upon as flow-altering devices that can prevent scour from occurring at bridge piers. The piles prevent scour from occurring because they deflect the flow of the water away from the bridge pier. One of the best configurations for sacrificial piles is a triangle placed upstream of the bridge pier. This technique has shown to provide a 50% scour reduction during laboratory testing (Melville 1999). The limitations that are involved with the use of sacrificial piles have made them difficult to implement. Even though the sacrificial piles prevent scour from occurring on the bridge pier, scour has been observed on the individual piles. When the flow of the river changes and the river meanders in one direction or the other, the sacrificial piles may not provide any protection for the pier (Melville 1999). The triangular arrangement of the piles requires the flow to be properly aligned in order for the piles to be effective. Because of the problems that could occur after placement of the sacrificial piles, they are only recommended if the river flow is sure to remain constant in direction, and the intensity is small enough to not cause scour on the individual piles(Melville 1999).

Collars

For a bridge pier, scour is typically a result of a down flow of water due to the pier disrupting the water flow. Collars have been researched to prevent this down flow of water from removing sediment around the pier. A series of issues have been discovered when a collar is implemented on a pier. The collar is ideally placed at the level of the existing streambed. Even with this placement, a collar will divide the flow of water into two separate sections, which can be seen in Figure 6.11. As seen in the figure, scour will still occur with the collar, but the severity of scour upstream of the pier will be reduced. Experiments have also discovered that scour will start to occur downstream of the pier once the collar is placed (Zarrati 2006). A combination of collars and riprap has yielded a scour reduction of up to 60% (Zarrati 2006). Even though the collar reduces the rate of scour the technology of collars is still seen as experimental, and the severity of scour holes that occur downstream of the pier have prevented its implementation.

Gabion Mattresses

Gabions have a history of being used for stream bank protection, but recent research has been conducted using gabions as a pier scour countermeasure. The use of gabions allows smaller stones to be used than the traditional riprap would require. Studies have shown that smaller wire gabions will provide the same amount of protection as larger riprap (Yoon 2005). The gabion mattress has been studied as a pier scour countermeasure and is most effective when it is placed around the pier at a distance of two times the pier width (Lagasse et al. 2007). A schematic of how to place the gabion mattresses to ensure maximum efficiency is shown in Figure 6.12. It is important that the

gabion mattresses are connected to one another and the pier to increase the stability and reliability of the repair. There are several limitations regarding when the gabion mattresses may be utilized. Since gabion mattresses have not been used frequently, there is a lack of knowledge about how they will react for long term repairs. Gabion mattresses are an approved solution for local scour armoring of abutments and piers (FHWA 2009). However, they are only recommended for sand or fine stream beds and non-saline water to prevent possible deterioration (Lagasse et al. 2007). Gabion mattresses usually cost between $30 and $60 per cubic yard, and can withstand a typical velocity of 16 feet per second (Contech 2011).

Grout Filled Mattresses

Grout filled mattresses have not been a common solution to pier scour problems in the past. They are typically made of two layers of fabric that are sewn into compartments, through which the grout can flow. A schematic of the correct placement of a grout filled mattress around a bridge pier can be seen in Figure 6.13. It can be observed in the diagram that the grout filled mattresses should extend twice the diameter of the pier in every direction. The use of grout filled mattresses is desirable since they involve quick installation and do not require dewatering. Since pier scour countermeasures require flexibility and permeability, selected grout filled mattresses should have weep holes and small diameter ducts (Lagasse et al. 2007). Research has been conducted which indicates that grout filled mattresses may be an effective solution, but have limitations on when they should be utilized. The grout filled mattresses failed in testing when dune-type bed forms were present in live-bed conditions (Lagasse et al.

2007). The use of a grout seal between the pier and the mattress ensures that sediments will not rise and cause failure of the repair (FHWA 2009).

Articulating Concrete Blocks

Articulating concrete blocks are typically used for bank protection, but have also been found to be effective if used for pier scour protection. They are approved for local scour armoring and revetments of both piers and abutments (FHWA 2009). A schematic of the correct placement of articulating concrete block systems is shown in Figure 6.14. Similar to gabion mattresses and grout filled mattresses, the most effective implementation of articulating concrete blocks placed them a minimum of twice the width of the pier around the structure, with a filter beneath. Contrary to grout filled mattresses, articulating concrete blocks can be used in dune-type bed forms, but require separate design considerations (Lagasse et al. 2007). The success of the repair is highly dependent on the level of contact achieved between the articulating concrete blocks and the subgrade. The permeability offered by the blocks has made the repair successful during laboratory testing. The individual articulating blocks range in size depending upon which manufacturer is selected. A 6-inch articulating concrete block can resist typical velocities ranging from 13 to 29 feet per second and can cost between $90 and $127.50 per square yard (Contech 2011).

6.3 Abutments

Since abutments are typically placed away from the streambed, scour is not a typical concern for abutments. Due to the infrequency of abutment scour deterioration,

research has not been conducted to the extent as the repair methods for pier scour. Many of the similar repairs can be used for structural repairs and armoring techniques, with modified specifications from the pier scour procedure.

6.3.1 Structural Scour Countermeasures

The use of structural scour countermeasures for abutments is focused on the lowering of the foundation. Since abutment scouring is rare, it is typically resolved using an armoring technique. Structural countermeasures are useful alternatives since they lower the foundation below the scour line and usually incorporate some type of armoring technique to prevent future scour from occurring.

Lower Foundation

Scour around the base of abutments can be repaired in a manner similar to that used for the pier footings by filling the void foundation area with a concrete grout. In order to prevent settlement during the repair, the abutment should be shored up. After the abutment is shored up, any loose material in the scoured area is removed. Bolts are set into the abutment face along the length of the abutment. These bolts should extend a sufficient distance from the abutment face and be adequately spaced. These bolts are used to connect an expansion shield to the abutment as shown in Figure 6.15. Concrete is then placed behind the shield to fill the erosion cavity and the space between the shield and abutment face. Riprap should be placed on a 2 to 1 slope to prevent future scouring (Army and Air Force 1994). This repair is considered to be widely used, and requires moderate maintenance throughout the repair life (FHWA 2009). Lowering the

foundation of an abutment below the estimated scour depth can prevent loss of structural integrity due to a reduced bearing area from scour. Since this repair typically requires dewatering of the area, other methods are often chosen for scour repairs.

Concrete Apron Wall

A concrete apron wall can be utilized as a permanent structural repair for abutments that have experienced scour. For this repair, a concrete wall is cast against the stream side of the abutment and extended down at least eight feet. Riprap is typically utilized as another means of protection against future scour. Special attention should be paid to the riprap placement. The riprap will help to ensure that the new apron wall is not undermined due to scour. The lost soil below the abutment should also be filled with concrete in order to reintroduce bearing capacity. This repair is desired for its permanent nature, and is applicable for most scour situations (Agrawal 2005).

6.3.2 Abutment Scour Armoring

The countermeasures that are available to protect an abutment against scour are very similar to those used to protect a pier. The options available for abutment protection are less numerous than those available for pier protection. Riprap, partially grouted riprap, and steel sheet piles with riprap can all still be used for bridge abutments. In addition to the common riprap solutions, gabion mattresses, grout filled mattresses and articulating concrete blocks have been highlighted for their ability to effectively armor abutments.

Riprap

As with pier scour armoring, riprap is the most common technique to protect abutments from scour. Riprap is used frequently because of its simple construction, flexibility, permeability, and ease of repair. The performance of the repair is highly dependent on the correct placement of the stone at the abutment (Barkdoll et al. 2007). If the riprap is individually placed, as opposed to being end dumped, the blanket becomes much more effective. Provided that the riprap is sized correctly, it is considered an effective repair that requires moderate to high maintenance (FHWA 2009). Since the cost of riprap is high in some areas throughout the United States, there are several other solutions that have been used to protect abutments from local scour.

Partially Grouted Riprap

Partially grouted riprap is a very similar repair to standard riprap, but offers several improvements in performance. As with the partially grouted riprap that is used for pier scour protection, the partially grouted riprap used for abutment protection utilizes a smaller stone size, increases stability, and retains permeability. Partially grouted riprap is seen as a low maintenance means of protecting bridge abutments, but has not been initiated throughout the United States (FHWA 2009). Although partially grouted riprap reduces the amount of riprap that is required to protect the abutment, the cost may still be a concern if riprap costs are relatively high. Since the procedure has not commonly been done throughout the United States, testing is also required to ensure that adequate grout coverage is achieved during placement.

Sheet Piles

Sheet piles have been utilized around bridge abutments throughout the United States. As with the use of sheet piles to protect bridge piers, this technique is only designated as a possible application and requires low to moderate maintenance (FHWA 2009). In order to effectively protect the abutment, a sheet pile skirt is typically placed around the abutment. The correct placement of the skirt can be seen in Figure 6.16. The sheet piles are placed on all sides of the abutment below the estimated scour depth. As with the pier armoring, if the sheet piles need to be placed a farther distance away from the abutment, then riprap can be utilized as an infill (Barkdoll et al. 2007). While constructability issues have prevented the sheet piles from being frequently utilized, they are an appropriate armoring technique if the site conditions allow proper placement.

Gabions

Gabions have been used frequently as a means of armoring an abutment against potential scour. They are recommended for both pier and abutment armoring and require moderate maintenance (FHWA 2009). The gabions are advantageous in many situations since a smaller rock size typically results in a lower cost than traditional riprap. In addition to the smaller rock size, there are typically enough voids that vegetation growth can be achieved. There is concern of corrosion and potential vandalism of the wire cages (Agrawala 2005). If the wire breaks, then the gabion will be severely less effective since smaller riprap is utilized. The corrosion concern can be mitigated if the wire is coated prior to placement of the gabion system. When gabions are placed against an abutment, vandalism needs to be considered since the armoring will be easily accessible in most

situations. The gabion basket typically costs between $100 and $125 per cubic yard (Contech 2011).

Grout Filled Mattresses

Grout filled mattresses are a rarely utilized solution for protecting bridge abutments from local scour. They are approved for abutment armoring, but require moderate to high maintenance (FHWA 2009). The largest advantage of utilizing grout filled mattresses is that transporting the mattresses is simple and economical. The mattresses are typically filled with grout once they have been placed on site, which makes the mattresses easier to place. Grout filled mattresses are also an improvement upon riprap since no geotextile filter is required (Barkdoll et al. 2007). There are several limitations which have prevented grout filled mattresses from becoming a common repair. Grout filled mattresses are only suitable for sandy soils, and there are not many studies that address their effectiveness at preventing scour around abutments.

Articulating Concrete Blocks

Articulating concrete blocks are another method that can be used to protect abutments from scour. Most of the research that has been completed on articulating concrete blocks has studied them as a means of pier scour protection. Despite the lack of research that has been done on their performance, they are still recommended and are considered low to medium maintenance (FHWA 2009). Laboratory testing indicated that scour still occurred around the articulating concrete blocks, but the repair method did not fail. A picture of the laboratory test can be seen in Figure 6.17. After the test was

completed, the concrete blocks stayed connected and provided continuous protection for the abutment (Hoe 2001). Articulating concrete blocks are typically emphasized for the low maintenance, permeability and stability that is inherent in the structure. There is concern regarding corrosion of any steel cables that may be tying the elements together. Should these steel cables rust or break, the system will not be as reliable and the corrosion could affect water quality (Agrawal 2005). The repair could potentially be expensive depending upon how the specific articulating concrete block system needs to be assembled and whether or not accessibility is an issue.

6.4 Bank Slope

Erosion under and around a concrete slope protector can be repaired using a riprap, partially grouted riprap, articulating concrete blocks, or may require extending the protector. The design and construction procedures for each method vary, but they all attempt to provide a protective barrier to prevent future erosion.

Riprap

Riprap is the most commonly used procedure to protect bank slopes from future erosion. Figure 6.18 shows a bank repaired using stone riprap. The riprap should be extended above the face of the concrete to protect from future scouring (Army and Air Force 1994). The appropriate sizing of riprap during the design procedure is essential to ensure that the stones are not washed out. Partially grouted riprap and articulating concrete blocks provide an added stability over standard riprap that reduces the threat of washout.

Protector Extension

Bank slopes can also be repaired by extending the protector. The loose material is removed from the scour hole and the hole is backfilled with sand or gravel before the repair. A ground mold is formed in the backfill and concrete is placed into it. If the scour is under the protector, a hole is cut in the protector above the erosion cavity and the backfill or grout is placed through this hole (Army and Air Force 1994). A typical concrete bank protector extension is shown in Figure 6.19.

Partially Grouted Riprap

The implementation of partially grouted riprap has also frequently been used for bank slope protection. Partially grouted is typically more effective than fully grouted riprap because it improves upon the stability of loose riprap, but remains flexible and permeable (FHWA 2009). Large voids are desirable for partially grouted riprap, and grout should be placed at the contact points as seen in Figure 6.20. Partially grouted riprap is a common repair in Europe, and is beginning to gain popularity throughout the United States because it provides a stable, yet flexible, armor for scour protection.

Articulating Concrete Blocks

Another product that has been used for bank slope protection is articulating concrete blocks. Articulating concrete blocks are an approved method for armoring bank slopes (FHWA 2009). Since the individual units are typically connected by cables, more free space is made available for vegetation growth along the bank slope. The cables also allow a smaller size of articulating concrete block to be utilized than riprap since the

repair acts as a single unit, and garners additional strength through the interaction. A schematic of how the articulating concrete block system is typically placed as bank slope protection can be seen in Figure 6.21. Cost savings over traditional riprap can be achieved depending upon controlling site conditions. The cost for typical articulating concrete block systems can range from $82.50/SY to $135.00/SY (Contech 2011).

6.5 River Stabilization

If the use of riprap alone is not sufficient in protecting a substructure from scour, several other steps can be taken to protect the bridge. In the case of a river which is high-energy and highly erosive, there are several structures that can be placed upstream of the bridge in order to dissipate the energy of the flow (WSDOT 2010).

Bank Barbs

Bank barbs can be used to shift the deepest part of the channel away from slope protection, abutments or piers and prevent undermining from occurring. Barbs will not do anything to repair scour that has already occurred on substructure members, but can be used to prevent further scour. An example of how the barbs are typically placed within a channel can be seen in Figure 6.22. It is evident in the figure that the flow of the river is directed away from the bank where the barbs are placed. In addition to redirecting flow, barbs add roughness to the channel which decreases the energy that will be experienced by the bridge substructure downstream (WSDOT 2010). The decrease in energy of the flow will decrease the possibility of scour occurring on the substructure elements. Barbs are also approved as a means to change flow direction, induce deposition, and reduce

stream velocity (Raina 1996). Stream barbs are primarily used for lateral stream instability, but have been identified as being applicable for local scour occurring at abutments and piers. The estimated maintenance that will be required after the barbs are placed is low when compared to other scour countermeasures (FHWA 2009).

Both permeable and impermeable barbs have been examined for use as flow altering devices. It is common to utilize riprap to create a barb, which usually results in an impermeable and expensive structure. Impermeable barbs can cause flow disturbances, bank erosion, and lateral stream corrosion (Raina 1996). Permeable barbs are a less common choice, but have several benefits over the traditional use of riprap. If the permeable barbs are placed at right angles to the banks, or inclined downstream, they can usually provide the same desired result as impermeable spurs (Raina 1996). Permeable barbs also do not cause lateral stream corrosion, are flexible and require less maintenance (Raina 1996). If the correct system is designed and implemented, permeable barbs can be less costly and more efficient than traditional impermeable barbs.

Engineered Log Jam

Another method that is used to reduce the energy of the water flow is an engineered log jam. An engineered log jam is usually composed of large timber pieces that still contain branches and roots. The logs are primarily used in an attempt to increase the friction of the channel and dissipate the energy of the water flow, thereby preventing erosion. Engineered log jams are considered to be experimental, but have proven to be successful in protecting banks and substructure members (WSDOT 2010).

Check Dams

Check dams are commonly used to increase vertical stream stability. The secondary effects of a check dam help prevent local scour at abutments and piers and contraction scour (FHWA 2009). Check dams can be constructed using sheet pile, riprap, gabions, concrete or grout filled mattresses downstream of the bridge structure that is scour critical (Raina 1996). This placement ensures that the streambed is at a stable elevation around the bridge substructure, which reduces the potential for scour to occur. The velocity of the flow upstream of the structure is also reduced due to the placement of the check dam. Erosion has been known to occur downstream of check dams, so correct placement and design is critical for proper effectiveness (FHWA 2009).

6.6 Concluding Remarks

There are a wide variety of options available to reduce and repair scour on bridge substructures. The repairs were separated into distinct categories to further differentiate them. Structural repairs are designated as repairs which increase bearing of the existing foundation, which could be through extending the footing below the scour line or underpinning the existing foundation. Armoring techniques are repairs which place a barrier to prevent erosion of the substrate. Both the structural repairs and armoring techniques can be utilized on piers or abutments when the conditions are appropriate. As a means of reducing the erosive capacity of the water, a river stabilization method can be utilized. Depending on what stage the scour is presently in; a structural repair, armoring technique or river stabilization may be the most appropriate method.

6.7 References

Agrawal, A.K., Khan, M.A., Yi, Z. (2005) *Handbook of Scour Countermeasures Designs*, New Jersey Department of Transportation Research Report, 210 pp.

Army and Air Force (1994), *Bridge Inspection, Maintenance, and Repair*, Joint Departments of the Army and Air Force, TM 5-600/AFJPAM 32-1088.

Barkdoll, B.D., Ettema, R., Melville, B.W. (2007) *Countermeasures to Protect Bridge Abutments from Scour*, National Cooperative Highway Research Program (NCHRP) Synthesis 587, Transportation Research Board, Washington D.C., pp. 211.

Contech Construction Products. (2011). *Erosion Control Product Selection Guide* [Brochure].

FHWA (2009), *Bridge Scour and Stream Instability Countermeasures: Experience, Selection, and Design Guidance*. 3rd Ed. FHWA-NHI-09-111 HEC 23.

Hoe,D. (2001). *Cable-Tied Block Protection of Bridge Abutments*. Fourth-year project in resource engineering, Department of Civil and Resource Engineering, the University of Auckland,New Zealand.

Fitch, G.M. (2003), *Minimizing the Impact on Water Quality of Placing Grout Underwater to Repair Bridge Scour Damage*, Report from Virginia Department of Transportation Research Report VTRC 03-R16, 31 pp.

Lagasse, P.F., Clopper, P.E., Zevenbergen, L.W. and Girard, L.G. (2007), *Countermeasures to Protect Bridge Piers from Scour*, National Cooperative Highway Research Program (NCHRP) Synthesis 593, Transportation Research Board, Washington D.C., pp. 284.

Melville, B.W., Hadfield, A.C. (1999), "Use of Sacrificial Piles as Pier Scour Countermeasures", *Journal of Hydraulic Engineering*, Vol. 125, No. 11, pp.1221-1224.

Raina V.K. (1996). *Concrete Bridge: Inspection, Repair, Strengthening, Testing and Load Capacity Evaluation*. New York: McGraw-Hill.

WSDOT (2010) *Open Channel Flow*, Washington Hydraulics Manual, http://www.wsdot.wa.gov/publications/manuals/fulltext/M23-03/Chapter4.pdf , last access on April 2, 2012.

Yoon, T.H. (2005), “Wire Gabion for Protecting Bridge Piers”, *ASCE Journal of Hydraulic Engineering,* Vol. 131, No. 11, pp. 942-949.

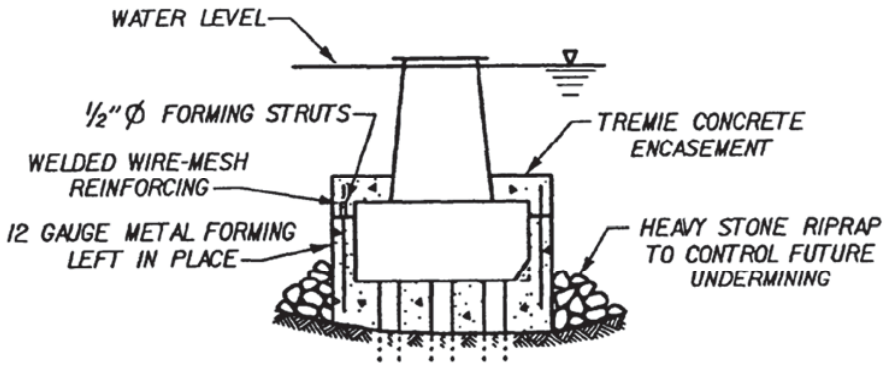

Figure 6.1 Forming a footing with a tremie encasement (Army and Air Force 1994)

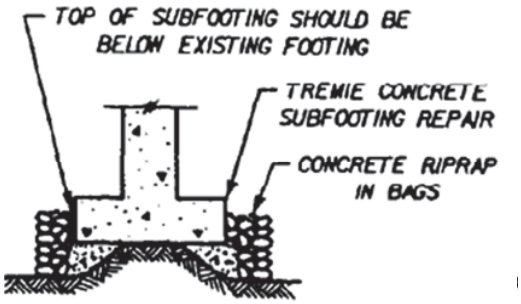

Figure 6.2 Forming a footing with confining walls (Army and Air Force 1994)

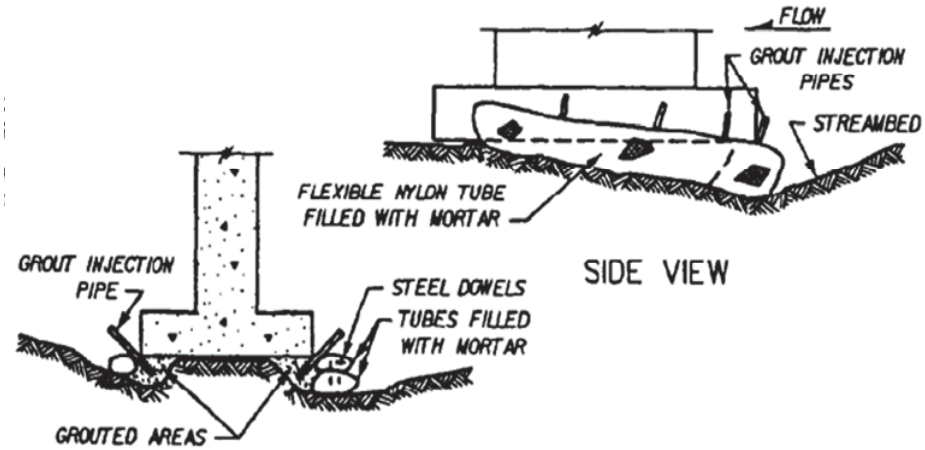

Figure 6.3 Forming a footing with flexible fabric (Army and Air Force 1994)

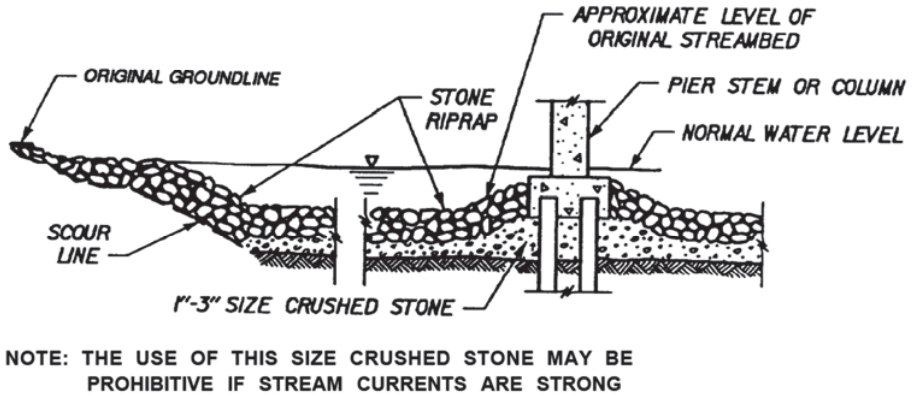

Figure 6.4 Use of crushed stone fill to repair scour damage (Army and Air Force 1994)

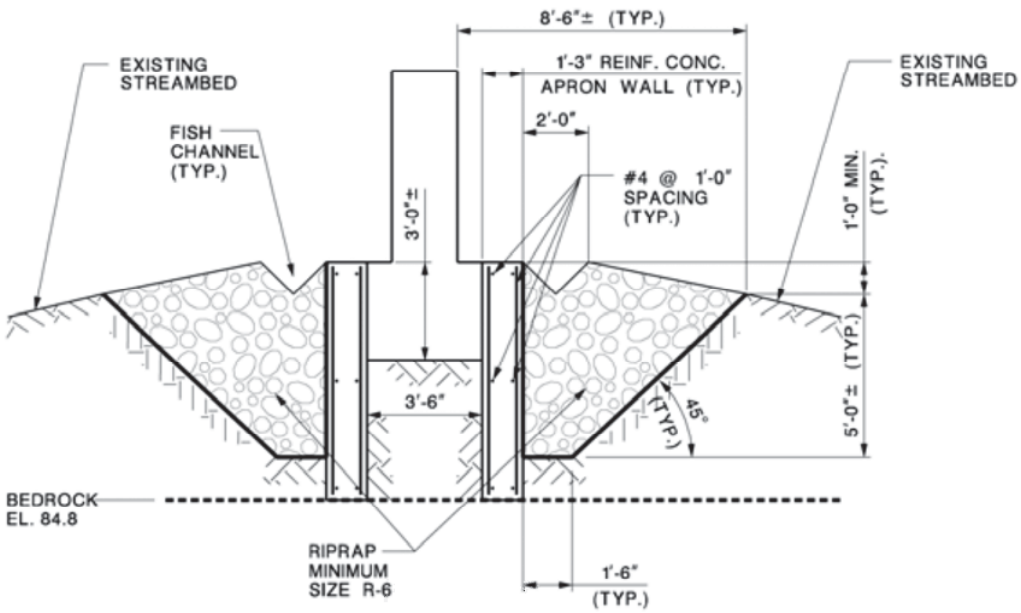

Figure 6.5 Concrete Apron Wall Pier Repair (Agrawal 2005)

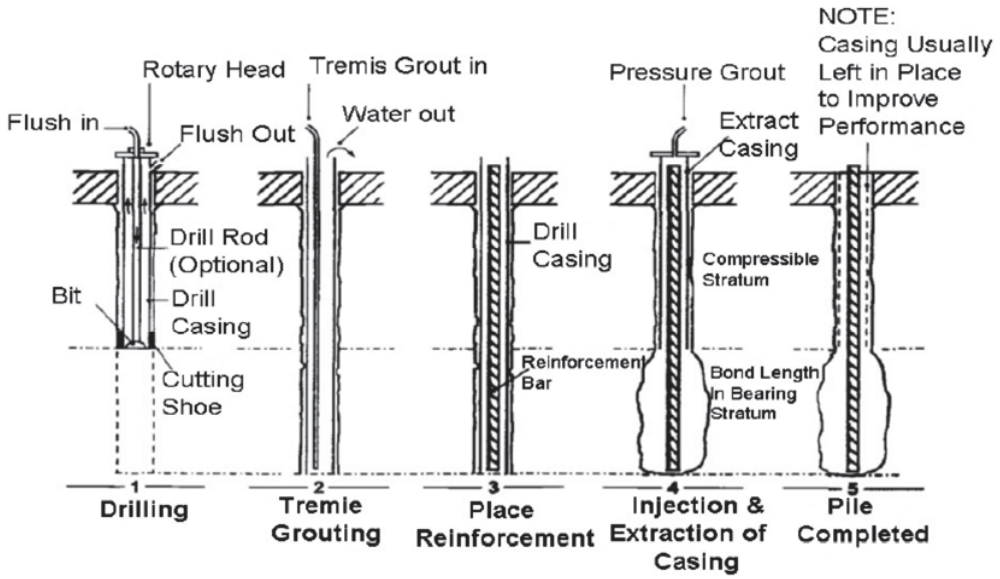

Figure 6.6 Mini Pile Installation Schematic (Agrawal 2005)

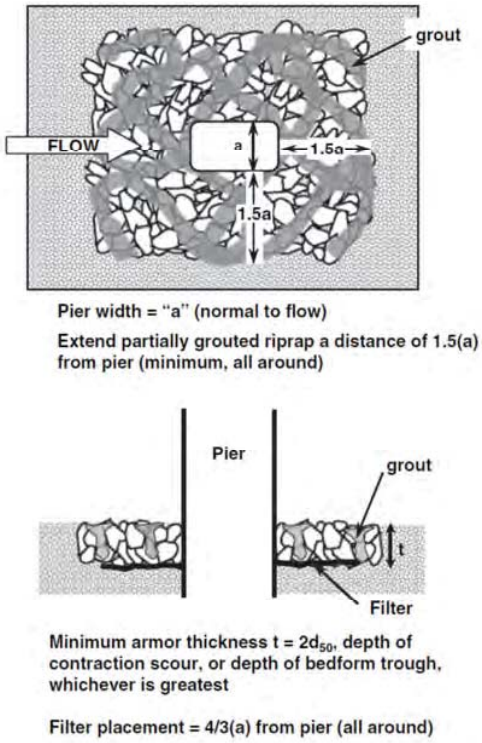

Figure 6.7 Partially Grouted Riprap Pier Placement (Lagasse et al. 2007)

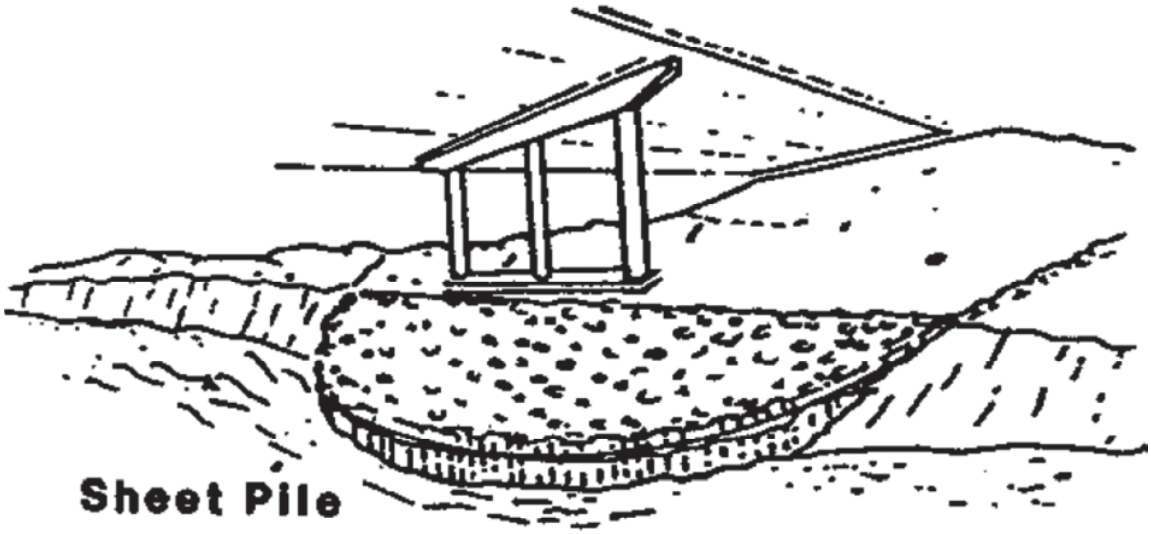

Figure 6.8 Sheet Pile and Riprap Pier Protection (Agrawal 2005)

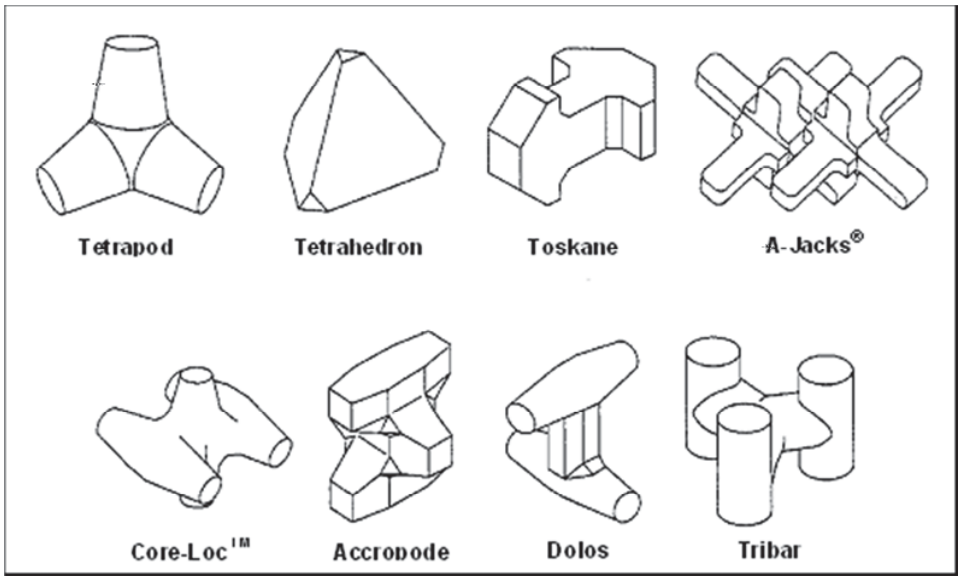

Figure 6.9 Concrete Armor Units (FHWA 2009)

Figure 6.10 A-Jacks® Pier Scour Protection (FHWA 2009)

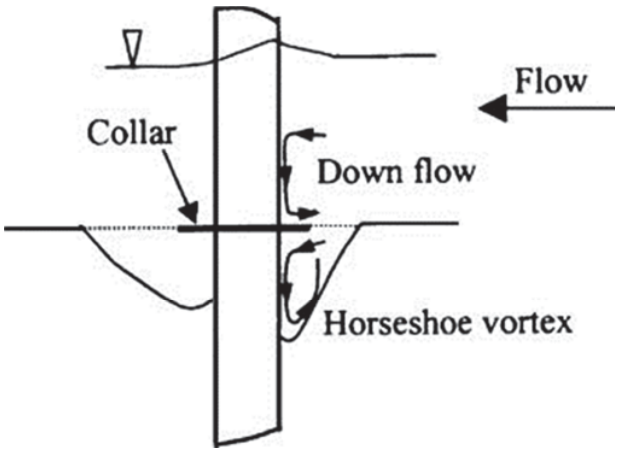

Figure 6.11 Water Flow due to a Collar around pier (Zarrati 2006)

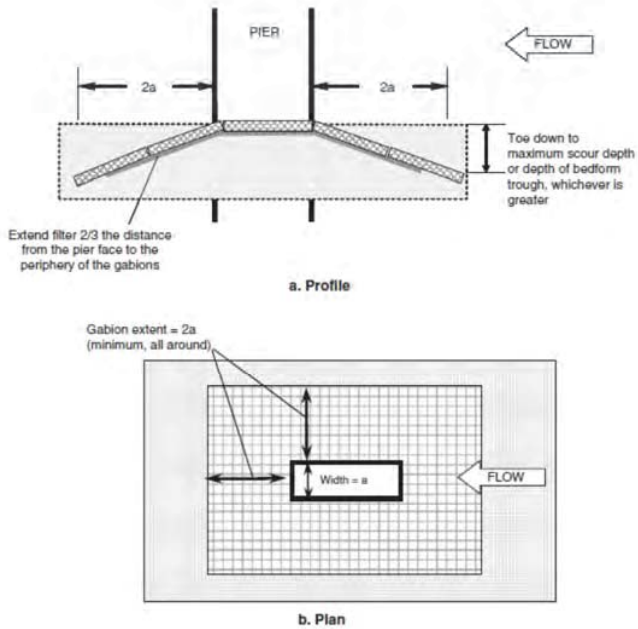

Figure 6.12 Placement of Gabion Mattress (Lagasse et al. 2007)

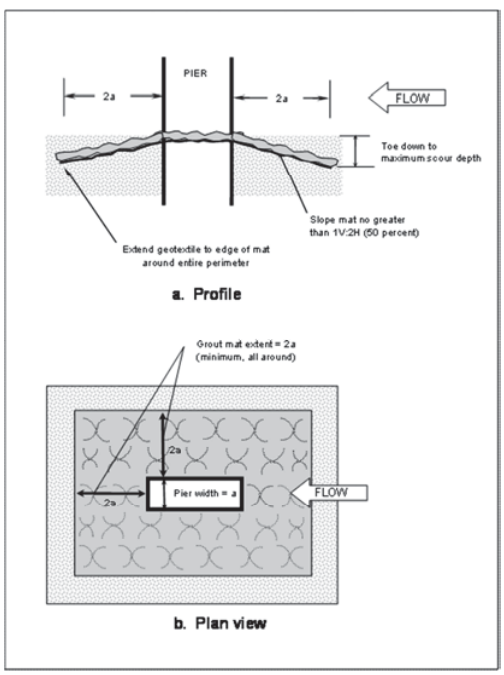

Figure 6.13 Placement of Grout Filled Mattress (FHWA 2009)

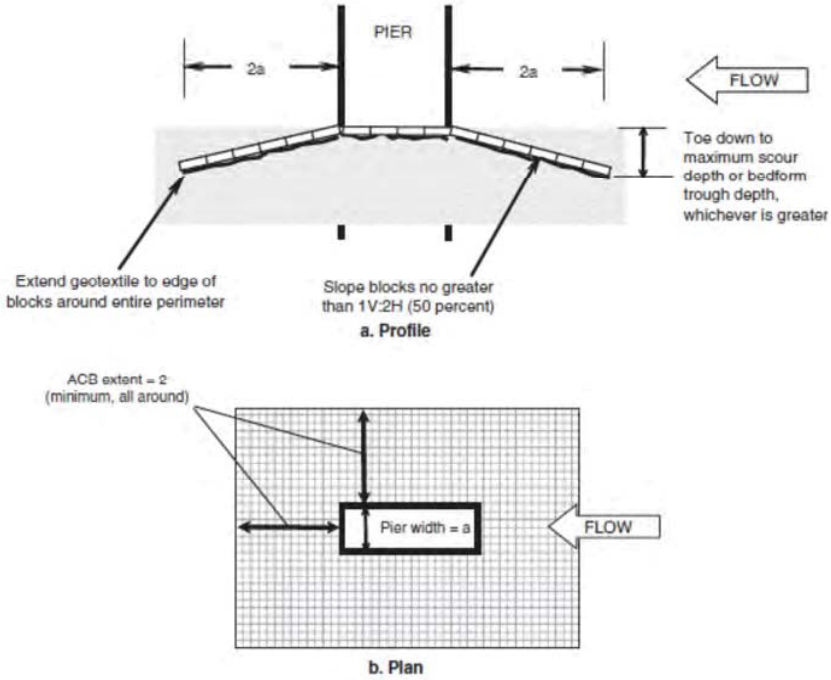

Figure 6.14 Placement of Articulating Concrete Block System (Lagasse et al. 2007)

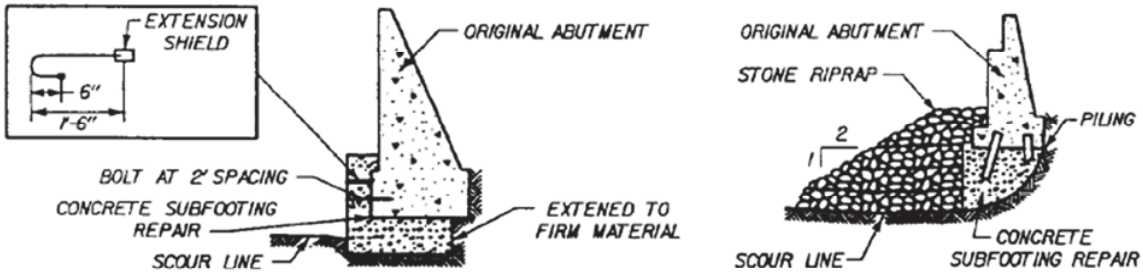

Figure 10-7. Repair of scour around concrete abutments.

Figure 6.15 Repair of Scour around Concrete Abutments (Army and Air Force 1994)

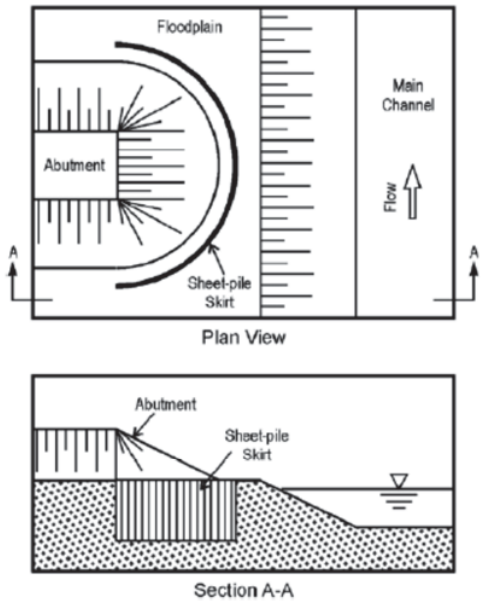

Figure 6.16 Sheet Pile Skirt Abutment Scour Protection (Barkdoll et al. 2007)

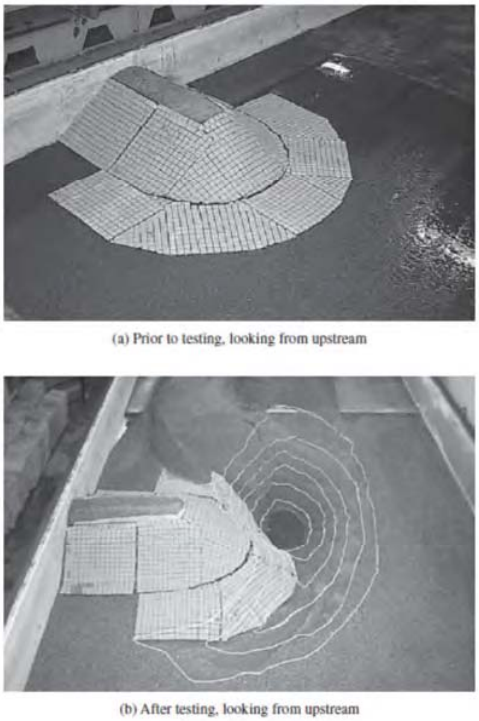

Figure 6.17 Articulating Concrete Block Abutment Scour Protection (Hoe 2001)

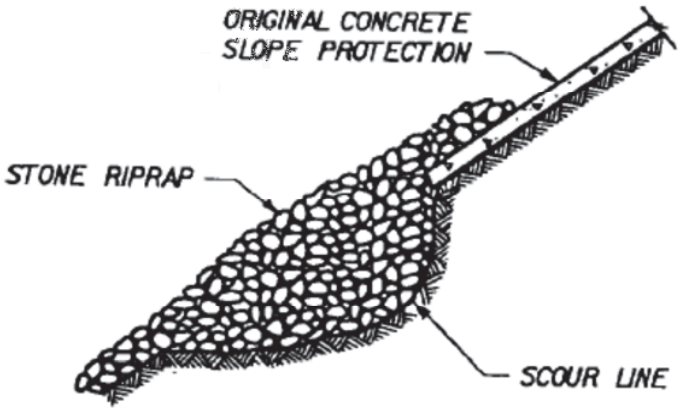

Figure 6.18 Bank repair using riprap (Army and Air Force 1994)

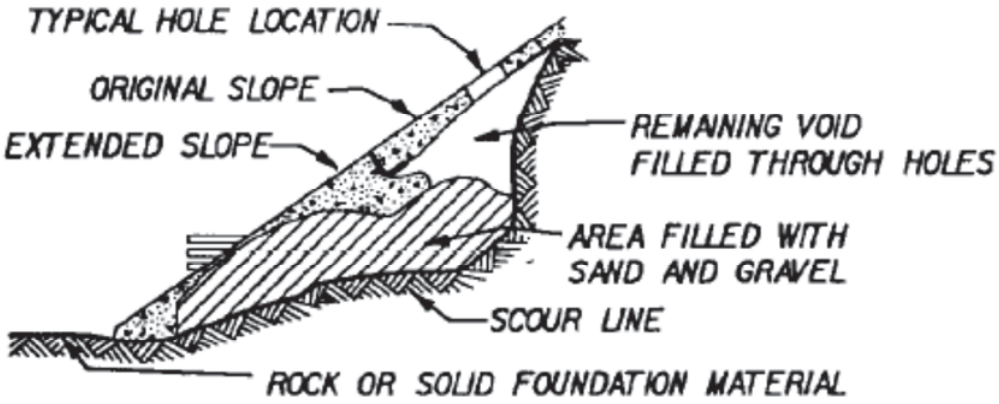

Figure 6.19 Concrete Bank Protector Extension (Army and Air Force 1994)

Figure 6.20 Partially Grouted Riprap (FHWA 2009)

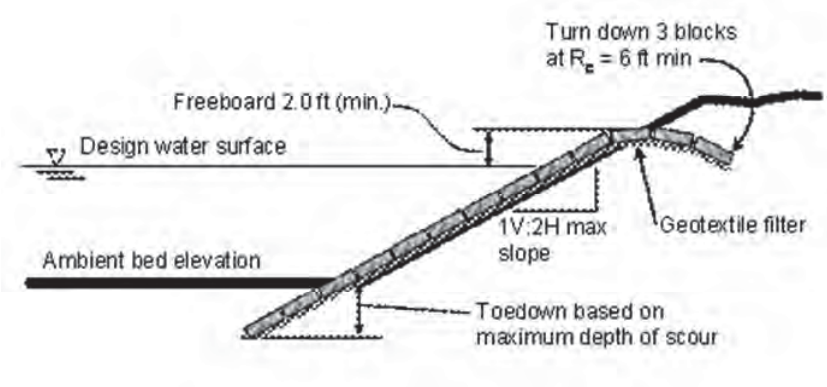

Figure 6.21 Articulated Concrete Block Bank Slope Protection (FHWA 2009)

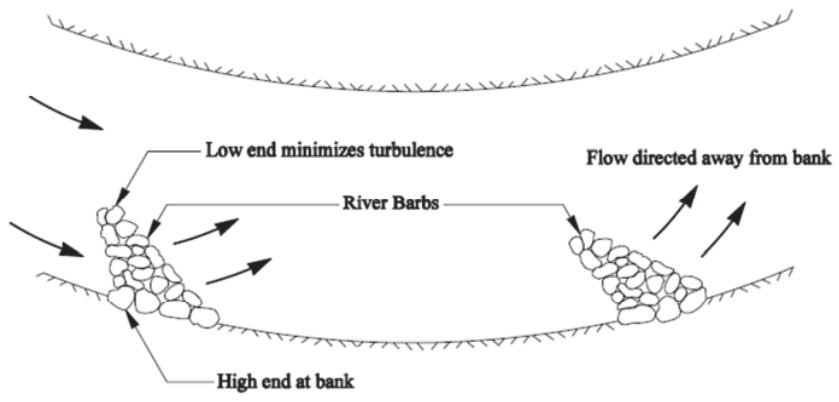

Figure 6.22 River Barb Implementation (WSDOT 2010)

This Page Has Been Intentionally Left Blank

Chapter 7 Summary, Conclusions, Recommendations and Future Research

7.1 Summary

The research team conducted a review of published material regarding bridge repair. All fifty state D.O.T.'s were researched for relevant manuals. National publications, produced by the FHWA and the Army and Air Force, were also analyzed. All elements of substructure deterioration were considered, including general concrete deterioration and scour. The absence of specific documentation for substructure repair was evident throughout the research process.

In order to determine common repair practices and their success rates, the research team surveyed maintenance engineers throughout the United States. The survey, composed of nine questions, was sent to 90 maintenance engineers and generated a response rate of 30%. It was determined from the survey that concrete surface repair is the most common repair technique, and is also viewed as the most unreliable. It was identified as the least effective repair, accounting for 40% of the responses. The most reliable repair was the correct sizing and use of riprap. Unique and successful repair techniques were also collected from the survey. The use of sacrificial anodes, concrete armor units and concrete encasements were reported for their effective nature. The survey gave the research team a guide for the state of practice and estimated longevity of bridge substructure repairs.

The research team visited 8 bridges throughout the Southeast and Southwest regions of WisDOT. These bridges were documented, both for their typical

deteriorations and unique repair methods. Through these bridges it was determined that the damage caused by deicing chemicals is extensive and varying. Improper expansion joint maintenance has accounted for a large portion of deterioration throughout Wisconsin's infrastructure. Bridges were visited where pier caps and bridge seats were directly below an expansion joint. These members typically showed signs of spalling and reinforcement corrosion due to chloride intrusion. Deicing chemicals becoming embedded within snowpack on concrete columns was also observed to cause a large portion of the observed deterioration.

In addition to observing deterioration throughout Wisconsin's infrastructure, the research team observed a number of unique repairs. A concrete encasement on pier columns was observed that had been in place for 18 years. At the time of site visit, the encasements were experiencing some delamination, but were still in very good condition. No spalling or exposed reinforcement was observed. Additionally, a concrete encasement of a pier cap was observed that had only been in place for 5 years. This encasement was much less successful than the column encasement, and had already exhibited delamination, extensive cracking and spalling. The use of FRP on pier columns and pier caps was observed only a year after the repair was conducted. Initial results make FRP appear to be a much more appropriate repair for pier caps than concrete encasements. Long term life of the column FRP repair needs to be tracked for it to be effectively compared to concrete column encasement. The use of sacrificial zinc anodes and sprayed-on concrete was another young repair that was documented. Four years after the repair was conducted, it was still in sound condition. No delamination was observed, and the entire concrete patch was still in place.

Throughout the research it was discovered that concrete repairs are the most common throughout Wisconsin. The current repair procedures for concrete only address the effect of the deterioration, and not the cause. Concrete surface repairs are frequently conducted without addressing what caused the steel reinforcement to corrode and result in delamination. When chlorides are allowed to remain in the existing concrete, or are allowed to continue entering the concrete, the steel reinforcement corrosion will continue to occur. Chloride extraction processes, cathodic protection and expansion joint maintenance are all useful tools to prevent steel reinforcement corrosion. Repairs are also available which not only replace section loss but incorporate a barrier to prevent further chloride intrusion, such as fiberglass jacketing and fiber wrapping. Consideration should be placed on repair life in addition to repair cost, since many of the concrete surface repairs have exhibited high failure rates within a few years of placement.

Timber repairs that were researched involved the repair of individual timber piles and timber sway bracing. A number of solutions are available which can replace a deteriorated portion of a pile, and possibly protect it from further attack. Pile posting, pile restoration and pile shimming all incorporate a new piece of treated timber in the repair. These methods are cost effective, but will be subjected to the same deterioration as the original pile since it is being replaced with the same material. Concrete jacketing, pile augmentation and PVC wrapping are methods which leave the existing pile in its deteriorated state, but replace the section loss with concrete and usually provide a watertight seal. While these three methods are typically more expensive than a typical timber replacement, they provide a level of protection against future deterioration.

Several other solutions are available to strengthen a timber pile bent, such as adding piles, repairing sway bracing or creating sway bracing.

Since the only substructure member that is composed out of steel is pile, there is not a wide range of options for steel substructure repair. Steel piles typically experience section loss at the waterline from the continual wetting and drying of the member. This can typically be rectified by adding steel to the cross section by welding or bolting. Further protection against deterioration can be provided if a concrete encasement is also incorporated for the repair. Fiberglass jackets that are form fitted to the specific H-pile can be utilized for the repair, and have the unique advantage of not requiring dewatering. If corrosion is a serious concern for H-piles, sacrificial anodes can be combined with any of the included repairs in order to create further protection.

There are a wide variety of options available to reduce and repair scour on bridge substructures. The repairs were separated into distinct categories to further differentiate them. Structural repairs are designated as repairs which increase bearing of the existing foundation, which could be through extending the footing below the scour line or underpinning the existing foundation. Armoring techniques are repairs which place a barrier to prevent erosion of the substrate. Armoring techniques included in the report are riprap, partially grouted riprap, sheet piles with riprap, concrete armor units, sacrificial piles, collars, gabion mattresses, grout filled mattresses and articulating concrete blocks. The appropriate design and placement procedures are included in Appendix B. Both the structural repairs and armoring techniques can be utilized on piers or abutments when the conditions are appropriate. As a means of reducing the erosive capacity of the water, a river stabilization method can be utilized. River stabilization

methods that were researched are bank barbs, engineered log jams and check dams. While the techniques are different for the three methods, they all attempt to reduce the energy and velocity of the river prior to it reaching the bridge substructure. Depending on what stage the scour is presently in a structural repair, armoring technique or river stabilization may be utilized.

7.2 Conclusions

Determining the efficacy of one repair method when compared to others is a difficult task. The longevity of repairs throughout WisDOT is not currently being tracked. Concrete surface repairs are often conducted without creating an appropriate record of when the work was done. The estimates for appropriate service lives could be much more accurate with proper records. As a means of comparing separate repairs, three decision matrices were created. The first decision matrix, included as Table 7.1, focuses on the different concrete repair methods. In order to effectively organize the various concrete repairs, they were separated into five categories. The categories are cathodic protection systems, crack repairs, general deterioration repairs, abutment repairs and bridge seat repairs. For the common repairs, pricing and service life data are included as a means of comparing the available options. Since unique repairs for abutments and bridge seats are less common, the data for pricing and service life was not able to be obtained. It should be noted that many of the available service life estimates are provided by specific product manufacturers. More accurate service life data may be obtained through the continued tracking of repair longevity throughout WisDOT.

Since existing bridges typically only utilize steel and timber for piles, they were combined into one decision matrix. Table 7.2 is the pile repair decision matrix, and includes both rehabilitation of existing piles and addition of supplemental piles. It can be noted that concrete piles are included in both the pile repair decision matrix and the concrete repair decision matrix. Dependent upon the type of deterioration, a relevant repair may be found in either matrix. In the pile repair decision matrix, the use of an anode embedded jacket includes a service life estimate, but no cost estimate. This repair is traditionally reserved for saltwater environments, and has a variable cost dependent on a number of factors. The cost could be estimated using the provided anode costs, fiberglass jacketing costs and site conditions if desired.

The last decision matrix that was created for the report compares the different scour repairs that are available. Table 7.3 is the scour decision matrix and is separated into armoring, structural and river stabilization techniques. Even though riprap is typically reported for its effective nature, many departments only see it as a temporary repair. There are several unique scour repairs included in the decision matrix which may reduce cost and increase service life. The implementation of gabions or grouted riprap, for example, can reduce the required riprap size while increasing the overall stability of the repair. Recent research has started to examine many of these systems; however service lives for scour repairs, particularly armoring techniques, are not readily available. This lack of information may be due to the high use of riprap for repairs, the variability of river conditions, or a lack of longevity tracking throughout the country. The difficulty of a visual inspection may also play a role in not understanding exactly when a scour repair fails.

7.3 Recommendations & Future Research

The research that was conducted indicates that several actions can be taken to increase the knowledge of repair efficacy. One of the most important changes that could be implemented would be to start tracking longevity of repairs throughout Wisconsin. Keeping a better record of simple concrete repairs, and making that record available through the Highway Structures Information System (HSI) would help to determine why some repairs are considered unreliable. In addition to tracking common repairs, new experimental repairs should be well documented and tracked for longevity. Several FRP repairs have been conducted in the Southwest region of WisDOT in the past few years. A catalog of these repairs, documenting any visible deterioration that appears will help to determine the efficacy of this technique for Wisconsin's climate. In addition to documenting longevity, the construction pricing provided in the decision matrix should be regularly updated. Many of the prices that were obtained were from other states that had experience with certain repair methods. Updating the decision matrix after some of these repairs are conducted will increase its accuracy and relevancy. After longevity and cost data have been assembled, a life cycle analysis can be conducted on any desired repairs. Getting a better idea of the life of a specific repair will provide the designer with useful information for determining which repair is most appropriate for a substructure.

After observing the relative successes and failures of repairs throughout Wisconsin, it was determined that there are several actions that can be taken to increase the reliability of existing repair methods. One of the main causes of substructure deterioration in Wisconsin is expansion joint deterioration. Initiating a more aggressive approach to expansion joint maintenance could prevent vast amounts of deterioration.

Replacing expansion joints before deterioration is observed on the substructure would help to prevent the spalling and cracking that is currently occurring on many pier caps. Another alteration that could be made to the current system is to modify the approach that is taken for concrete surface repairs. The cause of deterioration is frequently not being addressed when a concrete surface repair is conducted. Chlorides are being left in existing concrete, which will reinitiate the deterioration process. The use of concrete surface repair with chloride extraction or cathodic protection would greatly increase the reliability. Another repair that could be made more reliable is the use of concrete encasement. While concrete encasement has been very successful for columns and piles, it has not performed well on pier caps in the bridge which the research team visited. There are other available repair methods for concrete pier caps, such as FRP wrapping, which should be attempted before a concrete encasement. Since the FRP wrap covers the top of the pier cap, it helps prevent further deterioration caused by a leaking expansion joint. A concrete encasement provides no protection on the top of the pier cap, and should only be utilized if some other form of protection is included in the repair.

There are several topics that could be further investigated to help optimize future substructure repair methods. The use of cathodic protection systems provides a wide range of approaches to prevent reinforcement corrosion. They have been implemented with success in many states throughout the country. Cathodic protection systems have a higher initial cost, but a life cycle analysis could be conducted in order to determine if the extended repair life is worth the additional cost. In addition to cathodic protection, chloride extraction may be implemented to prevent steel reinforcement corrosion. The

removal of chloride ions from the concrete could greatly increase the service life of a bridge and is worth further investigation.

There are a wide variety of scour repairs that have been researched in the past ten years. Different approaches besides riprap should be investigated in order to ensure that the highest cost savings is always achieved. A life cycle cost analysis of the different scour repairs may justify the use of alternative methods to riprap. Many states have had experience and success utilizing manufactured scour armoring units, where riprap would be costly or ineffective. Another repair that could be investigated is the use of geofoam when an abutment is inadequate for the lateral loading. Since most of the approved repairs for abutment movement involve deadman walls and soil anchors, geofoam could be a cost effective alternative. Excavating the soil behind the abutment may prove to be a difficult task, but several of the existing repair methods require that procedure. Research could be undertaken which would analyze the reduction of lateral loading in addition to the geofoam's ability to withstand the surcharge loading.

Through the survey process it was discovered that many engineers have observed a problem regarding the adhesion of concrete repairs. The use of a standard concrete surface repair and a sprayed-on concrete repair were both noted for poor adhesion properties. Further research into the bonding of old and new concrete, and the use of bonding agents could prove useful as a means of increasing repair reliability. Many engineers commented that replacing concrete with a similar type frequently resulted in the best bonding performance. Determining which concrete characteristics are necessary to keep consistent would result in a refined and reliable means of conducting concrete patch repairs.

	Repair Methods	Piles	Piers	Abutments	Bridge Seats	Unit	Estimated Cost		Service Life	Year of Cost
							Low	High	Years	Estimate
Cathodic Protection Systems	Galvashield CC		X			Each	$24.00	$36.00	15	2012
	Galvashield XP		X	X	X	Each	$21.00	$36.00	15	2012
	Ebonex		X			Each	$29.00	$97.00	25-30	2012
	Norcure Chloride Extraction		X	X		SF	$35.00	$50.00	25-30	2012
	Galvanode DAS	X	X		X	Each	$165.00		10-20	2012
	Galvanode ASZ+		X			SF	$22.00	$27.00	10-20	2012
Crack Repairs	Epoxy Injection		X	X		LF	$20.00	$50.00	20	2012
	Mortar		X	X		LF	$35.00		20	2012
	Jacketing	X	X			LF	$600.00	$1,200.00	20-40	2012
	Drilling and Plugging			X						
	Simple Surface Repair		X	X		SF	$45.00	$77.60	5-10	2012
General Deterioration Repairs	Fiberglass Jackets	X	X			LF	$600.00	$1,200.00	20-40	2012
	FRP Wrap	X	X			SF	$10.00	$50.00	50-75	2012
	Mini Piles	X				LF	$49.00	$53.50		2008
	Underpinning	X				LF	$50.00	$200.00	15	2012
	Pier Widening		X			Each	$10,000.00	$25,000.00		2008
	Encasement	X	X			LF	$20.00		20	2012
	Sprayed-On Concrete		X	X		SF	$7.20	$20.13		2008
Abutment Repairs	Abutment Stability			X						
	Abutment Sliding Repair			X						
	Abutment Settlement Repair			X						
	Abutment Slope-Failure Effect			X						
	Abutment Tensile Repair			X						
Bridge Seat Repairs	Cap Seat Repair				X					
	Concrete Cap Extension				X					
	Beam Saddle Addition		X							

Table 7.1 Concrete Repair Decision Matrix.

	Repair Methods	Timber	Steel	Concrete	Unit	Estimated Cost		Service Life	Year of Cost
						Low	High	Years	Estimate
Pile Repair	Pile Posting	X			Each	$126.00	$252.00		2012
	Concrete Encasement	X	X	X	LF	$20.00		20	2012
	Pile Restoration	X							
	Pile Augmentation	X							
	PVC Wrap	X							
	FRP Wrap	X		X	SF	$10.00	$50.00	50-75	2012
	Pile Shimming	X			Each	$320.00			2011
	Adding Steel		X		LF	$10.00			2012
	Pile Jacket		X	X	LF	$600.00	$1,200.00	20	2012
	Anodes		X	X	Each	$21.00	$36.00	15	2012
	Anode Embedded Jacket		X	X				10-35	2012
Supplemental Piles	Steel Piles		X		LF	$29.64	$42.22		2011
	Timber Piles	X			LF	$17.00			2011
	Concrete Piles			X	LF	$32.08	$40.00		2011

Table 7.2 Pile Repair Decision Matrix.

	Repair Methods	Piers	Abutments	Bank Slope	Unit	Estimated Cost		Service Life	Year of Cost
						Low	High	Years	Estimate
Armoring	Riprap-Light	X	X	X	CY	$42.91	$49.02		2011
	Riprap-Medium	X	X	X	CY	$41.02	$43.13		2011
	Riprap-Heavy	X	X	X	CY	$32.92	$42.90		2011
	Grouted Riprap	X	X	X	CY	$125.00	$183.00		2012
	Sheet Piles with Riprap	X	X		LF	$23.43	$55.00		2011
	Concrete Armor Units	X			Each	$30.00	$2,250.00		2012
	Sacrificial Piles	X			LF	$17.00	$70.00		2011
	Collars	X				Experimental			
	Gabion Mattresses	X	X		CY	$30.00	$60.00		2012
	Gabion Baskets		X		CY	$100.00	$125.00		2012
	Grout Filled Matresses	X	X		SF	$25.00	$30.00		2005
	Articulated Concrete Blocks	X	X	X	SY	$82.50	$135.00		2012
	Slope Protector Extension			X	SF	$8.33	$9.60		2011
River Stabilization	Bank Barbs		X		Each	$10,000.00		10	2012
	Engineered Log Jam	X	X		Each	$15,000.00		10	2012
	Check Dams	X	X		Each	$20,000.00	$30,000.00	10	2012
Structural	Extended Footings	X	X						
	Backfill	X			CY	$5.28	$9.31		2011
	Concrete Apron Wall	X	X		CY	$385.78	$494.04		2008
	Under-Pinning	X			LF	$50.00	$200.00	15	2012
	Mini Piles	X			LF	$49.00	$53.50		2008

Table 7.3 Scour Repair Decision Matrix

Appendix A

Maintenance Engineer Survey Results

Page 1, Q1. Please Enter Your Contact Information

	1	
Name:	[redacted]	Mar 4, 2012 12:08 PM
Company:	WisDOT	Mar 4, 2012 12:08 PM
City/Town:	SE	Mar 4, 2012 12:08 PM
State:	WI	Mar 4, 2012 12:08 PM
Email Address:	[redacted]	Mar 4, 2012 12:08 PM

Page 2, Q3. What are the typical substructure deterioration problems that you have encountered?

1	Delamination of reinforced concrete columns and pier caps resulting from corrosion of reinforcing steel. Problem areas are concentrated but not limited to areas where salt laden snow is plastered against columns, and at pier caps under leaking joints, or pier caps extending beyond edge of deck. This problem may also be exasperated by thick salt spray clouds that are whipped up by traffic when pavement is wet. Insufficient concrete cover on reinforcing steel also plays a part but is not the sole contributor.	Mar 4, 2012 12:09 PM

Page 2, Q4. What investigation methods do you use to identify sources of substructure deterioration? For example, what method or sensor is used to identify scour?

1	Visual identification supplemented by a hammer. Areas of vertical or horizontal cracking are checked with hammer. Concrete discoloration or rust stains are also an indicator. Often there are none of these conditions present and delaminations are found just through sounding of the concrete, where accessible, with a hammer. Often large areas on pier caps are undetected by visual identification techniques.	Mar 4, 2012 12:09 PM

Page 2, Q5. Are there any novel NDE methods to detect substructure deterioration that you would recommend the research team to investigate for applicability in Wisconsin?

1	Not aware of any that would be practical in this Region.	Mar 4, 2012 12:09 PM

Page 1, Q1. Please Enter Your Contact Information

	1	
Name:	[redacted]	Sep 26, 2011 9:24 AM
Company:	wisdot	Sep 26, 2011 9:24 AM
City/Town:	waukesha	Sep 26, 2011 9:24 AM
State:	WI	Sep 26, 2011 9:24 AM
Email Address:	[redacted]	Sep 26, 2011 9:24 AM

Page 2, Q3. What are the typical substructure deterioration problems that you have encountered?

1	Delamination, Hairline Cracks, Wood pile rot at water line	Sep 26, 2011 9:32 AM

Page 2, Q4. What investigation methods do you use to identify sources of substructure deterioration? For example, what method or sensor is used to identify scour?

1	Routine inspection. Hit areas with a hammer and you can tell if there is deterioration by the sound.	Sep 26, 2011 9:32 AM

Page 2, Q5. Are there any novel NDE methods to detect substructure deterioration that you would recommend the research team to investigate for applicability in Wisconsin?

1	I can think of any.	Sep 26, 2011 9:32 AM

Page 2, Q6. What techniques have you commonly used or seen for repair of deteriorated or damaged substructures? How effective are they in your opinion? What are the positive and negative aspects of the technique(s)?

1	Removal and replacment of delaminated concrete works good. Reinforced concrete incasement of rotting wood piles worked good. Hair line cracking the do nothing opption works the best.	Sep 26, 2011 9:32 AM

Page 1, Q1. Please Enter Your Contact Information

	1	
Name:	[redacted]	Sep 26, 2011 6:33 AM
Company:	Wis. D.O.T.	Sep 26, 2011 6:33 AM
City/Town:	Madison	Sep 26, 2011 6:33 AM
State:	WI	Sep 26, 2011 6:33 AM
Email Address:	[redacted]	Sep 26, 2011 6:33 AM

Page 2, Q3. What are the typical substructure deterioration problems that you have encountered?

1	Cracking	Sep 26, 2011 6:36 AM

Page 2, Q4. What investigation methods do you use to identify sources of substructure deterioration? For example, what method or sensor is used to identify scour?

1	None, done by bridge section.	Sep 26, 2011 6:36 AM

Page 2, Q6. What techniques have you commonly used or seen for repair of deteriorated or damaged substructures? How effective are they in your opinion? What are the positive and negative aspects of the technique(s)?

1	Patching or crack sealing.	Sep 26, 2011 6:36 AM

Page 3, Q7. Based on your experience, what do you feel has been the most effective repair technique for a specific problem (i.e. scour, concrete cracking, concrete spalling, steel corrosion)?

1	Keeping the end of the deck sealed.	Sep 26, 2011 6:37 AM

Page 1, Q1. Please Enter Your Contact Information

	1	
Name:	[redacted]	Mar 4, 2012 12:18 PM
Company:	WisDOT	Mar 4, 2012 12:18 PM
City/Town:	SW - La Crosse	Mar 4, 2012 12:18 PM
State:	WI	Mar 4, 2012 12:18 PM
Email Address:	[redacted]	Mar 4, 2012 12:18 PM

Page 2, Q3. What are the typical substructure deterioration problems that you have encountered?

1	a) Microbiologically Induced Corrosion (MIC) b) Steel Section Loss c) Steel cracking d) Timber Defects and Deterioration e) Tipping concrete wings f) Scour g) Concrete spalling	Mar 4, 2012 12:19 PM

Page 2, Q4. What investigation methods do you use to identify sources of substructure deterioration? For example, what method or sensor is used to identify scour?

1	99% of the time it is VISUAL 1% - Ultrasonic Thickness Gauge	Mar 4, 2012 12:19 PM

Page 2, Q5. Are there any novel NDE methods to detect substructure deterioration that you would recommend the research team to investigate for applicability in Wisconsin?

1	No	Mar 4, 2012 12:19 PM

Page 2, Q6. What techniques have you commonly used or seen for repair of deteriorated or damaged substructures? How effective are they in your opinion? What are the positive and negative aspects of the technique(s)?

1	See appended table	Mar 4, 2012 12:19 PM

Page 3, Q7. Based on your experience, what do you feel has been the most effective repair technique for a specific problem (i.e. scour, concrete cracking, concrete spalling, steel corrosion)?		
1	I think building a concrete pier wall around the deteriorated timber piles is the most effective repair that we have done. I believe it strengthens the pier and it will last a very long time. Most other repairs will not last this long, even though I have no evidence to support this conclusion.	Mar 4, 2012 12:20 PM

Page 3, Q8. What has been the least effective in your experience? What caused the lack of effectiveness?		
1	Prior to 2004, many concrete spalling repairs have spalled again and need work. These repairs may not have included cleaning the reinforcement which would be a reason that they did not last. Maybe the original source of the corrosion was not eliminated either.	Mar 4, 2012 12:20 PM

Page 3, Q9. Are there any general or specialty contractors you have worked with in the past on substructure deterioration and repair projects that you would suggest the research team contact?		
1	I have attached a brochure from work in another part of my region that I do not know any more about than what is here. I attached the file to the email with this questionnaire.	Mar 4, 2012 12:20 PM

Page 3, Q10. Are you aware of any online maintenance manuals that would be relevant to this project? If so, could you provide a link or instructions on how to access them below?		
1	NHI course 134029: Bridge Maintenance Training Course	Mar 4, 2012 12:20 PM

Page 1, Q1. Please Enter Your Contact Information

	1	
Name:	[redacted]	Sep 26, 2011 8:29 AM
Company:	Wis DOT	Sep 26, 2011 8:29 AM
City/Town:	Madison	Sep 26, 2011 8:29 AM
State:	WI	Sep 26, 2011 8:29 AM
Email Address:	[redacted]	Sep 26, 2011 8:29 AM

Page 2, Q3. What are the typical substructure deterioration problems that you have encountered?

1	Spalling, scaling, cracking.	Sep 26, 2011 8:31 AM

Page 2, Q4. What investigation methods do you use to identify sources of substructure deterioration? For example, what method or sensor is used to identify scour?

1	GPR, sounding.	Sep 26, 2011 8:31 AM

Page 2, Q6. What techniques have you commonly used or seen for repair of deteriorated or damaged substructures? How effective are they in your opinion? What are the positive and negative aspects of the technique(s)?

1	Replace concrete with shot-crete or epoxy wrap repair job. Epoxy seems to have a much better life. Shot-crete is cheaper, but not confident in it's durability.	Sep 26, 2011 8:31 AM

Page 3, Q7. Based on your experience, what do you feel has been the most effective repair technique for a specific problem (i.e. scour, concrete cracking, concrete spalling, steel corrosion)?

1	FRP wraps for cracking/spalling concrete columns.	Sep 26, 2011 8:34 AM

Page 3, Q8. What has been the least effective in your experience? What caused the lack of effectiveness?

1	Shot-crete/hand mixed concrete for spalls. Adhesion issues caused the repair to	Sep 26, 2011 8:34 AM

Page 3, Q8. What has been the least effective in your experience? What caused the lack of effectiveness?

fall off.

Page 3, Q9. Are there any general or specialty contractors you have worked with in the past on substructure deterioration and repair projects that you would suggest the research team contact?

1	[redacted]	Sep 26, 2011 8:34 AM

Page 3, Q10. Are you aware of any online maintenance manuals that would be relevant to this project? If so, could you provide a link or instructions on how to access them below?

1	Not aware at this time.	Sep 26, 2011 8:34 AM

Page 1, Q1. Please Enter Your Contact Information

	1	
Name:	[redacted]	Mar 4, 2012 12:32 PM
Company:	WisDOT	Mar 4, 2012 12:32 PM
City/Town:	SW-Madison	Mar 4, 2012 12:32 PM
State:	WI	Mar 4, 2012 12:32 PM
Email Address:	[redacted]	Mar 4, 2012 12:32 PM

Page 2, Q3. What are the typical substructure deterioration problems that you have encountered?

1	Scour, cracking and spalling with or without corrosion of reinforcement. Some deterioration of exposed piling has been encountered.	Mar 4, 2012 12:33 PM

Page 2, Q4. What investigation methods do you use to identify sources of substructure deterioration? For example, what method or sensor is used to identify scour?

1	Underwater Probe inspections, underwater dive inspections and scour monitoring measurements with a measuring rod or a depth finder are all used to identify scour. Other deterioration is identified visually and by "sounding" with a hammer.	Mar 4, 2012 12:33 PM

Page 2, Q5. Are there any novel NDE methods to detect substructure deterioration that you would recommend the research team to investigate for applicability in Wisconsin?

1	No	Mar 4, 2012 12:33 PM

Page 2, Q6. What techniques have you commonly used or seen for repair of deteriorated or damaged substructures? How effective are they in your opinion? What are the positive and negative aspects of the technique(s)?

1	Concrete surface repair or just cleaning &painting of exposed rebar with epoxy are the most common. Some reinforced concrete jacketing has been done. We have a lot of experience with fiberwrapping spalled/delaminated areas (usually columns and pier caps). Concrete surface repair and coating of exposed rebar is effective for awhile, but generally fails over time because rebar continues to corrode and the surface repair falls off. Concrete jacketing has been done that has lasted 25 – 30 years before failing. I have heard that concrete jackets draw the chlorides from the original concrete into the jackets so that they eventually fail, but they are longer lasting. Fiberwrapping is fairly new, but most of it has held up well so far. The advantage of fiberwrapping is that it should last a long time and also helps to hold the repair in place and protect from the elements. The disadvantage is that it is expensive.	Mar 4, 2012 12:33 PM

Page 3, Q7. Based on your experience, what do you feel has been the most effective repair technique for a specific problem (i.e. scour, concrete cracking, concrete spalling, steel corrosion)?

1	Placing riprap for scour has been effective. Crack sealing is hit and miss, depending on the size of the crack and other factors. We have tried crack sealing where unknown voids existed behind the crack and we couldn't seal the crack because the material was just filling the void. See 4. for spalling /rebar corrosion.	Mar 4, 2012 12:34 PM

Page 3, Q8. What has been the least effective in your experience? What caused the lack of effectiveness?

1	Concrete surface repair is probably the least effective because the rebar continues to corrode and the spalling process starts all over.	Mar 4, 2012 12:34 PM

Page 3, Q9. Are there any general or specialty contractors you have worked with in the past on substructure deterioration and repair projects that you would suggest the research team contact?

1	[redacted] The contact information is in the attached info.	Mar 4, 2012 12:34 PM

Page 3, Q10. Are you aware of any online maintenance manuals that would be relevant to this project? If so, could you provide a link or instructions on how to access them below?

1	No	Mar 4, 2012 12:34 PM

Page 1, Q1. Please Enter Your Contact Information

	1	
Name:	[redacted]	Sep 27, 2011 6:00 AM
Company:	WisDOT	Sep 27, 2011 6:00 AM
City/Town:	Eau Claire	Sep 27, 2011 6:00 AM
State:	WI	Sep 27, 2011 6:00 AM
Email Address:	[redacted]	Sep 27, 2011 6:00 AM

Page 2, Q3. What are the typical substructure deterioration problems that you have encountered?

1	Rust, spalled concrete, cracked concrete	Sep 27, 2011 6:04 AM

Page 2, Q4. What investigation methods do you use to identify sources of substructure deterioration? For example, what method or sensor is used to identify scour?

1	Mostly visual. Other in depth methods are done by co-workers.	Sep 27, 2011 6:04 AM

Page 2, Q5. Are there any novel NDE methods to detect substructure deterioration that you would recommend the research team to investigate for applicability in Wisconsin?

1	I don't know enough to make a recommendation.	Sep 27, 2011 6:04 AM

Page 2, Q6. What techniques have you commonly used or seen for repair of deteriorated or damaged substructures? How effective are they in your opinion? What are the positive and negative aspects of the technique(s)?

1	I have not been around any structural damage repairs.	Sep 27, 2011 6:04 AM

Page 3, Q7. Based on your experience, what do you feel has been the most effective repair technique for a specific problem (i.e. scour, concrete cracking, concrete spalling, steel corrosion)?

1	I haven't been around any repair work.	Sep 27, 2011 6:04 AM

Page 3, Q7. Based on your experience, what do you feel has been the most effective repair technique for a specific problem (i.e. scour, concrete cracking, concrete spalling, steel corrosion)?

Page 3, Q8. What has been the least effective in your experience? What caused the lack of effectiveness?

1	I haven't been around any repair work.	Sep 27, 2011 6:04 AM

Page 3, Q9. Are there any general or specialty contractors you have worked with in the past on substructure deterioration and repair projects that you would suggest the research team contact?

1	I don't know of any.	Sep 27, 2011 6:04 AM

Page 3, Q10. Are you aware of any online maintenance manuals that would be relevant to this project? If so, could you provide a link or instructions on how to access them below?

1	No.	Sep 27, 2011 6:04 AM

Page 1, Q1. Please Enter Your Contact Information

	1	
Name:	[redacted]	Sep 26, 2011 4:36 AM
Company:	WisDOT	Sep 26, 2011 4:36 AM
City/Town:	Eau Claire	Sep 26, 2011 4:36 AM
State:	WI	Sep 26, 2011 4:36 AM
Email Address:	[redacted]	Sep 26, 2011 4:36 AM

Page 2, Q3. What are the typical substructure deterioration problems that you have encountered?

1	Wing wall/abutment/pier settlement. Concrete cracking/spalling.	Sep 26, 2011 4:41 AM

Page 2, Q4. What investigation methods do you use to identify sources of substructure deterioration? For example, what method or sensor is used to identify scour?

1	Probe for scour. Visual for cracking/settlement.	Sep 26, 2011 4:41 AM

Page 2, Q5. Are there any novel NDE methods to detect substructure deterioration that you would recommend the research team to investigate for applicability in Wisconsin?

1	no	Sep 26, 2011 4:41 AM

Page 2, Q6. What techniques have you commonly used or seen for repair of deteriorated or damaged substructures? How effective are they in your opinion? What are the positive and negative aspects of the technique(s)?

1	Wing replacement for settlement issues. Very effective, but costly. Concrete repair to fix cracks/spalls on abutments and piers. Most repairs seem to only last 5-10 years.	Sep 26, 2011 4:41 AM

Page 3, Q7. Based on your experience, what do you feel has been the most effective repair technique for a specific problem (i.e. scour, concrete cracking, concrete spalling, steel corrosion)?

1	Early detection, removal of bad material, prep and repair with new.	Sep 26, 2011 4:43 AM

Page 3, Q7. Based on your experience, what do you feel has been the most effective repair technique for a specific problem (i.e. scour, concrete cracking, concrete spalling, steel corrosion)?

Page 3, Q8. What has been the least effective in your experience? What caused the lack of effectiveness?

1	Crack repair, concrete sealing.	Sep 26, 2011 4:43 AM

Page 3, Q9. Are there any general or specialty contractors you have worked with in the past on substructure deterioration and repair projects that you would suggest the research team contact?

1	no.	Sep 26, 2011 4:43 AM

Page 3, Q10. Are you aware of any online maintenance manuals that would be relevant to this project? If so, could you provide a link or instructions on how to access them below?

1	none.	Sep 26, 2011 4:43 AM

Page 1, Q1. Please Enter Your Contact Information

	1	
Name:	[redacted]	Sep 27, 2011 5:44 AM
Company:	WDOT	Sep 27, 2011 5:44 AM
City/Town:	Wisconsin Rapids	Sep 27, 2011 5:44 AM
State:	WI	Sep 27, 2011 5:44 AM
Email Address:	[redacted]	Sep 27, 2011 5:44 AM

Page 2, Q3. What are the typical substructure deterioration problems that you have encountered?

1	Timber/Steel Piling: Deterioration of piles at/near ground line. Concrete (solid pier walls): Deterioration of concrete poured originally underwater, ie voids, spalling, inadequate consolidation, undermining etc.	Sep 27, 2011 6:01 AM

Page 2, Q4. What investigation methods do you use to identify sources of substructure deterioration? For example, what method or sensor is used to identify scour?

1	probing - hand methods; side-scan sonar and diving.	Sep 27, 2011 6:01 AM

Page 2, Q5. Are there any novel NDE methods to detect substructure deterioration that you would recommend the research team to investigate for applicability in Wisconsin?

1	Side scan sonar.	Sep 27, 2011 6:01 AM

Page 2, Q6. What techniques have you commonly used or seen for repair of deteriorated or damaged substructures? How effective are they in your opinion? What are the positive and negative aspects of the technique(s)?

1	Above water line: Steel: Reinforce with additional steel members; concrete: remove and replace deterioration; Limited experience with polymer/fabric (epoxy binder with some sort of fabric (column wrapping). Below waterline: concrete encapsulation (often times restricted by room to place forms, generally have to pour underwater); Most effective if substructure can be dewatered.	Sep 27, 2011 6:01 AM

Page 3, Q7. Based on your experience, what do you feel has been the most effective repair technique for a specific problem (i.e. scour, concrete cracking, concrete spalling, steel corrosion)?

1	Concrete Repairs Underwater: Pre-placed Concrete aggregate repairs.	Sep 27, 2011 6:01 AM

Page 3, Q8. What has been the least effective in your experience? What caused the lack of effectiveness?

1	Generally, any type of concrete patching (ie. surface repairs). Materials do not last for the long term, they are only a temporary repair.	Sep 27, 2011 6:01 AM

Page 3, Q9. Are there any general or specialty contractors you have worked with in the past on substructure deterioration and repair projects that you would suggest the research team contact?

1	[redacted]	Sep 27, 2011 6:01 AM

Page 3, Q10. Are you aware of any online maintenance manuals that would be relevant to this project? If so, could you provide a link or instructions on how to access them below?

1	No.	Sep 27, 2011 6:01 AM

Page 1, Q1. Please Enter Your Contact Information

	1	
Name:	[redacted]	Sep 29, 2011 11:55 AM
Company:	WisDOT	Sep 29, 2011 11:55 AM
City/Town:	Green Bay	Sep 29, 2011 11:55 AM
State:	WI	Sep 29, 2011 11:55 AM
Email Address:	[redacted]	Sep 29, 2011 11:55 AM

Page 2, Q3. What are the typical substructure deterioration problems that you have encountered?

1	Vertical cracks, spalling, r-bar corrosion	Sep 29, 2011 11:59 AM

Page 2, Q4. What investigation methods do you use to identify sources of substructure deterioration? For example, what method or sensor is used to identify scour?

1	Visual inspection, sounding with a hammer	Sep 29, 2011 11:59 AM

Page 2, Q5. Are there any novel NDE methods to detect substructure deterioration that you would recommend the research team to investigate for applicability in Wisconsin?

1	No	Sep 29, 2011 11:59 AM

Page 2, Q6. What techniques have you commonly used or seen for repair of deteriorated or damaged substructures? How effective are they in your opinion? What are the positive and negative aspects of the technique(s)?

1	Concrete Surface Repair. They can be effective if the surface and r-bar are prepared properly.	Sep 29, 2011 11:59 AM

Page 1, Q1. Please Enter Your Contact Information

	1	
Name:	[redacted]	Mar 4, 2012 12:11 PM
Company:	WisDOT	Mar 4, 2012 12:11 PM
City/Town:	NE	Mar 4, 2012 12:11 PM
State:	WI	Mar 4, 2012 12:11 PM
Email Address:	[redacted]	Mar 4, 2012 12:11 PM

Page 2, Q3. What are the typical substructure deterioration problems that you have encountered?

1	1.) Concrete spalling due to steel reinforcement corrosion. 2.) Erosion under and around abutments. 3.) Scour around piers	Mar 4, 2012 12:12 PM

Page 2, Q4. What investigation methods do you use to identify sources of substructure deterioration? For example, what method or sensor is used to identify scour?

1	Visual for erosion and sounding concrete deterioration with a hammer. Boat with depth finder and survey rod to determine scour hole.	Mar 4, 2012 12:12 PM

Page 2, Q5. Are there any novel NDE methods to detect substructure deterioration that you would recommend the research team to investigate for applicability in Wisconsin?

1	None that I'm aware of.	Mar 4, 2012 12:12 PM

Page 2, Q6. What techniques have you commonly used or seen for repair of deteriorated or damaged substructures? How effective are they in your opinion? What are the positive and negative aspects of the technique(s)?

1	For deteriorated concrete, we sound the area, sawcut around the area (1" deep), remove the unsound concrete and patch with a fast setting concrete by either hand placement or spraying. The repair usually lasts 2 to 5 years. We placed large riprap in the scour hole to stabilize the area. To date the repairs have worked.	Mar 4, 2012 12:12 PM

Page 3, Q7. Based on your experience, what do you feel has been the most effective repair technique for a specific problem (i.e. scour, concrete cracking, concrete spalling, steel corrosion)?

1	All the techniques we have tried for concrete repairs on substructure units are minimally effective and are in-effect a "band-aid" fix. The large riprap repair for scour has been effective.	Mar 4, 2012 12:12 PM

Page 3, Q8. What has been the least effective in your experience? What caused the lack of effectiveness?

1	See answer to question 7.	Mar 4, 2012 12:12 PM

Page 3, Q9. Are there any general or specialty contractors you have worked with in the past on substructure deterioration and repair projects that you would suggest the research team contact?

1	Concrete surface repairs, ways to contain erosion under abutments.	Mar 4, 2012 12:12 PM

Page 3, Q10. Are you aware of any online maintenance manuals that would be relevant to this project? If so, could you provide a link or instructions on how to access them below?

1	No	Mar 4, 2012 12:12 PM

Page 1, Q1. Please Enter Your Contact Information

	1	
Name:	[redacted]	Sep 16, 2011 6:37 AM
Company:	IDOT	Sep 16, 2011 6:37 AM
City/Town:	Schaumburg	Sep 16, 2011 6:37 AM
State:	IL	Sep 16, 2011 6:37 AM
Email Address:	[redacted]	Sep 16, 2011 6:37 AM

Page 2, Q3. What are the typical substructure deterioration problems that you have encountered?

1	Cracking, delamination, and spalling of concrete. Corrosion of reinforcement.	Sep 16, 2011 6:45 AM

Page 2, Q4. What investigation methods do you use to identify sources of substructure deterioration? For example, what method or sensor is used to identify scour?

1	Visually, sounding with a hammer. We typically check for scour with physical probes (rods).	Sep 16, 2011 6:45 AM

Page 2, Q5. Are there any novel NDE methods to detect substructure deterioration that you would recommend the research team to investigate for applicability in Wisconsin?

1	Check for delams over large areas using IR cameras to detect minor differences in surface temperature resulting from different thicknesses of concrete.	Sep 16, 2011 6:45 AM

Page 2, Q6. What techniques have you commonly used or seen for repair of deteriorated or damaged substructures? How effective are they in your opinion? What are the positive and negative aspects of the technique(s)?

1	Formed concrete repair / structural repair of concrete, and shotcrete application. These methods tend to be somewhat effective in the short term, but there are usually fairly high rates of failure within 5-10 years.	Sep 16, 2011 6:45 AM

Page 3, Q7. Based on your experience, what do you feel has been the most effective repair technique for a specific problem (i.e. scour, concrete cracking, concrete spalling, steel corrosion)?		
1	Our scour issues (fairly rare) have been dealt with effectively by dumping rip rap into scour holes.	Sep 16, 2011 6:49 AM

Page 3, Q8. What has been the least effective in your experience? What caused the lack of effectiveness?		
1	Formed concrete repairs and shotcrete repairs often fail, presumably due to lack of adequate bond when constructed, or additional corrosion of reinforcement.	Sep 16, 2011 6:49 AM

Page 3, Q9. Are there any general or specialty contractors you have worked with in the past on substructure deterioration and repair projects that you would suggest the research team contact?		
1	Mo	Sep 16, 2011 6:49 AM

Page 3, Q10. Are you aware of any online maintenance manuals that would be relevant to this project? If so, could you provide a link or instructions on how to access them below?		
1	IDOT Bureau of Bridges and strucutres has a number of useful mauals online. The structural services manual in particular may be of some use. http://www.dot.il.gov/bridges/brdocuments.html http://www.dot.il.gov/bridges/brmanuals.html http://www.dot.il.gov/bridges/pdf/structural%20services%20manual.exe	Sep 16, 2011 6:49 AM

Page 1, Q1. Please Enter Your Contact Information

	1	
Name:	[redacted]	Sep 20, 2011 8:31 AM
Company:	IDOT	Sep 20, 2011 8:31 AM
City/Town:	Schaumburg	Sep 20, 2011 8:31 AM
State:	IL	Sep 20, 2011 8:31 AM
Email Address:	[redacted]	Sep 20, 2011 8:31 AM

Page 2, Q3. What are the typical substructure deterioration problems that you have encountered?

1	Spalling, delaminations, cracks.	Sep 20, 2011 8:37 AM

Page 2, Q4. What investigation methods do you use to identify sources of substructure deterioration? For example, what method or sensor is used to identify scour?

1	Hammer Sounding of the substructure elements. Source of the detioration can be traced to leaking expansion joints above the substructure elements - or salt spray from the adjacent roadway next to the abutment / pier. To detect scour we use survey rods or fish finders.	Sep 20, 2011 8:37 AM

Page 2, Q5. Are there any novel NDE methods to detect substructure deterioration that you would recommend the research team to investigate for applicability in Wisconsin?

1	Use of Infrared Cameras Technology to determine area of delamination. This is complicated because many of the substructure elements are shaded by the deck.	Sep 20, 2011 8:37 AM

Page 2, Q6. What techniques have you commonly used or seen for repair of deteriorated or damaged substructures? How effective are they in your opinion? What are the positive and negative aspects of the technique(s)?

1	Shotcrete, Formed Concrete Repairs. Effectiveness varies by whether or not the source of the chloride contamination was remedied. Shotcrete is a little cheaper and is useful when large areas require repairs, but the formed repairs are the	Sep 20, 2011 8:37 AM

Page 2, Q6. What techniques have you commonly used or seen for repair of deteriorated or damaged substructures? How effective are they in your opinion? What are the positive and negative aspects of the technique(s)?

most durable.

Page 1, Q1. Please Enter Your Contact Information		
	1	
Name:	[redacted]	Mar 4, 2012 11:53 AM
Company:	Indiana D.O.T.	Mar 4, 2012 11:53 AM
City/Town:	Midwest	Mar 4, 2012 11:53 AM
State:	IN	Mar 4, 2012 11:53 AM
Email Address:	[redacted]	Mar 4, 2012 11:53 AM

Page 2, Q3. What are the typical substructure deterioration problems that you have encountered?		
1	Timber – Rotted/Crushed Timber Piles and Bent Caps Concrete – Deteriorated concrete mainly due to salt leakage through failed joints, broken drain pipes, and salt spray from vehicles over and under the bridges. Steel – Section loss to exposed steel piles at the waterline and at the interface with Concrete Bent Caps.	Mar 4, 2012 11:55 AM

Page 2, Q4. What investigation methods do you use to identify sources of substructure deterioration? For example, what method or sensor is used to identify scour?		
1	Usually visual methods and sounding with a hammer.	Mar 4, 2012 11:55 AM

Page 2, Q5. Are there any novel NDE methods to detect substructure deterioration that you would recommend the research team to investigate for applicability in Wisconsin?		
1	Not at this time.	Mar 4, 2012 11:55 AM

Page 2, Q6. What techniques have you commonly used or seen for repair of deteriorated or damaged substructures? How effective are they in your opinion? What are the positive and negative aspects of the technique(s)?

1	Timber – Replace the deteriorated timber members, encase the timber in concrete, replace the entire structure. They are effective if done. Repairs involve a lot of effort on what may be a sub-standard bridge. Concrete – Remove deteriorated concrete and replace with a good concrete repair product. We have installed zinc anodes on some substructures, as well as some full blown cathodic protection systems. Most repairs are only done using contracts. Many designers aren't aware of cathodic protection and therefore don't call for it. Steel – Place steel jackets of some type around damaged or deteriorated piles, or encased in concrete. These repairs can be effective for the short term, if done properly. For the long term, more that jackets usually need to be done, since deterioration will continue.	Mar 4, 2012 11:55 AM

Page 3, Q7. Based on your experience, what do you feel has been the most effective repair technique for a specific problem (i.e. scour, concrete cracking, concrete spalling, steel corrosion)?

1	Timber – Short Term: Replace Timber in kind. Long Term: Replace the structure. Concrete – If chloride levels are low enough then repairs made with adding zinc anodes and good quality concrete patch material can be made. If chloride levels are too high, then often the best option is to just try to get more life out of the structure then replace it. On some occasions, when the chloride levels are high, chloride extraction and a full/partial cathodic protection system may be cost effective. Steel – Placing steel jackets around round steel pile shells has worked when the deterioration is away from the cap or the channel bottom. For other steel substructure units bolted spliced in repairs and on occasion even welded repairs have been used. Sometimes, concrete filled jackets have been placed around steel piles. All of these have been effective for the short term, and sometimes much longer.	Mar 4, 2012 11:56 AM

Page 3, Q8. What has been the least effective in your experience? What caused the lack of effectiveness?

1	Concrete – Concrete patching without addressing the chlorides in some manner. Corrosion cells re- develop and deterioration resumes often at an accelerated rate.	Mar 4, 2012 11:56 AM

Page 3, Q9. Are there any general or specialty contractors you have worked with in the past on substructure deterioration and repair projects that you would suggest the research team contact?

1	On the US-12 project, [redacted] was used to test and evaluate the situation and then develop the cathodic protection system that was installed.	Mar 4, 2012 11:56 AM

Page 1, Q1. Please Enter Your Contact Information

	1	
Name:	[redacted]	Sep 15, 2011 9:38 AM
Company:	INDOT	Sep 15, 2011 9:38 AM
City/Town:	Laporte	Sep 15, 2011 9:38 AM
State:	IN	Sep 15, 2011 9:38 AM
Email Address:	[redacted]	Sep 15, 2011 9:38 AM

Page 2, Q3. What are the typical substructure deterioration problems that you have encountered?

1	1. Rocker Bottoms Rusting and Flattening causing bridge joint edges to drop, creates a bump and snow plow blade tripping. 2. Pier spalls due to ice and salt leaking thru joints. 3.Scour, undermining, and loss of stability of pier foundations due to floods	Sep 15, 2011 10:03 AM

Page 2, Q4. What investigation methods do you use to identify sources of substructure deterioration? For example, what method or sensor is used to identify scour?

1	1, visual on site bridge inspection and tapping surface with hammer. 2. Recording and taking channel cross-section depth elevation from top of bridge rails and coparing them with past measurements to watch for channel shifting, and increases or decrease in depths elevations. 3. Hiring divers to inspect depths greater than 5'. 4. Wading with probe, tapes, and waders. 5. Using fish finder radar to provide a plot of the stream's cross-section and along 10' width on both pier sides.	Sep 15, 2011 10:03 AM

Page 2, Q5. Are there any novel NDE methods to detect substructure deterioration that you would recommend the research team to investigate for applicability in Wisconsin?

1	Side Shooting Radar and Sonar, Underwater Camers on a radio controlled submirsible.	Sep 15, 2011 10:03 AM

Page 2, Q6. What techniques have you commonly used or seen for repair of deteriorated or damaged substructures? How effective are they in your opinion? What are the positive and negative aspects of the technique(s)?

1	1. Sprayed on Hydraulic Cocrete, or Gunite, on to a reinforcement mat anchor bolted to a pier after the loose cocrete was removed. 2. Concrete placed underwater. Quite, effective for 20 years, cathodic protective pucks need to be wired to reinforing to prevent corrosion battery from forming between new concrete and old concrete. After 20 years repairs need to be repeated.	Sep 15, 2011 10:03 AM

Page 3, Q7. Based on your experience, what do you feel has been the most effective repair technique for a specific problem (i.e. scour, concrete cracking, concrete spalling, steel corrosion)?

1	Good Programming of Bridges: Replace Overlays, Jts., and Conc, Appr, Slabs every 20 years. Only do (2) overlays on a Deck. Repace Decks every 40 yrs if less than 12" thick. Replace Deck every 60 yrs if more than 12" thick. Replace whole Bridge, Piles, Piers every 60 years.	Sep 15, 2011 10:15 AM

Page 3, Q8. What has been the least effective in your experience? What caused the lack of effectiveness?

1	Sealing Joints with a silicone membrane and concrete headers, XJS type Jt. A quick, inexpensive repair, silicone begin to break down in 5 years and header break up at 10 years, but a good ss Exp Jt with Steel Anchors with last 20yrs the Service Life of an Overlay.	Sep 15, 2011 10:15 AM

Page 3, Q9. Are there any general or specialty contractors you have worked with in the past on substructure deterioration and repair projects that you would suggest the research team contact?

1	No.	Sep 15, 2011 10:15 AM

Page 3, Q10. Are you aware of any online maintenance manuals that would be relevant to this project? If so, could you provide a link or instructions on how to access them below?

1	No.	Sep 15, 2011 10:15 AM

Page 1, Q1. Please Enter Your Contact Information

	1	
Name:	[redacted]	Sep 19, 2011 6:33 AM
Company:	INDot	Sep 19, 2011 6:33 AM
City/Town:	Vincennes	Sep 19, 2011 6:33 AM
State:	IN	Sep 19, 2011 6:33 AM
Email Address:	[redacted]	Sep 19, 2011 6:33 AM

Page 2, Q3. What are the typical substructure deterioration problems that you have encountered?

1	Leaking joints onto piers and bent caps causing spalling and corrodide steel.	Sep 19, 2011 6:38 AM

Page 2, Q4. What investigation methods do you use to identify sources of substructure deterioration? For example, what method or sensor is used to identify scour?

1	Sounding hammer on concrete, visual probing around in water piers along with portable fathometer, and under water divers.	Sep 19, 2011 6:38 AM

Page 2, Q6. What techniques have you commonly used or seen for repair of deteriorated or damaged substructures? How effective are they in your opinion? What are the positive and negative aspects of the technique(s)?

1	Sheet piling with large riprap around exposed footing and or piling. it holds very well and soilts in over time for good protection, it is very hard to get placed in some locations.	Sep 19, 2011 6:38 AM

Page 1, Q1. Please Enter Your Contact Information

	1	
Name:	[redacted]	Sep 19, 2011 3:01 AM
Company:	INDOT	Sep 19, 2011 3:01 AM
City/Town:	Indianapolis	Sep 19, 2011 3:01 AM
State:	IN	Sep 19, 2011 3:01 AM
Email Address:	[redacted]	Sep 19, 2011 3:01 AM

Page 2, Q3. What are the typical substructure deterioration problems that you have encountered?

1	Spalling, delaminations, rebar exposure, crushing, vertical cracks, other diagonal cracks, settlement due to scour, corrosion of pilings, erosion around substructure units.	Sep 19, 2011 3:09 AM

Page 2, Q4. What investigation methods do you use to identify sources of substructure deterioration? For example, what method or sensor is used to identify scour?

1	visual Sonar unit, probe (survey rod)	Sep 19, 2011 3:09 AM

Page 2, Q5. Are there any novel NDE methods to detect substructure deterioration that you would recommend the research team to investigate for applicability in Wisconsin?

1	I don't believe there is one clear cut favorite or best applicant.	Sep 19, 2011 3:09 AM

Page 2, Q6. What techniques have you commonly used or seen for repair of deteriorated or damaged substructures? How effective are they in your opinion? What are the positive and negative aspects of the technique(s)?

1	Wrapping of columns; crete shot injection; gunite repairs. Only fair. They just don't hold up very long.	Sep 19, 2011 3:09 AM

Page 3, Q7. Based on your experience, what do you feel has been the most effective repair technique for a specific problem (i.e. scour, concrete cracking, concrete spalling, steel corrosion)?		
1	Scour - counter measures Cracks and spalls and corrosion - once the cracking, spalling and rebar corrosion has occurred no repair I know seems to be effective for very long.	Sep 19, 2011 3:14 AM

Page 3, Q8. What has been the least effective in your experience? What caused the lack of effectiveness?		
1	Gunite repairs Additional cracking and water penetration.	Sep 19, 2011 3:14 AM

Page 3, Q9. Are there any general or specialty contractors you have worked with in the past on substructure deterioration and repair projects that you would suggest the research team contact?		
1	No specific ones.	Sep 19, 2011 3:14 AM

Page 3, Q10. Are you aware of any online maintenance manuals that would be relevant to this project? If so, could you provide a link or instructions on how to access them below?		
1	Sorry no	Sep 19, 2011 3:14 AM

Page 1, Q1. Please Enter Your Contact Information

	1	
Name:	[redacted]	Sep 15, 2011 9:44 AM
Company:	INDOT	Sep 15, 2011 9:44 AM
City/Town:	Vincennes	Sep 15, 2011 9:44 AM
State:	IN	Sep 15, 2011 9:44 AM
Email Address:	[redacted]	Sep 15, 2011 9:44 AM

Page 2, Q3. What are the typical substructure deterioration problems that you have encountered?

1	spalling, rebar-corrosion, collision damage, (bearing pad movement), scour	Sep 15, 2011 9:52 AM

Page 2, Q4. What investigation methods do you use to identify sources of substructure deterioration? For example, what method or sensor is used to identify scour?

1	visual only	Sep 15, 2011 9:52 AM

Page 2, Q5. Are there any novel NDE methods to detect substructure deterioration that you would recommend the research team to investigate for applicability in Wisconsin?

1	none--there are consultants available to do this work, but it is expensive, and would only be used if absolutely necessary to investigat a suspected problem	Sep 15, 2011 9:52 AM

Page 2, Q6. What techniques have you commonly used or seen for repair of deteriorated or damaged substructures? How effective are they in your opinion? What are the positive and negative aspects of the technique(s)?

1	Repairs are generally cosmetic only, and do not last very long. Normally , repairs are done by hand to cover unsightly spalling--there are some machines that can be used, but again only cosmetic--no real structural value. Rip rap used for scour problems.	Sep 15, 2011 9:52 AM

Page 3, Q7. Based on your experience, what do you feel has been the most effective repair technique for a specific problem (i.e. scour, concrete cracking, concrete spalling, steel corrosion)?

1	rip rap for scour, hand placed cosmetic concrete repair.	Sep 15, 2011 9:54 AM

Page 3, Q7. Based on your experience, what do you feel has been the most effective repair technique for a specific problem (i.e. scour, concrete cracking, concrete spalling, steel corrosion)?

Page 3, Q8. What has been the least effective in your experience? What caused the lack of effectiveness?

1	hand places concrete repair—cosmetic only	Sep 15, 2011 9:54 AM

Page 3, Q9. Are there any general or specialty contractors you have worked with in the past on substructure deterioration and repair projects that you would suggest the research team contact?

1	no	Sep 15, 2011 9:54 AM

Page 3, Q10. Are you aware of any online maintenance manuals that would be relevant to this project? If so, could you provide a link or instructions on how to access them below?

1	no	Sep 15, 2011 9:54 AM

Page 1, Q1. Please Enter Your Contact Information

	1	
Name:	[redacted]	Sep 16, 2011 4:22 AM
Company:	INDOT	Sep 16, 2011 4:22 AM
City/Town:	Laporte, IN	Sep 16, 2011 4:22 AM
State:	IN	Sep 16, 2011 4:22 AM
Email Address:	[redacted]	Sep 16, 2011 4:22 AM

Page 2, Q3. What are the typical substructure deterioration problems that you have encountered?

1	Minor scour, exposed piles, rusted steel pile shells, concrete deterioration	Sep 16, 2011 4:28 AM

Page 2, Q4. What investigation methods do you use to identify sources of substructure deterioration? For example, what method or sensor is used to identify scour?

1	Usually probing for scour, dive teams, visual majority method	Sep 16, 2011 4:28 AM

Page 2, Q5. Are there any novel NDE methods to detect substructure deterioration that you would recommend the research team to investigate for applicability in Wisconsin?

1	Purdue is developing a scour truck enabling engineers to check for scour with radar/camera/probe	Sep 16, 2011 4:28 AM

Page 2, Q6. What techniques have you commonly used or seen for repair of deteriorated or damaged substructures? How effective are they in your opinion? What are the positive and negative aspects of the technique(s)?

1	Clean and paint, surface repairs with grout, rip rap for scour. all limited success	Sep 16, 2011 4:28 AM

Page 3, Q7. Based on your experience, what do you feel has been the most effective repair technique for a specific problem (i.e. scour, concrete cracking, concrete spalling, steel corrosion)?

1	Refer to # 6	Sep 16, 2011 4:31 AM

Page 3, Q7. Based on your experience, what do you feel has been the most effective repair technique for a specific problem (i.e. scour, concrete cracking, concrete spalling, steel corrosion)?

Page 3, Q8. What has been the least effective in your experience? What caused the lack of effectiveness?

1	Misplaced rip rap, insufficient cleaning of base material	Sep 16, 2011 4:31 AM

Page 3, Q9. Are there any general or specialty contractors you have worked with in the past on substructure deterioration and repair projects that you would suggest the research team contact?

1	No	Sep 16, 2011 4:31 AM

Page 3, Q10. Are you aware of any online maintenance manuals that would be relevant to this project? If so, could you provide a link or instructions on how to access them below?

1	ASHTO may have. Recall seeing one at the Midwest MTG but cannot remember.	Sep 16, 2011 4:31 AM

Page 1, Q1. Please Enter Your Contact Information

	1	
Name:	[redacted]	Mar 4, 2012 12:30 PM
Company:	KYDOT	Mar 4, 2012 12:30 PM
City/Town:	Midwest	Mar 4, 2012 12:30 PM
State:	KY	Mar 4, 2012 12:30 PM
Email Address:	[redacted]	Mar 4, 2012 12:30 PM

Page 2, Q3. What are the typical substructure deterioration problems that you have encountered?

1	Typically, we deal with scour related issues such as exposure of foundation elements, undermining of the foundations, or settlement due to scour.	Mar 4, 2012 12:30 PM

Page 2, Q4. What investigation methods do you use to identify sources of substructure deterioration? For example, what method or sensor is used to identify scour?

1	Most investigations are done visually or with probe rods. We have recently begun using NDT methods for determination of unknown foundation depth determination (dispersive wave method). In some cases, sonar is used for stream bed depths. We also have consultants using side imaging to get pictures of the current condition of the foundations and stream bed.	Mar 4, 2012 12:30 PM

Page 2, Q5. Are there any novel NDE methods to detect substructure deterioration that you would recommend the research team to investigate for applicability in Wisconsin?

1	Side imaging sonar seems to be the way of the future to determine substructure deterioration. Investigating methods and technology to increase the resolution of the images would be useful.	Mar 4, 2012 12:30 PM

Page 2, Q6. What techniques have you commonly used or seen for repair of deteriorated or damaged substructures? How effective are they in your opinion? What are the positive and negative aspects of the technique(s)?

1	The most common fix is riprap (cheapest). It can be effective if properly sized	Mar 4, 2012 12:30 PM

Page 2, Q6. What techniques have you commonly used or seen for repair of deteriorated or damaged substructures? How effective are they in your opinion? What are the positive and negative aspects of the technique(s)?

	and placed (follow HEC 23 guidelines). We have also used Ajacks (precast concrete countermeasures) and they were effective. Ajacks are more expensive, but may provide a more permanent fix.	

Page 3, Q7. Based on your experience, what do you feel has been the most effective repair technique for a specific problem (i.e. scour, concrete cracking, concrete spalling, steel corrosion)?

1	This is a difficult question to answer. Most of the techniques are dependent upon the specific problem presented. We try to follow HEC 23 guidelines and the matrix provided when selecting countermeasures.	Mar 4, 2012 12:31 PM

Page 3, Q8. What has been the least effective in your experience? What caused the lack of effectiveness?

1	I personally have not been involved with the scour program long enough to evaluate many of the techniques used for long term effectiveness. I will say that debris diverting measures (mechanical devices attached to the upstream face of piers) used to divert debris away from piers have not been effective in their application on KY bridges.	Mar 4, 2012 12:31 PM

Page 3, Q9. Are there any general or specialty contractors you have worked with in the past on substructure deterioration and repair projects that you would suggest the research team contact?

1	We have used [redacted] and [redacted] for underwater inspection contracts. Also, [redacted] may be a good consultant to contact about investigations and evaluations.	Mar 4, 2012 12:31 PM

Page 3, Q10. Are you aware of any online maintenance manuals that would be relevant to this project? If so, could you provide a link or instructions on how to access them below?

1	The best would be HEC 23 provided by the FHWA http://www.fhwa.dot.gov/engineering/hydraulics/pubs/09111/index.cfm	Mar 4, 2012 12:31 PM

Page 1, Q1. Please Enter Your Contact Information

	1	
Name:	[redacted]	Sep 30, 2011 6:10 AM
Company:	Minnesota DOT	Sep 30, 2011 6:10 AM
City/Town:	Oakdale	Sep 30, 2011 6:10 AM
State:	MN	Sep 30, 2011 6:10 AM
Email Address:	[redacted]	Sep 30, 2011 6:10 AM

Page 2, Q3. What are the typical substructure deterioration problems that you have encountered?

1	Local scour: When contractors are allowed to build haul roads out into river beds it causes scour – the river can never be replaced as it was before construction started. Debris is not removed in a timely manner. It does not matter if the roads are upstream or downstream of the bridge. Abutment tipping: Due to a couple of design sources a. Poor foundation work, piling is too short for soil conditions (mostly in older bridges). b. Expansion/contraction abutments: freeze/thaw is uneven allowing material to fall into voids left when abutments are in contraction. This 'thawing fill' causes tipping and rotational forces on superstructures. Concrete Columns: 95% of time the rebar cages are too close to the surface in snow (salt) splash zones. Steel Columns: These are typically bents in water. They rust and often have section loss at the water/air line. Timber: Most timber bridges I have inspected were over 50 years old. Crushing of pier caps is common. Rotting bents at soil/air lines is common. Most timber bridges are single spans. Many have abutments consisting of timber pile driven straight down (not battered - somtimes the outside piles are the only ones battered). These abutments often tip in due to soil and hydraulic pressure from the roadway.	Sep 30, 2011 6:16 AM

Page 2, Q4. What investigation methods do you use to identify sources of substructure deterioration? For example, what method or sensor is used to identify scour?

1	A few MnDOT bridges have movement sensors. Scour inspection is usually by probing or soundings (recommended every four years minimum). Underwater inspections are accomplished by consultants every 4th year on bridges identified as being critical or bridges that may have some other issues that are difficult to inspect. Steel bents: typically inspections are hands on – most problems occur from rusting and section loss at water/air line. Magnetic Particle units may be used as well as ultrasound but these are usually in rare instances. Concrete Columns: hands on inspections. Usually the inspector will notice discoloring if reinforcement steel is corroded. Once that happens, sounding with geological hammers may give the extent of damage. These issues almost always lead to cracking, spalling and exposing reinforcement in the affected areas. Timber	Sep 30, 2011 6:16 AM

Page 2, Q4. What investigation methods do you use to identify sources of substructure deterioration? For example, what method or sensor is used to identify scour?

Columns: sounding, probing, core drilling are all methods used.

Page 2, Q5. Are there any novel NDE methods to detect substructure deterioration that you would recommend the research team to investigate for applicability in Wisconsin?

1	Discoloring is often the first sign of a problem. Infrared thermography can detect delaminated concrete. we are investigating this technique.	Sep 30, 2011 6:16 AM

Page 2, Q6. What techniques have you commonly used or seen for repair of deteriorated or damaged substructures? How effective are they in your opinion? What are the positive and negative aspects of the technique(s)?

1	New Construction - concrete: Proper cover for reinforcement is a must! A penetrating sealer should also be applied before special surface finishes are sprayed on. [this includes all columns, pier caps and abutments with the potential to be exposed] Preventive Maintenance: Concrete columns in snow (salt) splash zones should be cleaned then special surface finish applied within 5 years of construction. Special surface finishes last about 4 to 5 years on bridges in our northern climate. Penetrating sealers should be considered before applying special surface finishes at this time as well. [include exposed pier caps and abutments to save bearing areas] Concrete Columns Repairs: For minor deterioration – chip loose concrete, sandblast steel, apply rust preventer/bonding agent, cover with Gunnite, shotcrete or concrete. Let cure then apply penetrating sealer and special surface finish. Epoxy injection into larger cracks may be something to consider. Concrete Columns with severe deterioration: follow the steps above through applying the rust preventer/bonding agent – use forms that give additional concrete cover to existing external surfaces (4" to 6")	Sep 30, 2011 6:16 AM

Page 3, Q7. Based on your experience, what do you feel has been the most effective repair technique for a specific problem (i.e. scour, concrete cracking, concrete spalling, steel corrosion)?

1	Scour: using applicable riprap with filter fabric. Cracking: Epoxy injection if cracks are large. The repair described in Question 6 is a successful repair. Steel reinforcement: sandblasted clean – then using rust preventers and covering as in Question 6.	Sep 30, 2011 8:57 AM

Page 3, Q8. What has been the least effective in your experience? What caused the lack of effectiveness?

1	Using special surface finishes after advanced deterioration. Surface finishes	Sep 30, 2011 8:57 AM

Page 3, Q8. What has been the least effective in your experience? What caused the lack of effectiveness?

should be applied to concrete in fair to good shape (only). Good Workmanship of all repairs is imperative.

Page 3, Q9. Are there any general or specialty contractors you have worked with in the past on substructure deterioration and repair projects that you would suggest the research team contact?

1	none	Sep 30, 2011 8:57 AM

Page 3, Q10. Are you aware of any online maintenance manuals that would be relevant to this project? If so, could you provide a link or instructions on how to access them below?

1	I'll send the mndot maintenance manual by separate email.	Sep 30, 2011 8:57 AM

Page 1, Q1. Please Enter Your Contact Information

	1	
Name:	[redacted]	Sep 15, 2011 7:19 PM
Company:	MoDOT	Sep 15, 2011 7:19 PM
City/Town:	Jefferson City	Sep 15, 2011 7:19 PM
State:	MO	Sep 15, 2011 7:19 PM
Email Address:	[redacted]	Sep 15, 2011 7:19 PM

Page 2, Q3. What are the typical substructure deterioration problems that you have encountered?

1	The most frequent forms of deterioration we find to substructure units is that which forms under expansion devices due to infiltration from salt and runoff onto the beam cap and columns. This includes cracking, delaminating spalling and leaching of concrete units. Another fast emerging problem has been the development of section loss in piling of piling bents or piling under abutment caps.	Sep 15, 2011 7:20 PM

Page 2, Q4. What investigation methods do you use to identify sources of substructure deterioration? For example, what method or sensor is used to identify scour?

1	The usual way we detect deterioration is simply through visual means	Sep 15, 2011 7:20 PM

Page 2, Q5. Are there any novel NDE methods to detect substructure deterioration that you would recommend the research team to investigate for applicability in Wisconsin?

1	No	Sep 15, 2011 7:20 PM

Page 2, Q6. What techniques have you commonly used or seen for repair of deteriorated or damaged substructures? How effective are they in your opinion? What are the positive and negative aspects of the technique(s)?

1	Typical (approved) concrete patching products are used to patch, especially where critical bearing support is needed. Formed type repairs are preferred and longer lasting. Unformed type repairs or shotcrete repairs are sometimes used	Sep 15, 2011 7:20 PM

Page 2, Q6. What techniques have you commonly used or seen for repair of deteriorated or damaged substructures? How effective are they in your opinion? What are the positive and negative aspects of the technique(s)?

	in less critical areas but those type repairs are usually not real effective or long-lasting. In less critical areas, sometimes an epoxy sealer is used in lieu of a patch.	

Page 3, Q7. Based on your experience, what do you feel has been the most effective repair technique for a specific problem (i.e. scour, concrete cracking, concrete spalling, steel corrosion)?

1	The most effective, I would say, is preventive maintenance to stave off deterioration that eventually develops through corrosion when cracks are not sealed off. When substructure cracking is observed in beam caps, for instance, this is the time to thoroughly clean (flush) and apply a penetrating epoxy sealer that seals off the cracks and protects the steel from the intrusion of salts and water. Also, resealing on a certain interval (5 to 7 years) is important to keep the sealer effective.	Sep 15, 2011 7:34 PM

Page 3, Q8. What has been the least effective in your experience? What caused the lack of effectiveness?

1	Spalling concrete - Unformed patching of concrete. The material is an overhead or vertical patch product that relies on bond to the existing concrete and has nothing to grab to.	Sep 15, 2011 7:34 PM

Page 3, Q9. Are there any general or specialty contractors you have worked with in the past on substructure deterioration and repair projects that you would suggest the research team contact?

1	No specific contractors.	Sep 15, 2011 7:34 PM

Page 3, Q10. Are you aware of any online maintenance manuals that would be relevant to this project? If so, could you provide a link or instructions on how to access them below?

1	not aware	Sep 15, 2011 7:34 PM

Page 1, Q1. Please Enter Your Contact Information

	1	
Name:	[redacted]	Sep 19, 2011 5:15 AM
Company:	New York State Dept of Transportation	Sep 19, 2011 5:15 AM
City/Town:	Albany	Sep 19, 2011 5:15 AM
State:	NY	Sep 19, 2011 5:15 AM
Email Address:	[redacted]	Sep 19, 2011 5:15 AM

Page 2, Q3. What are the typical substructure deterioration problems that you have encountered?

1	Chloride intrusion - rebar corrosion	Sep 19, 2011 5:21 AM

Page 2, Q4. What investigation methods do you use to identify sources of substructure deterioration? For example, what method or sensor is used to identify scour?

1	Sounding/hammer, visual For scour: probing	Sep 19, 2011 5:21 AM

Page 2, Q5. Are there any novel NDE methods to detect substructure deterioration that you would recommend the research team to investigate for applicability in Wisconsin?

1	We've tried GPR and Thermal. We have enough visually evident problems - we haven't pursued early detection techniques in earnest.	Sep 19, 2011 5:21 AM

Page 2, Q6. What techniques have you commonly used or seen for repair of deteriorated or damaged substructures? How effective are they in your opinion? What are the positive and negative aspects of the technique(s)?

1	Form & pour concrete repairs, Low volume shotcrete. Forming takes some time - shotcrete is quicker but needs an experienced operator and may not be suitable for large repairs.	Sep 19, 2011 5:21 AM

Page 3, Q7. Based on your experience, what do you feel has been the most effective repair technique for a specific problem (i.e. scour, concrete cracking, concrete spalling, steel corrosion)?

1	Replace in kind. Prevention: stop the leaking joint and protect the substructure	Sep 19, 2011 5:23 AM

Page 3, Q7. Based on your experience, what do you feel has been the most effective repair technique for a specific problem (i.e. scour, concrete cracking, concrete spalling, steel corrosion)?

concrete with silane.

Page 3, Q8. What has been the least effective in your experience? What caused the lack of effectiveness?

1	Do nothing.	Sep 19, 2011 5:23 AM

Page 3, Q9. Are there any general or specialty contractors you have worked with in the past on substructure deterioration and repair projects that you would suggest the research team contact?

1	No	Sep 19, 2011 5:23 AM

Page 3, Q10. Are you aware of any online maintenance manuals that would be relevant to this project? If so, could you provide a link or instructions on how to access them below?

1	ACI manual on concrete repair.	Sep 19, 2011 5:23 AM

Page 1, Q1. Please Enter Your Contact Information

	1	
Name:	[redacted]	Mar 4, 2012 12:03 PM
Company:	Ohio D.O.T.	Mar 4, 2012 12:03 PM
City/Town:	-	Mar 4, 2012 12:03 PM
State:	OH	Mar 4, 2012 12:03 PM
Email Address:	[redacted]	Mar 4, 2012 12:03 PM

Page 2, Q3. What are the typical substructure deterioration problems that you have encountered?

1	Cracking of concrete Spalling underneath bearing masonry plate Delamination and spalling on stub abutments supporting slab Beams touching backwall Corrosion holes and section loss through steel bents at mudline Settlement	Mar 4, 2012 12:04 PM

Page 2, Q4. What investigation methods do you use to identify sources of substructure deterioration? For example, what method or sensor is used to identify scour?

1	Annual visual inspections, ODOT Manual of Bridge Inspection: http://www.dot.state.oh.us/Divisions/Engineering/Structures/bridge%20operations%20and%20maintenance/Documents/Manual%20of%20Bridge%20Inspection_2010.pdf	Mar 4, 2012 12:04 PM

Page 2, Q6. What techniques have you commonly used or seen for repair of deteriorated or damaged substructures? How effective are they in your opinion? What are the positive and negative aspects of the technique(s)?

1	Replacing concrete or steel in kind – good only if you allow the drainage to escape and clean the corrosion from the steel ODOT Specs detail concrete removal and replacement– good only if you allow the drainage to escape and clean the corrosion from the steel Temporary supports	Mar 4, 2012 12:04 PM

Page 3, Q7. Based on your experience, what do you feel has been the most effective repair technique for a specific problem (i.e. scour, concrete cracking, concrete spalling, steel corrosion)?

1	Depends on the situation	Mar 4, 2012 12:04 PM

Page 3, Q7. Based on your experience, what do you feel has been the most effective repair technique for a specific problem (i.e. scour, concrete cracking, concrete spalling, steel corrosion)?

Page 3, Q10. Are you aware of any online maintenance manuals that would be relevant to this project? If so, could you provide a link or instructions on how to access them below?

1	ODOT Maintenance Manual: http://www.dot.state.oh.us/Divisions/Engineering/Structures/bridge%20operations%20and%20maintenance/PreventiveMaintenanceManual/Pages/default.aspx	Mar 4, 2012 12:04 PM

Page 1, Q1. Please Enter Your Contact Information

	1	
Name:	[redacted]	Mar 4, 2012 12:15 PM
Company:	Oklahoma DOT	Mar 4, 2012 12:15 PM
City/Town:	South/Central Region	Mar 4, 2012 12:15 PM
State:	OK	Mar 4, 2012 12:15 PM
Email Address:	[redacted]	Mar 4, 2012 12:15 PM

Page 2, Q3. What are the typical substructure deterioration problems that you have encountered?

1	• Corrosion primarily from chloride contamination. • Traffic impact or impacts from debris • Scour • Rot • Infestation • Steel section loss	Mar 4, 2012 12:16 PM

Page 2, Q4. What investigation methods do you use to identify sources of substructure deterioration? For example, what method or sensor is used to identify scour?

1	• Sounding of RC/timber substructures with hammers • Probe spread footings with rod • Visual	Mar 4, 2012 12:16 PM

Page 2, Q5. Are there any novel NDE methods to detect substructure deterioration that you would recommend the research team to investigate for applicability in Wisconsin?

1	No	Mar 4, 2012 12:16 PM

Page 2, Q6. What techniques have you commonly used or seen for repair of deteriorated or damaged substructures? How effective are they in your opinion? What are the positive and negative aspects of the technique(s)?

1	• Shotcrete – Effective short term repair • Fiber wrap (FRP) with shotcrete – Effective long term repair • Timber pile "splints" – Effective short term repair • Timber pile encasement – Effective long term repair. We have done some piling with GFRP. • Steel/Timber pile replacement – Effective long term repair • Concrete encasement with mild reinforcement and sacrificial anodes or inhibitors	Mar 4, 2012 12:16 PM

Page 3, Q7. Based on your experience, what do you feel has been the most effective repair technique for a specific problem (i.e. scour, concrete cracking, concrete spalling, steel corrosion)?

1	A combination of shotcrete and fiber (FRP) or concrete encasement for RC substructures using an inhibitor or sacrificial anodes. All repairs for timber substructures are effective until structure can be replaced.	Mar 4, 2012 12:17 PM

Page 3, Q8. What has been the least effective in your experience? What caused the lack of effectiveness?

1	Shotcrete alone has been the least effective repair. Water/chlorides penetrate cold joints and/or shrinkage cracks in concrete encasements and cause repairs to spall. Not addressing chlorides embedded in existing concrete or steel rebar can shorten the life of the repairs.	Mar 4, 2012 12:17 PM

Page 3, Q9. Are there any general or specialty contractors you have worked with in the past on substructure deterioration and repair projects that you would suggest the research team contact?

1	[redacted]	Mar 4, 2012 12:17 PM

Page 3, Q10. Are you aware of any online maintenance manuals that would be relevant to this project? If so, could you provide a link or instructions on how to access them below?

1	No manuals.	Mar 4, 2012 12:17 PM

Page 1, Q1. Please Enter Your Contact Information

	1	
Name:	[redacted]	Mar 4, 2012 12:23 PM
Company:	Tennessee DOT	Mar 4, 2012 12:23 PM
City/Town:	Headquarters	Mar 4, 2012 12:23 PM
State:	TN	Mar 4, 2012 12:23 PM
Email Address:	[redacted]	Mar 4, 2012 12:23 PM

Page 2, Q3. What are the typical substructure deterioration problems that you have encountered?

1	Concrete substructures – typical deterioration is caused by leaking expansion joints and reinforcement steel with inadequate cover. Problems would be spalls from corrosion of reinforcement, cracks from the same type of corrosion. Cap damage from steel expansion bearings that have frozen from corrosion and are pulling on the anchor bolts. Columns that are spalling, cracking with rebar corrosion. Bents and piers with steel piles also have corrosion/ section loss problems, typically in areas in contact with the ground line.	Mar 4, 2012 12:24 PM

Page 2, Q4. What investigation methods do you use to identify sources of substructure deterioration? For example, what method or sensor is used to identify scour?

1	For typical investigation we would use visual inspection, sounding with hammers. For scour critical bridges or bridges with unknown foundations we use the Bridgewatch program that notifies when conditions are there that could cause scour.	Mar 4, 2012 12:24 PM

Page 2, Q5. Are there any novel NDE methods to detect substructure deterioration that you would recommend the research team to investigate for applicability in Wisconsin?

1	None that I can think of.	Mar 4, 2012 12:24 PM

Page 2, Q6. What techniques have you commonly used or seen for repair of deteriorated or damaged substructures? How effective are they in your opinion? What are the positive and negative aspects of the technique(s)?

1	We commonly remove the concrete deterioration or damage, clean the rebar,	Mar 4, 2012 12:24 PM

Page 2, Q6. What techniques have you commonly used or seen for repair of deteriorated or damaged substructures? How effective are they in your opinion? What are the positive and negative aspects of the technique(s)?

and then recast the concrete. For scour, we typically use rip-rap and in some cases we use both rip-rap and a seal footing. Sometimes repaired columns are encased in a steel shell to help keep concrete confined. Steel pile bents have concrete collars cast around them at the ground line.

Page 3, Q7. Based on your experience, what do you feel has been the most effective repair technique for a specific problem (i.e. scour, concrete cracking, concrete spalling, steel corrosion)?

1	I feel that all the techniques are effective unless you neglect to fix the problem that caused the deterioration in the first place.	Mar 4, 2012 12:25 PM

Page 3, Q8. What has been the least effective in your experience? What caused the lack of effectiveness?

1	Neglecting to fix the problem that caused the deterioration in the first place.	Mar 4, 2012 12:25 PM

Page 3, Q9. Are there any general or specialty contractors you have worked with in the past on substructure deterioration and repair projects that you would suggest the research team contact?

1	We have not used any specialty contractors.	Mar 4, 2012 12:25 PM

Page 3, Q10. Are you aware of any online maintenance manuals that would be relevant to this project? If so, could you provide a link or instructions on how to access them below?

1	We don't have any online maintenance maunuals.	Mar 4, 2012 12:25 PM

Page 1, Q1. Please Enter Your Contact Information

	1	
Name:	[redacted]	Sep 15, 2011 12:03 PM
Company:	VCTIR	Sep 15, 2011 12:03 PM
City/Town:	charlottesville	Sep 15, 2011 12:03 PM
State:	VA	Sep 15, 2011 12:03 PM
Email Address:	[redacted]	Sep 15, 2011 12:03 PM

Page 2, Q3. What are the typical substructure deterioration problems that you have encountered?

1	Salt scaling of concrete and corrosion of rebar, both due to salt and water leaking through joints between deck spans. Salt scaling of concrete and corrosion of rebar due to salt water exposure.	Sep 15, 2011 12:11 PM

Page 2, Q4. What investigation methods do you use to identify sources of substructure deterioration? For example, what method or sensor is used to identify scour?

1	Visual inspection, hammer taps for delaminations and half cell potential measurements for corrosion.	Sep 15, 2011 12:11 PM

Page 2, Q5. Are there any novel NDE methods to detect substructure deterioration that you would recommend the research team to investigate for applicability in Wisconsin?

1	Infrared thermography.	Sep 15, 2011 12:11 PM

Page 2, Q6. What techniques have you commonly used or seen for repair of deteriorated or damaged substructures? How effective are they in your opinion? What are the positive and negative aspects of the technique(s)?

1	Shotcrete, self consolidating concrete, pier jackets, galvanic cathodic protection. Performance is a function of design and workmanship. Best performance when all salt contaminated concrete is removed, good surface preparation, good placement and cure of concrete.	Sep 15, 2011 12:11 PM

Page 3, Q7. Based on your experience, what do you feel has been the most effective repair technique for a specific problem (i.e. scour, concrete cracking, concrete spalling, steel corrosion)?

1	Currently, remove concrete and do shotecrete repair and apply CP if needed.	Sep 15, 2011 12:17 PM

Page 3, Q8. What has been the least effective in your experience? What caused the lack of effectiveness?

1	Placing jackets around pier. Low service life because covered up problem (corrosion continued and chloride contaminated concrete was not removed).	Sep 15, 2011 12:17 PM

Page 3, Q9. Are there any general or specialty contractors you have worked with in the past on substructure deterioration and repair projects that you would suggest the research team contact?

1	[redacted]	Sep 15, 2011 12:17 PM

Page 3, Q10. Are you aware of any online maintenance manuals that would be relevant to this project? If so, could you provide a link or instructions on how to access them below?

1	No	Sep 15, 2011 12:17 PM

Page 1, Q1. Please Enter Your Contact Information

	1	
Name:	[redacted]	Mar 4, 2012 12:26 PM
Company:	Washington DOT	Mar 4, 2012 12:26 PM
City/Town:	Olympic	Mar 4, 2012 12:26 PM
State:	WA	Mar 4, 2012 12:26 PM
Email Address:	[redacted]	Mar 4, 2012 12:26 PM

Page 2, Q3. What are the typical substructure deterioration problems that you have encountered?

1	Washington still has a lot of creosote treated timber bridges. These bridges were built from the 1930's up to 1956. We spend a lot of time replacing or encapsulating timber caps. The piles we remove the deteriorated portion and replace with steel. Scour is the next problem. We normally use rip rap to protect the piers. We also use barbs to redirect the flow and engineered log jams to protect the abutments. Concrete piles and columns in a salt water environment have been another problem. We have been encapsulating the piles with either steel jackets that are then grouted or fiberglass jackets. The majority of the other substructure problems have been small spalls in the concrete. These are patched.	Mar 4, 2012 12:27 PM

Page 2, Q4. What investigation methods do you use to identify sources of substructure deterioration? For example, what method or sensor is used to identify scour?

1	Where practical a visual inspection by state bridge inspectors. Diving inspections are conducted by either by the bridge diving team or contract divers. Inspectors use probes around foundations. The waterways are also surveyed and records kept. If the waterway is aggrading or degrading this is noted by the inspectors. The elevation of the bottom of the spread footings or pile tips is noted on the records. We have had contract divers use an underwater LIDAR camera that could take a picture of the foundation in heavily silted water with zero visibility. Electronic soundings are also taken.	Mar 4, 2012 12:27 PM

Page 2, Q6. What techniques have you commonly used or seen for repair of deteriorated or damaged substructures? How effective are they in your opinion? What are the positive and negative aspects of the technique(s)?

1	In the past we used to replace creosoted treated timber caps in kind. Because of environmental regulations and the difficulty in finding good tight grained timber we have switched to replacing timber caps with steel. We now have an innovative way of encapsulating the cap with steel that does not require removals of the old cap or the need to jack the bridge up to replace the cap. The same goes with timber piles. We used to replace the deteriorated portion of a pile with a new treated piece of pile. Now we use 12 inch diameter round steel piling. The use of the steel lasts a long time, meets our environmental regulations, we can do the repairs without need of constructing temporary bents to support the structure.	Mar 4, 2012 12:27 PM

Page 3, Q7. Based on your experience, what do you feel has been the most effective repair technique for a specific problem (i.e. scour, concrete cracking, concrete spalling, steel corrosion)?

1	Scour , This needs to be determined in the field. We usually fill in the scour holes with rip rap of a size that will not get washed away. We also have had success with installing barbs to redirect the flow of the water away from piers. Engineered log jams are an environmental way to protect the piers along banks without the hardening of large rip rap. We have also successfully used check dams in the stream. Concrete cracking – epoxy injection of the cracks. Concrete spalling - patch the smaller spalls after treating any exposed reinforcing steel. Use of steel or fiberglass jackets on piles in salt water. Fiberglass wrap. Steel corrosion- clean the steel and paint. Severe deterioration may require replacement.	Mar 4, 2012 12:28 PM

Page 3, Q8. What has been the least effective in your experience? What caused the lack of effectiveness?

1	Use of rip rap that was too small for the force of the flow and washed out in a short time. Check dams that were not constructed of hard enough rock that deteriorated in a short amount of time.	Mar 4, 2012 12:28 PM

Page 3, Q9. Are there any general or specialty contractors you have worked with in the past on substructure deterioration and repair projects that you would suggest the research team contact?

1	Don't have any.	Mar 4, 2012 12:28 PM

Page 3, Q10. Are you aware of any online maintenance manuals that would be relevant to this project? If so, could you provide a link or instructions on how to access them below?

1	Not if the AASHTO Repair Manual is the same as the AASHTO Maintenance	Mar 4, 2012 12:28 PM

This page has been intentionally left blank.

Appendix B

Bridge Substructure Repair Manual

Table of Contents

Concrete Substructure Repairs B-5
Repair of Concrete Cracking B-5
Epoxy Injection B-5
Stitching B-6
Fiberglass Jacketing B-7
FRP Wrap B-8
Drilling and Plugging B-10
Repair of Reinforcement Corrosion B-11
Galvanic Cathodic Systems B-11
Impressed Current Systems B-13
Chloride Extraction B-15
Zinc Surface Spray B-17
Repair of Concrete Deterioration B-19
Concrete Surface Repair B-19
Sprayed-On Concrete Repair B-20
Repair of Concrete Piles B-21
Fiberglass Pile Jacket B-21
FRP Wrap B-22
Underpinning with Mini-Piles B-24
Underpinning B-25
Repair of Concrete Piers B-26
Strengthening or Widening B-26
Pier Column Encasement B-27
Column FRP Wrap B-28
Fiberglass Jacket B-30
Pier Cap Encasement B-31
Repair of Concrete Abutments B-32
Abutment Concrete Repair B-32
Abutment Stability B-33
Abutment Sliding B-34
Abutment Settlement B-36

Abutment Slop Failure B-37
Abutment Tensile Cracking B-39
Repair of Concrete Bridge Seats B-40
Abutment and Cap Seat Repair B-40
Concrete Cap Extension B-41
Beam Saddle Addition B-42
Timber Substructure Repairs B-44
Timber Pile Repair B-44
Pile Posting B-44
Concrete Jacketing B-46
Pile Restoration B-47
Pile Augmentation B-48
PVC Wrap B-49
FRP Wrap B-50
Pile Shimming B-52
Supplemental Piles B-53
Steel Piles B-53
Timber Piles B-55
Timber Sway Bracing B-57
Repair of Sway Bracing B-57
Creation of Sway Bracing B-58
Steel Substructure Repairs B-59
Steel Pile Repair B-59
Adding Steel B-59
Pile Jackets B-60
Concrete Encasement B-61
Sacrificial Anodes B-62
Anode Embedded Jacket B-63
Scour Repairs B-64
Pier Structural Repairs B-64
Extended Footings B-64
Backfill B-66
Concrete Apron Wall B-67

Underpinning....B-68
Underpinning with Mini-Piles....B-70
Pier Armoring Techniques....B-71
Riprap....B-71
Partially Grouted Riprap....B-73
Sheet Pile Skirt with Riprap....B-76
Concrete Armor Units....B-77
Gabion Mattresses....B-79
Grout Filled Mattresses....B-82
Articulating Concrete Blocks....B-84
Abutment Structural Repairs....B-87
Lower Foundation....B-87
Concrete Apron Wall....B-88
Abutment Armoring Techniques....B-89
Riprap....B-89
Partially Grouted Riprap....B-91
Sheet Pile Skirt with Riprap....B-92
Gabion Mattresses....B-93
Grout Filled Mattresses....B-95
Articulating Concrete Blocks....B-97
Bank Slope Protection....B-99
Protector Extension....B-99
Riprap....B-100
Partially Grouted Riprap....B-102
Articulating Concrete Blocks....B-104
River Stabilization....B-105
Bank Barbs....B-105
Engineered Log Jam....B-107
Check Dams....B-108

Epoxy Injection

This method can be used for cracks 3/8-inch or less in width. If the crack is present in a pier cap, it should only be injected if it is less than 1/8-inch wide and it should be inspected for further movement. Manufacturer's specifications should be followed when provided.

Required Materials

1. Injection Gun
2. Plastic Tube
3. Epoxy
4. Flanged Injection Nipple
5. High Pressure Air Compressor
6. Variable Speed Drill

Construction Procedure

1. Clean the crack with high pressure air
2. Drill injection holes along the length of the crack
3. Fix flanged injection nipples into the drilled holes
4. Use a thixotropic liquid sealant to cover the crack-surface between injection sites
5. Prepare the epoxy for injection
6. Inject the epoxy utilizing the injection gun through the injection nipples in a vertically ascending order
7. If necessary, re-inject the epoxy

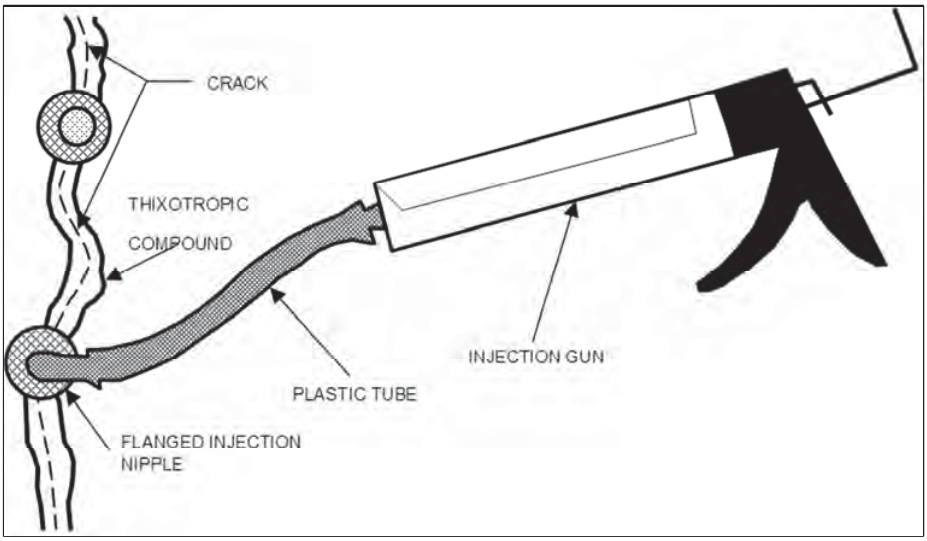

*Adapted from: Raina 1996

Stitching

This method is not typically applicable for compression members. If it is used in a compression member, a concrete overlay needs to be placed on the stitching dogs to ensure adequate transfer of compressive forces. Stitching does not close the existing crack; if chloride intrusion is a concern, a sealer or injection should be utilized. If a concrete overlay is present, a surface finish can be placed over the concrete overlay.

Required Materials

1. Stitching Dogs
2. Non-shrink Grout or Epoxy
3. Variable Speed Drill with Masonry Bits
4. Concrete
5. (Optional) Surface finish

Construction Procedure

1. Clean the crack with high pressure air
2. Drill holes in concrete for non-shrink grout or epoxy placement
3. When selecting hole placement, ensure that stitching dogs are of varying length, location and orientation
4. Place non-shrink grout or epoxy in drilled holes
5. Place stitching dogs
6. Cover the repair with a concrete overlay, possibly using shotcrete
7. (Optional) Place a surface finish over the concrete overlay

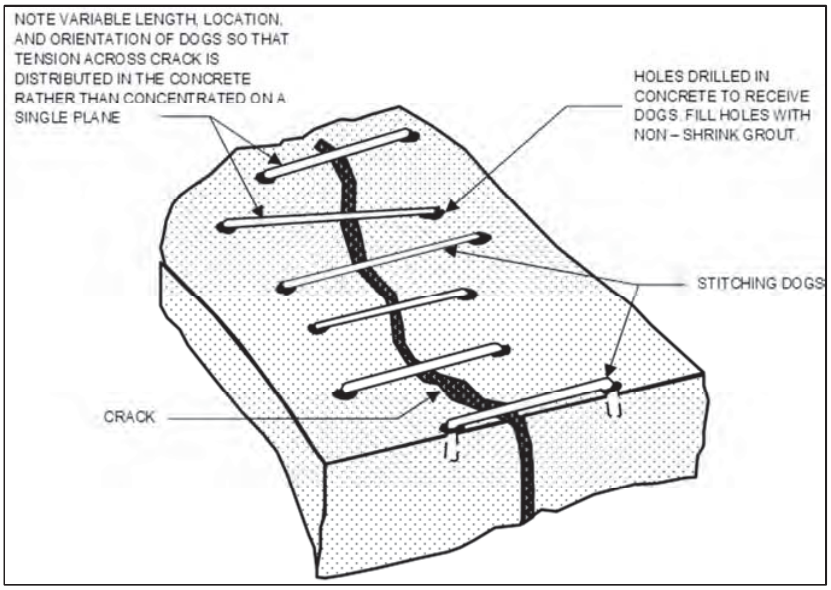

*Adapted from: Army and Air Force 1994

Fiberglass Jacketing

If extensive cracking is present on the substructure member, jacketing may be the most cost-effective repair option. Jacketing can be completed utilizing fiberglass forms that stay in place around the concrete member. Since this section is regarding cracking, it will be assumed no significant section loss is present and epoxy grout can be utilized. A 1/2-inch annular void should be created between the jacket and the concrete member. Fiberglass jackets can be used without dewatering of the member.

Required Materials

1. Epoxy Grout (specified by jacket manufacturer)
2. Interlocking Fiberglass Jacket
3. Compressible Seal
4. High Pressure Power Washer
5. Electric Drill
6. Mixing Paddle

Construction Procedure

1. Clean the concrete member with high pressure water
2. Place the fiberglass jacket on the substructure member, interlocking the pieces
3. Place the compressible seal at the bottom of the fiberglass jacket
4. Mix the epoxy grout using an electric drill and mixing paddle (see manufacturer's specifications)
5. Pour epoxy grout into annular void between fiberglass jacket and concrete member
6. Trowel epoxy grout above jacket to achieve sufficient water runoff

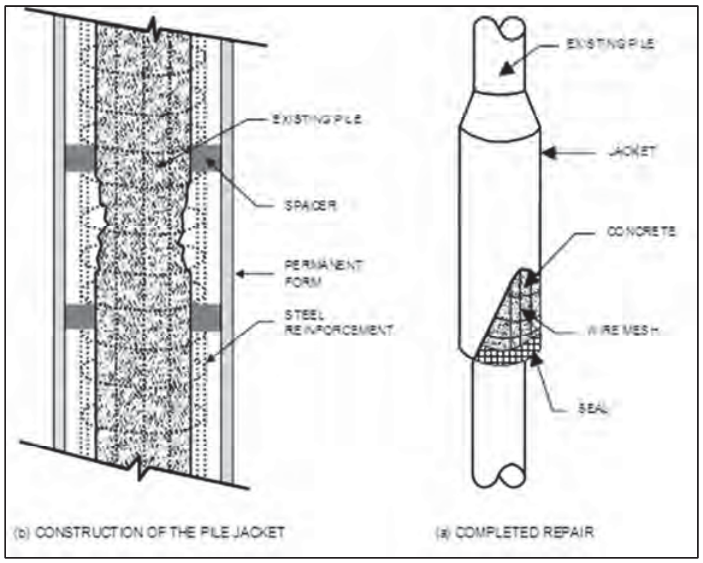

*Adapted from: Wipf et al. 2003

FRP Wrap

If extensive cracking is present on the substructure member, FRP wraps may be utilized in order to regain structural integrity. Manufacturer specifications and WisDOT provisions should be followed for all FRP repairs. Suppliers of the FRP must have a minimum of ten installations and shall submit certified test reports designated by WisDOT. Polyester resin is not an acceptable substitute for the designated epoxy resin. When the epoxy resin is mixed, the ambient temperature must be between 55 and 95 degrees F. When it is applied, the relative humidity shall be below 85% and the surface temperature shall be more than 5 degrees F above the dew point.

Required Materials

1. Continuous filament woven fabric meeting the following requirements:
   - Primary fibers shall be electrical (E) glass fibers
   - Minimum ultimate tensile strength shall be 40 ksi
   - Minimum thickness of the wrap shall be 1/8-inch
2. Epoxy resin (supplied by manufacturer)
3. Mechanical Mixer
4. Light Abrasive
5. Epoxy Paint

Construction Procedure

1. Smooth the concrete surfaces to remove any protrusions that may cause voids or damage the fiber
2. Ensure all concrete surfaces are dry
3. If concrete has been placed within 7 days, a water-based epoxy paint should be placed over the concrete
4. Mix the components of the epoxy resin with a mechanical mixer and apply it uniformly to the fiber, within one hour of mixing, at a rate that shall ensure complete saturation of the fabric.
5. Apply the fabric in one continuous piece surrounding the concrete. The wrap shall be a minimum of one layer with edge laps of 6-inches and end laps of 12-inches. Multiple layers shall have end laps offset by a minimum of 90 degrees.
6. Place successive layers of composite materials before polymerization of the previous layer of epoxy is complete. If polymerization does occur between layers, roughen the surface using a light abrasive that will not damage the fiber. Release or roll-out entrapped air before the epoxy sets.
7. Cover the final layer of fabric with a 15-mil thick coat of epoxy that produces a uniform finished surface.
8. After the final epoxy coat is completely polymerized, clean and roughen the exterior surfaces of the composite wrap using a light abrasive. The abrasive shall be of the appropriate hardness to roughen the surface without damaging the fibers.
9. Before painting, dust and dry all cleaned and roughened surfaces.

10. Paint the areas with a minimum of two finish coats of epoxy paint. The total dry film thickness of all applications of the finish coats shall be not less than 4 mils nor more than 8 mils.

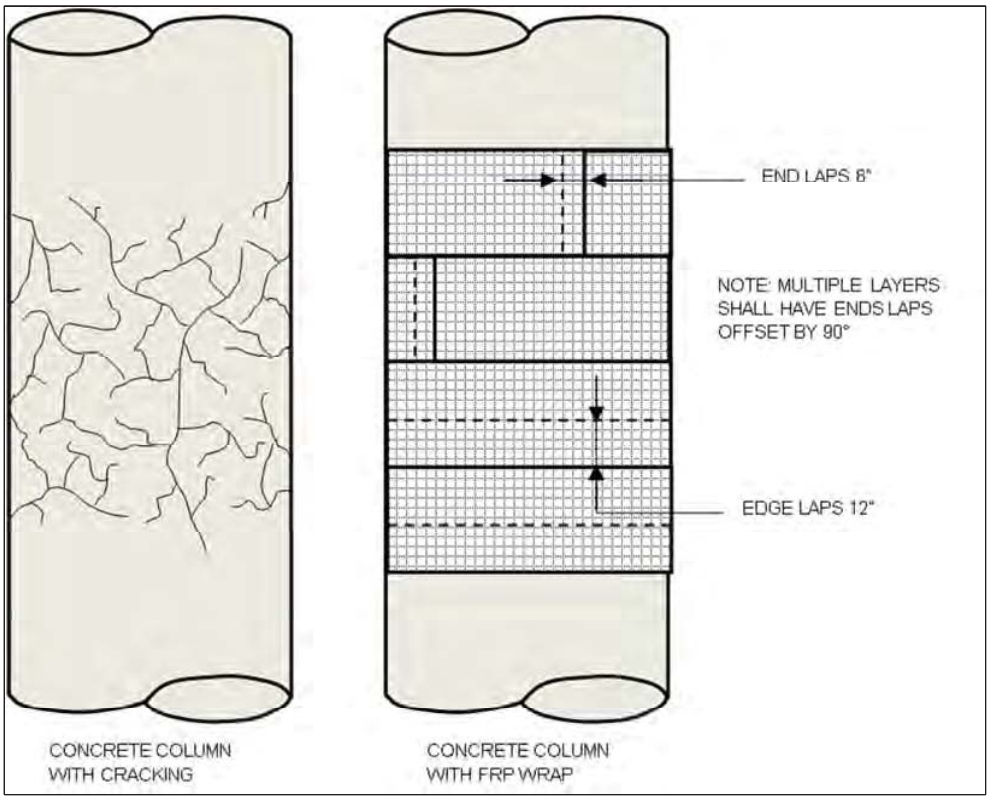

*Adapted from: Wisdot Special Provisions 2005

Drilling and Plugging

This repair method is applicable only for vertical cracks of retaining walls and abutments. Vertical cracking will result in an abutment if there is differential settlement under the abutment. Drilling and plugging is the preferred repair method for this deterioration because the new material acts as a structural key to resist loads and prevents leakage through the crack.

Required Materials

1. Drill capable of reaching full length of crack
2. 2” to 2.5” minimum diameter drill bits (size dependent on crack width)
3. Plug Material

Construction Procedure

1. Clean the crack with high pressure air
2. If the crack extends a far distance along the abutment, utilize a core drill to drill along the length of the crack.
3. Prepare plug material
4. Place plug material into the predrilled hole along the length of the crack

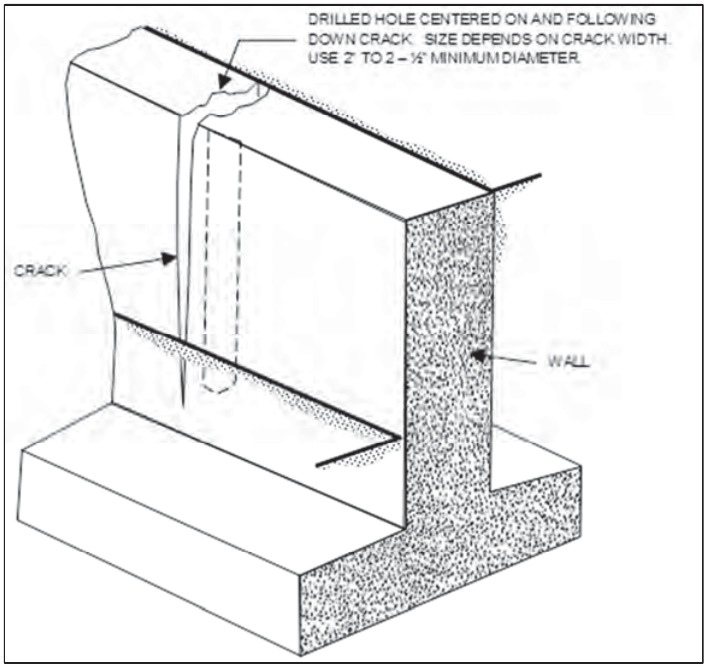

*Adapted from: Raina 1996

Galvanic Cathodic Systems

Galvanic cathodic systems are capable of preventing new corrosion activity from beginning on a concrete member. Ongoing corrosion activity may be reduced, if the correct product and spacing are utilized.

Required Materials

1. Concrete Saw
2. Sandblast Machine
3. Multimeter
4. Tie Wires
5. Galvanic Anodes
6. Concrete Patch Material with a resistivity below 15,000 ohm*cm

Design Procedure

1. Calculate existing steel density ratio.

$$\frac{Surface\ area\ of\ steel}{Surface\ area\ of\ concrete} = steel\ density\ ratio$$

$$\frac{\pi * D * L * n}{144\ in^2} = steel\ density\ ratio\ per\ square\ foot$$

Where D = bar diameter, L = length of bars in calculated area (12 inches for square foot), n = number of bars in calculated area

2. Sum all layers of existing reinforcement for an accurate steel density ratio
3. Enter manufacturer's supplied design table with steel density ratio, and estimated chloride content of concrete.

Anode Spacing for Low to Moderate Corrosion Risk (Chloride Content < 0.8% or Carbonated Concrete)								
Protection Level	Corrosion Prevention				Corrosion Control			
Galvashield Anode	XP or XPT		XP2		XP2		XP4	
Steel Density Ratio	mm	in.	mm	in.	mm	in.	mm	in.
<0.3	750	30	750	30	600	24	750	30
0.31 - 0.6	600	24	700	28	500	20	700	28
0.61 - 0.9	500	20	650	26	400	16	550	22
0.91 - 1.2	450	18	550	22	350	14	450	18
1.21 - 1.5	400	16	500	20	250	10	425	17
1.51 - 1.8	350	14	450	18	200	8	375	15

(Vector Corrosion Technologies 2012)

4. Choose between corrosion prevention and corrosion control, then determine spacing of anodes from manufacturer's table

Construction Procedure

1. Remove all delaminated and unsound concrete from around and behind the steel reinforcement. Ensure that there is enough concrete removed so that the anodes will have a minimum of ¾-inches of concrete cover. Concrete should be saw-cut only on the horizontal and vertical faces, creating square or rectangular patch areas and conforming to section 509.3.7 of the standard specifications
2. Sandblast the exposed reinforcement to remove any existing corrosion
3. Check electrical continuity of the reinforcement using a multimeter (a DC resistance of 1 ohm or less is typically acceptable)
4. Fasten the sacrificial anodes to the reinforcement utilizing the supplied tie wires
5. Verify electrical continuity between the tie wires and the rebar with a multimeter
6. Pre-wet the concrete substrate and anode units to achieve a saturated surface dry condition less than 20 minutes prior to the concrete placement.
7. Install concrete repair material that meets manufacturer's requirements. Epoxy bonding agents are not to be used with this repair method.

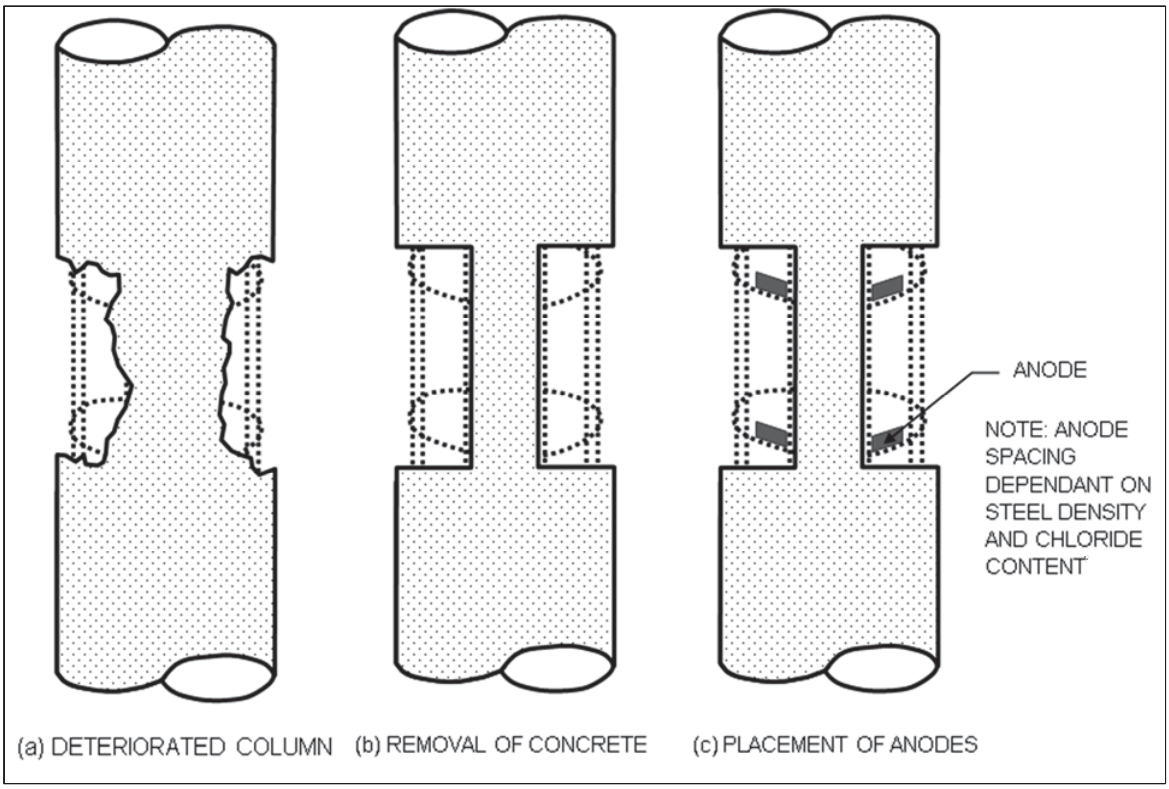

*Adapted from: Vector Corrosion Technologies 2012

Impressed Current Systems

Impressed current systems are capable of reducing or eliminating ongoing corrosion activity of a concrete member. Impressed current systems require a constant electrical current in order to effectively stop ongoing corrosion. A small DC current is passed from the discrete anodes to the steel reinforcement, which prevents corrosion.

Required Materials

1. Concrete Saw
2. Variable Speed Drill
3. Sandblast Machine
4. Discrete Anodes
5. Discrete Anode Grout
6. Current Distributor Wire
7. Rectifier (power source)
8. Multimeter
9. Titanium Crimps
10. Electrical Connectors
11. Gas Venting Tube
12. Crimping Tool
13. Concrete Patch Material with a resistivity below 50,000 ohm*cm

Design Procedure

1. Ensure that controlled areas of the structure do not exceed 6,500 ft^2. Multiple zones should be utilized if more area requires protection
2. The current density should be between 1.8 and 83 mA/ft^2 of reinforcing steel. Consult with manufacturer for more precise qualifications
3. The anode voltage drop should be less than 300 mV from the rectifier to the furthest point

Construction Procedure

1. Remove all delaminated and unsound concrete from around and behind the steel reinforcement. Concrete should be saw-cut only on the horizontal and vertical faces, creating square or rectangular patch areas and conforming to section 509.3.7 of the standard specifications
2. Sandblast the exposed reinforcement to remove any existing corrosion
3. Check electrical continuity of the reinforcement using a multimeter (a DC resistance of 1 ohm or less is typically acceptable)
4. Drill holes slightly larger than the discrete anodes, at least 20-inches apart
5. Cut a groove into the concrete, which travels between the drilled holes
6. Test the holes for shorts using a resistance meter configured for use in drilled holes

7. Fill the bottom of the drilled hole with a premixed grout designated by the manufacturer
8. Wet the discrete anodes, but do not submerge for more than 10 seconds. Place the discrete anodes into the predrilled holes
9. Connect the current distributor wires and the gas venting tube to the anodes
10. Connect the current distributor wires to the rectifier (power source)
11. Connect the steel reinforcement to the rectifier with a manufacturer designated wire and procedure
12. Ensure that the gas venting tube is exposed to the air
13. Perform all necessary checks recommended by manufacturer for steel continuity, depth of concrete cover, anode/steel isolation and initial energization
14. Fill the grooved saw cut with an approved cementitious mortar

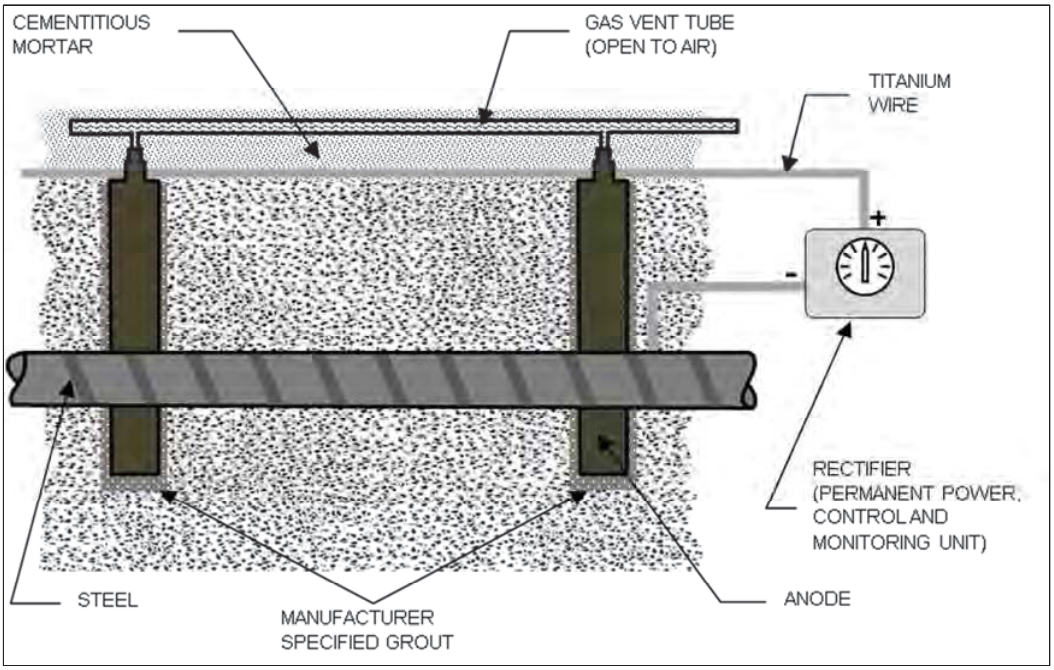

*Adapted from: Vector Corrosion Technologies 2012

Chloride Extraction

Electrochemical chloride extraction is the only available method which extracts chloride ions from the existing concrete without requiring in depth removal of concrete. For electrochemical chloride extraction to work, an electric field needs to be applied between the steel reinforcement and an externally mounted anode mesh. Chloride extraction removes the cause of reinforcement corrosion by removing chloride ions.

Required Materials

1. Core Drill
2. Concrete Patch Material
3. Catalyzed Titanium or Steel Anode Mesh
4. Sprayed Cellulose Fiber
5. Potable Water
6. Electrical Insulating Material
7. AC/DC Rectifier
8. Cables and Wiring
9. Voltmeter
10. Current Probes
11. (Optional) Sandblaster

Construction Procedure

1. Ensure that there are no service finishes present on the concrete, as they will interfere with the extraction process (sandblasting may be necessary)
2. Sample the concrete using the core drill in order to determine chloride content and how much current should be utilized
3. Repair any deteriorated concrete using a manufacturer approved cementitious mortar, ensuring that there is adequate concrete cover for all steel reinforcement and adhering to section 509.3.7 of the standard specifications
4. Insulate any metal components on the surface of the concrete which may interfere with the extraction process
5. Check electrical continuity of the steel reinforcement
6. Connect the negative terminal of the power source to the steel reinforcement, multiple connections may be necessary if large areas are being treated
7. Place the anode mesh using wooden spacers to inhibit direct contact with the concrete
8. Connect the positive terminal of the power source to the anode mesh, multiple connections may be necessary if large areas are being treated
9. Spray the cellulose fiber and potable water onto the concrete surface, storing in separate tanks and mixing right before the spray nozzle
10. Ensure that the electrolyte media stays wet at all times, an irrigation system and plastic covering should be utilized
11. Adjust the current output of the system in accordance with manufacturers specifications

12. Leave the system in place for four to eight weeks
13. Pressure wash the concrete after the system is removed, to ensure that all of the cellulose fibers have been removed

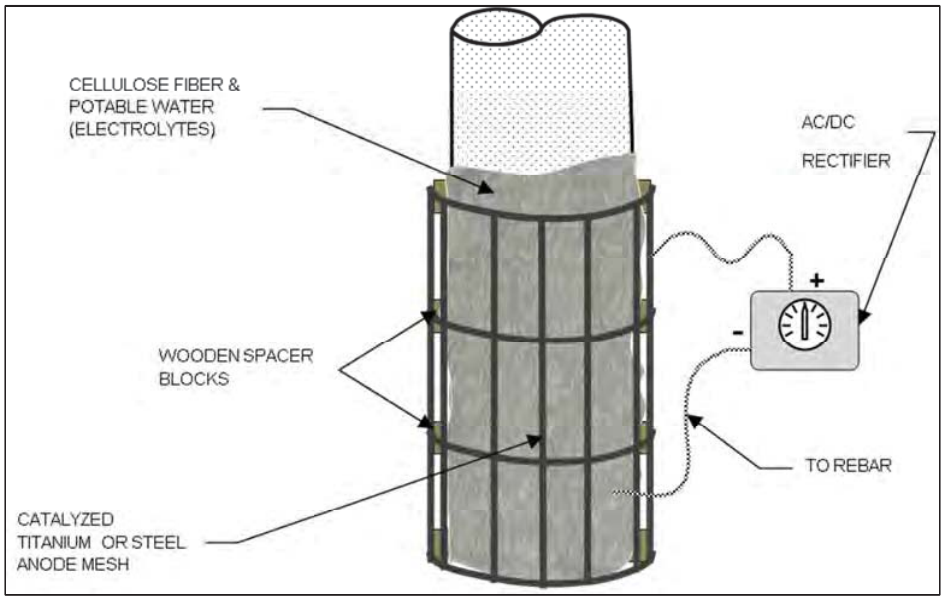

*Adapted from: Vector Corrosion Technologies 2012

Zinc Surface Spray

Zinc surface spray is a form of galvanic corrosion protection available for concrete structures. A thin coating of metalized zinc is applied to the surface of the concrete, which will attract the chloride ions in place of the steel reinforcement. This method is less invasive than traditional sacrificial anodes since concrete does not have to be removed for installation.

Required Materials

1. Concrete Patch Material with a resistivity less than 15,000 ohm*cm
2. Sandblaster
3. Air Compressor
4. Concrete Chisel and Hammer
5. Galvanized Steel Threaded Rod
6. Multimeter
7. Metalized Zinc
8. Portable Electric Arc Metalized Zinc Applicator
9. Zinc Mesh Plate
10. Humectant Activator Solution

Construction Procedure

1. Repair any deteriorated concrete using a manufacturer approved concrete patch material and adhering to section 509.3.7 of the standard specifications, ensuring that it has 28 days to cure before the zinc is applied
2. Lightly sandblast the existing concrete to adequately clean the surface
3. Use the air compressor to remove any dust from the surface of the concrete
4. Chip out concrete to expose the steel reinforcement
5. Place galvanized steel threaded rod next to reinforcement and seal with non-conductive paste, the rod should extend out of the finished concrete surface
6. Verify electrical continuity of the existing reinforcement and the threaded rod
7. Apply the metalized zinc, multiple passes may be necessary to achieve the desired thickness
8. Install the zinc mesh plate onto the threaded rod
9. Apply an additional coating of zinc over the zinc mesh plate
10. Apply the humectant activator solution to the zinc coating, using multiple passes until the manufacturer’s specifications are met

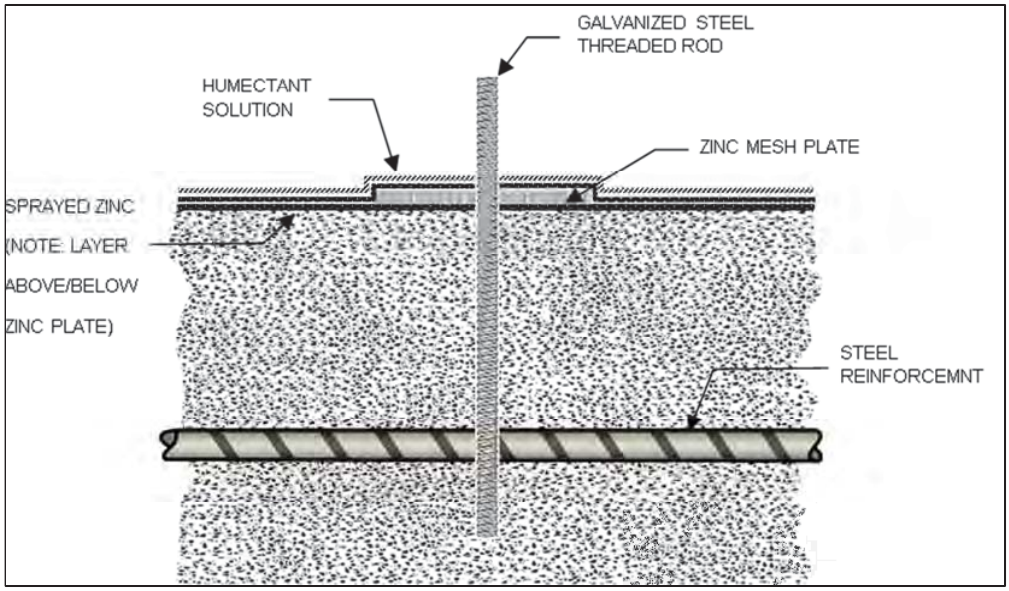

*Adapted from: Vector Corrosion Technologies 2012

Concrete Surface Repair

Concrete surface repair is the most common repair conducted on bridge substructures throughout Wisconsin. Due to the intrusion of chloride ions, reinforcement corrosion has resulted in large portions of concrete needing to be replaced. Concrete surface repair is typically the response for spalled concrete and should conform to section 509.3.7 of the standard specifications.

Required Materials

1. Concrete Saw
2. Concrete Patch Material
3. Formwork

Construction Procedure

1. Make a 1/2-inch deep saw cut at the limits of the concrete surface repair before removal of the deteriorated concrete
2. Remove concrete to sound concrete or to one inch behind the existing reinforcing steel, whichever depth is greater
3. Take necessary precautions while removing deteriorated concrete to preserve all existing reinforcing steel
4. Clean, realign, and retie existing reinforcing steel
5. Place formwork
6. Clean the surfaces against which placing the new concrete to remove all loose particles and dust, and keep continuously wet for a period of 2 hours before placing new concrete
7. Place new concrete

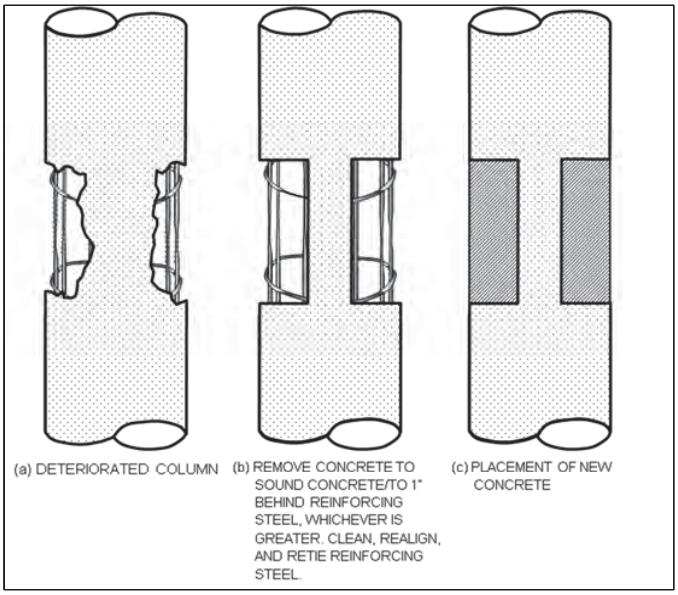

*Adapted from: Vector Corrosion Technologies 2012

Sprayed-On Concrete Repair

The use of sprayed-on concrete, or shotcrete, is advantageous for areas where accessibility is a concern. Many maintenance engineers have noted that bonding is an issue when shotcrete is utilized. Appropriate measures should be taken to ensure that adequate bonding is developed.

Required Materials

1. Concrete Saw
2. Sprayed-On Concrete
3. Steel Reinforcement
4. Sandblaster
5. Hydraulic Concrete Machine, Hoses and Nozzles
6. Air Compressor

Construction Procedure

1. Make a 1/2-inch deep saw cut at the limits of the concrete surface repair before removal of the deteriorated concrete
2. Remove concrete to sound concrete or to one inch behind the existing reinforcing steel, whichever depth is greater
3. Take necessary precautions while removing deteriorated concrete to preserve all existing reinforcing steel
4. Clean, realign, and retie existing reinforcing steel; wire mesh is typically incorporated for shotcrete repairs
5. Clean the surfaces against which placing the new concrete to remove all loose particles and dust, and keep continuously wet for a period of 2 hours before placing new concrete
6. Spray on concrete

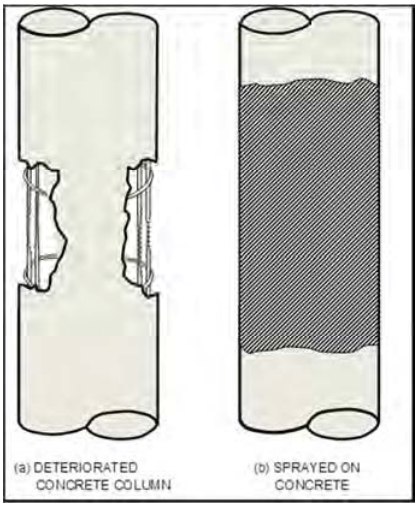

Fiberglass Pile Jacket

Fiberglass jackets are pre-molded forms created for specific structural members. The jackets are manufactured in many varying shapes, such as round, rectangular, square, or H-shaped. They are ideal repair methods for deterioration that has occurred due to the continuous wetting and drying at the ground line. Dewatering is not required when pre-molded fiberglass jackets are utilized.

Required Materials

1. Epoxy Grout or Cementitious Grout (specified by manufacturer)
2. Interlocking Fiberglass Jacket
3. Compressible Seal (optional)
4. High Pressure Power Washer
5. Electric Drill
6. Mixing Paddle

Construction Procedure

1. Clean the concrete member with high pressure water
2. Place the fiberglass jacket on the substructure member, interlocking the pieces
3. Place the compressible seal at the bottom of the fiberglass jacket (optional)
4. Mix the epoxy grout (optional: and cementitious grout) using an electric drill and mixing paddle (see manufacturer's specifications).
    - If there is less than 25% section loss of the member, only epoxy grout should be used and a ½-inch annular void is necessary.
    - If there is more than 25% section loss of the member, the bottom 6-inches and the top 4-inches should be filled with epoxy grout. A cementitious grout may be used in the middle of the repair, and a 2-inch annular void is necessary
5. Pour epoxy grout (optional: and cementitious grout) into annular void between fiberglass jacket and concrete member
6. Trowel epoxy grout above jacket to achieve sufficient water runoff

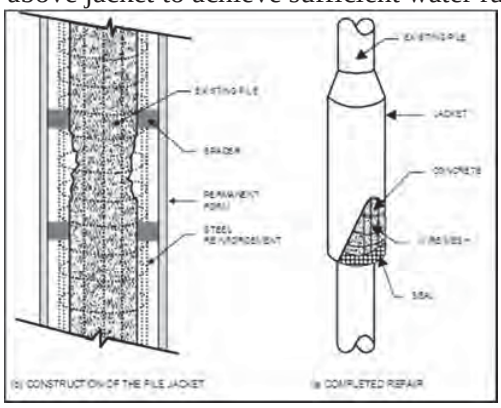

*Adapted from: Fox Industries/Simpson Strong Tie 2011

Concrete Pile FRP Wrap

If the pile needs to regain structural integrity, FRP wrapping is an available option. A concrete surface repair should be conducted before the FRP is placed. If corrosion is an ongoing concern, sacrificial anodes may be embedded within the concrete. Manufacturer specifications and WisDOT provisions should be followed for all FRP repairs. Suppliers of the FRP must have a minimum of ten installations and shall submit certified test reports designated by WisDOT. Polyester resin is not an acceptable substitute for the designated epoxy resin. When the epoxy resin is mixed, the ambient temperature must be between 55 and 95 degrees F. When it is applied, the relative humidity shall be below 85% and the surface temperature shall be more than 5 degrees F above the dew point. With proper maintenance and UV protection, FRP wrapping can last upwards of 50 years.

Required Materials

1. Continuous filament woven fabric meeting the following requirements:
   - Primary fibers shall be electrical (E) glass fibers
   - Minimum ultimate tensile strength shall be 40 ksi
   - Minimum thickness of the wrap shall be 1/8-inch
2. Epoxy resin (supplied by manufacturer)
3. Mechanical Mixer
4. Light Abrasive
5. Epoxy Paint

Construction Procedure

1. Repair any deteriorated concrete using a manufacturer approved concrete patch material and adhering to section 509.3.7 of the standard specifications
2. Smooth the concrete surfaces to remove any protrusions that may cause voids or damage the fiber
3. Ensure all concrete surfaces are dry
4. If concrete has been placed within 7 days, a water-based epoxy paint should be placed over the concrete
5. Mix the components of the epoxy resin with a mechanical mixer and apply it uniformly to the fiber, within one hour of mixing, at a rate that shall ensure complete saturation of the fabric.
6. Apply the fabric in one continuous piece surrounding the concrete. The wrap shall be a minimum of one layer with edge laps of 6-inches and end laps of 12-inches. Multiple layers shall have end laps offset by a minimum of 90 degrees.
7. Place successive layers of composite materials before polymerization of the previous layer of epoxy is complete. If polymerization does occur between layers, roughen the surface using a light abrasive that will not damage the fiber. Release or roll-out entrapped air before the epoxy sets.
8. Cover the final layer of fabric with a 15-mil thick coat of epoxy that produces a uniform finished surface.

9. After the final epoxy coat is completely polymerized, clean and roughen the exterior surfaces of the composite wrap using a light abrasive. The abrasive shall be of the appropriate hardness to roughen the surface without damaging the fibers.
10. Before painting, dust and dry all cleaned and roughened surfaces.
11. Paint the areas with a minimum of two finish coats of epoxy paint. The total dry film thickness of all applications of the finish coats shall be not less than 4 mils nor more than 8 mils.

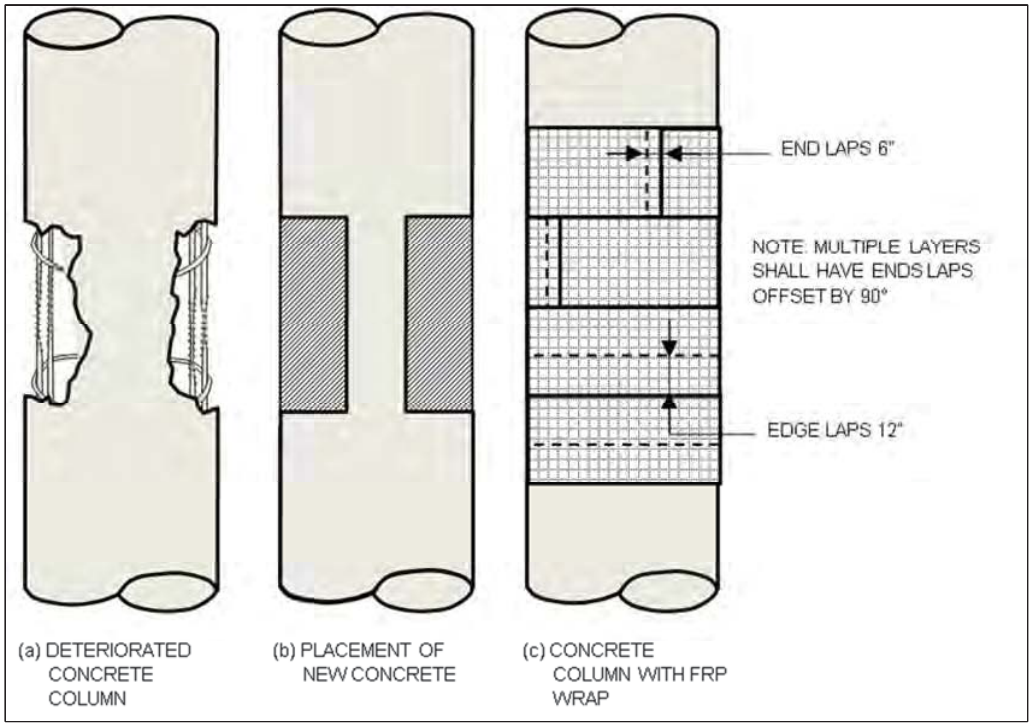

*Adapted from: Wisdot Special Provisions 2005

Underpinning with Mini-Piles

Mini-piles, or micro-piles, can be used to strengthen a foundation that has lost some bearing capacity. Mini-piles are typically drilled through the existing foundation and rely on friction with the soil in order to generate the necessary strength. The drilling through the existing concrete eliminates the need for a needle beam, but can create accessibility issues with equipment. If there are existing piles, care should be taken that none of the new piles are too close to the existing piles.

Required Materials

1. Portland Cement Grout
2. Steel Reinforcing Bar
3. Bearing Plate
4. Steel Casing
5. Rotary Driller

Construction Procedure

1. Advance outside casing to full pile depth required using a rotary driller
2. Tremie the casing full with specified cementitious grout
3. Place reinforcing thread bar with centralizers
4. Reattach drill head to the top of the casing and pressure grout the pile bond length by pumping cement grout under pressure while extracting casing
5. Reinsert the casing into the top of the bond length, distance determined by design process
6. Trim the top of the casing to the desired elevation
7. Weld bearing plate with stiffener plates onto the top of the casing

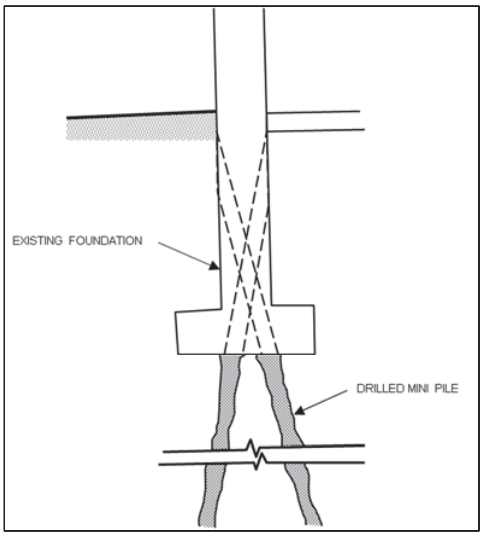

*Adapted from: Raina 1996

Underpinning

Underpinning is an invasive bridge rehabilitation method that requires the bridge to be shut down while the repairs are conducted. Loads are transferred from the existing footing to needle beams which are placed below the footing. The new piling can be placed adjacent to the existing footing since they will tie in to the needle beam.

Required Materials

1. Needle Beam
2. New Piling
3. Pile Driver or Rotary Driller
4. Excavator
5. Dry Pack Concrete or Steel Bearing Plates

Construction Procedure

1. Excavate around the existing footing, creating enough space to place the pilings and needle beams
2. Depending on the type of piling that is being utilized for the underpinning, utilize the pile driver or rotary driller to place the piling
3. Caution should be exercised that new piling is not placed in the vicinity of existing piling, as side frictional losses will occur
4. Install the needle beam between the existing footing and newly placed piling
5. Place dry pack concrete or steel bearing plates between the needle beam and footing to achieve a snug fit
6. Backfill and monitor for possible settlement

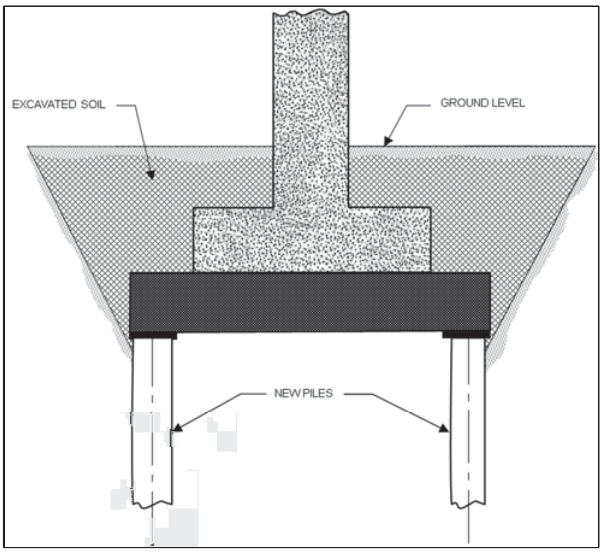

*Adapted from Raina 1996

Strengthening or Widening

Widening a pier may be necessary if the existing pier columns or caps are no longer deemed adequate. A new pier cap, pier footing and pier columns have to be constructed for this repair method. Due to the load transfer that is being created, the bridge will have to be closed to traffic for the duration of the repair. Follow all WisDOT guidelines when designing the new pier cap.

Required Materials

1. Electric Drill
2. Formwork
3. Reinforcing Steel
4. Concrete
5. Air Compressor
6. Excavator

Construction Procedure

1. Clean the surface of the existing pier columns using the air compressor to ensure that there will be adequate bond to the new pier cap
2. Excavate to create footings for the new columns, taking care not to damage the existing footing
3. Place the formwork and reinforcing steel required for the new footings
4. Cast the new footings
5. Utilize the electric drill to drill through the existing pier columns, this will provide holes for the main reinforcing steel in the new pier cap
6. Place the formwork and reinforcing steel required for the new pier columns
7. Cast the new pier columns
8. Place the formwork and reinforcing steel required for the new pier cap
9. Cast the new pier cap
10. Backfill the excavated soil

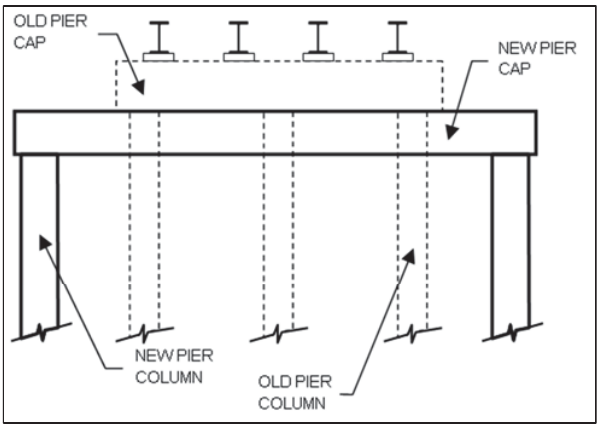

*Adapted from: Wipf. et al. 2003

Pier Column Encasement

Pier column encasement is a typical repair procedure conducted throughout Wisconsin. The additional concrete that is placed not only provides added strength, but gives the existing reinforcement more concrete cover. The creation of the concrete encasement will inhibit future inspection of the original column, so chloride removal should also be a consideration. Sacrificial anodes may be embedded within the concrete before the repair is conducted if there is a high chloride content.

Required Materials

1. Welded Steel Wire Fabric (Should conform to WisDOT special provisions)
2. Concrete with a non-shrink admixture
3. Sandblaster
4. Formwork

Construction Procedure

1. Remove all loose and delaminated concrete until sound concrete is encountered following standard specification 509.3.7
2. Clean all exposed existing bar steel such that no surface rust remains (sandblaster)
3. If there is a high chloride content within the concrete, consider using sacrificial anodes or some other form of corrosion protection
4. Construct the formwork and place the welded steel wire fabric for the concrete encasement
5. Cast the concrete for the encasement, 100% of the coarse aggregates for the concrete should pass through a 1-inch sieve
6. Furnish and apply a protective surface treatment as specified in section 502 of the standard specifications to the surface areas of the concrete encasement

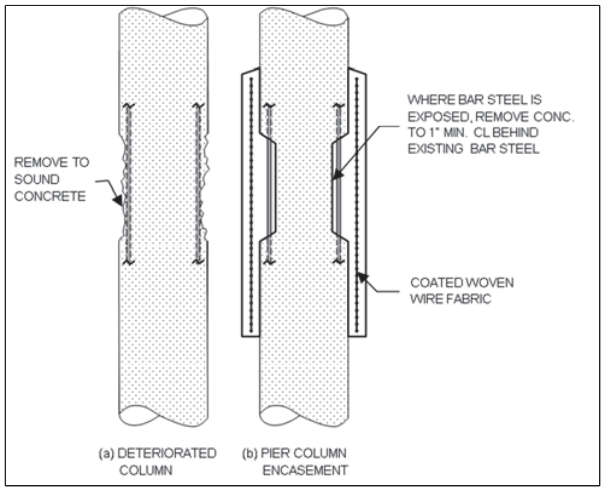

*Adapted from: WisDOT Special Provisions 2005

Column FRP Wrapping

If the pier needs to regain structural integrity, FRP wrapping is an available option. A concrete surface repair should be conducted before the FRP is placed. If corrosion is an ongoing concern, sacrificial anodes may be embedded within the concrete. Manufacturer specifications and WisDOT provisions should be followed for all FRP repairs. Suppliers of the FRP must have a minimum of ten installations and shall submit certified test reports designated by WisDOT. Polyester resin is not an acceptable substitute for the designated epoxy resin. When the epoxy resin is mixed, the ambient temperature must be between 55 and 95 degrees F. When it is applied, the relative humidity shall be below 85% and the surface temperature shall be more than 5 degrees F above the dew point. With proper maintenance and UV protection, FRP wrapping can last upwards of 50 years.

Required Materials

1. Continuous filament woven fabric meeting the following requirements:
   - Primary fibers shall be electrical (E) glass fibers
   - Minimum ultimate tensile strength shall be 40 ksi
   - Minimum thickness of the wrap shall be 1/8-inch
2. Epoxy resin (supplied by manufacturer)
3. Mechanical Mixer
4. Light Abrasive
5. Epoxy Paint

Construction Procedure

1. Repair any deteriorated concrete using a manufacturer approved concrete patch material and adhering to section 509.3.7 of the standard specifications
2. Smooth the concrete surfaces to remove any protrusions that may cause voids or damage the fiber
3. Ensure all concrete surfaces are dry
4. If concrete has been placed within 7 days, a water-based epoxy paint should be placed over the concrete
5. Mix the components of the epoxy resin with a mechanical mixer and apply it uniformly to the fiber, within one hour of mixing, at a rate that shall ensure complete saturation of the fabric.
6. Apply the fabric in one continuous piece surrounding the concrete. The wrap shall be a minimum of one layer with edge laps of 6-inches and end laps of 12-inches. Multiple layers shall have end laps offset by a minimum of 90 degrees.
7. Place successive layers of composite materials before polymerization of the previous layer of epoxy is complete. If polymerization does occur between layers, roughen the surface using a light abrasive that will not damage the fiber. Release or roll-out entrapped air before the epoxy sets.
8. Cover the final layer of fabric with a 15-mil thick coat of epoxy that produces a uniform finished surface.

9. After the final epoxy coat is completely polymerized, clean and roughen the exterior surfaces of the composite wrap using a light abrasive. The abrasive shall be of the appropriate hardness to roughen the surface without damaging the fibers.
10. Before painting, dust and dry all cleaned and roughened surfaces.
11. Paint the areas with a minimum of two finish coats of epoxy paint. The total dry film thickness of all applications of the finish coats shall be not less than 4 mils nor more than 8 mils.

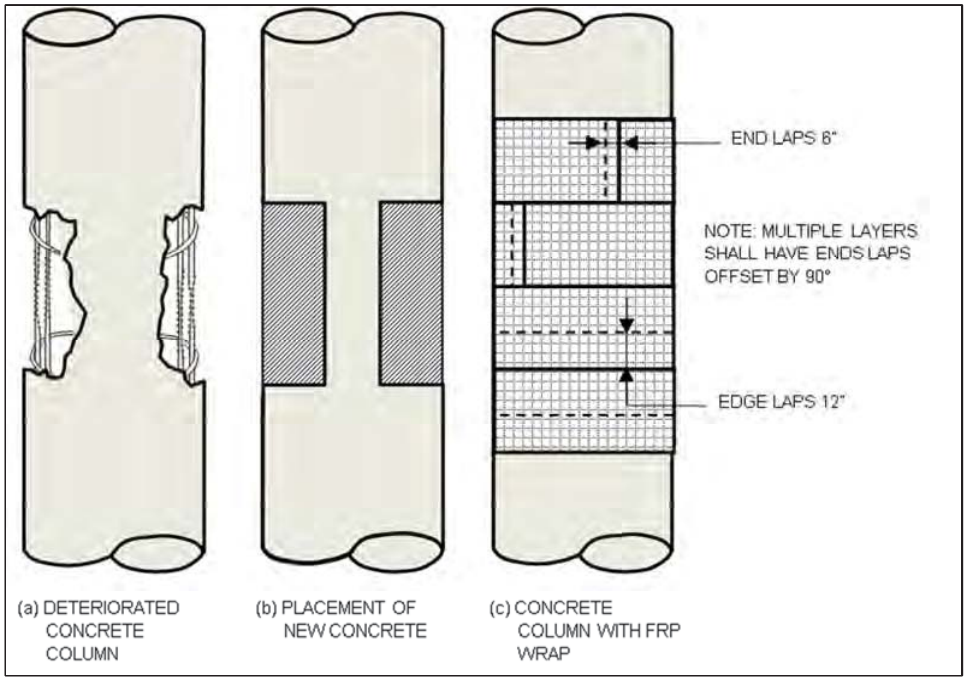

*Adapted from: WisDOT Special Provisions 2005

Fiberglass Jacket

Fiberglass jackets are pre-molded forms created for specific structural members. The jackets are manufactured in many varying shapes, such as round, rectangular, square, or H-shaped. They are ideal repair methods for deterioration that has occurred due to the continuous wetting and drying at the ground line. Dewatering is not required when pre-molded fiberglass jackets are utilized.

Required Materials

1. Epoxy Grout or Cementitious Grout (specified by manufacturer)
2. Interlocking Fiberglass Jacket
3. Compressible Seal (optional)
4. High Pressure Power Washer
5. Electric Drill
6. Mixing Paddle

Construction Procedure

1. Clean the concrete member with high pressure water
2. Place the fiberglass jacket on the substructure member, interlocking the pieces
3. Place the compressible seal at the bottom of the fiberglass jacket (optional)
4. Mix the epoxy grout (optional: and cementitious grout) using an electric drill and mixing paddle (see manufacturer's specifications).
    - If there is less than 25% section loss of the member, only epoxy grout should be used and a ½-inch annular void is necessary.
    - If there is more than 25% section loss of the member, the bottom 6-inches and the top 4-inches should be filled with epoxy grout. A cementitious grout may be used in the middle of the repair, and a 2-inch annular void is necessary
5. Pour epoxy grout (optional: and cementitious grout) into annular void between fiberglass jacket and concrete member
6. Trowel epoxy grout above jacket to achieve sufficient water runoff

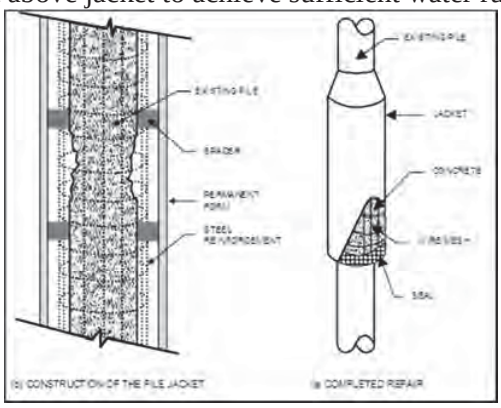

*Adapted from: Fox Industries/Simpson Strong Tie 2011

Pier Cap Encasement

Pier cap encasements have been attempted as a repair method in Wisconsin. Pier cap encasements have been conducted since they replace any spalled concrete and provide an additional layer of concrete cover for the existing reinforcement. The success of these repairs is questionable, as widespread cracking and delamination have been observed. For past projects, 5 to 6 inches of concrete have been added onto the sides and bottom of the pier cap. This approach still leaves the top of the pier cap susceptible to chloride intrusion, so proper expansion joint maintenance is required.

Required Materials

1. Epoxy Grout
2. Masonry Anchors
3. Bar Steel Reinforcement
4. Concrete
5. Sandblaster
6. Formwork
7. Concrete Saw
8. Electric Drill

Construction Procedure

1. Remove any deteriorated concrete adhering to section 509.3.7 of the standard specifications
2. Blast clean all existing exposed reinforcement
3. Drill into concrete at specified anchor locations, typically between 7 and 15 inches minimum
4. Place epoxy grout into predrilled holes, either with injection gun or breakable capsule
5. Install masonry anchors into predrilled holes with epoxy grout
6. Place bar steel reinforcement, ensuring that it is 2-inches clear
7. Place formwork
8. Cast concrete

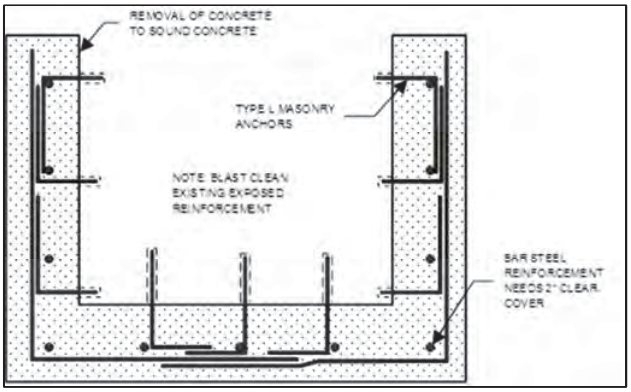

*Adapted from: WisDOT Bridge Plans

Abutment Concrete Repair

While common repair practice in Wisconsin rectifies deteriorated concrete abutments with the concrete surface repair, there are documented methods which build out the abutment. This method is typically undertaken if the abutment is at the waterline and additional concrete cover is desired for impact concerns or as a means of protecting the existing reinforcement.

Required Materials

1. Steel Reinforcement
2. Concrete
3. Sandblaster
4. Formwork
5. Concrete Saw
6. (Optional) Water Pump
7. (Optional) Sand Bags

Construction Procedure

1. (Optional) Construct a cofferdam and pump out water
2. Remove any deteriorated concrete adhering to section 509.3.7 of the standard specifications
3. Blast clean all existing exposed reinforcement
4. Place new steel reinforcement mat, tying it into the existing reinforcement. The concrete should be 4 to 6-inches thicker than the existing abutment in the region where the repair is taking place
5. Place formwork
6. Cast concrete
7. (Optional) Remove sandbags after sufficient strength of concrete has been achieved

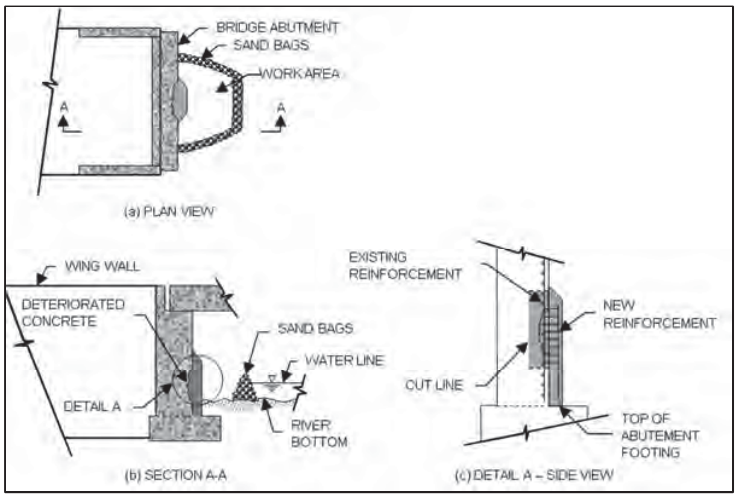

*Adapted from: Wipf et al. 2003 and Army and Air Force 1994

Abutment Stability

If the vertical loading on an abutment is not large enough to overcome the overturning moment caused by lateral earth pressures, rotational movement may result. A combination of different repairs is the best way to stabilize the abutment and relieve the lateral earth pressure.

Required Materials

1. Waler Beams
2. Restraining Rod, Steel Plates and Hex Nuts
3. Deadman Wall (C.I.P. Concrete or Driven Sheet Piles)
4. (Optional) Battered Piles
5. Variable Speed Drill
6. Excavator

Construction Procedure

1. Excavate all necessary soil
2. (Optional) Drive battered piles
3. Place deadman wall approximately 3 feet on either side of bridge and 60 to 100 feet from face of abutment, creating a hole for the restraining rod. If C.I.P. concrete is utilized, it should be poured against the earth without formwork
4. Drill hole through abutment for restraining rod
5. Place waler beams along face of abutment
6. Run restraining rod through abutment, waler beams and deadman wall
7. Apply a tensile force to the restraining rod in an attempt to move the abutment back towards its original position
8. Drill evenly spaced weep holes along the base of the abutment, using caution to not disturb steel reinforcement
9. Backfill all excavated soil

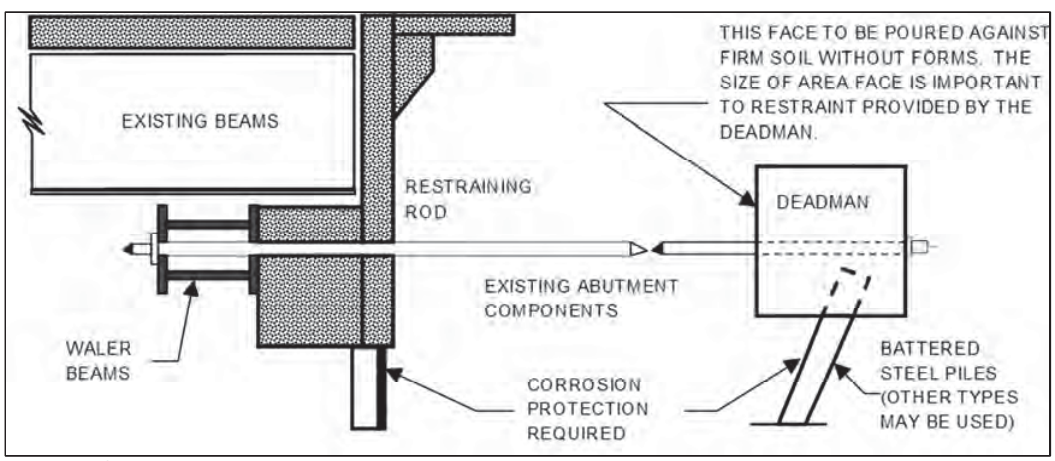

*Adapted from: Army and Air Force 1994 and Raina 1996

Abutment Sliding

Abutment sliding is an unusual form of deterioration for bridge substructures. If there is insufficient vertical loading present on the structure, adequate friction force may not develop between the foundation and the soil. The lateral pressures from the earth will cause the abutment to slide. This deterioration can best be rectified with a sheet pile or tie back system. Since the details for a sheet pile system are discussed for abutment stability, a tie back system will be explained.

Required Materials

1. Rotary Drill, Core Drill, Auger Drill or Percussion Drill
2. Prestressed Tendon
3. Bearing Plate with Welded Trumpet
4. Hex Nut
5. Heat Shrinkable Insulating Cover
6. Bearing Plate Insulation
7. Corrosion Inhibiting Grease
8. PVC Sheath
9. Cementitious Anchor Grout
10. Grout Pump
11. Centralizers

Construction Procedure

1. Drill the hole for the ground anchor, at least 2-feet beyond the specified bar length and providing 1/2-inches of grout cover
2. (Optional) Install casing to ensure that the drilled hole stays open
3. Conduct all necessary performance and proof tests on the provided tendons
4. Install the tendon in the drilled hole, centralizers should be used every 10-feet to center the tendon in the hole
5. Initialize the grouting operation, injecting grout at the lowest point of the anchor
6. Install the bearing plate, filling the void of the trumpet with grout
7. Place the hex nut on the tendon, cover all exposed elements with insulating cover
8. Repeat for all necessary ground anchors

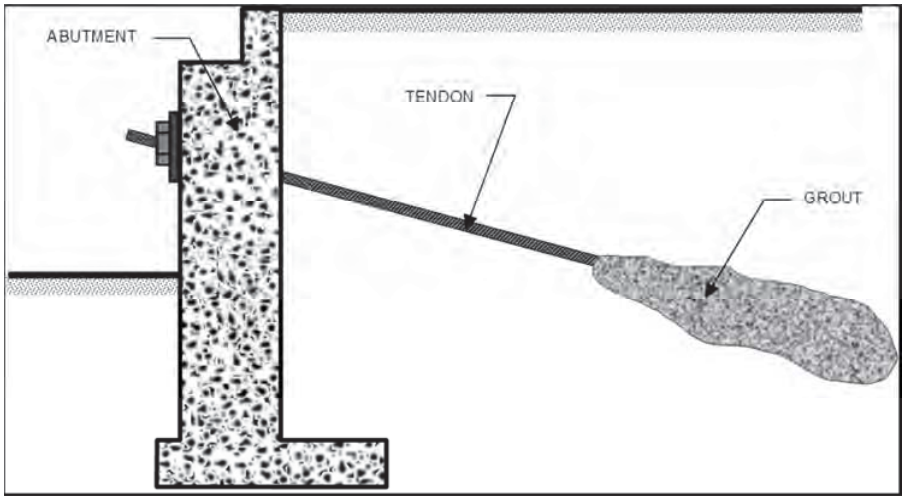

*Adapted from: Raina 1996

Abutment Settlement

If soil rupture occurs as a result of inadequate shearing resistance of the foundation material, then cement or chemical grouting may be necessary. Water migration through poor soil substrates can also be a cause for abutment settlement, which would necessitate a grouting procedure.

Required Materials

1. Black Iron Pipe or Plastic Pipe
2. Grout Pump
3. High Pressure Flow Control Valve
4. Injection Hose
5. Chemical Grout

Construction Procedure

1. Identify current soil conditions using approved testing methods
2. Mechanically drive injection probes into place (for black iron pipe) OR Air jet or water jet the probes into place (for plastic pipe)
3. Follow manufacturer instructions for mixing the chemical grout solution
4. Attach the flow control valve to preplaced probes and use lowest pressure setting of the pump
5. Lift the probe one foot between injection amounts, stopping two feet before the surface
6. Inject the chemical grout at all injection probe sites

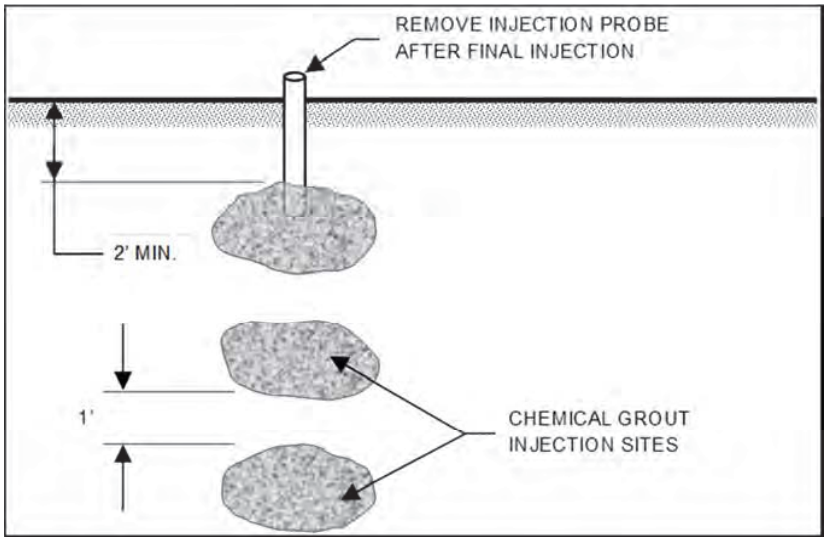

*Adapted from: Raina 1996

Abutment Slope Failure

If the soil lacks adequate cohesion and the foundation is not placed at a great enough depth, then slope-failure of the embankment can occur. Slope-failure effect can best be rectified with a tie-back or ground anchor system.

Required Materials

1. Rotary Drill, Core Drill, Auger Drill or Percussion Drill
2. Prestressed Tendon
3. Bearing Plate with Welded Trumpet
4. Hex Nut
5. Heat Shrinkable Insulating Cover
6. Bearing Plate Insulation
7. Corrosion Inhibiting Grease
8. PVC Sheath
9. Cementitious Anchor Grout
10. Grout Pump
11. Centralizers
12. Sheet Pile
13. Pile Driving Hammer

Construction Procedure

1. Drive sheet piling at the toe of the abutment to prevent future heaving from occurring
2. Drill the hole for the ground anchor, at least 2-feet beyond the specified bar length and providing ½-inches of grout cover
3. (Optional) Install casing to ensure that the drilled hole stays open
4. Conduct all necessary performance and proof tests on the provided tendons
5. Install the tendon in the drilled hole, centralizers should be used every 10-feet to center the tendon in the hole
6. Initialize the grouting operation, injecting grout at the lowest point of the anchor
7. Install the bearing plate, filling the void of the trumpet with grout
8. Place the hex nut on the tendon, cover all exposed elements with insulating cover
9. Repeat for all necessary ground anchors

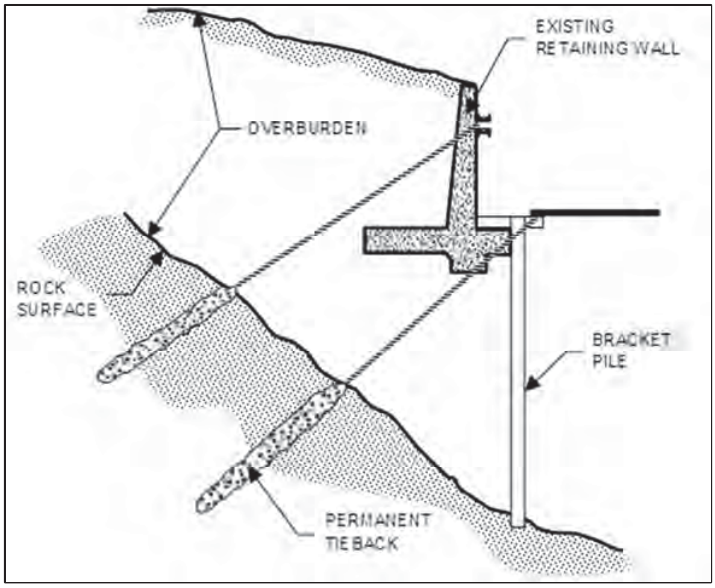

*Adapted from: Raina 1996

Abutment Tensile Cracking

When a bridge abutment is structurally inadequate for the lateral loading that is applied, tensile cracking may occur. Tensile cracking indicates a serious problem, and failure of the structure should be an immediate concern. Lateral loading should be reduced, and the crack should be repaired.

Required Materials

1. Sheet Piling
2. Excavator
3. Pile Driver
4. Lightweight Engineered Fill

Construction Procedure

1. Excavate all necessary soil
2. Drive sheet piling behind abutment wall in order to resist majority of lateral loading
3. A lightweight fill can be placed in order to reduce the lateral loading that is created
4. Backfill any necessary soil
5. Repair cracking that occurs within abutment using the stitching repair method, or any appropriate method for tensile cracks

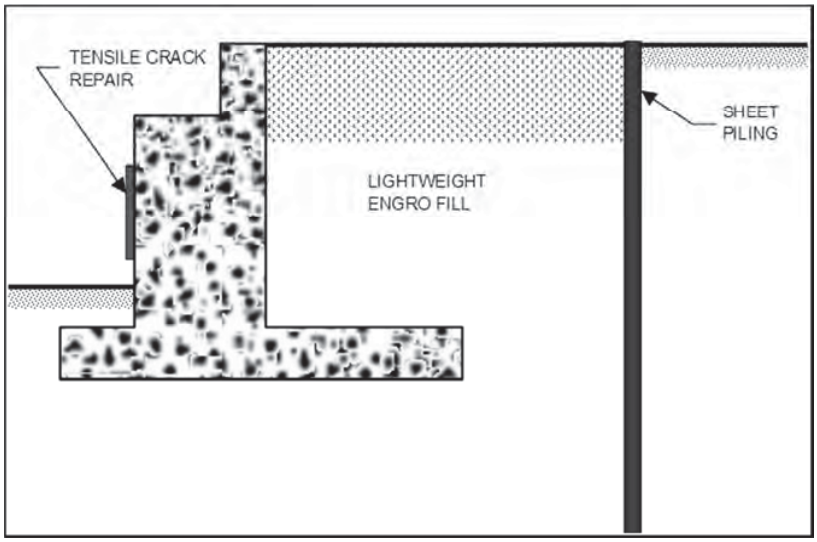

*Adapted from: Raina 1996

Abutment and Cap Seat Repair

Abutment and cap seats are typically damaged due to runoff from the superstructure. When the reinforcement corrosion, caused by the runoff, ultimately leads to delaminated or spalled concrete this repair method can be undertaken. It should be noted that this repair requires lifting of the superstructure, and the bridge should be closed to traffic.

Required Materials

1. Concrete Saw
2. (Optional) Steel Reinforcing Bars
3. Formwork
4. Concrete
5. Bonding Material
6. (Optional) New Bearings
7. Hydraulic Jacks
8. Sandblaster

Construction Procedure

1. Use the hydraulic jacks to lift the superstructure an adequate amount for work to proceed on the caps
2. Use the concrete saw to remove any deteriorated concrete, adhering to section 509.3.7 of the standard specifications
3. Concrete should be removed on the horizontal and vertical planes to provide a smooth surface for the repair
4. Sandblast clean all reinforcing steel that is exposed
5. (Optional) If the reinforcing steel has experienced significant section loss, tie in new reinforcement
6. Construct formwork
7. Apply bonding material
8. Cast concrete
9. (Optional) Replace bearings

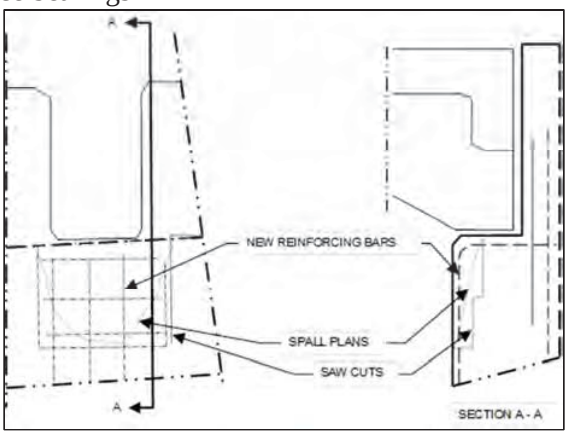

*Adapted from: Army and Air Force 1994

Concrete Cap Extension

This repair is typically conducted for concrete pier caps in order to restore adequate bearing if the beams have deteriorated at the point of bearing. While this repair is done on a substructure member, it is undertaken to rectify superstructure deterioration.

Required Materials

1. Concrete Saw
2. Electric Drill
3. Epoxy Grout
4. Masonry Anchors
5. Welded Reinforcing Steel Grid
6. Roofing Paper
7. Concrete

Construction Procedure

1. Use the concrete saw to remove any deteriorated concrete on the cap, adhering to section 509.3.7 of the standard specifications
2. Layout the grid pattern for the masonry anchors
3. Drill a minimum of 6-inches into the existing pier cap
4. Place epoxy capsules or by means of injection into the drilled holes
5. Place the masonry anchors into the drilled holes
6. Wire the reinforcing steel grid around the inside head of the anchor bolts, ensuring adequate cover is provided (4-inches for the sides and 2-inches for the face)
7. Place roofing paper against the bottom of the beam
8. Construct formwork
9. Cast concrete, the extension should not carry any load during the curing process

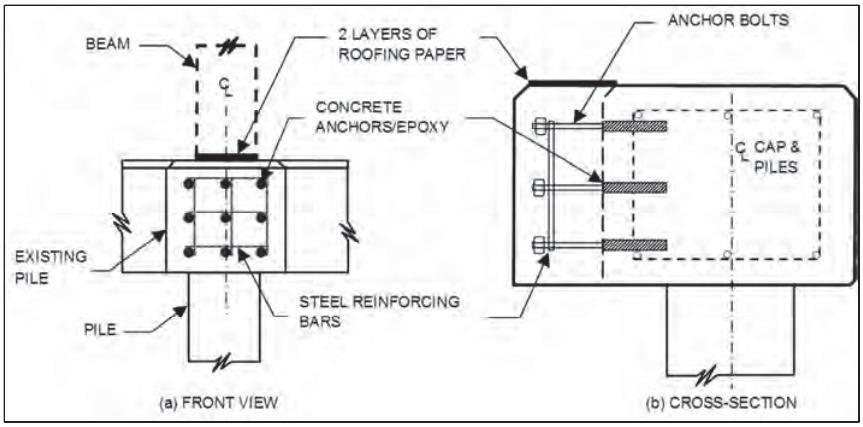

*Adapted from: Army and Air Force 1994

Beam Saddle Addition

The use of a beam saddle can restore bearing if a beam or cap is damaged at the point of bearing. A beam saddle consists of structural steel members which are fastened together onsite, eliminating the need for jacking of the superstructure. The bridge should be closed to traffic prior to the start of repairs.

Required Materials

1. Structural Steel (painted to resist corrosion)
2. Neoprene Bearing Pads
3. Bolts with Nuts and Washers
4. (Optional) Concrete
5. (Optional) Concrete Saw

Design Procedure

1. Measure the existing pier cap for width in order to adequately design the saddle (if concrete surface repairs are necessary, ensure that the saddle will still fit)
2. Calculate the net reaction, R, which has to be transferred between the beam and pier cap
3. Select a trial shape for the rolled steel sections based on bearing stresses (such that the section need not be reinforced with bearing stiffeners).

   $$A_w = \frac{2.3 * R}{F_{yw}}$$

   A_w = cross sectional area of the web (in^2)
   F_{yw} = yield stress of the web material (psi)

4. (Optional) If the calculated web area is too large for a practical member, bearing stiffeners can be utilized
5. (Optional) Bearing stiffeners should be checked for local buckling, bearing resistance and axial resistance of the effective column section

   Local Buckling Check: $$t_p \geq \frac{b_s}{12} * \sqrt{\frac{F_y}{33{,}000}}$$

   t_p= thickness of bearing stiffeners (in)
   b_s= width of the bearing stiffeners (in)
   F_y=yield stress of the bearing stiffeners (psi)

6. Determine if induced shear stresses are within allowable limits
7. Determine if flexural stresses are within allowable limits
8. Each bolt should be designed to carry an axial tension of R/N, where N is the number of bolts

Construction Procedure

1. Use the concrete saw to remove any deteriorated concrete on the cap, adhering to section 509.3.7 of the standard specifications
2. Replace any missing concrete, allowing adequate curing time before the saddle will be installed
3. Brush clean the top of the cap and bottom of the beam to ensure uniform bearing can be achieved
4. Place neoprene bearing pads on the top of the pier cap
5. Place saddle members on top of the neoprene bearing pads on the pier cap
6. Install the saddle members that will be below the beam, placing neoprene bearing pads between the saddle and the beam

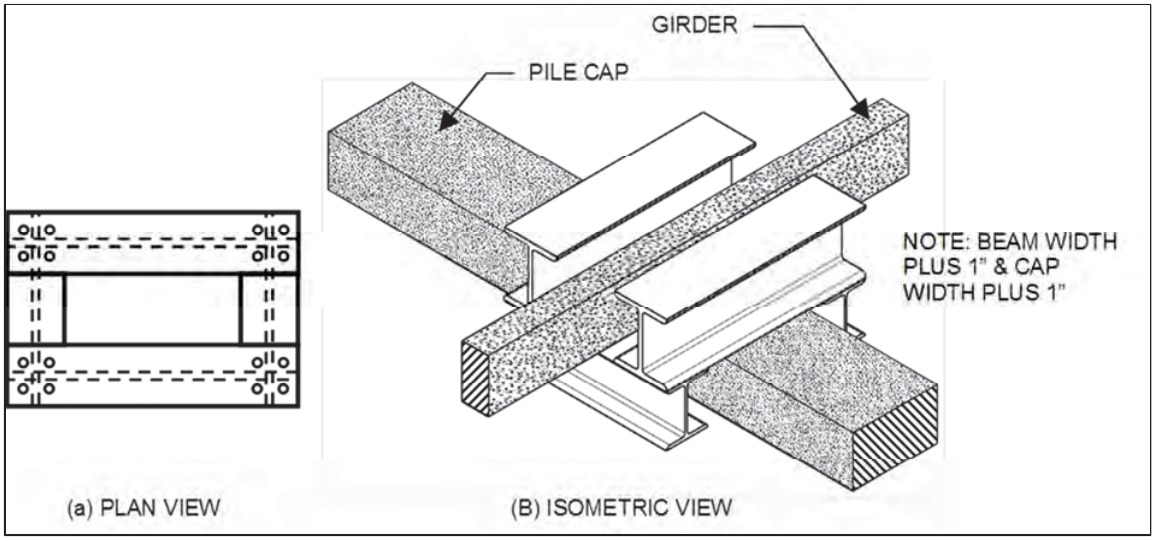

*Adapted from: Wipf. et al. 2003 and Army and Air Force 1994

Pile Posting

Pile posting is one of two common pile rehabilitation techniques for timber piles. Pile posting necessitates removal of an entire section of damaged timber; therefore a temporary system needs to be put in place for adequate load transfer during the repair.

Required Materials

1. Saw
2. Steel Pins
3. New Timber Section
4. Electric Drill
5. Plastic Tape
6. Epoxy
7. Nails
8. Washers
9. Timber Wedges
10. Temporary Supports

Construction Procedure

1. Install the temporary supports to remove loading from the pile that needs to be repaired
2. Remove the damaged portion of the pile
3. Adequately clean the existing pile surface and the new timber section surface
4. Place the new timber section, using the timber wedges to leave 1/8-inch to ¼-inch gaps on both ends, the new timber section should have the nails and washers preplaced
5. Drill holes at steep downward angles above each joint, spacing them 90º apart
6. Drive steel pins into the drilled holes
7. Place the plastic tape around the joints
8. Inject the epoxy into the nail holes, and fill the gap between timber members

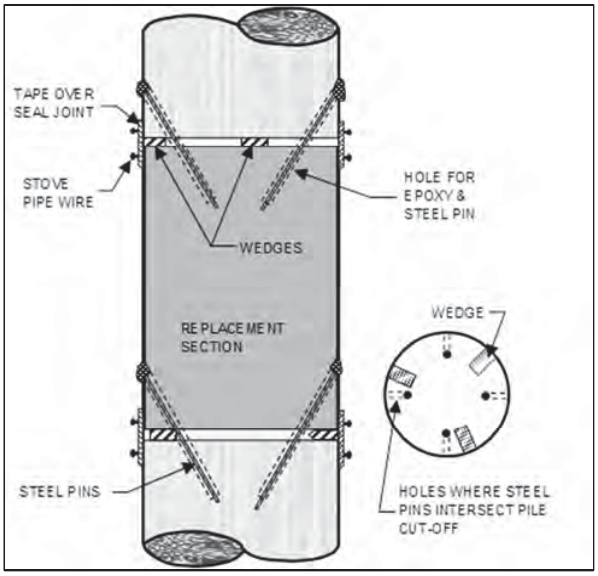

*Adapted from MnDOT 2011 and Army and Air Force 1994

Concrete Jacketing

When a significant length of timber pile needs to be repaired, concrete jacketing is typically the most economical and reliable method. If the deteriorated portion of the pile is at the ground line, then the concrete jacket provides future protection from the damage that occurs due to the continual wetting and drying of the pile. This repair is typically recommended if the pile has undergone 15-50% section loss.

Required Materials

1. Saw
2. New Timber Section
3. Jacks
4. Steel Reinforcement Cage
5. Steel Formwork (can be left in place)
6. Steel Plate
7. Concrete

Construction Procedure

1. Excavate any necessary soil around the deteriorated pile
2. Install jacks and cribbing to raise the cap and remove loading from the pile that needs to be repaired
3. Remove the pile between the damaged portion and the cap
4. Place steel reinforcement cage and formwork, ensuring 6-inches of cover is provided around the pile
5. Place new pile section on top of remaining existing pile
6. Pour concrete into formwork and slope the top to allow water to runoff
7. Attach the new pile section to the pier cap with the exterior steel plate
8. Backfill soil

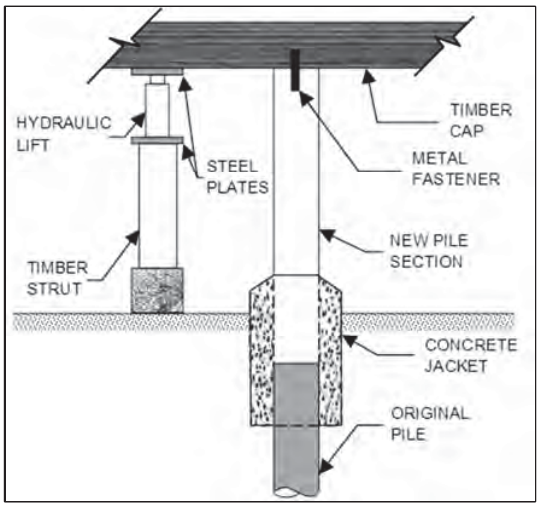

*Adapted from MnDOT 2011 and Army and Air Force 1994

Pile Restoration

Pile restoration is utilized when only a small portion of the existing pile cross section is showing signs of deterioration. Pile restoration is typically more expensive than pile posting due to the increased labor that is required. This repair is usually only selected if site accessibility is a concern.

Required Materials

1. Saw
2. Chisel
3. New Timber Section
4. Epoxy
5. Putty Knife
6. Metal Banding

Construction Procedure

1. Remove the vertically wedge shaped portion of the pile that is deteriorated, using a saw and chisels
2. Fabricate a new treated timber section that is slightly smaller in size than the removed portion
3. Cover the contact surfaces of the existing pile and replacement section with epoxy, using the putty knife
4. Place the fabricated replacement section into the existing pile
5. Place metal banding around repair area to hold new section in place until the epoxy cures
6. Remove metal banding

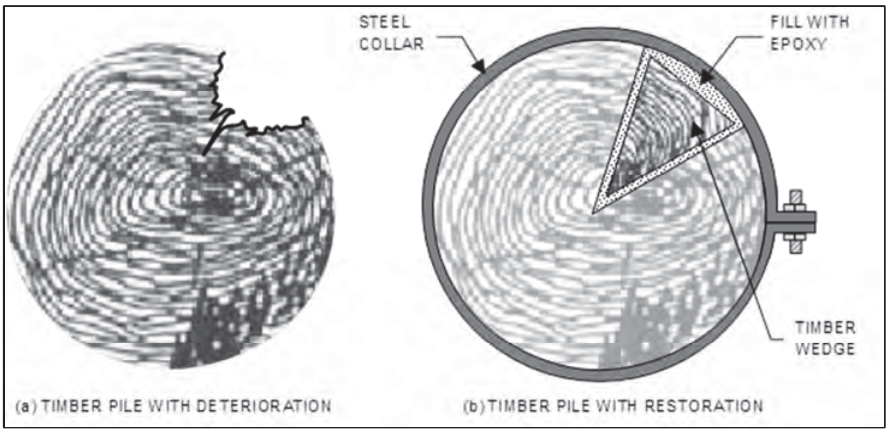

*Adapted from MnDOT 2011

Pile Augmentation

Pile augmentation is a general term for any repair that adds new material to the existing pile in an attempt to strengthen the pile. These materials are typically fixed to the exterior of the pile, and no attempt is made to repair the existing pile. The obvious detriment of this repair method is that future inspections of the original piling will be impossible. If fiberglass jacketing is chosen as the repair method, the section on concrete pile repair can be referenced. This section will highlight the specific method of augmentation referred to as scabbing.

Required Materials

1. Steel C.I.P. Pile Shell
2. Steel Angle Sections
3. High Strength Hex Bolts
4. Beveled Washers
5. High Strength Threaded Rods
6. Electric Drill

Construction Procedure

1. Fabricate two semicircle steel collars utilizing the C.I.P. pile shell, angle sections, and hex bolts
2. Paint the collar with a zinc based paint to resist corrosion
3. Place both pieces of the collar on the deteriorated pile
4. Fasten the two collar pieces together using the threaded rods and beveled washers

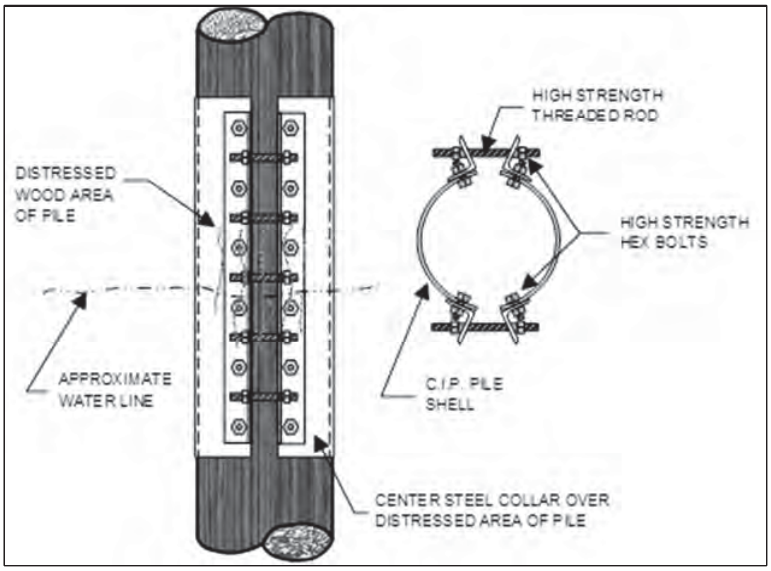

*Adapted from MnDOT 2011 and WisDOT Bridge Plans

PVC Wrap

The use of a flexible PVC wrap for timber pile repair is typically recommended if section loss is between 10 and 15%. Special attention should be paid to piles that have been treated with creosote, since that will cause the PVC wrap to deteriorate.

Required Materials

1. PVC Sheet
2. Wood Pole
3. (Optional) Polyethylene Film
4. Staple Gun
5. Polyethylene Foam
6. Aluminum Alloy Rails
7. Rigid Plastic Banding
8. Cofferdam

Construction Procedure

1. Dewater the pile, if necessary construct a cofferdam
2. (Optional) If there is creosote present on the surface of the timber pile, then a polyethylene film should be placed between the pile and the PVC sheet
3. Staple polyethylene foam 1-inch from the upper and lower horizontal edges of the wrap
4. Attach the wood pole to the vertical edge of the PVC sheet and use it to wrap the PVC around the piling, 1-foot below the mudline and 1-foot above the high tide level
5. Secure the wrap using the aluminum alloy rails
6. Nail the rigid plastic banding directly over the polyethylene foam, if necessary place rigid plastic banding equally spaced throughout the length of the PVC wrap

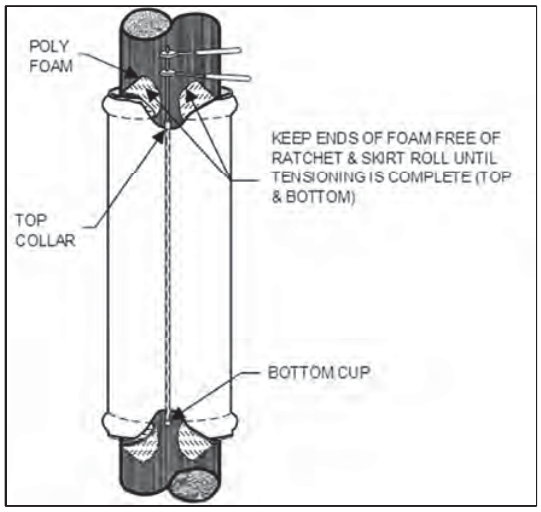

*Adapted from Army and Air Force 1994

FRP Wrap

If the pile needs to regain structural integrity, FRP wrapping is an available option. Manufacturer specifications and WisDOT provisions should be followed for all FRP repairs. Suppliers of the FRP must have a minimum of ten installations and shall submit certified test reports designated by WisDOT. Polyester resin is not an acceptable substitute for the designated epoxy resin. When the epoxy resin is mixed, the ambient temperature must be between 55 and 95 degrees F. When it is applied, the relative humidity shall be below 85% and the surface temperature shall be more than 5 degrees F above the dew point. With proper maintenance and UV protection, FRP wrapping can last upwards of 50 years.

Required Materials

1. Continuous filament woven fabric meeting the following requirements:
   - Primary fibers shall be electrical (E) glass fibers
   - Minimum ultimate tensile strength shall be 40 ksi
   - Minimum thickness of the wrap shall be 1/8-inch
2. Epoxy resin (supplied by manufacturer)
3. Mechanical Mixer
4. Light Abrasive
5. Epoxy Paint

Construction Procedure

1. Smooth the timber surfaces to remove any protrusions that may cause voids or damage the fiber
2. Ensure all timber surfaces are dry
3. Mix the components of the epoxy resin with a mechanical mixer and apply it uniformly to the fiber, within one hour of mixing, at a rate that shall ensure complete saturation of the fabric.
4. Apply the fabric in one continuous piece surrounding the concrete. The wrap shall be a minimum of one layer with edge laps of 6-inches and end laps of 12-inches. Multiple layers shall have end laps offset by a minimum of 90 degrees.
5. Place successive layers of composite materials before polymerization of the previous layer of epoxy is complete. If polymerization does occur between layers, roughen the surface using a light abrasive that will not damage the fiber. Release or roll-out entrapped air before the epoxy sets.
6. Cover the final layer of fabric with a 15-mil thick coat of epoxy that produces a uniform finished surface.
7. After the final epoxy coat is completely polymerized, clean and roughen the exterior surfaces of the composite wrap using a light abrasive. The abrasive shall be of the appropriate hardness to roughen the surface without damaging the fibers.
8. Before painting, dust and dry all cleaned and roughened surfaces.

9. Paint the areas with a minimum of two finish coats of epoxy paint. The total dry film thickness of all applications of the finish coats shall be not less than 4 mils nor more than 8 mils.

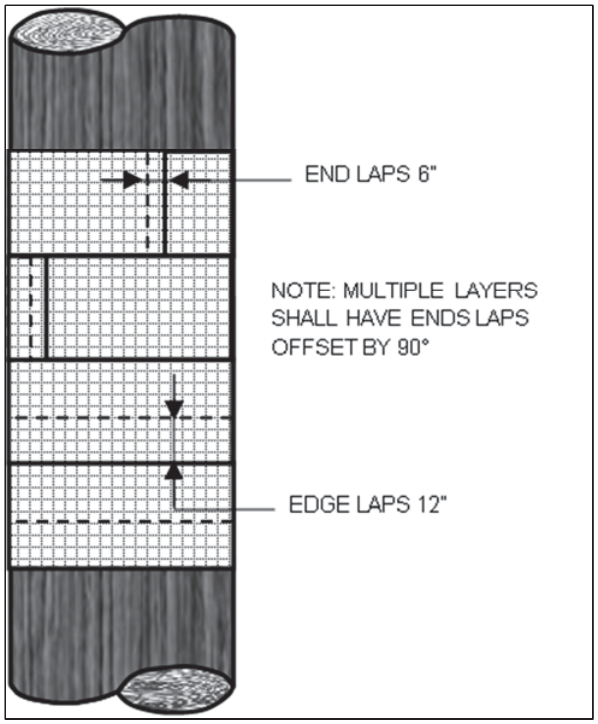

*Adapted from: WisDOT Special Provisions 2005

Pile Shimming

Pile shimming is a relatively simple procedure that can be enacted if bearing is lost between the cap and the piles due to settlement or decay. The structure needs to be jacked for the repair to be completed, thus the bridge should be closed prior to the start of the repair procedure.

Required Materials

1. Treated Timber Shim
2. Nails
3. Hydraulic Jacks
4. Cribbing
5. Steel Fishplates
6. Saw
7. Electric Drill
8. Dowels

Construction Procedure

1. Close the bridge to traffic
2. Construct any necessary cribbing adjacent to deteriorated piling, place the hydraulic jacks on the cribbing
3. Raise the cap and superstructure ½-inch higher than the final desired elevation
4. (Optional) If the bearing has been lost due to deterioration at the top of the pile, remove the deteriorated portion of timber
5. Cut the shim to ¼-inch less than the space between the raised cap and new top of the pile cap
6. Lower the jacks
7. Toenail the shim to the existing pile
8. Place dowel through the cap into the new pile section
9. Nail fishplates onto the exterior of the timber pile and shim
10. Remove Cribbing

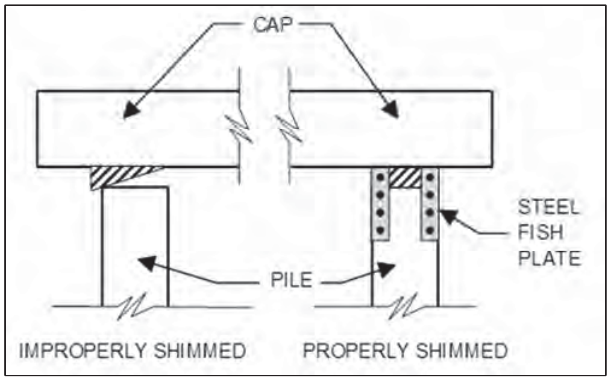

*Adapted from: Wipf et al. 2003 and Army and Air Force 1994

Supplemental Steel Piles

Supplemental steel piles can be added to a bridge substructure if the timber pile bent has experienced pile deterioration or settlement. This repair is necessary if the existing piles have experienced deterioration past the reasonable point of rehabilitation. Care should be exercised that the steel piles are not driven too close to the existing timber piles, as they might not develop proper bearing capacity.

Required Materials

1. Steel H-Piles
2. Steel Cap Beams
3. Steel Shim Plates
4. Steel Reinforcing Bars
5. Welding Equipment
6. Appropriate Patch Material
7. Cross Bracing
8. Pile Driver

Construction Procedure

1. Close the bridge to traffic
2. Cut holes through the deck, large enough to drive the new steel piling through
3. Drive piles (battered if necessary) and cut off at an elevation that will provide adequate room for the installation of the steel cap beam (steel shim plates may also be used if necessary)
4. Weld or bolt the new steel cap beam to the steel piles
5. Use shim plates to ensure that there is adequate bearing between the cap beam and the existing pier cap
6. Splice new steel reinforcement in the deck where reinforcement was cut for the driving operations
7. Place an appropriate patch material to repair the holes that were created in the deck

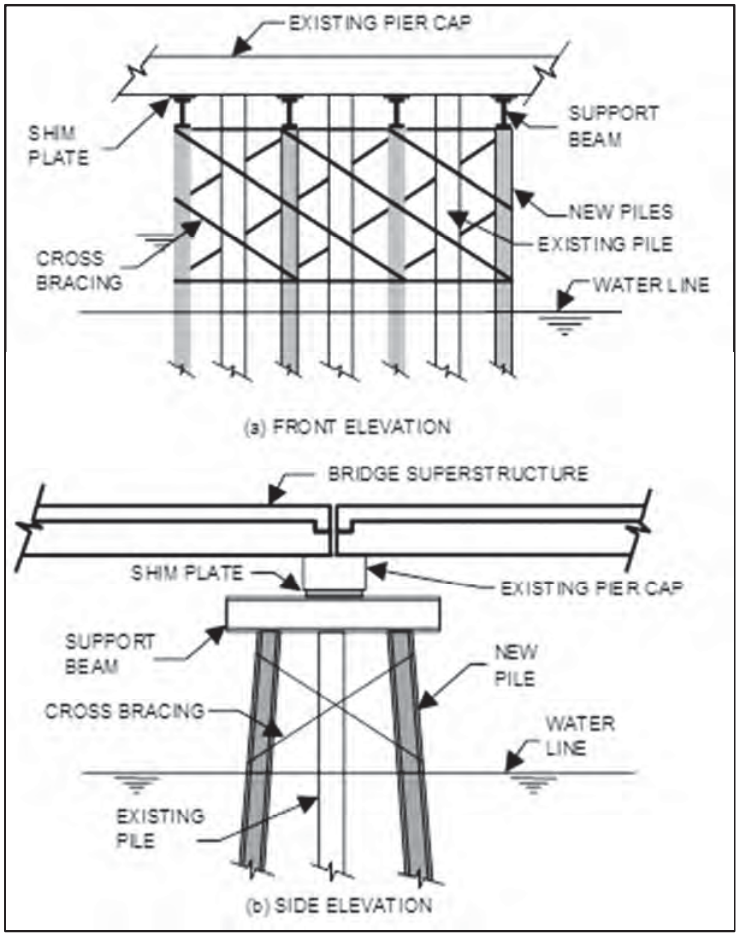

*Adapted from: Wipf et al. 2003

Supplemental Timber Piles

Supplemental steel piles can be added to a bridge substructure if the timber pile bent has experienced pile deterioration or settlement. This repair is necessary if the existing piles have experienced deterioration past the reasonable point of rehabilitation. Care should be exercised that the steel piles are not driven too close to the existing timber piles, as they might not develop proper bearing capacity.

Required Materials

1. Treated Timber Piles
2. Cap Beams
3. Steel Shim Plates
4. Steel Reinforcing Bars
5. Welding Equipment
6. Appropriate Patch Material
7. Pile Driver

Construction Procedure

1. Close the bridge to traffic
2. Cut holes through the deck, large enough to drive the new timber piling through
3. Drive piles and cut off at an elevation that will provide adequate room for the installation of the cap beam (steel shim plates may also be used if necessary)
4. Wedge the cap beam between the new timber piling and the existing timber pile bent cap
5. Use shim plates to ensure that there is adequate bearing between the cap beam and the existing pier cap
6. Splice new steel reinforcement in the deck where reinforcement was cut for the driving operations
7. Place an appropriate patch material to repair the holes that were created in the deck

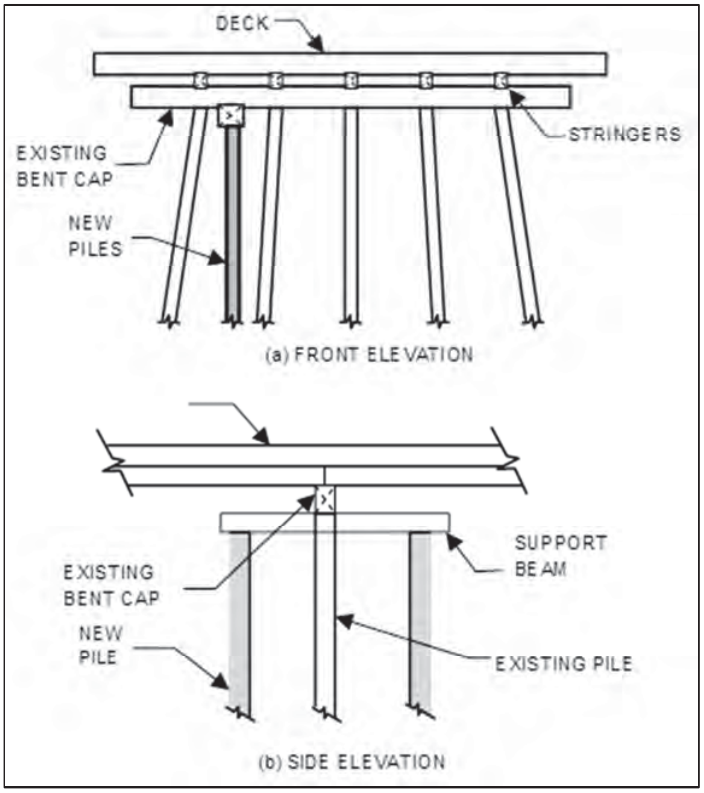

*Adapted from: Wipf et al. 2003

Repair of Timber Sway Bracing

If the existing sway bracing on a timber pile bent has experienced deterioration and section loss, then it should be replaced. The repair procedure simply replaces the timber in-kind, and will do nothing to address the cause of the deterioration.

Required Materials

1. Treated Timber Sections
2. Galvanized Bolts
3. Cast Iron Washers
4. Saw
5. Electric Drill
6. Hot Oil Preservative
7. Tar

Construction Procedure

1. Determine where the deterioration of the sway bracing ends
2. Cut off the sway bracing at the pile closest to the deterioration
3. Measure length of new bracing required and cut section
4. Treat all timber cuts with a hot oil preservative, and a coating of tar
5. Install new timber section, utilizing any existing bolt holes and drilling new holes where necessary
6. Ensure that all bolt holts are treated with an appropriate hot oil preservative

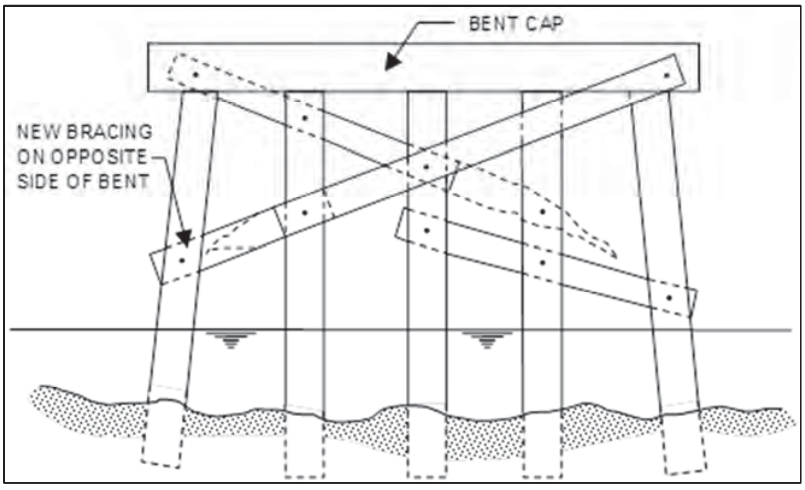

*Adapted from: Wipf et al. 2003 and Army and Air Force 1994

Creation of Timber Sway Bracing

If the stability of the existing pile bent is a concern, and sway bracing is not currently installed, then the pile bent can be retrofitted with sway bracing. This procedure documents the use of timber for sway bracing, but steel is also a viable option.

Required Materials

1. Treated Timber Sections
2. Galvanized Bolts
3. Cast Iron Washers
4. Galvanized Nails
5. Saw
6. Electric Drill
7. Hot Oil Preservative
8. Tar

Construction Procedure

1. Measure length of new bracing required and cut section
2. Treat all timber cuts with a hot oil preservative, and a coating of tar
3. Temporarily attach the sway bracing to the existing piling using galvanized nails
4. Drill through the bracing and the piling in order to install the bolts
5. Ensure that all bolt holts are treated with an appropriate hot oil preservative
6. Install the galvanized bolts and cast iron washers

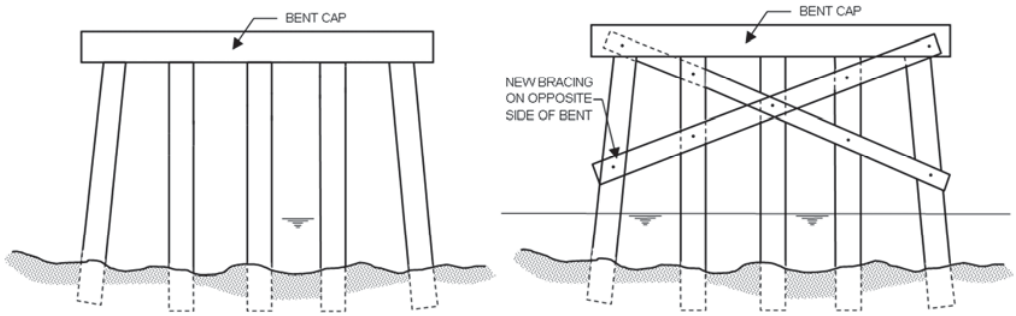

*Adapted from: Wipf et al. 2003 and Army and Air Force 1994

Adding Steel

Steel can be added to existing piles that have experienced section loss from being in contact with the groundline or waterline. Two different methods can be used to increase the cross section of the steel pile. Channel sections can be bolted to the pile or plate section can be welded. Residual stresses should be monitored if welding is the chosen method. Additional protection can be achieved if a concrete encasement is placed after the additional steel.

Required Materials

1. Steel Channel Section or Steel Plate
2. High Strength Bolts, Nuts and Washers (for Channel Section)
3. Welding Equipment (for Plate Section)
4. Drilling Equipment (for Channel Section)

Construction Procedure

1. Measure length of deteriorated portion of pile, have fabricated section extend a minimum of 9-inches past deterioration
2. Clean the existing pile
3. Clamp the new section in place
4. Drill holes through the channel and the pile for bolt placement (for channel section)
5. Place bolts, nuts and washers (for channel section)
6. Weld steel plate onto existing pile (for plate section)
7. Monitor residual stresses (for plate section)
8. Remove clamps
9. Coat steel with protective material, consider use of concrete encasement around waterline

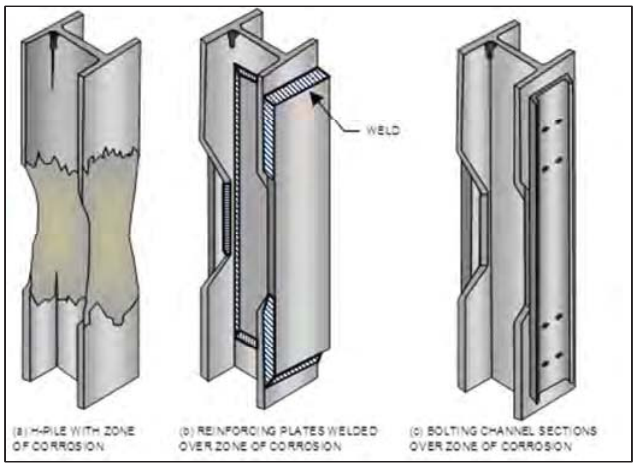

*Adapted from: Wipf et al. 2003 and Army and Air Force 1994

Pile Jackets

Grout filled pile jackets can be used to increase strength and prevent suture corrosion of steel piles. Typical pile jackets are constructed of fiberglass and can be formfitting to the existing member or circularly shaped. Fiberglass jackets that are formfitting do not need to be dewatered.

Required Materials

1. Fiberglass Jacket
2. Sandblaster
3. Epoxy Grout
4. (Optional) Cementitious grout
5. Bracing and Banding
6. Epoxy Bonding Compound

Construction Procedure

1. Sandblast the existing steel pile
2. Place fiberglass jacket (round or fitted) around steel pile
3. Seal the joints of the fiberglass jacket with the manufacturer designated epoxy bonding compound
4. Place any necessary bracing and banding to hold the form in place
5. Dewater the form (for round forms)
6. Fill the bottom 6-inches with epoxy grout (for round forms)
7. Fill up to 6-inches from the top with a cementitious grout (for round forms)
8. Fill the top 6-inches with epoxy grout (for round forms)
9. Fill the entire form with epoxy grout (for fitted forms)
10. Slop the top to allow proper water runoff
11. Remove external bracing and banding after all grout has completely cured

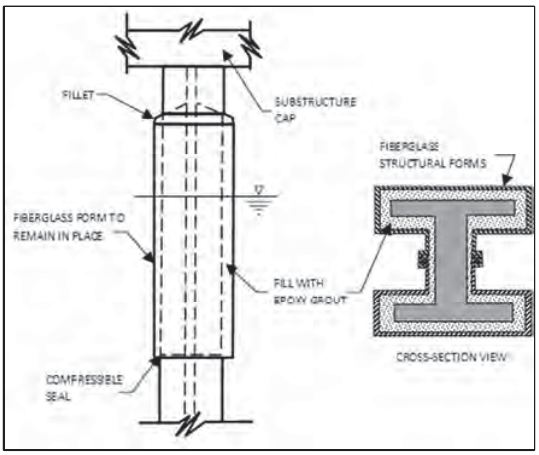

*Adapted from: Fox Industries/Simpson Strong Tie 2011 and Army and Air Force 1994

Concrete Encasement

Concrete encasement is typically cheaper than the use of a pile jacket because standard materials are typically utilized. The permeability of concrete shortens this repair life when compares to the pile jacket method. This procedure can be combined with the addition of steel if portions of the steel piling are completely rusted through.

Required Materials

1. Formwork
2. Sandblaster
3. Bracing and Banding
4. Steel Reinforcement Cage
5. Concrete
6. Cofferdam
7. (Optional) Materials from the “Adding Steel” Repair

Construction Procedure

1. Construct a cofferdam
2. Sandblast the existing steel pile
3. (Optional) Perform the “Adding Steel” repair
4. Place steel reinforcement cage
5. Place formwork around steel pile
6. Place any necessary bracing and banding to hold the form in place
7. Pour concrete
8. Slop the top to allow proper water runoff
9. Remove external bracing and banding after all grout has completely cured

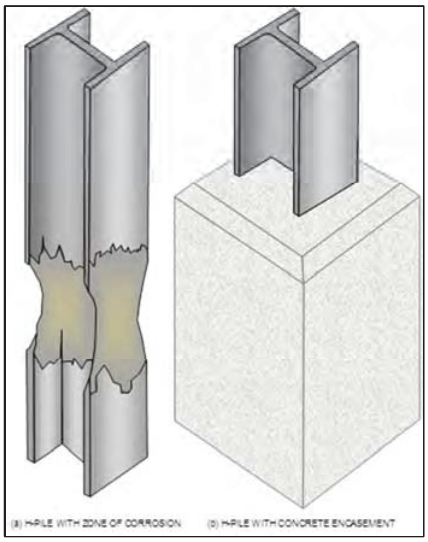

*Adapted from: ODOT 2012 and WisDOT Bridge Plans

Sacrificial Anodes

Sacrificial zinc anodes are a form of corrosion protection that will deteriorate over time. The direct application of sacrificial anodes onto steel piles is usually reserved for saltwater environments. This repair can typically be combined with concrete encasement if the steel needs to be strengthened in addition to having corrosion protection.

Required Materials

1. Zinc Anodes
2. Coated Clamp
3. Positive Drive Screw (Case Hardened Point)
4. Cofferdam
5. Sandblaster
6. (Optional) Materials from the “Concrete Encasement” Repair

Construction Procedure

1. Construct a cofferdam
2. Sandblast the existing steel pile
3. Place zinc anodes at least 3-feet under the typical waterline at manufacturer specified spacing
4. Utilize the clamp and drive screw to attach the different anodes to the pile flange
5. (Optional) Perform a concrete encasement of any deteriorated sections
6. Remove cofferdam

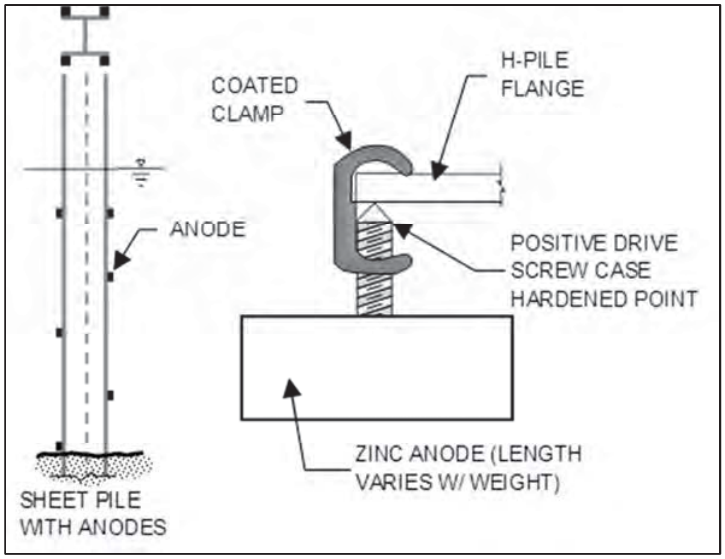

*Adapted from: Army and Air Force 1994

Anode Embedded Jacket

Anode embedded fiberglass jackets combine a number of repairs to strengthen and protect the existing steel piles. The fiberglass jacket provides and impermeable barrier to protect against future deterioration, while the anodes help to prevent corrosion in the event that chlorides reach the steel member.

Required Materials

1. Anode Embedded Fiberglass Jacket
2. Sandblaster
3. Compressible Strip Seal
4. Manufacturer Designated Mortar
5. Epoxy Bonding Compound
6. Stainless Steel Screws
7. Temporary Formwork
8. (Optional) Material from the “Adding Steel” Repair

Construction Procedure

1. Sandblast existing steel pile
2. (Optional) Perform the “adding steel” repair if section loss is present and electrical continuity needs to be preserved
3. Place the fiberglass jacket around the existing pile, holding it in place with temporary formwork
4. Seal jacket joints with epoxy and stainless steel screws
5. Seal the bottom of the jacket with the compressible strip seal
6. Pour the mortar
7. Slope the top to allow proper water runoff
8. Remove temporary formwork after all of the mortar has cured

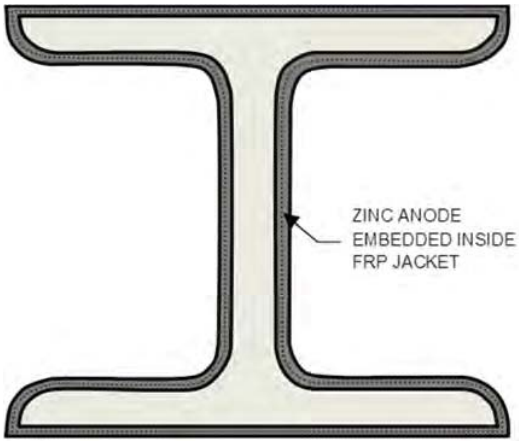

*Adapted from: Vector Corrosion Technologies 2010 and Fox Industries/Simpson Strong Tie 2011

Extended Footings

The construction of an extended footing on a bridge substructure is typically used for local scour, when the depth of the scour is relatively low. The procedure is recommended for concrete spread footings, but is not suitable for masonry. Dewatering is not necessary for this repair, as the concrete grout will displace the water. The tremie encasement method and the confinement wall method are both documented in this section, the use of a flexible fabric filled with grout is also a possibility and involved a similar procedure.

Required Materials

1. Steel Welded Wire Reinforcement (Tremie Encasement Method)
2. Forming Struts (Tremie Encasement Method)
3. Steel Formwork (Tremie Encasement Method)
4. Riprap or Sandbags (Confinement Wall Method)
5. Concrete Grout
6. Heavy Riprap
7. Concrete Pump
8. Steel Reinforcement (Tremie Encasement Method)
9. Chisel (Tremie Encasement Method)

Construction Procedure

1. Close bridge to traffic
2. Chisel holes into the existing concrete footing (Tremie Encasement Method)
3. Place steel reinforcement into the holes to create a better bond between the existing and the new footing (Tremie Encasement Method)
4. Place the steel formwork around the bottom of the pier (Tremie Encasement Method)
5. Place forming struts and steel welded wire reinforcement (Tremie Encasement Method)
6. Place riprap or sandbags along the faces of the footing and extending through the mud layer (Confinement Wall Method)
7. Inject concrete grout into the bottom of the encasement, displacing water through the vents and adhering to Section 502.3.5.3 of the WisDOT Standard Specifications
8. Place heavy riprap along the sides of the extended footing to prevent future undermining from occurring

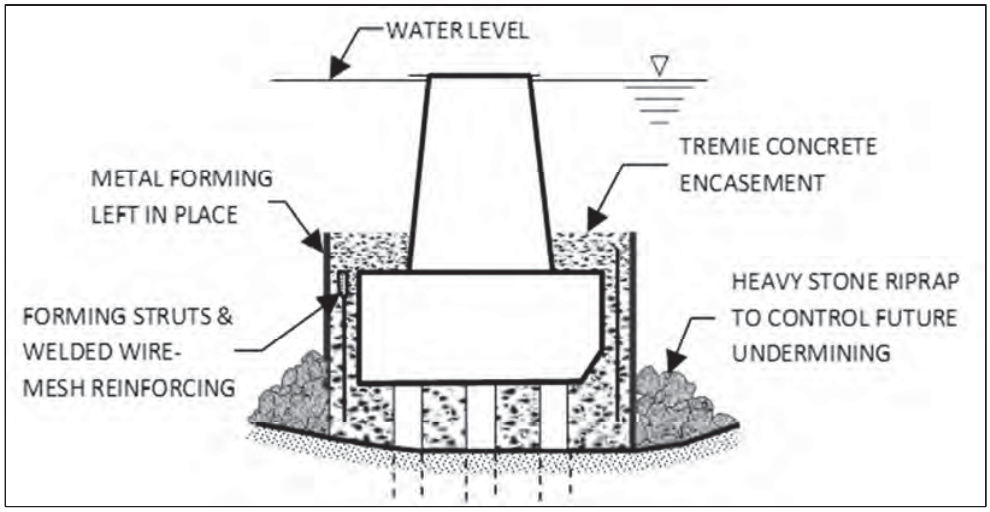

*Adapted from: Army and Air Force 1994 and Agrawal et al. 2005

Backfill

If the pier footing is not permanently under water and has experienced scour due to flooding or runoff, then backfill can be used with a structural fill. If the pier footing is permanently underwater, then backfill should be conducted with crushed stone. For both repair methods riprap should be used to prevent future scour events from occurring.

Required Materials

1. Structural Fill (Dry Footing)
2. Crushed Stone (Wet Footing)
3. Excavator
4. Cofferdam

Construction Procedure

1. Close bridge to traffic
2. Construct a cofferdam, if necessary, to allow proper access and placement of material, and adhering to Section 206 of the WisDOT Standard Specifications
3. Select structural fill, adhering to Section 210 of the WisDOT Standard Specifications
4. Place structural fill or crushed stone where scour has occurred, extended on a slope of 2:1
5. Cover the newly placed backfill with sufficient amount of riprap to ensure that scour does not occur again, adhering to Section 606 of the WisDOT Standard Specifications
6. Remove cofferdam

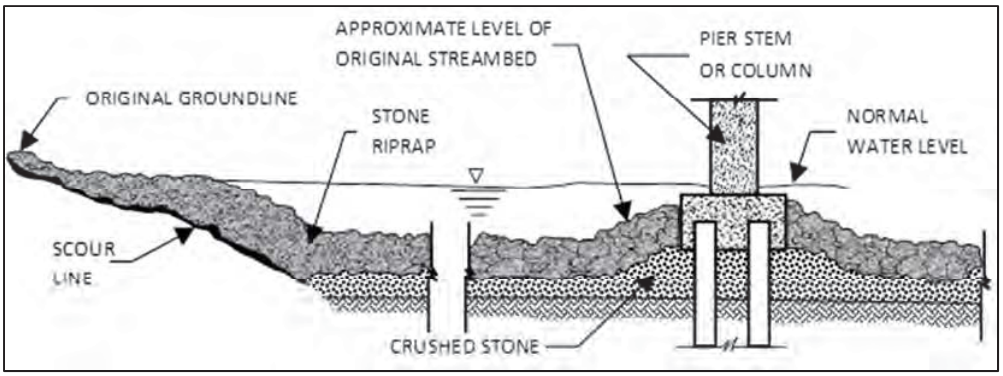

*Adapted from: Army and Air Force 1994

Concrete Apron Wall

Concrete apron walls can be utilized to protect bridge piers from local or contraction scour. The concrete walls that are constructed on the faces of the footing can rest on hard strata, providing an unequaled amount of scour protection. A cofferdam is necessary for construction and the bridge should be closed to traffic during the operations.

Required Materials

1. Formwork
2. Steel Reinforcement
3. Concrete
4. Excavator
5. Cofferdam
6. Riprap

Construction Procedure

1. Close bridge to traffic
2. Construct a cofferdam, adhering to Section 206 of the WisDOT Standard Specifications
3. Excavate all necessary soil down to hard strata, accounting for apron walls and riprap placement and adhering to Section 206 of the WisDOT Standard Specifications
4. Place steel reinforcement, adhering to Section 505 of the WisDOT Standard Specifications
5. Place formwork, adhering to Section 502.3.3 of the WisDOT Standard Specifications
6. Cast concrete, adhering to Section 503.3.5 of the WisDOT Standard Specifications
7. After the concrete has cured, remove the formwork
8. Place riprap, extending on a 1:1 slope from the base and adhering to Section 606 of the WisDOT Standard Specifications
9. Remove cofferdam

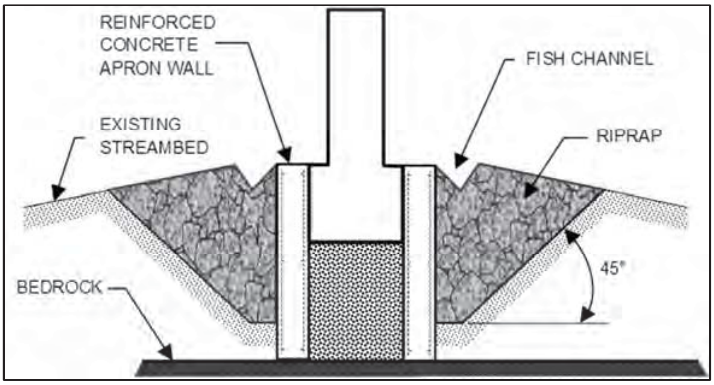

*Adapted from: Agrawal et al. 2005

Underpinning

Underpinning is an invasive bridge rehabilitation method that requires the bridge to be shut down while the repairs are conducted. Loads are transferred from the existing footing to needle beams which are placed below the footing. Underpinning is typically used for local or contraction scour since it lowers the bottom of the footing elevation below the scour depth. This method is typically not recommended for high traffic volume bridges.

Required Materials

1. Needle Beam
2. New Piling
3. Pile Driver or Rotary Driller
4. Excavator
5. Dry Pack Concrete or Steel Bearing Plates
6. Cofferdam

Construction Procedure

1. Close bridge to traffic
2. Construct a cofferdam, adhering to Section 206 of the WisDOT Standard Specifications
3. Excavate around the existing footing, creating enough space to place the pilings and needle beams
4. Depending on the type of piling that is being utilized for the underpinning, utilize the pile driver or rotary driller to place the piling
5. Caution should be exercised that new piling is not placed in the vicinity of existing piling, as side frictional losses will occur
6. Install the needle beam between the existing footing and newly placed piling
7. Place dry pack concrete or steel bearing plates between the needle beam and footing to achieve a snug fit
8. Backfill and monitor for possible settlement
9. Remove cofferdam

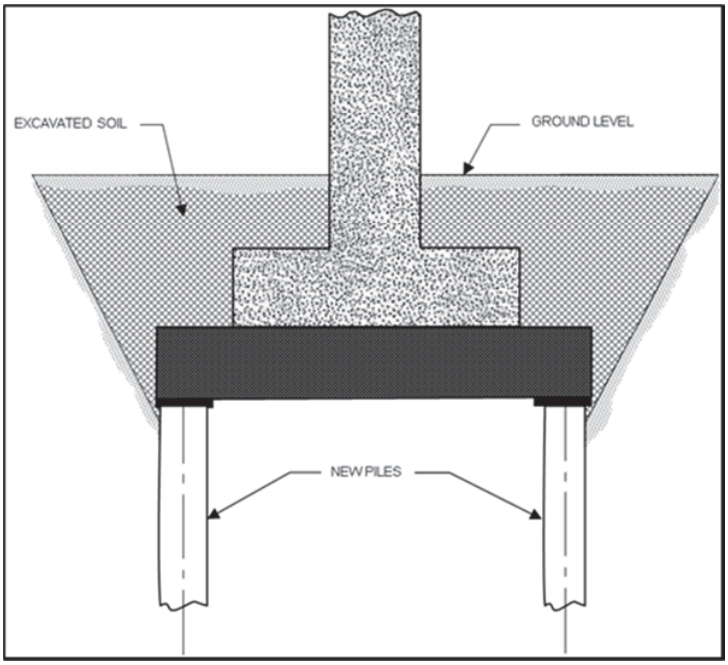

*Adapted from: Agrawal et al. 2005

Underpinning with Mini-Piles

Mini-piles, or micro-piles, can be used for a footing that has experienced degradation scour. Mini-piles are typically drilled through the existing foundation and rely on friction with the soil in order to generate the necessary strength. Mini-piles are commonly used for footing strengthening, but are not typically recommended for high traffic volume bridges.

Required Materials

1. Portland Cement Grout
2. Steel Reinforcing Bar
3. Bearing Plate
4. Steel Casing
5. Rotary Driller
6. Cofferdam

Construction Procedure

1. Close bridge to traffic
2. Construct a cofferdam, adhering to Section 206 of the WisDOT Standard Specifications
3. Advance outside casing to full pile depth required using a rotary driller
4. Tremie the casing full with specified cementitious grout
5. Place reinforcing thread bar with centralizers
6. Reattach drill head to the top of the casing and pressure grout the pile bond length by pumping cement grout under pressure while extracting casing
7. Reinsert the casing into the top of the bond length, distance determined by design process
8. Trim the top of the casing to the desired elevation
9. Weld bearing plate with stiffener plates onto the top of the casing
10. Remove cofferdam

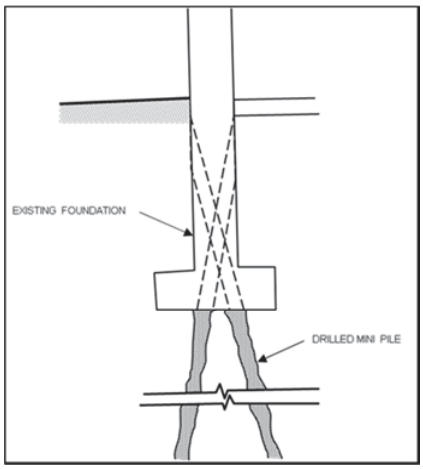

*Adapted from: Raina 1996 and Agrawal et al. 2005

Riprap

Riprap is the most common solution for scour repairs throughout Wisconsin. Several distinct factors need to be addressed when riprap is designed for piers. The most common failures for riprap result from improper sizing or improper placement.

Required Materials

1. Riprap
2. Excavator
3. Hydraulic Excavator, Clamshell or Orange Peel Grapple for Riprap Placement
4. Woven or Non-Woven Needle Punched Geotextile Filter
5. Cofferdam (optional)

Design Procedure

Riprap Sizing

1. Determine design velocity:
   $V_{des} = K_1 * K_2 * V_{avg}$
   K_1 = 1.5 for round-nose piers and 1.7 for square-edged piers
   K_2 = Velocity adjustment factor based on location in channel, 0.9 for piers near a bank and 1.7 for piers in the main current of flow near a bend
   V_{avg}=Section average approach velocity upstream of bridge (ft/s)

2. Calculate d_{50} value using the Isbash equation:
   $$d_{50} = \frac{0.692 * V_{des}^2}{(S_g - 1) * 2g}$$
   d_{50} = Particle size for which 50% is finer by weight (ft)
   S_g = Specific gravity of riprap (usually 2.65)
   g = Acceleration due to gravity (32.2 ft/s^2)

Riprap Layout

1. Optimal performance is achieved when the riprap is extended a distance of 2 times the pier width in all directions, 2a
2. (Optional) If the pier is skewed in relation to the flow of the river, a correction should be multiplied by the optimal riprap distance of 2a
   $$K_\alpha = \left(\frac{a\cos\alpha + L\sin\alpha}{a}\right)^{0.65}$$
   a = width of the pier
   L = length of the pier
   α = skew angle
3. The riprap layer should have a minimum thickness of 3 times the d_{50} size of the rock
4. If installation occurs underwater, increase riprap thickness by 50%
5. Riprap should be placed in a pre-excavated hole so that the top of the layer is level with the bed elevation

6. Mounding riprap around a pier is not acceptable

Filter Sizing (For more information see: Lagasse et al. 2007)
1. Obtain base soil information
2. Determine particle retention criterion
3. Determine permeability criterion
4. Select a geotextile that meets strength criteria
5. Analyze minimum long-term clogging potential

Filter Layout
1. The filter should not extend the full distance of the riprap, it should end 2/3 of the distance from the pier to the edge of the riprap
2. If the filter is being placed underwater, the thickness should be increased by 50%

Construction Procedure

1. (Optional) Construct cofferdam
2. If a cofferdam is utilized than the area to receive the riprap should be compacted shaped and graded
3. If a cofferdam is not utilized, divers need to ensure that the bed is free of any debris that would jeopardize the effectiveness of the system
4. Place the geotextile filter directly on the prepared area, ensuring that riprap is placed soon after so ultraviolet exposure is minimized
5. If a cofferdam is not utilized, materials must be used to weigh down the geotextile fabric since it will float and has high potential to float away
6. Place the riprap, ensuring that the geotextile fabric is not damaged and dropping less than 1-foot
7. Remove cofferdam

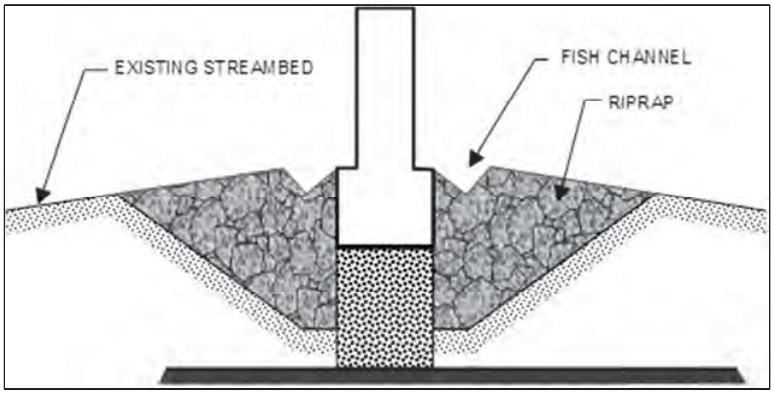

*Adapted from: Lagasse et al. 2007

Partially Grouted Riprap

Partially grouted riprap has not been utilized much throughout the United States as a solution for scour. The benefit of using partially grouted riprap to protect piers is that less riprap can be used while increasing overall stability without sacrificing flexibility or permeability.

Required Materials

1. Riprap
2. Excavator
3. Hydraulic Excavator, Clamshell or Orange Peel Grapple for Riprap Placement
4. Woven or Non-Woven Needle Punched Geotextile Filter
5. Cofferdam (optional)
6. Portland Cement Grout

Design Procedure

Riprap Sizing

1. Determine design velocity:
   $V_{des} = K_1 * K_2 * V_{avg}$

   K_1 = 1.5 for round-nose piers and 1.7 for square-edged piers
   K_2 = Velocity adjustment factor based on location in channel, 0.9 for piers near a bank and 1.7 for piers in the main current of flow near a bend
   V_{avg}=Section average approach velocity upstream of bridge (ft/s)

2. Calculate d_{50} value using the Isbash equation:

   $$d_{50} = \frac{0.692 * V_{des}^2}{(S_g - 1) * 2g}$$

   d_{50} = Particle size for which 50% is finer by weight (ft)
   S_g = Specific gravity of riprap (usually 2.65)
   g = Acceleration due to gravity (32.2 ft/s^2)
3. Select either class II, III, or IV riprap, any other size will not be appropriate for grout penetration

Riprap Layout

1. Optimal performance is achieved when the riprap is extended a distance of 1.5 times the pier width in all directions, 1.5a
2. (Optional) If the pier is skewed in relation to the flow of the river, a correction should be multiplied by the optimal riprap distance of 2a
   $$K_\alpha = \left(\frac{a\cos\alpha + L\sin\alpha}{a}\right)^{0.65}$$
   a = width of the pier

L = length of the pier
α = skew angle

3. The riprap layer should have a minimum thickness of 2 times the d_{50} size of the rock
4. If installation occurs underwater, increase riprap thickness by 50%
5. Riprap should be placed in a pre-excavated hole so that the top of the layer is level with the bed elevation
6. Mounding riprap around a pier is not acceptable

Filter Sizing (For more information see: Lagasse et al. 2007)

1. Obtain base soil information
2. Determine particle retention criterion
3. Determine permeability criterion
4. Select a geotextile that meets strength criteria
5. Analyze minimum long-term clogging potential

Filter Layout

1. The filter should not extend the full distance of the riprap, it should extend a distance of 4/3 a in all directions
2. If the filter is being placed underwater, the thickness should be increased by 50%

Construction Procedure

1. (Optional) Construct cofferdam
2. If a cofferdam is utilized than the area to receive the riprap should be compacted shaped and graded
3. If a cofferdam is not utilized, divers need to ensure that the bed is free of any debris that would jeopardize the effectiveness of the system
4. Place the geotextile filter directly on the prepared area, ensuring that riprap is placed soon after so ultraviolet exposure is minimized
5. If a cofferdam is not utilized, materials must be used to weigh down the geotextile fabric since it will float and has high potential to float away
6. Place the riprap, ensuring that the geotextile fabric is not damaged and dropping less than 1-foot
7. Apply grout using the following application quantities:

Class of Riprap	*Application Quantity, ft^3/yd^2*
Class II	2.0-2.2
Class III	2.7-3.2
Class IV	3.4-4.1

Loose riprap should have 15-25% more grout
Tight riprap should have 10% less grout

8. If grout is placed underwater, test boxes and special grout should be used
9. Remove cofferdam

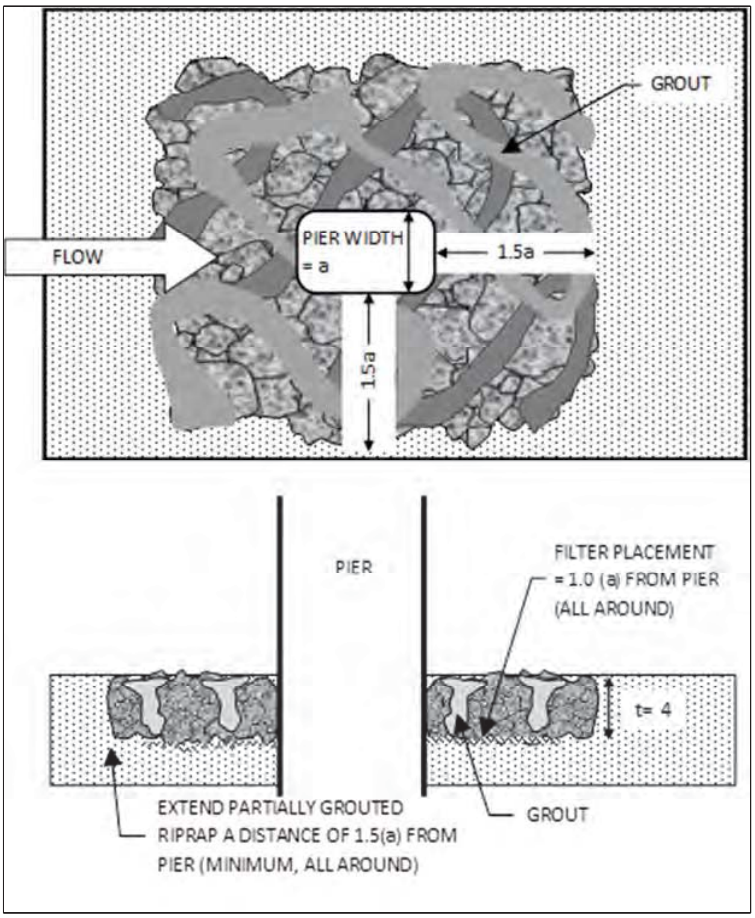

*Adapted from: Lagasse et al. 2007

Sheet Pile Skirt with Riprap

A protective sheet pile skirt with riprap protection is a technique for protecting bridge piers along banks that are not in the water. Sheet piles are driven as a protective barrier, and riprap is placed to prevent scour from occurring on the sheet piling.

Required Materials

1. Riprap
2. Excavator
3. Hydraulic Excavator, Clamshell or Orange Peel Grapple for Riprap Placement
4. Woven or Non-Woven Needle Punched Geotextile Filter
5. Sheet Piling
6. Pile Driver

Construction Procedure

1. Drive interlocking sheet piling around existing pier foundation
2. Excavate soil behind sheet piling
3. Place geotextile filter inside the protective ring, ensuring it is not exposed to ultraviolet radiation for extended periods of time
4. Place riprap inside and outside the ring of sheet piling

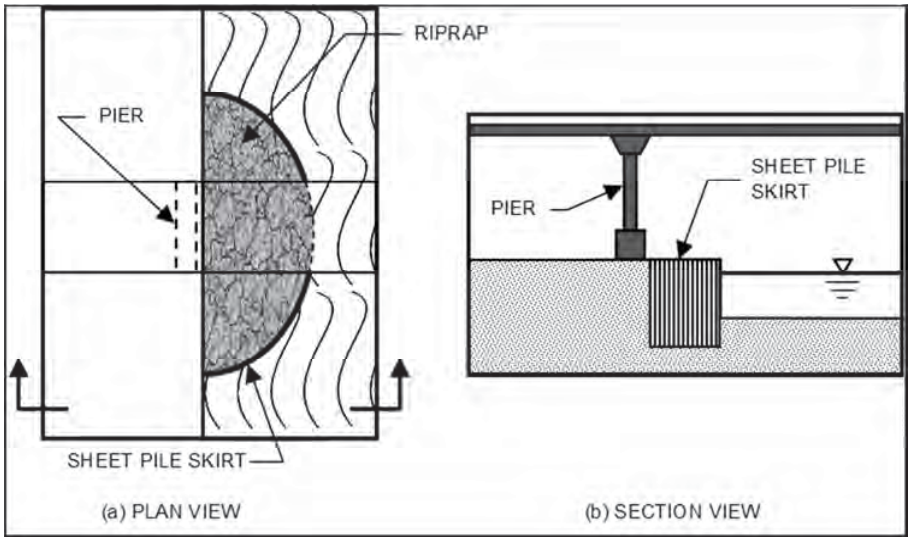

*Adapted from: Agrawal et al. 2005

Concrete Armor Units

Concrete armor units are precast concrete units that can be used in place of riprap. Many variations exist on size and shape, but they are all designed to interlock with one another for stability. Concrete armor units can be constructed on very large scales, making them more cost effective in highly turbulent conditions. The specific A-Jacks product is described below; other products will have similar procedures.

Required Materials

1. A-Jacks Concrete Armor Units
2. Geotextile Fabric
3. Manufacturer Specified Stone Bedding
4. Galvanized or Stainless Steel Banding
5. Cofferdam
6. Excavator

Design Procedure

1. Determine hydraulic stability by equating the overturning moment caused by drag force to the resisting moment due to submerged weight

$$F_d * H_d = W_s * L_w$$

F_d = Drag Force = $0.5 * C_D * \rho * A * V^2$
C_d = Drag Coefficient, 1.05 (1.2 can be used conservatively)
ρ = density of water
A = Frontal area of A-jacks module, ft^2
V = Limiting upstream velocity, ft/s
H_d = Moment arm of drag force (use full height of module)
W_s = Submerged weight of A-jacks module
L_w = Moment arm for submerged weight

2. Depending on the type of A-jacks configuration, the module dimensions can change. The following information is a sample based on a 5x4x5 module:

A-Jack Size (in)	Module Dimesions (HxWxL) (in)	Submerged Module Weight (lbs)	Limiting Upstream Velocity, ft/s
24	16 x 52 x 40	540	10.7

3. If limiting upstream velocity is too low for given conditions, either increase A-jacks size or module configuration until the proper velocity is achieved. Multiple modules should be used for each repair

Construction Procedure

1. Construct cofferdam
2. Dewater
3. (Optional) Excavate the area for the A-jacks placement, ideally ensuring that at least half of the unit will be below the mud line
4. Grade the slop to provide a smooth surface for installation
5. Place geotextile filter, ensuring full contact with prepared surface
6. Place bedding stone material
7. Place individual A-jacks units
8. Band A-jacks together into modular units
9. Use bedding stone material to bridge any interior voids
10. Remove cofferdam

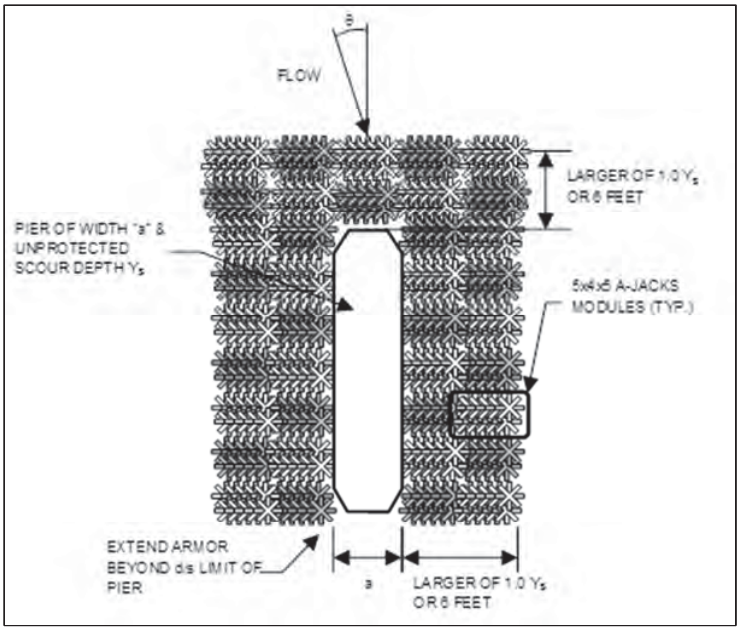

*Adapted from: Lagasse et al. 2007 and Contech 2011

Gabion Mattresses

Gabion mattresses are wire containers that are filled with either angular rock or rounded cobbles. The wire mesh containers allow smaller size stones to be used while still deforming to any changes in bed elevation. The different gabion mattresses are usually connected by lacing wire, which should be treated to prevent corrosion. The gabion mattress system is only appropriate for sand or fine-bed streams, not for gravel bedded streams. Gabion mattresses can be placed in the wet or dry, but the construction procedure must be appropriate for the chosen method.

Required Materials

1. Wire Gabion Baskets
2. Riprap
3. Geotextile Fabric
4. Cementitious Grout
5. Galvanized Wire Ties
6. (Optional) Cofferdam
7. Backhoe
8. (Optional) Crane

Design Procedure

1. Determine the desired factor of safety for the system, 1.5 is the minimum for bridge piers
2. Determine the permissible shear stress for a trial size gabion mattress:

$$\tau_p = C_s * (\gamma_s - \gamma_w) * d_{50}$$

τ_p = Permissible shear stress (lb/ft^3)
C_s = Stability coefficient equal to 0.10
γ_s = Unit weight of stone (lb/ft^3)
γ_w = Unit weight of water, 62.4 lb/ft^3
d_{50} = Median diameter of rock fill in mattress

3. Determine design velocity:

$$V_{des} = K_1 * K_2 * V_{avg}$$

K_1 = 1.5 for round-nose piers and 1.7 for square-edged piers
K_2 = Velocity adjustment factor based on location in channel, 0.9 for piers near a bank and 1.7 for piers in the main current of flow near a bend
V_{avg} = Section average approach velocity upstream of bridge (ft/s)

4. Calculate local shear stress at the pier using Manning's equation:

$$\tau_{des} = \frac{\gamma_w}{y^{1/3}}\left(\frac{n * V_{des}}{K_u}\right)^2$$

   τ_{des} = Design shear stress (lb/ft^2)
   γ_w = Unit weight of water, 62.4 lb/ft3
   y = Depth of flow at pier (ft)
   n = Manning's n for gabion mattress (0.025-0.035)
   K_u = 1.486
5. Verify that desired factor of safety is being met with selected gabion mattress

$$F.S. = \frac{\tau_p}{\tau_{des}}$$

6. (Optional) If the pier is skewed in relation to the flow of the river, a correction should be multiplied by the optimal gabion mattress distance of 2a

$$K_\alpha = \left(\frac{a\cos\alpha + L\sin\alpha}{a}\right)^{0.65}$$

   a = width of the pier
   L = length of the pier
   α = skew angle

Construction Procedure

1. (Optional) Construct cofferdam
2. Prepare subgrade soil, ensuring that enough excavation has occurred to toe down the mattresses
3. Place geotextile directly on the prepared subgrade, 2/3 of the distance from the pier to the edge of the gabion mattresses
4. Follow manufacturer's instructions when installing gabion mattresses, care should be taken to not damage the mesh, geotextile or subgrade during installation. The mattress should extend twice the width of the pier in all directions
5. Fill gabion mattress with selected riprap size, ensuring all compartments are filled simultaneously (this step may be completed before placement of the mattress if a crane is to be used)
6. Close the gabion mattress lids using galvanized tie wires, 2-feet on center
7. Fill the gap between the gabion mattress and the pier with cementitious grout (with an anti-washout additive if done underwater)
8. Backfill the soil above the toed down portions of the gabion mattress system
9. Remove cofferdam

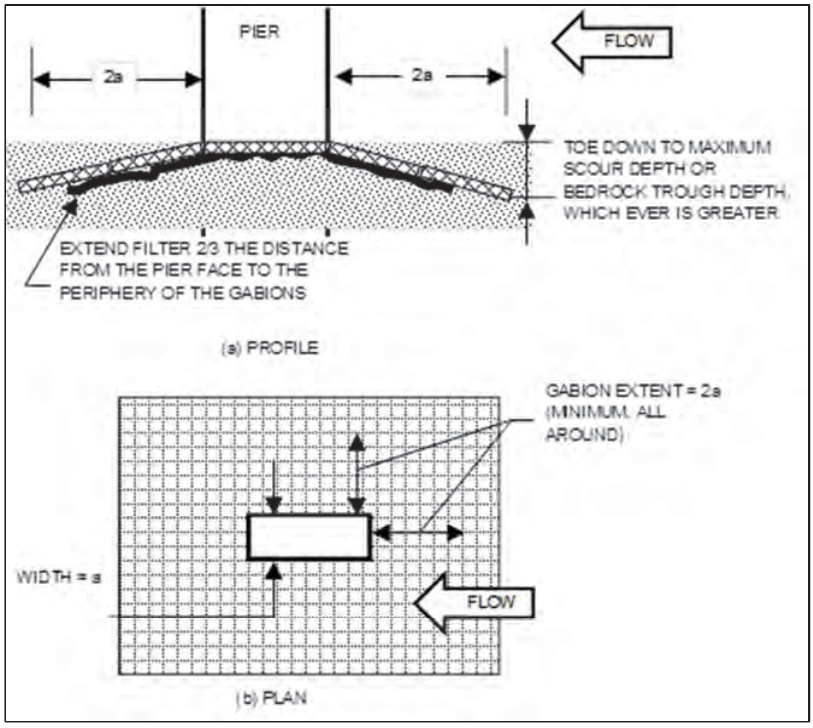

*Adapted from: Lagasse et al. 2007 and Contech 2011

Grout Filled Mattresses

Grout filled mattresses are typically composed of a double layer of synthetic fabric, which creates compartments that can be filled with concrete grout. Grout filled mattresses that incorporate weep holes are ideal for pier scour protection since they maintain flexibility and permeability. Installation of this system is rather quick, and can be done without the need of dewatering.

Required Materials

1. (Optional) Cofferdam
2. Fabric Mattress Forms
3. Fine Aggregate Concrete Grout
4. Concrete Pump
5. Geotextile Filter
6. Backhoe

Design Procedure

1. Determine the desired factor of safety for the system, 1.5 is the minimum for bridge piers
2. Determine design velocity:

   $$V_{des} = K_1 * K_2 * V_{avg}$$

   K_1 = 1.5 for round-nose piers and 1.7 for square-edged piers
   K_2 = Velocity adjustment factor based on location in channel, 0.9 for piers near a bank and 1.7 for piers in the main current of flow near a bend
   V_{avg} = Section average approach velocity upstream of bridge (ft/s)

3. Calculate local shear stress at the pier using Manning's equation:

   $$\tau_{des} = \frac{\gamma_w}{y^{1/3}}\left(\frac{n * V_{des}}{K_u}\right)^2$$

   τ_{des} = Design shear stress (lb/ft^2)
   γ_w = Unit weight of water, 62.4 lb/ft3
   y = Depth of flow at pier (ft)
   n = Manning's n for grout mattress (0.02-0.03), supplied by manufacturer
   K_u = 1.486

4. Check the sliding safety factor for a trial grout mattress size

   $$SF = \mu\left[\frac{t(\gamma_c - \gamma_w)\cos\theta\cos\alpha - \tau_{des}}{\sqrt{[t(\gamma_c - \gamma_w)\sin\theta]^2 + \tau_{des}^2}}\right]$$

   γ_c = Unit weight of grout (lb/ft^3)
   t = Thickness of grout mattress (ft)

μ = Coefficient of static friction
θ = Angle of side slope (degrees)
α = Angle of bed slope (degrees)

5. (Optional) If the pier is skewed in relation to the flow of the river, a correction should be multiplied by the optimal gabion mattress distance of 2a

$$K_\alpha = \left(\frac{a\cos\alpha + L\sin\alpha}{a}\right)^{0.65}$$

a = width of the pier
L = length of the pier
α = skew angle

Construction Procedure

1. (Optional) Construct cofferdam
2. Prepare subgrade soil, ensuring that enough excavation has occurred to toe down the mattresses no greater than 1:2 until maximum scour depth is reached
3. Place geotextile directly on the prepared subgrade, the entire distance from the pier to the edge of the grout mattress
4. Place grout mattress, providing an excess of 10% size to account for contraction
5. Connect double layers of adjacent mattresses by sewing or zipping
6. Fill the mattress with the concrete grout, moving from lowest elevation to highest
7. After the mattress is filled with grout, under no circumstances should it be moved
8. Fill the gap between the grout mattress and the pier with concrete grout (with an anti-washout additive if done underwater)
9. Backfill the soil above the toed down portions of the grout mattress system, waiting at least 8 hours after the grout has set and overfilling by 1 to 2-inches
10. Remove cofferdam

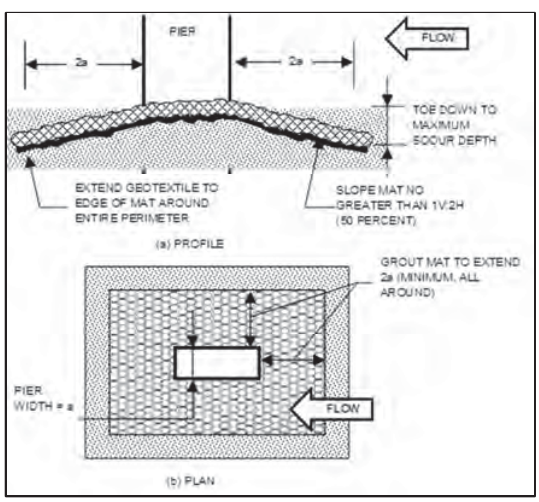

*Adapted from: Lagasse et al. 2007

Articulating Concrete Blocks

Articulating concrete blocks are preformed concrete units that are typically held together by cables. They provide a flexible armor while still maintaining permeability. The individual blocks are allowed to deform with any subgrade changes, while the system as a whole will remain intact. The most important factor for success of this repair is that the articulating concrete blocks remain in intimate contact with the subgrade. Articulating concrete blocks can be placed in the wet or dry, but the construction procedure must be appropriate for the chosen method

Required Materials

1. (Optional) Cofferdam
2. Articulating Concrete Blocks
3. Geotextile Fabric
4. Manufacturer Approved Polyester, Stainless Steel or Galvanized Steel Cable
5. Backhoe
6. Concrete Grout
7. Crushed Rock Aggregate

Design Procedure

1. Determine the desired factor of safety for the system, 1.5 is the minimum for bridge piers
2. Determine design velocity:
   $$V_{des} = K_1 * K_2 * V_{avg}$$

   K_1 = 1.5 for round-nose piers and 1.7 for square-edged piers
   K_2 = Velocity adjustment factor based on location in channel, 0.9 for piers near a bank and 1.7 for piers in the main current of flow near a bend
   V_{avg} = Section average approach velocity upstream of bridge (ft/s)

3. Calculate local shear stress at the pier using Manning's equation:
   $$\tau_{des} = \frac{\gamma_w}{y^{1/3}}\left(\frac{n * V_{des}}{K_u}\right)^2$$

   τ_{des} = Design shear stress (lb/ft^2)
   γ_w = Unit weight of water, 62.4 lb/ft3
   y = Depth of flow at pier (ft)
   n = Manning's n for block system, supplied by manufacturer
   K_u = 1.486
4. Perform the following necessary calculations:

Equation	Term Definitions
$F_L' = F_D' = 0.5\rho b(\Delta z)(V_{des})^2$ (E1.2)	a_θ = Projection of W_S into plane of subgrade b = Block width normal to flow (ft) F'_D, F'_L = added drag and lift forces due to protruding block (lb) ℓ_x = Block moment arms (ft) γ_c = Concrete density, lb/ft^3 γ_w = Density of water, lb/ft^3 V_{des} = Design velocity (ft/s) W = Weight of block in air (lb) W_S = Submerged block weight (lb) Δz = Height of block protrusion above ACB matrix (ft) β = Angle between block motion and the vertical δ = Angle between drag force and block motion η_0 = Stability number for a block on a horizontal surface η_1 = Stability number for a block on a sloped surface θ = Angle between side slope projection of W_S and the vertical θ_0 = Channel bed slope (degrees) θ_1 = Side slope of block installation (degrees) ρ = Mass density of water (slugs/ft^3) τ_c = Critical shear stress for block on a horizontal surface (lb/ft^2) τ_{des} = Design shear stress (lb/ft^2) SF = Calculated factor of safety
$\eta_0 = \frac{\tau_{des}}{\tau_C}$ (E1.3)	
$\theta = \arctan\left(\frac{\tan\theta_0}{\tan\theta_1}\right)$ (E1.4)	
$a_\theta = \sqrt{(\cos\theta_1)^2 - (\sin\theta_0)^2}$ (E1.5)	
$\beta = \arctan\left(\frac{\cos(\theta_0+\theta)}{\left(\frac{\ell_4}{\ell_3}+1\right)\left(\frac{\sqrt{1-a_\theta^2}}{\eta_0(\ell_2/\ell_1)}\right)+\sin(\theta_0+\theta)}\right)$ (E1.6)	
$\delta = 90^\circ - \beta - \theta$ (E1.7)	
$\eta_1 = \eta_0\left(\frac{(\ell_4/\ell_3)+\sin(\theta_0+\theta+\beta)}{(\ell_4/\ell_3)+1}\right)$ (E1.8)	
$W_s = W\left(\frac{\gamma_c-\gamma_w}{\gamma_c}\right)$ (E1.9)	
$SF = \frac{(\ell_2/\ell_1)a_\theta}{\cos\beta\sqrt{(1-a_\theta)^2}+\eta_1(\ell_2/\ell_1)+\frac{(\ell_3F'_D\cos\delta+\ell_4F'_L)}{\ell_1W_s}}$ (E1.10)	

Note: The equations cannot be solved for $\theta_1 = 0$ (i.e., division by 0 in Equation E1.4); therefore, a very small but non-zero side slope must be entered for the case of $\theta_1 = 0$.

5. Calculate factor of safety for a single block within the system

$$SF = \frac{\ell_2 * W_s * a_\theta}{\ell_1 * W_s * \sqrt{1-a_\theta{}^2} * \cos\delta + \ell_4 * F_L + \ell_3 * F'_D * \cos\delta + \ell_4 * F'_L}$$

6. (Optional) If the pier is skewed in relation to the flow of the river, a correction should be multiplied by the optimal gabion mattress distance of 2a

$$K_\alpha = \left(\frac{a\cos\alpha + L\sin\alpha}{a}\right)^{0.65}$$

a = width of the pier
L = length of the pier
α = skew angle

Construction Procedure

1. (Optional) Construct cofferdam
2. Prepare subgrade soil, ensuring that enough excavation has occurred to toe down the mattresses no greater than 1:2 until maximum scour depth is reached
3. Place geotextile directly on the prepared subgrade, half the distance from the pier to the edge of the ACB system
4. The ACB blocks may be installed individually or as a mat (by using a backhoe)
5. The ACB placement should begin upstream of the pier and more downstream
6. When relevant the ACB placement should begin at the toe of a slope and proceed upslope
7. Fill any gaps 2-inches or greater between blocks with concrete grout
8. Fill the gap between the ACB mat and the pier with concrete grout (with an anti-washout additive if done underwater)
9. Backfill the soil above the toed down portions of the ACB system with crushed rock aggregate (is topsoil is used it should be overfilled 1 to 2-inches)
10. Remove cofferdam

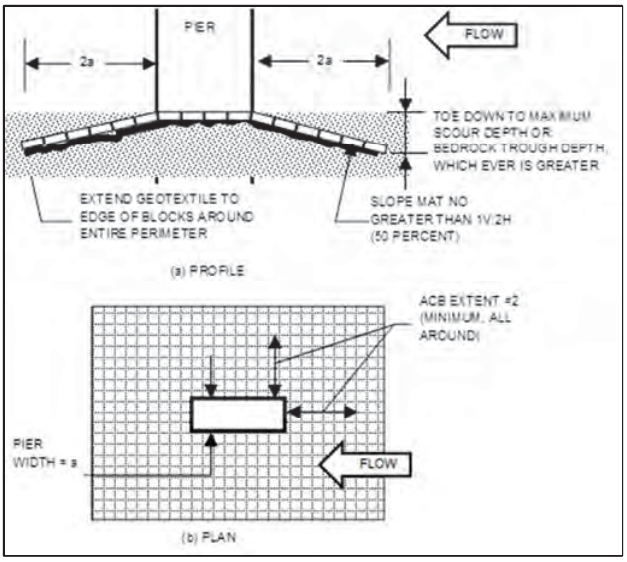

*Adapted from: Lagasse et al. 2007 and Contech 2011

Lower Foundation

Similar to the repair conducted for pier scour, foundations can be lowered for abutments. Lowering the foundation beneath the scour line is an invasive and permanent repair method. This repair is normally chosen if scour has already removed material from beneath the abutment, and armoring will not do enough.

Required Materials

1. Concrete
2. Backhoe
3. Electric Drill
4. Bolts
5. Expansion Shields
6. Formwork
7. Riprap

Construction Procedure

1. Close bridge to traffic
2. Construct a cofferdam, adhering to Section 206 of the WisDOT Standard Specifications
3. Shore up the abutment to prevent any possible settlement
4. Remove any loose material from the scoured area
5. Drill holes in the face of the abutment, 2-feet on center
6. Place expansion shields into drilled holes
7. Place bolts into expansion shields, extending 3 to 6-inches from the face of the abutment
8. Place formwork
9. Cast Concrete, filling any erosion cavity and the space between the shield and the abutment
10. Place riprap on a 2:1 slope to prevent future scouring
11. Remove cofferdam

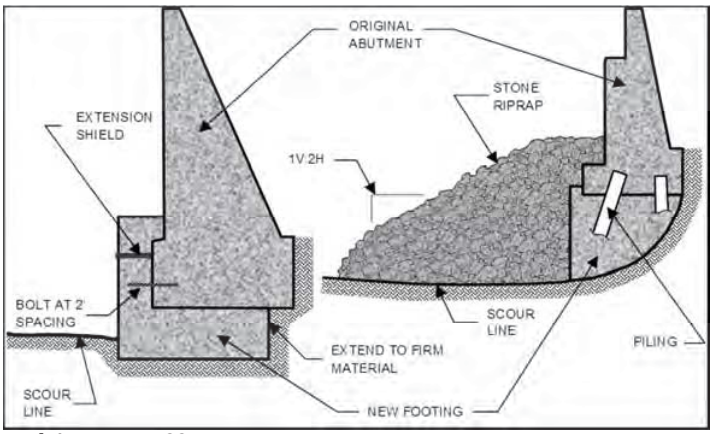

*Adapted from: Army and Air Force 1994

Concrete Apron Wall

Concrete apron walls can be utilized to protect bridge abutments from local or contraction scour. The concrete walls that are constructed on the faces of the footing can rest on hard strata, providing an unequaled amount of scour protection. A cofferdam is necessary for construction and the bridge should be closed to traffic during the operations. Concrete apron walls can be used in conjunction with concrete grout and riprap, if necessary.

Required Materials

1. Formwork
2. Steel Reinforcement
3. Concrete
4. Backhoe
5. Cofferdam
6. Riprap

Construction Procedure

1. Close bridge to traffic
2. Construct a cofferdam, adhering to Section 206 of the WisDOT Standard Specifications
3. Excavate all necessary soil, accounting for apron walls and riprap placement and adhering to Section 206 of the WisDOT Standard Specifications
4. Place steel reinforcement, adhering to Section 505 of the WisDOT Standard Specifications
5. Place formwork, adhering to Section 502.3.3 of the WisDOT Standard Specifications
6. Cast concrete filling any voids below the abutment and the formwork, adhering to Section 503.3.5 of the WisDOT Standard Specifications
7. After the concrete has cured, remove the formwork
8. Place riprap, extending on a 1:1 slope, 18-inches from the base and adhering to Section 606 of the WisDOT Standard Specifications
9. Remove cofferdam

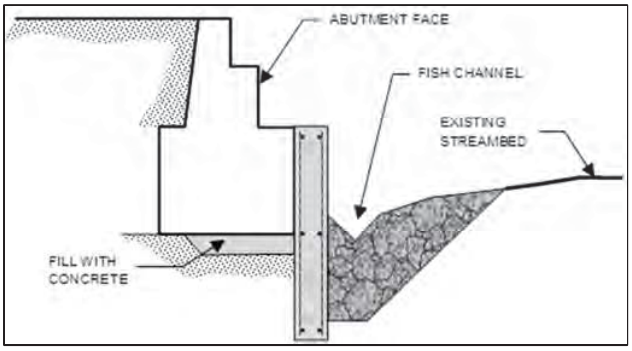

*Adapted from: Agrawal et al. 2005

Riprap

Riprap is the most popular choice for scour repairs throughout the United States. Proper design of riprap is the most important consideration in order to avoid shear and edge failure. The geotechnical stability of the abutment should also be considered, since the riprap apron will affect its stability. The procedure described below is for wing-wall abutments, not spill-through abutments. For information on spill through abutments see Barkdoll et al. 2007.

Required Materials

1. Riprap
2. (Optional) Cofferdam
3. Geotextile Filter
4. Excavator

Design Procedure

1. Estimate maximum scour depth, d_s
2. Calculate appropriate riprap size using the Pagan-Ortiz equation (factor of safety not included in equation)

$$d_{50} = \left(\frac{1.064 * U^2 * y^{0.23}}{(S_s - 1) * g}\right)^{0.81}$$

d_{50} = median size of riprap stones
U = average velocity in the contracted bridge section
y = depth of flow in the contracted bridge section
S_s = specific gravity of riprap
g = acceleration due to gravity

3. Calculated riprap thickness, larger of $1.5*d_{50}$ or d_{100}
4. Calculate required apron width, W

$$W = C_1(d_{s2} - d_b + d_{50})$$

C_1 = 1.68 for upstream corner and 1.19 for downstream corner
d_{s2} = scour depth at outer edge of riprap
d_b = placement depth of riprap

Construction Procedure

1. (Optional) Construct a cofferdam, adhering to Section 206 of the WisDOT Standard Specifications
2. If a cofferdam is utilized than the area to receive the riprap should be compacted shaped and graded

3. If a cofferdam is not utilized, divers need to ensure that the bed is free of any debris that would jeopardize the effectiveness of the system
4. Place the geotextile filter directly on the prepared area, ensuring that riprap is placed soon after so ultraviolet exposure is minimized
5. If a cofferdam is not utilized, materials must be used to weigh down the geotextile fabric since it will float and has high potential to float away
6. Place the riprap, ensuring that the geotextile fabric is not damaged. Drop riprap less than 1-foot and adhere to Section 606 of the WisDOT Standard Specifications
7. Individual placement of riprap is recommended, as opposed to end-dumping, to ensure accurate placement of the riprap
8. Side slope should range from 1:2 to 1:1.5 or flatter
9. Remove cofferdam

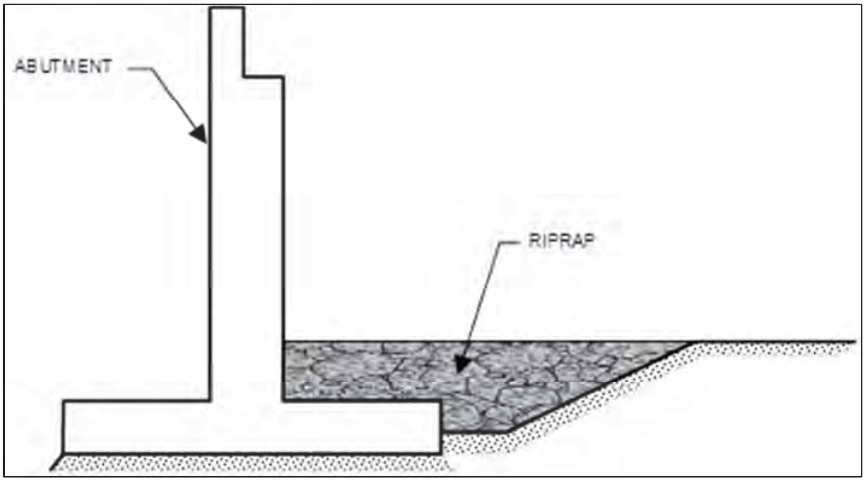

*Adapted from: Barkdoll et al. 2007

Partially Grouted Riprap

Partially grouted riprap has not been utilized much throughout the United States as a solution for scour. The benefit of using partially grouted riprap to protect abutments is that less riprap can be used while increasing overall stability without sacrificing flexibility or permeability. A realized benefit of partially grouted riprap over normal riprap is that it reduces vandalism concerns.

Required Materials

1. Riprap
2. Geotextile Filter
3. Grout
4. Grout Pump
5. Backhoe
6. Cofferdam

Construction Procedure

1. (Optional) Construct a cofferdam, adhering to Section 206 of the WisDOT Standard Specifications
2. If a cofferdam is utilized than the area to receive the riprap should be compacted shaped and graded
3. If a cofferdam is not utilized, divers need to ensure that the bed is free of any debris that would jeopardize the effectiveness of the system
4. Place the geotextile filter directly on the prepared area, ensuring that riprap is placed soon after so ultraviolet exposure is minimized
5. If a cofferdam is not utilized, materials must be used to weigh down the geotextile fabric since it will float and has high potential to float away
6. Place the riprap, ensuring that the geotextile fabric is not damaged. Drop riprap less than 1-foot and adhere to Section 606 of the WisDOT Standard Specifications
7. Test the grout in a small section of riprap to adjust the pumping rate and ensure even application
8. Apply the grout at a rate of 2.0 to 2.2-ft^3 per square yard
9. Remove cofferdam

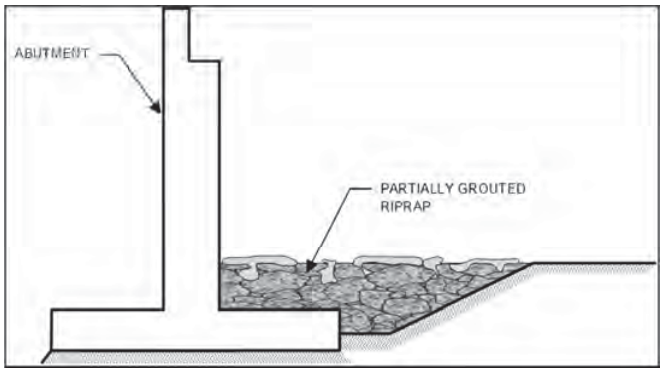

*Adapted from: FHWA 2009

Sheet Pile Skirt

A relatively low maintenance means of armoring abutments against scour is to utilize sheet piles. The sheet piles are typically used on spill through abutments and are driven in a semicircle in the floodplain. Sheet pile skirts are used for local scour caused by flow contraction. When this procedure is completed for existing bridges, typically an infill of large riprap is used for the portions under the superstructure that the pile driving equipment cannot reach.

Required Materials

1. Sheet Piling
2. Pile Driver
3. Riprap
4. Excavator

Construction Procedure

1. Drive sheet piling a short distance away from the toe of the face slope of the abutment
2. The sheet piling should extend around the front and sides of the abutment, as much as possible with pile driving equipment
3. The sheet piling should be placed to a depth with exceeds the maximum estimated scour depth
4. (Optional) If the pile driving equipment could not reach the center of the abutment, create and infill of large riprap, adhering to the proper abutment armoring techniques

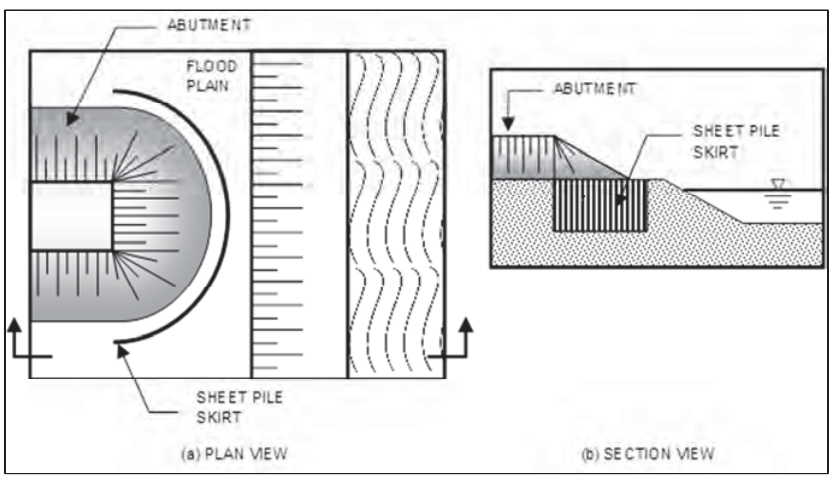

*Adapted from: Barkdoll et al. 2007

Gabions

Gabions as a scour countermeasure have several advantages over traditional riprap: smaller rock sizes can be used, less riprap is required, they can be used at footing locations, and are stable on steep slopes. Depending on construction conditions gabion sacks, gabion boxes, gabion mattresses or wire enclosed riprap can be employed to protect an abutment.

Required Materials

1. Gabion Baskets
2. Riprap
3. Geotextile Filter
4. Coarse Aggregate
5. Backhoe
6. Cementitious Grout

Design Procedure

1. Design of gabions is typically based off manufacturer's tables and specifications
2. An example of typical sizing of gabions based on velocity can be seen below:

Gabion Thickness (ft)	*Stone Size (in)*	*Critical Velocity (ft/s)*	*Limiting Velocity (ft/s)*
0.49-0.56	3.3	≤11.5	13.8
	4.3	13.8	14.8
0.75-0.82	3.3	11.8	18.0
	4.7	14.8	20.0
1.0	3.9	13.8	18.0
	4.9	16.4	21.0
1.64	5.9	19.0	24.9
	7.5	21.0	26.2

(Agrawal et al. 2005)

3. The following requirements should also be met:

$$Min_{riprap} > 1.25 * (maximum\ spacing\ between\ wires)$$
$$Max_{riprap} < \frac{2}{3} * (height\ of\ gabion)$$
$$Min_{gabionheight} > 6\ inches$$

4. The smallest riprap should not be less than 3-inches and the largest should not be more than 12-inches
5. The gabions should extend twice the width of the abutment into the streambed, and at least twice the flow depth from the toe of the abutment

Construction Procedure

1. (Optional) Construct cofferdam
2. Prepare subgrade soil, excavating enough so the gabion and backfill will not exceed existing streambed elevations
3. Place geotextile directly on the prepared subgrade, the entire distance that the gabion mattress will extend
4. Place coarse aggregate on top of geotextile fabric
5. Follow manufacturer's instructions when installing gabions, care should be taken to not damage the mesh, geotextile or subgrade during installation
6. Fill gabions with selected riprap size, ensuring all compartments are filled simultaneously (this step may be completed before placement of the gabion if a crane is to be used)
7. Close the gabion lids using galvanized tie wires, 2-feet on center
8. Fill the gap between the gabion mattress and the abutment with cementitious grout (with an anti-washout additive if done underwater)
9. Backfill the soil above any portions of the gabion that extend into the streambed

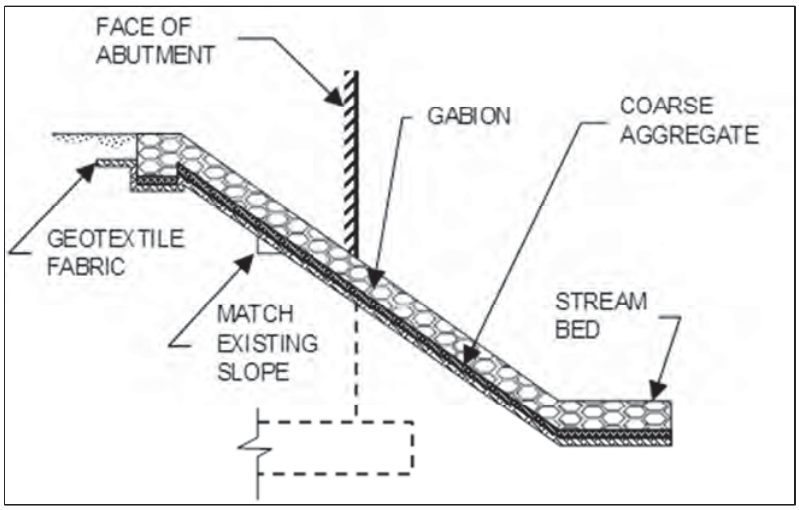

*Adapted from: Agrawal et al. 2005

Grout Filled Mattresses

Grout filled mattresses are typically composed of a double layer of synthetic fabric, which creates compartments that can be filled with concrete grout. Grout filled mattresses that incorporate weep holes are ideal for pier scour protection since they maintain flexibility and permeability. Installation of this system is rather quick, and can be done without the need of dewatering.

Required Materials

1. (Optional) Cofferdam
2. Fabric Mattress Forms
3. Fine Aggregate Concrete Grout
4. Concrete Pump
5. Geotextile Filter
6. Backhoe

Design Procedure

1. Design sizes are typically determined by manufacturer's guidelines and testing
2. Calculated scour depth should be between 3 and 6-feet
3. The design flood velocity should be between 5 and 10-ft/s
4. Layout should be calculated following the same procedure as riprap

Construction Procedure

1. (Optional) Construct cofferdam
2. Prepare subgrade soil
3. Place geotextile directly on the prepared subgrade, ending 6-inches before the grout filled mattress will terminate
4. Place grout mattress, providing an excess of 10% size to account for contraction
5. Connect double layers of adjacent mattresses by sewing or zipping
6. Fill the mattress with the concrete grout, moving from lowest elevation to highest
7. After the mattress is filled with grout, under no circumstances should it be moved
8. Fill the gap between the grout mattress and the abutment with concrete grout (with an anti-washout additive if done underwater)
9. Remove cofferdam

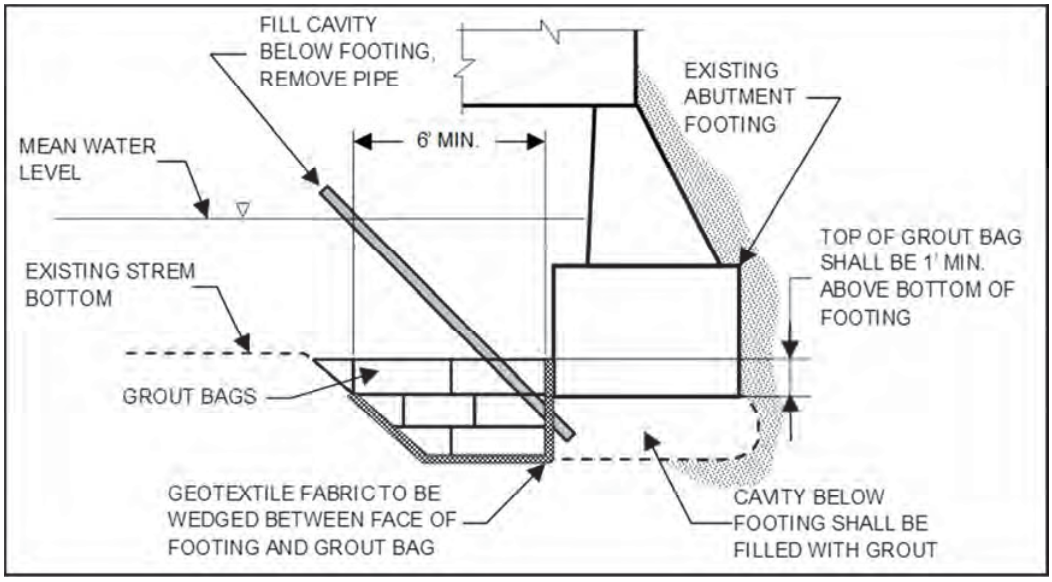

*Adapted from: Agrawal et al. 2005

Articulating Concrete Blocks

Articulating concrete blocks are preformed concrete units that are typically held together by cables. They provide a flexible armor while still maintaining permeability. The individual blocks are allowed to deform with any subgrade changes, while the system as a whole will remain intact. The most important factor for success of this repair is that the articulating concrete blocks remain in intimate contact with the subgrade. Articulating concrete blocks can be placed in the wet or dry, but the construction procedure must be appropriate for the chosen method

Required Materials

1. (Optional) Cofferdam
2. Articulating Concrete Blocks
3. Geotextile Fabric
4. Manufacturer Approved Polyester, Stainless Steel or Galvanized Steel Cable
5. Backhoe
6. Concrete Grout

Design Procedure

1. Determine block size

$$\zeta = 0.2 * \frac{\rho_{cb}}{\rho_{cb} - \rho} * \rho * U^2$$

ζ = weight per unit area
ρ_{cb} = block density
ρ = fluid density
U = approach flow velocity

2. Determine minimum block height

$$H = \frac{\zeta}{\rho_{cb} * g * (1 - \rho)}$$

ρ = volume fraction pore space within the system

3. Calculate apron width

$$W = 1.55 * (d_s - d_b)$$

d_s = scour depth at outer edge of mat
W = apron width
d_b = placement depth of mat

4. Verify system is stable against overturning

$$\frac{H_b}{Y} = \frac{158}{(S_{cb} - 1)} Fr^2 \frac{n^2}{y^{0.33}}$$

H_b = height of blocks
Y = flow depth in the bridge section
S_{cb} = specific gravity of blocks
Fr = Froude number in contracted bridge section
n = Manning coefficient

Construction Procedure

1. (Optional) Construct cofferdam
2. Prepare subgrade soil
3. Place geotextile directly on the prepared subgrade, half the distance from the abutment to the end of the ACB system
4. The ACB may be installed individually or as a mat (by using a backhoe)
5. The ACB placement should begin upstream of the abutment and more downstream
6. When relevant the ACB placement should begin at the toe of a slope and proceed upslope
7. Fill any gaps 2-inches or greater between blocks with concrete grout
8. Fill the gap between the ACB mat and the abutment with concrete grout (with an anti-washout additive if done underwater)
9. Backfill soil
10. Remove cofferdam

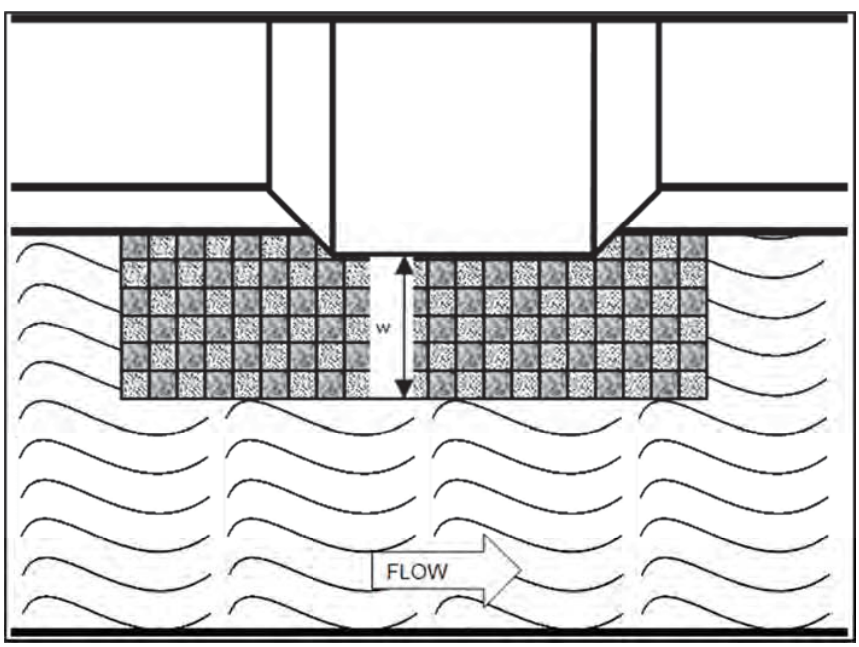

*Adapted from: Agrawal et al. 2005

Protector Extension

When scour has caused erosion under or around a concrete slope protector, it can be repaired by extending the protector. The original slope is maintained, but the protector is extended farther into the streambed until it is below the scour depth or hits solid foundation material.

Required Materials

1. Cofferdam
2. Sand and Gravel
3. Concrete
4. Backhoe
5. (Optional) Concrete Grout
6. (Optional) Drill

Construction Procedure

1. Construct cofferdam
2. Remove loose material from the scour hole beneath the slope embankment
3. Backfill the area with sand or gravel
4. Use the backfill to form a ground mold for the slope protector extension
5. Pour concrete into ground mold
6. (Optional) If the existing slope protector has been undermined drill a hole in the top of the protector
7. (Optional) Backfill undermined portion with sand, gravel or concrete grout
8. Repair drilled hole with concrete
9. Remove cofferdam

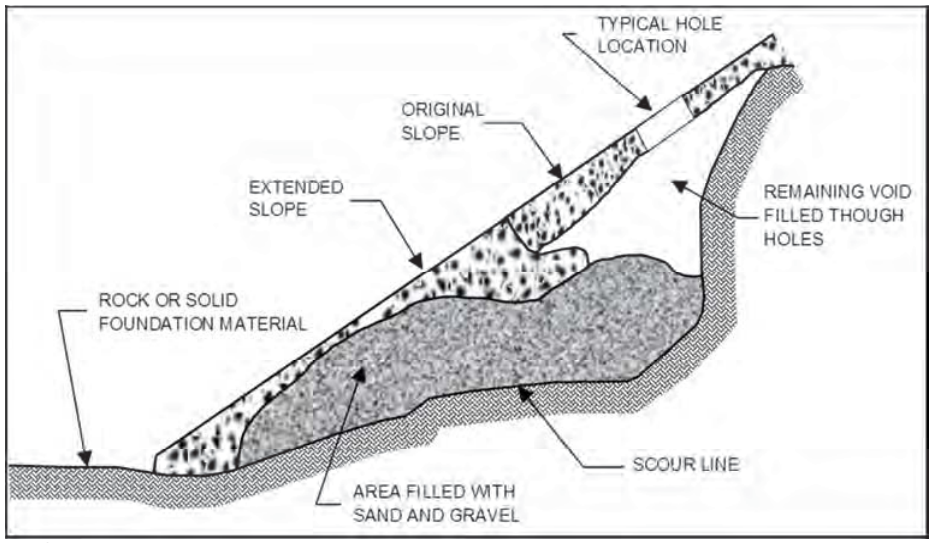

*Adapted from: Army and Air Force 1994

Riprap

Riprap is the most popular choice for scour repairs throughout the United States. Proper design of riprap is the most important consideration in order to avoid shear and edge failure. All riprap design and placement should adhere to Section 606 of the WisDOT Standard Specifications. There are a wide variety of equations and design procedures available for riprap revetment. The procedure for abutment protection was utilized since that is the most relevant.

Required Materials

1. Riprap
2. (Optional) Cofferdam
3. Geotextile Filter
4. Excavator

Design Procedure

1. Estimate maximum scour depth, d_s
2. Calculate appropriate riprap size using the Pagan-Ortiz equation (factor of safety not included in equation)

$$d_{50} = \left(\frac{1.064 * U^2 * y^{0.23}}{(S_s - 1) * g}\right)^{0.81}$$

d_{50} = median size of riprap stones
U = average velocity in the contracted bridge section
y = depth of flow in the contracted bridge section
S_s = specific gravity of riprap
g = acceleration due to gravity

3. Calculated riprap thickness, larger of $1.5*d_{50}$ or d_{100}
4. Calculate required apron width, W

$$W = C_1(d_{s2} - d_b + d_{50})$$

C_1 = 1.68 for upstream corner and 1.19 for downstream corner
d_{s2} = scour depth at outer edge of riprap
d_b = placement depth of riprap

Construction Procedure

1. (Optional) Construct a cofferdam, adhering to Section 206 of the WisDOT Standard Specifications
2. If a cofferdam is utilized than the area to receive the riprap should be compacted shaped and graded

3. If a cofferdam is not utilized, divers need to ensure that the bed is free of any debris that would jeopardize the effectiveness of the system
4. Place the geotextile filter directly on the prepared area, ensuring that riprap is placed soon after so ultraviolet exposure is minimized
5. If a cofferdam is not utilized, materials must be used to weigh down the geotextile fabric since it will float and has high potential to float away
6. Place the riprap, ensuring that the geotextile fabric is not damaged. Drop riprap less than 1-foot and adhere to Section 606 of the WisDOT Standard Specifications
7. Individual placement of riprap is recommended, as opposed to end-dumping, to ensure accurate placement of the riprap
8. Side slope should range from 1:2 to 1:1.5 or flatter
9. Remove cofferdam

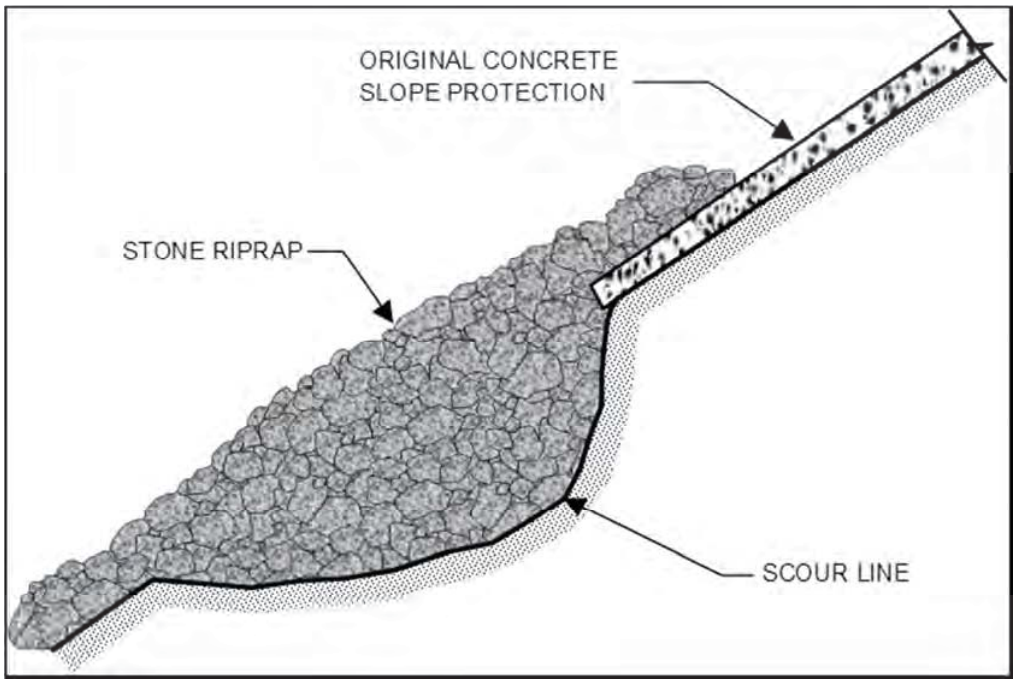

*Adapted from: Barkdoll et al. 2007

Partially Grouted Riprap

Partially grouted riprap has not been utilized much throughout the United States as a solution for scour. The benefit of using partially grouted riprap to repair bank slopes is that less riprap can be used while increasing overall stability without sacrificing flexibility or permeability. A realized benefit of partially grouted riprap over normal riprap is that it reduces vandalism concerns.

Required Materials

1. Riprap
2. Geotextile Filter
3. Grout
4. Grout Pump
5. Backhoe
6. (Optional) Cofferdam

Construction Procedure

1. (Optional) Construct a cofferdam, adhering to Section 206 of the WisDOT Standard Specifications
2. If a cofferdam is utilized than the area to receive the riprap should be compacted shaped and graded
3. If a cofferdam is not utilized, divers need to ensure that the bed is free of any debris that would jeopardize the effectiveness of the system
4. Place the geotextile filter directly on the prepared area, ensuring that riprap is placed soon after so ultraviolet exposure is minimized
5. If a cofferdam is not utilized, materials must be used to weigh down the geotextile fabric since it will float and has high potential to float away
6. Place the riprap, ensuring that the geotextile fabric is not damaged. Drop riprap less than 1-foot and adhere to Section 606 of the WisDOT Standard Specifications
7. Test the grout in a small section of riprap to adjust the pumping rate and ensure even application
8. Apply the grout at a rate of 2.0 to 2.2-ft^3 per square yard
9. Remove cofferdam

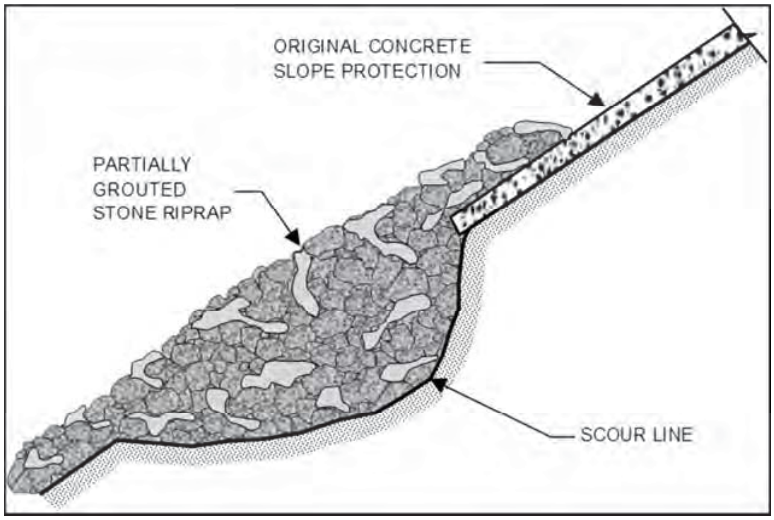

*Adapted from: FHWA 2009

Articulating Concrete Blocks

Articulating concrete blocks are preformed concrete units that are typically held together by cables. They provide a flexible armor while still maintaining permeability. The individual blocks are allowed to deform with any subgrade changes, while the system as a whole will remain intact. Design procedures are typically best described by individual manufacturers, since shape of the unit greatly influences the design.

Required Materials

1. (Optional) Cofferdam
2. Articulating Concrete Blocks
3. Geotextile Fabric
4. Manufacturer Approved Polyester, Stainless Steel or Galvanized Steel Cable
5. Backhoe
6. Concrete Grout

Construction Procedure

1. (Optional) Construct cofferdam
2. Prepare subgrade soil
3. Place geotextile directly on the prepared subgrade
4. The ACB blocks may be installed individually or as a mat (by using a backhoe)
5. The ACB placement should begin upstream of the abutment and more downstream
6. When relevant the ACB placement should begin at the toe of a slope and proceed upslope
7. Fill any gaps 2-inches or greater between blocks with concrete grout
8. Backfill soil
9. Remove cofferdam

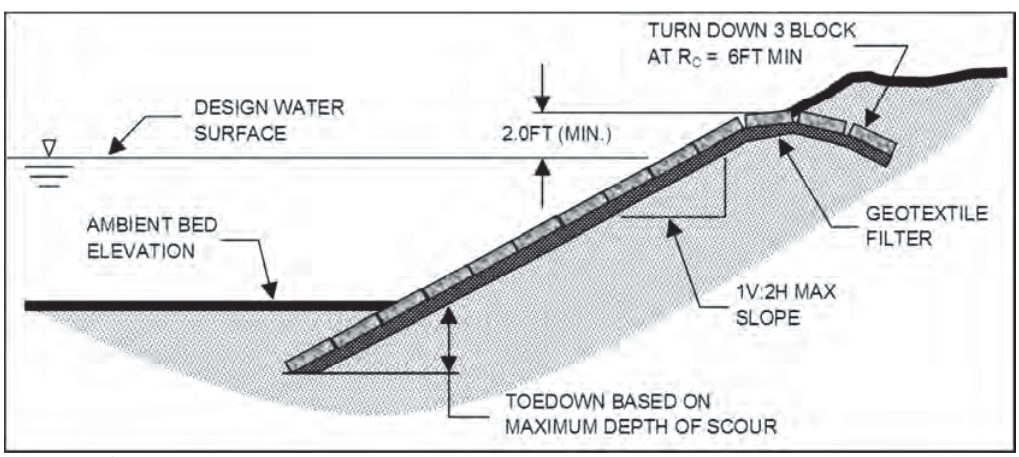

*Adapted from: FHWA 2009

Bank Barbs

Bank barbs are used to shift the deepest part of a channel away from abutments, piers or slope protection. Bank barbs help to dissipate some of the energy of the water flow, reducing the erosive capacities of the river. Since the bank barbs are placed in the full flow of the river, the riprap needs to be larger than it would for typical stream bank protection.

Required Materials

1. (Optional) Cofferdam
2. Riprap
3. Backhoe
4. (Optional) Vegetation

Design Procedure

1. Assume a water density of 62.4 lb/ft^3 and a riprap specific gravity of 2.65
2. Multiple the slope of the channel by the flow depth
3. Determine the correct riprap gradation using the table below:

Riprap Gradation	D_{50}		Slope Times Flow Depth	
	English (ft)	Metric (m)	English (ft)	Metric (m)
Spalls	0.5	0.15	0.0361	0.011
Light Loose Riprap	1.1	0.32	0.0764	0.0233
Heavy Loose Riprap	2.2	0.67	0.1587	0.0484
1 Meter D50 (Three Man)[1]	3.3	1	0.2365	0.0721
2 Meter D50 (Six Man)[1]	6.6	2	0.5256	0.1602

1. See Standard Specification Section 9-13.7(1).

4. The barb should be designed to be 50º from the upstream bank, a minimum of 5-feet wide and incorporate a 5 x 10-foot key

Construction Procedure

1. (Optional) Construct cofferdam
2. Excavate into the existing streambank an area 5 x 5 x 10-feet
3. Place riprap, larger rocks should be downstream on the base with the longest axis point upstream
4. The barb should never be thinner than 1.6-feet
5. Place riprap into the excavated streambank to create a key, this riprap should have a minimum elevation of 2-feet above the 100-year flood elevation

6. (Optional) Place vegetation along any land that was cleared during the construction process, willow cuttings and cottonwood are ideal
7. Remove cofferdam

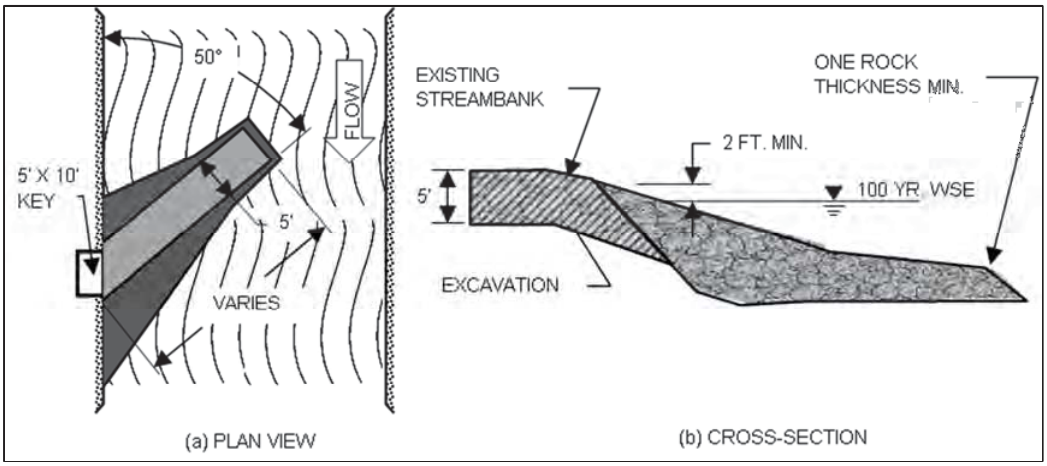

*Adapted from: WSDOT 2010

Engineered Log Jams

The use of engineered log jams and large woody debris are intended to increase the roughness of a river in order to reduce the velocity of the flow. When the velocity of the flow is reduced the hydraulic shear is also reduced, which makes the formation of scour downstream less likely. Large woody debris can also help stabilize eroding banks, improve fish migration and create wildlife habitats. This procedure is seen as experimental, and should be utilized with great caution.

Required Materials

1. (Optional) Cofferdam
2. Logs with Root Wads Still Attached
3. (Optional) Anchoring
4. Backhoe

Construction Procedure

1. (Optional) Construct cofferdam
2. Excavate into the existing streambank for log placement
3. Place logs with root wads still attached into the river, maximizing protrusions during placement
4. (Optional) Place vegetation along any land that was cleared during the construction process, willow cuttings and cottonwood are ideal
5. Remove cofferdam

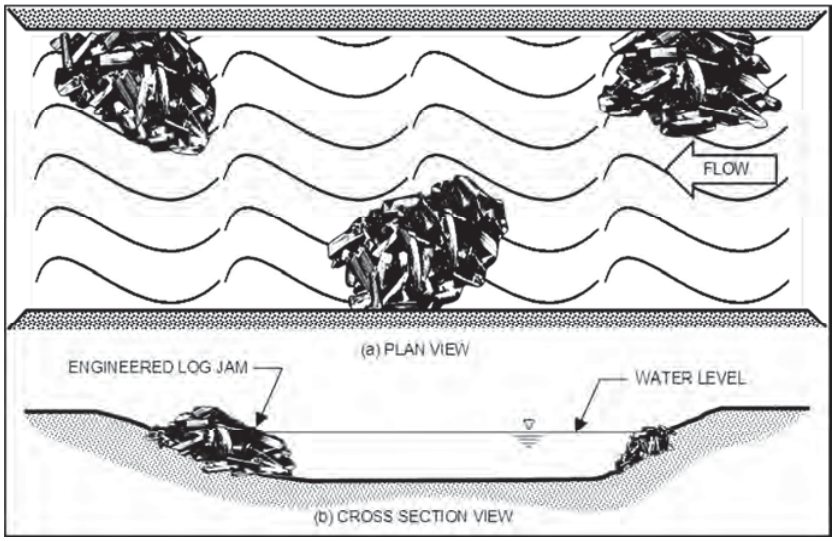

*Adapted from: WSDOT 2010

Check Dams

Check dams are usually structures constructed out of riprap designed to control the velocity of the stream. If a check dam is correctly designed and placed downstream of the substructure, the velocity of the river will be reduced. The lessened velocity will diminish the erosive capacities of the river. This is typically only done for smaller rivers, and there may be environmental concerns depending on what species of fish are in the river.

Required Materials

1. (Optional) Cofferdam
2. Riprap
3. Backhoe
4. (Optional) Vegetation

Design Procedure

1. Assume a water density of 62.4 lb/ft^3 and a riprap specific gravity of 2.65
2. Multiple the slope of the channel by the flow depth
3. Determine the correct riprap gradation using the table below:

Riprap Gradation	D_{50}		Slope Times Flow Depth	
	English (ft)	Metric (m)	English (ft)	Metric (m)
Spalls	0.5	0.15	0.0361	0.011
Light Loose Riprap	1.1	0.32	0.0764	0.0233
Heavy Loose Riprap	2.2	0.67	0.1587	0.0484
1 Meter D50 (Three Man)[1]	3.3	1	0.2365	0.0721
2 Meter D50 (Six Man)[1]	6.6	2	0.5256	0.1602

1. See Standard Specification Section 9-13.7(1).

Construction Procedure

1. (Optional) Construct cofferdam
2. Excavate into the existing streambank to create the key for the check dam
3. Place riprap, larger rocks should be downstream on the base with the longest axis point upstream
4. The check dam should never be taller than 1.5-feet above the original streambed and the slope should never exceed 10:1
5. Place riprap into the excavated streambank to create a key, this riprap should have a minimum elevation of 2-feet above the 100-year flood elevation

6. (Optional) Place vegetation along any land that was cleared during the construction process, willow cuttings and cottonwood are ideal
7. Remove cofferdam

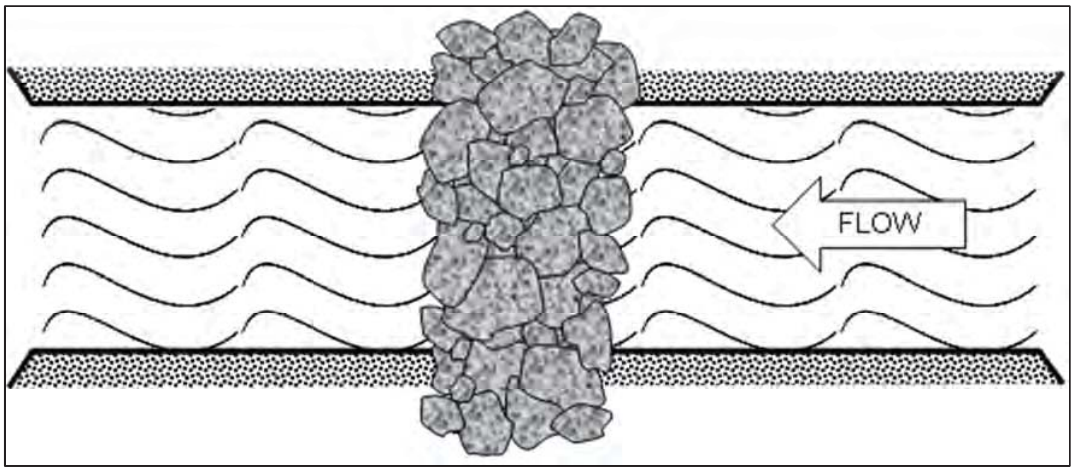

*Adapted from: WSDOT 2010

This page has been intentionally left blank.

Wisconsin Highway Research Program
University of Wisconsin-Madison
1415 Engineering Drive
2204 Engineering Hall
Madison, WI 53706
608.890.4966
http://wisdotresearch.wi.gov/whrp