DISCLAIMER

Although the material in this Wisconsin Bridge Manual has been tested by the Bureau of Structures, no warranty, expressed or implied, is made by the Wisconsin Department of Transportation, as to the accuracy of the material in this manual, nor shall the fact of distribution constitute any such warranty, and responsibility is not assumed by Wisconsin Department of Transportation in connection therewith.

1.1 Introduction

The Bridge Manual is for the guidance of design engineers, technicians, and inspection personnel engaged in bridge design, plan preparation, and construction for the Wisconsin Department of Transportation. It is prepared to encourage uniform application of designs and standard details in plan preparation of bridges and other related structures.

This manual is a guide for the layout, design and preparation of highway structure plans. It does not replace, modify, or supersede any provisions of the Wisconsin Standard Specifications, plans or contracts.

1.2 Index

Chapter	Title
2	General
3	Design Criteria
4	Aesthetics
5	Economics and Costs
6	Plan Preparation
7	Accelerated Bridge Construction
8	Hydraulics
9	Materials
10	Geotechnical Investigation
11	Foundation Support
12	Abutments
13	Piers
14	Retaining Walls
15	Slope Protection
17	Superstructure – General
18	Concrete Slab Structures
19	Prestressed Concrete
23	Timber Structures
24	Steel Girder Structures
27	Bearings
28	Expansion Devices
29	Floor Drains
30	Railings
32	Utilities and Lighting
36	Box Culverts
37	Pedestrian Bridges
38	Railroad Structures
39	Sign Structures
40	Bridge Rehabilitation
41	Structures Asset Management
42	Bridge Preservation
43	Structures Asset Management: Maintenance Work
45	Bridge Rating

Table of Contents

2.1 Organizational Charts 2
2.2 Incident Management 5
2.2.1 Bridge Incidents 5
2.2.2 Major Bridge Failures 5
2.2.3 Bureau of Structures Actions in Incident Response 6
2.2.4 Public Communication Record 7
2.3 Responsibilities of Bureau of Structures 8
2.3.1 Structures Design Section 8
2.3.2 Structures Development Section 9
2.3.3 Structures Maintenance Section 10
2.4 Bridge Standards and Insert Sheets 12
2.5 Structure Numbers 13
2.6 Bridge Files 16
2.7 Contracts 18
2.8 Special Provisions 19
2.9 Terminology 20
2.10 WisDOT Bridge History 30
2.10.1 Unique Structures 31

2.1 Organizational Charts

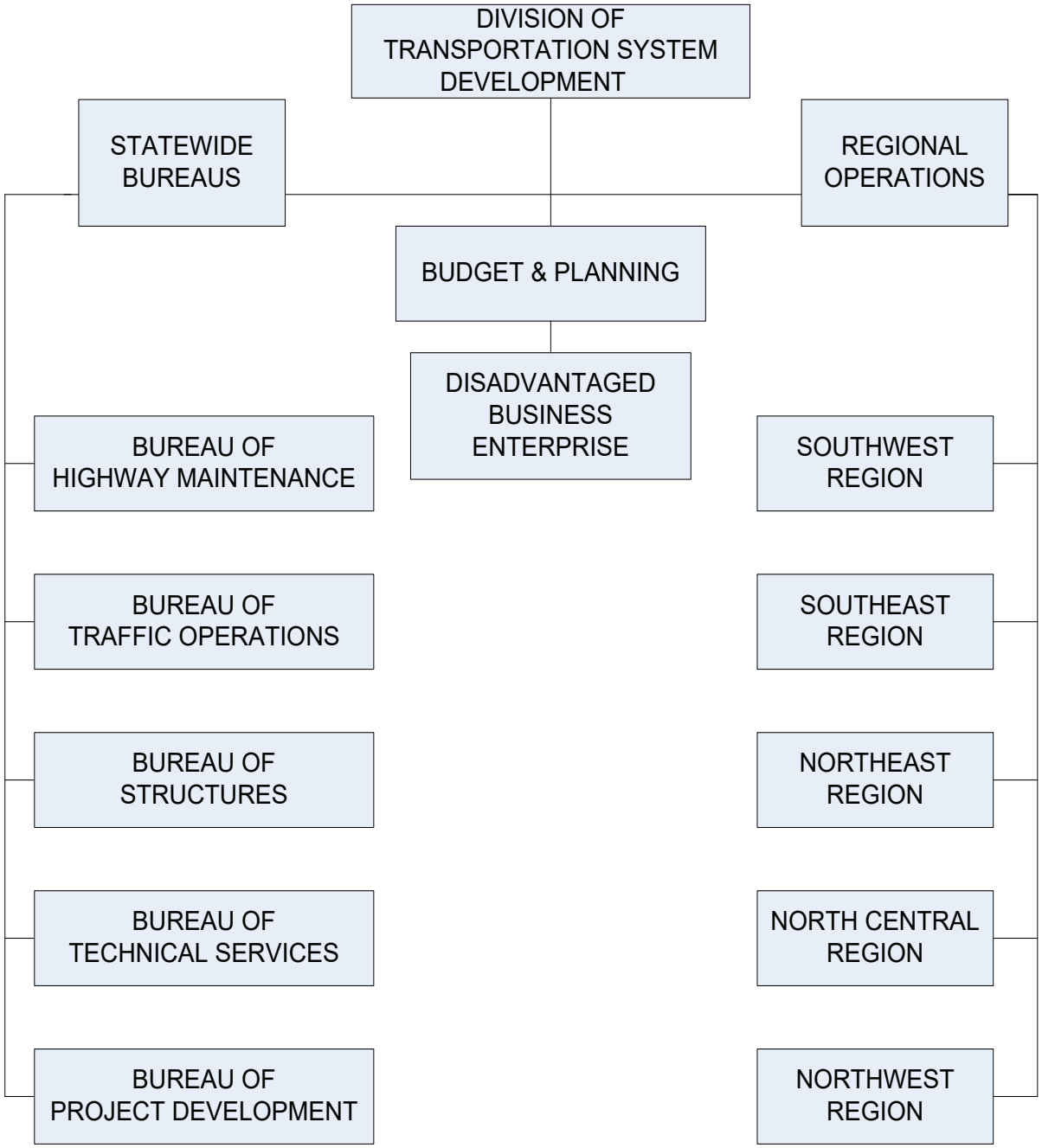

Figure 2.1-1
Division of Transportation System Development

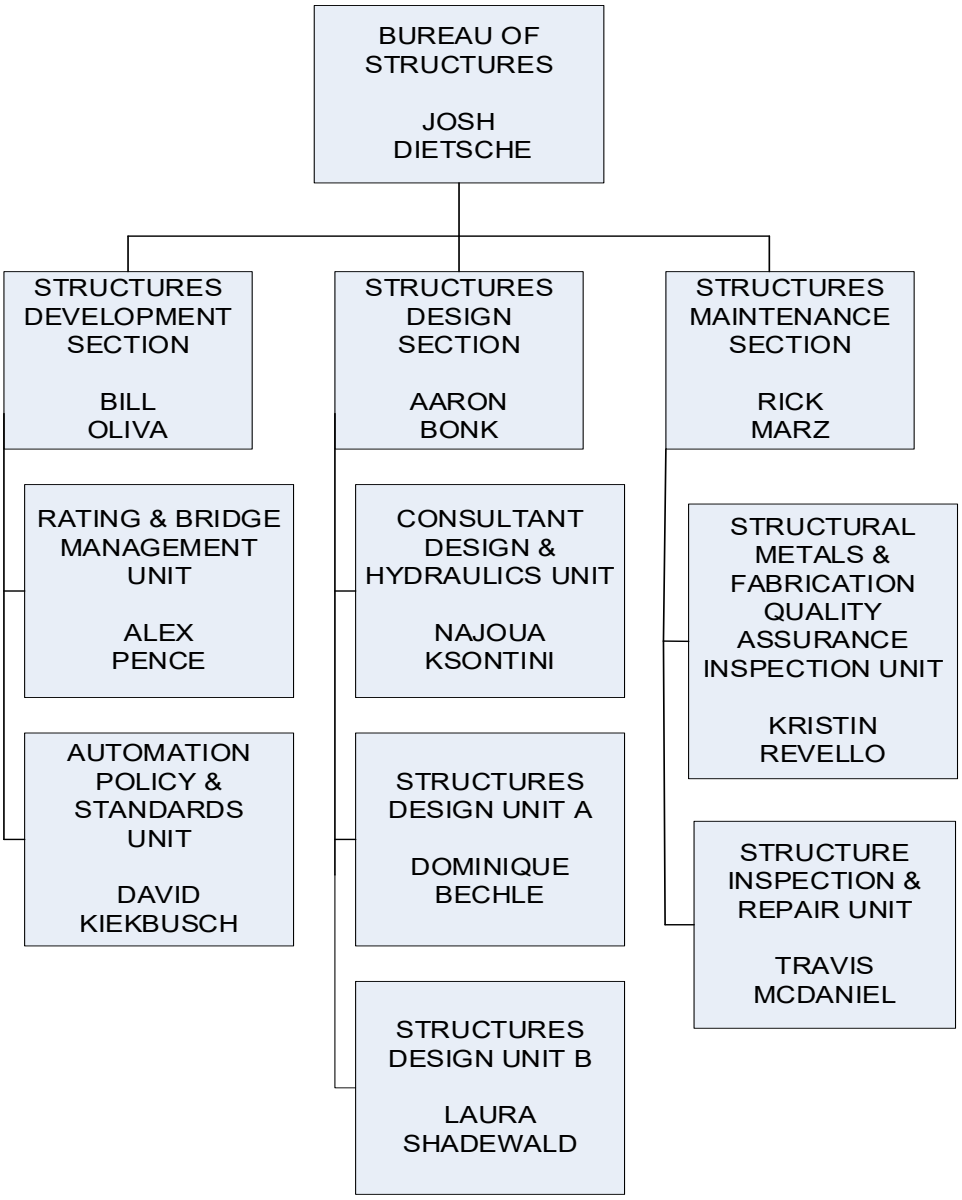

Figure 2.1-2
Bureau of Structures

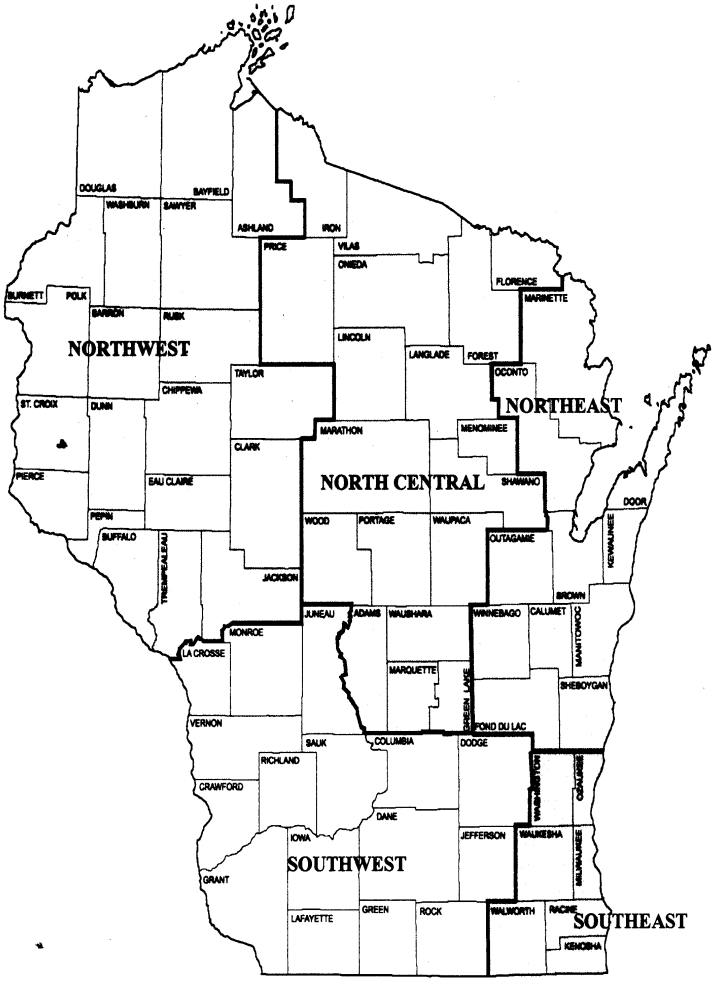

NO.	COUNTY	REGION	NO.	COUNTY	REGION
1	ADAMS	NORTH CENTRAL	37	MARATHON	NORTH CENTRAL
2	ASHLAND	NORTHWEST	38	MARINETTE	NORTHEAST
3	BARRON	NORTHWEST	39	MARQUETTE	NORTH CENTRAL
4	BAYFIELD	NORTHWEST	40	MILWAUKEE	SOUTHEAST
5	BROWN	NORTHEAST	41	MONROE	SOUTHWEST
6	BUFFALO	NORTHWEST	42	OCONTO	NORTHEAST
7	BURNETT	NORTHWEST	43	ONEIDA	NORTH CENTRAL
8	CALUMET	NORTHEAST	44	OUTAGAMIE	NORTHEAST
9	CHIPPEWA	NORTHWEST	45	OZAUKEE	SOUTHEAST
10	CLARK	NORTHWEST	46	PEPIN	NORTHWEST
11	COLUMBIA	SOUTHWEST	47	PIERCE	NORTHWEST
12	CRAWFORD	SOUTHWEST	48	POLK	NORTHWEST
13	DANE	SOUTHWEST	49	PORTAGE	NORTH CENTRAL
14	DODGE	SOUTHWEST	50	PRICE	NORTH CENTRAL
15	DOOR	NORTHEAST	51	RACINE	SOUTHEAST
16	DOUGLAS	NORTHWEST	52	RICHLAND	SOUTHWEST
17	DUNN	NORTHWEST	53	ROCK	SOUTHWEST
18	EAU CLAIRE	NORTHWEST	54	RUSK	NORTHWEST
19	FLORENCE	NORTH CENTRAL	55	ST CROIX	NORTHWEST
20	FOND DU LAC	NORTHEAST	56	SAUK	SOUTHWEST
21	FOREST	NORTH CENTRAL	57	SAWYER	NORTHWEST
22	GRANT	SOUTHWEST	58	SHAWANO	NORTH CENTRAL
23	GREEN	SOUTHWEST	59	SHEBOYGAN	NORTHEAST
24	GREEN LAKE	NORTH CENTRAL	60	TAYLOR	NORTHWEST
25	IOWA	SOUTHWEST	61	TREMPEALEAU	NORTHWEST
26	IRON	NORTH CENTRAL	62	VERNON	SOUTHWEST
27	JACKSON	NORTHWEST	63	VILAS	NORTH CENTRAL
28	JEFFERSON	SOUTHWEST	64	WALWORTH	SOUTHEAST
29	JUNEAU	SOUTHWEST	65	WASHBURN	NORTHWEST
30	KENOSHA	SOUTHEAST	66	WASHINGTON	SOUTHEAST
31	KEWAUNEE	NORTHEAST	67	WAUKESHA	SOUTHEAST
32	LA CROSSE	SOUTHWEST	68	WAUPACA	NORTH CENTRAL
33	LAFAYETTE	SOUTHWEST	69	WAUSHARA	NORTH CENTRAL
34	LANGLADE	NORTH CENTRAL	70	WINNEBAGO	NORTHEAST
35	LINCOLN	NORTH CENTRAL	71	WOOD	NORTH CENTRAL
36	MANITOWOC	NORTHEAST	73	MENOMINEE	NORTH CENTRAL

Figure 2.1-3
Region Map

2.2 Incident Management

The procedures to be followed in Incident Management are:

2.2.1 Bridge Incidents

For Bridge Incidents such as vehicle hits on girders, column or railing that are not likely to cause a bridge failure, incident management will be handled by the Regional Office and after consultation of the Regional Duty Officer (RDO) the structures technical expert. Assistance will be provided by the Structures Design Section if rehabilitation plans are required. Refer to the contacts list below for names and telephone numbers.

WisDOT policy item:

The Bureau of Structures has an on call technical expert number that is to be activated with the consultation of the RDO for bridge incidents. The number is: (608) -206 -1280.

2.2.2 Major Bridge Failures

A bridge failure requires emergency action on the part of the DOT to protect the safety of other drivers and to prevent additional crashes, to establish appropriate traffic detours, to assess the damage, to determine its cause, to plan and implement its repair. Examples include a bridge that collapses as the result of flooding, being struck by a motor vehicle, or the weakening of its members. The Bureau of Structures follows all responsibilities and actions established in the Departments Emergency Operations Plan (ETO).

To organize and execute an effective and efficient response to a major bridge failure, DOT will follow the principles of National Incident Management System (NIMS) and incident command system (ICS). NIMS and ICS are being used nationwide as an organizational tool for command, control and coordination of responses to an array of incidents – large and small, natural and man-made, spontaneous or planned.

NIMS and ICS provide a common organizational structure and terminology within a unified command under the direction of an incident commander. A large-scale incident may require the establishment of a unified command to coordinate the activities of multiple jurisdictions.

When an incident takes place, law enforcement will generally be the first responders and will take steps to close the highway to traffic. County highway officials will erect barricades and begin detouring traffic.

The State Patrol or other law enforcement will contact the Regional Office and RDO who in turn should contact the Bureau of Structures technical expert. While the Regional Office will probably retain general oversight of the incident, a Bureau of Structures representative should be given shared responsibility.

The ICS structure recognizes the importance of public information and media relations during a high-profile incident. As part of the command staff, the public information officer (PIO) reports directly to the incident commander, who has the overall responsibility and authority for the response.

Generally, the PIO is responsible for coordinating the release of information to the media, handling reporters' inquiries and advising the incident commander about communication strategies. Public information in the event of a major bridge failure or damage will be directed at assuring the public that the DOT is taking appropriate action to protect other drivers, provide adequate routes, investigate the cause and make repairs in a timely manner.

The PIO may need assistance from the Bureau of Structures or region staff to provide: 1) details of the incident, 2) acknowledgement of deaths or injuries, 3) traffic detours, 4) plans for investigation, 5) cause of the incident, 6) plans to repair or rebuild the bridge, 7) maps locating the bridge, closed highways and alternate routes, 8) background information on the bridge's design, construction and past repairs, 9) recent bridge inspection reports, and 10) policies regarding bridge inspection.

The incident commander has the final authority over the release of all information to the media and the general public. DOT employees are authorized to make only the following statement when questioned in any capacity about emergency and recovery efforts. This policy and statement applies to all agency personnel at all offices:

> "Wisconsin DOT has activated an incident command system. All inquiries for more information are being handled by the information officer at our agency command center".

Only the information officer or incident commander is authorized to provide other information.

2.2.3 Bureau of Structures Actions in Incident Response

1. Document details from Regional Office RDO at time of contact.
2. Notify Bureau Director, Division Administrator, Secretary's Office & all Bureau coworkers via PCR (Public Communication Record).
3. In the event of a structure hit that compromises the ability to carry traffic, the DMV OSOW permitting unit should be notified.
4. Respond to the bridge site if requested.
    a. Determine In-house expertise for Project team.
    b. Determine if Consultant expertise is needed.
    c. Involve all available Bureau Sections in decision making.
    d. Have bridge plans available.

e. Establish a Bureau contact for communication from Response site.

f. Select at least one other structure person to go to the bridge site.

5. Observe all safety rules at bridge site.

6. Continue to communicate with all Bureau staff.

   a. Select at least one other structure person to go to Notify Bureau Contact Person to perform required communication.

7. Document actions taken and file for future reference. Communicate to all indicated in Item #2.

2.2.4 Public Communication Record

A "Public Communication Record": (PCR) is a form filled out by DOT employees to inform upper management and other potentially interested staff of a contact that may be of interest to the recipient. The contact is normally from the Media, Legislator, Local Official or the public concerning a topic that is or could be controversial now or in the future.

Within the Bureau of Structures (BOS), the Bureau Director, Section Managers, Supervisors and Lead workers should be included in all PCRs filled out by BOS staff, along with the established list of PCR contacts found in Outlook "Global Address List" under DOT DL PCR. A copy of the PCR form (DT 33) can be found on the DOTNET at:

http://dotnet/opa/opapolicies.htm

If you are contacted by the Media, Legislator or Local Official and are not sure if you need to fill out a PCR, contact your Supervisor for their opinion. A PCR is quick and easy to do so "if in doubt fill it out" is the best approach to use.

2.3 Responsibilities of Bureau of Structures

2.3.1 Structures Design Section

- Provide guidance to Regional Offices on the preparation of various types of Structure Survey Reports.
- Assist Regional Offices making design investigation studies by providing guidance on structure costs, depths, and practical structure types for the alternate sites under consideration.
- Prepare comparative cost estimates for alternate structure types. Prepare economic studies on rehabilitation versus replacement of existing structure. Make recommendations to Regional Office or Consultant or Government Agency.
- Review and approve Consultant preliminary and final plans, evaluate hydraulic adequacy and compliance to current Standards.
- Review and approve Consultant rehabilitation proposals.
- Collect and make information available to Regional Offices for hydrology studies and new hydraulic developments by other agencies.
- Provide procedures for scour analysis of structures.
- Make field observations of the proposed site, gather additional information for hydraulic reports, and evaluate the general conditions of the site. Coordinate hydraulic impacts with DNR.
- Assemble data and prepare drawings as required by Coast Guard for permit applications to construct bridges over navigable streams. Assemble data as necessary and receive certification from the Corps of Engineers and other agencies exercising environmental control over the proposed structure improvement.
- Prepare preliminary structures plans for bridges. This includes designing, detailing, drafting, estimating, and checking as may be necessary to obtain approvals from other governmental agencies.
- Determine size and length of box culverts. Design and plot culvert plans for checking by staff.
- Distribute preliminary structure plans to Regional Offices for approval and utility contacts.
- Prepare final contract plans for bridges, box culverts and other structures which include designing, detailing, drafting, estimating and ensuring compliance with preliminary study report and Standard Specifications.

- Prepare Special Provisions for construction of bridges, box culverts, and other structures covering special items not on the contract plans or in Standard Specifications.

- Review and approve permits relating to placement of utilities on structures.

- Evaluate bridges for rehabilitation, replacement or widening and recommend the course of action. Prepare contract plans for structure rehabilitation.

- Provide design and plans for bridge damage repair, contract change orders and steel repair.

- Provide technical assistance to Regional Offices or consultants with inquiries on final plans, specifications, materials, etc. in both the design and construction phases of the project.

- Upon request review construction falsework plans for structures.

- Design and prepare plans for sign bridges, sign supports, light poles, and other sign or lighting related to structures.

- Review fabrication drawings for monotube, highmast light towers, misc. light and sign support structures as submitted by Bureau of Highway Operations (Traffic Engineering Section) or Regional Office Traffic personnel.

- Make recommendations for standard bridge details, design procedures, and new computer programs to the Structures Development Section.

- Provide design costs for structures on an as needed basis to the Regional Offices for use in negotiating consultant contracts and budgeting in-house design time on structural projects.

2.3.2 Structures Development Section

- Create and maintain plan insert sheets that detail commonly used bridge components (i.e. Parapets, Railings, Bearings, Girders and Diaphragms).

- Review and approve overweight vehicle permit requests for State Trunk Network System bridges.

- Maintain the filing system and supervise the scanning of all highway structures data.

- Maintain the Highway Structures Information System (HSIS) for transportation structures.

- Develop and maintain Bridge Management Systems.

- Evaluate, implement, and develop new transportation structures Computer Programs and maintain all computer program documentation.
- Provide technical assistance and operational procedures for Bridge Engineering Workstations, CADDS and PC applications.
- Research, evaluate, and recommend the use of new materials, design theories, and structural types. Work closely with other transportation structure agencies and manufacturers in these areas gathering relevant facts and make recommendations for improving materials or product specifications.
- Develop and maintain text and tables for the Bridge Manual and post on extranet site.
- Develop and maintain Bridge Standard details by evaluating new design and/or by revising existing procedures, materials, and specifications. Prepare design tables, graphs, or curves to assist in structures design and detail plans preparation.
- Provide structure related technical assistance to Consultants, Contractors, Counties, DOT Central Offices, and Regional Offices with an emphasis on quality improvement of materials and/or procedures.
- Initiate work plans and provide specifications for Experimental Construction Projects. Provide follow up in-service inspection and performance evaluation reporting on new materials or methods.
- Maintain the Bridge Computer Programs as they relate to analysis and design procedures, materials, and specifications.
- Maintain office facilities for computer program documentation, manual texts and technical libraries for design, research records and new products information.
- Provide technical development, guidance, or review of material specifications such as AASHTO, ACI, ASTM, AWS, etc. in areas related to transportation structures.

2.3.3 Structures Maintenance Section

- Perform complex in-depth inspection of structures
- Write in-depth inspection reports
- Perform complex emergency repairs
- Perform routine inspections with or without special equipment
- Assist in bridge repair.
- Provide bridge inspection training courses

- Manage the bridge painting program

2.4 Bridge Standards and Insert Sheets

Bridge standards are drawings which show the standard practice for details used by WisDOT. These Standards have been developed over time by input from individuals involved in design, construction and maintenance. They are applicable to most structures and should be used unless exceptions are approved by the Section Managers.

The Insert Sheets represent the Standards and are intended to be used with minimum revision for insertion in the final set of plans for construction purposes.

1. FHWA Approval of Structure Standards Process

   The following points define the working relationship between FHWA and WISDOT concerning production and adoption of Bureau of Structures (BOS) Standard Detail Drawings. These points were agreed upon at a meeting on December 17, 2002 between BOS and FHWA.

- Submittals will be sent by electronic methods in PDF format to FHWA. (For special cases with a large amount of supporting information other methods may be used as agreed to by both parties on a case by case basis).

- Generally two weeks should be sufficient to render an approval or request for additional information. (In special cases requiring input from sources outside of the Wisconsin FHWA office additional time will be requested in writing with an expected due date for a decision agreed to by both WisDOT and FHWA).

- Appropriate supporting documentation ranging from written explanations to fully detailed engineering calculations will accompany submittals. The level of support should reflect the level of review expected.

- The Structure Standards reviewed by the FHWA will be done so with respect to Federal Law, Policy and safety issues. Differing opinions on other issues will not be cause for non-approval of standards.

2.5 Structure Numbers

An official number, referred to as a structure number, is assigned to bridge structures and ancillary structures in the WisDOT right-of-way. As shown in Figure 2.5-1, structure numbers begin with a letter based on the structure type. The structure type designation is then followed by a two-digit county number, a unique four-digit structure number, and in some cases a unit number. Note: leading zeroes may be omitted from the structure number (i.e. B-5-70).

Structure numbers should be assigned to structures prior to submitting information to the Bureau of Structures for the structural design process or the plan review process. Contact the Regional Ancillary Program Manager for assigning structure numbers and structure unit numbers. For inspection purposes, structure unit numbers are beneficial and should be coordinated with the Region once determined needed. Refer to the WisDOT Structures Maintenance and Inspection website for additional information.

When a structure is rehabilitated, the name plate should be preserved, if possible, and reinstalled on the rehabilitated structure. If a new name plate is required, it should show the year of original construction. The original structure number applies to all rehabilitation including widening, lengthening, superstructure replacement, etc.

The following criteria should be used when assigning structure numbers to bridge (B) and ancillary structures (C, P, S, L, R, N, or M):

- B is assigned to bridge structures (B-Structures) over 20 ft. in structure length, measured along the roadway centerline between the inside faces of abutments or exterior walls. A set of nested pipes may be assigned as a bridge structure if the distance between the inside diameters of the end pipes exceeds 20 ft. and the clear distance between pipe openings is less than half the diameter of the smallest pipe. Refer to the Structure Inspection Manual for measurements used to define a bridge structure. Bridges on state boundary lines also have a number designated by the adjacent state. Unit numbers may be assigned to long bridges or complex interchanges where it is desirable to have only one bridge number for the site.

  Pedestrian only bridge structures are assigned a B-Structure if they are over 20 ft in structure length <u>and</u> are state maintained, DNR bridges reviewed by WisDOT, or cross a roadway. Pedestrian boardwalks may be assigned a B-Structure when a clear span exceeds 20 ft. Other cases may be considered on a project-to-project basis.

- In general, C is assigned to small bridge structures (C-Structures) 20 ft. or less in structure length that have a unique structural design and/or a heightened inspection interest. This includes bridge-like structures (deck girders, flat slabs, etc.), concrete box culverts with a cross-sectional opening greater than, or equal to 20 square feet, rigid frames (three-sided concrete structures), and structural plate structures (pipes, pipe arches, box culverts, etc.). Structures not meeting the bridge structure or small bridge structure criteria are then typically considered a roadway culvert as described in Facilities Development Manual (FDM) 13-1. Buried structures listed in FDM 13-1 are typically not assigned a structure number, except for closely nested pipes and

structural plate structures. Refer to the Structure Inspection Manual for additional information on small bridge structures.

- P designates structures for which there are no structural plans on file.

WisDOT Policy Item:

No new P numbers will be assigned as we should always request plans.

- S is assigned to overhead sign structures and signal monotubes. Unit numbers should be assigned to signal monotubes at an intersection with multiple structures. In this case, the base structure number should be the same for all signal monotubes and the unit numbers use to designate individual structures (i.e. S-13-1421-0001, S-13-1421-0002, etc.).

- L is assigned to high mast lighting structures.

- R is assigned to permanent retaining walls. For a continuous wall consisting of various wall types, such as a secant pile wall followed by a soldier pile wall, unit numbers should be assigned to each wall type segment. Wall facing discontinuities (e.g. stairwells, staged construction, tiers, or changes to external loads) do not require unique wall numbers if the leveling pad or footing is continuous between the completed wall segments. For soldier pile walls with anchored and non-anchored segments, unique wall numbers are not required for each segment.

  Cast-in-place walls being utilized strictly as bridge abutment or box culvert wings do not require R numbers as they are considered part of the structure.

  Retaining walls whose height exceeds the below criteria require R numbers:

  - Proprietary retaining walls (e.g., modular block MSE walls)

    - MSE walls having a maximum height of less than 5.5 ft. measured from the bottom of wall or top of leveling pad to top of wall are deemed to be “minor retaining walls” and do not require an R number. Refer to FDM 11-55-5.2 for more information.

    - Modular block gravity walls having a maximum height of less than 4.0 ft. measured from the bottom of wall or top of leveling pad to top of wall are deemed to be “minor retaining walls” and do not require an R number. Refer to FDM 11-55-5.2 for more information.

  - Non-proprietary walls (e.g., sheet pile walls, cast-in-place walls):

Walls having an exposed height of less than 5.5 ft. measured from the plan ground line to top of wall may require an R number based on specific project features. Designer to contact the Bureau of Structures region liaison for more information.

- N is assigned to noise barriers. Unit numbers may be assigned to long bridges or complex interchanges where it is desirable to have
- M is assigned to miscellaneous structures where it is desirable to have a structure plan record while not meeting the above-mentioned structure assigned criteria.

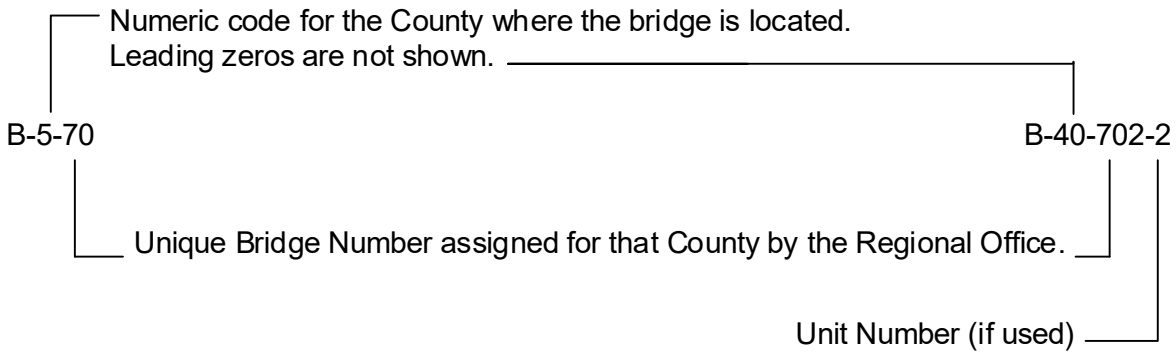

Figure 2.5-1
Bridge Number Detail

2.6 Bridge Files

Records and information useful in bridge planning and design are kept in appropriate places. Following is a brief summary of the various types of files, their contents and location. The data is arranged in alphabetical order for quick reference.

		Location	Agency
Bridge Cost Analysis		Structures Design	BOS
National Bridge Inventory Data			
	Information coded for the electronic computer file.	Structures Development	BOS
Catalogues		Structures Development	BOS
	Manufacturers' Product Files		
	Research Files and Technical Items		
Civil, Mechanical and Electrical Technical Reference Books			
Design Calculations			
	After project is completed, the design calculations are filed in a folder until they are digitized.	Bridge Files, Microfilm or in HSIS	BOS
Engineers' Estimates		----------	BPD
FHWA Program Manual		----------	BOS
Log of Test Borings		Geotechnical Section	BTS
	Records of all borings.		
	Borings for each bridge are kept in Bridge Folder or on microfilm.		
Manuals		Structures Development	BOS
Bridge Manual, Computer, Construction and Materials Manual, Design Manual, Maintenance Manual and Transportation Administrative Manual			
Maps		Structures Design	BOS
	Geological Maps, National Forests		
	Navigation Charts, Rivers-Harbors		
	State Park, Topographic, Historical		
Maps		Structures Development	BOS

	City-Village-Town (CVT) Maps showing location of bridges.		
Payment estimates to Contractors		----------	BPD
ASTM Specifications		Structures Development	BOS
Plans		----------	BOS
As built. All plans are digitized.		Structures Development	BOS
	Bridge Plans: Plans of structures designed but not yet advertised are in files.	----------	BOS
Shop Plans of Active Steel Projects		Metals Fabrication and Inspection Unit	BOS
Records (Accounting)			
	Bridge Standards: Documentation for Standards and Bridge Manual	Structures Development	BOS
	Rainfall and Runoff Data	Structures Design	BOS
	Bids on Individual Items	_____	BPD
Reports			
	Bridge Maintenance Reports	Structures Maintenance	BOS
	Federal Highway Experimental Project Reports	Structures Development	BOS
	Foundation Reports	Geotechnical Section	BTS
	Preliminary Reports: Contains Information necessary for Design of Structures.	----------	Region
	Research Reports	Structures Development	BOS
Special Provisions of Active Projects		----------	BOS
Specifications		Structures Development	BOS
	AASHTO, ACI, AWS, AREMA, AISC, CRSI, PTI, SSPC, etc.		
Survey Notes		----------	Region
Text Books on Foundations, Structures and Bridge Design		Structures Development	BOS

Bureau Legend:

BOS - Bureau of Structures

BPD - Bureau of Project Development

BTS - Bureau of Technical Services

2.7 Contracts

Contracts are administered by construction personnel in the Regional Office where the project is located. The Bureau of Project Development coordinates the activities of the Regional Offices.

The contract contains the plans, specifications, supplemental specifications where applicable and special provisions where applicable. These parts of the contract are intended to be cooperative. In the event of a discrepancy, the Standard Specifications gives the priority part to be used.

2.8 Special Provisions

Special provisions are required for some projects to give special directions or requirements that are not otherwise satisfactorily detailed or prescribed in the standard specifications. Following are some of the principal functions of the special provisions:

1. Supplement the Standard Specifications by setting forth requirements which are not adequately covered, for the proposed project, by the Standard Specifications.

2. Alter the requirements of the Standard Specifications where such requirements are not appropriate for the proposed work.

3. Supplement the plans with verbal requirements where such requirements are too lengthy to be shown on the plans.

4. Call the bidder's attention to any unusual conditions, regulations or laws affecting the work.

5. For experimental use of a new material or system such as paint systems not covered in the Standard Specifications.

When preparing the special provisions for any project, the writer must visualize the project from the standpoint of the problems that may occur during construction.

Special provisions are generally written for a specific project or structure, however several “standard” bridge special provisions are available on-line at the Structures Design Information site:

https://wisconsindot.gov/Pages/doing-bus/eng-consultants/cnslt-rsrces/strct/special-provisions.aspx

These special provisions may require modification to accurately reflect the requirements of individual projects or structures.

2.9 Terminology

AASHTO	American Association of State Highway and Transportation Officials.
ABUTMENT	Supports at the end of the bridge used to retain the approach embankment and carry the vertical and horizontal loads from the superstructure.
ACI	American Concrete Institute.
AISC	American Institute of Steel Construction.
Allowable Headwater	The maximum elevation to which water may be ponded upstream of a culvert or structure as specified by law or design.
Anchor Bolts	Bolts that are embedded in concrete which are used to attach an object to the concrete such as rail posts, bearings, etc.
ANSI	American National Standards Institute.
Apron	The paved area between wingwalls at the end of a culvert.
ASTM	American Society for Testing Materials.
ADT	Average Daily Traffic
Award	The decision to accept the proposal of the lowest responsible bidder for the specified work, subject to the execution and approval of a satisfactory contract bond and other conditions as may be specified or required by law.
AWS	American Welding Society.
Backfill	Fill materials placed between structural elements and existing embankment.
Backwater	An unnaturally high stage in a stream caused by obstruction of flow, as by a dam, a levee, or a bridge opening. Its measure is the excess of unnatural over natural stage. A back up of water due to a restriction.
Bar Chair	A device used to support horizontal reinforcing bars above the base of the form before the concrete is poured.
Bar Cutting Diagram	A diagram used in the detailing of bar steel reinforcement where the bar lengths vary as a straight line.
Base Course	The layer of specified material of designed thickness placed on a subbase or a subgrade to support a surface course.
Batter Pile	A pile that is purposely driven at an angle with vertical.
Bearings	Device to transfer girder reactions without overstressing the supports, insuring the bridge functions as intended. (See Fixed Bearings and Expansion Bearings).
Bearing Stiffener	A stiffener used at points of support on a steel beam to transmit the load from the top of the beam to the support point.
Bedrock	The solid rock underlying soils or other superficial formation.
Bench Mark	A relatively permanent object bearing a marked point whose elevation above or below an adopted datum is known.
Blocking Diagram	A diagram which shows the distance from a horizontal line to all significant points on a girder as it will be during erection.

Bridge	A structure having a span of more than 20 ft. from face to face of abutments, measured along the roadway centerline.
Bridge Approach	Includes the embankment materials and surface pavements that provide the transition between bridges and roadways.
Bushings	A lining used to reduce friction and/or insulate mating surfaces usually on steel hanger plate bearings.
Butt Splice	A splice where the ends of two adjoining pieces of metal in the same plane are fastened together by welding.
CADDS	Computer Aided Design and Drafting System.
Caisson	A watertight box of wood or steel sheeting; or a cylinder of steel and concrete, used for the purpose of making an excavation. Caissons may be either open (open to free air) or pneumatic (under compressed air).
Camber	A slight vertical curvature built into a structural member to allow for deflection and/or vertical grade.
Cathodic Protection	A method of protecting steel in concrete by impressing direct current via anodes thus making the bar steel cathodically protected.
Causeway	A raised road across wet or marshy ground or across water.
Change Order	A written order to the Contractor, signed by the Engineer, ordering a change in the work from that originally shown by the Plans and Specifications that has been found necessary. If the work is of a nature involving an adjustment or unit price, a Supplemental Agreement shall be executed. Change orders duly signed and executed by the Contractor constitute authorized modifications of the Contract.
City and Village Streets	City and Village streets are the public thoroughfares within the boundaries of incorporated municipalities. They are improved and maintained under the jurisdiction of the respective city and village authorities that constitute the local governing bodies. A few city and village streets are eligible for federal aid.
Cofferdam	A barrier built in the water so as to form an enclosure from which the water is pumped to permit free access to the area within.
Composite Section	Two sections made of the same or different materials together to act as one integral section; such as a concrete slab on a steel or prestressed girder.
Compression Seals	A preformed, compartmented, elastomeric (neoprene) device, which is capable of constantly maintaining a compressive force against the joint interfaces in which it is inserted.
Concrete Overlay	1 1/2” to 2” of concrete placed on top of the deck, used to extend the life of the deck and provide a good riding surface.
Construction Limits	The Stations at which construction begins and ends.
Contract Time	The number of calendar days shown in the proposal which is allowed for completion of the work.

Contraction Joint	A joint in concrete that does not provide for expansion but allows for contraction or shrinkage by the opening up of a crack or joint.
Coordinates	Linear or angular dimensions designating the position of a point in relation to a given reference frame. In Wisconsin it refers to the State Plane Coordinate System.
County Trunk Highway System	The County Trunk Highway System, established in 1925, which forms the secondary system of highways within the State, constitutes the interconnecting highways of the State Trunk System, and is made up mainly of highways secondary in traffic importance. It consists generally of highways of local service and is improved and maintained by the 72 county boards, which constitute the local governing authorities. Many county trunks are eligible for federal aid.
Creep	Time dependent inelastic deformation under elastic loading of concrete or steel resulting solely from the presence of stress.
Cross Bracing	Bracing used between stringers and girders to hold them in place and stiffen the structure.
Culvert	A structure not classified as a bridge having a span of 20 ft. or less spanning a watercourse or other opening on a public highway.
Curb	A vertical or sloping member along the edge of a pavement or shoulder forming part of a gutter, strengthening or protecting the edge, and clearly defining the edge of vehicle operators. The surface of the curb facing the general direction of the pavement is called the "face".
Cut-Off-Wall	A wall built at the end of a culvert apron to prevent the undermining of the apron.
Dead Load	The weight of the materials used to build the structure including parapets, utilities and future wearing surface on deck.
Deadman	A concrete mass, buried in the earth behind a structure, that is used as an anchor for a rod or cable to resist horizontal forces that act on the structure.
Deck Structure	A structure that has its floor resting on top of all the main stress carrying members.
Deflection Joint	A joint placed in the parapets of bridges to prevent cracking of the parapet due to deflection of the superstructures.
Design Volume	A volume determined for use in design representing traffic expected to use the highway. Unless otherwise stated, it is an hourly volume.
DHV	Design hourly volume.
Diaphragm	A structural member used to tie adjoining girders together and stiffen them in a lateral direction as well as distribute loads.
Dolphins	A group of piles or sheet piling driven adjacent to a pier. Their purpose is to prevent extensive damage or possible collapse of a pier from a collision with a ship or barge.

Draped Strands	Strand pattern for prestressing strands, where strands are draped at the ends of the girder to decrease the prestressing stress where the applied moments are small.
Drift Pin	A metal pin, tapered at both ends, used to draw members of a steel structure together by being driven through the corresponding bolt holes.
Drip Groove	A groove formed into the underside of a projecting sill or coping to prevent water from following around the projection and reaching the face of the wall.
Dummy Joint	A groove in the surface of a concrete structure that resembles a joint but does not go all the way through. It provides a plane of weakness, and is used to ensure that any cracks that occur will be in a straight line.
Epoxy Coated Rebar	Bar steel reinforcement coated with a powdered epoxy resin to prevent corrosion of the bar steel.
Expansion Bearings	Bearings that allow longitudinal movement of the superstructure relative to the substructure and rotation of the superstructure relative to the substructure.
Expansion Device	A device placed at expansion points in bridge superstructures to carry the vertical bridge loads without preventing longitudinal movement.
Expansion Joint	An expansion device in concrete that allows expansion due to temperature changes, thereby preventing damage to the slabs.
Filler Plate	A steel plate or shim used to filling in space between compression members.
Fixed Bearings	Bearings that do not provide for any longitudinal movement of the superstructure relative to the substructure, but allows for rotation of the superstructure relative to the substructure.
Flat Slab	A reinforced concrete superstructure that has a uniform depth throughout.
Floor Beam	A transverse structural member that extends from truss to truss or from girder to girder across the bridge.
Fracture Critical Members	Steel tension members or steel tension components of members whose failure would probably cause a portion of or the entire bridge to collapse.
Fracture Mechanics	Study of crack growth in materials.
GVW	Gross vehicle weight which is the total weight of basic truck, body and related payload.
Geotextiles	Sheets of woven or nonwoven synthetic polymers or nylon used for drainage and soil stabilization.
Girder	Main longitudinal load carrying member in a structure.
Grade Separation	A crossing of two highways, or a highway and a railroad, at different levels.
Grid Floors	Prefabricated steel grids set on girders and/or stringers provide the roadway surface, generally on moveable highway structures.

Hammerhead Pier	A pier which has only one column with a cantilever cap and is somewhat similar to the shape of a hammer.
Hanger Plate	A steel plate which connects the pins at hinge points thus transmitting the load through the hinge.
Haunch	An increase in depth of a structural member usually at points of intermediate support.
Haunched Slab	A reinforced concrete superstructure that is haunched (has an increased depth) at the intermediate supports.
Hinge	A device used to hold the ends of two adjoining girders together, but allowing for longitudinal movement of the superstructure.
Hinged Bearing	At hinge location along a girder, where forces from supported member are transferred to supporting member by a bearing (See Std. 24.8).
Holddown Device	A device used on bridge abutments to prevent girders from lifting off their bearings as a result of the passage of liveload over the bridge.
Hybrid Girder	A steel plate girder with the web steel having a lower yield strength than the steel in one or both flanges.
Inlet Control	The case where the discharge capacity of a culvert is controlled at the culvert entrance by the depth of headwater and the entrance geometry, including barrel shape, cross sectional area, and inlet edge.
Intermediate Stiffener	A vertical transverse steel member used to stiffen the webs of plate girders between points of supports.
Jetting	Forcing water into holes in an embankment to settle or compact the earth.
Laminated Elastomeric Bearing	A bearing device constructed from elastomer layers restraining at their interfaces by integrally bonded steel or fabric reinforcement. Its purpose is to transmit loads and accommodate movements between a bridge and its supporting structure.
Lateral Bracing	Bracing placed in a horizontal plane between steel girders near the bottom and/or top flanges.
Leads	The vertical members of a pile driver that steady the hammer and pile during the driving.
Liquid Penetrant Inspection	Nondestructive testing method that reveals surface discontinuities by the bleedout of a penetrating medium against a contrasting colored background.
Live Load	For highway structures AASHTO truck or lane loadings. The weight of moving loads.
LRFD	Load Resistance Factor Design.
Longitudinal Stiffener	A longitudinal steel plate (parallel to girder flanges) used to stiffen the webs of welded plate girders.
Low Relaxation Strands	Prestressing tendons which are manufactured by subjecting the strands to heat treatment and tensioning causing a permanent elongation. This increases the strand yield strength and reduces strand relaxation under constant tensile stress.

Low Slump Concrete	Grade "E" concrete, used for concrete masonry overlays and repairs on decks.
Mag Particle Inspection	Nondestructive testing method that is used primarily to discover surface discontinuities in ferro magnetic materials by applying dry magnetic particles to a weld area or surface area that has been suitably magnetized.
Modular Exp. Joints	Multiple, watertight units placed on structures requiring expansion movements greater than 4”.
Mud Sill	A timber platform laid on earth as a support for vertical members or bridge falsework.
NCHRP	National Cooperative Highway Research Program.
Negative Moment	The moment causing tension in the top fibers and compression in the bottom fibers of a structural member.
Negative Reinforcement	Reinforcement placed in concrete to resist negative bending moments.
Non-Redundant Structure	Type of structure with single load path, where a single fracture in a member can lead to the collapse of the structure.
Oil Well Pipe Pile	High quality pipe used in oil industry drilling operations that may be used as an alternate to HP piling.
Outlet Control	The case where the discharge capacity of a culvert is controlled by the elevation of the tailwater in the outlet channel and the slope, roughness, and length of the culvert barrel, in addition to the cross sectional area and inlet geometrics.
P S & E	Literally plans, specifications, and estimates. Usually it refers to the time when the plans, specifications, and estimates on a project have been completed and referred to FHWA for approval. When the P S & E have been approved, the project goes from the preliminary engineering phase to the construction phase.
Parapet	A masonry barrier designed and placed to protect traffic from falling over the edge of a bridge, or in some cases, from crossing lanes of traffic traveling in opposite directions.
Pier	Intermediate substructure unit of a bridge.
Pile	A long, slender piece of wood, concrete, or metal to be driven or jetted into the earth or river bed to serve as a support or protection.
Pile Bent	A pier where the piles are extended to the pier cap to support the structure.
Pile Cap	A slab, usually of reinforced concrete, covering the tops of a group of piles for the purpose of tying them together and transmitting to them as a group the load of the structure which they are to carry.
Pile Foot	The lower extremity of a pile.
Pile Head	The top of a pile.
Pile Points	Metal tip fastened to the lower end of pile to protect it when the driving is hard.
Pin Plate	A steel plate attached to the web plate of girders at hinge points to strengthen the web plate of girders at the hinge locations.

Positive Moment	The moment causing compression in the top fibers and tension in the bottom fibers in a structural member.
Post-Tensioned	Method of prestressing in which the tendon is tensioned after the concrete has cured.
Prestress Camber	The deflection in prestressed girders (usually upward) due to the application of the prestressing force.
Prestressed Concrete	Concrete in which there have been introduced internal stresses of such magnitude and distribution that the stresses resulting from given external loadings are counteracted to a desired degree. In reinforced-concrete members the prestress is commonly introduced by tensioning the steel reinforcement.
Pretensioned	Any method of prestressing in which the strands are tensioned before the concrete is placed.
Radiographic Inspection	Nondestructive testing method where gamma rays or X rays pass thru the object and cast an image of the internal structure onto a sheet of film as the result of density changes.
Redundant Structure	Type of structure with multi-load paths where a single fracture in a member cannot lead to the collapse of the structure.
Reflection Crack	A crack appearing in a resurface or overlay caused by movement at joints or cracks in underlying base or surface.
Residual Camber	Camber due to the prestressing force minus the deadload deflection of the girder.
RIPRAP	A facing of stone used to prevent erosion. It is usually dumped into place, but is occasionally placed by hand.
Rolled Girder Structure	A structure which has a rolled steel beam as the main stress carrying member.
Roughometer	A wheeled instrument used for testing riding qualities or road surfaces.
S.S.P.C.	Steel Structures Painting Council.
Semi-Retaining Abutment	An abutment used for retaining part of the back-fill of the roadway as well as supporting the end of the bridge.
Semi-Through Structure	A structure that has no overhead bracing, but the main stress carrying members project above the floor level.
Shear Connector	A connector used to join cast-in-place concrete to a steel section and to resist the shear at the connection.
Sheet Pile	A pile made of flat or arched cross section to be driven into the ground and meshed or interlocked with like members to form a wall, or bulkhead.
Shoulders	The portions of the roadway between the traveled way and the inside edges of slopes of ditches or fills, exclusive of auxiliary lanes, curbs, and gutters.
Shrinkage	Contraction of concrete due to drying and chemical changes, dependent on time.
Sill Abutment	A shallow concrete masonry abutment generally about 5 feet deep.
Simple Spans	Spans with the main stress carrying members non-continuous, or broken, at the intermediate supports.

Skew or Skew Angle	The acute angle formed by the intersection of a line normal to the centerline of the roadway with a line parallel to the face of the abutments or piers, or in the case of culverts with the centerline of the culverts. Left hand forward skew indicates that, look up station, the left side of the structure is further up station than the right hand side. Right hand skew indicates that the right side of structure is further up station than the left side.
Slope	The degree of inclination to the horizontal. Usually expressed as a ratio, such as 1:25 or 1 of 25, indicating 1 unit rise in 25 units of horizontal distance.
Slope Paving	Paving placed on the slope in front of abutment under a bridge to prevent soil erosion and sliding.
Spandrel	The area between the roadway and the arch in the side view of an arch bridge.
Special Provisions	Special directions and requirements that are prepared for the project under consideration and made a part of the contract.
Specifications	The body of directions, provisions, and requirements contained herein, together with written agreements and all documents of any description, made or to be made, pertaining to the method or manner of performing the work, the quantities, and the quality of materials to be furnished under the contract.
Spread Footing	A footing that is supported directly by soil or rock.
Spur Dike	A wall or mound built or extended out from the upstream side of an abutment used to train the stream flow to prevent erosion of stream bank. May also be used where there is no bridge, but the stream flows along the side of highway embankment.
Stainless Steel Teflon Bearings	Incorporates stainless steel and Teflon with steel to provide the necessary expansion movement.
State Plane Coordinates	The plane-rectangular coordinate system established by the United States Coast and Geodetic Survey. The plane coordinate system in Wisconsin is based on the Lambert conformal conic projection. Plane coordinates are used to locate geographic position.
State Trunk Highway Network	The system of highways heretofore selected and laid out by the Legislature and special legislative committees and by the Commission, and as revised, altered and changed by the Commission, including temporary routes designated by the Commission, the portions of the Interstate Highway System within the state, and routes adopted by the American Association of State Highway Officials as part of the U.S. Numbered Route System.
Stirrup	Vertical U-shaped or rectangular shaped bars placed in concrete beams to resist the shearing stresses in the beam.
Strip Seal Joint	Molded neoprene glands inserted and mechanically locked between armored interfaces of extruded steel sections.
Substructure	All of that part of the structure below the bridge seats or below the skewbacks of arches, or below the tops of the caps of piling or

	framed trestles, except that the wingwalls and parapets of abutments shall be considered as part of the substructure.
Superstructure	That part of the structure above the bridge seats, or above the skewbacks of arches, or above the tops of the caps of piling or framed trestles, including the flooring, but excluding wing walls and parapets of abutments (See substructures).
Supplemental Specifications	Specifications adopted subsequent to the publication of these specifications. They generally involve new construction items or substantial changes in the approved specifications. Supplemental specifications prevail over those published whenever in conflict therewith.
Surcharge	Any load that causes thrust on a retaining wall, other than backfill to the level of the top of the wall.
TRB	Transportation Research Board.
Temporary Holddown Device	A device used at the ends of steel bridges where the slab pour terminates to prevent the girders from lifting off the abutment bridge seats during the pouring of the concrete deck.
Tendon	A name for prestressed reinforcing element whether wires, bars, or strands.
Through Structure	A structure that has its floor connected to the lower portion of the main stress-carrying members, so that the bracing goes over the traffic. A structure whose main supporting members project above the deck or surface.
Tining	Used on finished concrete deck or slab surfaces to provide friction and reduce hydroplaning.
Town Road System	The town road system, or tertiary system of highways within the state, has been improved or maintained under the jurisdiction of the town boards, which are the local governing bodies. Some of the town roads are eligible for federal aid.
Transfer Stresses	In pretensioned prestressed concrete members the stresses that take place at the release of prestress from the bulkheads.
Ultrasonic Inspection	A non-destructive inspection process where by an ultra-high frequency sound wave induced into a material is picked up in reflection from any interface or boundary.
Unbonded Strands	Strands so coated as to prevent their forming a bond with surrounding concrete. Used to reduce stress at the ends of a member.
Underpinning	The adding of new permanent support to existing foundations, to provide either additional capacity or additional depth.
Uplift	A force tending to raise a structure or part of a structure and usually caused by wind and/or eccentric loads, or the passage of live-load over the structure.
Waterproofing Members	Impervious asphaltic sheets overlaid with bituminous concrete to protect decks from the infiltration of chlorides and resulting deterioration.

Wearing Surface	The top layer of a pavement designed to provide a surface resistant to traffic abrasion.
Weep Hole	A drain hole through a wall to prevent the building up of hydraulic pressure behind the wall.
Weir	A dam across a stream for diverting or measuring the flow.
Weld Inspection	Covers the process, written procedure, and welding in process. Post weld heat maintenance if required, post weld visual inspection and non-destructive testing as specified in contract and Standard Specifications.
Welded Wire Fabric	A two-way reinforcement system, fabricated from cold-drawn steel wire, having parallel longitudinal wires welded at regular intervals to parallel transverse wires and conforming to "Specifications for Welded Steel Wire Fabric for Concrete Reinforcement", AASHTO.
Well-Graded	An aggregate possessing proportionate distribution of successive particle sizes.
Wingwall	A wall attached to the abutments of bridges or box culverts retaining the backfill of the roadway. The sloping retaining walls on each side of the center part of a bridge abutment.

Table 2.9-1
Terminology

2.10 WisDOT Bridge History

Prior to the early 1950's, structure types on Wisconsin State Highways were predominantly reinforced concrete slabs and steel girders or trusses with reinforced concrete decks. Also, timber structures were used at a number of county and town road sites. In 1952, the first prestressed concrete voided slab sections were cast and erected incorporating transverse post-tensioning. In 1956, the first prestressed concrete "I" girders were designed and precast. After field setting, these prestressed girders were post-tensioned and completed with an integral cast-in-place reinforced concrete deck. During the mid-1950's and early 1960's, prestressed concrete "I" and steel girder structures were made continuous and incorporated composite designs for carrying live loads.

In 1971, the first cable-stayed bridge in the United States, a three span pedestrian structure, was constructed in Menomonee Falls.

2.10.1 Unique Structures

Structure Type	Bridge Number	Year Constructed	(feet) Span Configuration
Steel Rigid Frames	B-40-48-Milwaukee	1959	45.3, 168.5, 46.3
Steel Rigid Frames	B-56-47/48*-Mirror Lake	1961	50.6, 22-.0, 49.4
Overhead Timber Truss	B-22-50*-Cassville	1962	48.0
Arch Truss	B-16-5-Superior	1961	270.0, 600.1, 270.0
Tied Arches	B-9-87*-Cornell	1971	485.0
Tied Arches	B-12-27*-Prairie du Chien	1974	462.0
Tied Arches	B-40-400-Milwaukee	1974	270.0, 600, 270.0
Tied Arches	B-5-158*-Green Bay	1980	450.1
Tied Arches	B-22-60-Dubuque, IA	1982	670.0
Tied Arches	B-16-38*-Superior	1984	500.0
Prestressed “I” Girders with Cantilever	B-40-524*-Milwaukee	1985	112.0, 69.0, 107.8, 383.5 Spans with 25’ Cantilevers
Prestressed Strutted Arches	B-40-603-Milwaukee	1992	8-158.0 Strutted Arch Spans
Tied Arches	B-32-202* - LaCrosse	2004	475’

Table 2.10-1
Unique Structures

* Designed in the Wisconsin Department of Transportation Bureau of Structures.

This page intentionally left blank.

Table of Contents

3.1 Specifications and Standards 2
3.2 Geometrics and Loading 3

3.1 Specifications and Standards

All bridges in the State of Wisconsin carrying highway traffic are to be designed to the *American Association of State Highway and Transportation Officials (AASHTO) LRFD Design Specifications,* the *American Society for Testing and Materials (ASTM)*, the *American Welding Society (AWS)* and Wisconsin Department of Transportation Standards. The material in this *Bridge Manual* is supplemental to these specifications and takes precedence over them.

All highway bridges are to be constructed according to State of Wisconsin, Department of Transportation, Division of Transportation Systems Development *Standard Specifications for Highway and Structure Construction* and applicable supplemental specifications and special provisions as necessary for the individual project.

All railroad bridges are to be designed to the specifications of the *American Railway Engineering Maintenance-of-Way Association (AREMA) Manual for Railway Engineering* and the specifications of the railroad involved.

3.2 Geometrics and Loading

The structure location is determined by the alignment of the highway or railroad being carried by the bridge and the alignment of the feature being crossed. If the bridge is on a horizontal curve, refer to Figure 3.2-1 to determine the method used for bridge layout. The method of transition from tangent to curve can be found in *AASHTO - A Policy on Geometric Design of Highways and Streets*. Layout structures on the skew when the skew angle exceeds 2 degrees; otherwise detail structures showing a zero skew when possible.

For highway structures, the minimum desirable longitudinal vertical gradient is 0.5 percent. There have been ponding problems on bridges with smaller gradients. This requirement is applied to the bridge in its final condition, without consideration of short term camber effects. Vertical curves with the high point located on the bridge are acceptable provided that sufficient grade each side of the high point is provided to facilitate drainage. Keeping the apex of the curve off of a pier, especially for slab bridges, can be beneficial to reduce ponding at those locations.

The clearances required on highway crossings are given in the Facilities Development Manual (FDM). The recommended clearance for railroad crossings is shown on Chapter 38 Standard for Highway Over Railroad Design Requirements. Proposed railroad clearances are subject to review by the railroad involved.

Highway bridge design live loadings follow the AASHTO LRFD Design specifications using HL93. Chapter 17 provides more detail on applying this load for design. WisDOT requires a specific vehicle design check using the Wis-SPV (Standard Permit Vehicle) which can be found in Chapter 45.

Railroad loadings are specified in the *AREMA Manual for Railway Engineering*.

All new bridges constructed in the State of Wisconsin are designed for the clearances shown in FDM 11-35-1 Attachment 1.8. FDM 11-35-1 Attachment 1.9 covers the cases described in that section as well as bridge widenings. Wires and cables over highways are designed for clearances of 18’-0” to 22’-0”. Vertical clearance is needed for the entire roadway width (critical point to include traveled way, auxiliary lanes, turn lanes and shoulders).

Coordinate early in the design process with the Bureau of Highway Maintenance and Bureau of Structures in determining the appropriate vertical clearance along an OSOW High Clearance Route for new bridges, replacement bridges, bridges with superstructure replacement and overhead utilities. Refer to the FDM 11-10-5.4.3 and 11-35-1.5.1 for additional details along these high routes, including for new and replacement sign structures.

Sidewalks on bridges shall be designed a minimum of 6 feet wide. Refer to the FDM for more details.

The length of bridge approaches should be determined using appropriate design standards. Refer to FDM 3-20-1 for discussion of touchdown points on local program bridge projects.

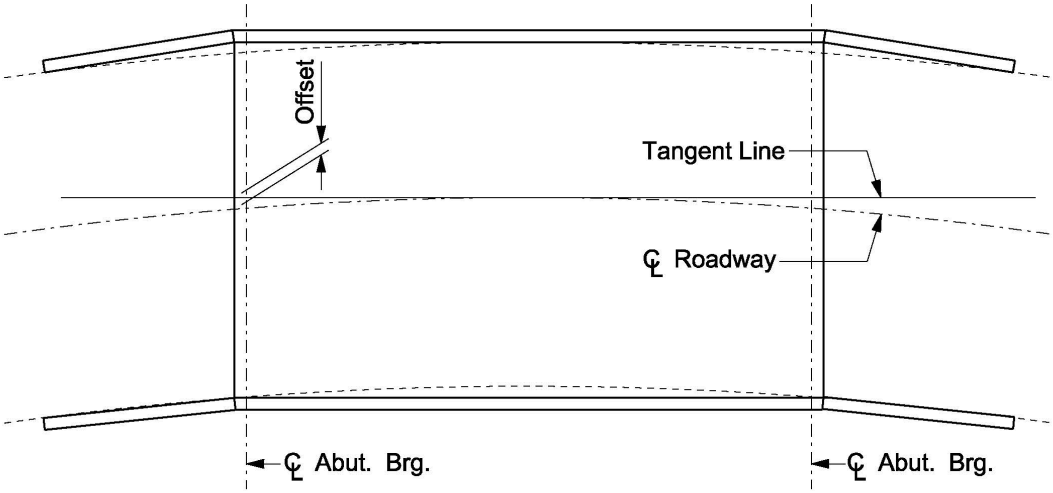

Case 1
For offsets 0" to 6"
Keep bridge straight. Widen bridge to provide full lane and shoulder width over entire length of bridge (round up to nearest 1"). Align straight wings so inside of wing tip is at edge of shoulder.

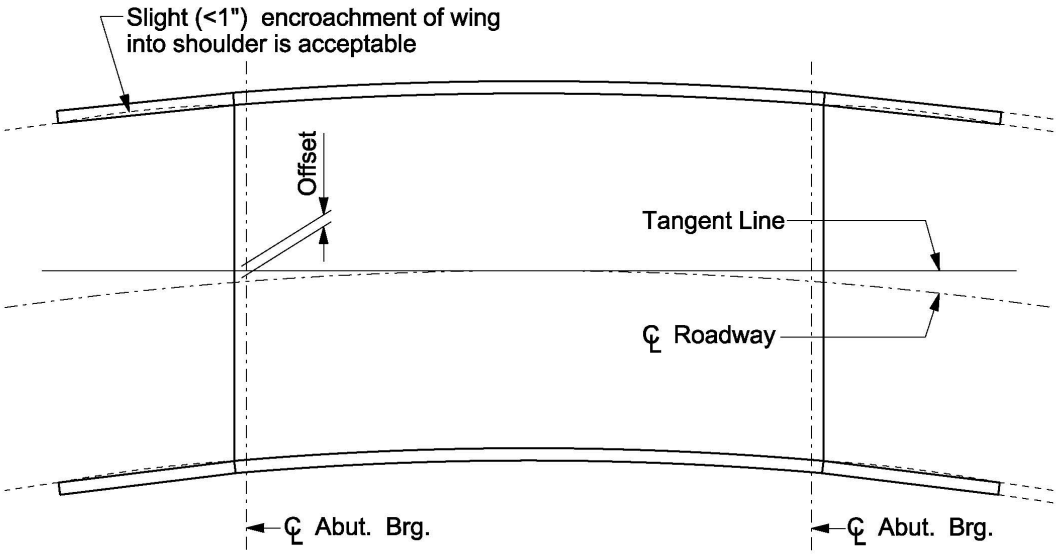

Case 2
For offsets over 6"
Curve entire bridge. Do not widen. Align straight wings so inside of wing tip is at edge of shoulder.

Figure 3.2-1
Bridge Layout on Horizontal Curves

Table of Contents

4.1 Introduction 2
4.2 General Aesthetic Guidelines 3
4.3 Primary Features 5
4.4 Secondary Features 7
4.5 Aesthetics Process 9
4.6 Level of Aesthetics 11
4.7 Accent Lighting for Significant Bridges 12
4.8 Resources on Aesthetics 13
4.9 Non-CSS Aesthetic Concepts 14
4.10 References 18

4.1 Introduction

Transportation structures, such as bridges and retaining walls, have a strong influence on the appearance of transportation projects, as well as the overall appearance of the general vicinity of the project. In locations where there is an opportunity to appreciate such structures, it is often desirable to add aesthetic enhancements to fit the project site.

Desirable bridge aesthetics do not necessarily need to cost much, if any, additional money. Aesthetic enhancements can be made in a number of ways. Primary features such as structure type and shape have the most influence on appearance, with color and texture playing secondary roles. Formliners, especially when used in conjunction with a multi-colored stain, are more expensive than one or two single color stains on smooth concrete, and have on a number of occasions not fit the context of the project. It is the responsibility of the design team to identify aesthetic treatments that are consistent with the environment and goals of the project, are maintainable over the life of the structures, and are cost effective. See 4.5 for current policy regarding structure aesthetics.

While initial cost for aesthetic enhancements is a concern, it has become apparent that maintenance costs can be considerably more than initial costs. Stain, which acts more like paint, must be periodically redone. Such reapplication oftentimes requires lane closures which are both an undesirable inconvenience to users and come with a significant cost associated with maintenance-of-traffic.

4.2 General Aesthetic Guidelines

Primary features – in relative order of importance:

- Superstructure type and shape, with parapets/railings/fencing being fairly prominent, as well. See Chapter 30 – Railings for further guidance.
- Abutment type and shape, with the wings being most prominent.
- Pier type and shape, with the end elevation being the most notable, especially for a bridge over a highway.
- Grade and/or skews.

Secondary features – in relative order of importance:

- Color
- Pattern and texture
- Ornamentation

Consider the following key points, in relative order of importance, when designing structures:

1. Simplicity
2. Good proportions with an emphasis on thinner members, or members that appear thinner
3. Clear demonstration of how the structure works with recognizable flow of forces
4. Fitting its context/surroundings
5. Good proportions in 3 dimensions
6. Choice of materials
7. Coloring – neutral colors, preferably no more than two. (Chapter 9 – Materials lists *AMS Standard Color Numbers* used most commonly for girders)
8. Pattern and texture
9. Lighting

Consider the bridge shape, relative to the form and function at the location. Use a structural shape that blends with its surroundings. The aesthetic impact is the effect made on the viewer by every aspect of a bridge in its totality and in its individual parts. The designer makes an aesthetic decision as well as a structural decision when sizing a girder or locating a pier.

The structure lines should flow smoothly with as few interruptions as possible. Do not clutter up the structure with distractive elements. If light standards are required, place them in line with the piers and abutments, so the vertical lines blend. Light spacing, however, needs to be coordinated with the Regional electrical engineer. Steel girder bearing stiffeners should be the only vertical stiffeners on the outside face of the exterior girders, although longitudinal stiffeners on the outside face can have an appealing look.

Refer to the WisDOT *Traffic Engineering, Operations and Safety Manual* section 2-1-60 for guidance on community sensitive design signing.

4.3 Primary Features

Superstructure Type and Shape

At highway speeds, highway structures are viewed from 300-500 feet away. The general shape of the bridge, with an emphasis on thinness, produces the most appealing structure. Given that there are realistic physical limitations on thinness (without resorting to anchored end spans or other costly measures), the designer has other options available to achieve the appearance of thinness such as:

- Larger overhangs to create better shadow lines.
- Horizontal recess on the backside of the parapet, which could be stained or left as plain concrete. Any parapet that is non-standard (either side) is considered CSS.
- Eliminate or minimize pedestals along the parapet. Such pedestals tend to break up the horizontal flow and make the superstructure appear top heavy. Pedestals, if desired, are better left on the wings to delineate the beginning or end of the bridge or to frame the bridge when viewed from below. If used on the superstructure, keep the pedestal size smaller and space apart far enough to avoid a top heavy appearance. See Chapter 30 – Railings for further guidance.
- Minimize vertical or patterned elements on the backside of the parapet as such elements tend to break up the horizontal flow. Rock formliner has become an overused aesthetic enhancement for the backside of parapets, as its use oftentimes does not fit the surroundings. Any parapet that is non-standard (either side) is considered CSS. See Chapter 30 – Railings for further guidance.
- Structure type should be based on economics, not aesthetics. Additional costs associated with a preferred structure type are considered CSS. Add-ons, such as false arches, etc. are considered CSS.

Abutment Type and Shape

Wing walls are the most visible portion of the abutment. Unless pedestrians are beneath a bridge, formliners or other aesthetic enhancements are not very visible and should be left off of the abutment front face, as these *treatments provide no additional aesthetic value.*

Pier Type and Shape

Pier shapes should be kept relatively simple and uncluttered. For highway grade separations, the end elevation of the pier is the view most often seen by the traveling public. For slower speed roads or where pedestrians travel beneath a bridge, the front pie*r* elevation is also seen. For taller piers, such as those used for multi-level interchanges or water crossings, the entire 3D-view of the pier is readily seen and the pier shape is very important. For such piers, a clean, smooth flowing slender shape that clearly demonstrates the flow of forces from the superstructure to the ground is essential. External and internal (reentrant) corners on the pier/column shaft should be kept to a reasonable number. (Approximately 8 external, 4 internal maximum).

Grade and/or Skew

While grade and skew cannot be controlled by the bridge design engineer, these geometric features do affect bridge appearance. For example, a steep grade or pronounced vertical curve makes the use of a block type rustication an awkward choice. Horizontal blocks are typically associated with buildings and block buildings tend to have level roof lines. Cut stone form liners used on steep grades or pronounced vertical curves require excessive cutting of forms, which drives up price. Consideration of abutment height warrants more consideration when bridges are on steep grades, with a more exposed abutment face on the high end of the bridge producing a more balanced look.

Large skews tend to make piers longer as well as making the front elevation of the pier more visible to properties adjacent to the bridge. With larger skews, having more than one multi-columned pier can create a 'forest' of pier columns if the columns are too numerous. Try to maximize column spacing or use multiple hammerhead piers to help alleviate this effect. Abutment wings tend to be longer on the acute corners of bridges. Whatever aesthetic treatment is used needs to be appropriate for both the longer and shorter wings.

The design engineer should keep in mind that a bridge is never entirely seen at a 90-degree angle as depicted in a side elevation view. As the person viewing the bridge moves closer to the bridge the pier directly in front of them will be seen nearly as an end elevation of the pier, while adjacent piers will start to be viewed more as a pier side elevation. The 'forest' of columns starts to take effect, again, especially for wider bridges.

4.4 Secondary Features

Color

Color can have a strong visual effect, either positive or negative. Using earth toned colors versus vivid colors is preferred. More neutral colors tend to blend in more with the surroundings. Also, over time earth tones will weather less and not appear as dingy or faded. A bright yellow, for example, will begin to appear dull and dirty soon after application. Avoid red as this color is not UV tolerant and will fade. Concrete stain behaves more like paint and is susceptible to fading and peeling, requiring re-application to avoid an unsightly structure. Stained concrete in need of maintenance looks worse than concrete that was originally left unstained.

Using a maximum of two colors will lend itself to the desired outcome of a clean appearance. On larger structures it may be desirable to use two colors for everything other than the girders, which may be a third color. Remember that plain concrete is a color, too. It should be utilized as much as possible (especially on smaller surfaces) to reduce initial cost and, especially, future maintenance costs.

Utilizing a ribbed, or broken ribbed pattern on a large expanse of plain concrete can give the appearance of color as the patterned section will appear darker than the adjacent plain concrete. This is a good way to add 'color' without the future maintenance costs associated with actual stain reapplication.

As much as possible, *AMS Standard Color Numbers* should be used for color selection. A few colors are given in Chapter 9 – Materials, but others may be used. STSP's should be used as is for staining and multi-colored staining. Specific colors, areas to be applied, etc. should be referenced on the plan sheets.

Pattern and Texture

See 4.5 for current policy regarding structure aesthetics, including patterns and texture.

Large expanses of flat concrete, even if colored, are usually not desirable.

Most bridges are seen from below by people traveling at higher rates of speed. Detail smaller than 4-inches is difficult to discern. The general shape, and perhaps color, will have a greater visual effect than the pattern and/or texture. Sometimes texture is used to represent a building material that wasn't used for the construction of the structure, as would be the case of rock form liner. While a rock appearance might be appropriate for a smaller bridge over a stream in a small town, it seldom fits the context of a grade separation over a highway or busy urban interchange. Modern bridges should, for the most part, look like they are built out of modern materials appropriate to the current time. Texture consisting of random or ordered geometric forms is generally more preferred over simulating other materials.

On MSE retaining walls it is desirable to keep logos or depictions within a given panel. Matching lines across panels, especially horizontal lines susceptible to differential panel settlement, is difficult. Rock texturing is unconvincing as real stone due to panel joints. A random geometric pattern is a good way to give relief to a wall.

Repetition in pattern rather than an assembly of various patterns or details is more cost effective. For effects that are meant to appear random (e.g. rock), care must be taken in order for the pattern repetition to not appear noticeable.

At all locations on a structure (abutment wings and piers, MSE walls, etc.), form details should be terminated 1'-0" below low water or ground elevations where they will not be visible. See the Standard for Formliner Details.

Designers are cautioned about introducing textures and relief on the inside faces of vehicle barriers. The degree of relief and texture can influence the vehicle response during a crash. See Chapter 30 – Railings for further guidance.

Ornamentation

If signs or medallions are necessary, refer to section 2-1-60 of the *Traffic Engineering, Operations and Safety Manual*.

Regarding ornamentation in general, more is seldom better.

"In bridge building… to overload a structure or any part thereof with ornaments… would be to suppress or disguise the main members and to exhibit an unbecoming wastefulness. The plain or elaborate character of an entire structure must not be contradicted by any of its parts."

- J.B. Johnson, 1912

4.5 Aesthetics Process

The structural design engineer needs to be involved early in the aesthetic decision making process. BOS should have early representation on projects with considerable aesthetic concerns. Throughout this process it is important to remember that aesthetics is a concept, not a commodity – it is about a look, not about what can be added to a structure.

WisDOT policy item:

For current statewide policy on aesthetic and/or decorative features (CSS), please see the *Program Management Manual* (PMM). See 4.3 for discussion on primary features such as shape and 4.9 for simple aesthetic concepts. The information below is current WisDOT policy. **Note: Any deviation from the standard details found in the WisDOT Bridge Manual regarding aesthetic features requires prior approval from BOS.**

Aesthetic and/or Decorative Items (non-Participating, or CSS Items)

- *All* formliner is considered CSS. This includes geometric patterns, vertical ribs, rock patterns, custom patterns/designs, etc.
- Stain
- Ornamentation, including city symbols, city names, etc. (City symbols, city names, memorial names, etc. are not allowed on the structures).
- Fencing, railing, or parapets not described below.
- Structure shapes not defined in 4.3 and 4.9 or the standard details.

Note: Future maintenance costs can be substantial when factoring in not only surface preparation and stain/paint, but planning, mobilization and maintenance of traffic required that is entirely attributable to the maintenance project. For example, re-staining of concrete, when all project costs are accounted for, often exceeds $20/SF.

Participating (non-CSS) Items

- Street Names: Street names recessed in the bridge parapet, and stained for visibility, are considered a participating item. The street name is considered an assistance to drivers. Having the name in the parapet removes the sign from the side of the road, which is considered a maintenance problem and safety hazard.

- Protective Fence: Any standard fencing from the Wisconsin Bridge Manual is considered a participating item. Additional costs for decorative fencing requested by the municipality will be included as a non-participating item. Fencing can be either galvanized or a duplex system of galvanized with a colored polymer-coating and/or paint. The polymer coating and/or paint is a nominal cost that provides a longer service life for the fence.

- Bridge Rail: Any standard railing from the Wisconsin Bridge Manual is considered a participating item as long as the railing is required for pedestrian and/or bicyclist

protection. There is no discernable difference in cost between any of the standard railings. Paint is a nominal cost that provides longer service life for the railing.

- Bridge Parapet: Any standard parapet from the Wisconsin Bridge Manual is considered a participating item. The Vertical Face Parapet 'TX' may be used as a participating item as long as the parapet is required for pedestrian and/or bicyclist protection. There is no discernable difference in cost between the Type 'TX' and a shorter, plain concrete parapet with railing that is often used for pedestrian and/or bicyclist protection.

4.6 Level of Aesthetics

The Regional Office should establish one of the following levels of aesthetics and indicate it on the Structure Survey Report. This will help the structural designer decide what level of effort and possible types of aesthetics treatments to consider. If Level 2 or greater is indicated, the Regional Office personnel or consultant must suggest particular requirements such as railing type, pier shape, special form liners, color, etc. in the comments area of the Structure Survey Report. Most Regions/municipalities prefer to leave anti-graffiti coating off of structures and would rather re-stain, as this is easier than trying to clean the graffiti.

Aesthetic treatments should be agreed upon prior to completion of preliminary plans in order for the final design to proceed efficiently. These details would be developed through the aesthetic process.

1. Level One: A general structure designed with standard structure details. This would apply in rural areas and urban areas with industrial development.

2. Level Two: Consists of cosmetic improvements to conventional Department structure types, such as the use of color stains/paints, texturing surfaces, modifications to fascia walls and beams or more pleasing shapes for columns. This would apply where there needs to be less visual impact from roadway structures.

3. Level Three: Emphasize full integration of efficiency, economy and elegance in structure components and the structure as a whole. Consider structure systems that are pleasing such as shaped piers and smooth superstructure lines. These structures would need to be in harmony with the surrounding buildings and/or the existing landscape.

4. Level Four: Provide overall aesthetics at the site with the structure incorporating level three requirements. The structure would need to blend with the surrounding terrain and landscaping treatment would be required to complete the appearance.

Note: The above text was left in this chapter, but will likely be modified or removed in future editions of this Manual. See 4.5 for current policy regarding CSS and levels of aesthetics.

4.7 Accent Lighting for Significant Bridges

The Wisconsin DOT will consider as part of an improvement project accent lighting for significant urban bridges with a clear span length of 450 feet and greater. The lighting would accent significant components above the driving surface such as an arch, truss, or a cable stayed superstructure. This lighting would enhance the noteworthy structure components of these significant bridges. The *Traffic Engineering, Operations and Safety Manual* (TEOpS) and the *Program Management Manual* (PMM) have respective guidance of maintenance and cost share policy.

The following structures would fall into this definition of significant urban bridges:

"Name"	Region	County	Feature On	Feature Under	Year Built	Border
Tower Drive	NE	Brown	IH 43	Fox River	1979	
Praire du Chien	SW	Crawford	USH 18-STH 60	Mississippi River	1974	X
Blatnik	NW	Douglas	IH 535-USH 53	St Louis Bay	1961	X
Bong	NW	Douglas	USH 2	St Louis River	1983	X
Cass Arch	SW	La Crosse	USH 14 EB	Mississippi River	2004	X
Cass Truss	SW	La Crosse	USH 14 WB	Mississippi River	1940	X
Hoan Bridge	SE	Milwaukee	IH 794 WB-Lake Freeway	Milwaukee River	1974	
Dubuque (Iowa)	SW	Grant	USH 61-USH 151	Mississippi River	1982	X
Stillwater	NW	St Croix	TH 36	St Croix River	New	X

Table 4.4-1
Accent Lighting for Significant Bridges

4.8 Resources on Aesthetics

The *Bridge Aesthetic Sourcebook* from AASHTO is a very good source of practical ideas for short and medium span bridges. The Transportation Research Board (TRB) Subcommittee on Bridge Aesthetics authored this document and it can be found on the following website: The final printing of this guide (noted in the References) is available through the AASHTO publication website:

4.9 Non-CSS Aesthetic Concepts

Standards 4.02-4.05 provide details for acceptable non-CSS funded aesthetic concepts. The three types (Type I, Type II and Type III) show a plain wing, a wing with a rustication trim line and a wing with a recessed panel, respectively. For each given wing type, one or two acceptable parapet and/or pier details are shown.

- Type I: Simple features utilizing a plain wing, standard parapet and minimal pier rustications. Type I is ideal for most rural and some urban applications.

- Type II: The wings utilize the same rustication trim line as the columns. The columns can have single or paired rustication trim lines. Single rustication lines can be used for 32-inch parapets and double rustication lines can be used for 42-inch parapets. Type II can be used in urban applications and other limited areas.

- Type III: Recessed panel wings and recessed panel columns, along with standard parapets, are to be used in urban settings, only.

Within a given corridor, only one Type should be chosen so as not to create a disharmonious experience for those driving the corridor.

The following pages show renderings of the various non-CSS aesthetic concepts.

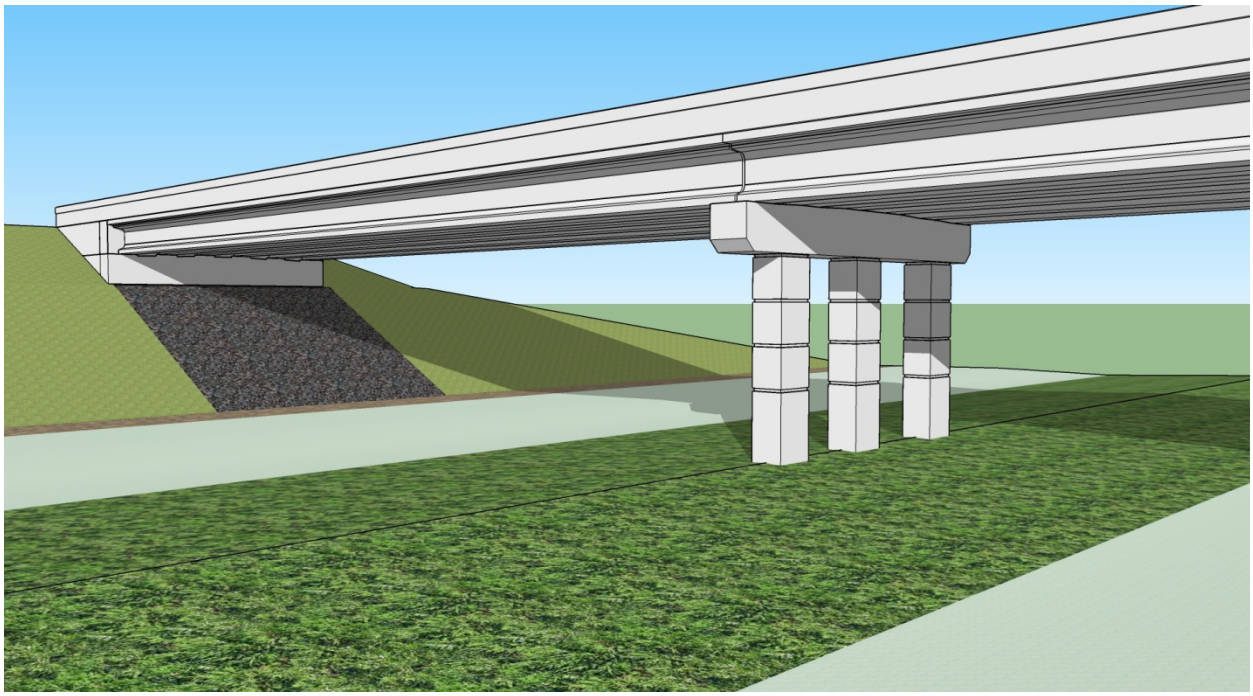

Figure 4.9-1
Aesthetic Concept Type I

- Plain abutment wings
- Single banded pier rustications
- Standard parapets
- Most rural and some urban applications

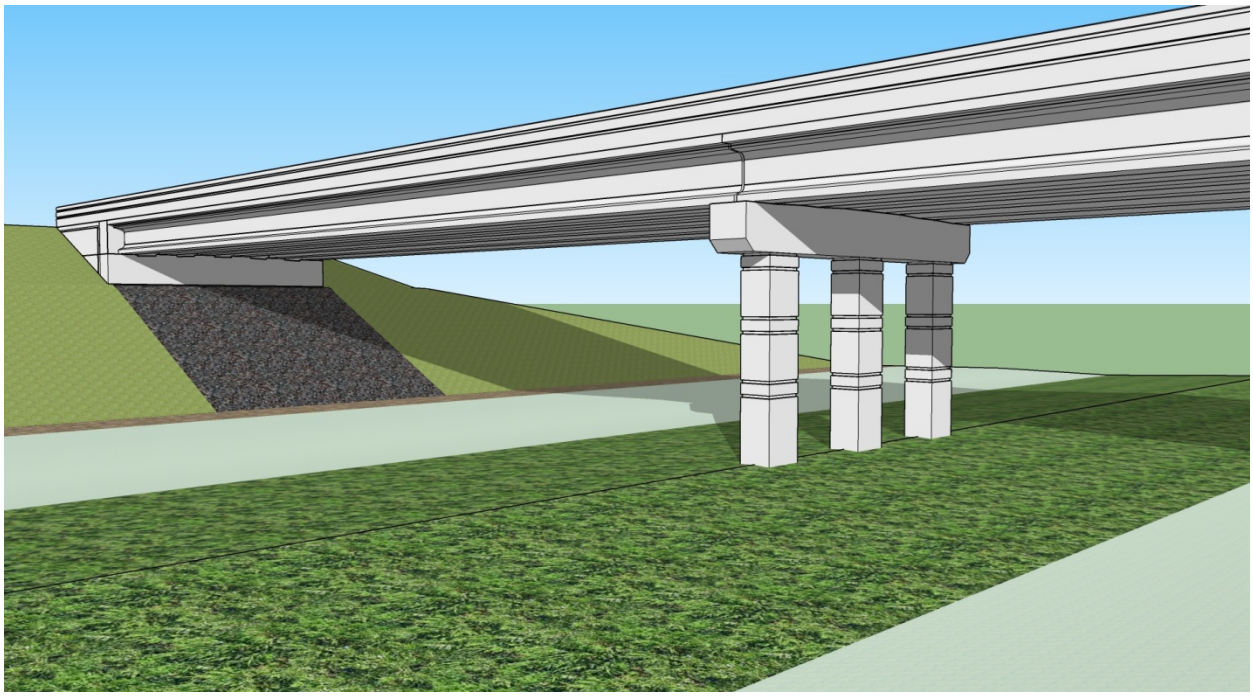

Figure 4.9-3
Aesthetic Concept Type II

- Rustication trim line on abutment wing
- Single or double banded pier rustications
- Rustication trim line(s) on parapets (one on 32” parapet and two on 42” parapet)
- Urban and other select applications

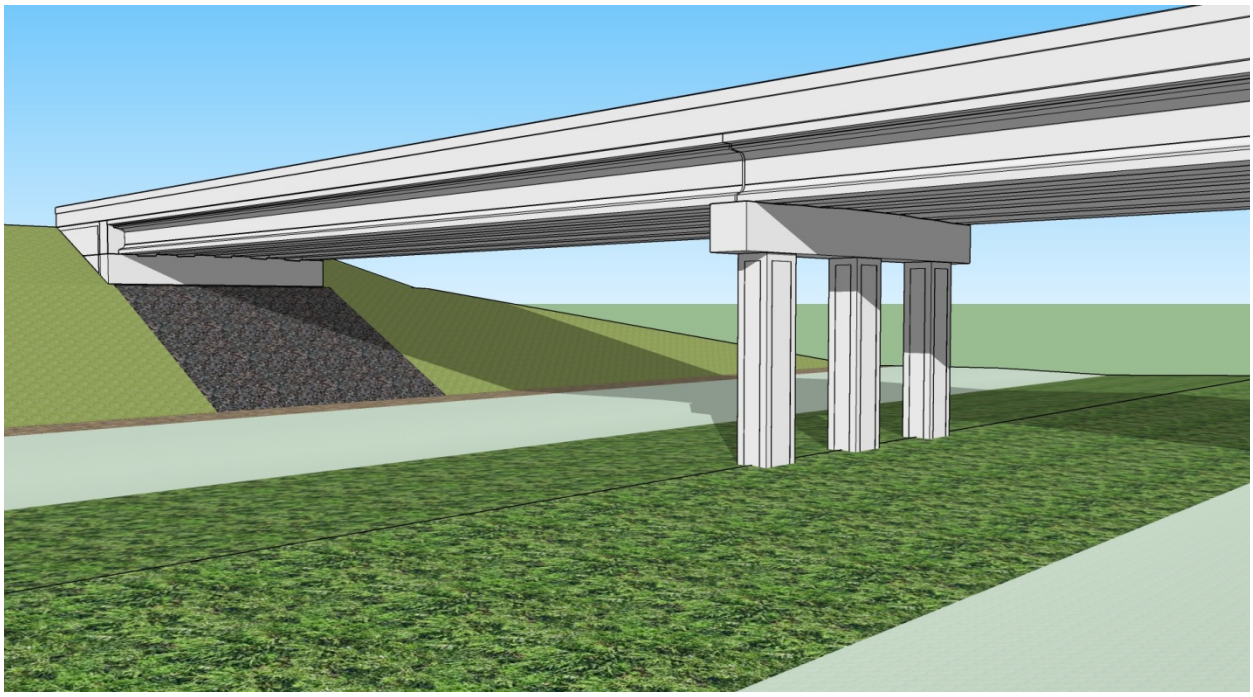

Figure 4.9-2
Aesthetic Concept Type III

- Recessed panel abutment wings
- Recessed panel columns
- Standard parapet
- Urban applications

4.10 References

1. AASHTO, *Bridge Aesthetics Sourcebook,* 2010.

2. Gottemoeller, Frederick, *Bridgescape: The Art of Designing Bridges*, John Wiley & Sons, Inc., 2004.

Table of Contents

5.1 Factors Governing Bridge Costs 2
5.2 Economic Span Lengths 4
5.3 Contract Unit Bid Prices 5
5.4 Bid Letting Cost Data 6
5.4.1 2015 Year End Structure Costs 6
5.4.2 2016 Year End Structure Costs 9
5.4.3 2017 Year End Structure Costs 10
5.4.4 2018 Year End Structure Costs 12
5.4.5 2019 Year End Structure Costs 14

5.1 Factors Governing Bridge Costs

Bridge costs are tabulated based on the bids received for all bridges let to contract. While these costs indicate some trends, they do not reflect all the factors that affect the final bridge cost. Each bridge has its own conditions which affect the cost at the time a contract is let. Some factors governing bridge costs are:

1. Location - rural or urban, or remote regions
2. Type of crossing
3. Type of superstructure
4. Skew of bridge
5. Bridge on horizontal curve
6. Type of foundation
7. Type and height of piers
8. Depth and velocity of water
9. Type of abutment
10. Ease of falsework erection
11. Need for special equipment
12. Need for maintaining traffic during construction
13. Limit on construction time
14. Complex forming costs and design details
15. Span arrangements, beam spacing, etc.

Figure 5.2-1 shows the economic span lengths of various type structures based on average conditions. Refer to Chapter 17 for discussion on selecting the type of superstructure.

Annual unit bridge costs are included in this chapter. The area of bridge is from back to back of abutments and out to out of the concrete superstructure. Costs are based only on the bridges let to contract during the period. In using these cost reports exercise care when a small number of bridges are reported as these costs may not be representative.

In these reports prestressed girder costs are grouped together because there is a small cost difference between girder sizes. Refer to unit costs. Concrete slab costs are also grouped together for this reason.

No costs are shown for rolled steel sections as these structures are not built very often. They have been replaced with prestressed girders which are usually more economical. The cost of plate girders is used to estimate rolled section costs.

For structures over a railroad, use the costs of grade separation structures. Costs vary considerably for railroad structures over a highway due to different railroad specifications.

Other available estimating tools such as *AASHTOWare Project Estimator* and *Bid Express*, as described in Facilities Development Manual (FDM) 19-5-5, should be the primary tools for structure project cost estimations. Information in this chapter can be used as a supplemental tool.

5.2 Economic Span Lengths

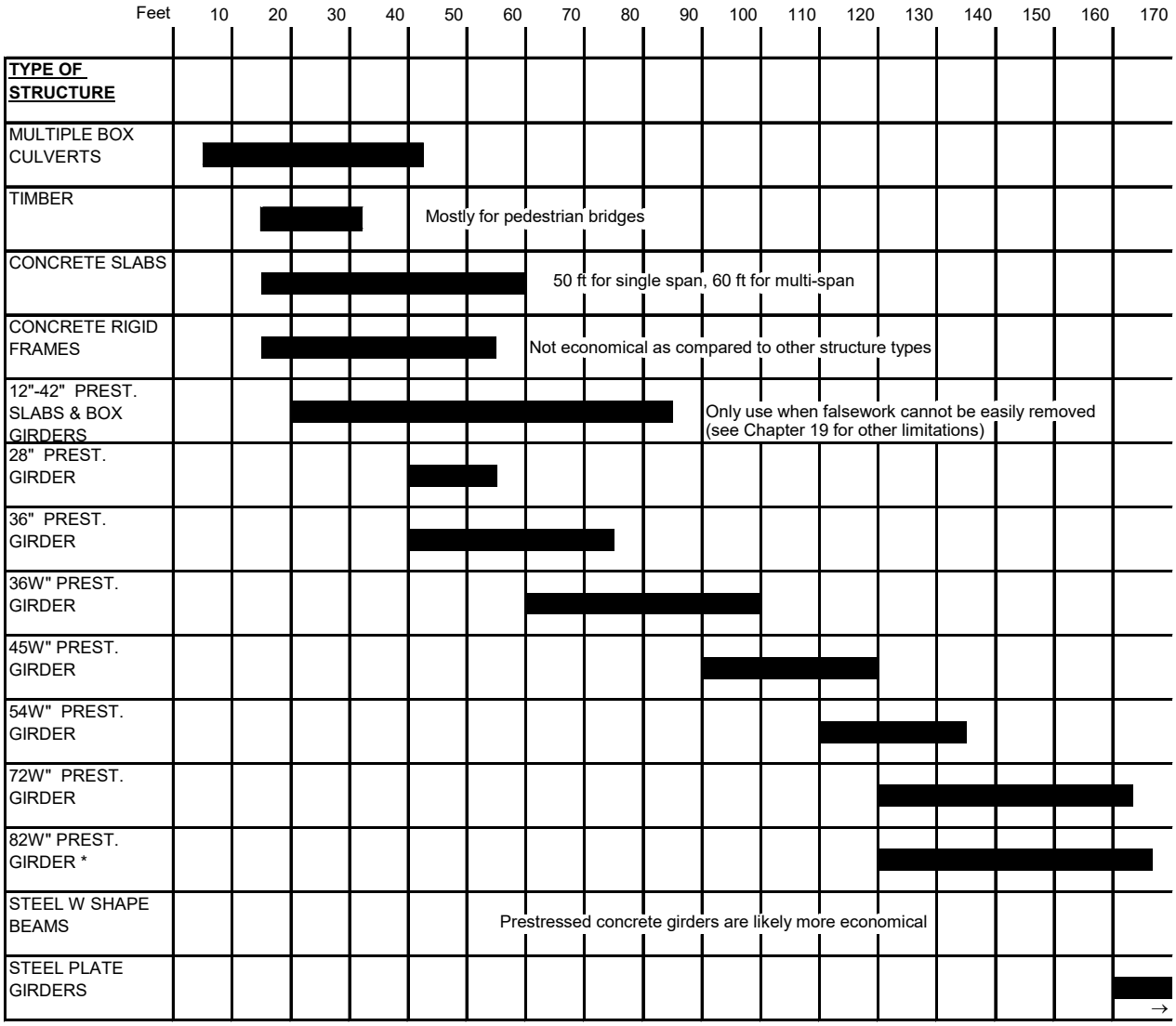

*Currently there is a moratorium on the use of 82W" prestressed girders in Wisconsin

Figure 5.2-1
Economic Span Lengths

5.3 Contract Unit Bid Prices

Individual bid items should be looked up in Estimator or Bid Express

5.4 Bid Letting Cost Data

This section includes past information on bid letting costs per structure type. Values are presented by structure type and include: number of structures, total area, total cost, superstructure cost per square foot and total cost per square foot.

The square foot costs include all items shown on the structure plan except removing old structure. Costs also include a proportionate share of the project's mobilization, as well as structural approach slab costs, if applicable. However, square footage does not include the structural approach slabs, and is based on the length of the bridge from abutment to abutment. (It is realized that this yields a slightly higher square footage bridge cost for those bridges with structural approach slabs.)

5.4.1 2015 Year End Structure Costs

Structure Type	No. of Bridges	Total Area (Sq. Ft.)	Total Costs	Super. Only Cost Per Square Foot	Cost per Square Foot
Prestressed Concrete Girders	22	338,229	41,220,154	60.96	121.87
Reinf. Conc. Slabs (Flat)	26	47,766	7,151,136	62.77	149.71
Reinf. Conc. Slabs (Haunched)	6	27,967	3,517,913	57.49	125.79
Buried Slab Bridges	1	2,610	401,000	43.74	153.64
Pre-Fab Pedestrian Bridges	3	29,304	3,440,091	--	117.39

Table 5.4-1
Stream Crossing Structures

Structure Type	No. of Bridges	Total Area (Sq. Ft.)	Total Costs	Super. Only Cost Per Square Foot	Cost per Square Foot
Prestressed Concrete Girders	58	768,458	102,067,913	66.04	132.82
Reinf. Conc. Slabs (Flat)	2	8,566	922,866	46.36	107.74
Reinf. Conc. Slabs (Haunched)	1	6,484	868,845	41.26	133.99
Steel Plate Girders	4	100,589	20,248,653	137.13	201.30
Trapezoidal Steel Box Girders	4	305,812	79,580,033	189.24	260.23
Rigid Frames	2	7,657	2,730,308	--	356.58
Timber	1	16,800	1,982,669	--	118.02
Pre-Fab Pedestrian Bridges	1	1,851	449,475	--	242.83

Table 5.4-2
Grade Separation Structures

Box Culvert Type	No. of Culverts	Cost per Lin. Ft.
Single Cell	2	2,235.67
Twin Cell	6	3,913.05
Single Pipe	1	2,262.11
Double Pipe	2	426.20
Triple Pipe	2	1,424.09
Quadruple Pipe	1	2,332.96

Table 5.4-3
Box Culverts

Retaining Wall Type	No. of Walls	Total Area (Sq. Ft.)	Total Costs	Cost per Square Foot
MSE Block Walls	11	22,353	1,594,171	71.32
MSE Panel Walls	51	315,440	28,038,238	88.89
MSE Panel Walls w/Integral Barrier	4	14,330	1,098,649	76.67
Concrete Walls	2	6,850	712,085	103.96
Wire Faced MSE Walls	3	10,345	1,501,948	145.19
Wire Faced MSE Walls w/ Precast Conc. Wall Panels	12	50,670	10,195,161	201.21
Secant Pile Walls	1	5,796.50	1,075,785	185.59
Soldier Pile Walls	6	37,498	6,037,788	161.02
Steel Sheet Pile Walls	6	11,319	668,227	59.04

Table 5.4-4
Retaining Walls

Sign Structure Type		No. of Structures	Total Lineal Ft. of Arm	Total Costs	Cost per Lin. Ft.
Butterfly (1-Sign)	Conc. Col.	2	44	122,565	2,785.56
	1-Steel Col.	2	42	63,965	1,522.98
Butterfly (2-Signs)	1-Steel Col.	1	21	48,971	2,331.97
Cantilever	Conc. Col	18	530	1,217,454	2,297.08
	1-Steel Col.	15	394	528,950	1,342.85
Full Span	Conc. Col.	44	4,035	5,309,906	1,315.96
	1-Steel Col.	12	720	476,598	662.00
	2-Steel Col.	10	711	775,858	1,091.22
Full Span + Cantilever	Conc. Col.	1	84	166,003	1,976.22

Table 5.4-5
Sign Structures

5.4.2 2016 Year End Structure Costs

Structure Type	No. of Bridges	Total Area (Sq. Ft.)	Total Costs	Super. Only Cost Per Square Foot	Cost per Square Foot
Prestressed Concrete Girders	19	199,367	26,157,660	57.97	131.20
Reinf. Conc. Slabs (Flat)	36	72,066	10,985,072	63.40	152.43
Reinf. Conc. Slabs (Haunched)	5	22,144	2,469,770	50.63	111.53
Prestressed Box Girders	3	4,550	773,098	80.85	169.91

Table 5.4-6
Stream Crossing Structures

Structure Type	No. of Bridges	Total Area (Sq. Ft.)	Total Costs	Super. Only Cost Per Square Foot	Cost per Square Foot
Prestressed Concrete Girders	25	343,165	40,412,805	60.62	117.76
Reinf. Conc. Slabs (Haunched)	5	33,268	4,609,286	59.21	138.55
Steel Plate Girders	3	127,080	18,691,714	90.78	147.09
Pedestrian Bridges	1	4,049	846,735	91.35	209.13

Table 5.4-7
Grade Separation Structures

Box Culvert Type	No. of Culverts	Cost per Lin. Ft.
Single Cell	18	1,694.52
Twin Cell	10	2,850.45
Single Pipe	1	1,268.42

Table 5.4-8
Box Culverts

Retaining Wall Type	No. of Walls	Total Area (Sq. Ft.)	Total Costs	Cost per Square Foot
MSE Block Walls	10	10,310	558,347	54.16
MSE Panel Walls	21	112,015	8,681,269	77.50
Modular Walls	5	6,578	419,334	63.75
Soldier Pile Walls	2	13,970	1,208,100	86.48
Steel Sheet Pile Walls	1	3,440	104,814	30.47

Table 5.4-9
Retaining Walls

Sign Structure Type		No. of Structures	Total Lineal Ft. of Arm	Total Costs	Cost per Lin. Ft.
Butterfly (2-Signs)	Conc. Col.	1	25.25	89,102	3,528.80
	1-Steel Col.	1	24.34	44,176	1,814.97
Cantilever	Conc. Col	5	171	384,487	2,248.46
	1-Steel Col.	18	536.25	758,646	1,414.72
Full Span	Conc. Col.	0	--	--	--
	1-Steel Col.	7	430.25	400,125	929.98
	2-Steel Col.	7	590	611,292	1,036.23

Table 5.4-10
Sign Structures

5.4.3 2017 Year End Structure Costs

Structure Type	No. of Bridges	Total Area (Sq. Ft.)	Total Costs	Super Only Cost per Square Foot	Cost per Square Foot
Prestressed Concrete Girders	24	238,956	33,970,344.86	60.05	142.16
Reinf. Conc. Slabs (Flat)	44	69,095	11,063,299.53	57.75	160.12
Reinf. Conc. Slabs (Haunched)	8	48,434	6,759,897.64	55.41	139.57
Prestressed Box Girders	2	2,530	691,474.35	117.93	273.31

Table 5.4-11
Stream Crossing Structures

Structure Type	No. of Bridges	Total Area (Sq. Ft.)	Total Costs	Super. Only Cost per Square Foot	Cost per Square Foot
Prestressed Concrete Girders	28	302,672	37,247,580.94	52.67	123.10
Reinf. Conc. Slabs (Flat)	25	58,076	9,561,823.06	42.14	164.64
Reinf. Conc. Slabs (Haunched)	6	49,160	9,444,012.75	43.73	192.11
Steel Plate Girders	0	--	--	--	--
Pedestrian Bridges	2	12,864	2,141,133.01	53.53	166.44

Table 5.4-12
Grade Separation Structures

Box Culvert Type	No. of Culverts	Cost per Lin. Ft.
Single Cell	18	1,849.26
Twin Cell	3	3,333.61
Single Pipe	1	1,752.93
Precast	1	2,204.32
Precast Three-Sided	3	8,754.76

Table 5.4-13
Box Culverts

Retaining Wall Type	No. of Walls	Total Area (Sq. Ft.)	Total Costs	Cost per Square Foot
CIP Cantilever	17	30,808	3,277,766.33	106.39
CIP Facing (MSE)	3	10,611	1,683,447.67	158.65
MSE Block Walls	6	13,378	1,457,896.15	108.98
MSE Panel Walls	21	137,718	11,789,074.54	85.60
Modular Walls	3	3,643	254,004.30	69.72
Precast Panel and Wire Faced	3	17,270	2,294,507.57	132.86
Soldier Pile Walls	0	--	--	--
Steel Sheet Pile Walls	5	15,056	1,442,741.15	95.82

Table 5.4-14
Retaining Walls

Sign Structure Type		No. of Structures	Total Lineal Ft. of Arm	Total Costs	Cost per Lin. Ft.
Butterfly (1-Sign)	Conc. Col.	0	--	--	--
	1-Steel Col.	4	84.5	221,728.47	2,623.01
Butterfly (2-Signs)	Conc. Col.	0	--	--	--
	1-Steel Col.	6	217.22	417,307.35	1,921.13
Cantilever	Conc. Col	0	--	--	--
Cantilever Full Span	1-Steel Col.	28	825.75	1,165,570.03	1,411.53
	2-Steel Col.	2	199	245,997.03	1,236.17
	Conc. Col.	2	185	349,166.59	1887.39
Full Span	1-Steel Col.	6	466.03	589,773.11	1265.53
	2-Steel Col.	21	1,773.5	1,789,041.14	1008.76

Table 5.4-15
Sign Structures

5.4.4 2018 Year End Structure Costs

Structure Type	No. of Bridges	Total Area (Sq. Ft.)	Total Costs	Super. Only Cost Per Square Foot	Cost per Square Foot
Prestressed Concrete Girders	45	276,820	45,260,979	66.45	163.50
Reinf. Conc. Slabs (Flat)	49	72,180	12,259,362	68.04	169.85
Reinf. Conc. Slabs (Haunched)	8	34,732	6,437,911	70.04	185.36
Prestressed Box Girder	1	1,864	419,175	113.39	224.88

Table 5.4-16
Stream Crossing Structures

Structure Type	No. of Bridges	Total Area (Sq. Ft.)	Total Costs	Super. Only Cost Per Square Foot	Cost per Square Foot
Prestressed Concrete Girders	52	727,872	124,665,613	59.90	171.30
Reinf. Conc. Slabs (Haunched)	6	56,580	10,858.579	57.14	191.92
Steel Plate Girders	0	--	--	--	--
Trapezoidal Steel Box Girders	0	--	--	--	--

Table 5.4-17
Grade Separation Structures

Box Culvert Type	No. of Culverts	Cost per Lin. Ft.
Single Cell	13	1,948
Twin Cell	6	2,941
Three Cell	1	6,354

Table 5.4-18
Box Culverts

Bridge Type	Cost
Twin Pipe Culvert	2,292 Lin. Ft.

Table 5.4-19
Miscellaneous Bridges

Retaining Wall Type	No. of Walls	Total Area (Sq. Ft.)	Total Costs	Cost per Square Foot
CIP Cantilever	0	--	--	--
CIP Facing (MSE)	0	--	--	--
MSE Block Walls	3	4,693	567,547	120.93
MSE Panel Walls	49	378,371	44,841,726	118.51
Modular Walls	3	2,402	204,002	84.93
Precast Panel and Wire Faced	1	5,945	948,347	159.53
Soldier Pile Walls	4	8,531	1,570,107	184.05

Steel Sheet Pile Walls	2	16,620	1,639,380	98.64

Table 5.4-20
Retaining Walls

Sign Structure Type		No. of Structures	Total Lineal Ft. of Arm	Total Costs	Cost per Lin. Ft.
Butterfly (1-Sign)	Conc. Col.	6	118	273,756	2,319.97
	1-Steel Col.	0	--	--	--
Butterfly (2-Signs)	Conc. Col.	5	88	277,787	3,156.67
	1-Steel Col.	4	73	326,652	4,474.68
Cantilever	Conc. Col	8	234	588,676	2,515.71
	1-Steel Col	32	850.83	1,380,710	1,622.78
Cantilever Full Span	Conc. Col.	16	1267	2,909,973	2,296.74
	1-Steel Col.	2	184.2	279,115	1,515.28
	2-Steel Col.	17	1469	2,236,464	1,522.44
Full Span	1-Steel Col.	10	675.5	513,623	760.36
	2-Steel Col.	0	--	--	--

Table 5.4-21
Sign Structures

5.4.5 2019 Year End Structure Costs

Structure Type	No. of Bridges	Total Area (Sq. Ft.)	Total Costs	Super. Only Cost Per Square Foot	Cost per Square Foot
Prestressed Concrete Girders	25	128,141	21,357,588	66.55	166.67
Reinf. Conc. Slabs (Flat)	44	69,664	12,974,370	70.13	186.24
Reinf. Conc. Slabs (Haunched)	10	43,057	7,035,245	100.04	163.39
Prestressed Box Girder	1	1,253	292,643	101.17	233.55

Table 5.4-16
Stream Crossing Structures

Structure Type	No. of Bridges	Total Area (Sq. Ft.)	Total Costs	Super. Only Cost Per Square Foot	Cost per Square Foot
Prestressed Concrete Girders	19	170,986	30,850,532	75.00	180.40
Reinf. Conc. Slabs (Haunched)	3	18,772	3,335,053	60.01	177.76
Steel Beams	1	7,964	1,897,388	95.77	238.25
Steel Plate Girders	3	130,986	30,430,624	144.97	232.32

Table 5.4-17
Grade Separation Structures

Box Culvert Type	No. of Culverts	Cost per Lin. Ft.
Single Cell	8	2,611
Twin Cell	5	3,559
Three Cell	1	3,444

Table 5.4-18
Box Culverts

Bridge Type	Cost
(none)	--

Table 5.4-19
Miscellaneous Bridges

Retaining Wall Type	No. of Walls	Total Area (Sq. Ft.)	Total Costs	Cost per Square Foot
CIP Cantilever	0	--	--	--
CIP Facing (MSE)	0	--	--	--
MSE Block Walls	7	17,195	2,490,957	144.87
MSE Panel Walls	27	85,496	10,517,536	123.02
Modular Walls	0	--	--	-
Precast Panel and Wire Faced	0	--	--	--
Soldier Pile Walls	3	6,290	1,378,911	219.22
Steel Sheet Pile Walls	1	1,940	92,512	47.69

Table 5.4-20
Retaining Walls

Sign Structure Type		No. of Structures	Total Lineal Ft. of Arm	Total Costs	Cost per Lin. Ft.
Butterfly (1-Sign)	Conc. Col.	0	--	--	--
	1-Steel Col.	0	--	--	--
Butterfly (2-Signs)	Conc. Col.	0	--	--	--
	1-Steel Col.	0	--	--	--
Cantilever	Conc. Col	0	--	--	--
	1-Steel Col	2	56	42,520	1,518
Cantilever Full Span	Conc. Col.	--	--	--	--
	1-Steel Col.	--	--	--	--
	2-Steel Col.	10	735.5	126,495	1,719.86
Full Span	1-Steel Col.	3	187	45,069	723.04
	2-Steel Col.	0	--	--	--

Table 5.4-21
Sign Structures

Table of Contents

6.1 Approvals, Distribution and Work Flow 5
6.2 Preliminary Plans 7
6.2.1 Structure Survey Report 7
6.2.1.1 BOS-Designed Structures 7
6.2.1.2 Consultant-Designed Structures 8
6.2.2 Preliminary Layout 8
6.2.2.1 General 8
6.2.2.2 Basic Considerations 8
6.2.2.3 Requirements of Drawing 10
6.2.2.3.1 Plan View 10
6.2.2.3.2 Elevation View 12
6.2.2.3.3 Cross-Section View 13
6.2.2.3.4 Other Requirements 13
6.2.2.4 Utilities 15
6.2.3 Distribution of Exhibits 16
6.2.3.1 Federal Highway Administration (FHWA). 16
6.2.3.2 Other Agencies 18
6.3 Final Plans 20
6.3.1 General Requirements 20
6.3.1.1 Drawing Size 20
6.3.1.2 Scale 20
6.3.1.3 Line Thickness 20
6.3.1.4 Lettering and Dimensions 20
6.3.1.5 Notes 20
6.3.1.6 Standard Insert Drawings 21
6.3.1.7 Abbreviations 21
6.3.1.8 Nomenclature and Definitions 22
6.3.2 Plan Sheets 22
6.3.2.1 General Plan (Sheet 1) 23
6.3.2.1.1 Plan Notes for New Bridge Construction 25
6.3.2.1.2 Plan Notes for Bridge Rehabilitation 26
6.3.2.2 Subsurface Exploration 27

6.3.2.3 Abutments 27
6.3.2.4 Piers 28
6.3.2.5 Superstructure 29
6.3.2.5.1 All Structures 29
6.3.2.5.2 Steel Structures 31
6.3.2.5.3 Railing and Parapet Details 31
6.3.3 Miscellaneous Information 31
6.3.3.1 Bill of Bars 31
6.3.3.2 Box Culverts 32
6.3.3.3 Miscellaneous Structures 33
6.3.3.4 Standard Drawings 33
6.3.3.5 Insert Sheets 33
6.3.3.6 Change Orders and Maintenance Work 33
6.3.3.7 Name Plate and Benchmarks 33
6.3.3.8 Removing Old Structure and Debris Containment 34
6.3.3.8.1 Structure Repairs 35
6.3.3.8.2 Complete or Substantial Removals 36
6.3.4 Checking Plans 36
6.3.4.1 Items requiring a PDF copy for the Project Records (Group A) – Paper Copies to be Destroyed when Construction is Completed. 37
6.3.4.2 Additional Items to be Destroyed When Construction is Completed (Group B) 37
6.3.4.3 Items to be Destroyed when Plans are Completed (Group C) 38
6.4 Computation of Quantities 39
6.4.1 Excavation for Structures Bridges (Structure) 39
6.4.2 Granular Materials 39
6.4.3 Concrete Masonry Bridges 40
6.4.4 Prestressed Girder Type I (28-Inch; 36-Inch; 36W-Inch; 45W-Inch; 54W-Inch; 72W-Inch, 82W-Inch) 40
6.4.5 Bar Steel Reinforcement HS Bridges or Bar Steel Reinforcement HS Coated Bridges 40
6.4.6 Bar Steel Reinforcement HS Stainless Bridges 40
6.4.7 Structural Steel Carbon or Structural Steel HS 40
6.4.8 Bearing Pads Elastomeric Non-Laminated or Bearing Pads Elastomeric Laminated or Bearing Assemblies Fixed (Structure) or Bearing Assemblies Expansion (Structure) 40
6.4.9 Piling Test Treated Timber (Structure) 41

6.4.10 Piling CIP Concrete Delivered and Driven ___-Inch, Piling Steel Delivered and Driven ___ -Inch 41
6.4.11 Preboring CIP Concrete Piling or Steel Piling 41
6.4.12 Railing Steel Type (Structure) or Railing Tubular Type (Structure)..... 41
6.4.13 Slope Paving Concrete or Slope Paving Crushed Aggregate or Slope Paving Select Crushed Material 42
6.4.14 Riprap Medium, Riprap Heavy or Grouted Riprap, Riprap Light..... 42
6.4.15 Pile Points 42
6.4.16 Floordrains Type GC, Floordrains Type H, or Floordrains Type WF 42
6.4.17 Cofferdams (Structure) 42
6.4.18 Rubberized Membrane Waterproofing 42
6.4.19 Expansion Devices 42
6.4.20 Electrical Work..... 42
6.4.21 Conduit Rigid Metallic __-Inch or Conduit Rigid Nonmetallic Schedule 40 -Inch 42
6.4.22 Preparation Decks Type 1 or Preparation Decks Type 2 42
6.4.23 Cleaning Decks 43
6.4.24 Joint Repair 43
6.4.25 Concrete Surface Repair 43
6.4.26 Full-Depth Deck Repair 43
6.4.27 Concrete Masonry Overlay Decks 43
6.4.28 Removing Old Structure and Debris Containment 43
6.4.29 Anchor Assemblies for Steel Plate Beam Guard..... 43
6.4.30 Steel Diaphragms (Structure) 44
6.4.31 Welded Stud Shear Connectors X -Inch 44
6.4.32 Concrete Masonry Seal 44
6.4.33 Geotextile Fabric Type..... 44
6.4.34 Concrete Adhesive Anchors 44
6.4.35 Piling Steel Sheet Permanent Delivered or Piling Steel Sheet Permanent Driven... 44
6.4.36 Piling Steel Sheet Temporary 44
6.4.37 Temporary Shoring..... 44
6.4.38 Concrete Masonry Deck Repair..... 44
6.4.39 Sawing Pavement Deck Preparation Areas 45
6.4.40 Removing Bearings 45
6.4.41 Ice Hot Weather Concreting..... 45

6.4.42 Asphaltic Overlays 45
6.5 Production of Structure Plans by Consultants, Regional Offices and Other Agencies 46
6.5.1 Approvals, Distribution, and Work Flow 47
6.5.2 Preliminary Plan Requirements 48
6.5.3 Final Plan Requirements 49
6.5.4 Addenda 50
6.5.5 Post-Let Revisions 50
6.5.6 Local-Let Projects 50
6.6 Structures Data Management and Resources 51
6.6.1 Structures Data Management 51
6.6.2 Resources 52

6.1 Approvals, Distribution and Work Flow

Production of Structural Plans

Regional Office	Prepare Structure Survey Report.
Geotechnical Section (Bur. of Tech. Services)	Make site investigation and prepare Site Investigation Report. See 6.2.1 for exceptions.
Structures Development Sect. (BOS)	Record Structure Survey Report.
Structures Design Section (BOS)	Determine type of structure.
	Perform hydraulic analysis if required.
	Check roadway geometrics and vertical clearance.
	Review Site Investigation Report and determine foundation requirements. Develop scour computations for bridges and record scour code on the preliminary plans.
	Draft preliminary plan layout of structure.
	Send copies of preliminary plans to Regional Office.
	If Federal aid funding is involved, send copies of preliminary plans to the Federal Highway Administration for major, moveable, and unusual bridges.
	If a waterbody that qualifies as a “navigable water of the United States” is crossed, a Permit drawing to construct the bridge is sent to the Coast Guard. If FHWA determines that a Coast Guard permit is needed, send a Permit drawing to the Coast Guard. If Federal aid is involved, preliminary plans are sent to

	the Federal Highway Administration for approval.
	Review Regional Office comments and other agency comments, modify preliminary plans as necessary.
	Review and record project for final structural plan preparation.
Structures Design Units (BOS)	Prior to starting project, Designer contacts Regional Office to verify preliminary structure geometry, alignment, width and the presence of utilities.
	Prepare and complete plans, specs and estimates for the specified structure.
	Give completed job to the Supervisor of Structures Design Unit.
Supervisor, Structures Design Unit (BOS)	Review plans, specs and estimates.
	Send copies of final structural plans and special provisions to Regional Offices.
	Sign lead structural plan sheet.
	Deliver final structural plans and special provisions to the Bureau of Project Development.
Bur. of Project Development	Prepare final approved structural plans for pre-contract administration.

See Facilities Development Manual (FDM) Section 20-50-5 for information on determining whether a bridge crossing falls under the Coast Guard's jurisdiction.

6.2 Preliminary Plans

6.2.1 Structure Survey Report

The Structure Survey Report is prepared by Regional Office or consultant personnel to request a structure improvement project. The following forms in word format are used and are available at: http://www.dot.wisconsin.gov/forms/index.htm

Under the "Plans and Projects" heading:

DT1694	Separation Structure Survey Report
DT1696	Rehabilitation Structure Survey Report
DT1698	Stream Crossing Structure Survey Report (use for Culverts also)

The front of the form lists the supplemental information to be included with the report.

6.2.1.1 BOS-Designed Structures

When preparing the Structure Survey Report, the region or consultant roadway designers will make their best estimate of structure type and location of substructure units. The completed Structure Survey Report with the locations of the substructure units and all required attachments and supporting information will then be submitted to the Bureau of Structures via e-submit (as "BOS Design") and also to the Geotechnical Section, through the Regional Soils Engineer. This submittal will take place a minimum of 18 months in advance of the earliest PS&E due date shown on the Structure Survey Report. The Geotechnical Section is responsible for scheduling and conducting the necessary soil borings. The Bureau of Structures and the Geotechnical Section will coordinate activities to deliver the completed structure plans on schedule.

When a geotechnical consultant is performing the subsurface exploration, the work typically proceeds after the preliminary plans have been assembled by the Bureau of Structures. Under some circumstances, it may be expected that the geotechnical information gathered will be included in the Structure Survey Report in advance of the development of the preliminary plans. In the case of the Geotechnical Section performing the subsurface exploration, the geotechnical work will proceed after the preliminary plans have been assembled by the Bureau of Structures.

The Project Manager may request information on structure type and substructure locations from the Bureau of Structures if such information is necessary to expedite the environmental process.

Under this process, the scheduling of geotechnical work is coordinated with the Bureau of Structures toward completion of the bridge plans by the final plan due date. If other geotechnical work is required for the project, the Project Manager should coordinate with the

Regional Soils Engineer and the Geotechnical Section to promote efficiency of field drilling operations.

If the preliminary plans are required more than one year in advance of the final plan due date due to the unique needs of the project, the Project Manager should discuss this situation with the Bureau of Structures Design Supervisor prior to submitting the Structure Survey Report.

Coordination early in the design process with DNR regarding removal techniques for the existing structure (if applicable), and new structure placement and type is very important. The status of any agreements with the DNR, which affect the structure, should be noted under additional information on the Structure Survey Report.

6.2.1.2 Consultant-Designed Structures

When preparing the Structure Survey Report, the region or consultant roadway designer's responsibility for submitting the Structure Survey Report depends on their involvement with the design of the structure and the soils investigation.

If the preliminary bridge plans are required more than one year in advance of the final plan due to the unique needs of the project, the Project Manager should discuss this situation with the consultant.

Coordination early in the design process with DNR regarding removal techniques for the existing structure (if applicable), and new structure placement and type is very important. The status of any agreements with the DNR, which affect the structure, should be noted under additional information on the Structure Survey Report.

6.2.2 Preliminary Layout

6.2.2.1 General

The preparation of a preliminary layout for structures is primarily for the purpose of presenting an exhibit to the agencies involved for approval, before proceeding with final design and preparation of detail plans. When all the required approvals are obtained, the preliminary layout is used as a guide for final design and plan preparation.

The drawings for preliminary layouts are on sheets having an overall width of 11 inches and an overall length of 17 inches and should be placed within the current sheet border under the #8 tab.

6.2.2.2 Basic Considerations

The following criteria are used for the preparation of preliminary plans.

1. Selection of Structure Type. Refer to Chapter 17 - Superstructure-General, for a discussion of structure types.

2. Span Arrangements. For stream crossings the desired minimum vertical clearance from high water to low chord is given in Chapter 8 - Hydraulics. Span lengths for multiple

span stream crossings are in most cases a matter of economics and the provision for an opening that adequately passes flood flows, ice and debris. For structures over waterways that qualify as navigable waters of the United States, the minimum vertical and horizontal clearances of the navigable span are determined by the U.S. Coast Guard after considering the interests of both highway and waterway transportation users.

For most of the ordinary grade separation structures the requirements for horizontal clearance determine the span arrangements. Refer to Chapter 17 - Superstructure-General for span length criteria.

3. Economics.

   Economy is a primary consideration in determining the type of structure to be used. Refer to Chapter 5 – Economics and Costs, for cost data.

   At some stream crossings where the grade line permits considerable head room, investigate the economy of a concrete box culvert versus a bridge type structure. When economy is not a factor, the box culvert is the preferred type from the standpoint of maintenance costs, highway safety, flexibility for roadway construction, and provision of a facility without roadway width restrictions.

4. Aesthetics. Recognition of aesthetics as an integral part of a structure is essential if bridges are to be designed in harmony with adjacent land use and development. Refer to Chapter 4 - Aesthetics.

5. Hydraulic Consideration. Stream crossing structures are influenced by stream flow, drift, scour, channel conditions, ice, navigation, and conservation requirements. This information is submitted as part of the Structure Survey Report. Refer to Chapter 8 - Hydraulics for Hydraulic considerations and Section 8.1.5 for Temporary Structure Criteria.

6. Geometrics of Design. The vertical and horizontal clearance roadway widths, design live loading, alignment, and other pertinent geometric requirements are given in Chapter 3.

7. Maintenance. All bridge types require structural maintenance during their service life. Maintenance of approaches, embankments, drainage, substructure, concrete deck, and minor facilities is the same for the various types of bridges. A minimum draining grade of 0.5% across the bridge is desirable to eliminate small ponds on the deck except for open railings where the cross slope is adequate.

   Epoxy coated bar steel is required in all new decks and slabs.

   Steel girders require periodic painting unless a type of weathering steel is used. Even this steel may require painting near the joints. It is more difficult to repaint steel girders that span busy highways.

Cast-in-place reinforced concrete box girders and voided slabs have a poor experience in Wisconsin. They should not be used on new structures.

Deck expansion joints have proved to be a source of maintenance problems. Bridges designed with a limited number of watertight expansion devices are recommended.

8. Construction. Occasionally a structure is proposed over an existing highway on which traffic must be maintained. If the roadway underneath carries high volumes of traffic, any obstruction such as falsework would be hazardous as well as placing undesirable vertical clearance restrictions on the traveled way. This is also true for structures over a railroad.

   For structures over most high-volume roadways construction time, future maintenance requirements, and provision for future expansion of the roadway width, have considerable influence on the selection of the final product.

9. Foundations. Poor foundation conditions may influence the structure geometry. It may be more economical to use longer spans and fewer substructure units or a longer structure to avoid high approach fills.

10. Environmental Considerations. In addition to the criteria listed above all highway structures must blend with the existing site conditions in a manner that is not detrimental to environmental factors. Preservation of fish and wildlife, pollution of waters, and the effects on surrounding property are of primary concern in protecting the environment. The design of structures and the treatment of embankments must consider these factors.

11. Safety. Safety is a prime consideration for all aspects of the structure design and layout. Bridge railings are approved through actual vehicle crash testing.

6.2.2.3 Requirements of Drawing

6.2.2.3.1 Plan View

The plan view is preferably placed in the upper left-hand portion of the sheet at the largest scale practical (1”=10’) and shows the following basic information:

1. The plan view shall be shown with the reference line stationing progressing upstation from left to right on the sheet. A reference north arrow shall be included.

2. Structure span lengths, (center-to-center of piers and to centerline of bearing at abutments, end distance from centerline of bearing to back face of abutment and overall length of structure).

3. Dimensions along the reference line except for structures on a curve in which case they are along a tangent to the curve.

4. Stations are required at centerline of piers, centerline of bearing at abutments, and end of deck or slab.

5. Stations at intersection with reference line of roadway underneath for grade separation structures.

6. Direction of stationing increase for highway or railroad beneath a structure.

7. Detail the extent of slope paving or riprap.

8. Direction of stream flow and name if a stream crossing.

9. Highway number and direction and number of traffic lanes.

10. Horizontal clearance dimensions, pavement, shoulder, sidewalk, and structure roadway widths.

11. Median width if dual highway.

12. Skew angles and angles of intersection with other highways, streets or railroads.

13. Horizontal curve data if within the limits of the structure showing station of P.C., P.T., and P.I. Complete curve data of all horizontal curves which may influence layout of structure.

14. Location and dimension of minimum vertical clearance for highway or railroad grade separation structures.

    a. The minimum vertical clearance should be noted as the “Point of Minimum Vertical Clearance” for all spans.

    b. Minimum vertical clearance is required for each span of a structure above a traveled way (i.e., roadway, railroad track, etc.).

    c. Refer to *Facilities Development Manual 11-35-1, Section 1.5* for guidance pertaining to the required locations to be checked for underclearance.

15. If floor drains are proposed the type, approximate spacing, and whether downspouts are to be used.

16. Existing structure description, number, station at each end, buildings, underground utilities and pole lines giving owner's name and whether to remain in place, be relocated or abandoned.

17. Indicate which wingwalls have beam guard rail attached if any and wing lengths.

18. Structure numbers on plan.

19. Excavation protection for railroads.

20. Limits of railroad right-of-way. The locations are for reference only and need not be dimensioned.

21. Location of deck lighting or utilities if any.

22. Name Plate location.

23. Benchmark location

24. Locations of surface drains on approach pavement.

25. Tangent offsets between reference line and tangent line along C_L substructure unit. Also include tangent offsets for edge of deck and reference line at 10 foot intervals.

6.2.2.3.2 Elevation View

The elevation view is preferably placed below the plan view. If the structure is not skewed the substructure units are to be a straight projection from the plan view. If skewed, the elevation is a view normal to substructure units. The view shows the following basic information:

1. Profile of existing groundline or streambed.

2. Cross-section of highway or channel below showing back slopes at abutments.

3. Elevation of top of berm and rate of back slope used in figuring length of structure.

4. Type and extent of slope paving or riprap on back slopes.

5. Proposed elevations of bottom of footings and type of piling if required.

6. Depth of footings for piers of stream crossing and if a seal is required, show and indicate by a note.

7. Location and dimension of minimum vertical clearance.

    a. Minimum vertical clearance is required for each span of a structure above a traveled way (i.e., roadway, railroad track, etc.).

    b. Refer to *Facilities Development Manual 11-35-1, Section 1.5* for guidance pertaining to the required locations to be checked for underclearance.

8. Streambed, observed and high water elevations for stream crossings.

9. Location of underground utilities, with size, kind of material and elevation indicated.

10. Location of fixed and expansion bearings.

11. Location and type of expansion devices.

12. Limits of railroad right-of-way. The locations are for reference only and need not be dimensioned.

An elevation view is required for deck replacements, overlays with full-depth deck repair and painting plans (or any rehabilitation requiring the contractor to go beneath the bridge). Enough detail should be given to provide the contractor an understanding of what is beneath the bridge (e.g. roadway, bike path, stream, type of slope paving, etc.).

6.2.2.3.3 Cross-Section View

A view of a typical pier is shown as a part of the cross-section. The view shows the following general information:

1. Slab thickness, curb height and width, type of railing.
2. Horizontal dimensions tied into a reference line or centerline of roadway.
3. Girder spacing with girder depth.
4. Direction and amount of crown or superelevation, given in %.
5. Point referred to on profile grade.
6. Type of pier with size and number of columns proposed.
7. For solid, hammerhead or other type pier approximate size to scale.
8. Dimension minimum depth of bottom of footings below ditch or finished ground line or if railroad crossing below top of rail.
9. Location for public and private utilities to be carried in the superstructure. Label owner's name of utilities.
10. Location of lighting on the deck or under the deck if any.

6.2.2.3.4 Other Requirements

1. Profile grade line across structure showing tangent grades and length of vertical curve. Station and elevation of P.C., P.I., P.T., and centerline of all substructure units.

   Profile grade line of highway beneath structure if highway separation or of top rail if railroad separation. Stations along top of rail are to be tied into actual stationing as established by the railroad company.

2. Channel change section if applicable. Approximate stream bed elevation at low point.
3. Any other view or detail which may influence the bridge type, length or clearance.
4. List design data including:

   <u>Material Properties</u>:

- Concrete Superstructure
- Concrete Substructure
- Bar Steel Reinforcement
- Structural Steel
- Prestressed Concrete
- Prestressing Steel

*Note: For rehabilitation projects, include Material Properties only for those materials utilized in the rehabilitation.

Foundations

- Soil Bearing Pressure
- Pile Type and Capacity (see 6.3.2.1)

Ratings (Plans Including Ratings that have been changed)

Live Load: (if using LRFR)
Design Loading: HL-93
Inventory Rating Factor: RF = X.XX
Operating Rating Factor: RF = X.XX
Wisconsin Standard Permit Vehicle (Wis-SPV) = XXX kips

Live Load: (if using LFR)
Inventory Rating: HS = XX
Operating Rating: HS = XX
Wisconsin Standard Permit Vehicle (Wis-SPV) = XXX kips

(See Chapter 45 – Bridge Rating (45.9.3) for additional information)

Ratings (Plans Including Ratings that have not been changed)

Live Load: (if HSI uses LRFR)
Taken from HSI, xx/xx/2xxx
Design Loading: HL-93
Inventory Rating Factor: RF = X.XX
Operating Rating Factor: RF = X.XX
Wisconsin Standard Permit Vehicle (Wis-SPV) = XXX kips

Live Load: (if HSI uses LFR)
Taken from HSI, xx/xx/2xxx
Inventory Rating: HS = XX
Operating Rating: HS = XX

Wisconsin Standard Permit Vehicle (Wis-SPV) = XXX kips

If widening a bridge, provide ratings for both the new and existing superstructure elements. For example, if widening a girder bridge previously designed with Load Factor Design, provide the LFR rating for the controlling existing girder and the LRFR rating for the controlling new girder.

Hydraulic Data

100 YEAR FREQUENCY

Q_{100} = XXXX C.F.S.
VEL. = X.X F.P.S.
HW_{100} = EL. XXX.XX
WATERWAY AREA = XXX SQ.FT.
DRAINAGE AREA = XX.X SQ.MI.
ROADWAY OVERTOPPING = (NA or add "Roadway Overtopping Frequency" data)
SCOUR CRITICAL CODE = X

2 YEAR FREQUENCY

Q_2 = XXXX C.F.S.
VEL. = X.X F.P.S.
HW_2 = EL. XXX.XX

ROAD OVERTOPPING FREQUENCY (if applicable, frequencies < 100 years)

FREQUENCY = XX YEARS
Q_{XX} = XXXX C.F.S.
HW_{XX}= EL. XXX.XX

(See Chapter 8 – Hydraulics for additional information)

5. Show traffic data. Give traffic count, data and highway for each highway on grade separation or interchange structure.

6. Rehabilitation structure plans should use the same labeling convention as shown on the original structure plans when practical. Generally, this will include substructure labels (wings, abutments, piers, etc.) and girder numbers. This labeling convention is beneficial for inspection purposes.

6.2.2.4 Utilities

In urban areas, public and private utilities generally have their facilities such as sewers, water cables, pipes, ducts, etc., underground, or at river crossings, in the streambed.

If these facilities cannot be relocated, they may interfere with the most economical span arrangement. The preferred location of light poles is at the abutments or piers.

Overhead power lines may cause construction problems or maintenance inspection problems. Verify if they exist and notify Utilities & Access Management Unit (Bureau of Tech. Services) to have them removed.

It is the general policy to not place utilities on the structure. The Utilities & Access Management Unit approves all utility applications and determines whether utilities are placed on the structures or can be accommodated some other way. Refer all requests to them. Also see FDM Chapter 18 and Chapter 4 of "*WisDOT Guide to Utility Coordination*".

6.2.3 Distribution of Exhibits

6.2.3.1 Federal Highway Administration (FHWA).

FHWA memorandums "Implementing Guidance-Project Oversight under Section 1305 of the Transportation Equity Act for the 21st Century (TEA-21) of 1998" dated August 20, 1998, and "Project Oversight Unusual Bridges and Structures" dated November 13, 1998, indicate that **FHWA Headquarters Bridge Division or the Division Office must review and approve preliminary plans for unusual bridges and structures on the following projects:**

1. Projects on the Interstate System
2. Projects on the National Highway System (NHS) but not on the Interstate System, unless it is determined by FHWA and WisDOT that the responsibilities can be assumed by WisDOT
3. Projects on non-NHS Federal-aid highways, and eligible projects on public roads which are not Federal-aid highways if WisDOT determines that it is not appropriate for WisDOT to assume the responsibilities

Technical assistance is also available upon request for projects/structures that are not otherwise subject to FHWA oversight.

Unusual bridges have the following characteristics:

- Difficult or unique foundation problems
- New or complex designs with unique operational or design features
- Exceptionally long spans
- Design procedures that depart from currently recognized acceptable practices

Examples of unusual bridges:

- Cable-stayed
- Suspension
- Arch

- Segmental concrete
- Movable
- Truss
- Bridge types that deviate from AASHTO bridge design standards or AASHTO guide specifications for highway bridges
- Major bridges using load and resistance factor design specifications
- Bridges using a three-dimensional computer analysis
- Bridges with spans exceeding 350 feet

Examples of unusual structures:

- Tunnels
- Geotechnical structures featuring new or complex wall systems or ground improvement systems
- Hydraulic structures that involve complex stream stability countermeasures, or designs or design techniques that are atypical or unique

Timing of submittals is an important consideration for FHWA approval and assistance, therefore, **FHWA should be involved as early as possible.**

The following preliminary documents should be submitted electronically (PDF format) to FHWA:

1. Preliminary plans (Type, Size and Location)
2. Bridge/structures related environmental concerns and suggested mitigation measures
3. Studies of bridge types and span arrangements
4. Approach bridge span layout plans and profile sheets
5. Controlling vertical and horizontal clearance requirements
6. Roadway geometry
7. Design specifications used
8. Special design criteria
9. Cost estimates

10. Hydraulic and scour design studies/reports showing scour predictions and related mitigation measures

11. Geotechnical studies/reports

12. Information on substructure and foundation types

Note: Much of this information may be covered by the submittal of a Structure Type Selection Report.

6.2.3.2 Other Agencies

This is a list of other agencies that may or may not need to be coordinated with. There may be other stakeholders that require coordination. Consult FDM Chapter 5 for more details on coordination requirements.

- Department of Natural Resources

  A copy of preliminary plans (preliminary layout, plan & profile, and contour map) for stream crossing bridges are forwarded by BOS to the Department of Natural Resources for comment, in accordance with the cooperative agreement between the Department of Transportation and the Department of Natural Resources. (See Chapter 8 - Hydraulics).

- Railroad (FDM Chapter 17)

  Begin communicating as early as possible with the Region Railroad Coordinator.

- Utilities (FDM Chapter 18, Bridge Manual Chapter 32)

  BOS discourages attachment of utilities to a structure. However, if there are no other viable options, private or public utilities desiring to attach their facilities (water, and sewer mains, ducts, cables, etc.) to the structure must apply to the owner for approval. For WisDOT owned structures, approval is required from the Region's Utilities & Access Management Unit.

- Coast Guard (FDM)

- Regions

  A copy of the preliminary plans is sent to the Regional Office involved for their review and use.

- Native American Tribal Governments

- Corps of Engineers

- Other governing municipalities

- State Historic Preservation Office
- Environmental Protection Agency
- Other DOTs

6.3 Final Plans

This section describes the general requirements for the preparation of construction plans for bridges, culverts, retaining walls and other related highway structures. It provides a standard procedure, form, and arrangement of the plans for uniformity.

6.3.1 General Requirements

6.3.1.1 Drawing Size

Sheets are 11 inches wide from top to bottom and 17 inches long. A border line is provided on the sheet 1 inch from the left edge, and ¼ inch from other edges. Title blocks are provided on the first sheet for a signature and other required information. The following sheets contain the same information without provision for a signature.

6.3.1.2 Scale

All drawings insofar as possible are drawn to scale. Such details as reinforcing steel, steel plate thicknesses, etc. are not scaled. The scale is adequate to show all necessary details.

6.3.1.3 Line Thickness

Object lines are the widest line on the drawing. Lines showing all or part of an existing structure or facility are shown by dashed lines of somewhat lighter weight.

Lines showing bar steel are lighter than object lines and are drawn continuous without any break. Dimension and extension lines are lighter than bar steel lines but heavy enough to make a good reproduction.

6.3.1.4 Lettering and Dimensions

All lettering is upper case. Lettering and dimensions are read from the bottom or right hand side and should be placed above the dimension lines. Notes and dimension text are 0.12 inches high; view titles are 0.20 inches high (based on full size sheet, 22” x 34”). Dimensions are given in feet and inches. Elevations are given in decimal form to the nearest 0.01 of a foot. Always show two decimal places. Although plan dimensions are very accurate, the contractor should use reasonable tolerances during construction of the project by building to the accuracy required. Detail structural steel to the thickness of the material involved.

6.3.1.5 Notes

Show any notes to make the required details clear on the plans. Do not include material that is part of the specifications.

6.3.1.6 Standard Insert Drawings

Standard detail sheets are available for railings and parapets, prestressed girders, bearings, expansion joints, and drains. Fill in the dimensions and titles required and insert in the final plans.

Standard insert sheets can be found at: https://wisconsindot.gov/Pages/doing-bus/eng-consultants/cnslt-rsrces/strct/insert-sheets.aspx

6.3.1.7 Abbreviations

Abbreviations are to be used throughout the plans whenever possible. Abbreviations approved to be used are as follows:

Abutment	ABUT.	Flange Plate	Fl. Pl.
Adjacent	ADJ.	Front Face	F.F.
Alternate	ALT.	Galvanized	GALV.
And	&	Gauge	GA.
Approximate	APPROX.	Girder	GIR.
At	@	Highway	HWY.
Back Face	B.F.	Horizontal	HORIZ.
Base Line	B/L	Inclusive	INCL.
Bench Mark	B.M.	Inlet	INL.
Bearing	BRG.	Invert	INV.
Bituminous	BIT.	Left	LT.
Cast-in-Place	C.I.P.	Left Hand Forward	L.H.F.
Centers	CTRS.	Length of Curve	L.
Center Line	C/L	Live Load	L.L.
Center to Center	C to C	Longitudinal	LONGIT.
Column	COL.	Maximum	MAX.
Concrete	CONC.	Minimum	MIN.
Construction	CONST.	Miscellaneous	MISC.
Continuous	CONT.	North	N.
Corrugated Metal Culvert Pipe	C.M.C.P.	Number	NO.
Cross Section	X-SEC.	Near Side, Far Side	N.S.F.S.
Dead Load	D.L.	Per Cent	%
Degree of Curve	D.	Plate	PL
Degree	°	Point of Curvature	P.C.
Diaphragm	DIAPH.	Point of Intersection	P.I.
Diameter	DIA.	Point of Tangency	P.T.
Discharge	DISCH.	Point on Curvature	P.O.C.
East	E.	Point on Tangent	P.O.T.
Elevation	EL.	Property Line	P.L.
Estimated	EST.	Quantity	QUAN.
Excavation	EXC.	Radius	R.
Expansion	EXP.	Railroad	R.R.
Fixed	F.	Railway	RY.

Reference	REF.	Station	STA.
Reinforcement	REINF.	Structural	STR.
Reinforced Concrete Culvert Pipe	R.C.C.P.	Substructure	SUBST.
Required	REQ'D.	Superstructure	SUPER.
Right	RT.	Surface	SURF.
Right Hand Forward	R.H.F.	Superelevation	S.E.
Right of Way	R/W	Symmetrical	SYM
Roadway	RDWY.	Tangent Line	TAN. LN.
Round	ø	Transit Line	T/L
Section	SEC.	Transverse	TRAN.
Shoulder	SHLD.	Variable	VAR.
Sidewalk	SDWK.	Vertical	VERT.
South	S.	Vertical Curve	V.C.
Space	SPA.	Volume	VOL.
Specification	SPEC	West	W.
Standard	STD.	Zinc Gauge	ZN. GA.

Table 6.3-1
Abbreviations

6.3.1.8 Nomenclature and Definitions

Universally accepted nomenclature and approved definitions are to be used wherever possible.

6.3.2 Plan Sheets

The following information describes the order of plan sheets and the material required on each sheet.

Plan sheets are placed in order of construction generally as follows:

1. General Plan
2. Subsurface Exploration
3. Abutments
4. Piers
5. Superstructure and Superstructure Details
6. Railing and Parapet Details

Show all views looking up station.

6.3.2.1 General Plan (Sheet 1)

See the BOS web page, CADD Resource Files, for the latest sheet borders to be used. Sheet borders are given for new bridges, rehabilitation projects and concrete box culverts. A superstructure replacement utilizing the existing substructure, bridge widenings, as well as damaged girder replacements should use the sheet border for a new structure. See Chapter 40 - Bridge Rehabilitation for criteria as to when superstructure replacements are allowed.

1. Plan View

   Same requirements as specified for preliminary drawing, except do not show contours of groundline and as noted below.

   a. Sufficient dimensions to layout structure in the field.

   b. Describe the structure with a simple note such as: Four span continuous steel girder structure.

   c. Station at end of deck on each end of bridge.

   On Structure Replacements

   Show existing structure in dashed-lines on Plan View.

2. Elevation View

   Same requirements as specified for preliminary plan except:

   a. Show elevation at bottom of all substructure units.

   b. Give estimated pile lengths where used.

3. Cross-Section View

   Same requirements as specified for preliminary plan except:

   a. For railroad bridges show a railroad cross-section.

   b. View of pier if the bridge has a pier (s), if not, view of abutment.

4. Grade Line

   Same requirements as specified for preliminary plan.

5. Design and Traffic Data

   Same requirements as specified for preliminary plans, plus see 6.3.2.1 for guidance regarding sheet border selection.

6. Hydraulic Information, if Applicable

7. Foundations

   Give soil/rock bearing capacity or pile capacity.

   Example for General Plan sheet: Abutments to be supported on HP 10 x 42 steel piling driven to a required driving resistance of 180 tons * per pile as determined by the Modified Gates Dynamic Formula. Estimated 50'-0" long.

   *The factored axial resistance of piles in compression used for design is the required driving resistance multiplied by a resistance factor of 0.5 using modified Gates to determine driven pile capacity.

   Abutments with spread footings to be supported on sound rock with a required factored bearing resistance of "XXX" PSF ***. A geotechnical engineer, with three days notice, will determine the factored bearing resistance by visual inspection prior to construction of the abutment footing.

   *** The factored bearing resistance is the value used for design.

   Repeat the note above on each substructure sheet, except the asterisk (*) and subsequent explanation of factored design resistance need not appear on individual substructure sheets.

   See Table 11.3-5 for typical maximum driving resistance values.

8. Estimated Quantities

   a. Enter bid items and quantities as they appear, and in the order in which they appear in the "Schedule of Bid Items" of the Standard Specifications. Put items not provided for at the bottom of the list. Enter quantities for each part of the structure, (superstructure, each abutment, each pier) under a separate column with a grand total.

      Quantities are to be bid under items for the Structure Type and not by the "B" or "C" numbers. For example, concrete for a multi-cell box culvert exceeding a total length of 20 feet is to be bid under item Concrete Masonry Culverts. As another example, a bridge having a length less than 20 feet would be given a "C" number; however, the concrete bid item is Concrete Masonry Bridges.

   b. For incidental items to be furnished for which there is no bid item, and compensation is not covered by the *Standard Specifications* or *Special Provisions*, note on the plans the most closely related bid item that is to include the cost in the price bid per unit of item. As an example, the cost of concrete inserts is to be included in the price bid per cubic yard of concrete masonry.

9. General Notes

   A standard list of notes is given in 6.3.2.1.1 and 6.3.2.1.2. Use the notes that apply to the structure drawn on the plans.

10. List of Drawings

    Each sheet is numbered sequentially beginning with 1 for the first sheet. Give the sheet number and title of sheet.

11. Title Block

    Fill in all data for the Title Block except the signature. The title of this sheet is "General Plan". Use the line below the structure number to describe the type of crossing. (Example: STH 15 SB OVER FOX RIVER). See 6.3.2.1 for guidance regarding sheet border selection.

12. Professional Seal

    All final bridge plans prepared by Consultants or Governmental Agencies shall be professionally sealed, signed, and dated on the general plan sheet. If the list of drawings is not on the general plan sheet, the sheet which has the list of drawings shall also be professionally sealed, signed, and dated. This is not required for WisDOT prepared plans, as they are covered elsewhere.

6.3.2.1.1 Plan Notes for New Bridge Construction

1. Drawings shall not be scaled. Bar Steel Reinforcement shall be embedded 2” clear unless otherwise shown or noted.

2. All field connections shall be made with 3/4” diameter friction type high-tensile strength bolts unless shown or noted otherwise.

3. Slab falsework shall be supported on piles or the substructure unless an alternate method is approved by the Engineer.

4. The first or first two digits of the bar mark signifies the bar size.

5. The slope of the fill in front of the abutments shall be covered with heavy riprap and geotextile fabric Type ‘HR’ to the extent shown on sheet 1 and in the abutment details.

6. The slope of the fill in front of the abutments shall be covered with slope paving material to the extent shown on sheet 1 and in the abutment details.

7. The stream bed in front of the abutment shall be covered with riprap as shown on this sheet and in the abutment details.

8. The existing stream bed shall be used as the upper limits of excavation at the piers.

9. The existing ground line shall be used as the upper limits of excavation at the piers.

10. Within the length of the box all spaces excavated and not occupied by the new structure shall be backfilled with Structure Backfill to the elevation and section existing prior to excavation within the length of the culvert.

11. At the backface of abutment all volume which cannot be placed before abutment construction and is not occupied by the new structure shall be backfilled with structure backfill.

12. Concrete inserts to be furnished by the utility company and placed by the contractor. Cost of placing inserts shall be included in the bid price for concrete masonry.

13. Prestressed Girder Bridges - The haunch concrete quantity is based on the average haunch shown on the Prestressed Girder Details sheet.

6.3.2.1.2 Plan Notes for Bridge Rehabilitation

WisDOT policy item:

The note "Dimensions shown are based on the original structure plans" is acceptable. However, any note stating that the contractor shall field verify dimensions is not allowed.

It is the responsibility of the design engineer to use original structure plans, as-built structure plans, shop drawings, field surveys and structure inspection reports as appropriate when producing rehabilitation structure plans of any type (bridges, retaining walls, box culverts, sign structures, etc.). **Note:** Older Milwaukee bridge plans used a baseline datum of 100.00. Add 580.60 to elevations using this datum. If uncertainty persists after reviewing available documentation, a field visit may be necessary by the design engineer.

1. Dimensions shown are based on the original structure plans.

2. All concrete removal not covered with a concrete overlay shall be defined by a 1 inch deep saw cut, unless specified otherwise.

3. Utilize existing bar steel reinforcement where shown and extend 24 bar diameters into new work, unless specified otherwise.

4. Concrete expansion bolts and inserts to be furnished and placed by the contractor under the bid price for concrete masonry.

5. At "Curb Repair" expose existing reinforcement a minimum of 1 1/2" clear.

6. Existing floor drains to remain in place. Remove top of deck in drain area as directed by the Field Engineer to allow placing and sloping of 1 1/2" concrete overlay.

7. Clean and fill existing longitudinal and transverse cracks with penetrating epoxy as directed by the Field Engineer.

8. Variations to the new grade line over 1/4" must be submitted by the Field Engineer to the Structures Design Section for review.

9. The contractor shall supply a new name plate in accordance with Section 502.3.11 of the *Standard Specifications* and the standard detail drawings. Name plate to show original construction year.

6.3.2.2 Subsurface Exploration

This sheet is initiated by the Geotechnical Engineer. The following information is required on the sheet. Bridge details are not drawn by the Geotechnical Engineer.

1. Plan View

   Show a plan layout of structure with survey lines, reference lines, pier and abutment locations and location of borings and probings plotted to scale.

   On box culvert structure plans, show three profile lines of the existing ground elevations (along the centerline and outer walls of the box). Scale the information for these lines from the site contour map that is a part of the structure survey report.

2. Elevation

   Show a centerline profile of existing ground elevation.

   Show only substructure units at proper elevation w/no elevations shown. Also show the pile lengths.

   Show the kind of material, its located depth, and the blow count of the split spoon sampler for each boring. Give the blow count at about 5 foot intervals or where there is a significant change in material.

6.3.2.3 Abutments

Use as many sheets as necessary to show details clearly. Each substructure unit should have its own plan sheet(s). Show all bar steel required using standard notations; solid lines lengthwise and solid dots in cross section. Give dimensions for a skewed abutment to a reference line which passes through the intersection for the longitudinal structural reference line and centerline of bearing of the abutment. Give the dimension, from centerline of bearing to backface of abutment along the longitudinal reference line and the offset distance if on a skew. Show the skew angle.

If there is piling, show a complete footing layout giving piling dimensions tied to the reference line. Number all the piles. Give the type of piling, length and required driving resistance. Show a welded field splice for cast in place concrete or steel H piles.

Bridge seats for steel bearings and laminated elastomeric bearings are level within the limits of the bearing plate. Slope the bearing area utilizing non-laminated elastomeric bearings if the slope of the bottom of girder exceeds 1%. Slope the bridge seat between bearings 1” from front face of backwall to front face of abutment. Give all beam seat elevations.

1. Plan View

   a. Place a keyed construction joint near the center of the abutment if the length of the body wall exceeds 50 feet. Make the keyway as large as feasible and extend the horizontal bar steel through the joint.

b. Dimension wings in a direction parallel and perpendicular to the wing centerline. Wings should be numbered starting from the lower left corner and increasing in a clockwise order.

c. Dimension angle between wing and body if that angle is different from the skew angle of the abutment.

2. Elevation

   a. Give beam seat, wing (front face and wing tip), and footing elevations to the nearest .01 of a foot.

   b. Give vertical dimension of wing.

3. Wing Elevation

4. Body Section

   Place an optional keyed construction joint in the parapet at the bridge seat elevation if there is a parapet.

5. Wing Sections

6. Bar Steel Listing and Detail

Use the following views where necessary:

7. Pile Plan & Splice Detail

8. View Showing Limits of Excavation and Backfill

9. Special Details for Utilities

10. Drainage Details

6.3.2.4 Piers

Use as many sheets as necessary to show all details clearly. Each substructure unit should have its own plan sheet(s).

Give dimensions for a skewed pier to a reference line which passes through the intersection of the longitudinal structural reference line and the pier centerline. Show the skew angle. Dimension the centerline spacing of superstructure girders.

1. Plan View

   Show dimensions, footings, cap steps, beam spacings and skew angle.

2. Elevation

Show dimensions and elevations. Show lengths of all columns for clarity. Give the elevation of the bottom of footings and beam seats. Refer to abutments for detailing bridge seats. Dimension all bar steel and stirrups.

3. Footing Plan

   Show dimensions for pile spacing, pile numbers and reinforcing steel in footing.

4. Bar Steel Listing and Details

5. Pile Splice Detail (If different from abutment only).

6. Cross Section thru Column and Pier Cap

   Detail anchor bolts between reinforcing bars to provide clearance. Long steel bridges may require more clearance. This allows an erection tolerance for the structural steel so that the bar steel is not pierced by the anchor bolts if the bearing is shifted.

6.3.2.5 Superstructure

Use as many sheets as are necessary to show all details clearly. Standard insert sheets are available to show many standard details. The title, project number, and a few basic dimensions are added to these standard sheets.

6.3.2.5.1 All Structures

1. Show the cross-section of roadway, plan view and related details, elevation of typical girder or girders, details of girders, and other details not shown on standard insert sheets. All drawings are to be fully dimensioned and show such sections and views as needed to detail the superstructure completely.

2. For girder bridges:
   Show the total dead load deflections, including composite dead load (without future wearing surface) acting on the composite section, at tenth points of each span. Distribute the composite dead load evenly to all girders and provide one deflection value for a typical interior girder. Chapter 17 – Superstructure-General illustrates three load cases for exterior girder design with raised sidewalks, cases that provide a conservative envelope to ensure adequate girder capacity. However, the above composite dead load distribution should be used for deflection purposes. For prestressed concrete girders, the dead load deflection reported does not include the weight of the girder. See Chapter 24 – Steel Girder Structures for camber and blocking, top of steel elevation and deflection reporting criteria.

   A separate deflection value for interior and exterior girders *may* be provided if the difference, accounting for load transfer between girders, warrants multiple values. A weighted distribution of composite dead load could be used for deflection purposes *only*. For example, an extremely large composite load over the exterior girder could be distributed as 40-30-30 percent to the exterior and first two interior girders respectively.

Use good engineering judgment to determine whether to provide separate deflection values for individual girder lines. In general, this is not necessary.

Indicate girder numbers about the centerline of bearing in each span. Girders should be numbered in increasing order from left to right in the cross-section view. For rehabilitation projects, indicate the existing girder numbers and assign new girder numbers in increasing order from left to right.

For slab bridges:
Provide camber values at the tenth points of all spans. The camber is based on 3 times the deflection of the slab, only. For multi-span bridges, the deflection calculations are based on a continuous span structure since the falsework supports the bridge until the concrete slab has cured.

Deflection and camber values are to be reported to the nearest 0.1 inch, for all girder and slab superstructures.

3. For girder structures, provide finished grade top of deck elevations for each girder line at the tenth points of all spans. Show the top of deck elevations at the outside edge of deck at tenth points. If staged construction, include tenth point elevations along the construction joint. For slab structures, provide the finished grade elevations at the reference line and/or crown and edge of slab at tenth points.

4. Decks of uniform thickness are used on all girders. Variations in thickness are achieved by haunching the deck over each girder. Haunches are formed off the top of the top flange. See the standards for details. In general the minimum haunch depth along the edge of girder is to be 1 1/4” although 2” is recommended to allow for construction tolerances. Haunch depth is the distance from the bottom of the concrete deck to the top of the top flange.

5. Provide a paving notch at each end of all structures for rigid approach pavements. See standard for details.

6. If the structure contains conduit for a deck lighting system, place the conduit in the concrete parapet. Place expansion devices on conduit which passes through structure expansion joints.

7. Show the bar steel reinforcement in the slab, curb, and sidewalk with the transverse spacing and all bars labeled. Show the direction and amount of roadway crown.

8. On bridges with a median curb and left turn lane, water may be trapped at the curb due to the grade slope and crown slope. If this is the case, make the cross slope flat to minimize the problem. Existing pavers cannot adjust to a variable crown line.

9. On structures with modular joints consider cover plates for the back of parapets when aesthetics are a consideration.

10. Provide a table of tangent offsets for the reference line and edges of deck at 10 foot intervals for curved bridges.

6.3.2.5.2 Steel Structures

1. Show the diaphragm connections on steel girders. Show the spacing of rail posts on the plan view.

2. Show a steel framing plan for all steel girders. Show the spacing of diaphragms.

3. On the elevation view of steel girders show dimension, material required, field and shop splice locations, stiffener spacing, shear connector spacing, and any other information necessary to construct the girder. In additional views show the field splice details and any other detail that is necessary.

4. Show the size and location of all weld types with the proper symbols except for butt welds. Requirements for butt welds are covered by A.W.S. Specifications.

5. See Chapter 24 – Steel Girder Structures for camber and blocking, top of steel elevation and deflection reporting criteria.

6. Existing flange and web sizes should be shown to facilitate the sizing of bolts on Rehabilitation Plans.

6.3.2.5.3 Railing and Parapet Details

Standard drawings are maintained by the Structures Development Section showing railing and parapet details. Add the details and dimensions to these drawings that are unique to the structure being detailed. Compute the length along the slope of grade line rather than the horizontal dimension.

6.3.3 Miscellaneous Information

6.3.3.1 Bill of Bars

Show a complete bill of bar steel reinforcement for each unit of the structure. Place this bill on the sheet to which the bars pertain. If the abutments or piers are similar, only one bar list is needed for each type of unit.

Give each bar or group of bars a different mark if they vary in size, length, or location in a unit. Each bar list is to show the mark, number of bars, length, location and detail for each bar. Give bar lengths to the nearest 1” and segment lengths of bent bars to the nearest 1/2”. Show all bar bends and hooks in detail.

Identify all bars with a letter indicating the unit in which the bar is placed - A for abutment, P for pier, S for superstructure. Where units are multiple, each unit should have a different letter. Next use a one or two digit number to sequentially number the bars in a unit. P1008 indicates bar number 08 is a size number 10 bar located in a Pier.

Use a Bar Series Table where a number of bars the same size and spacing vary in length is a uniform progression. Use only one mark for all these bars and put the average length in the table.

Refer to the Standard drawings in Chapter 9 – Materials for more information on reinforcing bars such as minimum bend diameter, splice lengths, bar supports, etc.

When a bridge is constructed in stages, show the bar quantities for each stage. This helps the contractor with storage and retrieval during construction.

6.3.3.2 Box Culverts

Detail plans for box culverts are to be fully dimensioned and have sectional drawings needed to detail the structure completely. The following items are to be shown when necessary:

1. Plan View
2. Longitudinal section
3. Section thru box
4. Wing elevations
5. Section thru wings
6. Section thru cutoff wall
7. Vertical construction joint
8. Bar steel clearance details
9. Header details
10. North point, Name plate location, Benchmark location, and Quantities
11. Bill of bars, Bar details
12. General notes, List of drawings, Rip rap layout
13. Inlet nose detail on multiple cell boxes
14. Corner details

Bid items commonly used are excavation, concrete masonry, bar steel, rubberized membrane waterproofing, backfill and rip rap. Filler is a non-bid item. In lieu of showing a contour map, show profile grade lines as described for Subsurface Exploration sheet.

See the standard details for box culverts for the requirements on vertical construction joints, apron and cutoff walls, longitudinal construction joints, and optional construction joints.

Show name plate location on plan view and on wing detail.

6.3.3.3 Miscellaneous Structures

Detail plans for other structures such as retaining walls, pedestrian bridges, and erosion control structures are to be detailed with the same requirements as previously mentioned. Multiple sign structure of the same type and project may be combined into a single set of plans per standard insert sheet provisions, and shall be subject to the same requirements for bridge plans.

6.3.3.4 Standard Drawings

Standard drawings are maintained and furnished by the Structures Development Section. These drawings show the common types of details required on the contract plans.

6.3.3.5 Insert Sheets

These sheets are maintained by the Structures Development Section and are used in the contract plans to show standard details.

6.3.3.6 Change Orders and Maintenance Work

These plans are drawn on full size sheets. A Structure Survey Report should be submitted for all maintenance projects, including painting projects and polymer overlay projects. In addition to the SSR, final structure plans on standard sheet borders with the #8 tab should be submitted to BOS in the same fashion as other rehabilitation plans. Painting plans should include at minimum a plan view with overall width and length dimensions, the number of spans, an indication of the number and type of elements to be painted (girders, trusses, etc.), and an elevation view showing what the structure is crossing. The SSR should give a square foot quantity for patchwork painting. For entire bridges or well defined zones (e.g. Paint all girders 5 feet on each side of expansion joints), the design engineer will be responsible for determining the quantity.

6.3.3.7 Name Plate and Benchmarks

For multi-directional bridges, locate the name plate on the roadway side of the first right wing or parapet traveling in the highway cardinal directions of North or East. For one-directional bridges, locate the name plate on the first right wing or parapet in the direction of travel. For type “NY”, “W”, “M” or timber railings, name plate to be located on wing. For parapets, name plate to be located on inside face of parapet.

A benchmark location shall be shown on bridge and larger culvert plans. Locate the benchmark on a horizontal surface flush with the concrete and in close proximity to the name plate. When possible, locate on top of the parapet on the bridge deck, above the abutment. Do not locate benchmarks at locations where elevations are subject to movement (e.g. midspan) and avoid placing below a rail or fence system. Benchmarks are typically metal survey disks, which are to be supplied by the department and set by the contractor. See FDM 9-25-5 for additional benchmark information.

6.3.3.8 Removing Old Structure and Debris Containment

This section provides guidance for selecting the appropriate Removing Old Structure bid item and determining when to use the "Debris Containment" bid item.

The "Removing Old Structure" bid item is most typically used for complete or substantial removals, as described in 6.3.3.8.2, of grade separation structures. In addition to this Standard Specification bid item, there are three STSP bid items for complete or substantial removal work over waterways: "Removing Old Structure Over Waterway", "Removing Old Structure Over Waterway With Minimal Debris", and "Removing Old Structure Over Waterway With Debris Capture System". The designer should review all of these STSPs and coordinate with the Wisconsin Department of Natural Recourses (DNR) to reach consensus on which STSP to use when removing a particular structure. **The designer should not automatically defer to the recommendation from the initial DNR letter, but should work with WisDOT and DNR environmental coordinators, considering constructability and cost impacts of the items.** For unique or difficult removals, designers should consult with the contracting community to assess costs and the feasibility of a particular removal technique. One of the following Removing Old Structure bid items should be selected for removals over waterways:

- Removing Old Structure Over Waterway is used where it is not possible to remove the structure without dropping it, or a portion of it, into a waterway or wetland; and that waterway or wetland is not highly environmentally sensitive. This special provision is typically appropriate for removing the following structure types: slab spans; voided slabs; cast-in-place concrete girder bridges; earth-filled bridges.

- Removing Old Structure Over Waterway <u>With Minimal Debris</u> is used where it is possible to remove the structure without dropping it, or a portion of it, into a waterway or wetland, and that waterway or wetland is not highly environmentally sensitive. This special provision is typically appropriate for removing all structures types except for the following bridges which are typically covered under Removing Old Structure Over Waterway: slab spans; voided slabs; cast-in-place concrete girder bridges; earth-filled bridges.

- Removing Old Structure Over Waterway <u>With Debris Capture System</u> is typically used when the waterway or wetland is highly environmentally sensitive. Before including this special provision in the contract, consult with the department's regional environmental coordinator to determine if the affected waterway or wetland is highly environmentally sensitive and if this special provision is appropriate.

Debris Containment is used where structure removal, reconstruction, or other construction operations may generate falling debris that might pose a safety hazard or environmental/contamination concern to facilities located under the structure. This item is most typically used where the removal area is located over a railroad.

The Debris Containment item is not used when one of the Removing Old Structure Over Waterway items is used.

6.3.3.8.1 Structure Repairs

Structure repair work could include, but is not limited to, the following bid items:

- Removing Concrete Masonry Deck Overlay
- Removing Asphaltic Concrete Deck Overlay
- Removing Polymer Overlay
- Cleaning Parapets
- Cleaning Concrete Surfaces
- Cleaning Decks to Reapply Concrete Masonry Overlay
- Preparation Decks (type)
- Cleaning Decks
- Joint Repair
- Curb Repair
- Concrete Surface Repair
- Full-Depth Deck Repair

Removal work limited to the above items is already included in the respective bid item specification, therefore a Removing Old Structure bid item not required. Use of Debris Containment should be reviewed for the following conditions:

- For work **over waterways**, a method of protecting the waterway is needed in some cases. Use Debris Containment, **only as needed** based on the extent and location of removal, and environmental sensitivity of the waterway. Debris is expected to be minimal.

- For work **over roadways**, Standard Specification, Sections 104 and 107, addresses safety of the traveling public and damage to all property, so generally no additional specifications are needed. **It is expected that pertinent lanes of the underpass roadway are closed when falling debris is expected from above.** No additional specifications are needed unless specifically requested with sufficient reason, in which case use Debris Containment **only as needed**, based on the extent and location of removal. Debris is expected to be minimal.

- For work **over railroads**, Standard Specification, Sections 104 and 107, addresses safety of the traveling public and damage to all property, so generally no additional specifications are needed. Exception: containment of debris is required where Full-Depth Deck Repair is expected. Use Debris Containment if Full-Depth Deck Repair is

expected, or **only as needed**, based on the extent and location of removal. Debris is expected to be minimal.

6.3.3.8.2 Complete or Substantial Removals

Complete or substantial removals, not covered by one of the bid items listed in 6.3.3.8.1, should use a Removing Old Structure bid item. Substantial removals could include, but are not limited to; decks, parapets, and wingwalls. The appropriate Removing Old Structure bid item should be selected and the need for Debris Containment should be reviewed for the following conditions:

- For work **over waterways**, a method of protecting the waterway is needed if the removal area is located over the waterway. If the removal area is located over the waterway, use Removing Old Structure Over Waterway, Removing Old Structure Over Waterway With Minimal Debris or Removing Old Structure Over Waterway With Debris Capture System. If the removal area is not located over the waterway, use Removing Old Structure. The Debris Containment item is not used for this work.

- For work **over roadways**, Standard Specification, Sections 104 and 107, addresses safety of the traveling public and damage to all property, and Standard Specification, Section 203 Removing Old Culverts and Bridges addresses removal. **It is expected that pertinent lanes of the underpass roadway are closed when falling debris is expected from above.** Use Removing Old Structure. No additional specifications are needed unless specifically requested with sufficient reasoning. Use Debris Containment **only as needed**, based on the significance of the roadway and/or location of removal.

- For work **over railroads**, Standard Specification, Sections 104 and 107, addresses safety of the traveling public and damage to all property, and Standard Specification, Section 203 Removing Old Culverts and Bridges addresses removal. A method of protecting the railroad is needed if the removal area is located over the railroad. Use Removing Old Structure. Use Debris Containment if the **removal area is located over the railroad, or only as needed**, based on the extent and location of removal.

6.3.4 Checking Plans

Upon completion of the design and drafting of plans for a structure, the final plans are usually checked by one person. Dividing plans checking between two or more Checkers for any one structure leads to errors many times. The plans are checked for compliance with the approved preliminary drawing, design, sufficiency and accuracy of details, dimensions, elevations, and quantities. Generally the information shown on the preliminary plan is to be used on the final plans. Revisions may be made to footing sizes and elevations, pile lengths, dimensions, girder spacing, column shapes, and other details not determined at the preliminary stage. Any major changes from the preliminary plan are to be approved by the Structural Design Engineer and Supervisor.

The Checkers check the final plans against the Engineer's design and sketches to ensure all information is shown correctly. The Engineer prepares all sketches and notations not covered by standard drawings. A good Checker checks what is shown and noted on the plan and also

checks to see if any essential details, dimensions, or notation have been omitted. The final plan Bid Items should be checked for conformity with those listed in the WisDOT Standard Specifications for Highway and Structure Construction.

The Checker makes an independent check of the Bill of Bars list to ensure the Plan Preparer has not omitted any bars when determining the quantity of bar steel.

Avoid making minor revisions in details or dimensions that have very little effect on cost, appearance, or adequacy of the completed structure. Check grade and bridge seat elevations and all dimensions to the required tolerances. The Checkers make all corrections, revisions, and notations on a print of the plan and return it to the Plan Preparer. The Plan Preparer back checks all marks made by the Checker before changing. Any disagreements are resolved with the Supervisor.

Common complaints received from field staff are dimension errors, small details crowded on a drawing, lettering is too small, and reinforcing bar length or quantity errors.

After the plans are completed, the items in the project folder are separated into the following groups by the Structures Design Engineer:

6.3.4.1 Items requiring a PDF copy for the Project Records (Group A) – Paper Copies to be Destroyed when Construction is Completed.

1. QC/QA sign-off sheet
2. Design computations and computer runs
3. Quantity computations
4. Bridge Special Provisions and STSP's (only those STSP's requiring specific blanks to be filled in or contain project specific information)
5. Final Structure Survey Report form (not including photos, cross-sections, project location maps, etc.)
6. Final Geotechnical Report
7. Final Hydrology and Hydraulic computations and structure sizing report
8. Contour map

6.3.4.2 Additional Items to be Destroyed When Construction is Completed (Group B)

1. Miscellaneous correspondence and transmittal letters
2. Preliminary drawings and computations
3. Prints of soil borings and plan profile sheets

4. Shop steel quantity computations*
5. Design checker computations
6. Layout sheets
7. Elevation runs and bridge geometrics
8. Falsework plans*
9. Miscellaneous Test Report
10. Photographs of bridge rehabs

* These items are added to the packet during construction.

6.3.4.3 Items to be Destroyed when Plans are Completed (Group C)

1. All "void" material
2. All copies except one of preliminary drawings
3. Extra copies of plan and profile sheets
4. Preliminary computer design runs

Note that lists for Group A, B & C are not intended to be all inclusive, but serve as starting points for categorizing design material. Items in Group A & B should be labeled separately. Computation of Quantities

6.4 Computation of Quantities

When the final drafting and plan checking is completed, the person responsible for drafting the plans and plans checker are to prepare individual quantity calculations for the bid items listed on the plans. The following instructions apply to the computation on quantities.

Divide the work into units that are repetitive such as footings, columns, and girders. Label all items with a clear description. Use sketches for clarity. These computations may be examined by others in future years so make them understandable.

One of the most common errors made in quantity computation is computing only half of an item which is symmetrical about a centerline and forgetting to double the result.

Following is a list of commonly used bridge quantities. Be sure to use the appropriate item and avoid using incidental items as this is too confusing for the contractor and project manager. The bid item for Abatement of Asbestos Containing Material should be included on the structure plans. Items such as Incentive Strength Concrete Structures, Construction Staking Structure Layout, etc. should not be included on the structure plans.

A column with the title “Bid Item Number” should be the first column for the “Total Estimated Quantities” table shown in the plans. The numbers in this column will be the numbers associated with the bid items as found in the Standard Specification, STSP, and/or Special Provisions.

6.4.1 Excavation for Structures Bridges (Structure)

This is a lump sum bid item. The limits of excavation are shown in the chapter in the manual which pertains to the structural item, abutments, piers, retaining walls, box culverts, etc. If the excavation is required for the roadway, the work may be covered under Excavation Common.

The limits of excavation made into solid rock are the neat line of the footing.

6.4.2 Granular Materials

Granular materials can be bid in units of tons or cubic yards. Structure plans should use the TON bid item for Structure Backfill, Granular Backfill, and Base Aggregate Dense 1 1/4-inch, unless directed otherwise by the Region. The Region may consider use of the CY bid item when contractor-provided tickets may be problematic or when the TON bid item is not used elsewhere on the contract. Other cases may also warrant the use of the CY bid item.

For Structure Backfill, Granular Backfill, and Base Aggregate Dense 1 1/4-inch materials use a 2.0 conversion factor (tons/cubic yard) for compacted TON bid items or use a 1.20 expansion factor (i.e. add an additional 20%) for CY bid items, unless directed otherwise. Refer to the FDM when preparing computations using other granular materials (breaker run, riprap, etc.).

Granular quantities and units should be coordinated with the roadway designer. For some structures, backfill quantities may be negligible to the roadway, while others may encompass a large portion of the roadway cross section and be present in multiple cross sections. A long

MSE retaining wall would be an example of the latter case and will require coordination with the roadway designer.

Generally, granular material pay limits should be shown on all structure plans. This information should be used to generate the estimated quantities and used to coordinate with roadway cross sections and construction details. See Standard Detail 9.01 – Structure Backfill Limits and Notes - for typical pay limits and plan notes.

Refer to 9.10 for additional information about granular materials.

6.4.3 Concrete Masonry Bridges

Show unit quantities to the nearest cubic yard, as well as the total quantity. In computing quantities no deduction is made for metal reinforcement, floor drains, conduits and chamfers less than 2”. Flanges of steel and prestressed girders projecting into the slab are deducted.

Deduct the volume of pile heads into footings and through seals for all piling except steel H sections. Deduct the actual volume displaced for precast concrete and cast-in-place concrete piling.

Consider the concrete parapet railing on abutment wing walls as part of the concrete volume of the abutment.

6.4.4 Prestressed Girder Type I (28-Inch; 36-Inch; 36W-Inch; 45W-Inch; 54W-Inch; 72W-Inch, 82W-Inch)

Record the total length of prestressed girders to the nearest 1 foot.

6.4.5 Bar Steel Reinforcement HS Bridges or Bar Steel Reinforcement HS Coated Bridges

Record this quantity to the nearest 10 lbs. Designate if bar steel is coated. Include the bar steel in C.I.P. concrete piling in bar steel quantities.

6.4.6 Bar Steel Reinforcement HS Stainless Bridges

Record this quantity to the nearest 10 lbs. Bar weight shall be assumed to be equivalent to Bar Steel Reinforcement HS Bridges or Bar Steel Reinforcement HS Coated Bridges bid items.

6.4.7 Structural Steel Carbon or Structural Steel HS

See 24.2.4.

6.4.8 Bearing Pads Elastomeric Non-Laminated or Bearing Pads Elastomeric Laminated or Bearing Assemblies Fixed (Structure) or Bearing Assemblies Expansion (Structure)

Record as separate item with quantity required. Bid as Each.

6.4.9 Piling Test Treated Timber (Structure)

Record this quantity as a lump sum item. Estimate the pile lengths by examining the subsurface exploration sheet and the Site Investigation Report. Give the length and location of test piles in a footnote. Do not use this quantity for steel piling or concrete cast-in-place piling.

6.4.10 Piling CIP Concrete Delivered and Driven ___-Inch, Piling Steel Delivered and Driven ___ -Inch

Record this quantity in feet for Steel and C.I.P. types of piling delivered and driven. Timber piling are Bid as separate items, delivered and driven. Pile lengths are computed to the nearest 5.0 foot for each pile within a given substructure unit, unless a more exact length is known due to well defined shallow rock (approx. 20 ft.), etc.. Typically, all piles within a given substructure unit are shown as the same length.

The length of foundation piling driven includes the length through any seal and embedment into the footing. The quantity delivered is the same as quantity driven. For trestle piling the amount of piling driven is the penetration below ground surface.

Oil field pipe is allowed as an alternate on all plans unless a note is added in the General Notes stating it is not allowed on that specific project.

6.4.11 Preboring CIP Concrete Piling or Steel Piling

Record the type, quantity in feet. Calculate to the nearest lineal foot per pile location.

6.4.12 Railing Steel Type (Structure) or Railing Tubular Type (Structure)

Record the type and quantity, bid in lineal feet. For bridges, the railing length should be horizontal length shown on the plans. For retaining walls, use the length along the top of the wall. Calculate railing lengths as follows:

- Steel Railing Type ‘W’ – CL end post to CL end post
- Tubular Railing Type ‘H’ – CL end plate to CL end plate
- Combination Railing Type ‘3T’ – CL end post to CL end post + (2’-5”) per railing
- Tubular Railing Type ‘M’ – CL end post to CL end post + (4’-6”) per railing
- Combination Railing Type ‘Type C1-C6’ – CL end rail base plate to CL end rail base plate
- Tubular Steel Railing Type NY3&4 – CL end post to CL end post + (4’-10”) per railing

6.4.13 Slope Paving Concrete or Slope Paving Crushed Aggregate or Slope Paving Select Crushed Material

Record this quantity to the nearest square yard. Deduct the area occupied by columns or other elements of substructure units.

6.4.14 Riprap Medium, Riprap Heavy or Grouted Riprap, Riprap Light

Record this quantity to the nearest 1 cubic yard.

6.4.15 Pile Points

When recommended in soils report. Bid as each.

6.4.16 Floordrains Type GC, Floordrains Type H, or Floordrains Type WF

Record the type and number of drains. Bid as Each.

6.4.17 Cofferdams (Structure)

Lump Sum

6.4.18 Rubberized Membrane Waterproofing

Record the quantity to the nearest square yard.

6.4.19 Expansion Devices

For “Expansion Device” and “Expansion Device Modular”, bid the items in lineal feet. The distance measured is from flowline to flowline along the skew (do not include turn-ups into parapets or medians).

6.4.20 Electrical Work

Refer to Standard Construction Specifications for bid items.

6.4.21 Conduit Rigid Metallic __-Inch or Conduit Rigid Nonmetallic Schedule 40 -Inch

Record this quantity in feet.

6.4.22 Preparation Decks Type 1 or Preparation Decks Type 2

Record these quantities to the nearest square yard. Preparation Decks Type 1 should be provided by the Region. Estimate Preparation Decks Type 2 as 40% of Preparation Decks Type 1. Deck preparation areas shall be filled using Concrete Masonry Overlay Decks, Concrete Masonry Deck Repair, or with an appropriate deck patch. See Chapter 40 Standards.

6.4.23 Cleaning Decks

Record this quantity to the nearest square yard.

6.4.24 Joint Repair

Record this quantity to the nearest square yard.

6.4.25 Concrete Surface Repair

Record this quantity to the nearest square foot.

6.4.26 Full-Depth Deck Repair

Record this quantity to the nearest square yard.

6.4.27 Concrete Masonry Overlay Decks

Record this quantity to the nearest cubic yard. Estimate the quantity by using a thickness measured from the existing ground concrete surface to the plan gradeline. Calculate the minimum overlay thickness and add ½" for variations in the deck surface. Provide this average thickness on the plan, as well. Usually 1" of deck surface is removed by grinding. Include deck repair quantities for Preparation Decks Type 1 & 2 and Full-Depth Deck Repair. Use 2-inch thickness for each Preparation area and ½ the deck thickness for Full-Depth Deck Repairs in areas of deck preparation (full-depth minus grinding if no deck preparation).

6.4.28 Removing Old Structure and Debris Containment

For work over roadways and railroads, "Removing Old Structure" is most typically used for complete or substantial removals. For work over waterways, one of the following bid items should be used for complete or substantial removals: Removing Old Structure Over Waterway, Removing Old Structure Over Waterway With Minimal Debris, or Removing Old Structure Over Waterway With Debris Capture System. For work other than complete or substantial removals, a Removing Old Structure bid item may not be required.

Use Debris Containment, **only as needed** based on the significance, extent, or location of the removal.

See 6.3.3.8 for additional information on Removing Old Structure and Debris Containment bid items.

Bid as Lump Sum.

6.4.29 Anchor Assemblies for Steel Plate Beam Guard

Attachment assembly for Beam Guard at the termination of concrete parapets. Bid as each.

6.4.30 Steel Diaphragms (Structure)

In span diaphragms used on bridges with prestressed girders. Bid as each.

6.4.31 Welded Stud Shear Connectors X -Inch

Total number of shear connectors with the given diameter. Bid as each.

6.4.32 Concrete Masonry Seal

Seal concrete bid to the nearest cubic yard. Whenever a concrete seal is shown on the plans, then “Cofferdams (Structure)” is also to be a bid item.

6.4.33 Geotextile Fabric Type

List type of fabric. Type HR is used in conjunction with Heavy Riprap. Bid in square yards.

6.4.34 Concrete Adhesive Anchors

Used when anchoring reinforcing bars into concrete. Bid as each.

6.4.35 Piling Steel Sheet Permanent Delivered or Piling Steel Sheet Permanent Driven

Record this quantity to the nearest square foot for the area of wall below cutoff.

6.4.36 Piling Steel Sheet Temporary

This quantity is used when the designer determines that retention of earth is necessary during excavation and soil forces require the design of steel sheet piling. This item is seldom used now that railroad excavations have a unique SPV.

Record this quantity to the nearest square foot for the area from the sheet pile tip elevation to one foot above the retained grade.

6.4.37 Temporary Shoring

This quantity is used when earth retention may be required and the method chosen is the contractor’s option.

Measured as square foot from the ground line in front of the shoring to a maximum of one foot above the retained grade. For the estimated quantity use the retained area (from the ground line in front of the shoring to the ground line behind the shoring, neglecting the additional height allowed for measurement).

6.4.38 Concrete Masonry Deck Repair

Record this quantity to the nearest cubic yard. Use 2-inch thickness for each Preparation area and ½ the deck thickness for Full-Depth Deck Repairs.

6.4.39 Sawing Pavement Deck Preparation Areas

Use 10 lineal feet per SY of Preparation Decks Type 1.

6.4.40 Removing Bearings

Used to remove existing bearings for replacement with new expansion or fixed bearing assemblies. Bid as each.

6.4.41 Ice Hot Weather Concreting

Used to provide a mechanism for payment of ice during hot weather concreting operations. See FDM 19-5-3.2 for bid item usage guidance and quantity calculation guidance. Bid as LB and round to the nearest 5 lbs.

6.4.42 Asphaltic Overlays

Estimate the overlay quantity by using the theoretical average overlay thickness and add ½" for variations in the deck surface. Provide this average thickness on the plan, as well. Use 110 lbs/(square yard - inch) to calculate hot mix asphalt (HMA) and polymer modified asphalt (PMA) overlay quantities.

For HMA overlays use 0.07 gallons/square yard to calculate tack coat quantity, unless directed otherwise.

Coordinate asphaltic quantity assumptions with the Region and roadway designers.

6.5 Production of Structure Plans by Consultants, Regional Offices and Other Agencies

On Federal (FHWA) or State Aid Projects (including maintenance projects), a completed Structure Survey Reports, preliminary and final plans are submitted to the Bureau of Structures with a copy forwarded to the Regional Office for review and approval prior to construction. Structure and project numbers are provided by the Regional Offices. In preparation of the structural plans, the appropriate specifications and details recommended by the Bureau of Structures are to be used. If the consultant elects to modify or use details other than recommended, approval is required prior to their incorporation into the final plans.

On all Federal or State Aid Projects involving Maintenance work, the Concept Definition or Work Study Report, the preliminary and final bridge reconstruction plans shall be submitted to the Bureau of Structures for review.

Consultants desiring eligibility to perform engineering and related services on WisDOT administered structure projects must have on file with the Bureau of Structures, an electronic copy of their current Quality Assurance/Quality Control (QA/QC) plan and procedures. The QA/QC plan and procedures shall include as a minimum:

- Procedures to detect and correct bridge design errors before the design plans are made final.
- A means for verifying that the appropriate design calculations have been performed, that the calculations are accurate, and that the capacity of the load-carrying members is adequate with regard to the expected loads on the structure.
- A means for verifying the completeness, constructability and accuracy of the structure plans.
- Verification that independent checks, reviews and ratings were performed.

The QA/QC plan shall also include the following items:

- Identification of a lead QA/QC Structures Program contact
- Identification of the QA/QC plan and procedures implementation date
- A statement indicating that the independent design check will be performed by an individual other than the designer, and the independent plan check will be performed by an individual other than the drafter.

Provisions for periodic reviews and update of the QA/QC plan with a frequency no less than 5 years; or as needed due to changes in the firm's personnel or firm's processes or procedures; or as requested by BOS.A QA/QC verification summary sheet is required as part of every final structure plan submittal, demonstrating that the QA/QC plan and procedures were followed for that structure. The QA/QC verification summary sheet shall include the signoff or initialing by each individual that performed the tasks (design, checking, plan review, technical review, etc.) documented in the QA/QC plan and procedures. The summary sheet must be submitted with the final structure plans as part of the e-submit process.

Consultants' QA/QC plans and verification summary sheets may be subject to periodic reviews by BOS. These reviews are intended to assess compliance with BOS requirements listed above.

The list of consultant firms eligible to provide structural design services to WisDOT may be accessed using the link below:

https://wisconsindot.gov/Pages/doing-bus/eng-consultants/cnslt-rsrces/strct/plan-submittal.aspx

6.5.1 Approvals, Distribution, and Work Flow

Consultant	Meet with Regional Office and/or local units of government to determine need.
	Prepare Structure Survey Report including recommendation of structure type.
Geotechnical Consultant	Make site investigation and prepare Subsurface Investigation Report.
Consultant	Submit hydrology report via Esubmit or as an email attachment to the supervisor of the Consultant Review and Hydraulics Unit. Submit 60 days prior to preliminary plan submittal.
	Prepare preliminary plans according to 6.2.
	Coordinate with Region and other agencies per 6.2.3.
	Submit preliminary plans, SSR and supporting documents via e-submit for review and approval of type, size and location.
Structures Design Section	Record project information in HSIS.
	Review hydraulics for Stream Crossings.
	Review Preliminary Plan. A minimum of 30 days to review preliminary plans should be expected.
	Coordinate with other agencies per 6.2.3.
	Return preliminary plans and comments from Structures Design Section and other appropriate agencies to Consultant with a copy to the Regional Office.
	Forward Preliminary Plan and Hydraulic Data to DNR.
Consultant	Modify preliminary plan as required, and provide explanation for preliminary comments not incorporated in final plan.
	Prepare and complete final design and plans for the specified structure.
	Write special provisions.
	At least **two months** in advance of the PS&E date, submit the required final design documents via e-submit per 6.5.3.

Structures Design Section	Determine which final plans will be reviewed and perform quality assurance review as applicable.
	For final plans that are reviewed, return comments to Consultant and send copy to Regional Office, including FHWA as appropriate.
Consultant	Modify final plans and specifications as required.
	Submit modified final plans via e-submit as required.
Structures Design Section	Review modified final plans as applicable.
	Sign final plans and send performance evaluation form to Region and Consultant.
Geotechnical Consultant	At time of PSE, transmit gINT boring logs, soils laboratory testing summary and data sheets, and Soil Reports to the emails provided in the Soils and Subsurface Investigations section of Two/Three Party Design Contract Special Provisions.
Bureau of Project Development	Prepare final accepted structure plans for pre-development contract administration.
Consultant	If a plan change is needed after being advertised but before being let, an addendum is required per FDM 19-22-1 and 19-22 Attachment 1.2.
Structures Design Section	Review structure addendum as applicable.
	Sign structure addendum.
Bureau of Project Development	Distributes structure addendum to bidders.
Consultant	If a plan change is required after being let, a post-let revision is required per 6.5.5.
Structures Design Section	Review post-let revision as applicable.
	Stamp post-let revision plan as accepted.
	Delivers revised plan to DOT construction team for distribution.

Table 6.5-1
Approvals, Distribution and Work Flow

6.5.2 Preliminary Plan Requirements

The Consultant prepares the Structure Survey Report for the improvement. Three types of Structure Survey Reports are available at the Regional Offices and listed in 6.2.1 of this Chapter. Preliminary layout requirements are given in 6.2.2. The Preliminary Plan exhibits are as follows:

1. Hydrology Report

2. Structure Survey Report
3. Preliminary plan, including log borings shown on the subsurface exploration sheet
4. Evaluation of subsurface investigation report
5. Contour map
6. Plan and profile, and typical section for roadway approaches
7. Hydraulic/Sizing Report (see Chapter 8 - Hydraulics) and hydraulic files are required for stream crossing structures
8. County map showing location of new and/or existing structures and FEMA map
9. Any other information or drawings which may influence location, layout or design of structure, including DNR initial review letter and photographs

6.5.3 Final Plan Requirements

The guidelines and requirements for Final Plan preparation are given in 6.3. The Load Rating Summary form and On-Time Submittal form can be found on the Bureau of Structures' Design and Construction webpage. The following files are included as part of the final-plan submittal:

1. Final Drawings
2. Design and Quantity Computations

   For all structures for which a finite element model was developed, include the model computer input file(s).
3. Special Provisions covering unique items not in the Standard Specifications or Standardized Special Provisions (STSP).
4. QA/QC Verification Sheet
5. Inventory Data Sheet
6. Bridge Load Rating Summary Form
7. LRFD Input File (Excel ratings spreadsheet)
8. On-Time Improvement Form

   The On-Time Improvement form is required to be submitted if either of the following situations occur:

   - If the first version of a final structure plan is submitted after the deadline of two months prior to the PSE date.

- If any version of a final structure plan is re-submitted after the deadline of two months prior to the PSE date. However this form is not required when the re-submit is prompted by comments from the Consultant Review Unit. The form is also not necessary when submitting addenda or post-let revisions.

6.5.4 Addenda

Addenda are plan and special provision changes that occur after the bid package has been advertised to potential bidders. See FDM 19-22-1 for instruction on the addenda process.

6.5.5 Post-Let Revisions

Post-let revisions are changes to plan details after the contract is awarded to a bidder. ESubmit only the changed plan sheets, not the entire plan set. The changes to the plan sheet shall be in red font, and outlined by red clouding. The revision box shall also be filled in with red font. Each sheet shall be 11x17, PE stamped, signed, and dated on the date of submittal.

6.5.6 Local-Let Projects

Local-let projects that are receiving State or Federal funding shall be submitted to and reviewed by the Consultant Review Unit in the same way as a State-let project. Final structure plans accepted and signed by the Consultant Review Unit will be returned to the Designer of Record and to the Region for incorporation into the local contract package.

6.6 Structures Data Management and Resources

6.6.1 Structures Data Management

The following items are part of the Data Management System for Structures. The location is shown for all items that need to be completed in order to properly manage the Structure data either by Structures Design personnel for in-house projects or consultants for their designs.

1. Structure Survey Report - Report is submitted by Region or Consultant and placed in the individual structure folder in HSI by BOS support staff.

2. Subsurface Exploration Report - Report is submitted by WisDOT Geotechnical Engineering Unit and placed in the individual structure folder in HSI by BOS support staff.

3. Hydraulic and Scour Computations, Contour Maps and Site Report - Data is assembled by the BOS Consultant Review & Hydraulics Unit and placed in the individual structure folder in HSI by BOS support staff.

4. Designer Computations and Inventory Superstructure Design Run (Substructure computer runs as determined by the Engineer). The designers record design, inventory, operating ratings and maximum vehicle weights on the plans.

5. Load Rating Input File and Load Rating Summary sheet - The designer submits an electronic copy of the input data for load rating the structure to the Structures Development Section. (For internal use, it is located at //H32751/rating.)

6. Structure Inventory Form (Available under “Inventory & Rating Forms” on the HSI page of the BOS website). New structure or rehabilitation structure data for this form is completed by the Structural Design Engineer. It is E-submitted to the Structures Development Section for entry into the File.

7. Pile Driving Reports - An electronic copy of Forms DT1924 (Pile Driving Data) and DT1315 (Piling Record) are to be submitted to the Bureau of Structures by email to “DOTDTSDStructuresPiling@dot.wi.gov ”. These two documents will be placed in HSI for each structure and can be found in the “Shop” folder.

8. Final Shop Drawings for steel bridges (highway and pedestrian), sign bridges, floor drains, railings, all steel joints, all bearings, high-mast poles, prestressed girders, prestressed boxes, noise walls and retaining walls. Metals Fabrication & Inspection Unit or others submit via email to the Structures Development Section at “DOTDLDTSDSTRUCTURESRECORDS@DOT.WI.GOV ”. This process does not, however, supersede submission processes in place for specific projects.

9. Mill Tests, Heat Numbers and Shop Inspection Reports for all Steel Main Members. Metals Fabrication & Inspection Unit electronically files data into HSI

10. As-Let Plans: After bid letting, a digital image of the As-Let plans are placed in a computer folder in the Bureau of Project Development (BPD). BOS office support staff

extract a digital copy of the As-Let structure plans and place it in the structure folder for viewing on HSI.

11. As-Built Plans: As-Built structure plans shall be prepared for all let structure projects, new or rehabilitation. The structures with prefix 'B', 'P', 'C', 'M', 'N', 'R' and 'S' shall have As-Built plans produced after construction. The As-Built shall be prepared in accordance with Section 1.65.14 of the Construction and Materials Manual (CMM). These plans are located on a network drive and be viewed in DOTView GIS. BOS staff will ensure that the proper BOS folder (\\dotstrc\04bridge) has a copy of these plans for viewing in HSI.

12. Inspection Reports - A certified bridge inspector enters the initial and subsequent inspection data into HSI.

Initial	Underwater (UW-Probe/Visual)
Routine Visual	Movable
Fracture Critical	Damage
In-Depth	Interim
Underwater (UW)-Dive	Posted
Underwater (UW)-Survey	Structure Inventory and Appraisal

Table 6.6-1
Various Inspection Reports

** HSI – Highway Structures Information System – The electronic file where bridge data is stored for future use.

6.6.2 Resources

The following items are available for assistance in the preparation of structure plans on the department internet sites:

https://wisconsindot.gov/Pages/doing-bus/eng-consultants/cnslt-rsrces/strct/default.aspx

Bridge Manual
Highway Structures Information System (HSI)
Insert sheets
Standard details
Posted bridge map
Standard bridge CADD files
Structure survey reports and check lists
Structure costs
Structure Special Provisions

https://wisconsindot.gov/Pages/doing-bus/eng-consultants/cnslt-rsrces/strct/manuals.aspx

Facilities Development Manual
Standard Specifications for Highway and Structures Construction
Construction and Materials Manual

Additional information is available on the AASHTO and AREMA websites listed below:

http://bridges.transportation.org

https://www.arema.org/

This page intentionally left blank.

Table of Contents

7.1 Introduction 3
7.1.1 WisDOT ABC Initiative 3
7.1.2 ABC Overview 3
7.1.3 Accelerated Bridge Construction Technology 4
7.1.4 ABC Methods 6
7.1.4.1 Prefabricated Bridge Elements 6
7.1.4.1.1 Precast Piers 7
7.1.4.1.2 Application 7
7.1.4.1.3 Design Considerations 8
7.1.4.2 Geosynthetic Reinforced Soil – Integrated Bridge Systems (GRS-IBS) 9
7.1.4.2.1 Design Standards 12
7.1.4.2.2 Application 12
7.1.4.2.3 Design Considerations 13
7.1.4.2.3.1 Hydraulics 13
7.1.4.2.3.2 Reinforced Soil Foundation (RSF) and Reinforced Soil Mass 13
7.1.4.2.3.3 Superstructure 14
7.1.4.2.3.4 Approach Integration 15
7.1.4.2.3.5 Design Details 15
7.1.4.2.4 Design Steps 15
7.1.4.3 Lateral Sliding 17
7.1.4.4 ABC Using Self Propelled Modular Transporter (SPMT) 18
7.1.4.4.1 Introduction 18
7.1.4.4.2 Application 21
7.1.4.4.3 Special Provision 22
7.1.4.4.4 Roles and Responsibilities 22
7.1.4.4.4.1 WisDOT 23
7.1.4.4.4.2 Designer 24
7.1.4.4.4.3 Contractor 24
7.1.4.4.5 Temporary Supports 25
7.1.4.4.6 Design Considerations 25
7.1.4.4.6.1 Bridge Staging Area 25
7.1.4.4.6.2 Travel Path 26
7.1.4.4.6.3 Allowable Stresses 27

7.1.4.4.6.4 Pick Points 27
7.1.4.4.6.5 Deflection and Twist 29
7.1.4.4.7 Structure Removal Using SPMT 30
7.1.5 Project Delivery Methods/Bidding Process 30
7.2 ABC Decision-Making Guidance 32
7.2.1 Descriptions of Terms in ABC Decision-Making Matrix 34
7.3 References 39

7.1 Introduction

Disclaimer:
This chapter is in the early stages of development. The information is limited and will develop over time. The intent of this chapter is to provide guidance to designers, but is far from all-inclusive.

The purpose of the Accelerated Bridge Construction (ABC) Chapter is to provide guidance for the planning and implementation of projects that may benefit from the application of rapid bridge construction technologies and methods. This chapter was prepared to provide planners and engineers with a basic understanding of different ABC methods available, help guide project specific selection of ABC methods, and to encourage the use of the ABC methods described in this chapter.

7.1.1 WisDOT ABC Initiative

The Department's mission is to provide leadership in the development and operation of a safe and efficient transportation system. One of our values relates to Improvement - Finding innovative and visionary ways to provide better products and services and measure our success. The application of Accelerated Bridge Construction (ABC) is consistent with our Mission and Values in promoting efficient development and operation of the transportation system through innovative bridge construction techniques that better serve the public. This service may manifest as safer projects with shorter and less disruptive impacts to the traveling public, and potential cost savings.

WisDOT is following the Federal Highway Administration's (FHWA) Every Day Counts initiative "aimed at shortening project delivery, enhancing the safety of our roadways, and protecting the environment." Two of the five major methods that the FHWA has emphasized as accelerating technologies are Prefabricated Bridge Elements and Systems (PBES) and Geosynthetic Reinforced Soil – Integrated Bridge Systems (GRS-IBS). These accelerating technologies are incorporated in the following sections in this chapter, namely: Prefabricated Bridge Elements, Geosynthetic Reinforced Soil – Integrated Bridge Systems (GRS-IBS), Self Propelled Modular Transporters (SPMTs) and Lateral Sliding (both SPMTs and Lateral Sliding are classified as Prefabricated Bridge Systems). WisDOT has had success using GRS-IBS and Prefabricated Bridge Elements, and is always looking for new technologies to improve construction and reduce impacts to traffic. For more information on the Every Day Counts Initiative, refer to www.fhwa.dot.gov/everydaycounts.

7.1.2 ABC Overview

In essence, ABC uses different methods of project delivery and construction to reduce the project schedule, on-site construction time, and public impact. With the ever increasing demand on transportation infrastructure, and the number of bridges that are approaching the end of their service lives, the need for ABC becomes more apparent.

Three main benefits of using ABC methods include minimized impact to traffic, increased safety during construction, and minimized impacts in environmentally sensitive areas. Where conventional bridge construction takes months or years, a bridge utilizing ABC may be placed

in a matter of weeks, days, or even a few hours depending on the methods used. ABC methods are generally safer than conventional construction methods because much of the construction can be done offsite, away from traffic. Quality can also be improved because the construction is often completed in a more controlled environment compared to on-site conditions. On the other hand, as with the implementation of all new technologies, the use of ABC comes with challenges that need to be overcome on a project-specific basis.

Oftentimes accelerating the schedule increases the cost of the project. This increased project delivery cost can be offset by reductions in road user costs. In some states, it has been shown that a high percentage of the public approves the use of ABC knowing that the cost can be significantly higher.

WisDOT policy item:

Prior to the implementation of ABC methods on a project, contact the Bureau of Structures Development Section Chief for discussion, resources, and approval.

7.1.3 Accelerated Bridge Construction Technology

Acronym/Term	Definition
ABC (Accelerated Bridge Construction)	Bridge construction methods that use innovative planning, design, materials, and construction techniques in a safe and cost-effective manner to reduce the onsite construction time that occurs when building new bridges or replacing and rehabilitating existing bridges.
AC (Alternative Contracting)	Nontraditional project delivery systems, bidding practices, and specifications that may be used to reduce life-cycle costs, improve quality, and accelerate the delivery of construction projects.
BSA (Bridge Staging Area)	Location where a bridge is constructed near the final location for the bridge, where the traveling public is not affected. The bridge can be moved from the staging area to the final location with SPMTs or by sliding.
CM/GC (Construction Manager/General Contractor)	Hybrid of the DBB and D/B processes that allows the owner to remain active in the design process, while the risk is still taken by the general contractor. This method is not an option for WisDOT administered projects.
D/B (Design/Build)	Accelerated project delivery method where one entity (the “designer-builder”) assumes responsibility for both the design and construction of a project. This method is not an option for WisDOT administered projects.

DBB (Design-Bid-Build)	Traditional project delivery method where the owner contracts out the design and construction of a project to two different entities.
EDC (Every Day Counts)	Initiative put forth by FHWA designed to identify and deploy innovation aimed at shortening project delivery, enhancing the safety of our roadways, and protecting the environment.
GRS-IBS (Geosynthetic Reinforced Soil – Integrated Bridge System)	An ABC technology that uses alternating layers of compacted granular fill material and fabric sheets of geotextile reinforcement to provide support for the bridge in place of a traditional abutment.
LBDB (Low Bid Design Build)	A type of D/B where the design and construction service is bundled into a single contract awarded to the lowest competent and responsible bidder.
PBES (Prefabricated Bridge Elements and Systems)	Structural components of a bridge or bridge system that are constructed offsite, or near-site of a bridge that reduce the onsite construction time and impact to the traveling public relative to conventional construction methods.
Pick Points	Locations where the SPMTs will lift and carry the bridge.
Program Initiative	The use of ABC methods to facilitate research, investigate technology, develop familiarity, or address other stakeholder needs.
Road User Costs	Costs pertaining to a project alternative borne by motorists and the community at-large as a result of work zone activity. (FDM 11-50-32)
SPMTs (Self Propelled Modular Transporters)	Remote-controlled, multi-axle platform vehicles capable of transporting several thousand tons of weight.
Stroke	Distance an SPMT can raise or lower its platform.
TMP (Transportation Management Plan)	A set of coordinated transportation management strategies that describes how they will be used to manage work zone impacts of a road project. (FDM 11-50-5)
TP (Travel Path)	Course that the SPMTs travel to carry the completed structure from the staging area to the final location.

Table 7.1-1
ABC Terminology

7.1.4 ABC Methods

7.1.4.1 Prefabricated Bridge Elements

Prefabricated bridge elements are a commonly used ABC method and can be incorporated into most bridge projects as a form of accelerated construction. Concrete bridge elements are prefabricated, transported to the construction site, placed in the final location, and tied into the structure. An entire bridge can be composed of prefabricated elements, or single bridge elements can be prefabricated as the need arises. Prefabricated bridge elements can also be used in combination with other accelerated bridge construction methods. Commonly used prefabricated bridge elements are prestressed concrete girders (including I-girders, adjacent inverted T-beams, and boxes), full depth and partial depth deck panels, abutments, pier caps, pier columns, and footings, as well as precast three-sided and four-sided box culverts.

For all prefabricated bridge elements, shop drawings shall be submitted by email to the Bureau of Structures Development Section Chief.

Figure 7.1-1
Prefabricated Pier Cap

Figure 7.1-2
Prefabricated Abutment

Prefabricated bridge elements are used to mitigate the on-site time required for concrete forming, rebar tying and concrete curing, saving weeks to months of construction time. Deck beam elements eliminate conventional onsite deck forming activities. To reduce onsite deck forming operations, deck beam elements are typically placed in an abutting manner. Prefabricated elements are often of higher quality than conventional field-constructed elements, because the concrete is cast and cured in a controlled environment. The elements are often connected using high strength grout, and post-tensioning or pretensioning. Because some previous prefabricated bridge element connections have had problems, close attention should be given to these connections.

7.1.4.1.1 Precast Piers

Precast concrete piers are optimally used when constructed adjacent to traffic. This application can be best visualized for a two span bridge with a pier located between median barriers. The use of precast piers minimizes traffic disruptions and construction work near traffic.

7.1.4.1.2 Application

Precast concrete piers have successfully been used on past projects. However, these projects did not allow the use of cast-in-place concrete piers which is currently not practical for most projects. An approach that allows for either cast-in-place or precast construction (or a combination thereof) after the contract has been awarded provides contractors greater flexibility to meet schedule demands, provides a safer work environment, and has the potential to reduce costs.

Optional precast concrete pier elements are currently being used on the I-39/90 Project. To aid in the continued development of precast piers, several bridges on the I-39/90 Project required the use of precast pier elements. These mandatory locations will follow the optional precast pier requirements, but prohibit cast-in-place construction. The remaining I-39/90 Project bridges, unless provided an exception, are being delivered as traditional cast-in-place piers with a noted allowance for the contractor to select a precast option. The precast option provides the Project Team and contractors with more flexibility while requiring minimal coordination with designers and the Bureau of Structures.

WisDOT policy item:

Pier configurations shall be determined by providing the most efficient cast-in-place concrete pier design, unless approved otherwise. When the cast-in-place design can accommodate a precast option, include a noted allowance. See Standards for Precast Pier (Optional) Cap and Columns. Contact the Bureau of Structures Development Section for further guidance.

In some cases, optional precast piers may not be suitable for a particular bridge location and there are specific limitations that can cause concern. The designer shall investigate the potential viability of precast pier elements for any proposed bridge. The designer should be aware of the common criteria for use and the limitations of the pier system. Some specific limitations for the optional precast pier element usage are the following:

- Piers shall be designed to allow either cast-in-place or precast concrete construction, but with only cast-in-place detailed on the plans. Differences between construction methods shall be limited to pier column connections, beam seats details, and diaphragm details. If the pier configuration is not able to reasonably accommodate interchangeability between the two construction types, optional piers may be exempt from the precast option.
- Multi-column piers (3x4 ft rectangular) grade separations over roadways only.
- Fixed piers supporting prestressed concrete girders only.
- Precast elements shall be limited to 90 kips.
- Deep foundations are recommended when multiple pier caps are used. Shallow foundations may be considered if differential settlement is not expected.
- Integral barriers or crashwalls are currently excluded from the precast option.
- Applications where the top of the footing may become submerged are prohibited.

An exception to the precast pier option may be given by the Bureau of Structures.

7.1.4.1.3 Design Considerations

Precast concrete piers shall be designed in conformance with the current *AASHTO LRFD*, in accordance with the WisDOT Bridge Manual, and as given in the Special Provisions.

The optional precast pier allowance shall be established as prescribed in the optional precast pier details and specifications to envelope design requirements between precast and cast-in-place concrete construction. Contract plans shall follow a traditional cast-in-place delivery, with the exception of a noted allowance for precast piers. If the contractor selects the precast option, the contractor shall submit shop drawings, sealed by a professional engineer, to the Bureau of Structures. The fabrication shall be in conformance with the current *AASHTO LRFD*, in accordance to the Bridge Manual, and as given in the Special Provisions. Payment for the precast option will be paid using the cast-in-place concrete bid items.

Refer to Chapter 7 Standards for additional design considerations.

7.1.4.2 Geosynthetic Reinforced Soil – Integrated Bridge Systems (GRS-IBS)

Geosynthetic Reinforced Soil-Integrated Bridge Systems (GRS-IBS) are composed of two main components: Geosynthetic Reinforced Soil (GRS) and Integrated Bridge Systems (IBS). GRS is an engineered fill of closely spaced alternating layers of compacted fill and geosynthetic reinforcement that eliminates the need for traditional concrete abutments. IBS is a quickly-built, potentially cost-effective method of bridge support that blends the roadway into the superstructure using GRS technology. This integration system creates a transition area that allows for uniform settlement between the bridge substructure and the roadway approach, alleviating the “bump at the bridge” problem caused from uneven settlement. The result of this system is a smoother bridge approach.

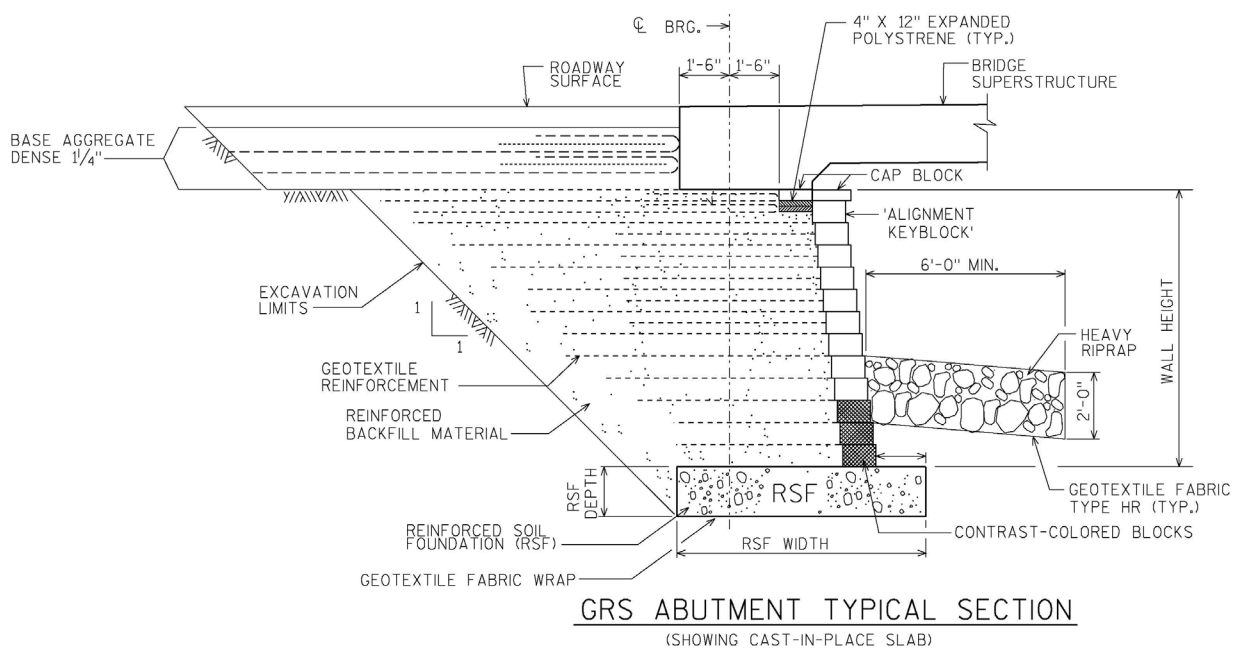

Figure 7.1-3
GRS-IBS Typical Cross Section

Figure 7.1-4
GRS-IBS Structure

Figure 7.1-5
GRS Abutment Layer During Construction

FHWA initially developed this accelerated construction technology, and the first bridge constructed in Wisconsin using the GRS-IBS technology was built in the spring of 2012. This

structure (including structure numbers B-9-380, R-9-13, and R-9-14) is located on State Highway 40 in Chippewa County. This structure utilized a single-span cast-in-place concrete slab, which is the first of its kind in the nation. This structure was closely monitored for two years to assess its performance.

This technology has several advantages over traditional bridge construction methods. A summary of the benefits of using GRS-IBS technology include the following:

1. Reduced Construction Time: Due to the simplicity of the design, low number of components, and only requiring common construction equipment to construct, the abutments can be rapidly built.

2. Potential Reduced Construction Costs: Compared to typical bridge construction in Wisconsin, GRS-IBS abutments can achieve significant cost savings. Nationwide, the potential cost savings is reported to be between 25 to 60% over traditional methods. The savings comes largely from the reduced number of construction steps, readily available and economical materials, and the need of only basic tools and equipment for construction.

3. Lower Weather Dependency: GRS-IBS abutments utilize only precast modular concrete facing blocks, open-graded backfill, and geotextile reinforcement in the basic design. The abutments can be constructed in poor weather conditions, unlike cast-in-place concrete, reducing construction delays.

4. Flexible Design: The abutment designs are simplistic and can be easily field-modified where needed to accommodate a variety of field conditions.

5. Potential Reduced Maintenance Cost: Since there are fewer parts to GRS-IBS abutments, overall maintenance is reduced. In addition, when repairs are needed, the materials are typically readily available and the work can be completed by maintenance staff or a variety of contractors.

6. Simpler Construction: The basic nature of the design demands less specialized construction equipment and the materials are usually readily available. Contractor capability and capacity demands are also reduced, allowing smaller and more diverse contractors to bid and complete the work.

7. Less Dependent on Quality Control: GRS-IBS systems are simple and basic in both their design and construction. Lack of technically challenging components and construction methods results in higher overall quality, reducing the probability of quality control related problems.

8. Minimized Differential Settlement: The GRS-IBS system is designed to integrate the structure with the approach pavement. Even though settlements can accumulate, differential settlement between the superstructure and the transition pavement is small. This can substantially reduce the common “bump at the bridge” that can be felt when traveling over traditional bridge transitions.

For more information, see Section 7.3, WisDOT Standard Details 7.01 and 7.02, and the Department's specification.

7.1.4.2.1 Design Standards

GRS Abutments shall be designed in conformance with the current *AASHTO Load and Resistance Factor Design Specifications* (AASHTO LRFD) and in accordance with the WisDOT Bridge Manual and the *FHWA Geosynthetic Reinforced Soil Integrated Bridge System Interim Implementation Guide*.

7.1.4.2.2 Application

In some cases GRS-IBS abutments may not be suitable for a particular bridge location and there are specific limitations that can cause concern. As with any preliminary bridge planning, the site should be thoroughly investigated for adequacy. The designer shall investigate the potential viability of using of GRS-IBS for any proposed bridge. The designer should be aware of the common criteria for use and the limitations of GRS-IBS systems. Some of the common criteria for usage of GRS-IBS are the following:

1. Scour potential at the abutment locations has been evaluated and is within acceptable limits
2. Water velocities are less than 5 ft/s
3. Adequate freeboard is provided (See Bridge Manual Chapter 8.3.1.5)
4. Soil conditions permit shallow foundations.
5. Low-volume roadways
6. Single span structure with a span length less than 90 feet
7. Abutment wall height less than 22 feet (measured at the maximum wall height, from the top of the RSF to the top of the wall)
8. Wingwalls are parallel to roadway
9. Maximum skew angle of 15°
10. Short and long term settlements are tolerable
11. Differential settlement along the length of the abutment is tolerable to avoid twisting of the superstructure
12. Suitable construction materials available

7.1.4.2.3 Design Considerations

7.1.4.2.3.1 Hydraulics

Similar to any bridge spanning a waterway, the hydraulic conditions must be evaluated. The integrity of this system is very susceptible to scouring and undercutting of the Reinforced Soil Foundation (RSF) which could lead to further erosion and movement of the backfill in the GRS mass, causing settlement and possible structural failure.

WisDOT policy item:

The use of GRS-IBS is subject to prior-approval by the Bureau of Structures for hydraulic design. Evaluation of scour vulnerability will include assessment of long-term aggradation and degradation, potential for lateral migration of the stream, and calculation of contraction scour and abutment scour. The conservative nature of abutment scour calculations is acknowledged. Placement of adequately designed permanent scour countermeasures will be required to resist calculated scour.

In some cases of bridge replacement, the new GRS-IBS abutments can be constructed behind old abutments which can be left partially in place to promote scour protection for the RSF and GRS mass. Rip-rap, gabion mattresses and other traditional permanent counter measures can also be used.

To help bridge inspectors with scour detection, the lower rows of facing block below proposed grade should have an accent color (typically red, either integral or stained color treatment) that will become visible if scour is occurring. The accented colors provide a visual cue to inspectors that movement of soils has occurred. The top of the contrast-colored blocks shall be placed 2-3 block courses below the top of riprap elevation.

7.1.4.2.3.2 Reinforced Soil Foundation (RSF) and Reinforced Soil Mass

In the GRS-IBS system, bridge seat loads (including dead loads, live loads, etc.) and the weight of the GRS mass and facing blocks comprise the vertical loads that are carried by the RSF and ultimately transmitted to the soil. The vertical bridge seat loads are transferred to the RSF via the GRS mass. The facing blocks only carry their self-weight. Horizontal earth pressure forces are resisted by the GRS mass and little horizontal forces are carried by the facing blocks.

As with any bridge design, proper subsurface exploration should be conducted to ascertain the soil types and layer thicknesses in the vicinity of the proposed site. Laboratory testing may also be necessary to help determine the soil properties and provide the magnitude and time rate of total and differential settlements that may occur.

The external stability of the RSF and reinforced soil mass should be checked for failure against sliding, bearing capacity, and global stability. Due to the behavior of the reinforcement within the soil mass, overturning is an unlikely failure mode, but needs to be checked. The internal stability of the GRS mass should also be checked for bearing capacity, deformations, and the required reinforcement strength. FHWA (1) has provided general guidelines for GRS-IBS

ultimate bearing capacities and the predicted deformations when using the prescribed material properties (geotextile, backfill, etc.) and geometry (layer spacings, wall height, etc.). In addition, anticipated settlements should be included when designing for vertical clearance. Under the conditions recommended by FHWA (1), creep in the geotextile reinforcement is typically negligible since the sustained stresses are redistributed and relatively low and reduction factors for creep are not required. Creep testing and evaluation should be conducted when the loading conditions and backfill and reinforcement conditions prescribed by FHWA (1) are exceeded.

The wall facing is composed of precast modular concrete blocks, which have a height of 8-inches. These types of blocks are readily available and need to conform to the same physical and chemical requirements as WisDOT MSE Wall Modular Blocks.

Special consideration should be given to the degree of batter of the various facing block systems. The amount of batter integrated into the wall systems can vary between manufacturers. Batter that is greater than expected will result in a decreased width between abutments when the span distance is held constant. The designer should be familiar with typical batter ranges for suppliers, and plan for variations in batter.

The wall facing blocks only support their self-weight and are held in place by the friction generated from their self-weight, the mechanical block interlocks, and the geotextile reinforcing fabric placed between each block layer. The upper layers of block will be less stable than the lower layers and they should be bonded in accordance with the specifications. This prevents movement of the blocks from expansion and contraction, freeze-thaw forces, settlement forces and vandalism.

The backfill should be an open graded material with an assumed internal angle of friction of 38 degrees. Generally this will limit the material to a crushed aggregate product. The RSF and integrated approach should generally use a wrapped dense graded aggregate.

The RSF and GRS mass should utilize a biaxial woven geotextile reinforcement fabric from the same manufacturer and of the same type and strength. Using biaxial geotextiles reduces the possibility of construction placement errors.

7.1.4.2.3.3 Superstructure

Typically, the bridge superstructure is placed directly on the reinforced soil abutment. Prestressed girders are often placed on top of the GRS substructure, followed by a traditional cast-in-place deck or precast deck panels. Other methods include the use of a cast-in-place concrete slab capable of spanning between the abutments or precast box girders. Both of these superstructure alternatives should be placed directly on the GRS abutment. The bearing area should contain additional geotextile reinforcement layers, which ensures that the superstructure bears on the GRS mass and not the facing blocks. The clear space between the facing block and the superstructure should be a minimum of 3-inches or 2 percent of the wall height, whichever is greater.

If steel or concrete I-girders are used, a precast or cast-in-place beam seat should be used to help distribute the girder reactions to the GRS abutment. Since there is open space between

I-girders, the beam seat can be used to support a backwall between the girders to retain the soil behind the girder ends.

7.1.4.2.3.4 Approach Integration

The approach construction that ties the roadway to the superstructure is essential for minimizing approach settlement and minimizing the bump at each end of the bridge. With a GRS abutment, this is accomplished by compacting and reinforcing the approach fill in wrapped geotextile layers and blending the integration zone with the approach pavement structure.

The integrated approach is constructed in a similar manner as the GRS mass, using layers of geotextile reinforcement and aggregate backfill. However, the integrated approach uses thinner layers until approximately 2 inches from the bottom of the pavement structure. The lift thicknesses should not exceed 6-inches and should be adjusted to accommodate the beam depths.

7.1.4.2.3.5 Design Details

Many of the typical detailing requirements for traditional bridges are still required on GRS-IBS bridges such as railings, parapets, guardrail end treatments, and drainage. Steel posts should be used for guardrail systems within the GRS and integrated approach areas, which can more easily penetrate the layers of geotextile than timber posts.

Penetrations and disturbances through the geotextile layers should be kept to a minimum and only used when absolutely necessary. Planning the locations of utilities and future utilities should be considered to avoid disturbing these layers. If utilities must be installed through a GRS-IBS abutment, all affected layers of geotextile should be overlapped/spliced according to the manufacturer's recommendations.

The backfill used for GRS-IBS is usually comprised of free draining, open graded material. The designer should give consideration to providing additional drainage if warranted. Surface drainage should be directed away from the wall face and the reinforced soil mass.

7.1.4.2.4 Design Steps

The design of GRS-IBS abutments should follow a systematic process and is summarized below:

1. Establish Project Requirements
    - Determine geometry of abutment and wing walls (height, length, batter, back slope and toe slope, skew, grade, superelevation)
    - Ensure construction requirements are reasonable and economical
    - Determine the loading conditions (soil surcharge, dead load, live load, impact load, load from adjacent structures)
    - Determine performance criteria (tolerable settlements, displacements, and distortions, design life, constraints)

2. Perform a Site Evaluation
   - Study the existing topography
   - Check any existing structures/roads for problems
   - Conduct a subsurface investigation (foundation soil properties, groundwater conditions)
   - Evaluate soil properties for retained earth and reinforced backfill
   - Evaluate foundation soil properties to determine if shallow foundations are feasible at the site
   - Evaluate hydraulic conditions
   - Evaluate scour conditions to ensure shallow foundations are feasible at the site

3. Determine Layout of GRS-IBS
   - Define the geometry of the abutment face wall and wing walls
   - Lay out the abutment with respect to the superstructure (skew, superelevations, grade)
   - Account for setback and clear space to calculate the elevation of the abutment face wall and the span length of the bridge
   - Determine the depth and volume of excavation necessary for construction. A GRS abutment can be built with a truncated base to reduce the excavation. Truncation also reduces the requirements for backfill and reinforcement.
   - Determine the length of the reinforcement for the abutment
   - Add a bearing reinforcement zone underneath the bridge seat to support the increased loads due to the bridge
   - Blend the reinforcement layers in the integration zone to create a smooth transition

4. Calculate Applicable Loads
   - Lateral Pressures and Stresses

   - Dead Loads
     - Adjacent box beams can have the superstructure bearing directly on the GRS abutment
     - Dead load pressure includes bridge beams, overlay, railing, and any other applicable permanent loads related to the superstructure
   - Live Loads
   - Design Pressure

     Adding LL on the superstructure and the bridge DL per abutment will give the total load that the bridge seat must support. Dividing this total load by the area of the bridge seat will give the bearing pressure. For abutment applications, the bearing pressure should be targeted to approximately 4,000 lbs/ft^2. If this is exceeded, the width of the bridge seat should be increased.

5. Conduct an External Stability Analysis [If requirements not met, go back to Step 3]
   - Direct Sliding
   - Bearing Capacity
   - Global Stability

6. Conduct Internal Stability Analysis [If requirements not met, go back to Step 3]
   - Ultimate Capacity
   - Deformations
   - Required Reinforcement Strength

7. Implement Design Details
   - Conduct a hydraulic analysis (if necessary)
   - Ensure face of the abutment is wide enough to accommodate guardrail installation, including enough length for guardrail to lie down. Consider using native soil behind the reinforced backfill material at the abutment and two adjacent wing walls.
   - Determine whether to build wing walls with either a full face or a stepped face that leads into the cut slope
   - Check special requirements for skew, superelevation, and grade
   - Determine necessary construction compaction requirements and density testing methods for GRS and RSF granular backfill materials
   - Contain the GRS integrated approach fill by wrapping the geotextile layers adjacent to the beam ends to prevent lateral spreading
   - Avoid any abrupt transition of soil type from the roadway to the bridge
   - Locate and plan to accommodate existing and potential future utilities

7.1.4.3 Lateral Sliding

Bridge placement using lateral sliding is another type of ABC where the entire superstructure is constructed in a temporary location and is moved into place over a night or weekend. This method is typically used for bridge replacement of a primary roadway where the new superstructure is constructed on temporary supports adjacent and parallel to the bridge being replaced. Once the superstructure is fully constructed, the existing bridge structure is demolished, and the new bridge is moved transversely into place. In some instances, a more complicated method known as a bridge launch has been used, which involves longitudinally moving a bridge into place.

Figure 7.1-6
Lateral Sliding

Several different methods have been used to slide a bridge into place. One common method is to push the bridge using a hydraulic ram while the bridge slides on a smooth surface and Teflon coated elastomeric bearing pads. Other methods have also been used, such as using rollers instead of sliding pads, and winches in place of a hydraulic ram. The bridge can also be built on a temporary support frame equipped with rails and pushed or pulled into place along those rails. Many DOTs have successfully replaced bridges overnight using lateral sliding.

This ABC method is used to replace bridges that are part of a main transportation artery traversing a minor road, waterway, or other geographic feature. The limiting factor with using lateral slide is having sufficient right-of-way, and space adjacent to the existing bridge to construct the new superstructure.

7.1.4.4 ABC Using Self Propelled Modular Transporter (SPMT)

7.1.4.4.1 Introduction

SPMTs are remote-controlled, self-leveling (each axle has its own hydraulic cylinder), multi-axle platform vehicles capable of transporting several thousand tons of weight. SPMTs have the ability to move laterally, rotate 360° with carousel steering, and typically have a jack stroke of 18 to 24 inches. They have traditionally been used to move heavy equipment that is too large for standard trucks to carry. SPMTs have been used for bridge placement in Europe for more than 30 years. Over the past decade, the United States has implemented SPMTs for rapid bridge replacement following the FHWA's recommendation in 2004 to learn how other countries have used prefabricated bridge components to minimize traffic disruption, improve work zone safety, reduce environmental impact, improve constructability, enhance quality, and lower life-cycle costs. The benefits of ABC using SPMTs include the following:

1. Minimize traffic disruption: Building or replacing a bridge using traditional construction methods can require the bridge to be closed for months to years, with lane restrictions, crossovers, and traffic slowing for the duration of the closure. Using SPMTs, a bridge can be placed in a matter of hours, usually requiring only a single night or weekend of full road closure and traffic divergence.

2. Improve work zone safety: The bridge superstructure is constructed in an off-site location called a bridge staging area (BSA). This allows construction of the entire superstructure away from live traffic, which improves the safety of both the construction workers and the traveling public.

3. Improve constructability: The BSA typically offers better construction access than traditional construction by keeping workspaces away from live traffic, environmentally sensitive areas, and over existing roadways.

4. Enhance quality: Bridge construction takes place off-site at the BSA where conditions can be more easily controlled, resulting in a better product. There is an opportunity to provide optimal concrete cure time in the BSA because the roadway in the temporary location does not have traffic pressures to open early.

5. Lower life-cycle costs: Because the quality of the bridge is increased, the overall durability and life of the bridge is also increased. This reduces the life-cycle cost of the structure.

6. Provide opportunities to include other ABC technologies: Multiple ABC technologies can be used on the same project, for example, a project could utilize prefabricated bridge elements, and also be moved into place using SPMTs.

7. Reduce environmental impacts: SPMT bridge moves have significantly shorter on-site construction durations than traditional construction, which is particularly advantageous for areas that are environmentally sensitive. These areas may restrict on-site construction durations due to noise, light, or night work.

Figure 7.1-7
Self Propelled Modular Transporters Moving a Bridge

When replacing a bridge using SPMTs the new superstructure is built on temporary supports off-site in a designated BSA near the bridge site. Once the new superstructure is constructed, the existing structure can be removed quickly with SPMTs or can be demolished in conventional time frames, depending on the project-specific needs. Once the existing structure is removed, the new superstructure is moved from the staging area to the final location using two or more lines of SPMT units. The SPMTs lift the superstructure off of the temporary abutments and transport it to the permanent substructure. The placement of a bridge superstructure using SPMTs often requires only one night of full road closure, and many bridges in the United States have been placed successfully in a matter of hours.

When using SPMTs for bridge replacement a new substructure may be constructed, or the existing substructure may be reused. If the existing substructure is in good condition and meets current design requirements, it may be reused, or it may be rehabilitated. When constructing a new substructure, the new abutments are often built below the superstructure in front of the existing abutments, so the construction can advance before deconstruction of the existing structure begins. Because the superstructure is constructed in the BSA, the new superstructure can be constructed at the same time as the substructure.

SPMTs are typically used to replace bridges that carry or span major roadways. Time limitations or impacts to traffic govern the need for a quick replacement. Locating an off-site BSA to build the superstructure is a critical component for using SPMTs. There needs to be a clearly defined travel path (TP) between the staging area and the final bridge location that can support the SPMT movements (vertical clearances, horizontal clearances, turning radii, soil conditions, utility conflicts, etc.). See sections 7.1.4.4.6.1 and 7.1.4.4.6.2 for additional discussion of the BSA and TP.

SPMTs can also be used to place a bridge over a waterway. In this case, the bridge superstructure is constructed offsite, and then SPMTs transport the superstructure from the BSA onto a barge which travels the waterway to the final bridge site.

To date, mostly single-span bridges or individual spans of multi-span bridges with lengths ranging from approximately 100 to 200 feet have been moved with SPMTs. There have been a few two-span bridge moves with SPMTs in the United States. The most common structures that have been moved successfully are prestressed I-girder or steel plate girder bridges.

The following sections discuss key items for bridge placement using SPMT in the State of Wisconsin. For additional information on the use of SPMTs for the movement of bridges consult FHWA's *Manual on Use of Self Propelled Modular Transporters to Remove and Replace Bridges*, and UDOT's *SPMT Manual*. Contact the WisDOT Bureau of Structures Design Section as an additional resource.

7.1.4.4.2 Application

For guidance on whether SPMT bridge placement or another ABC technology should be used for a project, first refer to the WisDOT ABC decision making guidance spreadsheet and flowchart in Section 7.2. Some of the common criteria that govern the use of SPMTs are the following:

1. There is a need to minimize the out-of-service window for the roadway(s) on or under the structure
2. There is a major railroad track on or under the bridge
3. There is a major navigation channel under the bridge
4. The bridge is an emergency replacement
5. The road on or under the bridge has a high ADT and/or ADTT

6. There are no good alternatives for staged construction or detours

7. There is a sensitive environmental issue

Along with the use of this technology, the specifications need to include incentives and disincentives to employ for the project.

7.1.4.4.3 Special Provision

When writing a special provision for a project using SPMTs, consider the following items that may need to be included in the special provision text:

1. Drainage – Define areas (bridge site, BSA, TP, etc.) where drainage needs to be maintained throughout construction and indicate areas where temporary culvert pipes will be required. In the special provision text, clearly indicate if the temporary culvert pipes are to be included with the "SPMT Bridge Construction B-XX-XXX".

2. Temporary Concrete Barrier – define areas where temporary concrete barrier is required. Clearly indicate which barriers (temporary or permanent) are paid for with the roadway bid items, and which barriers are paid for with the item "SPMT Bridge Construction B-XX-XXX".

3. Bearing Pads – Indicate if bearing pads need to be adhered to the bottoms of girders prior to the bridge move or if temporary bearing pads are required on the temporary supports. Clearly indicate how the bearing pads are to be paid.

7.1.4.4.4 Roles and Responsibilities

The following sections outline the roles and responsibilities for the parties involved in the project using the design-bid-build delivery method. These roles apply if WisDOT specifies that the bridge will be placed using SPMTs. If SPMT use is not a stated requirement for the project, the Contractor may have the option to use them as long as the project specifications are met. If this occurs, the contractor would assume the responsibilities for certain items in Table 7.1-2 as described in 7.1.4.4.4.3.

Category	Responsibility Description	Responsible Party
Scoping	Decision to Use SPMTs	WisDOT Region & BOS
	Bridge Type Selection	Designer
	Provide Resources to Design Team	WisDOT BOS
Superstructure	Superstructure Design	Designer
Pick Points	Location and Tolerances	Designer
	Analyze Bridge for Effects from Lifting and Travel	Designer
Deflections	Set Stress, Deflection, and Twist Limits	WisDOT & Designer
	Monitoring Plan (Specifications)	Designer
	Monitoring Plan (Execution)	Contractor
BSA and TP	Location of BSA	Designer
	Geometry of TP	Designer
Utilities	Utility Agreements	WisDOT
	Mitigation Concepts	Designer
	Mitigation Execution	Contractor
Site Conditions	Structural Analysis of Bridge Along TP	Designer
	Set Allowable Stress Limits on BSA and TP	Designer
	Mitigation of Affected Areas at BSA and TP	Contractor
	Protection of Structure Along TP	Contractor
Heavy Lifter Equipment	SPMT	Contractor
	Heavy Lifter Equipment to Raise Bridge	Contractor
	Contingency Plan For Equipment Failure	Contractor
Support Structures	Permanent Substructure Design	Designer
	Temporary Support Design	Contractor

Table 7.1-2
SPMT Roles and Responsibilities

7.1.4.4.4.1 WisDOT

The WisDOT Region and the Bureau of Structures shall make the final decision to use SPMTs on a project, considering user costs. WisDOT either specifies to the designer that SPMTs will be used for the project, or they allow the contractor to propose an ABC method. If the latter is chosen, the project parameters, specification, schedule, and proposal should be defined in a way that ensures the requirements are met if the contractor decides that an SPMT move is the best solution.

7.1.4.4.4.2 Designer

The Designer includes any traffic, structural, or geotechnical engineers engaged by WisDOT in the design of the project. Final drawings and calculations should be stamped by a Professional Engineer licensed in the State of Wisconsin. The permanent substructure and superstructure should be designed in accordance with AASHTO LRFD Specifications and WisDOT Bridge Manual requirements. The superstructure should be designed to withstand induced forces from lifting off of temporary supports, transportation along TP, and lowering onto permanent bearings.

The Designer determines the feasibility of a BSA and TP, considering the following items at a minimum: geotechnical concerns, conflicting utilities, real estate and conflicting obstacles. The Designer also specifies the monitoring plan and maximum bearing pressure along travel path.

The Designer should deliver a project that can accommodate travel conditions during transportation of the structure on the SPMT units. Braking forces while the bridge is on the SPMTs shall be accounted for. Consider placing diaphragms at the pick points for additional lateral support.

7.1.4.4.4.3 Contractor

The Contractor may include the General Contractor, Heavy Lifter or SPMT Contractor, any bridge specialty engineers, and/or any other subcontractor employed by the General Contractor for the construction of the project.

The Contractor is responsible for:

1. The design of all temporary structures.
2. The construction of all structures, permanent or otherwise.
3. The design of the support system between the SPMT units and the bridge at final position.
4. The redesign and changes to plans to adjust for constructability issues based on the transport system chosen.
5. The design of the blocking or structure that supports the bridge during transport.
6. The safe transport of the bridge from the BSA to the final bridge location, ensuring that no maximum stresses or deflections are exceeded.

The Contractor is required to:

1. Provide all required plans, calculations, etc. in accordance with the specifications.
2. Identify, design and implement any required ground improvements in the BSA and TP.

3. Provide a contingency plan in the case of equipment malfunction or failure.

If the Contractor requests and is granted departmental approval to use SPMTs on a project that has not been designed for SPMT use, the following responsibilities (Refer to Table 7.1-2) that others are typically responsible for would be assumed by the Contractor:

1. Utilities – Mitigation Concepts
2. Site Conditions – Structural Analysis of Bridge Along TP
3. Site Conditions – Set allowable stress limits on BSA and TP
4. All Items under the category of Pick Points, Deflections (analysis), BSA and TP
5. Acquiring real estate

7.1.4.4.5 Temporary Supports

Temporary supports include temporary shoring and abutments that support the superstructure in the BSA and on the SPMTs during transport. The contractor is responsible for the design and construction of temporary supports. Temporary structures should be designed using *AASHTO Guide Design Specifications for Bridge Temporary Works*.

Design the temporary supports in the BSA to withstand a minimum lateral load equal to 10% of the superstructure dead load. Other lateral loads, such as wind, need not be included with this loading scenario.

These structures should provide bearing support conditions similar to the permanent bearings. The bridge superstructure is typically constructed in the temporary location with the same vertical clearance under the structure as the permanent location. The bridge may be constructed at a lower elevation for ease of construction; however this requires jacking the superstructure up to the correct elevation prior to transport.

SPMT blocking is the temporary support during transport that supports the superstructure at the pick point and connects to the SPMT units. Design SPMT blocking to withstand the forces induced during transport such as braking, turning, elevation changes, and wind loads.

7.1.4.4.6 Design Considerations

7.1.4.4.6.1 Bridge Staging Area

The BSA is the temporary location where the bridge superstructure will be constructed. The BSA is an area within the right of way, an offsite location, or an area acquired by the contractor. If an existing bridge is being removed using SPMTs, the BSA should provide adequate space for the superstructure to be removed. For projects with multiple bridges or one bridge with multiple simple spans, one or more bridges may occupy a single BSA. Figure 7.1-8 shows an example BSA that accommodated several structures.

Figure 7.1-8
Example Bridge Staging Area (BSA)

The BSA soil must have enough capacity to support the SPMTs carrying the superstructure. This requires a geotechnical investigation of the soils with possible additional measures such as ground improvements, soft soil mitigation, and utility protection. The contractor may need to address the bearing capacity of the soil in different manners based on the particular SPMT equipment that is selected. The BSA must be clear of all obstacles during bridge construction.

The designer specifies the maximum soil pressure in the BSA and TP based on the actual weight of the structure, anticipated SPMT weight, and temporary blocking. SPMT and temporary blocking weights need to be assumed. The design shall include a 5% dead load increase to cover miscellaneous loads (concrete tolerances, miscellaneous items, equipment during the move, etc.).

7.1.4.4.6.2 Travel Path

The TP is the path that the SPMTs use to transport the bridge(s) from the BSA to the final bridge location. The TP has similar requirements as the BSA. A geotechnical investigation is required to determine the need for ground improvements, soft soil mitigation, and utility protection. Steel plates, spreader beams, temporary pavement, and soft soil replacement are different methods used to help distribute the load and control settlement over these sensitive areas. Even a small area of soft soil can be detrimental during a superstructure transport. If the soil collapses under an SPMT tire, it can be extremely difficult to continue the bridge transport.

SPMT units are capable of traveling on uneven surfaces, however, it is preferred to keep the surface of the TP as level as possible with gradual elevation changes to minimize deflection

and twist in the superstructure. Contact the WisDOT Bureau of Structures Design Section for approval of an uneven TP surface.

7.1.4.4.6.3 Allowable Stresses

During the process of lifting, transporting, and placing a bridge using SPMTs, the superstructure will undergo stresses different than those induced with traditional cast in place bridge construction. These stresses include stress reversals as described in 7.1.4.4.6.4. For calculation of the stresses in the superstructure when supported on the SPMTs, an impact factor of 1.15 applied to the dead load shall be used.

The Designer calculates the allowable stresses in the deck and in the girders. The bridge should be designed so that the reinforcement in the deck and parapet will not yield during transport of the bridge.

7.1.4.4.6.4 Pick Points

Pick points are the bearing locations where the superstructure is lifted off the temporary supports by the SPMTs and transported to the permanent location. Pick points should be located within 20% of the span length from the ends of the superstructure. This minimizes the cantilevered portion and negative forces induced on the superstructure. During the lifting of the superstructure off the temporary supports, the bridge undergoes a stress reversal. When the girders are placed and the deck is poured, the girders deflect under the wet concrete weight, inducing stresses in the girder. When the deck is cured, the stresses in the girders induced by the deck are locked in, and the superstructure is in a state of equilibrium. Changing the support locations causes a stress reversal in the superstructure, which must be considered in the design of the bridge.

Figure 7.1-9 illustrates the stress reversal that the superstructure undergoes when the bearing locations are changed. The easiest way to visualize this change is through the moment diagrams in the figure. The first diagram in the figure illustrates the moment on the superstructure due to dead loads with the support system at the ends similar to the final bearing system. The moment, M_a, is the moment at the pick point location. The second moment diagram shows the moments when the superstructure is supported at the pick points. Again, the moment, M_b, is the moment at the pick point location. The third diagram in the figure shows the two moments superimposed. The total stress that the superstructure sees at the pick point location, M_c, is from the two moments combined. Please note that this illustration is very simplified, and more in depth calculations and/or finite element modeling is required in order to calculate the actual stresses on the deck.

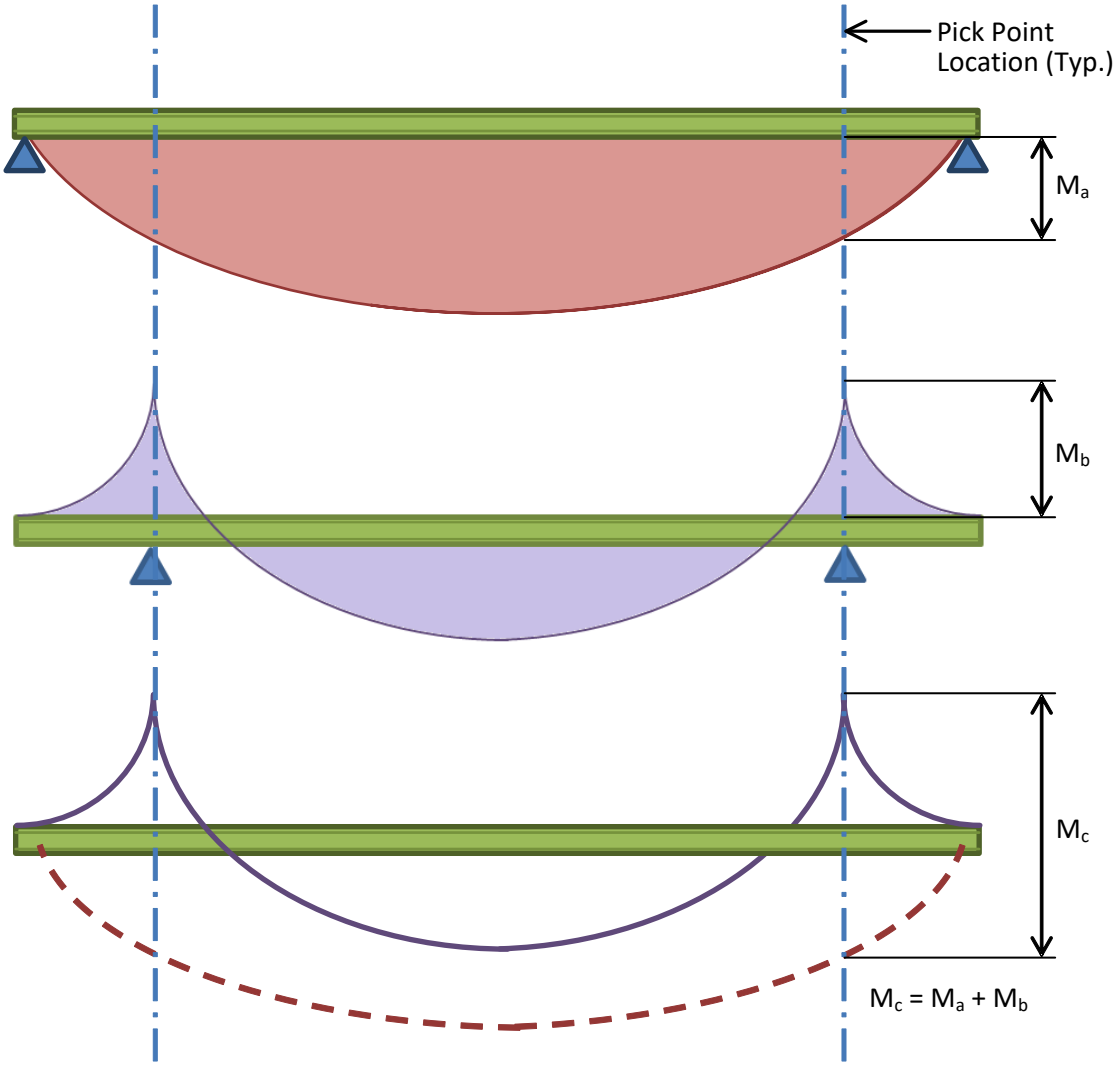

Figure 7.1-9
Support Change Moment Diagram (Illustrating Stress Reversal)

The construction sequence also complicates stress considerations. In the construction sequence, the girders are placed and the concrete is poured for the deck. The deck cures with essentially no stress, but the stress in the girders due to the deck pour is locked in when the girder and deck become composite. When the SPMTs engage the superstructure at the pick points, the girders go from positive bending at the pick points to negative bending. The deck at the pick point locations transitions from a state of zero bending (zero stress) to a state of negative bending. The stress calculations for the deck will be based on the composite moment of inertia.

The pick points must be located on the bridge in a manner to limit the tension in the deck. Clearly show pick points in the plans, and ensure that stresses induced from lifting and transporting the superstructure are within the allowable stresses shown in plans.

7.1.4.4.6.5 Deflection and Twist

During transport of the bridge from the BSA to its final position, the bridge will deflect and twist. Minor deflection and twist is to be expected during the movement of the bridge, but excessive deflections induce unwanted stresses in the deck that can cause cracking or other permanent damage to the superstructure. The bridge should be monitored during transport to keep the deflection and twist within specified limits. The specifications should outline the allowable deflections for the specific circumstances and structure(s). A critical point in the movement of the bridge is when the bridge is initially lifted off of the temporary supports. The stress reversal discussed in 7.1.4.4.6.4 will occur during this initial lift.

Warping and/or twisting of the bridge occurs when uneven bearing supports cause the slope of the bearing lines to be different from each other at each end of the span. Figure 7.1-10 shows an illustration of bridge warping. The blue solid square shows the as-constructed plane of the bridge. The red lines show the warped bridge plane and the dashed red lines represent the relative deflection from the as-constructed position.

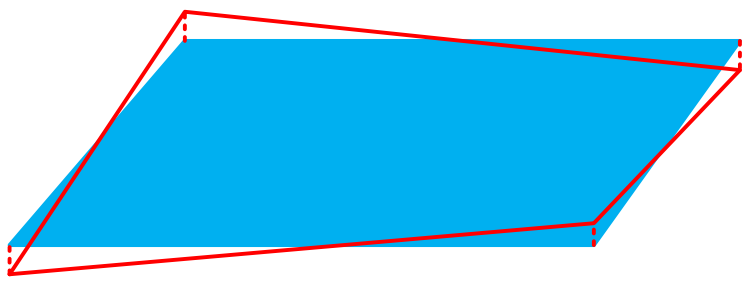

Figure 7.1-10
Bridge Warping Diagram

A monitoring plan should be developed by the Designer to monitor deflection and twist of the superstructure. Survey of critical points should be taken after construction of the superstructure and immediately after lifting it off of the temporary supports. A system should be established to monitor the relative deflections of each corner of the bridge during the transportation of the bridge. An example of bridge monitoring for deflection and twist can be found in UDOT's *Manual for the Moving of Utah Bridges Using Self Propelled Modular Transporters (SPMTs)*.

Accurate deflection calculations are very important when considering the SPMT unit jack stroke. For example, if the superstructure needs to be jacked 6 inches in order to lift the bridge off the temporary supports at the pick points, one quarter of the SPMT jack stroke would be used solely to lift the superstructure (assuming a typical jack stroke maximum of 24 inches).

Figure 7.1-11 illustrates how the deflection is accounted for in raising the superstructure off the temporary supports. Deflection, Δ_a, is the dead load deflection of the superstructure at the pick point location relative to the ends when the bridge is supported at the ends. Deflection, Δ_b, is the dead load deflection of the composite structure between the pick point location and the end support location when the bridge is supported at the pick point locations. Deflection, Δ_c, is the distance required to raise the structure off the temporary support.

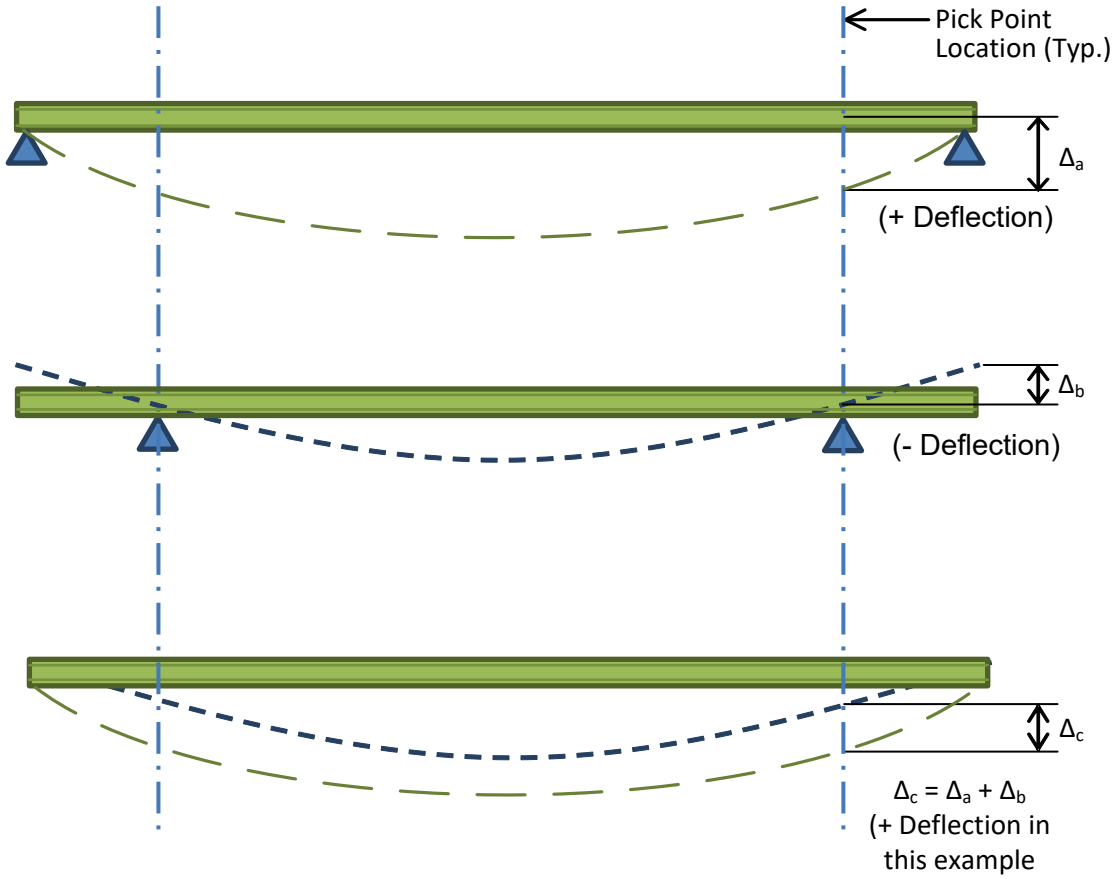

Figure 7.1-11
Support Change Deflection Diagram

Note: For this example, assume positive deflections are downward.

7.1.4.4.7 Structure Removal Using SPMT

When using SPMTs for bridge replacement, an alternative to onsite demolition of the existing bridge superstructure is removing the bridge using SPMTs. The existing superstructure can be removed and transported to the BSA where it is placed on temporary abutments until it can be demolished or salvaged. This method eliminates the need for protection of the underlying roadway and substructure elements.

All TP and BSA considerations, covered in 7.1.4.4.6.2 and 7.1.4.4.6.1 respectively, must be addressed for the movement of the existing superstructure. Follow guidelines in 7.1.4.4.5 for the design of temporary supports for existing superstructure.

7.1.5 Project Delivery Methods/Bidding Process

In addition to the accelerating technologies discussed in this chapter, the Every Day Counts initiative includes accelerated project delivery methods as a way to shorten the project

duration. Traditionally, the Design-Bid-Build (DBB) method has been used for project delivery. This involves the design and construction to be completed by two different entities. Project schedules using the DBB method are elongated because the design and construction cannot be completed concurrently. The entire design process must be completed before the bidding process begins. Finally, after the bidding process is completed, the construction can begin.

Other state DOT's have used project delivery methods that can allow for more accelerated overall project delivery. These include Design/Build (D/B) and Construction Manager/General Contractor (CM/GC). The D/B process requires the designer-builder to assume responsibility for both the design and construction of the project. This method increases the risk for the design-builder, and reduces the risk for the owner. Project delivery time can be reduced, since the D/B process allows for the design and construction phases to overlap, unlike the DBB process. There is a specific type of D/B called Low Bid Design Build (LBDB) which has the same structure as the traditional D/B process, except that the lowest bidder wins the project (rather than having a quality component as with the traditional D/B process). Refer to the Facilities Development Manual (FDM) for further discussion on LBDB.

The CM/GC process is a hybrid of the DBB and D/B processes. In CM/GC, both the designer and the contractor have contracts with the owner, and the owner is part of the design team. In this process, a construction manager is selected, and is able to provide input regarding schedule, pricing, and phasing during the design phase. Around the 60% or 90% design completion, the owner and construction manager negotiate a "guaranteed maximum price" for the construction of the project based on the defined scope and schedule. CM/GC allows the owner to remain active in the design process, while the risk is still taken by the general contractor.

Generally, in Wisconsin, projects administered by the Department have been Design Bid Build with minimal use of the Low Bid Design Build method. Refer to the FDM 11-2 for additional discussion on Alternative Contracting (AC) methods.

WisDOT policy item:

Each state has different preferences and constraints to which project delivery method they use, and due to current legislation, CM/GC and traditional D/B are not viable options for the state of Wisconsin. To implement ABC using the DBB process, the contract should either specify to use the ABC method required by the owner, and/or provide opportunity for the contractor to propose ABC alternatives that meet contract requirements.

7.2 ABC Decision-Making Guidance

This section is intended to provide guidance on when to use ABC versus conventional construction. When ABC methods are appropriate, this section will also help determine which ABC method(s) are most practical for a particular project.

Figure 7.2-1 is a Decision Matrix that can be used to determine how applicable an ABC method is for a particular project. Each item in Figure 7.2-1 is described further in Table 7.2-1. Once a total score is obtained from the Decision Matrix, the score is used to enter the Decision Flowchart (Figure 7.2-2). After entering the Flowchart, the user could be directed to the question "Do the benefits of ABC outweigh any additional costs?" This question needs to be evaluated on a project-specific basis, using available project information and engineering judgment. This item is intended to force the user to step back, think about the project as a whole, and decide if an ABC method really makes sense with all the project-specific information considered. The remainder of the flow chart questions will help guide the user toward the ABC method(s) that are most appropriate for the project.

There is an acknowledged level of subjectivity in both the Decision Matrix and in the Flowchart. These tools are intended to provide general guidance, not to provide a specific answer for all projects. The tools present different types of considerations that should be taken into account to help guide the user in the right direction and are not intended to provide a "black and white" answer.

The flowchart item "Program Initiative" can encompass a variety of initiatives, including (but not limited to) research needs, public input, local initiatives, stakeholder requests, or structure showcases. These items should be considered on a project-specific basis.

The flowchart guides users towards specific ABC technologies. However, the user should also recognize the ability and opportunity to combine various ABC technologies. For example, the combination of PBES with GRS-IBS could be utilized.

For additional guidance or questions, contact the Bureau of Structures Development Section Chief.

% Weight	Category	Decision-Making Item	Possible Points	Points Allocated	Scoring Guidance
17%	Disruptions (on/under Bridge)	**Railroad on Bridge?**	8		0 No railroad track on bridge 4 Minor railroad track on bridge 8 Major railroad track on bridge
		Railroad under Bridge?	3		0 No railroad track under bridge 1 Minor railroad track under bridge 3 Major railroad track(s) under Bridge
		Over Navigation Channel that needs to remain open?	6		0 No navigation channel that needs to remain open 3 Minor navigation channel that needs to remain open 6 Major navigation channel that needs to remain open
8%	Urgency	**Emergency Replacement?**	8		0 Not emergency replacement 4 Emergency replacement on minor roadway 8 Emergency replacement on major roadway
23%	User Costs and Delays	**ADT and/or ADTT** (Combined Construction Year ADT on and under bridge)	6		0 No traffic impacts 1 ADT under 10,000 2 ADT 10,000 to 25,000 3 ADT 25,000 to 50,000 4 ADT 50,000 to 75,000 5 ADT 75,000 to 100,000 6 ADT 100,000+
		Required Lane Closures/Detours? (Length of Delay to Traveling Public)	6		0 Delay 0-5 minutes 1 Delay 5-15 minutes 2 Delay 15-25 minutes 3 Delay 25-35 minutes 4 Delay 35-45 minutes 5 Delay 45-55 minutes 6 Delay 55+ minutes
		Are only Short Term Closures Allowable?	5		0 Alternatives available for staged construction 3 Alternatives available for staged construction, but undesirable 5 No alternatives available for staged construction
		Impact to Economy (Local business access, impact to manufacturing etc.)	6		0 Minor or no impact to economy 3 Moderate impact to economy 6 Major impact to economy
14%	Construction Time	**Impacts Critical Path of the Total Project?**	6		0 Minor or no impact to critical path of the total project 3 Moderate impact to critical path of the total project 6 Major impact to critical path of the total project
		Restricted Construction Time (Environmental schedules, Economic Impact – e.g. local business access, Holiday schedules, special events, etc.)	8		0 No construction time restrictions 3 Minor construction time restrictions 6 Moderate construction time restrictions 8 Major construction time restrictions
5%	Environment	**Does ABC mitigate a critical environmental impact or sensitive environmental issue?**	5		0 ABC does not mitigate an environmental issue 2 ABC mitigates a minor environmental issue 3 ABC mitigates several minor environmental issues 4 ABC mitigates a major environmental issue 5 ABC mitigates several major environmental issues
3%	Cost	**Compare *Comprehensive* Construction Costs** (Compare conventional vs. prefabrication)	3		0 ABC costs are 25%+ higher than conventional costs 1 ABC costs are 1% to 25% higher than conventional costs 2 ABC costs are equal to conventional costs 3 ABC costs are lower than conventional costs
18%	Risk Management	**Does ABC allow management of a particular risk?**	6		0 - 6 Use judgment to determine if risks can be managed through ABC that aren't covered in other topics
		Safety (Worker Concerns)	6		0 Short duration impact with TMP Type 1 3 Normal duration impact with TMP Type 2 6 Extended duration impact with TMP Type 3-4
		Safety (Traveling Public Concerns)	6		0 Short duration impact with TMP Type 1 3 Normal duration impact with TMP Type 2 6 Extended duration impact with TMP Type 3-4
12%	Other	**Economy of Scale** (repetition of components in a bridge or bridges in a project) (Total spans = sum of all spans on all bridges on the project)	5		0 1 total span 1 2 total spans 2 3 total spans 3 4 total spans 4 5 total spans 5 6+ total spans
		Weather Limitations for conventional construction?	2		0 No weather limitations for conventional construction 1 Moderate limitations for conventional construction 2 Severe limitations for conventional construction
		Use of Typical Standard Details (Complexity)	5		0 No typical standard details will be used 3 Some typical standard details will be used 5 All typical standard details will be used
			Sum of Points:	0	(100 Possible Points)

Figure 7.2-1
ABC Decision-Making Matrix

7.2.1 Descriptions of Terms in ABC Decision-Making Matrix

The following text describes each item in the ABC Decision-Making Matrix (Figure 7.2-1). The points associated with the scoring guidance in the matrix and in the text below are simply *guidance*. Use engineering judgment and interpolate between the point ranges as necessary.

Decision-Making Item	Scoring Guidance Description
Railroad on Bridge?	This is a measure of how railroad traffic on the bridge will be affected by the project. If a major railroad line runs over the bridge that requires minimum closures and a shoo fly (a temporary railroad bridge bypass) cannot be used, provide a high score here. If a railroad line that is rarely used runs over the bridge, consider providing a mid-range or low score here. If there is no railroad on the bridge, assign a value of zero here.
Railroad under Bridge?	This is a measure of how railroad traffic under the bridge will be affected by the project. If a major railroad line runs under the bridge that would disrupt construction progress significantly, provide a high score here. If a railroad track runs under the structure, but it is used rarely enough that it will not disrupt construction progress significantly, provide a low score here. Consider if the railroad traffic is able to be suspended long enough to move a new bridge into place. If there is not a large enough window to move a new bridge into place, SPMT could be eliminated as an alternative for this project. For this case, PBES may be a more applicable alternative. If there is no railroad under the bridge, assign a value of zero here.
Over Navigation Channel that needs to remain open?	This is a measure of how a navigation channel under a bridge will be affected by the project. If a navigation channel is highly traveled and needs to remain open for shipments, provide a high score here. If a navigation channel is rarely traveled and there are not requirements for it to remain open at certain time periods, provide a low score here. If there is no navigation channel under the bridge, assign a value of zero here.
Emergency Replacement?	This is a measure of the urgency of the bridge replacement. A more urgent replacement supports the use of accelerated bridge construction methods, since demolition and construction can be progressing concurrently. Depending on the particular project, accelerated bridge construction methods can also allow multiple components of the bridge to be constructed concurrently. If the bridge replacement is extremely urgent and the bridge can be replaced quicker by using accelerated construction methods, provide a high score here.

ADT and/or ADTT (Construction Year)	This is a measure of the total amount of traffic crossing the bridge site. A higher ADT value at a site will help support the use of accelerated bridge construction methods. Use a construction year ADT value equal to the sum of the traffic on the structure and under the structure. For cases where there is a very high ADT on the bridge and very low or no ADT under the bridge, consider using a "slide" method (on rollers or Polytetrafluorethylene (PTFE)/Elastomeric pads) or SPMT's, which can be very cost effective ABC techniques for this situation. For structures with a higher-than-average percentage of truck traffic, consider providing a higher score than indicated solely by the ADT values in the table.
Required Lane Closures/Detours?	This is a measure of the delay time imposed on the traveling public. If conventional construction methods will provide significant delays to the traveling public, provide a high score here. If conventional construction methods will provide minimal delays to the traveling public, provide a low score here. Use the delay times provided in the table as guidance for scoring.
Are only Short Term Closures Allowable?	This is a measure of what other alternatives are available besides accelerated bridge construction. If staged construction is not an alternative at a particular site, the only alternative may be to completely shut down the bridge for an SPMT move, and therefore a high score should be provided here. If there is a good alternative available for staged construction that works at the site, a low score should be provided here.
Impact to Economy	This is a measure of the impact to the local businesses around the project location. Consider how the construction staging, road closures, etc. will impact local businesses (public access, employee access, etc.) A high impact to the economy equates to a high score here. A low impact to the economy equates to a low score here.
Impacts Critical Path of Total Project?	This is a measure of how the construction schedule of the structure impacts the construction schedule of the entire project. If the construction of the structure impacts the critical path of the entire project, and utilizing ABC methods provides shorter overall project duration, provide a high score here. If other project factors are more critical for the overall project schedule and utilizing ABC methods will not affect the overall project duration, provide a low score here.
Restricted Construction Time	This is a measure of how the construction schedule is impacted by environmental and community concerns or requirements. Items to consider are local business access windows, holiday schedules and traffic, special event traffic, etc. If there are significant restrictions on construction schedule, provide a high score here. If there are little to no restrictions on the construction schedule, provide a low score here.

Does ABC mitigate a critical environmental impact or sensitive environmental issue?	This is a measure of how using accelerated bridge construction methods can help mitigate impacts to the environment surrounding the project. Since accelerated methods allow a shorter on-site construction time, the impacts to the environment can be reduced. If the reduced on-site construction time provided by accelerated bridge construction methods mitigates a significant or critical environmental concern or issue, provide a high score here. If there are no environmental concerns that can be mitigated with accelerated construction methods, provide a low score here.
Compare Comprehensive Construction Costs	This is a measure of the complete comprehensive cost difference between conventional construction methods versus using an accelerated bridge construction method. Some costs will increase with the use of accelerated construction methods, such as the cost of the SPMT equipment and the learning curve that will be incorporated into using new technologies. However, some costs will decrease with the use of accelerated construction methods, such as the reduced cost for traffic control, equipment rentals, inspector wages, etc. Many of the reduced costs are a direct result of completing the project in less time. Use the cost comparisons in the table as guidance for scoring here.
Does ABC allow management of a particular risk?	This is an opportunity to add any project-specific items or unique issues that have risk associated with them that are not incorporated into another section in this text. Consider how ABC may or may not manage those particular risks.
Safety (Worker Concerns)	This is a measure of the relative safety of the construction workers between conventional construction methods and accelerated construction methods. The reduced on-site construction time from using accelerated bridge construction methods reduces the exposure time of workers in a construction zone, thus increasing safety. If a significant increase in safety can be seen by utilizing accelerated construction methods, provide a high score here. If utilizing accelerated construction methods does not provide additional safety, provide a low score here. Refer to the FDM for definitions of TMP Types.
Safety (Traveling Public Concerns)	This is a measure of the relative safety of the traveling public between conventional construction methods and accelerated construction methods. The reduced on-site construction time from using accelerated bridge construction methods reduces the exposure time of the traveling public in a construction zone, thus increasing safety. If a significant increase in safety can be seen by utilizing accelerated construction methods, provide a high score here. If utilizing accelerated construction methods does not provide additional safety, provide a low score here. Refer to the FDM for definitions of TMP Types.
Economy of Scale	This is a measure of how much repetition is used for elements on the project, which can help keep costs down. Repetition can be used on both substructure and superstructure elements. To measure the economy of scale, sum the total number of spans that will be constructed on the project. For example, if there are 2 bridges on the project that each have 2 spans, the total number of spans on the project is equal to 4. Use the notes in the table for scoring guidance here.

Weather Limitations for Conventional Construction?	This is a measure of the restrictions that the local weather causes for on-site construction progress. Accelerated bridge construction methods may allow a large portion of the construction to be done in a controlled facility, which helps reduce delays caused by inclement weather (rain, snow, etc.). Depending on the location and the season, faster construction progress could be obtained by minimizing the on-site construction time.
Use of Typical Standard Details (Complexity)	This is a measure of the efficiency that can be gained by using standard details that have already been developed and approved. If standard details are used, some errors in the field can be prevented. If new details are going to be created for a project, the contractors will be less familiar with the details and problems may arise during construction that were not considered in the design phase. Use the notes in the table for scoring guidance here.

Table 7.2-1
ABC Decision-Making Matrix Terms

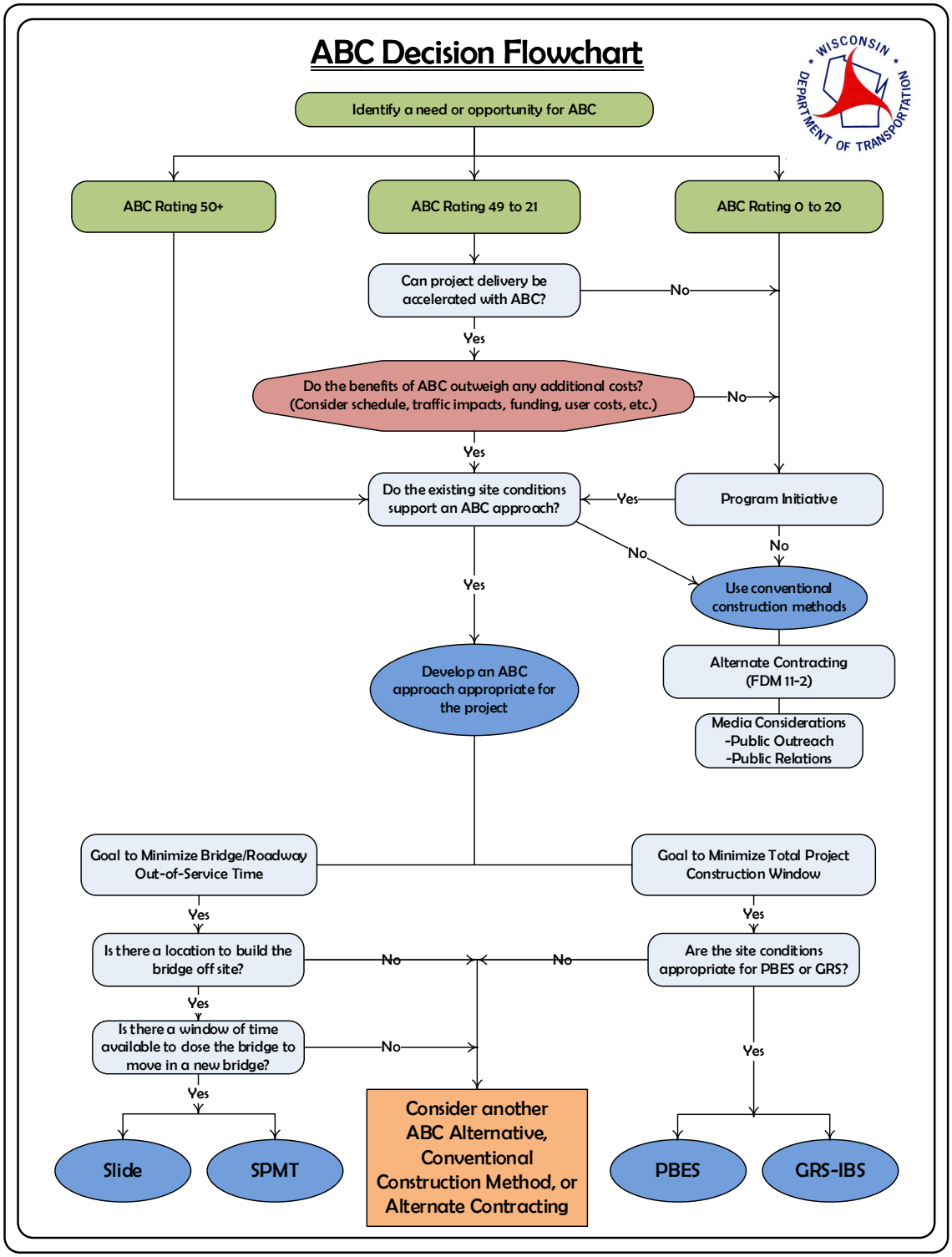

Figure 7.2-2
ABC Decision-Making Flowchart

7.3 References

1. Every Day Counts Initiative. Federal Highway Administration. 23 May. 2012. http://www.fhwa.dot.gov/everydaycounts/

2. Federal Highway Administration. Geosynthetic Reinforced Soil Integrated Bridge System Interim Implementation Guide. U.S. Department of Transportation. McLean, VA: Turner-Fairbank Highway Research Center, 2011. FHWA-HRT-11-026

3. Federal Highway Administration. Geosynthetic Reinforced Soil Integrated Bridge System Synthesis Report. U.S. Department of Transportation. McLean, VA: Turner-Fairbank Highway Research Center, 2011. FHWA-HRT-11-027.

This page intentionally left blank.

Table of Contents

8.1 Introduction 4
8.1.1 Objectives of Highway Drainage 4
8.1.2 Basic Policy 4
8.1.3 Design Frequency 4
8.1.3.1 FHWA Directive 5
8.1.3.2 DNR-DOT Cooperative Agreement 5
8.1.3.3 DOT Facilities Development Manual 5
8.1.4 Hydraulic Site Report 5
8.1.5 Hydraulic Design Criteria for Temporary Structures 5
8.1.6 Erosion Control Parameters 6
8.1.7 Bridge Rehabilitation and Hydraulic Studies 6
8.2 Hydrologic Analysis 7
8.2.1 Regional Regression Equations 7
8.2.2 Watershed Comparison 7
8.2.3 Flood Insurance and Floodplain Studies 7
8.2.4 Natural Resources Conservation Service 8
8.3 Hydraulic Design of Bridges 9
8.3.1 Hydraulic Design Factors 9
8.3.1.1 Velocity 9
8.3.1.2 Roadway Overflow 9
8.3.1.3 Bridge Skew 9
8.3.1.4 Backwater and High-water Elevation 9
8.3.1.5 Freeboard 10
8.3.1.6 Scour 11
8.3.2 Design Procedures 11
8.3.2.1 Determine Design Discharge 11
8.3.2.2 Determine Hydraulic Stream Slope 11
8.3.2.3 Select Floodplain Cross-Section(s) 11
8.3.2.4 Assign “Manning n” Values to Section(s) 12
8.3.2.5 Select Hydraulic Model Methodology 12
8.3.2.6 Develop Hydraulic Model 13
8.3.2.6.1 Bridge Hydraulics 14

8.3.2.6.2 Roadway Overflow 14
8.3.2.7 Conduct Scour Evaluation 18
8.3.2.7.1 Live Bed and Clear Water Scour 19
8.3.2.7.2 Long-term Aggradation and Degradation 19
8.3.2.7.3 Contraction Scour 19
8.3.2.7.4 Local Scour 20
8.3.2.7.5 Design Considerations for Scour 25
8.3.2.8 Select Bridge Design Alternatives 25
8.4 Hydraulic Design of Box Culverts 27
8.4.1 Hydraulic Design Factors 27
8.4.1.1 Economics 27
8.4.1.2 Minimum Size 27
8.4.1.3 Allowable Velocities and Outlet Scour 27
8.4.1.4 Roadway Overflow 27
8.4.1.5 Culvert Skew 28
8.4.1.6 Backwater and Highwater Elevations 28
8.4.1.7 Debris Protection 28
8.4.1.8 Anti-Seepage Collar 28
8.4.1.9 Weep Holes 29
8.4.2 Design Procedure 30
8.4.2.1 Determine Design Discharge 30
8.4.2.2 Determine Hydraulic Stream Slope 30
8.4.2.3 Determine Tailwater Elevation 30
8.4.2.4 Design Methodology 30
8.4.2.5 Develop Hydraulic Model 30
8.4.2.6 Roadway Overflow 37
8.4.2.7 Outlet Scour and Energy Dissipators 37
8.4.2.7.1 Drop Inlet 37
8.4.2.7.1.1 Drop Inlet Example Calculations 41
8.4.2.7.2 Drop Outlets 42
8.4.2.7.2.1 Drop Outlet Example Calculations 46
8.4.2.7.3 Hydraulic Jump Stilling Basins 49
8.4.2.7.3.1 Hydraulic Jump Stilling Basin Example Calculations 51
8.4.2.7.4 Riprap Stilling Basins 52

8.4.2.8 Select Culvert Design Alternatives 52
8.5 References..... 53
8.6 Appendix 8-A, Check List for Hydraulic/Site Report..... 55
8.7 Appendix 8-B, FHWA Hydraulic Engineering Publications..... 57

8.1 Introduction

The methods of hydrologic and hydraulic analysis provided in this chapter give the designer information necessary for an analysis of a roadway drainage crossing. Experience and sound engineering judgment are not to be ignored and may, at times, differ from results obtained using methods in this chapter. Very careful weighing of experience, judgment, and procedure must be made to arrive at a solution to the problem. Research in the field of drainage continues throughout the country and may subsequently alter the procedures found in this chapter.

8.1.1 Objectives of Highway Drainage

The objective of highway drainage is to prevent the accumulation and retention of water on and/or around the highway by:

- Anticipating the amount and frequency of storm runoff.
- Determining natural points of concentration of discharge and other hydraulic controls.
- Removing detrimental amounts of surface and subsurface water.
- Providing the most efficient hydraulic design consistent with economy, the importance of the road, maintenance and legal obligations.

8.1.2 Basic Policy

In designing highway drainage, there are three major considerations; first, the safety of the traveling public, second, the design should be in accordance with sound engineering practices to economically protect and drain the highway, and third, in accordance with reasonable interpretation of the law, to protect private property from flooding, water soaking or other damage. In general, the hydraulic adequacy of structures is determined by the methods as outlined in this manual and performance records of structures in the same or similar locations.

8.1.3 Design Frequency

Federal and State governments have placed increasing emphasis on environmental protection over the last several years. Consequently the administrative rules established by regulatory agencies have made past practice of designing structures to accommodate flood frequencies of 25 and 50 years obsolete and unworkable. Thus, the design discharge for all bridges and box culverts covered under this chapter shall be the 100 year (Q_{100}) frequency flood. In floodplain management this is also referred to as the Regional or Base flood. Design frequency is determined from requirements in Federal Highway Administration (FHWA) directives and the co-operative agreement between Wisconsin Department of Transportation (DOT) and Wisconsin Department of Natural Resources (DNR). The following publications are suggested for guidance.

8.1.3.1 FHWA Directive

Title 23, Chapter 1, Sub Chapter G, Part 650, Subpart A of the FHWA – Federal-Aid Policy Guide, "*Location and Hydraulic Design of Encroachments on Flood Plains*", prescribes FHWA policy and procedures. Copies of this directive may be found on the FHWA website.

8.1.3.2 DNR-DOT Cooperative Agreement

The Wisconsin Department of Transportation and the Wisconsin Department of Natural Resources have signed a co-operative agreement to provide a reasonable and economical procedure for carrying out their respective duties in a manner that is in the total public interest. The provisions in this agreement establish the basic considerations for highway stream crossings. A copy of this agreement can be found in Facilities Development Manual (FDM) 20-5-15.

8.1.3.3 DOT Facilities Development Manual

Refer to FDM Chapter 10 – Erosion Control and Storm Water Quality, FDM Chapter 11 – Design, FDM Chapter 13 - Drainage, and FDM Chapter 20 - Environmental Documents, Reports and Permits.

8.1.4 Hydraulic Site Report

The "Stream Crossings Structure Survey Report" shall be submitted for all bridge and box culvert projects. When submitting preliminary structure plans for a stream crossing, a hydraulic site report shall also be included. A check list of the various discussion items that need to be provided in the hydraulic site report is included as 8.6 Appendix 8-A. Plan survey datum must conform to datum in use by local zoning authorities. In most cases elevations are referenced to the National Geodetic Vertical Datum (NGVD) of 1929, or to the North American Vertical Datum of 1988 (NAVD 88). The Hydraulic Site Report discusses and documents the hydrologic, hydraulic, site conditions, and all other pertinent factors that influence the type, size, and location of the proposed structure.

8.1.5 Hydraulic Design Criteria for Temporary Structures

The basic design criteria for temporary structures will to be the ability to pass a 5-year storm (Q5) with only 0.5 feet of backwater over existing conditions. This criteria is only a general guideline and site specific factors and engineering judgment may indicate that this criteria is inappropriate. Separate hydraulic design criteria should be used for the design of temporary construction causeways. Factors that should be considered in the design of temporary structures and approach embankments are:

- Effects on surrounding property and buildings
- Velocities that would cause excessive scour
- Damage or inconvenience due to failure of temporary structure

- DNR concerns
- Temporary roadway profile
- Structure depths will be 36” for short spans and 48” or more for longer spans.

If possible and practical, the temporary roadway profile should be designed and constructed in such a manner that infrequent flood events are not obstructed from overflowing the temporary profile and creating excessive backwaters upstream of the construction. The temporary roadway profile should provide adequate clearance for the temporary structure.

The roadway designer should indicate the need for a temporary structure on the Stream Crossing Structure Survey Report. Preliminary and Final plans should indicate the hydraulic parameters of the temporary structure. The required parameters are the 5-year flood discharge (Q5), the 5-year high-water elevation (HW5), and the flow area of the temporary structure required to pass the 5-year flood (Abr).

8.1.6 Erosion Control Parameters

In order to assist designers in determining the appropriate erosion control measures to be provided at Bridge construction site, preliminary and final plans should indicate the 2-year flood discharge (Q2), 2-year velocity, and the 2-year high-water elevation (HW2).

8.1.7 Bridge Rehabilitation and Hydraulic Studies

Generally no hydraulic study will be required in bridge rehabilitation projects that do not involve encroachment to the Base Floodplain. This includes entire super structure replacement provided that the substructure and berm configuration remain unchanged and the low cord elevation is not significantly lowered.

The designer should consider historical high-water elevations, Flood Insurance Studies and the potential of inundation when choosing the replacement superstructure type. The risk of damage to the structure as the result of Scour should also be considered.

8.2 Hydrologic Analysis

The first step in designing a hydraulic structure is to determine the design discharge for the waterway. The problem is particularly difficult for small watersheds, say under five square miles, because the smaller the area, the more sensitive it is to conditions which affect runoff and the less likely there are runoff records for the area.

Acceptable methods of determining the design discharge for the 100 year flood shall be based on the guidelines contained in the *State Administrative Code NR 116.07, Wisconsin's Floodplain Management Program*[1]. Generally, a minimum of two methods should be used in determining a design discharge.

The most frequently used methods for determining the design discharge for bridges and box culverts in the State of Wisconsin are discussed below.

8.2.1 Regional Regression Equations

The U. S. Geological Survey (USGS) in cooperation with the Wisconsin Department of Transportation prepared a report entitled *Flood Frequency Characteristics of Wisconsin Streams*[2] which considers the flood potentials for a site using regional regression equations based on flood data from gaging stations on Wisconsin's rivers and streams. The flood-frequency regression equations are correlated with three or more of seven parameters, namely, drainage area, main-channel slope, storage, forest cover, mean annual snowfall, precipitation intensity index, and soil permeability. These equations are applicable to all drainage areas in Wisconsin except for highly regulated streams, and highly urbanized areas of the state.

8.2.2 Watershed Comparison

The results obtained from the above regression equations should be compared to similar gaged watersheds listed in reference (2) above using the area transfer formulas and procedures detailed in that document. A good discussion and examples of the use of regression equations and basin comparison methods can be seen in the WisDOT Facilities Development Manual, Procedure 13-10-5. The flood frequency discharges listed in reference (2) are for flood records up to the year 2000. More years of data are available from the USGS for most of the gaged watersheds.

The flood frequency discharges for the gaged watersheds can be updated past water year 2000 by using the Log-Pearson Type III distribution method as described in *Bulletin #17B entitled Guidelines For Determining Flood Flow Frequency*[3] and the guidelines for weighting the station skew with the generalized skew in *NR116.07, Wisconsin's Floodplain Management Program*[1].

8.2.3 Flood Insurance and Floodplain Studies

The Federal Emergency Management Agency (FEMA) had contracted for detailed flood studies throughout Wisconsin. They were developed for floodplain management and flood insurance purposes. These Flood Insurance Studies (FIS) which are on file with Floodplain-

Shoreland Management Section of the Wisconsin Dept. of Natural Resources (DNR) contain discharge values for many sites. These studies, along with other various floodplain studies, may be obtained from the DNR's Floodplain Analysis Interactive Map by using the following link:

https://dnr.wi.gov/topic/floodplains/mapindex.html

8.2.4 Natural Resources Conservation Service

For small watersheds in urban and rural areas, the National Resources Conservation Service (NRCS) has developed procedures to calculate storm runoff volumes, peak rates of discharge, hydrographs and storage volumes. The procedure is documented in *Technical Release 55 Urban Hydrology for Small Watersheds*[4].

8.3 Hydraulic Design of Bridges

Bridge design for roadway stream crossings requires analysis of the hydraulic characteristics for both the "existing conditions" and the "proposed conditions" of the project site. A thorough hydraulic analysis is essential to providing a properly sized, safe and economical bridge design and assessing the relative impact that the proposed bridge has on the floodplain. The following subsections discuss design considerations and hydraulic design procedures for bridges. See 8.6 Appendix 8-A for a checklist of items that need to be considered and included in the Hydraulic/Sizing report for stream crossing structures.

8.3.1 Hydraulic Design Factors

Several hydraulic factors dictate the design of both the bridge and the approach roadway within the floodplain limits of the project site. The critical hydraulic factors for design consideration are:

8.3.1.1 Velocity

Velocity through the bridge opening is a major design factor. Velocity relates to the scour potential in the bridge opening and the development of scour areas adjacent to the bridge. Examination of the "existing conditions" model, existing site conditions, soil conditions, and flooding history will give good insight to acceptable design velocity. Generally, velocities through bridges of less than 10 feet per second are acceptable.

8.3.1.2 Roadway Overflow

The vertical alignment of the approach grade is a critical factor in the bridge design when roadway overflow is a design consideration. The two important design features of roadway overflow is overtopping velocity and overtopping frequency. See 8.3.2.6.2

8.3.1.3 Bridge Skew

When a roadway is at a skew angle to the stream or floodway, the bridge shall also be at a skew to the roadway with the abutments and piers parallel to the flow of the stream. The hydraulic section through the bridge shall be the skewed section normal to the flow of the stream. Generally, in the design of stream crossing, the skew of the structure should be varied in increments of 5 degrees where practical. Improper skew can greatly aggravate the magnitude of scour.

8.3.1.4 Backwater and High-water Elevation

Roadways and bridges are generally restrictions to the normal flow of floodwaters and increase the flood profile in most situations. The increase in the flood profile is referred to as the backwater and the resultant upstream water surface elevation is referred to as the High-Water Elevation (HW).

The high-water elevation or backwater calculations at the bridge are directly related to the bridge size and roadway alignment, which dictates all of the aforementioned hydraulic design

factors. A significant design consideration when computing backwater is the potential for increasing flood damage for upstream property owners. The Cooperative Agreement between the Wis. Department of Natural Resources (DNR) and Wis. Department of Transportation (DOT) (see 8.1.3.2) defines the policy for high-water elevation design. That portion of the Cooperative Agreement relating to floodplain considerations is based on the Wisconsin Adm. Rule NR116, "Wisconsin Floodplain Management Program". It is advisable to thoroughly study both documents as they can significantly influence the hydraulic design of the bridge.

One very subtle backwater criteria which is not addressed under the guidelines of the DNR-DOT Cooperative Agreement, is the backwater produced for flood events less than the 100 year frequency flood. Design consideration should be given to the more frequent flood events when there is potential for increasing the extent and frequency of flood damage upstream.

8.3.1.5 Freeboard

Freeboard is defined as the vertical distance between the low cord elevation of the bridge superstructure and the high-water elevation. A freeboard of 2.0 feet is the desirable minimum for all types of superstructures. However, economics, vertical and horizontal alignment, and the scope of the project may force a compromise to the 2 foot minimum freeboard. For these situations, close evaluation shall be made of the type and amount of debris and ice that would pass through the structure. Freeboard should be computed using the low chord elevation at the upstream face on the lower end of the bridge. The calculated 100-year high water elevation at a cross section that is approximately one bridge length upstream should be used to check freeboard.

It has become common practice that if debris and ice are a potential problem, or adequate freeboard cannot be provided, a concrete slab superstructure is preferred. A girder superstructure may be susceptible to damage when ice and/or debris is a significant problem. Girder structures are more susceptible to damage associated with buoyancy and lateral hydrostatic forces. In situations where the superstructure may be inundated during major flood events, it is recommended that the girders be anchored, tied or blocked so they cannot be pushed or lifted off the substructure units by hydraulic forces. In addition, air vents near the top of the girder webs can allow entrapped air to escape and thus may reduce buoyancy forces. The use of Precast Pretensioned Slab and Box Sections is allowed where desirable freeboard cannot be provided and conventional cast in place slabs cannot be employed. The following requirements should be met:

- Precast Pretensioned Slab and Box Sections may be in the water for the 100-year flood. The designer will be responsible for ensuring the stability of the structure for buoyant and lateral forces.

- If Precast Pretensioned Slab and Box Sections are in contact with water for flood events equal to or less than a 5-year event, the Precast Pretensioned Slab and Box Sections must be cast solid.

- If Precast Pretensioned Slab and Box Sections are in contact with water for flood events equal to or less than a 100-year event, the void in Precast Pretensioned Slab and Box Sections must be cast with a non-water absorbing material.

8.3.1.6 Scour

Investigation of the potential for scour at the bridge site is a design consideration for the bridge opening geometry and size, as well as pier and abutment design. Bridges shall be designed to withstand the effects of scour from a super-flood (a flood exceeding the 100-year flood) without failing; i.e., experiencing foundation movement of a magnitude that requires corrective action. See 8.3.2.7. Generally, scour associated with a 100-year event without significant reduction in foundation factor of safety will accomplish this objective. For situations where a combination of flow through a bridge and over the roadway exist, scour should also be evaluated for flow conditions at the onset of flow over topping when velocity through the bridge may be the greatest.

8.3.2 Design Procedures

8.3.2.1 Determine Design Discharge

See 8.2 for procedures.

8.3.2.2 Determine Hydraulic Stream Slope

The primary method of determining the hydraulic slope of a stream is surveying the water surface elevation through a reach of stream 1500 feet upstream to 1500 feet downstream of the site. Intermediate points through this reach should also be surveyed to detect any significant slope variation.

There are situations, particularly on flat stream profiles, where it is difficult to determine a realistic slope using survey data. This will occur at normal water surface elevation at the mouth of a stream, upstream of a dam, or other significant restriction in the stream. In this case a USGS 7-1/2” quadrangle map and existing flood studies of the stream can be investigated to determine a reasonable stream slope.

8.3.2.3 Select Floodplain Cross-Section(s)

Generally, a minimum of two floodplain valley cross-section(s) are required to perform the hydraulic analysis of a bridge. The sections shall be normal to the stream flow at flood stage and approximately one bridge length upstream and downstream of the structure. A detailed cross-section of one or both faces of the bridge will also be required. If the section is skewed to the flow, the horizontal stationing shall be adjusted using the cosine of the skew angle.

If the downstream boundary condition of the hydraulic model is using normal depth, then the most downstream cross-section in the model should be located far enough downstream from the bridge and should reflect the natural floodplain conditions.

Field survey cross-sections will be needed when a contour map is plotted using stereographic methods. A field survey section is needed for that portion below the normal water surface.

Cross-sections taken from contour maps are acceptable when the information is supplemented with field survey sections and data. Additional sections may be required to develop a proper hydraulic model for the site.

The hydraulic cross-sections should not include slack water portions of the flood plain or portions not contributing to the downstream movement of water.

Refer to FDM 9-55 for a discussion of Drainage Structure Surveys.

8.3.2.4 Assign "Manning n" Values to Section(s)

"Manning n" values are assigned to the cross-section sub-areas. Generally, the main channel will have different "manning n" values than the overbank areas. Values are chosen by on-site inspection, pictures taken at the section, and use of aerial photos defining the extent of each "n" value. There are several published sources on open channel hydraulics which contain tables for selecting appropriate "n" values. See 8.5 References (5) and (6).

8.3.2.5 Select Hydraulic Model Methodology

There are several public and private computer software programs available for modeling open channel hydraulics, bridge hydraulics, and culvert hydraulics. Three public domain computer software programs that are most prevalent and preferred in Wisconsin bridge design work are "HEC-RAS", "WSPRO" and "HY8".

The HEC-RAS program is currently the most widely used methodology for floodplain and bridge hydraulic modeling. HEC-RAS has more options and capabilities than WSPRO when modeling complex floodplains and requires a greater amount of expertise to apply. HEC-RAS should be used where existing HEC-2 data is available from a previous Flood Insurance Study. The WSPRO methodology is tailored specifically for bridge hydraulics with many appropriate default coefficients and analysis options. More information on these two programs is given below. "HY8" is a FHWA sponsored culvert analysis package based on the FHWA publication "Hydraulic Design of Highway culverts" (HDS-5), see 8.5 Reference (13).

1. HEC-RAS

   The hydrologic Engineering Center's River Analysis System (HEC-RAS) is the first of the U.S. Army Corps of Engineers "Next Generation" software packages. It is the successor to the HEC-2 program, which was originally developed by the Corps of Engineers in the early 1970's. HEC-RAS includes several data entry, graphing, and reporting capabilities. It is well suited for modeling water flowing through a system of open channels and computing water surface profiles to be used for floodplain management and evaluation of floodway encroachments. HEC-RAS can also be used for bridge and culvert design and analysis and channel modification studies.

   For a complete treatise on the methodology of the program, see 8.5 reference (7), (8) and (9). The HEC-RAS program and supporting documentation can be downloaded from the U.S. Army Corps of Engineers web site: http://www.hec.usace.army.mil/software/hec-ras/. A list of vendors for HEC-RAS is also available on this web site.

2. WSPRO

"Water Surface Profiles (WSPRO)" is a computer program developed by the U.S. Geological Survey under contract with Federal Highway Administration. WSPRO was specifically oriented toward hydraulic design of highway bridges although it is equally suitable for water surface profile computations unrelated to highway and bridge design.

The program uses bridge backwater computations based on analyses documented in the USGS publication entitled Measurement of Peak Discharge at Width Contractions by Indirect Methods, see 8.5 reference (10).

For a complete treatise on the methodology of the program, see 8.5 reference (11) and (12). The WSPRO program and supporting documentation can be downloaded from the following FHWA web site, or can be obtained through "McTrans" or "PcTrans". See 8.7 Appendix 8-B.

http://www.fhwa.dot.gov/engineering/hydraulics/software.cfm

3. HY8

HY8 is a computer program that uses the FHWA culvert hydraulic approaches and protocols as documented in the publication "Hydraulic Design Series 5: Hydraulic Design of Highway Culverts" (HDS-5). See 8.5 reference (13). HY8 can perform hydraulic computations for circular, rectangular, elliptical, metal box, high and low profile arch, as well as user defined geometry culverts. FHWA recently released a new Windows based version of the HY-8 culvert program. The methodology used by HY8 is discussed in 8.4.2.4. This program can be downloaded from the FHWA web site: http://www.fhwa.dot.gov/engineering/hydraulics/software.cfm.

8.3.2.6 Develop Hydraulic Model

First, a hydraulic model shall be developed for the "existing conditions" at the bridge site. This shall become the basis for hydraulic design of "proposed conditions" for the project and allows for an assessment of the relative hydraulic changes associated with the proposed structure. Special attention should be given to historic high-water and flood history, evidence of scour (high velocity), roadway overtopping, existing high-water, and compatibility with existing Flood Insurance Study (FIS) profiles. When current information and/or estimates of site conditions or flows differ significantly from adopted regulatory information (FIS), it may be necessary to compute both "design" and "regulatory" existing and proposed conditions.

There are a number of encompassing features of a steady state (flow is constant) hydraulic model for a roadway stream crossing. They include the natural adjacent floodplain, subject structure, any supplemental structures, and the roadway. Accurate modeling and calculations need to account for all potential conveyance mechanisms. Generally, most modern step-backwater methodologies can incorporate all of the above elements in the evaluation of hydraulic characteristics of the project site.

The designer shall determine whether the proposed site is located in a FEMA Special Flood Hazard Area (Zone AE, A, etc). If so, a determination shall be made whether an effective

hydraulic model (HEC-RAS, HEC-2, WSPRO, etc) exists for the waterway. If an effective model exists, it shall be used to evaluate the impact of the proposed stream crossing structure on mapped floodplain elevations. Areas mapped as Zone AE should always have an effective model. Effective models can be acquired from the DNR or the FEMA Engineering Library. Contact a DNR regional floodplain engineer with any questions related to existing effective models.

The designer should verify that the results of the existing hydraulic model match the flood profile listed in the corresponding Flood Insurance Study (FIS) report. This is called the 'duplicate effective' model. The duplicate effective model should then be updated to include geometry based on any recent project survey information. This is called the 'corrected effective' model and will serve as the existing condition for the bridge hydraulic analysis.

The Project Engineer shall ensure the appropriate local zoning authority is notified of the results of the hydraulic analysis.

Official bridge hydraulic models and supporting documentation are available for download from the Highway Structures Information System (HSIS).

8.3.2.6.1 Bridge Hydraulics

The three most common types of flow through bridges are free surface flow (low flow), free surface (unsubmerged) orifice flow and submerged orifice flow. The latter two are also referred to as pressure flow. All of the above flow conditions may also occur simultaneously with flow over the roadway.

There are situations in which steep stream slopes are encountered and the flow may be supercritical (Froude No. > 1). This is a situation in which theoretically no backwater is created. For critical and supercritical flow situations the profile calculation would proceed from upstream to downstream. If this situation is encountered, the accuracy of the hydraulic model may be suspect and it is questionable whether the bridge should impose any constrictions on the stream channel. Sufficient clearance should be provided to insure that the superstructure will not come in contact with the flow.

Generally, in Wisconsin, most natural stream flow is in a sub-critical (Froude No. < 1) regime. Therefore, the water surface profile calculation will proceed from downstream to upstream.

Sample bridge hydraulic problems using HEC-RAS can be found in the HEC-RAS Applications Guide[9].

8.3.2.6.2 Roadway Overflow

One potential element in developing a hydraulic model for a stream crossing is roadway overflow. It is sometimes necessary to compute flow over highway embankments in combination with flow through structure openings. Most automated methodologies will incorporate the division of flow through a structure and over the road in determination of the solution. The WSPRO methodology will conduct the "combined flow" solution and internally determine and adjust the coefficient of discharge for both the structure and roadway weir section. Other methodologies, such as HEC-RAS, rely on user defined coefficients for both the

structure and roadway flow solutions. The discharge equation and coefficients for flow over a highway embankment are given in this section.

The geometry and flow pattern for a highway embankment are illustrated in Figure 8.3-4. Under free flow conditions critical depths occur near the crown line. The head (H) is referred to the elevation of the water above the crown, and the length (L), in direction of flow, is the distance between the points of the upstream and downstream embankment faces (edge of shoulder). The length (B) of the embankment has no influence on the discharge coefficient.

The weir discharge equation is:

$$Q = k_t \cdot C_f \cdot B \cdot H^{3/2}$$

Where:

Q	=	discharge
C_f	=	coefficient of discharge for free flow conditions
B	=	length of flow section along the road normal to the direction of flow
H	=	total head = $h + h_v$
k_t	=	submergence factor

The length of overflow section (B) will be a function of the roadway profile grade line and depth of over-topping (h). Coefficient (C_f) is obtained by computing h/L and using Figure 8.3-1 or Figure 8.3-2, for paved or gravel roads.

The degree of submergence of a highway embankment is defined by ration ht/H. The effect of submergence on the discharge coefficient (C_f) is expressed by the factor k_t as shown in Figure 8.3-3. The factor k_t is multiplied by the discharge coefficient (C_f) for free-flow conditions to obtain the discharge coefficient for submerged conditions. For roadway overflow conditions with high degree of submergence, HEC-RAS switches to energy based calculations of the upstream water surface. The default maximum submergence is 0.95, however that criterion may be modified by the user.

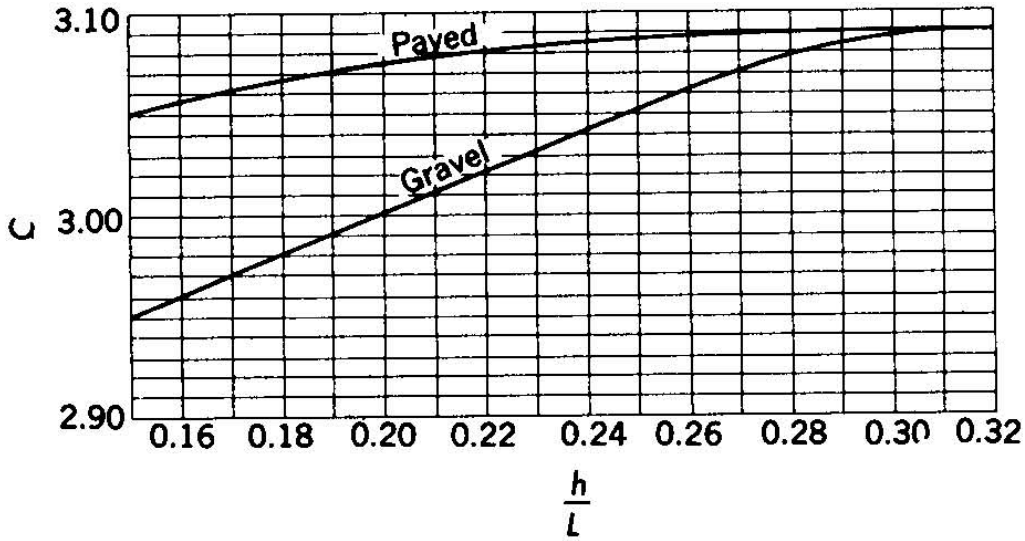

Figure 8.3-1

Discharge Coefficients, C_f, for Highway Embankments for H/L Ratios > 0.15

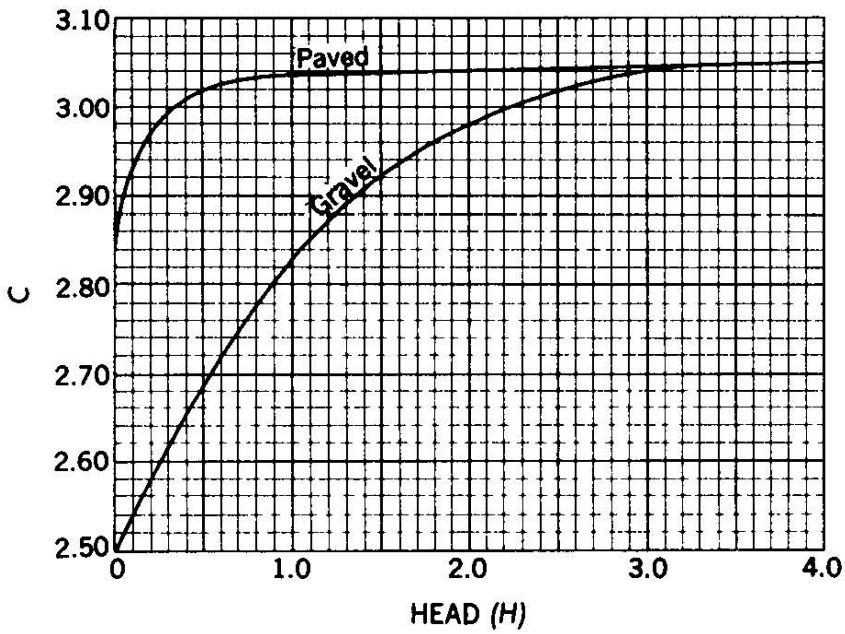

Figure 8.3-2

Discharge Coefficients, C_f, for Highway Embankments for H/L Ratios < 0.15

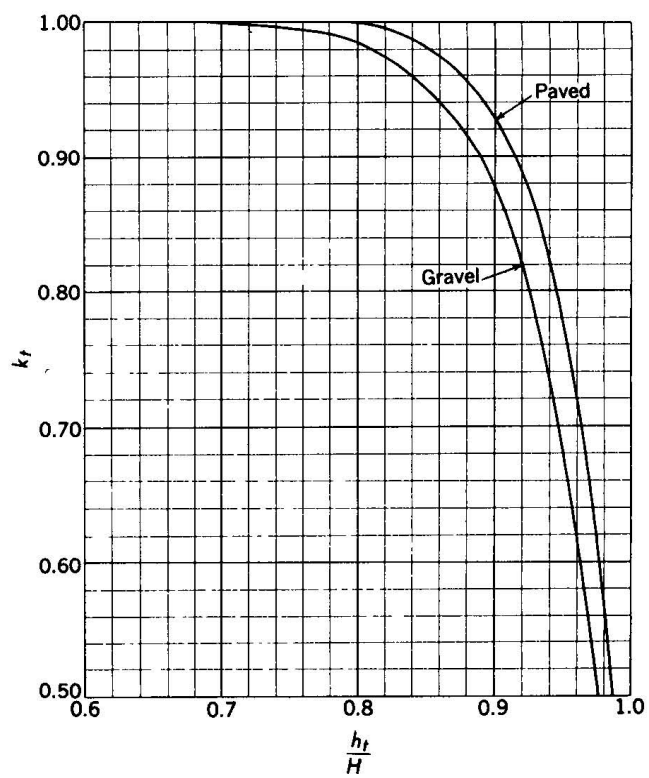

Figure 8.3-3

Definition of Adjustment Factor, k_t, for Submerged Highway Embankments

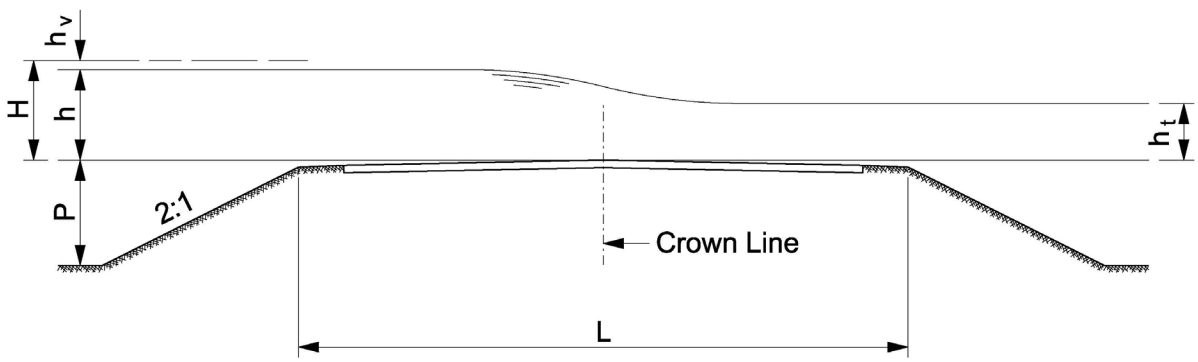

Figure 8.3-4
Definition Sketch of Flow Over Highway Embankment

8.3.2.7 Conduct Scour Evaluation

Evaluating scour potential at bridges is based on recommendations and background from FHWA Technical Advisory "*Evaluating Scour at Bridges*" dated October 28, 1991 and procedures from the *FHWA Hydraulic Engineering Circular No. 18, Evaluating Scour at Bridges, Fourth Edition*, May 2001[14], and *Hydraulic Engineering Circular No. 20, Stream Stability at Highway Structures, Third Edition*, March 2001[15]. Consult FHWA's website for the most current versions of the above publications.

All bridges shall be evaluated to determine the vulnerability to scour. In the FHWA publication *Recording and Coding Guide for Structure Inventory and Appraisal of the Nation's Bridges*[16], a code system has been established for evaluation. A section in this guide "Item 113 - Scour Critical Bridges" uses a single-digit code to identify the status of the bridge regarding its vulnerability to scour. The most current version of the Item 113 Scour Coding Guide can be found here: https://www.fhwa.dot.gov/engineering/hydraulics/policymemo/revguide.cfm.

There are three main components of total scour at a bridge site. They are Long-term Aggradation and Degradation, Contraction Scour, and Local Scour. In addition, lateral migration of the stream must be assessed when evaluating total scour at substructure units. Contraction and local scour will be evaluated in the context of clear-water and live bed scour conditions. In most of the methods for determining individual scour components, hydraulic characteristics at the approach section are required. The approach section should be understood as the cross section located approximately one bridge length upstream of the bridge opening.

8.3.2.7.1 Live Bed and Clear Water Scour

Clear-water scour occurs when there is insignificant or no movement (transport) of the bed material by the flow upstream of the crossing, but the acceleration of flow and vortices created by the piers or abutments causes the bed material in the vicinity of the crossing to move.

Live-bed scour occurs when there is significant transport of bed material from the upstream reach into the crossing.

8.3.2.7.2 Long-term Aggradation and Degradation

Aggradation is the deposition of eroded material in the stream from the upstream watershed. Degradation is the scouring (removal) of the streambed resulting from a deficient supply of sediment. These are subtle long term streambed elevation changes. These processes are natural in most cases. However, unnatural changes like dam construction or removal, as well as urbanization may cause Aggradation and Degradation. Excellent reference on this subject and the geomorphology of streams is the FHWA publication *Highways in the River Environment*[17], *HEC-18, Evaluating Scour at Bridges*[14], and *HEC-20, Stream Stability at Highway Structures*[15].

8.3.2.7.3 Contraction Scour

Generally, Contraction scour is caused by bridge approaches encroaching onto the floodplain and decreasing the flow area resulting in an increase in velocity through a bridge opening. The higher velocities are able to transport sediment out of the contracted area until an equilibrium is reached. Contraction scour can also be caused by short term changes in the downstream water surface elevation, such as bridges located on a meander bend or bridges located in the backwater of dams with highly fluctuating water levels. See 8.5 reference (14) & (15) for discussion and methods of analysis. If a pressure flow condition exists at the bridge opening, then vertical contraction scour must be evaluated. Reference HEC-18 for a description of the method used to estimate this scour component.

Computing Contraction Scour.

1. Live-Bed Contraction Scour

$$\frac{y_2}{y_1} = \left(\frac{Q_2}{Q_1}\right)^{\frac{6}{7}} \left(\frac{W_1}{W_2}\right)^{k_1}$$

Where:

y_s = y_2-y_0 = Average scour depth, ft

y_1 = Average depth in the upstream main Channel, ft

y_2 = Average depth in the contracted section, ft

y_0 = Existing depth in the contracted section before scour, ft

Q_1 = Flow in upstream channel transporting sediment, ft^3/s

Q_2 = Flow in contracted channel, ft^3/s

W_1 = Bottom Width of upstream main channel, ft

W_2 = Net bottom Width of channel at contracted section, ft

k_1 = Exponent for mode of bed material transport, 0.59-0.69 see 8.5 ref. (14)

2. Clear-Water Contraction Scour

$$y_2 = \left[\frac{Q^2}{130 \cdot D_m^{\frac{3}{2}} \cdot W^2} \right]^{\frac{3}{7}}$$

Where:

y_s = y_2-y_0 = Average scour depth, ft

y_2 = Average depth in the contracted section, ft

y_0 = Existing depth in the contracted section before scouring, ft

Q = Discharge through the bridge associated with W, ft^3/s

D_m = Diameter of the smallest nontransportable particle ($1.25D_{50}$), ft

D_{50} = Median Diameter of the bed material (50% smaller than), ft

W = Net bottom Width of channel at contracted section, ft

8.3.2.7.4 Local Scour

Local scour is the removal of material from around a pier abutment, spur dike, or the embankment. It is caused by an acceleration of the flow and/or resulting vortices induced by obstructions to flow.

1. Pier Scour & Colorado State University's (CSU) Equation

   The recommended equation for determination of pier scour is the CSU's equation. Velocity is a factor in calculating the Froude Number. Therefore it is applicable where a hydraulic model of the bridge is available. The equation and appropriate charts and

tables are shown below in Table 8.3-1, Table 8.3-2, Table 8.3-3 and Figure 8.3-5. See 8.5 reference (14) for a complete discussion of the CSU Equation.

The CSU equation for pier scour is:

$$\frac{y_s}{a} = 2.0 \cdot K_1 \cdot K_2 \cdot K_3 \cdot K_4 \cdot \left(\frac{y_1}{a}\right)^{0.35} \cdot Fr_1^{0.43}$$

Where:

y_s	=	Scour depth, ft
y_1	=	Flow depth directly upstream of the pier, ft
A	=	Pier width, ft
Fr_1	=	Froude number directly upstream of the pier = $V_1/(gy_1)^{1/2}$
V_1	=	Mean Velocity of flow directly upstream of the pier, ft/s
g	=	Acceleration of gravity, 32.2 ft/s^2
K_1	=	Correction Factor for pier nose shape (see Table 8.3-1 and Figure 8.3-5)
K_2	=	Correction Factor for angle of attack of flow (see Table 8.3-2)
K_3	=	Correction Factor for bed condition (see Table 8.3-3)
K_4	=	Correction Factor for armoring by bed material 0.7 - 1.0 (see 8.5 reference 14)

Correction Factor, K_1, for Pier Nose Shape (HEC-18 Table 2)	
Shape of Pier Nose	K_1
(a) Square Nose	1.1
(b) Round Nose	1.0
(c) Circular Cylinder	1.0
(d) Group of Cylinders	1.0
(e) Sharp Nose	0.9

Table 8.3-1
Correction Factor, K_1, for Pier Nose Shape

Correction Factor, K_2, for Angle of Attack, Θ, of the Flow (HEC-18 Table 3)			
Angle	L/a = 4	L/a = 8	L/a = 12
0	1.0	1.0	1.0
15	1.5	2.0	2.5
30	2.0	2.75	3.5
45	2.3	3.3	4.3
90	2.5	3.9	5.0
Angle = skew angle of flow L = length of pier, ft a = pier width, ft			

Table 8.3-2
Correction Factor, K_2, for Angle of Attack,θ, of the Flow

Increase in Equilibrium Pier Scour Depths, K_3, for Bed Conditions (HEC-18 Table 4)		
Bed Condition	Dune Height, ft	K_3
Clear – water Scour	N/A	1.1
Plane Bed and Antidune Flow	N/A	1.1
Small Dunes	$3 > H \geq 0.6$	1.1
Medium Dunes	$9 > H \geq 3$	1.2 to 1.1
Large Dunes	$H \geq 9$	1.3

Table 8.3-3
Increase in Equilibrium Pier Scour Depths, K_3, for Bed Condition

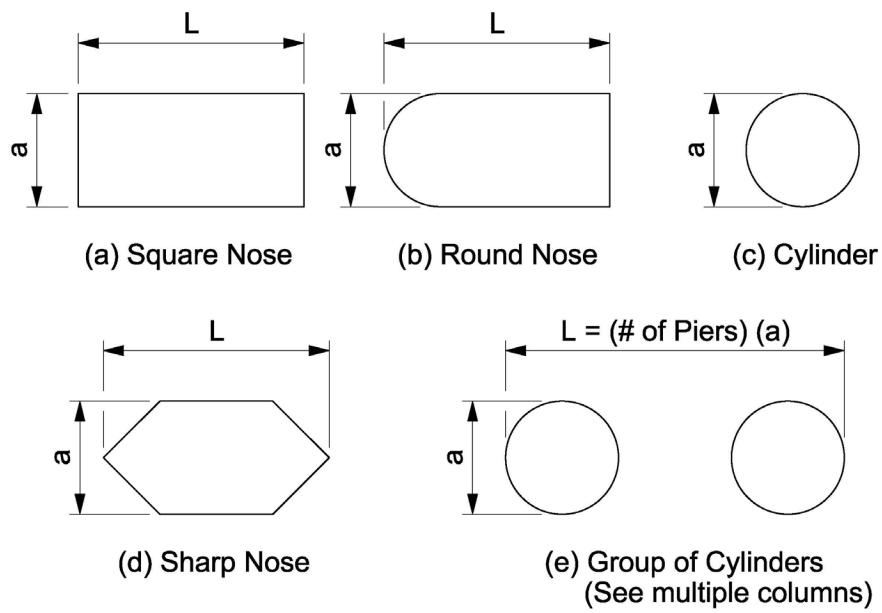

Figure 8.3-5
Common Pier Shapes

2. Abutment Scour Equations

Abutment scour analysis is dependent on equations that relate the degree of projection of encroachment (embankment) into the flood plain. Several equations were developed to estimate abutment scour depths, however lack of field data to verify any one equation causes doubt on the reliability of these scour estimates. This is one of the reasons heavy riprap underlain with geotextile fabric used to resist scour as described in the construction specifications at most stream crossing abutments.

Three methods are presented in the FHWA publication HEC-18 “Evaluating Scour at Bridges”. The HIRE equation can be used when L/y1 is greater than 25, where L is the length of embankment projected and normal to the flow (ft), and y_1 is depth of flow at the abutment on the overbank or in the main channel (ft). For lower values of L/y1, the live-bed Froehlich equation can be used, which incorporates the effective embankment length. The user needs to refer to the publication HEC-18, see 8.5 reference (14), for a discussion of the applicability of the equations presented and further definitions of the parameters used in these equations. In addition, common hydraulic modeling programs used for bridge design, such HEC-RAS and WSPRO, include routines to calculate abutment scour. Designers are cautioned to closely examine how the parameters that are used in these automated routines are defined. The third approach presented in HEC-18 was recently developed under NCHRP Project 24-20. This method includes equations that encompass a range of abutment types and locations, as well as flow conditions. The primary advantage of this approach is that the equations are more physically representative of the abutment scour process, but it also avoids using the effective embankment length, which can be difficult to determine accurately. This

approach computes total scour, rather than just local scour, at the abutment. Reference HEC-18 for a detailed description of the NCHRP approach and equations.

Froelich's Live-Bed Scour at Abutments

$$\frac{y_s}{y_a} = 2.27 \cdot K_1 \cdot K_2 \cdot \left(\frac{L'}{y_a}\right)^{0.43} \cdot F_r^{0.61} + 1$$

y_s	=	Scour depth, ft
y_a	=	Average depth of flow on the floodplain, ft
L'	=	Length of active flow obstructed by the embankment, ft
K_1	=	Coefficient for abutment shape (see Table 8.3-4)
K_2	=	Coefficient for angle of embankment to flow (see 8.5 reference 14)
Fr	=	Froude number of approach flow upstream of the abutment = $V_e/(gy_a)^{1/2}$

Where:

V_e	=	Q_e/A_e, ft/s
g	=	Acceleration of gravity, 32.2 ft/s^2
A_e	=	Flow Area of approach cross section obstructed by embankment, ft^2
Q_e	=	Flow obstructed by abutment and approach embankment, ft^3/s

The HIRE Equation for Live-Bed Scour at Abutments

$$\frac{y_S}{y_1} = 4 \cdot Fr_1^{0.33} \cdot \frac{K_1 \cdot K_2}{0.55}$$

y_s	=	Scour depth, ft
y_1	=	Depth of flow at the abutment on the overbank or in the main channel, ft
K_1	=	Coefficient for abutment shape (see Table 8.3-4)
K_2	=	Coefficient for skew angle of abutment to flow (see 8.5 reference 14)
Fr_1	=	Froude number based on velocity and depth adjacent to and upstream of the abutment

Description	K_1
Vertical-wall abutment	1.00
Vertical-wall abutment with wing walls	0.82
Spill-through abutment	0.55

Table 8.3-4
Abutment Shape Coefficients (K_1)

The Froehlich and HIRE equations often predict excessively conservative abutment scour depths. This is due to the fact that these equations were developed based on results of experiments in laboratory flumes and did not reflect the typical geometry or flow distribution associated with roadway encroachments on floodplains. However, since the NCHRP equations are more physically representative of the abutment scour process, greater confidence can be placed in the scour depths resulting from this approach.

8.3.2.7.5 Design Considerations for Scour

Provide adequate free board (2 feet desirable) to prevent occurrences of pressure flow conditions.

Pier foundation elevations on floodplains should be designed considering the potential of channel or thalweg migration over the design life of the structure.

Align all substructure units and especially piers with the direction of flow. Improper alignment may significantly increase the magnitude of scour.

Piers in the water should have a rounded or streamline nose to reduce turbulence and related scour potential.

Spill-through (sloping) abutments are less vulnerable to scour than vertical wall abutments.

The Froehlich and HIRE equations used to estimate the magnitude of abutment scour were developed in a laboratory under ideal conditions and lack adequate field verification. These equations may tend to over estimate the magnitude of scour. These equations should be incorporated with a great deal of discretion.

8.3.2.8 Select Bridge Design Alternatives

In most design situations, the “proposed bridge” design will be based on the various pertinent design factors discussed in 8.3.1. They will dictate the final selection of bridge length, abutment design, superstructure design and approach roadway design. The Hydraulic/Site report should

adequately document the site characteristics, hydrologic and hydraulic calculations, as well as the bridge type and size alternatives considered. See 8.6 Appendix 8-A for a sample check list of items that need to be included in the Hydraulic/Site Report.

8.4 Hydraulic Design of Box Culverts

Box culverts are an efficient and economical design alternative for roadway stream crossings with design discharges in the 300 to 1500 cfs range. As a general guide culvert pipes are best suited for smaller discharge values while bridges are better suited for larger values. Although multi-cell box culverts are designed for larger discharges, the larger size culverts tend to lose the hydraulic and economic advantage over bridges. The following subsections discuss the design considerations and hydraulic design procedures for box culverts.

8.4.1 Hydraulic Design Factors

As in the hydraulic design of bridges, several hydraulic factors dictate the design of both the culvert and approach roadway. The critical hydraulic factors for design considerations are:

8.4.1.1 Economics

The best economics for box culvert design are realized with the culvert flowing full and producing a reasonable headwater depth (HW) within the boundary of other hydraulic and roadway design constraints.

For long box culverts, particularly on steep slopes, considerable savings can be realized by incorporating an improved inlet design known as “Tapered Inlets”. The improved efficiency of the inlet where the inlet controls the headwater, will allow for design of a smaller culvert barrel. See 8.5 reference (13) for discussion on “Tapered Inlets”.

8.4.1.2 Minimum Size

If the highway grade permits, a minimum five foot box culvert height is desirable for clean-out purposes.

8.4.1.3 Allowable Velocities and Outlet Scour

Generally, for velocities under 10 fps no riprap is needed at the discharge end of a box culvert, although close examination of local soil conditions is advisable.

For outlet velocities from 10-14 fps heavy riprap shall be used extending 15 to 35 feet from the end of the culvert apron.

For velocities greater than 14 fps energy dissipators should be considered. These are the most expensive means of end protection. See 8.4.2.7 for the hydraulic design of energy dissipators.

When heavy riprap is used it is carried up the slopes around the ends of the outlet apron to an elevation at mid-length of apron wing.

8.4.1.4 Roadway Overflow

See 8.3.1.2.

8.4.1.5 Culvert Skew

See 8.3.1.3.

8.4.1.6 Backwater and Highwater Elevations

The "Highwater elevation" commonly referred to as headwater for culverts, is the backwater created at the upstream end of the culvert. Although culverts are more hydraulically efficient and economical when flowing under a reasonable headwater, several factors shall be considered in determining an allowable highwater elevation. For further discussion see Section 8.3.1.4.

8.4.1.7 Debris Protection

Debris protection is provided where physical study of the drainage area indicates considerable debris collection. Where used, structural design of debris protection features should be part of the culvert design. The box culvert survey report must justify the need for protection. Sample debris protection devices are presented in the FHWA publication, *Hydraulic Engineering Circular No. 9, Debris Control Structures, Evaluation and Countermeasures.* See 8.5 reference (18).

8.4.1.8 Anti-Seepage Collar

Anti-seepage collars are used to prevent the movement of water along the outside of the culvert and the failure by piping of the fill next to the culvert. They are used in sandy fills where the culvert has a large headwater.

Collars are located at the midpoint and upstream quarter point on long box culverts. If only one collar is used, it is located far enough from the inlet to intercept the phreatic (zero pressure) line to prevent seepage over the top of the collar. See 8.5 reference (19).

A typical collar is shown in Figure 8.4-1 and is applicable to all single and twin box structures.

An alternate method of preventing seepage is to use a minimum one foot thick impervious soil blanket around the culvert inlet extending five feet over undisturbed embankment. The same effect can be obtained by designing seepage protection into the endwalls.

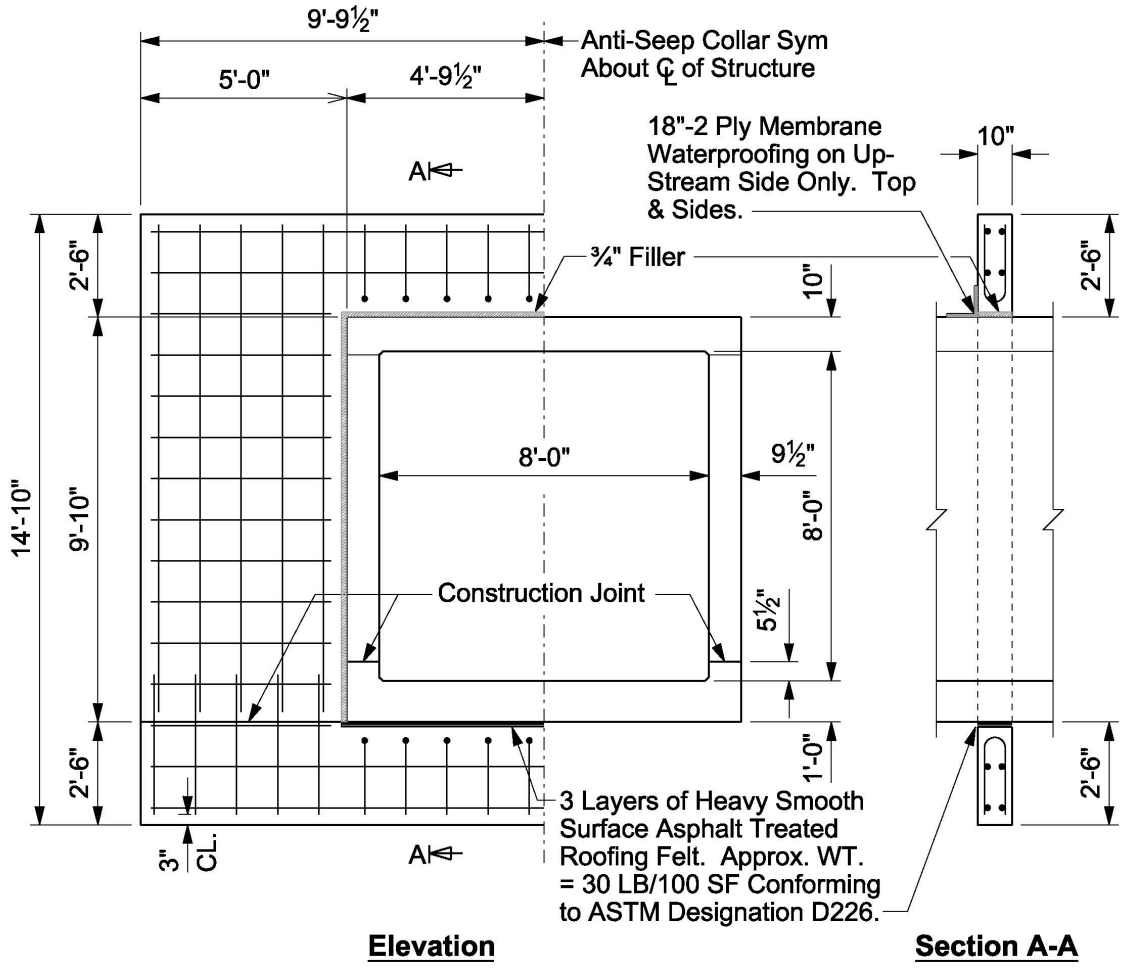

All Bars Are #4s Spaced at 1'-0"

Figure 8.4-1
Anti-Seepage Collar

8.4.1.9 Weep Holes

The need for weep holes should be investigated for clay type soils with high fills, and should be eliminated in other cases.

If weep holes are necessary, alternate layers of fine and coarse aggregate are placed around the holes starting with coarse aggregate next to the hole.

8.4.2 Design Procedure

8.4.2.1 Determine Design Discharge

See 8.2 for procedures.

8.4.2.2 Determine Hydraulic Stream Slope

See 8.3.2.2 for procedures.

8.4.2.3 Determine Tailwater Elevation

The tailwater elevation is the depth of water in the natural channel computed at the outlet of the culvert. In situations of steeper slopes and small culverts, the tailwater is not a critical design factor. However, for mild slopes and larger culverts, the tailwater is a critical design factor. It may control the outlet velocity and depth of flow in the culvert.

The tailwater elevation is calculated using a typical section downstream of the outlet and performing a “normal depth” analysis. Most hydraulic engineering textbooks and handbooks include discussion of methods to calculate “normal depth” for symmetrical and irregular cross-sections in an open channel.

8.4.2.4 Design Methodology

The most prevalent design methodology for culverts is the procedure in the FHWA publication DHS No. 5, see 8.5 reference (13). It is highly recommended the designer first thoroughly study the methodologies presented in that publication.

Several computer software programs are available from public and private sources which use the same technique and methodology presented in HDS No. 5. One public domain computer program developed by FHWA entitled “HY8” is based on the HDS No. 5 manual. This program and documentation are available from the FHWA web site (see 8.7 Appendix 8-B). HEC-RAS and WSPRO also have culvert options using the same methodology. These programs have the capability of allowing the user to calculate the tailwater based on a downstream section and to calculate a combination of culvert and roadway overflow.

8.4.2.5 Develop Hydraulic Model

There are two major types of culvert flow: (1) flow with inlet control, and (2) flow with outlet control. For each type of control, different factors and formulas are used to compute the hydraulic capacity of a culvert. Under inlet control, the cross-sectional area, and the inlet geometry at the entrance are of primary importance. Outlet control involves the consideration of the tailwater in the outlet channel, the culvert slope, the culvert roughness, and the length of the culvert barrel, as well as inlet geometry and cross-sectional area.

Another design of Inlet control which is used frequently is “Tapered Inlets” or improved inlets. The slope-tapered and side-tapered inlets are more efficient hydraulically, and can be a more economical design for long culverts in flow with inlet control.

In all culvert design, headwater depth (HW) or depth of water at the entrance to a culvert is an important factor in culvert capacity. The headwater depth is the vertical height from the culvert invert elevation at the entrance to the total energy elevation of the headwater pool (depth plus velocity head). Because of the low velocities at the entrance in most cases and difficulty in determining the velocity head for all flows, the water surface elevation and the total energy elevation at the entrance are assumed to be coincident.

The box culvert charts presented here are inlet and outlet control nomographs Figure 8.4-3 and Figure 8.4-4, and a critical depth chart Figure 8.4-6. Note the "Inlet Type" over the HW/D scales on Figure 8.4-3 and entrance loss coefficients "Ke" for inlet types on Figure 8.4-4. The following illustrative problems are examples of their use. Forms similar to Figure 8.4-2 are used for computation.

1. Outlet Control Problem.

   The information necessary to solve this problem is given in Figure 8.4-2.

   Check for Inlet Control: For a Q/B value of 36 and a twin 10 x 5 box with type "C" inlet; HW/D=1.08 from Figure 8.4-3.

   The HW = 1.08 (5 ft) = 5.4 ft.

   Check for Outlet Control: For Q = 720/2 = 360 cfs. Length = 180 ft. and type "C" inlet; H = 1.5 ft. from Figure 8.4-4, TW = 5.2 ft. = ho

   Then HW = H + h_o - LS_o = 1.5 ft. + 5.2 ft. - .2 ft. = 6.5 ft.

   Design HW is 6.5 ft. (outlet controls) and the outlet velocity is 7.2 f.p.s. No heavy riprap is needed at the discharge apron.

2. Inlet Control Problem.

   The information necessary to solve this problem is given in Figure 8.4-5.

   Check for Inlet Control: For a Q/B value of 36 and a twin 10 x 5 box with type "C" inlet; HW/D = 1.08 from Figure 8.4-3.

   Then HW = 1.08 (5 ft.) = 5.4 ft.

   Check for Outlet Control: For Q = 720/2 = 360 cfs. Length = 132 ft. and type "C" inlet; H = 1.3 ft. from Figure 8.4-4. From Figure 8.4-6 critical depth = 3.4 ft. ho = (3.4 ft. + 5 ft.)/2 = 4.2 ft.

   Then HW = H + h_o - LS_o = 1.3 ft. + 4.2 ft. - .7 ft. = 4.8 ft.

   Design HW = 5.4 ft. (inlet control) and the outlet velocity is 11.0 f.p.s. Heavy riprap is needed at the discharge apron.

HYDROLOGIC AND CHANNEL INFORMATION

State of Wisconsin/Department of Transportation
E-B-31-68

Project *Outlet Control Problem*
Culvert Sta. *560+00*

Designer *L.J.G.*
Date *9-23-69*

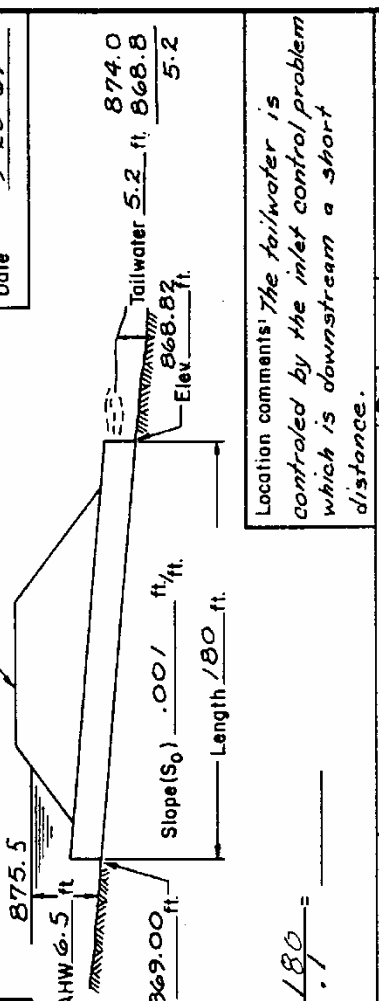

Location comments: *The tailwater is controlled by the inlet control problem which is downstream a short distance.*

Hydrology:
(*50* freq.) Q= *720* cfs.
(____ freq.) Q= ____ cfs.

$\frac{L}{100S_o} = \frac{180}{.1} =$ ____

Culvert				Q	Capacity Charts HW	Inlet Cont.		Outlet Control								Controlling HW	Outlet Velocity f.p.s.	Comments
Entrance	Material	Size				$\frac{HW}{D}$	HW	K_e	d_c	$\frac{d_c+D}{2}$	* h_o	H	LS_o	** HW				
Type "C"	R.C. Box	Twin 10x5		36 720		1.08	5.4	0.2	3.4	4.2	5.2	1.5	.2	6.5	6.5	7.2	(For n=.015)

Summary & Recommendations:

* h_o = The greater of $\frac{d_c+D}{2}$ or TW
** HW = H + h_o − LS_o

Figure 8.4-2
Culvert Computation Form

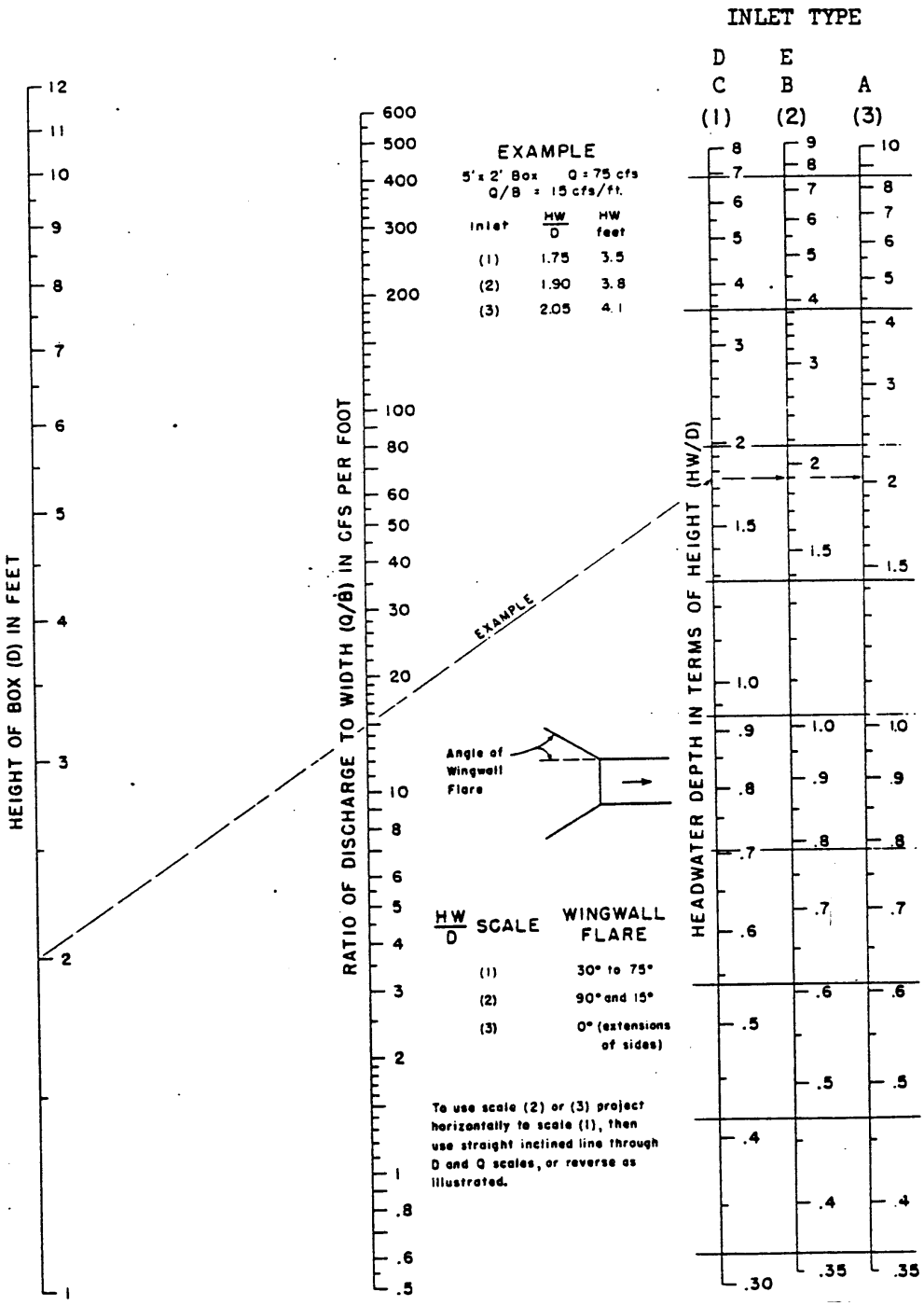

Figure 8.4-3
Headwater Depth for Box Culverts with Inlet Control

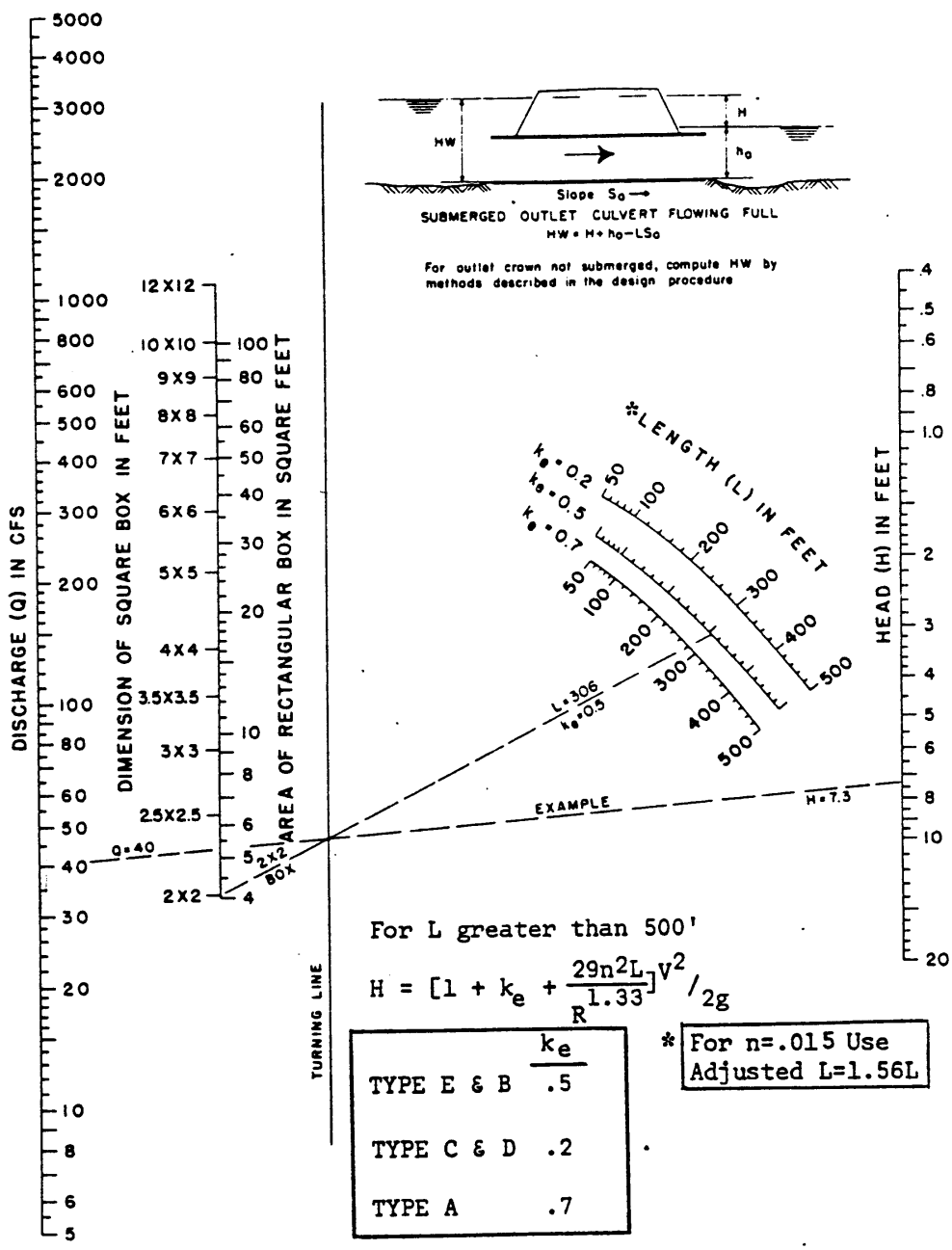

Figure 8.4-4
Head for Concrete Box Culverts Flowing Full, n = 0.012

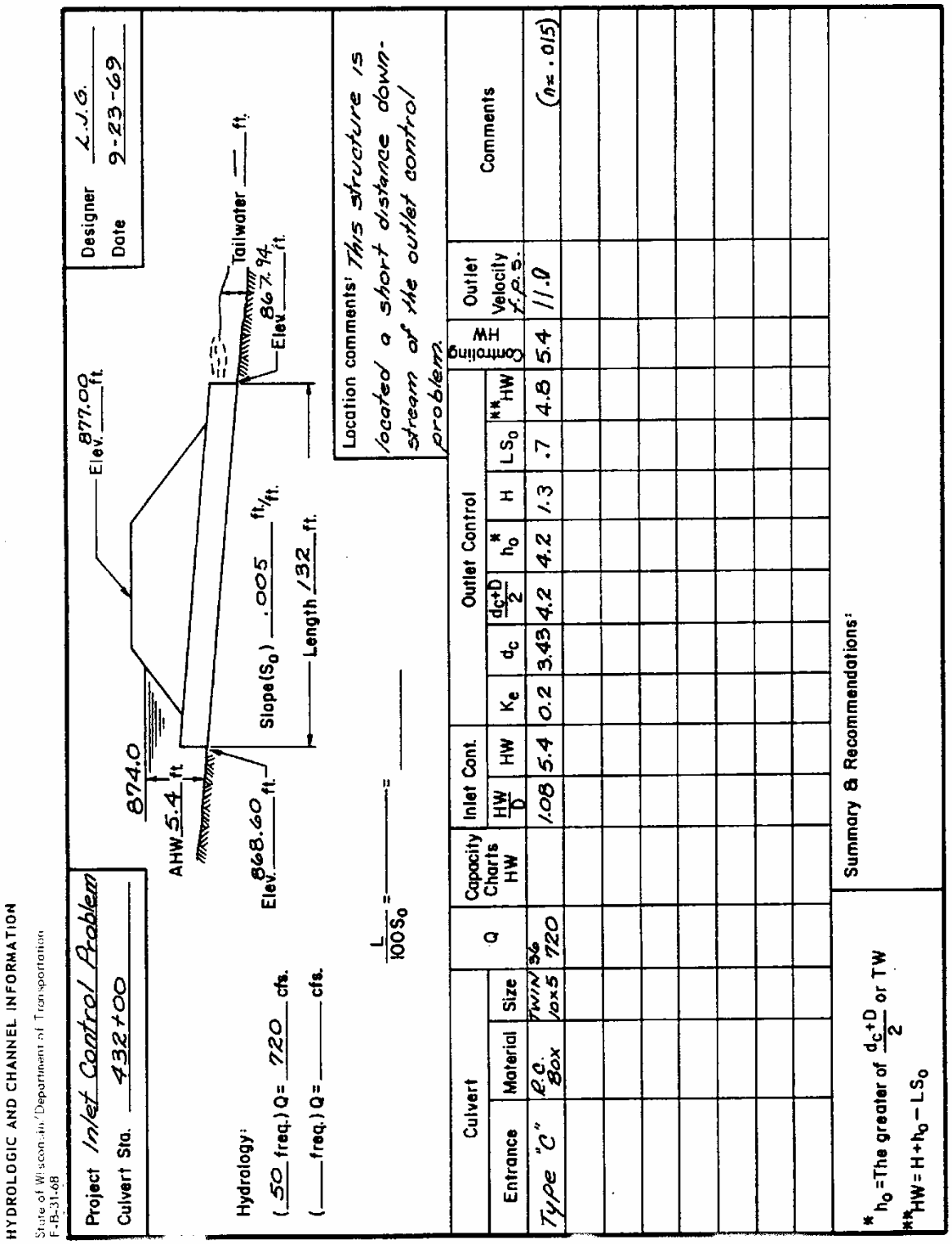

Figure 8.4-5
Culvert Computation Form

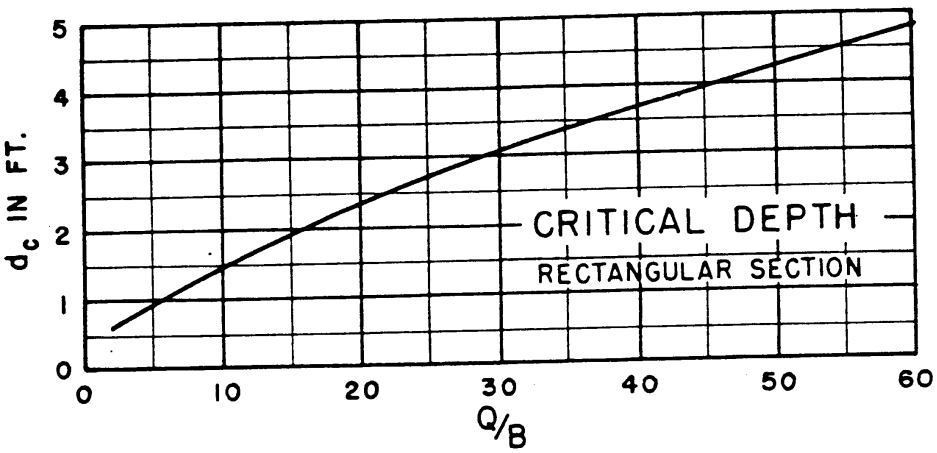

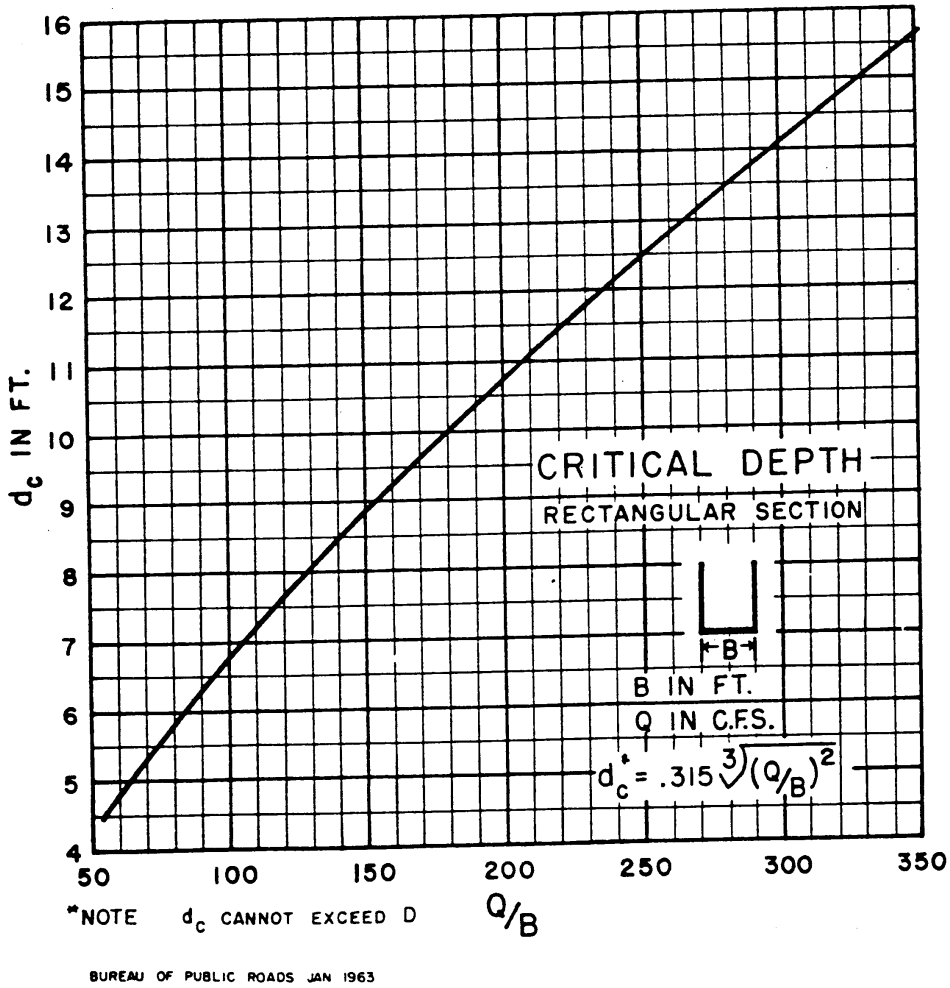

Figure 8.4-6
Critical Depth – Rectangular Section

8.4.2.6 Roadway Overflow

See 8.3.2.6.

8.4.2.7 Outlet Scour and Energy Dissipators

Energy dissipating devices are used where it is desirable to reduce the discharge velocity by inducing high energy losses at the inlet or discharge ends of the structure. They are generally warranted when discharge velocities exceed 14 feet per second.

Energy losses may be induced at the culvert entrance with a drop inlet, or at the outlet using energy dissipating devices and stilling basins to form a hydraulic jump.

Drop inlets are used where headroom is limited, and energy dissipating devices and stilling basins at the discharge are used where headroom is not critical.

The use of drop inlets should generally be reserved for areas where channel slopes are steep. Under these conditions drop inlets enable the reduction of culvert grades and in turn lower discharge velocities. When evaluating a site, a drop inlet may also be applicable on drainage ditches, in addition to channels that are normally dry or do not support fish or other aquatic organism habitat of pronounced significance. The use of a drop inlet requires approval from the Bureau of Structures, as well as coordination with the Department of Natural Resources early in project development.

For outlet devices utilizing the hydraulic jump, two conditions must be present for the formation of a hydraulic jump; the approach depth must be less than critical depth (supercritical flow); and the tailwater depth must be deeper than critical depth (subcritical flow) and of sufficient depth to control the location of the hydraulic jump. Where the tailwater depth is too low to cause a hydraulic jump at the desired location, the required depth can be provided by either depressing the discharge apron or utilizing a broad-crested weir at the end of the apron to provide a pool of sufficient depth. The depressed apron method is preferred since there is less scouring action at the end of the apron. The amount of depression is determined as the difference between the natural tailwater depth and the depth required to form a jump.

There are numerous design concepts of energy dissipating devices and stilling basins that may be adapted for energy dissipation to reduce the velocity and avoid scour at the culvert outlet. The more common type of designs are drop inlets, drop outlets, hydraulic jump stilling basins and riprap stilling basins.

More discussion on energy dissipators for culverts is available in 8.5 references (19), (20), (21), and (22). The designer is strongly advised to closely examine and study reference (20). More detailed discussions about the various types of energy dissipators and their designs are presented in that reference.

8.4.2.7.1 Drop Inlet.

In drop inlet design, flow is controlled at the inlet crest by the weir effect of the drop opening. Drop inlet culverts operate most satisfactorily when the height of drop is sufficient to permit

considerable submergence of the culvert entrance without submerging the weir or exceeding limiting headwater depths.

Referring to Figure 8.4-7, the general formula for flow into the horizontal drop opening is:

$$Q = C_1 (2g)^{1/2} L H^{3/2}$$

Where Q is the discharge in c.f.s., L is the crest length 2B+W, H is the depth of flow plus velocity head, and C_1 is a dimensionless discharge coefficient taken as 0.4275. The formula is expressed in english units as:

$$Q = 3.43 LH^{3/2}$$

and

$$L = Q/(3.43H^{3/2})$$

There are four corrections which have to be multiplied times the discharge coefficient C_1, or times the factor 3.43:

1. Correction for head H/W (Table 8.4-1)
2. Correction for box-inlet shape B/W. (Table 8.4-2)
3. Correction for approach channel width W_c/L (Table 8.4-3).

   Where: W_c = approach channel width = Area/Depth
4. Correction for dike effect X/W (Table 8.4-4)

The size of the culvert should be determined by using the discharge (Q) and not allowing the height of water (HW) to exceed the inlet drop plus the critical depth of the weir which is given as:

$$d_c = [(Q/L)^2/g]^{1/3}$$

When using the hydraulic charts of 8.4.2.5, consider the culvert to have a wingwall flare of 0 degrees (extension of sides).

Sample computations are shown in 8.4.2.7.1.1.

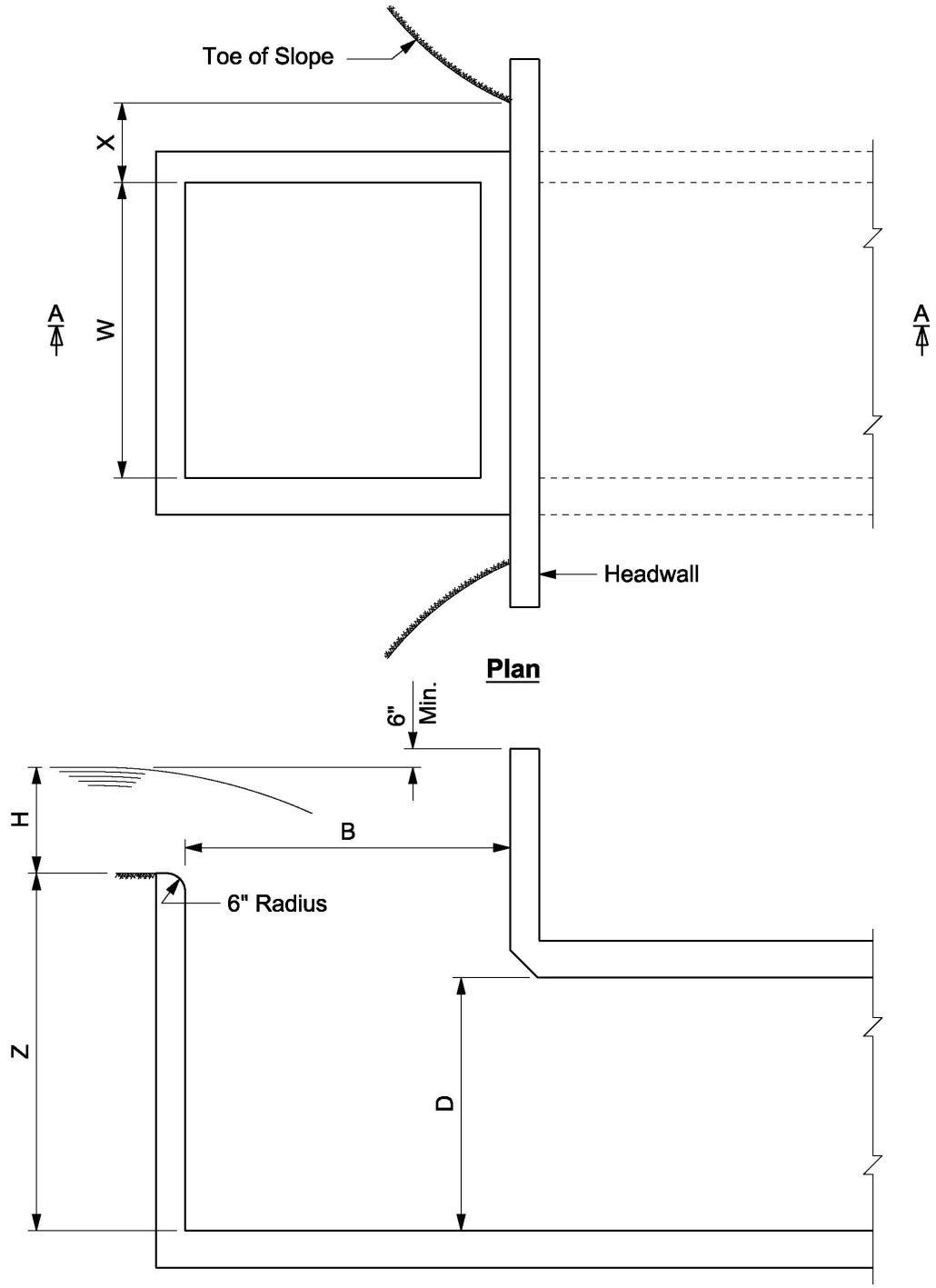

Figure 8.4-7
Box Drop Inlet

H/W	0	0.01	0.02	0.03	0.04	0.05	0.06	0.07	0.08	0.09
0	--	--	--	--	--	0.76	0.8	0.82	0.84	0.86
0.1	0.8	0.88	0.89	0.9	0.91	0.91	0.92	0.92	0.93	0.93
0.2	0.93	0.94	0.94	0.95	0.95	0.95	0.95	0.96	0.96	0.96
0.3	0.97	0.97	0.97	0.97	0.98	0.98	0.98	0.98	0.98	0.98
0.4	0.99	0.99	0.99	0.99	0.99	0.99	0.99	0.99	0.99	1
0.5	1	1	1	1	1	1	1	1	1	1
0.6	1	--	--	--	--	--	--	--	--	--
Correction is 1.00 when H/W exceeds 0.6										

Table 8.4-1
Correction for Head
(Control at Box-Inlet Crest)

B/W	0	0.1	0.2	0.3	0.4	0.5	0.6	0.7	0.8	0.9
0	0.98	1.01	1.03	1.03	1.04	1.04	1.03	1.02	1.01	1.01
1	1	0.99	0.99	0.98	0.98	0.98	0.97	0.97	0.96	0.96
2	0.96	0.96	0.95	0.95	0.95	0.95	0.95	0.95	0.94	0.94
3	0.94	0.94	0.94	0.94	0.94	0.94	0.94	0.94	0.93	0.93
4	0.93	--	--	--	--	--	--	--	--	--

Table 8.4-2
Correction for Box-Inlet Shape
(Control at Box-Inlet Crest)

Wc/L	0	0.1	0.2	0.3	0.4	0.5	0.6	0.7	0.8	0.9
0	0	0.09	0.18	0.27	0.35	0.44	0.53	0.62	0.71	0.8
1	0.84	0.87	0.9	0.92	0.93	0.94	0.95	0.96	0.97	0.97
2	0.98	0.98	0.99	0.99	0.99	0.99	1	1	1	1
3	1	--	--	--	--	--	--	--	--	--
Correction is 1.00 when Wc/L exceeds 3.0										

Table 8.4-3
Correction for Approach-Channel Width
(Control at Box-Inlet Crest)

B/W	X/W						
	0	0.1	0.2	0.3	0.4	0.5	0.6
0.5	0.9	0.96	1	1.02	1.04	1.05	1.05
1	0.8	0.88	0.93	0.96	0.98	1	1.01
1.5	0.76	0.83	0.88	0.92	0.94	0.96	0.97
2	0.76	0.83	0.88	0.92	0.94	0.96	0.97

Table 8.4-4
Correction for Dike Effect
(Control at Box-Inlet Crest)

8.4.2.7.1.1 Drop Inlet Example Calculations

Given:

Q = 420 cfs through single 9'x6' box

H = 4.4' in a 27 ft. wide channel

Drop = 5 ft

Assume:

B = $\frac{W}{2} = 4.5$

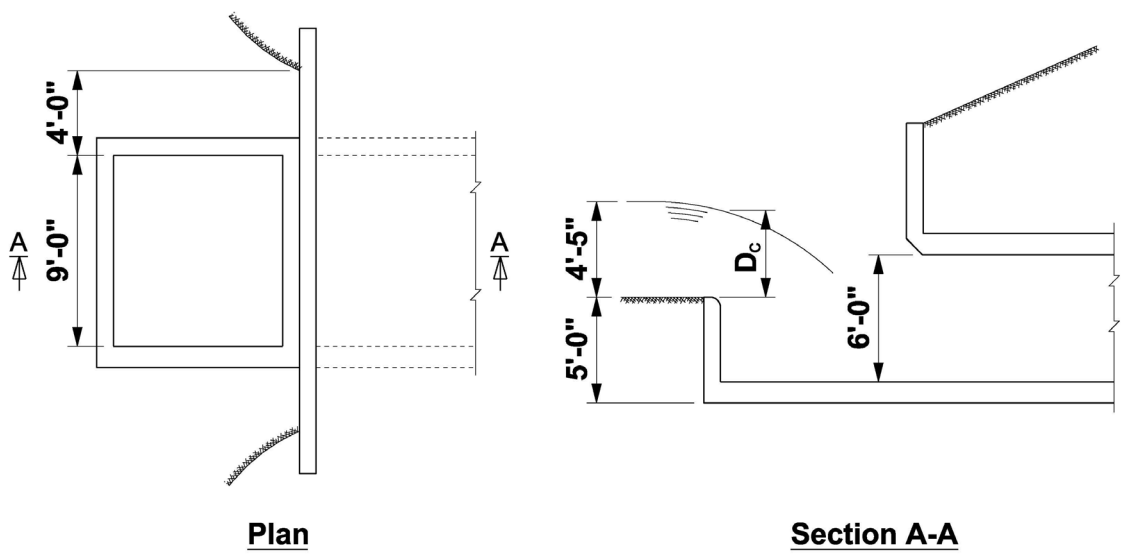

Figure 8.4-8
Drop Inlet Example

Control at inlet crest: $L = \frac{Q}{3.43 \cdot H^{3/2}}$

Corrections:

1. $\frac{H}{W} = \frac{4.4}{9} = 0.49 \Rightarrow 1.00$

2. $\frac{B}{W} = \frac{4.5}{9} = 0.5 \Rightarrow 1.04$

3. $\frac{W_c}{L} = \frac{27}{9 + 2(4.5)} = \frac{27}{18} = 1.50 \Rightarrow 0.94$

4. $\frac{X}{W} = \frac{4.0}{9.0} = 0.44 \Rightarrow 1.04$

Total Correction = 1.00 x 1.04 x 0.94 x 1.04 = 1.02

$$L = \frac{420}{1.02 \cdot 3.43 \cdot 4.4^{3/2}} = \frac{420}{1.02 \cdot 3.43 \cdot 9.23} = 13.01 < (2B + W) = 18 \Rightarrow \text{OK}$$

$$d_c = \sqrt[3]{\frac{Q^2}{L^2 g}} = \left(\frac{17.64\text{x}10^4}{3.24 \cdot 3.22\text{x}10^3}\right)^{1/3} = 16.85^{1/3} = 2.56$$

HW must be less than Z+d_c to prevent submerged weir. With inlet control, from Figure 8.4-3:

$$\frac{HW}{D} = 1.19$$

HW = 1.19x6 = 7.14

7.14 < (5+2.56) = 7.56, therefore weir controls

8.4.2.7.2 Drop Outlets

This generalized design is applicable to relative heights of fall ranging from 1.0 y/d_c to 15 y/d_c and to crest lengths greater than 1.5 d_c. Here y is the vertical distance between the crest and the stilling basin floor and d_c is the critical depth of flow.

$d_c = 0.315[(Q/B)^2]^{1/3}$

Referring to Figure 8.4-10 and Figure 8.4-9, this design uses the following formulas:

1. The minimum length L_b of the stilling basin is:

$X_a + X_b + X_c = X_a + 2.55\ d_c$

a. The distance X_a from the headwall to the point where the surface of the upper nappe strikes the stilling basin floor is solved graphically in Figure 8.4-9.

b. The distance X_b from the point at which the surface of the upper nappe strikes the stilling basin floor to the upstream face of the floor blocks is:

$X_b = 0.8\ d_c$

c. The distance X_c, between the upstream face of the floor blocks and the end of the stilling basin is:

$X_c \geq 1.75\ d_c$

2. The floor blocks are proportioned as follows:

a. The height of the floor blocks is:

$0.8\ d_c$

b. The width and spacing of the floor blocks are approximately:

$0.4\ d_c$

A variation of $\pm\ 0.15\ d_c$ from this limit is permissible.

c. The floor blocks are square in plan.

d. The floor blocks occupy between 50 and 60 percent of the stilling basin width.

3. The height of the end sill is:

$0.4\ d_c$

4. The sidewall height above the tailwater level is:

$0.85\ d_c$

5. The minimum height d_2, of the tailwater surface above the floor of the stilling basin is:

$d_2 = 2.15\ d_c$

In cases where the approach velocity head is greater than 1/3 of the specific head (velocity head + elevation head), X_a is checked by the formula below and the greater X_a value is used.

$$X_a^{\ 2} = \left(\frac{2 \cdot V^2}{g}\right) \cdot y_1$$

Where:

y_1 = top of water at crest

V = velocity of approach

Sometimes high values of d_c become unworkable, resulting in a need for large drops, high end sills and floor blocks. To prevent this d_c may be reduced by flaring the end of the barrel. The flare angle is approximately 150/V where V is the velocity at the beginning of the taper.

Sample computations are shown in 8.4.2.7.2.1.

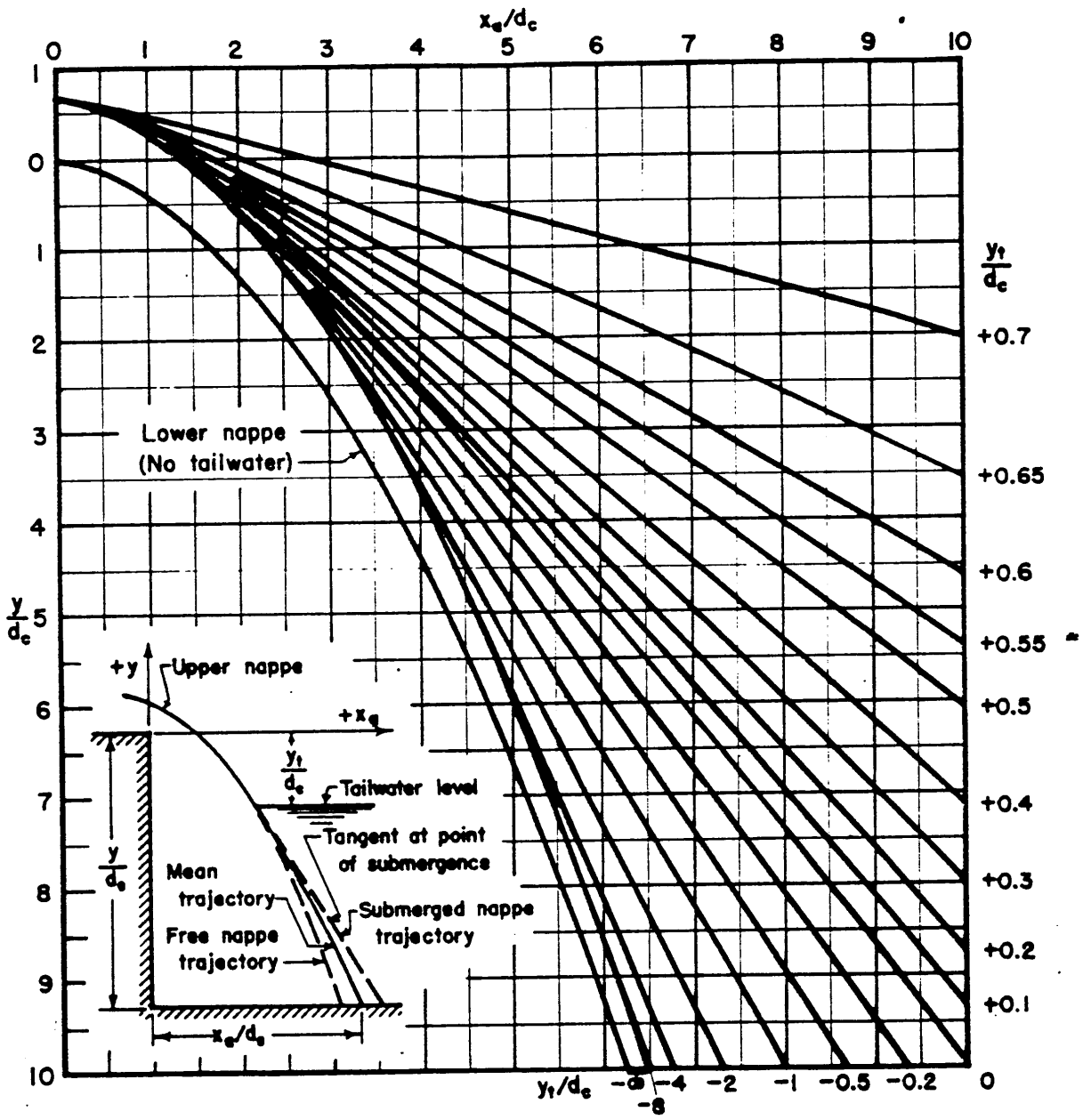

Figure 8.4-9
Design Chart for Determination of "X_a"

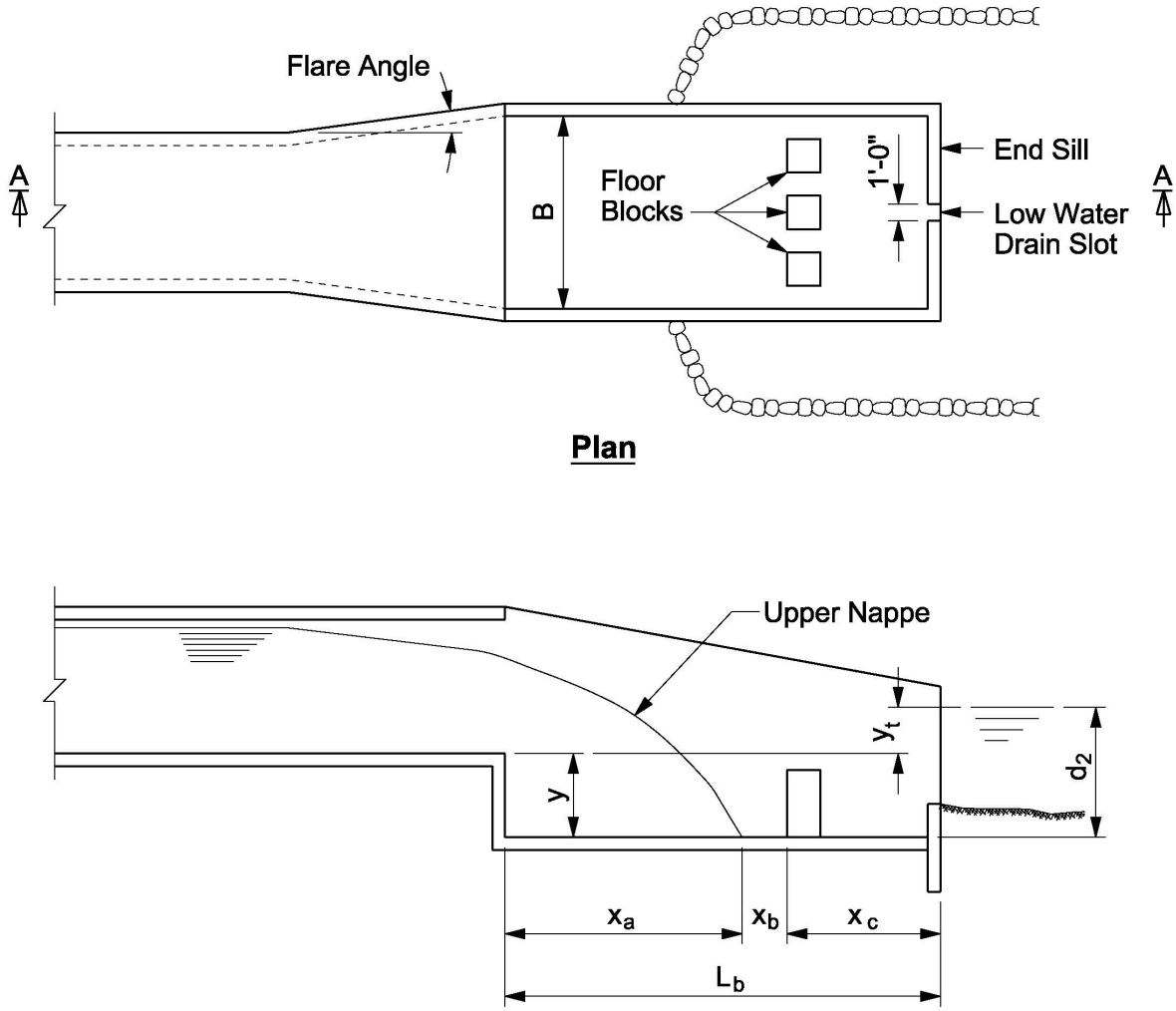

Figure 8.4-10
Straight Drop Outlet Stilling Basin

8.4.2.7.2.1 Drop Outlet Example Calculations

Given:

Q	=	800 cfs through single 8'x8' box
V	=	13.5 fps in the box
Drop	=	5 ft

Depth = 7.5 ft

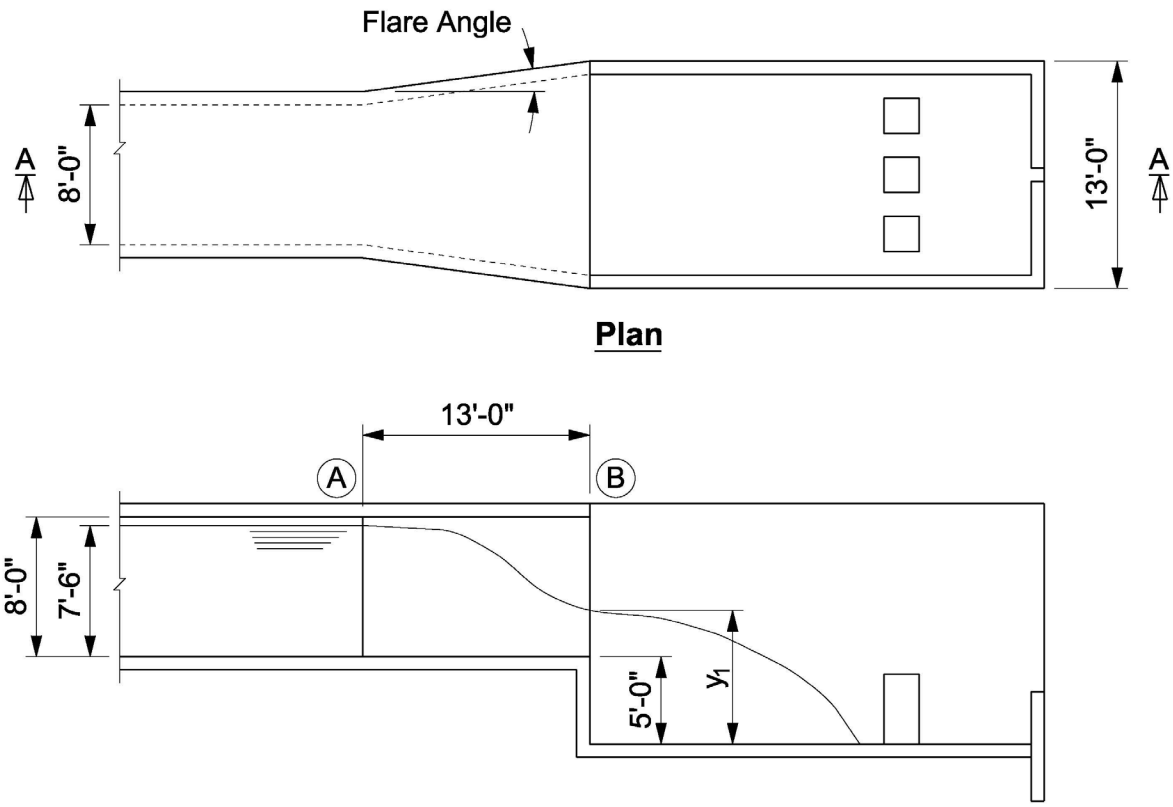

Figure 8.4-11
Drop Outlet Example

Assumptions:

- That the specific head of "A" is approximately equal to the specific head at "B". Therefore, the elevation head + velocity head at "A" = elevation head + velocity head at "B".
- The end sill height should be less than or equal to 2'-0".

If the drop were placed at "A":

$$d_c = 0.315 \cdot \sqrt[3]{\left(\frac{Q}{B}\right)^2} = 0.315 \cdot (100)^{2/3} = 6.78$$

And end sill = 0.4dc = 2'-9" which exceeds 2'-0, therefore flare outlet.

To obtain a 2'-0" sill, set d_c = 2'-0"/0.4 = 5 ft

$$B = \left(\frac{0.315 \cdot Q^{2/3}}{d_c}\right)^{3/2} = \left(\frac{0.315 \cdot 800^{2/3}}{5}\right)^{3/2} = 13'$$

Flare from B = 9 ft to B = 13 ft at an angle of 150/13.5 = 11^0

$$\text{Length} = \frac{\left(\frac{13-8}{2}\right)}{\tan 11^0} = 13'$$

$$\text{Specific Head, } H_A = 7.5 + \frac{V_A^{\,2}}{2g} = \frac{13.5^2}{2 \cdot 32.2} = 10.33'$$

By trial and error; assume $\frac{V_B^{\,2}}{2g} = 7.5'$

$$V_B = (2 \cdot 32.2 \cdot 7.5)^{1/2} = 22\text{fps}$$

Elevation head (depth) = 10.33-7.2 = 2.83'

Check trial; Q = AV = (13x2.83)x22 = 809 cfs, Q_{actual} = 800 cfs, OK

$$d_c = 0.315 \cdot \sqrt[3]{\left(\frac{Q}{B}\right)^2} = 0.315 \cdot \left(\frac{800}{13}\right)^{2/3} = 0.315 \cdot 15.6 = 4.91'$$

$$\frac{h_v}{H} = \frac{\left(\frac{V_B^{\,2}}{2g}\right)}{10.33} = \frac{7.5}{10.33} = 0.725 > \frac{1}{3} \qquad \therefore X_a^{\,2} = \frac{2V^2}{g} y_1$$

$$X_a = \left[\frac{2 \cdot 22^2 \cdot (5 + 2.83)}{32.2}\right]^{1/2} = 15.35' \qquad \text{Use } X_a = 15'\text{-}6''$$

Dimensions:

Height of floor blocks	=	0.8 x 4.91 = 4'-0"
Height of end sill	=	0.4 x 4.91 = 2'-0"
Length of Basin	=	15.5+2.55 d_c = 28'
Floor Blocks	=	2'-0" square

Height of Sidewalls = $(2.15 + 0.85)d_c = 14.48'$ above basin floor. Use 13'-0"

8.4.2.7.3 Hydraulic Jump Stilling Basins

The simplest form of a hydraulic jump stilling basin has a straight centerline and is of uniform width. A sloping apron or a chute spillway is typically used to increase the Froude number as the water flows from the culvert to the stilling basin. The outlet barrel of the culvert is also sometimes flared to decrease y_1 so that the tailwater elevation necessary to cause a hydraulic jump need not be so high. This is done using the 150/V relationship as in the drop outlet sample problem. y_1 is usually kept in the 2-3 foot range.

Referring to Figure 8.4-12, the required tailwater is computed by the formula:

$$y_2/y_1 = \frac{1}{2}\ [(1+8F_1^2)^{1/2} - 1]$$

Where:

y_2	=	tailwater height required to cause the hydraulic jump,
F_1	=	Froude number = $v_1 /(gy_1)^{1/2}$
g	=	acceleration of gravity,
y_1	=	velocity at beginning of jump.

End sill height (ΔZ_0) is determined graphically from Figure 8.4-13

Length of jump is assumed to be 6 times the depth change (y_2-y_1).

In many cases the tailwater height isn't deep enough to cause the hydraulic jump. To remedy this, the slope of the culvert may be increased to greater than the slope of the streambed. This will result in an apron depressed such that normal tailwater is of sufficient depth.

The problem of scour on the downstream side of the end sill can be overcome by providing riprap in the stream bottom. If riprap is used, it starts from the top of the sill at a maximum slope of 6:1 up from end sill to original streambed. If no riprap is used, the streambed begins at the top of the end sill.

More detailed discussion about the various types of hydraulic jump stilling basins and their design can be found in 8.5 reference (20).

Sample computations are shown in 8.4.2.7.3.1.

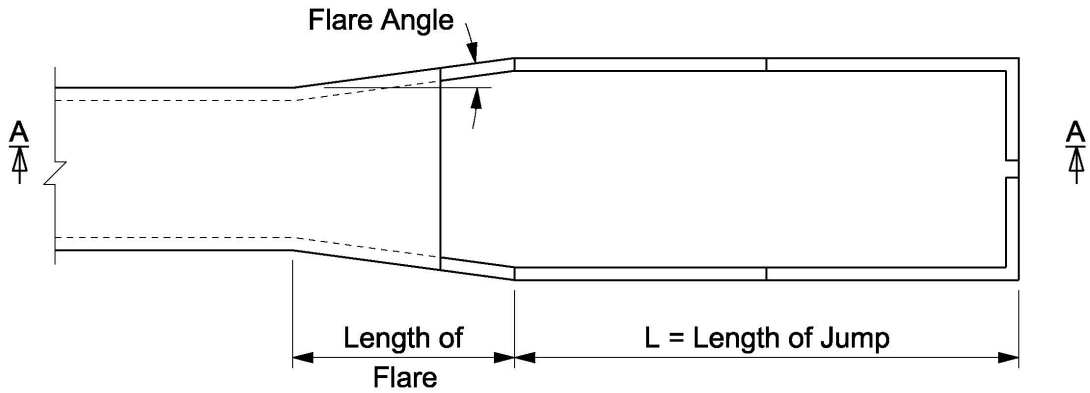

Plan

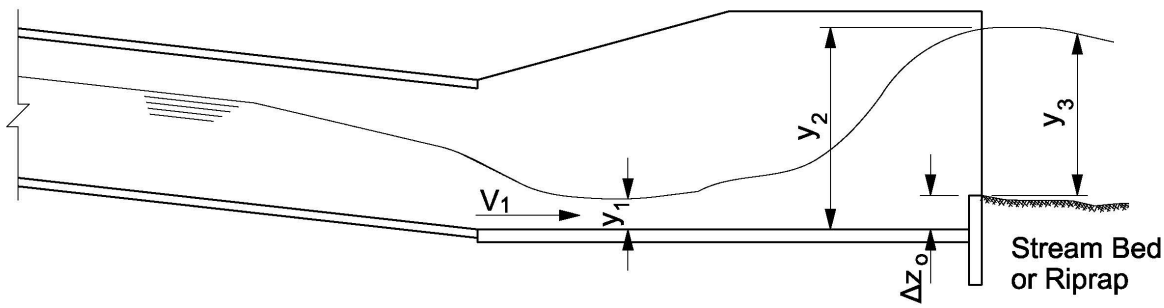

Section A-A

Figure 8.4-12
Hydraulic Jump Stilling Basin

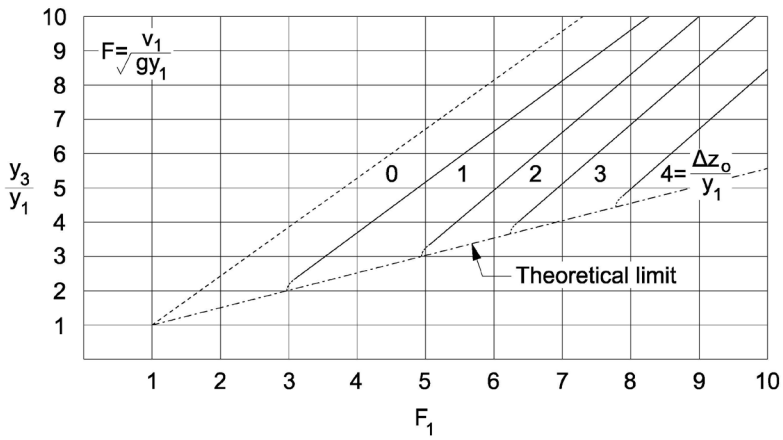

Figure 8.4-13
Characteristics of a Hydraulic Jump at an Abrupt Rise

8.4.2.7.3.1 Hydraulic Jump Stilling Basin Example Calculations

Given:

A discharge of 600 cfs flows through a 7'x6' box culvert at 16 fps and a depth of 5.8'. Normal tailwater depth in the outlet channel is 5.0 feet.

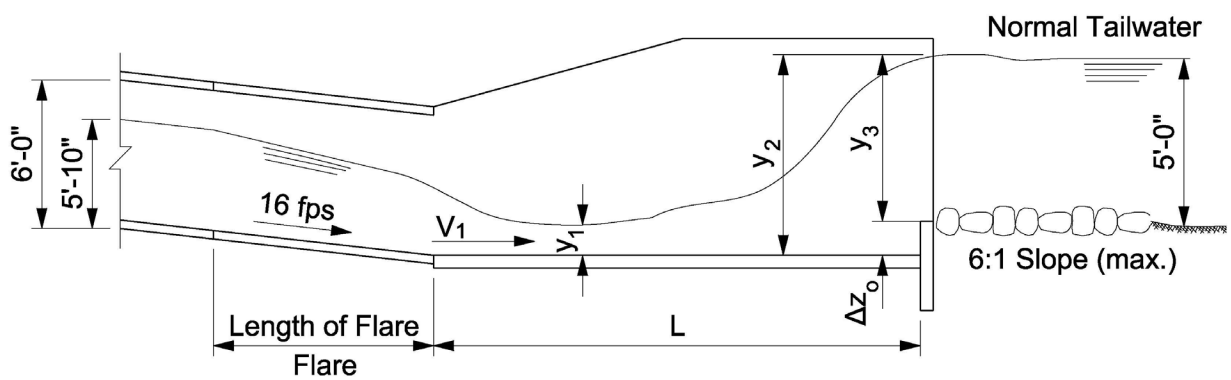

Figure 8.4-14
Hydraulic Jump Stilling Basin Example

$$\text{Flare of wings} = \frac{150}{16} \approx 9^0$$

$$H = 5.8 + \frac{16^2}{2 \times 32.2} = 5.8 + 3.975 = 9.775$$

Assume:

$y_1 = 2.2$ and $\frac{V_1^2}{2 \cdot g} = 9.775 - 2.2 = 7.575'$

$V_1 = (2 \times 32.2 \times 7.575)^{1/2} = 22.1$ fps

Q = 600 = AV = 2.2 x width x 22.1, width = 12.36

Length of flare = $\frac{\frac{(12.36 - 7)}{2}}{\tan 9^0} = 17'$

$Y_1 = 2.20$

$V_1 = 22.1$

$$F_1 = \frac{V_1}{\sqrt{g \cdot y_1}} = \frac{22.1}{\sqrt{32.2 \times 2.2}} = 2.63$$

$$y_2 = y_1 \cdot \frac{1}{2} \cdot \left(\sqrt{1 + 8 \times 2.63^2} - 1\right) = 7.15$$

$L = 6(y_2 - y_1) = 6\ (7.15 - 2.20) = 29.7'$ use L = 30 ft.

Assume $y_3 = 5'$

$y_3/y_1 = 5/2.2 = 2.27$

From Figure 8.4-13, $\Delta Z_o/y_1 = 0.5$

$\Delta Z_o = 1.1$, use 1'-6"

8.4.2.7.4 Riprap Stilling Basins

The riprap stilling basins, in many cases, is a very economical approach to dissipate energy at culvert outlets and avoid damaging scour. A good treatise on riprap stilling basin is given in the FHWA Hydraulic Design of Energy Dissipators for Culverts and Channels, see 8.5 reference (20).

8.4.2.8 Select Culvert Design Alternatives

The "proposed culvert" design shall be based on several design factors. In most design situations, the pertinent hydraulic factors discussed in 8.4.1 will dictate the final selection of culvert size, length, scour protection, as well as the approach roadway design.

8.5 References

1. Wisconsin Department of Natural Resources, *Wisconsin's Floodplain Management Program, Chapter NR116*, Register, August 2004, No. 584.

2. U. S. Geological Survey, *Flood-Frequency Characteristics of Wisconsin Streams*. Water-Resources Investigations Report 03-4250, 2003. This report can be found on the USGS web site using the following link:

   http://wi.water.usgs.gov/publications/flood/currentreport.html

3. U. S. Geological Survey, *Guidelines for Determining Flood Flow Frequency, Bulletin #17B* Revised September 1981, Editorial Corrections, March 1982.

4. U.S. Department of Agriculture, Soil Conservation Service, Urban Hydrology for Small Watersheds, Technical Release 55 (2nd Edition), June 1986.

5. Ven Te Chow, Ph.D. *Open Channel Hydraulics* (New York, McGraw-Hill Book Company 1959).

6. U.S. Department of Transportation, Federal Highway Administration, *Design Charts for Open-Channel Flow Hydraulic Design,* Series No. 3, August 1961.

7. U.S. Army Corps of Engineers, *HEC-RAS River Analysis System Users Manual*, (CPD-68), Hydrologic Engineering Center, Davis CA, Version 4.0, March 2008.

8. U.S. Army Corps of Engineers, *HEC-RAS River Analysis System Hydraulic Reference Manual* (CPD-69), Hydrologic Engineering Center, Davis CA, Version 4.0, March 2008.

9. U.S. Army Corps of Engineers, *HEC-RAS River Analysis System Applications Guide* (CPD-70), Hydrologic Engineering Center, Davis CA, Version 4.0, March 2008.

10. U.S. Department of Interior, Geological Survey, *Measurement of Peak Discharge at Width Contractions by Indirect Methods; Techniques of Water-Resources Investigation of the U.S.G.S.*, Chapter A4, Book 3, Third printing 1976.

11. L.A. Arneson and J.O. Shearman, *User's Manual for WSPRO-A computer Model for Water Surface Profile Computations,* FHWA Report No. FHWA-SA-98-080, June 1998.

12. J.O. Shearman, W. H. Hirby, V.R. Schneider, H.N. Flippo, *Bridge Waterways Analysis Model*, Research Report, FHWA Report No. FHWO-RD-86/108.

13. U.S. Department of Transportation, FHWA, Hydraulic Design Series (HDS), Number 5, *Hydraulic Design of Highway Culverts*, September 2001, Revised May 2005.

14. U.S Department of Transportation, Federal Highway Administration, *Hydraulic Engineering Circular No. 18, Evaluating Scour at Bridges*, 4th Edition, May 2001.

15. U.S Department of Transportation, Federal Highway Administration, *Hydraulic Engineering Circular No. 20, Stream Stability at Highway Structures*, 3rd Edition, March 2001.

16. U.S. Department of Transportation, Federal Highway Administration, *Recording and Coding Guide for the Structure Inventory and Appraisal of the Nation's Bridges*, Office of Engineering, Bridge Division, Report No. FHWA-PD-96-001, December 1995.

17. U.S. Department of Transportation, Federal Highway Administration, *Highways in the River Environment,* Report No. FHWA-HI-90-016, February 1990.

18. U.S. Department of Transportation, FHWA, *Debris-Control Structures, Evaluation and Countermeasures, Third Edition,* Hydraulic Engineering Circular (HEC) No.9, Publication No. FHWA-IF-014-016, October 2005.

19. U.S. Department of Interior, Bureau of Reclamation, *Design of Small Dam*, 3rd Edition Washington D.C. 1987.

20. U.S. Department of Transportation, Federal Highway Administration, *Hydraulic Design of Energy Dissipators for Culverts and Channels*, Hydraulic Engineering Circular (HEC) No. 14, Third Edition, Publication No. FHWA-NHI-06-086, July 2006.

21. Blaisdell, Fred W. and Donnelly, Charles A., *Hydraulic Design of the Box Inlet Drop Spillway*, U.S. Department of Agriculture, Soil Conservation Service, SCS-TP-106, July, 1951.

22. Blaisdell, Fred W. and Donnelly, Charles A., *Straight Drop Spillway Stilling Basin*, University of Minnesota, St. Anthony Falls Hydraulic Laboratory, November, 1954.

8.6 Appendix 8-A, Check List for Hydraulic/Site Report

A hydraulic and site report shall be prepared for all stream crossing bridge and culvert projects that are completed by consultants. The report shall be submitted to the Bureau of Structures for review along with the "Stream Crossing Structure Survey Report" and preliminary structure plans (see WisDOT Bridge Manual, 6.2.1). The hydraulic and site report needs to include information necessary for the review of the hydraulic analysis and the type, size and location of proposed structure. The following is a list of the items that need to be included in the hydraulic site report:

- Document the location of the stream crossing or project site. Indicate county, municipality, Section, Town, and Range.

- List available information and references for methodologies used in the report. Indicate when survey information was collected and what vertical datum was used as reference for elevations used in hydraulic models and shown on structure plans. Indicate whether the site is in a mapped flood hazard area and type of that mapping, if any.

- Provide complete description of the site, including description of the drainage basin, river reach upstream and downstream of the site, channel at site, surrounding bank and over bank areas, and gradient or slope of the river. Also, provide complete description of upstream and downstream structures.

- Provide a summary discussion of the magnitude and frequency of floods to be used for design. Hydrologic calculations shall be provided to the Bureau of Structures beforehand for their review and concurrence. Indicate in the hydraulic site report when calculations were submitted and whether approval was obtained.

- Provide a description of the hydraulic analyses performed for the project. Indicate what models were used and the basis for and assumptions used in the selection of various modeling parameters. Specifically, discuss the assumptions used for defining the modeling reach boundary conditions, roughness coefficients, location and source of hydraulic cross sections, and any assumptions made in selecting the bridge modeling methodology. (Hydraulic calculations shall be submitted with the hydraulic site report).

- Provide a complete description of the existing structure, including a description of the geometry, type, size and material. Indicate the sufficiency rating of the structure. Provide information about observed scour, flooding, roadway overtopping, ice or debris, navigation clearance and any other structurally or hydraulically pertinent information. Provide a discussion of calculated hydraulic characteristics at the site.

- Provide a description of the various sizing constraints considered at the site, including but not limited to regulatory requirements, hydraulic and roadway geometric conditions, environmental and constructability considerations, etc.

- Provide a discussion of the alternatives considered for this project including explanations of how certain alternatives are removed from consideration and how the recommended alternative is selected. Include a cost comparison.

- Provide complete description of proposed structure including calculated hydraulic characteristics.
- Provide a discussion of calculated scour depths, recommended scour prevention measures and assigned scour code. (Scour calculations shall be submitted with the hydraulic site report).
- Provide a summary table comparing calculated hydraulic characteristics for existing and proposed conditions.

8.7 Appendix 8-B, FHWA Hydraulic Engineering Publications

Note: Some links may be obsolete, but will be updated in the future.

Code	Title	Year	Publication #	NTIS #
HDS 01	Hydraulics of Bridge Waterways	1978	FHWA-EPD-86-101	PB86-181708
HDS 02	Highway Hydrology Second Edition	2002	FHWA-NHI-02-001	
HDS 03	Design Charts for Open-Channel Flow	1961	FHWA-EPD-86-102	PB86-179249
HDS 04	Introduction to Highway Hydraulics	2001	FHWA-NHI-01-019	
HDS 05	Hydraulic Design of Highway Culverts	2005	FHWA-NHI-01-020	
HDS 06	River Engineering for Highway Encroachments	2001	FHWA-NHI-01-004	
HEC 09	Debris Control Structures Evaluation and Countermeasures	2005	FHWA-IF-04-016	
HEC 11	Design of Riprap Revetment	1989	FHWA-IP-89-016	PB89-218424
HEC 14	Hydraulic Design of Energy Dissipators for Culverts and Channels	2006	FHWA-NHI-06-086	
HEC 15	Design of Roadside Channels with Flexible Linings, Third Edition	2005	FHWA-IF-05-114	
HEC 17	The Design of Encroachments on Flood Plains Using Risk Analysis	1981	FHWA-EPD-86-112	PB86-182110
HEC 18	Evaluating Scour at Bridges, Fourth Edition	2001	FHWA-NHI-01-001	
HEC 18	Evaluating Scour at Bridges, Fourth Edition (Errata Sheet)	2001		
HEC 20	Stream Stability at Highway Structures Third Edition	2001	FHWA-NHI-01-002	
HEC 20	Stream Stability at Highway Structures Third Edition (Errata Sheet)	2001	FHWA-NHI-01-002	
HEC 21	Bridge Deck Drainage Systems	1993	FHWA-SA-92-010	PB94-109584
HEC 22	Urban Drainage Design Manual Second Edition	2001	FHWA-NHI-01-021	
HEC 23	Bridge Scour and Stream Instability Countermeasures Experience, Selection, and Design Guidance Second Edition	2001	FHWA-NHI-01-003	
HEC 23	Bridge Scour and Stream Instability Countermeasures Experience, Selection, and Design Guidance Second Edition (Errata Sheet)	2001		
HEC 24	Highway Stormwater Pump Station Design (cover)	2001	FHWA-NHI-01-007	
HEC 24	Highway Stormwater Pump Station Design	2001	FHWA-NHI-01-007	
HEC 25	Tidal Hydrology, Hydraulics, and Scour at Bridges	2004	FHWA-NHI-05-077	
HEC 25	Highways in the Coastal Environment - 2nd edition	2008	FHWA-NHI-07-096	
HRT	Assessing Stream Channel Stability at Bridges in Physiographic Regions	2006	FHWA-HRT-05-072	

Code	Title	Year	Publication #	NTIS #
HRT	Effects of Inlet Geometry on Hydraulic Performance of Box Culverts	2006	FHWA-HRT-06-138	
HRT	Junction Loss Experiments: Laboratory Report	2007	FHWA-HRT-07-036	
HRT	Hydraulics Laboratory Fact Sheet	2007	FHWA-HRT-07-054	
Other	Geosynthetic Design and Construction Guidelines	1995	FHWA-HI-95-038	PB95-270500
Other	Underwater Evaluation And Repair of Bridge Components	1998	FHWA-DP-98-1	
Other	Best Management Practices for Erosion and Sediment Control	1995	FHWA-FLP-94-005	
Other	Underwater Inspection of Bridges	1980	FHWA-DP-80-1	
Other	Culvert Management Systems User Manual	2001	FHWA-02-001	
Other	FHWA Hydraulics Library on CD-ROM FHWA Hydraulics Library on CD-ROM (Updated Browser)	2002		
Other	Hydraulic Performance of Curb and Gutter Inlets	1999	FHWA-KU-99-1	
Other	Culvert Management Systems Source Code	2001		
Other	NCHRP Report 25-25 (04) Environmental Stewardship Practices, Procedures, and Policies for Highway Construction and Maintenance	2004		
Other	New England Transportation Consortium: Performance Specs for Wood Waste Materials as an Erosion Control Mulch and as a Filter Berm	2001	FHWA-NETC 25	
Other	Bridge Scour Protection Systems Using Toskanes	1994	FHWA-PA-94-012	PB95-266318
Other	Structural Design Manual for Improved Inlets and Culverts	1983	FHWA-IP-83-6	PB84-153485
Other	Culvert Inspection Manual	1986	FHWA-IP-86-2	PB87-151809
RD	Bottomless Culvert Scour Study: Phase II Laboratory Report	2007	FHWA-HRT-07-026	
RD	Effects of Gradation and Cohesion on Scour, Volume 2, "Experimental Study of Sediment Gradation and Flow Hydrograph Effects on Clear Water Scour Around Circular Piers"	1999	FHWA-RD-99-184	PB2000-103271
RD	Effects of Gradation and Cohesion on Scour, Volume 1, "Effect of Sediment Gradation and Coarse Material Fraction on Clear Water Scour Around Bridge Piers"	1999	FHWA-RD-99-183	PB2000-103270
RD	Portable Instrumentation for Real Time Measurement of Scour At Bridges	1999	FHWA-RD-99-085	PB2000-102040
RD	Users Primer for BRI-STARS	1999	FHWA-RD-99-191	PB2000-107371

Code	Title	Year	Publication #	NTIS #
RD	Effects of Gradation and Cohesion on Scour, Volume 3, "Abutment Scour for Nonuniform Mixtures"	1999	FHWA-RD-99-185	PB2000-103272
RD	Remote Methods of Underwater Inspection of Bridge Structures	1999	FHWA-RD-99-100	PB9915-7968
RD	Hydraulics of Iowa DOT Slope-Tapered Pipe Culverts	2001	FHWA-RD-01-077	
RD	Users Manual for BRI-STARS	1999	FHWA-RD-99-190	PB2000-107372
RD	Effects of Gradation and Cohesion on Scour, Volume 4, "Experimental Study of Scour Around Circular Piers in Cohesive Soils"	1999	FHWA-RD-99-186	PB2000-103273
RD	Effects of Gradation and Cohesion on Scour, Volume 5, "Effect of Cohesion on Bridge Abutment Scour"	1999	FHWA-RD-99-187	PB2000-103274
RD	Effects of Gradation and Cohesion on Scour, Volume 6, "Abutment Scour in Uniform and Stratified Sand Mixtures"	1999	FHWA-RD-99-188	PB2000-103275
RD	Durability Analysis of Aluminized Type 2 Corrugated Metal Pipe	2000	FHWA-RD-97-140	
RD	Performance Curve for a Prototype of Two Large Culverts in Series Dale Boulevard, Dale City, Virginia	2001	FHWA-RD-01-095	
RD	Bottomless Culvert Scour Study: Phase I Laboratory Report	2002	FHWA-RD-02-078	
RD	Bridge Scour in Nonuniform Sediment Mixtures and in Cohesive Materials: Synthesis Report	2003	FHWA-RD-03-083	PB-2204-104690
RD	Enhanced Abutment Scour Studies For Compound Channels	2004	FHWA-RD-99-156	
RD	Field Observations and Evaluations of Streambed Scour at Bridges	2005	FHWA-RD-03-052	
RD	South Dakota Culvert Inlet Design Coefficients	1999	FHWA-RD-01-076	

Figure 8.7-1
FHWA Hydraulic Engineering Publications

FHWA Hydraulics Engineering Software		
Software	Title	Year
HY 7	Bridge Waterways Analysis Model (WSPRO)	2005
HY 7	WSPRO User's Manual (Version 061698) (pdf 2.1 MB)	1998
HY 8	Culvert Hydraulic Analysis Program, Version 7.0	2007
HDS 5	HDS 5 Hydraulic Design of Highway Culverts (pdf, 9.25 mb)	2001
HDS 5	HDS 5 Chart Calculator	2001
HY 11	Preliminary Analysis System for WSP	1989
HY 11	PAS USERS MANUAL (ISDDC)	1989
HY 11	Accuracy of Computed Water Surface Profiles (ISDDC)	1986
FESWMS	FESWMS (Version 3.1.5)	2003
FESWMS	FESWMS User's Manual	2003
HY 22	Visual Urban	2002
HY 22	HEC 22 - Urban Drainage Manual	2001
BRI-STARS	Bridge Stream Tube for Alluvial River Sim	2000
BRI-STARS	BRI-STARS Users Manual	2000
HYRISK	HYRISK Setup (zip, 13 mb)	2002
Hydraulics Software by Others		
Software	Title	Year
BCAP	Broken-back Culvert Analysis Program (Version 3.0)	2002
CAESAR	Cataloging And Expert evaluation of Scour risk And River stability at bridge sites	2001
CHL	Coastal & Hydraulics Laboratory USACE	
FishXing	Fish Passage through Culverts USFS	
HEC	Hydrologic Engineering Center USACE	
HyperCalc	HyperCalc Plus	2002
NSS	National Streamflow Statistics Program	
PEAKFQ	PEAKFQ	1995
SMS	Surface-Water Modeling System (SMS)	2001
StreamStats	StreamStats	
USGS	Water Resources Applications Software USGS	
WMS	Watershed Modeling System (WMS)	

Figure 8.7-2
FHWA Hydraulics Software List

Table of Contents

9.1 General 2
9.2 Concrete 3
9.3 Reinforcement Bars 4
9.3.1 Development Length and Lap Splices for Deformed Bars 5
9.3.2 Bends and Hooks for Deformed Bars 6
9.3.3 Bill of Bars 7
9.3.4 Bar Series 7
9.4 Steel 9
9.5 Miscellaneous Metals 11
9.6 Timber 12
9.7 Miscellaneous Materials 13
9.8 Painting 15
9.9 Bar Tables and Figures 17
9.10 Granular Materials 25
9.11 References 26
9.12 Appendix - Draft Bar Tables 27

9.1 General

The *Wisconsin Standard Specifications for Highway and Structure Construction* (hereafter referred to as *Standard Specifications*) contains references to *ASTM Specifications* or *AASHTO Material Specifications* which provide required properties and testing standards for materials used in highway structures. The service life of a structure is dependent upon the quality of the materials used in its construction as well as the method of construction. This chapter highlights applications of materials for highway structures and their properties.

In cases where proprietary products are experimentally specified, special provisions are written which provide material properties and installation procedures. Manufacturer's recommendations for materials, preparation and their assistance during installation may also be specified.

Materials that are proposed for incorporation into highway structure projects performed under the jurisdiction of the Wisconsin Department of Transportation (WisDOT) may be approved or accepted by a variety of procedures:

- Laboratory testing of materials that are submitted or samples randomly selected.
- Inspection and/or testing at the source of fabrication or manufacture.
- Inspection and/or testing in the field by WisDOT regional personnel.
- Manufacturer's certificate of compliance and/or manufacturer's certified report of test or analysis, either as sole documentation for acceptance or as supplemental documentation.
- Inspection, evaluation and testing in the normal course of project administration of material specifications.
- Some products are on approved lists or from fabricators, manufacturers, and certified sources approved by WisDOT. Lists of approved suppliers, products, and certified sources are located at:

https://wisconsindot.gov/Pages/doing-bus/eng-consultants/cnslt-rsrces/tools/appr-prod/default.aspx

The *Wisconsin Construction and Materials Manual* (CMM) contains a description of procedures for material testing and acceptance requirements in Chapter 8, Section 45. Materials, unless otherwise permitted by the specifications, cannot be incorporated in the project until tested and approved by the proper authority.

9.2 Concrete

Concrete is used in many highway structures throughout Wisconsin. Some structure types are composed entirely of concrete, while others have concrete members. Different concrete compressive strengths (f'_c) are used in design and depend on the structure type or the location of the member. Compressive strengths are verified by cylinder tests done on concrete samples taken in the field. The *Standard Specifications* describe the requirements for concrete in Section 501.

Some of the concrete structure types/members and their design strengths for new projects are:

- Decks, Diaphragms, Overlays, Curbs, Parapets, Medians, Sidewalks and Concrete Slab Bridges (f'_c = 4 ksi)
- Other cast-in-place structures such as Culverts, Cantilever Retaining Walls and Substructure units (f'_c = 3.5 ksi)
- Other types of Retaining Walls (f'_c - values as specified in Chapter 14)
- Prestressed "I" Girders (f'_c = 6 to 8 ksi)
- Prestressed Box Girders (f'_c = 5 ksi)
- Prestressed Deck Panels (f'_c = 6 ksi)

Grade "E" concrete (Low Slump Concrete) is used in overlays for decks and slabs as stated in Section 509.2.

The modulus of elasticity of concrete, E_c, is a function of the unit weight of concrete and its compressive strength **LRFD [C5.4.2.4]**. For a unit weight of 0.150 kcf, the modulus of elasticity is:

f'_c = 3.5 ksi ; E_c = 3600 ksi

f'_c = 4 ksi ; E_c = 3800 ksi

For prestressed concrete members, the value for E_c is based on studies in the field and is calculated as shown in 19.3.3.8.

The modulus of rupture for concrete, f_r, is a function of concrete strength and concrete density, and is described in **LRFD [5.4.2.6]**. The coefficient of thermal expansion for normal weight concrete is 6 x 10^{-6} in/in/°F per **LRFD [5.4.2.2]**.

Air entraining admixture is added to concrete to provide durability for exposure to freeze and thaw conditions. Other concrete admixtures used are set retarding and water reducing admixtures. These are covered in Section 501 of the *Standard Specifications.*

9.3 Reinforcement Bars

Notice: Section 9.3 contents and the **LRFD [**article numbers**]** referenced in this Section are based on AASHTO LRFD Bridge Design Specifications (7th Edition – 2014).

Reinforced concrete structures and concrete members are designed using Grade 60 deformed bar steel with a minimum yield strength of 60 ksi. The modulus of elasticity, E_s , for steel reinforcing is 29,000 ksi. Reinforcement may be epoxy coated and this is determined by its location in the structure as described below. Adequate concrete cover and epoxy coating of reinforcement contribute to the durability of the reinforced concrete structure. The *Standard Specifications* describe the requirements for steel reinforcement and epoxy coating in Section 505.

Epoxy coated bars shall be used for both top and bottom reinforcement on all new decks, deck replacements, concrete slab superstructures, structural approach slabs and top slab of culverts (with no fill on top). They shall be used in other superstructure elements such as curbs, parapets, medians, sidewalks, diaphragms and pilasters. Some of the bars in prestressed girders are epoxy coated and are specified in the Chapter 19 - Standards. Also use coated bars for sign bridge footings.

Use epoxy coated bar steel on all piers detailed with expansion joints and on all piers at grade separations. Use epoxy coated bars down to the top of the footing elevation.

At all abutments, use epoxy coated bars in the parapets and in the wing walls. For A3 abutments, use epoxy coated bars in the paving block and in the abutment backwall. For A1(fixed) abutments, use epoxy coated dowel bars.

Welding of bar steel is not permitted unless approved by the Bureau of Structures or used in an approved butt splice as stated in Section 505.3.3.3 of the *Standard Specifications*. Test results indicate that the fatigue life of steel reinforcement is reduced by welding to them. Supporting a deck joint by welding attachments to the bar steel is not permitted. The bar steel mat does not provide adequate stiffness to support deck joints or similar details during the deck pour and maintain the proper joint elevations.

The minimum and maximum spacing of reinforcement, and spacing between bar layers is provided in **LRFD [5.10.3.1, 5.10.3.2]**. Use minimum and maximum values shown on Standards where provided.

Bridge plans show the quantity of bar steel required for the structure. Details are not provided for bar chairs or other devices necessary to support the reinforcement during the placement of the concrete. This information is covered by the *Standard Specifications* in Section 505.3.4 and these devices are part of the bid quantity.

Reinforcement for shrinkage and temperature stresses shall be provided near surfaces of concrete as stated in **LRFD [5.10.8]**.

When determining the anchorage requirements for bars, consider the bar size, the development length for straight bars and the development length for standard hooks. Note in Table 9.9-1 and Table 9.9-2 that smaller bars require considerably less development length

than larger bars and the development length is also less if the bar spacing is 6 inches or more. By detailing smaller bars to get the required area and providing a spacing of 6 inches or more, less steel is used. Bar hooks can reduce the required bar development lengths, however the hooks may cost more to fabricate. In cases such as footings for columns or retaining walls, hooks may be the only practical solution because of the concrete depth available for developing the capacity of the bars.

Fabricators stock all bar sizes in 60 foot lengths. For ease of handling, the detailed length for #3 and #4 bars is limited to 45 feet. Longer bars may be used for these bar sizes at the discretion of the designer, when larger quantities are required for the structure. All other bar sizes are detailed to a length not to exceed 60 feet, except for vertical bars. Bars placed in a vertical position are detailed to match optional construction joint spacing plus lap. The location of optional horizontal construction joints in pier shafts or columns will generally determine the length of vertical bars in piers. All bars are detailed to the nearest inch.

The number of bars in a bundle shall not exceed four, except in flexural members the bars larger than #11 shall not exceed two in any one bundle. Individual bars in a bundle, cut off within the span of a member, shall be terminated at different points with at least a 40-bar diameter stagger. Where spacing limitations are based on bar size, bundled bars shall be treated as a single bar of a diameter derived from the equivalent total area **LRFD [5.10.3.1.5]**.

Stainless steel deformed reinforcement meeting the requirements of ASTM A955 has been used on a limited basis with the approval of the Bureau of Structures. It has been used in bridge decks, parapets and in the structural approach slabs at the ends of the bridge. Fabricators typically stock #6 bars and smaller in 60 foot lengths and #7 bars and larger in 40 foot lengths. Follow the guidance above for selecting bar lengths based on ease of handling.

9.3.1 Development Length and Lap Splices for Deformed Bars

Table 9.9-1 and Table 9.9-2 provide the development length, ℓ_d , for straight bars and the required lap length of spliced tension bars according to **LRFD [5.11.2.1, 5.11.5.3]**. The basic development length, ℓ_{db} , is a function of bar area, A_b , bar diameter, d_b , concrete strength, f'_c and yield strength of reinforcement, f_y. The basic development length is multiplied by applicable modification factors to produce the required development length, ℓ_d. The lap lengths for spliced tension bars are equal to a factor multiplied times the development length, ℓ_d . The factor applied depends on the classification of the splice; Class A, B or C. The class selected is a function of the numbers of bars spliced at a given location and the ratio of the area of reinforcement provided to the area required. The values for development length (required embedment) are equal to Class "A" splice lengths shown in these tables. Table 9.9-1 gives the development lengths and required lap lengths for a concrete compressive strength of f'_c = 3.5 ksi and a reinforcement yield strength of f_y = 60 ksi. Table 9.9-2 gives these same lengths for a concrete compressive strength of f'_c = 4 ksi and a reinforcement yield strength of f_y = 60 ksi. In tensile stress zones the maximum allowable change in bar size at a lap is three bar sizes. The spacing of lap splice reinforcement is provided in **LRFD [5.10.3.1.4]**, but values on Standards should be used where provided.

The development length of individual bars within a bundle, shall be that for the individual bar, increased by 20% for a three-bar bundle and by 33% for a four-bar bundle **LRFD [5.11.2.3]**. For determining the modification factors specified in **LRFD [5.11.2.1.2, 5.11.2.1.3]**, a unit of

bundled bars shall be treated as a single bar of a diameter determined from the equivalent total area.

Lap splices within bundles shall be as specified in **LRFD [5.11.2.3]**. Individual bar splices within a bundle shall not overlap. Entire bundles shall not be lap spliced **LRFD [5.11.5.2.1]**.

Hook and embedment requirements for transverse (shear) reinforcement are stated in **LRFD [5.11.2.6.2]**. The lap length for pairs of U-stirrups or ties that are placed to form a closed unit shall be considered properly anchored and spliced where lengths of laps are not less than 1.7 ℓ_d **LRFD [5.11.2.6.4]**. In members not less than 18 inches deep, the length of the stirrup leg for anchoring closed stirrup splices is described in **LRFD [5.11.2.6.4]**.

The Bureau of Structures interprets the lap length to be used for temperature and distribution reinforcement to be a Class "A" splice (using "top" or "others", as appropriate). See Table 9.9-1 and Table 9.9-2 for definition of "top" bars.

The required development length, ℓ_{dh}, for bars in tension terminating in a standard hook is detailed in **LRFD [5.11.2.4]**. This length increases with the bar size. The basic development length, ℓ_{hb}, for a hooked bar is a function of bar diameter, d_b, and concrete strength, f'_c. The basic development length is multiplied by applicable modification factors to produce the required development length, ℓ_{dh}. Figure 9.9-2 shows typical development lengths for standard hooks in tension.

Embedment depth is increased for dowel bars (with hooked ends) that run from column or retaining wall into the footing, if the hook does not rest on top of the bar steel mat in the bottom of the footing. This is a construction detail which is the preferred method for anchoring these bars before the concrete is placed.

Dowel bars are used as tensile reinforcement to tie columns or retaining walls to their footings. The amount of bar steel can be reduced by varying the dowel bar lengths projecting above the footing, so that only half the bars are spliced in the same plane. This is a consideration for long retaining walls and for some columns. This allows a Class "B" splice to be used, as opposed to a Class "C" splice where equal length dowel bars are used and all bars are spliced in the same plane.

The length of lap, ℓ_c , for splices in compression is provided in **LRFD [5.11.5.5.1]**.

9.3.2 Bends and Hooks for Deformed Bars

Figure 9.9-1 shows standard hook and bend details for development of longitudinal tension reinforcement. Figure 9.9-3 shows standard hook and bend details for transverse reinforcement (open stirrups and ties). Figure 9.9-4 shows details for transverse reinforcement (closed stirrups). Dimensions for the bending details are shown as out to out of bar, as stated in the *Standard Specifications* Section 505.3.2. The diameter of a bend, measured on the inside of the bar for a standard bend is specified in **LRFD [5.10.2.3]**. Where a larger bend radius is required (non-standard bend) show the inside bend radius on the bar detail. When computing total bar lengths account for the accumulation in length in the bends. Use the figures mentioned above to account for accumulation in length for standard hooks and bends. One leg of bent bars is not dimensioned so that the tolerance for an error in the length due to

bending is placed there. Fabrication tolerances for bent bars are specified in the *Concrete Reinforcing Steel Institute (CRSI) Manual of Standard Practices* or the *American Concrete Institute (ACI) Detailing Manual* as stated in Section 505.2.1 of the *Standard Specifications*.

Figure 9.3-1 shows typical detailing procedures for bars with bends.

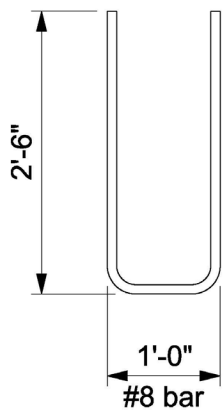

Figure 9.3-1
Bar Bend Detail (#8 bar)

Bar length = 1.0 ft + (2)(2.5 ft) – (2)(0.21 ft) = 5.58 ft or 5'-7" (to the nearest inch)

Where (0.21 ft) is (2.5"/12) and is the standard bar bend deduction found in Figure 9.9-1 for a #8 bar bent 90°.

9.3.3 Bill of Bars

Figure 9.9-5 shows a sample Bill of Bars table for a concrete slab. Different bar letter designations are used for abutments, slabs, and culverts, etc. If bundled bars are used, place a symbol adjacent to the bar mark of the bundled bars and a note below the Bill of Bars table stating the symbol represents bars to be bundled. A column for Bar Series is included if bars are cut.

9.3.4 Bar Series

A Bar Series table enables the detailer to detail bar steel in the simplest manner if it is used properly. Also, it helps the fabricator to prepare the Bill of Bars table.

The following general rules apply to the Bar Series table:

- Equal spacing of bars is required.
- There may be more than 1 Series with same number of bars.

- The total length of a bar is 60 feet (maximum).
- The minimum number of bars per Series is 4.
- Bent bars are bent after cutting.
- Set numbers are assigned to each Series used.

Figure 9.9-6 provides a sample layout for a Bar Series table. The Bill of Bars table will show the number of bars and the average bar length in the Series.

9.4 Steel

Structural steel is used in highway structures throughout Wisconsin. It is used for steel plate I-girders, rolled I-girders and box girders. Steel used for these three superstructure types are typically ASTM A709 Grades 36, 50 and 50W, but may also include high performance steel (HPS). Information on materials used for these superstructure types is provided in 24.2. Other types of steel superstructures are trusses, tied arches and cable-stayed bridges.

Steel is also used in other parts of the structure, such as:

- Bearings (Type A, B, A-T and top/interior plates for Laminated Elastomeric Bearings)
- Piling (H-Piles and CIP-Pile shells)
- Expansion Devices (single strip seal or modular joint)
- Drains (frame, grate and bracket)
- Railings (Type W, H, NY, M, PF, Tubular Screening, Fencing and Combination Railing)
- Steel diaphragms (attached to prestressed girders)

Structural carbon steel (ASTM A709 Grade 36) is used in components that are part of railings, and for steel diaphragms attached to prestressed girders. Structural carbon steel (ASTM A1011 Grade 36) is used in laminated elastomeric bearings. Structural carbon steel (ASTM A36) is used in components that are part of drains. The minimum yield strength is 36 ksi.

High strength structural steel (ASTM A709 Grade 50) is used in components that are part of railings and laminated elastomeric bearings, and (ASTM A572 Grade 50) is used in H-piles. High strength structural weathering steel (ASTM A709 Grade 50W) is used in bearings. The minimum yield strength is 50 ksi.

Structural steel tubing (ASTM A500 Grades B,C) is used in components that are part of railings, such as posts or rail members. The minimum yield strengths will have values around 46 to 50 ksi.

Steel pipe pile material (ASTM A252 Grade 2) is used as the shell to form cast-in-place (CIP) concrete piles. The minimum yield strength is 35 ksi.

Corrugated sheet steel (AASHTO M180, Class A, Type 2) is used as rail members for steel railing Type “W”. The minimum yield strength is 50 ksi.

Stainless steel (ASTM A240 Type 304) can be found as sheets on the surface of top plates for Type A and A-T bearings. It is also used for anchor plates cast into the ends of prestressed girders.

The grade of steel, ASTM Specification (or AASHTO Material Specification) associated with the bulleted items listed above (and their components) can be found in the *Bridge Manual*

Chapters or Standards corresponding to these items. This information may also be found in the *Standard Specifications* or "*Special Provisions*".

The modulus of elasticity of steel, E_s , is 29,000 ksi and the coefficient of thermal expansion is 6.5×10^{-6} in/in/°F per **LRFD [6.4.1]**.

9.5 Miscellaneous Metals

The *Standard Specifications* provide the requirements for other materials made of metal that are used in highway structures. Some metals used or new products containing metal may be covered in the "*Special Provisions*".

Some of these metals, their applications and the Section of the *Standard Specifications* where they are covered are described below.

- Lubricated bronze plates are used on Type A expansion bearings. The requirements for these plates are found in Section 506.2.3.4.

- Bridge name plates are made from a casting of copper, lead, zinc and tin. The requirements for name plates are found in Section 506.2.4.

- Prestressed strands (low relaxation) are made from high tensile strength, 7-wire strands (0.5 or 0.6 inch diameter). The requirements for these strands are found in Section 503.2.3.

- Gray iron castings conforming to ASTM A48, Class 30 are used on Type GC floor drains and downspouts.

- Galvanized standard pipe conforming to ASTM A53 is used for downspouts on Type H floor drains.

- Sheet copper may be used as a waterstop for railroad bridges or as a flashing on movable bridge operator buildings. The requirements for these sheets are found in Section 506.2.3.9.

- Zinc plates may be used at deflection joints in sidewalks and parapets. The requirements for these plates are found in Section 506.2.3.10.

- Shear connectors are welded to the top flanges of steel girders to make the deck composite with the girder. Requirements for these connectors are in Section 506.2.7.

- Aluminum is used for sign bridges and some railings (Tubular Railing Type H). See Section 641.2.7 for sign bridges and Section 513.2.2 for railings that are made from aluminum. For sign bridges and sign supports made from steel, see Section 641.2.8 and 635.2 respectively.

- Steel grid floors are prefabricated grids set on girders and/or stringers. The top of the grid becomes the roadway surface. See Section 515 for the requirements for this steel.

- Welded deformed steel wire fabric has been used as an alternate to stirrup reinforcement for prestressed girders. It shall conform to the requirements of ASTM A1064 as shown on the Chapter 19 – Standards.

9.6 Timber

Timber has been used for timber structures on local roads in Wisconsin. Timber has also been used for piling, railings, falsework, formwork and as backing planks between or behind piling to retain soil.

The *Bridge Manual* and the *Standard Specifications* provide requirements for timber used in highway structures. These locations are highlighted below.

- Timber structures have material requirements that are covered in Chapter 23 of the *Bridge Manual*. Requirements for the condition of the timber members and applicable preservative treatments are covered in Section 507 of the *Standard Specifications*.

- Timber railings for timber structures have material requirements that are covered in Chapter 23 of the *Bridge Manual*. Requirements for the condition of the timber members are covered in Section 507 of the *Standard Specifications*.

- Timber backing plank requirements are covered in 12.10.

9.7 Miscellaneous Materials

Several types of materials are being used as part of a bridge deck protective system. Epoxy coated reinforcing steel, mentioned earlier, is part of this system. Some of these materials or products, are experimental and are placed on specific structures and then monitored and evaluated. A list of materials or products that are part of a bridge deck protective system and are currently used or under evaluation are:

- Galvanized or stainless steel reinforcing bars
- Waterproofing membrane with bituminous concrete overlay
- Microsilica modified concrete or polymer impregnated concrete
- Low slump concrete overlays
- Low-viscosity crack sealer
- Cathodic protection systems with surface overlays

Other materials or products used on highway structures are:

- Downspouts for Type GC and H drains may be fabricated from fiberglass conforming to ASTM D2996, Grade 1, Class A.
- Elastomeric bearing pads (non-laminated) are primarily used with prestressed "I" girders at fixed abutments and piers and at semi-expansion abutments. They are also used with prestressed "slab and box" sections at all supports. The requirements for these pads are described in Section 506.2.6 of the *Standard Specifications*.
- Elastomeric bearing pads (laminated) are primarily used with prestressed "I" girders at expansion supports. The requirements for these pads are described in Section 506.2.6 of the *Standard Specifications*.
- Preformed fillers are placed vertically in the joint between wing and diaphragm in A1 and A5 abutments, in the joint between wing and barrel in box culverts and at expansion joints in concrete cast-in-place retaining walls. Preformed fillers are placed along the front top surface of A1 and A5 abutments, along the outside top surfaces of fixed piers and under flanges between elastomeric bearing pad (non-laminated) and top edge of support. Cork filler is placed vertically on semi-expansion abutments. The requirements for fillers are described in Section 502.2.7 of the *Standard Specifications*.
- Polyethelene sheets are placed on the top surface of semi-expansion abutments to allow movement of the superstructure across the bearing surface. They are also placed between the structural approach slab and the subgrade, and the approach slab and its footing.

- Rubberized waterproofing membranes are used to seal horizontal and vertical joints at the backface of abutments, culverts and concrete cast-in-place retaining walls. See Section 5.16.2.3 of the *Standard Specifications*.

- Non-staining gray non-bituminous joint sealer is used to seal exposed surfaces of preformed fillers placed in joints as described above. It is also used to place a seal around exposed surfaces of plates used at deflection joints and around railing base plates. The requirement for this joint sealer is referenced in Section 502.2.9 of the *Standard Specifications*.

- Plastic plates may be used at deflection joints in sidewalks and parapets.

- Preformed Fabric, Class A, has been used as a bearing pad under steel bearings. The requirement for this material is given in Section 506.2.8.4 of the *Standard Specifications*.

- Neoprene strip seals are used in single cell and multi-cell (modular) expansion devices.

- Teflon sheets are bonded to steel plates in Type A-T expansion bearings. The requirements for these sheets are found in Section 506.2.8.3 of the *Standard Specifications*.

- Asphalt panels are used on railroad structures to protect the rubber membrane on top of the steel ballast plate from being damaged by the ballast. The requirements for these panels are in the "*Special Provisions*".

- Geotextile fabric is used for drainage filtration, and under riprap and box culverts. This fabric consists of sheets of woven or non-woven synthetic polymers or nylon. Type DF is used for drainage filtration in the pipe underdrain detail placed behind abutments and walls. The fabric allows moisture to drain to the pipe while keeping the backfill from migrating into the coarse material and then into the pipe. Type DF is also used behind abutments or walls that retain soil with backing planks between or behind piling and also for some of the walls detailed in Chapter 14 – Retaining Walls. This fabric will allow moisture to pass through the fabric and the joints in the walls without migration of the soil behind the wall. Type R or HR is placed below riprap and will keep the soil beneath it from being washed away. Type C is placed under breaker run when it is used under box culverts. The requirements for these fabrics are found in Section 645.2 of the *Standard Specifications*.

9.8 Painting

All highway grade separation structures require steel girders to be painted because unpainted steel is subject to additional corrosion from vehicle salt spray. Additional discussion on painting is presented in Chapter 24 – Steel Girder Structures and Chapter 40 – Bridge Rehabilitation. The current paint system used for I-girders is the three-coat epoxy system specified in Section 517 of the *Standard Specifications*. Tub girders utilize a two-coat polysiloxane system, which includes painting of the inside of the tubs.

Recommended paint colors and *AMS Standard Color Numbers* for steel girders in Wisconsin shall be in accordance with AMS Standard 595A and are:

White (For Inside of Box Girders)	#27925
Blue (Medium Sky Blue Tone)	#25240
[1] Brown (Similar to Weathering Steel)	#20059
Gray (Light Gray)	#26293
Green (Medium Tone)	#24260
Reddish-Brown (Red Brick Tone)	#20152
Gray (Dark Gray-DNR Request)	#26132
Black	#27038

Table 9.8-1
Standard Colors for Steel Girders

[1] Shop applied color for weathering steel.

AMS Standard 595A can be found at www.ams-std-595-color.com/

All steel bearing components which are not welded to the girder or do not have a Teflon or bronze surface, and anchor bolts shall be galvanized. In addition to galvanizing, some bearing components may also be field or shop painted as noted in the Standards for Chapter 27 – Bearings.

All new structural steel is blast cleaned including weathering steel. It has been shown that paint systems perform well over a longer period of time with proper surface preparation. The blast cleaned surface is a very finely pitted surface with pit depths of 1 ½ mils.

Corrosion of structural steel occurs if the agents necessary to form a corrosion cell are present. A corrosion cell is similar to a battery in that current flows from the anode to the cathode. As the current flows, corrosion occurs at the anode and materials expand. Water carries the electrical current between the anode and cathode. If there is salt in the water, the current travels much faster and the rate of corrosion is accelerated. Oxygen combines with the materials to help form the anodic corrosion cell.

The primary reason for painting steel structures is for the protection of the steel surface. Appearance is a secondary function that is maintained by using compatible top coatings over

epoxy systems. Regarding appearance with respect to color retention, black is good, blues and greens are decent, and reddish browns are acceptable, but not the best. Reds are highly discouraged and should not be used.

Paint applied to the steel acts as a moisture barrier. It prevents the water from contacting the steel and then a corrosion cell cannot be formed. When applying a moisture barrier, it is important to get an adhering, uniform thickness as well as an adequate thickness. The film thickness of paint wears with age until it is finally depleted. At this point the steel begins to corrode as moisture is now present in the corrosion cell. If paint is applied too thick, it may crack and/or check due to temperature changes and allow moisture to contact the steel long before the film thickness wears down.

The paint inspector uses a paint gauge to randomly measure the film thickness of the paint according to specifications. Wet film thickness is measured and it is always thicker than the dry film thickness. A vehicle is added to the paint solids so that the solids can be applied to a surface and then it evaporates leaving only the solids on the surface. The percent of solids in a gallon of paint gives an estimate of the wet to dry film thickness ratio.

Recommended paint maintenance is determined with assistance from the Wisconsin Structures Asset Management System (WiSAMS), which utilizes information provided by the routine bridge inspections.

Recommended paint colors and *AMS Standard Color Numbers* for concrete in Wisconsin shall be in accordance with AMS Standard 595A and are:

Pearl Gray	#26622
Medium Tan	#33446
Gray Green	#30372
Dark Brown	#30140
Dawn Mist (Grayish Brown)	#36424
Lt. Coffee (Creamy Brown)	#33722

Table 9.8-2
Standard Colors for Concrete

Most paints require concrete to be a minimum of 30 days old before application. This should be considered when specifying completion times for contracts.

9.9 Bar Tables and Figures

(f'_c = 3500 psi; f_y = 60 ksi)											
BAR SPACING	BAR SIZE		4	5	6	7	8	9	10	11	TYPE
6" OR MORE	CLASS A	TOP [1]	1-2 1-5	1-5 1-9	1-9 2-1	2-3 2-9	3-0 3-8	3-9 4-7	4-10 5-10	5-11 7-2	UNCOATED EPOXY
	1.0 ℓ_d	OTHERS	1-0 1-0	1-0 1-6	1-3 1-10	1-8 2-5	2-2 3-3	2-9 4-1	3-5 5-2	4-3 6-4	UNCOATED EPOXY
	CLASS B	TOP [1]	1-6 1-9	1-10 2-3	2-3 2-8	3-0 3-7	3-11 4-8	4-11 5-11	6-3 7-7	7-8 9-3	UNCOATED EPOXY
	1.3 ℓ_d	OTHERS	1-1 1-3	1-4 2-0	1-7 2-5	2-2 3-2	2-9 4-2	3-6 5-3	4-5 6-8	5-6 8-2	UNCOATED EPOXY
	CLASS C	TOP [1]	1-11 2-4	2-5 2-11	2-11 3-6	3-10 4-8	5-1 6-2	6-5 7-9	8-1 9-10	10-0 12-1	UNCOATED EPOXY
	1.7 ℓ_d	OTHERS	1-5 1-8	1-9 2-7	2-1 3-1	2-9 4-2	3-8 5-5	4-7 6-10	5-10 8-8	7-2 10-8	UNCOATED EPOXY
LESS THAN 6"	CLASS A	TOP [1]	1-5 1-9	1-9 2-2	2-2 2-7	2-10 3-5	3-9 4-6	4-9 5-9	6-0 7-3	7-4 8-11	UNCOATED EPOXY
	1.0 ℓ_d	OTHERS	1-0 1-3	1-3 1-11	1-6 2-3	2-1 3-1	2-8 4-0	3-5 5-1	4-3 6-5	5-3 7-10	UNCOATED EPOXY
	CLASS B	TOP [1]	1-10 2-3	2-4 2-10	2-9 3-4	3-8 4-6	4-10 5-10	6-1 7-5	7-9 9-5	9-6 11-7	UNCOATED EPOXY
	1.3 ℓ_d	OTHERS	1-4 1-7	1-8 2-6	2-0 3-0	2-8 3-11	3-6 5-2	4-5 6-7	5-7 8-4	6-10 10-2	UNCOATED EPOXY
	CLASS C	TOP [1]	2-5 2-11	3-0 3-8	3-7 4-5	4-10 5-10	6-4 7-8	8-0 9-8	10-2 12-4	12-5 15-1	UNCOATED EPOXY
	1.7 ℓ_d	OTHERS	1-9 2-1	2-2 3-3	2-7 3-10	3-5 5-2	4-6 6-9	5-9 8-7	7-3 10-10	8-11 13-4	UNCOATED EPOXY

Table 9.9-1

Tension Lap Splice Length or Development Length - Deformed Bars

LRFD [5.11.2.1, 5.11.5.3.1] – 7th Edition (2014)

[1] Top Bar – is a horizontal or nearly horizontal bar with 12 inches of fresh concrete cast below it.

CLASS A - [A_s provided/A_s required] ≥ 2; Bars spliced are 75% or less.

CLASS B - [A_s provided/A_s required] < 2; Bars spliced are 50% or less (or) [A_s provided/A_s required] ≥ 2; Bars spliced are greater than 75%.

CLASS C - [A_s provided/A_s required] < 2; Bars spliced are greater than 50%.

(f'_c = 4000 psi; f_y = 60 ksi)											
BAR SPACING	BAR SIZE		4	5	6	7	8	9	10	11	TYPE
6" OR MORE	CLASS A	TOP [1]	1-2 1-5	1-5 1-9	1-9 2-1	2-2 2-7	2-10 3-5	3-6 4-3	4-6 5-5	5-6 6-8	UNCOATED EPOXY
	1.0 ℓ_d	OTHERS	1-0 1-0	1-0 1-6	1-3 1-10	1-6 2-3	2-0 3-0	2-6 3-9	3-3 4-10	3-11 5-11	UNCOATED EPOXY
	CLASS B	TOP [1]	1-6 1-9	1-10 2-3	2-3 2-8	2-9 3-4	3-8 4-5	4-7 5-7	5-10 7-1	7-2 8-8	UNCOATED EPOXY
	1.3 ℓ_d	OTHERS	1-1 1-3	1-4 2-0	1-7 2-5	2-0 3-0	2-7 3-11	3-3 4-11	4-2 6-3	5-1 7-8	UNCOATED EPOXY
	CLASS C	TOP [1]	1-11 2-4	2-5 2-11	2-11 3-6	3-7 4-5	4-9 5-9	6-0 7-3	7-7 9-3	9-4 11-4	UNCOATED EPOXY
	1.7 ℓ_d	OTHERS	1-5 1-8	1-9 2-7	2-1 3-1	2-7 3-10	3-5 5-1	4-3 6-5	5-5 8-2	6-8 10-0	UNCOATED EPOXY
LESS THAN 6"	CLASS A	TOP [1]	1-5 1-9	1-9 2-2	2-2 2-7	2-8 3-3	3-6 4-3	4-5 5-4	5-7 6-9	6-10 8-4	UNCOATED EPOXY
	1.0 ℓ_d	OTHERS	1-0 1-3	1-3 1-11	1-6 2-3	1-11 2-10	2-6 3-9	3-2 4-9	4-0 6-0	4-11 7-4	UNCOATED EPOXY
	CLASS B	TOP [1]	1-10 2-3	2-4 2-10	2-9 3-4	3-5 4-2	4-6 5-6	5-9 6-11	7-3 8-10	8-11 10-10	UNCOATED EPOXY
	1.3 ℓ_d	OTHERS	1-4 1-7	1-8 2-6	2-0 3-0	2-6 3-8	3-3 4-10	4-1 6-2	5-2 7-9	6-5 9-7	UNCOATED EPOXY
	CLASS C	TOP [1]	2-5 2-11	3-0 3-8	3-7 4-5	4-6 5-6	5-11 7-2	7-6 9-1	9-6 11-6	11-8 14-2	UNCOATED EPOXY
	1.7 ℓ_d	OTHERS	1-9 2-1	2-2 3-3	2-7 3-10	3-3 4-10	4-3 6-4	5-4 8-0	6-9 10-2	8-4 12-6	UNCOATED EPOXY

Table 9.9-2

Tension Lap Splice Length or Development Length – Deformed Bars

LRFD [5.11.2.1, 5.11.5.3.1] – 7th Edition (2014)

[1] Top Bar – is a horizontal or nearly horizontal bar with 12 inches of fresh concrete cast below it.

CLASS A – [A_s provided/A_s required] ≥ 2; Bars spliced are 75% or less.

CLASS B – [A_s provided/A_s required] < 2; Bars spliced are 50% or less (or) [A_s provided/A_s required] ≥ 2; Bars spliced are greater than 75%.

CLASS C - [A_s provided/A_s required] < 2; Bars spliced are greater than 50%.

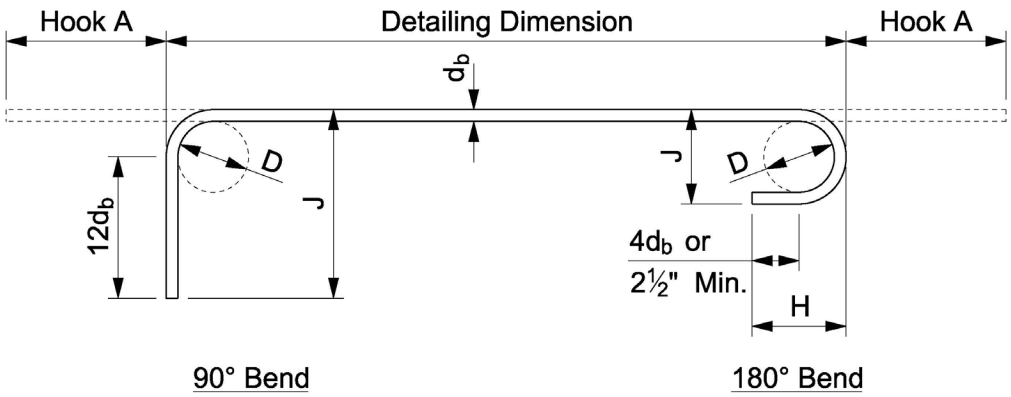

d_b = nominal diameter of reinforcing bar (in)

Definition of standard hooks **LRFD [5.10.2.1, C5.11.2.4.1] – 7th Edition (2014)**

MINIMUM BEND DIAMETER (D) – **LRFD [5.10.2.3] – 7th Edition (2014)**

D = $6d_b$ FOR #3 THRU #8

D = $8d_b$ FOR #9, #10, and #11

BAR SIZE	MINIMUM HOOK, ALL GRADES					
	90° HOOKS			180° HOOKS		
	HOOK A	J	J MINUS HOOK A [1]	HOOK A	J	APPROX. H
4	7	8	1	6	4	4 ½
5	8 ½	10	1 ½	7	5	5
6	10	1-0	2	8	6	6
7	1-0	1-2	2	10	7	7
8	1-1 ½	1-4	2 ½	11	8	8
9	1-4	1-7	3	1-3	11 ¼	10 ¼
10	1-6	1-9 ½	3 ½	1-5	1-0 ¾	11 ½
11	1-8	2-0	4	1-7	1-2 ¼	1-0 ¾

Figure 9.9-1
Standard Hooks and Bends for Deformed Longitudinal Reinforcement

[1] "J" MINUS "HOOK A" = DEDUCTION FOR ONE BEND

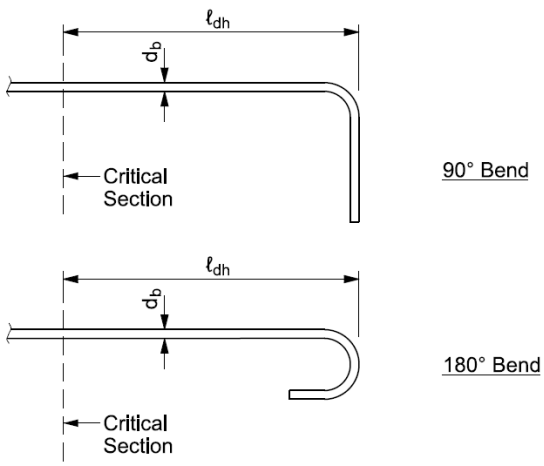

f'c=3.5 ksi; fy=60 ksi		
Bar Size	ℓ_{dh}	
	Uncoated $\ell_{hb}(0.7)$	Epoxy $\ell_{hb}(0.7)(1.2)$
3	0' - 6"	0' - 7"
4	0' - 8"	0' - 9"
5	0' - 9"	0' - 11"
6	0' - 11"	1' - 1"
7	1' - 1"	1' - 3"
8	1' - 3"	1' - 6"
9	1' - 5"	1' - 8"
10	1' - 7"	1' - 10"
11	1' - 9"	2' - 1"

Figure 9.9-2
Development Length for Standard Hooks in Tension
(See Figure 9.9-1 for bend details)

The development length for standard hooks in tension, ℓ_{dh}, shall not be less than the product of the basic tension development length, ℓ_{hb}, and the appropriate modification factor(s), λ_i, $8d_b$, or 6-inches. The following equation is for the required development length for standard hooks in tension (in):

$\ell_{dh} = \max(\ell_{hb}\,\lambda_i, 8d_b, 6.0)$ **LRFD [5.11.2.4.1] – 7th Edition (2014)**

Where:

$\ell_{hb} = 38d_b / (f'_c)^{1/2}$ = basic hook development length (in.) **LRFD [Eq'n 5.11.2.4.1-1]**

λ_i = modification factor(s) **LRFD [5.11.2.4.2] – 7th Edition (2014)**

- (0.70) Side cover for #11 bar and smaller, normal to plane of hook, is not less than 2.5 inches, and 90 hook, cover on bar extension beyond hook not less than 2.0 inches
- (0.80) Hooks for #11 bar and smaller enclosed vertically or horizontally within ties or stirrups ties which are placed along the full development length, ℓ_{dh}, at a spacing not exceeding $3d_b$
- (1.20) Epoxy coated reinforcement

d_b = diameter of bar (in.)

f'_c = specified compressive strength of concrete (ksi)

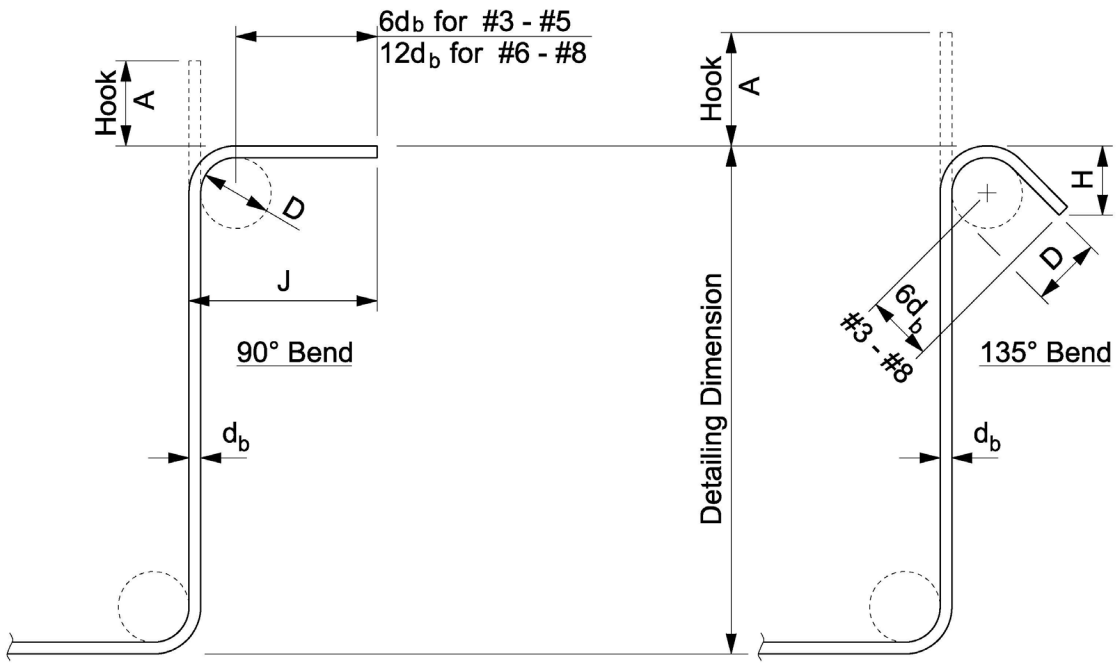

d_b = nominal diameter of reinforcing bar (in)

Definition of Standard Hooks **LRFD [5.10.2.1] – 7th Edition (2014)**

MINIMUM BEND DIAMETER (D) – **LRFD [5.10.2.3] – 7th Edition (2014)**

D = $4d_b$ FOR #3 THRU #5

D = $6d_b$ FOR #6 THRU #8

MINIMUM HOOK, ALL GRADES					
		90° HOOKS		135° HOOKS	
BAR SIZE	D	HOOK A	APPROX J	HOOK A	H
3	1 ½	3	4	4	2 ½
4	2	3 ½	4 ½	4 ½	3
5	2 ½	4 ½	6	5 ½	3 ¾
6	4 ½	10	1-0	8	4 ½

Figure 9.9-3
Standard Hooks and Bends for Deformed Transverse Reinforcement
(Stirrups and Ties)

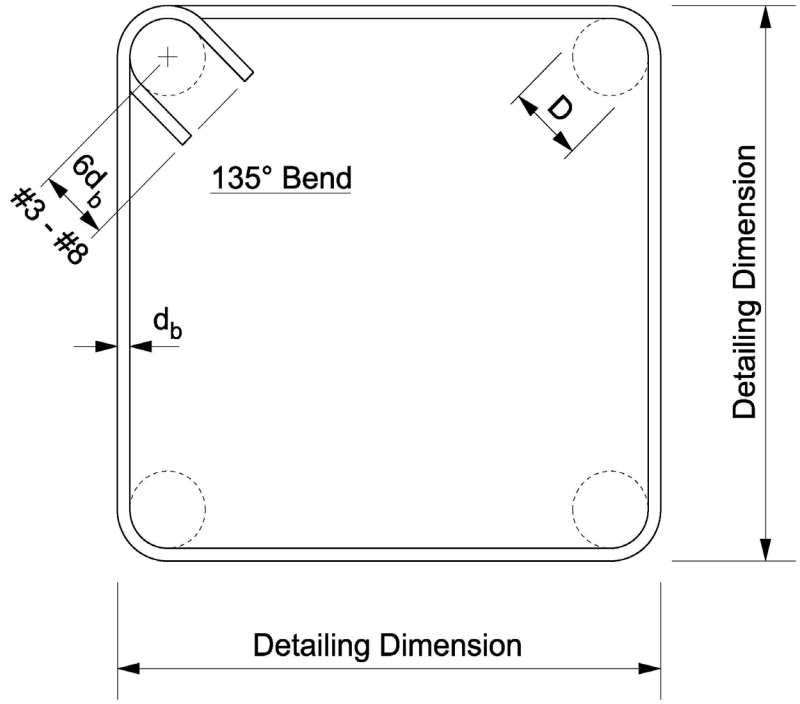

Stirrup Bar Length equals sum of all Detailing Dimensions plus "Stirrup Add-On" from table

d_b = nominal diameter of reinforcing bar (in)

Definition of Standard Hooks **LRFD [5.10.2.1] – 7th Edition (2014)**

MINIMUM BEND DIAMETER (D) – **LRFD [5.10.2.3] – 7th Edition (2014)**

D = $4d_b$ FOR #3 THRU #5

D = $6d_b$ FOR #6 THRU #8

BAR SIZE	D	STIRRUP ADD-ON
3	1 ½	5
4	2	6
5	2 ½	8
6	4 ½	10
7	5 ¼	12
8	6	13

Figure 9.9-4
Standard Details and Bends for Deformed Transverse Reinforcement
(Closed Stirrups)

BILL OF BARS

NOTE: THE FIRST OR FIRST TWO DIGITS OF THE BAR MARK SIGNIFIES THE BAR SIZE.

BAR MARK	COAT	NO. REQ'D	LENGTH	BENT	BAR SERIES	LOCATION
S501		10	4-2		Δ	SLAB - TRANS.
S502		20	6-3		Δ	SLAB - TRANS.
S503	X	19	42-8			SLAB - LONG.

Δ LENGTH SHOWN FOR BAR IS AN AVERAGE LENGTH AND SHOULD ONLY BE USED FOR BAR WEIGHT CALCULATIONS. SEE BAR SERIES TABLE FOR ACTUAL LENGTHS.

Figure 9.9-5
Bill of Bars

BAR SERIES TABLE

MARK	NO. REQ'D.	LENGTH
S501	1 SERIES OF 10	2-1 TO 6-3
S502	2 SERIES OF 10	3-2 TO 9-5

BUNDLE AND TAG EACH SERIES SEPARATELY

Figure 9.9-6
Bar Series Table

BAR SIZE	BAR WEIGHT (lbs/ft)	NOM. DIA (in)	NOM. AREA (in^2)	NUMBER OF BARS								
				2	3	4	5	6	7	8	9	10
4	0.668	0.500	0.20	0.40	0.60	0.80	1.00	1.20	1.40	1.60	1.80	2.00
5	1.043	0.625	0.31	0.62	0.93	1.24	1.55	1.86	2.17	2.48	2.79	3.10
6	1.502	0.750	0.44	0.88	1.32	1.76	2.20	2.64	3.08	3.52	3.96	4.40
7	2.044	0.875	0.60	1.20	1.80	2.40	3.00	3.60	4.20	4.80	5.40	6.00
8	2.670	1.000	0.79	1.58	2.37	3.16	3.95	4.74	5.53	6.32	7.11	7.90
9	3.400	1.128	1.00	2.00	3.00	4.00	5.00	6.00	7.00	8.00	9.00	10.00
10	4.303	1.270	1.27	2.54	3.81	5.08	6.35	7.62	8.89	10.16	11.43	12.70
11	5.313	1.410	1.56	3.12	4.68	6.24	7.80	9.36	10.92	12.48	14.04	15.60

Table 9.9-3

Bar Areas Per Number of Bars (in^2)

BAR SIZE	4 ½“	5”	5 ½“	6”	6 ½“	7”	7 ½”	8”	8 ½”	9”	10”	11”	12”
4	0.52	0.47	0.43	0.39	0.36	0.34	0.31	0.29	0.28	0.26	0.24	0.21	0.20
5	0.82	0.74	0.67	0.61	0.57	0.53	0.49	0.46	0.43	0.41	0.37	0.33	0.31
6	1.18	1.06	0.96	0.88	0.82	0.76	0.71	0.66	0.62	0.59	0.53	0.48	0.44
7	1.60	1.44	1.31	1.20	1.11	1.03	0.96	0.90	0.85	0.80	0.72	0.66	0.60
8	2.09	1.88	1.71	1.57	1.45	1.35	1.26	1.18	1.11	1.05	0.94	0.86	0.79
9	---	2.40	2.18	2.00	1.85	1.71	1.60	1.50	1.41	1.33	1.20	1.09	1.00
10	---	3.04	2.76	2.53	2.34	2.17	2.02	1.90	1.79	1.69	1.52	1.38	1.27
11	---	3.75	3.41	3.12	2.88	2.68	2.50	2.34	2.21	2.08	1.87	1.70	1.56

Table 9.9-4

Area of Bar Reinf. (in^2 / ft) vs. Spacing of Bars (in)

9.10 Granular Materials

Several types of granular materials are used for backfilling excavations, providing foundation improvements, and reinforcing soils. Table 9.10-5 provides recommended uses and notes for commonly used granular materials for structures. Refer to the specifications for material gradations, testing, compaction, and other requirements specific for the application. Refer to 6.4.2 for plan preparations.

Granular pay limits should be shown on all structure plans. See Standards for typical backfill limits and plan notes.

Granular Material Type	Uses	Notes
Backfill Structure – Type A	Backfill • Abutments • Retaining walls	Type A facilitates better drainage than Type B. Type A may be substituted for Type B material per specifications.
Backfill Structure – Type B	Backfill • Box culverts • Structural plate pipes • Pipe arches Retained Backfill (if needed) ▪ Various structures Foundation • Abutments • Retaining walls	
Backfill Granular – Grade 1	Refer to Facilities Development Manual (FDM) for usages	Grade 1 may be substituted for Grade 2 material per specifications.
Backfill Granular – Grade 2		
Base Aggregate Dense 1 1/4-inch	• Structural approach (base) • GRS Walls (reinforced soil foundation and approach)	
Reinforced Soils	• MSE Walls	Backfill included in MSE Wall bid items.
Base Aggregate Open Graded	• GRS Walls (reinforced soil) • MSE Walls (for elevations below HW100)	
Breaker Run	• Box culverts (foundation)	See Standard Detail 9.01 for alternatives and notes
Flowable Backfill	• Soldier pile walls	

Table 9.10-5
Recommendations for Granular Material Usage

9.11 References

1. Ghorbanpoor, A., Kriha, B., Reshadi, R. *Aesthetic Coating for Steel Bridge Components – Amended Study*. S.1.: Wisconsin Department of Transportation, Final Report No. 0092-11-07, 2015.

9.12 Appendix - Draft Bar Tables

The following Draft Bar Tables are provided for information only. We expect the tables to be moved into the main text of Chapter 9 in January of 2020, and at that time to begin their use. We are delaying their use to allow time for modification of details and software that are affected.

The 2015 Interim Revisions to the AASHTO LRFD Bridge Design Specifications (7th Edition), modified the tension development lengths and tension lap lengths for straight deformed bars as follows - (**LRFD [**article number**]** references below match the AASHTO LRFD Bridge Design Specifications – 8th Edition):

The tension development length, ℓ_d ,shall not be less than the product of the basic tension development length, ℓ_{db} , and the appropriate modification factors, λ_i . **LRFD [5.10.8.2.1a]**

$$\ell_d = \ell_{db} \cdot (\lambda_{rl} \cdot \lambda_{cf} \cdot \lambda_{rc} \cdot \lambda_{er}) / \lambda$$

in which: $\ell_{db} = 2.4 \cdot d_b \cdot [f_y / (f'_c)^{1/2}]$

where:

ℓ_{db} = basic development length (in.)

λ_{rl} = reinforcement location factor

λ_{cf} = coating factor

λ = conc. density modification factor ; for normal weight conc. = 1.0 , **LRFD [5.4.2.8]**

λ_{rc} = reinforcement confinement factor

λ_{er} = excess reinforcement factor

f_y = specified minimum yield strength of reinforcement (ksi)

d_b = nominal diameter of reinforcing bar (in.)

f'_c = compressive strength of concrete for use in design (ksi)

Top bars will continue to refer to horizontal bars placed with more than 12” of fresh concrete cast below it. Bars not meeting this criteria will be referred to as Others.

Per **LRFD [5.10.8.4.3a]**, there are two lap splice classes, Class A and Class B.

- Class A lap splice ……1.0 ℓ_d
- Class B lap splice …….. 1.3 ℓ_d

The criteria for where to apply each Class is covered in the above reference.

Draft Table

Epoxy Coated (f'_c = 4,000 psi; f_y = 60,000 psi)

Basic Lap - Others					
Bar Size	Min. Cover	Class A (1.0 ℓ_d)		Class B (1.3 ℓ_d)	
		s < 6" cts.	s ≥ 6" cts.	s < 6" cts.	s ≥ 6" cts.
4	1.5"	1'-6"	1'-6"	1'-11"	1'-11"
	2.0"	1'-6"	1'-6"	1'-11"	1'-11"
	≥ 2.5"	1'-6"	1'-6"	1'-11"	1'-11"
5	1.5"	2'-3"	2'-3"	3'-0"	3'-0"
	2.0"	2'-3"	1'-10"	3'-0"	2'-4"
	≥ 2.5"	2'-3"	1'-10"	3'-0"	2'-4"
6	1.5"	2'-11"	2'-9"	3'-10"	3'-7"
	2.0"	2'-11"	2'-9"	3'-10"	3'-7"
	≥ 2.5"	2'-11"	2'-2"	3'-10"	2'-10"
7	1.5"	3'-7"	3'-7"	4'-8"	4'-8"
	2.0"	3'-6"	3'-2"	4'-6"	4'-2"
	≥ 2.5"	3'-6"	3'-2"	4'-6"	4'-2"
8	1.5"	4'-6"	4'-6"	5'-11"	5'-11"
	2.0"	4'-6"	3'-8"	5'-11"	4'-9"
	≥ 2.5"	4'-6"	3'-8"	5'-11"	4'-9"
9	1.5"	5'-9"	5'-7"	7'-5"	7'-4"
	2.0"	5'-9"	4'-6"	7'-5"	5'-10"
	≥ 2.5"	5'-9"	4'-1"	7'-5"	5'-4"
10	1.5"	7'-4"	6'-9"	9'-7"	8'-10"
	2.0"	7'-4"	5'-6"	9'-7"	7'-2"
	≥ 2.5"	7'-4"	4'-10"	9'-7"	6'-3"
11	1.5"	9'-1"	8'-2"	11'-9"	10'-7"
	2.0"	9'-1"	6'-8"	11'-9"	8'-7"
	≥ 2.5"	9'-1"	6'-0"	11'-9"	7'-9"

Epoxy Coated (f'_c = 4,000 psi; f_y = 60,000 psi)

Horizontal Lap w/ >12" Concrete Cast Below - Top					
Bar Size	Min. Cover	Class A (1.0 ℓ_d)		Class B (1.3 ℓ_d)	
		s < 6" cts.	s ≥ 6" cts.	s < 6" cts.	s ≥ 6" cts.
4	1.5"	1'-11"	1'-11"	2'-6"	2'-6"
	2.0"	1'-11"	1'-11"	2'-6"	2'-6"
	≥ 2.5"	1'-11"	1'-11"	2'-6"	2'-6"
5	1.5"	2'-7"	2'-7"	3'-4"	3'-4"
	2.0"	2'-7"	2'-4"	3'-4"	3'-1"
	≥ 2.5"	2'-7"	2'-4"	3'-4"	3'-1"
6	1.5"	3'-4"	3'-1"	4'-4"	4'-0"
	2.0"	3'-4"	3'-1"	4'-4"	4'-0"
	≥ 2.5"	3'-4"	2'-10"	4'-4"	3'-8"
7	1.5"	4'-1"	4'-1"	5'-3"	5'-3"
	2.0"	4'-0"	3'-7"	5'-2"	4'-8"
	≥ 2.5"	4'-0"	3'-7"	5'-2"	4'-8
8	1.5"	5'-2"	5'-2"	6'-8"	6'-8"
	2.0"	5'-2"	4'-1"	6'-8"	5'-4"
	≥ 2.5"	5'-2"	4'-1"	6'-8"	5'-4"
9	1.5"	6'-6"	6'-4"	8'-5"	8'-3"
	2.0"	6'-6"	5'-1"	8'-5"	6'-7"
	≥ 2.5"	6'-6"	4'-8"	8'-5"	6'-0"
10	1.5"	8'-4"	7'-8"	10'-10"	10'-0"
	2.0"	8'-4"	6'-3"	10'-10"	8'-1"
	≥ 2.5"	8'-4"	5'-6"	10'-10"	7'-1"
11	1.5"	10'-3"	9'-3"	13'-4"	12'-0"
	2.0"	10'-3"	7'-6"	13'-4"	9'-9"
	≥ 2.5"	10'-3"	6'-10"	13'-4"	8'-10"

Draft Table

Uncoated (f'_c = 4,000 psi; f_y = 60,000 psi)

Basic Lap - Others					
Bar Size	Min. Cover	Class A (1.0 ℓ_d)		Class B (1.3 ℓ_d)	
		s < 6" cts.	s ≥ 6" cts.	s < 6" cts.	s ≥ 6" cts.
4	1.5"	1'-3"	1'-3"	1'-7"	1'-7"
	2.0"	1'-3"	1'-3"	1'-7"	1'-7"
	≥ 2.5"	1'-3"	1'-3"	1'-7"	1'-7"
5	1.5"	1'-6"	1'-6"	2'-0"	2'-0"
	2.0"	1'-6"	1'-6"	2'-0"	2'-0"
	≥ 2.5"	1'-6"	1'-6"	2'-0"	2'-0"
6	1.5"	2'-0"	1'-10"	2'-7"	2'-4"
	2.0"	2'-0"	1'-10"	2'-7"	2'-4"
	≥ 2.5"	2'-0"	1'-10"	2'-7"	2'-4"
7	1.5"	2'-5"	2'-5"	3'-1"	3'-1"
	2.0"	2'-4"	2'-2"	3'-0"	2'-9"
	≥ 2.5"	2'-4"	2'-2"	3'-0"	2'-9"
8	1.5"	3'-0"	3'-0	3'-11"	3'-11"
	2.0"	3'-0"	2'-5"	3'-11"	3'-2"
	≥ 2.5"	3'-0"	2'-5"	3'-11"	3'-2"
9	1.5"	3'-10"	3'-9"	5'-0"	4'-10"
	2.0"	3'-10"	3'-0"	5'-0"	3'-11"
	≥ 2.5"	3'-10"	2'-9"	5'-0"	3'-7"
10	1.5"	4'-11"	4'-6"	6'-4"	5'-11"
	2.0"	4'-11"	3'-8"	6'-4"	4'-9"
	≥ 2.5"	4'-11"	3'-3"	6'-4"	4'-2"
11	1.5"	6'-0"	5'-5"	7'-10"	7'-1"
	2.0"	6'-0"	4'-5"	7'-10"	5'-9"
	≥ 2.5"	6'-0"	4'-0"	7'-10"	5'-2"

Uncoated (f'_c = 4,000 psi; f_y = 60,000 psi)

Horizontal Lap w/ >12" Concrete Cast Below - Top					
Bar Size	Min. Cover	Class A (1.0 ℓ_d)		Class B (1.3 ℓ_d)	
		s < 6" cts.	s ≥ 6" cts.	s < 6" cts.	s ≥ 6" cts.
4	1.5"	1'-7"	1'-7"	2'-1"	2'-1"
	2.0"	1'-7"	1'-7"	2'-1"	2'-1"
	≥ 2.5"	1'-7"	1'-7"	2'-1"	2'-1"
5	1.5"	2'-0"	2'-0"	2'-7"	2'-7"
	2.0"	2'-0"	2'-0"	2'-7"	2'-7"
	≥ 2.5"	2'-0"	2'-0"	2'-7"	2'-7"
6	1.5"	2'-7"	2'-4"	3'-4"	3'-1"
	2.0"	2'-7"	2'-4"	3'-4"	3'-1"
	≥ 2.5"	2'-7"	2'-4"	3'-4"	3'-1"
7	1.5"	3'-1"	3'-1"	4'-0"	4'-0"
	2.0"	3'-0"	2'-9"	3'-11"	3'-7"
	≥ 2.5"	3'-0"	2'-9"	3'-11"	3'-7"
8	1.5"	3'-11"	3'-11"	5'-1"	5'-1"
	2.0"	3'-11"	3'-2"	5'-1"	4'-1"
	≥ 2.5"	3'-11"	3'-2"	5'-1"	4'-1"
9	1.5"	5'-0"	4'-10"	6'-5"	6'-4"
	2.0"	5'-0"	3'-11"	6'-5"	5'-1"
	≥ 2.5"	5'-0"	3'-7"	6'-5"	4'-7"
10	1.5"	6'-4"	5'-11"	8'-3"	7'-8"
	2.0"	6'-4"	4'-9"	8'-3"	6'-3"
	≥ 2.5"	6'-4"	4'-2"	8'-3"	5'-5"
11	1.5"	7'-10"	7'-1"	10'-2"	9'-2"
	2.0"	7'-10"	5'-9"	10'-2"	7'-6"
	≥ 2.5"	7'-10"	5'-2"	10'-2"	6'-9"

Draft Table

Epoxy Coated (f'_c = 3,500 psi; f_y = 60,000 psi)

Basic Lap - Others					
Bar Size	Min. Cover	Class A (1.0 ℓ_d)		Class B (1.3 ℓ_d)	
		s < 6" cts.	s ≥ 6" cts.	s < 6" cts.	s ≥ 6" cts.
4	1.5"	1'-7"	1'-7"	2'-0"	2'-0"
	2.0"	1'-7"	1'-7"	2'-0"	2'-0"
	≥ 2.5"	1'-7"	1'-7"	2'-0"	2'-0"
5	1.5"	2'-5"	2'-5"	3'-2"	3'-2"
	2.0"	2'-5"	1'-11"	3'-2"	2'-6"
	≥ 2.5"	2'-5"	1'-11"	3'-2"	2'-6"
6	1.5"	3'-2"	2'-11"	4'-1"	3'-9"
	2.0"	3'-2"	2'-11"	4'-1"	3'-9"
	≥ 2.5"	3'-2"	2'-4"	4'-1"	3'-0"
7	1.5"	3'-10"	3'-10"	5'-0"	5'-0"
	2.0"	3'-9"	3'-5"	4'-10"	4'-5"
	≥ 2.5"	3'-9"	3'-5"	4'-10"	4'-5"
8	1.5"	4'-10"	4'-10"	6'-3"	6'-3"
	2.0"	4'-10"	3'-11"	6'-3"	5'-0"
	≥ 2.5"	4'-10"	3'-11"	6'-3"	5'-0"
9	1.5"	6'-1"	6'-0"	7'-11"	7'-10"
	2.0"	6'-1"	4'-10"	7'-11"	6'-3"
	≥ 2.5"	6'-1"	4'-4"	7'-11"	5'-8"
10	1.5"	7'-10"	7'-3"	10'-2"	9'-5"
	2.0"	7'-10"	5'-11"	10'-2"	7'-8"
	≥ 2.5"	7'-10"	5'-2"	10'-2"	6'-8"
11	1.5"	9'-8"	8'-9"	12'-7"	11'-4"
	2.0"	9'-8"	7'-1"	12'-7"	9'-2"
	≥ 2.5"	9'-8"	6'-5"	12'-7"	8'-4"

Epoxy Coated (f'_c = 3,500 psi; f_y = 60,000 psi)

Horizontal Lap w/ >12" Concrete Cast Below - Top					
Bar Size	Min. Cover	Class A (1.0 ℓ_d)		Class B (1.3 ℓ_d)	
		s < 6" cts.	s ≥ 6" cts.	s < 6" cts.	s ≥ 6" cts.
4	1.5"	2'-0"	2'-0"	2'-8"	2'-8"
	2.0"	2'-0"	2'-0"	2'-8"	2'-8"
	≥ 2.5"	2'-0"	2'-0"	2'-8"	2'-8"
5	1.5"	2'-9"	2'-9"	3'-7"	3'-7"
	2.0"	2'-9"	2'-6"	3'-7"	3'-3"
	≥ 2.5"	2'-9"	2'-6"	3'-7"	3'-3"
6	1.5"	3'-7"	3'-4"	4'-7"	4'-3"
	2.0"	3'-7"	3'-4"	4'-7"	4'-3"
	≥ 2.5"	3'-7"	3'-0"	4'-7"	3'-11"
7	1.5"	4'-4"	4'-4"	5'-7"	5'-7"
	2.0"	4'-3"	3'-10"	5'-6"	5'-0"
	≥ 2.5"	4'-3"	3'-10"	5'-6"	5'-0"
8	1.5"	5'-6"	5'-6"	7'-1"	7'-1"
	2.0"	5'-6"	4'-5"	7'-1"	5'-8"
	≥ 2.5"	5'-6"	4'-5"	7'-1"	5'-8"
9	1.5"	6'-11"	6'-10"	9'-0"	8'-10"
	2.0"	6'-11"	5'-5"	9'-0"	7'-1"
	≥ 2.5"	6'-11"	4'-11"	9'-0"	6'-5"
10	1.5"	8'-11"	8'-2"	11'-7"	10'-8"
	2.0"	8'-11"	6'-8"	11'-7"	8'-8"
	≥ 2.5"	8'-11"	5'-10"	11'-7"	7'-7"
11	1.5"	10'-11"	9'-10"	14'-3"	12'-10"
	2.0"	10'-11"	8'-0"	14'-3"	10'-5"
	≥ 2.5"	10'-11"	7'-3"	14'-3"	9'-5"

Draft Table

Uncoated (f'_c = 3,500 psi; f_y = 60,000 psi)

Basic Lap - Others					
Bar Size	Min. Cover	Class A (1.0 ℓ_d)		Class B (1.3 ℓ_d)	
		s < 6" cts.	s ≥ 6" cts.	s < 6" cts.	s ≥ 6" cts.
4	1.5"	1'-4"	1'-4"	1'-8"	1'-8"
	2.0"	1'-4"	1'-4"	1'-8"	1'-8"
	≥ 2.5"	1'-4"	1'-4"	1'-8"	1'-8"
5	1.5"	1'-8"	1'-8"	2'-1"	2'-1"
	2.0"	1'-8"	1'-8"	2'-1"	2'-1"
	≥ 2.5"	1'-8"	1'-8"	2'-1"	2'-1"
6	1.5"	2'-1"	1'-11"	2'-9"	2'-6"
	2.0"	2'-1"	1'-11"	2'-9"	2'-6"
	≥ 2.5"	2'-1"	1'-11"	2'-9"	2'-6"
7	1.5"	2'-7"	2'-7"	3'-4"	3'-4"
	2.0"	2'-6"	2'-3"	3'-3"	2'-11"
	≥ 2.5"	2'-6"	2'-3"	3'-3"	2'-11"
8	1.5"	3'-3"	3'-3	4'-2"	4'-2"
	2.0"	3'-3"	2'-7"	4'-2"	3'-4"
	≥ 2.5"	3'-3"	2'-7"	4'-2"	3'-4"
9	1.5"	4'-1"	4'-0"	5'-4"	5'-2"
	2.0"	4'-1"	3'-3"	5'-4"	4'-2"
	≥ 2.5"	4'-1"	2'-11"	5'-4"	3'-10"
10	1.5"	5'-3"	4'-10"	6'-10"	6'-3"
	2.0"	5'-3"	3'-11"	6'-10"	5'-1"
	≥ 2.5"	5'-3"	3'-5"	6'-10"	4'-6"
11	1.5"	6'-5"	5'-10"	8'-5"	7'-7"
	2.0"	6'-5"	4'-9"	8'-5"	6'-2"
	≥ 2.5"	6'-5"	4'-3"	8'-5"	5'-7"

Uncoated (f'_c = 3,500 psi; f_y = 60,000 psi)

Horizontal Lap w/ >12" Concrete Cast Below - Top					
Bar Size	Min. Cover	Class A (1.0 ℓ_d)		Class B (1.3 ℓ_d)	
		s < 6" cts.	s ≥ 6" cts.	s < 6" cts.	s ≥ 6" cts.
4	1.5"	1'-8"	1'-8"	2'-2"	2'-2"
	2.0"	1'-8"	1'-8"	2'-2"	2'-2"
	≥ 2.5"	1'-8"	1'-8"	2'-2"	2'-2"
5	1.5"	2'-1"	2'-1"	2'-9"	2'-9"
	2.0"	2'-1"	2'-1"	2'-9"	2'-9"
	≥ 2.5"	2'-1"	2'-1"	2'-9"	2'-9"
6	1.5"	2'-9"	2'-6"	3'-6"	3'-3"
	2.0"	2'-9"	2'-6"	3'-6"	3'-3"
	≥ 2.5"	2'-9"	2'-6"	3'-6"	3'-3"
7	1.5"	3'-4"	3'-4"	4'-4"	4'-4"
	2.0"	3'-3"	2'-11"	4'-2"	3'-10"
	≥ 2.5"	3'-3"	2'-11"	4'-2"	3'-10"
8	1.5"	4'-2"	4'-2"	5'-5"	5'-5"
	2.0"	4'-2"	3'-4"	5'-5"	4'-4"
	≥ 2.5"	4'-2"	3'-4"	5'-5"	4'-4"
9	1.5"	5'-4"	5'-2"	6'-11"	6'-9"
	2.0"	5'-4"	4'-2"	6'-11"	5'-5"
	≥ 2.5"	5'-4"	3'-10"	6'-11"	4'-11"
10	1.5"	6'-10"	6'-3"	8'-10"	8'-2"
	2.0"	6'-10"	5'-1"	8'-10"	6'-8"
	≥ 2.5"	6'-10"	4'-6"	8'-10"	5'-10"
11	1.5"	8'-5"	7'-7"	10'-11"	9'-10"
	2.0"	8'-5"	6'-2"	10'-11"	8'-0"
	≥ 2.5"	8'-5"	5'-7"	10'-11"	7'-3"

This page intentionally left blank.

Table of Contents

10.1 General 2
10.2 Subsurface Exploration 3
10.3 Soil Classification 8
10.4 Site Investigation Report 10

10.1 General

The purpose of the Geotechnical Investigation is to provide subsurface information for the plans and to develop recommendations for the construction of the structure at reasonable costs versus short and long term performance. The level of Geotechnical Investigation is a function of the type of the structure and the associated performance. For example, a box culvert under a low ADT roadway compared to a multi-span bridge on a major interstate would require a different level of Geotechnical Investigation. The challenge for the geotechnical engineer is to gather subsurface information that will allow for a reasonable assessment of the soil and rock properties compared to the cost of the investigation.

The geotechnical engineer and the structure engineer need to work collectively when evaluating the loads on the structures and the resistance of the soil and rock. The development of the geotechnical investigation and evaluation of the subsurface information requires a degree of engineering judgment. A guide for performing the Geotechnical Investigation is provided in WisDOT Geotechnical Bulletin No. 1, **LRFD [10.4]** and Geotechnical Engineering Circular #5 – Evaluation of Soil and Rock Properties (Sabatini, 2002).

The following structures will require a Geotechnical Investigation:

- Bridges
- Box Culverts
- Retaining Walls
- Non-Standard Sign Structures Foundations
- High Mast Lighting Foundations
- Noise Wall Foundations

10.2 Subsurface Exploration

The Geotechnical Engineering Unit (or geotechnical consultant) prepares the Site Investigation Report (SIR) and the Subsurface Exploration (SE) sheet. The SIR describes the subsurface investigation, laboratory testing, analyses, computations and recommendations for the structure. All data relative to the underground conditions which may affect the design of the proposed structure's foundation are reported. Further information describing this required investigation can be found in the Department's "Geotechnical Bulletin #1" document. The Subsurface Exploration sheet is a CADDS drawing that illustrates the soil boring locations and is a graphical representation of the driller's findings. This sheet is included in the structure plans. If the Department is not completing the geotechnical work on the project, the SIR and SE sheet(s) are the responsibility of the consultant.

The subsurface investigation is composed of two areas of investigation: the Surface Survey and the detailed Site Investigation.

Surface Surveys include studies of the site geology and air-photo review, and they can include geophysical methods of exploration. This work should include a review of any existing structure foundations and any existing geotechnical information. Surface Surveys provide valuable data indicating approximate soil conditions during the reconnaissance phase.

Based on the results of the Surface Survey information, the plans for a Detailed Site Investigation are made. The subsurface investigation needs to provide the following information:

- Depth, extent and thickness of each soil or rock stratum
- Soil texture, color, mottling and moisture content
- Rock type, color and condition
- In-situ field tests to determine soil and rock parameters
- Laboratory samples for determining soil or rock parameters
- Water levels, water loss during drilling, utilities and any other relevant information

The number and spacing of borings is controlled by the characteristics and sequence of subsurface strata and by the size and type of the proposed structure. Depending upon the timing of the Geotechnical Investigation the required information may not be available and the geotechnical engineer may have to develop a subsurface investigation plan based on the initial design. The Department understands that additional investigation may be required once the preliminary design is completed. The challenge for the Department and the consultant is to develop a geotechnical investigation budget without knowing the subsurface conditions that will be encountered. Existing subsurface information from previous work can help this situation, but the plans should be flexible to allow for some unforeseen subsurface conditions.

One particular subsurface condition is the presence of shallow rock. In some cases, borings should be made at a frequency of one per substructure unit to adequately define the subsurface conditions. However, with shallow rock two or more borings may be necessary to define the rock line below the foundation. Alternatively, where it is apparent the soil is uniform, fewer borings are needed. For example, a four span bridge with short (less than30 foot) spans at each end of a bridge may only require three borings versus the five borings (one per substructure).

Borings are typically advanced to a depth where the added stress due to the applied load is 10 percent of the existing stress due to overburden or extended beyond the expected pile penetration depths. Where rock is encountered, borings are advanced by diamond bit coring according to ASTM D2113 to determine rock quality according to ASTM D6032.

LRFD [Table 10.4.2-1] Minimum Number of Exploration Points and Depth of Exploration (modified after Sabatini et al., 2002) provides guidelines for an investigation of bridges (shallow foundations and deep foundations) and retaining walls. The following presents the typical subsurface investigation guidelines for the other structures:

- Box Culverts: A minimum of two soil borings (generally located near the proposed culvert aprons) are recommended for box culvert lengths up to 150 feet, with one additional boring for each additional 100 feet of culvert length. These additional borings along the culvert length, should be spaced approximately equally between the apron borings. The number of additional borings can also be adjusted based on the uniformity of subsurface conditions, and knowledge of site geology. All borings should have a minimum of 15 feet of continuous SPT samples below the base of the box culvert.

- Box Culvert Extensions: The recommended borings depend on the extension length at the culvert end, available information from the existing box culvert, and proposed loads (i.e. traffic lanes over the extension). In general, one boring is recommended at each extension. If an extension length exceeds 150 feet, a minimum of two borings may be warranted.

- Non-Standard Sign Structure Foundations: The recommended spacing would be one for each sign structure site. If the sign structure is a bridge with two foundations then one boring may still be adequate. The borings should have 20 feet of continuous SPT samples and a SPT sample at 25 feet and 30 feet below the ground surface at the sign structure site.

- High Mast Lighting Foundations: The recommended spacing would be one for each site. The borings should have 15 feet of continuous SPT samples and a SPT sample every 5 feet to a depth of 40 feet below the ground surface at the site.

- Noise Wall Foundations: The recommended spacing would be one for every 200 feet to 300 feet of wall. The borings should have 20 feet of continuous SPT samples below the ground surface.

The Department generally follows AASHTO laboratory testing procedures. Any or all of the following soil tests may be considered necessary or desirable at a given site:

In-situ (field) Tests

- Standard penetration
- Pocket penetrometer (cohesive soil)
- Vane shear (cohesive soil)
- Cone penetration (seldom used)
- Rock core recovery and Rock Quality Designation (RQD)

Laboratory Tests

- Moisture, density, consistency limits and unit weight
- Unconfined compression (cohesive soils and rock cores)
- Grain size analysis (water crossings) - This test is required for streambed sediments of multi-span structures over water to facilitate scour computations.
- One-dimensional consolidation (seldom used)
- Unconsolidated undrained triaxial compression (seldom used)
- Consolidated undrained triaxial compression with pore water pressure readings (seldom used)
- Corrosion Tests (pH, resistivity, sulfate, chloride and organic content)

One of the most widely used in-situ tests in the United States is the Standard Penetration Test (AASHTO T-206) as described in the *AASHTO Standard Specifications*. This test provides an indication of the relative density of cohesionless soils and, along with the pocket penetrometer readings, predicts the consistency and undrained shear strength of cohesive soils. Standard Penetration Tests (SPTs) generally consist of driving a 2-inch O.D. split barrel sampler into the ground with a 140-pound hammer falling over a height of 30 inches. The split-barrel sampler is driven in 6-inch increments for a total of 18-inches and the number of blows for each 6-inch increment is recorded. The field blow-count, SPT N-value, equals the number of blows that are required to drive the sampler the last 12-inches of penetration. Split-barrel samplers are typically driven with a conventional donut, safety or automatic-trip hammer. Hammer efficiencies, ER, are determined in accordance with ASTM D 4945. In lieu of a more detailed assessment, ER values of 45, 60 and 80 percent may be used to compute corrected blow counts, N_{60}, for conventional, safety and automatic-trip hammers, respectively, in accordance with **LRFD [10.4.6.2.4]**. Correlation between standard penetration values and the resulting soil bearing value approximations are available from many sources. Standard penetration values can be used by experienced Geotechnical Engineers to estimate pile shaft resistance values by also considering soil texture, moisture content, location of water table, depth below proposed footing and method of boring advance.

For example, DOT Geotechnical Engineers using DOT soil test information know that certain sand and clays in the northeastern part of Wisconsin have higher load-carrying capacities than tests indicate. This information is confirmed by comparing test pile data at the different sites to computed values. The increased capacities are realized by increasing the design point resistance and/or shaft resistance values in the Site Investigation Report.

Wisconsin currently uses most of the soil tests previously mentioned. The soil tests used for a given site are determined by the complexity of the site, size of the project and availability of funds for subsurface investigation. The scope and extent of the laboratory testing program should take into consideration available subsurface information obtained during the initial site reconnaissance and literature review, prior experience with similar subsurface conditions encountered in the project vicinity and potential risk to structure performance. Detailed information about how to develop a laboratory testing program and the type of tests required is presented in previous sited reference or refer to a soils textbook for a more detailed description of soil tests.

Laboratory tests of undisturbed samples provide a more accurate assessment of soil settlement and structural properties. Unconfined compression tests and other tests are employed to measure the undrained shear strength and to estimate pile shaft resistance in clay soils by assuming:

$$c = \frac{q_u}{2}$$

Where:

c	=	cohesion of soil
q_u	=	unconfined compression strength

It is worthy to note that pile shaft resistance is a function of multiple parameters, including but not limited to stress state, depth, soil type and foundation type.

In addition to the tests of subsurface materials, a geological and/or geophysical study may be conducted to give such geological aspects as petrology, rock structure, rock quality, stratigraphy, vegetation and erosion. This can include in-situ and laboratory testing of selected samples, as well as utilizing non-destructive geophysical techniques, such as seismic refraction, electromagnetic or ground penetrating radar (GPR)

Boring and testing data analysis, along with consideration of the geology and terrain, allow the geotechnical engineer to present the following in the bridge SIR:

- The preferred type of substructure foundation (i.e. shallow or deep).
- The factored bearing resistance for shallow foundations.
- The settlement for the shallow foundations.

- If piles are required, recommend the most suitable type and the support values (shaft resistance and point resistance) furnished by the different soil strata.

- A discussion of any geotechnical issues that may affect construction.

- The presence and effect of water, including discussion of dewatering impact and cut-slope impact under abutments.

When piles are recommended, suitable pile types, estimated length requirements, pile drivability and design loads are discussed. Adverse conditions existing at abutments due to approach fills being founded on compressible material are pointed out, and recommended solutions are proposed. Unfactored resistance values at various elevations are given for footing foundation supports. Problems associated with scour, tremie seals, cofferdams, settlement of structure or approach fill slopes and other conditions unique to a specific site are discussed as applicable.

10.3 Soil Classification

The total weight of the structure plus all of the forces imposed upon the structure is carried by the foundation soils. There are many ways to classify these soils for foundation purposes. An overall geological classification follows:

1. Bedrock - This is igneous rock such as granite; sedimentary rock such as limestone, sandstone and shale; and metamorphic rock such as quartzite or marble.

2. Glacial soils (Intermediate Geo Material- IGM) - This wide variety of soils includes granular outwash, hard tills, bouldery areas and almost any combination of soil that glaciers can create and are typically defined to have a SPT number greater than 50.

3. Alluvial soils - These are found in flood plains and deltas along creeks and rivers. In Wisconsin, these soils normally contain large amounts of sand and silt. They are highly stratified and generally loose. Pockets of clay are found in backwater areas.

4. Residual soils - These soils are formed as a product of weathering and invariably reflect the parent bedrock material. They may be sands, silts or clay.

5. Lacustrine soils - These soils are formed as sediment and are deposited in water environments. In Wisconsin, they tend to be clayey. One example of these soils is the red clay sediments around Lakes Superior and Michigan.

6. Gravel, cobbles and boulders - These are particles that have been dislodged from bedrock, then transported and rounded by abrasion. Some boulders may result from irregular weathering.

Regardless of how the materials are formed, for engineering purposes, they are generally broken into the categories of bedrock, gravel, sand, silt, clay or a combination of these. The behavioral characteristics of any soil are generally based on the properties of the major constituent(s). Listed below are some properties associated with each of these material types.

1. Sand - The behavior of sand depends on grain size, gradation, density and water conditions. Sand scours easily, so foundations on sand must be protected in areas subject to scour.

2. Silt - This is a relatively poor foundation material. It scours and erodes easily and causes large volume changes when subject to frost.

3. Clay - This material needs to be investigated very carefully for use as a bearing material. Long-term consolidation may be an issue.

4. Bedrock - This is generally the best foundation material. Wisconsin has shallow weathered rock in many areas of the state. Weathered granite and limestone become sands. Shale and sandstone tend to weather more on exposure.

5. Mixture of soils - This is the most common case. The soil type with predominant behavior has the controlling name. For example, a soil composed of sand and clay is called sandy clay if the clayey fraction controls behavior.

10.4 Site Investigation Report

The following is a sample of a Site Investigation Report for a two-span bridge and retaining wall. The subsurface exploration drawing is also submitted with the reports.

CORRESPONDENCE/MEMORANDUM _____State of Wisconsin

DATE: February 17, 2015

TO: Casey Wierzchowski, P.E.
Southeast Region Soils Engineer

FROM: Jeffrey D Horsfall, P.E.
Geotechnical Engineer

SUBJECT: **Site Investigation Report**
Project I.D. 1060-33-16
B-40-0880
Center Street over USH 45
Milwaukee County

Attached is the Site Investigation Report for the above project.

Please call if you have any questions.

Attachments

cc: Southeast Region (via e-mail)
Bureau of Structures, Structures Design (via e-submit)
Geotechnical File (original)

Site Investigation Report
Project I.D. 1060-33-16
Structure B-40-0880
Center Street over USH 45
Milwaukee County
February 17, 2015

1. GENERAL

The project is Center Street over USH 45, Milwaukee County. The proposed structure has two spans and will replace the existing structure with four spans (B-40-284). The existing structure is supported on spread footings with an allowable bearing capacity of 5,000 psf. The end slope in front of the abutments is to be supported with MSE walls with precast concrete panels. The current topography near the proposed structure is a rolling terrain in an urban area.

The Southeast Region requested that the Geotechnical Engineering Unit evaluate the foundation support for the proposed new structure. The following report presents results of the subsurface investigation, design evaluation, findings, conclusions, and recommendations.

2. SUBSURFACE CONDITIONS

Wisconsin Department of Transportation contracted with Gestra to completed one boring and PSI, Inc. to complete three borings near the proposed structure. Samples were collected in the borings with a method conforming to AASHTO T-206, Standard Penetration Test, in October and November 2014, using automatic hammers (with an efficiency ranging from 84 percent (Gestra) to 69 percent (PSI)). Attachment 1 presents tables showing the summary of subsurface conditions logged in the borings at this site and at the time of drilling for the structure. Attachment 2 presents a figure that illustrates the boring locations and graphical representations of the boring logs. The original borings logs are available at the Geotechnical Engineering Unit and will be made available upon request.

The following describes subsurface conditions in the four borings:

0.7 feet of topsoil or 1.0 feet to 2.0 feet of pavement structure, overlying
0.0 feet to 7.0 feet of brown, dense to very dense, fine to course, sand and gravel, overlying
20.0 feet to 43.0 feet of brown to gray, medium hard, clay, some silt, trace sand, overlying
0.0 feet to 8.0 feet of gray, loose to dense, fine sand, little silt, overlying
0.0 feet to 26.0 feet of gray, medium hard, clay, some silt, trace sand, overlying
Gray, very hard, clay and silt, some gravel

The observed groundwater elevation at the time of drilling ranged from 714 feet to 732 feet as determined by the drillers describing the samples as wet. However, not all of the borings encountered samples that were wet.

3. ANALYSIS ASSUMPTIONS

Foundation analyses are separated into shallow foundations (spread footings) and deep foundations (piling supports). The analyses used the following assumptions:

Shallow Foundation

1. The groundwater elevation ranged from 714 feet to 732 feet.
2. The base of the foundations are at the following elevations

Table 1: Foundation Elevations	
West Abutment	755.9 feet
Pier	733.3 feet
East Abutment	754.4 feet

3. The abutment end slopes are MSE Walls with precast panel facing.
4. The width of the pier footing is 10 feet and the width of the abutment footing is 6 feet.
5. The resistance factor of 0.55 for the factored bearing resistance.

Pile Supported Deep Foundation

1. Soil pressures for displacement piles are based upon a 10 3/4-inch diameter cast-in-place pile.
2. The groundwater elevation ranged from 714 feet to 732 feet.
3. Table 1 presents elevations at the base of the foundations.
4. Nominal soil pressures determined using the computer program APILE.
5. The drivability evaluation was performed using the computer program GRLWEAP.

The design shear strength, cohesion and unit weight for this analyses are presented latter in this report. The values are based upon empirical formulas for internal friction angles using blow counts from the AASHTO T-206 Standard Penetration Test results and the effective overburden pressure for the granular soils, the pocket penetrometer values for the cohesive soils and published values for the bedrock.

4. RESULTS OF ANALYSIS

Shallow Foundation

The results of the shallow foundation evaluation indicated that the factored bearing resistance was 6,000 psf for the west abutment and east abutment and 5,000 psf for the pier. The soils are relatively uniform. The estimated settlement from the bridge loads at the abutments and piers was excessive. The time for settlement would occur over a relatively long period of time.

Deep Foundation

Table 2 shows estimated nominal skin friction and end bearing values for deep foundation pilings.

Drivability

The drivability evaluation used a Delmag D 16-32 diesel hammer to determine if the pile would be overstressed during pile installation. The results of the evaluation indicated that 10 x 42 H-pile at the abutments and the 12 x 53 H-piles at the pier should not be overstressed.

Lateral Earth Pressure

The lateral earth pressure for the backfill material will exert 40 psf for sandy soils. The backfill material will be granular, free draining and locally available.

Table 2: Soil Parameters and Foundation Capacities					
Soil Description	**Friction Angle (degrees)**	**Cohesion (psf)**	**Unit Weight (pcf)**	**Skin Friction[1] (psf)**	**End Bearing[1] (psf)**
B-40-0880 West Abutment (B-1)					
MSE Wall (Elevation 755.9 ft – 738.6 ft)	30	0	120	NA	NA
Clay, gray, trace gravel (Elevation 738.6 ft – 733.4 ft)	0	3,000	125	640	19,100
Clay, gray, trace gravel (Elevation 733.4 ft – 729.4 ft)	0	2,500	120	1,075	21,700
Clay, gray, trace gravel (Elevation 729.4 ft – 717.4 ft)	0	2,000	120	1,370	17,900
Clay and Silt, gray, trace sand and gravel (Elevation 717.4 ft – 705.4 ft)	0	4,500	135	1,210	40,500
Silt, gray, trace sand (Elevation 705.4 ft – 700.4 ft)	0	2,000	120	1,720	17,900
Silt, gray, some sand, trace gravel (Elevation 700.4 ft and below)	0	25,000	135	NA	Refusal
B-40-0880 Pier (B-1Gestra)					
Clay, brown to gray, trace sand, trace gravel (Elevation 733.3 ft – 731.7 ft)	0	2,000	120	340	15,800
Clay, gray, trace gravel (Elevation 731.7 ft – 715.7 ft)	0	3,000	125	930	27,000
Silt, gray, trace gravel (Elevation 715.7 ft – 698.7 ft)	0	3,500	130	495	31,600
Silt, gray, trace gravel (Elevation 698.7 ft – 694.2 ft)	40	0	135	470	417,800
Silt, Sand, Gravel, gray (Elevation 694.2 ft and below)	0	25,000	135	NA	Refusal

1. Skin friction and end bearings vales are the nominal capacities
2. NA - not applicable

Table 2: Soil Parameters and Foundation Capacities					
Soil Description	**Friction Angle (degrees)**	**Cohesion (psf)**	**Unit Weight (pcf)**	**Skin Friction[1] (psf)**	**End Bearing[1] (psf)**
B-40-0880 East Abutment (B-2 and B-3)					
MSE Wall (Elevation 754.4 ft – 741.5 ft)	30	0	120	NA	NA
Clay, gray, trace gravel (Elevation 741.5 ft – 732.5 ft)	0	2,500	125	920	22,500
Sand, gray, some silt (Elevation 732.5 ft – 730.5 ft)	36	0	130	620	45,900
Sand, gray, some silt (Elevation 730.5 ft – 728.5 ft)	30	0	115	340	19,700
Clay, gray, trace sand, trace gravel (Elevation 728.5 ft – 717.5 ft)	0	2,500	125	2,380	22,500
Clay, gray, trace sand, trace gravel (Elevation 717.5 ft – 711.0 ft)	0	2,000	120	1,830	17,900
Silt, gray, trace sand (Elevation 711.0 ft – 702.5 ft)	33	0	125	890	50,000
Clay, gray (Elevation 702.5 ft – 692.5 ft)	0	3,000	125	1,730	27,000
Clay and Gravel, gray, some silt (Elevation 692.5 ft and below)	0	25,000	135	NA	Refusal

1. Skin friction and end bearings vales are the nominal capacities
2. NA - not applicable

5. FINDING AND CONCLUSIONS

The following findings and conclusions are based upon the subsurface conditions and analysis:

1. The following describes the subsurface conditions in the four borings:

   0.7 feet of topsoil or 1.0 feet to 2.0 feet of pavement structure, overlying
   0.0 feet to 7.0 feet of brown, dense to very dense, fine to course, sand and gravel, overlying
   20.0 feet to 43.0 feet of brown to gray, medium hard, clay, some silt, trace sand, overlying
   0.0 feet to 8.0 feet of gray, loose to dense, fine sand, little silt, overlying
   0.0 feet to 26.0 feet of gray, medium hard, clay, some silt, trace sand, overlying
   Gray, very hard, clay and silt, some gravel

2. The observed groundwater elevation at the time of drilling ranged from 714 feet to 732 feet as determined by the drillers describing the samples as wet.

3. The results of the shallow foundation evaluation indicated that the factored bearing resistance was 6,000 psf for the west abutment and east abutment and 5,000 psf for the pier. The soils are relatively uniform. The calculations used a resistance factor of 0.55.

4. The estimated settlement from the bridge loads on the shallow foundations would be excessive. The time for settlement would occur over a long period of time.

5. If used the support of the piles will occur in the very hard clay and silt. The pile tip elevation will range from 692 feet to 700 feet. The driven pile lengths will depend upon the type of pile hammer used and actual subsurface conditions encountered.

6. RECOMMENDATIONS

The following recommendations are based upon the findings and conclusions:

1. The recommended support system for the abutments are 10 x 42 H-piles driven to a “Required Driving Resistance” of 180 tons and for the pier footings are 12 x 53 H-piles driven to a “Required Driving Resistance” of 220 tons. Table 3 presents the estimated pile tip elevation for the piles. The actual driven length may be shorter due to the very hard clay.

Table 3: Estimated H-Pile Tip Elevations		
Substructure	Pile Type	Pile Tip Elevation
West Abutment	10 x 42 H-pile	700 feet
Pier	12 x 53 H-pile	694 feet
East Abutment	10 x 42 H-pile	692 feet

2. The field pile capacity should be determined by using the modified Gates dynamic formula. This method will use of a resistance factor of 0.50.

3. Pile points should be used to reduce the potential for damage during driving through the very hard clay and silts.

4. Shallow foundation should not be used based upon the anticipated settlement at the pier and the MSE walls at the abutments.

5. Granular 1 backfill should be used behind the abutments.

Attachment 1
Tables of Subsurface Conditions

B-40-0880 Subsurface Conditions

B-1 Station 19+00.0 22.4 feet left of CE RL				B-1Gestra Station 20+11.3 38.2 feet left of CE RL			
Top of Soil Layer Elevation (feet)	**Soil Description**	**SPT Blow count**	**Corr. SPT Blow count[1]**	**Top of Soil Layer Elevation (feet)**	**Soil Description**	**SPT Blow count**	**Corr. SPT Blow count**
762.6	Pavement Structure			742.7	Pavement Structure	6	14
761.6	Clay, dark brown, trace sand and gravel (fill)	4	7	740.7	Clay, brown to gray, trace sand, trace gravel Qp=1.0 – 3.0	6,9, 9,13	12,17, 16,21
754.1	Clay, brown, some silt, trace sand and gravel Qp=3.0	18	25	731.7	Clay, gray, trace gravel Qp=3.0 – 4.0	9,10, 11,13, 14,12	14,15, 16,18, 19,15
749.6	Clay, gray, trace gravel Qp=1.75 – 3.5	15,13, 14	18,14, 15	715.7	Silt, gray, trace sand Qp=4.0	24,33, 31	27,36, 31
739.6	Clay, gray, trace gravel Qp=3.0 – 3.75	20,14, 18	21,14, 17	698.7	Silt, gray, with gravel Qp=4.5	50/6”	51/6”
733.6	Clay, gray, trace gravel Qp=2.0 – 2.5	23,29	22,26	694.2	Silt, Sand, Gravel, gray Qp=4.5	79, 50/2”	78, 48/2”
729.6	Clay, gray, trace gravel Qp=1.5 – 3.0	13,15, 24,17	12,13, 20,13	689.7	EOB		
717.6	Clay and Silt, gray, trace sand and gravel Qp=3.0 - 4.5+	66,67	49,47				
705.6	Silt, gray, trace sand Qp=1.5	28	18				
700.6	Silt, gray, some sand, trace gravel Qp=4.5+	78,42, 59, 60/4”	49,25, 34, 33/4”				
682.6	EOB						

1. Blow counts are corrected for SPT hammer efficiency and overburden pressure.
2. First elevation is the surface elevation for the boring
3. Qp = Unconfined compression strength as determined by a pocket penetrometer, tons/ft^2
4. EOB is the end of boring.

B-40-0880 Subsurface Conditions							
B-3 Station 21+10.0 40.6 feet right of CE RL				**B-2 Station 21+14.8 23.3 feet left of CE RL**			
Top of Soil Layer Elevation (feet)	**Soil Description**	**SPT Blow count**	**Corr. SPT Blow count**	**Top of Soil Layer Elevation (feet)**	**Soil Description**	**SPT Blow count**	**Corr. SPT Blow count**
759.4	Topsoil			760.5	Pavement Structure		
758.7	Sand, light brown to brown, fine to course, trace silt and gravel	14,13	32,24	759.5	Sand and Gravel, brown	31	49
755.4	Clay, brown, some silt, trace sand and gravel Qp=4.5 – 4.5+	14,32, 16,50	23,48, 22,65	752.5	Clay and Silt, brown, trace gravel Qp=2.5 – 3.0	11,15	15,18
747.4	Clay, gray, trace sand and gravel Qp=2.5 – 3.25	32,13, 14,15	40,15, 15,15	742.5	Clay, gray, trace gravel Qp=1.75 – 4.5+	18,22, 24,15, 19	19,23, 24,15, 18
730.4	Sand, gray, fine, little silt	29	27	732.5	Sand, gray, some silt	38	35
726.4	Sand, gray, fine, little silt	9	8	730.5	Sand, gray, some silt	9	8
722.4	Silt, gray, little sand, trace clay Qp=3.0	15	13	728.5	Clay, gray, trace sand and gravel Qp=2.5 – 3.0	22,14, 17,20, 21	20,12, 15,17, 17
719.4	EOB			711.0	Silt, gray, trace sand Qp=1.0	38	30
				702.5	Clay, gray Qp=1.75 – 3.0	21,27	16,20
				692.5	Clay and Gravel, gray, some silt Qp=4.5+	117, 108, 60/2’	85, 76, 41/2”
				680.5	EOB		

1. Blow counts are corrected for SPT hammer efficiency and overburden pressure.
2. First elevation is the surface elevation for the boring
3. Qp = Unconfined compression strength as determined by a pocket penetrometer, tons/ft^2
4. EOB is the end of boring.

Attachment 2
Bridge Figure

ZOO INTERCHANGE, NORTH LEG
CENTER STREET OVER USH 45

BORING #	DATE COMPLETED	NORTHING (Y)	EASTING (X)
1	11/3/2014	310125.9	567409.9
GESTRA 1	10/16/2014	310131.3	567531.0
2	11/4/2014	310125.5	567623.7
3	11/5/2014	310040.4	567628.0

BORINGS COMPLETED BY: PSI/GESTRA
REPORT COMPLETED BY: WISDOT
ALL COORDINATES REFERENCED TO WCCS NAD 83(91) MILWAUKEE COUNTY

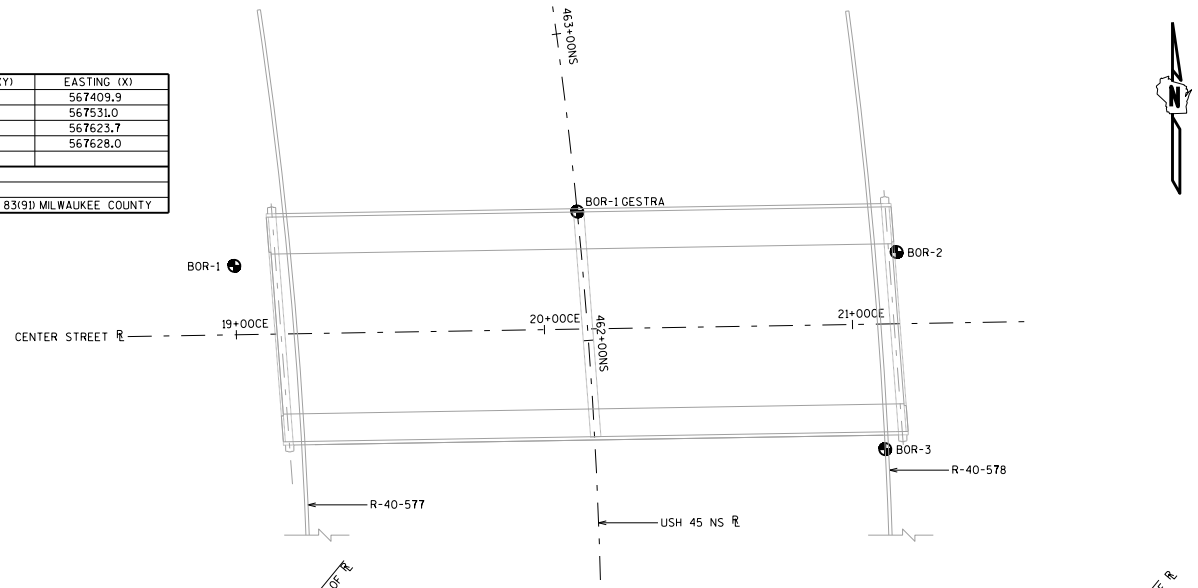

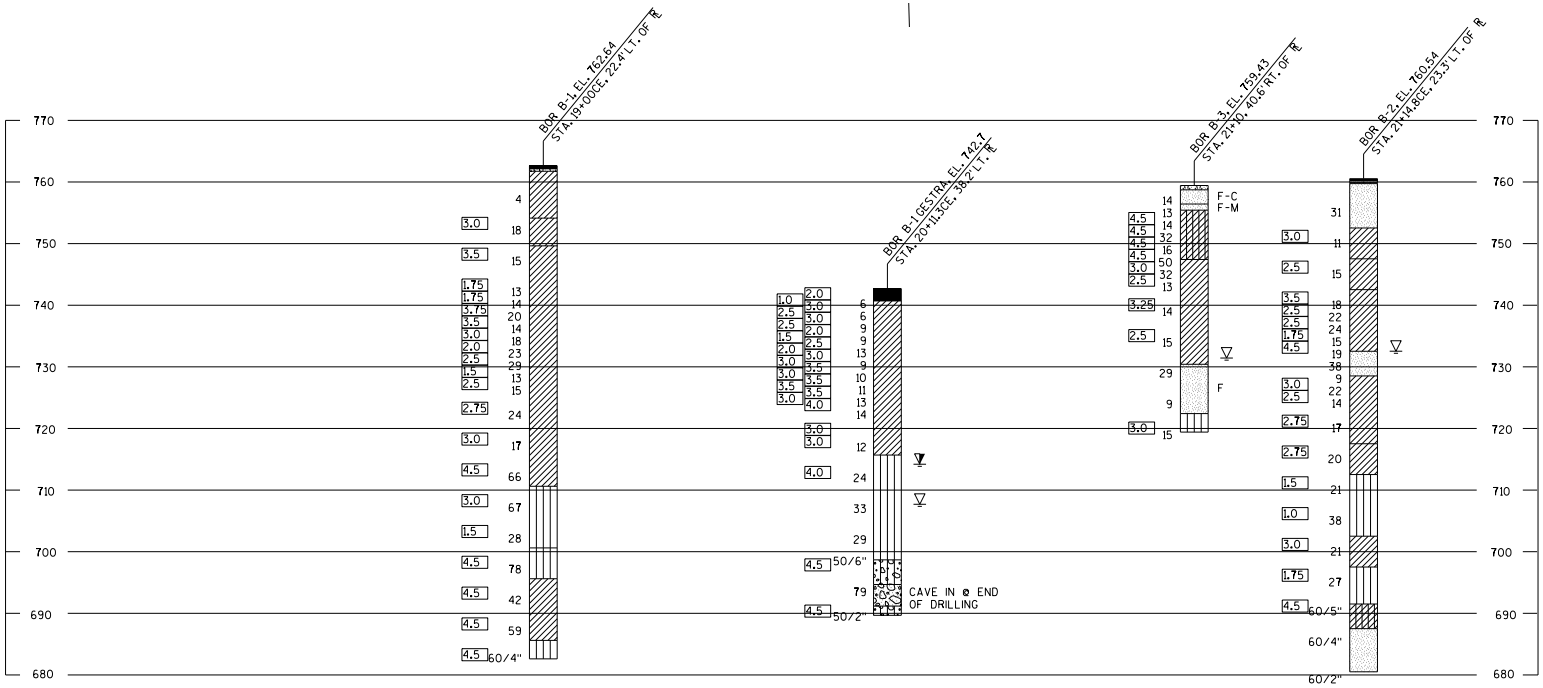

STATE PROJECT NUMBER

1060-33-16

MATERIAL SYMBOLS

ASPHALT, TOPSOIL, PEAT, CONCRETE, FILL, GRAVEL, SAND, CLAY, SILT, BOULDERS OR COBBLES, LIMESTONE, BEDROCK (UNKNOWN), SHALE, SANDSTONE, IGNEOUS/META

LEGEND OF BORING

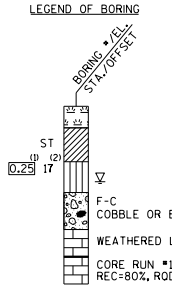

(1) UNCONFINED STRENGTH, AS DETERMINED BY A POCKET PENETROMETER (TSF)

(2) UNLESS OTHERWISE SPECIFIED THE SPT 'N' VALUE IS BASED ON AASHTO T-206, STANDARD PENETRATION TEST. THE SPT 'N' VALUE PRESENTED HAS NOT BEEN CORRECTED FOR OVERBURDEN PRESSURE OR HAMMER EFFICIENCY.

GROUND WATER ELEVATION

- AT TIME OF DRILLING
- END OF DRILLING
- AFTER DRILLING

ABBREVIATIONS

F-FINE M-MEDIUM C-COARSE ST-SHELBY TUBE

SUBSURFACE EXPLORATION FOR FOUNDATION DESIGN AND BIDDERS INFORMATION

BORINGS WERE COMPLETED AT POINTS APPROXIMATELY AS INDICATED ON THIS DRAWING TO OBTAIN INFORMATION CONCERNING THE CHARACTER OF SUBSURFACE MATERIALS FOUND AT THE SITE. BECAUSE THE INVESTIGATED DEPTHS ARE LIMITED AND THE AREA OF THE BORINGS IS VERY SMALL IN RELATION TO THE ENTIRE SITE, THE WISCONSIN DEPARTMENT OF TRANSPORTATION DOES NOT WARRANT SIMILAR SUBSURFACE CONDITIONS BELOW, BETWEEN, OR BEYOND THESE BORINGS. VARIATIONS IN SOIL CONDITIONS SHOULD BE EXPECTED AND FLUCTUATIONS IN GROUNDWATER LEVELS MAY OCCUR.

NO.	DATE	REVISION	BY

STATE OF WISCONSIN
DEPARTMENT OF TRANSPORTATION
STRUCTURES DESIGN SECTION

STRUCTURE B-40-880

DRAWN BY PR | PLANS CK'D.

SUBSURFACE EXPLORATION

SHEET

8

8

SCALE =

WI Dept. of Transportation 3502 Kinsman Blvd. Madison, WI 53704	WISDOT PROJECT ID: 1060-33-16 WISDOT STRUCTURE ID: B-40-880-2	BORING ID: B-1 PAGE NO: 1 of 4	
WISDOT PROJECT NAME: Center Street over US Highway 45	CONSULTANT: Professional Service Industries, Inc.	CONSULTANT PROJECT NO: 0052853-7	LATITUDE: N43° 04.048' / LONGITUDE: W88° 03.229'
ROADWAY NAME: Center Street Over USH 45	DRILLING CONTRACTOR: PSI	DRILLING CONTRACTOR PROJECT NO: 0052853-7	NORTHING: / EASTING:
DATE STARTED: 11/03/14	CREW CHIEF: P. Rotaru	DRILL RIG: Freightliner	COORDINATE SYSTEM: Lat/Long
DATE COMPLETED: 11/03/14	LOGGED BY: D. Zuydhoek	HOLE SIZE: 10 in	HORIZONTAL DATUM: WGS 1984 / VERTICAL DATUM: MSL
COUNTY: Milwaukee	LOG QC BY:	HAMMER TYPE: Automatic	STREAMBED ELEVATION: NA
STATION 462+35 / OFFSET 112.5' LT	TOWNSHIP: / RANGE: / SECTION: / 1/4 SECTION: / 1/4 1/4 SECTION:		SURFACE ELEVATION: 762.64 ft

SAMPLE TYPE NUMBER	RECOVERY (in) (RQD)	Moisture	BLOW COUNTS (N VALUE)	Depth (ft)	Graphic	Soil / Rock Description and Geological Origin for Each Major Unit / Comments	USCS / AASHTO	Strength Qp (tsf)	Liquid Limit (%)	Plasticity Index (%)	Boulders	Drilling Method	Notes
						0.5 ASPHALT, (5.5" Thick) 762.1						HSA	
						0.9 BASE COURSE, (5" Thick) 761.7	GPS						
				1		CLAY, Fill, Dark Brown, Soft, Trace Sand and Gravel							
				2									
				3									
SPT 1	4	M	3-2-2-3 (4)	4									
				5			CL						
				6									
				7									
				8		8.5 754.1							
SPT 2	24	M	5-6-12-17 (18)	9		CLAY, Brown, Very Stiff, Trace Sand and Gravel		3.0					
				10									
				11			CL						
				12									
				13		13.0 749.6							
SPT 3	24	M	8-8-7-11 (15)	14		CLAY, Gray, Very Stiff, Trace to Few Sand and Gravel		3.5					
				15									
				16									
				17									
				18									
SPT 4	24	M	4-5-8-7 (13)	19				1.75					
				20		Stiff							
SPT 5	24	M	4-6-8-8 (14)	21			CL	1.75					
				22		Very Stiff							
SPT 6	24	M	6-9-11-10 (20)	23				3.75					
				24									
SPT 7	24	M	6-6-8-11 (14)	25				3.5					
				26									
SPT 8	24	M	7-8-10-11 (18)	27				3.0					
				28									
SPT 9	24	M	11-11-12-12 (23)	29				2.0					

WATER LEVEL & CAVE-IN OBSERVATION DATA

WATER ENCOUNTERED DURING DRILLING: NE		CAVE - IN DEPTH AT COMPLETION: NMR	WET ☐ DRY ☐
WATER LEVEL AT COMPLETION: NMR		CAVE - IN DEPTH AFTER 0 HOURS: NMR	WET ☐ DRY ☐

NOTES: 1) Stratification lines between soil types represent the approximate boundary; gradual transition between in-situ soil layers should be expected.
2) NE = Not Encountered; NMR = No Measurement Recorded

P:\GINT\WISDOT GINT PROJECTS\GINT_40\B-40-880.GPJ Center Street over US Highway 45 2/11/15

SAMPLE TYPE NUMBER	RECOVERY (in) (RQD)	Moisture	BLOW COUNTS (N VALUE)	Depth (ft)	Graphic	Soil / Rock Description and Geological Origin for Each Major Unit / Comments	USCS / AASHTO	Strength Qp (tsf)	Liquid Limit (%)	Plasticity Index (%)	Boulders	Drilling Method	Notes
SPT 10	24	M	16-15-14-17 (29)	31		CLAY, Gray, Very Stiff, Trace to Few Sand and Gravel		2.5					
				32		Stiff							
SPT 11	24	M	5-6-7-10 (13)	33				1.5					
				34									
SPT 12	24	M	4-7-8-11 (15)	35		Very Stiff		2.5					
				36									
				37									
				38									
SPT 13	24	M	10-12-12-15 (24)	39				2.75					
				40									
				41			CL						
				42									
				43									
SPT 14	24	M	6-7-10-13 (17)	44				3.0					
				45								MR	
				46									
				47									
				48									
SPT 15	24	M	17-33-33-51 (66)	49				4.5					
				50		Hard							
				51									
				52		52.0 710.6							
				53		SILT, Gray, Very Stiff, Trace Sand							
SPT 16	24	M	13-25-42-60 (67)	54				3.0					
				55									
				56									
				57			ML						
				58									
SPT 17	24	M	8-12-16-18 (28)	59				1.5					
				60		Stiff							
				61									
				62		62.0 700.6							
				63		SILT, Gray, Hard, Some Sand, Trace Gravel							
SPT 18	15	M	30-43-35-46 (78)	64				4.5					
				65			ML						
				66									
				67		67.0 695.6							
				68		CLAY, Gray, Hard, Little Sand, Trace Gravel	CL						
SPT			11-20-22-										

SAMPLE TYPE NUMBER	RECOVERY (in) (RQD)	Moisture	BLOW COUNTS (N VALUE)	Depth (ft)	Graphic	Soil / Rock Description and Geological Origin for Each Major Unit / Comments	USCS / AASHTO	Strength Qp (tsf)	Liquid Limit (%)	Plasticity Index (%)	Boulders	Drilling Method	Notes
19	24	M	27 (42)	70		CLAY, Gray, Hard, Little Sand, Trace Gravel		4.5					
				71									
				72									
				73			CL						
SPT 20	24	M	15-23-36-31 (59)	74				4.5					
				75									
				76									
				77		77.0 685.6							
						SILT, Gray, Hard, Some Sand, Trace Gravel							
SPT 21	8	M	58-60/4"	78			ML	4.5					
				79									
				80		80.0 682.6							

End of Boring at 80.0 ft.

WI Dept. of Transportation 3502 Kinsman Blvd. Madison, WI 53704	WISDOT PROJECT ID: 1060-33-16 WISDOT STRUCTURE ID: B-40-880-2	BORING ID: B-1 PAGE NO: 4 of 4

SAMPLE TYPE NUMBER	RECOVERY (in) (RQD)	Moisture	BLOW COUNTS (N VALUE)	Depth (ft)	Graphic	Soil / Rock Description and Geological Origin for Each Major Unit / Comments	USCS / AASHTO	Strength Qp (tsf)	Liquid Limit (%)	Plasticity Index (%)	Boulders	Drilling Method	Notes

WI Dept. of Transportation 3502 Kinsman Blvd. Madison, WI 53704	WISDOT PROJECT ID: 1060-33-16 WISDOT STRUCTURE ID: B-40-880	BORING ID: B-1 Gestra PAGE NO: 1 of 2

WISDOT PROJECT NAME: Center Street over US Highway 45	CONSULTANT: Professional Service Industries, Inc.	CONSULTANT PROJECT NO: 0052853-7	LATITUDE:	LONGITUDE:
ROADWAY NAME: Center Street Over USH 45	DRILLING CONTRACTOR: GESTRA	DRILLING CONTRACTOR PROJECT NO:	NORTHING:	EASTING:
DATE STARTED: 10/16/14	CREW CHIEF: A. Woerpel	DRILL RIG: CME-75	COORDINATE SYSTEM: WCCS	
DATE COMPLETED: 10/16/14	LOGGED BY: A. Woerpel	HOLE SIZE: 3.25 in	HORIZONTAL DATUM: WCCS Milwaukee	VERTICAL DATUM: MSL
COUNTY: Milwaukee	LOG QC BY:	HAMMER TYPE: Automatic	STREAMBED ELEVATION: NA	
STATION 462+42 / OFFSET ON R/L	TOWNSHIP: / RANGE: / SECTION: / 1/4 SECTION: / 1/4 1/4 SECTION:		SURFACE ELEVATION: 742.7 ft	

SAMPLE TYPE NUMBER	RECOVERY (in) (RQD)	Moisture	BLOW COUNTS (N VALUE)	Depth (ft)	Graphic	Soil / Rock Description and Geological Origin for Each Major Unit / Comments	USCS / AASHTO	Strength Qp (tsf)	Liquid Limit (%)	Plasticity Index (%)	Boulders	Drilling Method	Notes
SPT 1	5	M	3-3 (6)	1		Asphalt Concrete		2.0				HSA	3 1/4 Hollowstem Auger
				2		2.0 / 740.7							
SPT 2	10	M	2-3-3-4 (6)	3		Moist Brown Clay with Trace Gravel Trace Sand		1.0 3.0					
				4									
SPT 3	22	M	2-3-6-7 (9)	5		Color Change To Gray Moist Clay Trace Gravel		2.5 3.0					
				6									
SPT 4	24	M	3-4-5-6 (9)	7				2.5 2.0					
				8									
SPT 5	24	M	3-6-7-9 (13)	9				1.5 2.5					
				10									
SPT 6	24	M	2-3-6-7 (9)	11				2.0 3.0					
				12									
SPT 7	24	M	2-4-6-7 (10)	13				3.0 3.5					
				14		Moist Gray Clay Trace Gravel							
SPT 8	24	M	2-5-6-8 (11)	15				3.0 3.5					
				16									
SPT 9	24	M	2-5-8-10 (13)	17				3.5 3.5					
				18									
SPT 10	24	M	2-5-9-10 (14)	19				3.0 4.0					
				20		Wet Pockets							
				21									
				22									
				23									
SPT 11	18	M	3-5-7 (12)	24				3.0 3.0					
				25									
				26									
				27		27.0 / 715.7							
						Moist Gray Silt With Trace Sand							
				28									
SPT 12	18	M	5-10-14 (24)	29				4.0					

WATER LEVEL & CAVE-IN OBSERVATION DATA

WATER ENCOUNTERED DURING DRILLING: NMR	CAVE - IN DEPTH AT COMPLETION: NMR	WET ☐ DRY ☐
WATER LEVEL AT COMPLETION: NMR	CAVE - IN DEPTH AFTER 0 HOURS: NMR	WET ☐ DRY ☐

NOTES: 1) Stratification lines between soil types represent the approximate boundary; gradual transition between in-situ soil layers should be expected.
2) NE = Not Encountered; NMR = No Measurement Recorded

WI Dept. of Transportation 3502 Kinsman Blvd. Madison, WI 53704	WISDOT PROJECT ID: 1060-33-16 WISDOT STRUCTURE ID: B-40-880	BORING ID: B-1 Gestra PAGE NO: 2 of 2

SAMPLE TYPE NUMBER	RECOVERY (in) (RQD)	Moisture	BLOW COUNTS (N VALUE)	Depth (ft)	Graphic	Soil / Rock Description and Geological Origin for Each Major Unit / Comments	USCS / AASHTO	Strength Qp (tsf)	Liquid Limit (%)	Plasticity Index (%)	Boulders	Drilling Method	Notes
				31		Moist Gray Silt With Trace Sand							
				32									
				33									
SPT 13	18	M	10-14-19 (33)	34									
				35		Wet Silt And Sand Mix							
				36									
				37		Wet Gray Silt							
				38									
SPT 14	18	W	12-13-16 (29)	39									
				40									
				41									
				42									
				43									
SPT 15	12	M	20-50	44		44.0 698.7 Moist Silt With Gravel		4.5					
				45									
				46									
				47									
				48		48.0 694.7 Saturated Gray Sand & Gravel							
SPT 16	12	W	16-35-44 (79)	49									
				50									
				51		51.5 691.2 Moist Silt With Gravel							
				52									
				53		53.0 689.7							
SPT 17	2	M	50/2"			End of Boring at 53.0 ft.		4.5					

WI Dept. of Transportation 3502 Kinsman Blvd. Madison, WI 53704	WISDOT PROJECT ID: 1060-33-16 WISDOT STRUCTURE ID: B-40-880-3	BORING ID: B-2 PAGE NO: 1 of 4	
WISDOT PROJECT NAME: Center Street over US Highway 45	CONSULTANT: Professional Service Industries, Inc.	CONSULTANT PROJECT NO: 0052853-7	LATITUDE: N43° 04.048' / LONGITUDE: W88.03.181'
ROADWAY NAME: Center Street	DRILLING CONTRACTOR: PSI	DRILLING CONTRACTOR PROJECT NO: 0052853-4	NORTHING: / EASTING:
DATE STARTED: 11/04/14	CREW CHIEF: P. Rotaru	DRILL RIG: Freightliner	COORDINATE SYSTEM: Lat/Long
DATE COMPLETED: 11/04/14	LOGGED BY: D. Zuydhoek	HOLE SIZE: 10 in	HORIZONTAL DATUM: WGS 1984 / VERTICAL DATUM: MSL
COUNTY: Milwaukee	LOG QC BY:	HAMMER TYPE: Automatic	STREAMBED ELEVATION: NA
STATION 462+20 / OFFSET 102' RT	TOWNSHIP: / RANGE: / SECTION: / 1/4 SECTION: / 1/4 1/4 SECTION:		SURFACE ELEVATION: 760.54 ft

SAMPLE TYPE NUMBER	RECOVERY (in) (RQD)	Moisture	BLOW COUNTS (N VALUE)	Depth (ft)	Graphic	Soil / Rock Description and Geological Origin for Each Major Unit / Comments	USCS / AASHTO	Strength Qp (tsf)	Liquid Limit (%)	Plasticity Index (%)	Boulders	Drilling Method	Notes
						0.3 ASPHALT, (4" Thick) 760.2						HSA	
				1		0.6 CONCRETE, (3" Thick) 759.9	GPS						
						0.8 BASE COURSE, (3" Thick) 759.7							
				2		SAND, Brown, Dense, Some Gravel							
				3									
SPT 1	12	M	17-15-16-10 (31)	4			SP						
				5									
				6									
				7									
				8		8.0 752.5							
SPT 2	24	M	9-5-6-8 (11)	9		CLAY, Brown, Very Stiff, Trace Sand and Gravel		3.0					
				10			CL						
				11									
				12									
				13		13.0 747.5							
SPT 3	24	M	5-7-8-11 (15)	14		CLAY, Brown, Very Stiff, Trace Silt, Sand and Gravel		2.5					
				15			CL						
				16									
				17									
				18		18.0 742.5							
SPT 4	24	M	6-7-11-13 (18)	19		CLAY, Gray, Very Stiff, Trace Sand and Gravel		3.5					
				20									
SPT 5	24	M	12-10-12-12 (22)	21				2.5					
				22									
SPT 6	24	M	11-13-11-12 (24)	23			CL	2.5					
				24									
SPT 7	24	M	4-7-8-11 (15)	25		Stiff		1.75					
				26									
SPT 8	18	M	5-6-13-15 (19)	27		Hard		4.5					
				28		28.0 732.5							
SPT 9	24	W	19-22-16-16 (38)	29		SAND, Gray, Dense, Little Silt	SP						

WATER LEVEL & CAVE-IN OBSERVATION DATA

WATER ENCOUNTERED DURING DRILLING: NMR	CAVE - IN DEPTH AT COMPLETION: NMR	WET ☐ DRY ☐
WATER LEVEL AT COMPLETION: NMR	CAVE - IN DEPTH AFTER 0 HOURS: NMR	WET ☐ DRY ☐

NOTES: 1) Stratification lines between soil types represent the approximate boundary; gradual transition between in-situ soil layers should be expected.
2) NE = Not Encountered; NMR = No Measurement Recorded

P:\GINT\WISDOT GINT PROJECTS\GINT_40\B-40-880.GPJ Center Street over US Highway 45 2/11/15

SAMPLE TYPE NUMBER	RECOVERY (in) (RQD)	Moisture	BLOW COUNTS (N VALUE)	Depth (ft)	Soil / Rock Description and Geological Origin for Each Major Unit / Comments	USCS / AASHTO	Strength Qp (tsf)	Liquid Limit (%)	Plasticity Index (%)	Boulders	Drilling Method	Notes
SPT 10	24	W	2-3-6-9 (9)	31	SAND, Gray, Dense, Little Silt Loose	SP						
				32	32.0 728.5							
SPT 11	24	W	6-9-13-15 (22)	33	CLAY, Gray, Very Stiff, Trace Sand and Gravel		3.0					
				34								
SPT 12	24	W	4-6-8-8 (14)	35			2.5					
				36								
				37	Little Sand	CL						
				38								
SPT 13	24	W	5-6-11-12 (17)	39			2.75					
				40								
				41								
				42								
				43	43.0 717.5							
SPT 14	24	M	7-8-12-12 (20)	44	CLAY, Gray, Very Stiff, Trace Gravel		2.75					
				45								
				46		CL						
				47								
				48	48.0 712.5							
SPT 15	24	W	6-9-12-19 (21)	49	SILT, Gray, Stiff, Trace Sand		1.5				MR	
				50								
				51								
				52								
				53		ML						
SPT 16	18	W	17-18-20-22 (38)	54			1.0					
				55								
				56								
				57								
				58	58.0 702.5							
SPT 17	24	W	5-8-13-16 (21)	59	CLAY, Gray, Very Stiff, Trace Sand and Gravel		3.0					
				60								
				61		CL						
				62								
				63	63.0 697.5							
SPT 18	18	W	10-13-14-27 (27)	64	SILT, Gray, Stiff, Trace Sand		1.75					
				65								
				66		ML						
				67								
				68								
SPT	17	W	37-57-		69.0 691.5		4.5					

WI Dept. of Transportation 3502 Kinsman Blvd. Madison, WI 53704	WISDOT PROJECT ID: 1060-33-16 WISDOT STRUCTURE ID: B-40-880-3	BORING ID: B-2 PAGE NO: 3 of 4

SAMPLE TYPE NUMBER	RECOVERY (in) (RQD)	Moisture	BLOW COUNTS (N VALUE)	Depth (ft)	Graphic	Soil / Rock Description and Geological Origin for Each Major Unit / Comments	USCS / AASHTO	Strength Qp (tsf)	Liquid Limit (%)	Plasticity Index (%)	Boulders	Drilling Method	Notes
19			60/5"			SILTY CLAY, Gray, Hard, Trace Sand and Gravel							
				70									
				71			CL-ML						
				72									
				73		73.0 687.5							
SPT 20	12	W	53-48-60/4"			SAND, Gray, Very Dense, Some Gravel, Trace Silt							
				74									
				75									
				76			SP						
				77									
				78									
SPT 21	2	W	60/2"										
				79									
				80		80.0 680.5							

End of Boring at 80.0 ft.

SAMPLE TYPE NUMBER	RECOVERY (in) (RQD)	Moisture	BLOW COUNTS (N VALUE)	Depth (ft)	Graphic	Soil / Rock Description and Geological Origin for Each Major Unit / Comments	USCS / AASHTO	Strength Qp (tsf)	Liquid Limit (%)	Plasticity Index (%)	Boulders	Drilling Method	Notes

WI Dept. of Transportation 3502 Kinsman Blvd. Madison, WI 53704	WISDOT PROJECT ID: 1060-33-16 WISDOT STRUCTURE ID: R-40-578-3	BORING ID: B-3 PAGE NO: 1 of 2	
WISDOT PROJECT NAME: Center Street over US Highway 45	CONSULTANT: Professional Service Industries, Inc.	CONSULTANT PROJECT NO: 0052853-7	LATITUDE: N43° 04.034' / LONGITUDE: W88° 03.180'
ROADWAY NAME: Center Street Over USH 45	DRILLING CONTRACTOR: PSI	DRILLING CONTRACTOR PROJECT NO: 0052853-4	NORTHING: / EASTING:
DATE STARTED: 11/05/14	CREW CHIEF: M. Ball	DRILL RIG: Diedrich D-50	COORDINATE SYSTEM: Lat/Long
DATE COMPLETED: 11/05/14	LOGGED BY: D. Zuydhoek	HOLE SIZE: 10 in	HORIZONTAL DATUM: WGS 1984 / VERTICAL DATUM: MSL
COUNTY: Milwaukee	LOG QC BY:	HAMMER TYPE: Automatic	STREAMBED ELEVATION: NA
STATION 461+60 / OFFSET 94' RT	TOWNSHIP: / RANGE: / SECTION: / 1/4 SECTION: / 1/4 1/4 SECTION:		SURFACE ELEVATION: 759.43 ft

SAMPLE TYPE NUMBER	RECOVERY (in) (RQD)	Moisture	BLOW COUNTS (N VALUE)	Depth (ft)	Soil / Rock Description and Geological Origin for Each Major Unit / Comments	USCS / AASHTO	Strength Qp (tsf)	Liquid Limit (%)	Plasticity Index (%)	Boulders	Drilling Method	Notes
SPT 1	18	D	3-5-9-10 (14)	1	0.7 TOPSOIL, (8" Thick) 758.7 SAND, Brown, Firm, Fine to Coarse, Trace Silt and Gravel	SP					HSA	
SPT 2	24	D	12-7-6-6 (13)	2, 3	3.0 756.4 SAND, Light Brown, Firm, Fine to Medium	SP						
SPT 3	24	M	4-6-8-11 (14)	4, 5	4.0 755.4 SILTY CLAY, Brown, Hard, Trace Sand and Gravel	CL-ML	4.5					
SPT 4	12	M	7-12-20-18 (32)	6, 7			4.5					
SPT 5	24	M	5-6-10-12 (16)	8, 9			4.5					
SPT 6	24	M	12-25-25-23 (50)	10, 11			4.5					
SPT 7	24	M	18-15-17-17 (32)	12, 13	12.0 747.4 CLAY, Gray, Very Stiff, Trace Sand and Gravel	CL	3.0					
SPT 8	24	M	4-6-7-7 (13)	14, 15			2.5					
				16, 17								
SPT 9	24	M	5-6-8-10 (14)	18, 19			3.25					
				20, 21								
				22, 23								
SPT 10	24	M	9-7-8-8 (15)	24			2.5					
				25, 26								
				27, 28								
SPT 11	24	W	28-16-13-13 (29)	29	29.0 730.4 SAND, Gray, Firm, Fine, Little Silt	SP						

WATER LEVEL & CAVE-IN OBSERVATION DATA

WATER ENCOUNTERED DURING DRILLING: NMR	CAVE - IN DEPTH AT COMPLETION: NMR	WET ☐ DRY ☐
WATER LEVEL AT COMPLETION: NMR	CAVE - IN DEPTH AFTER 0 HOURS: NMR	WET ☐ DRY ☐

NOTES: 1) Stratification lines between soil types represent the approximate boundary; gradual transition between in-situ soil layers should be expected.
2) NE = Not Encountered; NMR = No Measurement Recorded

P:\GINT\WISDOT GINT PROJECTS\GINT_40\B-40-880.GPJ Center Street over US Highway 45 2/11/15

WI Dept. of Transportation 3502 Kinsman Blvd. Madison, WI 53704	WISDOT PROJECT ID: 1060-33-16 WISDOT STRUCTURE ID: R-40-578-3	BORING ID: B-3 PAGE NO: 2 of 2

SAMPLE TYPE NUMBER	RECOVERY (in) (RQD)	Moisture	BLOW COUNTS (N VALUE)	Depth (ft)	Graphic	Soil / Rock Description and Geological Origin for Each Major Unit / Comments	USCS / AASHTO	Strength Qp (tsf)	Liquid Limit (%)	Plasticity Index (%)	Boulders	Drilling Method	Notes
				31		SAND, Gray, Firm, Fine, Little Silt							
				32									
				33									
SPT 12	24	W	3-3-6-6 (9)	34			SP						
				35		Loose							
				36									
				37		37.0 722.4							
						SILT, Gray, Very Stiff, Little Sand, Trace Clay							
				38									
SPT 13	24	W	4-8-7-8 (15)	39			ML	3.0					
				40		40.0 719.4							

End of Boring at 40.0 ft.

CORRESPONDENCE/MEMORANDUM _____State of Wisconsin

DATE: April 10, 2015

TO: Casey Wierzchowski, P.E.
Southeast Region Soils Engineer

FROM: Jeffrey D Horsfall, P.E.
Geotechnical Engineer

SUBJECT: **Site Investigation Report**
Project I.D. 1060-33-16
R-40-0577
Center Street over USH 45
(West Abutment B-40-0880)
Milwaukee County

Attached is the Site Investigation Report for the above project.

Please call if you have any questions.

Attachments

cc: Southeast Region (via e-mail)
Bureau of Structures, Structures Design (via e-submit)
Geotechnical File (original)

Site Investigation Report
Project I.D. 1060-33-16
Structure R-40-0577
Center Street over USH 45
(West Abutment B-40-0880)
Milwaukee County
April 10, 2015

1. GENERAL

The project is a retaining wall located along the west side of USH 45 near Center Street, Milwaukee County. A portion of the proposed retaining wall supports the West Abutment of B-40-0880. Table 1 presents the location of the wall compared to the wall stationing

Table 1: Wall Locations

USH 45 Roadway Station	Wall Station	Description
457+75.0, 92.0' left	10+00.0	Beginning of Wall and supports side slope
463+22.0, 94.0' left	12+33.8	End of Wall and supports side slope

The maximum exposed height is 24.9 feet. The proposed wall type is a MSE wall with precast concrete panels. Aesthetics is a key item to consider in the evaluation of the wall. A portion of the wall is located within a cut section of the roadway. Topography in the general vicinity is urban with a bridge approach located near the wall.

The Southeast Region requested that the Geotechnical Unit evaluate a MSE wall with precast concrete panels. The following report presents the results of the subsurface investigation, the design evaluation, the findings, the conclusions and the recommendations.

2. SUBSURFACE CONDITIONS

Wisconsin Department of Transportation contracted with PSI to completed three borings near the proposed wall. Samples were collected with a method conforming to AASHTO T-206, Standard Penetration Test, using an automatic hammer. The purpose of the borings was to define subsurface soil conditions at this site. Soil textures in the boring logs were field identified by the drillers. Attachment 1 presents tables showing the summaries of subsurface conditions logged in the borings at this site and at the time of drilling for the retaining wall. Attachment 2 presents a figure that illustrates the boring locations and graphical representations of the boring logs. The original borings logs are available at the Central Office Geotechnical Engineering Unit and will be made available upon request.

The following describes the subsurface conditions in the three borings:

0.0 feet to 1.0 foot of pavement structure, overlying
0.0 feet to 7.5 feet of dark brown, soft, clay, trace sand and gravel (fill, B-1), overlying
3.0 feet to 36.5 feet of brown, medium hard to hard, clay, trace sand and gravel, overlying
5.0 feet to 25.0 feet of brown to gray, fine to medium, firm to very dense, sand or silt, trace gravel, overlying
Gray, very hard, silt and clay, little sand, trace gravel

Generally, groundwater was not encountered in the borings at the time of drilling.

3. ANALYSIS ASSUMPTIONS

Chapter 14 of the WisDOT Bridge Manual describe ten different types of retaining structures: reinforced cantilever, gabion, post and panel, sheet pile, modular block gravity, mechanically stabilized earth (MSE) with 4 types of facings, and modular bin and crib walls. Geotechnical Engineering Unit procedures require that the wall alternatives requested by the region be evaluated to determine the feasibility at a particular location, from a geotechnical standpoint.

Table 2 presents the design soil parameters utilized for the analyses, which approximate the conditions at B-7, B-6 and B-1.

Table 2: Soil Parameters

Soil Description	Friction Angle (degrees)	Cohesion (psf)	Unit Weight (pcf)
Granular Backfill Within the wall in the reinforcing zone	30	0	120
Fill Behind and below the reinforcing zone	31	0	120
B-7, 11+00			
Silt, gray, trace sand and gravel (Elevation 745.9 ft – 741.4 ft)	0	4,500	135
Sand, gray, fine to medium (Elevation 741.4 ft – 737.4 ft)	36	0	135
Silt, gray, trace sand, trace clay (Elevation 737.4 ft – 723.4 ft)	0	2,500	125
Silt, gray, trace sand, trace clay (Elevation 723.4 ft – 716.4 ft)	0	4,500	135
B-6, 12+00			
Silt, gray, trace clay, trace sand, trace gravel (Elevation 743.4 ft – 738.4 ft)	0	4,500	135
Sand, gray, fine to medium (Elevation 738.4 ft – 732.4 ft)	32	0	120
Clay, gray, little silt, trace sand, trace gravel (Elevation 732.4 ft – 710.4 ft)	0	3,000	128
Clay, gray, little silt, trace sand, trace gravel (Elevation 710.4 ft – 709.4 ft)	0	4,500	135
B-1, 14+60			
Clay, gray, trace gravel (Elevation 738.6 ft – 733.6 ft)	0	3,000	125
Clay, gray, trace gravel (Elevation 733.6 ft – 729.6 ft)	0	2,500	120
Clay, gray, trace gravel (Elevation 729.6 ft – 717.6 ft)	0	2,000	120
Clay and Silt, gray, trace sand and gravel (Elevation 717.6 ft – 705.6 ft)	0	4,500	135

Table 2: Soil Parameters			
Soil Description	Friction Angle (degrees)	Cohesion (psf)	Unit Weight (pcf)
B-1, 14+60 (continued)			
Clay, gray, trace sand (Elevation 705.6 ft – 700.6 ft)	0	2,000	120
Silt, gray, some sand, trace gravel (Elevation 700.6 ft and below)	0	25,000	135

The typical wall section used in the analyses had an **exposed** height that varies from 8.7 feet to 24.9 feet. The following assumptions are also included in the analyses:

1. The slope in front and behind the wall is horizontal.
2. Groundwater was not used in the analyses.
3. The granular backfill is free draining and will not become saturated.
4. The minimum embedment depth is 1.5 feet.
5. A surcharge load of 240 psf is included to model pedestrian and lightweight construction equipment.
6. An additional surcharge load equivalent to the weight of the soil behind the abutment is also included in the design.
7. Global stability factor of safety was determined by the computer program STABLPRO.
8. Bearing resistance is determined by Terzaghi's bearing capacity equation.
9. Settlement of the foundation on cohesionless and cohesive soil is based upon methods described in the FHWA Soils and Foundations Manual.

4. RESULTS OF ANALYSIS

The Geotechnical Unit evaluated a MSE wall with precast concrete facing for the project. The wall was evaluated for sliding, overturning, bearing resistance, global stability and settlement.

Table 3 presents the results of the evaluation and the Capacity to Demand Ratio (CDR).
The exposed wall height examined varied from 8.7 feet to 24.9 feet. The length of reinforcement for the wall is determined by meeting the eccentricity requirements (B/4>e) and a minimum embedment length of 8 feet.

The results of the evaluation indicated that if the sliding and bearing resistance requirements are met, then the eccentricity is also met. The global stability of the wall at the critical location was stable with a CDR of greater than 1.0.

The settlement of the foundation was estimated to be less than 1 inches and should occur within years of loading of the wall. The subsurface soils are relatively uniform; therefore, differential settlement should not be an issue.

Table 3: Results of MSE Wall External Stability Evaluation				
Dimensions				
Wall Height (feet)[1]	10.2	13.2	18.8	26.4
Exposed Wall Height (feet)	8.7	11.7	17.3	24.9
Length of Reinforcement (feet)[3]	8.0	9.2	17.4	18.5
Length of Rein. / Wall Height	NA	0.70	0.93	0.70
Wall Station	11+00.0	12+00.0	14+50.0	14+67.2
Boring Used	B-7	B-6	B-1	B-1
Capacity to Demand Ratio (CDR)[4]				
Sliding (CDR > 1.0)	1.4	1.3	1.0	1.5
Eccentricity (CDR > 1.0)	1.5	1.2	1.0	1.3
Global Stability (CDR > 1.0)	NA	NA	2.1	NA
Bearing Resistance (CDR > 1.0)	2.4	1.8	1.1	1.1
Required Bearing Resistance (psf)	6,000	6,000	7,000	7,000

1. The wall height includes an embedment of 1.5 feet.
2. The wall stability evaluation included a surcharge load that was equal to the weight of the soil behind the abutment.
3. The length of reinforcement is the minimum required length.
4. CDR requirements and load and resistance factors are presented in Chapter 14 of the Bridge Manual.
5. NA not applicable, global slope stability was evaluated at the critical wall location.

5. FINDINGS AND CONCLUSIONS

The following findings and conclusions are based upon the subsurface conditions and the analysis:

1. The following describes the subsurface conditions in the three borings:

   0.0 feet to 1.0 foot of pavement structure, overlying
   0.0 feet to 7.5 feet of dark brown, soft, clay, trace sand and gravel (fill, B-1), overlying
   3.0 feet to 36.5 feet of brown, medium hard to hard, clay, trace sand and gravel, overlying
   5.0 feet to 25.0 feet of brown to gray, fine to medium, firm to very dense, sand or silt, trace gravel, overlying
   Gray, very hard, silt and clay, little sand, trace gravel

2. The groundwater was not encountered in the investigation.

3. Table 3 presents the results of the external stability evaluation and shows that if the sliding and bearing resistance requirements are satisfied, then the eccentricity and global stability will also be satisfied.

4. Settlement of the foundation was estimated to be less than 2 inches and should occur within months of loading of the wall. The subsurface soils are relatively uniform; therefore, differential settlement should not be an issue.

6. RECOMMENDATIONS

The following recommendations are based upon the findings and conclusions:

1. The MSE wall with precast concrete panels will achieve the external stability factors of safety if the sliding and bearing resistance requirements are met. Table 3 presents the minimum length of the reinforcement at the locations evaluated. In the area of the wall that supports the abutment, the ratio of length of reinforcement to total height of wall should be increased from 0.70 to 0.93.

2. The contractor should remove 6-inches of topsoil and silt and clay below the reinforcing zone and replace with granular fill in the areas that the topsoil and silt and clay are encountered.

3. The backfill behind the MSE wall with precast concrete facing should be granular and free draining.

4. The Southeast Region soils engineer should review the fill subsurface conditions prior to construction of the wall.

Attachment 1
Tables of Subsurface Conditions

Site Investigation Report
Structure R-40-0577
Attachment 1

Subsurface Conditions: R-40-0577							
B-7 Station 458+75 85.5 feet left of USH 45 RL				**B-6 Station 459+75 85.5 feet left of USH 45 RL**			
Estimated Top of Soil Layer Elevation (feet)	**Soil Description**	**SPT Blow count**	**Corr. SPT Blow count**	**Estimated Top of Soil Layer Elevation (feet)**	**Soil Description**	**SPT Blow count**	**Corr. SPT Blow count**
751.4	Clay, brown, trace sand and gravel Qp=3.5	9	20	749.4	Clay, brown, trace sand and gravel Qp=2.25 – 2.5	7,12, 8	16,22, 13
748.4	Sand, brown, fine to medium, trace clay	18	33	743.9	Silt, gray, trace clay, trace sand, trace gravel Qp=4.5 – 4.5+	42,26	63,36
747.4	Silt, gray, trace sand and gravel Qp=3.0 – 4.5+	36,56, 62	58,82, 85	738.4	Sand, gray, fine to medium	12,31, 26	16,39, 31
741.4	Sand, gray, fine to medium	55,47	71,57	732.4	Clay, gray, little silt, trace sand, trace gravel Qp=3.25 – 4.5	23,17, 15,18	25,17, 14,16
737.4	Silt, gray, trace sand, trace clay Qp=2.5 – 4.5+	18,25, 18	21,27, 18	710.4	Clay, gray, little silt, trace sand, trace gravel Qp=3.5	43	35
723.4	Silt, gray, trace sand, trace clay Qp=3.5	108, 60/4”	100, 51/4”	709.4	EOB		
716.4	EOB						

1. Blow counts are corrected for SPT hammer efficiency and overburden pressure.
2. First elevation is the surface elevation for the boring.
3. Qp = Unconfined compression strength as determined by a pocket penetrometer, tons/ft^2.
4. EOB is the end of boring.

Subsurface Conditions: R-40-0577			
B-1 Station 462+35.0 112.5 feet left of USH 45 RL			
Estimated Top of Soil Layer Elevation (feet)	**Soil Description**	**SPT Blow count**	**Corr. SPT Blow count**
762.6	Pavement Structure		
761.6	Clay, dark brown, trace sand and gravel (fill)	4	7
754.1	Clay, brown, some silt, trace sand and gravel Qp=3.0	18	25
749.6	Clay, gray, trace gravel Qp=1.75 – 3.5	15,13,14	18,14,15
739.6	Clay, gray, trace gravel Qp=3.0 – 3.75	20,14,18	21,14,17
733.6	Clay, gray, trace gravel Qp=2.0 – 2.5	23,29	22,26
729.6	Clay, gray, trace gravel Qp=1.5 – 3.0	13,15,24,17	12,13,20,13
717.6	Clay and Silt, gray, trace sand and gravel Qp=3.0 - 4.5+	66,67	49,47
705.6	Silt, gray, trace sand Qp=1.5	28	18
700.6	Silt, gray, some sand, trace gravel Qp=4.5+	78,42,59, 60/4”	49,25,34, 33/4”
682.6	EOB		

1. Blow counts are corrected for SPT hammer efficiency and overburden pressure.
2. First elevation is the surface elevation for the boring.
3. Qp = Unconfined compression strength as determined by a pocket penetrometer, tons/ft^2.
4. EOB is the end of boring.

Attachment 2
Wall Figure

ZOO INTERCHANGE, NORTH LEG
CENTER STREET OVER USH 45

BORING #	DATE COMPLETED	NORTHING (Y)	EASTING (X)
1	11/3/2014	310125.9	567409.9
6	11/7/2014	309858.5	567454.0
7	11/7/2014	309749.1	567476.0
BORINGS COMPLETED BY: PSI			
REPORT COMPLETED BY: WISDOT			
ALL COORDINATES REFERENCED TO WCCS NAD 83(91) MILWAUKEE COUNTY			

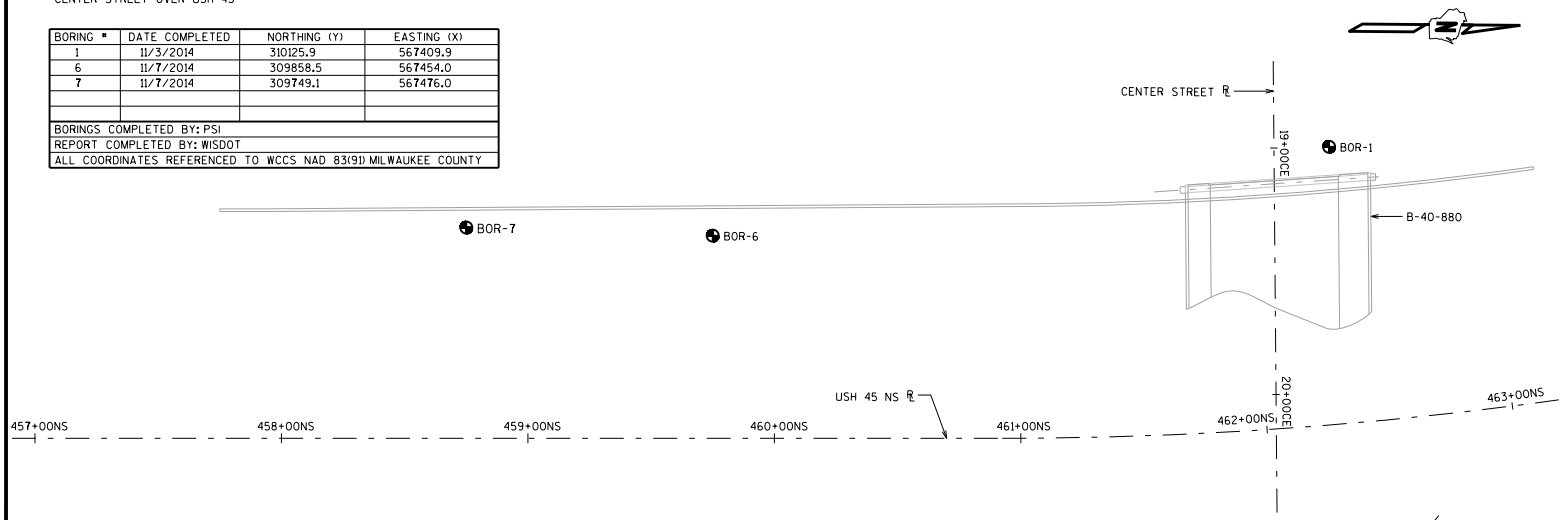

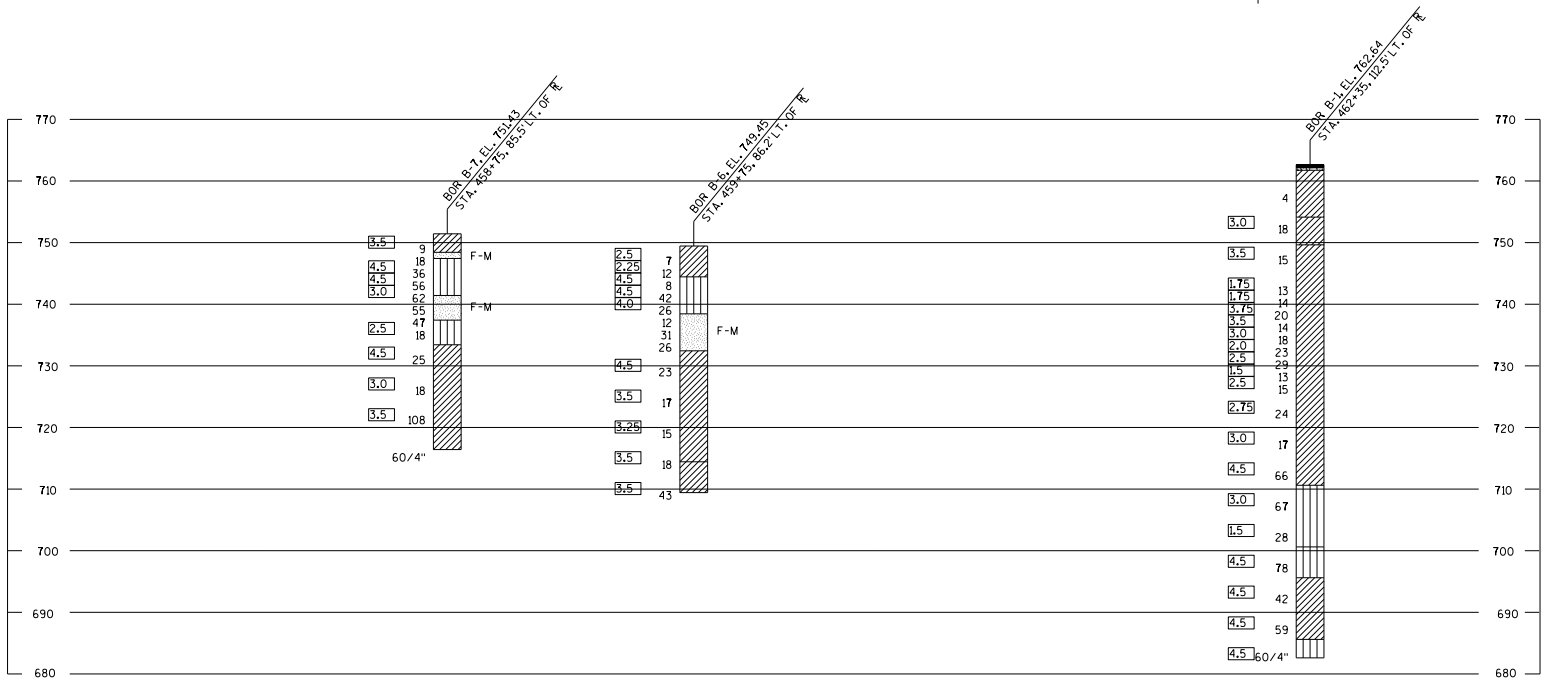

STATE PROJECT NUMBER

1060-33-16

MATERIAL SYMBOLS

ASPHALT, TOPSOIL, PEAT, CONCRETE, FILL, GRAVEL, SAND, CLAY, SILT, BOULDERS OR COBBLES, LIMESTONE, BEDROCK (UNKNOWN), SHALE, SANDSTONE, IGNEOUS/META

LEGEND OF BORING

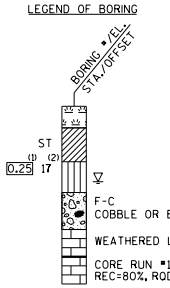

(1) UNCONFINED STRENGTH, AS DETERMINED BY A POCKET PENETROMETER (TSF)

(2) UNLESS OTHERWISE, SPECIFIED THE SPT 'N' VALUE IS BASED ON AASHTO T-206, STANDARD PENETRATION TEST. THE SPT 'N' VALUE PRESENTED HAS NOT BEEN CORRECTED FOR OVERBURDEN PRESSURE OR HAMMER EFFICIENCY.

GROUND WATER ELEVATION

AT TIME OF DRILLING
END OF DRILLING
AFTER DRILLING

ABBREVIATIONS

F-FINE M-MEDIUM C-COARSE ST-SHELBY TUBE

SUBSURFACE EXPLORATION FOR FOUNDATION DESIGN AND BIDDERS INFORMATION

BORINGS WERE COMPLETED AT POINTS APPROXIMATELY AS INDICATED ON THIS DRAWING TO OBTAIN INFORMATION CONCERNING THE CHARACTER OF SUBSURFACE MATERIALS FOUND AT THE SITE. BECAUSE THE INVESTIGATED DEPTHS ARE LIMITED AND THE AREA OF THE BORINGS IS VERY SMALL IN RELATION TO THE ENTIRE SITE, THE WISCONSIN DEPARTMENT OF TRANSPORTATION DOES NOT WARRANT SIMILAR SUBSURFACE CONDITIONS BELOW, BETWEEN, OR BEYOND THESE BORINGS. VARIATIONS IN SOIL CONDITIONS SHOULD BE EXPECTED AND FLUCTUATIONS IN GROUNDWATER LEVELS MAY OCCUR.

NO.	DATE	REVISION	BY

STATE OF WISCONSIN
DEPARTMENT OF TRANSPORTATION
STRUCTURES DESIGN SECTION

STRUCTURE R-40-577

DRAWN BY PR | PLANS CK'D.

SUBSURFACE EXPLORATION

SHEET

8

SCALE =

This page intentionally left blank.

Table of Contents

11.1 General 4
11.1.1 Overall Design Process 4
11.1.2 Foundation Type Selection 4
11.1.3 Cofferdams 6
11.1.4 Vibration Concerns 6
11.2 Shallow Foundations 8
11.2.1 General 8
11.2.2 Footing Design Considerations 8
11.2.2.1 Minimum Footing Depth 8
11.2.2.1.1 Scour Vulnerability 9
11.2.2.1.2 Frost Protection 9
11.2.2.1.3 Unsuitable Ground Conditions 10
11.2.2.2 Tolerable Movement of Substructures Founded on Shallow foundations 10
11.2.2.3 Location of Ground Water Table 11
11.2.2.4 Sloping Ground Surface 11
11.2.3 Settlement Analysis 11
11.2.4 Overall Stability 12
11.2.5 Footings on Engineered Fills 13
11.2.6 Construction Considerations 14
11.2.7 Geosynthetic Reinforced Soil (GRS) Abutment 14
11.3 Deep Foundations 15
11.3.1 Driven Piles 15
11.3.1.1 Conditions Involving Short Pile Lengths 15
11.3.1.2 Pile Spacing 16
11.3.1.3 Battered Piles 17
11.3.1.4 Corrosion Loss 17
11.3.1.5 Pile Points 17
11.3.1.6 Preboring 18
11.3.1.7 Seating 18
11.3.1.8 Pile Embedment in Footings 18
11.3.1.9 Pile-Supported Footing Depth 19
11.3.1.10 Splices 19

11.3.1.11 Painting 19
11.3.1.12 Selection of Pile Types 19
11.3.1.12.1 Timber Piles 20
11.3.1.12.2 Concrete Piles 20
11.3.1.12.2.1 Driven Cast-In-Place Concrete Piles 21
11.3.1.12.2.2 Precast Concrete Piles 23
11.3.1.12.3 Steel Piles 23
11.3.1.12.3.1 H-Piles 24
11.3.1.12.3.2 Pipe Piles 25
11.3.1.12.3.3 Oil Field Piles 25
11.3.1.12.4 Pile Bents 26
11.3.1.13 Tolerable Movement of Substructures Founded on Driven Piles 26
11.3.1.14 Resistance Factors 26
11.3.1.15 Bearing Resistance 28
11.3.1.15.1 Shaft Resistance 29
11.3.1.15.2 Point Resistance 32
11.3.1.15.3 Group Capacity 33
11.3.1.16 Lateral Load Resistance 33
11.3.1.17 Other Design Considerations 34
11.3.1.17.1 Downdrag Load 34
11.3.1.17.2 Lateral Squeeze 35
11.3.1.17.3 Uplift Resistance 35
11.3.1.17.4 Pile Setup and Relaxation 35
11.3.1.17.5 Drivability Analysis 36
11.3.1.17.6 Scour 40
11.3.1.17.7 Typical Pile Resistance Values 40
11.3.1.18 Construction Considerations 42
11.3.1.18.1 Pile Hammers 43
11.3.1.18.2 Driving Formulas 44
11.3.1.18.3 Field Testing 45
11.3.1.18.3.1 Installation of Test Piles 46
11.3.1.18.3.2 Static Pile Load Tests 46
11.3.1.19 Construction Monitoring for Economic Evaluation of Deep Foundations 47
11.3.2 Drilled Shafts 49

11.3.2.1 General 49
11.3.2.2 Resistance Factors 50
11.3.2.3 Bearing Resistance 52
11.3.2.3.1 Shaft Resistance 52
11.3.2.3.2 Point Resistance 53
11.3.2.3.3 Group Capacity 53
11.3.2.4 Lateral Load Resistance 53
11.3.2.5 Other Considerations 53
11.3.3 Micropiles 53
11.3.3.1 General 53
11.3.3.2 Design Guidance 54
11.3.4 Augered Cast-In-Place Piles 54
11.3.4.1 General 54
11.3.4.2 Design Guidance 55
11.4 References 56
11.5 Design Examples 58

11.1 General

11.1.1 Overall Design Process

The overall foundation support design process requires an iterative collaboration to provide cost-effective constructible substructures. Input is required from multiple disciplines including, but not limited to, structural, geotechnical and design. For a typical bridge design, the following four steps are required (see 6.2):

1. Structure Survey Report (SSR) – This design step results in a very preliminary evaluation of the structure type and approximate location of substructure units, including a preliminary layout plan.

2. Site Investigation Report – Based on the Structure Survey Report, a Geotechnical Investigation (see Chapter 10 – Geotechnical Investigation) is required, including test borings to determine foundation requirements. A hydraulic analysis is also performed at this time, if required, to assess scour potential and maximum scour depth. The Site Investigation Report and Subsurface Exploration Drawing are used to identify known constraints that would affect the foundations in regard to type, location or size and includes foundation recommendations to support detailed structural design. Certain structure sites/types may require the preliminary structure plans (Step 3) prior to initiating the geotechnical site investigation. One example of this is a multi-span structure over water. See 6.2 for more information.

3. Preliminary Structure Plans – This design step involves preparation of a general plan, elevation, span arrangement, typical section and cost estimate for the new bridge structure. The Site Investigation Report is used to identify possible poor foundation conditions and may require modification of the structure geometry and span arrangement. This step may require additional geotechnical input, especially if substructure locations must be changed.

4. Final Contract Plans for Structures – This design step culminates in final plans, details, special provisions and cost estimates for construction. The Subsurface Exploration sheet(s) are part of the Final Contract Plans. Unless design changes are required at this step, additional geotechnical input is not typically required to prepare foundation details for the Final Contract Plans.

11.1.2 Foundation Type Selection

The following items need to be assessed to select site-specific foundation types:

- Magnitude and direction of loads.
- Depth to suitable bearing material.
- Potential for liquefaction, undermining or scour.
- Frost potential.

- Performance requirements, including deformation (settlement), lateral deflection, global stability and resistance to bearing, uplift, lateral, sliding and overturning forces.
- Ease, time and cost of construction.
- Environmental impact of design and construction.
- Site constraints, including restricted right-of-way, overhead and lateral clearance, construction access, utilities and vibration-sensitive structures.

Based on the items listed above, an assessment is made to determine if shallow or deep foundations are suitable to satisfy site-specific needs. A shallow foundation, as defined in this manual, is one in which the depth to the bottom of the footing is generally less than or equal to twice the smallest dimension of the footing. Shallow foundations generally consist of spread footings but may also include rafts that support multiple columns and typically are the least costly foundation alternative.

Shallow foundations are typically initially considered to determine if this type of foundation is technically and economically viable. Often foundation settlement and lateral loading constraints govern, rather than bearing capacity. Other significant considerations for selection of shallow foundations include requirements for cofferdams, bottom seals, dewatering, temporary excavation support/shoring, over-excavation of unsuitable material, slope stability, available time to dissipate consolidation settlement prior to final construction, scour susceptibility, environmental impacts and water quality impacts. Shallow foundations may not be economically viable when footing excavations exceed 10 to 15 feet below the final ground surface elevation.

When shallow foundations are not satisfactory, deep foundations are considered. Deep foundations can transfer foundation loads through shallow deposits to underlying deposits of more competent deeper bearing material. Deep foundations are generally considered to mitigate concerns about scour, lateral spreading, excessive settlement and satisfy other site constraints.

Common types of deep foundations for bridges include driven piling, drilled shafts, micropiles and augercast piles. Driven piling is the most frequently-used type of deep foundation in Wisconsin. Drilled shafts may be advantageous where a very dense stratum must be penetrated to obtain required bearing, uplift or lateral resistance are concerns, or where obstructions may result in premature driving refusal or where piers need to be founded in areas of shallow bedrock or deep water. A drilled shaft may be more cost effective than driven piling when a drilled shaft is extended into a column and can be used to eliminate the need for a pile footing, pile casing or cofferdams.

Micropiles may be the best foundation alternatives where headroom is restricted or foundation retrofits are required at existing substructures. Micropiles tend to have a higher cost than traditional foundations.

Augercast piles are a potentially cost-effective foundation alternative, especially where lateral loads are minimal. However, restrictions on construction quality control including pile integrity

and capacity need to be considered when augercast piles are being investigated. Augercast piles tend to have a higher cost than traditional foundations.

11.1.3 Cofferdams

At stream crossings, tremie-sealed cofferdams are frequently used when footing concrete is required to be placed below the surrounding water level.. The tremie-seal typically consists of a plain-cement concrete slab that is placed underwater (in the wet), within a closed-sided cofferdam that is generally constructed of sheetpiling. The seal concrete is placed after the excavation within the cofferdam has been completed to the proper elevation. The seal has three main functions: allowing the removal of water in the cofferdam so the footing concrete can be placed in the dry; serving as a counterweight to offset buoyancy due to differing water elevations within and outside of the cofferdam; and minimizing the possible deterioration of the excavation bottom due to piping and bottom heave. Concrete for tremie-seals is permitted to be placed with a tremie pipe underwater (in-the-wet). Footing concrete is typically required to be placed in-the-dry. In the event that footing concrete must be placed in-the-wet, a special provision for underwater inspection of the footing subgrade is required.

When bedrock is exposed in the bottom of any excavation and prior to placement of tremie concrete, the bedrock surface must be cleaned and inspected to assure removal of loose debris. This will assure good contact between the bedrock and eliminate the potential consolidation of loose material as the footing is loaded.

Cofferdams need to be designed to determine the required sheetpile embedment needed to provide lateral support, control piping and prevent bottom heave. The construction sequence must be considered to provide adequate temporary support, especially when each row of ring struts is installed. Over-excavation may be required to remove unacceptable materials at the base of the footing. Piles may be required within cofferdams to achieve adequate nominal bearing resistance. WisDOT has experienced a limited number of problems achieving adequate penetration of displacement piles within cofferdams when sheetpiling is excessively deep in granular material. Cofferdams are designed by the Contractor.

Refer to 13.11.5 for further guidance to determine the required thickness of cofferdam seals and to determine when combined seals and footings are acceptable.

11.1.4 Vibration Concerns

Vibration damage is a concern during construction, especially during pile driving operations. The selection process for the type of pile and hammer must consider the presence of surrounding structures that may be damaged due to high vibration levels. Pile driving operations can cause ground displacement, soil densification and other factors that can damage nearby buildings, structures and/or utilities. Whenever pile-driving operations pose the potential for damage to adjacent facilities (usually when they are located within approximately 100 feet), a vibration-monitoring program should be implemented. This program consists of requiring and reviewing a pile-driving plan submittal, conducting pre-driving and post-driving condition surveys and conducting the actual vibration monitoring with an approved seismograph. A special provision for implementing a vibration monitoring program is available and should be used on projects whenever pile-driving operations or other construction

activities pose a potential threat to nearby facilities. Contact the geotechnical engineer for further discussion and assistance, if vibrations appear to be a concern.

11.2 Shallow Foundations

11.2.1 General

Design of a shallow foundation, also known as a spread footing, must provide adequate resistance against geotechnical and structural failure. The design must also limit deformations to within tolerable values. This is true for designs using ASD or LRFD. In many cases, a shallow foundation is the most economical foundation type, provided suitable soil conditions exist within a depth of approximately 0 to 15 feet below the base of the proposed foundation.

WisDOT policy item:

Design shallow foundations in accordance with *AASHTO LRFD*. No additional guidance is available at this time.

Discussion is provided in 12.8 and 13.1 about design loads at abutments and piers, respectively. Live load surcharges at bridge abutments are described in 12.8.

11.2.2 Footing Design Considerations

The following design considerations apply to shallow foundations:

- Scour must not result in the loss of bearing or stability.
- Frost must not cause unacceptable movements.
- External or surcharge loads must be adequately supported.
- Deformation (settlement) and angular distortion must be within tolerable limits.
- Bearing resistance must be sufficient.
- Eccentricity requirements must be satisfied.
- Sliding resistance must be satisfied.
- Overall (global) stability must be satisfied.
- Uplift resistance must be sufficient.
- The effects of ground water must be mitigated and/or considered in the design.

11.2.2.1 Minimum Footing Depth

Foundation type selection and the preliminary design process require input from the geotechnical and hydraulic disciplines. The geotechnical engineer should provide guidance on the minimum embedment for shallow foundations that takes into consideration frost protection

and the possible presence of unsuitable foundation materials. The hydraulic engineer should be consulted to assess scour potential and maximum scour depth for water crossings.

At shallow foundations bearing on rock, it is essential to obtain a proper connection to sound rock. Sometimes it is not possible to obtain deep footing embedment in granite or similar hard rock, due to the difficulty of rock removal.

11.2.2.1.1 Scour Vulnerability

Scour is a hydraulic erosion process caused by flowing water that lowers the grade of a water channel or riverbed. For this reason, scour vulnerability is an essential design consideration for shallow foundations. Scour can undermine shallow foundations or remove sufficient overburden to redistribute foundation forces, causing foundation displacement and detrimental stresses to structural elements. Excessive undermining of a shallow foundation leads to gross deformation and can lead to structure collapse.

Scour assessment will require streambed sampling and gradation analysis to define the median diameter of the bed material, D_{50}. Specific techniques for scour assessment, along with a detailed discussion of scour analysis and scour countermeasure design, are presented in the following publications:

- HEC 18 – *Evaluating Scour at Bridges*, 4th Edition
- HEC 20 – *Stream Stability at Highway Structures*, 3rd Edition
- HEC 23 – *Bridge Scour and Stream Instability Countermeasures - Experience, Selection and Design Guidance*, 2nd Edition

Foundations for new bridges and structures located within a stream or river should be located at an elevation below the maximum scour depth that is identified by the hydraulics engineer. In addition, the foundation should be designed deep enough such that scour protection is not required. If the maximum calculated scour depth elevation is below the practical limits for a shallow foundation, a deep foundation system should be used to support the structure.

11.2.2.1.2 Frost Protection

Shallow foundation footings must be embedded below the maximum depth of frost potential (frost depth) whenever frost heave is anticipated to occur in frost-susceptible soil and adequate moisture is available. This embedment is required to prevent foundation heave due to volumetric expansion of the foundation subgrade from freezing and/or to prevent settling due to loss of shear strength from thawing.

Frost susceptible material includes inorganic soil that contains at least 3 percent, dry weight, which is finer in size than 0.02 millimeters. Gravel that contains between 3 and 20 percent fines is least susceptible to frost heave. Bedrock is not considered frost susceptible if the bedrock formation is massive, dense and intact below the footing.

Foundation design is usually not governed by frost heave for foundations bearing on clean gravel and sand or very dense till. Frost heave is a concern whenever the water table, static or perched, is located within 5 feet of the freezing plane.

In Wisconsin, the maximum depth of frost potential generally ranges from approximately 4 feet in the southeastern part of the state to 6 feet in the northwestern corner of the state.

WisDOT policy item:

The minimum depth of embedment of shallow foundations shall be 4 feet, unless founded on competent bedrock.

Further discussion about frost protection in the design of bridge abutments and piers is presented in 12.5 and 13.6, respectively.

11.2.2.1.3 Unsuitable Ground Conditions

Footings should bear below weak, compressible or loose soil. In addition, some soil exhibits the potential for changes in volume due to the introduction or expulsion of water. These volumetric changes can be large enough to exceed the performance limits of a structure, even to the point of structural damage. Both expansive and collapsible soil is regional in occurrence. Neither soil type is well suited for shallow foundation support without a mitigation plan to address the potential of large soil volume changes in this soil, due to changes in moisture content. Expansive and collapsible soils seldom cause problems in Wisconsin.

It should be noted that the procedures presented herein for computing bearing resistance and settlement are applicable to naturally occurring soil and are not necessarily valid for conditions of modified ground such as uncontrolled fills, dumps, mines and waste areas. Due to the unpredictable behavior of shallow foundations in these types of random materials, deep foundations which penetrate through the random material, overexcavation to remove the random material, or subgrade improvement to improve material behavior is required at each substructure unit.

11.2.2.2 Tolerable Movement of Substructures Founded on Shallow foundations

The bridge designer shall account for any differential settlement (angular distortion) in the design.

WisDOT policy item:

For design of new bridge structures founded on shallow foundations, the maximum permissible movement is 1 inch of horizontal movement at the top of substructure units and 1.5 inches of total estimated settlement of each substructure unit at the Service Limit State.

The sequence of construction can be important when evaluating total settlement and angular distortion. The effects of embankment settlement, as well as settlement due to structure loads, should be considered when the magnitude of total settlement is estimated. It may be possible to manage the settlements after movements have stabilized, by monitoring movements and

delaying critical structural connections such as closure pours or casting of decks that are continuous. Generally project timelines may restrict the time available for soil consolidation. Any project delays for geotechnical reasons must be thoroughly transmitted to, and analyzed by, design personnel.

11.2.2.3 Location of Ground Water Table

The location of the ground water table will impact both the stability and constructability of shallow foundations. A rise in the ground water table will cause a reduction in the effective vertical stress in soil below the footing and a subsequent reduction in the factored bearing resistance. A fluctuation in the ground water table is not usually a bearing concern at depths greater than 1.5 times the footing width below the bottom of footing.

WisDOT policy item:

The highest anticipated groundwater table should be used to determine the factored bearing resistance of footings. The Geotechnical Engineer should select this elevation based on the borings and knowledge of the specific site.

11.2.2.4 Sloping Ground Surface

The influence of a sloping ground surface must be considered for design of shallow foundations. The factored bearing resistance of the footing will be impacted when the horizontal distance is less than three times the footing width between the edge of sloping surface and edge of footing. Shallow foundations constructed in proximity to a sloping ground surface must be checked for overall stability. Procedures for incorporating sloping ground influence can be found in FHWA Publication SH-02-054, *Geotechnical Engineering Circular No. 6 Shallow Foundations* and **LRFD [10.6.3.1.2c]** Considerations for Footings on Slopes.

11.2.3 Settlement Analysis

Settlement should be computed using Service I Limit State loads. Transient loads may be omitted to compute time-dependent consolidation settlement. Two aspects of settlement are important to structural designers: total settlement and differential settlement (ie relative displacement between adjacent substructure units). In addition to the amount of settlement, the designer also needs to determine the time rate for it to occur.

Vertical settlement can be a combination of elastic, primary consolidation and secondary compression movement. In general, the settlement of footings on cohesionless soil, very stiff to hard cohesive soil and rock with tight, unfilled joints will be elastic and will occur as load is applied. For footings on very soft to stiff cohesive soil, the potential for primary consolidation and secondary compression settlement components should be evaluated in addition to elastic settlement.

The design of shallow foundations on cohesionless soil (sand, gravel and non-plastic silt), either as found in-situ or as engineered fill, is often controlled by settlement potential rather than bearing resistance, or strength, considerations. The method used to estimate settlement of footings on cohesionless soil should therefore be reliable so that the predicted settlement is

rarely less than the observed settlement, yet still reasonably accurate so that designs are efficient.

Elastic settlement is estimated using elastic theory and a value of elastic modulus based on the results of in-situ or laboratory testing. Elastic deformation occurs quickly and is usually small. Elastic deformation is typically neglected for movement that occurs prior to placement of girders and final bridge connections.

Semi-empirical methods are the predominant techniques used to estimate settlement of shallow foundations on cohesionless soil. These methods have been correlated to large databases of simple and inexpensive tests such as the Standard Penetration Test (SPT) and the Cone Penetrometer Test (CPT).

Consolidation of clays or clayey deposits may result in substantial settlement when the structure is founded on cohesive soil. Settlement may be instantaneous or may take weeks to years to complete. Furthermore, because soil properties may vary beneath the foundation, the duration of the consolidation and the amount of settlement may also vary with the location of the footing, resulting in differential settlement between footing locations. The consolidation characteristics of a given soil are a function of its past history. The reader is directed to FHWA Publication SA-02-054, *Geotechnical Engineering Circular No. 6 Shallow Foundations* for a detailed discussion on consolidation theory and principles.

The rate of consolidation is usually of lesser concern for foundations, because superstructure damage will occur once the differential settlements become excessive. Shallow foundations are designed to withstand the settlement that will ultimately occur during the life of the structure, regardless of the time that it takes for the settlement to occur.

The design of footings bearing on intermediate geomaterials (IGM) or rock is generally controlled by considerations other than settlement. Intermediate geomaterial is defined as a material that is transitional between soil and rock in terms of strength and compressibility, such as residual soil, glacial till, or very weak rock. If a settlement estimate is necessary for shallow foundations supported on IGM or rock, a method based on elastic theory is generally the best approach. As with any of the methods for estimating settlement that use elastic theory, a major limitation is the engineer's ability to accurately estimate the modulus parameter(s) required by the method.

11.2.4 Overall Stability

Overall stability of shallow foundations that are located on or near slopes is evaluated using a limiting equilibrium slope stability analysis. Both circular arc and sliding-block type failures are considered using a Modified Bishop, simplified Janbu, Spencers or simplified wedge analysis, as applicable. The Service I load combination is used to analyze overall stability. A free body diagram for overall stability is presented in Figure 11.2-1.

Detailed guidance to complete a limiting equilibrium analysis is presented in FHWA Publication NHI-00-045, *Soils and Foundation Workshop Reference Manual* and **LRFD [11.6.2.3]**.

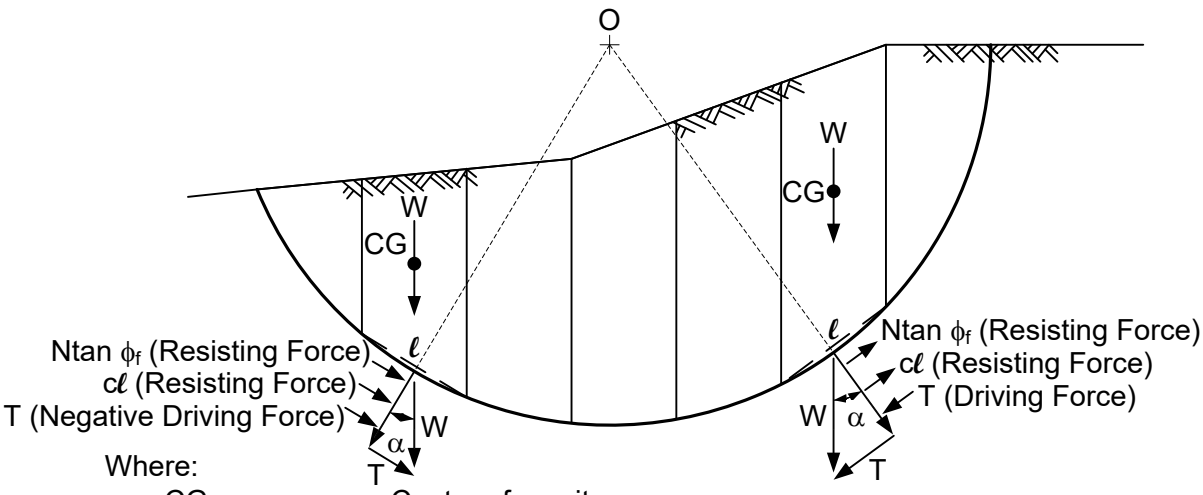

Where:

CG	=	Center of gravity
c	=	Cohesion along base of slice (psf)
ϕ_f	=	Angle of internal friction of drained soil (degrees)
W	=	Total weight of slice (lb/ft)
N	=	W cos α (lb/ft)
T	=	W sin α (lb/ft)
ℓ	=	length of slice (ft)

Figure 11.2-1
Free Body Diagram for Overall Stability

11.2.5 Footings on Engineered Fills

When shallow foundations are considered for placement on fill, further consideration is required. It is essential to satisfy the design tolerance with regard to total settlement, angular distortion and horizontal movement, including lateral squeeze of the embankment subgrade. The designer must consider the range of probable estimated movement and the impact that this range has on the overall structure performance. The anticipated movement of both new embankment fill and existing embankment materials must be assessed. If shallow foundations are considered, WisDOT requires a thorough subsurface investigation to evaluate settlement of the existing subgrade, including but not limited to continuous soil sampling. WisDOT does not typically place shallow foundations on general embankment fill. WisDOT may consider shallow foundations that are placed on engineered fill, such as that within MSE walls. WisDOT has placed a limited number of shallow foundations on MSE walls for single span bridges. Engineered fill typically consists of high-quality free-draining granular material that is not prone to behavior change due to moisture change, freeze-thaw action, long-term consolidation or shear failure. Engineered fill must also be tightly compacted. On occasion, engineered fill is used in combination with geotextile and/or geogrid to improve shear resistance and overall performance at approach embankments.

If it is not feasible to use a footing to support a sill abutment at the top of slope, it may be feasible to consider a shallow foundation at the bottom of abutment slope to support a full

retaining abutment as discussed in 12.2. The increase in stem height will be offset by a reduction in required bridge span length.

11.2.6 Construction Considerations

Shallow foundations require field inspection during construction to confirm that the actual footing subgrade material is equivalent to, or better than, that considered for design. The prepared subgrade should be checked to confirm that the type and condition of the exposed subgrade will provide uniform bearing over the full length or width of footing. The exposed subgrade should be probed to identify possible underlying pockets of soft material that are covered by a thin crust of more competent material. Underlying pockets of soft material and unsuitable material should be over-excavated and replaced with competent material. The structural/geotechnical designer should be contacted if the revised field footing elevations vary by more than one foot lower or three feet higher than the plan elevations, due to differing conditions.

The exposed footing subgrade should be level and stepped, as needed. Stepped shallow foundations may be appropriate when the subsurface conditions vary over the length of substructure unit (footing). For simplicity, planned footing steps should be designated in maximum 4-foot increments. The number and spacing of footing steps is dependent on several factors including, but not limited to, site foundation conditions, temporary excavation support and dewatering requirements, frost and scour depth limitations, constructability, and construction sequence. In general, it is preferred to build uniform step-increments, to simplify construction. Typically the footing with the lowest elevation is constructed first to avoid excavation disturbance of other portions of the footing, as construction continues.

11.2.7 Geosynthetic Reinforced Soil (GRS) Abutment

Geosynthetic Reinforced Soil (GRS) abutments are a type of bridge foundation system typically supporting a single span precast superstructure.. The superstructure is supported on a course-grained soil (gravel) with layers of woven geotextile fabric spaced horizontally from the existing ground, to the base of the slab. The facing is a precast modular block and connected to the woven geotextile fabric. The following reference can be used for design, ‘Geosynthetic Reinforced Soil Integrated Bridge System Interim Implementation Guide, Publication Number: FHWA-HRT-11-026’

See 7.1.4.2 for guidance on GRS abutments.

11.3 Deep Foundations

When competent bearing soil is not present near the base of the proposed foundation, structure loads must be transferred to a deeper stratum by using deep foundations such as piles or drilled shafts (caissons). Deep foundations can be composed of piles, drilled shafts, micropiles or augered cast-in-place piles.

The primary functions of a deep foundation are:

- To transmit the load of the structure through a stratum of poor bearing capacity to one of adequate bearing capacity.
- To eliminate objectionable settlement.
- To transfer loads from a structure through erodible soil in a scour zone, to stable underlying strata.
- To anchor structures subjected to hydrostatic uplift or overturning forces.
- To resist lateral loads from earth pressures, as well as external forces.

11.3.1 Driven Piles

Deep foundation support systems have been in existence for many years. The first known pile foundations consisted of rows of timber stakes driven into the ground. Timber piles have been found in good condition after several centuries in a submerged environment. Several types of concrete piles were devised at the turn of the twentieth century. The earliest concrete piles were cast-in-place, followed by reinforced, precast and prestressed concrete piling. The requirement for longer piles with higher bearing capacity led to the use of concrete-filled steel pipe piles in about 1925. More recently, steel H-piles have also been specified due to ease of fabrication, higher bearing capacity, greater durability during driving and the ability to easily increase or decrease driven lengths.

11.3.1.1 Conditions Involving Short Pile Lengths

WisDOT policy generally requires piles to penetrate a minimum of 10 feet through the original ground. Concern exists that short pile penetration in foundation materials of variable consistency may not adequately restrain lateral movements of substructure units. Pile penetrations of less than 10 feet are allowed if prebored at least 3 feet into solid rock. If conditions detailed in the Site Investigation Report clearly indicate that minimum pile penetration cannot be achieved, preboring should be included as a pay quantity. If there is a potential that preboring may not be necessary, do not include it in the plan documents. Piles which are not prebored into rock must not only meet the 10-foot minimum pile penetration criteria but must also have at least 5 feet of penetration through material with a blow count of at least 7 blows per foot. Piling should be “firmly seated” on rock after placement in prebored holes. The annular space between the cored holes in bedrock and piling should then be filled with concrete. Some sites may require casing during the preboring operation. If casing is

required, it should be clearly indicated in the plan documents. Refer to 11.3.1.6 11.3.1.6 for additional information on preboring.

Foundations without piles (spread footings) should be given consideration at sites where pile penetrations of less than 10 feet are anticipated. The economics of the following two alternatives should be investigated:

1. Design for a shallow foundation founded at a depth where the foundation material is adequate. Embed the footing 6 inches into sound rock for lateral stability.

2. Excavate to an elevation where foundation material is adequate, and backfill to the bottom of footing elevation with suitable granular material or concrete.

If a substructure unit is located in a stream or lake, consideration should be given to the effects of the anticipated stream bed scour when selecting the footing type. Pile length computations should not incorporate pile resistance developed within the scour zone. The pile cross section should also be checked to ensure it can withstand the driving stresses necessary to penetrate through the anticipated scour depth and reach the required driving resistance plus the frictional resistance within the scour zone.

11.3.1.2 Pile Spacing

Arbitrary pile spacing rules specifying maximums and minimums are extensively used in foundation design. Proper spacing is dependent upon length, size, shape and surface texture of piles, as well as soil characteristics. A wide spacing of piles reduces heaving and possible uplifting of the pile, damage by tension due to heaving and the possibility of crushing from soil compression. Wider spacing more readily permits the tips of later-driven piles in the group to reach the same depths as the first piles and result in more even bearing and settlement. Large horizontal pressures are created when driving in relatively uncompressible strata, and damage may occur to piles already driven if piles are too closely spaced. In order to account for this, a minimum center-to-center spacing of 2.5 times the pile diameter is often required. **LRFD [10.7.1.2]** calls for a center-to-center pile spacing of not less than 2’-6” or 2.5 pile diameters (widths).

WisDOT policy item:

The minimum pile spacing is 2’-6” or 2.5 pile diameters, whichever is greater. For displacement piles located within cofferdams, or with estimated lengths ≥ 100 ft., the minimum pile spacing is 3.0 pile diameters. The minimum pile spacing for pile-encased piers and pile bents is 3’-0”. The maximum pile spacing is 8’-0” for abutments, pile encased piers, and pile bents, based on standard substructure designs.

See Chapter 13 – Piers for criteria on battered piles in cofferdams. The distance from the side of any pile to the nearest edge of footing shall not be less than 9”. Piles shall project at least 6” into the footings.

11.3.1.3 Battered Piles

Battered piles are used to resist large lateral loads or when there is insufficient lateral soil resistance within the initial 4 to 5 pile diameters of embedment. Battered piles are frequently used in combination with vertical piles. The lateral resistance of battered piling is a function of the vertical load applied to the pile group. Since the sum of the forces at the pile head must equal zero, increasing the number of battered piles does not necessarily increase the lateral load capacity of the pile group. Both the lateral passive resistance of the soil above the footing as well as the sliding resistance developed at the base of footing are generally neglected in design. See the standard details for further guidance when battered piles are used.

Piles are typically battered at 1 horizontal to 4 vertical. Hammer efficiencies must be reduced when piles are battered. Where negative skin friction loads are anticipated, battered piles should not be considered.

11.3.1.4 Corrosion Loss

Piling should be designed with sufficient corrosion resistance to assure a minimum design life of 75 years. Corrosive sites may included those with combinations of organic soils, high water table, man-made coal combustion products or waste materials, and those materials that allow air infiltration such as wood chips. Experience indicates that corrosion is not a practical problem for steel piles driven in natural soil, due primarily to the absence of oxygen in the soil. However, in fill material at or above the water table, moderate corrosion may occur and protection may be required. Concrete piles are prone to deterioration from exposure to excess concentrations of sulfate and/or chloride. Special consideration (including thicker pile shells, heavier pile sections, painting and concrete encasement) should be given to permanent steel piling that is used in areas of northern Wisconsin which are inhabited by corrosion causing bacteria (see Facilities Development Manual 13-1-15). Typically, WisDOT does not increase pile sections or heavier pile sections to provide corrosion protection outside of these areas.

At potentially corrosive sites, encasement by cast-in-place concrete can provide the required protection for piles extending above the ground surface. All exposed piling should be painted. Additional guidance on corrosion is provided in **LRFD [10.7.5]**.

11.3.1.5 Pile Points

A study was conducted on the value of pile tips (pile points) on steel piles when driving into rock. The results indicated that there was very little penetration difference between the piles driven with pile points and those without. The primary advantages for specifying pile points are for penetrating or displacing boulders, driving through dense granular materials and hardpan layers, and to reduce the potential pile damage in hard driving conditions. Piling can generally be driven faster and in straighter alignment when points are used.

Conical pile points have also been used for round, steel piling (friction and point-bearing) in certain situations. These points can also be flush-welded if deemed necessary.

Standard details for pile points are available from the approved suppliers that are listed in WisDOT's current Product Acceptability List (PAL).

Pile points and preboring are sometimes confused. They are not interchangeable. Pile points can be used to help drive piles through soil that has gravel and/or cobbles or presents other difficult driving conditions. They can also be used to get a good 'bite' when ending piles on sloping bedrock surfaces. Points cannot be used to ensure that piles penetrate into competent bedrock. They may assist in driving through weathered zones of rock or soft rock, but will generally not be effective when penetration into hard rock is desired.

11.3.1.6 Preboring

If embedment into rock is required or minimum pile penetration is doubtful, preboring should be considered. Preboring is required for displacement piles driven into new embankment that are over 10 feet in height. The WisDOT has developed special provisions to provide preboring requirements.

Except for point resistance piles, preboring should be terminated at least 5 feet above the scheduled pile tip elevation. When the pile is planned to be point resistance on rock, preboring may be advanced to plan pile tip elevation. Restrike is not performed when point-bearing piles are founded in rock within prebored holes. Preboring should only be used when appropriate, since many bridge contractors do not own the required construction equipment necessary for this work.

The annular space between the wall of the prebored hole and the pile is required to be backfilled. The annulus in bedrock should be filled with concrete or cement grout after the pile has been installed. Clean sand may be used to backfill the annulus over the depth of soil overburden. Backfill material should be deposited with either a tremie pipe or concrete pump to reduce potential arching (bridging) and assure that the complete depth of hole is filled.

11.3.1.7 Seating

Care must be taken when seating end bearing piles, especially when seating on bedrock with little to no weathered zone. When a pile is firmly seated on rock in prebored holes, pile driving to refusal is not required or recommended, to avoid driving overstress and pile damage. After reaching the predetermined prebore elevation, piles founded in soil are driven with a pile hammer to achieve the specified average penetration or set per blow for the final ten blows of driving.

11.3.1.8 Pile Embedment in Footings

The length of pile embedment in footings is determined based on the type and function of substructure unit and the magnitude of any uplift load.

WisDOT policy item:

Use a minimum 6-inch pile embedment in footings. This embedment depth is considered to result in a free (pinned) head connection for analysis. When the pile embedment depth into the footing is 2.0 feet or greater, the designer can assume a fixed head connection for analysis.

Additional pile embedment is required at some wing walls and at pile-encased substructures, especially where moment connections are required and where cofferdams are not used at stream crossings. Further guidance is provided in 13.6 and in the standard substructure details.

11.3.1.9 Pile-Supported Footing Depth

WisDOT policy item:

Place the bottom of pile-supported footings below the final ground surface at a minimum depth of 2.5 feet for sill abutments, 1.5 feet for sill abutments supported by MSE walls, and 4 feet for piers and other types of abutments.

11.3.1.10 Splices

Full-length piles should be used whenever practical. In no case should timber piles be spliced. Where splices are unavoidable, their number, location and details must be approved by WisDOT prior to pile splicing.

Splice details are shown on Wisconsin bridge plan standards for Pile Details. Splices are designed to develop the full strength of the pile section. Splices should be watertight for CIP concrete piles. Mechanical splice sleeves can be used to join sections of H-pile and pipe pile at greater depth where flexural resistance is not critical. Steel piling 20 feet or less in length is to be furnished in one unwelded piece. Piling from 20 to 50 feet in length can have two shop or field splices, and piling over 50 feet in length can be furnished with up to a maximum of four splices, unless otherwise stated in the project plan documents.

11.3.1.11 Painting

Normally, WisDOT paints all exposed sections of piling. This typically occurs at exposed pier bents.

11.3.1.12 Selection of Pile Types

The selection of a pile type for a given foundation application is made on the basis of soil type, stability under vertical and horizontal loading, long-term settlement, required method of pile installation, substructure type, cost comparison and estimated length of pile. Frequently more than one type of pile meets the physical and technical requirements for a given site. The performance of the entire structure controls the selection of the foundation. Primary considerations in choosing a pile type are the evaluation of the foundation materials and the selection of the substratum that provides the best foundation support.

Piling is generally used at piers where scour is possible, even though the streambed may provide adequate support without piling. In some cases, it is advisable to place footings at greater depths than minimum and specify a minimum pile penetration to guard against excessive scour beneath the footing and piling. Shaft resistance (skin friction) within the maximum depth of scour is assumed to be zero. When a large scour depth is estimated, this area of lost frictional support must be taken into account in the pile driving operations and capacities.

Subsurface conditions at the structure site also affect pile selection and details. The presence of artesian water pressure, soft compressible soil, cobbles and/or boulders, loose/firm uniform sands or deep water all influence the selection of the optimum type of pile for deep foundation support. For instance, WisDOT has experienced 'running' of displacement piling in certain areas that are composed of uniform, loose sands. The Department has also experienced difficulty driving displacement piles in denser sands within cofferdams, as consecutive piles are driven, due to compaction of the in-situ sand during pile installation within the cofferdam footprint.

If boulders or cobbles are anticipated within the estimated length of the pile, consideration should be given to increasing the cast-in-place (CIP) pile shell thickness to reduce the potential of pile damage due to high driving stresses. Other alternatives are to investigate the use of pile points or the use of HP piles at the site.

Environmental factors may be significant in the selection of the pile type. Environmental factors include areas subject to high corrosion, bacterial corrosion, abrasion due to moving debris or ice, wave action, deterioration due to cyclic wetting and drying, strong current and gradual erosion of riverbed due to scour. Concrete piles are susceptible to corrosion when exposed to alkaline soil or strong chemicals, especially in rivers and streams. Steel piles can suffer serious electrolysis deterioration if placed in an environment near stray electrical currents. Cast-in-place concrete piling is generally the preferred pile type on structure widenings where displacement piles are required. Timber pile is not to be used, even if timber pile was used on the original structure.

Displacement pile consisting of tapered steel is proprietary and can be an efficient type of friction pile for bearing in loose to medium-dense granular soil. Tapered friction piles may need to be installed with the aid of water jetting in dense granular soil. Straight-sided friction piles are recommended for placement in cohesive soils underlain by a granular stratum to develop the greatest combined shaft and point resistance. Steel HP or open-end pipe piles are best suited for driving through obstructions or fairly competent layers to bedrock. Foundations such as pier bents which may be subject to large lateral forces when located in deep and/or swiftly moving water require piles that can sustain large bending forces. Precast, prestressed concrete pile is best suited for high lateral loading conditions but is seldom used on Wisconsin transportation projects.

11.3.1.12.1 Timber Piles

Current design practice is not to use timber piles.

11.3.1.12.2 Concrete Piles

The three principal types of concrete pile are cast-in-place (CIP), precast reinforced and prestressed reinforced. CIP concrete pile types include piles cast in driven steel shells that remain in-place, and piles cast in unlined drilled holes or shafts. Driven-type concrete pile is discussed below in this section. Concrete pile cast in drilled holes is discussed later in this chapter and include drilled shafts (11.3.2), micropiles (11.3.3), and augered cast-in-place piles (11.3.4).

Depending on the type of concrete pile selected and the foundation conditions, the load-carrying capacity of the pile can be developed by shaft resistance, point resistance or a combination of both. Generally, driven concrete pile is employed as a displacement type pile.

When embedded in the earth, plain or reinforced concrete pile is generally not vulnerable to deterioration. The water table does not affect pile durability provided the concentration level is not excessive for acidity, alkalinity or chemical salt. Concrete pile that extends above the water surface is subject to abrasion damage from floating objects, ice debris and suspended solids. Deterioration can also result from frost action, particularly in the splash zone and from concrete spalling due to internal corrosion of the reinforcement steel. Generally, concrete spalls are a concern for reinforced concrete pile more than prestressed pile because of micro-cracks due to shrinkage, handling, placement and loading. Prestressing reduces crack width. Concrete durability increases with a corresponding reduction in aggregate porosity and water/cement ratio. WisDOT does not currently use prestressed reinforced concrete pile.

11.3.1.12.2.1 Driven Cast-In-Place Concrete Piles

Driven cast-in-place (CIP) concrete piles are formed by pouring concrete into a thin-walled closed-end steel shell which has been previously driven into the ground. A flat, oversize plate is typically welded to the bottom of the steel shell. Steel shells are driven either with or without a mandrel, depending on the wall thickness of the steel shell and the shell strength that is required to resist driving stress. Piling in Wisconsin is typically driven without the use of a mandrel. The minimum thickness of the steel shell should be that required for pile reinforcement and to resist driving stress. The Contractor may elect to furnish steel shells with greater thickness to permit their choice of driving equipment. A thin-walled shell must be carefully evaluated so that it does not collapse from soil pressure or deform from adjacent pile driving. Deformities or distortions in the pile shell could constrict the flow of concrete into the pile and produce voids or necking that reduce pile capacity. It is standard construction practice to inspect the open shell prior to concrete placement. Care must be exercised to avoid intermittent voids over the pile length during concrete placement.

Driven CIP concrete piles are considered a displacement-type pile, because the majority of the applied load is usually supported by shaft resistance. This pile type is frequently employed in slow flowing streams and areas requiring pile lengths of 50 to 120 feet. Driven CIP pile is generally selected over timber pile because of the availability of different diameters and wall thicknesses, the ability to adjust driven lengths and the ability to achieve greater resistances.

Driven CIP concrete piles may have a uniform cross section or may be tapered. The minimum cross-sectional area is required to be 100 and 50 square inches at the pile butt and tip, respectively. The Department has only used a limited number of tapered CIP piles and has experienced some driving problems with them.

For consistency with WisDOT design practice, the steel shell is ignored when computing the axial structural resistance of driven CIP concrete pile that is symmetrical about both principal axes. This nominal (ultimate) axial structural resistance capacity is computed using the following equation, neglecting the contribution of the steel shell to resist compression: **LRFD [Eq'n 5.6.4.4-3]**.

$$P_u \leq P_r = \phi P_n$$

Where:

$$P_n = 0.80(k_C \cdot f'_c \cdot (A_g - A_{st})) + f_y \cdot A_{st}$$

Where:

P_u	=	Factored axial force effect (kips)
P_r	=	Factored axial resistance without flexure (kips)
ϕ	=	Resistance factor
P_n	=	Nominal axial resistance without flexure (kips)
A_g	=	Gross area of concrete pile section (inches^2)
A_{st}	=	Total area of longitudinal reinforcement (inches^2)
k_c	=	Ratio of max. concrete compressive stress to specified compressive strength of concrete; k_C = 0.85 (for $f'_c \leq$ 10.0 ksi)
f_y	=	Specified yield strength of reinforcement (ksi)
f'_c	=	Concrete compressive strength (ksi)

For cast-in-place concrete piles with steel shell and no steel reinforcement bars, A_{st} equals zero and the above equation reduces to the following.

$$P_n = 0.68f'_c A_g$$

A resistance factor, ϕ, of 0.75 is used to compute the factored structural axial resistance capacity, as specified in **LRFD [5.5.4.2]**. For CIP piling there are no reinforcing ties, however the steel shell acts to confine concrete similar to ties.

$$P_r = 0.51f_c A_g$$

For piles subject to large lateral loads, the structural pile capacity must also be checked for shear and combined stress against flexure and compression.

Piles subject to uplift must also be checked for tension resistance.

A concrete compressive strength of 4 ksi is the minimum value required by specification, while a value of 3.5 ksi is used in the structural design computations. Pile capacities are maximums, based on an assumed concrete compressive strength of 3.5 ksi. The concrete compressive strength of 3.5 ksi is based on construction difficulties and unknowns of placement. The

Geotechnical Site Investigation Report must be used as a guide in determining the nominal geotechnical resistance for the pile.

Any structural strength contribution associated with the steel shell is neglected in driven CIP concrete pile design. Therefore, environmentally corrosive sites do not affect driven CIP concrete pile designs. An exception is that CIP should not be used for exposed pile bents in corrosive environments as shown in the *Facilities Development Manual,* Procedure 13-1-15.

Based on the above equation, current WisDOT practice is to design driven cast-in-place concrete piles for factored (ultimate structural) axial compression resistances as shown in Table 11.3-5. See 6.3.2.1 for the typical style of plan notes showing axial resistance as well as required driving resistance on plans. **If less than the maximum axial resistance is required by design, state only the required corresponding driving resistance on the plans.** The minimum shell thickness is 0.219 inches for straight steel tube and 0.1793 inches for fluted steel shells, unless otherwise noted in the Geotechnical Site Investigation Report and stated in the project plans. Exposed piling (e.g. open pile bents) should not be less than 12 inches in diameter.

When cobbles or other difficult driving conditions are present, the minimum wall thickness for steel shells of driven cast-in-place concrete piles should be increased to 0.25 inches or thicker to facilitate driving without damaging the pile. A drivability analysis should be completed in design, to determine the required wall thickness based on site conditions and an assumed driving equipment.

Driven cast-in-place concrete pile is generally the most favorable displacement pile type since inspection of the steel shell is possible prior to concrete placement and more reliable control of concrete placement is attainable.

11.3.1.12.2.2 Precast Concrete Piles

Precast concrete pile can be divided into two primary types – reinforced concrete piles and prestressed concrete piles. These piles have parallel or tapered sides and are usually of rectangular or round cross section. Since the piles are usually cast in a horizontal position, the round cross section is not common because of the difficulty involved in filling a horizontal cylindrical form. Because of the somewhat variable subsurface conditions in Wisconsin and the need for variable length piles, these piles are currently not used in Wisconsin.

11.3.1.12.3 Steel Piles

Steel pile generally consist of either H-pile or pipe pile types. Both open-end and closed-end pipe pile are used. Pipe piles may be left open or filled with concrete, and can also have a structural shape or reinforcement steel inserted into the concrete. Open-end pipe pile can be socketed into bedrock with preboring.

Steel pile is typically top driven at the pile butt. However, closed-end pipe pile can also be bottom driven with a mandrel. Mandrels are generally not used in Wisconsin.

Steel pile can be used in friction, point-bearing, a combination of both, or rock-socketed piles. One advantage of steel pile is the ease of splicing or cutting to accommodate differing final constructed lengths.

Steel pile should not be used for exposed pile bents in corrosive environments as show in the *Facilities Development Manual, Procedure 13.1.15*.

The nominal (ultimate) axial structural compressive resistance of steel piles is designed in accordance with **LRFD [10.7.3.13.1]** as either non-composite or composite sections. Composite sections include concrete-filled pipe pile and steel pile that is encased in concrete. The nominal structural compressive resistance for non-composite and composite steel pile is further specified in **LRFD [6.9.4 and 6.9.5]**, respectively. The effective length of horizontally unsupported steel pile is determined in accordance with **LRFD [10.7.3.13.4]**. Resistance factors for the structural compression limit state are specified in **LRFD [6.5.4.2]**.

WisDOT policy item:

For steel H-piles, 50 ksi shall be used for pile design. For steel pipe piles, 35 ksi shall be used for pile design and drivability analyses. Plans shall note specified yield strength.

11.3.1.12.3.1 H-Piles

Steel piles are generally used for point-bearing piles and typically employ what is known as the HP-section (often called H-piles for brevity). Steel H-piles are rolled sections with wide flanges such that the depth of the section and the width of the flanges are approximately equal. The cross-sectional area and volume displacement are relatively small and as a result, H-piles can be driven through compact granular materials and slightly into soft rock. Also, steel piles have little or no effect in causing ground swelling or raising of adjacent piles. Because of the small volume of H-piles, they are considered “non-displacement” piling.

H-piles are available in many sizes and lengths. Unspliced pile lengths up to 140 feet and spliced pile lengths up to 230 feet have been driven. Typical pile lengths range from 40 to 120 feet. Common H-pile sizes vary between 10 and 14 inches.

The current WisDOT practice is to design driven H-piles for the factored (ultimate structural) axial compression resistance as shown in Table 11.3-5. These values are based on $\phi_c = 0.5$ for severe driving conditions **LRFD [6.5.4.2]**. See 6.3.2.1 for the typical style of plan notes showing axial resistance as well as required driving resistance on plans. **If less than the maximum axial resistance is required by design, state only the required corresponding driving resistance on the plans.**

Since granular soil is largely incompressible, the principal action at the tip of the pile is lateral displacement of soil particles. Although it is an accepted fact that steel piles develop extremely high loads per pile when driven to point-bearing on rock, some misconceptions still remain that H-piles cannot function as friction piles. Load tests indicate that steel H-piles can function quite satisfactorily as friction piles in sand, sand-clay, silt-and-sand or hard clay. However, they are not as efficient as displacement piles in these conditions and typically drive to greater depths.

The surface area for pile frictional computations is considered to be the projected “box area” of the H-pile, and not the actual steel surface area.

Clay is compressible to a far greater degree than sand or gravel. As the solid particles are pressed into closer contact with each other and water is squeezed out of the voids, only small frictional resistance to driving is generated because of the lubricating action of the free water. However, after driving is completed, the lateral pressure against the pile increases due to dissipation of the pore water pressures. This causes the fine clay particles to increase adherence to the comparatively rough surface of the pile. Load is transferred from the pile to the soil by the resulting strong adhesive bond. In many types of clay, this bond is stronger than the shearing resistance of the soil.

In hard, stiff clays containing a low percentage of voids and pore water, the compressibility is small. As a result, the amount of displacement and compression required to develop the pile’s full capacity are correspondingly small. As an H-pile is driven into stiff clay, the soil trapped between the flanges and web usually becomes very hard due to the compression and is carried down with it. This trapped soil acts as a plug and the pile can also act as a displacement pile.

In cases where loose soil is encountered, considerably longer point-bearing steel piles are required to carry the same load as relatively short displacement-type piles. This is because a displacement-type pile, with its larger cross section, produces more compaction as it is driven through materials such as soft clays or loose organic silts. H-piles are not typically used in exposed pile bents due to concerns with debris catchment.

11.3.1.12.3.2 Pipe Piles

Pipe piles consist of seamless, welded or spiral welded steel pipes in diameters ranging from 7-3/4 to 24 inches. Other sizes are available, but they are not commonly used. Typical wall thicknesses range from 0.375-inch to 0.75-inch, with wall thicknesses of up to 1.5 inches possible. Pipe piles should be specified by grade with reference to ASTM A 252.

Pipe piles may be driven either open or closed end. If the end bearing capacity from the full pile toe area is required, the pile toe should be closed with a flat plate or a conical tip.

11.3.1.12.3.3 Oil Field Piles

The oil industry uses a very high quality pipe in their drilling operations. Every piece is tested for conformance to their standards. Oil field pipe is accepted as a point-bearing alternative to HP piling, provided the material in the pipe meets the requirements of ASTM A 252, Grade 3, with a minimum tensile strength of 120 ksi or a Brinell Hardness Number (BHN) of 240, a minimum outside diameter of 7-3/4 inches and a minimum wall thickness of 0.375-inch. The weight and area of the pipe shall be approximately the same as the HP piling it replaces. Sufficient bending strength shall be provided if the oil field pipe is replacing HP piling in a pile bent. Oil field pipe is driven open-ended and not filled with concrete. The availability of this pile type varies and is subject to changes in the oil industry.

11.3.1.12.4 Pile Bents

See 13.1 for criteria to use pile bents at stream crossings. When pile bents fail to meet these criteria, pile-encased pier bents should be considered. To improve debris flow, round piles are generally selected for exposed bents. Round or H-piles can be used for encased bents.

11.3.1.13 Tolerable Movement of Substructures Founded on Driven Piles

WisDOT policy item:

For design of new bridge structures founded on driven piles, limit the horizontal movement at the top of the foundation unit to 0.5 inch or less at the service limit state.

11.3.1.14 Resistance Factors

The nominal (ultimate) geotechnical resistance capacity of the pile should be based on the type, depth and condition of subsurface material and ground water conditions reported in the Geotechnical Site Investigation Report, as well as the method of analysis used to determine pile resistance. Resistance factors to compute the factored geotechnical resistance are presented in **LRFD [Table 10.5.5.2.3-1]** and are selected based on the method used to determine the nominal (ultimate) axial compression resistance. The design intent is to adjust the resistance factor based on the reliability of the method used to determine the nominal pile resistance. When construction controls, are used to improve the reliability of capacity prediction (such as pile driving analyzer or static load tests), the resistance factors used during final design should be increased in accordance with **LRFD [Table 10.5.5.2.3-1]** to reflect planned construction monitoring.

WisDOT exception to AASHTO:

WisDOT requires at least four (4) piles per group to support each substructure unit, including each column for multi-column bents. WisDOT does not reduce geotechnical resistance factors to satisfy redundancy requirements to determine axial pile resistance. Hence, redundancy resistance factors in **LRFD [10.5.5.2.3]** are not applicable to WisDOT structures. This exception applies to typical CIP concrete pile and H-pile foundations. Non-typical foundations (such as drilled shafts) shall be investigated individually.

No guidance regarding the structural design of non-redundant driven pile groups is currently included in *AASHTO LRFD*. Since WisDOT requires a minimum of 4 piles per substructure unit, structural design should be based on a load modifier, η, of 1.0. Further description of load modifiers is presented in **LRFD [1.3.4]**.

The following geotechnical resistance factors apply to the majority of the Wisconsin bridges that are founded on driven pile. On the majority of WisDOT projects, wave equation analysis and dynamic monitoring are not used to set driving criteria. This equates to typical resistance factors of 0.35 to 0.45 for pile design. A summary of resistance factors is presented in Table 11.3-1, based on **LRFD [Table 11.5.5.2.3-1]**, which are generally used for geotechnical design on WisDOT projects.

Condition/Resistance Determination Method			Resistance Factor
Static Analysis – Used in Design Phase	Nominal Resistance of Single Pile in Axial Compression, φ_{stat}	Skin Friction and End Bearing in Clay and Mixed Soil Alpha Method	0.35
		Skin Friction and End Bearing in Sand Nordlund/Thurman Method	0.45
		Point Bearing in Rock	0.45
	Block Failure, φ_{bl}	Clay	0.60
	Uplift Resistance of Single Pile, φ_{up}	Clay and Mixed Soil Alpha Method	0.25
		Sand Nordlund Method	0.35
	Horizontal Resistance of Single Pile or Pile Group	All Soil Types and Rock	1.0
Nominal Resistance of Single Pile in Axial Compression – Dynamic Analysis – for the Hammer and Pile Driving System Actually - used During Construction for Pile Installation, φ_{dyn}		FHWA-modified Gates dynamic pile formula (end of drive condition only)	0.50 (1)
		Wave equation analysis, without pile dynamic measurements or load test, at end of drive condition only	0.50
		Driving criteria established by dynamic test [Pile Driving Analyzer, (PDA)] with signal matching [CAse Pile Wave Analysis Program, (CAPWAP)] at beginning of redrive conditions only, of at least two production pile per substructure, but no less than 2% of the structure production piles. Quality control of remaining piles by calibrated wave equation and/or dynamic testing.	0.65
		Static Pile Load Test(s) and dynamic test (PDA) with signal matching (CAPWAP) at beginning of redrive conditions only, of at least two production pile per substructure, but no less than 2% of the structure production piles. Quality control of remaining piles by calibrated wave equation and/or dynamic testing.	0.80

(1) Based on department research and past experience

Table 11.3-1
Geotechnical Resistance Factors for Driven Pile

Resistance factors for structural design of piles are based on the material used, and are presented in the following sections of *AASHTO LRFD*:

- Concrete piles – **LRFD [5.5.4.2]**

- Steel piles – **LRFD [6.5.4.2]**

11.3.1.15 Bearing Resistance

A pile foundation transfers load into the underlying strata by either shaft resistance, point resistance or a combination of both. Any driven pile will develop some amount of both shaft and point resistance. However, a pile that receives the majority of its support capacity by friction or adhesion from the soil along its shaft is referred to as a friction pile, whereas a pile that receives the majority of its support from the resistance of the soil near its tip is a point resistance (end bearing) pile.

The design pile capacity is the maximum load the pile can support without exceeding the allowable movement criteria. When considering design capacity, one of two items may govern the design – the nominal (ultimate) geotechnical resistance capacity or the structural resistance capacity of the pile section. This section focuses primarily on the geotechnical resistance capacity of a pile.

The factored load that is applied to a single pile is carried jointly by the soil beneath the tip of the pile and by the soil around the shaft. The total factored load is not permitted to exceed the factored resistance of the pile foundation for each limit state in accordance with **LRFD [1.3.2.1 and 10.7.3.8.6]**. The factored bearing resistance, or pile capacity, of a pile is computed as follows:

$$\sum \eta_i \gamma_i Q_i \leq R_r = \varphi R_n = \varphi_{stat} R_p + \varphi_{stat} R_s$$

Where:

η_i	=	Load modifier
γ_i	=	Load factor
Q_i	=	Force effect (tons)
R_r	=	Factored bearing resistance of pile (tons)
R_n	=	Nominal resistance (tons)
R_p	=	Nominal point resistance of pile (tons)
R_s	=	Nominal shaft resistance of pile (tons)
φ	=	Resistance factor
φ_{stat}	=	Resistance factor for driven pile, static analysis method

This equation is illustrated in Figure 11.3-1.

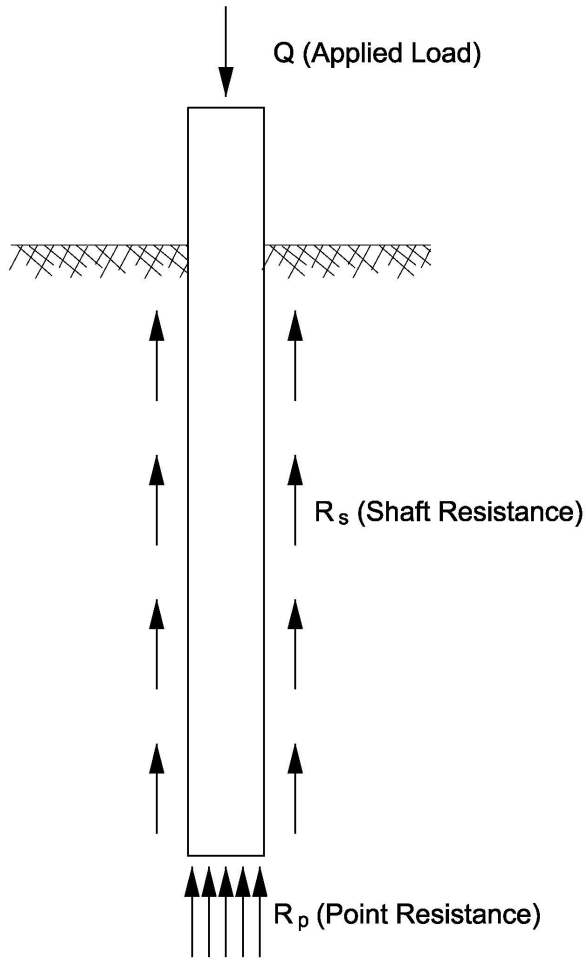

Figure 11.3-1
Resistance Distribution for Axially-Loaded Pile

11.3.1.15.1 Shaft Resistance

The shaft resistance of a pile is estimated by summing the frictional resistance developed in each of the different soil strata.

For non-cohesive (granular) soil, the total shaft resistance can be calculated using the following equation (based on the Nordlund/Thurman Method):

$$R_s = \Sigma C_d D K_\delta C_F \sigma_v' \frac{\sin(\delta + \omega)}{\cos(\omega)}$$

Where:

R_s	=	Total shaft resistance capacity (tons)
C_d	=	Pile perimeter (feet)
D	=	Pile segment length (feet)
K_δ	=	Coefficient of lateral earth pressure at mid-point of soil layer under consideration from **LRFD [Figures 10.7.3.8.6f-1 through 10.7.3.8.6f-4]**
C_F	=	Correction factor for K_δ when $\delta \neq \phi_f$, from **LRFD [Figure 10.7.3.8.6f-5],** whereby ϕ_f = angle of internal friction for drained soil
σ_v'	=	Effective overburden pressure at midpoint of soil layer under consideration (tsf)
δ	=	Friction angle between the pile and soil obtained from **LRFD [Figure 10.7.3.8.6f-6]** (degrees)
ω	=	Angle of pile taper from vertical (degrees)

For cohesive (fine-grained) soil, the total shaft resistance can be calculated using the following equation (based on the alpha method):

$$R_s = \Sigma \alpha S_u C_d D$$

Where:

R_s	=	Total (nominal) shaft resistance capacity (tons)
α	=	Adhesion factor based on the undrained shear strength from **LRFD [Figure 10.7.3.8.6b-1]**
S_u	=	Undrained shear strength (tsf)
C_d	=	Pile perimeter (feet)
D	=	Pile segment length (feet)

Typical values of nominal shaft resistance for various soils are presented in Table 11.3-2 and Table 11.3-3. The values presented are average ranges and are intended to provide orders of magnitude only. Other conditions such as layering sequences, drilling information, ground water, thixotropy and clay sensitivity must be evaluated by experienced geotechnical engineers and analyzed using principles of soil mechanics.

Soil Type	q_u(1) (tsf)	Nominal Shaft Resistance (psf)
Very soft clay	0 to 0.25	---
Soft clay	0.25 to 0.5	200 to 450
Medium clay	0.5 to 1.0	450 to 800
Stiff clay	1.0 to 2.0	800 to 1,500
Very stiff clay	2.0 to 4.0	1,500 to 2,500
Hard clay	4.0	2,500 to 3,500
Silt	---	100 to 400
Silty clay	---	400 to 700
Sandy clay	---	400 to 700
Sandy silt	---	600 to 1,000
Dense silty clay	---	900 to 1,500

(1) Unconfined Compression Strength

Table 11.3-2

Typical Nominal Shaft Resistance Values for Cohesive Material

Soil Type	N_{160}(1)	Nominal Shaft Resistance (psf)
Very loose sand and silt or clay	0 to 6	50 to 150
Medium sand and silt or clay	6 to 30	400 to 600
Dense sand and silt or clay	30 to 50	600 to 800
Very dense sand and silt or clay	over 50	800 to 1,000
Very loose sand	0 to 4	700 to 1,700
Loose sand	4 to 10	700 to 1,700
Firm sand	10 to 30	700 to 1,700
Dense sand	30 to 50	700 to 1,700
Very dense sand	over 50	700 to 1,700
Sand and gravel	---	1,000 to 3,000
Gravel	---	1,500 to 3,500

(1) Standard Penetration Value (AASHTO T206) corrected for both overburden and hammer efficiency effects (blows per foot).

Table 11.3-3

Typical Nominal Shaft Resistance Values for Granular Material

Shaft resistance values are dependent upon soil texture, overburden pressure and soil cohesion but tend to increase with depth. However, experience in Wisconsin has shown that shaft resistance values in non-cohesive materials reach constant final values at depths of 15 to 25 pile diameters in loose sands and 25 to 35 pile diameters in firm sands.

In computing shaft resistance, the method of installation must be considered as well as the soil type. The method of installation significantly affects the degree of soil disturbance, the lateral stress acting on the pile, the friction angle and the area of contact. Shafts of prebored piles do not always fully contact the soil; therefore, the effective contact area is less than the shaft surface area. Driving a pile in granular material densifies the soil and increases the friction angle. Driving also displaces the soil laterally and increases the horizontal stress acting on the pile. Disturbance of clay soil from driving can break down soil structure and increase pore pressures, which greatly decreases soil strength. However, some or all of the strength recovers following reconsolidation of the soil due to a decrease in excess pore pressure over time. Use the initial soil strength values for design purposes. The type and shape of a pile also affects the amount of shaft resistance developed, as described in 11.3.1.12.

11.3.1.15.2 Point Resistance

The point resistance, or end bearing capacity, of a pile is estimated from modifications to the bearing capacity formulas developed for shallow footings.

For non-cohesive soils, point resistance can be calculated using the following equation (based on the Nordlund/Thurman Method):

$$R_p = A_p \alpha_t N'_q \sigma_v' \leq q_L A_p$$

Where:

R_p	=	Point resistance capacity (tons)
A_p	=	Pile end area (feet^2)
α_t	=	Dimensionless factor dependent on depth-width relationship from **LRFD [Figure 10.7.3.8.6f-7]**
N'_q	=	Bearing capacity factor from **LRFD [Figure 10.7.3.8.6f-8]**
σ_v'	=	Effective overburden pressure at the pile point ≤ 1.6 (tsf)
q_L	=	Limiting unit point resistance from **LRFD [Figure 10.7.3.8.6f-9]** (tsf)

For cohesive soils, point resistance can be calculated using the following equation:

$$R_p = 9 S_u A_p$$

Where:

R_p = Point resistance capacity (tons)

S_u = Undrained shear strength of the cohesive soil near the pile base (tsf)

A_p = Pile end area (feet^2)

This equation represents the maximum value of point resistance for cohesive soil. This value is often assumed to be zero because substantial movement of the pile tip (1/10 of the pile diameter) is needed to mobilize point resistance capacity. This amount of tip movement seldom occurs after installation.

A point resistance (or end bearing) pile surrounded by soil is not a structural member like a column. Both experience and theory demonstrate that there is no danger of a point resistance pile buckling due to inadequate lateral support if it is surrounded by even the very softest soil. Therefore, pile stresses can exceed column stresses. Although, exposed pile bent piles may act as structural columns.

11.3.1.15.3 Group Capacity

The nominal resistance capacity of pile groups may be less than the sum of the individual nominal resistances of each pile in the group for friction piles founded in cohesive soil. For pile groups founded in cohesive soil, the pile group must be analyzed as an equivalent pier for block failure in accordance with **LRFD [10.7.3.9]**. WisDOT no longer accepts the Converse-Labarre method of analysis to account for group action. If the pile group is tipped in a firm stratum overlying a weak layer, the weak layer should be checked for possible punching failure in accordance with **LRFD [10.6.3.1.2a]**. Experience in Wisconsin indicates that in most thixotropic clays where piles are driven to a hammer bearing as determined by dynamic formulas, pile group action is not the controlling factor to determine pile resistance capacity. For pile groups in sand, the sum of the nominal resistance of the individual piles always controls the group resistance.

11.3.1.16 Lateral Load Resistance

Structures supported by single piles or pile groups are frequently subjected to lateral forces from lateral earth pressure, live load forces, wave action, ice loads and wind forces. Piles subjected to lateral forces must be designed to meet combined stress and deflection criteria to prevent impairment or premature failure of the foundation or superstructure. To solve the soil-structure interaction problems, the designer must consider the following:

- Pile group configuration.

- Pile stiffness.
- Degree of fixity at the pile connection with the pile footing.
- Maximum bending moment induced on the pile from the superstructure load and moment distribution along the pile length.
- Probable points of fixity near the pile tip.
- Soil response (P-y method) for both the strength and service limit states.
- Pile deflection permitted by the superstructure at the service limit state.

If a more detailed lateral load investigation is desired, a P-y analysis is typically performed using commercially available software such as COM624P, FB Multi-Pier or L-Pile. A resistance factor of 1.0 is applied to the soil response when performing a P-y analysis using factored loads since the soil response represents a nominal (ultimate) condition. For a more detailed analysis of lateral loads and displacements, refer to the listed FHWA design references at the end of this chapter or a geotechnical engineering book.

WisDOT policy item:

A detailed analysis is required for the lateral resistance of piles used in A3 abutments.

11.3.1.17 Other Design Considerations

Several other topics should be considered during design, as presented below.

11.3.1.17.1 Downdrag Load

Negative shaft resistance (downdrag) results in the soil adhesion forces pulling down the pile instead of the soil adhesion forces resisting the applied load. This can occur when settlement of the soil through which the piling is driven takes place. It has been found that only a small amount of settlement is necessary to mobilize these additional pile (drag) loads. This settlement occurs due to consolidation of softer soil strata caused by such items as increased embankment loads (due to earth fill) or a lowering of the existing ground water elevation. The nominal pile resistance available to support structure loads plus downdrag shall be estimated by considering only the positive skin and tip resistance below the lowest layer acting to produce negative skin resistance. When this condition is present, the designer may provide time to allow consolidation to occur before driving piling, or **LRFD [10.7.3.8.6]** may be used to estimate the available pile resistance to withstand the downdrag plus structure loads. Other alternatives are to pre-auger the piling, drive the pile to bearing within a permanent pipe sleeve that is placed from the base of the substructure unit to the bottom of the soft soil layer(s), coat the pile with bitumen above the compressible soil strata or use proprietary materials to encase the piles (within fill constructed after the piling is installed). The Department has experienced problems with bitumen coatings.

The factored axial compression resistance values given for H-piles in Table 11.3-5 are conservative and based on Departmental experience to avoid overstressing during driving. For H-piles in end bearing, loading from downdrag is allowed in addition to the normal pile loading, since this is a post-driving load. Use the values given in Table 11.3-5 and design piling as usual. Additionally, up to 45, 60, and 105 tons downdrag for HP 10x42, HP 12x53, and HP 14x73 piles respectively is allowed when the required driving resistance is determined by the modified Gates formula.

11.3.1.17.2 Lateral Squeeze

Lateral squeeze as described in **LRFD [10.7.2.6]** occurs when pile supported abutments are constructed on embankments and/or MSE walls over soft soils. Typically, the piles are installed prior to completion of the embankment and/or MSE wall, and therefore are potentially subject to subsurface soil instability. If the embankment and/or MSE wall has a marginal factor of safety with regards to slope stability, then lateral squeeze has the potential to laterally deflect the piles and tilt the abutment. Typically, if the shear strength of the subsurface soil is less than the height of the embankment times the unit weight of the embankment divided by three, then damage from lateral squeeze could be expected.

If this is a potential problem, the following are the recommended solutions from the *FHWA Design and Construction of Driven Piles Manual*:

1. Delay installation of abutment piling until after settlement has stabilized (best solution).
2. Provide expansion shoes large enough to accommodate the movement.
3. Use steel H-piles strong enough and rigid enough to provide both adequate strength and deflection control.
4. Use lightweight fill to reduce driving forces.

11.3.1.17.3 Uplift Resistance

Uplift forces may also be present, both permanently and intermittently, on a pile system. Such forces may occur from hydrostatic uplift or cofferdam seals, ice uplift resulting from ice grip on piles and rising water, wind uplift due to pressures against high structures or frost uplift. In the absence of pulling test data, the calculated factored shaft resistance should be used to determine static uplift capacity to demand ratio (CDR). A minimum CDR value of 1.0 is required. Generally, the type of pile with the largest perimeter is the most efficient in resisting uplift forces.

11.3.1.17.4 Pile Setup and Relaxation

The nominal resistance of a deep foundation may change over time, particularly for driven piles. The nominal resistance may increase (setup) during dissipation of excess pore pressure, which developed during pile driving, as soil particles reconsolidate after the soil has been remolded during driving. The shaft resistance may decrease (relaxation) during dissipation of negative pore pressure, which was induced by physical displacement of soil during driving. If

the potential for soil relaxation is significant, a non-displacement pile is preferred over a displacement type pile. Relaxation may also occur as a result of a deterioration of the bearing stratum following driving-induced fracturing, especially for point-bearing piles founded on non-durable bedrock. Relaxation is generally associated with densely compacted granular material.

Pile setup has been found to occur in some fine-grained soil in Wisconsin. Pile setup should not be included in pile design unless pre-construction load tests are conducted to determine site-specific setup parameters. The benefits of obtaining site-specific setup parameters could include shortening friction piles and reducing the overall foundation cost. Pile driving resistance would need to be determined at the end of driving and again later after pore pressure dissipation. Restrike tests involve additional taps on a pile after the pile has been driven and a waiting period (generally 24 to 72 hours) has elapsed. The dynamic monitoring analysis are used to predict resistance capacity and distribution over the pile length.

CAPWAP(CAse Pile Wave Analysis Program) is a signal matching software. CAPWAP uses dynamic pile force and velocity data to discern static and dynamic soil resistance, and then estimate static shaft and point resistance for driven pile. Pile top force and velocity are calculated based on strain and acceleration measurements during pile driving, with a pile driving analyzer (PDA). CAPWAP is based on the wave equation model which characterizes the pile as a series of elastic beam elements, and the surrounding soil as plastic elements with damping (dynamic resistance) and stiffness (static resistance) properties.

Typically, a test boring is drilled and a static load test is performed at test piles where pile setup properties are to be determined. Typical special provisions have been developed for use on projects incorporating aspects of pile setup. Pile setup is discussed in greater detail in FHWA Publication NHI-05-042, *Design and Construction of Driven Pile Foundations*.

Restrike tests with an impact hammer can be used to identify change in pile resistance due to pile setup or relaxation. Restrike is typically performed by measuring pile penetration during the first 10 blows by a warm hammer. Due to setup, it is possible that the hammer used for initial driving may not be adequate to induce pile penetration and a larger hammer may be required to impart sufficient energy for restrike tests. Only warm hammers should be used for restrikes by first applying at least 20 blows to another pile.

Restrike tests with an impact hammer must be used to substantiate the resistance capacity and integrity of pile that is initially driven with a vibratory hammer. Vibratory hammers may be used with approval of the engineer. Other than restrikes with an impact hammer, no formula exists to reliably predict the resistance capacity of a friction pile that is driven with a vibratory hammer.

11.3.1.17.5 Drivability Analysis

In order for a driven pile to develop its design geotechnical resistance, it must be driven into the ground without damage. Stresses developed during driving often exceed those developed under even the most extreme loading conditions. The critical driving stress may be either compression, as in the case of a steel H-pile, or tension, as in the case of a concrete pile.

Drivability is treated as a strength limit state. The geotechnical engineer will perform the evaluation of this limit state during design based on a preliminary dynamic analysis using wave

equation techniques. These techniques are used to document that the assumed pile driving hammers are capable of mobilizing the required nominal (ultimate) resistance of the pile at driving stress levels less than the factored driving resistance of the pile. Drivability can often be the controlling strength limit state check for a pile foundation. This is especially true for high capacity piles driven to refusal on rock.

Drivability analysis is required by **LRFD [10.7.8]**. A drivability evaluation is needed because the highest pile stresses are usually developed during driving to facilitate penetration of the pile to the required resistance. However, the high strain rate and temporary nature of the loading during pile driving allow a substantially higher stress level to be used during installation than for service. The drivability of candidate pile-hammer-system combinations can be evaluated using wave equation analyses.

As stated in the 2004 FHWA Design and Construction of Driven Pile Foundations Manual:

> "The wave equation does not determine the capacity of the pile based on soil boring data. The wave equation calculates a penetration resistance for an assumed ultimate capacity, or conversely it assigns estimated ultimate capacity to a pile based upon a field observed penetration resistance."
>
> "The accuracy of the wave equation analysis will be poor when either soil model or soil parameters inaccurately reflect the actual soil behavior, and when the driving system parameters do not represent the state of maintenance of hammer or cushions."

The following presents potential sources of wave equation errors.

- Hammer Data Input, Diesel Hammers
- Cushion Input
- Soil Parameter Selection

LRFD [C10.7.8] states that the local pile driving results from previous drivability analyses and historical pile driving experience can be used to refine current drivability analyses. WisDOT recommends using previous pile driving records and experience when performing and evaluating drivability analyses. These correlations with past pile driving experience allow modifications of the input values used in the drivability analysis, so that results agree with past construction findings.

Driving stress criteria are specified in the individual LRFD material design sections and include limitations of unfactored driving stresses in piles based on the following:

- Yield strength in steel piles, as specified in **LRFD [6.4.1]**
- Ultimate compressive strength of the gross concrete section, accounting for the effective prestress after losses for prestressed concrete piles loaded in tension or compression, as specified in **LRFD [5.6.4.4]**

Though there are a number of ways to assess the drivability of a pile, the steps necessary to perform a drivability analysis are typically as follows:

1. Estimate the total resistance of all soil layers. This may include layers that are not counted on to support the completed pile due to scour or potential downdrag, but will have to be driven through. WisDOT recommends using the values for quake and damping provided in the FHWA Design and Construction of Driven Pile Foundations Manual.

   In addition, the soil resistance parameters should be reduced by an appropriate value to account for the loss of soil strength during driving. The following table provides some guidelines based on Table 9-19 of the FHWA Design and Construction of Driven Pile Foundations Manual:

Soil Type	Recommended Soil Set Up Factor[1]	Percentage Loss of Soil Strength during Driving
Clay	2.0	50 percent
Silt – Clay	1.5[2]	33 percent
Silt	1.5	33 percent
Sand – Clay	1.5	33 percent
Sand – Silt	1.2	17 percent
Fine Sand	1.2	17 percent
Sand	1.0	0 percent
Sand - Gravel	1.0	0 percent

Notes:
1. Confirmation with local experience recommended
2. The value of 1.5 is higher than the FHWA Table 9-19 value of 1.0 based upon WisDOT experience.

Table 11.3-4
Soil Resistance Factors

Incorporation of loss of soil strength and soil set-up should only be accounted for in the pile drivability analyses. Typically, WisDOT does not include set-up in static pile design analyses.

2. Select a readily available hammer. The following hammers have been used by Wisconsin Bridge Contractors: Delmag D-12-42, Delmag D-12-32, Delmag D-12, Delmag D-15, Delmag D-16-32, Delmag D-19, Delmag D-19-32, Delmag D-19-42, Delmag D-25, Delmag D-30-32, Delmag D-30, Delmag D-36, MKT-7, Kobe K-13, Gravity Hammer 5K.

3. Model the driving system, soil and pile using a wave equation program. The driving system generally includes the pile-driving hammer, and elements that are placed between the hammer and the top of pile, which include the helmet, hammer cushion, and pile cushion (concrete piles only). Pile splices are also modeled. Compute the driving stress using the drivability option for the wave equation, which shows the pile compressive stress an blow counts versus depth for the given soil profile.

4. Determine the permissible driving stress in the pile. During the design stage, it is often desirable to select a lower driving stress than the maximum permitted. This will allow the contractors greater flexibility in hammer selection. WisDOT generally limits driving stress to 90 percent of the steel yield strength

5. Evaluate the results of the drivability analysis to determine a reasonable blow count (that is, ranges from 25 blows per foot to 120 blows per foot) associated with the permissible driving stress.

The goal of the drivability study is to evaluate the potential for excessive driving stresses and to determine that the pile/soil system during driving will result in reasonable blow counts. The drivability study is not intended to evaluate the ultimate pile capacity or establish plan lengths. If the wave equation is used to set driving criteria, then contact the Bureau of Technical Services, Geotechnical Engineering Unit to discuss the proper procedures.

11.3.1.17.6 Scour

During design, estimated pile lengths are increased to compensate for scour loss. The scour depth is estimated and used to compute the estimated shaft resistance that is lost over the scour depth (exposed pile length). The required pile length is then increased to compensate for the resistance capacity that is lost due to scour. The pile length is increased based on the following equation:

$$R_n = R_{n\text{-stat}} + R_{n\text{-scour}}$$

Where:

R_n	=	Nominal shaft resistance capacity, adjusted for scour effect (tons)
$R_{n\text{-stat}}$	=	Nominal shaft resistance based on static analysis, without scour consideration (tons)
$R_{n\text{-scour}}$	=	Nominal shaft resistance lost (negative value) over the exposed pile length due to scour (tons)

WisDOT policy item:

If there is potential for scour at a site, account for the loss of pile resistance from the material within the scour depth. The designer must not include any resistance provided by this material when determining the nominal pile resistance. Since the material within the scour depth may be present during pile driving operations, the additional resistance provided by this material shall be included when determining the required driving resistance. The designer should also consider minimum pile tip elevation requirements.

11.3.1.17.7 Typical Pile Resistance Values

Table 11.3-5 shows the typical pile resistance values for several pile types utilized by the Department. The table shows the Nominal Axial Compression Resistance (Pn), which is a function of the pile materials, the Factored Axial Compression Resistance (Pr), which is a function of the construction procedures, and the Required Driving Resistance, which is a function of the method used to measure pile capacity during installation. The bridge designer uses the Factored Axial Compression Resistance to determine the number and spacing of the piles. The Required Driving Resistance is placed on the plans. See 6.3.2.1-7 for details regarding plan notes.

Pile Size	Shell Thickness (inches)	Concrete or Steel Area (A_g or A_s) (in^2)	Nominal Resistance (Pn) (tons) (2)(3)(6)	(ϕ)	Maximum Factored Resistance (Pr) (tons) (4)	Modified Gates Driving Criteria		PDA/CAPWAP Driving Criteria	
						Factored Resistance (Pr) (ϕ = 0.50) (tons)	Required Driving Resistance (Rn_{dyn}) (tons) (5)	Factored Resistance (Pr) (ϕ = 0.65) (tons)	Required Driving Resistance (Rn_{dyn}) (tons) (5)
Cast in Place Piles									
10 ¾“	0.219	83.5	99.4	0.75	75	55 (8)	110	72 (8)	110
10 ¾“	0.250	82.5	98.2	0.75	74	65 (8)	130	75 (9)	115
10 ¾“	0.365	78.9	93.8	0.75	70	75 (9)	150	75 (9)	115
10 ¾“	0.500	74.7	88.8	0.75	67	75 (9)	150	75 (9)	115
12 ¾”	0.250	118.0	140.4	0.75	105	80 (8)	160	104 (8)	160
12 ¾”	0.375	113.1	134.6	0.75	101	105 (9)	210	104 (9)	160
12 ¾”	0.500	108.4	129.0	0.75	97	105 (9)	210	104 (9)	160
14”	0.250	143.1	170.3	0.75	128	85 (8)	170	111 (8)	170
14”	0.375	137.9	164.1	0.75	123	120 (8)	240	120	185
14”	0.500	132.7	158.0	0.75	118	120 (9)	240	120 (9)	185
16”	0.375	182.6	217.3	0.75	163	145 (8)	290	159	245
16”	0.500	176.7	210.3	0.75	158	160 (9)	320	159 (9)	245
H-Piles									
10 x 42	NA(1)	12.4	310.0	0.50	155	90	180 (10)	117	180 (10)
12 x 53	NA(1)	15.5	387.5	0.50	194	110	220 (10)	143	220 (10)
14 x 73	NA(1)	21.4	535.0	0.50	268	125	250 (10)	162	250 (10)

Table 11.3-5

Typical Pile Axial Compression Resistance Values

Notes:

1. NA – not applicable

2. For CIP Piles: Pn = 0.8 (k_C * f’c * Ag + fy * As) **LRFD [Eq’n 5.6.4.4-3]**. k_C = 0.85 (for $f'_C \leq$ 10.0 ksi). Neglecting the steel shell, equation reduces to 0.68 * f’c * Ag.

   f’c = compressive strength of concrete = 3,500 psi

3. For H-Piles: Pn = (0.66^{λ} * Fe * As) **LRFD [Eq’n 6.9.5.1-1]** (λ = 0 for piles embedded in the ground below the substructure, i.e. no unsupported lengths)

Fe = fy = yield strength of steel = 50,000 psi

4. Pr = ϕ * Pn

   ϕ = 0.75 (**LRFD [5.5.4.2]** for axial compression concrete)

   ϕ = 0.50 (**LRFD [6.5.4.2]** for axial steel, for difficult driving conditions)

5. The Required Driving Resistance is the lesser of the following:

   - $Rn_{dyn} = Pr / \varphi_{dyn}$

     φ_{dyn} = 0.50 for construction driving criteria using modified Gates

     φ_{dyn} = 0.65 for construction driving criteria using PDA/CAPWAP

   - The maximum allowable driving stress based on 90 percent of the specified yield stress = 35,000 psi for CIP piles and 50,000 psi for H-Piles (see note 10).

6. Values for Axial Compression Resistance are calculated assuming the pile is fully supported. Piling not in the ground acts as an unbraced column. Calculations verify that the pile values given in Table 11.3-5 are valid for open pile bents within the limitations described in 13.2.2. Cases of excessive scour require the piling to be analyzed as unbraced columns above the point of streambed fixity.

7. If less than the maximum axial resistance, P_r, is required by design, state only the required corresponding driving resistance on the plans.

8. The Factored Axial Compression Resistance is controlled by the maximum allowable driving resistance based on 90 percent of the specified yield stress of steel rather than concrete capacity.

9. Values were rounded up to the value above so as to not penalize the capacity of the thicker walled pile of the same diameter. (Wisconsin is conservative in not considering the pile shell in the calculation of the Factored Axial Compression Resistance. Rounded values utilize some pile shell capacity)

10. Rn_{dyn} values given for H-Piles are representative of past Departmental experience (rather than Pn x ø) and are used to avoid problems associated with overstressing during driving. These Rn_{dyn} values result in driving stresses much less than 90 percent (46%-58%) of the specified yield stress. If other H-Piles are utilized that are not shown in the table, driving stresses should be held to approximately this same range.

11.3.1.18 Construction Considerations

Construction considerations generally include selection of pile hammers, use of driving formulas and installation of test piles, when appropriate, as described below.

11.3.1.18.1 Pile Hammers

Pile driving hammers are generally powered by compressed air, steam pressure or diesel units. The diesel hammer, a self-contained unit, is the most popular due to its compactness and adoption in most construction codes. Also, the need for auxiliary power is eliminated and the operation cost is nominal. Vibratory and sonic type hammers are employed in special cases where speed of installation is important and/or noise from impact is prohibited. The vibrating hammers convert instantly from a pile driver to a pile extractor by merely tensioning the lift line.

Pile hammers are raised and allowed to fall either by gravity or with the assistance of power. If the fall is due to gravity alone, the hammer is referred to as single-acting. The single-acting hammer is suitable for all types of soil but is most effective in penetrating heavy clays. The major disadvantage is the slow rate of driving due to the relatively slow rate of blows from 50 to 70 per minute. Wisconsin construction specifications call for a minimum hammer weight depending on the required final bearing value of the pile being driven. In order to avoid damage to the pile, the fall of the gravity hammer is limited to 10 feet.

If power is added to the downward falling hammer, the hammer is referred to as double-acting. This type of hammer works best in sandy soil but also performs well in clay. Double-acting hammers deliver 100 to 250 blows per minute, which increases the rate of driving considerably over the single-acting hammers. Wisconsin construction specifications call for a rated minimum energy of 15 percent of the required bearing of the pile. A rapid succession of blows at a high velocity can be extremely inefficient, as the hammer bounces on heavy piles.

Differential-acting hammers overcome the deficiencies found with both single- and double-acting hammers by incorporating higher frequency of blows and more efficient transfer of energy. The steam cycle, which is different from that of any other hammer, makes the lifting area under the piston independent of the downward thrusting area above the piston. Sufficient force can be applied for lifting and accelerating these parts without affecting the dead weight needed to resist the reaction of the downward acceleration force. The maximum delivered energy per blow is the total weight of the hammer plus the weight of the downward steam force times the length of the stroke.

The contractor's selection of the pile hammer is generally dependent on the following:

- The hammer weight and rated energy are selected on the basis of supplying the maximum driving force without damaging the piles.
- The hammer types dictated by the construction specification for the given pile type.
- The hammer types available to the contractor.
- Special situations, such as sites adjacent to existing buildings, that require consideration of vibrations generated from the driving impact or noise levels. In these instances, reducing the hammer size or choosing a double-acting hammer may be preferred over a single-acting hammer. Impact hammers typically cause less ground vibration than vibratory hammers.
- The subsurface conditions at the site.

- The required final resistance capacity of the pile.

WisDOT specifications require the heads of all piling to be protected by caps during driving. The pile cap serves to protect the pile, as well as modulate the blows from the hammer which helps eliminate large inefficient hammer forces. When penetration-per-blow is used as the driving criteria, constant cap-block material characteristics are required. The cap-block characteristics are also assumed to be constant for all empirical formula computations to determine the rate of penetration equivalent to a particular dynamic resistance.

11.3.1.18.2 Driving Formulas

Formulas used to estimate the bearing capacity of piles are of four general types – empirical, static, dynamic and wave equation.

Empirical formulas are based upon tests under limited conditions and are not suggested for general use.

Static formulas are based on soil stresses and try to equate shaft resistance and point resistance to the load-bearing capacity of the piles.

Dynamic pile driving formulas assume that the kinetic energy imparted by the pile hammer is equal to the nominal pile resistance plus the energy lost during driving, starting with the following relationship:

$$\text{Energy input} = \text{Energy used} + \text{Energy lost}$$

The energy used equals the driving resistance multiplied by the pile movement. Thus, by knowing the energy input and estimating energy losses, driving resistance can be calculated from observed pile movement. Numerous dynamic formulas have been proposed. They range from the simpler Engineering News Record (ENR) Formula to the more complex Hiley Formula. A modified Engineering News Formula was previously used by WisDOT to determine pile resistance capacity during installation. All new designs shall use the FHWA-modified Gates dynamic pile formula (modified Gates) or WAVE equation for determining the required driving resistance.

The following modified Gates formula is used by WisDOT:

$$R_R = \varphi_{dyn} R_{ndr} = \varphi_{dyn}\left(0.875\left(E_d\right)^{0.5} \log_{10}\left(10/s\right) - 50\right)$$

Where:

R_R	=	Factored pile resistance (tons)
φ_{dyn}	=	Resistance factor = 0.50, as specified in Table 11.3-1
R_{ndr}	=	Nominal pile resistance measured during pile driving (tons)

E_d = Energy delivered by the hammer per blow (lb-foot)

s = Average penetration in inches per blow for the final 10 blows (inches/blow)

Because of the difficulty of evaluating the many energy losses involved with pile driving, these dynamic formulas can only approximate pile driving resistance. These approximate results can be used as a safe means of determining pile length and bearing requirements. Despite the obvious limitations, the dynamic pile formulas take into account the best information available and have considerable utility to the engineer in securing reasonably safe and uniform results over the entire project.

The wave equation can be used to set driving criteria to achieve a specified pile bearing capacity (contact the Bureau of Technical Services, Geotechnical Engineering Unit prior to using the wave equation to set the driving criteria). The wave equation is based upon the theory of longitudinal wave transmission. This theory, proposed by Saint Venant a century ago, did not receive widespread use until the advent of computers due to its complexity. The wave equation can predict impact stresses in a pile during driving and estimate static soil resistance at the time of driving by solving a series of simultaneous equations. An advantage of this method is that it can accommodate any pile shape, as well as any distribution of pile shaft resistance and point resistance. The effect of the hammer and cushion block can be included in the computations.

Dynamic monitoring is performed by a Pile Driving Analyzer (PDA). WisDOT uses the PDA to evaluate the driving criteria, which is set by a wave equation analysis, and in an advisory capacity for evaluating if sufficient pile penetration is achieved, if pile damage has occurred or if the driving system is performing satisfactorily.

The PDA provides a method of dynamic pile testing both for pile design and construction control. Testing is accomplished during pile installation by attaching reusable strain transducers and accelerometers directly on the pile. Piles can be tested while being driven or during restrike. The instrumentation mounted on the pile allows the measurement of force and acceleration signals for each hammer blow. This data is transmitted to a small field computer for processing and recording. Calculations made by the computer based upon one-dimensional wave mechanics provide an immediate readout of maximum stresses in the pile, energy transmitted to the pile and a prediction of the nominal axial resistance of the pile for each hammer impact. Monitoring of the force and velocity wave traces with the computer during driving also enables detection of any structural pile damage that may have occurred. Review of selected force and velocity wave traces are also available to provide additional testing documentation. The PDA can be used on all types of driven piles with any impact type of pile-driving hammer.

11.3.1.18.3 Field Testing

Test piles are employed at a project site for two purposes:

- For test driving, to determine the length of pile required prior to placing purchasing orders.

- For load testing, to verify actual pile capacity versus design capacity for nominal axial resistance.

11.3.1.18.3.1 Installation of Test Piles

Test piles are not required for spliceable types of piles. Previous experience indicates that contractors typically order total plan quantities for cast-in-place or steel H-piling in 60-foot lengths. The contractor uses one of the driven structure piles as a test pile at each designated location.

Test piling should be driven near the location of a soil boring where the soil characteristics are known and representative of the most unfavorable conditions at the site. The test pile must be exactly the same type and dimension as the piles to be used in the construction and installed by the same equipment and manner of driving. A penetration record is kept for every 1 foot of penetration for the entire length of pile. This record may be used as a guide for future pile driving on the project. Any subsequent pile encountering a smaller resistance is considered as having a smaller nominal resistance capacity than the test pile.

11.3.1.18.3.2 Static Pile Load Tests

A static pile load test is usually conducted to furnish information to the geotechnical engineer to develop design criteria or to obtain test data to substantiate nominal resistance capacity for piles. A static pile load test is the only reliable method of determining the nominal bearing resistance of a single pile, but it is expensive and can be quite time consuming. The decision to embark on an advance test program is based upon the scope of the project and the complexities of the foundation conditions. Such test programs on projects with large numbers of displacement piling often result in substantial savings in foundation costs, which can more than offset the test program cost. WisDOT has only performed a limited number of pile load tests on similar type projects.

Static pile load testing generally involves the application of a direct axial load to a single vertical pile. However, static pile load testing can involve uplift or axial tension tests, lateral tests applied horizontally, group tests or a combination of these applied to battered piles. Most static test loads are applied with hydraulic jacks reacting against either a stable loaded platform or a test frame anchored to reaction piles.

The basic information to be developed from the static pile load test is usually the deflection of the pile head under the test load. Movement of the head is caused by elastic deformation of the piles and the soil. Soil deformation may cause undue settlement and must be guarded against. The amount of deformation is the significant value to be obtained from load tests, rather than the total downward movement of the pile head. Static pile load tests are typically performed by loading to a given deflection value.

It is impractical to test every pile on a project. Therefore, test results can be applied to other piles or pile groups providing that the following conditions exist:

- The other piles are of the same type, material and size as the test piles.

- Subsoil conditions are comparable to those at the test pile locations.
- Installation methods and equipment used are the same as, or comparable to, those used for the test piles.
- Piles are driven to the same penetration depth or resistance or both as the test piles to compensate for variations in the vertical position and density of the bearing strata.

11.3.1.19 Construction Monitoring for Economic Evaluation of Deep Foundations

The goal of the foundation design is to provide the most efficient and economical design for the subsurface conditions. The design of pile-supported foundations is influenced by the resistance factor, which is generally a function of pile resistance determination during installation. The discussion in 11.3.1.14 presents the definition of resistance factors.

The typical method for a majority of the Department's deep foundation substructures is using the modified Gates to determine the RDR and to use a resistance factor of 0.50 based on department research and past experience. A comparison should be made between the use of the modified Gates and the use of the PDA with CAPWAP or the use of the Static Pile Load Test and the PDA with CAPWAP to determine which method is the most economical.

There are two possible methods available to economically use the PDA with CAPWAP to determine the required driving resistance, which allows the use of a resistance factor of 0.65.

Method 1: Reduce the number of piles in the substructure by driving the piles to the same RDR as using the modified Gates, but then increasing the FACR used in design. This is possible because the department has set a maximum value on the RDR, which when converted to the FACR is less than the structural capacity of the piles. This is true for all H-piles, and for some CIP piles when the FACR is controlled by the maximum allowable compression stress during driving based on 90 percent of the specified yield stress of steel.

Method 2: Drive each pile to a lower RDR, which should result in a shorter pile length. The number of piles per substructure would remain the same. The design estimated pile lengths are a function of the assumed soil conditions and the required driving resistance. The as-built pile lengths are a function of the actual soil conditions encountered and the contractor's hammer selection.

The department recommends Method 1 when evaluating the potential economic benefits of using the PDA with CAPWAP, because of the difficultly in accurately predicting pile lengths.

The method used to compare modified Gates to Static Pile Load Test(s) and the PDA with CAPWAP, which allows the use of a resistance factor of 0.80, would follow the procedures described in Method 1 used in the PDA with CAPWAP, reducing the number of piles per substructure. The number of static load test(s) will be a function of the size and number of substructures, the general spatial extent of the area in question and the variability of the subsurface conditions in the area of interest.

The costs to be included in the economic evaluation include the cost of the piling, the cost for the Department/Consultant to monitor the test piles, the cost for the Consultant CAPWAP evaluation (the Department does not currently have this capability), the unit costs for the contractor's time for driving and redriving the test piles, and the cost for the static pile load test(s).

Once the investigation of the subsurface conditions has been completed the geotechnical engineer and the structure engineer should discuss the potential for cost savings by increasing the resistance factor. The Bureau of Structures, Geotechnical Engineering Unit and the Region should be included in the discussion and should be part of the decision. Generally, the larger the project, the greater the potential for significant savings. The Department has two PDA's; therefore, the project team should contact the Geotechnical Engineering Unit (608-246-7940) to evaluate resources prior to incorporation of an increased resistance factor in the foundation design. PDA monitoring may be completed by Department or consultant personnel.

The following two examples use Method 1 to illustrate the potential cost savings/expenses for PDA with CAPWAP:

Pier
Pier Example: 12 x 53 H-piles to an estimated length of 100 feet at a unit cost of $40/foot. (**Note:** It is realized that for pier design the number of piles is not exclusively related to the vertical load, but this example is simplified for illustrative purposes).
Modified Gates: RDR = 220 tons, FACR = 110 tons, Total Load on Pier = 3,500 tons, Number of Piles = 3,500 tons / 110 tons = 32 piles Pile Cost = 32 piles x 100 feet x $40/ft = $128,000 Total Cost = $128,000
PDA/CAPWAP: RDR = 220 tons, FACR = 143 tons, Total Load on Pier = 3,500 tons, Number of Piles = 3,500 tons / 143 tons = 25 piles Pile Cost = 25 piles x 100 feet x $40/ft = $100,000 PDA Testing Cost = 2 piles/sub. x $700/pile = $1,400 PDA Restrike Cost = 2 piles/sub. x $600/pile = $1,200 CAPWAP Evaluation = 1 eval./sub. x $400/eval. = $400 Total Cost = $103,000
PDA/CAPWAP Savings = $25,000/pier

Abutment
Abutment Example: 12 x 53 H-piles to an estimated length of 100 feet at a unit cost of $40/foot.
Modified Gates: RDR = 220 tons, FACR = 110 tons, Total Load on Abut = 980 tons, Number of Piles = 980 tons / 110 tons = 9 piles Total Cost = 9 piles x 100 feet x $40/ft = $36,000
PDA/CAPWAP: RDR = 220 tons, FACR = 143 tons, Load on Abut = 980 tons, Number of Piles = 980 tons / 143 tons = 7 piles, however because of maximum spacing requirements the design will need 8 piles. Pile Cost = 8 piles x 100 feet x $40/ft = $32,000 PDA Testing Cost = 2 piles/sub. x $700/pile = $1,400 PDA Restrike Cost = 2 piles/sub. x $600/pile = $1,200 CAPWAP Evaluation = 1 eval./sub. x $400/eval. = $400 Total Cost = $35,000
PDA/CAPWAP Cost = $1000/abutment **Note:** For a three span bridge, with 12 x 53 H-piles to an estimated length of 100 feet at a unit cost of $40/foot, PDA/CAPWAP would provide an estimated structure savings of $52,000. For a two span bridge, with 12 x 53 H-piles to an estimated length of 40 feet at a unit cost of $40/foot, PDA/CAPWAP would provide an estimated structure savings of $5,400. Bid prices based on 2014-2015 cost data.

Table 11.3-6

Economical Evaluation for Deep Foundations with Two Construction Monitoring Methods

11.3.2 Drilled Shafts

11.3.2.1 General

Drilled shafts are generally large diameter, cast-in-place, open ended, cased concrete piles which are designed to carry extremely heavy loads. Drilled shafts can be the most economical foundation alternative at sites where foundation loads are carried to bearing on dense strata or bedrock. They are also cost effective in water crossings with very shallow bedrock, where cofferdams are difficult or expensive to construct, and where high overturning moments must be resisted.

Drilled shafts are installed by removing soil and rock using drilling methods or other excavation techniques and constructing the foundation element in the excavated hole. The excavated hole may be supported using temporary or permanent casing, drilling slurry or other methods. The hole is then filled with a reinforcement cage and cast-in-place concrete. Drilled shafts are non-displacement elements since the soil volume required for the element is physically removed prior to installation. Thus, the effective normal stress adjacent to the pile remains unchanged or is reduced (due to expansion of the soil into the hole before insertion/construction of the load bearing element), and the soil properties and pore water pressure adjacent to the foundation elements are not significantly impacted.

Because drilled shafts do not require a hammer for installation and do not displace the soil, they typically have much less impact on adjacent structures. Depending on the excavation technique used, they can penetrate significant obstructions. Because the method of construction often allows a decrease in the effective stress immediately adjacent to and beneath the tip of the foundation element, the resistance developed will often be less than an equivalently sized driven pile.

Drilled shafts are generally considered fixed to the substructure unit if the reinforcing steel from the shaft is fully developed within the substructure unit.

Drilled shafts vary in diameter from approximately 2.5 to 10 feet. Drilled shafts with diameters greater than 6 feet are generally referred to as piers. Shafts may be designed to transfer load to the bearing stratum through side friction, point-bearing or a combination of both. The drilled shaft may be cased or uncased, depending on the subsurface conditions and depth of bearing.

The minimum drilled shaft spacing shall be 3.0 shaft diameters center-to-center (3D). When drilled shafts are spaced less than 6D, group effects shall be evaluated for possible reductions to axial and lateral resistances. See 11.3.2.3.3 for more information.

Drilled shafts have been used on only a small number of structures in Wisconsin. For unusual site conditions, the use of drilled shafts may be advantageous. Design methodologies for drilled shafts can be found in **LRFD [10.8]** Drilled Shafts and *Drilled Shafts: Construction Procedures and Design Methods*. FHWA Publication NHI-18-024, FHWA GEC 010. 2018.

Strength limit states for drilled shafts are evaluated in the same way as for driven piles. Drivability is not required to be evaluated. The structural resistance of drilled shafts is evaluated in accordance with **LRFD [5.6 and 5.7]**. This includes evaluation of axial resistance, combined axial and flexure, shear and buckling. It is noted that the critical load case for combined axial and flexure may be a load case that results in the minimum axial load or tension.

11.3.2.2 Resistance Factors

Resistance factors for drilled shafts are presented in Table 11.3-7 and are selected based on the method used to determine the nominal (ultimate) resistance capacity of the drilled shaft. The design intent is to adjust the resistance factor based on the reliability of the method used to determine the nominal shaft resistance. As with driven piles, the selection of a geotechnical resistance factor should be based on the intended method of resistance verification in the field. Because of the cost and difficulty associated with testing drilled shafts, much more reliance is placed on static analysis methods.

Condition/Resistance Determination Method				Resistance Factor
Static Analysis – Used in Design Phase	Nominal Resistance of Single-Drilled Shaft in Axial Compression, φ_{stat}	Shaft Resistance in Clay	Alpha Method	0.45
		Point Resistance in Clay	Total Stress	0.40
		Shaft Resistance in Sand	Beta Method	0.55
		Point Resistance in Sand	O'Neill and Reese	0.50
		Shaft Resistance in IGMs	O'Neill and Reese	0.60
		Point Resistance in IGMs	O'Neill and Reese	0.55
		Shaft Resistance in Rock	Horvath and Kenney O'Neill and Reese	0.55
			Carter and Kulhawy	0.50
		Point Resistance in Rock	Canadian Geotech. Soc. Pressuremeter Method O'Neill and Reese	0.50
	Block Failure, φ_{bl}	Clay		0.55
	Uplift Resistance of Single-Drilled Shaft, φ_{up}	Clay	Alpha Method	0.35
		Sand	Beta Method	0.45
		Rock	Horvath and Kenney Carter and Kulhawy	0.40
	Group Uplift Resistance, φ_{ug}	Sand and Clay		0.45
	Horizontal Geotechnical Resistance of Single Shaft or Pile Group	All Soil Types and Rock		1.0

Table 11.3-7

Geotechnical Resistance Factors for Drilled Shafts **LRFD [Table 10.5.5.2.4-1]**

For drilled shafts, the base geotechnical resistance factors in Table 11.3-7 assume groups containing two to four shafts, which are slightly redundant. For groups containing at least five elements, the base geotechnical resistance factors in Table 11.3-7 should be increased by 20%.

WisDOT policy item:

When a bent contains at least 5 columns (where each column is supported on a single drilled shaft) the resistance factors in Table 11.3-7 should be increased up to 20 percent for the Strength Limit State.

For piers supported on a single drilled shaft, the resistance factors in Table 11.3-7 should be decreased by 20 percent for the Strength Limit State. Use of single drilled shaft piers requires approval from the Bureau of Structures.

Resistance factors for structural design of drilled shafts are obtained from **LRFD [5.5.4.2]**.

11.3.2.3 Bearing Resistance

Most drilled shafts provide geotechnical resistance in both end bearing and side friction. Because the rate at which side friction mobilizes is usually much higher than the rate at which end bearing mobilizes, past design practice has been to ignore either end bearing for shafts with significant sockets into the bearing stratum or to ignore skin friction for shafts that do not penetrate significantly into the bearing stratum. This makes evaluation of the geotechnical resistance slightly more complex, because in most cases it is not suitable to simply add the nominal (ultimate) end bearing resistance and the nominal side friction resistance in order to obtain the nominal axial geotechnical resistance.

When computing the nominal geotechnical resistance, consideration must be given to the anticipated construction technique and the level of construction control. If it is anticipated to be difficult to adequately clean out the bottom of the shafts due to the construction technique or subsurface conditions, the end bearing resistance may not be mobilized until very large deflections have occurred. Similarly, if construction techniques or subsurface conditions result in shaft walls that are very smooth or smeared with drill cuttings, side friction may be far less than anticipated.

Because these resistances mobilize at different rates, it may be more appropriate to add the ultimate end bearing to that portion of the side resistance remaining at the end of bearing failure. Or it may be more appropriate to add the ultimate side resistance to that portion of the end bearing mobilized at side resistance failure. Note that consideration of deflection, which is a service limit state, may control over the axial geotechnical resistance since displacements required to mobilize the ultimate end bearing can be excessive.

11.3.2.3.1 Shaft Resistance

The shaft resistance is estimated by summing the friction developed in each stratum. When drilled shafts are socketed in rock, the shaft resistance that is developed in soil is generally ignored to satisfy strain compatibility. The following analysis methods are typically used to compute the static shaft resistance in soil and rock:

- Alpha method for cohesive soil, as specified in **LRFD [10.8.3.5.1]**
- Beta method (β-method) for cohesionless soil, as specified in **LRFD [10.8.3.5.2]**

- Horvath and Kenny method for rock, as specified in **LRFD [10.8.3.5.4]**

11.3.2.3.2 Point Resistance

The following analysis methods are typically used to compute the static shaft resistance in soil:

- Alpha method for cohesive soil, as specified in **LRFD [10.8.3.5.1]**
- Beta method (β-method) for cohesionless soil, as specified in **LRFD [10.8.3.5.2]**

The ultimate unit point resistance of a drilled shaft in intact or tightly jointed rock is computed as 2.5 times the unconfined compressive strength of the rock. For rock containing open or filled joints, the geomechanics RMR system is used to characterize the rock, and the ultimate point resistance in rock can be computed as specified in **LRFD [10.8.3.5.4c]**.

11.3.2.3.3 Group Capacity

Group effects for axial and lateral resistances shall be evaluated in accordance with **LRFD [10.8.3.6]** and **LRFD [10.8.3.8]**, respectively. In general, reductions to individual nominal resistances are limited to drilled shafts spaced less than 6D and are based on spacing, soil type, and soil contact.

11.3.2.4 Lateral Load Resistance

Because drilled shafts are made of reinforced concrete, the lateral analysis should consider the nonlinear variation of bending stiffness with respect to applied bending moment. At small applied moments, the reinforced concrete section performs elastically based on the size of the section and the modulus of elasticity of the concrete. At larger moments, the concrete cracks in tension and the stiffness drops significantly.

11.3.2.5 Other Considerations

Detailing of the reinforcing steel in a drilled shaft must consider the constructability of the shaft. The reinforcing cages must be stiff enough to resist bending during handling and concrete placement. In addition, the spaces between reinforcement bars must be kept large enough to permit easy flow of the concrete from the center of shaft to the outside of shaft. These two requirements will generally force the use of larger, more widely spaced longitudinal and transverse reinforcement bars than would be used in the design of an above-grade column. In addition, when using hooked bars to tie the shaft to the foundation, consideration must also be given to concrete placement requirements and temporary casing removal requirements.

11.3.3 Micropiles

11.3.3.1 General

In areas of restricted access, close proximity to settlement sensitive existing structures or difficult geology, micropiles may be considered when determining the recommended foundation type. Although typically more expensive than driven pile, constructability

considerations may warrant selection of micropiles as the preferred foundation type. A micropile is constructed by drilling a borehole with drill casing, placing reinforcement and grouting the hole. Micropiles are installed by methods that cause minimal disturbance to adjacent structures, soil and the environment. They can be installed in areas with restricted access and vertical clearance. Drill casing permits installation in poor ground conditions. Micropiles are installed with the same type of equipment that is used for ground anchor and grouting projects. Micropiles can be either vertical or battered.

Micropiles are used for structural support of new structures, underpinning existing structures, scour protection and seismic retrofit at existing structures. Micropiles are also used to create a reinforced soil mass for ground stabilization.

With a micropile's smaller cross-sectional area, the pile design is more frequently governed by structural and stiffness considerations. Due to the small pile diameter, point resistance is usually disregarded for design. Steel casing for micropiles is commonly delivered in 5 to 20 foot long flush-joint threaded sections. The casing is typically 5.5 to 12 inches in diameter, with yield strength of 80 ksi. Grout is mixed neat with a water/cement ratio on the order of 0.45 and an unconfined compressive strength of 4 to 6 ksi. Grade 60, 90 and 150 single reinforcement bars are generally used with centralizers.

Grout/ground bond capacity varies directly with the method of placement and pressure used to place the grout. Common methods include grout placement under gravity head, grout placement under low pressure as temporary drill steel is removed and grout placement under high pressure using a packer and regrout tube. Some regrout tubes are equipped to allow regrouting multiple times to increase pile capacity.

11.3.3.2 Design Guidance

Micropiles shall be designed in conformance with the current *AASHTO LRFD* and in accordance with the WisDOT Bridge Manual. Design guidelines for micropiles are provided in FHWA Publication No. FHWA-NHI-05-039.

11.3.4 Augered Cast-In-Place Piles

11.3.4.1 General

Augered cast-in-place (ACIP) piles are installed by drilling a hole with a hollow stem auger. When the auger reaches a design depth (elevation) or given torque, sand-cement grout or concrete is pumped through the hollow-stem auger while the auger is withdrawn from the ground. Reinforcement steel can be placed while the grout is still fluid. A single reinforcement bar can also be installed inside the hollow stem auger before the auger is extracted. ACIP piles are installed by methods that cause minimal disturbance to adjacent structures, soil and the environment. They can also be installed in areas with restricted access and vertical clearance. Temporary casing is not required. In many situations, these foundation systems can be constructed more quickly and less expensively than other deep foundation alternatives.

ACIP piles are generally available in 12- to 36-inch diameters and typically extend to depths of 60 to 70 feet. In some cases, ACIP piles have been installed to depths of more than 100

feet. The torque capacity of the drilling equipment may limit the available penetration depth of ACIP piles, especially in stiff to hard cohesive soil. Typical Wisconsin bridge contractors do not own the necessary equipment to install this type of pile.

ACIP piles may be more economical; however, there is a greater inherent risk in their installation from the quality control standpoint. There is currently no method available to determine pile capacity during construction of ACIP piles. WisDOT does not generally use this pile type unless there are very unusual design/site requirements.

11.3.4.2 Design Guidance

In the future, the FHWA will distribute a Geotechnical Engineering Circular that will provide design and construction guidance for ACIP piles. WisDOT plans to reassess the use of ACIP piles at that time.

11.4 References

1. State of Wisconsin, Department of Transportation. *Standard Specifications for Highway and Structure Construction*.

2. American Association of State Highway and Transportation Officials. *Standard Specifications for Highway Bridges*.

3. American Association of State Highway and Transportation Officials. *AASHTO LRFD Bridge Design Specifications*.

4. Armour, T., P. Groneck, J. Keeley and S. Sharma. *Micropile Design and Construction Guidelines, Implementation Manual*. FHWA Publication SA-97-070. June 2000.

5. Chellis, R.D. *Pile Foundations*. McGraw Hill. 1961.

6. Hannigan, P.J., G.G. Goble, G. E. Likins and F. Rausche. *Design and Construction of Driven Pile Foundations – Volumes 1 and 2*. FHWA Publication NHI-05-042. 2006.

7. Kimmerling, R.E., R.C. Bachus, P.W. Mayne, J.A. Scheider and T.E. Zettler. *Geotechnical Engineering Circular No. 6: Shallow Foundations*. FHWA Publication SA-02-054. September 2002.

8. Lagrasse, P.F., J.D. Schall and E.V. Richardson. *Hydraulic Engineering Circular No. 20: Stream Stability at Highway Structures*, 3rd Edition. FHWA Publication NHI 01-002. March 2001.

9. Lagrasse, P.F., L.W. Zevenbergen, J.D. Schall and P.E. Clopper. *Hydraulic Engineering Circular No. 23: Bridge Scour and Stream Instability Countermeasures, Experience, Selection, and Design Guidance*, 2nd Edition. FHWA Publication NHI 01-003. March 2001.

10. Leonards, G.A. *Foundation Engineering*. McGraw Hill. 1962.

11. Michael Baker Jr., Inc. *LRFD for Highway Bridge Substructures and Earth Retaining Structures*. FHWA Publication NHI-05-095. Revised October 2006.

12. *Micropile Design and Construction Reference Manual*. FHWA Publication NHI-05-039. 2005.

13. O'Neil, M.W. and L.C. Reese. *Drilled Shafts: Construction Procedures and Design Methods*. FHWA Publication IF-99-025. August 1999.

14. O'Neil, M.W., F.C. Townsend, K.M. Hassan, A. Butler and P.S. Chan. *Load Transfer for Drilled Shafts in Intermediate Geomaterials*. FHWA Publication RD-95-172. November 1996.

15. Richardson, E.V. and S.R. Davis. *Hydraulic Engineering Circular No. 18: Evaluating Scour at Bridges*, 4th Edition. FHWA Publication NHI 01-001. May 2001.

16. Sabatini, P.J. et al. *Geotechnical Engineering Circular No. 5: Evaluation of Soil and Rock Properties*. FHWA Publication IF-02-034. April 2002.

17. Terzaghi, K. and R.B. Peck. *Soil Mechanics in Engineering Practice*, 2nd Edition. Wiley. 1967.

18. Tschebotrarioff, G.P. *Foundations, Retaining and Earth Structures*, 2nd Edition. McGraw Hill. 1973.

19. *Drilled Shafts: Construction Procedures and Design Methods*. FHWA Publication NHI-18-024, FHWA GEC 010. 2018.

11.5 Design Examples

WisDOT will provide design examples.

This section will be expanded later when the design examples are available.

Table of Contents

12.1 General 3
12.2 Abutment Types 5
12.2.1 Full-Retaining 5
12.2.2 Semi-Retaining 6
12.2.3 Sill 6
12.2.4 Spill-Through or Open 7
12.2.5 Pile-Encased 8
12.2.6 Special Designs 8
12.3 Types of Abutment Support 9
12.3.1 Piles or Drilled Shafts 9
12.3.2 Spread Footings 9
12.4 Abutment Wing Walls 11
12.4.1 Wing Wall Length 11
12.4.1.1 Wings Parallel to Roadway 11
12.4.1.2 Wings Not Parallel to Roadway and Equal Slopes 13
12.4.2 Wing Wall Loads 15
12.4.3 Wing Wall Parapets 16
12.5 Abutment Depths, Excavation and Construction 17
12.5.1 Abutment Depths 17
12.5.2 Abutment Excavation 17
12.6 Abutment Drainage and Backfill 19
12.6.1 Abutment Drainage 19
12.6.2 Abutment Backfill Material 19
12.7 Selection of Standard Abutment Types 20
12.8 Abutment Design Loads and Other Parameters 22
12.8.1 Application of Abutment Design Loads 22
12.8.2 Load Modifiers and Load Factors 25
12.8.3 Live Load Surcharge 26
12.8.4 Other Abutment Design Parameters 27
12.8.5 Abutment and Wing Wall Design in Wisconsin 28
12.8.6 Horizontal Pile Resistance 29
12.9 Abutment Body Details 31

12.9.1 Construction Joints 31
12.9.2 Beam Seats 32
12.10 Timber Abutments 33
12.11 Bridge Approach Design and Construction Practices 34

12.1 General

Abutments are used at the ends of bridges to retain the embankment and to carry the vertical and horizontal loads from the superstructure to the foundation, as illustrated in Figure 12.1-1. The design requirements for abutments are similar to those for retaining walls and for piers; each must be stable against overturning and sliding. Abutment foundations must also be designed to prevent differential settlement and excessive lateral movements.

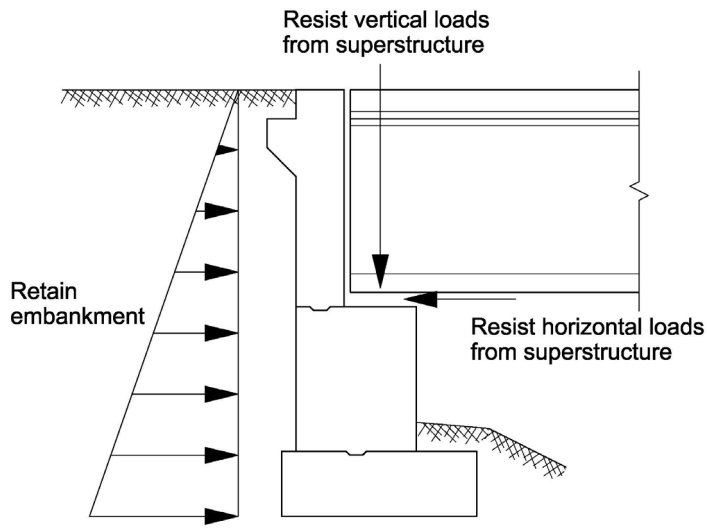

Figure 12.1-1
Primary Functions of an Abutment

The components of a typical abutment are illustrated in Figure 12.1-2.

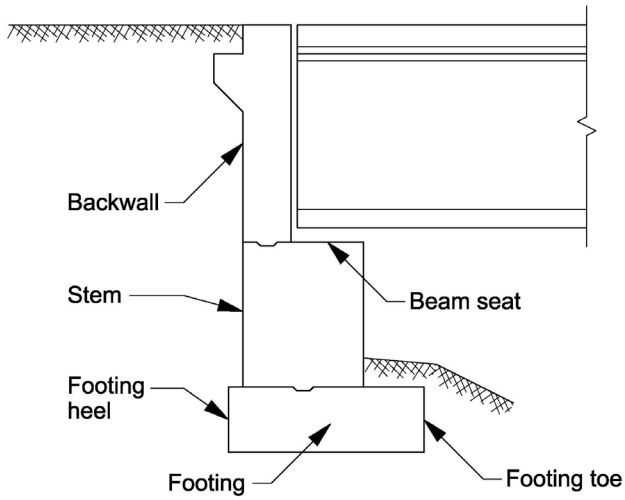

Figure 12.1-2
Components of an Abutment

Many types of abutments can be satisfactorily utilized for a particular bridge site. Economics is usually the primary factor in selecting the type of abutment to be used. For river or stream crossings, the minimum required channel area and section are considered. For highway overpasses, minimum horizontal clearances and sight-distances must be maintained.

An abutment built on a slope or on top of a slope is less likely to become a collision obstacle than one on the bottom of the slope and is more desirable from a safety standpoint. Aesthetics is also a factor when selecting the most suitable abutment type.

12.2 Abutment Types

Several different abutment types can be used, including full-retaining, semi-retaining, sill, spill-through or open, pile-encased and special designs. Each of these abutment types is described in the following sections.

12.2.1 Full-Retaining

A full-retaining abutment is built at the bottom of the embankment and must retain the entire roadway embankment, as shown in Figure 12.2-1. This abutment type is generally the most costly. However, by reducing the span length and superstructure cost, the total structure cost may be reduced in some cases. Full-retaining abutments may be desirable where right of way is critical.

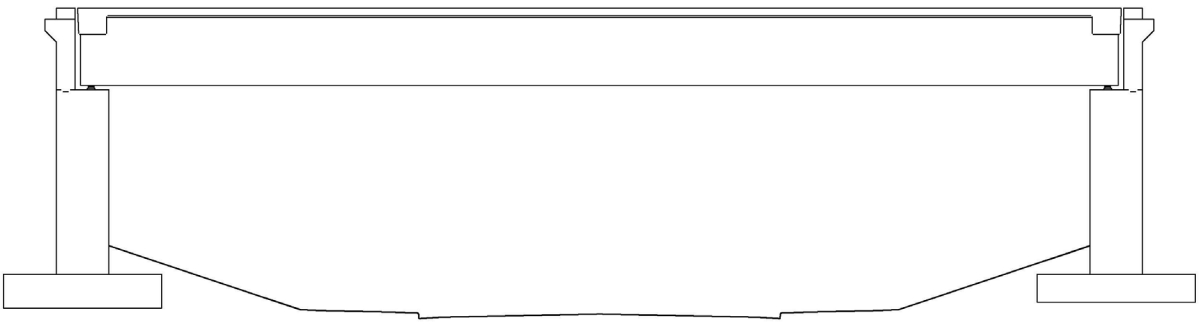

Figure 12.2-1
Full-Retaining Abutment

Rigid-frame structures use a full-retaining abutment poured monolithically with the superstructure. If both abutments are connected by fixed bearings to the superstructure (as in rigid frames), the abutment wings are joined to the body by a mortised expansion joint. For a non-skewed abutment, this enables the body to rotate about its base and allows for superstructure contraction and expansion due to temperature and shrinkage, assuming that rotation is possible.

An objectionable feature of full-retaining abutments is the difficulty associated with placing and compacting material against the body and between the wing walls. It is possible that full-retaining abutments may be pushed out of vertical alignment if heavy equipment is permitted to work near the walls, and this temporary condition is not accounted for in a temporary load combination. The placement of the embankment after abutment construction may cause foundation settlement. For these reasons, as much of the roadway embankment as practical should be in place before starting abutment construction. Backfilling above the beam seat is prohibited until the superstructure is in place.

Other disadvantages of full-retaining abutments are:

- Minimum horizontal clearance

- Minimum sight distance when roadway underneath is on a curved alignment
- Collision hazard when abutment front face is not protected
- Settlement

12.2.2 Semi-Retaining

The semi-retaining abutment (Type A3) is built somewhere between the bottom and top of the roadway embankment, as illustrated in Figure 12.2-2. It provides more horizontal clearance and sight distance than a full-retaining abutment. Located on the embankment slope, it becomes less of a collision hazard for a vehicle that is out of control.

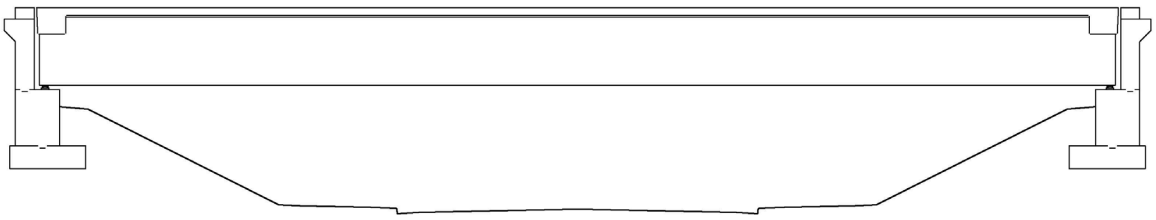

A3

Figure 12.2-2
Semi-Retaining Abutment

The description of full-retaining abutments in 12.2.1 generally applies to semi-retaining abutments as well. They are used primarily in highway-highway crossings as a substitute for a shoulder pier and sill abutment. Semi-retaining abutments generally are designed with a fixed base, allowing wing walls to be rigidly attached to the abutment body. The wings and the body of the abutment are usually poured monolithically.

12.2.3 Sill

The sill abutment (Type A1) is constructed at the top of the slope after the roadway embankment is close to final grade, as shown in Figure 12.2-3. The sill abutment helps avoid many of the problems that cause rough approach pavements. It eliminates the difficulties of obtaining adequate compaction adjacent to the relatively high walls of closed abutments. Since the approach embankment may settle by forcing up or bulging up the slope in front of the abutment body, a berm is often constructed at the front of the body. The weight of the berm helps prevent such bulging.

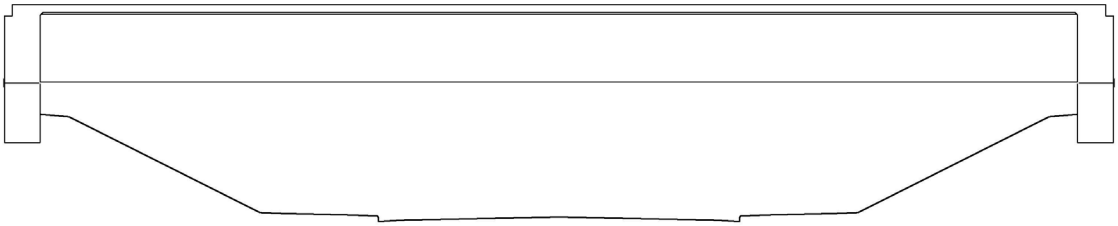

Figure 12.2-3
Sill Abutment

Sill abutments are the least expensive abutment type and are usually the easiest to construct. However, this abutment type results in a higher superstructure cost, so the overall cost of the structure should be evaluated with other alternatives.

For shallow superstructures where wing piles are not required, the Type A1 abutment is used with a fixed seat. This minimizes cracking between the body wall and wings. However, for shallow superstructures where wing piles are required, the Type A1 abutment is used with a semi-expansion seat. This allows superstructure movement, and it reduces potential cracking between the wings and body.

The parallel-to-abutment-centerline wings or elephant-ear wings, as shown on the Standard Details for Wings Parallel to A1 Abutment Centerline, should be used for grade separations when possible. This wing type is preferred because it increases flexibility in the abutment, it simplifies compaction of fill, and it improves stability. However, parallel-to-abutment-centerline wings should not be used for stream crossings when the high water elevation is above the bottom of the abutment. This wing configuration may not adequately protect bridge approaches and abutment backfill from the adjacent waterway.

12.2.4 Spill-Through or Open

A spill-through or open abutment is mostly used where an additional span may be added to the bridge in the future. It may also be used to satisfy unique construction problems. This abutment type is situated on columns or stems that extend upward from the natural ground. It is essentially a pier being used as an abutment.

It is very difficult to properly compact the embankment materials that must be placed around the columns and under the abutment cap. Early settlement and erosion are problems frequently encountered with spill-through or open abutments.

If the abutment is to be used as a future pier, it is important that the wings and backwall be designed and detailed for easy removal. Construction joints should be separated by felt or other acceptable material. Reinforcing steel should not extend through the joints. Bolts with threaded inserts should be used to carry tension stresses across joints.

12.2.5 Pile-Encased

Pile-encased abutments (Type A5) should only be used where documented cost data shows them to be more economical than sill abutments due to site conditions. For local roads right-of-way acquisition can be difficult, making the A5 a good option. Requiring crane access from only one side of a stream may be another reason to use a single span bridge with A5 abutments, as would savings in railing costs. Steeper topography may make A5 abutments a more reasonable choice than sill abutments. In general, however, using sill abutments with longer bridges under most conditions has cost advantages over using the Type A5 abutments. Type A5 abutments may require additional erosion control measures that increase construction cost.

The wall height of pile-encased abutments is limited to a maximum of 10 feet since increased wall height will increase soil pressure, resulting in uneconomical pile design due to size or spacing requirements. Reinforcement in the abutment body is designed based on live load surcharge and soil pressure on the back wall.

Pile-encased abutments with fixed seats are limited to a maximum skew of 15 degrees for girder structures and 30 degrees for slab structures in order to limit damage due to thermal expansion and contraction of the superstructure. Pile-encased abutments with a semi-expansion seat are limited to a maximum skew of 30 degrees. Wing skew angles are at 45 degrees relative to the body to prevent cracking between the abutment body and wings. These wings may be used for stream crossings when the high water elevation is above the bottom of the abutment. Parallel-to-roadway wings may be considered for extreme hydraulic conditions, however this will require a special design.

12.2.6 Special Designs

In addition to the standard abutment types described in the previous sections, many different styles and variations of those abutment types can also be designed. Such special abutment designs may be required due to special aesthetic requirements, unique soil conditions or unique structural reasons. Special designs of abutments require prior approval by the Bureau of Structures Development Chief.

12.3 Types of Abutment Support

Piles, drilled shafts and spread footings are the general types of abutment support used. This section provides a brief description of each type of abutment support.

WisDOT policy item:

Geotechnical and structural design of abutment supports shall be in accordance *AASHTO LRFD*. No additional guidance is available at this time.

12.3.1 Piles or Drilled Shafts

Most abutments are supported on piles to prevent abutment settlement. Bridge approach embankments are usually constructed of fill material that can experience settlement over several years. This settlement may be the result of the type of embankment material or the original foundation material under the embankment. By driving piles through the embankment and into the original ground, abutments usually do not settle with the embankment. A settling embankment may be resisted by the abutment piles through friction between the piles and fill material. The added load to friction piles and the need for preboring should be considered.

It is generally not necessary to prebore non-displacement piles for any fill depths, and it is not necessary to prebore displacement piles for fill depths less than 15 feet below the bottom of footing. However, for some problem soils this may not apply. See the soils report to determine if preboring is required. If required, the Special Provisions must be written with preboring guidelines.

Battered piles may cause more of a problem than vertical piles and are given special consideration. When driving battered piles, reduced hammer efficiency may be experienced, and battered piles should not be considered when negative skin friction loads are anticipated.

Fill embankments frequently shift laterally, as well as vertically. A complete foundation site investigation and information on fill material is a prerequisite for successful pile design.

Piles placed in prebored holes cored into rock do not require driving. The full design loading can be used if the hole is of adequate size to prevent pile hangups and to allow filling with concrete.

Piles in abutments are subject to lateral loads. The lateral resistance on a pile is usually determined from an acceptable level of lateral displacement and not the ultimate load that causes a stress failure in the pile. The lateral resistance on a pile may be more dependent on the material into which the pile is driven than on the pile type. See Chapter 11 – Foundation Support for a more thorough discussion of piles and allowable pile loads.

12.3.2 Spread Footings

Abutments on spread footings are generally used only in cut sections where the original soil can sustain reasonable pressures without excessive settlement. The bearing resistance is determined by the Geotechnical Section or the geotechnical consultant.

With improved procedures and better control of embankment construction, spread footings can be used successfully on fill material. It is important that construction be timed to permit the foundation material to consolidate before the spread footings are constructed. An advantage of spread footings is that the differential settlement between approach fills and abutments is minimized.

The use of spread footings is given greater consideration for simple-span bridges than for continuous-span bridges. However, under special conditions, continuous-span bridges can be designed for small amounts of settlement. Drainage for abutments on spread footings can be very critical. For these reasons, pile footings are usually preferred.

Lateral forces on abutments are resisted by passive earth pressure and friction between the soil and concrete. A shear key provides additional area on which passive earth pressure can act. A berm in front of the abutment may be necessary to prevent a shear failure in the soil along the slope.

12.4 Abutment Wing Walls

This section provides general equations used to compute wing wall lengths, as well as a brief description of wing wall loads and parapets.

12.4.1 Wing Wall Length

Wing walls must be long enough to retain the roadway embankment based on the allowable slopes at the abutment. A slope of 2:1 is usually used, and a slope greater than 2:1 is usually not permitted. Current practice is to round up to the next available wing length based on 2 feet increments and to consider an additional 2 feet to match other wing lengths. When setting wing wall lengths, be sure that the theoretical slope of the earth does not fall above the bridge seat elevation at the corner. Roadway embankment slopes are typically limited to a slope of 2.5:1 and may require a traffic barrier. Refer to the Facilities Development Manual (FDM) for roadway embankment slopes and traffic barrier requirements.

12.4.1.1 Wings Parallel to Roadway

The calculation of wing wall lengths for wings that are parallel to the roadway is illustrated in Figure 12.4-1 and Figure 12.4-2. Wing lengths should be lengthened an additional 2 feet to allow for the finished grade to intersect the top of wall 2 feet from the end of wings for erosion control protection. The additional 2 feet of wing wall length is only intended for wings parallel to the roadway.

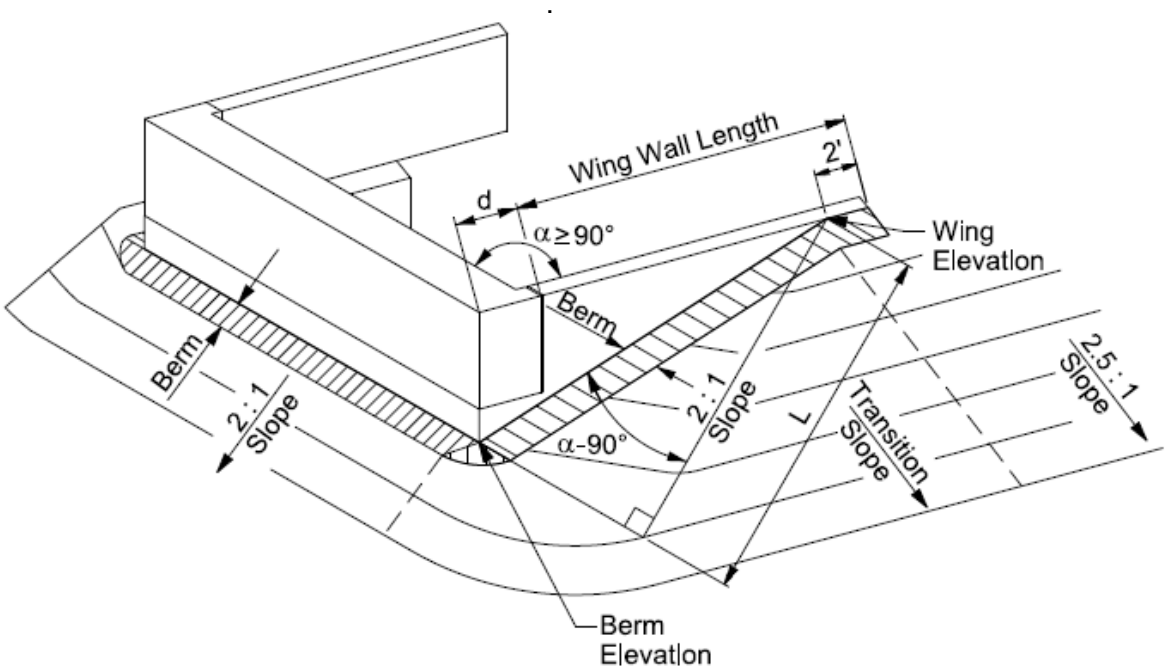

Figure 12.4-1
Wings Parallel to Roadway and Wing Wall Angle ≥ 90°

For wing wall angle, $\alpha \geq 90°$:

L = (Wing Elevation – Berm Elevation) (2)

$$\text{Wing Wall Length} = \frac{L}{\cos(\alpha - 90^\circ)} - d + 2.0 \text{ feet}$$

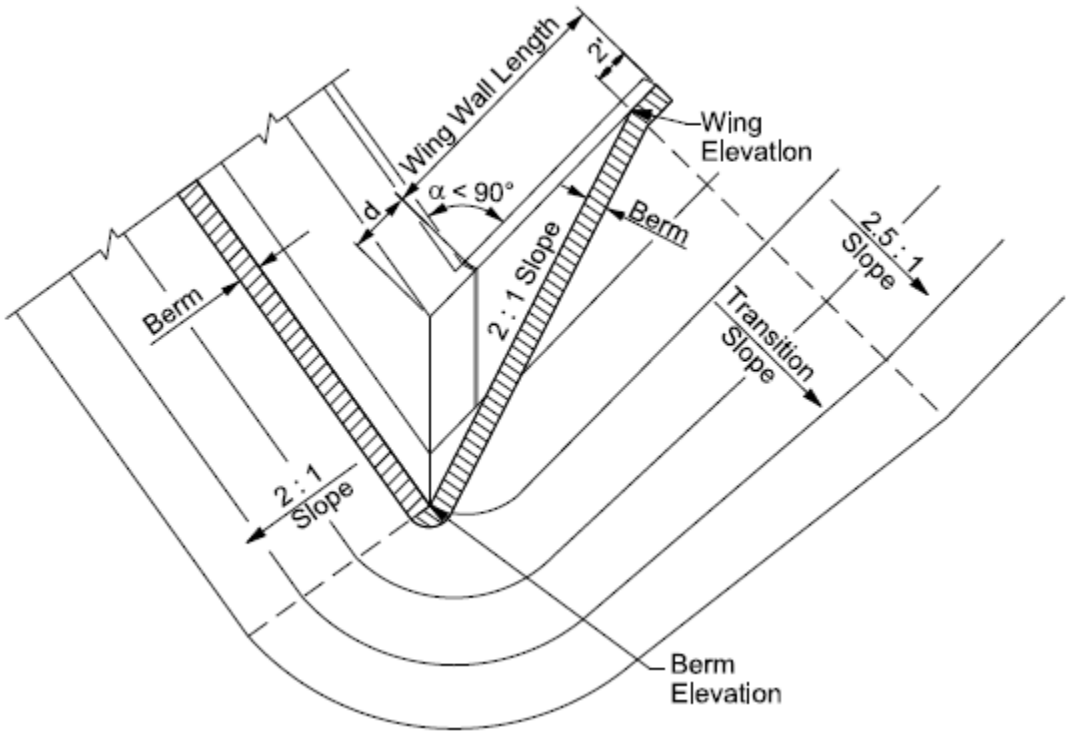

Figure 12.4-2
Wings Parallel to Roadway and Wing Wall Angle < 90°

For wing wall angle, α < 90°:

Wing Wall Length = (Wing Elevation – Berm Elevation) (2) – d – 2.0 feet

Note: The above calculations provide the minimum required wing wall length and should be rounded accordingly.

12.4.1.2 Wings Not Parallel to Roadway and Equal Slopes

The calculation of wing wall lengths for wings that are not parallel to the roadway and that have equal slopes is illustrated in Figure 12.4-3.

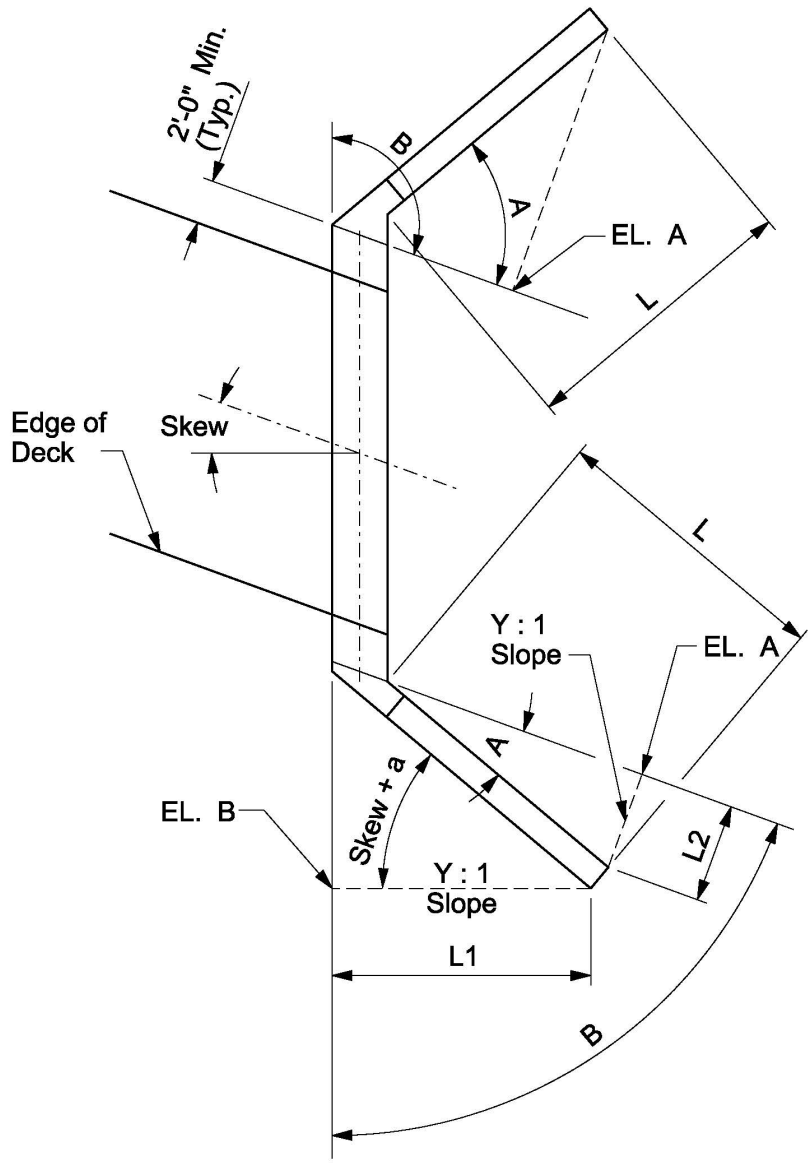

Figure 12.4-3
Wings Not Parallel to Roadway and Equal Slopes

For angle B ≥ 90°:

$$L1 + L2 = (EL.\ A - EL.\ B)(Y)$$

$$\cos(a - Skew) = \frac{L1}{L}$$

$$\sin(a) = \frac{L2}{L}$$

$$L = \frac{Y\,(EL.\,A - EL.\,B)}{\cos(a - Skew) + \sin(a)}$$

For angle B < 90°:

$$L1 + L2 = (EL.\,A - EL.\,B)(Y)$$

$$\cos(Skew + a) = \frac{L1}{L}$$

$$\sin(a) = \frac{L2}{L}$$

$$L = \frac{Y\,(EL.\,A - EL.\,B)}{\cos(Skew + a) + \sin(a)}$$

12.4.2 Wing Wall Loads

Wing walls are designed as retaining walls. Earth loads and surcharge loads are applied to wing walls similar to how they are applied to the stem of a retaining wall. Wing walls are analyzed as cantilevers extending from the abutment body.

The parapet on top of the wing is designed to resist railing loading, but it is not necessary that the railing loads be applied to the wing walls. Railing loads are dynamic or impact loads and are absorbed by the mass of the wing wall and if necessary by passive earth pressure.

The forces produced by the active earth pressure are resisted by the wing piles and the abutment body. Passive earth pressure resistance generally is not utilized, because there is a possibility that the approach fill slopes may slide away from the wings. This may seem like a conservative assumption, but it is justified due to the highly unpredictable forces experienced by a wing wall.

Wing walls without special footings that are poured monolithically with the abutment body are subjected to a bending moment, shear force and torsion. The primary force is the bending moment. Torsion is usually neglected.

The bending moment induced in the cantilevered wing wall by active earth pressure is reduced by the expected lateral resistance of the wing pile group times the distance to the section being investigated. This lateral pile resistance is increased by using battered piles. Individual piles offer little lateral resistance because of small wing deflections. See Chapter 11 – Foundation Support for lateral pile resistance.

12.4.3 Wing Wall Parapets

Steel plate beam guard is used at bridge approaches and is attached to the wing wall parapets. This helps to prevent vehicles from colliding directly into the end of the parapet.

A vehicle striking a guard rail may produce a high-tension force in the guard rail. It is important that sufficient longitudinal parapet steel be provided to resist this force. If the concrete in the parapet is demolished, the longitudinal steel continues to act as a cable guard rail if it remains attached to the steel plate beam guard.

12.5 Abutment Depths, Excavation and Construction

This section describes some additional design considerations for abutments, including depth, excavation and construction.

Abutment construction must satisfy the requirements for construction joints and beam seats presented in 12.9.1 and 12.9.2, respectively.

The abutment body is generally located above the normal water. Refer to the *Standard Specifications* or Special Provisions if part of the abutment body is below normal water.

12.5.1 Abutment Depths

The required depth of the abutment footing to prevent frost damage depends on the amount of water in the foundation material. Frost damage works in two directions. First, ice lenses form in the soil, heaving it upward. These lenses grow by absorbing additional water from below the frost line. Silts are susceptible to heaves, but well-drained sands and dense clays generally do not heave. Second, the direction of frost action is downward. The ice lenses thaw from the top down, causing a layer of water to be trapped near the surface. This water emulsifies the soil, permitting it to flow out from under the footing.

Sill and semi-retaining abutments are constructed on slopes which remain relatively moisture free. Sill abutments have been constructed in all parts of Wisconsin with footings only 2.5 feet below ground and have experienced no frost heave problems.

Full-retaining abutments are constructed at the bottom of embankment slopes, and their footings are more likely to be within a soil of high moisture content. Therefore, footings for full-retaining abutments must be located below the level of maximum frost penetration. Maximum frost penetration varies from 4 feet in the southeastern part of Wisconsin to 6 feet in the northwestern corner.

12.5.2 Abutment Excavation

Abutment excavation is referred to as "Excavation for Structures Bridges." It is measured as a unit for each specific bridge and is paid for at the contract lump sum price.

When a new bridge is constructed, a new roadway approaching the bridge is generally also constructed. Since the roadway contractor and bridge contractor are not necessarily the same, the limits of excavation to be performed by each must be specified. The roadway contractor cuts or fills earth to the upper limits of structural excavation as specified on the bridge plans or in the *Standard Specifications for Highway and Structure Construction*. If the bridge contractor does his work before the roadway contractor or if there is no roadway contract, the upper limit of structural excavation is the existing ground line. For sill abutments, the upper limit is specified in the *Standard Specifications* and need not be shown on the abutment plans.

For semi-retaining and full-retaining abutments, the upper limits are shown on the abutment plans. If a cut condition exists, the upper limit is usually the subgrade elevation and the top surface of the embankment slope (bottom of slope protection). Earth above these limits is removed by the roadway contractor. A semi-retaining or full-retaining abutment placed on fill

is considered a unique problem by the design engineer, and limits of excavation must be set accordingly. Construction sequence and type of fill material are considered when setting excavation limits. Slopes greater than 1.5 horizontal to 1 vertical are difficult to construct and generally are not specified. It is sometimes advantageous to have the roadway contractor place extra fill that later must be excavated by the bridge contractor, because the overburden aids in compaction and reduces subsequent settlement.

Lateral limits of excavation are not defined in the *Standard Specifications*. The contractor must excavate whatever is necessary within the right-of-way for the placement of the forms.

12.6 Abutment Drainage and Backfill

This section describes abutment design considerations related to drainage and backfill. The abutment drainage and backfill must be designed and detailed properly to prevent undesirable loads from being applied to the abutment.

12.6.1 Abutment Drainage

Abutment drainage is necessary to prevent hydrostatic pressure and frost pressure. Hydrostatic pressure, including both soil and water, can amount to an equivalent fluid unit weight of soil of 85 pcf. Frost action, which can occur in silty backfill, may result in extremely high pressures. On high abutments, these pressures will produce a very large force which could result in structural damage or abutment movement if not accounted for in the design.

To prevent these additional pressures on abutments, it is necessary to drain away whatever water accumulates behind the body and wings. This is accomplished using a pervious granular fill on the inside face of the abutment. Pipe underdrain must be provided to drain the fill located behind the abutment body and wings. For rehabilitation of structures, provide plan details to replace inadequate underdrain systems.

Past experience indicates that sill abutments are not capable of withstanding hydrostatic pressure on their full height without leaking.

Semi-retaining and full-retaining abutments generally will be overstressed or may slide if subject to large hydrostatic or frost pressures unless accounted for in the design. Therefore, “Pipe Underdrain Wrapped 6-inch” is required behind all abutments. This pipe underdrain is used behind the abutment and outside the abutment to drain the water away. Provide a minimum slope of 0.5% and discharge to suitable drainage (i.e. a storm sewer system or ditch). It is best to place the pipe underdrain along the bottom of footing elevation as per standards. However, if it is not possible to discharge the water to a lower elevation, the pipe underdrain should be placed higher. For bottom of abutments located below the normal water, pipe underdrain should be sloped to discharge a minimum of 1 foot above the normal water elevation.

Pipe underdrains and weepholes may discharge water during freezing temperatures. In urban areas, this may create a problem due to the accumulation of flow and ice on sidewalks.

12.6.2 Abutment Backfill Material

All abutments and wings shall utilize “Backfill Structure” to facilitate drainage. See Standard Detail 9.01 – Structure Backfill Limits and Notes – for typical pay limits and plan notes.

12.7 Selection of Standard Abutment Types

From past experience and investigations, the abutment types presented in Figure 12.7-1 are generally most suitable and economical for the given conditions. Although piles are shown for each abutment type, drilled shafts or spread footings may also be utilized depending on the material conditions at the bridge site. The chart in Figure 12.7-1 provides a recommended guide for abutment type selection.

Abutment Arrangements	Superstructures		
	Concrete Slab Spans	Prestressed Girders	Steel Girders
Type A1 (F-F) 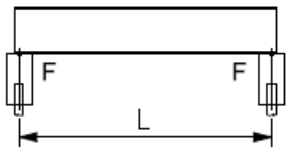	a. L ≤ 150' S ≤ 30° AL ≤ 50'	a. L ≤ 150' S ≤ 15° AL ≤ 50' 28" and 36" only (36W" thru 82W" require SE)	a. L ≤ 150' S ≤ 15° AL ≤ 50'
Type A1 (SE-SE) 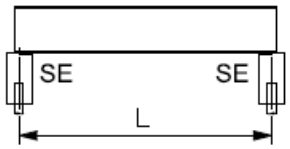	a. L ≤ 300' S ≤ 30° AL > 50'	a. L ≤ 300' S ≤ 40°	a. L ≤ 150' S ≤ 40°
Type A3 (F-E) 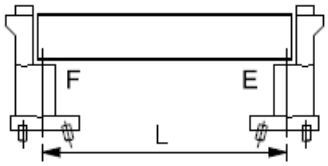	Not used	Single span and (S > 40°)	Single span and (L > 150' or S > 40°)
Type A3 (E-E) 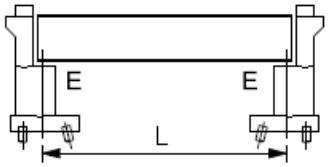	b. L >300' and S ≤ 30° with rigid piers	L>300' or (S > 40° and multi-span)	Multi-span and (L>150' or S > 40°) with rigid piers

Abutment Arrangements	Superstructures		
	Concrete Slab Spans	Prestressed Girders	Steel Girders
Type A5 (F-F) 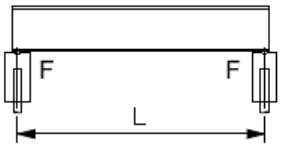	L ≤ 150' S ≤ 30° AL ≤ 50'	L ≤ 150' S ≤ 15° AL ≤ 50'	L ≤ 150' S ≤ 15° AL ≤ 50'
Type A5 (SE-SE) 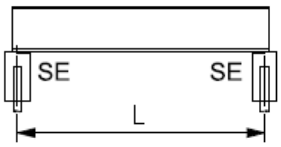	L ≤ 200' S ≤ 30° AL > 50'	L ≤ 200' S ≤ 30°	L ≤ 150' S ≤ 30°
ABUTMENT TYPES			

Figure 12.7-1
Recommended Guide for Abutment Type Selection

Where:

S = Skew

AL = Abutment Length

F = Fixed seat

SE = Semi-Expansion seat

E = Expansion seat

L = Length of continuous superstructure between abutments

Footnotes to Figure 12.7-1:

a. Type A1 fixed abutments are not used when wing piles are required. The semi-expansion seat is used to accommodate superstructure movements and to minimize cracking between the wings and body wall. See Standards for Abutment Type A1 (Integral Abutment) and Abutment Type A1 for additional guidance.

b. Consider the flexibility of the piers when choosing this abutment type. Only one expansion bearing is needed if the structure is capable of expanding easily in one direction. With rigid piers, symmetry is important in order to experience equal expansion movements and to minimize the forces on the substructure units.

12.8 Abutment Design Loads and Other Parameters

This section provides a brief description of the application of abutment design loads, a summary of load modifiers, load factors and other design parameters used for abutment and wing wall design, and a summary of WisDOT abutment design policy items.

12.8.1 Application of Abutment Design Loads

An abutment is subjected to both horizontal and vertical loads from the superstructure. The number and spacing of the superstructure girders determine the number and location of the concentrated reactions that are resisted by the abutment. The abutment also resists loads from the backfill material and any water that may be present.

Although the vertical and horizontal reactions from the superstructure represent concentrated loads, they are commonly assumed to be distributed over the entire length of the abutment wall or stem that support the reactions. That is, the sum of the reactions, either horizontal or vertical, is divided by the length of the wall to obtain a load per unit length to be used in both the stability analysis and the structural design. This procedure is sufficient for most design purposes.

Approach loads are not considered in the example below. However, designers shall include vertical reactions from reinforced concrete approaches as they directly transmit load from the approaches to the abutment. Reinforced concrete approaches include the concrete approach slab system (refer to FDM 14-10-15) and the structural approach slab system (as described in this chapter).

The first step in computing abutment design loads is to compute the dead load reactions for each girder or beam. To illustrate this, consider a 60-foot simple span structure with a roadway width of 44 feet, consisting of steel beams spaced at 9 feet and carrying an HL-93 live loading.

The dead load forces, DC and DW, acting on the abutments shall include reactions from the superstructure. DC dead loads include structural components and nonstructural attachments, and DW dead loads include wearing surfaces and utilities. If the total DC dead load is 1.10 kips per foot of girder and the total DW dead load is 0.18 kips per foot of girder, then the dead load reaction per girder is computed as follows:

$$R_{DC} = (1.10\ K/ft)\left(\frac{60\ Feet}{2}\right) = 33.0\ kips$$

$$R_{DW} = (0.18\ K/ft)\left(\frac{60\ Feet}{2}\right) = 5.4\ kips$$

These dead loads are illustrated in Figure 12.8-1. The dead loads are equally distributed over the full length of the abutment.

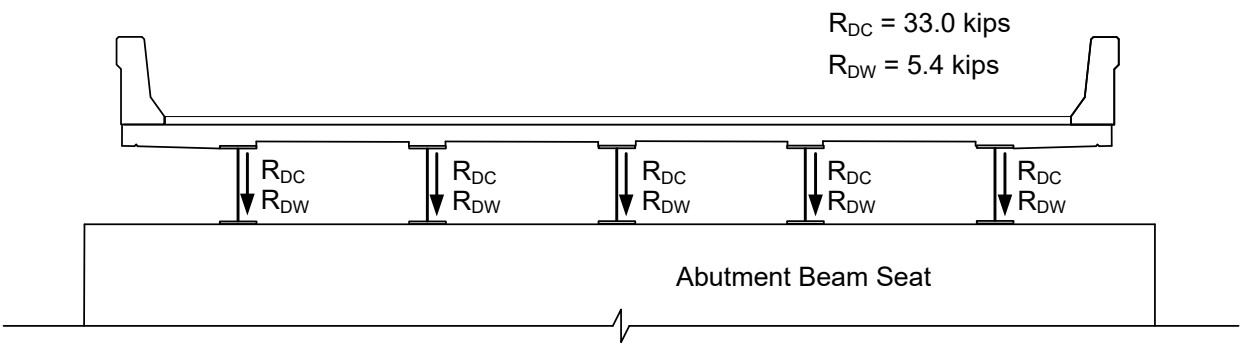

Figure 12.8-1
Dead Load on Abutment Beam Seat

The next step is to compute the live load applied to the abutment. To compute live load reactions to bearings, live load distribution factors must be used to compute the maximum live load reaction experienced by each individual girder. However, to compute live loading on abutments, the maximum number of design lanes are applied to the abutment to obtain the live load per foot of length along the abutment. Live load distribution factors are not used for abutment design, because it is too conservative to apply the maximum live load reaction for each individual girder; each individual girder will generally not experience its maximum live load reaction simultaneously because each one is based on a different configuration of design lane locations.

To illustrate the computation of live loads for abutment design, consider the same 60-foot simple span bridge described previously. Since the roadway width is 44 feet, the maximum number of design lanes is three (44 / 12 = 3.67 ≈ 3 lanes). The backwall live load is computed by placing the three design truck axles along the abutment and calculating the load on a per foot basis. The dynamic load allowance and multiple presence factor shall be included. The load is applied to the entire length of the abutment backwall and is assumed to act at the front top corner (bridge side) of the backwall. This load is not applied, however, when designing the abutment wall (stem) or footing. Assuming an abutment length of 48 feet and a backwall width of 2.0 feet, the backwall live load is computed as follows:

$$R_{\text{LL backwall}} = \frac{(0.85)\left[(3\text{ lanes})\left(\frac{2\text{ wheels}}{\text{lane}}\right)\left(\frac{16\text{ kips}}{\text{wheel}}\right)(1.33) + (3\text{ lanes})(0.64\text{ klf})(2.0\text{ feet})\right]}{48\text{ feet}}$$

$$= 2.33\ \frac{\text{K}}{\text{ft}}$$

It should be noted that dynamic load allowance is applied to the truck live load only and not to the lane live load. This live load configuration on the abutment backwall is illustrated in Figure 12.8-2.

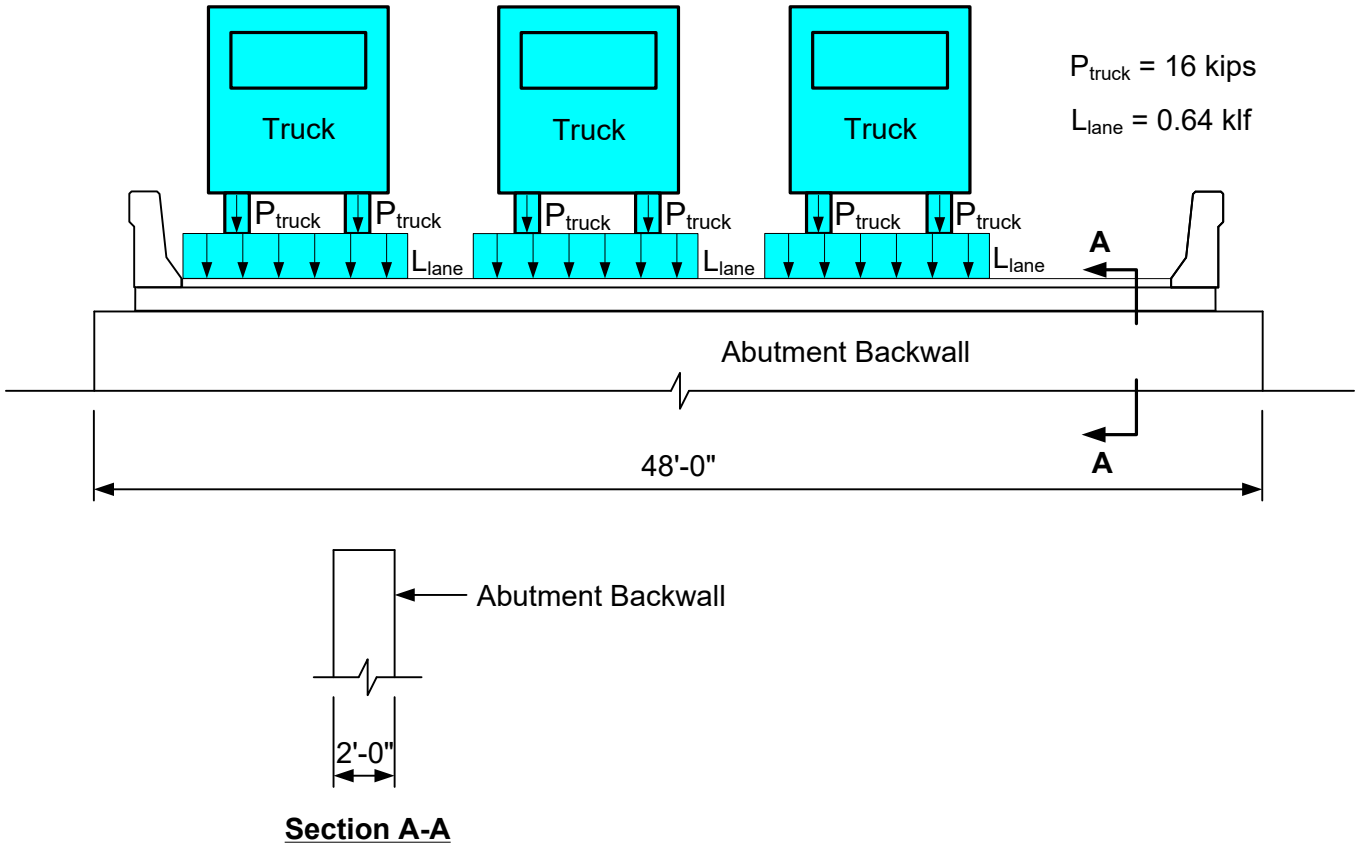

Figure 12.8-2
Live Load on Abutment Backwall

To compute the live loads applied to the abutment beam seat, the live load reactions should be obtained for one lane loaded using girder design software. For this example, for one design lane, the maximum truck live load reaction is 60.8 kips and the maximum lane live load reaction is 19.2 kips. In addition, assume that the abutment is relatively high; the load can therefore be distributed equally over the full length of the abutment. For wall (stem) design, the controlling maximum live loads applied at the beam seat are computed as follows, using three design lanes and using both dynamic load allowance and the multiple presence factor:

$$R_{LL\ stem} = \frac{(3\ \text{lanes})(0.85)[(60.8\ \text{kips})(1.33)+(19.2\ \text{kips})]}{48\ \text{feet}} = 5.32\ \frac{\text{K}}{\text{ft}}$$

This live load configuration for an abutment beam seat is illustrated in Figure 12.8-3.

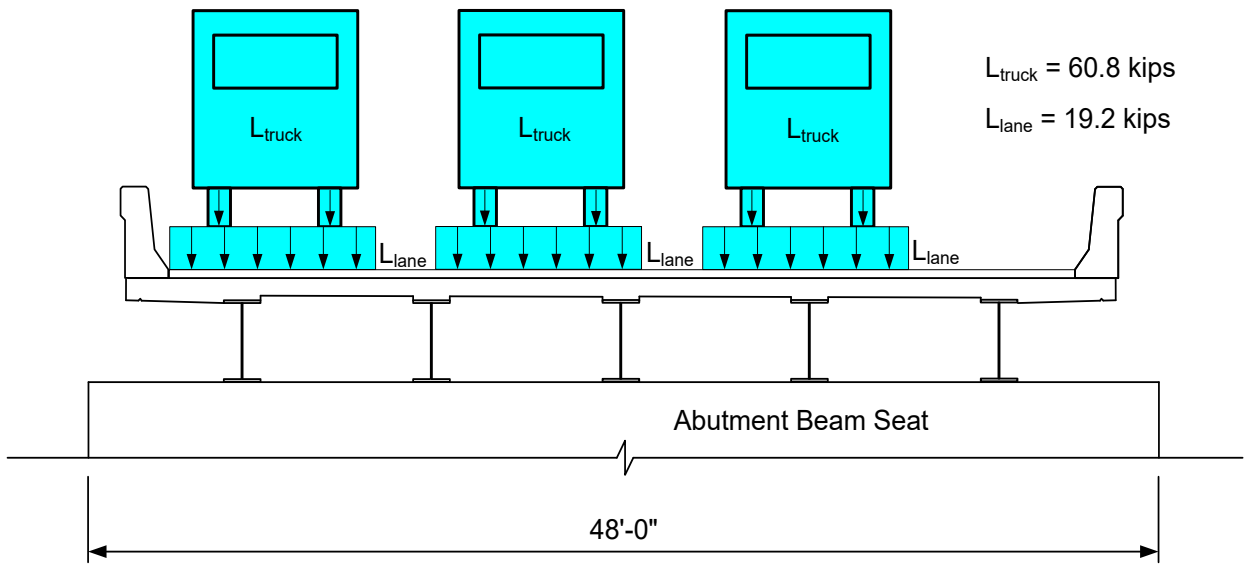

Figure 12.8-3
Live Load on Abutment Beam Seat

For a continuous bridge, the minimum live load applied to the abutment beam seat can be obtained based on the minimum (negative) live load reactions taken from girder design software output.

For footing design, the dynamic load allowance is not included. Therefore, the controlling maximum live loads applied at the beam seat are computed as follows:

$$R_{LL\ footing} = \frac{(3\ \text{lanes})(0.85)[60.8\ \text{kips} + 19.2\ \text{kips}]}{48\ \text{feet}} = 4.25\ \frac{K}{ft}$$

12.8.2 Load Modifiers and Load Factors

Table 12.8-1 presents the load modifiers used for abutment and wing wall design.

Description	Load Modifier
Ductility	1.00
Redundancy	1.00
Operational classification	1.00

Table 12.8-1
Load Modifiers Used in Abutment Design

Table 12.8-2 presents load factors used for abutment and wing wall design. Load factors presented in this table are based on the Strength I and Service I limit states. The load factors

for WS and WL equal 0.00 for Strength I. Load factors for the Service I limit state for WS and WL are shown in the table below. Only apply these loads in the longitudinal direction.

Direction of Load	Specific Loading	Load Factor		
		Strength I		Service I
		Max.	Min.	
Load factors for vertical loads	Superstructure DC dead load	1.25	0.90	1.00
	Superstructure DW dead load	1.50	0.65	1.00
	Superstructure live load	1.75	1.75	1.00
	Approach slab dead load	1.25	0.90	1.00
	Approach slab live load	1.75	1.75	1.00
	Wheel loads located directly on the abutment backwall	1.75	1.75	1.00
	Earth surcharge	1.50	0.75	1.00
	Earth pressure	1.35	1.00	1.00
	Water load	1.00	1.00	1.00
	Live load surcharge	1.75	1.75	1.00
Load factors for horizontal loads	Substructure wind load, WS	0.00	0.00	0.00
	Superstructure wind load, WS	0.00	0.00	1.00
	Superstructure wind on LL, WL	0.00	0.00	1.00
	Vehicular braking force from live load	1.75	1.75	1.00
	Temperature and shrinkage*	1.20*	0.50*	1.00
	Earth pressure (active)	1.50	0.90	1.00
	Earth surcharge	1.50	0.75	1.00
	Live load surcharge	1.75	1.75	1.00

Table 12.8-2
Load Factors Used in Abutment Design

* Use the minimum load factor for temperature and shrinkage unless checking for deformations.

12.8.3 Live Load Surcharge

The equivalent heights of soil for vehicular loading on abutments perpendicular to traffic are as presented in **LRFD [Table 3.11.6.4-1]** and in Table 12.8-3. Values are presented for various abutment heights. The abutment height, as used in Table 12.8-3, is taken as the distance between the top surface of the backfill at the back face of the abutment and the bottom of the

footing along the pressure surface being considered. Linear interpolation should be used for intermediate abutment heights. The load factors for both vertical and horizontal components of live load surcharge are as specified in **LRFD [Table 3.4.1-1]** and in Table 12.8-2.

Abutment Height (Feet)	h_{eq} (Feet)
5.0	4.0
10.0	3.0
≥ 20.0	2.0

Table 12.8-3

Equivalent Height, h_{eq}, of Soil for Vehicular Loading on Abutments Perpendicular to Traffic

WisDOT policy item:

The equivalent height of soil for vehicular loading on retaining walls parallel to traffic shall be 2.0 feet, regardless of the wall height. For standard unit weight of soil equal to 120 pcf, the resulting live load surcharge is 240 psf.

For abutments without reinforced concrete approaches, the equivalent height of soil for vehicular loading on abutments shall be based on Table 12.8-3. For abutments with reinforced concrete approaches, one half of the equivalent height of soil shall be used to calculate the horizontal load on the abutment.

12.8.4 Other Abutment Design Parameters

The equivalent fluid unit weights of soils are as presented in **LRFD [Table 3.11.5.5-1]**. Values are presented for loose sand or gravel, medium dense sand or gravel, and dense sand or gravel. Values are also presented for level or sloped backfill and for at-rest or active soil conditions.

Table 12.8-4 presents other parameters used in the design of abutments and wing walls. Standard details are based on the values presented in Table 12.8-4.

Description	Value
Bottom reinforcing steel cover	3.0 inches
Top reinforcing steel cover	2.0 inches
Unit weight of concrete	150 pcf
Concrete strength, f'_c	3.5 ksi
Reinforcing steel yield strength, f_y	60 ksi
Reinforcing steel modulus of elasticity, E_s	29,000 ksi
Unit weight of soil	120 pcf
Unit weight of structural backfill	120 pcf
Soil friction angle	30 degrees

Table 12.8-4
Other Parameters Used in Abutment Design

12.8.5 Abutment and Wing Wall Design in Wisconsin

The standard details for abutments and wing walls were developed as an envelope of the loading conditions produced by the standard superstructure types, span lengths and geometric conditions presented in this manual. Prior BOS approval is required and special consideration should be given to designs that are outside of the limits presented in the standard details. The loading conditions, material properties and design methods presented in this chapter should be used for these special designs.

WisDOT policy items:

The resistance of the wing pile to horizontal forces should not be included in the calculations for the wing capacity.

The passive earth resistance can only be developed if there is significant movement of the wing. The soil under the wing may settle or otherwise erode. Therefore, the resistance of the soil friction and the passive earth pressure should not be utilized in resisting the forces on wing walls.

In computing the weight of the approach slab, assume there is settlement under the approach slab and place one-half of the weight of the slab on the abutment. An unfactored dead load value of 1.2 klf shall be used for concrete approach slabs and 2.0 klf for structural approach slabs. An unfactored live load value of 0.900 klf shall be applied to abutment approach slabs when used. Approach reactions shall act along the centroid of the foundation.

The dynamic load allowance shall be applied to the live load for all abutment elements located above the ground line per **LRFD [3.6.2]**.

12.8.6 Horizontal Pile Resistance

The following procedure shall be used to verify the horizontal resistance of the piles for A3 abutments.

Given information:

Horizontal Loads	Unfactored (klf)		Load Factor		Factored Load (klf)
Earth Pressure	5.5	x	1.50	=	8.25
Live Load Surcharge	1.0	x	1.75	=	1.75
Temp. Load from Bearings	0.6	x	0.50	=	0.30
			Total, Hu	=	10.3

Back row pile spacing =	8.0 feet
Front row pile spacing =	5.75 feet
Ultimate Vertical Resistance, 12 3/4" CIP, Pr =	210 kips per pile
Factored Vertical Load on Front Row Pile*	160 kips per pile
Ultimate Horizontal Resistance of back row pile (from Geotech Report), Hr =	14 kips per pile
Ultimate Horizontal Resistance of front row pile (from Geotech Report), Hr =	11 kips per pile

* When calculating the horizontal component of the battered pile, use the actual factored load on the pile resulting from the loading conditions where the horizontal loads are maximized and the vertical loads are minimized.

Calculate horizontal component of the battered pile. The standard pile batter is 1:4.

$$Hr_{battered} = 160\left(\frac{1}{\sqrt{1^2 + 4^2}}\right)$$

$Hr_{battered}$ = 38.8 kips per pile

Calculate ultimate resistance provided by the pile configuration:

$$Hr = \left(\frac{14}{8.0}\right) + \left(\frac{11}{5.75}\right) + \left(\frac{38.8}{5.75}\right)$$

Hr = 10.4 klf

Hr > Hu = 10.3 klf OK

12.9 Abutment Body Details

There are many different body sections that are utilized for each of the different abutment types. When designing these sections, it is inadvisable to use small and highly reinforced sections. As a general principle, it is better to use a lot of concrete and less reinforcing steel, thus making parts relatively massive and stiff. Adequate horizontal reinforcement and vertical contraction joints are essential to prevent cracking, especially when wing walls are poured monolithically with the abutment body.

The bottom of abutment bodies are normally constructed on a horizontal surface. However, abutments constructed on a horizontal surface may require one end of the body to be much higher than the opposite end due to the vertical geometry of the bridge. This sometimes requires an extremely long and high wing wall. For these extreme cases, the bottom of the abutment body can be stepped.

The berm in front of the body is held level even though the body is stepped. A minimum distance of 2.5 feet between the top of berm and the top of beam seat is allowed. Minimum ground cover as shown in the Standard Detail for Abutments must be maintained.

Stepping the bottom of the body may result in a longer bridge. This is usually more costly than holding the body level and using larger wings and beam seats. Stepped abutments are also more difficult to build. Engineering judgment must be exercised when determining if the bottom of the abutment should be level or stepped. Generally, if a standard wing wall design cannot be used, the bottom of the abutment body should be stepped.

12.9.1 Construction Joints

In a U-shaped abutment with no joint between the wings and the body, traffic tends to compact the fill against the three sides of the abutment. When the temperature drops, the abutment body concrete cannot shrink without tending to squeeze the warmer fill inside. The resistance of the fill usually exceeds the tensile or shearing strength of the body or wing, and cracks result.

If contraction joints are not provided in long abutment bodies, nature usually creates them. To prevent uncontrolled cracking in the body or cracking at the body-wing joint, body pours are limited to a maximum of 50 feet. Expansion joints are required at a maximum of 90 feet, as specified in **LRFD [11.6.1.6]**.

WisDOT exception to AASHTO:

LRFD [11.6.1.6] specifies that contraction joints shall be provided at intervals not exceeding 30 feet for conventional retaining walls and abutments. However, WisDOT has not experienced significant problems with 50 feet and uses a maximum interval of 50 feet.

Shear keys are provided in construction joints to allow the center pour to maintain the beneficial stabilizing effects from the wings. The shear keys enable the end pours, with their counterfort action due to the attached wing, to provide additional stability to the center pour. Reinforcing steel should be extended through the joint.

In general, body construction joints are keyed to hold the parts in line. Water barriers are used to prevent leakage and staining. Steel girder superstructures generally permit a small movement at construction joints without cracking the concrete slab. In the case of concrete slab or prestressed concrete girder construction, a crack will frequently develop in the deck above the abutment construction joint. The designer should consider this when locating the construction joint.

12.9.2 Beam Seats

Because of the bridge deck cross-slopes and/or skewed abutments, it is necessary to provide beam seats of different elevations on the abutment. The tops of these beam seats are poured to the plan elevations and are made level except when elastomeric bearing pads are used and grades are equal to or exceed 1%. For this case, the beam seat should be parallel to the bottom of girder or slab. Construction tolerances make it difficult to obtain the exact beam seat elevation.

When detailing abutments, the differences in elevations between adjacent beam seats are provided by sloping the top of the abutment between level beam seats. For steel girders, the calculation of beam seat elevations and use of shim plates at abutments, to account for thicker flanges substituted for plan flange thickness, is described on the Standard *Plate Girder Details* in Chapter 24.

See the abutment standards for additional reinforcing required when beam seats are 4” higher, or more, than the lowest beam seat.

12.10 Timber Abutments

Timber abutments consist of a single row of piling capped with timber or concrete, and backed with timber to retain the approach fill. The superstructure types are generally concrete slab or timber. Timber-backed abutments currently exist on Town Roads and County Highways where the abutment height does not preclude the use of timber backing.

Piles in bents are designed for combined axial load and bending moments. For analysis, the assumption is made that the piles are supported at their tops and are fixed 6 feet below the stream bed or original ground line. For cast-in-place concrete piling, the concrete core is designed to resist the axial load. The bending stress is resisted by the steel shell section. Due to the possibility of shell corrosion, steel reinforcement is placed in the concrete core equivalent to a 1/16-inch steel shell perimeter section loss. The reinforcement design is based on equal section moduli for the two conditions. Reinforcement details and bearing capacities are given on the Standard Detail for Pile Details. Pile spacing is generally limited to the practical span lengths for timber backing planks.

The requirements for tie rods and deadmen is a function of the abutment height. Tie rods with deadmen on body piling are used when the height of "freestanding" piles is greater than 12 feet for timber piling and greater than 15 feet for cast-in-place concrete and steel "HP" piling. The "freestanding" length of a pile is measured from the stream bed or berm to grade. If possible, all deadmen should be placed against undisturbed soil.

Commercial grade lumber as specified in AASHTO having a minimum flexural resistance of 1.2 ksi is utilized for the timber backing planks. The minimum recommended nominal thickness and width of timber backing planks are 3 and 10 inches, respectively. If nominal sizes are specified on the plans, analysis computations must be based on the dressed or finished sizes of the timber. Design computations can be used on the full nominal sizes if so stated on the bridge plans. For abutments constructed with cast-in-place concrete or steel "HP" piles, the timber planking is attached with 60d galvanized nails to timber nailing strips which are bolted to the piling, or between the flanges of “HP” piles.

12.11 Bridge Approach Design and Construction Practices

While most bridge approaches are reasonably smooth and require a minimum amount of maintenance, there are also rough bridge approaches with maintenance requirements. The bridge designer should be aware of design and construction practices that minimize bridge approach maintenance issues. Soils, design, construction and maintenance engineers must work together and are jointly responsible for efforts to eliminate rough bridge approaches.

An investigation of the foundation site is important for bridge design and construction. The soils engineer, using tentative grades and foundation site information, can provide advice on the depth of material to be removed, special embankment foundation drainage, surcharge heights, waiting periods, construction rates and the amount of post-construction settlement that can be anticipated. Some typical bridge approach problems include the following:

- Settlement of pavement at end of approach slab
- Uplift of approach slab at abutment caused from swelling soils or freezing
- Backfill settlement under flexible pavement
- Approach slab not adequately supported at the abutments
- Erosion due to water infiltration

Most bridge approach problems can be minimized during design and construction by considering the following:

- Embankment height, material and construction methods
- Subgrade, subbase and base material
- Drainage-runoff from bridge, surface drains and drainage channels
- Special approach slabs allowing for pavement expansion

Post-construction consolidation of material within the embankment foundation is the primary contributor to rough bridge approaches. Soils which consist predominantly of sands and gravels are least susceptible to consolidation and settlement. Soils with large amounts of shales, silts and plastic clays are highly susceptible to consolidation.

The following construction measures can be used to stabilize foundation materials:

- Consolidate the natural material. Allow sufficient time for consolidation under the load of the embankment. When site investigations indicate an excessive length of time is required, other courses of corrective action are available. Use of a surcharge fill is effective where the compressive stratum is relatively thin and sufficient time is available for consolidation.

- Remove the material either completely or partially. This procedure is practical if the foundation depth is less than 15 feet and above the water table.

- Use lightweight embankment materials. Lightweight materials (fly ash, expanded shale and cinders) have been used with apparent success for abutment embankment construction to lessen the load on the foundation materials.

Abutment backfill practices that help minimize either settlement or swell include the following:

- Use of select materials

- Placement of relatively thin 4- to 6-inch layers

- Strict control of moisture and density

- Proper compaction

- Installation of moisture barriers

It is generally recognized by highway and bridge engineers that bridge abutments cause relatively few of the problems associated with bridge approaches. Proper drainage needs to be provided to prevent erosion of embankment or subgrade material that could cause settlement of the bridge approach. It is essential to provide for the removal of surface water that leaks into the area behind the abutment by using weepholes and/or drain tile. In addition, water infiltration between the approach slab and abutment body and wings must be prevented.

Reinforced concrete approach slabs are the most effective means for controlling surface irregularities caused by settlement. It is also important to allow enough expansion movement between the approach slab and the approach pavement to prevent horizontal thrust on the abutment.

The geotechnical engineer should evaluate approaches for settlement susceptibility and provide recommendations for mitigating settlements prior to approach placement. The bridge designer should determine if a structural approach slab is required and coordinate details with the roadway engineer. Usage of structural approach slabs is currently based on road functional classifications and considerations to traffic volumes (AADT), design speeds, and settlement susceptibility. Structural approach slabs are not intended to mitigate excessive approach settlements.

WisDOT policy item:

Structural approach slabs shall be used on all Interstate and US highway bridges. Structural approach slabs are recommended for bridges carrying traffic volumes greater than 3500 AADT in the future design year. Structural approach slabs are not required on buried structures and culverts. Structural approach slabs should not be used on rehabilitation projects, unless approved otherwise. Other locations can be considered with the approval of the Chief Structural Design Engineer. Design exceptions to structural approach slabs are considered on a project-by-project basis.

Standards for Structural Approach Slab for Type A1 and A3 Abutments and Structural Approach Slab Details for Type A1 and A3 Abutments are available for guidance.

Table of Contents

13.1 General 3
13.1.1 Pier Type and Configuration 3
13.1.2 Bottom of Footing Elevation 3
13.1.3 Pier Construction 4
13.2 Pier Types 5
13.2.1 Multi-Column Piers 5
13.2.2 Pile Bents 6
13.2.3 Pile Encased Piers 7
13.2.4 Solid Single Shaft / Hammerheads 8
13.2.5 Aesthetics 9
13.3 Location 10
13.4 Loads on Piers 11
13.4.1 Dead Loads 11
13.4.2 Live Loads 11
13.4.3 Vehicular Braking Force 12
13.4.4 Wind Loads 12
13.4.4.1 Wind Load from the Superstructure 14
13.4.4.2 Wind Load Applied Directly to Substructure 15
13.4.4.3 Wind Load on Vehicles 16
13.4.4.4 Vertical Wind Load 17
13.4.5 Uniform Temperature Forces 17
13.4.6 Force of Stream Current 20
13.4.6.1 Longitudinal Force 20
13.4.6.2 Lateral Force 20
13.4.7 Buoyancy 21
13.4.8 Ice 22
13.4.8.1 Force of Floating Ice and Drift 22
13.4.8.2 Force Exerted by Expanding Ice Sheet 23
13.4.9 Centrifugal Force 24
13.4.10 Extreme Event Collision Loads 24
13.5 Load Application 26

13.5.1 Loading Combinations 26
13.5.2 Expansion Piers 26
13.5.3 Fixed Piers 27
13.6 Multi-Column Pier and Cap Design 28
13.7 Hammerhead Pier Cap Design 30
13.7.1 Draw the Idealized Truss Model 31
13.7.2 Solve for the Member Forces 33
13.7.3 Check the Size of the Bearings 33
13.7.4 Design Tension Tie Reinforcement 34
13.7.5 Check the Compression Strut Capacity 35
13.7.6 Check the Tension Tie Anchorage 38
13.7.7 Provide Crack Control Reinforcement 38
13.8 General Pier Cap Information 40
13.9 Column / Shaft Design 42
13.10 Pile Bent and Pile Encased Pier Analysis 44
13.11 Footing Design 45
13.11.1 General Footing Considerations 45
13.11.2 Isolated Spread Footings 46
13.11.3 Isolated Pile Footings 48
13.11.4 Continuous Footings 50
13.11.5 Cofferdams and Seals 51
13.12 Quantities 54
13.13 Design Examples 55

13.1 General

Piers are an integral part of the load path between the superstructure and the foundation. Piers are designed to resist the vertical loads from the superstructure, as well as the horizontal superstructure loads not resisted by the abutments. The magnitude of the superstructure loads applied to each pier shall consider the configuration of the fixed and expansion bearings, the bearing types and the relative stiffness of all of the piers. The analysis to determine the horizontal loads applied at each pier must consider the entire system of piers and abutments and not just the individual pier. The piers shall also resist loads applied directly to them, such as wind loads, ice loads, water pressures and vehicle impact.

Bridges being designed with staged construction, whether new or rehabilitation, shall satisfy the requirements of LRFD (or LFD, if applicable) for each construction stage. Utilize the same load factors, resistance factors, load combinations, etc. as required for the final configuration, unless approved by Chief Structures Development Engineer at WisDOT.

WisDOT policy item:

Pier configurations shall be determined by providing the most efficient cast-in-place concrete pier design, unless approved otherwise. See 7.1.4.1.2 for policy guidance. Contact the Bureau of Structures Development Section for further guidance.

13.1.1 Pier Type and Configuration

Many factors are considered when selecting a pier type and configuration. The engineer should consider the superstructure type, the characteristics of the feature crossed, span lengths, bridge width, bearing type and width, skew, required vertical and horizontal clearance, required pier height, aesthetics and economy. For bridges over waterways, the pier location relative to the floodplain and scour sensitive regions shall also be considered.

The connection between the pier and superstructure is usually a fixed or expansion bearing which allows rotation in the longitudinal direction of the superstructure. This has the effect of eliminating longitudinal moment transfer between the superstructure and the pier. In rare cases when the pier is integral with the superstructure, this longitudinal rotation is restrained and moment transfer between the superstructure and the pier occurs. Pier types illustrated in the Standard Details shall be considered to be a pinned connection to the superstructure.

On grades greater than 2 percent, the superstructure tends to move downhill towards the abutment. The low end abutment should be designed as fixed and the expansion joint or joints placed on the uphill side or high end abutment. Consideration should also be given to fixing more piers than a typical bridge on a flat grade.

13.1.2 Bottom of Footing Elevation

The bottom of footing elevation for piers outside of the floodplain is to be a minimum of 4’ below finished ground line unless the footings are founded on solid rock. This requirement is intended to place the bottom of the footing below the frost line.

A minimum thickness of 2'-0" shall be used for spread footings and 2'-6" for pile-supported footings. Spread footings are permitted in streams only if they are founded on rock. Pile cap footings are allowed above the ultimate scour depth elevation if the piling is designed assuming the full scour depth condition.

The bottom of footing elevation for pile cap footings in the floodplain is to be a minimum of 6' below stable streambed elevation. Stable streambed elevation is the normal low streambed elevation at a given pier location when not under scour conditions. When a pile cap footing in the floodplain is placed on a concrete seal, the bottom of footing is to be a minimum of 4' below stable streambed elevation. The bottom of concrete seal elevation is to be a minimum of 8' below stable streambed elevation, except when used for pile encased piers. These requirements are intended to guard against the effects of scour.

13.1.3 Pier Construction

Except as allowed for pile encased piers (see 13.2.3) and seal concrete for footings, all footing and pier concrete shall be placed in the dry. Successful underwater concreting requires special concrete mixes, additives and placement procedures, and the risk of error is high. A major concern in underwater concreting is that the water in which the concrete is placed will wash away cement and sand, or mix with the concrete, and increase the water-to-cement ratio. It was previously believed that if the lower end of the tremie is kept immersed in concrete during a placement, then the new concrete flows under and is protected by previously placed concrete. However, tests performed at the University of California at Berkeley show that concrete exiting a tremie pipe may exhibit many different flow patterns exposing more concrete to water than expected. A layer of soft, weak and water-laden mortar called laitance may also form within the pour. Slump tests do not measure shear resistance, which is the best predictor of how concrete will flow after exiting a tremie pipe.

Footing excavation adjacent to railroad tracks which falls within the critical zone shown on Standard for Highway Over Railroad Design Requirements requires an approved shoring system. Excavation, shoring and cofferdam costs shall be considered when evaluating estimated costs for pier construction, where applicable. Erosion protection is required for all excavations.

13.2 Pier Types

The pier types most frequently used in Wisconsin are:

- Multi-column piers (Standards for Multi-Columned Pier and for Multi-Columned Pier – Type 2)
- Pile bents (Standard for Pile Bent)
- Pile encased piers (Standard for Pile Encased Pier)
- Solid single shaft / hammerheads (Standards for Hammerhead Pier and for Hammerhead Pier – Type 2)

Design loads shall be calculated and applied to the pier in accordance with 13.4 and 13.5. The following sections discuss requirements specific to each of the four common pier types.

13.2.1 Multi-Column Piers

Multi-column piers, as shown in Standard for Multi-Columned Pier, are the most commonly used pier type for grade separation structures. Refer to 13.6 for analysis guidelines.

A minimum of three columns shall be provided to ensure redundancy should a vehicular collision occur. If the pier cap cantilevers over the outside columns, a square end treatment is preferred over a rounded end treatment for constructability. WisDOT has traditionally used round columns. Column spacing for this pier type is limited to a maximum of 25'.

Multi-column piers are also used for stream crossings. They are especially suitable where a long pier is required to provide support for a wide bridge or for a bridge with a severe skew angle.

Continuous or isolated footings may be specified for multi-column piers. The engineer should determine estimated costs for both footing configurations and choose the more economical configuration. Where the clear distance between isolated footings would be less than 4'-6", a continuous footing shall be specified.

A variation of the multi-column pier in Standard for Multi-Columned Pier is produced by omitting the cap and placing a column under each girder. This detail has been used for steel girders with girder spacing greater than 12'. This configuration is treated as a series of single column piers. The engineer shall consider any additional forces that may be induced in the superstructure cross frames at the pier if the pier cap is eliminated. The pier cap may not be eliminated for piers in the floodplain, or for continuous slab structures which need the cap to facilitate replacement of the slab during future rehabilitation.

See Standard for Highway Over Railroad Design Requirements for further details on piers supporting bridges over railways.

13.2.2 Pile Bents

Pile bents are most commonly used for small to intermediate stream crossings and are shown on the Standard for Pile Bent.

Pile bents shall not be used to support structures over roadways or railroads due to their susceptibility to severe damage should a vehicular collision occur.

For pile bents, pile sections shall be limited to 12¾" or 14" diameter cast-in-place reinforced concrete piles with steel shells spaced at a minimum center-to-center spacing of 3'. A minimum of five piles per pier shall be used on pile bents. When a satisfactory design cannot be developed with one of these pile sections at the minimum spacing, another pier type should be selected. The outside piles shall be battered 2" per foot, and the inside piles shall be driven vertically. WisDOT does not rely on the shell of CIP piles for capacity; therefore these piles are less of a concern for long term reduced capacity due to corrosion than steel H-piles. For that reason the BOS Development Chief must give approval for the use of steel H-piles in open pile bents.

Because of the minimum pile spacing, the superstructure type used with pile bents is generally limited to cast-in-place concrete slabs, prestressed girders and steel girders with spans under approx. 70' and precast, prestressed box girders less than 21" in height.

To ensure that pile bents are capable of resisting the lateral forces resulting from floating ice and debris or expanding ice, the maximum distance from the top of the pier cap to the stable streambed elevation, including scour, is limited to:

- 15' for 12¾" diameter piles (or 12" H-piles if exception is granted).
- 20' for 14" diameter piles (or 14" H-piles if exception is granted).

Use of the pile values in Table 11.3-5 or Standard for Pile Details is valid for open pile bents due to the exposed portion of the pile being inspectable.

The minimum longitudinal reinforcing steel in cast-in-place piles with steel shells is 6-#7 bars in 12" piles and 8-#7 bars in 14" piles. The piles are designed as columns fixed from rotation in the plane of the pier at the top and at some point below streambed.

All bearings supporting a superstructure utilizing pile bents shall be fixed bearings or semi-expansion.

Pile bents shall meet the following criteria:

- If the water velocity, Q_{100}, is greater than 7 ft/sec, the quantity of the 100-year flood shall be less than 12,000 ft^3/sec.
- If the streambed consists of unstable material, the velocity of the 100-year flood shall not exceed 9 ft/sec.

Pile bents may only be specified where the structure is located within Area 3, as shown in the *Facilities Development Manual 13-1-15*, *Attachment 15.1* and where the piles are not exposed to water with characteristics that are likely to cause accelerated corrosion.

The minimum cap size shall be 3' wide by 3'-6" deep and the piles shall be embedded into the cap a minimum of 2'-0.

13.2.3 Pile Encased Piers

Pile encased piers are similar to pile bents except that a concrete encasement wall surrounds the piles. They are most commonly used for small to intermediate stream crossings where a pile bent pier is not feasible. Pile encased piers are detailed on Standard for Pile Encased Pier.

An advantage of this pier type is that the concrete encasement wall provides greater resistance to lateral forces than a pile bent. Also the hydraulic characteristics of this pier type are superior to pile bents, resulting in a smoother flow and reducing the susceptibility of the pier to scour at high water velocities. Another advantage is that floating debris and ice are less likely to accumulate against a pile encased pier than between the piles of a pile bent. Debris and ice accumulation are detrimental because of the increased stream force they induce. In addition, debris and ice accumulation cause turbulence at the pile, which can have the effect of increasing the local scour potential.

Pile sections shall be limited to 10", 12" or 14" steel HP piles, or 10¾", 12¾" or 14" diameter cast-in-place concrete piles with steel shells. Minimum center-to-center spacing is 3'. Where difficult driving conditions are expected, oil field pipe may be specified in the design. A minimum of five piles per pier shall be used. When a satisfactory design cannot be developed with one of these pile sections at the minimum spacing, another pier type should be selected. The inside and outside piles shall be driven vertically.

In most cases, pile encasement concrete may be poured underwater. While there are known risks with underwater concreting, this allowance has provided a cost-effective solution for small to intermediate stream crossings and past experience indicates concrete can be properly placed for encasement purposes. To help ensure minimum construction practices are being specified on a project, three pile encased pier types should be considered during the design process. These types are based on water depth and provide bid items, as necessary, to better ensure concrete can be properly placed. For the below discussions, water depth "H" is defined as the normal (or observed) water elevation minus the bottom of pier concrete elevation. Other factors such as velocity and the 2-year water elevation should also be considered when selecting pier types. The pile encased pier types are as follows:

- Type 1 (H ≤ 5.0'): For low water depths, the contractor may elect to furnish a cofferdam or other means to construct the pier per the plans and specifications. This may include underwater concreting or placing concrete in the dry. Additional bid items are not needed, and all work associated with properly constructing the pier shall be considered incidental to pier construction. Note: A cofferdam may be required due to environmental concerns. See 13.11.5 for additional guidance.

- Type 2 (5.0’ < H ≤ 10.0’): For moderate water depths, a cofferdam should be used to ensure that the concrete placed underwater is sound and to the limits shown on the plans. At a minimum, the cofferdam will remove the running water condition, stabilize excavations for the placement of forms, improve inspection conditions, and may allow dewatering, if needed. Bid item “Cofferdams (Structure)” is required and bid item “Underwater Substructure Inspection (Structure)” is required to inspect the concrete quality prior to removing the cofferdam.

- Type 3 (H > 10.0’): For high water depths, underwater concreting becomes increasingly difficult and is likely beyond the maximum practical depth for setting formwork and placing the reinforcing steel. As such, underwater concreting should be avoided and pier concrete should be placed in the dry. While this pier construction type may increase the initial pier construction cost, it will provide better quality concrete and avoid costly repairs. Alternative pier types (Hammerhead or Solid Wall) should also be considered during the design process to determine the most effective pier type. Bid item “Cofferdams (Structure)” is required and bid item “Concrete Masonry Seal” will most likely be required. The bid item “Underwater Substructure Inspection (Structure)” is not required when pier concrete will be poured in the dry.

Pile encased pier Types are detailed on Standard for Pile Encased Pier (Type). See 13.11.5 for additional guidance regarding cofferdams and seals. Total pier height shall be less than 25 feet.

All bearings supporting a superstructure utilizing pile encased piers shall be fixed bearings or semi-expansion.

The connection between the superstructure and the pier shall be designed to transmit the portion of the superstructure design loads assumed to be taken by the pier.

The concrete wall shall be a minimum of 2’-6” thick. The top 3’ of the wall is made wider if a larger bearing area is required. See Standard for Pile Encased Pier for details. The bottom of the wall shall be placed 2’ to 4’ below stable streambed elevation, depending upon stream velocities and frost depth.

13.2.4 Solid Single Shaft / Hammerheads

Solid single shaft piers are used for all types of crossings and are detailed on Standards for Hammerhead Pier and for Hammerhead Pier – Type 2. The choice between using a multi-column pier and a solid single shaft pier is based on economics and aesthetics. For high level bridges, a solid single shaft pier is generally the most economical and attractive pier type available.

The massiveness of this pier type provides a large lateral load capacity to resist the somewhat unpredictable forces from floating ice, debris and expanding ice. They are suitable for use on major rivers adjacent to shipping channels without additional pier protection. When used adjacent to railroad tracks, crash walls are not required.

If a cofferdam is required and the upper portion of a single shaft pier extends over the cofferdam, an optional construction joint is provided 2' above the normal water elevation. Since the cofferdam sheet piling is removed by extracting vertically, any overhead obstruction prevents removal and this optional construction joint allows the contractor to remove sheet piling before proceeding with construction of the overhanging portions of the pier.

A hammerhead pier shall not be used when the junction between the cap and the shaft would be less than the cap depth above normal water. Hammerhead piers are not considered aesthetically pleasing when the shaft exposure above water is not significant. A feasible alternative in this situation would be a wall type solid single shaft pier or a multi-column pier. On a wall type pier, both the sides and ends may be sloped if desired, and either a round, square or angled end treatment is acceptable. If placed in a waterway, a square end type is less desirable than a round or angled end.

13.2.5 Aesthetics

Refer to Chapter 4 for additional information about aesthetics.

13.3 Location

Piers shall be located to provide a minimum interference to flood flow. In general, place the piers parallel with the direction of flood flow. Make adequate provision for drift and ice by increasing span lengths and vertical clearances, and by selecting proper pier types. Special precautions against scour are required in unstable streambeds. Navigational clearance shall be considered when placing piers for bridges over navigable waterways. Coordination with the engineer performing the hydraulic analysis is required to ensure the design freeboard is met, the potential for scour is considered, the hydraulic opening is maintained and the flood elevations are not adversely affected upstream or downstream. Refer to Chapter 8 for further details.

In the case of railroad and highway separation structures, the spacing and location of piers and abutments is usually controlled by the minimum horizontal and vertical clearances required for the roadway or the railroad. Other factors such as utilities or environmental concerns may influence the location of the piers. Sight distance can impact the horizontal clearance required for bridges crossing roadways on horizontally curved alignments. Requirements for vertical and horizontal clearances are specified in Chapter 3 – Design Criteria. Crash wall requirements are provided on Standard for Highway Over Railroad Design Requirements.

Cost may also influence the number of piers, and therefore the number of spans, used in final design. During the planning stages, an analysis should be performed to determine the most economical configuration of span lengths versus number of piers that meet all of the bridge site criteria.

13.4 Loads on Piers

The following loads shall be considered in the design of piers. Also see 13.5 for additional guidance regarding load application.

13.4.1 Dead Loads

The dead load forces, DC and DW, acting on the piers shall include reactions from the superstructure. DC dead loads include structural components and nonstructural attachments, and DW dead loads include wearing surfaces and utilities. The pier diaphragm weight may be applied through the girders. Different load factors are applied to each of these dead load types.

For a detailed discussion of the application of dead load, refer to 17.2.4.1.

13.4.2 Live Loads

The HL-93 live load shall be used for all new bridge designs and is placed in 12'-wide design lanes. If fewer lane loads are used than what the roadway width can accommodate, the loads shall be kept within their design lanes. The design lanes shall be positioned between the curbs, ignoring shoulders and medians, to maximize the effect being considered. Refer to 17.2.4.2 for a detailed description of the HL-93 live load. For pier design, particular attention should be given to the double truck load described in 17.2.4.2.4. This condition places two trucks, spaced a minimum of 50' apart, within one design lane and will often govern the maximum vertical reaction at the pier.

WisDOT policy items:

A 10 foot design lane width may be used for the distribution of live loads to a pier cap.

The dynamic load allowance shall be applied to the live load for all pier elements located above the ground line per **LRFD [3.6.2]**.

For girder type superstructures, the loads are transmitted to the pier through the girders. For pier design, simple beam distribution is used to distribute the live loads to the girders. The wheel and lane loads are therefore transversely distributed to the girders by the lever rule as opposed to the Distribution Factor Method specified in **LRFD [4.6.2.2.2]**. The lever rule linearly distributes a portion of the wheel load to a particular girder based upon the girder spacing and the distance from the girder to the wheel load. The skew of the structure is not considered when calculating these girder reactions. Refer to 17.2.10 for additional information about live load distribution to the substructure and to Figure 17.2-17 for application of the lever rule.

For slab type superstructures, the loads are assumed to be transmitted directly to the pier without any transverse distribution. This assumption is used even if the pier cap is not integral with the superstructure. The HL-93 live load is applied as concentrated wheel loads combined with a uniform lane load. The skew of the structure is considered when applying these loads to the cap. The lane width is then divided by the cosine of the skew angle, and the load is distributed over the new lane width along the pier centerline.

As a reminder, the live load force to the pier for a continuous bridge is based on the *reaction*, not the sum of the adjacent span shear values. A pier beneath non-continuous spans (at an expansion joint) uses the sum of the reactions from the adjacent spans.

13.4.3 Vehicular Braking Force

Vehicular braking force, BR, is specified in **LRFD [3.6.4]** and is taken as the greater of:

- 25% of the axle loads of the design truck
- 25% of the axle loads of the design tandem
- 5% of the design truck plus lane load
- 5% of the design tandem plus lane load

The loads applied are based on loading one-half the adjacent spans. Do not use a percentage of the live load reaction. All piers receive this load. It is assumed that the braking force will be less than the dead load times the bearing friction value and all force will be transmitted to the given pier. The tandem load, even though weighing less than the design truck, must be considered for shorter spans since not all of the axles of the design truck may be able to fit on the tributary bridge length.

This force represents the forces induced by vehicles braking and may act in all design lanes. The braking force shall assume that traffic is traveling in the same direction for all design lanes as the existing lanes may become unidirectional in the future. This force acts 6' above the bridge deck, but the longitudinal component shall be applied at the bearings. It is not possible to transfer the bending moment of the longitudinal component acting above the bearings on typical bridge structures. The multiple presence factors given by **LRFD [3.6.1.1.2]** shall be considered. Per **LRFD [3.6.2.1]**, the dynamic load allowance shall not be considered when calculating the vehicular braking force.

13.4.4 Wind Loads

The design (3-second gust) wind speed (V) used in the determination of horizontal wind loads on superstructure and substructure units shall be taken from **LRFD [Table 3.8.1.1.2-1]**. The load combinations associated with the design of piers for wind load are Strength III, Strength V, and Service I. Their design wind speeds are:

- V =115 mph (Strength III)
- V = 80 mph (Strength V)
- V = 70 mph (Service I)

The wind pressure (P_Z) shall be determined as:

$P_Z = 2.56 \times 10^{-6} (V)^2 \cdot K_Z \cdot G \cdot C_D$ **LRFD [3.8.1.2.1]**

Where:

P_Z = design wind pressure (ksf)

V = design wind speed (mph) – (as stated above)

K_Z = pressure exposure and elevation coefficient

K_Z for Strength III is a function of ground surface roughness category as described in **LRFD [3.8.1.1.4]** and wind exposure category as described in **LRFD [3.8.1.1.5, 3.8.1.1.3]**, and is determined using **LRFD [Eq'ns 3.8.1.2.1-2**, **3.8.1.2.1-3**, **or 3.8.1.2.1-4]**.

- K_Z (Strength III) = see **LRFD [Table C3.8.1.2.1-1]**

K_Z for Strength V and Service I is not a function of bridge height, type, and wind exposure category **LRFD [3.8.1.2]**, and their values are:

- K_Z (Strength V) = 1.0
- K_Z (Service I) = 1.0

G = gust effect factor

- G (Strength III) = 1.0 **LRFD [Table 3.8.1.2.1-1]**
- G (Strength V) = 1.0 **LRFD [3.8.1.2.1]**
- G (Service I) = 1.0 **LRFD [3.8.1.2.1]**

C_D = drag coefficient for Strength III, Strength V, Service I **LRFD [Table 3.8.1.2.1-2]**

- C_D (girder/slab -superstructure) = 1.3
- C_D (substructure) = 1.6

Substituting these values into the equation for wind pressure (P_Z) gives:

- Strength III – P_Z (girder/slab -superstructure) = $0.044 \cdot (K_Z)$ ksf
  P_Z (substructure) = $0.054 \cdot (K_Z)$ ksf
- Strength V – P_Z (girder/slab -superstructure) = 0.021 ksf
  P_Z (substructure) = 0.026 ksf
- Service I – P_Z (girder/slab -superstructure) = 0.016 ksf
  P_Z (substructure) = 0.020 ksf

Wind pressure shall be assumed to be uniformly distributed on the area exposed to the wind. The exposed area shall be the sum of the area of all components as seen in elevation taken perpendicular to the wind direction. See 13.4.4.1 and 13.4.4.2 for additional information regarding application of these wind pressures.

Wind loads are divided into the following four types.

13.4.4.1 Wind Load from the Superstructure

The transverse and longitudinal wind load (WS_{SUPER}) components transmitted by the superstructure to the substructure for various angles of wind direction may be taken as the product of the skew coefficients specified in **LRFD [Table 3.8.1.2.3a-1]**, the wind pressure (P_Z) calculated as shown in 13.4.4, and the depth of the superstructure, as specified in **LRFD [3.8.1.2.3a]**. The depth shall be as seen in elevation perpendicular to the longitudinal axis of the bridge.

Both components of the wind loads shall be applied as line loads. The longitudinal component shall be applied at the bearing elevation, and the transverse component shall be applied at the mid-depth of the superstructure. In plan, the longitudinal components of wind loads shall be applied as line loads along the longitudinal axis of the superstructure. The purpose of applying the line load along the longitudinal axis of the bridge in plan is to avoid introducing a moment in the horizontal plane of the superstructure. The skew angle shall be taken as measured from the perpendicular to the longitudinal axis of the bridge in plan. Wind direction for design shall be that which produces the maximum force effect in the substructure. The transverse and longitudinal wind load components on the superstructure shall be applied simultaneously.

For girder bridges, the wind loads may be taken as the product of the wind pressure, skew coefficients, and the depth of the superstructure including the depth of the girder, deck, floor system, parapet, and sound barrier. Do not apply wind pressure to open rails or fences. Do apply wind pressure to all parapets, including parapets located between the roadway and the sidewalk if there is an open rail or fence on the edge of the sidewalk.

For usual girder and slab bridges having an individual span length of not more than 150 ft. (160 ft. for prestressed girders) and a maximum height of 33 ft. above low ground or water level, the following simplified method for wind load components (WS_{SUPER}) may be used:

- Transverse: 100% of the wind load calculated based on wind direction perpendicular to the longitudinal axis of the bridge.

- Longitudinal: 25% of the transverse load.

The wind load components are to be multiplied by the tributary length that the wind load is applied to, as described in 13.5, to produce the wind forces in the transverse and longitudinal directions.

Both forces shall be applied simultaneously.

WisDOT policy item:

For usual girder and slab bridges having an individual span length of not more than 150 ft. (160 ft. for prestressed girders) and a maximum height of 33 ft. above low ground or water level, the following simplified method for wind load components (WS_{SUPER}) may be used:

Strength III:

- 0.044 ksf, transverse
- 0.011 ksf, longitudinal

Strength V:

- 0.021 ksf, transverse
- 0.006 ksf, longitudinal

Service I:

- 0.016 ksf, transverse
- 0.004 ksf, longitudinal

Both forces shall be applied simultaneously. Do not apply to open rails or fences. Do apply this force to all parapets, including parapets located between the roadway and sidewalk if there is an open rail or fence on the edge of the sidewalk.

13.4.4.2 Wind Load Applied Directly to Substructure

The transverse and longitudinal wind loads (WS_{SUB}) to be applied directly to the substructure shall be calculated using the wind pressure (P_Z) determined as shown in 13.4.4, and as specified in **LRFD [3.8.1.2.3b]**. For wind directions taken skewed to the substructure, the wind pressure shall be resolved into components perpendicular to the end and front elevations of the substructure. The component perpendicular to the end elevation shall act on the exposed substructure area as seen in end elevation, and the component perpendicular to the front elevation shall act on the exposed substructure area as seen in the front elevation. The resulting wind forces shall be taken as the product of the value of resolved (P_Z) components acting on the end and front elevations, times its corresponding exposed area. These forces are applied at the centroid of the exposed area. The two substructure wind force components shall be applied simultaneously with the wind forces from the superstructure.

When combining the wind forces applied directly to the substructure with the wind forces transmitted to the substructure from the superstructure, all wind forces should correspond to wind blowing from the same direction.

WisDOT policy item:

The following conservative values for wind applied directly to the substructure, (WS_{SUB}), may be used for all bridges:

Strength III:

- 0.054 ksf, transverse
- 0.054 ksf, longitudinal

Strength V:

- 0.026 ksf, transverse
- 0.026 ksf, longitudinal

Service I:

- 0.020 ksf, transverse
- 0.020 ksf, longitudinal

Both forces shall be applied simultaneously.

13.4.4.3 Wind Load on Vehicles

Wind load on live load (WL) shall be represented by an interruptible, moving force of 0.10 klf acting transverse to, and 6.0 ft. above, the roadway and shall be transmitted to the structure as specified in **LRFD [3.8.1.3]**. The load combinations that are associated with this load are Strength V and Service I.

For various angles of wind direction, the transverse and longitudinal components of the wind load on live load may be taken as specified in **LRFD [Table 3.8.1.3-1]** with the skew angle measured from the perpendicular to the longitudinal axis of the bridge in plan.

The wind direction for design shall be that which produces the extreme force effect on the component under investigation. The transverse and longitudinal wind load components on the live load shall be applied simultaneously. The longitudinal component shall be applied at the bearing elevation, and the transverse component shall be applied at 6.0 ft. above the roadway surface.

For usual girder and slab bridges having an individual span length of not more than 150 ft. (160 ft. for prestressed girders) and a maximum height of 33 ft. above low ground or water level, the following simplified method for wind load components on live load (WL) may be used:

- 0.10 klf , transverse (Strength V, Service I)
- 0.04 klf , longitudinal (Strength V, Service I)

The wind load components are to be multiplied by the tributary length that the wind load is applied to, as described in 13.5, to produce the wind forces in the transverse and longitudinal directions.

Both forces shall be applied simultaneously.

This horizontal wind load (WL) should be applied only to the tributary lengths producing a force effect of the same kind, similar to the design lane load. These loads are applied in conjunction with the horizontal wind loads described in 13.4.4.1 and 13.4.4.2.

13.4.4.4 Vertical Wind Load

The effect of wind forces tending to overturn structures, unless otherwise determined according to **LRFD [3.8.3]**, shall be calculated as a vertical upward wind load (WS_{VERT}) as specified in **LRFD [3.8.2]**, and shall be equal to:

- 0.020 ksf (Strength III)

times the width of the deck, including parapets and sidewalks, and shall be applied as a longitudinal line load. This load shall be applied only when the direction of horizontal wind is taken to be perpendicular to the longitudinal axis of the bridge. This line load shall be applied at the windward ¼ point of the deck width, which causes the largest upward force at the windward fascia girder. This load is applied in conjunction with the horizontal wind loads described in 13.4.4.1 and 13.4.4.2.

WisDOT policy item:

If WisDOT policy items are being applied in 13.4.4.1 and 13.4.4.2, assume the wind direction is perpendicular to the longitudinal axis of the bridge and apply the vertical wind load as described above.

The vertical wind load (WS_{VERT}) is applied with load combinations that do not involve wind on live load, because the high wind velocity associated with this load would limit vehicles on the bridge, such as for load combination Strength III. The wind load shall be multiplied by the tributary length that the wind load is applied to, as described in 13.5, to produce the vertical wind force.

13.4.5 Uniform Temperature Forces

Temperature changes in the superstructure cause it to expand and contract along its longitudinal axis. These length changes induce forces in the substructure units based upon the fixity of the bearings, as well as the location and number of substructure units. The skew angle of the pier shall be considered when determining the temperature force components.

In determining the temperature forces, TU, applied to each substructure unit, the entire bridge superstructure length between expansion joints is considered. In all cases, there is a neutral point on the superstructure which does not move due to temperature changes. All temperature movements will then emanate outwards or inwards from this neutral point. This point is determined by assuming a neutral point. The sum of the expansion forces and fixed pier forces on one side of the assumed neutral point is then equated to the sum of the expansion forces and fixed pier forces on the other side of the assumed neutral point. Maximum friction coefficients are assumed for expansion bearings on one side of the assumed neutral point and minimum coefficients are assumed on the other side to produce the greatest unbalanced force for the fixed pier(s) on one side of the assumed neutral point. The maximum and minimum coefficients are then reversed to produce the greatest unbalanced force for the pier(s) on the other side of the assumed neutral point. For semi-expansion abutments, the assumed minimum friction coefficient is 0.06 and the maximum is 0.10. For laminated elastomeric bearings, the force transmitted to the pier is the shear force generated in the bearing due to temperature movement. Example E27-1.8 illustrates the calculation of this force. Other expansion bearing values can be found in Chapter 27 – Bearings. When writing the equation to balance forces, one can set the distance from the fixed pier immediately to one side of the assumed neutral point as 'X' and the fixed pier immediately to the other side as (Span Length – 'X'). This is illustrated in Figure 13.4-1.

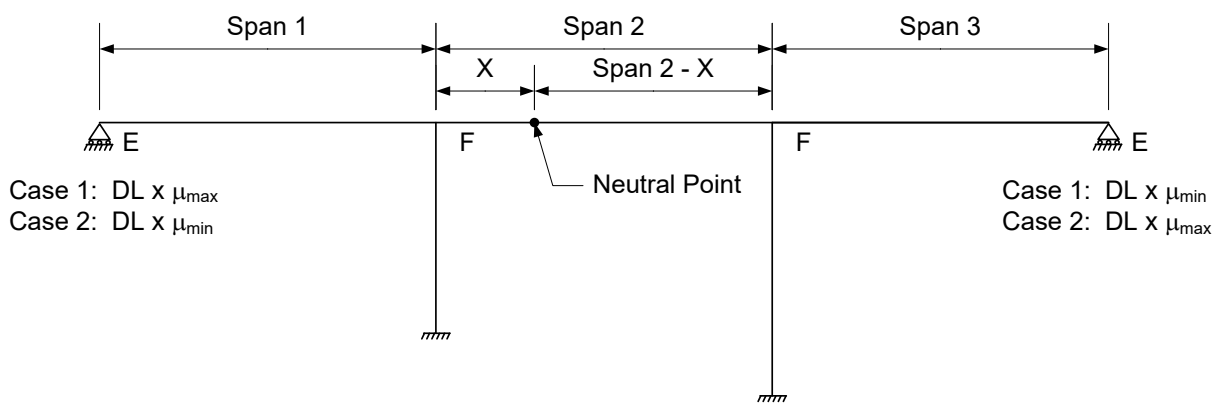

$$\text{Case1: } \sum DL \times \mu_{max} + \sum \frac{3EI\alpha TX}{144h^3} = \sum \frac{3EI\alpha T(\text{Span } 2 - X)}{144h^3} + \sum DL \times \mu_{min}$$

(Lt. Abutment) (Pier 1) (Pier 2) (Rt. Abutment)

Figure 13.4-1
Neutral Point Location with Multiple Fixed Piers

As used in Figure 13.4-1:

E = Column or shaft modulus of elasticity (ksi)

I	=	Column or shaft gross moment of inertia about longitudinal axis of the pier (in^4)
α	=	Superstructure coefficient of thermal expansion (ft/ft/°F)
T	=	Temperature change of superstructure (°F)
μ	=	Coefficient of friction of the expansion bearing (dimensionless)
h	=	Column height; top of footing to top of cap (ft)
DL	=	Total girder dead load reaction at the bearing (kips)
X	=	Distance between the fixed pier and the neutral point (ft)

The temperature force on a single fixed pier in a bridge is the resultant of the unbalanced forces acting on the substructure units. Maximum friction coefficients are assumed for expansion bearings on one side of the pier and minimum coefficients are assumed on the other side to produce the greatest unbalanced force on the fixed pier. For bridges with only one pier (fixed), do not include temperature force, TU, in the design of the pier when the abutments are either fixed or semi-expansion.

The temperature changes in superstructure length are assumed to be along the longitudinal axis of the superstructure regardless of the substructure skew angle. This assumption is more valid for steel structures than for concrete structures.

The force on a column with a fixed bearing due to a temperature change in length of the superstructure is:

$$F = \frac{3EI\alpha TL}{144h^3}$$

Where:

L	=	Superstructure expansion length between neutral point and location being considered (ft)
F	=	Force per column applied at the bearing elevation (kips)

This force shall be resolved into components along both the longitudinal and transverse axes of the pier.

The values for computing temperature forces in Table 13.4-1 shall be used on Wisconsin bridges. Do not confuse this temperature change with the temperature range used for expansion joint design.

	Reinforced Concrete	Steel
Temperature Change	45 °F	90 °F
Coefficient of Thermal Expansion	0.0000060/°F	0.0000065/°F

Table 13.4-1
Temperature Expansion Values

Temperature forces on bridges with two or more fixed piers are based on the movement of the superstructure along its centerline. These forces are assumed to act normal and parallel to the longitudinal axis of the pier as resolved through the skew angle. The lateral restraint offered by the superstructure is usually ignored. Except in unusual cases, the larger stiffness generated by considering the transverse stiffness of skewed piers is ignored.

13.4.6 Force of Stream Current

The force of flowing water, WA, acting on piers is specified in **LRFD [3.7.3]**. This force acts in both the longitudinal and transverse directions.

13.4.6.1 Longitudinal Force

The longitudinal force is computed as follows:

$$p = \frac{C_D V^2}{1{,}000}$$

Where:

p	=	Pressure of flowing water (ksf)
V	=	Water design velocity for the design flood in strength and service limit states and for the check flood in the extreme event limit state (ft/sec)
C_D	=	Drag coefficient for piers (dimensionless), equal to 0.7 for semicircular-nosed piers, 1.4 for square-ended piers, 1.4 for debris lodged against the pier and 0.8 for wedged-nosed piers with nose angle of 90° or less

The longitudinal drag force shall be computed as the product of the longitudinal stream pressure and the projected exposed pier area.

13.4.6.2 Lateral Force

The lateral force is computed as follows:

$$p = \frac{C_D V^2}{1{,}000}$$

Where:

p = Lateral pressure of flowing water (ksf)

C_D = Lateral drag coefficient (dimensionless), as presented in Table 13.4-2

Angle Between the Flow Direction and the Pier's Longitudinal Axis	C_D
0°	0.0
5°	0.5
10°	0.7
20°	0.9
≥ 30°	1.0

Table 13.4-2
Lateral Drag Coefficient Values

The lateral drag force shall be computed as the product of lateral stream pressure and the projected exposed pier area. Use the water depth and velocity at flood stage with the force acting at one-half the water depth.

Normally the force of flowing water on piers does not govern the pier design.

13.4.7 Buoyancy

Buoyancy, a component of water load WA, is specified in **LRFD [3.7.2]** and is taken as the sum of the vertical components of buoyancy acting on all submerged components. The footings of piers in the floodplain are to be designed for uplift due to buoyancy.

Full hydrostatic pressure based on the water depth measured from the bottom of the footing is assumed to act on the bottom of the footing. The upward buoyant force equals the volume of concrete below the water surface times the unit weight of water. The effect of buoyancy on column design is usually ignored. Use high water elevation when analyzing the pier for over-turning. Use low water elevation to determine the maximum vertical load on the footing.

The submerged weight of the soil above the footing is used for calculating the vertical load on the footing. Typical values are presented in Table 13.4-3.

	Submerged Unit Weight, γ (pcf)				
	Sand	Sand & Gravel	Silty Clay	Clay	Silt
Minimum (Loose)	50	60	40	30	25
Maximum (Dense)	85	95	85	70	70

Table 13.4-3
Submerged Unit Weights of Various Soils

13.4.8 Ice

Forces from floating ice and expanding ice, IC, do not act on a pier at the same time. Consider each force separately when applying these design loads.

For all ice loads, investigate each site for existing conditions. If no data is available, use the following data as the minimum design criteria:

- Ice pressure = 32 ksf
- Minimum ice thickness = 12”
- Height on pier where force acts is at the 2-year high water elevation. If this value is not available, use the elevation located midway between the high and measured water elevations.
- Pier width is the projection of the pier perpendicular to stream flow.

Slender and flexible piers shall not be used in regions where ice forces are significant, unless approval is obtained from the WisDOT Bureau of Structures.

13.4.8.1 Force of Floating Ice and Drift

Ice forces on piers are caused by moving sheets or flows of ice striking the pier.

There is not an exact method for determining the floating ice force on a pier. The ice crushing strength primarily depends on the temperature and grain size of the ice. **LRFD [3.9.2.1]** sets the effective ice crushing strength at between 8 and 32 ksf.

The horizontal force caused by moving ice shall be taken as specified in **LRFD [3.9.2.2]**, as follows:

$$F = F_c = C_a \cdot p \cdot t \cdot w$$

$$C_a = \left(\frac{5t}{w} + 1\right)^{0.5}$$

Where:

p	=	Effective ice crushing strength (ksf)
t	=	Ice thickness (ft)
w	=	Pier width at level of ice action (ft)

WisDOT policy item:

Since the angle of inclination of the pier nose with respect to the vertical is always less than or equal to 15° on standard piers in Wisconsin, the flexural ice failure mode does not need to be considered for these standard piers ($f_b = 0$).

WisDOT policy item:

If the pier is approximately aligned with the direction of the ice flow, only the first design case as specified in **LRFD [3.9.2.4]** shall be investigated due to the unknowns associated with the friction angle defined in the second design case.

A longitudinal force equal to F shall be combined with a transverse force of 0.15F

Both the longitudinal and transverse forces act simultaneously at the pier nose.

If the pier is located such that its longitudinal axis is skewed to the direction of the ice flow, the ice force on the pier shall be applied to the projected pier width and resolved into components. In this condition, the transverse force to the longitudinal axis of the pier shall be a minimum of 20% of the total force.

WisDOT exception to AASHTO:

Based upon the pier geometry in the Standards, the ice loadings of **LRFD [3.9.4]** and **LRFD [3.9.5]** shall be ignored.

13.4.8.2 Force Exerted by Expanding Ice Sheet

Expansion of an ice sheet, resulting from a temperature rise after a cold wave, can develop considerable force against abutting structures. This force can result if the sheet is restrained between two adjacent bridge piers or between a bluff type shore and bridge pier. The force direction is therefore transverse to the direction of stream flow.

Force from ice sheets depends upon ice thickness, maximum rate of air-temperature rise, extent of restraint of ice and extent of exposure to solar radiation. In the absence of more precise information, estimate an ice thickness and use a force of 8.0 ksf.

It is not necessary to design all bridge piers for expanding ice. If one side of a pier is exposed to sunlight and the other side is in the shade along with the shore in the pier vicinity, consider the development of pressure from expanding ice. If the central part of the ice is exposed to the sun's radiation, consider the effect of solar energy, which causes the ice to expand.

13.4.9 Centrifugal Force

Centrifugal force, CE, is specified in **LRFD [3.6.3]** and is included in the pier design for structures on horizontal curves. The lane load portion of the HL-93 loading is neglected in the computation of the centrifugal force.

The centrifugal force is taken as the product of the axle weights of the design truck or tandem and the factor, C, given by the following equation:

$$C = \frac{4}{3}\frac{v^2}{gR}$$

Where:

V	=	Highway design speed (ft/sec)
g	=	Gravitational acceleration = 32.2 (ft/sec^2)
R	=	Radius of curvature of travel lane (ft)

The multiple presence factors specified in **LRFD [3.6.1.1.2]** shall apply to centrifugal force.

Centrifugal force is assumed to act radially and horizontally 6' above the roadway surface. The point 6' above the roadway surface is measured from the centerline of roadway. The design speed may be determined from the Wisconsin *Facilities Development Manual*, Chapter 11. It is not necessary to consider the effect of superelevation when centrifugal force is used, because the centrifugal force application point considers superelevation.

13.4.10 Extreme Event Collision Loads

WisDOT policy item:

With regards to **LRFD [3.6.5]** and vehicular collision force, CT, protecting the pier and designing the pier for the 600 kip static force are each equally acceptable. The bridge design engineer should work with the roadway engineer to determine which alternative is preferred.

WisDOT policy item:

Designs for bridge piers adjacent to roadways with a design speed ≤ 40 mph need not consider the provisions of **LRFD [3.6.5]**.

If the design speed of a roadway adjacent to a pier is > 40 mph and the pier is not protected by a TL-5 barrier, embankment or adequate offset, the pier columns/shaft, *only*, shall be strengthened to comply with **LRFD [3.6.5]**. For a multi-column pier the minimum size column shall be 3x4 ft rectangular or 4 ft diameter (consider clearance issues and/or the wide cap required when using 4 ft diameter columns). Solid shaft and hammerhead pier shafts are considered adequately sized.

All multi-columned piers require a minimum of three columns. If a pier cap consists of two or more segments each segment may be supported by two columns. If a pier is constructed in stages, two columns may be used for the temporary condition.

The vertical reinforcement for the columns/shaft shall be the greater of what is required by design (not including the Extreme Event II loading) or a minimum of 1.0% of the gross concrete section (total cross section without deduction for rustications less than or equal to 1-1/2" deep) to address the collision force for the 3x4 ft rectangular and 4 ft diameter columns.

For the 3x4 ft rectangular columns, use double #5 stirrups spaced at 6" vertically as a minimum. For the 4 ft diameter columns, use #4 spiral reinforcement (smooth bars) spaced vertically at 6" as a minimum. Hammerhead pier shafts shall have, as a minimum, the horizontal reinforcement as shown on the Standards.

See Standard for Multi-Columned Pier with Rectangular Columns for an acceptable design to meet **LRFD [3.6.5]**.

WisDOT exception to AASHTO:

The vessel collision load, CV, in **LRFD [3.14]** will not be applied to every navigable waterway of depths greater than 2'. For piers located in navigable waterways, the engineer shall contact the WisDOT project manager to determine if a vessel collision load is applicable.

13.5 Load Application

When determining pier design forces, a thorough understanding of the load paths for each load is critical to arriving at loads that are reasonable per *AASHTO LRFD*. The assumptions associated with different pier, bearing and superstructure configurations are also important to understand. This section provides general guidelines for the application of forces to typical highway bridge piers.

13.5.1 Loading Combinations

Piers are designed for the Strength I, Strength III, Strength V and Extreme Event II load combinations as specified in **LRFD [3.4.1]**. Reinforced concrete pier components are also checked for the Service I load combination. Load factors for these load combinations are presented in Table 13.5-1. See 13.10 for loads applicable to pile bents and pile encased piers.

Load Combination	Load Factor										
	DC		DW		LL+IM BR CE	WA	WS	WL	FR	TU CR SH	IC CT CV
Limit State	Max.	Min.	Max.	Min.							
Strength I	1.25	0.90	1.50	0.65	1.75	1.00	0.00	0.00	1.00	0.5*	0.00
Strength III	1.25	0.90	1.50	0.65	0.00	1.00	1.00	0.00	1.00	0.5*	0.00
Strength V	1.25	0.90	1.50	0.65	1.35	1.00	1.00	1.00	1.00	0.5*	0.00
Service I	1.00	1.00	1.00	1.00	1.00	1.00	1.00	1.00	1.00	1.00	0.00
Extreme Event II	1.25	0.90	1.50	0.65	0.50	1.00	0.00	0.00	1.00	0.00	1.00

Table 13.5-1
Load Factors

* Values based on using gross moment of inertia for analysis **LRFD [3.4.1]**

13.5.2 Expansion Piers

See 13.4 for additional guidance regarding the application of specific loads.

Transverse forces applied to expansion piers from the superstructure include loads from one-half of the adjacent span lengths, and are applied at the location of the transverse load.

For expansion bearings other than elastomeric, longitudinal forces are transmitted to expansion piers through friction in the bearings. These forces, other than temperature, are based on loading one-half of the adjacent span lengths, with the maximum being no greater than the maximum friction force (dead load times the maximum friction coefficient of a sliding bearing). See 27.2.2 to determine the bearing friction coefficient. The longitudinal forces are applied at the bearing elevation.

Expansion piers with elastomeric bearings are designed based on the force that the bearings resist, with longitudinal force being applied at the bearing elevation. This force is applied as some combination of temperature force, braking force, and/or wind load depending on what load case generates the largest deflection at the bearing. The magnitude of the force shall be computed as follows:

$$F = \frac{GA\Delta n}{t}$$

Where:

F	=	Elastomeric bearing force used for pier design (kips)
G	=	Shear modulus of the elastomer (ksi)
A	=	Bearing pad area (in^2)
Δ	=	Deflection at bearing from thermal or braking force (in)
n	=	Number of bearings per girder line; typically one for continuous steel girders and two for prestressed concrete beams (dimensionless)
t	=	Total elastomer thickness (without steel laminates) (in)

Example E27-1.8 illustrates the calculation of this force.

See 13.4.5 for a discussion and example of temperature force application for all piers.

13.5.3 Fixed Piers

Transverse forces applied to fixed piers from the superstructure include loads from one-half of the adjacent span lengths, and are applied at the location of the transverse load.

For fixed bearings, longitudinal forces, other than temperature, are based on loading one-half of the adjacent span lengths. If longitudinal forces, other than temperature, at expansion substructure units exceed the maximum friction value of the bearings, the fixed piers need to assume the additional force beyond the maximum friction. The longitudinal forces are applied at the bearing elevation.

See 13.4.5 for a discussion and example of temperature force application for all piers.

13.6 Multi-Column Pier and Cap Design

WisDOT policy item:

Multi-column pier caps shall be designed using conventional beam theory.

The first step in the analysis of a pier frame is to determine the trial geometry of the frame components. The individual components of the frame must meet the minimum dimensions specified in 13.2.1 and as shown on the Standards. Each of the components should be sized for function, economy and aesthetics. Once a trial configuration is determined, analyze the frame and adjust the cap, columns and footings if necessary to accommodate the design loads.

When the length between the outer columns of a continuous pier cap exceeds 65', temperature and shrinkage should be considered in the design of the columns. These effects induce moments in the columns due to the expansion and contraction of the cap combined with the rigid connection between the cap and columns. A 0.5 factor is specified in the strength limit state for the temperature and shrinkage forces to account for the long-term column cracking that occurs. A full section modulus is then used for this multi-column pier analysis. Use an increase in temperature of +35 degrees F and a decrease of -45 degrees F. Shrinkage (0.0003 ft/ft) will offset the increased temperature force. For shrinkage, the keyed vertical construction joint as required on the Standard for Multi-Columned Pier, is to be considered effective in reducing the cap length. For all temperature forces, the entire length from exterior column to exterior column shall be used.

WisDOT policy item:

To reduce excessive thermal and/or shrinkage forces, pier caps greater than 65' long may be made non-continuous. Each segment may utilize as few as two columns. Spacing between ends of adjacent cap segments shall be 1'-0" minimum.

The maximum column spacing on pier frames is 25'. Column height is determined by the bearing elevations, the bottom of footing elevation and the required footing depth. The pier cap/column and column/footing interfaces are assumed to be rigid.

The pier is analyzed as a frame bent by any of the available analysis procedures considering sidesway of the frame due to the applied loading. The gross concrete areas of the components are used to compute their moments of inertia for analysis purposes. The effect of the reinforcing steel on the moment of inertia is neglected.

Vertical loads are applied to the pier through the superstructure. The vertical loads are varied to produce the maximum moments and shears at various positions throughout the structure in combination with the horizontal forces. The effect of length changes in the cap due to temperature is also considered in computing maximum moments and shears. All these forces produce several loading conditions on the structure which must be separated to get the maximum effect at each point in the structure. The maximum moments, shears and axial forces from the analysis routines are used to design the individual pier components. Moments at the face of column are used for pier cap design.

Skin reinforcement on the side of the cap, shall be determined as per **LRFD [5.7.3.4]**. This reinforcement shall not be included in any strength calculations.

See 13.1 and 13.2.1 for further requirements specific to this pier type.

13.7 Hammerhead Pier Cap Design

WisDOT policy item:

Hammerhead pier caps shall be designed using the strut-and-tie method **LRFD [5.8.2]**.

The strut-and-tie method (STM) is simply the creation of an internal truss system used to transfer the loads from the bearings through the pier cap to the column(s). This is accomplished through a series of concrete "struts" that resist compressive forces and steel "ties" that resist tensile forces. These struts and ties meet at nodes **LRFD [5.8.2.1]**. See Figure 13.7-1 for a basic strut-and-tie model that depicts two bearing reactions transferred to two columns. STM is used to determine internal force effects at the strength and extreme event limit states.

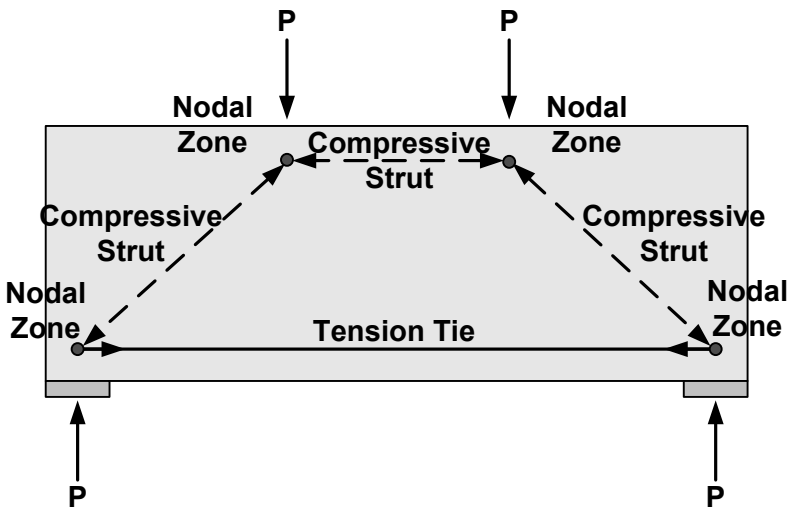

Figure 13.7-1
Basic Strut-and-Tie Elements

Strut-and-tie models are based on the following assumptions:

- The tension ties yield before the compressive struts crush.
- External forces are applied at nodes.
- Forces in the struts and ties are uniaxial.
- Equilibrium is maintained.
- Prestressing of the pier is treated as a load.

The generation of the model requires informed engineering judgment and is an iterative, graphical procedure. The following steps are recommended for a strut-and-tie pier cap design.

13.7.1 Draw the Idealized Truss Model

This model will be based on the structure geometry and loading configuration **LRFD [5.8.2.2]**. At a minimum, nodes shall be placed at each load and support point. Maintain angles of approximately 30° (minimum of 25°) to 60° (maximum of 65°) between strut and tie members that meet at a common node. An angle close to 45° should be used when possible. Figure 13.7-2 depicts an example hammerhead pier cap strut-and-tie model supporting (5) girders.

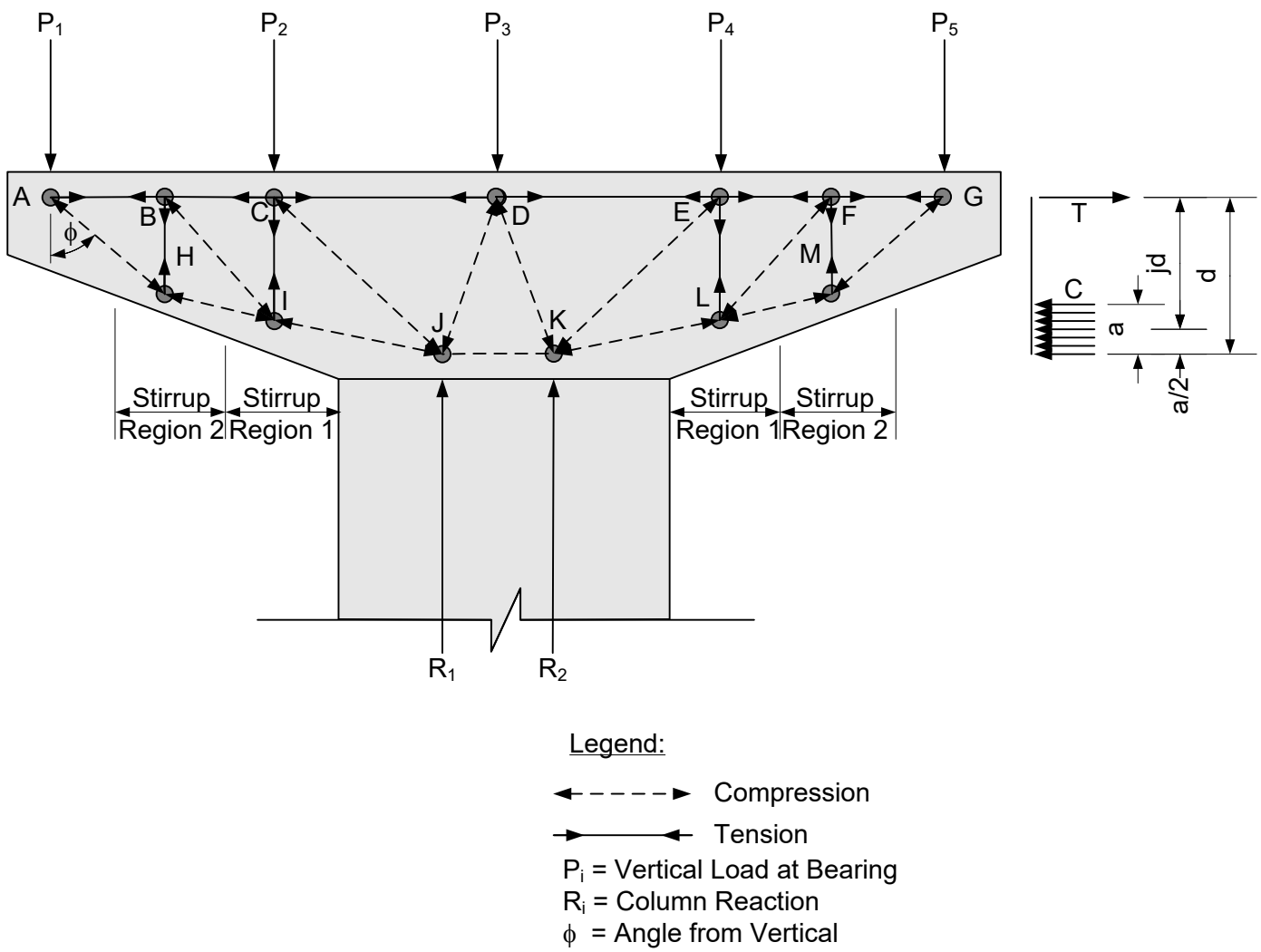

Figure 13.7-2
Example Hammerhead Pier Cap Strut-and-Tie Model

To begin, place nodes at the bearing locations and at the two column 1/3-points. In Figure 13.7-2, the minimum of nodes A, C, D, E and G are all placed at a bearing location, and nodes J and K are placed at the column 1/3-points. When drawing the truss model, the order of priority for forming compressive struts shall be the following:

1. Transfer the load directly to the column if the angle from vertical is less than 60°.

2. Transfer the load to a point directly beneath a bearing if the angle from vertical is between 30° and 60°.

3. Transfer the load at an approximately 45° angle from vertical and form a new node.

In Figure 13.7-2, the bearing load at node C is transferred directly to the column at node J since the angle formed by the compression strut C-J is less than 60°. The same occurs at strut E-K. However, the angle that would be formed by compression strut A-J to the column is not less than 60°, nor is the angle that would be formed by a strut A-I to beneath a bearing. Therefore, the load at node A is transferred at a 45° angle to node H by strut A-H. To maintain equilibrium at node H, the vertical tension tie B-H and the compression strut H-I are added.

Then, since the angle that would be formed by potential column strut B-J is not less than 60°, a check is made of the angle that would be formed by strut B-I. Since this angle is within the 30° to 60° range, compression strut B-I is added. To maintain equilibrium at node I, the vertical tension tie C-I and the compression strut I-J are added. This completes the basic strut-and-tie model for the left side of the cap. The geometric setup on the right side of the cap will be performed in the same manner as the left side.

The bearing load at node D, located above the column, is then distributed directly to the column as the angle from vertical of struts D-J and D-K are both less than 60°. Compression strut J-K must then be added to satisfy equilibrium at nodes J and K.

Vertically, the top chord nodes A, B, C, D, E, F and G shall be placed at the centroid of the tension steel. The bottom chord nodes H, I, J, K, L and M shall follow the taper of the pier cap and be placed at mid-height of the compression block, a/2, as shown in Figure 13.7-2.

The engineer should then make minor adjustments to the model using engineering judgment. In this particular model, this should be done with node H in order to make struts A-H and B-I parallel. The original 45° angle used to form strut A-H likely did not place node H halfway between nodes A and C. The angle of strut A-H should be adjusted so that node H is placed halfway between nodes A and C.

Another adjustment the engineer may want to consider would be placing four nodes above the column at 1/5-points as opposed to the conservative approach of the two column nodes shown in Figure 13.7-2 at 1/3-points. The four nodes would result in a decrease in the magnitude of the force in tension tie C-I. If the structure geometry were such that girder P_2 were placed above the column or the angle from vertical for potential strut B-J were less than 60°, then the tension tie C-I would not be present.

Proportions of nodal regions should be based on the bearing dimensions, reinforcement location, and depth of the compression zone. Nodes may be characterized as:

- CCC: Nodes where only struts intersect

- CCT: Nodes where a tie intersects the node in only one direction

- CTT: Nodes where ties intersect in two different directions

13.7.2 Solve for the Member Forces

Determine the magnitude of the unknown forces in the internal tension ties and compression struts by transferring the known external forces, such as the bearing reactions, through the strut-and-tie model. To satisfy equilibrium, the sum of all vertical and horizontal forces acting at each node must equal zero.

13.7.3 Check the Size of the Bearings

Per **LRFD [5.8.2.5]**, the concrete area supporting the bearing devices shall satisfy the following:

$P_u \leq \phi \cdot P_n$ **LRFD [5.8.2.3]**

Where:

ϕ = Resistance factor for bearing on concrete, equal to 0.70, as specified in **LRFD [5.5.4.2]**

P_u = Bearing reaction from strength limit state (kips)

P_n = Nominal bearing resistance (kips)

The nominal bearing resistance of the node face shall be:

$P_n = f_{cu} \cdot A_{cn}$ **LRFD [5.8.2.5]**

Where:

f_{cu} = Limiting compressive stress at the face of a node **LRFD [5.8.2.5.3]** (ksi)

A_{cn} = Effective cross-sectional area of the node face **LRFD [5.8.2.5.2]** (in^2)

Limiting compressive stress at the node face, f_{cu}, shall be:

$f_{cu} = m \cdot \nu \cdot f'_c$

Where:

f'_c = Compressive strength of concrete (ksi)

m = Confinement modification factor **LRFD [5.6.5]**

ν = Concrete efficiency factor (0.45, when no crack control reinforcement is present ; see **LRFD [Table 5.8.2.5.3a-1]** for values when crack control reinforcement is present per **LRFD [5.8.2.6]**)

For node regions with bearings:

$A_{cn} = A_{brg}$ = Area under bearing device (in^2)

$P_n = (m \cdot \nu \cdot f'_c) \cdot A_{brg}$; therefore $A_{brg} \geq P_u / \phi \cdot (m \cdot \nu \cdot f'_c)$

- Node regions with no crack control reinforcement:

  $A_{brg} \geq P_u / \phi \cdot (m \cdot 0.45 \cdot f'_c)$

- Node regions with crack control reinforcement per **LRFD [5.8.2.6]**:

  $A_{brg} \geq P_u / \phi \cdot (m \cdot 0.85 \cdot f'_c)$ --- (CCC) Node

  $A_{brg} \geq P_u / \phi \cdot (m \cdot 0.70 \cdot f'_c)$ --- (CCT) Node

  $A_{brg} \geq P_u / \phi \cdot (m \cdot 0.65 \cdot f'_c)$ --- (CTT) Node

Evaluate the nodes located at the bearings to find the minimum bearing area required.

13.7.4 Design Tension Tie Reinforcement

Tension ties shall be designed to resist the strength limit state force per **LRFD [5.8.2.4.1]**. For non-prestressed caps, the tension tie steel shall satisfy:

$P_u \leq \phi \cdot P_n$ **LRFD [5.8.2.3]**

$P_n = f_y \cdot A_{st}$; therefore,

$A_{st} \geq P_u / (\phi \cdot f_y)$

Where:

A_{st} = Total area of longitudinal mild steel reinforcement in the tie (in^2)

ϕ = Resistance factor for tension on reinforced concrete, equal to 0.90, as specified in **LRFD [5.5.4.2]**

f_y = Yield strength of reinforcement (ksi)

P_n = Nominal resistance of tension tie (kips)

P_u = Tension tie force from strength limit state (kips)

Horizontal tension ties, such as ties A-B and E-F in Figure 13.7-2, are used to determine the longitudinal reinforcement required in the top of the pier cap. The maximum tension tie force should be used to calculate the top longitudinal reinforcement.

Vertical tension ties, such as ties B-H and C-I, are used to determine the vertical stirrup requirements in the cap. Similar to traditional shear design, two stirrup legs shall be accounted for when computing A_{st}. In Figure 13.7-2, the number of stirrups, n, necessary to provide the A_{st} required for tie B-H shall be spread out across Stirrup Region 2. The length limit (L_2) of Stirrup Region 2 is from the midpoint between nodes A and B to the midpoint between nodes B and C. When vertical ties are located adjacent to columns, such as with tie C-I, the stirrup region extends to the column face. Therefore, the length limit (L_1) of Stirrup Region 1 is from the column face to the midpoint between nodes B and C. Using the equations above, the minimum area of reinforcement (A_{st}) can be found for the vertical tension tie **LRFD [5.8.2.4.1]**. The number of vertical stirrup legs at a cross-section can be selected, and their total area can be calculated as ($A_{stirrup}$). The number of stirrups required will then be:

$$n = A_{st} / A_{stirrup}$$

The stirrup spacing shall then be determined by the following equation:

$$s_{max} = L_i / n$$

Where:

s_{max}	=	Maximum allowable stirrup spacing (in)
L_i	=	Length of stirrup region (in)
n	=	Number of stirrups to satisfy the area (A_{st}) required to resist the vertical tension tie force

Skin reinforcement on the side of the cap, shall be determined as per **LRFD [5.6.7]**. This reinforcement shall not be included in any strength calculations.

13.7.5 Check the Compression Strut Capacity

Compression struts shall be designed to resist the strength limit state force per **LRFD [5.8.2.5]**.

$$P_u \leq \phi \cdot P_n \qquad \textbf{LRFD [5.8.2.3]}$$

The nominal resistance of the node face for a compression strut shall be taken as:

$$P_n = f_{cu} \cdot A_{cn} \qquad \textbf{LRFD [5.8.2.5]} \quad \text{--- (unreinforced)}$$

Where:

P_n = Nominal resistance of compression strut (kips)

P_u = Compression strut force from strength limit state (kips)

ϕ = Resistance factor for compression in strut-and-tie models, equal to 0.70, as specified in **LRFD [5.5.4.2]**

f_{cu} = Limiting compressive stress at the face of a node **LRFD [5.8.2.5.3]** (ksi)

A_{cn} = Effective cross-sectional area of the node face at the strut **LRFD [5.8.2.5.2]** (in^2)

The limiting compressive stress at the node face, f_{cu}, shall be given by:

$$f_{cu} = m \cdot \nu \cdot f'_c$$

Where:

f'_c = Compressive strength of concrete (ksi)

m = Confinement modification factor (use m = 1.0 at strut node face)

ν = Concrete efficiency factor (<u>0.45</u>, when no crack control reinforcement is present ; see **LRFD [Table 5.8.2.5.3a-1]** for values when crack control reinforcement is present per **LRFD [5.8.2.6]**)

For node regions with struts:

$P_n = (\nu \cdot f'_c) \cdot A_{cn}$; therefore $P_u \leq \phi \cdot (\nu \cdot f'_c) \cdot A_{cn}$

- Node regions with <u>no</u> crack control reinforcement:

  $P_u \leq \phi \cdot (0.45 \cdot f'_c) \cdot A_{cn}$

- Node regions <u>with</u> crack control reinforcement per **LRFD [5.8.2.6]**:

  $P_u \leq \phi \cdot (0.65 \cdot f'_c) \cdot A_{cn}$ --- (strut to node interface) --- <u>(CCC, CCT, CTT) Nodes</u>

  $P_u \leq \phi \cdot (0.85 \cdot f'_c) \cdot A_{cn}$ --- (back face) --- <u>(CCC) Node</u>

  $P_u \leq \phi \cdot (0.70 \cdot f'_c) \cdot A_{cn}$ --- (back face) --- <u>(CCT) Node</u>

  $P_u \leq \phi \cdot (0.65 \cdot f'_c) \cdot A_{cn}$ --- (back face) --- <u>(CTT) Node</u>

The cross-sectional area of the strut at the node face, A_{cn}, is determined by considering both the available concrete area and the anchorage conditions at the ends of the strut. Figure 13.7-3, Figure 13.7-4 and Figure 13.7-5 illustrate the computation of A_{cn}.

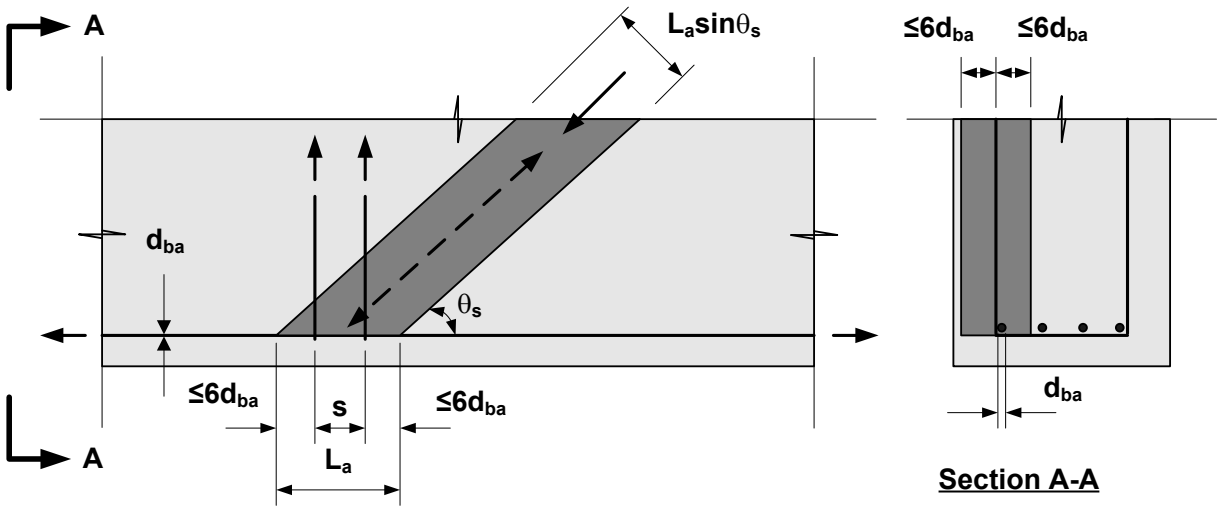

Figure 13.7-3
Strut Anchored by Tension Reinforcement Only (CTT)

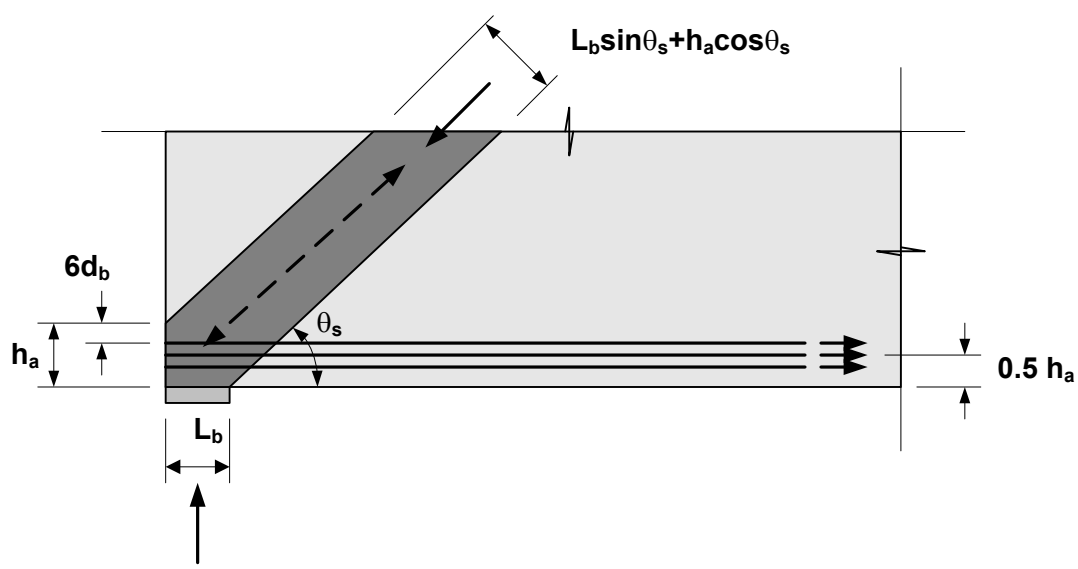

Figure 13.7-4
Strut Anchored by Bearing and Tension Reinforcement (CCT)

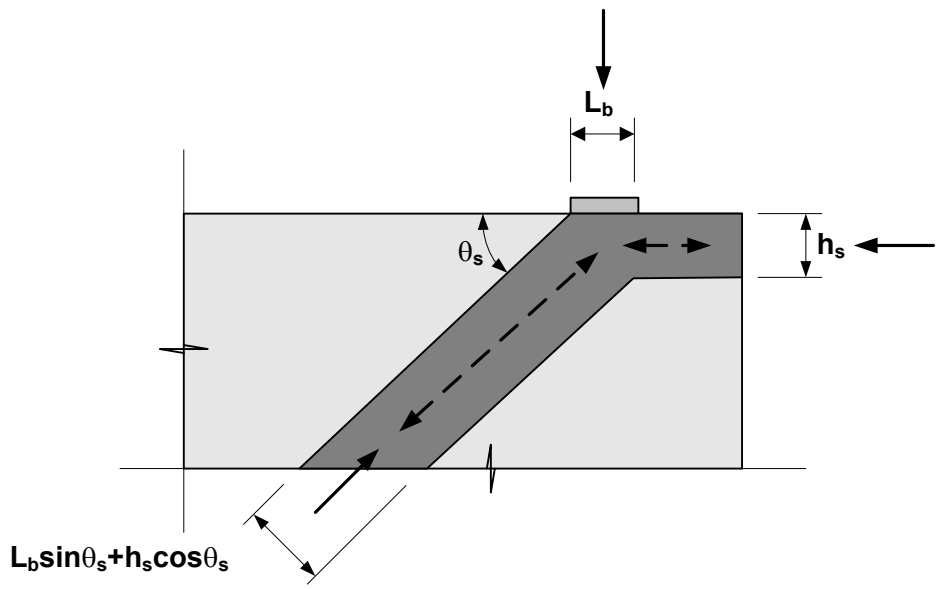

Figure 13.7-5
Strut Anchored by Bearing and Strut (CCC)

In Figure 13.7-3, the strut area is influenced by the stirrup spacing, s, as well as the diameter of the longitudinal tension steel, d_{ba}. In Figure 13.7-4, the strut area is influenced by the bearing dimensions, L_b, in both directions, as well as the location of the center of gravity of the longitudinal tension steel, $0.5h_a$. In Figure 13.7-5, the strut area is influenced by the bearing dimensions, L_b, in both directions, as well as the height of the compression strut, h_s. The value of h_s shall be taken as equal to "a" as shown in Figure 13.7-2. The strut area in each of the three previous figures depends upon the angle of the strut with respect to the horizontal, θ_s.

If the initial strut width is inadequate to develop the required resistance, the engineer should increase the bearing block size.

13.7.6 Check the Tension Tie Anchorage

Tension ties shall be anchored to the nodal zones by either specified embedment length or hooks so that the tension force may be transferred to the nodal zone. As specified in **LRFD [5.8.2.4.2]**, the tie reinforcement shall be fully developed at the inner face of the nodal zone. In Figure 13.7-4, this location is given by the edge of the bearing where θ_s is shown. Develop tension reinforcement per requirements specified in **LRFD [5.10.8]**.

13.7.7 Provide Crack Control Reinforcement

Pier caps designed using the strut-and-tie method and the efficiency factors of **LRFD [Table 5.8.2.5.3a-1]**, shall contain an orthogonal grid of reinforcing bars near each face in accordance with **LRFD [5.8.2.6]**. This reinforcement is intended to control the width of cracks and to ensure a minimum ductility for the member so that, if required, significant redistribution of internal

stresses can take place. Crack control reinforcement shall consist of two grids distributed evenly near each side face of the strut. Additional internal layers may be used when necessary for thicker members, in order to provide a practical layout. Maximum bar spacing shall not exceed the smaller of d/4 and 12”. This reinforcement is not to be included as part of the tie.

The reinforcement in the vertical direction shall satisfy:

$A_v / b_w \cdot s_v \geq 0.003$; therefore $A_v \geq (0.003)\, b_w \cdot s_v$

The reinforcement in the horizontal direction shall satisfy:

$A_h / b_w \cdot s_h \geq 0.003$; therefore $A_h \geq (0.003)\, b_w \cdot s_h$

Where:

A_v = Total area of vertical crack control reinforcement within spacing s_v (in.)

A_h = Total area of horizontal crack control reinforcement within spacing s_h (in.)

b_w = Width of member (in.)

s_v, s_h = Spacing of vertical and horizontal crack control reinforcement (in.)

13.8 General Pier Cap Information

The minimum cap dimension to be used is 3' deep by 2'-6" wide, with the exception that a 2'-6" deep section may be used for caps under slab structures. If a larger cap is needed, use 6" increments to increase the size. The multi-column cap width shall be a minimum of 1 1/2" wider than the column on each side to facilitate construction forming. The pier cap length shall extend a minimum of 2' transversely beyond the centerline of bearing and centerline of girder intersection.

On continuous slab structures, the moment and shear forces are proportional between the transverse slab section and the cap by the ratio of their moments of inertia. The effective slab width assumed for the transverse beam is the minimum of 1/2 the center-to-center column spacing or 8.0'.

$$M_{cap} = M_{total} \frac{I_{cap}}{I_{cap} + I_{slab}}$$

Where:

M_{cap}	=	Cap moment (kip-ft)
M_{total}	=	Total moment (kip-ft)
I_{cap}	=	Moment of inertia of pier cap (in^4)
I_{slab}	=	Moment of inertia of slab (in^4)

The concrete slab is to extend beyond the edge of pier cap as shown on Standards for Continuous Haunched Slab and for Continuous Flat Slab. If the cap is rounded, measure from a line tangent to the pier cap end and parallel to the edge of the deck.

Reinforcement bars are placed straight in the pier cap. Determine bar cutoff points on wide caps. If the pier cap is cantilevered over exterior columns, the top negative bar steel may be bent down at the ends to ensure development of this primary reinforcement.

Do not place shear stirrups closer than 4" on centers. Generally only double stirrups are used, but triple stirrups may be used to increase the spacing. If these methods do not work, increase the cap size. Stirrups are generally not placed over the columns. The first stirrup is placed one-half of the stirrup spacing from the edge of the column into the span.

The cap-to-column connection is made by extending the column reinforcement straight into the cap the necessary development length. Stirrup details and bar details at the end of the cap are shown on Standard for Multi-Columned Pier.

Crack control, as defined in **LRFD [5.6.7]** shall be considered for pier caps. Class 2 exposure condition exposure factors shall only be used when concern regarding corrosion (i.e., pier caps

located below expansion joints, pier caps subject to intermittent moisture above waterways, etc.) or significant aesthetic appearance of the pier cap is present.

13.9 Column / Shaft Design

See 13.4.10 for minimum shaft design requirements regarding the Extreme Event II collision load of **LRFD [3.6.5]**.

Use an accepted analysis procedure to determine the axial load as well as the longitudinal and transverse moments acting on the column. These forces are generally largest at the top and bottom of the column. Apply the load factors for each applicable limit state. The load factors should correspond to the gross moment of inertia. Load factors vary for the gross moment of inertia versus the cracked moment as defined in **LRFD [3.4.1]** for γ_{TU}, γ_{CR}, γ_{SH}. Choose the controlling load combinations for the column design.

Columns that are part of a pier frame have transverse moments induced by frame action from vertical loads, wind loads on the superstructure and substructure, wind loads on live load, thermal forces and centrifugal forces. If applicable, the load combination for Extreme Event II must be considered. Longitudinal moments are produced by the above forces, as well as the braking force. These forces are resolved through the skew angle of the pier to act transversely and longitudinally to the pier frame. Longitudinal forces are divided equally among the columns.

Wisconsin uses tied columns following the procedures of **LRFD [5.6.4]**. The minimum allowable column size is 2'-6" in diameter. The minimum steel bar area is as specified in **LRFD [5.6.4.2]**. For piers not requiring a certain percentage of reinforcement as per 13.4.10 to satisfy **LRFD [3.6.5]** for vehicular collision load, a reduced effective area of reinforcement may be used when the cross-section is larger than that required to resist the applied loading.

The computed column moments are to consider moment magnification factors for slenderness effects as specified in **LRFD [5.6.4.3]**. Values for the effective length factor, K, are as follows:

- 1.2 for longitudinal moments with a fixed seat supporting prestressed concrete girders
- 2.1 for longitudinal moments with a fixed seat supporting steel girders and all expansion bearings
- 1.0 for all transverse moments

The computed moments are multiplied by the moment magnification factors, if applicable, and the column is designed for the combined effects of axial load and bending. According to **LRFD [5.6.4.1]** all force effects, including magnified moments, shall be transferred to adjacent components. The design resistance under combined axial load and bending is based on stress-strain compatibility. A computer program is recommended for determining the column's resistance to the limit state loads.

As a minimum, the column shall provide the steel shown on the Pier Standards.

On large river crossings, it may be necessary to protect the piers from damage. Dolphins may be provided.

The column-to-cap connection is designed as a rigid joint considering axial and bending stresses. Column steel is run through the joint into the cap to develop the compressive stresses or the tensile steel stresses at the joint.

In general, the column-to-footing connection is also designed as a rigid joint. The bar steel from the column is generally terminated at the top of the footing. Dowel bars placed in the footing are used to transfer the steel stress between the footing and the column.

Crack control, as defined in **LRFD [5.6.7]** shall be considered for pier columns. All pier columns shall be designed using a Class 2 exposure condition exposure factor.

13.10 Pile Bent and Pile Encased Pier Analysis

WisDOT policy item:

Only the Strength I limit state need be utilized for determining the pile configuration required for open pile bents and pile encased piers. Longitudinal forces are not considered due to fixed or semi-expansion abutments being required for these pier types.

The distribution of dead load to the pile bents and pile encased piers is in accordance with 17.2.9. Live load is distributed according to 17.2.10.

WisDOT policy item:

Dynamic load allowance, IM, is included for determining the pile loads in pile bents, but not for piling in pile encased piers.

The pile force in the outermost, controlling pile is equal to:

$$P_n = \frac{F}{n} + \frac{M}{S}$$

Where:

F = Total factored vertical load (kips)

n = Number of piles

M = Total factored moment about pile group centroid (kip-ft)

S = Section modulus of pile group (ft^3), equal to:

$$\left(\frac{\sum d^2}{c}\right)$$

In which:

d = Distance of pile from pile group centroid

c = Distance from outermost pile to pile group centroid

See Standard for Pile Bent for details. See Standard for Pile Encased Pier for details.

13.11 Footing Design

13.11.1 General Footing Considerations

There are typical concepts to consider when designing and detailing both spread footings and pile footings.

For multi-columned piers:

- Each footing for a given pier should be the same dimension along the length of the bridge.
- Each footing for a given pier should be the same thickness.
- Footings within a given pier need not be the same width.
- Footings within a given pier may have variable reinforcement.
- Footings within a given pier may have a different number of piles. Exterior footings should only have fewer piles than an interior footing if the bridge is unlikely to be widened in the future. An appropriate cap span layout will usually lend itself to similar footing/pile configurations.
- Heavier piles, especially if primarily end bearing piles, can be more economical.

For hammerhead piers:

- Make as many seals the same size as reasonable to facilitate cofferdam re-use.
- Seal thickness can vary from pier to pier.
- Footing dimensions, reinforcement and pile configuration can vary from pier to pier.
- Heavier piles, especially if primarily end bearing piles, can be more economical.

WisDOT exception to AASHTO:

Crack control, as defined in **LRFD [5.6.7]** shall not be considered for pier isolated spread footings, isolated pile footings and continuous footings.

Shrinkage and temperature reinforcement, as defined in **LRFD [5.10.6]** shall not be considered for side faces of any buried footings.

13.11.2 Isolated Spread Footings

Spread footings are designed using LRFD strength limit state loads and resistance for moment and shear as specified in **LRFD [5.12.8]**. The foundation bearing capacity, used to dimension the footing's length and width, shall be determined using **LRFD [10.6]** of the AASHTO *LRFD Bridge Design Specifications*.

The spread footing is proportioned so that the foundation bearing capacity is not exceeded. The following steps are used to design spread footings:

1. Minimum depth of spread footings is 2'. Depth is generally determined from shear strength requirements. Shear reinforcement is not used.

2. A maximum of 25% of the footing area is allowed to act in uplift (or nonbearing). When part of a footing is in uplift, its section properties for analysis are based only on the portion of the footing that is in compression (or bearing). When determining the percent of a footing in uplift, use the Service Load Design method.

3. Soil weight on footings is based only on the soil directly above the footing.

4. The minimum depth for frost protection from top of ground to bottom of footing is 4'.

5. Spread footings on seals are designed by either of the following methods:

    a. The footing is proportioned so the pressure between the bottom of the footing and the top of the seal does not exceed the foundation bearing capacity and not more than 25% of the footing area is in uplift.

    b. The seal is proportioned so that pressure at the bottom of the seal does not exceed the foundation bearing capacity and the area in uplift between the footing and the seal does not exceed 25%.

6. The spread footing's reinforcing steel is determined from the flexural requirements of **LRFD [5.6.3]**. The design moment is determined from the volume of the pressure diagram under the footing which acts outside of the section being considered. The weight of the footing and the soil above the footing is used to reduce the bending moment.

7. The negative moment which results if a portion of the footing area is in uplift is ignored. No negative reinforcing steel is used in spread footings.

8. Shear resistance is determined by the following two methods:

    a. Two-way action

    The volume of the pressure diagram on the footing area outside the critical perimeter lines (placed at a distance d/2 from the face of the column, where d equals the effective footing depth) determines the shear force. The shear

resistance is influenced by the concrete strength, the footing depth and the critical perimeter length. The critical perimeter length is 2 (L + d + W + d) for rectangular columns and π (2R + d) for round columns, where R is the column radius and d is the effective footing depth. The critical perimeter location for spread footings with rectangular columns is illustrated in Figure 13.11-1.

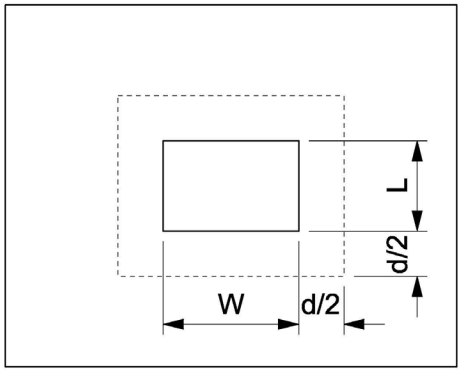

Figure 13.11-1
Critical Perimeter Location for Spread Footings

b. One-way action

The volume of the pressure diagram on the area enclosed by the footing edges and a line placed at a distance "d" from the face of the column determines the shear force. The shear resistance is influenced by the concrete strength, the footing depth and the entire footing width or length. The shear location for one-way action is illustrated in Figure 13.11-2.

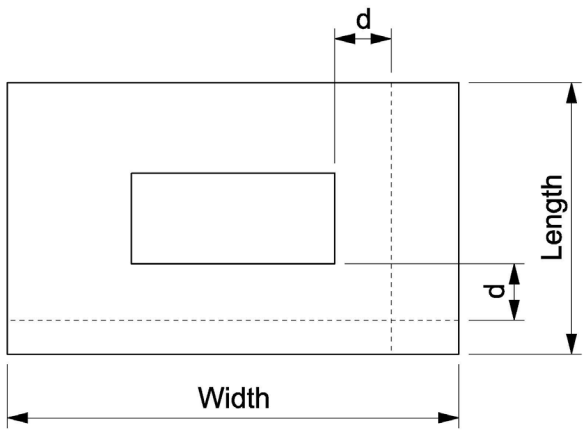

Figure 13.11-2
Shear Location for One-Way Action

The footing weight and the soil above the areas are used to reduce the shear force.

9. The bottom layer of reinforcing steel is placed 3” clear from the bottom of the footing.

10. If adjacent edges of isolated footings are closer than 4’-6”, a continuous footing shall be used.

13.11.3 Isolated Pile Footings

WisDOT policy item:

Pile footings are designed using LRFD strength limit state loads and resistance for moment and shear as specified in **LRFD [5.12.8]**. The pile design shall use LRFD strength limit state loads to compare to the factored axial compression resistance specified in Table 11.3-5.

The nominal geotechnical pile resistance shall be provided in the Site Investigation Report. The engineer shall then apply the appropriate resistance factor from Table 11.3.1 to the nominal resistance to determine the factored pile resistance. The footing is proportioned so that when it is loaded with the strength limit state loads, the factored pile resistance is not exceeded.

The following steps are used to design pile-supported footings:

1. The minimum depth of pile footing is 2’-6”. The minimum pile embedment is 6”. See 13.2.2 for additional information about pile footings used for pile bents.

2. Pile footings in uplift are usually designed by method (a) stated below. However, method (b) may be used if there is a substantial cost reduction.

a. Over one-half of the piles in the footings must be in compression for the Strength limit states. The section properties used in analysis are based only on the piles in compression. Pile and footing (pile cap) design is based on the Strength limit states. Service limit states require check for overall stability; however a check of crack control is not required per 13.11. The 600 kip collision load need not be checked per 13.4.10.

b. Piles may be designed for upward forces provided an anchorage device, sufficient to transfer the load, is provided at the top of the pile. Provide reinforcing steel to resist the tension stresses at the top of the footing.

3. Same as spread footing.

4. Same as spread footing.

5. The minimum number of piles per footing is four.

6. Pile footings on seals are analyzed above the seal. The only effect of the seal is to reduce the pile resistance above the seal by the portion of the seal weight carried by each pile.

7. If no seal is required but a cofferdam is required, design the piles to use the minimum required batter. This reduces the cofferdam size necessary to clear the battered piles since all piles extend above water to the pile driver during driving.

8. The pile footing reinforcing steel is determined from the flexural requirements of **LRFD [5.6.3]**. The design moment and shear are determined from the force of the piles which act outside of the section being considered. The weight of the footing and the soil above the footing are used to reduce the magnitude of the bending moment and shear force.

9. Shear resistance is determined by the following two methods:

   a. Two-way action

      The summation of the pile forces outside the critical perimeter lines placed at a distance d/2 from the face of the column (where d equals the effective footing depth) determines the shear force. The shear resistance is influenced by the concrete strength, the footing depth and the critical perimeter length. The critical perimeter length is 2 (L + d + W + d) for rectangular columns and π(2R + d) for round columns. The critical perimeter location for pile footings with rectangular columns is illustrated in Figure 13.11-3.

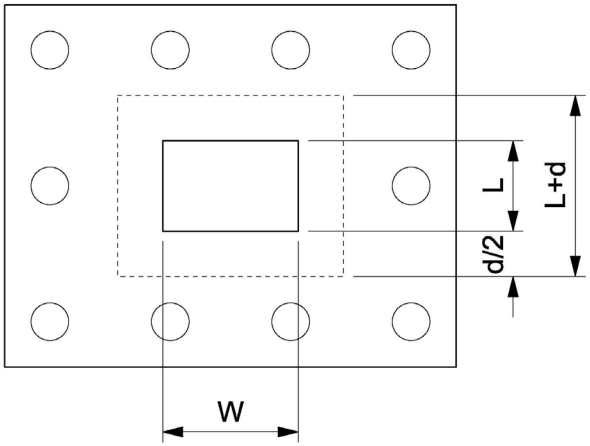

Figure 13.11-3
Critical Perimeter Location for Pile Footings

If the center of a pile falls on a line, then one-half of the pile force is assumed to act on each side of the line.

b. One-way action

The summation of the pile forces located within the area enclosed by the footing edges and a line at distance "d" from the face of the column determines the shear force, as illustrated in Figure 13.11-2. The shear resistance is influenced by the concrete strength, the footing depth and the entire footing width or length. If the center of a pile falls on a line, then one-half of the pile force is assumed to act on each side of the line.

10. The weight of the footing and soil above the areas is used to reduce the shear force.

11. The bottom layer of reinforcing steel is placed directly on top of the piles.

13.11.4 Continuous Footings

Continuous footings are used in pier frames of two or more columns when the use of isolated footings would result in a distance of less than 4’-6” between edges of adjacent footings. They are designed for the moments and shears produced by the frame action of the pier and the soil pressure under the footing.

The soil pressure or pile load under the footing is assumed to be uniform. The soil pressures or pile loads are generally computed only from the vertical column loads along with the soil and footing dead load. The moments at the base of the column are ignored for soil or pile loads.

To prevent unequal settlement, proportion the continuous footing so that soil pressures or pile loads are constant for Service I load combination. The footing should be kept relatively stiff between columns to prevent upward footing deflections which cause excessive soil or pile loads under the columns.

13.11.5 Cofferdams and Seals

A cofferdam is a temporary structure used to construct concrete substructures in or near water. The cofferdam protects the substructure during construction, controls sediments, and can be dewatered to construct the substructure in a dry environment. Dewatering the cofferdam allows for the cutting of piles, placement of reinforcing steel and ensuring proper consolidation of concrete. A cofferdam typically consists of driven steel sheet piling and allows for the structure to be safely dewatered when properly designed. Alternative cofferdam systems may be used to control shallow water conditions.

A cofferdam bid item may be warranted when water is expected at a concrete substructure unit during construction. The cofferdam shall be practically watertight to allow for dewatering such that the substructure is constructed in a dry environment. An exception is for pile encased piers. These substructures can be poured underwater, but in certain cases may still require a cofferdam for protection and/or to address environmental concerns. The designer should consult with geotechnical and regional personnel and the pile encased pier guidance provided in 13.2.3 to determine if a cofferdam is required. If a cofferdam is warranted, then include the bid item “Cofferdams (Structure)”.

Environmental concerns (specifically sediment control) may require the use of cofferdams at some sites. When excavation takes place in the water, some form of sediment control is usually required. The use of simple turbidity barrier may not be adequate based on several considerations (water depth, velocity, soil conditions, channel width, etc.). All sediment control devices, such as turbidity barrier, shall not be included in structure plans. Refer to Facilities Development Manual (FDM) Chapter 10 for erosion control and storm water quality information.

A seal is a mat of unreinforced concrete poured under water inside a cofferdam. The seal is designed to withstand the hydrostatic pressure on its bottom when the water above it is removed. For shallow water depths and certain soil conditions a concrete seal may not be necessary in order to dewater a cofferdam. Coordinate with geotechnical personnel to determine if a concrete seal is required. The designer shall determine if a concrete seal is required for a cofferdam. For pile encased piers, see guidance provided in 13.2.3 to determine if a seal is required. If a concrete seal is required, then include the bid item “Concrete Masonry Seal” and required seal dimensions. The cofferdam design shall be the responsibility of the contractor.

The hydrostatic pressure under the seal is resisted by the seal weight, the friction between the seal perimeter and the cofferdam walls, and friction between seal and piles for pile footings. The friction values used for the seal design are considered using the service limit state. To compute the capacity of piles in uplift, refer to Chapter 11. Values for bond on piles and sheet piling are presented in Table 13.11-1.

Application	Value of Bond
Bond on Piles	10 psi
Bond on Sheet Piling	2 psi applied to [(Seal Depth - 2') x Seal Perimeter]

Table 13.11-1
Bond on Piles and Sheet Piling

Lateral forces from stream flow pressure are resisted by the penetration of the sheet piling below the streambed elevation and by the bracing inside the cofferdam. When seals for spread footings are founded on rock, the weight of the seal is used to counterbalance the lateral stream flow pressure.

The downstream side of the cofferdam should be keyed into rock deep enough or other measures should be used to resist the lateral stream flow pressure. To provide a factor of safety, the cofferdam weight (sheet piling and bracing) is ignored in the analysis. The design stream flow velocity is based on the flow at the site at the time of construction but need not exceed 75% of the 100-year velocity. The force is calculated as per 13.4.6.

A rule of thumb for seal thickness is 0.40H for spread footings and 0.25H for pile footings, where H is the water depth from bottom of seal to top of water. The 2-year high water elevation, if available, should be used as the estimated water elevation during construction. The assumed water elevation used to determine the seal thickness should be noted on the plans. The minimum seal size is 3'-0" larger than the footing size on all sides. See Standard for Hammerhead Pier for additional guidance regarding the sizing of the seal.

Example: Determine the seal thickness for a 9’ x 12’ footing with 12-12” diameter piles. Uplift capacity of one pile equals 15 kips (per the Geotechnical Engineer). The water depth to the top of seal is 16’.

Assume 15’ x 18’ x 3.25’ seal.

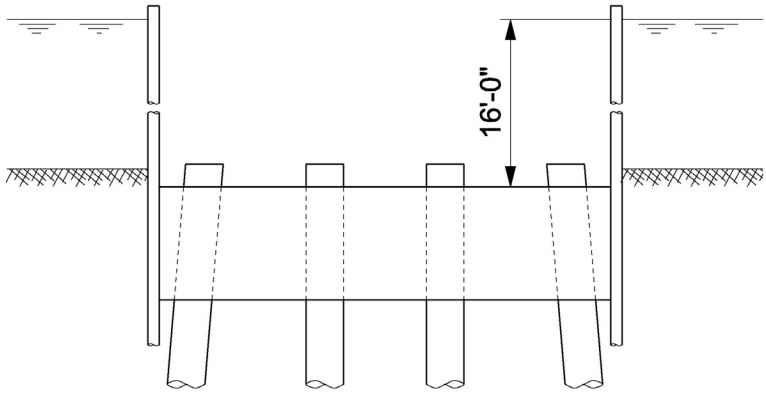

Figure 13.11-4
Seal Inside a Cofferdam

Uplift force of water	15 x 18 x 19.25 x 0.0624	=	324.3 kips (up)
Weight of seal course	15 x 18 x 3.25 x 0.15	=	131.6 kips (down)
Friction of sheet piling	2 x (15+18) x (3.25 - 2.0) x 144 x 0.002	=	23.8 kips (down)
Pile frictional resistance	π x 12 x (3.25 x 12) x 0.010	=	14.7 kips
Pile uplift resistance	(Per Geotechnical Engineer)	=	15.0 kips
Total pile resistance	12 piles x min(14.7,15.0)	=	176.4 kips (down)
Sum of downward forces	131.6+23.8+176.4	=	332 kips
Sum of upward forces	324.3	=	324 kips

332 > 324 OK

USE 3’- 3” THICK SEAL

Note: Pile uplift resistance shall be determine by the Geotechnical Engineer. For this example, when the pile uplift resistance equals 10 kips a 4’-6” thick seal is required.

13.12 Quantities

Consider the "Upper Limits for Excavation" for piers at such a time when the quantity is a minimum. This is either at the existing ground line or the finished graded section. Indicate in the general notes which value is used.

Structure backfill is not used at piers except under special conditions.

Compute the concrete quantities for the footings, columns and cap, and show values for each of them on the final plans.

13.13 Design Examples

E13-1 Hammerhead Pier Design Example

E13-2 Multi-Column Pier Design Example

This page intentionally left blank.

Table of Contents

E13-1 Hammerhead Pier Design Example 2
E13-1.1 Obtain Design Criteria 2
E13-1.1.1 Material Properties: 3
E13-1.1.2 Reinforcing Steel Cover Requirements: 3
E13-1.2 Relevant Superstructure Data 3
E13-1.2.1 Girder Dead Load Reactions 4
E13-1.2.2 Live Load Reactions per Design Lane 4
E13-1.3 Select Preliminary Pier Dimensions 4
E13-1.4 Compute Dead Load Effects 6
E13-1.5 Compute Live Load Effects 7
E13-1.6 Compute Other Load Effects 10
E13-1.6.1 Braking Force 10
E13-1.6.2 Wind Load from Superstructure 11
E13-1.6.2.1 Vertical Wind Load 17
E13-1.6.2.2 Wind Load on Vehicles 18
E13-1.6.3 Wind Load on Substructure 19
E13-1.6.4 Temperature Loading (Superimposed Deformations) 22
E13-1.7 Analyze and Combine Force Effects 22
E13-1.7.1 Pier Cap Force Effects 29
E13-1.7.2 Pier Column Force Effects 30
E13-1.7.3 Pier Pile Force Effects 32
E13-1.7.4 Pier Footing Force Effects 35
E13-1.8 Design Pier Cap Strut and Tie Method (STM) 37
E13-1.8.1 Determine Geometry and Member Forces 37
E13-1.8.2 Check the Size of the Bearings 41
E13-1.8.3 Calculate the Tension Tie Reinforcement 42
E13-1.8.4 Calculate the Stirrup Reinforcement 44
E13-1.8.5 Compression Strut Capacity Bottom Strut 45
E13-1.8.6 Compression Strut Capacity Diagonal Strut 47
E13-1.8.7 Check the Anchorage of the Tension Ties 49
E13-1.8.8 Provide Crack Control Reinforcement 51
E13-1.8.9 Summary of Cap Reinforcement 53
E13-1.9 Design Pier Column 53
E13-1.9.1 Design for Axial Load and Biaxial Bending (Strength V): 54
E13-1.9.2 Design for Shear (Strength III and Strength V) 59
E13-1.9.3 Transfer of Force at Base of Column 60
E13-1.10 Design Pier Piles 62
E13-1.11 Design Pier Footing 66
E13-1.11.1 Design for Moment 68
E13-1.11.2 Punching Shear Check 72
E13-1.11.3 One Way Shear Check 76
E13-1.12 Final Pier Schematic 79

E13-1 Hammerhead Pier Design Example

This example shows design calculations conforming to the ***AASHTO LRFD Bridge Design Specifications (Seventh Edition - 2016 Interim)*** as supplemented by the *WisDOT Bridge Manual* The design methods presented throughout the example are meant to be the most widely used in general bridge engineering practice.

The first design step is to identify the appropriate design criteria. This includes, but is not limited to, defining material properties, identifying relevant superstructure information, and determining the required pier geometry.

E13-1.1 Obtain Design Criteria

This pier is designed for the superstructure as detailed in example **E24-1**. This is a two-span steel girder stream crossing structure. Expansion bearings are located at the abutments, and fixed bearings are used at the pier.

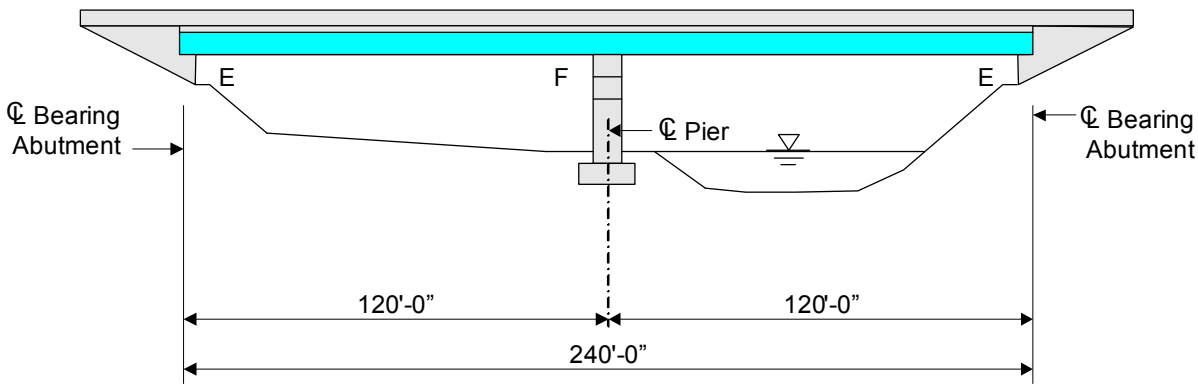

Figure E13-1.1-1
Bridge Elevation

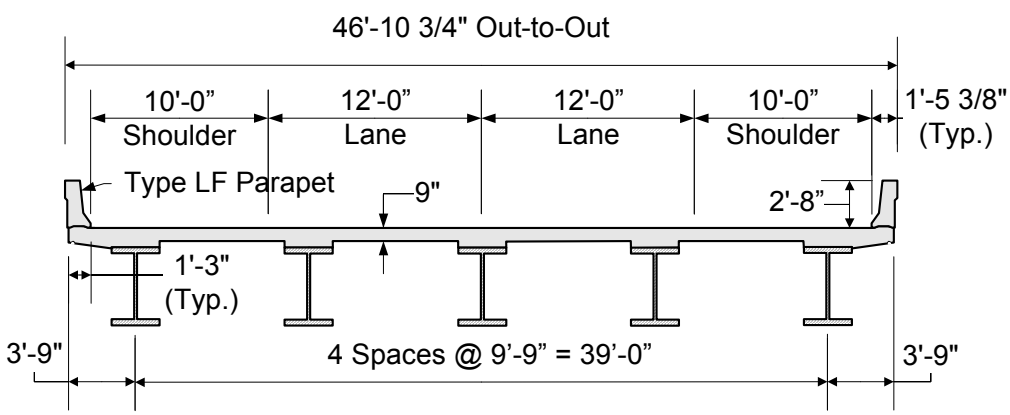

Figure E13-1.1-2
Bridge Cross Section

E13-1.1.1 Material Properties:

$w_c := 0.150$	unit weight of concrete, kcf
$f'_c := 3.5$	concrete 28-day compressive strength, ksi
$f_y := 60$	reinforcement yield strength, ksi

E13-1.1.2 Reinforcing Steel Cover Requirements:

All cover dimensions listed below are in accordance with **LRFD [Table 5.12.3-1]** and are shown in inches.

$Cover_{cp} := 2.5$	Pier cap
$Cover_{co} := 2.5$	Pier column
$Cover_{ft} := 2.0$	Footing top cover
$Cover_{fb} := 6.0$	Footing bottom cover, based on standard pile projection

E13-1.2 Relevant Superstructure Data

$w_{deck} := 46.50$	Deck Width, ft
$w_{roadway} := 44.0$	Roadway Width, ft
$ng := 5$	Number of Girders
$S := 9.75$	Girder Spacing, ft
$DOH := 3.75$	Deck Overhang, ft (Note that this overhang exceeds the limits stated in Chapter 17.6.2. WisDOT practice is to limit the overhang to 3'-7".)
$N_{spans} := 2$	Number of Spans
$L := 120.0$	Span Length, ft
$skew := 0$	Skew Angle, degrees
$H_{super} = 8.46$	Superstructure Depth, ft
$H_{brng} := 6.375$	Bearing Height, in (Fixed, Type A)
$W_{brng} := 18$	Bearing Width, in
$L_{brng} := 26$	Bearing Length, in
$\mu_{max} := 0.10$	Max. Coefficient of Friction of Abutment Expansion Bearings
$\mu_{min} := 0.06$	Min. Coefficient of Friction of Abutment Expansion Bearings

E13-1.2.1 Girder Dead Load Reactions

Unfactored Dead Load Reactions, kips

$$DLR_{int} := \begin{pmatrix} \text{"LoadType"} & \text{"Abut"} & \text{"Pier"} \\ \text{"Beam"} & 7.00 & 34.02 \\ \text{"Misc"} & 1.23 & 4.73 \\ \text{"Deck"} & 46.89 & 178.91 \\ \text{"Parapet"} & 6.57 & 24.06 \\ \text{"FWS"} & 7.46 & 27.32 \end{pmatrix} \qquad DLR_{ext} := \begin{pmatrix} \text{"LoadType"} & \text{"Abut"} & \text{"Pier"} \\ \text{"Beam"} & 7.00 & 34.02 \\ \text{"Misc"} & 0.83 & 3.15 \\ \text{"Deck"} & 48.57 & 185.42 \\ \text{"Parapet"} & 6.57 & 24.06 \\ \text{"FWS"} & 7.46 & 27.32 \end{pmatrix}$$

Abutment Reactions:

$\boxed{AbutRint_{DC} = 61.69}$ kips $\qquad$ $\boxed{AbutRext_{DC} = 62.97}$ kips

$\boxed{AbutRint_{DW} = 7.46}$ kips $\qquad$ $\boxed{AbutRext_{DW} = 7.46}$ kips

Pier Reactions:

$\boxed{Rint_{DC} = 241.72}$ kips $\qquad$ $\boxed{Rext_{DC} = 246.65}$ kips

$\boxed{Rint_{DW} = 27.32}$ kips $\qquad$ $\boxed{Rext_{DW} = 27.32}$ kips

E13-1.2.2 Live Load Reactions per Design Lane

Unfactored Live Load Reactions, kips

$$LLR := \begin{pmatrix} \text{"LoadType"} & \text{"Abut"} & \text{"Pier"} \\ \text{"Vehicle"} & 64.72 & 114.17 \\ \text{"Lane"} & 32.76 & 89.41 \end{pmatrix}$$

These loads are per design lane and do not include dynamic load allowance. The pier reactions are controlled by the 90% (Truck Pair + Lane) loading condition. The reactions shown include the 90% factor.

E13-1.3 Select Preliminary Pier Dimensions

Selecting the most optimal pier type depends on site conditions, cost considerations, superstructure geometry, and aesthetics. For this design example, a single column (hammerhead) pier was chosen.

Since the LRFD Specifications do not have standards regarding maximum or minimum dimensions for a pier cap, column, or footing, the designer should base the preliminary pier dimensions on WisDOT specific standards, previous designs, and past experience. The pier cap, however, must be wide enough to accommodate the bearings.

Figures E13-1.3-1 and E13-1.3-2 show the preliminary dimensions selected for this pier design example.

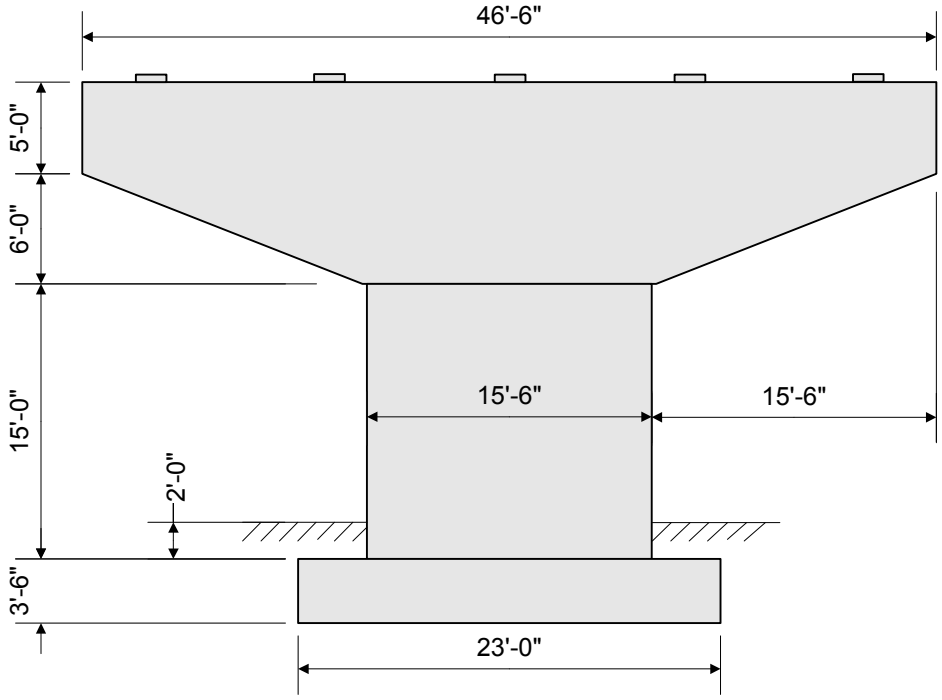

Figure E13-1.3-1
Preliminary Pier Dimensions - Front Elevation

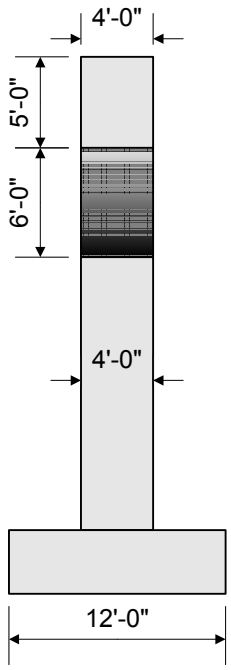

Figure E13-1.3-2
Preliminary Pier Dimensions - End Elevation

Pier Geometry Definitions (feet):

$L_{cap} := 46.5$ $L_{col} := 15.5$ $L_{ftg} := 23$

$W_{cap} := 4$ $W_{col} := 4$ $W_{ftg} := 12$

$H_{cap} := 11$ $H_{col} := 15$ $H_{ftg} := 3.5$

$H_{cap_end} := 5$ $D_{soil} := 2$ Soil depth above footing, feet

$L_{oh} := 15.5$ $\gamma_{soil} := 0.120$ Unit weight of soil, kcf

E13-1.4 Compute Dead Load Effects

Once the preliminary pier dimensions are selected, the corresponding dead loads can be computed in accordance with **LRFD [3.5.1]**. The pier dead loads must then be combined with the superstructure dead loads.

Exterior girder dead load reactions (DC and DW): $Rext_{DC} = 246.65$ kips

$Rext_{DW} = 27.32$ kips

Interior girder dead load reactions (DC and DW): $\boxed{Rint_{DC} = 241.72}$ kips

$\boxed{Rint_{DW} = 27.32}$ kips

Pier cap dead load:

$$DL_{Cap} := w_c \cdot W_{cap} \cdot \left[2 \cdot \left(\frac{H_{cap_end} + H_{cap}}{2}\right) \cdot L_{oh} + H_{cap} \cdot L_{col}\right]$$

$$= 0.150 \cdot 4 \cdot \left(2 \cdot \frac{5 + 11}{2} \cdot 15.5 + 11 \cdot 15.5\right)$$ $\boxed{DL_{Cap} = 251.1}$ kips

Pier column dead load:

$$DL_{col} := w_c \cdot W_{col} \cdot H_{col} \cdot L_{col}$$

$$= 0.150 \cdot 4 \cdot 15 \cdot 15.5$$ $\boxed{DL_{col} = 139.5}$ kips

Pier footing dead load:

$$DL_{ftg} := w_c \cdot W_{ftg} \cdot H_{ftg} \cdot L_{ftg}$$

$$= 0.150 \cdot 12 \cdot 3.5 \cdot 23$$ $\boxed{DL_{ftg} = 144.9}$ kips

In addition to the above dead loads, the weight of the soil on top of the footing must be computed. The two-foot height of soil above the footing was previously defined. Assuming a unit weight of soil at 0.120 kcf in accordance with **LRFD [Table 3.5.1-1]** :

$$EV_{ftg} := \gamma_{soil} \cdot D_{soil} \cdot \left(W_{ftg} \cdot L_{ftg} - W_{col} \cdot L_{col}\right)$$

$$= 0.120 \cdot 2 \cdot (12 \cdot 23 - 4 \cdot 15.5)$$ $\boxed{EV_{ftg} = 51.36}$ kips

E13-1.5 Compute Live Load Effects

For the pier in this design example, the maximum live load effects in the pier cap, column and footing are based on either one, two or three lanes loaded (whichever results in the worst force effect). Figure E13-1.5-1 illustrates the lane positions when three lanes are loaded.

The positioning shown in Figure E13-1.5-1 is determined in accordance with **LRFD [3.6.1].** The first step is to calculate the number of design lanes, which is the integer part of the ratio of the clear roadway width divided by 12 feet per lane. Then the lane loading, which occupies ten feet of the lane, and the HL-93 truck loading, which has a six-foot wheel spacing and a two-foot clearance to the edge of the lane, are positioned within each lane to maximize the force effects in each of the respective pier components.

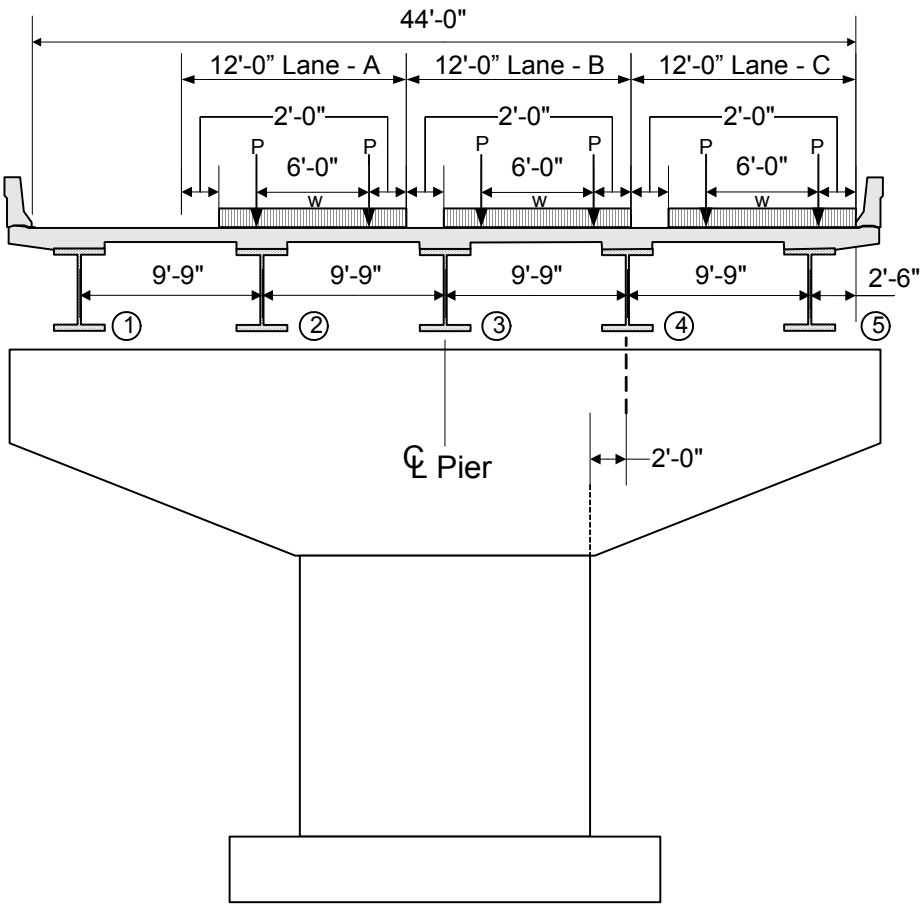

Figure E13-1.5-1
Pier Live Loading

N = maximum number of design lanes that the bridge can accommodate
$w_{roadway}$ = roadway width between curbs, ignoring any median strip
W = design lane width

$W := 12$ feet

$\boxed{w_{roadway} = 44}$ feet

$$N := \frac{w_{roadway}}{W}$$

$\boxed{N = 3.67}$

$\boxed{N = 3}$ design lanes

The unfactored girder reactions for lane load and truck load are obtained from the superstructure analysis and are as shown in E13-1.1.3.2. These reactions do not include dynamic load allowance and are given on a per lane basis (i.e., distribution factor = 1.0). Also, the reactions include the ten percent reduction permitted by the Specifications for interior pier reactions that result from longitudinally loading the superstructure with a truck pair in conjunction with lane loading **LRFD [3.6.1.3.1]**.

Live load reactions at Pier (w/o distribution):

$R_{truck} = 114.17$ kips

$R_{lane} = 89.41$ kips

$IM := 0.33$ Dynamic load allowance, IM from **LRFD [Table 3.6.2.1-1]**

The values of the unfactored concentrated loads which represent the girder truck pair load reaction per wheel line in Figure E13-1.5-1 are:

$$P_{wheel} := \frac{R_{truck}}{2} \cdot (1 + IM) \qquad P_{wheel} = 75.92 \text{ kips}$$

The value of the unfactored uniformly distributed load which represents the girder lane load reaction in Figure E13-1.5-1 is computed next. This load is transversely distributed over ten feet and is not subject to dynamic load allowance, **LRFD [3.6.2.1]**.

$$W_{lane} := \frac{R_{lane}}{10} \qquad W_{lane} = 8.94 \ \frac{\text{kips}}{\text{ft}}$$

The next step is to compute the reactions due to the above loads at each of the five bearing locations. This is generally carried out by assuming the deck is pinned (i.e., discontinuous) at the interior girder locations but continuous over the exterior girders. Solving for the reactions is then elementary. The computations for the reactions with only Lane C loaded are illustrated below as an example. The subscripts indicate the bearing location and the lane loaded to obtain the respective reaction:

$$R_{5_c} := \frac{P_{wheel} \cdot (4.25 + 10.25) + W_{lane} \cdot 10 \times 7.25}{9.75} \qquad R_{5_c} = 179.4 \text{ kips}$$

$$R_{4_c} := P_{wheel} \cdot 2 + W_{lane} \cdot 10 - R_{5_c} \qquad R_{4_c} = 61.86 \text{ kips}$$

The reactions at bearings 1, 2 and 3 with only Lane C loaded are zero. Calculations similar to those above yield the following live load reactions with the remaining lanes loaded. All reactions shown are in kips.

Lane A Loaded	Lane B Loaded	Lane C Loaded
$R_{5_a} := 0.0$	$R_{5_b} := 0.0$	$R_{5_c} = 179.4$
$R_{4_a} := 0.0$	$R_{4_b} = 123.66$	$R_{4_c} = 61.86$
$R_{3_a} = 72.31$	$R_{3_b} = 117.56$	$R_{3_c} := 0.0$
$R_{2_a} = 164.67$	$R_{2_b} := 0.0$	$R_{2_c} := 0.0$
$R_{1_a} = 4.27$	$R_{1_b} := 0.0$	$R_{1_c} := 0.0$

E13-1.6 Compute Other Load Effects

Other load effects that will be considered for this pier design include braking force, wind loads, and temperature loads.

For simplicity, buoyancy, stream pressure, ice loads and earthquake loads are not included in this design example.

E13-1.6.1 Braking Force

Since expansion bearings exist at the abutments, the entire longitudinal braking force is resisted by the pier.

In accordance with **LRFD [3.6.4]**, the braking force per lane is the greater of:

25 percent of the axle weights of the design truck or tandem

5 percent of the axle weights of the design truck plus lane load

5 percent of the axle weights of the design tandem plus lane load

The total braking force is computed based on the number of design lanes in the same direction. It is assumed in this example that this bridge is likely to become one-directional in the future. Therefore, any and all design lanes may be used to compute the governing braking force. Also, braking forces are not increased for dynamic load allowance in accordance with **LRFD [3.6.2.1]**. The calculation of the braking force for a single traffic lane follows:

25 percent of the design truck:

$BRK_{trk} := 0.25 \cdot (32 + 32 + 8)$ $\boxed{BRK_{trk} = 18}$ kips

25 percent of the design tandem:

$BRK_{tan} := 0.25 \cdot (25 + 25)$ $\boxed{BRK_{tan} = 12.5}$ kips

5 percent of the axle weights of the design truck plus lane load:

$BRK_{trk_lan} := 0.05 \cdot [(32 + 32 + 8) + (0.64 \times 2 \cdot L)]$ $\boxed{BRK_{trk_lan} = 11.28}$ kips

5 percent of the axle weights of the design tandem plus lane load:

$BRK_{tan_lan} := 0.05 \cdot [(25 + 25) + (0.64 \times 2 \cdot L)]$ $\boxed{BRK_{tan_lan} = 10.18}$ kips

Use:

$BRK := \max(BRK_{trk}, BRK_{tan}, BRK_{trk_lan}, BRK_{tan_lan})$ $\boxed{BRK = 18}$ kips per lane

LRFD [3.6.4] states that the braking force is applied along the longitudinal axis of the bridge at a distance of six feet above the roadway surface. However, since the skew angle is zero for this design example and the bearings are assumed incapable of transmitting longitudinal moment, the braking force will be applied at the top of bearing elevation. For bridges with skews, the component of the braking force in the transverse direction would be applied six feet above the roadway surface.

This force may be applied in either horizontal direction (back or ahead station) to cause the maximum force effects. Additionally, the total braking force is typically assumed equally distributed among the bearings:

$$BRK_{brg} := \frac{BRK}{5}$$ $\boxed{BRK_{brg} = 3.6}$ kips per bearing per lane

The moment arm about the base of the column is:

$$H_{BRK} := H_{col} + H_{cap} + \frac{H_{brng}}{12}$$ $\boxed{H_{BRK} = 26.53}$ feet

E13-1.6.2 Wind Load from Superstructure

Prior to calculating the wind load on the superstructure, the structure must be checked for aeroelastic instability, **LRFD [3.8.3]**. If the span length to width or depth ratio is greater than 30, the structure is considered wind-sensitive and design wind loads should be based on wind tunnel studies. This wind load applies to Strength III, Strength V, and Service I.

$\boxed{H_{par} = 2.67}$ Parapet height, feet

Span Length (L): $\boxed{L = 120}$ feet

$Width := w_{deck}$ $\boxed{Width = 46.5}$ feet

$Depth := H_{super} - H_{par}$ $\boxed{Depth = 5.79}$ feet

$\boxed{\frac{L}{Width} = 2.58}$ < 30 OK $\boxed{\frac{L}{Depth} = 20.72}$ < 30 OK

Since the span length to width and depth ratios are both less than 30, the structure does not need to be investigated for aeroelastic instability.

To compute the wind load on the superstructure, the area of the superstructure exposed to the wind must be defined. For this example, the exposed area is the total superstructure depth, (H_{super}), multiplied by length tributary to the pier. Due to expansion bearings at the abutment, the transverse length tributary to the pier is not the same as the longitudinal length.

The superstructure depth includes the total depth from the top of the barrier to the bottom of

the girder. Included in this depth is any haunch and/or depth due to the deck cross-slope. Once the total depth is known, (H_{super}), the exposed wind area can be calculated and the design wind pressure applied.

The total depth was previously computed in Section E13-1.1 and is as follows:

$H_{super} = 8.46$ feet

For this two-span bridge example, the tributary length for wind load on the fixed pier in the transverse direction is one-half of each adjacent span:

$$L_{windT} := \frac{L + L}{2} \qquad L_{windT} = 120 \qquad \text{feet}$$

In the longitudinal direction, the tributary length is the entire bridge length due to the expansion bearings at the abutments:

$$L_{windL} := L \cdot 2 \qquad L_{windL} = 240 \qquad \text{feet}$$

The transverse wind area is:

$$A_{wsuperT} := H_{super} \cdot L_{windT} \qquad A_{wsuperT} = 1015 \qquad ft^2$$

The longitudinal wind area is:

$$A_{wsuperL} := H_{super} \cdot L_{windL} \qquad A_{wsuperL} = 2031 \qquad ft^2$$

The design wind pressures applied to the superstructure are shown in Section 13.4.4. To calculate the wind pressure to be used for Strength III, the value of (Z) must be calculated to select the value of (K_Z) in **LRFD [Table C3.8.1.2.1-1]**.

The value of (Z) at the pier is:

$$Z_{pier} := H_{col} - D_{soil} + H_{cap} + H_{super} + \frac{H_{brng}}{12} \qquad Z_{pier} = 32.99 \qquad \text{feet}$$

Therefore, the average value of (Z) will be less than 33 feet, and because the Wind Exposure Category C applies to this structure, use:

$K_Z := 1.0$; therefore $Psup_{III} = 0.044$ ksf

Because the maximum height above low ground or water level to top of structure is (Z_{pier}), which is 33 feet, and individual span lengths are less than 150 feet, the values for transverse and longitudinal wind forces may be calculated using the simplified method in Section 13.4.4.1.

<u>Strength III</u>:

$Psup_{transIII} := 0.044$ ksf (transverse)

$Psup_{longitIII} := 0.011$ ksf (longitudinal)

Strength V:

$Psup_{transV} := 0.021$ ksf (transverse)

$Psup_{longitV} := 0.006$ ksf (longitudinal)

Service I:

$Psup_{transI} := 0.016$ ksf (transverse)

$Psup_{longitI} := 0.004$ ksf (longitudinal)

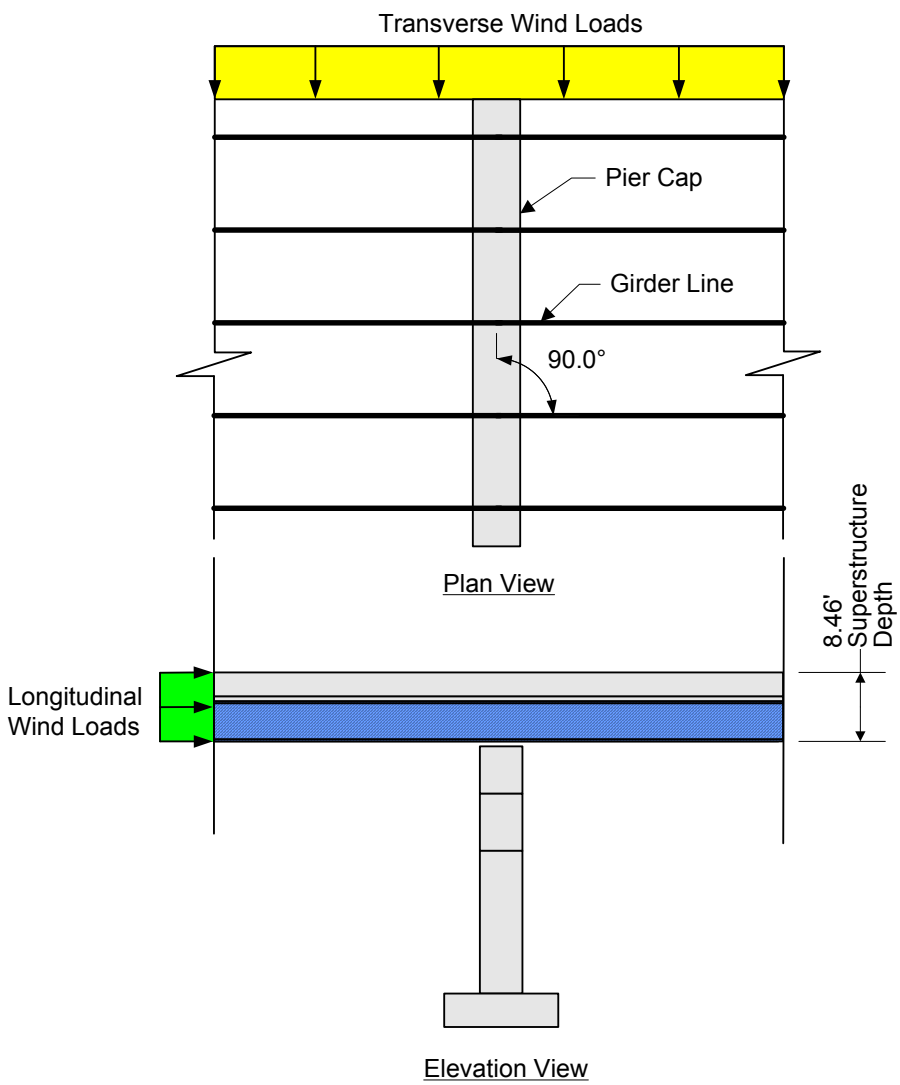

Figure E13-1.6-1
Application of Wind Load

The transvers and longitudinal superstructure wind loads acting on the pier (girders) are:

Strength III:

$WS_{suptrnsIII} := A_{wsuperT} \cdot Psup_{transIII}$ $\boxed{WS_{suptrnsIII} = 44.68}$ kips

$WS_{suplngIII} := A_{wsuperL} \cdot Psup_{longitIII}$ $\boxed{WS_{suplngIII} = 22.34}$ kips

Strength V:

$WS_{suptrnsV} := A_{wsuperT} \cdot Psup_{transV}$ $\boxed{WS_{suptrnsV} = 21.32}$ kips

$WS_{suplngV} := A_{wsuperL} \cdot Psup_{longitV}$ $\boxed{WS_{suplngV} = 12.18}$ kips

Service I:

$WS_{suptrnsI} := A_{wsuperT} \cdot Psup_{transI}$ $\boxed{WS_{suptrnsI} = 16.25}$ kips

$WS_{suplngI} := A_{wsuperL} \cdot Psup_{longitI}$ $\boxed{WS_{suplngI} = 8.12}$ kips

The total longitudinal wind loads (WS_{suplng}) shown above is assumed to be divided equally among the bearings. In addition, the load at each bearing is assumed to be applied at the top of the bearing. These assumptions are consistent with those used in determining the bearing forces due to the longitudinal braking force.

The horizontal force (WS_L) at each bearing due to the longitudinal wind loads on the superstructure are:

$WS_{L_III} := \frac{WS_{suplngIII}}{5}$ $\boxed{WS_{L_III} = 4.47}$ kips

$WS_{L_V} := \frac{WS_{suplngV}}{5}$ $\boxed{WS_{L_V} = 2.44}$ kips

$WS_{L_I} := \frac{WS_{suplngI}}{5}$ $\boxed{WS_{L_I} = 1.62}$ kips

The transverse wind loads ($WS_{suptrns}$) shown above are also assumed to be equally divided among the bearings but are applied at the mid-depth of the superstructure.

The horizontal force (WS_T) at each bearing due to the transverse wind loads on the superstructure are:

$$WS_{T_III} := \frac{WS_{suptrnsIII}}{5}$$ $WS_{T_III} = 8.94$ kips

$$WS_{T_V} := \frac{WS_{suptrnsV}}{5}$$ $WS_{T_V} = 4.26$ kips

$$WS_{T_I} := \frac{WS_{suptrnsI}}{5}$$ $WS_{T_I} = 3.25$ kips

These horizontal forces (WS_T) are shown in Figure E13-1.6-2

For calculating the resulting moment effect on the column, the moment arm about the base of the column for transverse and longitudinal wind forces are:

$$H_{WSlong} := H_{col} + H_{cap} + \frac{H_{brng}}{12}$$ $H_{WSlong} = 26.53$ feet

$$H_{WStrns} := H_{col} + H_{cap} + \frac{H_{brng}}{12} + \frac{H_{super}}{2}$$ $H_{WStrns} = 30.76$ feet

However, the transverse load also applies a moment to the pier cap. This moment, which acts about the centerline of the pier cap, induces vertical loads at the bearings as illustrated in Figure E13-1.6-2. The computations for these vertical forces are presented below.

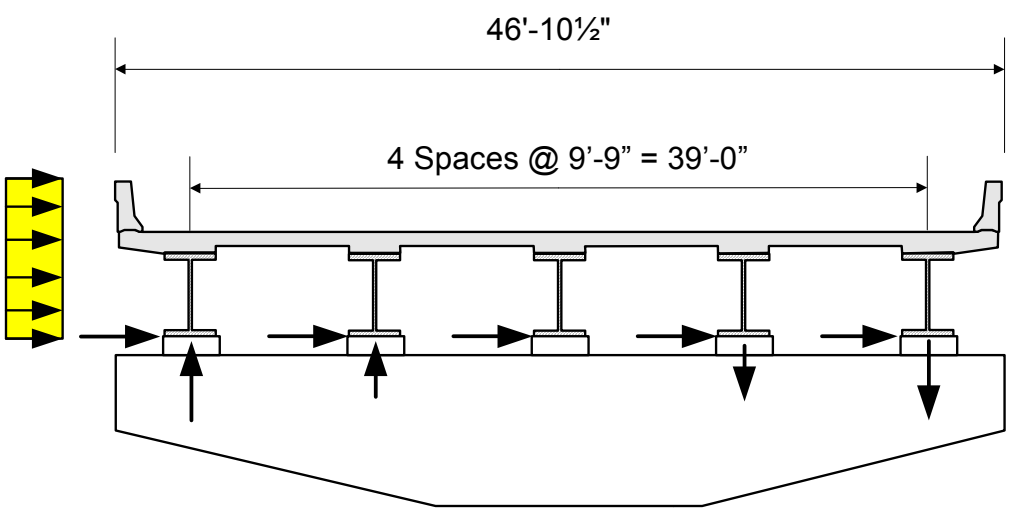

Figure E13-1.6-2
Transverse Wind Loads at Pier Bearings from Wind on Superstructure

Transverse Moments on the Pier Cap:

$M_{trnsIII} := WS_{suptrnsIII} \cdot \left(\frac{H_{super}}{2}\right)$ $\boxed{M_{trnsIII} = 189.02}$ kip-ft

$M_{trnsV} := WS_{suptrnsV} \cdot \left(\frac{H_{super}}{2}\right)$ $\boxed{M_{trnsV} = 90.22}$ kip-ft

$M_{trnsI} := WS_{suptrnsI} \cdot \left(\frac{H_{super}}{2}\right)$ $\boxed{M_{trnsI} = 68.74}$ kip-ft

Moment of Inertia for the Girder Group:

$I = \Sigma A \cdot y^2$

$A = 1 \quad I_1 = I_5 \quad I_2 = I_4 \quad I_3 = 0$ $\boxed{S = 9.75}$ feet (girder spacing)

$I_{girders} := 2 \cdot (S + S)^2 + 2 \cdot S^2$

$= 2 \cdot (9.75 + 9.75)^2 + 2 \cdot 9.75^2$ $\boxed{I_{girders} = 950.63}$ ft^2

$\text{Reaction} = \frac{\text{Moment} \cdot y}{I}$

Vertical Forces at the Bearings:

$RWS1_5_{trnsIII} := \frac{M_{trnsIII} \cdot (S + S)}{I_{girders}}$ $\boxed{RWS1_5_{trnsIII} = 3.88}$ kips

$RWS1_5_{trnsV} := \frac{M_{trnsV} \cdot (S + S)}{I_{girders}}$ $\boxed{RWS1_5_{trnsV} = 1.85}$ kips

$RWS1_5_{trnsI} := \frac{M_{trnsI} \cdot (S + S)}{I_{girders}}$ $\boxed{RWS1_5_{trnsI} = 1.41}$ kips

The loads at bearings 1 and 5 are equal but opposite in direction. Similarly for bearings 2 and 4:

$RWS2_4_{trnsIII} := \frac{M_{trnsIII} \cdot S}{I_{girders}}$ $\boxed{RWS2_4_{trnsIII} = 1.94}$ kips

$$RWS2_4_{trnsV} := \frac{M_{trnsV} \cdot S}{I_{girders}}$$ $RWS2_4_{trnsV} = 0.93$ kips

$$RWS2_4_{trnsl} := \frac{M_{trnsl} \cdot S}{I_{girders}}$$ $RWS2_4_{trnsl} = 0.70$ kips

Finally, by inspection: $RWS3_{trns} = 0$ kips

These vertical forces (RWS) are shown in Figure E13-1.6-2

E13-1.6.2.1 Vertical Wind Load

The vertical (upward) wind load is calculated by multiplying a 0.020 ksf vertical wind pressure by the out-to-out bridge deck width as described in Section 13.4.4.4. It is applied at the windward quarter-point of the deck only for limit states that do not include wind on live load (Strength III). The wind load is then multiplied by the tributary length, which is one-half of each adjacent span.

From previous definitions:

$w_{deck} = 46.5$ ft $L_{windT} = 120$ ft

The total vertical wind load is then:

$$WS_{vert} := 0.02(w_{deck}) \cdot (L_{windT})$$ $WS_{vert} = 111.6$ kips

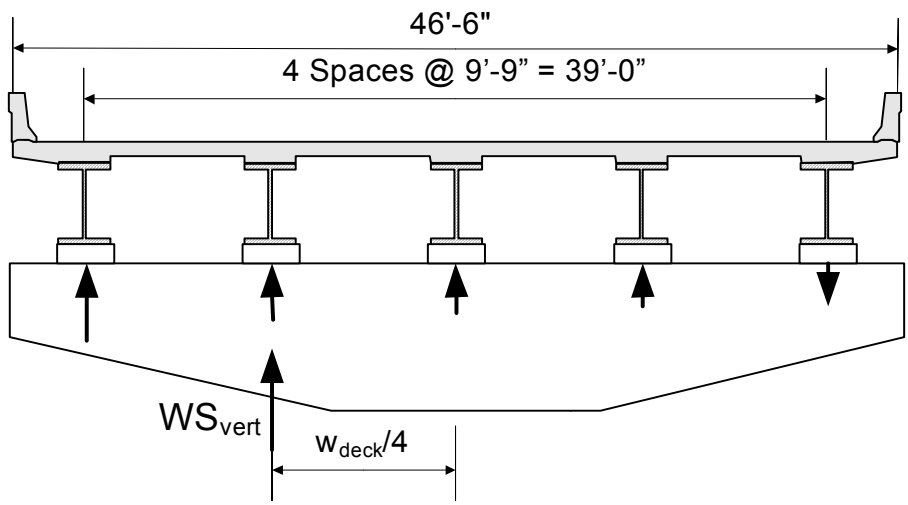

Figure E13-1.6-3
Vertical Wind Loads at Pier Bearings from Wind on Superstructure

This load causes a moment about the pier centerline. The value of this moment is:

$M_{WS_vert} := WS_{vert} \cdot \frac{w_{deck}}{4}$ $\boxed{M_{WS_vert} = 1297.35}$ kip-ft

The vertical loads at the bearings are computed as: $\boxed{S = 9.75}$ feet (girder spacing)

$RWS_{vert1} := \frac{-WS_{vert}}{5} + \frac{M_{WS_vert} \cdot (2 \cdot S)}{l_{girders}}$ $\boxed{RWS_{vert1} = 4.29}$ kips

$RWS_{vert2} := \frac{-WS_{vert}}{5} + \frac{M_{WS_vert} \cdot S}{l_{girders}}$ $\boxed{RWS_{vert2} = -9.01}$ kips

$RWS_{vert3} := \frac{-WS_{vert}}{5}$ $\boxed{RWS_{vert3} = -22.32}$ kips

$RWS_{vert4} := \frac{-WS_{vert}}{5} - \frac{M_{WS_vert} \cdot S}{l_{girders}}$ $\boxed{RWS_{vert4} = -35.63}$ kips

$RWS_{vert5} := \frac{-WS_{vert}}{5} - \frac{M_{WS_vert} \cdot 2 \cdot S}{l_{girders}}$ $\boxed{RWS_{vert5} = -48.93}$ kips

Where a negative value indicates a vertical upward load. These loads only apply to Strength III.

E13-1.6.2.2 Wind Load on Vehicles

The representation of wind pressure acting on vehicular traffic is given by **LRFD [3.8.1.3]** as a uniformly distributed line load. This load is applied both transversely and longitudinally. For the transverse and longitudinal loadings, the total force in each respective direction is calculated by multiplying the appropriate component by the length of structure tributary to the pier. Similar to the superstructure wind loading, the longitudinal length tributary to the pier differs from the transverse length. As shown in E13-1.6.2, the criteria for using the simplified method in Section 13.4.4.3 has been met, and the transverse and longitudinal loads are calculated as shown below and are to be applied simultaneously. This wind load applies to Strength V and Service I.

$\boxed{L_{windT} = 120}$ feet $\boxed{L_{windL} = 240}$ feet

$P_{LLtrans} := 0.100$ klf

$P_{LLlongit} := 0.040$ klf

$WL_{trans} := L_{windT} \cdot P_{LLtrans}$ $\boxed{WL_{trans} = 12}$ kips

$WL_{long} := L_{windL} \cdot P_{LLlongit}$ $\boxed{WL_{long} = 9.6}$ kips

The wind on vehicular live loads shown above are applied to the bearings in the same manner as the wind load from the superstructure. That is, the total transverse and longitudinal load is equally distributed to each bearing and applied at the top of the bearing.

The horizontal forces (WL_T , WL_L) at each bearing due to wind load on vehicles are:

$$WL_{T_V} := \frac{WL_{trans}}{5}$$ $\boxed{WL_{T_V} = 2.4}$ kips

$$WL_{T_I} := \frac{WL_{trans}}{5}$$ $\boxed{WL_{T_I} = 2.4}$ kips

$$WL_{L_V} := \frac{WL_{long}}{5}$$ $\boxed{WL_{L_V} = 1.92}$ kips

$$WL_{L_I} := \frac{WL_{long}}{5}$$ $\boxed{WL_{L_I} = 1.92}$ kips

In addition, the transverse load acting six feet above the roadway applies a moment to the pier cap. This moment induces vertical reactions at the bearings. The values of these vertical reactions are given below. The computations for these reactions are not shown but are carried out as shown in E13-1.6.2. The only difference is that the moment arm used for calculating the moment is equal to (H_{super} - H_{par} + 6.0 feet).

$$Mom_{arm} := H_{super} - H_{par} + 6$$ $\boxed{Mom_{arm} = 11.79}$ feet

<u>Vertical Forces at the Bearings</u>:

$\boxed{RWL1_5_{trns} = 2.9}$ kips

$\boxed{RWL2_4_{trns} = 1.45}$ kips

$\boxed{RWL3_{trns} = 0}$ kips

For calculating the resulting moment effect on the column, the moment arm about the base of the column is:

$$H_{WLlong} := H_{col} + H_{cap} + \frac{H_{brng}}{12}$$ $\boxed{H_{WLlong} = 26.53}$ feet

$$H_{WLtrns} := H_{col} + H_{cap} + \frac{H_{brng}}{12} + \left(H_{super} - H_{par} + 6\right)$$ $\boxed{H_{WLtrns} = 38.32}$ feet

E13-1.6.3 Wind Load on Substructure

The design wind pressure applied directly to the substructure units are shown in Section 13.4.4. As stated in E13-1.6.2, for Strength III the value of K_Z =1.0. For simplicity, apply the same pressure in the transverse and longitudinal directions for Strength III, V and Service I.

Strength III:

$P_{subIII} := 0.054$ ksf (transverse/longitudinal)

Strength V:

$P_{subV} := 0.026$ ksf (transverse/longitudinal)

Service I:

$P_{subI} := 0.020$ ksf (transverse/longitudinal)

In accordance with Section 13.4.4.2, the transverse and longitudinal wind forces calculated from these wind pressures acting on the corresponding exposed areas are to be applied simultaneously. These loads shall also act simultaneously with the superstructure wind loads.

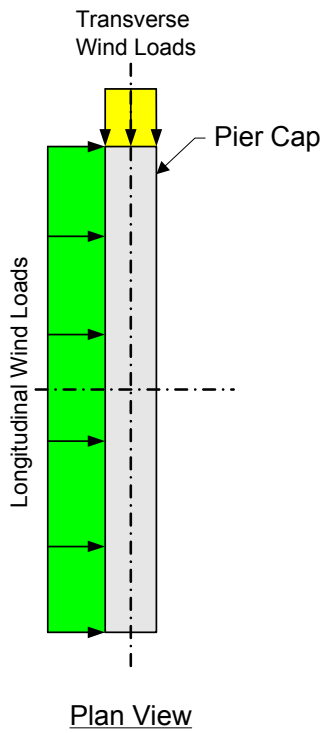

Figure E13-1.6-4
Wind Pressure on Pier

What follows is an example of the calculation of the wind loads acting directly on the pier. For simplicity, the tapers of the pier cap overhangs will be considered solid. The column height exposed to wind is the distance from the ground line (which is two feet above the footing) to

the bottom of the pier cap.

Component areas of the pier cap:

$A_{capLong} := (L_{cap})\cdot(H_{cap})$ $\boxed{A_{capLong} = 511.5}$ ft^2

$A_{capTrans} := (W_{cap})\cdot(H_{cap})$ $\boxed{A_{capTrans} = 44}$ ft^2

Component areas of the pier column:

$A_{colLong} := (L_{col})\cdot(H_{col} - D_{soil})$ $\boxed{A_{colLong} = 201.5}$ ft^2

$A_{colTrans} := (W_{col})\cdot(H_{col} - D_{soil})$ $\boxed{A_{colTrans} = 52}$ ft^2

The transverse and longitudinal substructure wind loads acting on the pier are:

Strength III:

$WS_{subLIII} := P_{subIII}\cdot(A_{capLong} + A_{colLong})$ $\boxed{WS_{subLIII} = 38.5}$ kips

$WS_{subTIII} := P_{subIII}\cdot(A_{capTrans} + A_{colTrans})$ $\boxed{WS_{subTIII} = 5.18}$ kips

Strength V:

$WS_{subLV} := P_{subV}\cdot(A_{capLong} + A_{colLong})$ $\boxed{WS_{subLV} = 18.54}$ kips

$WS_{subTV} := P_{subV}\cdot(A_{capTrans} + A_{colTrans})$ $\boxed{WS_{subTV} = 2.50}$ kips

Service I:

$WS_{subLI} := P_{subI}\cdot(A_{capLong} + A_{colLong})$ $\boxed{WS_{subLI} = 14.26}$ kips

$WS_{subTI} := P_{subI}\cdot(A_{capTrans} + A_{colTrans})$ $\boxed{WS_{subTI} = 1.92}$ kips

The point of application of these loads will be the centroid of the loaded area of each face, respectively.

$$H_{WSsubL} := \frac{A_{capLong}\cdot\left(H_{col} + \frac{H_{cap}}{2}\right) + A_{colLong}\cdot\left(\frac{H_{col} - 2}{2} + 2\right)}{A_{capLong} + A_{colLong}}$$

$\boxed{H_{WSsubL} = 17.11}$ feet

$$H_{WSsubT} := \frac{A_{capTrans} \cdot \left(H_{col} + \frac{H_{cap}}{2}\right) + A_{colTrans} \cdot \left(\frac{H_{col} - 2}{2} + 2\right)}{A_{capTrans} + A_{colTrans}}$$

$H_{WSsubT} = 14$ feet

E13-1.6.4 Temperature Loading (Superimposed Deformations)

In this particular structure, with a single pier centered between two abutments that have identical bearing types, the temperature force is based on assuming a minimum coefficient of expansion at one abutment and the maximum at the other using only dead load reactions. This force acts in the longitudinal direction of the bridge (either back or ahead station) and is equally divided among the bearings. Also, the forces at each bearing from this load will be applied at the top of the bearing.

The abutment girder Dead Load reactions from E13-1.2.1 are as follows:

$AbutRint_{DC} = 61.69$ $AbutRext_{DC} = 62.97$

$AbutRint_{DW} = 7.46$ $AbutRext_{DW} = 7.46$

$\mu_{min} = 0.06$

$\mu_{max} = 0.1$

$\Delta\mu := \mu_{max} - \mu_{min}$ $\Delta\mu = 0.04$

$$F_{TU} := \Delta\mu \cdot \left[3 \cdot \left(AbutRint_{DC} + AbutRint_{DW}\right) + 2 \cdot \left(AbutRext_{DC} + AbutRext_{DW}\right)\right]$$

$F_{TU} = 13.93$ kips

The resulting temperature force acting on each bearing is:

$$TU_{BRG} := \frac{F_{TU}}{5}$$

$TU_{BRG} = 2.79$ kips

The moment arm about the base of the column is:

$$H_{TU} := H_{col} + H_{cap} + \frac{H_{brng}}{12}$$

$H_{TU} = 26.53$ feet

E13-1.7 Analyze and Combine Force Effects

The first step within this design step will be to summarize the loads acting on the pier at the bearing locations. This is done in Tables E13-1.7-1 through E13-1.7-8 shown below. Tables E13-1.7-1 through E13-1.7-5 summarize the vertical loads, Tables E13-1.7-6 through E13-1.7-7 summarize the horizontal longitudinal loads, and Table E13-1.7-8 summarizes the horizontal transverse loads. These loads along with the pier self-weight loads, which are

shown after the tables, need to be factored and combined to obtain total design forces to be resisted in the pier cap, column and footing.

It will be noted here that loads applied due to braking and temperature can act either ahead or back station. Also, wind loads can act on either side of the structure and with positive or negative skew angles. This must be kept in mind when considering the signs of the forces in the tables below. The tables assume a particular direction for illustration only.

	Superstructure Dead Load		Wearing Surface Dead Load	
Bearing	Variable Name	Reaction (Kips)	Variable Name	Reaction (Kips)
1	$Rext_{DC}$	246.65	$Rext_{DW}$	27.32
2	$Rint_{DC}$	241.72	$Rint_{DW}$	27.32
3	$Rint_{DC}$	241.72	$Rint_{DW}$	27.32
4	$Rint_{DC}$	241.72	$Rint_{DW}$	27.32
5	$Rext_{DC}$	246.65	$Rext_{DW}$	27.32

Table E13-1.7-1
Unfactored Vertical Bearing Reactions from Superstructure Dead Load

	Vehicular Live Load **					
	Lane A		Lane B		Lane C	
Bearing	Variable Name	Reaction (Kips)	Variable Name	Reaction (Kips)	Variable Name	Reaction (Kips)
1	R_1_a	4.27	R_1_b	0.00	R_1_c	0.00
2	R_2_a	164.67	R_2_b	0.00	R_2_c	0.00
3	R_3_a	72.31	R_3_b	117.56	R_3_c	0.00
4	R_4_a	0.00	R_4_b	123.66	R_4_c	61.86
5	R_5_a	0.00	R_5_b	0.00	R_5_c	179.40

**Note: Live load reactions include impact on truck loading.

Table E13-1.7-2
Unfactored Vertical Bearing Reactions from Live Load

Strength III

Bearing No.	Reactions from Transverse Wind Load on Superstructure (kips)
1	3.88
2	1.94
3	0.00
4	-1.94
5	-3.88

Strength V

Bearing No.	Reactions from Transverse Wind Load on Superstructure (kips)
1	1.85
2	0.93
3	0.00
4	-0.93
5	-1.85

Service I

Bearing No.	Reactions from Transverse Wind Load on Superstructure (kips)
1	1.41
2	0.70
3	0.00
4	-0.70
5	-1.41

Table E13-1.7-3
Unfactored Vertical Bearing Reactions from Wind on Superstructure

Strength V , Service I

Bearing No.	Reactions from Transverse Wind Load on Vehicular Live Load (kips)
1	2.90
2	1.45
3	0.00
4	-1.45
5	-2.90

Table E13-1.7-4
Unfactored Vertical Bearing Reactions from Wind on Live Load

Strength III

	Vertical Wind Load on Superstructure	
Bearing No.	Variable Name	Reaction (Kips)
1	RWS_{vert1}	4.29
2	RWS_{vert2}	-9.01
3	RWS_{vert3}	-22.32
4	RWS_{vert4}	-35.63
5	RWS_{vert5}	-48.93

Table E13-1.7-5
Unfactored Vertical Bearing Reactions from Vertical Wind on Superstructure

	Braking Load **		Temperature Loading	
	Variable Name	Reaction (Kips)	Variable Name	Reaction (Kips)
Each Bearing	BRK_{brg}	3.60	TU_{BRG}	2.79

**Note: Values shown are for a single lane loaded

Table E13-1.7-6
Unfactored Horizontal Longitudinal Bearing Reactions from Braking and Temperature

Strength III

Load Type	Unfactored Horizontal Longitudinal Forces (kips)
Wind Loads from Superstructure	22.34
Wind on Live Load	0.00
Wind on Pier	38.50

Strength V

Load Type	Unfactored Horizontal Longitudinal Forces (kips)
Wind Loads from Superstructure	12.18
Wind on Live Load	9.60
Wind on Pier	18.54

Service I

Load Type	Unfactored Horizontal Longitudinal Forces (kips)
Wind Loads from Superstructure	8.12
Wind on Live Load	9.60
Wind on Pier	14.26

Table E13-1.7-7
Unfactored Horizontal Longitudinal Forces

Strength III

Load Type	Unfactored Horizontal Transverse Forces (kips)
Wind Loads from Superstructure	44.68
Wind on Live Load	0.00
Wind on Pier	5.18

Strength V

Load Type	Unfactored Horizontal Transverse Forces (kips)
Wind Loads from Superstructure	21.32
Wind on Live Load	12.00
Wind on Pier	2.50

Service I

Load Type	Unfactored Horizontal Transverse Forces (kips)
Wind Loads from Superstructure	16.25
Wind on Live Load	12.00
Wind on Pier	1.92

Table E13-1.7-8
Unfactored Horizontal Transverse Forces

In addition to all the loads tabulated above, the pier self-weight must be considered when determining the final design forces. Additionally for the footing and pile designs, the weight of the earth on top of the footing must be considered. These loads were previously calculated and are shown below:

$DL_{Cap} = 251.1$ kips

$DL_{ftg} = 144.9$ kips

$DL_{col} = 139.5$ kips

$EV_{ftg} = 51.36$ kips

In the AASHTO LRFD design philosophy, the applied loads are factored by statistically calibrated load factors. In addition to these factors, one must be aware of two additional sets of factors which may further modify the applied loads.

The first set of additional factors applies to all force effects and are represented by the Greek letter η (eta) in the Specifications, **LRFD [1.3.2.1]**. These factors are related to the ductility, redundancy, and operational importance of the structure. A single, combined eta is required for every structure. In accordance with WisDOT policy, all eta factors are taken equal to one.

The other set of factors mentioned in the first paragraph above applies only to the live load force effects and are dependent upon the number of loaded lanes. These factors are termed multiple presence factors by the Specifications, **LRFD [Table 3.6.1.1.2-1]**. These factors for this bridge are shown as follows:

Multiple presence factor, m (1 lane) $m_1 := 1.20$

Multiple presence factor, m (2 lanes) $m_2 := 1.00$

Multiple presence factor, m (3 lanes) $m_3 := 0.85$

Table E13-1.7-9 contains the applicable limit states and corresponding load factors that will be used for this pier design. Limit states not shown either do not control the design or are not applicable. The load factors shown in Table E13-1.7-9 are the standard load factors assigned by the Specifications and are exclusive of multiple presence and eta factors.

It is important to note here that the maximum load factors shown in Table E13-1.7-9 for uniform temperature loading (TU) apply only for deformations, and the minimum load factors apply for all other effects. Since the force effects from the uniform temperature loading are considered in this pier design, the minimum load factors will be used.

	Load Factors							
	Strength I		Strength III		Strength V		Service I	
Load	γ_{max}	γ_{min}	γ_{max}	γ_{min}	γ_{max}	γ_{min}	γ_{max}	γ_{min}
DC	1.25	0.90	1.25	0.90	1.25	0.90	1.00	1.00
DW	1.50	0.65	1.50	0.65	1.50	0.65	1.00	1.00
LL	1.75	1.75	---	---	1.35	1.35	1.00	1.00
BR	1.75	1.75	---	---	1.35	1.35	1.00	1.00
TU	1.20	0.50	1.20	0.50	1.20	0.50	1.20	1.00
WS	---	---	1.00	1.00	1.00	1.00	1.00	1.00
WL	---	---	---	---	1.00	1.00	1.00	1.00
EV	1.35	1.00	1.35	1.00	1.35	1.00	1.00	1.00

Table E13-1.7-9
Load Factors and Applicable Pier Limit States

The loads discussed and tabulated previously can now be factored by the appropriate load factors and combined to determine the governing limit states in the pier cap, column, footing and piles. Design calculations will be carried out for the governing limit states only.

E13-1.7.1 Pier Cap Force Effects

The pier cap will be designed using a strut and tie model. See E13-1.8 for additional information. For this type of model, the member's self weight is included in the bearing reactions. The calculation of the Strength I Factored girder reactions follows.

For the dead load of the cap, the tributary weight of the cap will be added to each girder reaction.

$$Cap_{DC_1} := 8.625 \cdot \frac{5 + 8.34}{2} \cdot W_{cap} \cdot w_c \qquad \boxed{Cap_{DC_1} = 34.52} \quad \text{kips}$$

$$Cap_{DC_2} := \left(6.875 \cdot \frac{8.34 + 11}{2} + 2.875 \cdot 11\right) \cdot W_{cap} \cdot w_c \qquad \boxed{Cap_{DC_2} = 58.86} \quad \text{kips}$$

$$Cap_{DC_3} := 9.75 \cdot 11 \cdot W_{cap} \cdot w_c \qquad \boxed{Cap_{DC_3} = 64.35} \quad \text{kips}$$

$$Cap_{DC_4} := Cap_{DC_2} \qquad \boxed{Cap_{DC_4} = 58.86} \quad \text{kips}$$

$$Cap_{DC_5} := Cap_{DC_1} \qquad \boxed{Cap_{DC_5} = 34.52} \quad \text{kips}$$

Look at the combined live load girder reactions with 1 (Lane C), 2 (Lanes C and B) and 3 lanes (Lanes C, B and A) loaded. The multiple presence factor from E13-1.7 shall be applied. The design lane locations were located to maximize the forces over the right side of the cap.

	Unfactored Vehicular Live Load					
	1 Lane, m=1.2		2 Lanes, m=1.0		3 Lanes, m=0.85	
Bearing	Variable Name	Reaction (Kips)	Variable Name	Reaction (Kips)	Variable Name	Reaction (Kips)
1	R_1_1	0.00	R_1_2	0.00	R_1_3	3.63
2	R_2_1	0.00	R_2_2	0.00	R_2_3	139.97
3	R_3_1	0.00	R_3_2	117.56	R_3_3	161.40
4	R_4_1	74.23	R_4_2	185.52	R_4_3	157.70
5	R_5_1	215.27	R_5_2	179.40	R_5_3	152.49

Table E13-1.7-10
Unfactored Vehicular Live Load Reactions

Calculate the Strength I Combined Girder Reactions for 1, 2 and 3 lanes loaded. An example calculation is shown for the girder 5 reaction with one lane loaded. Similar calculations are performed for the remaining girders and number of lanes loaded.

$$Ru_{5_1} := \gamma_{DCmax} \cdot \left(Rext_{DC} + Cap_{DC_5}\right) + \gamma_{DWmax} \cdot Rext_{DW} + \gamma_{LL} \cdot R_{5_1}$$

$$\boxed{Ru_{5_1} = 769.17} \quad \text{kips}$$

	Total Factored Girder Reactions**					
	1 Lane, m=1.2		2 Lanes, m=1.0		3 Lanes, m=0.85	
Bearing	Variable Name	Reaction (Kips)	Variable Name	Reaction (Kips)	Variable Name	Reaction (Kips)
1	Ru_1_1	392.44	Ru_1_2	392.44	Ru_1_3	398.79
2	Ru_2_1	416.71	Ru_2_2	416.71	Ru_2_3	661.66
3	Ru_3_1	423.57	Ru_3_2	629.30	Ru_3_3	706.01
4	Ru_4_1	546.62	Ru_4_2	741.38	Ru_4_3	692.68
5	Ru_5_1	769.17	Ru_5_2	706.38	Ru_5_3	659.29

** Includes dead load of pier cap

Table E13-1.7-11
Factored Girder Reactions for STM Cap Design

E13-1.7.2 Pier Column Force Effects

The controlling limit states for the design of the pier column are Strength V (for biaxial bending with axial load). The critical design location is where the column meets the footing, or at the column base. The governing force effects for Strength V are achieved by minimizing the axial effects while maximizing the transverse and longitudinal moments. This is accomplished by excluding the future wearing surface, applying minimum load factors on the structure dead load, and loading only Lane B and Lane C with live load.

For Strength V, the factored vertical forces and corresponding moments at the critical section are shown below.

Strength V Axial Force:

$Rext_{DC} = 246.65$ kips

$Rint_{DC} = 241.72$ kips

$DL_{Cap} = 251.1$ kips

$DL_{col} = 139.5$ kips

$R_{3_2} = 117.56$ kips

$R_{4_2} = 185.52$ kips

$R_{5_2} = 179.4$ kips

$$Ax_{colStrV} := \gamma_{DCminStrV} \cdot \left(2 \cdot Rext_{DC} + 3 \cdot Rint_{DC} + DL_{Cap} + DL_{col}\right) \ldots + \gamma_{LLStrV}\left(R_{3_2} + R_{4_2} + R_{5_2}\right)$$

$Ax_{colStrV} = 2099.51$ kips

Strength V Transverse Moment:

$S = 9.75$ feet (girder spacing)

$ArmV3_{col} := 0$ $ArmV3_{col} = 0$ feet

$ArmV4_{col} := S$ $ArmV4_{col} = 9.75$ feet

$ArmV5_{col} := 2 \cdot S$ $ArmV5_{col} = 19.5$ feet

$WS_{suptrnsV} = 21.32$ kips $H_{WStrns} = 30.76$ feet

$WL_{trans} = 12$ kips $H_{WLtrns} = 38.32$ feet

$WS_{subTV} = 2.5$ kips $H_{WSsubT} = 14$ feet

$$MuT_{colStrV} := \gamma_{LLStrV}\left(R_{3_2} \cdot ArmV3_{col} + R_{4_2} \cdot ArmV4_{col} + R_{5_2} \cdot ArmV5_{col}\right) \ldots$$
$$+ \gamma_{WLStrV} \cdot \left(WL_{trans} \cdot H_{WLtrns}\right) \ldots$$
$$+ \gamma_{WSStrV} \cdot \left(WS_{suptrnsV} \cdot H_{WStrns} + WS_{subTV} \cdot H_{WSsubT}\right)$$

$MuT_{colStrV} = 8315.32$ kip-ft

Strength V Longitudinal Moment:

$BRK_{brg} = 3.6$ kips/bearing per lane $H_{BRK} = 26.53$ feet

$TU_{BRG} = 2.79$ kips/ bearing $H_{TU} = 26.53$ feet

$WS_{suplngV} = 12.18$ kips $H_{WSlong} = 26.53$ feet

$WL_{long} = 9.6$ kips $H_{WLlong} = 26.53$ feet

$WS_{subLV} = 18.54$ kips $H_{WSsubL} = 17.11$ feet

$m_2 = 1.00$ multi presence factor for two lanes loaded

$$MuL_{colStrV} := \gamma_{BRStrV} \cdot \left(5 \cdot BRK_{brg} \cdot H_{BRK} \cdot 2 \cdot m_2\right) \ldots$$
$$+ \gamma_{TUminStrV}\left(5TU_{BRG} \cdot H_{TU}\right) \ldots$$
$$+ \gamma_{WLStrV} \cdot \left(WL_{long} \cdot H_{WLlong}\right) \ldots$$
$$+ \gamma_{WSStrV} \cdot \left(WS_{suplngV} \cdot H_{WSlong} + WS_{subLV} \cdot H_{WSsubL}\right)$$

$MuL_{colStrV} = 2369.38$ kip-ft

For Strength III, the factored transverse shear in the column is:

$WS_{subTIII} = 5.18$ kips $\qquad WS_{suptrnsIII} = 44.68$ kips

$VuT_{col} := \gamma_{WSStrIII}(WS_{suptrnsIII} + WS_{subTIII})$ $\qquad VuT_{col} = 49.86$ kips

For Strength V, the factored longitudinal shear in the column is (reference Table E13-1.7-7):

$WL_{long} = 9.6$ kips $\qquad WS_{subLV} = 18.54$ kips $\qquad WS_{suplngV} = 12.18$ kips

$$VuL_{col} := \gamma_{WSStrV}(WS_{suplngV} + WS_{subLV}) + \gamma_{WLStrV} \cdot WL_{long} \ldots$$
$$+ \gamma_{TUmin} \cdot (TU_{BRG} \cdot 5) + \gamma_{BRStrV} \cdot (5 \cdot BRK_{brg}) \cdot 3 \cdot m_3$$

$VuL_{col} = 109.25$ kips

E13-1.7.3 Pier Pile Force Effects

The foundation system for the pier is a reinforced concrete footing on steel H-piles. The force effects in the piles cannot be determined without a pile layout. The pile layout depends upon the pile capacity and affects the footing design. The pile layout used for this pier foundation is shown in Figure E13-1.10-1.

Based on the pile layout shown in Figure E13-1.10-1, the controlling limit states for the pile design are Strength I (for maximum pile load), Strength V (for minimum pile load), and Strength III and Strength V (for maximum horizontal loading of the pile group).

Structure Dead Load Effects:

Girder DC Reactions:

$Rext_{DC} = 246.65$ kips

$Rint_{DC} = 241.72$ kips

Girder DW Reactions:

$Rext_{DW} = 27.32$ kips

$Rint_{DW} = 27.32$ kips

$DC_{Super} := 2 \cdot Rext_{DC} + 3 \cdot Rint_{DC}$ $\qquad DC_{Super} = 1218.46$ kips

$DL_{Cap} = 251.1$ kips

$DL_{col} = 139.5$ kips

$DL_{ftg} = 144.9$ kips

$DC_{pile} := DC_{Super} + DL_{Cap} + DL_{col} + DL_{ftg}$ $\qquad DC_{pile} = 1753.96$ kips

$DW_{pile} := 2 \cdot Rext_{DW} + 3 \cdot Rint_{DW}$ $\qquad DW_{pile} = 136.6$ kips

Vertical Earth Load Effects:

$EV_{pile} := EV_{ftg}$ $\boxed{EV_{pile} = 51.36}$ kips

Live Load Effects (without Dynamic Load Allowance)

Live Load Girder Reactions for 2 lanes, Lanes B and C, loaded:

$\boxed{R_{1_2p} = 0}$ kips

$\boxed{R_{2_2p} = 0}$ kips

$\boxed{R_{3_2p} = 99.21}$ kips

$\boxed{R_{4_2p} = 156.54}$ kips

$\boxed{R_{5_2p} = 151.38}$ kips $\boxed{R_{T_2p} = 407.13}$ kips

From Section E13-1.7, the Transverse moment arm for girders 3, 4 and 5 are:

$\boxed{ArmV3_{col} = 0}$ feet

$\boxed{ArmV4_{col} = 9.75}$ feet

$\boxed{ArmV5_{col} = 19.5}$ feet

The resulting Transverse moment applied to the piles is:

$M_{LL2T_p} := R_{3_2p} \cdot ArmV3_{col} + R_{4_2p} \cdot ArmV4_{col} + R_{5_2p} \cdot ArmV5_{col}$

$\boxed{M_{LL2T_p} = 4478.2}$ kip-ft

The Longitudinal Strength I Moment includes the braking and temperature forces.

$MuL2_{colStr1} := \gamma_{BR} \cdot (5 \cdot BRK_{brg} \cdot H_{BRK} \cdot 2 \cdot m_2) + \gamma_{TUmin}(5TU_{BRG} \cdot H_{TU})$

$\boxed{MuL2_{colStr1} = 1856.29}$ kip-ft

Strength I Load for Maximum Pile Reaction

The maximum pile load results from the Strength I load combination with two lanes loaded.

$Pu2_{pile_Str1} := \gamma_{DCmax} \cdot DC_{pile} + \gamma_{DWmax} \cdot DW_{pile} + \gamma_{EVmax} \cdot EV_{pile} + \gamma_{LL} \cdot R_{T_2p}$

$Pu2_{pile_Str1} = 3179.17$ kips

$MuT2_{pile_Str1} := \gamma_{LL} \cdot M_{LL2T_p}$ $MuT2_{pile_Str1} = 7836.85$ kip-ft

$MuL2_{pile_Str1} := MuL2_{colStr1}$ $MuL2_{pile_Str1} = 1856.29$ kip-ft

Minimum Load on Piles Strength V

The calculation for the minimum axial load on piles is similar to the Strength V axial column load calculated previously. The weight of the footing and soil surcharge are included. The girder reactions used for pile design do not include impact. The DW loads are not included.

$$Pu_{pile_StrV} := \gamma_{DCminStrV} \cdot (2 \cdot Rext_{DC} + 3 \cdot Rint_{DC} + DL_{Cap} + DL_{col} + DL_{ftg}) \ldots + \gamma_{EVminStrV} \cdot EV_{pile} \ldots + \gamma_{LLStrV}(R_{3_2p} + R_{4_2p} + R_{5_2p})$$

$Pu_{pile_StrV} = 2179.55$ kips

The calculation for the Strength V longitudinal moment is the same as the longitudinal moment on the column calculated previously. These loads include the braking force, temperature, wind on live load and wind on the structure.

$$MuL_{pile_StrV} := \gamma_{BRStrV} \cdot (5 \cdot BRK_{brg} \cdot H_{BRK} \cdot 2 \cdot m_2) \ldots + \gamma_{TUminStrV}(5TU_{BRG} \cdot H_{TU}) \ldots + \gamma_{WLStrV} \cdot (WL_{long} \cdot H_{WLlong}) \ldots + \gamma_{WSStrV} \cdot (WS_{suplngV} \cdot H_{WSlong} + WS_{subLV} \cdot H_{WSsubL})$$

$MuL_{pile_StrV} = 2369.38$ kip-ft

The calculation for the Strength V transverse moment is the similar as the transverse moment on the column calculated previously. These loads include the live load, wind on live load and wind on the structure. Impact is not included in these live load reactions.

$$MuT_{pile_StrV} := \gamma_{LLStrV}(R_{3_2p} \cdot ArmV3_{col} + R_{4_2p} \cdot ArmV4_{col} + R_{5_2p} \cdot ArmV5_{col}) \ldots + \gamma_{WLStrV} \cdot (WL_{trans} \cdot H_{WLtrns}) \ldots + \gamma_{WSStrV} \cdot (WS_{suptrnsV} \cdot H_{WStrns} + WS_{subTV} \cdot H_{WSsubT})$$

$MuT_{pile_StrV} = 7196.34$ kip-ft

For Strength III, the factored transverse shear in the footing is equal to the transverse force at the base of the column.

$HuT_{pileStrIII} := VuT_{col}$

$= \gamma_{WSStrIII} \cdot (WS_{suptrnsIII} + WS_{subTIII})$ $\boxed{HuT_{pileStrIII} = 49.86}$ kips

For Strength V, the factored longitudinal shear in the column is equal to the longitudinal force at the base of the column.

$HuL_{pileStrV} := VuL_{col}$ $\boxed{HuL_{pileStrV} = 109.25}$ kips

The following is a summary of the controlling forces on the piles:

Strength I

$\boxed{Pu2_{pile_Str1} = 3179.17}$ kips

$\boxed{MuT2_{pile_Str1} = 7836.85}$ kip-ft

$\boxed{MuL2_{pile_Str1} = 1856.29}$ kip-ft

Strength III

$\boxed{HuT_{pileStrIII} = 49.86}$ kips

Strength V

$\boxed{Pu_{pile_StrV} = 2179.55}$ kips

$\boxed{MuT_{pile_StrV} = 7196.34}$ kip-ft

$\boxed{MuL_{pile_StrV} = 2369.38}$ kip-ft

$\boxed{HuL_{pileStrV} = 109.25}$ kips

E13-1.7.4 Pier Footing Force Effects

The controlling limit states for the design of the pier footing are Strength I (for flexure, punching shear at the column, and punching shear at the maximum loaded pile, and for one-way shear). In accordance with Section 13.11, the footings do not require the crack control by distribution check in **LRFD [5.7.3.4]**. As a result, the Service I Limit State is not required. There is not a single critical design location in the footing where all of the force effects just mentioned are checked. Rather, the force effects act at different locations in the footing and must be checked at their respective locations. For example, the punching shear checks are carried out using critical perimeters around the column and maximum loaded pile,

while the flexure and one-way shear checks are carried out on a vertical face of the footing either parallel or perpendicular to the bridge longitudinal axis. Also note that impact is not included for members that are below ground. The weight of the footing concrete and the soil above the footing are not included in these loads as they counteract the pile reactions.

$DC_{ftg} := DC_{Super} + DL_{Cap} + DL_{col}$ $\boxed{DC_{ftg} = 1609.06}$ kips

$DW_{ftg} := 2 \cdot Rext_{DW} + 3 \cdot Rint_{DW}$ $\boxed{DW_{ftg} = 136.6}$ kips

Unfactored Live Load reactions for one, two and three lanes loaded:

$\boxed{R_{T_1p} = 244.3}$ kips

$\boxed{R_{T_2p} = 407.13}$ kips

$\boxed{R_{T_3p} = 519.1}$ kips

The resulting Transverse moment applied to the piles is:

$M_{LL1T} := R_{4_1p} \cdot ArmV4_{col} + R_{5_1p} \cdot ArmV5_{col}$ $\boxed{M_{LL1T} = 4153.03}$ kip-ft

$M_{LL2T} := R_{4_2p} \cdot ArmV4_{col} + R_{5_2p} \cdot ArmV5_{col}$ $\boxed{M_{LL2T} = 4478.2}$ kip-ft

$M_{LL3T} := \left(-R_{2_3p} + R_{4_3p}\right) \cdot ArmV4_{col} + \left(-R_{1_3p} + R_{5_3p}\right) \cdot ArmV5_{col}$

$\boxed{M_{LL3T} = 2595.17}$ kip-ft

The maximum pile load results from the Strength I load combination with two lanes loaded.

$Pu2_{ftgStr1} := \gamma_{DCmax} \cdot DC_{ftg} + \gamma_{DWmax} \cdot DW_{ftg} + \gamma_{LL} \cdot R_{T_2p}$

$\boxed{Pu2_{ftgStr1} = 2928.7}$ kips

$MuT2_{ftgStr1} := \gamma_{LL} \cdot M_{LL2T}$ $\boxed{MuT2_{ftgStr1} = 7836.85}$ kip-ft

$MuL2_{ftgStr1} := \gamma_{BR} \cdot \left(5 \cdot BRK_{brg} \cdot H_{BRK} \cdot 2 \cdot m_2\right) \ldots + \gamma_{TUmin}\left(5TU_{BRG} \cdot H_{TU}\right)$ $\boxed{MuL2_{ftgStr1} = 1856.29}$ kip-ft

The Strength I limit state controls for the punching shear check at the column. In this case the future wearing surface is included, maximum factors are applied to all the dead load components, and all three lanes are loaded with live load. This results in the following bottom of column forces:

$Pu3_{ftgStr1} := \gamma_{DCmax} \cdot DC_{ftg} + \gamma_{DWmax} \cdot DW_{ftg} + \gamma_{LL} \cdot R_{T_3p}$

$\boxed{Pu3_{ftgStr1} = 3124.66}$ kips

$MuT3_{ftgStr1} := \gamma_{LL} \cdot M_{LL3T}$ $\boxed{MuT3_{ftgStr1} = 4541.55}$ kip-ft

$MuL3_{ftgStr1} := \gamma_{BR} \cdot (5 \cdot BRK_{brg} \cdot H_{BRK} \cdot 3 \cdot m_3) \ldots + \gamma_{TUmin}(5TU_{BRG} \cdot H_{TU})$ $\boxed{MuL3_{ftgStr1} = 2315.94}$ kip-ft

E13-1.8 Design Pier Cap - Strut and Tie Method (STM)

Prior to carrying out the actual design of the pier cap, a brief discussion is in order regarding the design philosophy that will be used for the design of the structural components of this pier.

When a structural member meets the definition of a deep component **LRFD [5.6.3.1]**, the LRFD Specifications recommend, although it does not mandate, that the strut-and-tie method be used to determine force effects and required reinforcing. **LRFD [C5.6.3.1]** indicates that a strut-and-tie model properly accounts for nonlinear strain distribution, nonuniform shear distribution, and the mechanical interaction of V_u, T_u and M_u. Use of strut-and-tie models for the design of reinforced concrete members is new to the LRFD Specification. WisDOT policy is to design hammerhead pier caps using STM.

E13-1.8.1 Determine Geometry and Member Forces

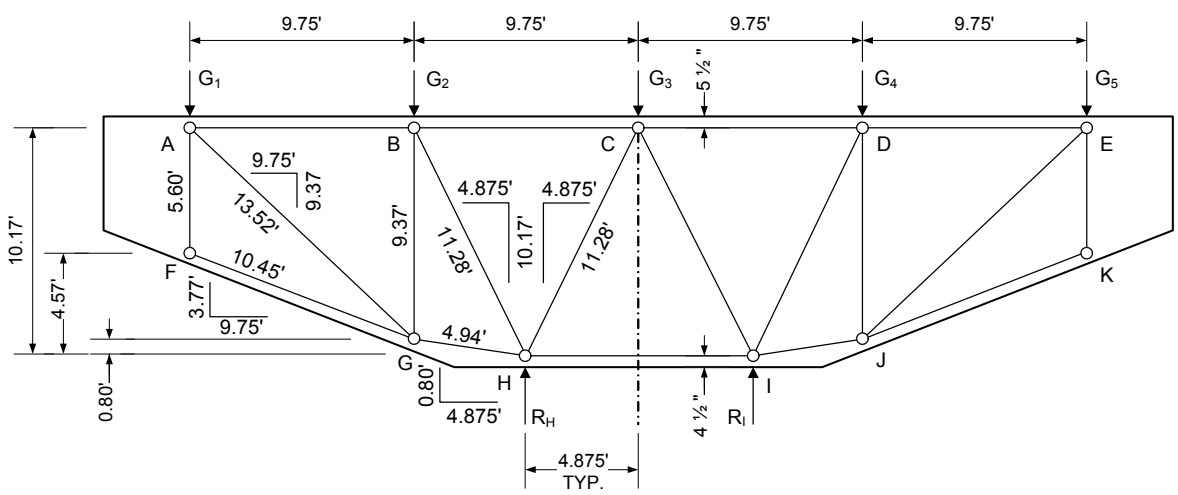

Figure E13-1.8-1
Strut and Tie Model Dimensions

In order to maintain a minimum 25° angle between struts and ties, the support Nodes (H and I) are located midway between the girder reactions **LRFD [5.6.3.2]**. For this example a compressive strut depth of 8 inches will be used, making the centroids of the bottom truss chords 4.5 inches from the concrete surface. It is also assumed that two layers of rebar will be required along the top tension ties, and the centroid is located 5.5 inches below the top of the cap.

$centroid_{bot} := 4.5$ inches $centroid_{top} := 5.5$ inches

Strength I Loads:

	Total Factored Girder Reactions**					
	1 Lane, m=1.2		2 Lanes, m=1.0		3 Lanes, m=0.85	
Bearing	Variable Name	Reaction (Kips)	Variable Name	Reaction (Kips)	Variable Name	Reaction (Kips)
1	Ru_1_1	392.44	Ru_1_2	392.44	Ru_1_3	398.79
2	Ru_2_1	416.71	Ru_2_2	416.71	Ru_2_3	661.66
3	Ru_3_1	423.57	Ru_3_2	629.30	Ru_3_3	706.01
4	Ru_4_1	546.62	Ru_4_2	741.38	Ru_4_3	692.68
5	Ru_5_1	769.17	Ru_5_2	706.38	Ru_5_3	659.29

** Includes dead load of pier cap

Table E13-1.8-1
Total Factored Girder Reactions

Calculate the forces in the members for the Strength I Load Case with 2 lanes loaded.

To find the column reaction at Node I, sum moments about Node H:

$$R_{I_2} := \frac{Ru_{3_2} \cdot 4.875 + Ru_{4_2} \cdot 14.625 + Ru_{5_2} \cdot 24.375 - Ru_{2_2} \cdot 4.875 - Ru_{1_2} \cdot 14.625}{9.75}$$

$$\boxed{R_{I_2} = 2395.66} \quad \text{kips}$$

$$R_{H_2} := Ru_{1_2} + Ru_{2_2} + Ru_{3_2} + Ru_{4_2} + Ru_{5_2} - R_{I_2}$$

$$\boxed{R_{H_2} = 490.55} \quad \text{kips}$$

The method of joints is used to calculate the member forces. Start at Node K.

By inspection, the following are zero force members and can be ignored in the model:

$F_{JK} := 0$ $F_{EK} := 0$ $F_{AF} := 0$ $F_{FG} := 0$ kips

Note: All forces shown are in kips. "C" indicates compression and "T" indicates tension.

At Node E:

$F_{EJ_vert} := Ru_{5_2}$ $\boxed{F_{EJ_vert} = 706.38}$

$F_{EJ_horiz} = Ru_{5_2} \cdot \frac{EJ_h}{EJ_v}$ $F_{EJ_horiz} = 735.42$

$F_{EJ} := \sqrt{F_{EJ_vert}^2 + F_{EJ_horiz}^2}$ $F_{EJ} = 1019.71$ C

$F_{DE} := F_{EJ_horiz}$ $F_{DE} = 735.42$ T

At Node J:

$F_{IJ_horiz} := F_{EJ_horiz}$ $F_{IJ_horiz} = 735.42$

$F_{IJ_vert} = F_{IJ_horiz} \cdot \frac{0.802}{4.875}$ $F_{IJ_vert} = 120.99$

$F_{IJ} := \sqrt{F_{IJ_horiz}^2 + F_{IJ_vert}^2}$ $F_{IJ} = 745.31$ C

$F_{DJ} := F_{EJ_vert} - F_{IJ_vert}$ $F_{DJ} = 585.4$ T

At Node D:

$F_{DI_vert} := F_{DJ} + Ru_{4_2}$ $F_{DI_vert} = 1326.77$

$F_{DI_horiz} = F_{DI_vert} \cdot \frac{4.875}{10.167}$ $F_{DI_horiz} = 636.18$

$F_{DI} := \sqrt{F_{DI_vert}^2 + F_{DI_horiz}^2}$ $F_{DI} = 1471.41$ C

$F_{CD} := F_{DE} + F_{DI_horiz}$ $F_{CD} = 1371.6$ T

At Node I:

$R_{I_2} = 2395.66$

$F_{CI_vert} := R_{I_2} - F_{DI_vert} - F_{IJ_vert}$ $F_{CI_vert} = 947.9$

$F_{CI_horiz} = F_{CI_vert} \cdot \frac{4.875}{10.167}$ $F_{CI_horiz} = 454.51$

$F_{CI} := \sqrt{F_{CI_vert}^2 + F_{CI_horiz}^2}$ $F_{CI} = 1051.23$ C

$F_{HI} := F_{DI_horiz} + F_{IJ_horiz} - F_{CI_horiz}$ $F_{HI} = 917.09$ C

Similar calculations are performed to determine the member forces for the remainder of the model and for the load cases with one and three lanes loaded. The results are summarized in the following figures:

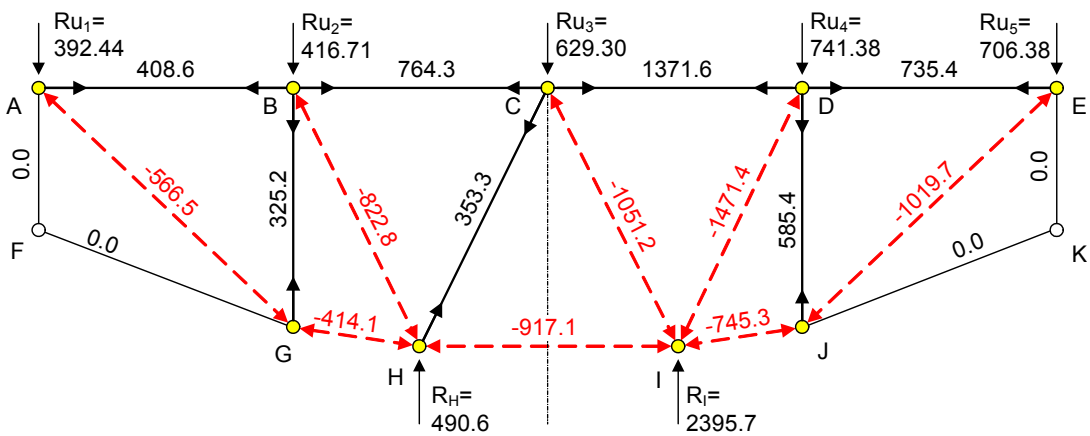

Figure E13-1.8-2
STM Member Forces (Two Lanes Loaded)

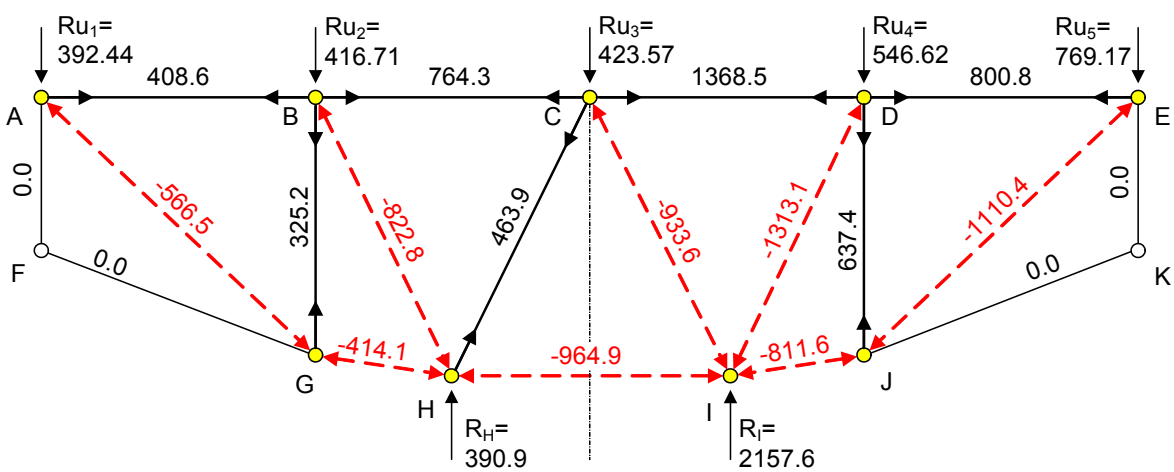

Figure E13-1.8-3
STM Member Forces (One Lane Loaded)

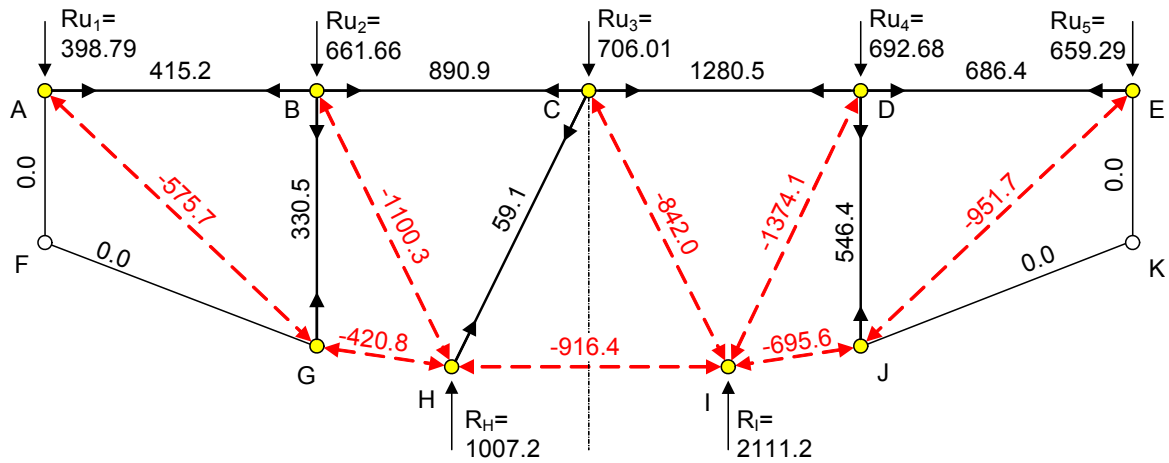

Figure E13-1.8-4
STM Member Forces (Three Lanes Loaded)

E13-1.8.2 Check the Size of the Bearings

The node types are defined by the combinations of struts and ties meeting at the node.

Nodes may be characterized as:

- CCC: Nodes where only struts intersect
- CCT: Nodes where a tie intersects the node in only one direction
- CTT: Nodes where ties intersect in two different directions

The nominal resistance (P_n) at the bearing node face is computed based on the limiting compressive stress (f_{cu}), and the effective area beneath the bearing device ($A_{bearing}$) **LRFD [5.6.3.5]**.

$$P_n = f_{cu} A_{bearing} = (m \nu f'_c) A_{bearing}$$

where:

m = Confinement modification factor **LRFD [5.7.5]**

ν = Concrete efficiency factor **LRFD [5.6.3.5.3a]**

therefore, $A_{bearing} \geq P_u / \phi_{brg} (m \nu f'_c)$

Bearing Nodes: Nodes A & E: (CCT) Node C: (CTT) Nodes B & D: (CTT)

The nodes located at the bearings are either (CTT) or (CCT) nodes, and the largest loads for these types are present at Nodes D and E respectively. Conservatively use m=1.0, and analyze for crack control reinforcement being present.

At Node D the bearing area required is: (CTT)

$A_{bearing} \geq P_u / \phi_{brg} \left(m \cdot 0.65 \cdot f'_c\right)$ --- (from Sect. 13.7.3)

At Node E the bearing area required is: (CCT)

$A_{bearing} \geq P_u / \phi_{brg} \left(m \cdot 0.70 \cdot f'_c\right)$ --- (from Sect. 13.7.3)

$m := 1.0$ $\phi_{brg} := 0.70$ **LRFD [5.5.4.2]** $f'_c = 3.5$ ksi

Calculate bearing area required for Node D:

$Ru_{4_2} = 741.38$ kips 2-lanes loaded controls (Fig. E13-1.8-2)

$\gamma_{DCmax} \cdot Cap_{DC_4} = 73.58$ kips pier cap tributary weight below Node D

$$BrgD_2 := \frac{Ru_{4_2} - \gamma_{DCmax} \cdot Cap_{DC_4}}{\phi_{brg} \cdot \left(m \cdot 0.65 \cdot f'_c\right)}$$ $BrgD_2 = 419.34$ in^2

Calculate bearing area required for Node E:

$Ru_{5_1} = 769.17$ kips 1-lane loaded controls (Fig. E13-1.8-3)

$\gamma_{DCmax} \cdot Cap_{DC_5} = 43.15$ kips pier cap tributary weight below Node E

$$BrgE_1 := \frac{Ru_{5_1} - \gamma_{DCmax} \cdot Cap_{DC_5}}{\phi_{brg} \cdot \left(m \cdot 0.70 \cdot f'_c\right)}$$ $BrgE_1 = 423.34$ in^2

$BrgArea := \max\left(BrgD_2, BrgE_1\right)$

The area provided by the (26" x 18") bearing plate is:

$A_{bearing} := L_{brng} \cdot W_{brng}$ $A_{bearing} = 468$ in^2

Is $A_{bearing} \geq BrgArea$? check = "OK"

E13-1.8.3 Calculate the Tension Tie Reinforcement

For the top reinforcement in the pier cap, the maximum area of tension tie reinforcement, (A_{st}), is controlled by Tie CD for two lanes loaded (Fig. E13-1.8-2) and is calculated as follows:

LRFD [5.6.3.4.1]

$Pu_{CD_2} = 1371.6$ kips

$\phi := 0.9$ **LRFD [5.5.4.2]** $f_y = 60$ ksi

$Ast_{CD} := \frac{Pu_{CD_2}}{\phi \cdot f_y}$ $Ast_{CD} = 25.4$ in^2

Therefore, use one row of 9 No.11 bars and one row of 9 No. 10 bars spaced at 5 inches for the top reinforcement.

$As_{No11} := 1.5625$ in^2

$As_{No10} := 1.2656$ in^2

Total area of top reinforcement is:

$As_{CD} := 9 \cdot As_{No11} + 9 \cdot As_{No10}$ $As_{CD} = 25.45$ in^2

Is $As_{CD} \geq Ast_{CD}$? check = "OK"

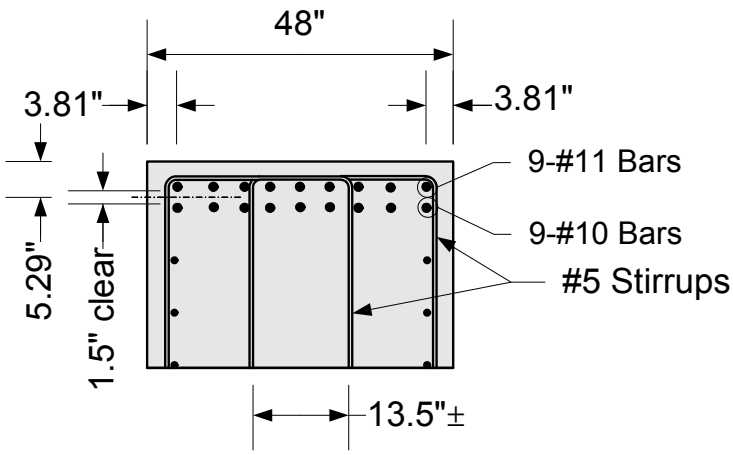

Figure E13-1.8-5
Cap Reinforcement at Tension Tie CD

Note: See **LRFD [5.10.3.1.3]** for spacing requirements between layers of rebar.

For the top reinforcement just inside the exterior girder (Node E), the required area of tension tie reinforcement, (A_{st}), is controlled by Tie DE for one lane loaded (Fig. E13-1.8-3), and is calculated as follows:

$Pu_{DE_1} = 800.79$ kips

$\phi = 0.9$ **LRFD [5.5.4.2]** $f_y = 60$ ksi

$Ast_{DE} := \frac{Pu_{DE_1}}{\phi \cdot f_y}$ $Ast_{DE} = 14.83$ in^2

Therefore, use one row of 9 No.11 bars spaced at 5 inches, and one row of 5 No.10 bars for the top reinforcement.

Total area of top reinforcement is:

$As_{DE} := 9 \cdot As_{No11} + 5 \cdot As_{No10}$ $As_{DE} = 20.39$ in^2

Is $As_{DE} \geq Ast_{DE}$? check = "OK"

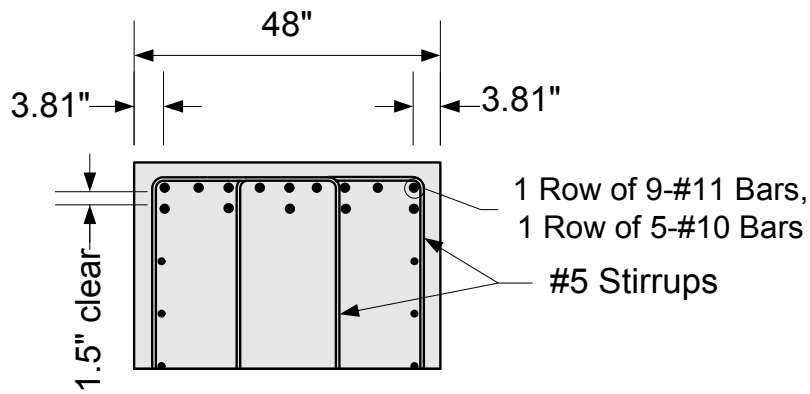

Figure E13-1.8-6
Cap Reinforcement at Tension Tie DE

E13-1.8.4 Calculate the Stirrup Reinforcement

The vertical tension Tie DJ must resist a factored tension force as shown below **LRFD [5.6.3.4.1]**. The controlling force occurs with one lane loaded (Fig. E13-1.8-3). This tension force will be resisted by stirrups within the specified stirrup region length, with the total area of stirrups being (Ast_{DJ}.) Note that any tension ties located directly over the column do not require stirrup design.

$Pu_{DJ_1} = 637.43$ kips

$\phi = 0.9$ **LRFD [5.5.4.2]** $f_y = 60$ ksi

$Ast_{DJ} := \frac{Pu_{DJ_1}}{\phi \cdot f_y}$ $Ast_{DJ} = 11.8$ in^2

Try No. 5 bars, with four legs (double-stirrups):

$As_{No5} := 0.3068$ in^2

$Ast := 4 \cdot As_{No5}$ $\boxed{Ast = 1.23}$ in^2

Calculate number of stirrups required:

$n_{DJ} := \frac{Ast_{DJ}}{Ast}$ $n_{DJ} = 9.62$ $\boxed{n_{DJ} = 10}$ bars

The length (L_{DJ}) of the region over which the stirrups shall be distributed for Tie DJ, is from the face of the column to half way between girders 4 and 5 (Nodes D and E).

$\boxed{S = 9.75}$ feet (girder spacing) $\boxed{L_{col} = 15.5}$ feet (column width)

$L_{DJ} := 1.5 \cdot S - \frac{L_{col}}{2}$ $\boxed{L_{DJ} = 6.88}$ feet

Therefore, the required stirrup spacing, s, within this region is:

$s_{stirrup} := \frac{L_{DJ} \cdot 12}{n_{DJ}}$ $\boxed{s_{stirrup} = 8.25}$ in

$\boxed{s_{stirrup} = 8}$ in

Examine stirrups as vertical crack control reinforcement, and their req'd. spacing (s_{cc}) **LRFD [5.6.3.6]**:

$\frac{Ast}{b_v \cdot s_{cc}} \geq 0.003$

$b_v := W_{cap} \cdot 12$ $\boxed{b_v = 48}$ in

$s_{cc} := \frac{Ast}{0.003 \cdot b_v}$ $\boxed{s_{cc} = 8.52}$ in

$\boxed{s_{cc} = 8}$ in

$s_{stir} := \min(s_{stirrup}, s_{cc})$ $\boxed{s_{stir} = 8}$ in

Therefore, use pairs of (No. 5 bar) double-legged stirrups at 8 inch spacing in the pier cap.

E13-1.8.5 Compression Strut Capacity - Bottom Strut

After the tension tie reinforcement has been designed, the next step is to check the capacity of the compressive struts in the pier cap. Strut IJ carries the highest bottom compressive force when one lane is loaded (Fig. E13-1.8-3). Strut IJ is anchored by Node J, which also anchors Tie DJ and Strut EJ. From the geometry of the idealized internal truss, the smallest angle (α_s) between Tie DJ and Strut IJ is:

$\alpha_s := \text{atan}\left(\frac{IJ_h}{IJ_v}\right)$ $\boxed{\alpha_s = 80.66 \cdot deg}$

$\theta := 90deg - \alpha_s$ $\boxed{\theta = 9.34 \cdot deg}$

$\boxed{Pu_{IJ_1} = -811.55}$ kips

The nominal resistance (Pn_{IJ}) of Strut IJ is computed based on the limiting compressive stress, (f_{cu}), and the effective cross-sectional area of the strut (Acn_{IJ}) at the node face **LRFD [5.6.3.5]**.

$Pn_{IJ} = f_{cu}\ Acn_{IJ} = (\nu\ f'_c)\ Acn_{IJ}$

where:

ν = Concrete efficiency factor **LRFD [5.6.3.5.3a]**

therefore, $Pu_{IJ_1} \le \phi c_{STM} (\nu\ f'_c)\ Acn_{IJ}$

The centroid of the strut was assumed to be at $\boxed{centroid_{bot} = 4.5}$ inches vertically from the bottom face. Therefore at Node J, the thickness of the strut perpendicular to the sloping bottom face (t_{IJ}), and the width (w_{IJ}) of the strut are:

$t_{IJ} := 2 \cdot centroid_{bot} \cdot \cos(\theta)$ $\boxed{t_{IJ} = 8.88}$ inches

$w_{IJ} := W_{cap} \cdot 12$ $\boxed{w_{IJ} = 48}$ inches

$Acn_{IJ} := t_{IJ} \cdot w_{IJ}$ $\boxed{Acn_{IJ} = 426.27}$ in^2

At Node J the node type is (CCT), and the surface where Strut IJ meets the node is a back face. Analyze for crack control reinforcement being present.

At Node J, the capacity of Strut IJ shall satisfy:

$Pu_{IJ_1} \le \phi c_{STM} \cdot (0.70 \cdot f'_c) \cdot Acn_{IJ}$ --- (from Sect. 13.7.5)

$\phi c_{STM} := 0.7$ **LRFD [5.5.4.2]** $f'_c = 3.5$ ksi

The factored resistance is:

$Pr_{IJ} := \phi c_{STM} \cdot (0.70 \cdot f'_c) \cdot Acn_{IJ}$ $\boxed{Pr_{IJ} = 731.05}$ kips

$\boxed{|Pu_{IJ_1}| = 811.55}$ kips

Is $Pr_{IJ} \geq Pu_{IJ_1}$? $\boxed{check = \text{"No Good"}}$

Because Node J is an interior node not bounded by a bearing plate, it is a smeared node, and a check of concrete strength as shown above is not necessary **LRFD [5.6.3.2]**.

E13-1.8.6 Compression Strut Capacity - Diagonal Strut

Strut DI carries the highest diagonal compressive force when two lanes are loaded (Fig. E13-1.8-2). Strut DI is anchored by Node D, which also anchors Ties CD, DE and DJ. From the geometry of the idealized internal truss, the smallest angle between Ties CD and DE and Strut DI is:

$\alpha_s := \text{atan}\left(\frac{DI_v}{DI_h}\right)$ $\boxed{\alpha_s = 64.38 \cdot deg}$

$\theta := 90deg - \alpha_s$ $\boxed{\theta = 25.62 \cdot deg}$

$\boxed{Pu_{DI_2} = -1471.41}$ kips

The cross sectional dimension of Strut DI in the plane of the pier at Node D is calculated as follows. Note that for skewed bearings, the length of the bearing is the projected length along the centerline of the pier cap.

$\boxed{L_{brng} = 26}$ inches $\boxed{W_{brng} = 18}$ inches

$\boxed{centroid_{top} = 5.5}$ inches

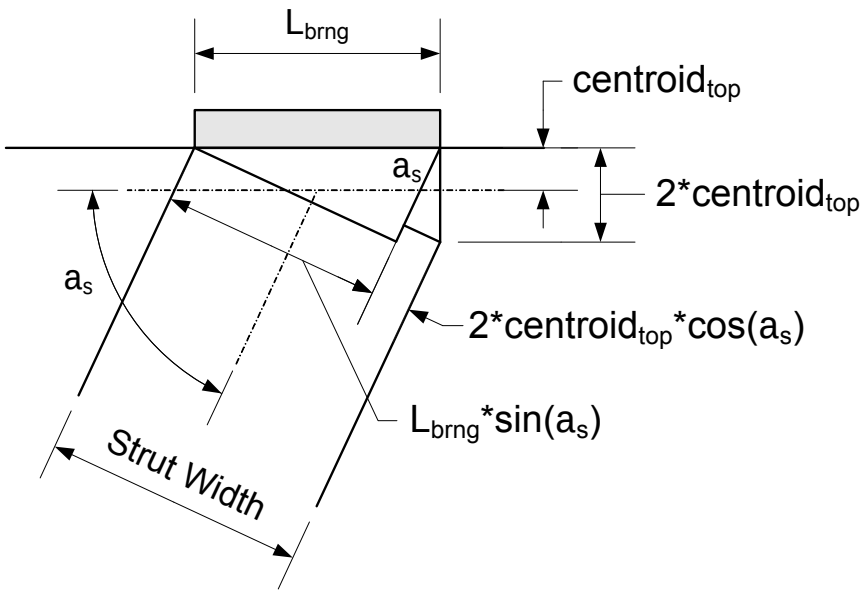

Figure E13-1.8-7
Compression Strut Width

Therefore at Node D, the thickness of the strut (t_{DI}) is:

$t_{DI} := L_{brng} \cdot \sin(\alpha_s) + 2 \cdot centroid_{top} \cdot \cos(\alpha_s)$ $\boxed{t_{DI} = 28.2}$ in

The effective compression strut width around each stirrup is:

$d_{bar11} := 1.410$ inches

$w_{ef} := 2 \cdot 6 \cdot d_{bar11}$ $\boxed{w_{ef} = 16.92}$ in

The effective spacing between the 4 legs of the stirrups is 13.5 inches, which is less than the value calculated above. Therefore, the entire cap width can be used for the effective strut width.

$w_{DI} := W_{cap} \cdot 12$ $\boxed{w_{DI} = 48}$ in

The nominal resistance (Pn_{DI}) of Strut DI is computed based on the limiting compressive stress, (f_{cu}), and the effective cross-section of the strut (Acn_{DI}) at the node face **LRFD [5.6.3.5]**.

$Acn_{DI} := t_{DI} \cdot w_{DI}$ $\boxed{Acn_{DI} = 1353.61}$ in^2

At Node D the node type is (CTT), and the surface where Strut DI meets the node is a strut to node interface. Analyze for crack control reinforcement being present.

At Node D, the capacity of Strut DI shall satisfy:

$Pu_{DI_2} \le \phi c_{STM} \cdot (0.65 \cdot f'_c) \cdot Acn_{DI}$ --- (from Sect. 13.7.5)

$\phi c_{STM} := 0.7$ **LRFD [5.5.4.2]** $f'_c = 3.5$ ksi

The factored resistance is:

$Pr_{DI} := \phi c_{STM} \cdot (0.65 \cdot f'_c) \cdot Acn_{DI}$ $Pr_{DI} = 2155.62$ kips

$|Pu_{DI_2}| = 1471.41$ kips

Is $Pr_{DI} \ge |Pu_{DI_2}|$? check = "OK"

E13-1.8.7 Check the Anchorage of the Tension Ties

Tension ties shall be anchored in the nodal regions per **LRFD [5.6.3.4.2]**. The 9 No. 11 and 5 No. 10 longitudinal bars along the top of the pier cap must be developed at the inner edge of the bearing at Node E (the edge furthest from the end of the member). Based on (Figure E13-1.8-8), the embedment length that is available to develop the bar beyond the edge of the bearing is:

L_{devel} = (distance from cap end to Node E) + (bearing block width/2) - (cover)

$L_{cap} = 46.5$ feet (pier cap length)

$S = 9.75$ feet (girder spacing) $ng = 5$ (# girders)

$L_{brng} = 26$ inches (bearing block width)

$Cover_{cp} = 2.5$ inches (conc. cover)

$$L_{devel} := \frac{L_{cap} - S \cdot (ng - 1)}{2} \cdot 12 + \frac{L_{brng}}{2} - Cover_{cp}$$ $L_{devel} = 55.5$ in

The basic development length for straight No. 11 and No. 10 bars with spacing less than 6", As(provided)/As(required) < 2, uncoated top bar, per (Wis Bridge Manual Table 9.9-1) is:

$L_{d11} := 9.5$ ft $L_{d11} \cdot 12 = 114$ in

$L_{d10} := 7.75$ ft $L_{d10} \cdot 12 = 93$ in

Therefore, there is not sufficient development length for straight bars. Check the hook development length. The base hook development length for 90° hooked No.11 and #10 bars per **LRFD [5.11.2.4]** is:

$$L_{hb11} := \frac{38.0 \cdot d_{bar11}}{\sqrt{f'_c}}$$ $L_{hb11} = 28.64$ in

$L_{hb10} := \frac{38.0 \cdot d_{bar10}}{\sqrt{f'_c}}$ $\boxed{L_{hb10} = 25.8}$ in

The length available is greater than the base hook development length, therefore the reduction factors do not need to be considered. Hook both the top 9 bars and the bottom layer 5 bars. The remaining 4 bottom layer bars can be terminated 7.75 feet from the inside edge of the bearings at girders 2 and 4, which will allow all bars to be fully developed at this inside edge.

In addition, the tension ties must be spread out sufficiently in the effective anchorage area so that the compressive force on the back face of a CCT Node produced by the development of the ties through bond stress, does not exceed the factored resistance **LRFD [5.6.3.5]**.

Following the steps in E13-1.8.5, we can calculate the nominal resistance based on the limiting compressive stress, (f_{cu}), and the effective cross-section of the back face (Acn_E) at Node E. Analyze for crack control reinforcement being present.

The centroid of the tension ties is $\boxed{centroid_{top} = 5.5}$ inches below the top of the pier cap.

Therefore, the thickness (t_{DE}), and the width (w_{DE}) at the back face are:

$t_{DE} := 2 \cdot centroid_{top}$ $\boxed{t_{DE} = 11.0}$ in

$w_{DE} := W_{cap} \cdot 12$ $\boxed{w_{DE} = 48}$ in

$Acn_E := t_{DE} \cdot w_{DE}$ $\boxed{Acn_E = 528}$ in^2

$\boxed{Pu_{DE_1} = 800.79}$ kips 1-lane loaded controls (Fig. E13-1.8-3)

The capacity at the back face of Node E shall satisfy:

$Pu_{DE_1} \le \phi \cdot (0.70 \cdot f'_c) \cdot Acn_E$ --- (from Sect. 13.7.5)

$\phi = 0.9$ **LRFD [5.5.4.2]** $f'_c = 3.5$ ksi

The factored resistance is:

$Pr_{DE} := \phi \cdot (0.70 \cdot f'_c) \cdot Acn_E$ $\boxed{Pr_{DE} = 1164.24}$ kips

Is $Pr_{DE} \ge Pu_{DE_1}$? $\boxed{check = \text{"OK"}}$

Because the compressive force on the backface is produced by development of reinforcement, the check as shown above is not necessary **LRFD [5.6.3.5.3b]**.

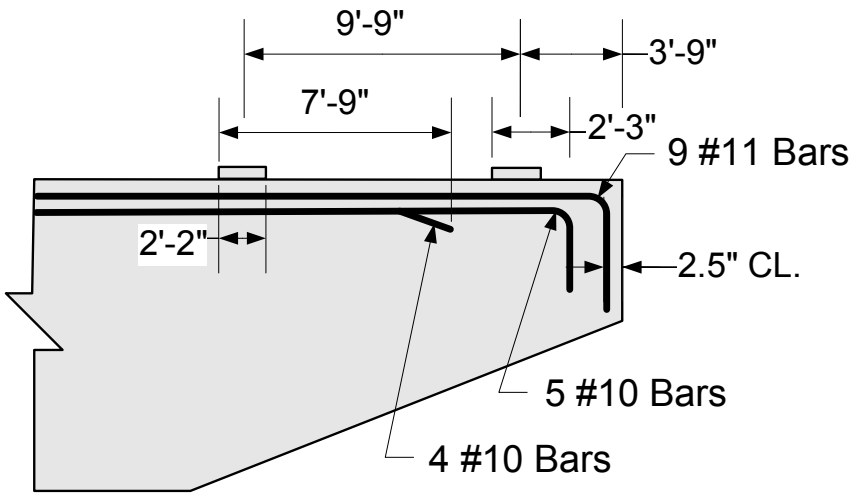

Figure E13-1.8-8
Anchorage of Tension Tie

E13-1.8.8 Provide Crack Control Reinforcement

In the pier cap, the minimum area of crack control reinforcement (As_{crack}) is equal to 0.003 times the width of the member (W_{cap}), and the spacing of the reinforcement (s_v, s_h) in each direction. The spacing of the bars in these grids must not exceed the smaller of d/4 or 12 inches, **LRFD [5.6.3.6]**.

$W_{cap} = 4.0$ ft

d/4 > 12" , therefore s_v and s_h = 12"

$As_{crack} := 0.003 \cdot (12) \cdot W_{cap} \cdot 12$ $\boxed{As_{crack} = 1.73}$ in^2

For horizontal reinforcement:

Use 4 - No. 7 horizontal bars at 12 inch spacing in the vertical direction - (Option 1)

$As_{No7} := 0.6013$ $\boxed{4 \cdot As_{No7} = 2.41}$ in^2

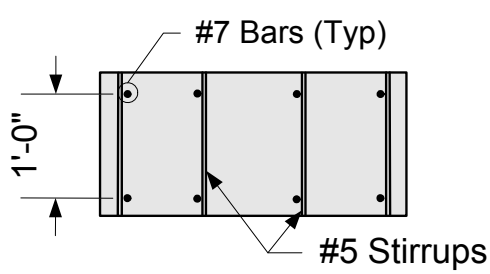

Figure E13-1.8-9
Crack Control Reinforcement - Option 1

OR: If we assume 6-inch vertical spacing - (Option 2)

$As_{crack} := 0.003 \cdot (6) \cdot W_{cap} \cdot 12$ $\boxed{As_{crack} = 0.86}$ in^2

Using 2 - No. 7 horiz. bars at 6 inch spacing $\boxed{2 \cdot As_{No7} = 1.2}$ in^2

Is $2 \cdot As_{No7} \geq As_{crack}$? $\boxed{check = \text{"OK"}}$

Therefore, No. 7 bars at 6" vertical spacing, placed horizontally on each side of the cap will satisfy this criteria.

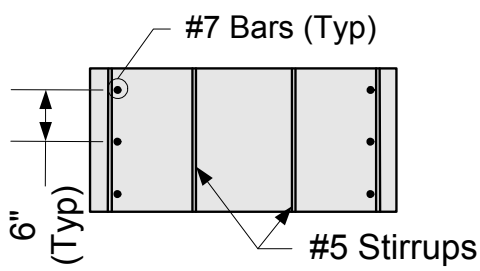

Figure E13-1.8-10
Crack Control Reinforcement - Option 2

This 6-inch spacing for the (No. 7 bars), is also used along the bottom of the cap for temperature and shrinkage reinforcement.

For vertical reinforcement:

The stirrups are spaced at, $\boxed{s_{stir} = 8}$ inches. Therefore the required crack control reinforcement within this spacing is:

$As_{crack2} := 0.003 \cdot (s_{stir}) \cdot W_{cap} \cdot 12$ $\boxed{As_{crack2} = 1.15}$ in^2

4 legs of No.5 stirrups at $\boxed{s_{stir} = 8}$ inch spacing in the horizontal direction

$\boxed{4 \cdot As_{No5} = 1.23}$ in^2

Is $4 \cdot As_{No5} \geq As_{crack2}$? $\boxed{check = \text{"OK"}}$

Therefore, pairs of (No. 5 bar) double-legged stirrups at 8" horizontal spacing will satisfy this criteria.

E13-1.8.9 Summary of Cap Reinforcement

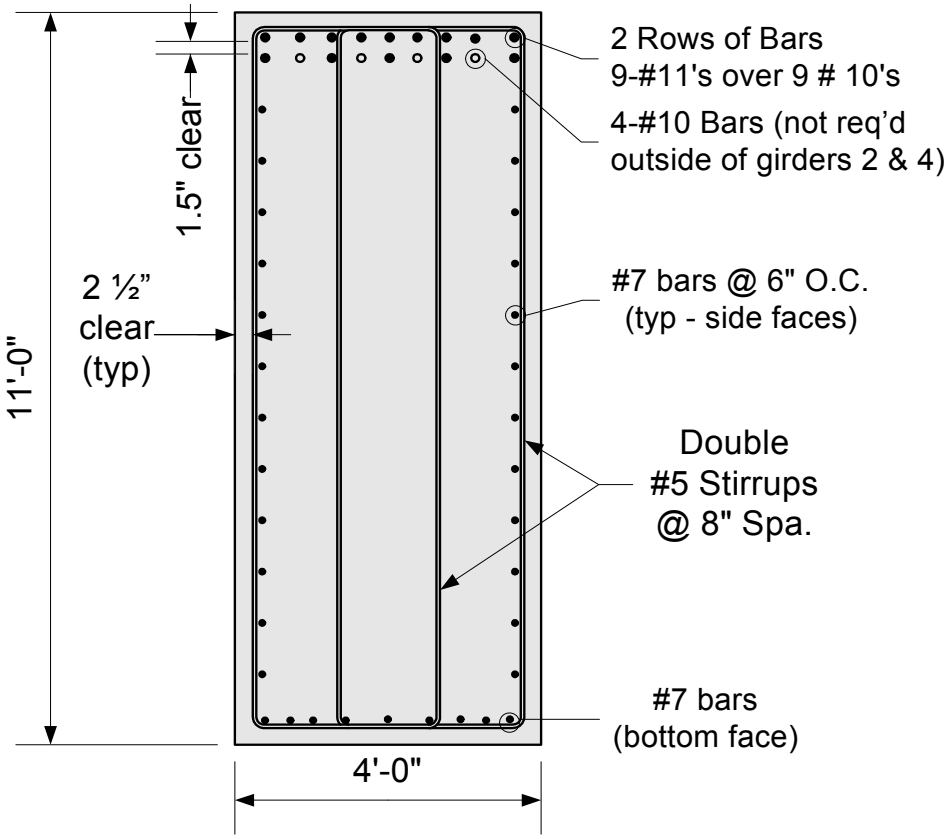

Figure E13-1.8-11
Pier Cap Design Summary

E13-1.9 Design Pier Column

As stated in E13-1.7, the critical section in the pier column is where the column meets the footing, or at the column base. The governing force effects and their corresponding limit states were determined to be:

Strength V

$Ax_{colStrV}$ = 2099.51 kips

$MuT_{colStrV}$ = 8315.32 kip-ft

$MuL_{colStrV}$ = 2369.38 kip-ft

Strength III

$VuT_{col} = 49.86$ kips

Strength V

$VuL_{col} = 109.25$ kips

A preliminary estimate of the required section size and reinforcement is shown in Figure E13-1.9-1.

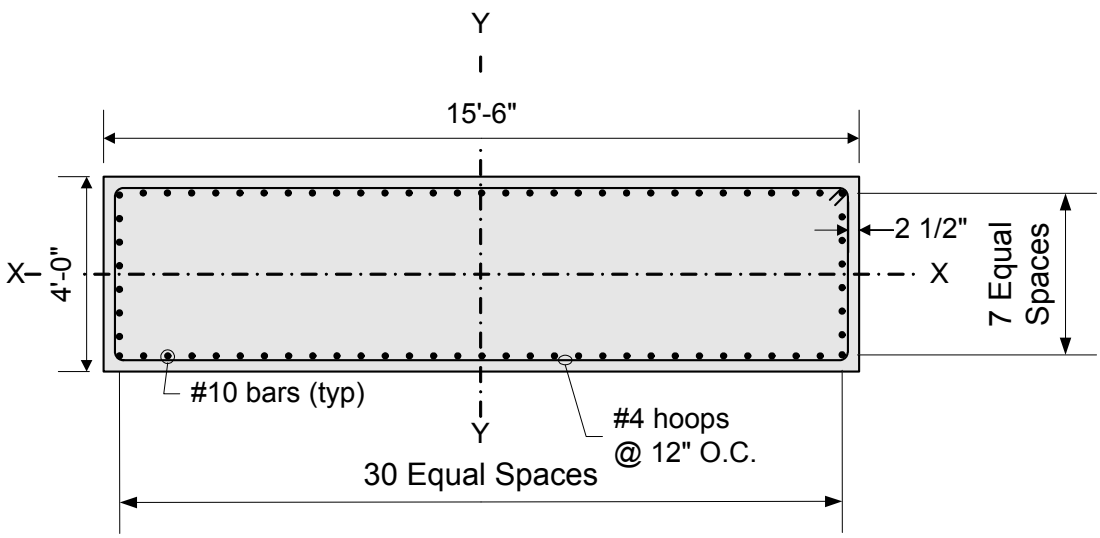

Figure E13-1.9-1
Preliminary Pier Column Design

E13-1.9.1 Design for Axial Load and Biaxial Bending (Strength V):

The preliminary column reinforcing is show in Figure E13-1.9-1 and corresponds to #10 bars equally spaced around the column perimeter. **LRFD [5.7.4.2]** prescribes limits (both maximum and minimum) on the amount of reinforcing steel in a column. These checks are performed on the preliminary column as follows:

$Num_bars := 74$ $bar_area10 := 1.27$ in^2 $bar_dia10 := 1.27$ in

$A_{s_col} := (Num_bars)\cdot(bar_area10)$ $A_{s_col} = 93.98$ in^2

$A_{g_col} := (W_{col})\cdot(L_{col})\cdot 12^2$ $A_{g_col} = 8928$ in^2

$\frac{A_{s_col}}{A_{g_col}} = 0.0105$ $0.0105 \le 0.08$ (max. reinf. check) OK

$\frac{0.135 \cdot f'_c}{f_y} = 0.008$ (but need not be greater than 0.015) $0.0105 \geq 0.008$ (min. reinf. check) OK

The column slenderness ratio (Kl_u/r) about each axis of the column is computed below in order to assess slenderness effects. Note that the Specifications only permit the following approximate evaluation of slenderness effects when the slenderness ratio is below 100.

For this pier, the unbraced lengths (l_{ux}, l_{uy}) used in computing the slenderness ratio about each axis is the full pier height. This is the height from the top of the footing to the top of the pier cap (26 feet). The effective length factor in the longitudinal direction, K_x, is taken equal to 2.1. This assumes that the superstructure has no effect on restraining the pier from buckling. In essence, the pier is considered a free-standing cantilever in the longitudinal direction. The effective length factor in the transverse direction, K_y, is taken to equal 1.0.

The radius of gyration (r) about each axis can then be computed as follows:

$I_{xx} := \frac{(L_{col} \cdot 12) \cdot (W_{col} \cdot 12)^3}{12}$ $\boxed{I_{xx} = 1714176}$ in^4

$I_{yy} := \frac{(W_{col} \cdot 12) \cdot (L_{col} \cdot 12)^3}{12}$ $\boxed{I_{yy} = 25739424}$ in^4

$r_{xx} := \sqrt{\frac{I_{xx}}{A_{g_col}}}$ $\boxed{r_{xx} = 13.86}$ in

$r_{yy} := \sqrt{\frac{I_{yy}}{A_{g_col}}}$ $\boxed{r_{yy} = 53.69}$ in

The slenderness ratio for each axis now follows:

$K_x := 2.1$

$K_y := 1.0$

$L_u := (H_{col} + H_{cap}) \cdot 12$ $\boxed{L_u = 312}$ in

$\boxed{\frac{K_x \cdot L_u}{r_{xx}} = 47.28}$ $47.28 < 100$ OK

$\boxed{\frac{K_y \cdot L_u}{r_{yy}} = 5.81}$ $5.81 < 100$ OK

LRFD [5.7.4.3] permits the slenderness effects to be ignored when the slenderness ratio is less than 22 for members not braced against side sway. It is assumed in this example that the pier is not braced against side sway in either its longitudinal or transverse directions. Therefore, slenderness will be considered for the pier longitudinal direction only (i.e., about the

"X-X" axis).

In computing the amplification factor that is applied to the longitudinal moment, which is the end result of the slenderness effect, the column stiffness (EI) about the "X-X" axis must be defined. In doing so, the ratio of the maximum factored moment due to permanent load to the maximum factored moment due to total load must be identified (β_d).

From Design Step E13-1.7, it can be seen that the force effects contributing to the longitudinal moment are the live load braking force, the temperature force and wind on the structure and live load. None of these are permanent or long-term loads. Therefore, β_d is taken equal to zero for this design.

$\beta_d := 0$

$E_c := 33000 \cdot w_c^{1.5} \cdot \sqrt{f'_c}$ **LRFD [C5.4.2.7]** $E_c = 3587$ ksi

$E_s = 29000.00$ ksi

$I_{xx} = 1714176$ in^4

I_s = Moment of Inertia of longitudinal steel about the centroidal axis (in^4)

$$I_s := \frac{\pi \cdot bar_dia10^4}{64} \cdot (Num_bars) + 2 \cdot 31 \cdot (bar_area10) \cdot 20.37^2 \ldots$$
$$+ 4 \cdot (bar_area10) \cdot 14.55^2 + 4 \cdot (bar_area10) \cdot 8.73^2 + 4 \cdot (bar_area10) \cdot 2.91^2$$

$I_s = 34187$ in^4

The column stiffness is taken as the greater of the following two calculations:

$$EI_1 := \frac{\frac{E_c \cdot I_{xx}}{5} + E_s \cdot I_s}{1 + \beta_d}$$ $EI_1 = 2.22 \times 10^9$ k-in^2

$$EI_2 := \frac{\frac{E_c \cdot I_{xx}}{2.5}}{1 + \beta_d}$$ $EI_2 = 2.46 \times 10^9$ k-in^2

$EI := \max(EI_1, EI_2)$ $EI = 2.46 \times 10^9$ k-in^2

The final parameter necessary for the calculation of the amplification factor is the phi-factor for compression. This value is defined as follows:

$\phi_{axial} := 0.75$

It is worth noting at this point that when axial load is present in addition to flexure, **LRFD [5.5.4.2.1]** permits the value of phi to be increased linearly to the value for flexure (0.90) as the section changes from compression controlled to tension controlled as defined in **LRFD [5.7.2.1]**. However, certain equations in the Specification still require the use of the phi factor for axial compression (0.75) even when the increase just described is permitted. Therefore, for

the sake of clarity in this example, if phi may be increased it will be labeled separately from ϕ_{axial} identified above.

$As_{col} := 2.53$ in^2 per foot, based on #10 bars at 6-inch spacing

$b := 12$ inches $\alpha_1 := 0.85$ (for $f'_c < 10.0$ ksi) **LRFD [5.7.2.2]**

$a := \frac{As_{col} \cdot f_y}{\alpha_1 \cdot f'_c \cdot b}$ $a = 4.25$ inches

$\beta_1 := 0.85$

$c := \frac{a}{\beta_1}$ $c = 5.00$ inches

$d_t := W_{col} \cdot 12 - Cover_{co} - 0.5 - \frac{bar_dia10}{2}$ $d_t = 44.37$ inches

$\varepsilon_c := 0.002$ Upper strain limit for compression controlled sections, f_y = 60 ksi **LRFD [Table C5.7.2-1]**

$\varepsilon_t := 0.005$ Lower strain limit for tension controlled sections, for f_y = 60 ksi

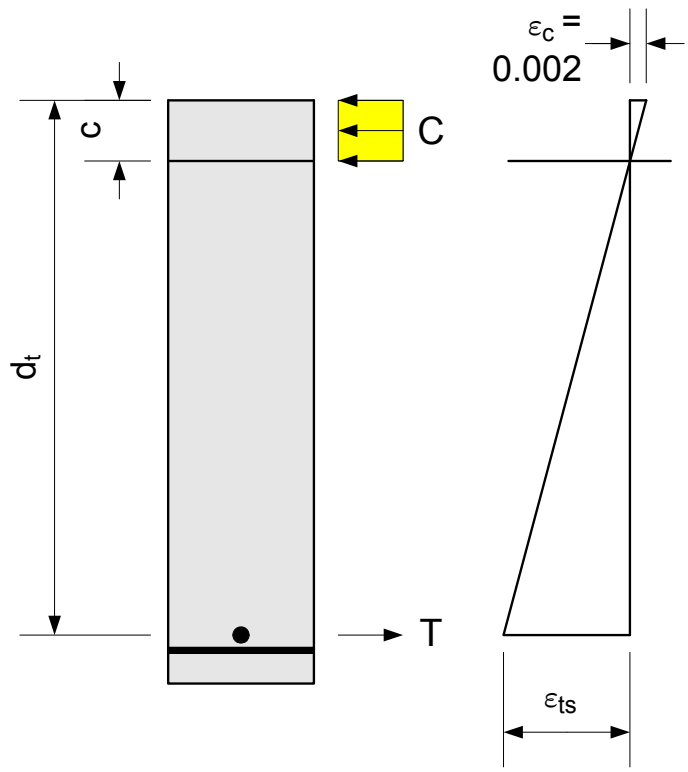

Figure E13-1.9-2
Strain Limit Tension Control Check

$\varepsilon_{ts} := \frac{\varepsilon_c}{c} \cdot (d_t - c)$ $\varepsilon_{ts} = 0.016$ $> \varepsilon_t = 0.005$

Therefore, the section is tension controlled and phi shall be equal to 0.9.

$\phi_t := 0.9$

The longitudinal moment magnification factor will now be calculated as follows:

$$P_e := \frac{\pi^2 \cdot EI}{(K_x \cdot L_u)^2}$$ $P_e = 56539.53$ kips

$$\delta_s := \frac{1}{1 - \left(\frac{Ax_{colStrV}}{\phi_t \cdot P_e}\right)}$$ $\delta_s = 1.04$

The final design forces at the base of the column for the Strength V limit state will be redefined as follows:

$P_{u_col} := Ax_{colStrV}$ $P_{u_col} = 2099.51$ kips

$M_{ux} := MuL_{colStrV} \cdot \delta_s$ $M_{ux} = 2471.35$ kip-ft

$M_{uy} := MuT_{colStrV}$ $M_{uy} = 8315.32$ kip-ft

The assessment of the resistance of a compression member with biaxial flexure for strength limit states is dependent upon the magnitude of the factored axial load. This value determines which of two equations provided by the Specification are used.

If the factored axial load is less than ten percent of the gross concrete strength multiplied by the phi-factor for compression members (ϕ_{axial}), then the Specifications require that a linear interaction equation for only the moments is satisfied (**LRFD [Equation 5.7.4.5-3]**). Otherwise, an axial load resistance (P_{rxy}) is computed based on the reciprocal load method (**LRFD [Equation 5.7.4.5-1]**). In this method, axial resistances of the column are computed (using f_{Low_axial} if applicable) with each moment acting separately (i.e., P_{rx} with M_{ux}, P_{ry} with M_{uy}). These are used along with the theoretical maximum possible axial resistance (P_o multiplied by ϕ_{axial}) to obtain the factored axial resistance of the biaxially loaded column.

Regardless of which of the two equations mentioned in the above paragraph controls, commercially available software is generally used to obtain the moment and axial load resistances.

For this pier design, the procedure as discussed above is carried out as follows:

$0.10 \cdot \phi_{axial} \cdot f'_c \cdot A_{g_col} = 2343.6$ kips

$P_{u_col} = 2099.51$ kips $P_{u_col} < 2343.6K$

Therefore, **LRFD [Equation 5.7.4.5-3]** will be used.

$M_{ux} = 2471.35$ kip-ft $M_{uy} = 8315.32$ kip-ft

The resultant moment equals:

$Mu := \sqrt{M_{ux}^2 + M_{uy}^2}$ $Mu = 8674.8$ kip-ft

$M_r := 24052.3$ kip-ft

$\frac{Mu}{M_r} = 0.36$ $0.36 \leq 1.0$ OK

The factored flexural resistances shown above, M_r, was obtained by the use of commercial software. This value is the resultant flexural capacity assuming that no axial load is present. Consistent with this, the phi-factor for flexure (0.90) was used in obtaining the factored resistance from the factored nominal strength.

Although the column has a fairly large excess flexural capacity, a more optimal design will not be pursued per the discussion following the column shear check.

E13-1.9.2 Design for Shear (Strength III and Strength V)

The maximum factored transverse and longitudinal shear forces were derived in E13-1.7 and are as follows:

$VuT_{col} = 49.86$ kips (Strength III)

$VuL_{col} = 109.25$ kips (Strength V)

These maximum shear forces do not act concurrently. Although a factored longitudinal shear force is present in Strength III and a factored transverse shear force is present in Strength V, they both are small relative to their concurrent factored shear. Therefore, separate shear designs can be carried out for the longitudinal and transverse directions using only the maximum shear force in that direction.

For the pier column of this example, the maximum factored shear in either direction is less than one-half of the factored resistance of the concrete. Therefore, shear reinforcement is not required. This is demonstrated for the longitudinal direction as follows:

$b_v := L_{col} \cdot 12$ $b_v = 186$ in

$h := W_{col} \cdot 12$ $h = 48$ in

Conservatively, d_v may be calculated as shown below, **LRFD [5.8.2.9]**.

$d_v := (0.72) \cdot (h)$ $d_v = 34.56$ in

The above calculation for d_v is simple to use for columns and generally results in a conservative estimate of the shear capacity.

$\beta := 2.0$ $\theta := 45deg$ $\lambda := 1.0$ (normal wgt. conc.) **LRFD [5.4.2.8]**

The nominal concrete shear strength is:

$V_c := 0.0316 \cdot \beta \cdot \lambda \sqrt{f'_c} \cdot b_v \cdot d_v$ **LRFD [5.8.3.3]** $\boxed{V_c = 760.04}$ kips

The nominal shear strength of the column is the lesser of the following two values:

$V_{n1} := V_c$ $\boxed{V_{n1} = 760.04}$ kips

$V_{n2} := 0.25 \cdot f'_c \cdot b_v \cdot d_v$ $\boxed{V_{n2} = 5624.64}$ kips

$V_n := \min(V_{n1}, V_{n2})$ $\boxed{V_n = 760.04}$ kips

The factored shear resistance is:

$\phi_v := 0.90$

$V_r := \phi_v \cdot V_n$ $\boxed{V_r = 684.04}$ kips

$\boxed{\frac{V_r}{2} = 342.02}$ kips

$\boxed{VuL_{col} = 109.25}$ kips $\frac{V_r}{2} > VuL_{col}$

$\boxed{check = "OK"}$

It has just been demonstrated that transverse steel is not required to resist the applied factored shear forces. However, transverse confinement steel in the form of hoops, ties or spirals is required for compression members. In general, the transverse steel requirements for shear and confinement must both be satisfied per the Specifications.

It is worth noting that although the preceding design checks for shear and flexure show the column to be over designed, a more optimal column size will not be pursued. The reason for this is twofold: First, in this design example, the requirements of the pier cap dictate the column dimensions (a reduction in the column width will increase the moment in the pier cap). Secondly, a short, squat column such as the column in this design example generally has a relatively large excess capacity even when only minimally reinforced.

E13-1.9.3 Transfer of Force at Base of Column

The provisions for the transfer of forces and moments from the column to the footing are new to the AASHTO LRFD Specifications. In general, standard engineering practice for bridge piers automatically satisfies most, if not all, of these requirements.

In this design example, and consistent with standard engineering practice, all steel reinforcing bars in the column extend into, and are developed, in the footing (see Figure E13-1.12-1). This automatically satisfies the following requirements for reinforcement across the interface of the column and footing: A minimum reinforcement area of 0.5 percent of the gross area of the supported member, a minimum of four bars, and any tensile force must be resisted by the reinforcement. Additionally, with all of the column reinforcement extended into the footing, along with the fact that the column and footing have the same compressive strength, a bearing check at the base of the column and the top of the footing is not applicable.

In addition to the above, the Specifications require that the transfer of lateral forces from the pier to the footing be in accordance with the shear-transfer provisions of **LRFD [5.8.4]**. With the standard detailing practices for bridge piers previously mentioned (i.e., all column reinforcement extended and developed in the footing), along with identical design compressive strengths for the column and footing, this requirement is generally satisfied. However, for the sake of completeness, this check will be carried out as follows:

$A_{cv} := A_{g_col}$ Area of concrete engaged in shear transfer. $\boxed{A_{cv} = 8928}$ in^2

$A_{vf} := A_{s_col}$ Area of shear reinforcement crossing the shear plane. $\boxed{A_{vf} = 93.98}$ in^2

For concrete placed against a clean concrete surface, not intentionally roughened, the following values are obtained from **LRFD [5.8.4.3]**.

$c_{cv} := 0.075$ Cohesion factor, ksi

$\mu := 0.60$ Friction factor

$K_1 := 0.2$

$K_2 := 0.8$

The nominal shear-friction capacity is the smallest of the following three equations (conservatively ignore permanent axial compression):

$V_{nsf1} := c_{cv} \cdot A_{cv} + \mu \cdot A_{vf} \cdot f_y$ $\boxed{V_{nsf1} = 4052.88}$ kips

$V_{nsf2} := K_1 \cdot f'_c \cdot A_{cv}$ $\boxed{V_{nsf2} = 6249.6}$ kips

$V_{nsf3} := K_2 \cdot A_{cv}$ $\boxed{V_{nsf3} = 7142.4}$ kips

Define the nominal shear-friction capacity as follows:

$V_{nsf} := \min(V_{nsf1}, V_{nsf2}, V_{nsf3})$ $\boxed{V_{nsf} = 4052.88}$ kips

The maximum applied shear was previously identified from the Strength V limit state:

$\boxed{VuL_{col} = 109.25}$ kips

It then follows:

$$\boxed{\phi_v = 0.9}$$

$$\boxed{\phi_v \cdot (V_{nsf}) = 3647.59} \text{ kips}$$

$$\phi_v \cdot (V_{nsf}) \geq VuL_{col}$$

$$\boxed{\text{check} = \text{"OK"}}$$

As can be seen, a large excess capacity exists for this check. This is partially due to the fact that the column itself is over designed in general (this was discussed previously). However, the horizontal forces generally encountered with common bridges are typically small relative to the shear-friction capacity of the column (assuming all reinforcing bars are extended into the footing). In addition, the presence of a shear-key, along with the permanent axial compression from the bridge dead load, further increase the shear-friction capacity at the column/footing interface beyond that shown above.

E13-1.10 Design Pier Piles

The foundation system for the pier is a reinforced concrete footing on steel H-piles. The HP12x53 pile layout used for this pier foundation is shown in Figure E13-1.10-1.

Based on the given pile layout, the controlling limit states for the pile design were given in E13-1.7.3.

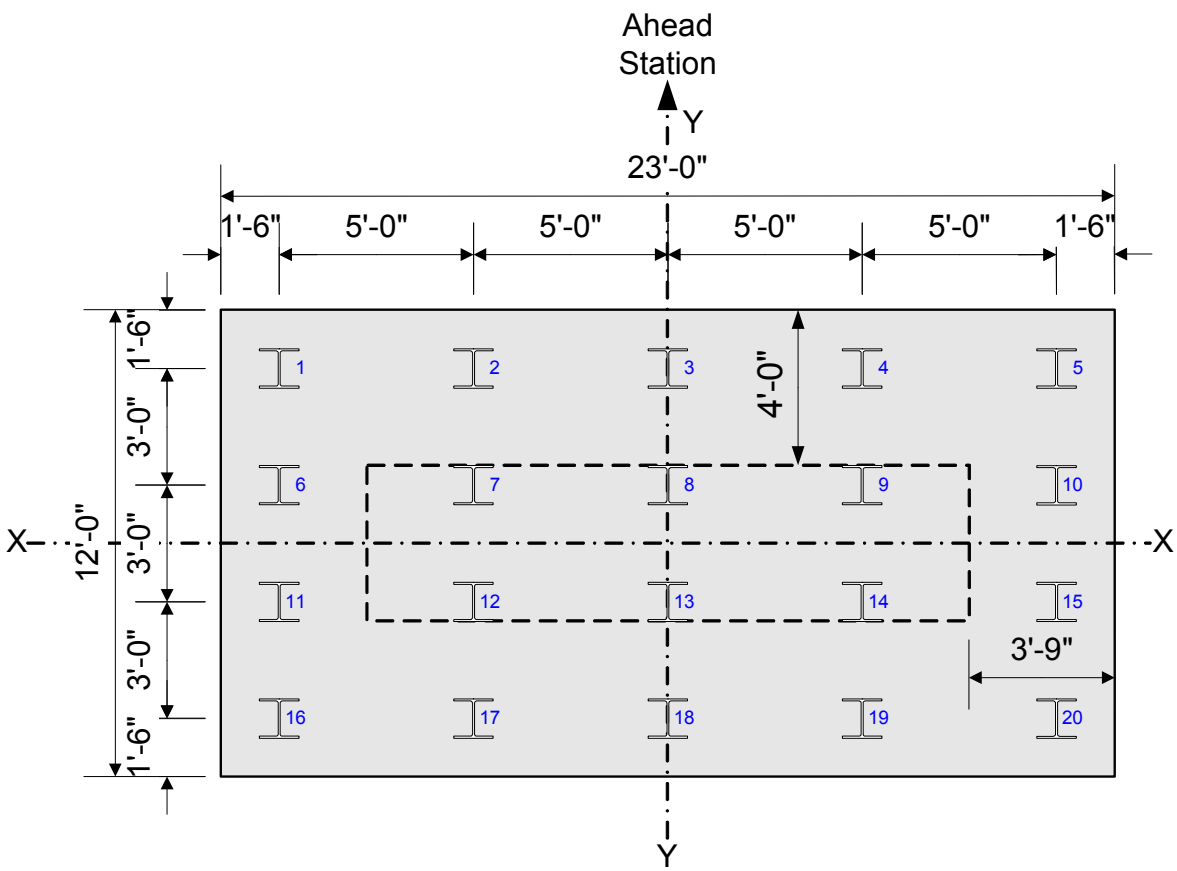

Figure E13-1.10-1
Pier Pile Layout

$N_p := 20$ Number of piles

$$S_{xx} := \frac{10 \cdot 4.5^2 + 10 \cdot 1.5^2}{4.5}$$ $\boxed{S_{xx} = 50}$ ft^3

$$S_{yy} := \frac{8 \cdot 10^2 + 8 \cdot 5^2}{10}$$ $\boxed{S_{yy} = 100}$ ft^3

Maximum pile reaction (Strength I):

$\boxed{\phi_t = 0.9}$

$\boxed{P_e = 56539.53}$ kips (from column design)

$\boxed{Pu2_{pile_Str1} = 3179.17}$ kips

$MuT2_{pile_Str1} = 7836.85$ kip-ft

$MuL2_{pile_Str1} = 1856.29$ kip-ft

$$\delta_{pile_StrI} := \frac{1}{1 - \left(\frac{Pu2_{pile_Str1}}{\phi_t \cdot P_e}\right)}$$

$\delta_{pile_StrI} = 1.07$

$$Pu_p := \frac{Pu2_{pile_Str1}}{N_p} + \frac{MuT2_{pile_Str1}}{S_{yy}} + \frac{MuL2_{pile_Str1} \cdot \delta_{pile_StrI}}{S_{xx}}$$

$Pu_p = 276.93$ kips

$$Pu_{p_tons} := \frac{Pu_p}{2}$$

$Pu_{p_tons} = 138.46$ tons

From Wis Bridge Manual, Section 11.3.1.17.6, the vertical pile resistance of HP12x53 pile is :

$Pr_{12x53} = 110$ tons check = "No Good"

$Pr_{12x53_PDA} = 143$ tons check = "OK"

Note: PDA with CAPWAP is typically used when it is more economical than modified Gates. This example uses PDA with CAPWAP only to illustrate that vertical pile reactions are satisfied and to minimize example changes due to revised pile values. The original example problem was based on higher pile values than the current values shown in Chapter 11,Table 11.3-5.

Minimum pile reaction (Strength V):

$Pu_{pile_StrV} = 2179.55$ kips

$MuT_{pile_StrV} = 7196.34$ kip-ft

$MuL_{pile_StrV} = 2369.38$ kip-ft

$$\delta_{pile_StrV} := \frac{1}{1 - \left(\frac{Pu_{pile_StrV}}{\phi_t \cdot P_e}\right)}$$

$\delta_{pile_StrV} = 1.04$

$$Pu_{min_p} := \frac{Pu_{pile_StrV}}{N_p} - \frac{MuT_{pile_StrV}}{S_{yy}} - \frac{MuL_{pile_StrV} \cdot \delta_{pile_StrV}}{S_{xx}}$$

$Pu_{min_p} = -12.49$ kips

Capacity for pile uplift is site dependant. Consult with the geotechnical engineer for allowable values.

The horizontal pile resistance of HP12x53 pile from the soils report is :

$Hr_{12x53} := 14$ kips/pile

Pile dimensions in the transverse (xx) and longitudinal (yy) directions:

$B_{xx} := 12.05$ inches

$B_{yy} := 11.78$ inches

Pile spacing in the transverse and longitudinal directions:

$Spa_{xx} := 5.0$ feet $\quad \dfrac{Spa_{xx}}{\frac{B_{xx}}{12}} = 4.98$ Say: 5B

$Spa_{yy} := 3.0$ feet $\quad \dfrac{Spa_{yy}}{\frac{B_{yy}}{12}} = 3.06$ Say: 3B

Use the pile multipliers from **LRFD [Table 10.7.2.4-1]** to calculate the group resistance of the piles in each direction.

$Hr_{xx} := Hr_{12x53} \cdot 4 \cdot (1.0 + 0.85 + 0.70 \cdot 3)$

$Hr_{xx} = 221.2$ kips

$HuT_{pileStrIII} = 49.86$ kips

$Hr_{xx} \geq HuT_{pileStrIII}$

check = "OK"

$Hr_{yy} := Hr_{12x53} \cdot 5 \cdot (0.7 + 0.5 + 0.35 \cdot 2)$

$Hr_{yy} = 133$ kips

$HuL_{pileStrV} = 109.25$ kips

$Hr_{yy} \geq HuL_{pileStrV}$

check = "OK"

E13-1.11 - Design Pier Footing

In E13-1.7, the Strength I limit states was identified as the governing limit state for the design of the pier footing.

Listed below are the Strength I footing loads for one, two and three lanes loaded:

$Pu1_{ftgStr1} = 2643.74$ kips

$Pu2_{ftgStr1} = 2928.7$ kips

$MuT1_{ftgStr1} = 7267.81$ kip-ft

$MuT2_{ftgStr1} = 7836.85$ kip-ft

$MuL1_{ftgStr1} = 1187.7$ kip-ft

$MuL2_{ftgStr1} = 1856.29$ kip-ft

$Pu3_{ftgStr1} = 3124.66$ kips

$MuT3_{ftgStr1} = 4541.55$ kip-ft

$MuL3_{ftgStr1} = 2315.94$ kip-ft

The longitudinal moment given above must be magnified to account for slenderness of the column (see E13-1.9). The computed magnification factor and final factored forces are:

$$\delta_{s1_ftgStr1} := \frac{1}{1 - \left(\frac{Pu1_{ftgStr1}}{\phi_t \cdot P_e}\right)} \qquad \delta_{s1_ftgStr1} = 1.05$$

$$\delta_{s2_ftgStr1} := \frac{1}{1 - \left(\frac{Pu2_{ftgStr1}}{\phi_t \cdot P_e}\right)} \qquad \delta_{s2_ftgStr1} = 1.06$$

$$\delta_{s3_ftgStr1} := \frac{1}{1 - \left(\frac{Pu3_{ftgStr1}}{\phi_t \cdot P_e}\right)} \qquad \delta_{s3_ftgStr1} = 1.07$$

$MuL1_{ftgStr1\delta} := \delta_{s1_ftgStr1} \cdot MuL1_{ftgStr1}$ $\quad MuL1_{ftgStr1\delta} = 1252.79$ kip-ft

$MuL2_{ftgStr1\delta} := \delta_{s2_ftgStr1} \cdot MuL2_{ftgStr1}$ $\quad MuL2_{ftgStr1\delta} = 1969.65$ kip-ft

$MuL3_{ftgStr1\delta} := \delta_{s3_ftgStr1} \cdot MuL3_{ftgStr1}$ $\quad MuL3_{ftgStr1\delta} = 2467.46$ kip-ft

The calculations for the Strength I pile loads on the footing are calculated below for one, two and three lanes loaded.

$N_p = 20$ Number of piles

$S_{xx} = 50$ ft^3

$S_{yy} = 100$ ft^3

The following illustrates the corner pile loads for 2 lanes loaded:

$$Pu2_1 := \frac{Pu2_{ftgStr1}}{N_p} + \frac{MuT2_{ftgStr1}}{S_{yy}} + \frac{MuL2_{ftgStr1\delta}}{S_{xx}} \qquad Pu2_1 = 264.2 \text{ kips}$$

$$Pu2_5 := \frac{Pu2_{ftgStr1}}{N_p} - \frac{MuT2_{ftgStr1}}{S_{yy}} + \frac{MuL2_{ftgStr1\delta}}{S_{xx}} \qquad Pu2_5 = 107.46 \text{ kips}$$

$$Pu2_{16} := \frac{Pu2_{ftgStr1}}{N_p} + \frac{MuT2_{ftgStr1}}{S_{yy}} - \frac{MuL2_{ftgStr1\delta}}{S_{xx}} \qquad Pu2_{16} = 185.41 \text{ kips}$$

$$Pu2_{20} := \frac{Pu2_{ftgStr1}}{N_p} - \frac{MuT2_{ftgStr1}}{S_{yy}} - \frac{MuL2_{ftgStr1\delta}}{S_{xx}} \qquad Pu2_{20} = 28.67 \text{ kips}$$

Pile loads between the corners can be interpolated. Similar calculations for the piles for the cases of one, two and three lanes loaded produce the following results:

$$Pu1 = \begin{pmatrix} 229.92 & 193.58 & 157.24 & 120.9 & 84.56 \\ 213.22 & 176.88 & 140.54 & 104.2 & 67.86 \\ 196.51 & 160.17 & 123.84 & 87.5 & 51.16 \\ 179.81 & 143.47 & 107.13 & 70.79 & 34.45 \end{pmatrix}$$

$$Pu2 = \begin{pmatrix} 264.2 & 225.01 & 185.83 & 146.64 & 107.46 \\ 237.93 & 198.75 & 159.57 & 120.38 & 81.2 \\ 211.67 & 172.49 & 133.3 & 94.12 & 54.94 \\ 185.41 & 146.23 & 107.04 & 67.86 & 28.67 \end{pmatrix}$$

$$Pu3 = \begin{pmatrix} 251 & 228.29 & 205.58 & 182.87 & 160.17 \\ 218.1 & 195.39 & 172.68 & 149.97 & 127.27 \\ 185.2 & 162.49 & 139.78 & 117.08 & 94.37 \\ 152.3 & 129.59 & 106.88 & 84.18 & 61.47 \end{pmatrix}$$

$Pu1_{pile} = 229.92$ kips $Pu2_{pile} = 264.2$ kips $Pu3_{pile} = 251$ kips

A conservative simplification is to use the maximum pile reaction for all piles when calculating the total moment and one way shear forces on the footing.

$Pu := \max(Pu1_{pile}, Pu2_{pile}, Pu3_{pile})$ $Pu = 264.2$ kips

E13-1.11.1 Design for Moment

The footing is designed for moment using the pile forces computed above on a per-foot basis acting on each footing face. The design section for moment is at the face of the column. The following calculations are based on the outer row of piles in each direction, respectively.

$L_{ftg_xx} := L_{ftg}$ $L_{ftg_xx} = 23$ feet

$L_{ftg_yy} := W_{ftg}$ $L_{ftg_yy} = 12$ feet

Applied factored load per foot in the "X" direction:

$Pu_{Mom_xx} := Pu \cdot 5$ $Pu_{Mom_xx} = 1320.98$ kips

$R_{xx} := \frac{Pu_{Mom_xx}}{L_{ftg_xx}}$ $\boxed{R_{xx} = 57.43}$ kips per foot

Estimation of applied factored load per foot in the "Y" direction:

$Pu_{Mom_yy} := Pu \cdot 4$ $\boxed{Pu_{Mom_yy} = 1056.79}$ kips

$R_{yy} := \frac{Pu_{Mom_yy}}{L_{ftg_yy}}$ $\boxed{R_{yy} = 88.07}$ kips per foot

$arm_{xx} := 2.5$ feet

$arm_{yy} := 2.25$ feet

The moment on a per foot basis is then:

$Mu_{xx} := R_{xx} \cdot arm_{xx}$ $\boxed{Mu_{xx} = 143.59}$ kip-ft per foot

$Mu_{yy} := R_{yy} \cdot arm_{yy}$ $\boxed{Mu_{yy} = 198.15}$ kip-ft per foot

Once the maximum moment at the critical section is known, flexure reinforcement must be determined. The footing flexure reinforcement is located in the bottom of the footing and rests on top of the piles.

Assume #8 bars:

$bar_diam8 := 1.0$ inches

$bar_area8 := 0.79$ in^2

$\boxed{f_y = 60}$ ksi

The footing minimum tensile reinforcement requirements will be calculated. The tensile reinforcement provided must be enough to develop a factored flexural resistance at least equal to the lesser of the cracking strength or 1.33 times the factored moment from the applicable strength load combinations, **LRFD [5.7.3.3.2]**.

The cracking strength is calculated as follows, **LRFD[5.7.3.3.2]**:

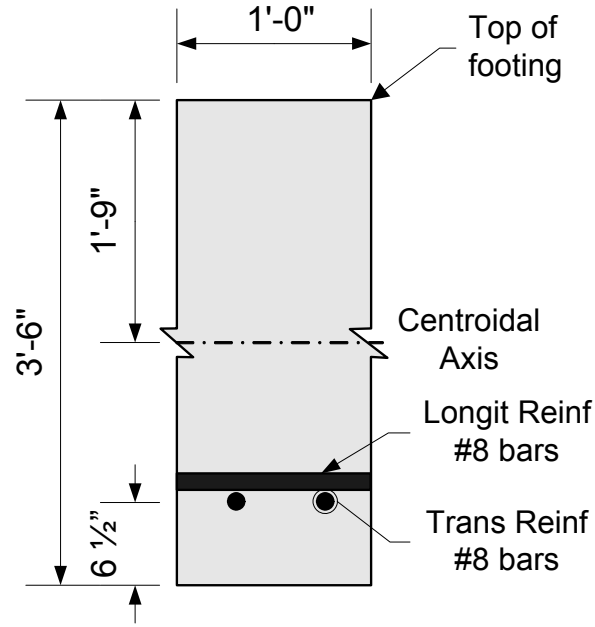

Figure E13-1.11-1
Footing Cracking Moment Dimensions

$f_r = 0.24 \cdot \lambda \sqrt{f'_c}$ = modulus of rupture (ksi) **LRFD [5.4.2.6]**

$f_r := 0.24 \cdot \sqrt{f'_c}$ $\lambda = 1.0$ (normal wgt. conc.) **LRFD [5.4.2.8]** $\boxed{f_r = 0.45}$ ksi

$S_g := \dfrac{b\left(H_{ftg} \cdot 12\right)^2}{6}$ $\boxed{S_g = 3528}$ in^4

$y_t := \dfrac{H_{ftg} \cdot 12}{2}$ $\boxed{y_t = 21}$ in

$M_{cr} = \gamma_3\left(\gamma_1 \cdot f_r\right)S_g$ therefore, $M_{cr} = 1.1\left(f_r\right)S_g$

Where:

$\gamma_1 := 1.6$ flexural cracking variability factor

$\gamma_3 := 0.67$ ratio of yield strength to ultimate tensile strength of the reinforcement <u>for A615, Grade 60 reinforcement</u>

$M_{cr} := 1.1 f_r \cdot S_g \cdot \dfrac{1}{12}$ $\boxed{M_{cr} = 145.21}$ kip-ft

1.33 times the factored controlling footing moment is:

$Mu_{ftg} := \max(Mu_{xx}, Mu_{yy})$ $\boxed{Mu_{ftg} = 198.15}$ kip-ft

$\boxed{1.33 \cdot Mu_{ftg} = 263.54}$ kip-ft

$M_{Design} := \min(M_{cr}, 1.33 \cdot Mu_{ftg})$ $\boxed{M_{Design} = 145.21}$ kip-ft

Mu_{ftg} exceeds M_{Design}, therefore set $M_{Design} = Mu_{ftg}$

Since the transverse moment controlled, M_{yy}, detail the transverse reinforcing to be located directly on top of the piles.

Effective depth, d_e = total footing thickness - cover - 1/2 bar diameter

$d_e := H_{ftg} \cdot 12 - Cover_{fb} - \frac{bar_diam8}{2}$ $\boxed{d_e = 35.5}$ in

Solve for the required amount of reinforcing steel, as follows:

$\phi_f := 0.90$

$\boxed{b = 12}$ in

$\boxed{f'_c = 3.5}$ ksi

$Rn := \frac{M_{Design} \cdot 12}{\phi_f \cdot b \cdot d_e^2}$ $\boxed{Rn = 0.175}$

$\rho := 0.85\left(\frac{f'_c}{f_y}\right) \cdot \left(1.0 - \sqrt{1.0 - \frac{2 \cdot Rn}{0.85 \cdot f'_c}}\right)$ $\boxed{\rho = 0.00300}$

$As_{ftg} := \rho \cdot b \cdot d_e$ $\boxed{As_{ftg} = 1.28}$ in^2 per foot

Required bar spacing = $\boxed{\frac{bar_area8}{As_{ftg}} \cdot 12 = 7.41}$ in

Use #8 bars @ $bar_space := 7$

$A_{sftg} := bar_area8 \cdot \left(\frac{12}{bar_space}\right)$ $\boxed{A_{sftg} = 1.35}$ in^2 per foot

Is $A_{sftg} \geq As_{ftg}$? $\boxed{check = \text{"OK"}}$

Similar calculations can be performed for the reinforcing in the longitudinal direction. The effective depth for this reinforcing is calculated based on the longitudinal bars resting directly on top of the transverse bars.

E13-1.11.2 Punching Shear Check

The factored force effects from E13-1.7 for the punching shear check at the column are:

$Pu3_{ftgStr1} = 3124.66$ kips

$MuT3_{ftgStr1} = 4541.55$ kip-ft

$MuL3_{ftgStr1\delta} = 2467.46$ kip-ft

$$Pu3 = \begin{pmatrix} 251 & 228.29 & 205.58 & 182.87 & 160.17 \\ 218.1 & 195.39 & 172.68 & 149.97 & 127.27 \\ 185.2 & 162.49 & 139.78 & 117.08 & 94.37 \\ 152.3 & 129.59 & 106.88 & 84.18 & 61.47 \end{pmatrix}$$

$Pu3_{pile} = 251$ kips

With the applied factored loads determined, the next step in the column punching shear check is to define the critical perimeter, b_o. The Specifications require that this perimeter be minimized, but need not be closer than $d_v/2$ to the perimeter of the concentrated load area. In this case, the concentrated load area is the area of the column on the footing as seen in plan.

The effective shear depth, d_v, must be defined in order to determine b_o and the punching (or two-way) shear resistance. An average effective shear depth should be used since the two-way shear area includes both the "X-X" and "Y-Y" sides of the footing. In other words, d_{ex} is not equal to d_{ey}, therefore d_{vx} will not be equal to d_{vy}. This is illustrated as follows assuming a 3'-6" footing with #8 reinforcing bars at 6" on center in both directions in the bottom of the footing:

$b = 12$ in

$h_{ftg} := H_{ftg} \cdot 12$ $\quad h_{ftg} = 42$ in

$A_{s_ftg} := 2 \cdot (bar_area8)$ $\quad A_{s_ftg} = 1.58$ in^2 per foot width

Effective depth for each axis:

$Cover_{fb} = 6$ in

$d_{ey} := h_{ftg} - Cover_{fb} - \frac{bar_diam8}{2}$ $\quad d_{ey} = 35.5$ in

$d_{ex} := h_{ftg} - Cover_{fb} - bar_diam8 - \frac{bar_diam8}{2}$ $\quad d_{ex} = 34.5$ in

Effective shear depth for each axis:

$T_{ftg} := A_{s_ftg} \cdot f_y$ $\boxed{T_{ftg} = 94.8}$ kips

$a_{ftg} := \dfrac{T_{ftg}}{\alpha_1 \cdot f'_c \cdot b}$ $\boxed{a_{ftg} = 2.66}$ in

$d_{vx} := \max\left(d_{ex} - \dfrac{a_{ftg}}{2}, 0.9 \cdot d_{ex}, 0.72 \cdot h_{ftg}\right)$ $\boxed{d_{vx} = 33.17}$ in

$d_{vy} := \max\left(d_{ey} - \dfrac{a_{ftg}}{2}, 0.9 \cdot d_{ey}, 0.72 \cdot h_{ftg}\right)$ $\boxed{d_{vy} = 34.17}$ in

Average effective shear depth:

$d_{v_avg} := \dfrac{d_{vx} + d_{vy}}{2}$ $\boxed{d_{v_avg} = 33.67}$ in

With the average effective shear depth determined, the critical perimeter can be calculated as follows:

$b_{col} := L_{col} \cdot 12$ $\boxed{b_{col} = 186}$ in

$t_{col} := W_{col} \cdot 12$ $\boxed{t_{col} = 48}$ in

$b_o := 2\left[b_{col} + 2 \cdot \left(\dfrac{d_{v_avg}}{2}\right)\right] + 2 \cdot \left[t_{col} + 2 \cdot \left(\dfrac{d_{v_avg}}{2}\right)\right]$ $\boxed{b_o = 602.69}$ in

The factored shear resistance to punching shear is the smaller of the following two computed values: **LRFD [5.13.3.6.3]**

$\beta_c := \dfrac{b_{col}}{t_{col}}$ $\boxed{\beta_c = 3.88}$

λ = 1.0 (normal wgt. conc.) **LRFD [5.4.2.8]**

$V_{n_punch1} := \left(0.063 + \dfrac{0.126}{\beta_c}\right) \cdot \lambda \sqrt{f'_c} \cdot (b_o) \cdot (d_{v_avg})$ $\boxed{V_{n_punch1} = 3626.41}$ kips

$V_{n_punch2} := 0.126 \cdot \left(\lambda \sqrt{f'_c}\right) \cdot (b_o) \cdot (d_{v_avg})$ $\boxed{V_{n_punch2} = 4783.77}$ kips

$V_{n_punch} := \min(V_{n_punch1}, V_{n_punch2})$ $\boxed{V_{n_punch} = 3626.41}$ kips

$\phi_v = 0.9$

$V_{r_punch} := \phi_v \cdot (V_{n_punch})$ $\boxed{V_{r_punch} = 3263.77}$ kips

With the factored shear resistance determined, the applied factored punching shear load will be computed. This value is obtained by summing the loads in the piles that are outside of the critical perimeter. As can be seen in Figure E13-1.11-2, this includes Piles 1 through 5, 6, 10,11, 15, and 16 through 20. These piles are entirely outside of the critical perimeter. If part

of a pile is inside the critical perimeter, then only the portion of the pile load outside the critical perimeter is used for the punching shear check, **LRFD [5.13.3.6.1]**.

$$\left(\frac{t_{col}}{2} + \frac{d_{v_avg}}{2}\right) \cdot \frac{1}{12} = 3.4 \qquad \text{feet}$$

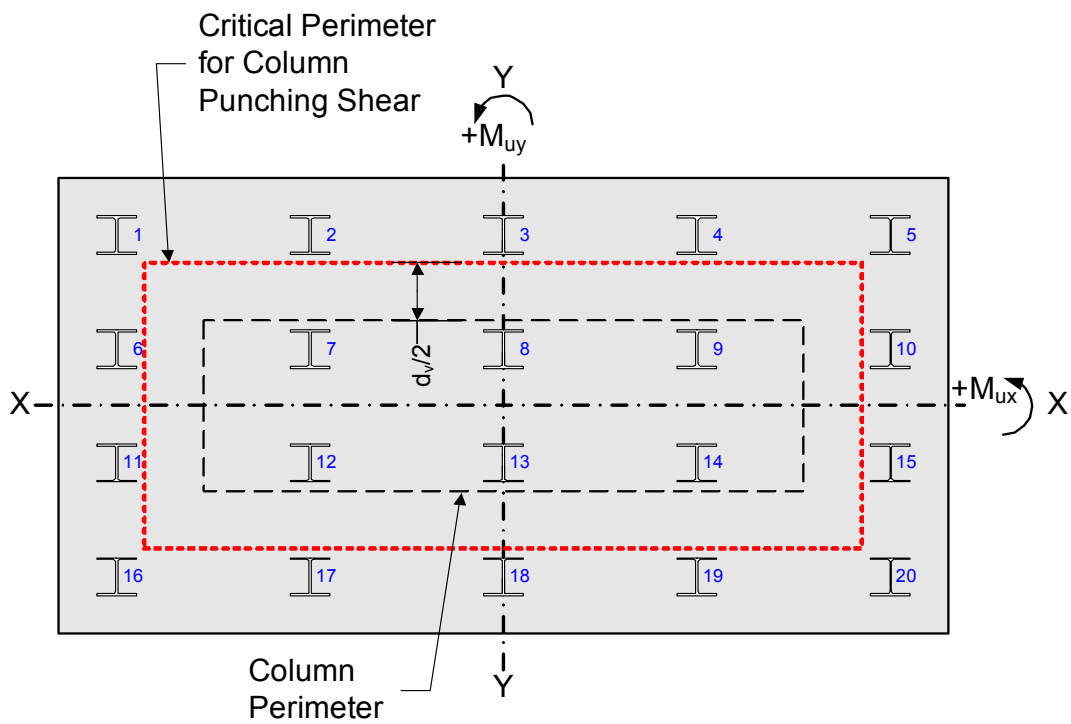

Figure E13-1.11-2
Critical Perimeter for Column Punching Shear

The total applied factored shear used for the punching shear check is the sum of the piles outside of the shear perimeter (1 through 5, 6, 10, 11, 15 and 16 through 20):

$$V_{u_punch} := \max(Pu1_{punch_col}, Pu2_{punch_col}, Pu3_{punch_col})$$

$$\boxed{V_{u_punch} = 2187.26} \quad \text{kips}$$

$$\boxed{V_{r_punch} = 3263.77} \quad \text{kips}$$

$$V_{u_punch} \le V_{r_punch}$$

$$\boxed{check = \text{"OK"}}$$

For <u>two-way action</u> around the <u>maximum loaded pile</u>, the pile critical perimeter, b_o, is located a minimum of $0.5d_v$ from the perimeter of the pile. If portions of the critical perimeter are located off the footing, that portion of the critical perimeter is limited by the footing edge.

Two-way action should be checked for the maximum loaded pile, The effective shear depth, d_v is the same as that used for the punching shear check for the column.

$V_{u2way} := Pu2_{pile}$ $\boxed{V_{u2way} = 264.2}$ kips

$\boxed{d_{v_avg} = 33.67}$ in

$\boxed{0.5 \cdot d_{v_avg} = 16.84}$ in

Two-way action or punching shear resistance for sections without transverse reinforcement can then be calculated as follows: **LRFD [5.13.3.6.3]**

λ = 1.0 (normal wgt. conc.) **LRFD [5.4.2.8]**

$$V_n = \left(0.063 + \frac{0.126}{\beta_c}\right) \cdot \lambda \sqrt{f'_c} \cdot b_o \cdot d_v \le 0.126 \cdot \lambda \sqrt{f'_c} \cdot b_o \cdot d_v$$

$\boxed{B_{xx} = 12.05}$ in

$\boxed{B_{yy} = 11.78}$ in

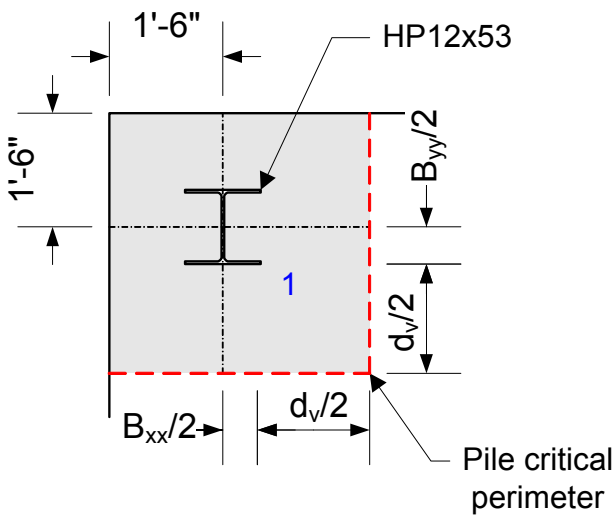

Figure E13-1.11-3
Pile Two-way Action Critical Perimeter

Since the critical section is outside of the footing, only include the portion of the shear perimeter that is located within the footing:

$b_{o_xx} := 1.5 \cdot 12 + \frac{B_{xx}}{2} + \frac{d_{v_avg}}{2}$ $\boxed{b_{o_xx} = 40.86}$ in

$b_{o_yy} := 1.5 \cdot 12 + \frac{B_{yy}}{2} + \frac{d_{v_avg}}{2}$ $\boxed{b_{o_yy} = 40.73}$ in

Ratio of long to short side of critical perimeter:

$\beta_{c_pile} := \frac{b_{o_xx}}{b_{o_yy}}$ $\boxed{\beta_{c_pile} = 1.003}$

$b_{o_pile} := b_{o_xx} + b_{o_yy}$ $\boxed{b_{o_pile} = 81.59}$ in

$V_{n_pile1} := \left(0.063 + \frac{0.126}{\beta_{c_pile}}\right) \cdot \lambda \sqrt{f'_c} \cdot (b_{o_pile}) \cdot (d_{v_avg})$ $\boxed{V_{n_pile1} = 969.24}$ kips

$V_{n_pile2} := 0.126 \cdot \left(\lambda \sqrt{f'_c}\right) \cdot (b_{o_pile}) \cdot (d_{v_avg})$ $\boxed{V_{n_pile2} = 647.59}$ kips

$V_{n_pile} := \min(V_{n_pile1}, V_{n_pile2})$ $\boxed{V_{n_pile} = 647.59}$ kips

$\phi_v = 0.9$

$V_{r_pile} := \phi_v \cdot (V_{n_pile})$ $\boxed{V_{r_pile} = 582.83}$ kips

$\boxed{V_{u2way} = 264.2}$ kips

$V_{r_pile} \geq V_{u2way}$

$\boxed{check = \text{"OK"}}$

E13-1.11.3 One Way Shear Check

Design for <u>one way shear</u> in both the <u>transverse</u> and <u>longitudinal directions</u>.

For one way action in the pier footing, in accordance with **LRFD[5.13.3.6.1]** & **[5.8.3.2]** the critical section is taken as the larger of:

$0.5 \cdot d_v \cdot \cot\theta$ or d_v

$\theta := 45deg$

The term d_v is calculated the same as it is for the punching shear above:

$\boxed{d_{vx} = 33.17}$ in

$\boxed{d_{vy} = 34.17}$ in

Now the critical section can be calculated:

$dv_{xx} := \max(0.5 \cdot d_{vx} \cdot \cot(\theta), d_{vx})$ $\boxed{dv_{xx} = 33.17}$ in

$dv_{yy} := \max(0.5 \cdot d_{vy} \cdot \cot(\theta), d_{vy})$ $\boxed{dv_{yy} = 34.17}$ in

Distance from face of column to CL of pile in longitudinal and transverse directions:

$\boxed{arm_{xx} = 2.5}$ feet

$\boxed{arm_{yy} = 2.25}$ feet

Distance from face of column to outside edge of pile in longitudinal and transverse directions:

$\boxed{arm_{xx} \cdot 12 + \frac{B_{yy}}{2} = 35.89}$ in > d_{vx}, design check required

$\boxed{arm_{yy} \cdot 12 + \frac{B_{xx}}{2} = 33.02}$ in < d_{vy}, no design check required

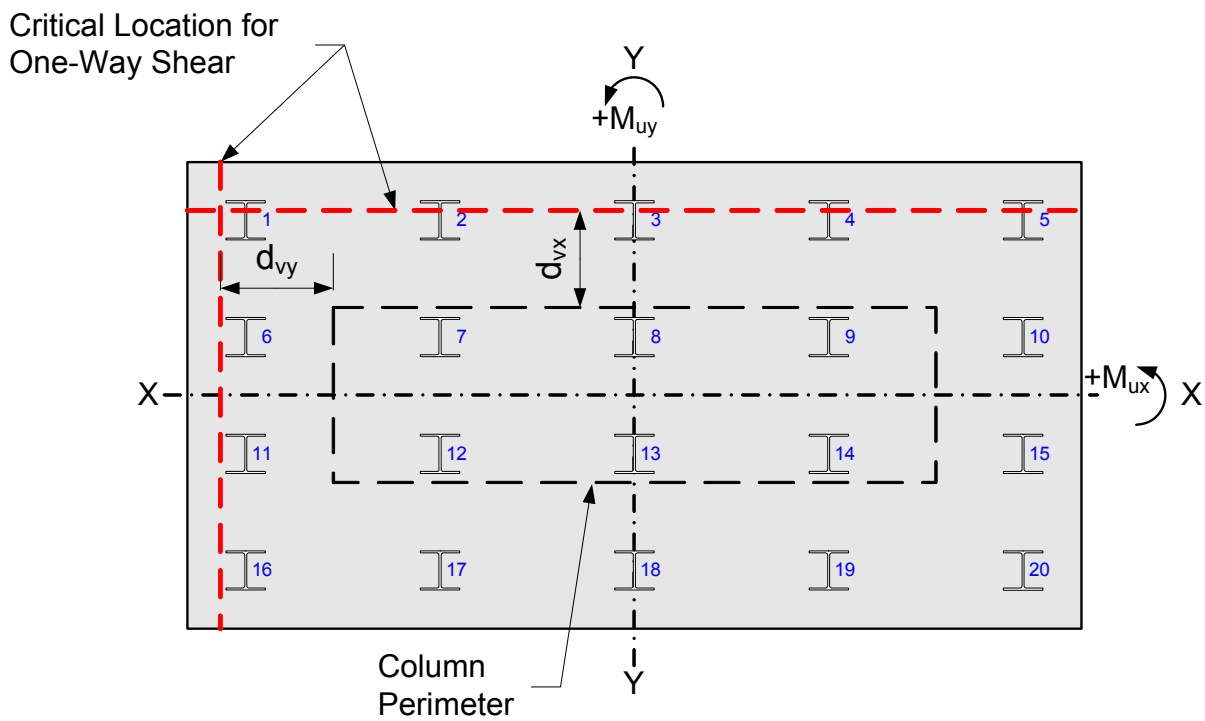

Figure E13-1.11-4
Critical Section for One-Way Shear

Portion of pile outside of the critical section for one way shear in the longitudinal direction:

$$b_{xx} := arm_{xx} \cdot 12 + \frac{B_{yy}}{2} - d_{vx} \qquad \boxed{b_{xx} = 2.72} \quad \text{inches}$$

The load applied to the critical section will be based on the proportion of the pile located outside of the critical section. As a conservative estimate, the maximum pile reaction will be assumed for all piles.

$Pu = 264.2$ kips

$Pu_{1wayx} := Pu \cdot 5$ $\quad Pu_{1wayx} = 1320.98$ kips

$Vu_{1wayx} := Pu_{1wayx} \cdot \frac{b_{xx}}{B_{yy}}$ $\quad Vu_{1wayx} = 304.76$ kips

The nominal shear resistance shall be calculated in accordance with **LRFD [5.8.3.3]** and is the lesser of the following:

$\beta_{1way} := 2.0$ $\quad \lambda = 1.0$ (normal wgt. conc.) **LRFD [5.4.2.8]**

$b_v := L_{ftg} \cdot 12$ $\quad b_v = 276$ inches

$V_{n_1way1} := 0.0316 \cdot \beta_{1way} \cdot \lambda \sqrt{f'_c} \cdot (b_v) \cdot (d_{vx})$ $\quad V_{n_1way1} = 1082.52$ kips

$V_{n_1ay2} := 0.25 \cdot (f'_c) \cdot (b_v) \cdot (d_{vx})$ $\quad V_{n_1ay2} = 8011.1$ kips

$V_{n_1way} := \min(V_{n_1way1}, V_{n_1ay2})$ $\quad V_{n_1way} = 1082.52$ kips

$\phi_v = 0.9$

$V_{r_1way} := \phi_v \cdot (V_{n_1way})$ $\quad V_{r_1way} = 974.27$ kips

$Vu_{1wayx} = 304.76$ kips

$V_{r_1way} \geq Vu_{1wayx}$

check = "OK"

E13-1.12 Final Pier Schematic

Figure E13-1.12-1 shows the final pier dimensions along with the required reinforcement in the pier cap and column.

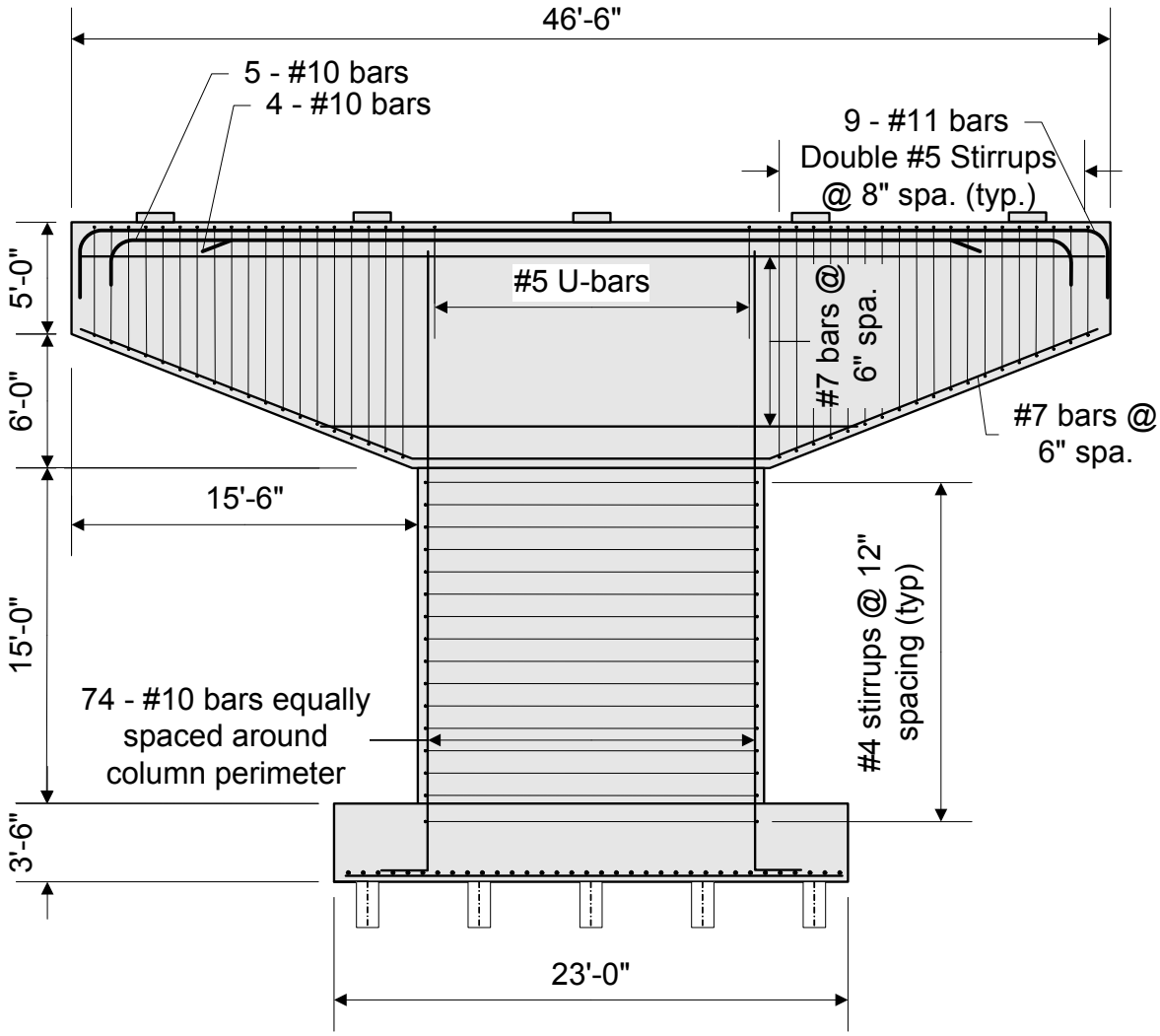

Figure E13-1.12-1
Final Pier Design

This page intentionally left blank.

Table of Contents

E13-2 Multi-Column Pier Design Example LRFD 2
E13-2.1 Obtain Design Criteria 2
E13-2.1.1 Material Properties: 2
E13-2.1.2 Reinforcing steel cover requirements (assume epoxy coated bars) 3
E13-2.1.3 Relevant Superstructure Data 3
E13-2.1.4 Select Optimum Pier Type 4
E13-2.1.5 Select Preliminary Pier Dimensions 4
E13-2.2 Loads 7
E13-2.2.1 Superstructure Dead Loads 7
E13-2.2.2 Live Load Reactions per Design Lane 9
E13-2.2.3 Superstructure Live Load Reactions 9
E13-2.3 Unfactored Force Effects 12
E13-2.4 Load Factors 12
E13-2.5 Combined Force Effects 12
E13-2.6 Pier Cap Design 15
E13-2.6.1 Positive Moment Capacity Between Columns 15
E13-2.6.2 Positive Moment Reinforcement Cut Off Location 17
E13-2.6.3 Negative Moment Capacity at Face of Column 20
E13-2.6.4 Negative Moment Reinforcement Cut Off Location 22
E13-2.6.5 Shear Capacity at Face of Center Column 25
E13-2.6.6 Temperature and Shrinkage Steel 28
E13-2.6.7 Skin Reinforcement 28
E13-2.7 Reinforcement Summary 29

E13-2 Multi-Column Pier Design Example - LRFD

2 Span Bridge, 54W, LRFD Design

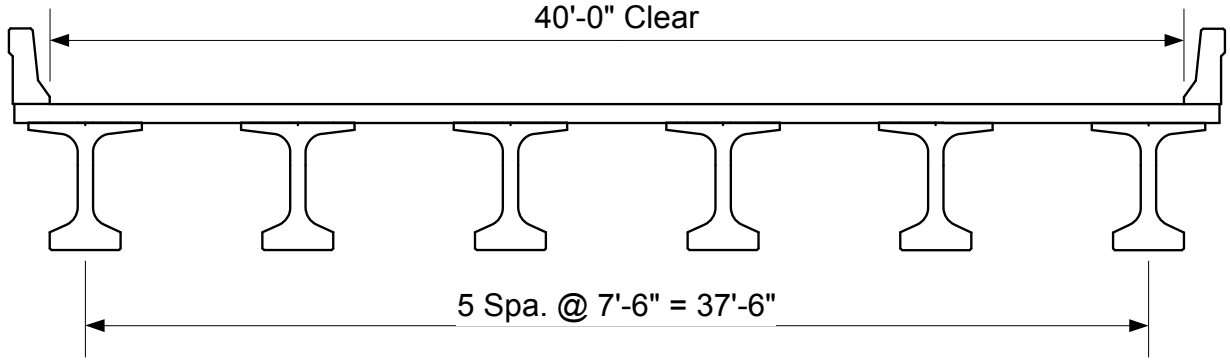

This pier is designed for the superstructure as detailed in example **E19-2**. This is a two-span prestressed girder grade separation structure. Semi-expansion bearings are located at the abutments, and fixed bearings are used at the pier.

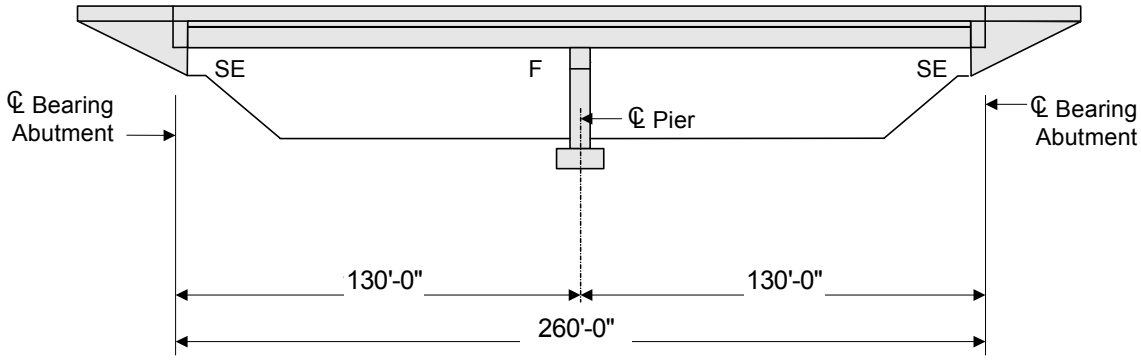

E13-2.1 Obtain Design Criteria

This multi-column pier design example is based on ***AASHTO LRFD Bridge Design Specifications, (Seventh Edition - 2016 Interim).*** The design methods presented throughout the example are meant to be the most widely used in general bridge engineering practice. Calculations are only shown for the pier cap. For example column and footing calculations, see example E13-1.

The first design step is to identify the appropriate design criteria. This includes, but is not limited to, defining material properties, identifying relevant superstructure information, and determining the required pier geometry.

E13-2.1.1 Material Properties:

$w_c := 0.150$ Concrete density, kcf

$f'_c := 3.5$ Concrete 28-day compressive strength, ksi **LRFD [5.4.2.1 & Table C5.4.2.1-1]**

$f_y := 60$ Reinforcement strength, ksi **LRFD [5.4.3 & 6.10.1.7]**

$E_s := 29000$ Modulus of Elasticity of the reinforcing steel, ksi

$E_c := 33000 \cdot w_c^{1.5} \cdot \sqrt{f'_c}$ **LRFD [C5.4.2.4]**

$\boxed{E_c = 3587}$ Modulus of Elasticity of the Concrete, ksi

E13-2.1.2 Reinforcing steel cover requirements (assume epoxy coated bars)

Cover dimension listed below is in accordance with **LRFD [Table 5.12.3-1].**

$Cover_{cap} := 2.5$ Concrete cover in pier cap, inches

E13-2.1.3 Relevant Superstructure Data

$L := 130$ design span length, feet

$w_b := 42.5$ out to out width of deck, feet

$w_{deck} := 40$ clear width of deck, feet

$w_p := 0.387$ weight of Wisconsin Type LF parapet, klf

$t_s := 8$ slab thickness, inches

$t_{haunch} := 4$ haunch thickness, inches

$skew := 0$ skew angle, degrees

$S := 7.5$ girder spacing, ft

$ng := 6$ number of girders

$DOH := \frac{w_b - (ng - 1) \cdot S}{2}$ deck overhang length $\boxed{DOH = 2.5}$ feet

$w_{tf} := 48$ width of 54W girder top flange, inches

$t_{tf} := 3$ thickness of 54W girder top flange, inches

$tf_{slope} := \frac{2.5}{20.75}$ slope of bottom surface of top flange $\boxed{tf_{slope} = 0.12}$ feet per foot

$girder_H := 54$ height of 54W girder, inches

E13-2.1.4 Select Optimum Pier Type

Selecting the most optimal pier type depends on site conditions, cost considerations, superstructure geometry, and aesthetics. The most common pier types are single column (i.e., "hammerhead"), solid wall type, and bent type (multi-column or pile bent). For this design example, a multi-column pier was chosen.

E13-2.1.5 Select Preliminary Pier Dimensions

Since the Specifications do not have standards regarding maximum or minimum dimensions for a pier cap, column, or footing, the designer should base the preliminary pier dimensions on state specific standards, previous designs, and past experience. The pier cap, however, must be wide enough to accommodate the bearing.

$cap_L := 41.5$ overall cap length, ft

$cap_H := 4.0$ pier cap height, ft

$cap_W := 3.5$ pier cap width, ft

$col_{spa} := 18.25$ column spacing, ft

$col_d := 3$ column depth (perpendicular to pier CL), ft

$col_w := 4$ column width (parallel to pier CL), ft

$col_h := 18$ column height, ft

$cap_{OH} := 2.5$ pier cap overhang dimension, ft

Figures E13-2.1-1 and E13-2.1-2 show the preliminary dimensions selected for this pier design example.

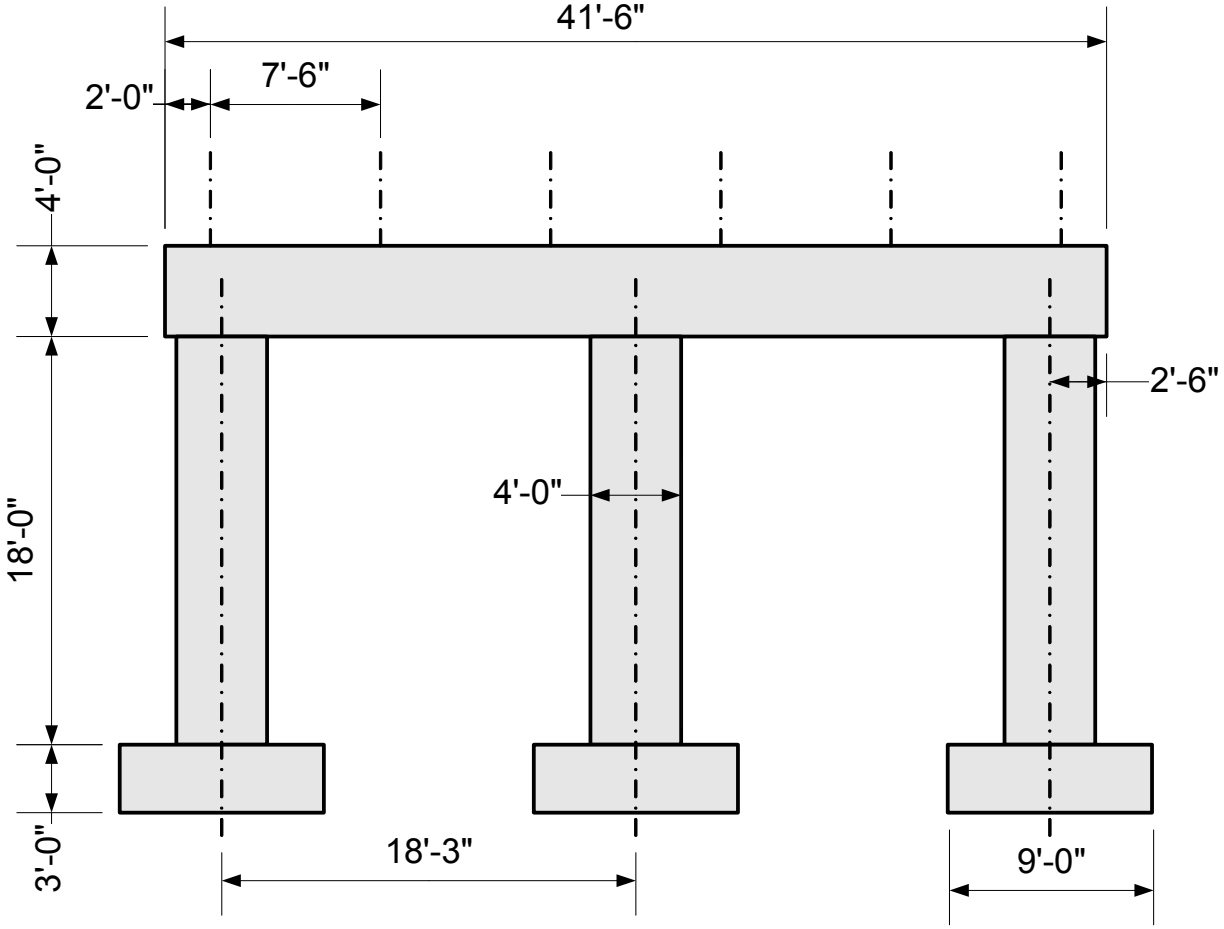

Figure E13-2.1-1
Preliminary Pier Dimensions - Front Elevation

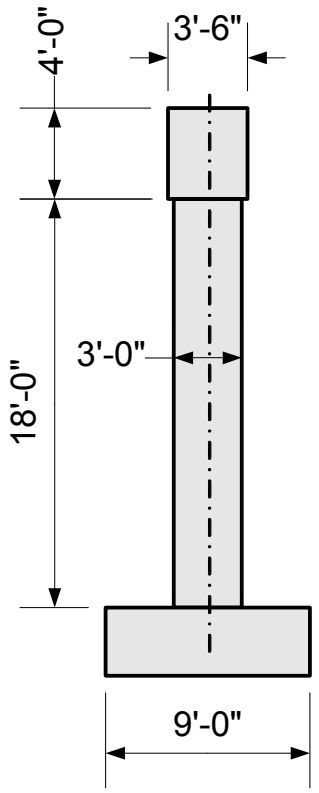

Figure E13-2.1-2
Preliminary Pier Dimensions - End Elevation

E13-2.2 Loads

$w_g := 0.831$ weight of 54W girder, klf

$w_{deck_int} := w_c \cdot \frac{t_s \cdot S}{12}$ weight of deck slab (int), klf $\boxed{w_{deck_int} = 0.75}$ klf

$OH := DOH - \frac{w_{tf}}{2 \cdot 12}$ deck overhang projection, ft $\boxed{OH = 0.5}$ ft

weight of deck slab (ext), klf

$$w_{deck_ext} := w_c \cdot \left[\frac{t_s}{12} \cdot \left(\frac{S}{2} + DOH \right) + \frac{1}{2} \cdot (OH) \cdot \left(\frac{t_{haunch} + t_{tf}}{12^2} - OH \cdot tf_{slope} \cdot \frac{1}{2} \right) \right]$$

$\boxed{w_{deck_ext} = 0.63}$ klf

weight of haunch, klf

$w_h := w_c \cdot \frac{t_{haunch} \cdot w_{tf}}{12^2}$ $\boxed{w_h = 0.2}$ klf

$w_{diaph_int} := 0.410$ weight of diaphragms on interior girder (assume 2), kips

$w_{diaph_ext} := 0.205$ weight of diaphragms on exterior girder, kips

$w_{ws} := 0.020$ future wearing surface, ksf

$w_p := 0.387$ weight of each parapet, klf

weight of concrete diaphragm between exterior girders

$w_{diaph} := w_c \cdot \frac{girder_H}{12} \cdot 2$ $\boxed{w_{diaph} = 1.35}$ klf

weight of cap

$w_{cap} := w_c \cdot cap_W \cdot cap_H$ $\boxed{w_{cap} = 2.1}$ klf

E13-2.2.1 Superstructure Dead Loads

DC Loads and Reactions

Interior DC1,DC2 and DW Loads

$w_{DC1_int} := w_g + w_{deck_int} + w_h + w_{diaph_int}$ $\boxed{w_{DC1_int} = 2.19}$ klf

$w_{DC2} := \frac{2 \cdot w_p}{ng}$ $\boxed{w_{DC2} = 0.13}$ klf

$w_{DW} := \frac{w_{ws} \cdot w_{deck}}{ng}$ $\boxed{w_{DW} = 0.13}$ klf

Interior DC and DW Reactions

$R_{DCi} := \left(\frac{1}{2} \cdot L \cdot w_{DC1_int} + \frac{5}{8} \cdot L \cdot w_{DC2}\right) \cdot 2$ $\boxed{R_{DCi} = 305.79}$ kips

$R_{DWi} := \left(\frac{5}{8} \cdot L \cdot w_{DW}\right) \cdot 2$ $\boxed{R_{DWi} = 21.67}$ kips

Exterior DC1 Loads

$w_{DC1_ext} := w_g + w_{deck_ext} + w_h + w_{diaph_ext}$ $\boxed{w_{DC1_ext} = 1.86}$ klf

Note: DC2 and DW loads are the same for interior and exterior girders.

Exterior DC and DW Reactions

$R_{DCe} := \left(\frac{1}{2} \cdot L \cdot w_{DC1_ext} + \frac{5}{8} \cdot L \cdot w_{DC2}\right) \cdot 2$ $\boxed{R_{DCe} = 262.98}$ kips

$R_{DWe} := \left(\frac{5}{8} \cdot L \cdot w_{DW}\right) \cdot 2$ $\boxed{R_{DWe} = 21.67}$ kips

The unfactored dead load reactions are listed below:

Unfactored Girder Reactions (kips)		
Girder #	DC	DW
1	263.0	21.7
2	305.8	21.7
3	305.8	21.7
4	305.8	21.7
5	305.8	21.7
6	263.0	21.7

Table E13-2.2-1
Unfactored Girder Dead Load Reactions

E13-2.2.2 Live Load Reactions per Design Lane

From girder line analysis, the following pier unfactored live load reactions are obtained:

$TruckPair := 125.64$ kips per design lane

$Lane := 103.94$ kips per design lane

$DLA := 1.33$ dynamic load allowance

These loads are per design lane and do not include dynamic load allowance. The pier reactions are controlled by the 90% (Truck Pair + Lane) loading condition. The resulting combined live load reactions per design lane (including dynamic load allowance) are:

$R_LL_{DesLane} := 0.90 \cdot (TruckPair \cdot DLA + Lane)$ $\boxed{R_LL_{DesLane} = 243.94}$ kips

The resulting wheel loads are:

$R_{LLw} := \dfrac{0.90 \cdot TruckPair \cdot DLA}{2}$ $\boxed{R_{LLw} = 75.2}$ kips per wheel

$R_{LLlane} := \dfrac{0.90 \cdot Lane}{10}$ $\boxed{R_{LLlane} = 9.35}$ kips per foot

E13-2.2.3 Superstructure Live Load Reactions

For the pier in this design example, the maximum live load effects in the pier cap, column and footing are based on either one, two or three lanes loaded (whichever results in the worst force effect). The lanes are moved across the deck to create the envelope of force effects. The following figures illustrate the lane locations loaded to determine the maximum positive and negative moments as well as the maximum shear force effects in the pier cap.

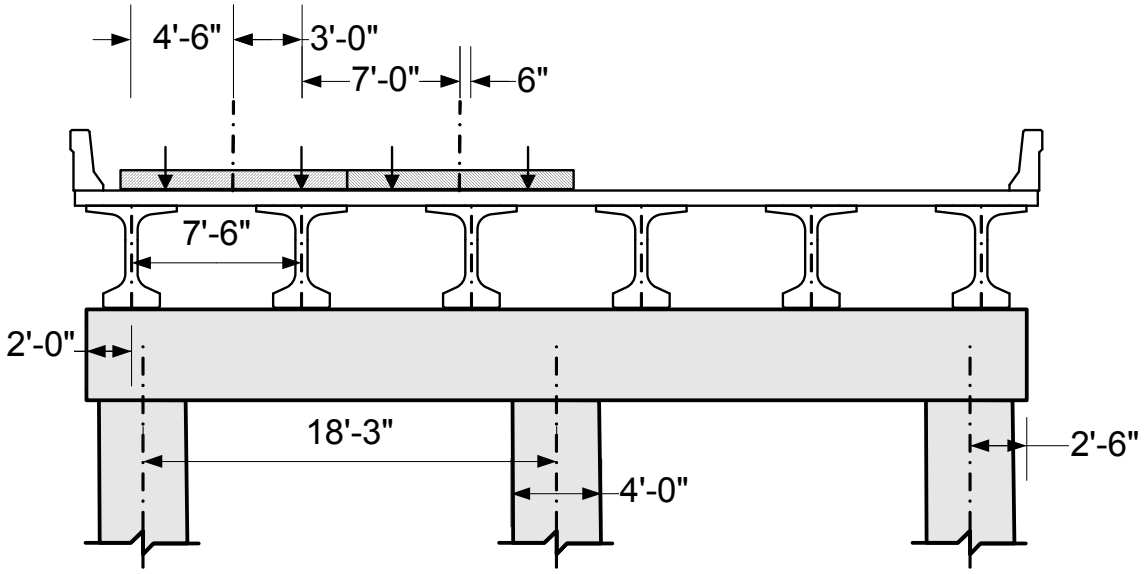

Figure E13-2.2-1
Lane Locations for Maximum Positive Moment

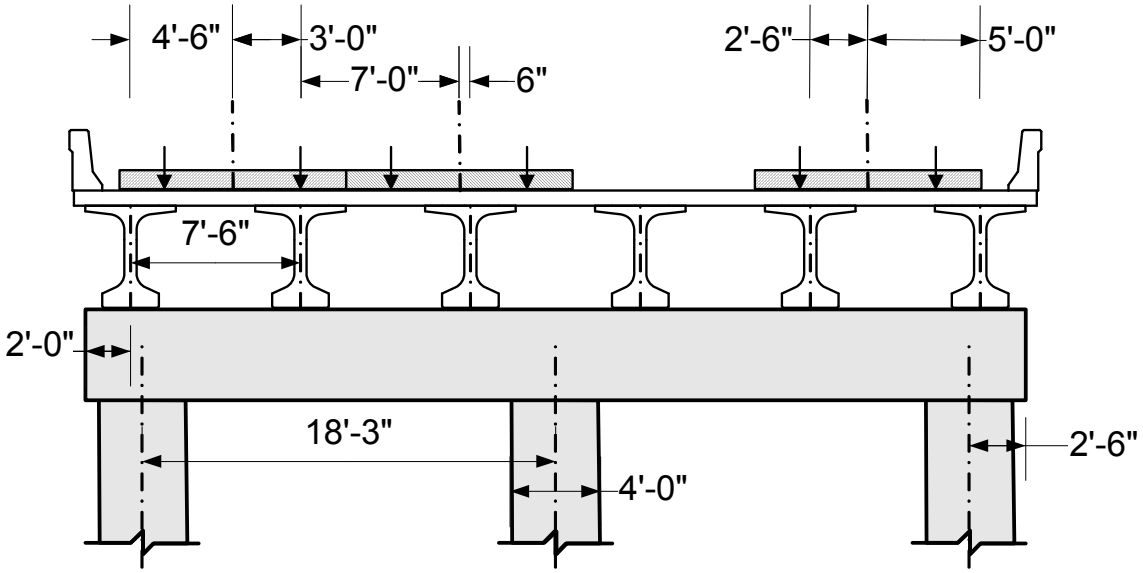

Figure E13-2.2-2
Lane Locations for Maximum Negative Moment

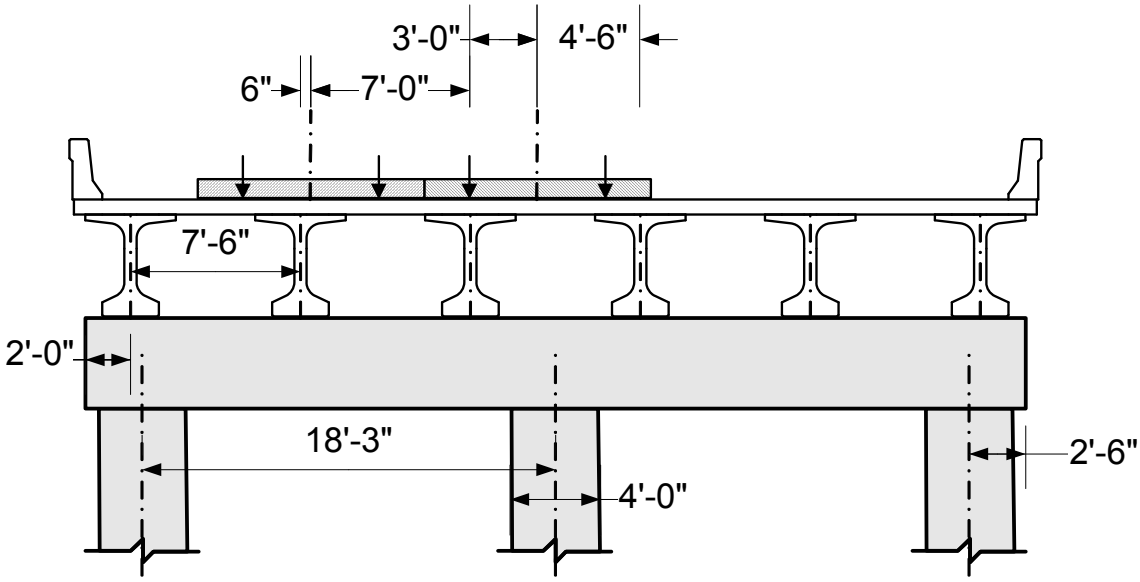

Figure E13-2.2-3
Lane Locations for Maximum Shear

The next step is to compute the reactions due to the above loads at each of the six bearing locations. This is generally carried out by assuming the deck is pinned (i.e., discontinuous) at the interior girder locations but continuous over the exterior girders. Solving for the reactions is then elementary. The computations for the reactions for maximum moment with only 2 lanes loaded are illustrated below as an example. All reactions shown are in kips.

$m_2 := 1.0$ Multi-presence factor for two lanes loaded

$$R1_{LL} := m_2 \cdot \left[R_{LLw} \cdot \left(\frac{6.0}{7.5} \right) + R_{LLlane} \cdot \left(0.5 + \frac{7.5}{2} \right) \right] \qquad \boxed{R1_{LL} = 99.91}$$

$$R2_{LL} := m_2 \cdot \left[R_{LLw} \cdot \left(\frac{1.5}{7.5} + 1 + \frac{3.5}{7.5} \right) + R_{LLlane} \cdot (7.5) \right] \qquad \boxed{R2_{LL} = 195.49}$$

$$R3_{LL} := m_2 \cdot \left[R_{LLw} \cdot \left(\frac{4.0 + 5.0}{7.5} \right) + R_{LLlane} \cdot \left(\frac{7.5}{2} + 4.5 \cdot \frac{5.25}{7.5} \right) \right] \qquad \boxed{R3_{LL} = 154.78}$$

$$R4_{LL} := m_2 \cdot \left[R_{LLw} \cdot \left(\frac{2.5}{7.5} \right) + R_{LLlane} \cdot 4.5 \cdot \frac{2.25}{7.5} \right] \qquad \boxed{R4_{LL} = 37.69}$$

$$R5_{LL} := 0 \qquad \boxed{R5_{LL} = 0}$$

$$R6_{LL} := 0 \qquad \boxed{R6_{LL} = 0}$$

E13-2.3 Unfactored Force Effects

The resulting unfactored force effects for the load cases shown above are shown in the table below. Note that the maximum shear and negative moment values are taken at the face of the column.

Unfactored Force Effects			
Effect	DC	DW	LL
Maximum Positive Moment	943.1	62.17	628.4
Maximum Negative Moment	-585.6	-39.03	-218.9
Maximum Shear	429.2	28.53	228.3
(Corresponding Moment)	-585.6	-39.03	-119.3

Table E13-2.3-1
Unfactored Force Effects

E13-2.4 Load Factors

From **LRFD [Table 3.4.1-1]**:

DC	DW	LL
$\gamma st_{DC} := 1.25$	$\gamma st_{DW} := 1.50$	$\gamma st_{LL} := 1.75$
$\gamma s1_{DC} := 1.0$	$\gamma s1_{DW} := 1.0$	$\gamma s1_{LL} := 1.0$

E13-2.5 Combined Force Effects

The resulting factored Service and Strength force effects for the load cases previously illustrated are shown in the tables below. The full Service and Strength factored moment and shear envelopes are shown in the following graphs.

Factored Service Force Effects				
Effect	DC	DW	LL	Total
Maximum Positive Moment	943.1	62.2	628.4	1633.7
Maximum Negative Moment	-585.6	-39.0	-218.9	-843.5
Maximum Shear	429.2	28.5	228.3	686.0
(Corresponding Moment)	-585.6	-39.0	-119.3	-743.9

Table E13-2.5-1
Factored Service Force Effects

Factored Strength Force Effects				
Effect	DC	DW	LL	Total
Maximum Positive Moment	1178.9	93.3	1099.7	2371.8
Maximum Negative Moment	-732.0	-58.5	-383.1	-1173.6
Maximum Shear	536.5	42.8	399.5	978.8
(Corresponding Moment)	-732.0	-58.5	-208.8	-999.3

Table E13-2.5-2
Factored Strength I Force Effects

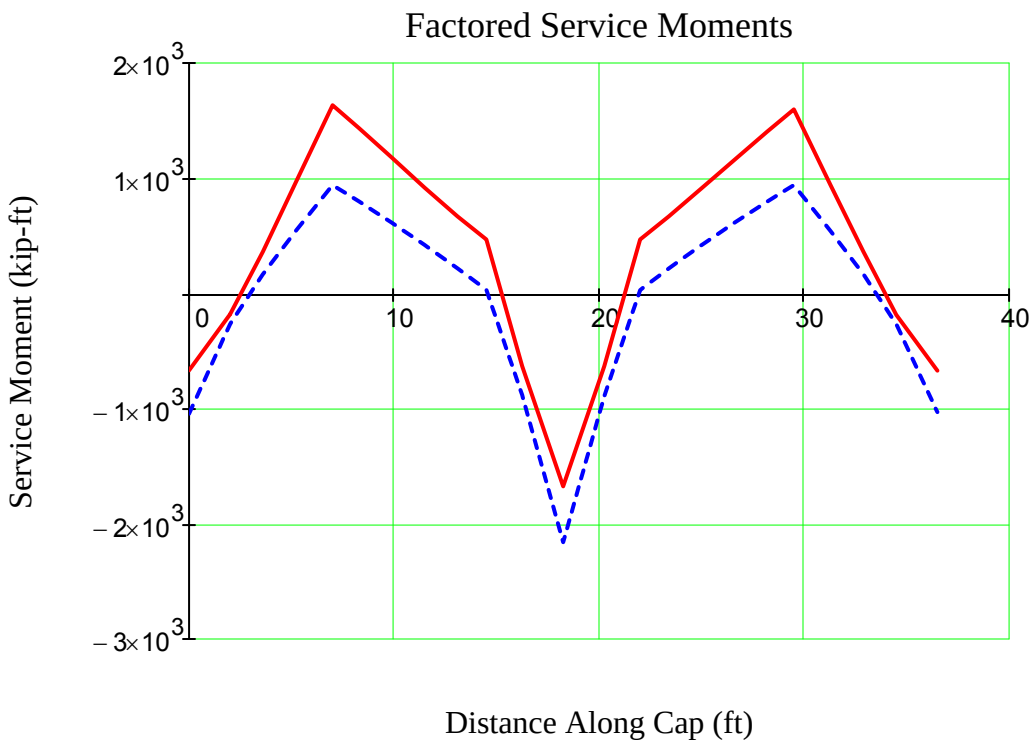
Factored Service Moments
Service Moment (kip-ft)
2×10^3
1×10^3
– 1×10^3
– 2×10^3
– 3×10^3
0
10
20
30
40
Distance Along Cap (ft)

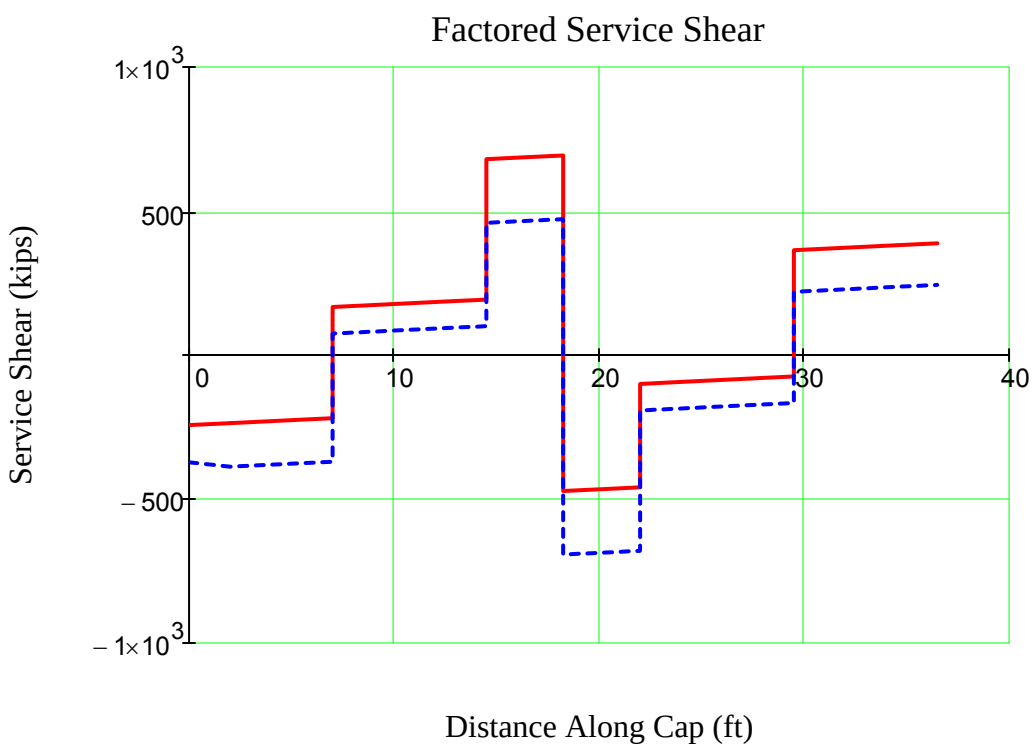
Factored Service Shear
Service Shear (kips)
1×10^3
500
– 500
– 1×10^3
0
10
20
30
40
Distance Along Cap (ft)

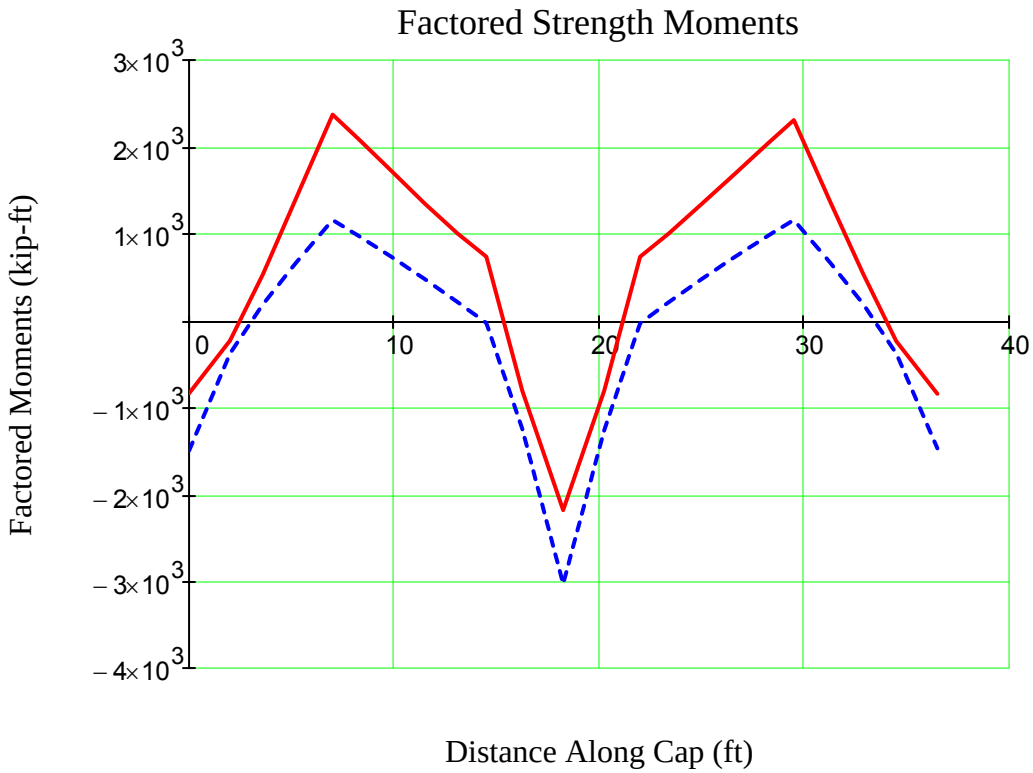
Factored Strength Moments
Factored Moments (kip-ft)
3×10^3
2×10^3
1×10^3
– 1×10^3
– 2×10^3
– 3×10^3
– 4×10^3
0
10
20
30
40
Distance Along Cap (ft)

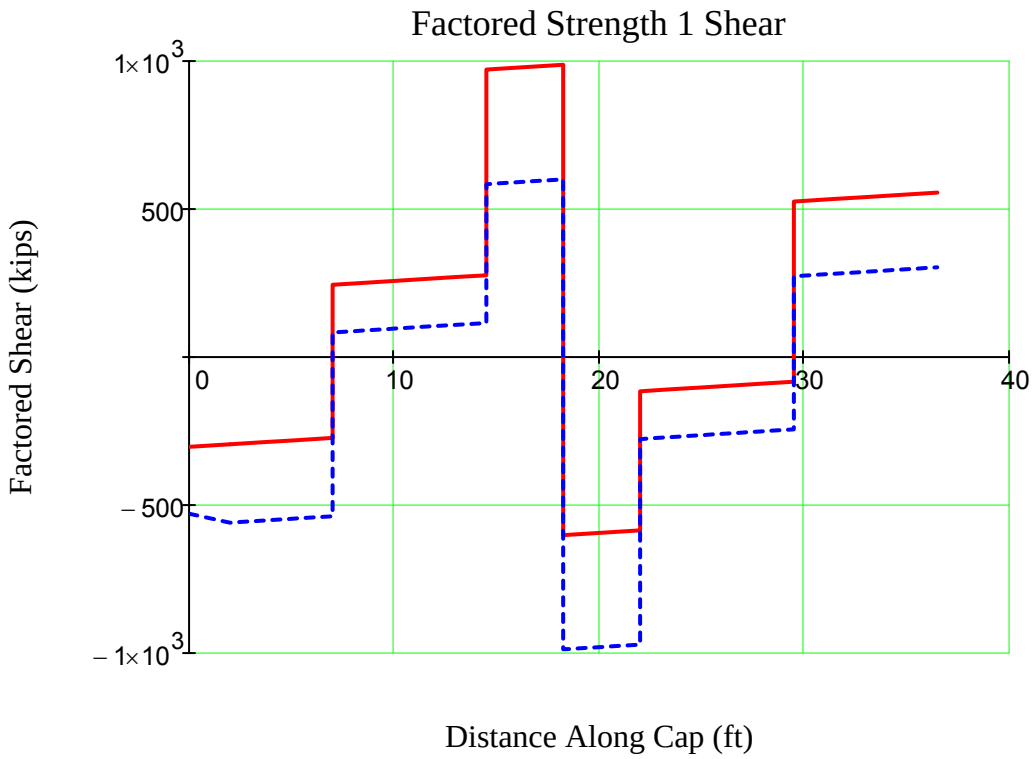
Factored Strength 1 Shear
Factored Shear (kips)
1×10^3
500
– 500
– 1×10^3
0
10
20
30
40
Distance Along Cap (ft)

E13-2.6 Pier Cap Design

Calculate positive and negative moment requirements.

E13-2.6.1 Positive Moment Capacity Between Columns

It is assumed that there will be two layers of positive moment reinforcement. Therefore the effective depth of the section at the pier is:

$cover := 2.5$ in

In accordance with **LRFD [5.10.3.1.3]** the minimum clear space between the bars in layers is one inch or the nominal diameter of the bars.

$spa_{clear} := 1.75$ in

$bar_{stirrup} := 5$ (transverse bar size)

$Bar_D(bar_{stirrup}) = 0.63$ in (transverse bar diameter)

$Bar_{No_pos} := 9$

$Bar_D(Bar_{No_pos}) = 1.13$ in (Assumed bar size)

$$d_e := cap_H \cdot 12 - cover - Bar_D(bar_{stirrup}) - Bar_D(Bar_{No_pos}) - \frac{spa_{clear}}{2}$$

$d_e = 42.87$ in

For flexure in non-prestressed concrete, $\phi_f := 0.9$.

The width of the cap:

$b_w := cap_W \cdot 12$ $b_w = 42$ in

$Mu_{pos} = 2372$ kip-ft

$$R_u := \frac{Mu_{pos} \cdot 12}{\phi_f \cdot b_w \cdot d_e^2}$$ $R_u = 0.4097$ ksi

$$\rho := 0.85 \frac{f'_c}{f_y} \cdot \left(1 - \sqrt{1 - \frac{2 \cdot R_u}{0.85 \cdot f'_c}}\right)$$ $\rho = 0.00738$

$A_s := \rho \cdot b_w \cdot d_e$ $A_s = 13.28$ in^2

This requires $n_{bars_pos} := 14$ bars. Use $n_{bars_pos1} := 9$ bars in the bottom layer and $n_{bars_pos2} := 5$ bars in the top layer. Check spacing requirements.

$$spa_{pos} := \frac{b_w - 2 \cdot (cover + Bar_D(bar_{stirrup})) - Bar_D(Bar_{No_pos})}{n_{bars_pos1} - 1}$$

$spa_{pos} = 4.33$ in

$clear_{spa} := spa_{pos} - Bar_D(Bar_{No_pos})$ $\boxed{clear_{spa} = 3.2}$ in

The minimum clear spacing is equal to 1.5 times the maximum aggregate size of 1.5 inches.

$spa_{min} := 1.5 \cdot 1.5$ $\boxed{spa_{min} = 2.25}$ in

Is $spa_{min} \le clear_{spa}$? $\boxed{check = "OK"}$

$As_{prov_pos} := Bar_A(Bar_{No_pos}) \cdot n_{bars_pos}$ $\boxed{As_{prov_pos} = 14}$ in^2

LRFD [5.7.2.2] $\alpha_1 := 0.85$ (for $f'_c \le 10.0$ ksi)

$a := \dfrac{As_{prov_pos} \cdot f_y}{\alpha_1 \cdot b_w \cdot f'_c}$ $\boxed{a = 6.72}$ in

$Mn_{pos} := As_{prov_pos} \cdot f_y \cdot \left(d_e - \dfrac{a}{2}\right) \cdot \dfrac{1}{12}$ $\boxed{Mn_{pos} = 2766}$ kip-ft

$Mr_{pos} := \phi_f \cdot Mn_{pos}$ $\boxed{Mr_{pos} = 2489}$ kip-ft

$\boxed{Mu_{pos} = 2372}$ kip-ft

Is $Mu_{pos} \le Mr_{pos}$? $\boxed{check = "OK"}$

Check the minimum reinforcement limits in accordance with **LRFD [5.7.3.3.2]**:

$S_{cap} := \dfrac{(cap_W \cdot 12) \cdot (cap_H \cdot 12)^2}{6}$ $\boxed{S_{cap} = 16128}$ in^3

$f_r = 0.24 \cdot \lambda \sqrt{f'_c}$ = modulus of rupture (ksi) **LRFD [5.4.2.6]**

$f_r := 0.24 \cdot \sqrt{f'_c}$ $\lambda = 1.0$ (normal wgt. conc.) **LRFD [5.4.2.8]** $\boxed{f_r = 0.45}$ ksi

$M_{cr} = \gamma_3(\gamma_1 \cdot f_r)S_{cap}$ therefore, $M_{cr} = 1.1(f_r)S_{cap}$

Where:

$\gamma_1 := 1.6$ flexural cracking variability factor

$\gamma_3 := 0.67$ ratio of yield strength to ultimate tensile strength of the reinforcement <u>for A615, Grade 60 reinforcement</u>

$M_{cr} := 1.1 \cdot f_r \cdot S_{cap} \cdot \dfrac{1}{12}$ $\boxed{M_{cr} = 664}$ kip-ft

$\boxed{1.33 \cdot Mu_{pos} = 3155}$ kip-ft

Is Mr_{pos} greater than the lesser value of M_{cr} and $1.33 \cdot Mu_{pos}$? $\boxed{check = "OK"}$

Check the Service I crack control requirements in accordance with **LRFD [5.7.3.4]**:

$\rho := \frac{As_{prov_pos}}{b_w \cdot d_e}$ $\rho = 0.00778$

$n := \text{floor}\left(\frac{E_s}{E_c}\right)$ $n = 8$

$k := \sqrt{(\rho \cdot n)^2 + 2 \cdot \rho \cdot n} - \rho \cdot n$ $k = 0.3$

$j := 1 - \frac{k}{3}$ $j = 0.9$

$d_c := cover + Bar_D(bar_{stirrup}) + \frac{Bar_D(Bar_{No_pos})}{2}$ $d_c = 3.69$ in

$Ms_{pos} = 1634$ kip-ft

$f_s := \frac{Ms_{pos}}{As_{prov_pos} \cdot j \cdot d_e} \cdot 12 \quad \leq 0.6\, f_y$ $f_s = 36.24$ ksi approx. = 0.6 f_y O.K.

The height of the section, h, is:

$h := cap_H \cdot 12$ $h = 48$ in

$\beta := 1 + \frac{d_c}{0.7 \cdot (h - d_c)}$ $\beta = 1.12$

$\gamma_e := 1.0$ for Class 1 exposure condition

$S_{max} := \frac{700 \gamma_e}{\beta \cdot f_s} - 2 \cdot d_c$ $S_{max} = 9.89$ in

$spa_{pos} = 4.33$ in

Is $spa_{pos} \leq S_{max}$? check = "OK"

E13-2.6.2 Positive Moment Reinforcement Cut Off Location

Terminate the top row of bars where bottom row of reinforcement satisfies the moment diagram.

$spa' := spa_{pos}$ $spa' = 4.33$ in

$As' := Bar_A(Bar_{No_pos}) \cdot n_{bars_pos1}$ $As' = 9$ in^2

LRFD [5.7.2.2] $\alpha_1 = 0.85$ (for $f'_c \leq 10.0$ ksi)

$a' := \frac{As' \cdot f_y}{\alpha_1 \cdot b_w \cdot f'_c}$ $a' = 4.32$ in

$d_{e'} := cap_H \cdot 12 - cover - Bar_D(bar_{stirrup}) - \frac{Bar_D(Bar_{No_pos})}{2}$

$d_{e'} = 44.31$ in

$M_{n'} := As' \cdot f_y \cdot \left(d_{e'} - \frac{a'}{2}\right) \cdot \frac{1}{12}$ $M_{n'} = 1897$ kip-ft

$M_{r'} := \phi_f \cdot M_{n'}$ $M_{r'} = 1707$ kip-ft

Based on the moment diagram, try locating the first cut off at $cut_{pos} := 10.7$ feet from the CL of the left column. Note that the Service I crack control requirements control the location of the cut off.

$M_{r'} = 1707$ kip-ft

$Mu_{cut1} = 1538$ kip-ft

$Ms_{cut1} = 1051$ kip-ft

Is $Mu_{cut1} \leq M_{r'}$? check = "OK"

Check the minimum reinforcement limits in accordance with **LRFD [5.7.3.3.2]**:

$M_{cr} = 664$ kip-ft

$1.33 \cdot Mu_{cut1} = 2045$ kip-ft

Is $M_{r'}$ greater than the lesser value of M_{cr} and $1.33 \cdot Mu_{cut1}$? check = "OK"

Check the Service I crack control requirements in accordance with **LRFD [5.7.3.4]**:

$\rho' := \frac{As'}{b_w \cdot d_{e'}}$ $\rho' = 0.00484$

$k' := \sqrt{(\rho' \cdot n)^2 + 2 \cdot \rho' \cdot n} - \rho' \cdot n$ $k' = 0.24$

$j' := 1 - \frac{k'}{3}$ $\boxed{j' = 0.92}$

$\boxed{Ms_{cut1} = 1051}$ kip-ft

$f_{s'} := \frac{Ms_{cut1}}{As' \cdot j' \cdot d_{e'}} \cdot 12 \quad \le 0.6\, f_y$ $\boxed{f_{s'} = 34.39}$ ksi $\le 0.6\, f_y$ O.K.

$\boxed{\beta = 1.12}$

$\boxed{\gamma_e = 1}$

$S_{max'} := \frac{700\gamma_e}{\beta \cdot f_{s'}} - 2 \cdot d_c$ $\boxed{S_{max'} = 10.81}$ in

$\boxed{spa' = 4.33}$ in

Is $spa' \le S_{max'}$? $\boxed{check = \text{"OK"}}$

The bars shall be extended past this cut off point for a distance not less than the following, **LRFD [5.11.1.2.1]**:

$\boxed{d_{e'} = 44.31}$ in

$\boxed{15 \cdot Bar_D(Bar_{No_pos}) = 16.92}$ in

$\boxed{\frac{col_{spa} \cdot 12}{20} = 10.95}$ in

$\boxed{BarExtend_{pos} = 44.31}$ in

The bars also must be extended past the point required for flexure the development length of the bar. From Chapter 9, **Table 9.9-1**, the development length for an epoxy coated number $\boxed{\rightarrow 9}$ bar with spacing less than 6-inches, is:

$l_{d_9} := 5.083$ ft

$\boxed{cut_{pos} + \frac{BarExtend_{pos}}{12} = 14.39}$

$\boxed{0.4 \cdot col_{spa} + l_{d_9} = 12.38}$

Similar calculations show that the second layer bottom mat bars can also be terminated at a distance of 2.0 feet from the CL of the left column. At least one quarter of the bars shall be

extended past the centerline of the support for continuous spans. Therefore, run the bottom layer bars to the end of the cap.

E13-2.6.3 Negative Moment Capacity at Face of Column

It is assumed that there will be one layer of negative moment reinforcement. Therefore the effective depth of the section at the pier is:

$\boxed{cover = 2.5}$ in

$\boxed{bar_{stirrup} = 5}$ (transverse bar size)

$\boxed{Bar_D(bar_{stirrup}) = 0.63}$ in (transverse bar diameter)

$Bar_{No_neg} := 8$

$\boxed{Bar_D(Bar_{No_neg}) = 1.00}$ in (Assumed bar size)

$$d_{e_neg} := cap_H \cdot 12 - cover - Bar_D(bar_{stirrup}) - \frac{Bar_D(Bar_{No_neg})}{2}$$

$\boxed{d_{e_neg} = 44.38}$ in

For flexure in non-prestressed concrete, $\boxed{\phi_f = 0.9}$.
The width of the cap:

$\boxed{b_w = 42}$ in

$\boxed{Mu_{neg} = -1174}$ kip-ft

$$R_{u_neg} := \frac{|Mu_{neg}| \cdot 12}{\phi_f \cdot b_w \cdot d_{e_neg}^2}$$

$\boxed{R_{u_neg} = 0.1892}$ ksi

$$\rho_{neg} := 0.85 \frac{f'_c}{f_y} \cdot \left(1 - \sqrt{1 - \frac{2 \cdot R_{u_neg}}{0.85 \cdot f'_c}}\right)$$

$\boxed{\rho_{neg} = 0.00326}$

$$A_{s_neg} := \rho_{neg} \cdot b_w \cdot d_{e_neg}$$

$\boxed{A_{s_neg} = 6.08}$ in^2

This requires $n_{bars_neg} := 9$ bars. Check spacing requirements.

$$spa_{neg} := \frac{b_w - 2 \cdot (cover + Bar_D(bar_{stirrup})) - Bar_D(Bar_{No_neg})}{n_{bars_neg} - 1}$$

$\boxed{spa_{neg} = 4.34}$ in

$clear_{spa_neg} := spa_{neg} - Bar_D(Bar_{No_neg})$ $\boxed{clear_{spa_neg} = 3.34}$ in

Is $spa_{min} \le clear_{spa_neg}$? $\boxed{check = \text{"OK"}}$

$As_{prov_neg} := Bar_A(Bar_{No_neg}) \cdot n_{bars_neg}$ $\boxed{As_{prov_neg} = 7.07}$ in^2

LRFD [5.7.2.2] $\alpha_1 := 0.85$ (for $f'_c \le 10.0$ ksi)

$a_{neg} := \dfrac{As_{prov_neg} \cdot f_y}{\alpha_1 \cdot b_w \cdot f'_c}$ $\boxed{a_{neg} = 3.39}$ in

$Mn_{neg} := As_{prov_neg} \cdot f_y \cdot \left(d_{e_neg} - \dfrac{a_{neg}}{2}\right) \cdot \dfrac{1}{12}$ $\boxed{Mn_{neg} = 1508}$ kip-ft

$Mr_{neg} := \phi_f \cdot Mn_{neg}$ $\boxed{Mr_{neg} = 1358}$ kip-ft

$\boxed{Mu_{neg} = 1174}$ kip-ft

Is $Mu_{neg} \le Mr_{neg}$? $\boxed{check = \text{"OK"}}$

Check the minimum reinforcement limits in accordance with **LRFD [5.7.3.3.2]**:

$\boxed{M_{cr} = 664}$ kip-ft

$\boxed{1.33 \cdot Mu_{neg} = 1561}$ kip-ft

Is Mr_{neg} greater than the lesser value of M_{cr} and $1.33 \cdot Mu_{neg}$? $\boxed{check = \text{"OK"}}$

Check the Service I crack control requirements in accordance with **LRFD [5.7.3.4]**:

$\rho_{neg} := \dfrac{As_{prov_neg}}{b_w \cdot d_{e_neg}}$ $\boxed{\rho_{neg} = 0.00379}$

$\boxed{n = 8}$

$k_{neg} := \sqrt{(\rho_{neg} \cdot n)^2 + 2 \cdot \rho_{neg} \cdot n} - \rho_{neg} \cdot n$ $\boxed{k_{neg} = 0.22}$

$j_{neg} := 1 - \dfrac{k_{neg}}{3}$ $\boxed{j_{neg} = 0.93}$

$d_{c_neg} := cover + Bar_D(bar_{stirrup}) + \dfrac{Bar_D(Bar_{No_neg})}{2}$ $\boxed{d_{c_neg} = 3.63}$ in

$\boxed{Ms_{neg} = 844}$ kip-ft

$f_{s_neg} := \frac{Ms_{neg}}{As_{prov_neg} \cdot j_{neg} \cdot d_{e_neg}} \cdot 12 \quad \le 0.6\, f_y$ $\qquad f_{s_neg} = 34.8$ ksi $\le 0.6\, f_y$ O.K.

The height of the section, h, is: $\boxed{h = 48}$ in

$\beta_{neg} := 1 + \frac{d_{c_neg}}{0.7 \cdot (h - d_{c_neg})}$ $\qquad \boxed{\beta_{neg} = 1.12}$

$\gamma_e := 1.0$ for Class 1 exposure condition

$S_{max_neg} := \frac{700 \gamma_e}{\beta_{neg} \cdot f_{s_neg}} - 2 \cdot d_{c_neg}$ $\qquad \boxed{S_{max_neg} = 10.76}$ in

$\boxed{spa_{neg} = 4.34}$ in

Is $spa_{neg} \le S_{max_neg}$? $\qquad \boxed{check = \text{"OK"}}$

E13-2.6.4 Negative Moment Reinforcement Cut Off Location

Cut 4 bars where the remaining 5 bars satisfy the moment diagram.

$n_{bars_neg'} := 5$

$spa'_{neg} := spa_{neg} \cdot 2$ $\qquad \boxed{spa'_{neg} = 8.69}$ in

$As'_{neg} := Bar_A(Bar_{No_neg}) \cdot n_{bars_neg'}$ $\qquad \boxed{As'_{neg} = 3.93}$ in^2

LRFD [5.7.2.2] $\qquad \alpha_1 := 0.85 \quad$ (for $f'_c \le 10.0$ ksi)

$a'_{neg} := \frac{As'_{neg} \cdot f_y}{\alpha_1 \cdot b_w \cdot f'_c}$ $\qquad \boxed{a'_{neg} = 1.89}$ in

$\boxed{d_{e_neg} = 44.38}$ in

$M_{n'_neg} := As'_{neg} \cdot f_y \cdot \left(d_{e_neg} - \frac{a'_{neg}}{2}\right) \cdot \frac{1}{12}$ $\qquad \boxed{M_{n'_neg} = 853}$ kip-ft

$M_{r'_neg} := \phi_f \cdot M_{n'_neg}$ $\qquad \boxed{M_{r'_neg} = 768}$ kip-ft

Based on the moment diagram, try locating the cut off at $cut_{neg} := 15.3$ feet from the CL of the left column. Note that the Service I crack control requirements control the location of the cut off.

$M_{r'_neg} = 768$ kip-ft

$Mu_{neg_cut} = 577$ kip-ft

$Ms_{neg_cut} = 381$ kip-ft

Is $Mu_{neg_cut} \le M_{r'_neg}$? check = "OK"

Check the minimum reinforcement limits in accordance with **LRFD [5.7.3.3.2]**:

$M_{cr} = 664$ kip-ft

$1.33 \cdot Mu_{neg_cut} = 767$ kip-ft

Is $M_{r'_neg}$ greater than the lesser value of M_{cr} and $1.33 \cdot Mu_{neg_cut}$? check = "OK"

Check the Service I crack control requirements in accordance with **LRFD [5.7.3.4]**:

$$\rho'_{neg} := \frac{As'_{neg}}{b_w \cdot d_{e_neg}}$$ $\rho'_{neg} = 0.00211$

$$k'_{neg} := \sqrt{(\rho'_{neg} \cdot n)^2 + 2 \cdot \rho'_{neg} \cdot n} - \rho'_{neg} \cdot n$$ $k'_{neg} = 0.17$

$$j'_{neg} := 1 - \frac{k'_{neg}}{3}$$ $j'_{neg} = 0.94$

$Ms_{neg_cut} = 381$ kip-ft

$$f_{s'_neg} := \frac{Ms_{neg_cut}}{As'_{neg} \cdot j'_{neg} \cdot d_{e_neg}} \cdot 12 \le 0.6\, f_y$$ $f_{s'_neg} = 27.79$ ksi $\le 0.6\, f_y$ O.K.

$\beta_{neg} = 1.12$

$\gamma_e = 1$

$$S_{max'_neg} := \frac{700 \gamma_e}{\beta_{neg} \cdot f_{s'_neg}} - 2 \cdot d_{c_neg}$$ $S_{max'_neg} = 15.30$ in

$spa'_{neg} = 8.69$ in

Is $spa'_{neg} \le S_{max'_neg}$? check = "OK"

The bars shall be extended past this cut off point for a distance not less than the following, **LRFD [5.11.1.2.3]**:

$d_{e_neg} = 44.38$ in

$12 \cdot Bar_D(Bar_{No_neg}) = 12$ in

$\frac{(col_{spa} - col_w) \cdot 12}{16} = 10.69$ in

$BarExtend_{neg} = 44.38$ in

These bars also must be extended past the point required for flexure the development length of the bar. From Chapter 9, **Table 9.9-1**, the development length for an epoxy coated number $\rightarrow 8$ "top" bar with spacing greater than 6-inches, is:

$l_{d_8} := 3.25$ ft

The cut off location is determined by the following:

$cut_{neg} - \frac{BarExtend_{neg}}{12} = 11.6$ ft

$col_{spa} - \frac{col_w}{2} - l_{d_8} = 13$ ft

Therefore, the cut off location is located at the following distance from the CL of the left column:

$cutoff_{location} = 11.6$ ft

By inspection, the remaining top mat reinforcement is adequate over the exterior columns. The inside face of the exterior column is located at:

$col_{face} := \frac{col_w}{2} \cdot \frac{1}{col_{spa}}$

$col_{face} = 0.11$ % along cap

$Mu_{negative}(col_{face}) = -378.37$ kip-ft

$Ms_{negative}(col_{face}) = -229.74$ kip-ft

E13-2.6.5 Shear Capacity at Face of Center Column

$Vu = 978.82$ kips

The Factored Shear Resistance, V_r

$$V_r = \phi_v(V_n)$$

$\phi_v := 0.9$

V_n is determined as the lesser of the following equations, **LRFD [5.8.3.3]**:

$$V_{n1} = V_c + V_s + V_p$$

$$V_{n2} = 0.25 \cdot f'_c \cdot b_v \cdot d_v + V_p$$

V_c , the shear resistance due to concrete (kip), is calculated as follows:

$$V_c = 0.0316 \cdot \beta \cdot \lambda \sqrt{f'_c} \cdot b_v \cdot d_v$$

Where:

b_v = effective web width (in) taken as the minimum section width within the depth d_v

d_v = effective shear depth (in), the distance, measured perpendicular to the neutral axis between the resultants of the tensile and compressive force due to flexure. It need not be taken less than the greater of $0.9d_e$ or $0.72h$

$b_v := cap_W \cdot 12$ $\quad b_v = 42$ in

$d_{e_neg} = 44.38$ in

$a_{neg} = 3.39$ in

$d_{v_neg} := d_{e_neg} - \frac{a_{neg}}{2}$ $\quad d_{v_neg} = 42.68$ in

$0.9 \cdot d_{e_neg} = 39.94$ in

$h = 48$ in $\quad 0.72 \cdot h = 34.56$ in

Therefore, use $d_v = 42.68$ in for V_c calculation.

$\beta := 2.0$ Factor indicating ability of diagonally cracked concrete to transmit tension. For nonprestressed sections, β = 2.0, **LRFD [5.8.3.4.1]**.

$\lambda := 1.0$ (normal wgt. conc.) **LRFD [5.4.2.8]**

$V_c := 0.0316 \cdot \beta \cdot \lambda \sqrt{f'_c} \cdot b_v \cdot d_v$ $\quad V_c = 211.94$ kips

V_s , the shear resistance due to steel (kips), is calculated as follows:

$$V_s = \frac{A_v \cdot f_y \cdot d_v \cdot (\cot(\theta) + \cot(\alpha)) \cdot \sin(\alpha)}{s}$$

Where:

s = spacing of stirrups (in)
θ = angle of inclination of diagonal compressive stresses (deg)
α = angle of inclination of transverse reinforcement to longitudinal axis (deg)

$s := 5$ in

$\theta := 45deg$ for non prestress members

$\alpha := 90deg$ for vertical stirrups

A_v = (# of stirrup legs)(area of stirrup)

$bar_{stirrup} = 5$

StirrupConfig := "Triple"

$stirrup_{legs} = 6$

$A_v := stirrup_{legs} \cdot (Bar_A(bar_{stirrup}))$ $A_v = 1.84$ in^2

$$V_s := \frac{A_v \cdot f_y \cdot d_v \cdot (\cot(\theta) + \cot(\alpha)) \cdot \sin(\alpha)}{s}$$ $V_s = 942.74$ kips

V_p , the component of the effective prestressing force in the direction of the applied shear:

$V_p := 0$ for non prestressed members

V_n is the lesser of:

$V_{n1} := V_c + V_s + V_p$ $V_{n1} = 1154.67$ kips

$V_{n2} := 0.25 \cdot f'_c \cdot b_v \cdot d_v + V_p$ $V_{n2} = 1568.41$ kips

Therefore, use: $V_n = 1154.67$ kips

$V_r := \phi_v \cdot V_n$ $V_r = 1039.2$ kips

$Vu = 978.82$ kips

Is $Vu \le V_r$? check = "OK"

Check the Minimum Transverse Reinforcement, **LRFD [5.8.2.5]**

Required area of transverse steel:

$\lambda := 1.0$ (normal wgt. conc.) **LRFD [5.4.2.8]**

$$Av_{min} := 0.0316 \cdot \frac{\lambda \sqrt{f'_c} \cdot b_v \cdot s}{f_y}$$

$Av_{min} = 0.21$ in^2

$A_v = 1.84$ in^2

Is $Av_{min} \le A_v$ (provided area of steel)? check = "OK"

Check the Maximum Spacing of the Transverse Reinforcement, **LRFD [5.8.2.7]**

If $v_u < 0.125f'_c$, then: $s_{max} := 0.8 \cdot d_v \le 24$ in

If $v_u >$ or $= 0.125f'_c$, then: $s_{max} := 0.4 \cdot d_v \le 12$ in

The shear stress on the concrete, v_u, is taken to be:

$$v_u := \frac{Vu}{\phi_v \cdot b_v \cdot d_v}$$

$v_u = 0.61$ ksi

$0.125 \cdot f'_c = 0.44$ ksi

$s_{max} = 12$ in

$s = 5$ in

Is the spacing provided $s \le s_{max}$? check = "OK"

Similar calculations are used to determine the required stirrup spacing for the remainder of the cap.

$s_2 = 12$	in	$s_3 = 6$	in
$StirrupConfig_2$ = "Double"		$StirrupConfig_3$ = "Double"	
$Vu2 = 276$	kips	$Vu3 = 560$	kips
$V_{r_2} = 408.94$	kips	$V_{r_3} = 627.13$	kips

It should be noted that the required stirrup spacing is typically provided for a distance equal to the cap depth past the CL of the girder. Consideration should also be given to minimize the number of stirrup spacing changes where practical. These procedures result in additional capacity in the pier cap that is often beneficial for potential future rehabilitation work on the structure.

E13-2.6.6 Temperature and Shrinkage Steel

Temperature and shrinkage steel shall be provided on each face and in each direction as calculated below. **LRFD [5.10.8]**

$cap_W = 3.5$ ft

$cap_H = 4$ ft

$b := cap_W \cdot 12$ $\quad b = 42$ in

$h = 48$ in

$As_{ts} := \dfrac{1.30 \cdot b \cdot h}{2 \cdot (b + h) \cdot f_y}$ $\quad As_{ts} = 0.24$ in²/ft in each face

Is the area required As_{ts} between 0.11 and 0.60 in² per foot? $\quad$ check = "OK"

Use number 5 bars at one foot spacing: $\quad Bar_A(5) = 0.31$ in²/ft in each face

E13-2.6.7 Skin Reinforcement

If the effective depth, d_e, of the reinforced concrete member exceeds 3 ft., longitudinal skin reinforcement is uniformly distributed along both side faces of the component for a distance of $d_e/2$ nearest the flexural tension reinforcement, **LRFD [5.7.3.4]**. The area of skin reinforcement (in²/ft of height) on each side of the face is required to satisfy:

$A_{sk} \geq 0.012(d_e - 30)$ and $A_{sk} \cdot \left(\dfrac{d_e}{2 \cdot 12}\right)$ need not exceed $(A_s / 4)$

Where: (For positive moment region)

A_{sk} = area of skin reinforcement (in²/ft)

A_s = area of tensile reinforcement (in²) $\quad A_s = 13.28$ in²

d_e = flexural depth taken as the distance from the compression face to the centroid of the steel, positive moment region (in) $\quad d_e = 42.87$ in

$A_{sk1} := 0.012 \cdot (d_e - 30)$ $\quad A_{sk1} = 0.15$ in²/ft

$A_{sk1} := A_{sk1} \cdot \left(\dfrac{d_e}{2 \cdot 12}\right)$ $\quad A_{sk1} = 0.28$ in²

$A_{sk2} := \dfrac{A_s}{4}$ $\quad A_{sk2} = 3.32$ in²

$A_{face} := \min(A_{sk1}, A_{sk2})$ (area req'd. per face within $d_e/2$ from tension reinf.) $\quad A_{face} = 0.28$ in²

$spa_max_{sk} := \min\left(\dfrac{d_e}{6}, 12\right)$ $\quad spa_max_{sk} = 7.15$ in

Use number 5 bars at 6" spacing: $\quad Bar_A(5) \cdot 2 = 0.61$ in² $> A_{face}$
(provides 2 bars within $d_e/2$ from tension reinf.)

Preceding calculations looked at skin reinforcement requirements in the positive moment region. For the negative moment region, #5 bars at 6" will also meet its requirements.

E13-2.7 Reinforcement Summary

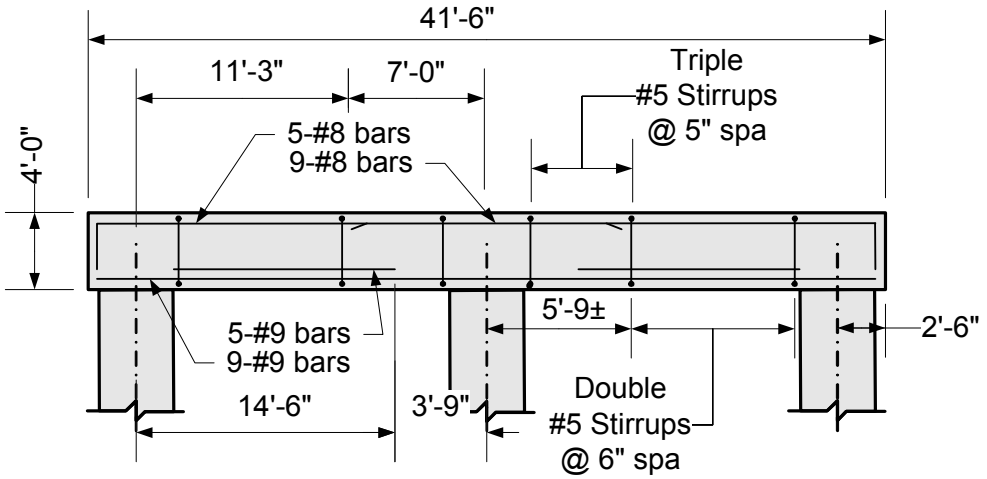

Figure E13-2.7-1
Cap Reinforcement - Elevation View

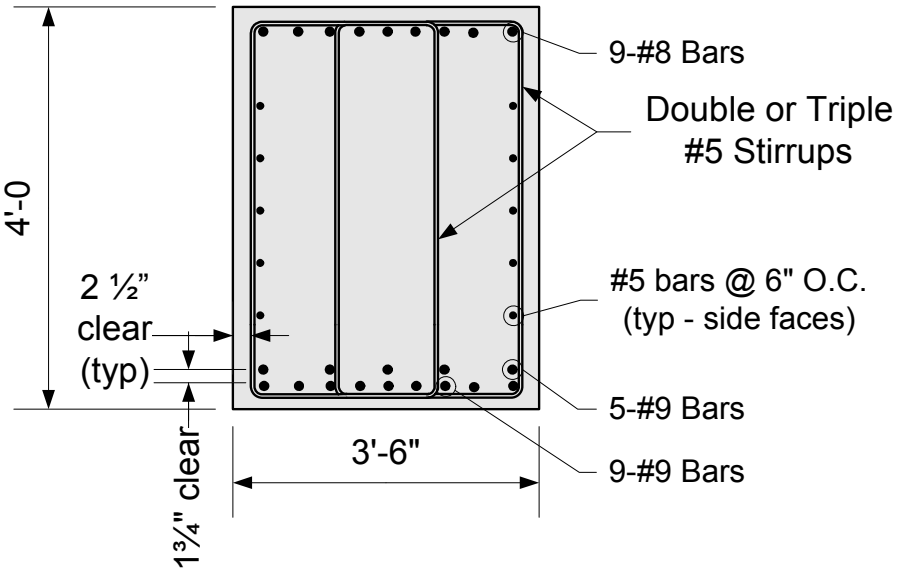

Figure E13-2.7-2
Cap Reinforcement - Section View

This page intentionally left blank.

Table of Contents

14.1 Introduction 7
14.1.1 Wall Development Process 7
14.1.1.1 Wall Numbering System 8
14.2 Wall Types 9
14.2.1 Gravity Walls 10
14.2.1.1 Mass Gravity Walls 10
14.2.1.2 Semi-Gravity Walls 10
14.2.1.3 Modular Gravity Walls 11
14.2.1.3.1 Modular Block Gravity Walls 11
14.2.1.3.2 Prefabricated Bin, Crib and Gabion Walls 11
14.2.1.4 Rock Walls 12
14.2.1.5 Mechanically Stabilized Earth (MSE) Walls: 12
14.2.1.6 Soil Nail Walls 12
14.2.2 Non-Gravity Walls 14
14.2.2.1 Cantilever Walls 14
14.2.2.2 Anchored Walls 14
14.2.3 Tiered and Hybrid Wall Systems 15
14.2.4 Temporary Shoring 16
14.2.5 Wall Classification Chart 16
14.3 Wall Selection Criteria 19
14.3.1 General 19
14.3.1.1 Project Category 19
14.3.1.2 Cut vs. Fill Application 19
14.3.1.3 Site Characteristics 20
14.3.1.4 Miscellaneous Design Considerations 20
14.3.1.5 Right of Way Considerations 20
14.3.1.6 Utilities and Other Conflicts 21
14.3.1.7 Aesthetics 21
14.3.1.8 Constructability Considerations 21
14.3.1.9 Environmental Considerations 21
14.3.1.10 Cost 21
14.3.1.11 Mandates by Other Agencies 22

14.3.1.12 Requests made by the Public 22
14.3.1.13 Railing 22
14.3.1.14 Traffic barrier 22
14.3.2 Wall Selection Guide Charts 22
14.4 General Design Concepts 25
14.4.1 General Design Steps 25
14.4.2 Design Standards 26
14.4.3 Design Life 26
14.4.4 Subsurface Exploration 26
14.4.5 Load and Resistance Factor Design Requirements 27
14.4.5.1 General 27
14.4.5.2 Limit States 27
14.4.5.3 Design Loads 28
14.4.5.4 Earth Pressure 28
14.4.5.4.1 Earth Load Surcharge 30
14.4.5.4.2 Live Load Surcharge 30
14.4.5.4.3 Compaction Loads 30
14.4.5.4.4 Wall Slopes 31
14.4.5.4.5 Loading and Earth Pressure Diagrams 31
14.4.5.5 Load factors and Load Combinations 39
14.4.5.6 Resistance Requirements and Resistance Factors 41
14.4.6 Material Properties 41
14.4.7 Wall Stability Checks 43
14.4.7.1 External Stability 43
14.4.7.2 Wall Settlement 47
14.4.7.2.1 Settlement Guidelines 47
14.4.7.3 Overall Stability 48
14.4.7.4 Internal Stability 48
14.4.7.5 Wall Embedment 48
14.4.7.6 Wall Subsurface Drainage 48
14.4.7.7 Scour 49
14.4.7.8 Corrosion 49
14.4.7.9 Utilities 49

14.4.7.10 Guardrail and Barrier 49
14.5 Cast-In-Place Concrete Cantilever Walls 50
14.5.1 General 50
14.5.2 Design Procedure for Cast-in-Place Concrete Cantilever Walls 50
14.5.2.1 Design Steps 51
14.5.3 Preliminary Sizing 52
14.5.3.1 Wall Back and Front Slopes 53
14.5.4 Unfactored and Factored Loads 53
14.5.5 External Stability Checks 54
14.5.5.1 Eccentricity Check 54
14.5.5.2 Bearing Resistance 54
14.5.5.3 Sliding 58
14.5.5.4 Settlement 59
14.5.6 Overall Stability 59
14.5.7 Structural Resistance 59
14.5.7.1 Stem Design 59
14.5.7.2 Footing Design 59
14.5.7.3 Shear Key Design 60
14.5.7.4 Miscellaneous Design Information 60
14.5.8 Design Tables for Cast-in-Place Concrete Cantilever Walls 62
14.5.9 Design Examples 62
14.5.10 Summary of Design Requirements 67
14.6 Mechanically Stabilized Earth Retaining Walls 69
14.6.1 General Considerations 69
14.6.1.1 Usage Restrictions for MSE Walls 69
14.6.2 Structural Components 70
14.6.2.1 Reinforced Earthfill Zone 71
14.6.2.2 Reinforcement: 72
14.6.2.3 Facing Elements 73
14.6.3 Design Procedure 78
14.6.3.1 General Design Requirements 78
14.6.3.2 Design Responsibilities 78
14.6.3.3 Design Steps 79

14.6.3.4 Initial Geometry 80
14.6.3.4.1 Wall Embedment 80
14.6.3.4.2 Wall Backslopes and Foreslopes 80
14.6.3.5 External Stability 81
14.6.3.5.1 Unfactored and Factored Loads 81
14.6.3.5.2 Sliding Stability 81
14.6.3.5.3 Eccentricity Check 82
14.6.3.5.4 Bearing Resistance 83
14.6.3.6 Vertical and Lateral Movement 84
14.6.3.7 Overall Stability 84
14.6.3.8 Internal Stability 85
14.6.3.8.1 Loading 85
14.6.3.8.2 Reinforcement Selection Criteria 86
14.6.3.8.3 Factored Horizontal Stress 87
14.6.3.8.4 Maximum Factored Tension Force 90
14.6.3.8.5 Reinforcement Pullout Resistance 90
14.6.3.8.6 Reinforced Design Strength 92
14.6.3.8.7 Calculate T_{al} for Inextensible Reinforcements 93
14.6.3.8.8 Calculate T_{al} for Extensible Reinforcements 93
14.6.3.8.9 Design Life of Reinforcements 94
14.6.3.8.10 Reinforcement /Facing Connection Design Strength 94
14.6.3.8.11 Design of Facing Elements 95
14.6.3.8.12 Corrosion 95
14.6.3.9 Wall Internal Drainage 95
14.6.3.10 Traffic Barrier 95
14.6.3.11 Design Example 95
14.6.3.12 Summary of Design Requirements 96
14.7 Modular Block Gravity Walls 99
14.7.1 Design Procedure for Modular Block Gravity Walls 99
14.7.1.1 Initial Sizing and Wall Embedment 100
14.7.1.2 External Stability 100
14.7.1.2.1 Unfactored and Factored Loads 100
14.7.1.2.2 Sliding Stability 100

14.7.1.2.3 Bearing Resistance 101
14.7.1.2.4 Eccentricity Check 101
14.7.1.3 Settlement 101
14.7.1.4 Overall Stability 102
14.7.1.5 Summary of Design Requirements 102
14.8 Prefabricated Modular Walls 104
14.8.1 Metal and Precast Bin Walls 104
14.8.2 Crib Walls 104
14.8.3 Gabion Walls 105
14.8.4 Design Procedure 105
14.8.4.1 Initial Sizing and Wall Embedment 106
14.8.5 Stability checks 106
14.8.5.1 Unfactored and Factored Loads 106
14.8.5.2 External Stability 107
14.8.5.3 Settlement 107
14.8.5.4 Overall Stability 107
14.8.5.5 Structural Resistance 108
14.8.6 Summary of Design Safety Factors and Requirements 108
14.9 Soil Nail Walls 110
14.9.1 Design Requirements 110
14.10 Steel Sheet Pile Walls 112
14.10.1 General 112
14.10.2 Sheet Piling Materials 112
14.10.3 Driving of Sheet Piling 113
14.10.4 Pulling of Sheet Piling 113
14.10.5 Design Procedure for Sheet Piling Walls 113
14.10.6 Summary of Design Requirements 116
14.11 Soldier Pile Walls 118
14.11.1 Design Procedure for Soldier Pile Walls 118
14.11.2 Summary of Design Requirements 119
14.12 Temporary Shoring 121
14.12.1 When Slopes Won't Work 121
14.12.2 Plan Requirements 121

14.12.3 Shoring Design/Construction 121
14.13 Noise Barrier Walls 122
14.13.1 Wall Contract Process 122
14.13.2 Pre-Approval Process 124
14.14 Contract Plan Requirements 125
14.15 Construction Documents 126
14.15.1 Bid Items and Method of Measurement 126
14.15.2 Special Provisions 126
14.16 Submittal Requirements for Pre-Approval Process 128
14.16.1 General 128
14.16.2 General Requirements 128
14.16.3 Qualifying Data Required For Approval 128
14.16.4 Maintenance of Approval Status as a Manufacturer 129
14.16.5 Loss of Approved Status 130
14.17 References 131
14.18 Design Examples 132

14.1 Introduction

Retaining walls are used to provide lateral resistance for a mass of earth or other material to accommodate a transportation facility. These walls are used in a variety of applications including right-of-way restrictions, protection of existing structures that must remain in place, grade separations, new highway embankment construction, roadway widening, stabilization of slopes, protection of environmentally sensitive areas, staging, and temporary support including excavation or underwater construction support, etc.

Several types of retaining wall systems are available to retain earth and meet specific project requirements. Many of these wall systems are proprietary wall systems while others are non-proprietary or design-build in Wisconsin. The wall selection criteria and design policies presented in this chapter are to ensure consistency of standards and applications used throughout WisDOT projects.

WisDOT policy item:

Retaining walls (such as MSE walls with precast concrete panel facing) that are susceptible to damage from vehicular impact shall be protected by a roadway barrier.

14.1.1 Wall Development Process

Overall, the wall development process requires an iterative collaboration between WisDOT Regions, Structures Design Section, Geotechnical Engineering Unit and WisDOT Consultants.

Retaining wall development is described in Section 11-55-5 of the *Facilities Development Manual*. WisDOT Regional staff determines the need for permanent retaining walls on highway projects. A wall number is assigned as per criteria discussed in 14.1.1.1 of this chapter. The Regional staff prepares a Structures Survey Report (SSR) that includes a preliminary evaluation of wall type, location, and height including a preliminary layout plan.

Based on the SSR, a Geotechnical site investigation (see Chapter 10 – Geotechnical Investigation) may be required to determine foundation and retained soil properties. A hydraulic analysis is also conducted, if required, to asses scour potential. The Geotechnical investigation generally includes a subsurface and laboratory investigation. For the departmental-designed walls, the Bureau of Technical Services, Geotechnical Engineering Unit can recommend the scope of soil exploration needed and provide/recommend bearing resistance, overall stability, and settlement of walls based on the geotechnical exploration results. These Geotechnical recommendations are presented in a Site Investigation Report.

The SSR is sent to the wall designer (Structures Design Section or WisDOT's Consultant) for wall selection, design and contract plan preparation. Based on the wall selection criteria discussed in 14.3, either a proprietary or a non-proprietary wall system is selected.

Proprietary walls, as defined in 14.2, are pre-approved by the WisDOT's Bureau of Structures. Preapproval process for the proprietary walls is explained in 14.16. The structural design, internal and final external stability of proprietary wall systems are the responsibility of the supplier/contractor. The design and shop drawing computations of the proprietary wall systems

are also reviewed by the Bureau of Structures in accordance with the plans and special provisions. The preliminary external stability, overall stability and settlement computations of these walls are performed by the Geotechnical Engineering Unit or the WisDOT's Consultant in the project design phase. Design and shop drawings must be accepted by the Bureau of Structures prior to start of the construction. Design of all temporary walls is the responsibility of the contractor.

Non-proprietary retaining walls are designed by WisDOT or its Consultant. The internal stability and the structural design of such walls are performed by the Structures Design Section or WisDOT's Consultant. The external and overall stability is performed by the Geotechnical Engineering Unit or Geotechnical Engineer of record.

The final contract plans of retaining walls include final plans, details, special provisions, contract requirements, and cost estimate for construction. The Subsurface Exploration sheet depicting the soil borings is part of the final contract plans.

The wall types and wall selection criteria to be used in wall selection are discussed in 14.2 and 14.3 of this chapter respectively. General design concepts of a retaining wall system are discussed in 14.4. Design criteria for specific wall systems are discussed in sections 14.5 thru 14.11. The plan preparation process is briefly described in Chapter 2 – General and Chapter 6 – Plan Preparation. The contract documents and contract requirements are discussed in 14.14 and 14.15 respectively.

For further information related to wall selection, design, approval process, pre-approval and review of proprietary wall systems please contact Structures Design Section of the Bureau of Structures at 608-266-8489. For questions pertaining to geotechnical analyses and geotechnical investigations please contact the Geotechnical Engineering Unit at 608-246-7940.

14.1.1.1 Wall Numbering System

Refer to 2.5 for assigning structure numbers.

14.2 Wall Types

Retaining walls can be divided into many categories as discussed below.

Conventional Walls

Retaining walls can be divided into gravity, semi-gravity, and non-gravity cantilever or anchored walls. A brief description of these walls is presented in 14.2.1 and 14.2.2 respectively.

Miscellaneous types of walls including multi-tiered walls, and hybrid or composite walls are also used by combining the wall types mentioned in the previous paragraph. These walls are used only under special project requirements. These walls are briefly discussed in 14.2.3, but the design requirements of these walls will not be presented in this chapter. In addition, some walls are also used for temporary shoring and discussed briefly in 14.2.4.

Permanent or Temporary Walls

All walls can be divided into permanent or temporary walls, depending on project application. Permanent walls have a typical designed life of 75 years. The temporary walls are designed for a service life of 3 years, or the intended project duration, whichever is greater. Temporary wall systems have less restrictive requirements for construction, material and aesthetics.

Fill Walls or Cut Walls

A retaining wall can also be classified as a fill wall, or a cut wall. This description is based on the nature of the earthwork required to construct the wall. If the roadway cross-sections (which include the wall) indicate that existing earth/soil must be removed (excavated) to install the wall, it is considered a 'cut' wall. If the roadway cross-sections indicate that earth fill will be placed behind the wall, with little excavation, the wall is considered a 'fill' wall. Sometimes wall construction requires nearly equal combinations of earth excavation and earth fill, leading to the nomenclature of a 'cut/fill' wall.

Bottom-up or Top-down Constructed Walls

This wall classification method refers to the method in which a wall is constructed. If a wall is constructed from the bottom of the wall, upward to the top, it is considered a bottom-up type of wall. Examples of this include CIP cantilever, MSE and modular block walls. Bottom-up walls are generally the most cost effective type. If a wall is constructed downward, from the top of the wall to the bottom, it is considered a top-down type of wall. This generally requires the insertion of some type of wall support member below the existing ground, and then excavation in front of the wall to the bottom of the exposed face. Examples of this include soil nail, soldier pile, cantilever sheet pile and anchored sheet pile walls. These walls are generally used when excavation room is limited.

Proprietary or Non-Proprietary

Some retaining walls have prefabricated modules or components that are proprietary in nature. Based on the use of proprietary components, walls can be divided into the categories of proprietary and non-proprietary wall systems as defined in 14.1.1.

A proprietary retaining wall system is considered as a patented or trademarked retaining wall system or a wall system comprised of elements/components that are protected by a trade name, brand name, or patent and are designed and supported by the manufacturer. MSE walls, modular block gravity walls, bin, and crib walls are considered proprietary walls because these walls have components which are either patented or have trademarks.

Proprietary walls require preapproval and appropriate special provisions. The preapproval requirements are discussed in 14.16 of this chapter. Proprietary walls also have special design requirements for the structural components, and are discussed in further detail within each specific wall design section. Most MSE, modular block, bin or crib walls require pre-approval and/or special provisions.

A non-proprietary retaining wall is fully designed and detailed by the designer or may be design-build. A non-proprietary retaining wall system may contain proprietary elements or components as well as non-proprietary elements and components. CIP cantilever walls, rock walls, soil nail walls and non-gravity walls fall under this category.

Wall classification is shown in Table 14.2-1 and is based on wall type, project function category, and method of construction.

14.2.1 Gravity Walls

Gravity walls are considered externally stabilized walls as these walls use self weight to resist lateral pressures due to earth and water. Gravity walls are generally subdivided into mass gravity, semi-gravity, modular gravity, mechanically stabilized reinforced earth (MSE), and in-situ reinforced earth wall (soil nailing) categories. A schematic diagram of the various types of gravity walls is included in Figure 14.2-1.

14.2.1.1 Mass Gravity Walls

A mass gravity wall is an externally stabilized, cast-in-place rigid gravity wall, generally trapezoidal in shape. The construction of these walls requires a large quantity of materials so these are rarely used except for low height walls less than 8.0 feet. These walls mainly rely on self-weight to resist external pressures and their construction is staged as bottom up construction, mostly in fill or cut/fill situations.

14.2.1.2 Semi-Gravity Walls

Semi-gravity walls resist external forces by the combined action of self-weight, weight of soil above footing and the flexural resistance of the wall components. A cast-in-place (CIP) concrete cantilever wall is an example and consists of a reinforced concrete stem and a base footing. These walls are non-proprietary.

Cantilever walls are best suited for use in areas exhibiting good bearing material. When bearing or settlement is a problem, these walls can be founded on piles or foundation improvement may be necessary. The use of piles significantly increases the cost of these walls. Walls exceeding 28 feet in height are provided with counter-forts or buttress slabs. Construction of these walls is staged as bottom-up construction and mostly constructed in fill situations. Cantilever walls are more suited where MSE walls are not feasible, although these walls are generally costlier than MSE walls.

14.2.1.3 Modular Gravity Walls

Modular walls are also known as externally stabilized gravity walls as these walls resist external forces by utilizing self-weight. Modular walls have prefabricated modules/components which are considered proprietary. The construction is bottom-up construction mostly used in fill situations.

14.2.1.3.1 Modular Block Gravity Walls

Modular block concrete facings are used without soil reinforcement to function as an externally stabilized gravity wall. The modular blocks are prefabricated dry cast or wet cast concrete blocks and the blocks are stacked vertically or slightly battered to resist external forces. The concrete blocks are either solid concrete or hollow core concrete blocks. The hollow core concrete blocks are filled with crushed aggregates or sand. Modular block gravity walls are limited to a maximum design height of 8 feet under optimum site geometry and soils conditions, but site conditions generally dictate the need for MSE walls when design heights are greater than 5.5 feet. Walls with a maximum height of less than 4 feet are deemed as “minor retaining walls” and do not require an R number. Refer to FDM 11-55-5.2 for more information. The modular blocks are proprietary and vary in sizes.

14.2.1.3.2 Prefabricated Bin, Crib and Gabion Walls

Bin Walls: Concrete and metal bin walls are built of adjoining open or closed faced bins and then filled with soil/rocks. Each metal bin is comprised of individual members bolted together. The concrete bin wall is comprised of prefabricated interlocking concrete modules. These wall systems are proprietary wall systems.

Crib Walls: Crib walls are constructed of interlocking prefabricated units of reinforced or unreinforced concrete or timber elements. Each crib is comprised of longitudinal and transverse members. Each unit is filled with free draining material. These wall systems are proprietary wall systems.

Gabion Walls**:** Gabion walls are constructed of steel wire baskets filled with selected rock fragments and tied together. Gabions walls are flexible, free draining and easy to construct. These wall systems are proprietary wall systems. Maximum heights are normally less than 21 feet. These walls are desirable where equipment access is limited. The wires used for constructing gabions baskets must be designed with adequate corrosion protection.

14.2.1.4 Rock Walls

Rock walls are also known as 'Rockery Walls'. These types of gravity walls are built by stacking locally available large stones or boulders into a trapezoid shape. These walls are highly flexible and height of these walls is generally limited to approximately 8.0 feet. A layer of gravel and geotextile is commonly used between the stones and the retained soil. These walls can be designed using the *FHWA Rockery Design and Construction Guideline*.

14.2.1.5 Mechanically Stabilized Earth (MSE) Walls:

Mechanically Stabilized Earth (MSE) walls include a selected soil mass reinforced with metallic or geosynthetic reinforcement. The soil reinforcement is connected to a facing element to prevent the reinforced soil from sloughing. Construction of these walls is staged as bottom-up construction. These can be constructed in cut and fill situations, but are better suited to fill sites. MSE walls are normally used for wall heights between 10 to 40 feet. A brief description of various types of MSE walls is given below:

Precast Concrete Panel MSE Walls: These types of walls employ a metallic strip or wire grid reinforcement connected to precast concrete panels to reinforce a selected soil mass. The concrete panels are usually 5'x5' or 5'x10' size panels. These walls are proprietary wall systems.

Modular Block Facing MSE Wall: Prefabricated modular concrete block walls consist of almost vertically stacked concrete modular blocks and the soil reinforcement is secured between the blocks at predetermined levels. Metallic strips or geogrids are generally used as soil reinforcement to reinforce the selected soil mass. Concrete blocks are either solid or hollow core blocks, and must meet freeze/thaw requirements. The hollow core blocks are filled with aggregates or sand. These types of walls are proprietary wall systems.

Geotextile/Geogrids/Welded Wire Faced MSE Walls: These types of MSE walls consist of compacted soil layers reinforced with continuous or semi-continuous geotextile, geogrid or welded wire around the overlying reinforcement. The wall facing is formed by wrapping each layer of reinforcement around the overlying layer of backfill and re-embedding the free end into the backfill. These types of walls are used for temporary or permanent applications. Permanent facings include shotcrete, gunite, galvanized welded wire mesh, cast-in-place concrete or prefabricated concrete panels.

14.2.1.6 Soil Nail Walls

Soil nail walls are internally stabilized cut walls that use in-situ reinforcement for resisting earth pressures. The large diameter rebars (generally #10 or greater) are typically used for the reinforcement. The construction of soil nail walls is staged top-down and soil nails are installed after each stage of excavation. Shotcrete can be applied as a facing. The facing of a soil nail wall is typically covered with vertical drainage strips located over the nail then covered with shotcrete. Soil nail walls are used for temporary or permanent construction. Specialty contractors are required when constructing these walls. Soil nail walls have been installed to heights of 60.0 feet or more but there have only been a limited number of soil nail walls constructed on WisDOT projects.

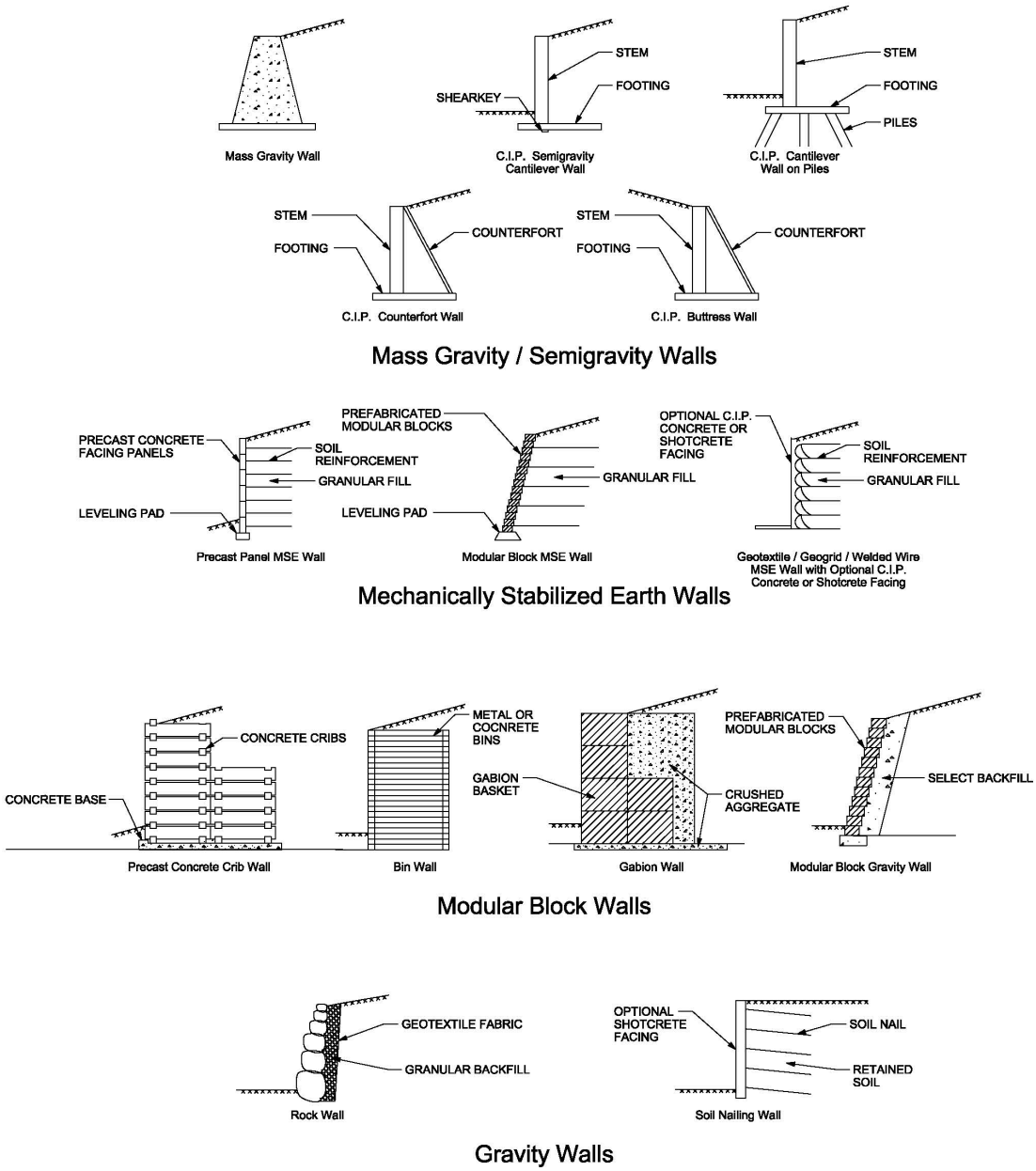

Figure 14.2-1
Gravity Walls

14.2.2 Non-Gravity Walls

Non-gravity walls are classified into cantilever and anchored wall categories. These walls are considered as externally stabilized walls and generally used in cut situations. The walls include sheet pile, soldier pile, tangent and secant pile type with or without anchors. Figure 14.2-2 shows common types of non-gravity walls.

14.2.2.1 Cantilever Walls

These types of walls derive lateral resistance through embedment of vertical elements into natural ground and the flexure resistance of the structural members. They are used where excavation support is needed in shallow cut situations.

Cantilever Sheet Pile Walls: Cantilever sheet pile walls consist of interlocking steel panels, driven into the ground to form a continuous sheet pile wall. The sheet piles resist the lateral earth pressure utilizing the passive resistance in front of the wall and the flexural resistance of the sheet pile. Most sheet pile walls are less than 15 feet in height.

Soldier Pile Walls: A soldier pile wall derives lateral resistance and moment capacity through embedment of vertical members (soldier piles) into natural ground usually in cut situations. The vertical elements (usually H piles) may be drilled or driven steel or concrete members. The soil behind the wall is retained by lagging. The lagging may be steel, wood, or concrete. For permanent walls, wall facings are usually constructed of either cast-in-place concrete or precast concrete panels (prestressed, if needed) that extend between vertical elements. Solider pile walls that use precast panels and H piles are also known as post-and-panel walls. Soldier pile walls can also be constructed from the bottom-up. These walls should be considered when minimizing disturbance to the site is critical, such as environmental and/or construction procedures. Soldier pile walls are also suitable for sites where rock is encountered near the surface, since holes for the piles can be drilled/prebored into the rock.

Tangent and Secant Pile Walls: A tangent pile wall consists of a single row of drilled shafts (bored piles) installed in the ground. Each pile touches the adjacent pile tangentially. The concrete piles are reinforced using a single steel beam or a steel reinforcement cage. A secant wall, similar to a tangent pile wall, consists of overlapping adjacent piles. All piles generally contain reinforcement, although alternating reinforced piles may be necessary. Secant and tangent wall systems are used to hold earth and water where water tightness is important, and lowering of the water table is not desirable. To improve wall water tightness, additional details can used to minimize water seepage.

14.2.2.2 Anchored Walls

Anchored walls are externally stabilized non-gravity cut walls. Anchored walls are essentially the same as cantilever walls except that these walls utilize anchors (tiebacks) to extend the wall heights beyond the design limit of the cantilever walls. These walls require less toe embedment than cantilever walls.

These walls derive lateral resistance by embedment of vertical wall elements into firm ground and by anchorages. Most commonly used anchored walls are anchored sheet pile walls and

soldier pile walls. Tangent and secant walls can also be anchored with tie backs and used as anchored walls. The anchors can be attached to the walls by tie rods, bars or wire tendons. The anchoring device is generally a deadman, screw-type, or grouted tieback anchor. Anchored walls can be built to significant heights using multiple rows of anchors.

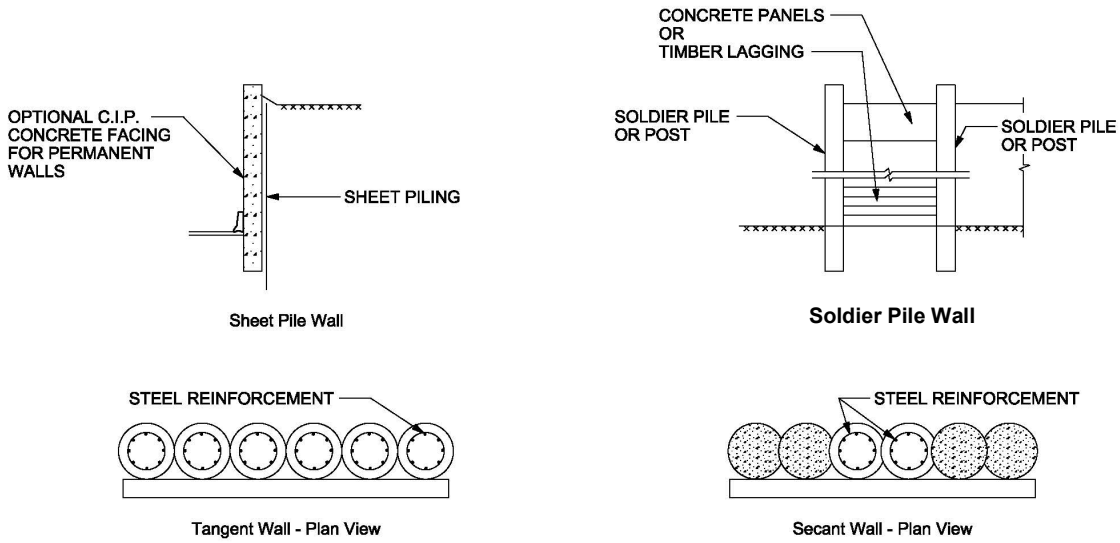

Cantilever Walls

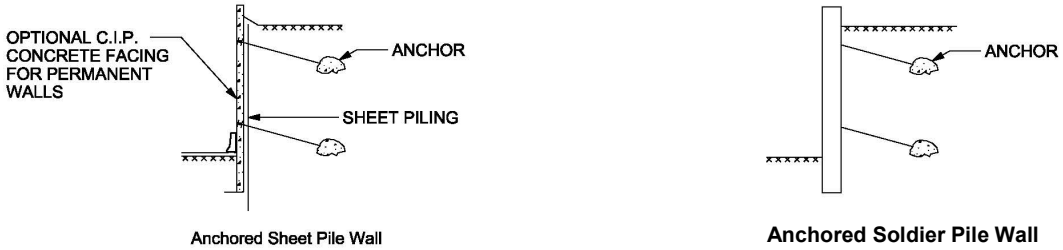

Anchored Walls

Figure 14.2-2
Non-Gravity Walls

14.2.3 Tiered and Hybrid Wall Systems

A tiered wall system is a series of two or more walls, with each wall set back from the underlying walls. The upper wall exerts an additional surcharge on the lower lying wall and requires

special design attention. The design of these walls has not been discussed in this chapter. Hybrids wall systems combine wall components from two or more different wall systems and provide an alternative to a single type of wall used in cut or fill locations. These types of walls require special design attention as components of these walls require different magnitudes of deformation to develop loading resistance. The design of such walls will be on a case-by-case basis, and is not discussed in this chapter.

Some examples of tiered and hybrid walls systems are shown in Figure 14.2-3.

14.2.4 Temporary Shoring

Temporary shoring is used to protect existing transportation facilities, utilities, buildings, or other critical features when safe slopes cannot be made for structural excavations. Shoring may be required within the limits of structures or on the approach roadway due to grade changes or staged construction. Shoring should not be required nor paid for when used primarily for the convenience of the contractor. Temporary shoring is designed by the contractor and may consist of a wall system, or some other type of support. MSE walls with flexible facings and sheet pile walls are commonly used for temporary shoring.

14.2.5 Wall Classification Chart

A wall classification chart has been developed and shown as Table 14.2-1.

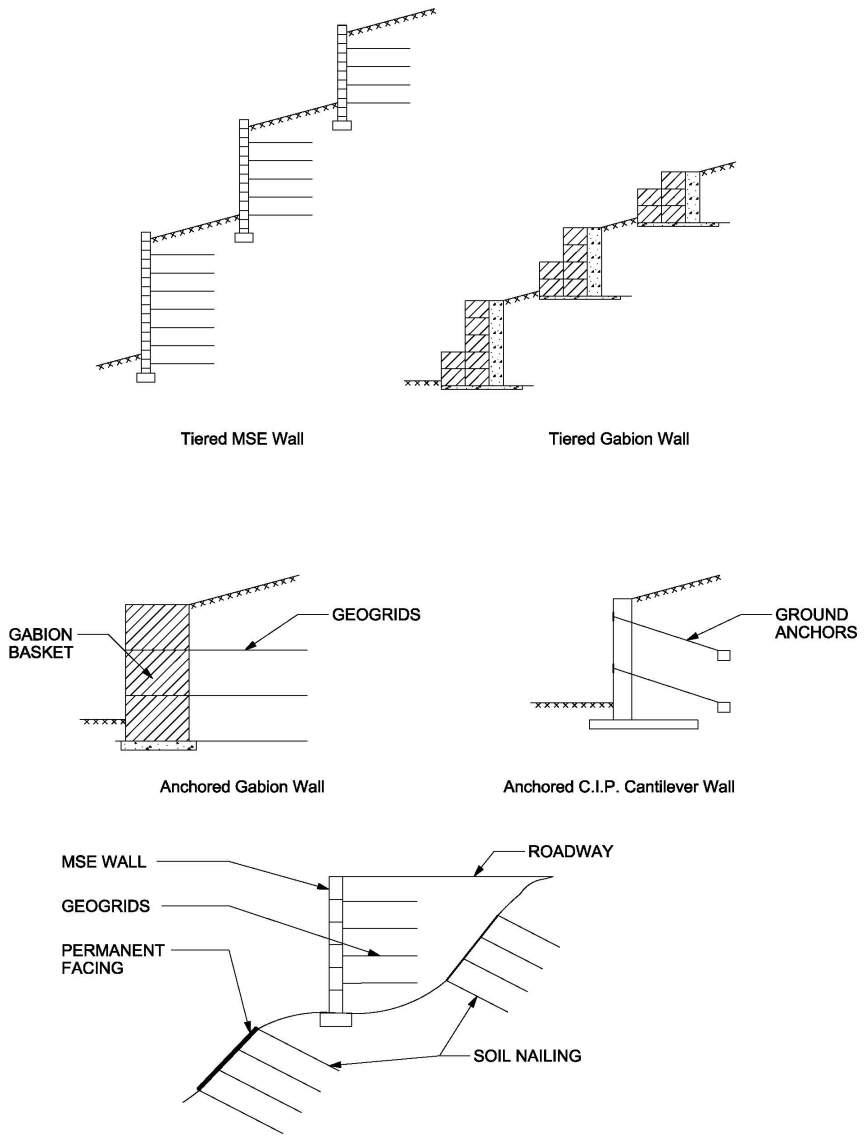

Figure 14.2-3
Tiered & Hybrid Wall Systems

Wall Category	Wall Sub-Category	Wall Type	Typical Construction Concept	Proprietary
Gravity	Mass Gravity	CIP Concrete Gravity	Bottom Up (Fill)	No
	Semi-Gravity	CIP Concrete Cantilever	Bottom Up (Fill)	No
	Reinforced Earth	MSE Walls: • Precast Panels • Modular Blocks • Geogrid/ Geo-textile/Wire- Faced	Bottom Up (Fill)	Yes
	Modular Gravity	Modular Blocks, Gabion, Bin, Crib	Bottom Up (Fill)	Yes
	In-situ Reinforced	Soil Nailing	Top Down (Cut)	No
Non-Gravity	Cantilever	Sheet Pile, Soldier Pile, Tangent/Secant	Top Down (Cut) /Bottom Up (Fill)	No
	Anchored	Anchored Sheet Pile, Soldier Pile, Tangent/Secant	Top Down (Cut)	No

Table 14.2-1
Wall Classification

14.3 Wall Selection Criteria

14.3.1 General

The objective of selecting a wall system is to determine an appropriate wall system that is practical to construct, structurally sound, economic, aesthetically pleasing, environmentally consistent with the surroundings, and has minimal maintenance problems.

With the development of many new wall systems, designers have the choice of selecting many feasible wall systems that can be constructed on a given highway project. Designers are encouraged to evaluate several feasible wall systems for a particular project where wall systems can be economically constructed. After consideration of various wall types, a single type should be selected for final analyses and design. Wall designers must consider the general design concepts described in section 14.4 and specific wall design requirements described in 14.5 thru 14.11 of this chapter, and key wall selection factors discussed in this section.

In general, selection of a wall system should include, but not limited to the key factors described in this section for consideration when generating a list of acceptable retaining wall systems for a given site.

14.3.1.1 Project Category

The designer must determine if the wall system is permanent or temporary.

14.3.1.2 Cut vs. Fill Application

Due to construction techniques and base width requirements for stability, some wall types are better suited for cut sections where as others are suited for fill or fill/cut situations. The key considerations are the amount of excavation or shoring, overall wall height, proximity of wall to other structures, and right-of-way width available. The site geometry should be evaluated to define site constraints. These constraints will generally dictate if fill, fill/cut or cut walls are required.

Cut Walls

Cut walls are generally constructed from the top down and used for both temporary and permanent applications. Cantilever sheet pile walls are suitable for shallower cuts. If a deeper cut is required to be retained, a key question is to determine the availability of right-of-way (ROW). Subsurface conditions such as shallow bedrock also enter into considerations of cut walls. Anchored walls, soil nail walls, and anchored soldier pile walls may be suitable for deeper cuts although these walls require either a larger permanent easement or permanent ROW.

Fill walls

Walls constructed in fill locations are typically used for permanent construction and may require large ROW to meet the base width requirements. The necessary fill material may be required to be granular in nature. These walls use bottom up construction and have typical cost effective

ranges. Surface conditions must also be considered. For instance, if soft compressible soils are present, walls that can tolerate larger settlements and movements must be considered. MSE walls are generally more economical for fill locations than CIP cantilever walls.

Cut/fill Walls

CIP cantilever and prefabricated modular walls are most suitable in cut/fill situations as the walls are built from bottom up, have narrower base widths and these walls do not rely on soil reinforcement techniques to provide stability. These types of walls are suitable for both cut or fill situations.

14.3.1.3 Site Characteristics

Site characterization should be performed, as appropriate, to provide the necessary information for the design and construction of retaining wall systems. The objective of this characterization is to determine composition and subsurface soil/rock conditions, define engineering properties of foundation material and retained soils, establish groundwater conditions, determine the corrosion potential of the water, and identify any discontinuities or geotechnical issues such as poor bearing capacity, large settlement potential, and/or any other design and construction problems.

Site characterization mainly includes subsurface investigations and analyses. WisDOT's Geotechnical Engineering Unit generally completes the investigation and analyses for all in-house wall design work.

14.3.1.4 Miscellaneous Design Considerations

Other key factors that may influence wall selection include height limitations for specific systems, limit of wall radius on horizontal alignment, and whether the wall is a component of an abutment.

Foundation conditions that may govern the wall selection are bearing capacity, allowable lateral and vertical movements, tolerable settlement and differential movement of retaining wall systems being designed, susceptibility to scour or undermining due to seepage, and long-term maintenance.

14.3.1.5 Right of Way Considerations

Availability of ROW at a site may influence the selection of wall type. When a very narrow ROW is available, a sheet pile wall may be suitable to support an excavation. In other cases, when walls with tiebacks or soil reinforcement are considered, a relatively large ROW may be required to meet wall requirements. Availability of vertical operating space may influence wall selection where piling installation is required and there is not enough room to operate driving equipment.

FDM 11-55-5.4 describes the ROW requirement for retaining walls. It requires that all segments of a retaining wall should be under the control of WisDOT. No improvements or utility construction should be allowed in the ROW area of the retaining wall systems.

14.3.1.6 Utilities and Other Conflicts

Feasibility of some wall systems may be influenced by the presence of utilities and buried structures. MSE, soil nailing and anchored walls commonly have conflict with the presence of utilities or buried underground structures. MSE walls should not be used where utilities must stay in the reinforcement zone.

14.3.1.7 Aesthetics

In addition to being functional and economical, the walls should be aesthetically pleasing. Wall aesthetics may influence selection of a particular wall system. However, the aesthetic treatment should complement the retaining wall and not disrupt the functionality or selection of wall type. All permanent walls should be designed with due considerations to the wall aesthetics. Each wall site must be investigated individually for aesthetic needs. Temporary walls should generally be designed with little consideration to aesthetics. Chapter 4 - Aesthetics presents structures aesthetic requirements.

14.3.1.8 Constructability Considerations

Availability of construction materials, site accessibility, equipment availability, form work and temporary shoring, dewatering requirements, labor considerations, complicated alignment changes, scheduling consideration, speed of construction, construction staging/phasing and maintaining traffic during construction are some of the important key factors when evaluating the constructability of each wall system for a specific project site.

In addition, it should also be ensured that the temporary excavation slopes used for wall construction are stable as per site conditions and meet all safety requirements laid by Occupation and Safety Health Administration (OSHA).

14.3.1.9 Environmental Considerations

Selection of a retaining wall system is influenced by its potential environmental impact during and after construction. Some of the environmental concerns during construction may include excavation and disposal of contaminated material at the project site, large quantity of water, corrosive nature of soil/water, vibration impacts, noise abatement and pile driving constraints.

14.3.1.10 Cost

Cost of a retaining wall system is influenced by many factors that must be considered while estimating preliminary costs. The components that influence cost include excavation, structure, procurement of additional easement or ROW, drainage, disposal of unsuitable material, traffic maintenance etc. Maintenance cost also affects overall cost of a retaining wall system. The retaining walls that have least structural cost may not be the most economical walls. Wall selection should be based on overall cost. When feasible, MSE Walls and modular block gravity walls generally cost less than other wall types.

14.3.1.11 Mandates by Other Agencies

In certain project locations, other agency mandates may limit the types of wall systems considered.

14.3.1.12 Requests made by the Public

A Public Interest Finding could dictate the wall system to be used on a specific project.

14.3.1.13 Railing

For safety reasons most walls will require a protective railing. The railing will usually be located behind the wall. The roadway designer will generally determine whether a pedestrian or non-pedestrian railing is required and what aesthetic considerations are needed.

14.3.1.14 Traffic barrier

A traffic barrier should be installed if vehicles, bicycles, or pedestrians are likely to be present on top of the wall. The roadway designer generally determines the need for a traffic barrier.

14.3.2 Wall Selection Guide Charts

Table 14.3-1 and Table 14.3-2 summarize the characteristics for the various wall types that are normally considered during the wall selection process. The tables also present some of the advantages, disadvantages, cost effective height range and other key selection factors. A wall designer can use these tables and the general wall selection criteria discussed in 14.3.1 as a guide. Designers are encouraged to contact the Structures Design Section if they have any questions relating to wall selection for their project.

Wall Type	Temp.	Perm.	Cost Effective Height (ft)	Req'd. ROW	Advantages	Disadvantages
CIP Concrete Gravity		√	3 - 10	0.5H - 0.7H	• Durable • Meets aesthetic requirement • Requires small quantity of select backfill	• High cost • May need deep foundation • Longer const. time
CIP Concrete Cantilever		√	6 - 28	0.4H - 0.7H	• Durable meets aesthetic requirement • Requires small quantity of select backfill	• High cost • May need deep foundation • Longer const. time & deeper embedment
Reinforced CIP Counterfort		√	26 - 40	0.4H - 0.7H	• Durable • Meets aesthetic requirement • Requires small back fill quantity	• High cost • May need deep foundation • Longer const. time & deeper embedment
Modular Block Gravity		√	3 - 8	0.4H - 0.7H	• Does not require skilled labor or specialized equipment	• Height limitations
Metal Bin		√	6 - 20	0.4H - 0.7H	• Does not require skilled labor or special equipment	• Difficult to make height adjustment in the field
Concrete Crib		√	6 - 20	0.4H - 0.7H	• Does not require skilled labor or specialized equipment	• Difficult to make height adjustment in the field
Gabion		√	6 - 20	0.4H - 0.7H	• Does not require skilled labor or specialized equipment	• Need large stone quantities • Significant labor
MSE Wall (precast concrete panel with steel reinforcement)		√	10 – 30*	0.7H - 1.0H	• Does not require skilled labor or specialized equipment	• Requires use of select backfill
MSE Wall (modular block and geo-synthetic reinforcement)		√	6 – 22*	0.7H - 1.0H	• Does not require skilled labor or specialized equipment	• Requires use of select backfill
MSE Wall (geotextile/geogrid/ welded wire facing)	√	√	6 – 35*	0.7H - 1.0H	• Does not require skilled labor or specialized equipment	• Requires use of select backfill

*WisDOT maximum wall height

Table 14.3-1
Wall Selection Chart for Gravity Walls

Wall Type	Temp.	Perm.	Cost Effective Height (ft)	Req'd. ROW	Water Tightness	Advantages	Disadvantages
Sheet Pile	√	√	6 - 15	Minimal	Fair	• Rapid construction • Readily available	• Deep foundation may be needed • Longer construction time
Soldier Pile	√	√	6 - 28	0.2H - 0.5H	Poor	• Easy construction • Readily available	• High cost • Deep foundation may be needed • Longer construction time
Tangent Pile		√	20 - 60	0.4H - 0.7H	Fair/Poor	• Adaptable to irregular layout • Can control wall stiffness	• High cost • Deep foundation may be needed • Longer construction
Secant Pile		√	14 - 60	0.4H - 0.7H	Fair	• Adaptable to irregular layout • Can control wall stiffness	• Difficult to make height adjustment in the field • High cost
Anchored	√	√	15 - 35	0.4H - 0.7H	Fair/Poor	• Rapid construction	• Difficult to make height adjustment in the field
Soil Nail	√	√	6 - 20	0.4H - 0.7H	Fair	• Option for top-down	• Cannot be used in all soil types • Cannot be used below water table • Significant labor

Table 14.3-2
Wall Selection Chart for Non-Gravity Walls

14.4 General Design Concepts

This section covers the general design standards and criteria to be used for the design of temporary and permanent gravity and non-gravity walls including proprietary and non-proprietary wall systems.

The design criteria for tiered walls that retain other walls or hybrid walls systems requiring special design are not covered specifically in this section.

14.4.1 General Design Steps

The design of wall systems should follow a systematic process applicable for all wall systems and summarized below:

1. Basic Project Requirement: This includes determination of wall alignment, wall geometry, wall function, aesthetic, and project constraints (e.g. right of way, easement during construction, environment, utilities, etc.) as part of the wall development process described in 14.1.

2. Wall Selection: Select wall type based on step 1 and the wall section criteria discussed in 14.3.

3. Geotechnical Investigation: Subsurface investigation and analyses should be performed in accordance with 14.4.4 and Chapter 10 - Geotechnical Investigation to develop foundation and fill material design strength parameters and foundation bearing capacity. Note: this work generally requires preliminary checks performed in step 7, based on steps 4 thru 6.

4. Wall Loading: Determine all applicable loads likely to act on the wall as discussed in 14.4.5.3.

5. Initial Wall Sizing: This step requires initial sizing of various wall components and establishing wall batter which is wall specific and described under each specific wall designs discussed in 14.5 thru 14.13.

6. Wall Design Requirements: Design wall systems using design standards and service life criteria and the *AASHTO Load and Resistance Factor Design* (*AASHTO LRFD*) requirements discussed in 14.4.1 and 14.4.2.

7. Perform external stability, overall stability, and wall movement checks discussed in 14.4.7. These checks will be wall specific and generally performed by the Geotechnical Engineer of record. The stability checks should be performed using the performance limits, load combinations, and the load/resistance factors per *AASHTO LRFD* requirements described in 14.4.5.5 and 14.4.5.6 respectively.

8. Perform internal stability and structural design of the individual wall components and miscellaneous components. These computations are performed by the Designer for non-proprietary walls. For proprietary walls, internal stability is the responsibility of the contractor/supplier after letting.

9. Repeat design steps 4 thru 8 if the required checks are not met.

14.4.2 Design Standards

Retaining wall systems shall be designed in conformance with the current *AASHTO Load and Resistance Factor Design Specifications* (AASHTO LRFD) and in accordance with the WisDOT Bridge Manual. Walls shall be designed to address all limit states.

Wall systems including rock walls and soil nail systems which are not specifically covered by the *AASHTO LRFD* specifications shall be designed using the hierarchy of guidelines presented in this chapter, Allowable Stress Design (ASD) or *AASHTO Load Factor Design* (LFD) methods or the design procedures developed based on standard engineering and/or industry practices. The guidelines presented in this chapter will prevail where interpretation differs. WisDOT's decision shall be final in those cases. The new specifications for the wall designs were implemented October 1st, 2010.

14.4.3 Design Life

All permanent retaining walls and components shall be designed for a minimum service life of 75 years. All temporary walls shall be designed for a period of 36 months or for the project specific duration, whichever is greater. The design of temporary wall systems is the responsibility of the contractor. The temporary walls shall meet all the safety requirements as that of a permanent wall except for corrosion and aesthetics.

14.4.4 Subsurface Exploration

Geotechnical exploration may be needed to explore the soil/rock properties for foundation, retained fill, and backfill soils for all retaining walls regardless of wall height. It is the designer's responsibility to ensure that pertinent soils information, loading conditions, foundation considerations, consolidation potential, settlement and external stability is provided for the wall design.

Before planning a subsurface investigation, it is recommended that any other available subsurface information such as geological or other maps or data available from previous subsurface investigations be studied. Subsurface investigation and analyses should be performed where necessary, in accordance with Chapter 10 - Geotechnical Investigation.

The investigations and analyses may be required to determine or establish the following:

- Nominal bearing pressure, consolidation properties, unit weight and shear strength (drained or undrained strength for fine grained soils) for foundation soils/rocks.
- Shear strength, and unit weight of selected backfill.
- Shear strength and unit weight of random fill or in-situ soil behind selected backfill or wall
- Location of water table

14.4.5 Load and Resistance Factor Design Requirements

14.4.5.1 General

In the LRFD process, wall stability is checked as part of the design process for anticipated failure modes for various types of walls at specified limit states, and the wall components are sized accordingly.

To evaluate the limit states, all applicable design loads are computed as nominal or un-factored loads, than factored using a load factor and grouped to consider the force effect of all loads and load combinations in accordance with **LRFD [3.4.1]**. The factored loads are compared with the factored resistance as part of the stability check in accordance with **LRFD [11.5]** such that the factored resistance is not less than factored loads as presented in **LRFD [1.3.2.1]**

$$Q = \sum \eta_i \gamma_I Q_i \quad \leq \phi R_n = R_r \qquad \textbf{LRFD [1.3.2.1-1]}$$

Where:

η_I	=	Load modifier (a function of η_D, η_R, assumed 1.0 for retaining walls)
γ_I	=	Load factor
Q_i	=	Force effect
Q	=	Total factored force effect
ϕ	=	Resistance factor
R_n	=	Nominal resistance
R_r	=	Factored resistance = ϕR_n

14.4.5.2 Limit States

The limit states (as defined in **LRFD [3.4.1]**) that must be evaluated as part of the wall design requirements mainly include (1) Strength limit states; (2) Service limit states; and (3) Extreme Event limit states. The fatigue limit state is not used for retaining walls.

Strength limit state is applied to ensure that walls have adequate strength to resist external stability failure due to sliding, bearing resistance failure, etc. and internal stability failure such as pullout of reinforcement, etc. Evaluation of Strength limit states is accomplished by grouping factored loads and comparing to the reduced or factored soil strengths using resistance factors discussed in 14.4.5.6.

Service limit state is evaluated for overall stability and total or differential settlement checks. Evaluation of the Service limit states is usually performed by using expected service loads

assuming a factor of 1.0 for nominal loads, a resistance factor of 1.0 for nominal strengths and elastic analyses.

Extreme Event II limit state is evaluated to design walls for vehicular collision forces. In particular, MSE walls having a traffic barrier at the top are vulnerable to damage due to vehicle collision forces and this case for MSE Walls is discussed further in 14.6.3.10.

14.4.5.3 Design Loads

Retaining walls shall be designed to withstand all applicable loads generally categorized as permanent and transient loads.

Permanent loads include dead load DC due to weight of the structural components and non structural components of the wall, dead load DW loads due to wearing surfaces and utilities, vertical earth pressure EV due to dead load of earth, horizontal earth pressure EH and earth surcharge loads ES. Applied earth pressure and earth pressure surcharge loads are further discussed in 14.4.5.4.

The transient loads include, but are not limited to, water pressure WA, live load surcharge LS, and forces caused by the deformations due to shrinkage SH, creep CR and settlement caused by the foundation SE.

These loads should be computed in accordance with **LRFD [3.4]** and **LRFD [11].** Only loads applicable for each specific wall type should be considered in the engineering analyses.

14.4.5.4 Earth Pressure

Determination of earth pressure will depend upon types of wall structure (gravity, semi gravity, reinforced earth wall, cantilever or anchored walls, etc.), wall movement, wall geometry, wall friction, configuration, retained soil type, ground water conditions, earth surcharge, and traffic and construction related live load surcharge. In general, earth pressure on retaining walls shall be calculated in accordance with **LRFD [3.11.5]**. Earth pressure that will develop on walls includes active, passive or at-rest earth pressure.

<u>Active Earth Pressure</u>

The active earth pressure condition exists when a retaining wall is free to rotate away from the retained backfill. There are two earth pressure theories available for determining the active earth pressure coefficient (K_a); Rankine and Coulomb earth pressure theories. A detailed discussion of Rankine and Coulomb theories can be found in *Foundation Design- Principles and Practices*; by Donald P. Cudoto or *Foundation Analysis and Design*, 5th Edition by Joseph E. Bowles as well as other standard text books on this subject.

Rankine earth pressure makes assumptions that the retained soil has a horizontal surface, the failure surface is a plane and that the wall is smooth (i.e. no friction). Rankine earth pressure theory is the preferred method for developing the active earth pressure coefficient; however, where wall friction is an important consideration or where sloping surcharge loads are considered, Coulomb earth pressure theory may be used. The use of Rankine theory will cause

a slight over estimation of K_a, therefore, increasing the pressure on the wall resulting in a more conservative design.

Walls that are cast-in-place (CIP) semi gravity concrete cantilever referred, hereafter, as CIP cantilever, Mechanically Stabilized Earth (MSE), modular block gravity, soil nailing, soldier-pile and sheet-pile walls are typically considered flexible enough to justify using an active earth pressure coefficient.

For walls using Coulomb earth pressure theory:

$$K_a = \frac{\sin^2(\theta+\phi_f')}{\Gamma[\sin^2\sin(\theta-\delta)]}$$ **LRFD [Eq'n 3.11.5.3-1]**

Where:

Γ = $\left[1+\sqrt{\frac{\sin(\phi_f'+\delta)\sin(\phi_f'-B)}{\sin(\theta-\delta)\sin(\theta+B)}}\right]^2$

δ = Friction angle between fill and wall (degrees)

B = Angle of fill to the horizontal (degrees)

θ = Angle of back face of wall to the horizontal (degrees)

ϕ_f' = Effective angle of internal friction (degrees)

Note: refer to Figure 14.4-1 for details.

For walls using Rankine earth pressure theory:

$$K_a = \tan^2\left(45 - \frac{\phi_f'}{2}\right)$$

<u>At-Rest Earth Pressure</u>

In the at-rest earth pressure (K_o) condition, the top of the wall is not allowed to deflect or rotate; therefore, requiring the wall to support the full pressure of the soil behind the wall.

The at-rest earth pressure coefficient shall be used to calculate the lateral earth pressure for non-yielding retaining walls restrained from rotation and/or lateral translation in accordance with **LRFD [3.11.5.2]**. Non-yielding walls include integral abutment walls, or retaining walls resting on bedrock or pile foundation.

For walls (normally consolidated soils, vertical wall, and level ground) using at-rest earth pressure:

$$K_o = 1 - \sin\phi_f'$$ **LRFD [Eq'n 3.11.5.2-1]**

Passive Earth Pressure

The development of passive earth pressure (K_p) requires a retaining wall to move into or toward the soil. As with the active earth pressure, Rankine earth pressure is the preferred method to be used to develop passive earth pressure coefficient. The use of Rankine theory will cause an under estimation of K_p, therefore resulting in a more conservative design. Coulomb earth pressure theory may be used if the appropriate conditions exist at a site; however, the designer is required to understand the limitations on the use of Coulomb earth pressure theory as applied to passive earth pressures.

Neglect any contribution from passive earth pressure in stability calculations unless the base of the wall extends below the depth to which foundation soil or rock could be weakened or removed by freeze-thaw, shrink-swell, scour, erosion, construction excavation, or any other means. In wall stability calculations, only the embedment below this depth, known as the effective embedment depth, shall be considered when calculating the passive earth pressure resistance. This is in accordance with **LRFD [11.6.3.5].**

14.4.5.4.1 Earth Load Surcharge

The effect of earth load surcharge including uniform, strip, and point loads shall be computed in accordance with **LRFD [3.11.6.1]** and **LRFD [3.11.6.2].**

14.4.5.4.2 Live Load Surcharge

Increased earth pressure on a wall occurs due to vehicular loading on top of the retained earth including operation of large or heavily-loaded cranes, staged equipment, soil stockpile or material storage, or any surcharge loads behind the walls. Earth pressure from live load surcharge shall be applied when a vehicular load is within one half of the wall height behind the back face of the wall or reinforced soil mass for MSE walls, in accordance with **LRFD [3.11.6.4].** In most cases, surcharge load can be modeled by assuming 2 ft of fill.

WisDOT policy item:

The equivalent height of soils for vehicular loading on retaining walls parallel to the traffic shall be 2.0 feet, regardless of the wall height. For standard unit weight of soil equal to 120 pcf, the resulting live load surcharge is 240 psf. Walls without traffic shall be designed for a live load surcharge of 100 psf to account for construction live loads.

14.4.5.4.3 Compaction Loads

Pressure induced by the compaction load can extend to variable depths due to the total static and dynamic forces exerted by compaction equipment. The effect of increased lateral earth pressure due to compaction loads during construction should be considered when compaction equipment is operated behind the wall. The compaction load surcharge effect is minimized by WISDOT standard specifications that require small walk behind compactors within 3 ft of the wall.

14.4.5.4.4 Wall Slopes

The slopes above and below the wall can significantly affect the earth pressures and wall stability. Slopes above the wall will influence the active earth pressure; slopes at the toe of the wall influences the passive earth pressures. In general, the back slope behind the wall should be no steeper than 2:1 (H:V). Where possible, a 4.0 ft wide horizontal bench should be provided at the front face of the wall.

14.4.5.4.5 Loading and Earth Pressure Diagrams

Loading and earth pressure diagrams are developed to compute nominal (unfactored) loads and moments. All applicable loads described in 14.4.5.3 and 14.4.5 shall be considered for computing nominal loads. For a typical wall, the force diagram for the earth pressure should be developed using a triangular distribution plus additional pressures resulting from earth or live load surcharge, water pressure, compaction etc. as discussed in 14.4.5.4.

The engineering properties for selected fill, concrete and steel are given in 14.4.6. The foundation and retained earth properties are selected as per discussions in 14.4.4 . One of the three cases is generally applicable for the development of loading diagrams and earth pressures:

1. Horizontal backslope with traffic surcharge
2. Sloping backslope
3. Broken backslope

Loading diagrams for CIP cantilever, MSE, modular block gravity, and prefabricated modular walls are shown for illustration. The designer shall develop loading diagrams as applicable.

CIP cantilever wall with sloping surcharge

For CIP cantilever walls, lateral active earth pressure shall be computed using Coulomb's theory for short heels or using Rankine theory for very long heels in accordance with the criteria presented in **LRFD [3.11.5.3]** and **LRFD [C3.11.5.3]**.

Walls resting on rock or batter piles can be designed for active earth pressure, based on WisDOT policy and in accordance with **LRFD [3.11.5.2].** Effect of the passive earth pressure on the front face of the wall shall be neglected in stability computation, unless the base of the wall extends below depth of maximum scour, freeze thaw or other disturbances in accordance with **LRFD [11.6.3.5]**.

Effect of surcharge loads ES present at the surface of the backfill of the wall shall be included in the analysis in accordance with 14.4.5.4.1. Walls with horizontal backfill shall be designed for live load surcharge in accordance with 14.4.5.4.2.

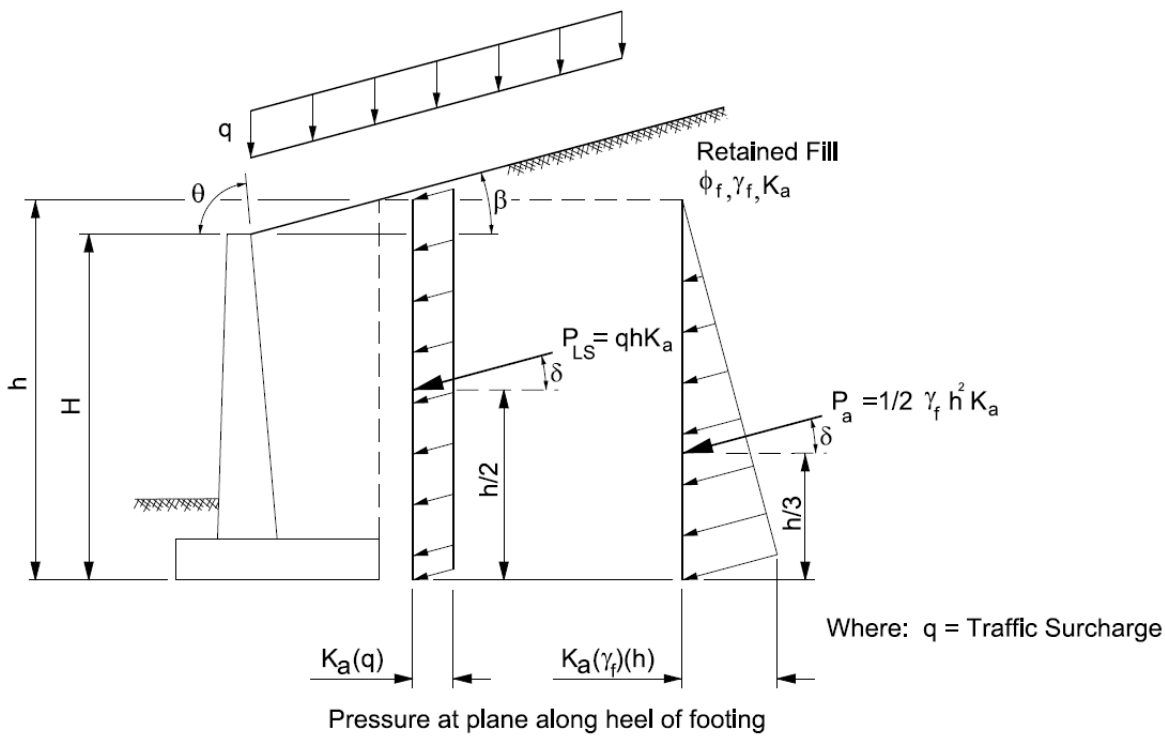

Figure 14.4-1
Loading Diagram for a Cantilever Retaining Wall with Surcharge Loading

MSE Walls

The loading and earth pressure diagram for an MSE wall shall be developed in accordance with **LRFD [11.10.5.2]** and described below for the three conditions defined earlier in this section.

MSE Wall with Horizontal Backslope and Traffic Surcharge

Figure 14.4-2 shows a procedure to estimate the earth pressure. The active earth pressure for horizontal backslope is computed using Rankine's theory as discussed in 14.4.5.4.

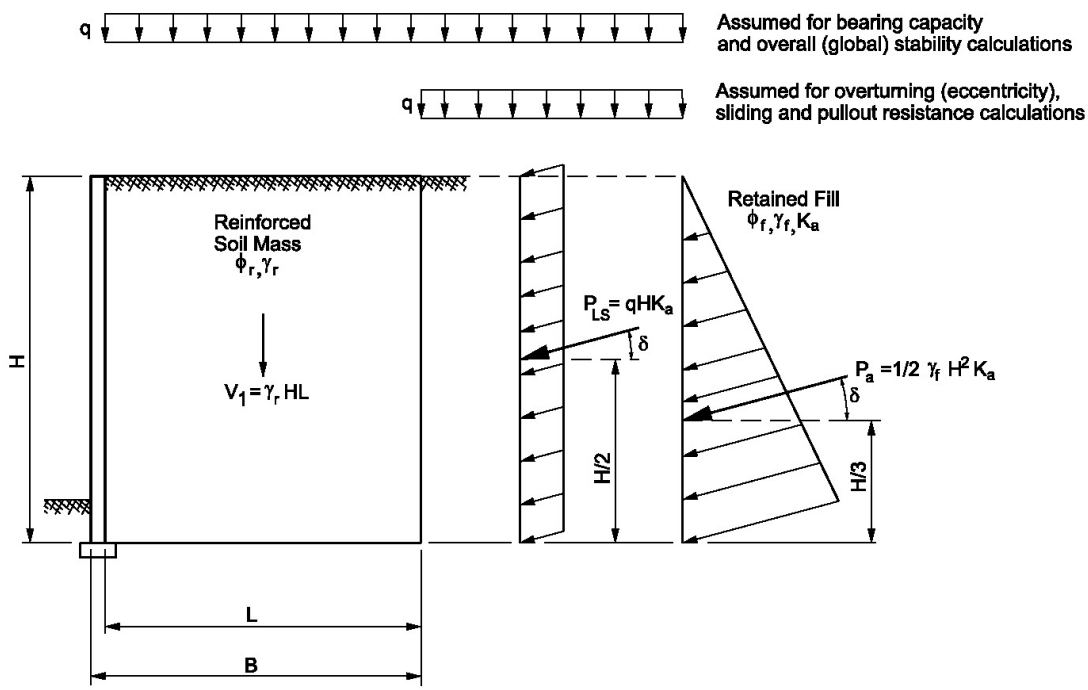

Figure 14.4-2
MSE Walls Earth Pressure for Horizontal Backslope with Traffic Surcharge
(Source **LRFD [Figure 11.10.5.2-1]**)

MSE Wall with Sloping Surcharge

Figure 14.4-3 shows a procedure to estimate the earth pressure. The active earth pressure for sloping backfill is computed using Coulomb's theory as discussed in 14.4.5.4.

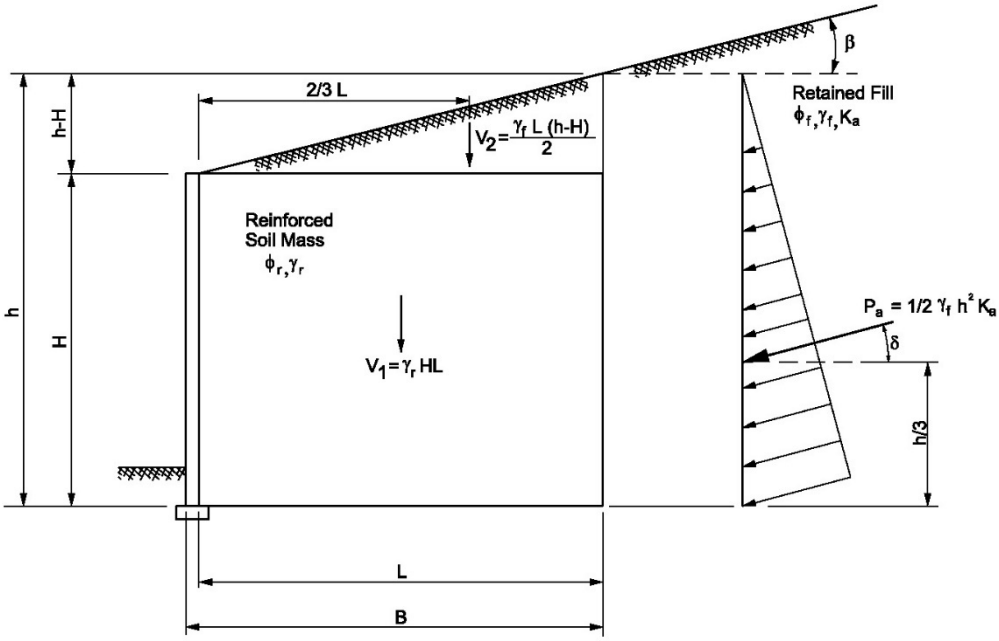

Figure 14.4-3
MSE Walls Earth Pressure for Sloping Backfill
(Source **LRFD [Figure 3.11.5.8.1-2]**)

MSE Wall with Broken Backslope

For broken backslopes, the active earth pressure coefficient is determined using Coulomb's equation except that surcharge angle β is substituted with slope angle β'.

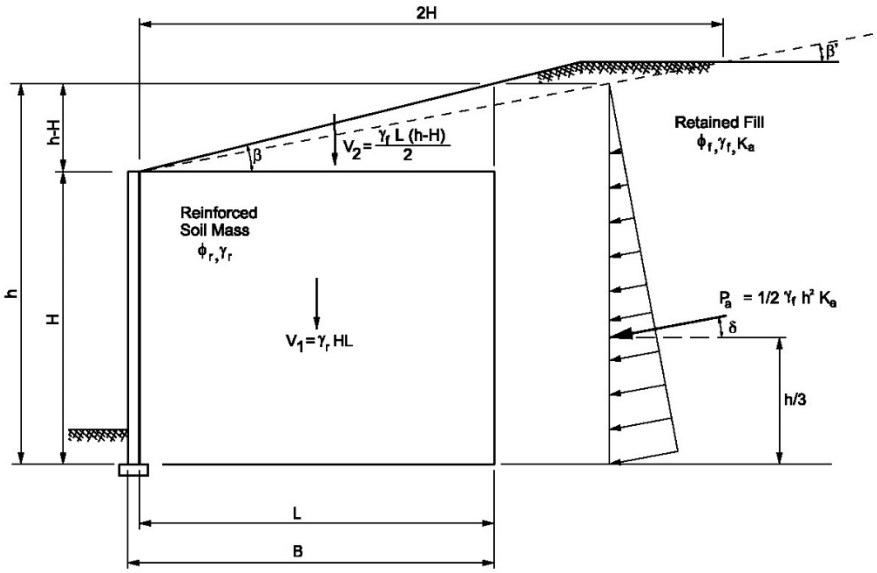

Figure 14.4-4
MSE Walls Earth Pressure for Broken Backfill
(Source **LRFD [Figure C3.11.5.8.1-1]**)

Modular Block Gravity Wall with Sloping Surcharge

When designing a “Modular Block Gravity Wall” without setback and with level backfill, the active earth pressure coefficient may be determined using Rankine theory as discussed in 14.4.5.4.

When designing a "Modular Block Gravity Wall" with setback, the active earth pressure coefficient K_a shall be determined using Coulomb theory as discussed in 14.4.5.4. The interface friction angle between the blocks and soil behind the blocks is assumed to be zero.

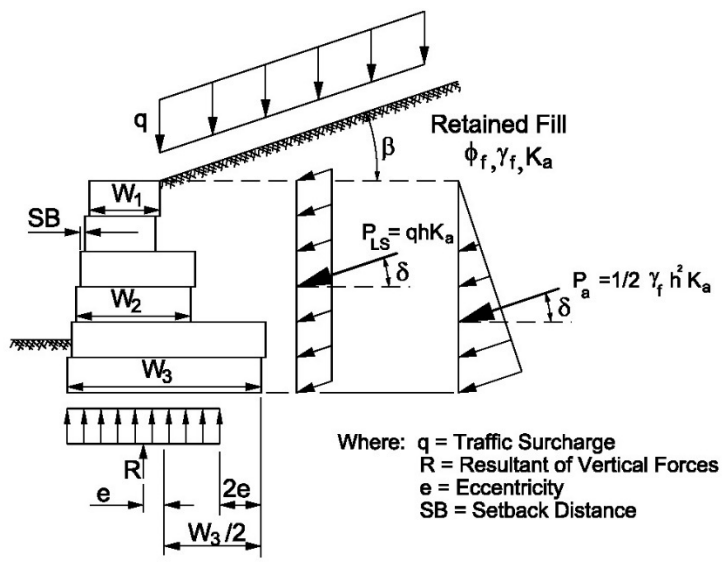

Figure 14.4-5
Modular Block Gravity Wall Analysis

No live load traffic and live load surcharge shall be allowed on modular block gravity walls although they are designed for a minimum live load of 100psf. The density of the blocks is assumed to be 135 pcf and the drainage aggregate inside or between the blocks 120 pcf. The forces acting on a modular block gravity wall are shown in Figure 14.4-5.

Prefabricated Modular Walls

Active earth pressure shall be determined by multiplying vertical loads by the coefficient of active earth pressure (K_a) and using Coulomb earth pressure theory in accordance with **LRFD [3.11.5.3] and LRFD [3.11.5.9]**. See Figure 14.4-6 for earth pressure diagram.

When the rear of the modules form an irregular surface (stepped surface), pressures shall be computed on an average plane surface drawn from the lower back heel of the lowest module as shown in Figure 14.4-7

Effect of the backslope soil surcharge and any other surcharge load imposed by existing structure should be accounted as discussed in 14.4.5.4. Trial wedge or Culmann method may also be used to compute the lateral earth pressure as presented in the *Foundation Analysis and Design*, 5th Edition (J. Bowles, 1996).

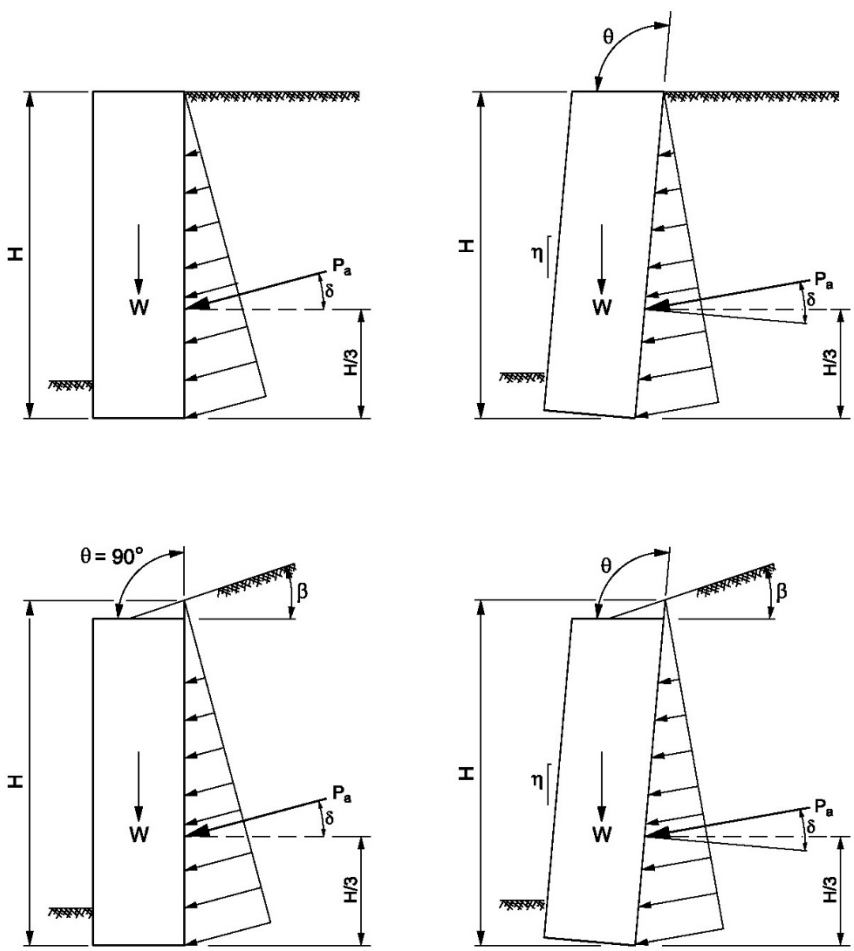

Figure 14.4-6
Lateral Earth Pressure on Concrete Modular Systems of Constant Width
(Source **LRFD [Figure 3.11.5.9-1]**)

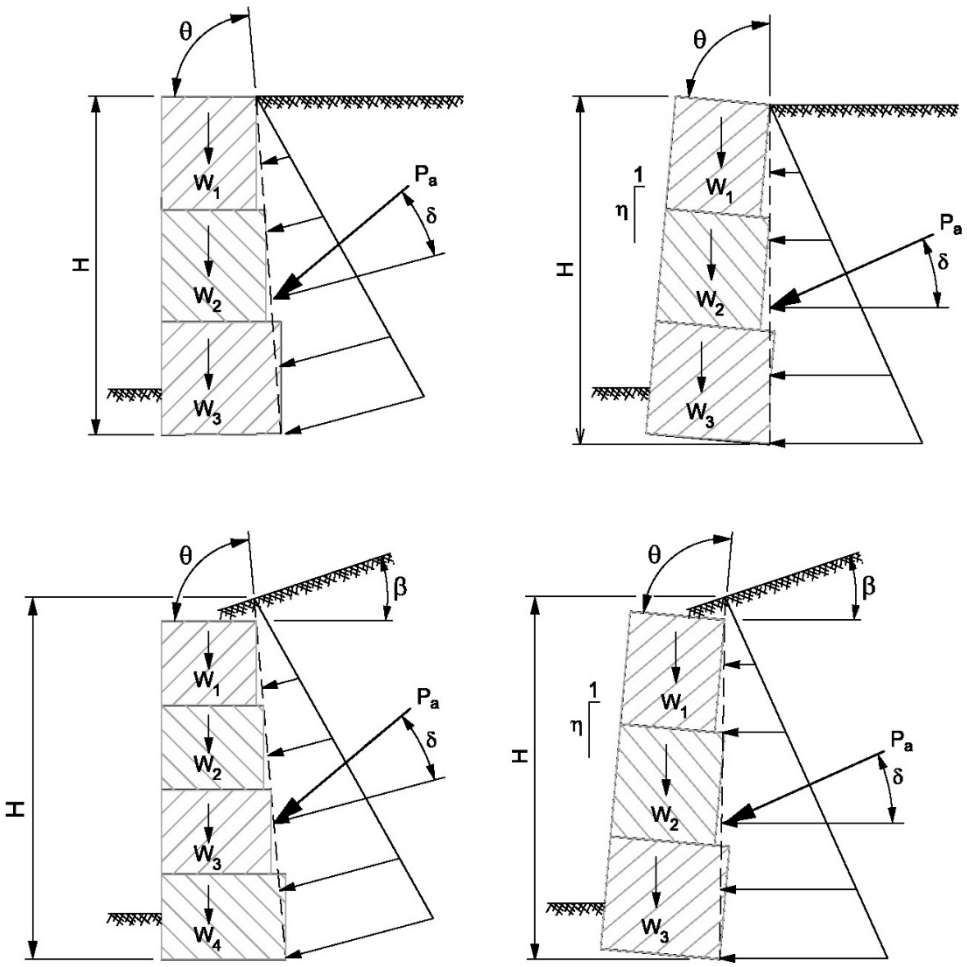

Figure 14.4-7
Lateral Earth Pressure on Concrete Modular Systems of Variable Width
(Source **LRFD [Figure 3.11.5.9-2]**)

14.4.5.5 Load factors and Load Combinations

The nominal loads and moments as described in 14.4.5.4.5 are factored using load factors found in **LRFD [Tables 3.4.1-1 and 3.4.1-2]**. The load factors applicable for most wall types considered in this chapter are given in Table 14.4-1. Load factors are selected to produce a total extreme factored force effect, and for each loading combination, both maximum and minimum extremes are investigated as part of the stability check, depending upon the expected wall failure mechanism.

Direction of Load	Load Type	Load Factor, γ_i		
		Strength I Limit		Service I Limit
		Maximum	Minimum	
Load Factors for Vertical Loads	Dead Load of Structural Components and Non-structural attachments DC	1.25	0.90	1.00
	Earth Surcharge Load ES	1.50	0.75	1.00
	Vertical Earth Load EV	1.35	1.00	1.00
	Water Load WA	1.00	1.00	1.00
	Live Load Surcharge LS	1.75	0.0	1.00
	Dead Load of Wearing Surfaces and Utilities DW	1.50	0.65	1.00
Load Factors for Horizontal Loads	Horizontal Earth Pressure EH Active At-Rest Passive	1.50 1.35 1.35	0.90 0.90 NA	1.00 1.00 1.00
	Earth Surcharge ES	1.50	0.75	1.00
	Live Load Surcharge LS	1.75	1.75	1.00

Table 14.4-1
Load Factors

The factored loads are grouped to consider the force effect of all loads and load combinations for the specified load limit state in accordance with **LRFD [3.4.1]** and **LRFD [11.5.6].** Figure 14.4-8 illustrates the load factors and load combinations applicable for checking sliding stability and eccentricity for a cantilever wall at the Strength I limit state. This figure shows that structure weight DC is factored by using a load factor of 0.9 and the vertical earth load EV is factored by using a factor of 1.0. This causes contributing stabilizing forces against sliding to have a minimum force effect. At the same time, the horizontal earth load is factored by 1.5 resulting in maximum force effect for computing sliding at the base.

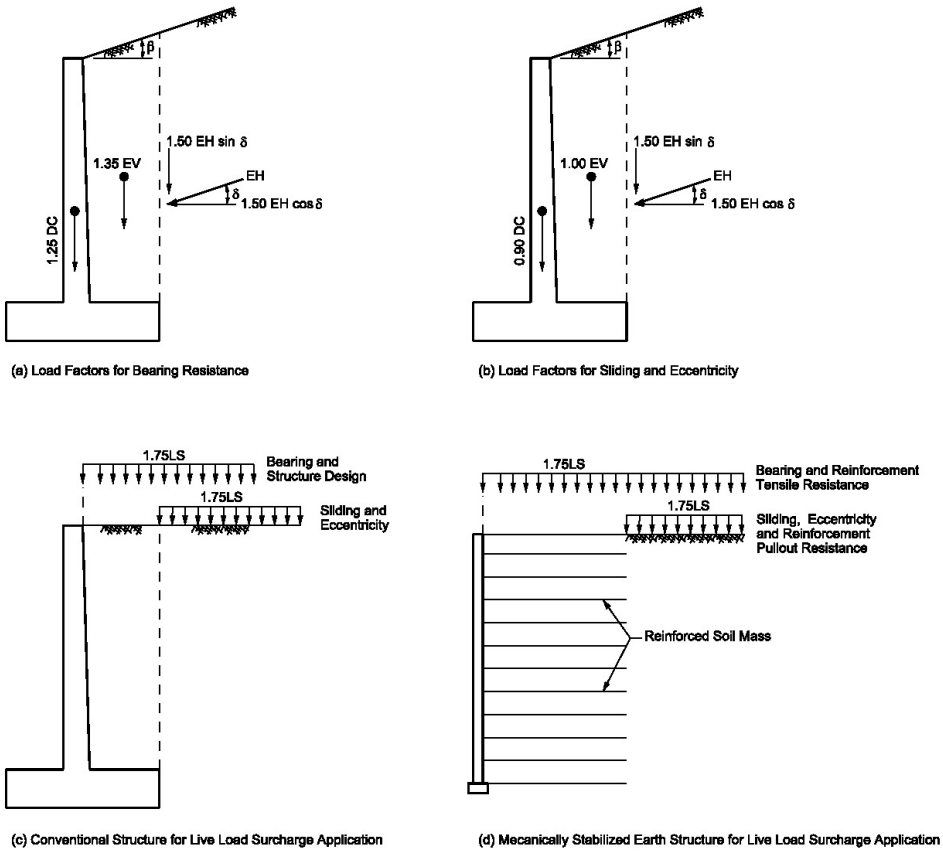

Figure 14.4-8
Application of Load Factors
(Source **LRFD [11.5.6]**)

14.4.5.6 Resistance Requirements and Resistance Factors

The wall components shall be proportioned by the appropriate methods so that the factored resistance as shown in **LRFD [1.3.2.1-1]** is no less than the factored loads, and satisfy criteria in accordance with **LRFD [11.5.4]** and **LRFD [11.6] thru [11.11]**. The factored resistance R_r is computed as follows: $R_r = \phi R_n$

Where

R_r	=	Factored resistance
R_n	=	Nominal resistance recommended in the Geotechnical Report
ϕ	=	Resistance factor

The resistance factors shall be selected in accordance with **LRFD [Tables 10.5.5.2.2-1, 10.5.5.2.3-1, 10.5.5.2.4-1, 11.5.7-1]**. Commonly used resistance factors for retaining walls are presented in Table 14.4-2.

14.4.6 Material Properties

The unit weight and strength properties of retained earth and foundation soil/rock (γ_f) are supplied in the geotechnical report and should be used for design purposes. Unless otherwise noted or recommended by the Designer or Geotechnical Engineer of record, the following material properties shall be assumed for the design and analysis if the selected backfill, concrete, and steel conforms to the WisDOT's *Standard Construction Specifications*:

Granular Backfill Soil Properties:

Internal Friction angle of backfill ϕ_f = 30 degrees

Backfill cohesion c = 0 psf

Unit Weight γ_f = 120 pcf

Concrete:

Compressive strength, f'_c at 28 days = 3500 psi

Unit Weight = 150 pcf

Steel reinforcement:

Yield strength f_y = 60,000 psi

Modulus of elasticity E_s = 29,000 ksi

Wall-Type and Condition		Resistance Factors
Mechanically Stabilized Earth Walls, Gravity Walls, and Semi-Gravity		
Bearing resistance	• Gravity & Semi-gravity • MSE	0.55 0.65
Sliding		1.00
Tensile resistance of metallic reinforcement and connectors	Strip reinforcement • Static loading Grid reinforcement • Static loading	0.75 0.65
Tensile resistance of geo-synthetic reinforcements and connectors	• Static loading	0.90
Pullout resistance of tensile reinforcement	• Static loading	0.90
Prefabricated Modular Walls		
Bearing		**LRFD [10.5]**
Sliding		**LRFD [10.5]**
Passive resistance		**LRFD [10.5]**
Non-Gravity Cantilevered and Anchored Walls		
Axial compressive resistance of vertical elements		**LRFD [10.5]**
Passive resistance of vertical elements		0.75
Pullout resistance of anchors	• Cohesionless soils • Cohesive soils • Rock	0.65 0.70 0.50
Pullout resistance of anchors	• Where proof tests are conducted	1.00
Tensile resistance of anchor tendons	• Mild steel • High strength steel	0.90 0.80
Flexural capacity of vertical elements		0.90

Table 14.4-2
Resistance Factors
(Source **LRFD [Table 11.5.7-1]**)

14.4.7 Wall Stability Checks

During the design process, walls shall be checked for anticipated failure mechanisms relating to external stability, internal stability (where applicable), movement and overall stability. In general, external and internal stability of the walls should be investigated at Strength limit states, in accordance with **LRFD [11.5.1]**. In addition, investigate the wall stability for excessive vertical and lateral displacement and overall stability at the Service limit states in accordance with **LRFD [11.5.2]**. Figure 14.4-2 thru Figure 14.4-14 show anticipated failure mechanisms for various types of walls.

14.4.7.1 External Stability

The external stability should be satisfied (generally performed by the Geotechnical Engineer) for all walls. The external stability check should include failure against lateral sliding, overturning (eccentricity), and bearing pressure failure as applicable for gravity or non-gravity wall systems in accordance with **LRFD [11.5.3]**. External stability checks should be performed at the Strength I limit state.

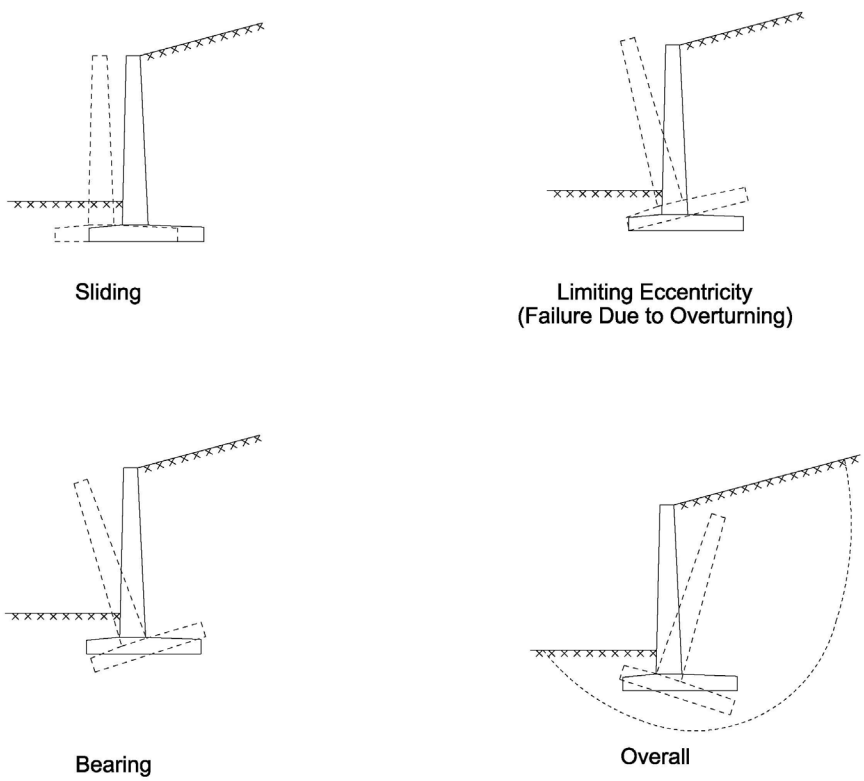

Figure14.4-9
External Stability Failure of CIP Semi-Gravity Walls

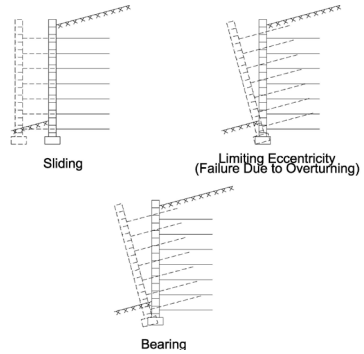

Figure 14.4-10
External Stability Failure of MSE Walls

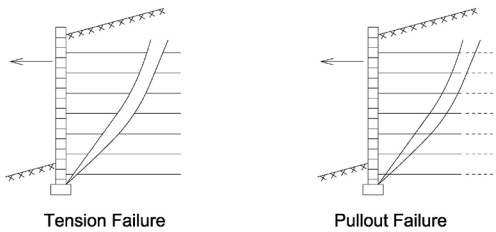

Figure 14.4-11
Internal Stability Failure of MSE Walls

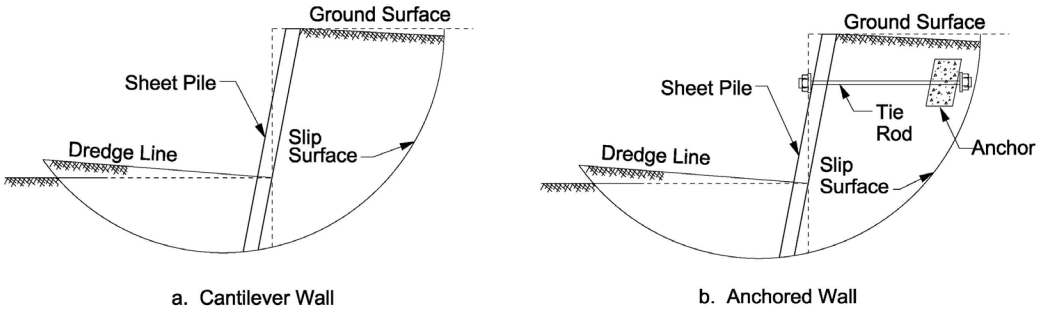

Figure 14.4-12
Deep Seated Failure of Non-Gravity Walls

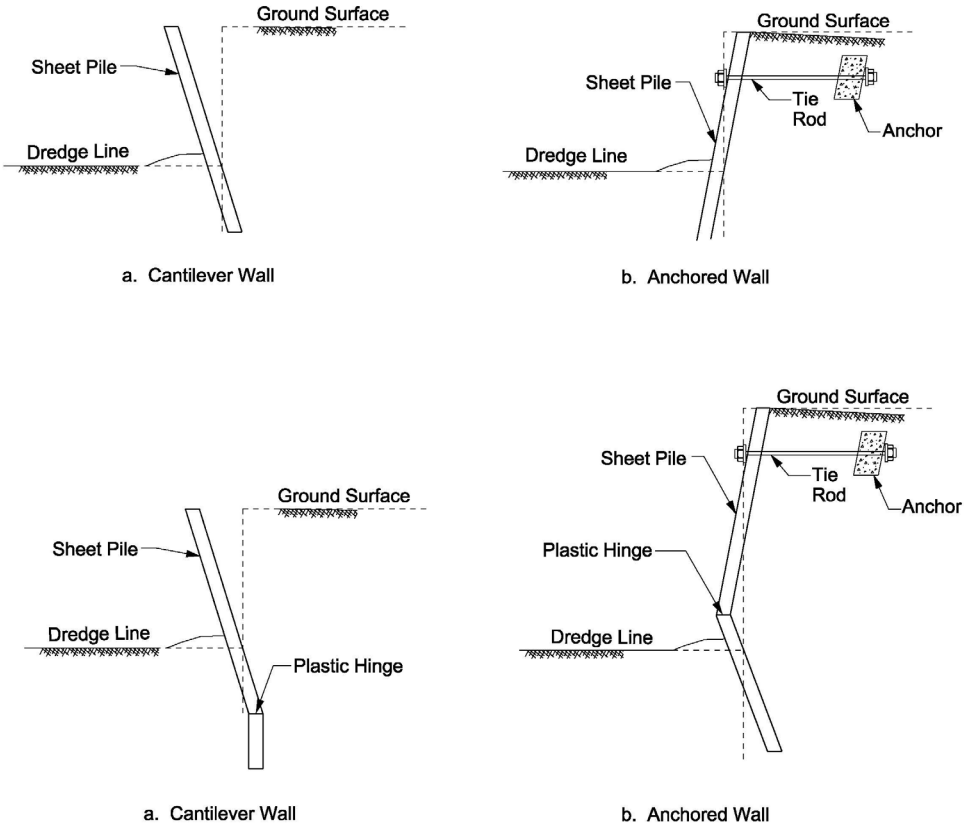

Figure 14.4-13
Flexural Failure of Non-Gravity Walls

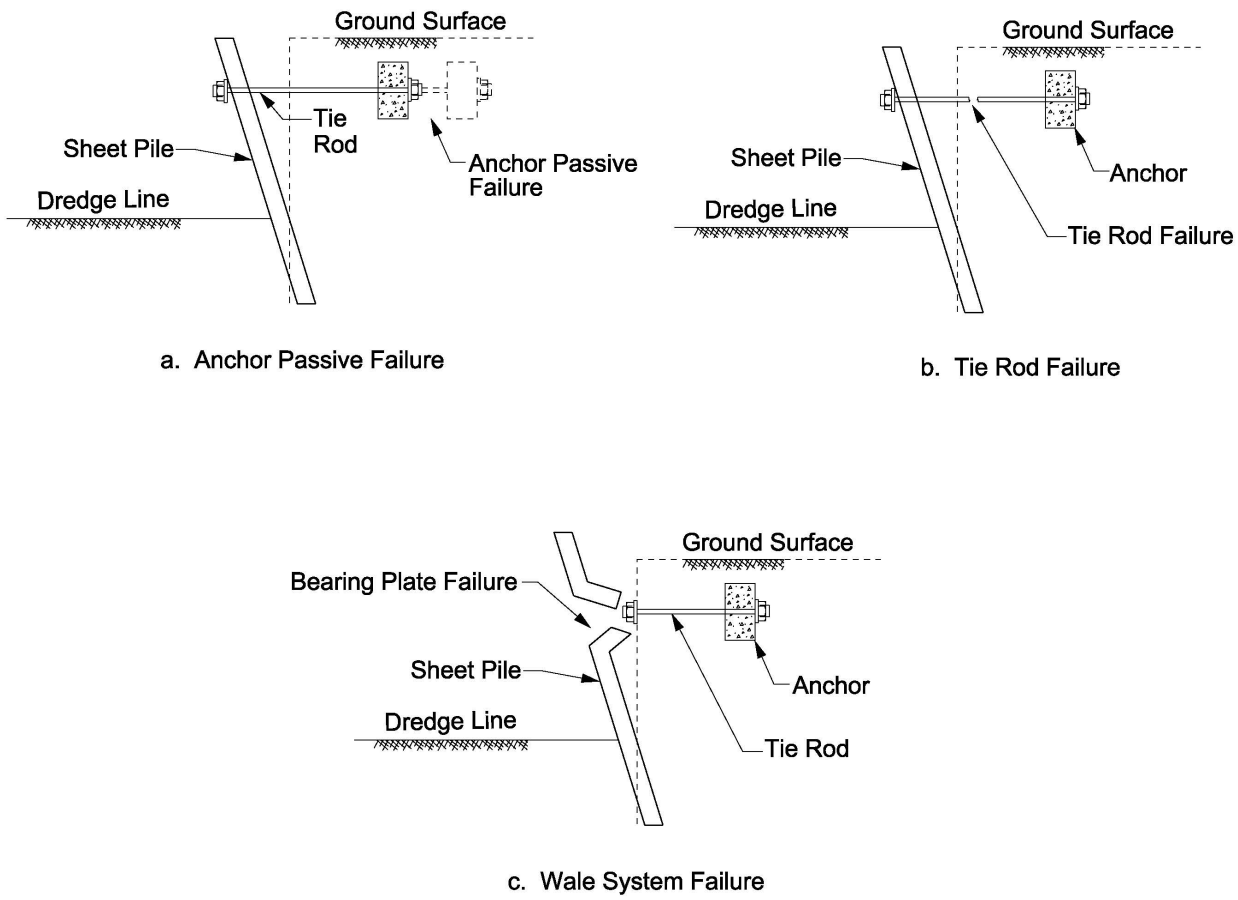

Figure 14.4-14
Flexural Failure of Non-Gravity Walls

14.4.7.2 Wall Settlement

Retaining walls shall be designed for the effects of total and differential foundation settlement at the Service I limit state, in accordance with **LRFD [11.5.2]** and 11.2. Maximum tolerable retaining wall total and differential foundation settlements are controlled largely by the potential for cosmetic and/or structural damage to facing elements, copings, barrier, guardrail, signs, pavements, utilities, structure foundations, and other highway appurtenances supported on or near the retaining wall.

14.4.7.2.1 Settlement Guidelines

The following table provides guidance for maximum tolerable vertical and total differential Settlement for various retaining wall types where Δh is the total settlement in inches and

Wall Type	Total Settlement Δh in inches	Total Differential Settlement $\Delta h1:L$ (in/in)
CIP semi-gravity cantilever walls	1-2	1:500
MSE walls with large pre-cast panel facing (panel front face area >30ft^2)	1-2	1:500
MSE walls with small pre-cast panel facing (panel front face area <30ft^2)	1-2	1:300
MSE walls with full-height cast-in-panel facing	1-2	1:500
MSE walls with modular block facing	2-4	1:200
MSE walls with geotextile /welded-wire facing	4-8	1:50-1:60
Modular block gravity walls	1-2	1:300
Concrete Crib walls	1-2	1:500
Bin walls	2-4	1:200
Gabion walls	4-6	1:50
Non-gravity cantilever and anchored walls	1-2.5	----

Table 14.4-3
Maximum Tolerable Settlement Guidelines for Retaining Walls

$\Delta h1:L$ is the ratio of the difference in total vertical settlement between two points along the wall base to the horizontal distance between the two points(L). It should be noted that the tolerance provided in Table 14.4-3 are for guidance purposes only. More stringent tolerances may be required to meet project-specific requirements.

14.4.7.3 Overall Stability

Overall stability of the walls shall be checked at the Service I limit state using appropriate load combinations and resistance factors in accordance with **LRFD [11.6.2.3].** The stability is evaluated using limit state equilibrium methods. The Modified Bishop, Janbu or Spencer method may be used for the analysis. The analyses shall investigate all potential internal, compound and overall shear failure surfaces that penetrate the wall, wall face, bench, back-cut, backfill, and/or foundation zone. The overall stability check is performed by the Geotechnical Engineering Unit for WISDOT designed walls.

14.4.7.4 Internal Stability

Internal stability checks including anchor pullout or soil reinforcement failure and/or structural failure checks are also required as applicable for different wall systems. As an example, see Figure 14.4-11 for internal stability failure of MSE walls. Internal stability checks must be performed at Strength Limits in accordance with **LRFD [11.5.3].**

14.4.7.5 Wall Embedment

The minimum wall footing embedment shall be 1.5 ft below the lowest adjacent grade in front of the wall.

The embedment depth of most wall footings should be established below the depths the foundation soil/rock could be weakened due to the effect of freeze thaw, shrink-swell, scour, erosion, construction excavation. The potential scour elevation shall be established in accordance with 11.2.2.1.1 of the Bridge Manual.

The final footing embedment depth shall be based on the required geotechnical bearing resistance, wall settlement limitations, and all internal, external, and overall (global) wall stability requirements in *AASHTO LRFD* and the *Bridge Manual*.

14.4.7.6 Wall Subsurface Drainage

Retaining wall drainage is necessary to prevent hydrostatic pressure and frost pressure. Inadequate wall sub-drainage can cause premature deterioration, reduced stability and collapse or failure of a retaining wall.

A properly designed wall sub-drainage system is required to control potentially damaging hydrostatic pressures and seepage forces behind and around a wall. A redundancy in the sub-drainage system is required where subsurface drainage is critical for maintaining retaining wall stability. This is accomplished using a pervious granular fill behind the wall.

Pipe underdrain must be provided to drain this fill. Therefore, “Pipe Underdrain Wrapped 6-Inch” is required behind all gravity retaining walls where seepage should be relieved. Gabion walls do not require a pipe drain system as these are porous due to rock fill. It is best to place the pipe underdrain at the top of the wall footing elevation. However, if it is not possible to discharge the water to a lower elevation, the pipe underdrain could be placed higher.

Pipe underdrains and weep holes may discharge water during freezing temperatures. In urban areas, this may create a problem due to the accumulation of flow and ice on sidewalks. Consideration should be given to connect the pipe underdrain to the storm sewer system.

14.4.7.7 Scour

The probable depth of scour shall be determined by subsurface exploration and hydraulic studies if the wall is located in flood prone areas. Refer to 11.2.2.1.1 for guidance related to scour vulnerability and design of walls. All walls with shallow foundations shall be founded below the scour elevation.

14.4.7.8 Corrosion

All metallic components of WISDOT retaining wall systems subjected to corrosion, should be designed to last through the designed life of the walls. Corrosion protection should be designed in accordance with the criteria given in **LRFD [11.10.6].** In addition, **LRFD [11.8.7]**, **[11.9.7]** and **[11.10]** also include design guidance for corrosion protection on non-gravity cantilever walls, anchored walls and MSE walls respectively.

14.4.7.9 Utilities

Walls that have or may have future utilities in the backfill should minimize the use of soil reinforcement. MSE, soil nail, and anchored walls commonly have conflicts with utilities and should not be used when utilities must remain in or below the reinforced soil zone unless there is no other wall option. Utilities that are encapsulated by wall reinforcement may not be accessible for replacement or maintenance. Utility agreements should specifically address future access if wall reinforcing will affect access.

14.4.7.10 Guardrail and Barrier

Guardrail and barrier shall meet the requirements of the Chapter 30 - Railings, *Facilities Development Manual,* Standard Plans, and *AASHTO LRFD*. In no case shall guardrail be placed through MSE wall or reinforced slope soil reinforcement closer than 3 ft from the back of the wall facing elements. Furthermore, the guard rail posts shall be installed through the soil reinforcement in a manner that prevents ripping, damage and distortion of the soil reinforcement. In addition, the soil reinforcement shall be designed to account for the reduced cross-section resulting from the guardrail post holes.

14.5 Cast-In-Place Concrete Cantilever Walls

14.5.1 General

A cast-in-place, reinforced concrete cantilever wall is a semi-gravity wall that consists of a base slab or footing from which a vertical wall or stem extends upward. Reinforcement is provided in both members to supply resistance to bending. These walls are generally founded on good bearing material. Cantilever walls shall not be used without pile support if the foundation stratum is prone to excessive vertical or differential settlement, unless subgrade improvements are made. Cantilever walls are typically designed to a height of 28 feet. For heights exceeding 28 feet, consideration should be given to providing a counterfort. Design of counterfort CIP walls is not covered in this chapter.

CIP cantilever walls shall be designed in accordance with *AASHTO LRFD,* design concepts presented in 14.4 and the *WisDOT Standard Specifications* including the special provisions.

14.5.2 Design Procedure for Cast-in-Place Concrete Cantilever Walls

The CIP wall shall be designed to resist lateral pressure caused by supported earth, surcharge loads and water in accordance with **LRFD [11.6].** The external stability, settlement, and overall stability shall be evaluated at the appropriate load limit states in accordance with **LRFD [11.5.5],** to resist anticipated failure mechanism. The structural components mainly stem and footing should be designed to resist flexural resistance in accordance with **LRFD [11.6.3].**

Figure 14.5-1 shows possible external stability failure and deep seated rotational failure mechanisms of CIP cantilever walls that must be investigated as part of the stability check.

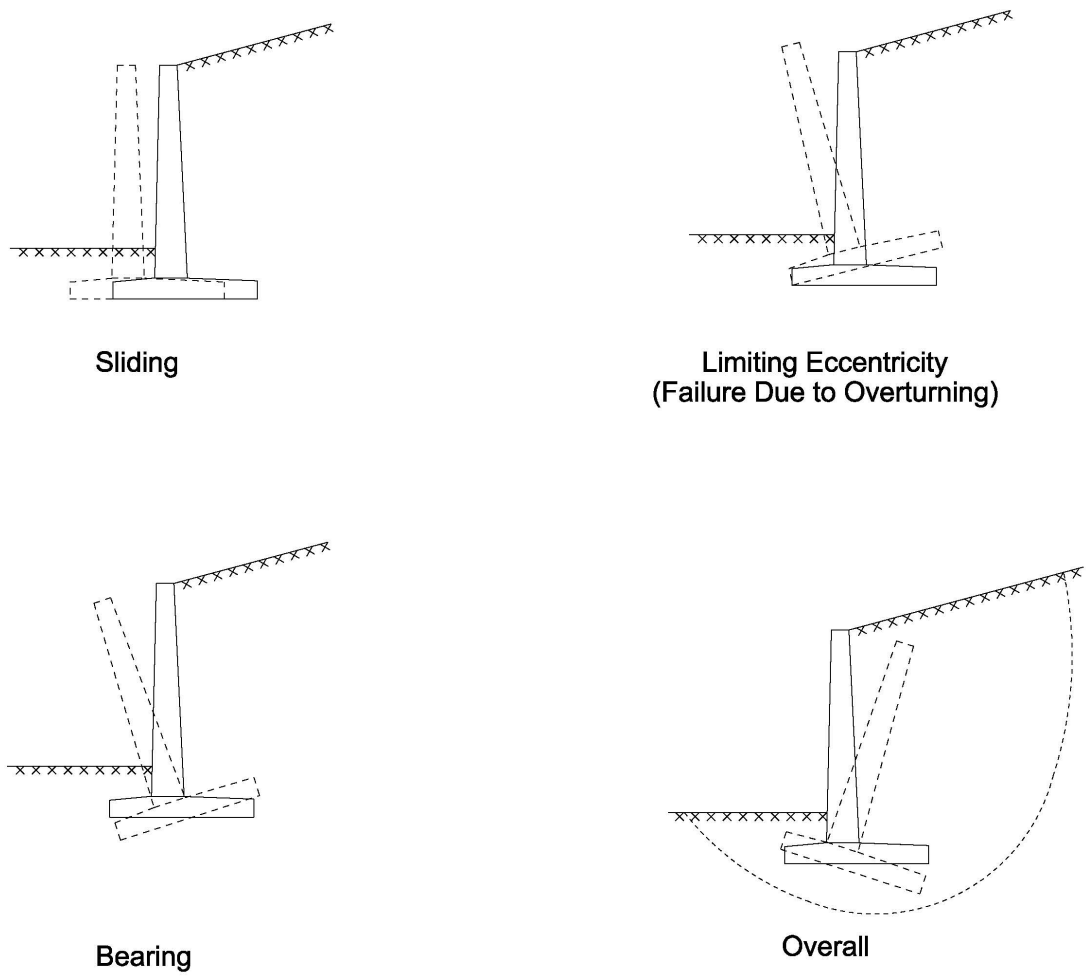

Figure 14.5-1
CIP Semi-Gravity Wall Failure Mechanism

14.5.2.1 Design Steps

The general design steps discussed in 14.4.1 shall be followed for the wall design. These steps as applicable for CIP cantilever walls are summarized below.

1. Establish project requirements including wall height, geometry and wall location as discussed in 14.1 of this chapter.

2. Perform Geotechnical investigation

3. Develop soil strength parameters

4. Determine preliminary sizing for external stability evaluation

5. Determine applicable unfactored or nominal loads

6. Evaluate factored loads for all appropriate limit states

7. Perform stability check to evaluate bearing resistance, eccentricity, and sliding as part of external stability

8. Estimate wall settlement and lateral wall movement to meet guidelines stated in Table 14.4-3.

9. Check overall stability and revise design, if necessary, by repeating steps 4 to 8.

It is assumed that steps 1, 2 and 3 have been performed prior to starting the design process.

14.5.3 Preliminary Sizing

A preliminary design can be performed using the following guideline.

1. The wall height and alignment shall be selected in accordance with the preliminary plan preparation process discussed in 14.1.

2. Preliminary CIP wall design may assume a stem top width of 12 inches. Stem thickness at the bottom is based on load requirements and/or batter. The front batter of the stem should be set at ¼ inch per foot for stem heights up to 28 feet. For stem heights from 16 feet to 26 feet inclusive, the back face batter shall be a minimum of ½ inch per foot, and for stem heights of 28 ft maximum and greater, the back face shall be ¾ inch per foot per stability requirements.

3. Minimum Footing thickness for stem heights equal to or less than 10 ft shall be 1.5 ft and 2.0 ft when the stem height exceeds 10 ft or when piles are used.

4. The base of the footing shall be placed below the frost line, or 4 feet below the finished ground line. Selection of shallow footing or deep foundation shall be based on the geotechnical investigation, which should be performed in accordance with guidelines presented in Chapter 11 - Foundation Support.

5. The final footing embedment shall be based on wall stability requirements including bearing resistance, wall settlement limitations, external stability, internal stability and overall stability requirements.

6. If the finished ground line is on a grade, the bottom of footings may be sloped to a maximum grade of 12 percent. If the grade exceeds 12 percent, place the footings level and use steps.

The designer has the option to vary the values of each wall component discussed in steps 2 to 6 above, depending on site requirements and to achieve economy. See Figure 14.5-2 for initial wall sizing guidance.

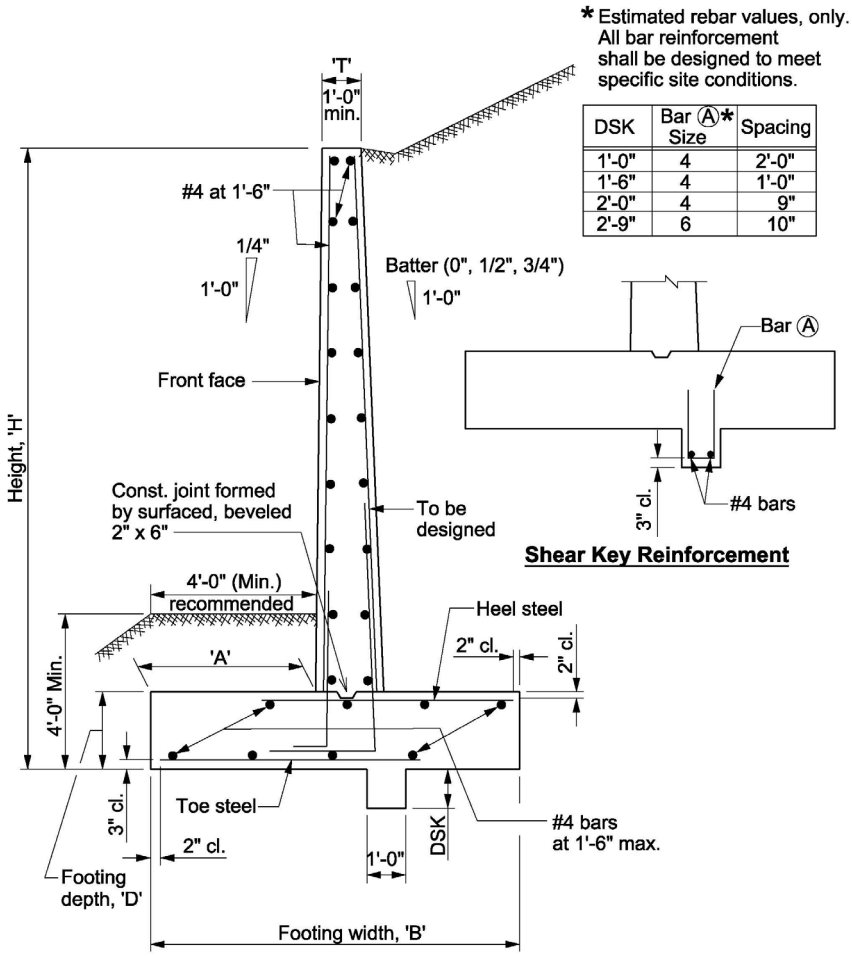

Figure 14.5-2
CIP Walls General Details

14.5.3.1 Wall Back and Front Slopes

CIP walls shall not be designed for backfill slope steeper than 2:1(H:V). Where practical, walls shall have a horizontal bench of 4.0 feet wide at the front face.

14.5.4 Unfactored and Factored Loads

Unfactored loads and moments are computed after establishing the initial wall geometry and using procedures defined in 14.4.5.4.5. A load diagram as shown in Figure **14.4-1** for the earth pressure is developed assuming a triangular distribution plus additional pressures resulting from earth surcharge, water pressure, compaction or any other loads, etc. The material

properties for backfill soil, concrete and steel are given in 14.4.6. The foundation and retained earth properties as recommended in the Geotechnical Report shall be used for computing nominal loads.

The computed nominal loads discussed in 14.5.4 are multiplied by applicable load factors given in Table 14.4-1. Figure 14.4-8 shows load factor and load combinations along with their application for the load limit state evaluation. A summary of load factors and load combinations as applicable for a typical CIP cantilever wall is presented in Table 14.4-1 and **LRFD [3.4.1]**, respectively. Computed factored loads and moments are used for performing stability checks.

14.5.5 External Stability Checks

The external stability check includes checks for limiting eccentricity (overturning), bearing stress, and sliding at Strength I and Extreme Event II due to vehicle impact in cases where live load traffic is carried.

14.5.5.1 Eccentricity Check

The eccentricity of the retaining wall shall be evaluated in accordance with **LRFD [11.6.3.3]**. The location of the resultant force should be within 1/3 of base width of the foundation centroid (e<B/3) for foundations on soil, and within 0.45 of the base width of the foundation centroid (e<0.45B) for foundations on rock. If there is inadequate resistance to overturning (eccentricity value greater than limits given above), consideration should be given to either increasing the width of the wall base, or providing a deep foundation.

14.5.5.2 Bearing Resistance

The bearing resistance shall be evaluated at the strength limit state using factored loads and resistances. Bearing resistance of the walls founded directly on soil or rock shall be computed in accordance with 11.2 and **LRFD [10.6]**. The bearing resistance for walls on piles shall be computed in accordance with 11.3 and **LRFD [10.6]**. Figure 14.5-3 shows bearing stress criteria for a typical CIP wall on soil and rock respectively.

The vertical stress for footings on soil shall be calculated using:

$$\sigma_v = \frac{\sum V}{(B-2e)}$$

For walls founded on rock, the vertical stress is calculated assuming a linearly distributed pressure over an effective base area. The vertical stress for footings on rock shall be computed using:

$$\sigma_v = \frac{\Sigma V}{B}\left(1 \pm \frac{6e}{B}\right)$$

Where

ΣV	=	Summation of vertical forces
B	=	Base width
e	=	Eccentricity as shown in Figure 14.5-3 and Figure 14.5-4

If the resultant is outside the middle one-third of the wall base, then the vertical stress shall be computed using:

$$\sigma_{v\,max} = \left(\frac{2\sum V}{3\left(\frac{B}{2} - e\right)} \right)$$

$\sigma_{vmin} = 0$

The computed vertical stress shall be compared with factored bearing resistance in accordance with the **LRFD [10.6.3.1]** using following equation:

$q_r = \phi_b q_n > \sigma_v$

Where:

q_r	=	Factored bearing resistance
q_n	=	Nominal bearing resistance computed using **LRFD [10.6.3.1.2-a]**
σ_v	=	Vertical stress
B	=	Base width
e	=	Eccentricity as shown in Figure 14.5-3 and Figure 14.5-4

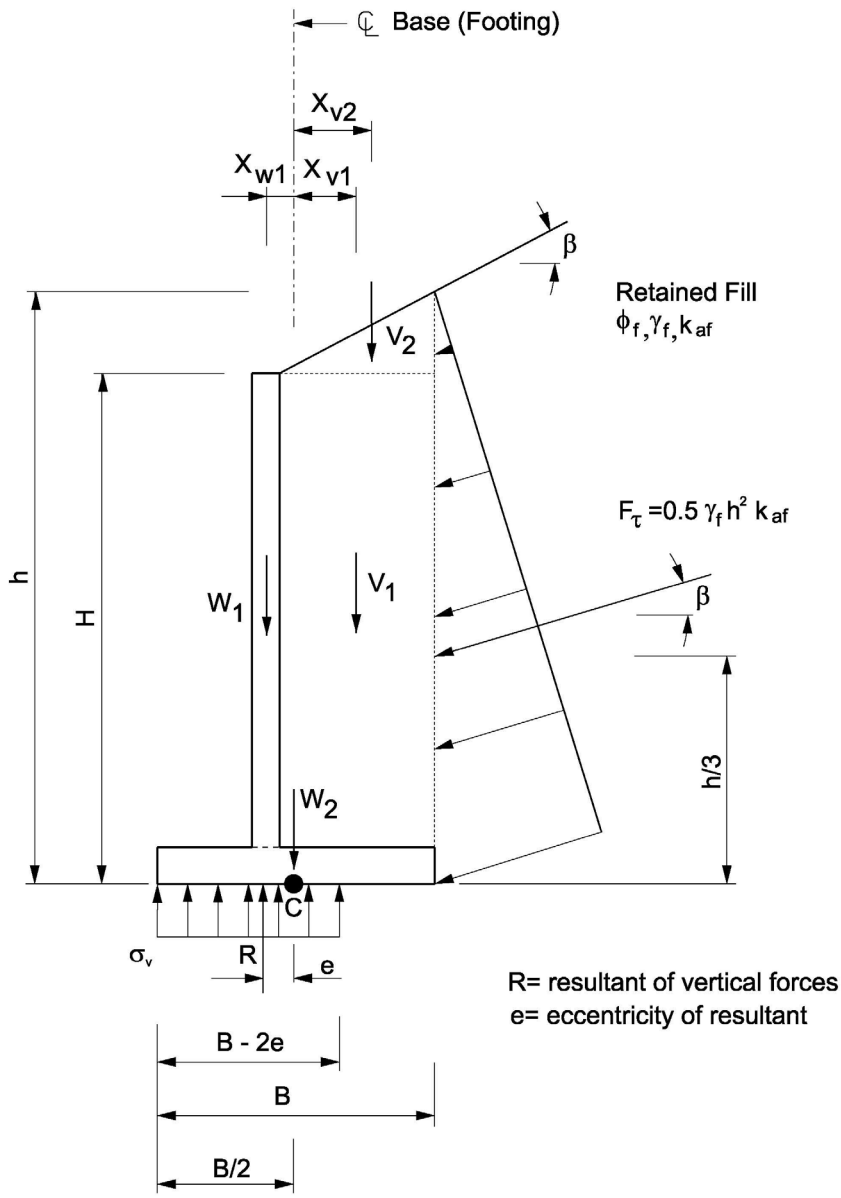

Summing Moments about Point C:

$$e = \frac{(F_T \cos\beta)h/3 - (F_T \sin\beta)B/2 - V_1 X_{V1} - V_2 X_{V2} + W_1 X_{W1}}{V_1 + V_2 + W_1 + W_2 + F_T \sin\beta}$$

Figure 14.5-3

Loading Diagram and Bearing Stress Criteria for CIP Cantilever Walls on Soil (source *AASHTO LRFD*)

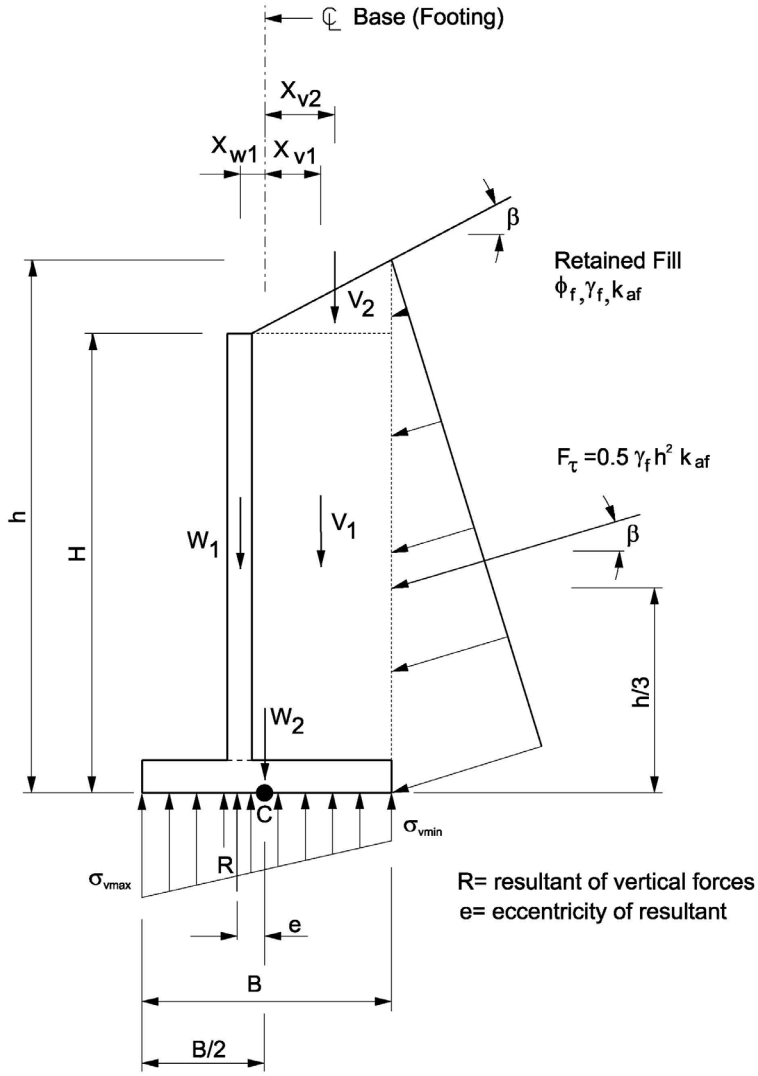

If e > B/6, σ_{vmin} will drop to zero, and as "e" increases, the portion of the heel of the footing which has zero vertical stress increases.

Summing Moments about Point C:

$$e = \frac{(F_T \cos\beta)h/3 - (F_T \sin\beta)B/2 - V_1 X_{V1} - V_2 X_{V2} + W_1 X_{W1}}{V_1 + V_2 + W_1 + W_2 + F_T \sin\beta}$$

Figure 14.5-4

Loading Diagram and Bearing Stress Criteria for CIP Cantilever Walls on Rock (source *AASHTO LRFD*)

14.5.5.3 Sliding

The sliding resistance of CIP cantilever walls is computed by considering the wall as a shallow footing resting on soil/rock or footing resting on piles in accordance with **LRFD [10.5]**. Sliding resistance of a footing resting on soil/rock foundation is computed in accordance with the **LRFD [10.6.3.4]** using the equation given below:

$$R_R = \phi R_n = \phi_\tau R_\tau + \phi_{ep} R_{ep}$$

Where:

R_R	=	Factored resistance against failure by sliding
R_n	=	Nominal sliding resistance against failure by sliding
ϕ_τ	=	Resistance factor for shear between soil and foundation per **LRFD [Table 10.5.5.2.2.1]**
R_τ	=	Nominal sliding resistance between soil and foundation
ϕ_{ep}	=	Resistance factor for passive resistance per **LRFD Table [10.5.5.2.2.1]**
R_{ep}	=	Nominal passive resistance of soil throughout the life of the structure

Contribution from passive earth pressure resistance against the embedded portion of the wall is neglected if the soil in front of the wall can be removed or weakened by scouring, erosion or any other means. Also, the live load surcharge is not considered as a stabilizing force over the heel of the wall when checking sliding.

If adequate sliding resistance cannot be achieved, footing design may be modified as follows:

- Increase the base width of the footing
- Construct a shear key
- Increase wall embedment to a sufficient depth, where passive resistance can be relied upon
- Incorporate a deep foundation, including battered piles (Usually a costly measure)

Guideline for selecting the shear key design is presented in 14.5.7.3. The design of wall footings resting on piles is performed in accordance with **LRFD [10.5]** and Chapter 11 - Foundation Support. Footings on piles resist sliding by the following:

1. Passive earth pressure in front of wall. Same as spread footing.
2. Lateral resistance of vertical piles as well as the horizontal components of battered piles. Maximum batter is 3 inches per foot. Refer to Chapter 11 - Foundation Support for lateral load capacity of piles.

3. Lateral resistance of battered or vertical piles in addition to horizontal component of battered piles. Refer to Chapter 11- Foundation Support for allowable lateral load capacity.

4. Do not use soil friction under the footing as consolidation of the soil may eliminate contact between the soil and footing.

14.5.5.4 Settlement

The settlement of CIP cantilever walls can be computed in accordance with guidelines and performance criteria presented in 14.4.7.2. The guideline for total and differential settlement is presented in Table 14.4-3. The actual performance limit can be changed for specific project requirements. For additional guidance contact the Geotechnical Engineering Unit.

14.5.6 Overall Stability

Investigate Service 1 load combination using an appropriate resistance factor and procedures discussed in **LRFD [11.6]** and 14.4.7.3. In general, the resistance factor, φ, may be taken as;

- 0.75 - where the geotechnical parameters are well defined, and slope does not support or contain a structural element.

- 0.65 – where the geotechnical parameters are based on limited information or the slope contains or supports a structural element.

14.5.7 Structural Resistance

The structural design of the stem and footing shall be performed in accordance with *AASHTO LRFD* and the design guidelines discussed below.

14.5.7.1 Stem Design

The initial sizing of the stem should be selected in accordance with criteria presented in 14.5.3. The stems of cantilever walls shall be designed as cantilevers supported at the footing. Axial loads (including the weight of the wall stem and frictional forces due to backfill acting on the wall stem) shall be considered in addition to the bending due to eccentric vertical loads, surcharge loads and lateral earth pressure if they control the design of the wall stems. The flexural design of the cantilever wall should be performed in accordance with *AASHTO LRFD*.

Loads from railings or parapets on top of the wall need not be applied simultaneously with live loads. These are dynamic loads which are resisted by the mass of the wall.

14.5.7.2 Footing Design

The footing of a cantilever wall shall be designed as a cantilever beam. The heel section must support the weight of the backfill soil and the shear component of the lateral earth pressure. All loads and moments must be factored using the criteria load factors discussed in 14.5.4. Use the following criteria when designing the footing.

1. Minimum footing thickness shall be selected in accordance with criteria presented in 14.5.3. The final footing thickness shall be based on shear at a vertical plane behind the stem.

2. For toe, design for shear at a distance from the face of the stem equal to the effective "d" distance of the footing. For heel, design for shear at the face of stem.

3. Where the footing is resting on piles, the piles shall be designed in accordance with criteria for pile design presented in Chapter 11 – Foundation Support. Embed piles six inches into footing. Place bar steel on top of the piles.

4. For spread footings, use a minimum of 3 inches clear cover at the bottom of footing. Use 2 inches clear cover for edge distance.

5. The critical sections for bending moments in footings shall be taken at the front and back faces of the wall stem. Bearing pressure along the bottom of the heel extension may conservatively be ignored. No bar steel is provided if the required area per foot is less than 0.05 square inches.

6. Design for heel moment, without considering the upward soil or pile reaction, is not required unless such a condition actually exists.

14.5.7.3 Shear Key Design

A shear key shall be provided to increase the sliding resistance when the factored sliding resistance determined using procedure discussed in 14.5.5.3 is inadequate. Use the following criteria when designing the shear key:

1. Place shear key in line with stem except under severe loading conditions.

2. The key width is 1'-0" in most cases. The minimum key depth is 1'-0".

3. Place shear key in unformed excavation against undisturbed material.

4. Analyze shear key in accordance with **LRFD [10.6.3.4]** and 14.5.5.3 .

5. The shape of shear key in rock is governed by the quality of the rock, but in general a 1 ft. by 1 ft key is appropriate.

14.5.7.4 Miscellaneous Design Information

1. Contraction joints shall be provided at intervals not exceeding 30 feet and expansion joints at intervals not exceeding 90 feet for reinforced concrete walls. Typical details of expansion and contraction joints are given in Figure 14.5-5. Expansion joints shall be constructed with a joint, filling material of the appropriate thickness to ensure the functioning of the joint and shall be provided with a waterstop capable of functioning over the anticipated range of joint movements.

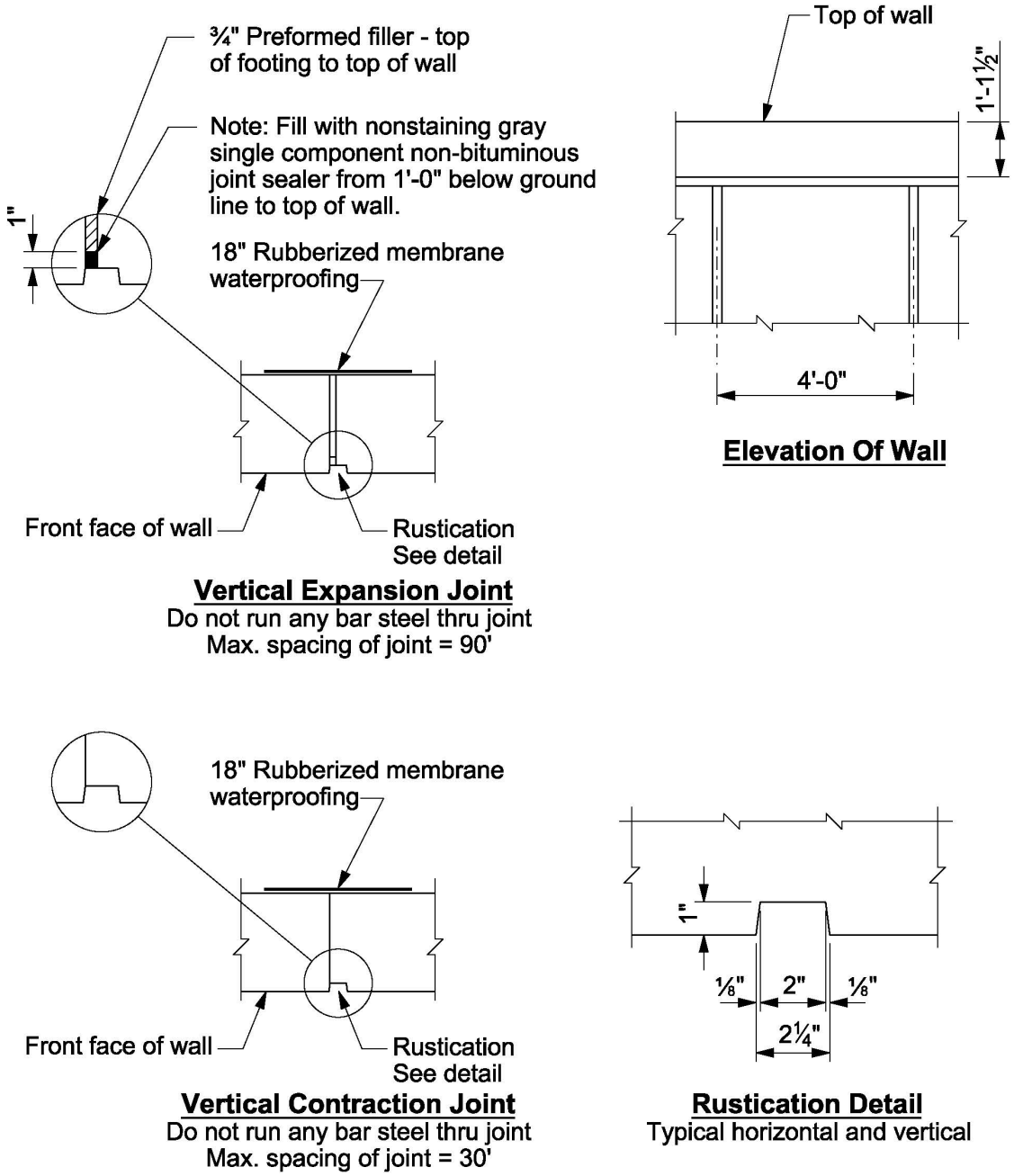

Figure 14.5-5
Retaining Wall Joint Details

2. Optional transverse construction joints are permitted in the footing, with a minimum spacing of three panel lengths. Footing joints should be offset a minimum of 1'-0 from wall joints. Run reinforcing bar steel thru footing joints.

3. The backfill material behind all cantilever walls shall be granular, free draining, non-expansive, non-corrosive material and shall be drained by weep holes with permeable material or other positive drainage systems, placed at suitable intervals and elevations. Structure backfill is placed behind the wall only to a vertical plane 18 inches beyond the face of footing. Lower limit is to the bottom of the footing.

4. If a wall is adjacent to a traveled roadway or sidewalk, use pipe underdrains in back of the wall instead of weep holes. Use a six-inch pipe wrapped underdrain located as detailed in this chapter. Provide a minimum slope of 0.5% and discharge to suitable drainage (i.e. a storm sewer system or ditch).

14.5.8 Design Tables for Cast-in-Place Concrete Cantilever Walls

Design tables suitable for use in preliminary design have been assembled and presented in this sub-section. These design tables are based on WisDOT design criteria and the material properties summarized in Table 14.5-1. Active earth pressure for the design tables was computed using the Rankine's equation for horizontal slopes and Coulomb's equation for surcharged slopes with the resultant perpendicular to the wall backface plus the wall friction angle. It was assumed that no water pressure exists. Service limit states were ignored in the analyses. The requirement of concrete is in accordance with **LRFD [5.4.2]** and 9.2. The requirement for bar steel is based on **LRFD [5.4.3]** and 9.3. The aforementioned assumptions were used in creating Table 14.5-2 thru Table 14.5-7. Refer to Figure 14.5-2 for details.

These tables should not be used if any of the assumptions or strength properties of the retained or foundation earth or the materials used for construction are different than those used in these design tables. The designer should also determine if the long-term or short-term soil strength parameters govern external stability analyses.

14.5.9 Design Examples

Refer to 14.18 for the design examples.

Design Criteria/Assumptions	Value
Concrete strength	3.5 ksi
Reinforcement yield strength	60 ksi
Concrete unit weight	150 pcf
Soil unit weight	120 pcf
Friction angle between fill and wall	21 degrees
Angle of Internal Friction (Soil - Backfill)	30 degrees

Angle of Internal Friction (Soil - Foundation)	34 degrees
Angle of Internal friction (Rock)	25 degrees
Cohesion (Soil)	0 psi
Cohesion (Rock)	20 psi
Soil Cover over Footing	4 feet
Stem Front Batter	0.25”/ft
Stem Back Batter	See Tables
Factored bearing resistance (On Soil)	**LRFD [10.6.3.1.2]**
Factored bearing resistance (On Rock)	20 ksf
Live Load Surcharge (Traffic)	240 psf
Live Load Surcharge (No Traffic)	100 psf
Lateral Earth Pressure (Horizontal Backfill)	Rankine
Lateral Earth Pressure (2:1 Backfill)	Coulomb

Table 14.5-1
Assumptions Summary for Preliminary Design of CIP Walls

HORIZONTAL BACKFILL – NO TRAFFIC – ON SOIL

H	B	A	D	Batter	Toe Steel			Heel Steel			Stem Steel		Shear	
(ft)	(ft)	(ft)	(ft)	(in/ft)	Size	Spa	L	Size	Spa	L	Size	Spa	Key	DSK
6	3'- 6"	0'- 9"	1'- 6"	0	---	---	---	---	---	---	---	---	NO	---
8	4'- 6"	1'- 0"	1'- 6"	0	---	---	---	4	12	3' - 5"	4	12	NO	---
10	5'- 3"	1'- 3"	1'- 6"	0	---	---	---	4	12	3' - 10"	4	12	NO	---
12	6'- 3"	1'- 6"	2'- 0"	0	---	---	---	4	10	4' - 7"	5	12	NO	---
14	7'- 3"	1'- 9"	2'- 0"	0	4	12	2' - 7"	5	9	5' - 6"	6	10	NO	---
16	8'- 0"	2'- 0"	2'- 0"	0.50	4	12	2' - 10"	5	8	5' - 5"	6	10	NO	---
18	8'- 9"	2'- 3"	2'- 0"	0.50	4	12	3' - 1"	7	11	6' - 7"	6	8	NO	---
20	9'- 9"	2'- 6"	2'- 0"	0.50	4	10	3' - 4"	7	8	7' - 3"	7	8	NO	---
22	10'- 6"	2'- 9"	2'- 3"	0.50	4	9	3' - 7"	9	12	9' - 2"	9	12	NO	---
24	11'- 6"	3'- 0"	2'- 9"	0.50	4	9	3' - 10"	9	11	9' - 10"	8	9	NO	---
26	12'- 0"	4'- 0"	2'- 9"	0.50	5	8	4' - 10"	8	8	8' - 5"	8	8	YES	1'- 6"
28	13'- 0"	5'- 0"	3'- 0"	0.75	7	11	6' - 6"	8	8	7' - 9"	8	7	YES	1'- 6"

Table 14.5-2
Reinforcement for Cantilever Retaining Walls

HORIZONTAL BACKFILL – TRAFFIC – ON SOIL

H	B	A	D	Batter	Toe Steel			Heel Steel			Stem Steel		Shear	
(ft)	(ft)	(ft)	(ft)	(in/ft)	Size	Spa	L	Size	Spa	L	Size	Spa	Key	DSK
6	4'- 6"	0'- 6"	1'- 6"	0	---	---	---	4	12	3' - 11"	---	---	NO	---
8	5'- 3"	0'- 9"	1'- 6"	0	---	---	---	4	11	4' - 5"	4	12	NO	---
10	6'- 6"	1'- 0"	1'- 6"	0	---	---	---	6	12	5' - 11"	4	8	NO	---
12	7'- 3"	1'- 3"	2'- 0"	0	---	---	---	6	11	6' - 5"	5	9	NO	---
14	8'- 3"	1'- 6"	2'- 0"	0	---	---	---	7	10	7' - 7"	6	9	NO	---
16	9'- 0"	2'- 3"	2'- 0"	0.50	4	12	3'- 1"	7	10	7'- 0 "	6	9	NO	---
18	9'- 3"	2'- 9"	2'- 0"	0.50	4	10	3'- 7"	7	10	6' - 7"	8	12	YES	1'- 0"
20	10'- 0"	3'- 6"	2'- 0"	0.50	5	9	4'- 4"	6	7	6'- 0 "	8	10	YES	1'- 0"
22	11'- 0"	4'- 3"	2'- 3"	0.50	5	7	5'- 1"	6	7	6' - 2"	7	7	YES	1'- 0"
24	11'- 9"	5'- 0"	2'- 6"	0.50	7	10	6'- 6"	6	7	6'- 0 "	9	11	YES	1'- 6"
26	12'- 9"	5'- 9"	2'- 9"	0.50	8	11	7'- 9"	6	7	6' - 2"	9	9	YES	1'- 6"
28	14'- 3"	7'- 0"	3'- 0"	0.75	9	11	9'- 7"	6	7	5' - 9"	9	9	YES	2'- 0"

Table 14.5-3
Reinforcement for Cantilever Retaining Walls

2:1 BACKFILL – NO TRAFFIC – ON SOIL

H	B	A	D	Batter	Toe Steel			Heel Steel			Stem Steel		Shear	
(ft)	(ft)	(ft)	(ft)	(in/ft)	Size	Spa	L	Size	Spa	L	Size	Spa	Key	DSK
6	4'- 6"	2'- 0"	1'- 6"	0	---	---	---	---	---	---	4	12	YES	1'- 0"
8	6'- 0"	2'- 6"	1'- 6"	0	4	12	3'- 4"	4	12	3' - 5"	4	9	YES	1'- 0"
10	7'- 6"	2'- 0"	1'- 6"	0	4	12	2'- 10"	6	11	5' - 11"	6	9	YES	1'- 0"
12	9'- 0"	1'- 9"	2'- 0"	0	4	12	2'- 7"	7	9	8' - 2"	8	11	YES	1'- 0"
14	10'- 6"	2'- 6"	2'- 6"	0	4	12	3'- 4"	8	10	9' - 8"	9	10	YES	1'- 6"
16	12'- 3"	3'- 9"	2'- 9"	0.50	5	12	4'- 7"	7	7	8' - 10"	9	10	YES	2'- 0"
18	14'- 0"	4'- 6"	3'- 0"	0.50	6	12	5'- 7"	9	9	11' - 2"	10	10	YES	2'- 0"
20	15'- 6"	5'- 6"	3'- 3"	0.50	7	11	7'- 0"	10	11	12' - 8"	10	8	YES	2'- 9"

Table 14.5-4
Reinforcement for Cantilever Retaining Walls

HORIZONTAL BACKFILL – NO TRAFFIC – ON ROCK

H	B	A	D	Batter	Toe Steel			Heel Steel			Stem Steel	
(ft)	(ft)	(ft)	(ft)	(in/ft)	Size	Spa	L	Size	Spa	L	Size	Spa
6	2'- 9"	0'- 9"	1'- 6"	0	---	---	---	---	---	---	4	12
8	3'- 6"	1'- 0"	1'- 6"	0	---	---	---	---	---	---	4	12
10	4'- 3"	1'- 3"	1'- 6"	0	---	---	---	4	12	2' - 10"	4	12
12	5'- 0"	1'- 6"	2'- 0"	0	4	12	2'- 4"	4	12	3' - 4"	5	12
14	5'- 9"	1'- 9"	2'- 0"	0	4	12	2'- 7"	4	12	3' - 10"	6	10
16	6'- 6"	2'- 0"	2'- 0"	0.50	4	12	2'- 10"	4	11	3' - 8"	6	10
18	7'- 3"	2'- 3"	2'- 0"	0.50	4	11	3'- 1"	5	12	4' - 3"	6	8
20	7'- 9"	2'- 6"	2'- 0"	0.50	5	11	3'- 4"	5	9	4' - 5"	8	11
22	8'- 6"	2'- 9"	2'- 0"	0.50	5	9	3'- 7"	6	10	5' - 1"	7	7
24	9'- 3"	3'- 0"	2'- 0"	0.50	6	10	4'- 1"	7	10	6'- 0 "	9	11
26	10'- 0"	3'- 3"	2'- 3"	0.50	6	9	4'- 4"	8	11	7' - 2"	10	12
28	10'- 6"	3'- 6"	2'- 6"	0.75	6	8	4'- 7"	8	11	6' - 9"	9	9

Table 14.5-5
Reinforcement for Cantilever Retaining Walls

HORIZONTAL BACKFILL – TRAFFIC – ON ROCK

H	B	A	D	Batter	Toe Steel			Heel Steel			Stem Steel	
(ft)	(ft)	(ft)	(ft)	(in/ft)	Size	Spa	L	Size	Spa	L	Size	Spa
6	3'- 6"	0'- 9"	1'- 6"	0	---	---	---	---	---	---	4	12
8	4'- 3"	1'- 0"	1'- 6"	0	---	---	---	4	12	3' - 2"	4	12
10	5'- 0"	1'- 3"	1'- 6"	0	---	---	---	4	12	3' - 7"	4	8
12	5'- 9"	1'- 6"	2'- 0"	0	---	---	---	4	12	4' - 1"	5	9
14	6'- 6"	1'- 9"	2'- 0"	0	4	12	2'- 7"	4	8	4' - 6"	6	9
16	7'- 3"	2'- 0"	2'- 0"	0.50	4	12	2'- 10"	4	7	4' - 5"	7	12
18	8'- 0"	2'- 3"	2'- 0"	0.50	4	11	3'- 1"	6	11	5' - 4"	8	12
20	8'- 9"	2'- 6"	2'- 3"	0.50	4	9	3'- 4"	6	9	5' - 9"	8	10
22	9'- 6"	2'- 9"	2'- 6"	0.50	5	12	3'- 7"	7	11	6' - 8"	9	12
24	10'- 3"	3'- 0"	2'- 9"	0.50	5	10	3'- 10"	7	9	7' - 1"	9	11
26	11'- 0"	4'- 0"	2'- 6"	0.50	7	10	5'- 6"	8	11	7' - 5"	8	7
28	11'- 9"	4'- 3"	2'- 9"	0.75	6	7	5'- 4"	8	11	7' - 3"	8	7

Table 14.5-6
Reinforcement for Cantilever Retaining Walls

2:1 BACKFILL – NO TRAFFIC – ON ROCK

H	B	A	D	Batter	Toe Steel			Heel Steel			Stem Steel	
(ft)	(ft)	(ft)	(ft)	(in/ft)	Size	Spa	L	Size	Spa	L	Size	Spa
6	3'- 9"	2'- 0"	1'- 6"	0	---	---	---	---	---	---	4	12
8	5'- 0"	2'- 9"	1'- 6"	0	4	12	3'- 7"	4	12	2' - 2"	4	12
10	6'- 0"	3'- 3"	1'- 6"	0	4	9	4'- 1"	4	12	2' - 7"	6	12
12	7'- 0"	4'- 0"	2'- 0"	0	5	11	4'- 10"	4	12	2' - 10"	6	9
14	8'- 3"	4'- 6"	2'- 0"	0	6	10	5'- 7"	4	12	3' - 7"	8	11
16	9'- 0"	5'- 3"	2'- 0"	0.50	8	11	7'- 3"	4	12	2' - 11"	8	11
18	10'- 0"	4'- 9"	2'- 0"	0.50	8	10	6'- 9"	6	11	4' - 10"	9	10
20	11'- 3"	4'- 0"	2'- 6"	0.50	7	10	5'- 6"	8	10	8'- 0 "	11	11
22	12'- 3"	4'- 6"	3'- 0"	0.50	7	9	6'- 0"	9	12	9' - 2"	11	9

Table 14.5-7
Reinforcement for Cantilever Retaining Walls

14.5.10 Summary of Design Requirements

1. Stability Check

    a. Strength I and Extreme Event II limit states

        - Eccentricity
        - Bearing Stress
        - Sliding

    b. Service I limit states

        - Overall Stability
        - Settlement

2. Foundation Design Parameters

    Use values provided by Geotechnical analysis

3. Concrete Design Data

    - f'c = 3500 psi
    - fy = 60,000 psi

4. Retained Soil

    - Unit weight = 120 lb/ft^3
    - Angle of internal friction - use value provided by Geotechnical analysis

5. Soil Pressure Theory

    - Coulomb theory for short heels or Rankine theory for long heels at the discretion of the designer.

6. Surcharge Load

    - Traffic live load surcharge = 2 feet = 240 lb/ft^2
    - If no traffic surcharge, use 100 lb/ft^2

7. Load Factors

Group	γ_{DC}	γ_{EV}	γ_{LSv}	γ_{LSh}	γ_{EH}	γ_{CT}	Probable use
Strength I-a	0.90	1.00	1.75	1.75	1.50		Sliding, eccentricity
Strength I-b	1.25	1.35	1.75	1.75	1.50		Bearing /wall strength
Extreme II-a	0.90	1.00	-	-	-	1.00	Sliding, eccentricity
Extreme II-b	1.25	1.35	-	-	-	1.00	Bearing
Service I	1.00	1.00	1.00	1.00	1.00		Global/settlement/wall crack control

Table 14.5-8
Load Factor Summary for CIP Walls

8. Bearing Resistance Factors

   - ϕ_b = 0.55 **LRFD [Table 11.5.7-1]**

9. Sliding Resistance Factors

   - ϕ_τ = 1.0 **LRFD [Table 11.5.7-1]**
   - ϕ_{ep} = 0.5 **LRFD Table [10.5.5.2.2-1]**

14.6 Mechanically Stabilized Earth Retaining Walls

14.6.1 General Considerations

Mechanically Stabilized Earth (MSE) is the term used to describe the practice of reinforcing a mass of soil with either metallic or geosynthetic soil reinforcement which allows the mass of soil to function as a gravity retaining wall structure. The soil reinforcement is placed horizontally across potential planes of shear failure and develops tension stresses to keep the soil mass intact. The soil reinforcement is attached to a wall facing located at the front face of the wall.

The design of MSE walls shall meet the *AASHTO LRFD* requirements in accordance with 14.4.2. The service life requirement for both permanent and temporary MSE wall systems is presented in 14.4.3.

The MSE walls shall be designed for external stability of the wall system and internal stability of the reinforced soil mass. The global stability shall also be considered as part of design evaluation. MSE walls are proprietary wall systems and the design responsibilities with respect to global, external, and internal stability as well as settlement are shared between the designer (WisDOT or Consultant) and contractor. The designer is responsible for the overall stability, preliminary external stability and settlement whereas the contractor is responsible for the internal stability, compound stability and structural design of the wall. The responsibilities of the designer and contractor are outlined in 14.6.3.2. The design and drawings of MSE walls provided by the contractor must also be in compliance with the WisDOT special provisions as stated in 14.15.2 and 14.16

The guidelines provided herein for MSE walls do not apply to geometrically complex MSE wall systems such as tiered walls (walls stacked on top of one another), back-to-back walls, or walls which have trapezoidal sections. Design guidelines for these cases are provided in publications FHWA-NHI-10-024 and FHWA-NHI-10-025.

Horizontal alignment and grades at the bottom and top of the wall are determined by the design engineer. The design must be in compliance with the WisDOT special provisions for the project and the policy and procedures as stated in the *Bridge Manual* and FDM.

14.6.1.1 Usage Restrictions for MSE Walls

Construction of MSE walls with either block or panel facings should not be used when any of the following conditions exist:

1. If the available construction limit behind the wall does not meet the soil reinforcement length requirements.

2. Sites where extensive excavation is required or sites that lack granular soils and the cost of importing suitable fill material may render the system uneconomical.

3. At locations where erosion or scour may undermine or erode the reinforced fill zone or any supporting leveling pad.

4. Soil is contaminated by corrosive material such as acid mine, drainage, other industrial pollutants, or any other condition which increases corrosion rate, such as the presence of stray electrical currents.

5. There is potential for placing buried utilities within (or below) the reinforced zone unless access is provided to utilities without disrupting reinforcement and breakage or rupture of utility lines will not have a detrimental effect on the stability of the wall. Contact WisDOT's Structures Design Section.

14.6.2 Structural Components

The main structural elements or components of an MSE wall are discussed below. General elements of a typical MSE wall are shown in Figure 14.6-1. These include:

- Selected Earthfill in the Reinforced Earth Zone
- Reinforcement
- Wall Facing Element
- Leveling Pad
- Wall Drainage

A combination of different wall facings and reinforcement provide a choice of selecting an MSE wall which can be used for several different functions.

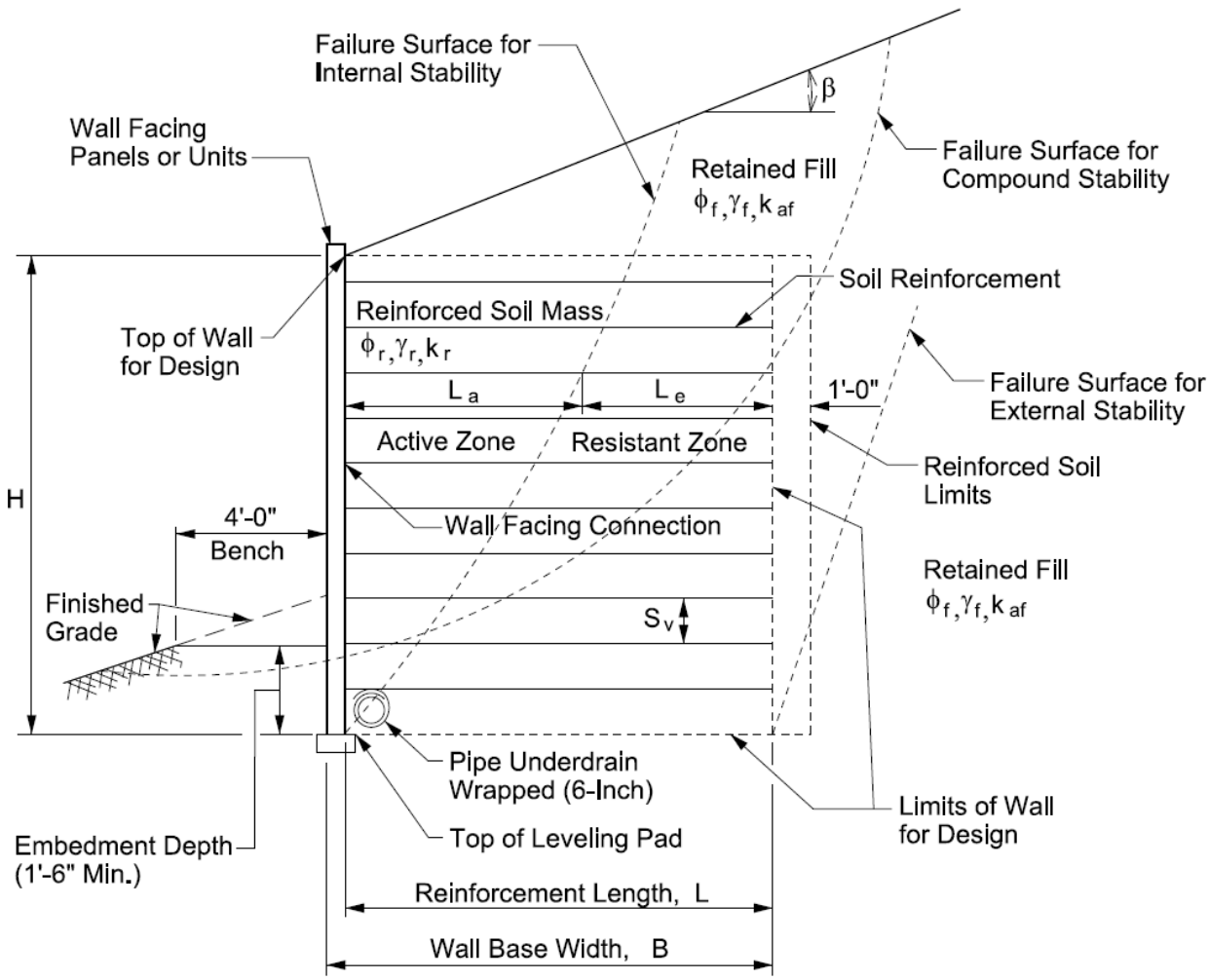

Figure 14.6-1
Structural Components of MSE Walls

14.6.2.1 Reinforced Earthfill Zone

The reinforced backfill to be used to construct the MSE wall shall meet the criteria in the wall specifications. The backfill shall be free from organics, or other deleterious material. It shall not contain foundry sand, bottom ash, blast furnace slag, or other potentially corrosive material. It shall meet the electrochemical criteria given in Table 14.6-1.

Reinforcement Material	Property	Criteria
Metallic	Resistivity	> 3000 ohm-cm
Metallic	Chlorides	< 100 ppm
Metallic	Sulfates	< 200 ppm
Metallic	pH	5.0 < pH < 10.0
Geosynthetic	pH	4.5 < pH < 9.0
Metallic/Geosynthetic	Organic Content	< 1.0 %

Table 14.6-1
Electrochemical Properties of Reinforced Fill MSE Walls

An angle of internal friction of 30 degrees and unit weight of 120 pcf shall be used for the stability analyses as stated in 14.4.6. If it is desired to use an angle of internal friction greater than 30 degrees, it shall be determined by the most current wall specifications.

14.6.2.2 Reinforcement:

Soil reinforcement can be either metallic (strips or bar grids like welded wire fabric) or non-metallic including geotextile and geogrids made from polyester, polypropylene, or high density polyethylene. Metallic reinforcements are also known as inextensible reinforcement and the non-metallic as extensible. Inextensible reinforcement deforms less than the compacted soil infill used in MSE walls, whereas extensible reinforcement deforms more than compacted soil infill

The metallic or inextensible reinforcement is mild steel, and usually galvanized or epoxy coated. Three types of steel reinforcement are typically used:

Steel Strips: The steel strip type reinforcement is mostly used with segmental concrete facings. Commercially available strips are ribbed top and bottom, 2 to 4 inch wide and 1/8 to 5/32 inch thick.

Steel grids: Welded wire steel grids using two to six W7.5 to W24 longitudinal wires spaced either at 6 or 8 inches. The transverse wire may vary from W11 to W20 and are spaced from 9 to 24 inches apart.

Welded wire mesh: Welded wire meshes spaced at 2 by 2 inch of thinner steel wire can also be used.

The galvanized steel reinforcement that is used for soil reinforcement is oversized in cross sectional areas to account for the corrosion that occurs during the life of the structure and the resulting loss of section. The net section remaining after corrosion at the end of the design service life is used to check design requirements

The non-metallic or extensible reinforcement includes the following:

Geogrids: The geogrids are mostly used with modular block walls.

Geotextile Reinforcement: High strength geotextile can be used principally with wrap-around and temporary wall construction.

Corrosion of the wall anchors that connect the soil reinforcement to the wall face must also be accounted for in the design.

14.6.2.3 Facing Elements

The types of facings element used in the different MSE walls mainly control aesthetics, provide protection against backfill sloughing and erosion, and may provide a drainage path in certain cases. A combination of different wall facings and reinforcement provide a choice of selecting an MSE wall which can be used for several different functions.

Major facing types are:

- Segmental precast concrete panels
- Dry cast or wet cast modular blocks
- Full height pre-cast concrete panels (tilt-up)
- Cast-in-place concrete facing
- Geotextile-reinforced wrapped face
- Geosynthetic /Geogrid facings
- Welded wire grids

Segmental Precast Concrete Panels

Segmental precast concrete panels include small panels (<30 sq ft) to larger (>30 sq ft) with a minimum thickness of 5-½ inches and are of a square, rectangular, cruciform, diamond, or hexagonal geometry. The geometric pattern of the joints and the smooth uniform surface finish of the factory provided precast panels give an aesthetically pleasing appearance. Segmental precast concrete panels are proprietary wall components.

Wall panels are available in a plain concrete finish or numerous form liner finishes and textures. An exposed aggregate finish is also available along with earth tone colors. Although color can be obtained by adding additives to the concrete mix it is more desirable to obtain color by applying concrete stain and/or paint at the job site. Aesthetics do affect wall costs.

WisDOT requires that MSE walls utilize precast concrete panels when supporting traffic live loads which are in close proximity to the wall. Panels are also allowed as components of an

abutment structure. Either steel strips or welded wire fabric is allowed for soil reinforcement when precast concrete panels are used as facing of the MSE wall system.

Walls with curved alignments shall limit radii to 50 feet for 5 feet wide panels and 100 feet for 10 feet wide panels. Typical joint openings are not suitable for wall alignments following a tighter curve. Special joints or special panels that are less than 5 feet wide may be able to accommodate tighter curves. In general, MSE wall structures with panel type facings shall be limited to wall heights of 33 feet. Contact Structures Design Section for approval on case by case basis.

Concrete Modular Blocks Facings

Concrete modular block retaining walls are constructed from modular blocks typically weighing from 40 to 100 pounds each, although blocks over 200 pounds are rarely used. Nominal front to back width ranges between 8 to 24 inches. Modular blocks are available in a large variety of facial textures and colors providing a variety of aesthetic appearances. The shape of the blocks usually allows the walls to be built along a curve, either concave (inside radius) or convex (outside radius). The blocks or units are dry stacked meaning mortar or grout is not used to bond the units together except for the top two layers. Figure 14.6-2 shows various types of blocks available commercially.

Figure 14.6-3 shows a typical modular block MSE wall system along with other wall components. Most modular block MSE walls are reinforced with geogrids.

Modular blocks can be either dry cast or wet cast. Dry cast (small) blocks are mass produced by using a zero slump concrete that allows forms to be stripped faster than wet cast (large) blocks. MSE walls usually use dry cast blocks since they are usually a cheaper facing and wall stability is provided by the reinforced mass. Gravity walls rely on facing size and mass for wall stability. For minor walls dry cast blocks are typically used and for taller gravity walls wider wet cast blocks are normally required to satisfy stability requirements.

Concrete modular blocks are proprietary wall component systems. Each proprietary system has its own unique method of locking the units together to resist the horizontal shear forces that develop. Fiberglass pins, stainless steel pins, glass filled nylon clips and mechanical interlocking surfaces are some of the methods utilized. Any pins or hardware must be manufactured from corrosion resistant materials.

During construction of these systems, the voids are filled with granular material such as crushed stone or gravel. Most of the systems have a built in or automatic set-back (incline angle of face to the vertical) which is different for each proprietary system. Blocks used on WisDOT projects must be of one piece construction. A minimum weight per block or depth of block (distance measured perpendicular to wall face) is not specified on WisDOT projects. The minimum thickness allowed of the front face is 4 inches (measured perpendicular from the front face to inside voids greater than 4 square inches). Also the minimum allowed thickness of any other portions of the block (interior walls or exterior tabs, etc.) is 2 inches.

Alignments that are not straight (i.e. kinked or curved) shall use 90 degree corners or curves. The minimum radius should be limited to 8 feet. For a concave wall the radius is measured to the front face of the bottom course. For convex walls the radius is measured to the front face

of the top course. In no case shall the radius be less than 6 feet. It is WisDOT policy to design modular block MSE walls for a maximum height of 22 ft (measured from the top of the leveling pad to the top of the wall).

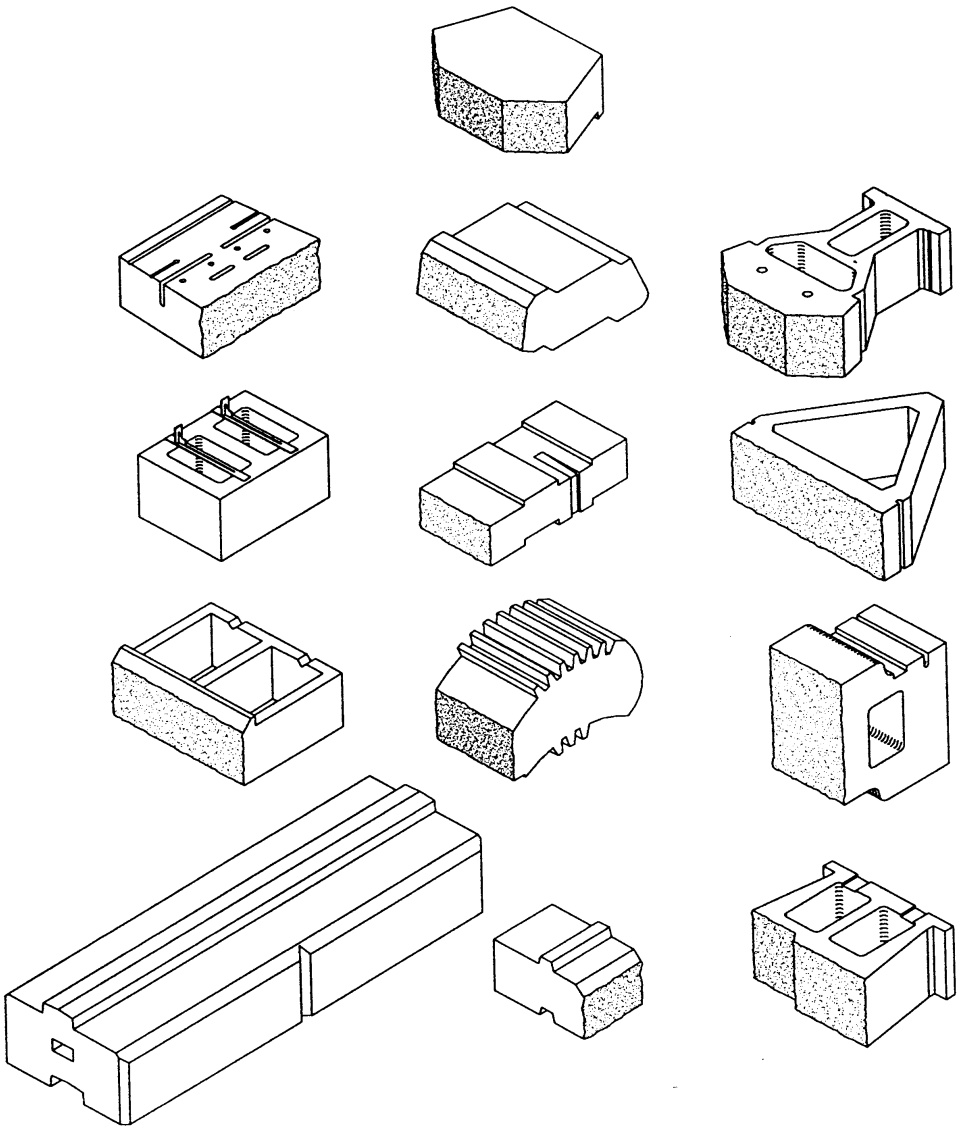

Figure 14.6-2
Modular Blocks
(Source FHWA-NHI-10-025)

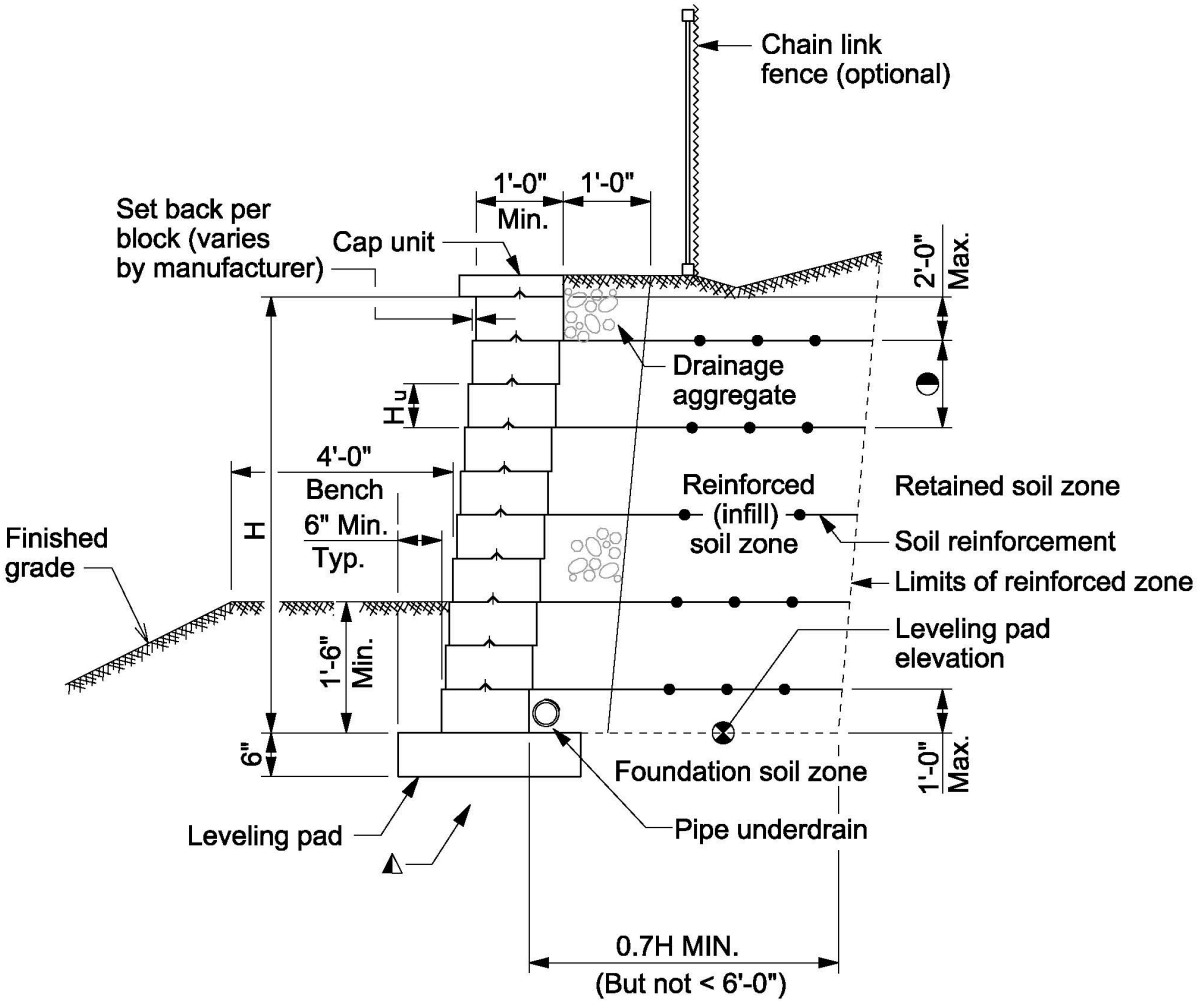

Modular Block MSE Wall

◭ Ground improvement meaures should be taken when the soil below the levelling pad is poor or subject to frost heave.

◑ Maximum vertical spacing of soil reinforcement layers shall be two times the block depth (Hu) or 32 inches, whichever is less.

Figure 14.6-3
Typical Modular Block MSE Walls

MSE Wire-Faced Facing

Welded wire fabric facing is used to build MSE wire-faced walls. These are essentially MSE walls with a welded wire fabric facing instead of a precast concrete facing. The wire size, spacing and patterns used in the facing are developed from performance data of full size wall tests and from applications in actual walls. A test to determine the connection strength between the soil reinforcement and the facing panels is required. Some systems do not use a connection because the ground reinforcement and facing panel are of one piece construction.

MSE wire-faced wall systems usually incorporate a backing mat behind the front facing. A fine metallic screen and geotextile fabric is placed behind the backing mat (or behind the facing if a backing mat is not used) to prevent the backfill from passing thru the front face.

MSE wire-faced walls can tolerate considerable differential settlement because of the flexibility of the wire facing. The limiting differential settlement is 1/50. The flexibility of the wire facing results in face bulging between ground reinforcement. The actual amount varies per system but normally is less than one inch. Recommended limits on bulging are 2" for permanent walls and 3" for temporary walls. This type of wall works well when a permanent wall facing can be placed after settlement/movement has occurred.

When MSE wire-faced walls are used for permanent wall applications, all steel components must be galvanized. When used for temporary wall applications black steel (non-galvanized) may be used since the walls are usually left in place and buried.

Temporary MSE wire-faced walls can be used as temporary shoring if site conditions permit. This wall type can also be used when staged construction is required to maintain traffic when an existing roadway is being raised and/or widened in conjunction with bridge approaches, railroad crossings or road reconstruction.

Cast-In- Place Concrete Facing

MSE walls with cast in place concrete facings are identical to MSE wire faced walls except a cast-in-place concrete facing is added after the wire face wall is erected. Modifications are made to the standard wire face wall detail to anchor the concrete facing to the wire facing and soil reinforcement. They are usually used when a special aesthetic facial treatment is required without the numerous joints that are common to precast panels. They can also be used where differential or total settlement is above tolerable limits for other wall types. A MSE wire faced wall can be constructed and allowed to settle with the concrete facing added after consolidation of the foundation soils has occurred.

The cast-in-place concrete facing shall be a minimum of 8-inches thick and contain coated or galvanized reinforcing steel. This is required because the panels and/or anchor that extend into the cast-in-place concrete are galvanized and a corrosion cell would be created if black steel contacts galvanized steel. All wire ties and bar chairs used in the cast–in-place concrete must also be coated or galvanized. Note that the 8-inch minimum wall thickness will occur at the points of maximum panel bulging and that the wall will be thicker at other locations. Also note that the 8-inch minimum is measured from the trough of any form liner or rustication.

Vertical construction joints are required in the cast-in-place concrete facing to allow for expansion and contraction and to allow for some differential settlement. Closer spacing of vertical construction joints is required when differential settlement may occur, but by delaying the placement of the cast-in-place concrete, the effects of differential settlement is minimized. Higher walls also require closer spacing of vertical construction joints if differential settlement is anticipated. Horizontal construction joints may disrupt the flow of a special aesthetic facial treatment and are sometimes not allowed for that reason. The designer should specify if optional horizontal construction joints are allowed. Cork filler is placed at vertical construction joints because cork is compressible and will allow some expansion and rotation to occur at the joint. An expandable polyvinyl chloride waterstop (PCW) is used on the back side of a vertical construction joint. Since forms are only used at the front face of the wall the PCW can be attached to a 10-inch board which is supported by the wire facing. The 8-inch minimum wall thickness may be decreased at the location of the vertical construction joint to accommodate the PCW and its support board.

Geosynthetic Facing

Geosynthetic reinforcements are looped around at the facing to form the exposed face of the MSE Wall. These faces are susceptible to ultraviolet light degradation, vandalism, and damage due to fire. Geogrid used for soil reinforcement can be looped around to form the face of the completed retaining structure in a similar manner to welded wire mesh and fabric facing. This facing is generally used in temporary applications. Similar to wire faced walls, these walls typically have a geotextile behind the geogrids, to prevent material from passing through the face.

14.6.3 Design Procedure

14.6.3.1 General Design Requirements

The procedure for design of an MSE wall requires evaluation of external stability and internal stability (structural design) at Strength Limit States and overall stability and vertical/lateral movement at Service Limit State. The Extreme Event II load combination is used to design and analyze for vehicle impact where traffic barriers are provided to protect MSE walls. The design and stability is performed in accordance with *AASHTO LRFD* and design guidance discussed in 14.4.

14.6.3.2 Design Responsibilities

MSE walls are proprietary wall systems and the structural design of the wall system is provided by the contractor. The structural design of the MSE wall system must include an analysis of internal stability (soil reinforcement pullout and stress) and local stability (facing connection forces and internal panel stresses). Additionally, the contractor should also provide internal drainage. Design drawings and calculations must be submitted to the Bureau of Structures for acceptance.

External stability, overall stability and settlement calculations are the responsibility of the WISDOT/Consultant designer. Compound stability is the responsibility of the Contractor. Soil borings and soil design parameters are provided by Geotechnical Engineer.

Although abutment loads can be supported on spread footings within the reinforced soil zone, it is WisDOT policy to support the abutment loads for multiple span structures on piles or shafts that pass through the reinforced soil zone to the in-situ soil below. Piles shall be driven prior to the placement of the reinforced earth. Strip type reinforcement can be skewed around the piles but must be connected to the wall panels and must extend to the rear of the reinforced soil zone.

For continuous welded wire fabric reinforcement, the contractor should provide details on the plans showing how to place the reinforcement around piles or any other obstacle. Abutments for single span structures may be supported by spread footings placed within the soil reinforcing zone, with WISDOT's approval. Loads from such footings must be considered for both internal wall design and external stability considerations.

14.6.3.3 Design Steps

Design steps specific to MSE walls are described in FHWA publication No. *FHWA-NHI-10-24* and modified shown below:

1. Establish project requirements including all geometry, loading conditions (transient and/or permanent), performance criteria, and construction constraints.
2. Evaluate existing topography, site subsurface conditions, in-situ soil/rock properties, and wall backfill parameters.
3. Select MSE wall using project requirement per step 1 and wall selection criteria discussed in 14.3.1.
4. Based on initial wall geometry, estimate wall embedment depth and length of reinforcement.
5. Estimate unfactored loads including earth pressure for traffic surcharge or sloping back slope and /or front slope.
6. Summarize load factors, load combinations, and resistance factors
7. Calculate factored loads for all appropriate limit states and evaluate (external stability) at Strength I Limit State
    a. sliding
    b. eccentricity
    c. bearing
8. Compute settlement at Service limit states
9. Compute overall stability at Service limit states
10. Compute vertical and lateral movement
11. Design wall surface drainage systems
12. Compute internal stability
    a. Select reinforcement
    b. Estimate critical failure surface
    c. Define unfactored loads
    d. Calculate factored horizontal stress and maximum tension at each reinforcement level
    e. Calculate factored tensile stress in each reinforcement
    f. Check factored reinforcement pullout resistance
    g. Check connection resistance requirements at facing
13. Design facing element
14. Design subsurface drainage

Steps 1-11 are completed by the designer and steps 12-14 are completed by the contractor after letting.

14.6.3.4 Initial Geometry

Figure 14.6-1 provides MSE wall elements and dimensions that should be established before making stability computations for the design of an MSE wall. The height (H) of an MSE wall is measured vertically from the top of the MSE wall to the top of the leveling pad. The length of reinforcement (L) is measured from the back of MSE wall panels. Alternately, the length of reinforcement (L1) is measured from the front face for modular block type MSE walls.

The MSE walls, with panel type facings, generally do not exceed heights of 35 feet, and with modular block type facings, should not exceed heights of 22 feet. Wall heights in excess of these limits will require approval on a case by case basis from WisDOT.

In general, a minimum reinforcement length of 0.7H or 8 feet whichever is greater shall be provided. MSE wall structures with sloping surcharge fills or other concentrated loads will generally require longer reinforcement lengths of 0.8H to 1.1H. As an exception, a minimum reinforcement length of 6.0 feet or 0.7H may be provided in accordance with **LRFD [C11.10.2.1]** provided all conditions for external and internal stability are met and smaller compaction equipment is used on a case by case basis as approved by WisDOT. MSE walls may be built to heights mentioned above; however, the external stability requirements may limit MSE wall height due to bearing capacity, settlement, or stability problems.

14.6.3.4.1 Wall Embedment

The minimum wall embedment depth to the bottom of the MSE wall reinforced backfill zone (top of the leveling pad shown in **LRFD [Figure 11.10.2-1]** and Figure 14.6-1 shall be based on external stability analysis (sliding, bearing resistance, overturning, and settlement) and the global (overall) stability requirements.

Minimum MSE wall leveling pad (and front face) embedment depths below lowest adjacent grade in front of the wall shall be in accordance with **LRFD [11.10.2.2]**, including the minimum embedment depths indicated in **LRFD [Table C11.10.2.2-1]** or 1.5 ft. whichever is greater. The embedment depth of MSE walls along streams and rivers shall be at least 2.0 ft below the potential scour elevation in accordance with **LRFD [11.10.2.2]** and the *Bridge Manual*.

WisDOT policy item:

The minimum depth of embedment of MSE walls shall be 1.5 feet

14.6.3.4.2 Wall Backslopes and Foreslopes

The wall backslopes and foreslopes shall be designed in accordance with 14.4.5.4.4. A minimum horizontal bench width of 4 ft (measured from bottom of wall horizontally to the

slope face) shall be provided, whenever possible, in front of walls founded on slopes. This minimum bench width is required to protect against local instability near the toe of the wall.

14.6.3.5 External Stability

The external stability of the MSE walls shall be evaluated for sliding, limiting eccentricity, and bearing resistance at the Strength I limit state. The settlement shall be calculated at Service I limit state.

Unfactored loads and factored load shall be developed in accordance with 14.6.3.5.1. It is assumed that the reinforced mass zone acts as a rigid body and that wall facing, the reinforced soil and reinforcement act as a rigid body.

For adequate stability, the goal is to have the factored resistance greater than the factored loads. According to publication FHWA-NHI-10-024, a capacity to demand ratio (CDR) can be used to quantify the factored resistance and factored load. CDR has been used to express the safety of the wall against sliding, limiting eccentricity, and bearing resistance.

14.6.3.5.1 Unfactored and Factored Loads

Unfactored loads and moments are computed based on initial wall geometry and using procedures defined in 14.4.5.4.5. The loading diagrams for one of the 3 possible earth pressure conditions are developed. These include 1) horizontal backslope with traffic surcharge shown in Figure 14.4-2; 2) sloping backslope shown in Figure 14.4-3; and, 3) broken backslope condition as shown in Figure 14.4-4.

The computed nominal loads discussed in 14.5.4 are multiplied by applicable load factors given in Table 14.4-1. A summary of load factors and load combinations as applicable for typical MSE wall stability check is presented in Table 14.6-4. Computed factored load and moments are used for performing stability checks.

14.6.3.5.2 Sliding Stability

The stability should be computed in accordance with **LRFD [11.10.5.3]** and **LRFD [10.6.3.4]**. The sliding stability analysis shall also determine the minimum resistance along the following potential surfaces in the zones shown in **LRFD [Figure 11.10.2.1]**.

- Sliding within the reinforced backfill (performed by contractor)
- Sliding along the reinforced back-fill/base soil interface (performed by designer)

The coefficient of friction angle shall be determined as:

- For discontinuous reinforcements, such as strips – the lesser of friction angle of either reinforced backfill, ϕ_r, the foundation soil, ϕ_{fd}.
- For continuous reinforcements, such as grids and sheets – the lesser of ϕ_r or ϕ_{fd} and ρ.

No passive soil pressure is allowed to resist sliding. The component of the passive resistance shall be ignored due to the possibility that permanent or temporary excavations in front of the wall could occur during the service life of the structure and lead to partial or complete loss of passive resistance. The shear strength of the facing system is also ignored.

For adequate stability, the factored resistance should be greater than the factored load for sliding,

The following equation shall be used for computing sliding:

$R_\tau = \phi R_n = \phi_\tau (V) (\tan\delta)$

Where:

R_R	=	Factored resistance against failure by sliding
R_n	=	Nominal sliding resistance against failure by sliding
R_τ	=	Nominal sliding resistance between soil and foundation
ϕ_τ	=	Resistance factor for shear between the soil and foundation per **LRFD [Table 11.5.7-1]**; 1.0
V	=	Factored vertical dead load
δ	=	Friction angle between foundation and soil
ρ	=	Maximum soil reinforcement interface angle **LRFD [11.10.5.3]**
$\tan\delta$	=	$\tan \phi_{fd}$ where ϕ is lesser of (ϕ_τ , ϕ_{fd} , ρ)
H_{tot}	=	Factored total horizontal load for Strength Ia
CDR	=	$R_\tau/H_{tot} \geq 1$

14.6.3.5.3 Eccentricity Check

The eccentricity check is performed in accordance with **LRFD [11.6.3.3]** and using procedure given in publication, *FHWA-NHI-10-025*

The eccentricity is computed using:

$e = B/2 - X_0$

Where:

$$X_0 = \frac{\sum M_V - M_H}{\sum V}$$

Where:

ΣM_V = Summation of Resisting moment due to vertical earth pressure

ΣM_H = Summation of Moments due to Horizontal Loads

ΣV = Summation of Vertical Loads

For eccentricity to be considered acceptable, the calculated location of the resultant vertical force (based on factored loads) should be within the middle two-thirds of the base width for soil foundations (i.e., e_{max} = B/3) and middle nine-tenths of the base width for rock foundations (i.e., e_{max} = 0.45B). Therefore, for each load group, e must be less than e_{max}. If e is greater than e_{max}, a longer length of reinforcement is required. The CDR for eccentricity should be greater than 1.

$CDR = e_{max}/e > 1$

14.6.3.5.4 Bearing Resistance

The bearing resistance check shall be performed in accordance with **LRFD [11.10.5.4]**. Provisions of **LRFD [10.6.3.1]** and **LRFD [10.6.3.2]** shall apply**.** Because of the flexibility of MSE walls, an equivalent uniform base pressure shall be assumed. Effect of live load surcharge shall be added, where applicable, because it increases the load on the foundation. Vertical stress, σ_v, shall be computed using following equation.

The bearing resistance computation requires:

Base Pressure $(\sigma_v) = \dfrac{\sum V}{B - 2e}$

σ_v = Vertical pressure

ΣV = Sum of all vertical forces

B = Reinforcement length

e = Eccentricity = $B/2 - X_0$

X_0 = $(\Sigma M_R - \Sigma M_H)/\Sigma V$

ΣM_V = Total resisting moments

ΣM_H = Total driving moments

The nominal bearing resistance, q_n, shall be computed using methods for spread footings. The appropriate value for the resistance factor shall be selected from **LRFD [Table 11.5.7-1]**.

The computed vertical stress, σ_v, shall be compared with factored bearing resistance, q_r in accordance with the **LRFD [11.10.5.4]** and a Capacity Demand Ratio, CDR, shall be calculated using the following equation:

$$q_r = \phi_b \, q_n \geq \sigma_v$$

Where:

q_r	=	Factored bearing resistance
q_n	=	Nominal bearing resistance computed using **LRFD [10.6.3.1.2a-1]**
ϕ_b	=	0.65 using **LRFD [Table 11.5.7-1]**
CDR	=	$q_r/\sigma_v > 1.0$

14.6.3.6 Vertical and Lateral Movement

Excessive MSE wall foundation settlement can result in damage to the wall facing, coping, traffic barrier, bridge superstructure, bridge end panel, pavement, and/or other settlement-sensitive elements supported on or near the wall.

Techniques to reduce damage from post-construction settlements and deformations may include full-height vertical sliding joints through the rigid wall facing elements and appurtenances, and/or ground improvement or reinforcement techniques. Staged preload/surcharge construction using onsite materials or imported fills may also be used.

Settlement shall be computed using the procedures outlined in 14.4.7.2 and the allowable limit settlement guidelines in 14.4.7.2.1 and in accordance with **LRFD [11.10.4]** and **LRFD [10.6.2.4].** Differential settlement from the front face to the back of the wall shall be evaluated, as appropriate.

For MSE walls with rigid facing concrete panels, slip joints of 0.75 inch width can be provided to control differential settlement as per **LRFD [Table C11.10.4-1]**.

14.6.3.7 Overall Stability

Overall Stability shall be performed in accordance with **LRFD [11.10.4.3]**. Provision of **LRFD [11.6.2.3]** shall also apply. Overall and compound stability of complex MSE wall system shall also be investigated, especially where the wall is located on sloping or soft ground where overall stability may be inadequate. Compound external stability is the responsibility of the contractor/wall supplier. The long term strength of each backfill reinforcement layer intersected by the failure surface should be considered as restoring forces in the limit equilibrium slope stability analysis. Figure 14.6-4 shows failure surfaces generated during overall or compound stability evaluation.

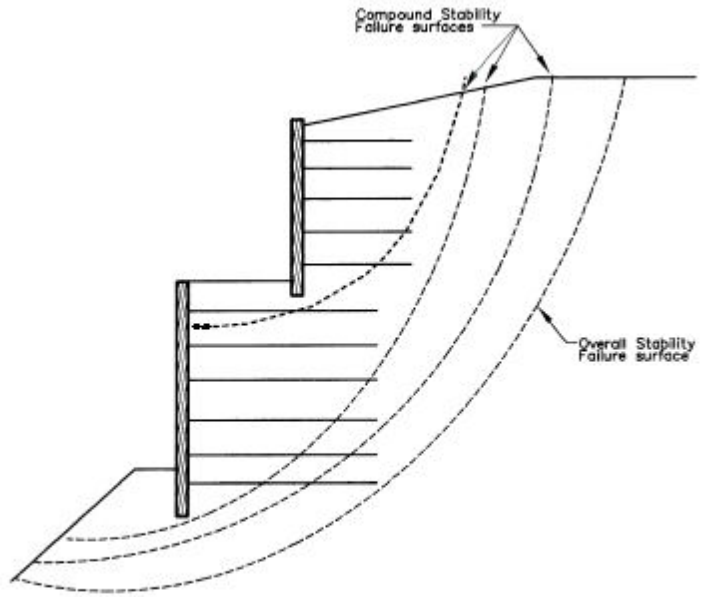

Figure 11.10.4.3-1 Overall and Compound Stability of Complex MSE Wall Systems.

Figure 14.6-4
MSE Walls Overall and Compound Stability
(Source *AASHTO LRFD*)

14.6.3.8 Internal Stability

Internal stability of MSE walls shall be performed by the wall contractor/supplier. The internal stability (safety against structural failure) shall be performed in accordance with **LRFD [11.10.6]** and shall be evaluated with respect to following at the Strength Limit:

- Tensile resistance of reinforcement to prevent breakage of reinforcement
- Pullout resistance of reinforcement to prevent failure by pullout
- Structural resistance of face elements and face elements connections

14.6.3.8.1 Loading

Figure 14.4-11 shows internal failure mechanism of MSE walls due to tensile and pullout failure of the soil reinforcement. The maximum factored tension load (T_{max}) due to tensile and pullout reinforcement shall be computed at each reinforcement level using the *Simplified Method* approach in accordance with **LRFD [11.10.6.2]**. Factored load applied to the reinforcement-facing connection (T_0) shall be equal to maximum factored tension reinforcement load (T_{max}) in accordance with **LRFD [11.10.6.2.2].**

14.6.3.8.2 Reinforcement Selection Criteria

At each reinforcement level, the reinforcement must be sized and spaced to preclude rupture under the stress it is required to carry and to prevent pullout for the soil mass. The process of sizing and designing the reinforcement consists of determining the maximum developed tension loads, their location, along a locus of maximum stress and the resistance provided by reinforcement in pullout capacity and tensile strength.

Soil reinforcements are either extensible or inextensible as discussed in 14.6.2.2.

When inextensible reinforcements are used, the soil deforms more than the reinforcement. The critical failure surface for this reinforcement type is determined by dividing the zone into active and resistant zones with a bilinear failure surface as shown in part (a) of Figure 14.6-5.

When extensible reinforcements are used, the reinforcement deforms more than soil and it is assumed that shear strength is fully mobilized and active earth pressure developed. The critical failure surface for both horizontal and sloping backfill conditions are represented as shown in lower part (b) of Figure 14.6-5.

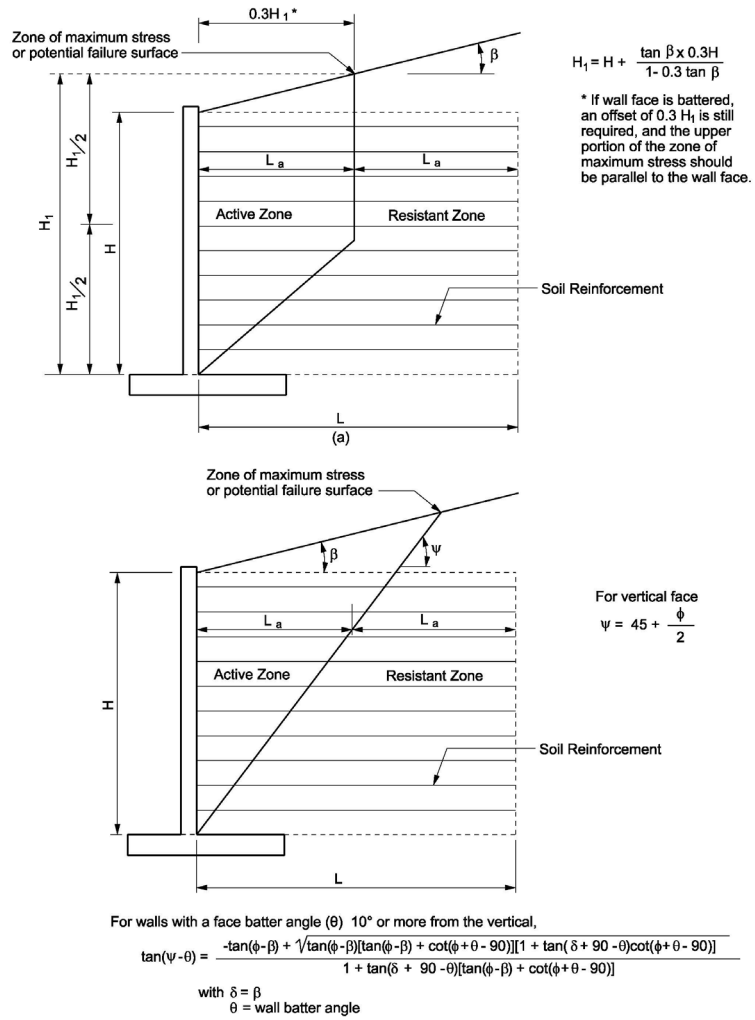

Figure 14.6-5
Location of Potential Failure Surface for Internal Stability of MSE Walls
(Source *AASHTO LRFD*)

14.6.3.8.3 Factored Horizontal Stress

The *Simplified Method* is used to compute maximum horizontal stress and is computed using the equation

$$\sigma_H = \gamma_P \left(\sigma_v k_r + \Delta\sigma_H\right)$$

Where:

γ_P = Maximum load factor for vertical stress (EV)

k_r = Lateral earth pressure coefficient computed using k_r/k_a

σ_V = Pressure due to reinforce soil mass and any surcharge loads above it

$\Delta\sigma_H$ = Horizontal stress at reinforcement level resulting in a concentrated horizontal surcharge load

Research studies have indicated that the maximum tensile force is primarily related to the type of reinforcement in the MSE mass, which, in turn, is a function of the modulus extensibility, and density of reinforcement. Based on this research, a relationship between the type of reinforcement and the overburden stress has been developed and is shown in Figure 14.6-6.

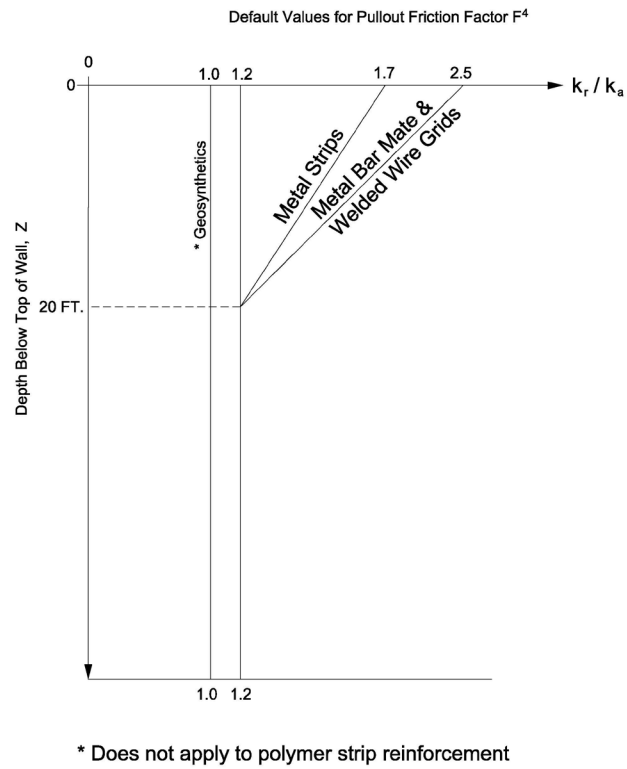

Figure 14.6-6
Variation of the Coefficient of Lateral Stress Ratio with Depth
(Source *AASHTO LRFD*)

Lateral stress ratio k_r/k_a, can be used to compute k_r at each reinforcement level. For vertical face batter <10^0, K_a is obtained using Rankine theory. For wall face with batter greater than 10^0 degrees, Coulomb's formula is used. If present, surcharge load should be added into the estimation of σ_V. For the simplified method, vertical stress for the maximum reinforcement load calculations are shown in Figure 14.6-7 .

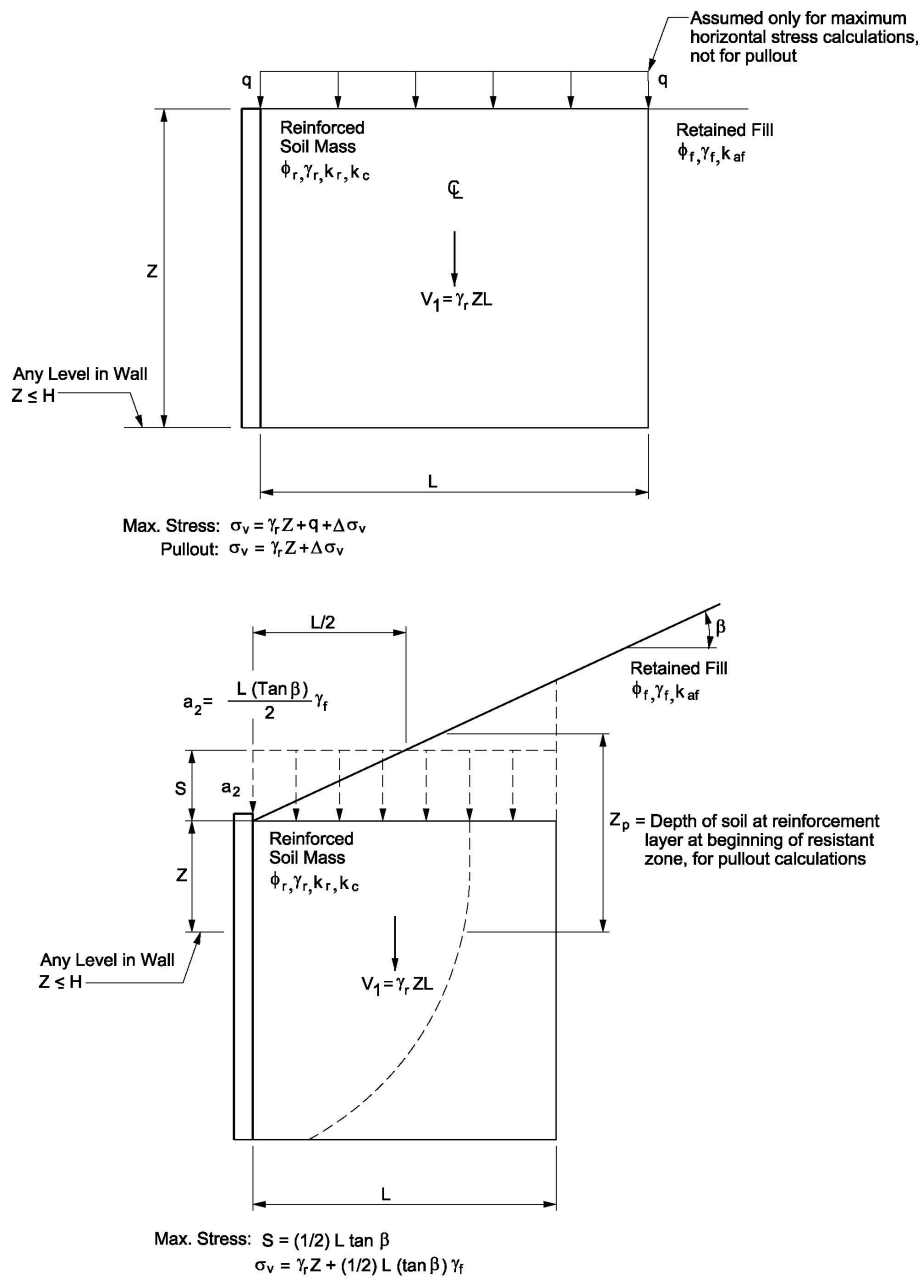

Figure 14.6-7

Calculation of Vertical Stress for Horizontal and Sloping Backslope for Internal Stability (Source *AASHTO LRFD*)

14.6.3.8.4 Maximum Factored Tension Force

The maximum tension load also referred as maximum factored tension force is applied to the reinforcements layer per unit width of wall (T_{max}) will be based on the reinforcement vertical spacing (S_V) as under:

$$T_{max} = \sigma_H S_V$$

Where:

T_{max}	=	Maximum tension load
σ_H	=	Factored horizontal load defined in 14.6.3.8.3

$T_{max\text{-}UWR}$ may also be computed at each level for discrete reinforcements (metal strips, bar mats, grids, etc) per a defined unit width of reinforcement

$T_{max\text{-}UWR}$	=	$(\sigma_H S_V)/R_C$
R_C	=	Reinforcement coverage ratio **LRFD [11.10.6.4.1]**

14.6.3.8.5 Reinforcement Pullout Resistance

MSE wall reinforcement pullout capacity is calculated in accordance with **LRFD [11.10.6.3]**. The potential failure surface for inextensible and extensible wall system and the active and resistant zones are shown in Figure 14.6-5. The pullout resistance length, L_e, shall be determined using the following equation

$$\phi L_e = \frac{T_{max}}{\left(F^* \cdot \alpha \cdot \sigma'_v \cdot C \cdot R_c\right)}$$

Where:

L_e	=	Length of reinforcement in the resistance zone
T_{max}	=	Maximum tension load
ϕ	=	Resistance factor for reinforcement pullout
F*	=	Pullout friction factor, Figure 14.6-8
α	=	Scale correction factor
σ'_V	=	Unfactored effective vertical stress at the reinforcement level in the resistance zone
C	=	2 for strip, grid, and sheet type reinforcement

R_c = Reinforcement coverage ratio **LRFD [11.10.6.4.1]**

The correction factor, α, depends primarily upon the strain softening of compacted granular material, and the extensibility, and the length of the reinforcement. Typical value is given in Table 14.6-2.

Reinforcement Type	α
All steel reinforcement	1.0
Geogrids	0.8
Geotextiles	0.6

Table 14.6-2
Typical values of α
(Source **LRFD [Table 11.10.6.3.2-1]**)

The pullout friction factor, F*, can be obtained accurately from laboratory pullout tests performed with specific material to be used on the project. Alternating, lower bound default values can be used from the laboratory or field pull out test performed in the specific back fill to be used on the project.

As shown in Figure 14.6-5, the total length of reinforcement (L) required for the internal stability is computed as below

$$L = L_e + L_a$$

Where:

L_e = Length of reinforcement in the resistance zone

L_a = Remainder length of reinforcement

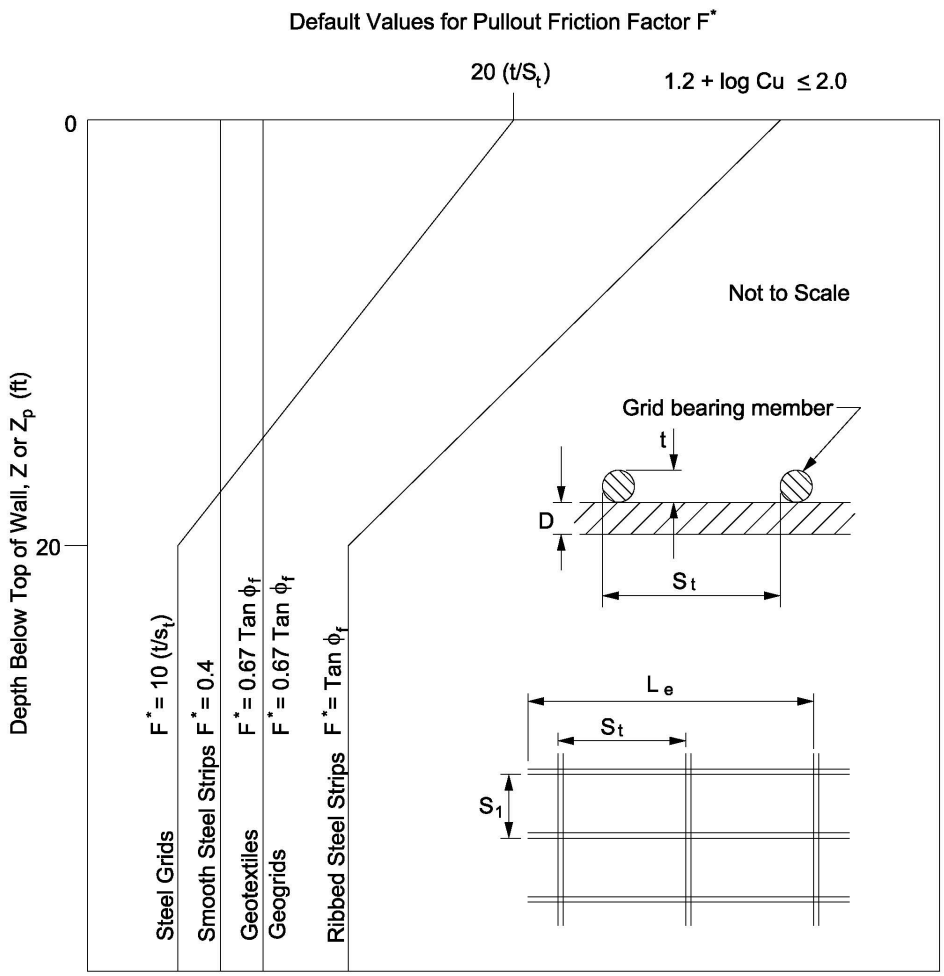

Figure 14.6-8
Default Values of F*
(Source: **LRFD [Figure 11.10.6.3.2-2]**)

14.6.3.8.6 Reinforced Design Strength

The maximum factored tensile stress (T_{MAX}) in each reinforcement layer as determined in 14.6.3.8.4 is compared to the long term reinforcement design strength computed in accordance with **LRFD [11.10.6.4.1]** as:

$$T_{MAX} \leq \phi T_{al} R_C$$

Where

ϕ = Resistance factor for tensile resistance

R_c = Reinforcement coverage ratio

T_{al} = Nominal tensile resistance (reinforcement design strength) at each reinforcement level

The value for T_{MAX} is calculated with a load factor of 1.35 for vertical earth pressure, EV. The tensile resistance factor for metallic and geosynthetic reinforcement is based on the following:

Metallic Reinforcement	Strip Reinforcement • Static Loading Grid Reinforcement • Static Loading	 0.75 0.65
Geosynthetic reinforcement	• Static Loading	0.90

Table 14.6-3
Resistance Factor for Tensile and Pullout Resistance
(Source **LRFD [Table 11.5.7-1]**)

14.6.3.8.7 Calculate T_{al} for Inextensible Reinforcements

T_{al} for inextensible reinforcements is computed as below:

$T_{al} = (A_c F_y)/b$

Where:

F_y = Minimum yield strength of steel

b = Unit width of sheet grid, bar, or mat

A_c = Design cross sectional area corrected for corrosion loss

14.6.3.8.8 Calculate T_{al} for Extensible Reinforcements

The available long-term strength, T_{al}, for extensible reinforcements is computed as:

$$T_{al} = \frac{T_{ult}}{RF} = \frac{Tult}{RF_{ID} * RF_{CR} * RF_D}$$

Where:

T_{ult} = Minimum average roll value ultimate tensile strength

RF = Combined strength reduction factor to account for potential long term degradation due to installation, damage, creep, and chemical aging

RF_{ID} = Strength Reduction Factor related to installation damage

RF_{CR} = Strength Reduction Factor caused by creep due to long term tensile load

RF_{D} = Strength Reduction Factor due to chemical and biological degradation

RF shall be determined from product specific results as specified in **LRFD [11.10.6.4.3b]**.

14.6.3.8.9 Design Life of Reinforcements

Long term durability of the steel and geosynthetic reinforcement shall be considered in MSE wall design to ensure suitable performance throughout the design life of the structure.

The steel reinforcement shall be designed to achieve a minimum designed life in accordance with **LRFD [11.5.1]** and shall follow the provision of **LRFD [11.10.6.4.2]**. The provision for corrosion loss shall be considered in accordance with the guidance presented in **LRFD [11.10.6.4.2a]**.

The durability of polymeric reinforcement is influenced by time, temperature, mechanical damage, stress levels, and changes in molecular structure. The strength reduction for geosynthetic reinforcement shall be considered in accordance with **LRFD [11.10.6.4.2b]**.

14.6.3.8.10 Reinforcement /Facing Connection Design Strength

Connections shall be designed to resist stresses resulting from active forces as well as from differential movement between the reinforced backfill and the wall facing elements in accordance with **LRFD [11.10.6.4.4]**.

<u>Steel Reinforcement</u>

Capacity of the connection shall be tested per **LRFD [5.10.8.3].** Elements of the connection which are embedded in facing elements shall be designed with adequate bond length and bearing area in the concrete, to resist the connection forces. The steel reinforcement connection strength requirement shall be designed in accordance with **LRFD [11.10.6.4.4a]**.

Connections between steel reinforcement and the wall facing units (e.g. bolts and pins) shall be designed in accordance with **LRFD [6.13]**. Connection material shall also be designed to accommodate loss due to corrosion.

<u>Geosynthetic Reinforcement</u>

The portion of the connection embedded in the concrete facing shall be designed in accordance with **LRFD [5.10.8.3]**. The nominal geosynthetic connection strength requirement shall be designed in accordance with **LRFD [11.10.6.4.4b]**.

14.6.3.8.11 Design of Facing Elements

Precast Concrete Panel facing elements are designed to resist the horizontal forces developed internally within the wall. Reinforcement is provided to resist the average loading conditions at each depth in accordance with structural design requirements in *AASHTO LRFD*. The embedment of the reinforcement to panel connector must be developed by test, to ensure that it can resist the maximum tension. The concrete panel must meet temperature and shrinkage steel requirements. Epoxy protection of panel reinforcement is required.

Modular Block Facing elements must be designed to have sufficient inter-unit shear capacity. The maximum spacing between unit reinforcement should be limited to twice the front block width or 2.7 feet, whichever is less. The maximum depth of facing below the bottom reinforcement layer should be limited to the block width of modular facing unit. The top row of reinforcement should be limited to 1.5 times the block width. The factored inter-unit shear capacity as obtained by testing at the appropriate normal load should exceed the factored horizontal earth pressure.

14.6.3.8.12 Corrosion

Corrosion protection is required for all permanent and temporary walls in aggressive environments as defined in **LRFD [11.10.2.3.3].** Aggressive environments in Wisconsin are typically associated with salt spray and areas near storm water pipes in urban areas. MSE walls with steel reinforcement should be protected with a properly designed impervious membrane layer below the pavement and above the first level of the backfill reinforcement. The details of the impervious layer drainage collector pipe can be found in *FHWA-NHI-0043* (FHWA 2001).

14.6.3.9 Wall Internal Drainage

The wall internal drainage should be designed using the guidelines provided in 14.4.7.6. Pipe underdrain must be provided to properly drain MSE walls. Chimney or blanket drains with collector-pipe drains are installed as part of the MSE walls sub-drainage system. Collector pipes with solid pipes are required to carry the discharge away from the wall. All collector pipes and solid pipes should be 6-inch diameter.

14.6.3.10 Traffic Barrier

Design concrete traffic barriers on MSE walls to distribute applied traffic loads in accordance with **LRFD [11.10.10.2]** and WisDOT standard details. Traffic impact loads shall not be transmitted to the MSE wall facing. Additionally, MSE walls shall be isolated from the traffic barrier load. Traffic barrier shall be self-supporting and not rely on the wall facing.

14.6.3.11 Design Example

Example E-2 shows a segmental precast panel MSE wall with steel reinforcement. Example E-3 shows a segmental precast panel MSE wall with geogrid reinforcement. Both design

examples include external and internal stability of the walls. The design examples are included in 14.18.

14.6.3.12 Summary of Design Requirements

1. Strength Limit Checks

   a. External Stability

      - Sliding

$$CDR = \left(\frac{R_\tau}{H_{tot}}\right) > 1.0$$

      - Eccentricity Check

$$CDR = \left(\frac{e_{\max}}{e}\right) > 1.0$$

      - Bearing Resistance

$$CDR = \left(\frac{q_r}{\sigma_v}\right) > 1.0$$

   b. Internal stability

      - Tensile Resistance of Reinforcement
      - Pullout Resistance of Reinforcement
      - Structural resistance of face elements and face elements connections

   c. Service Limit Checks

      - Overall Stability
      - Wall Settlement and Lateral Deformation

2. Concrete Panel Facings

   - f'_c = 4000 psi (wet cast concrete)
   - Min. thickness = 5.5 inches
   - Min. reinforcement = 1/8 square inch per foot in each direction (uncoated)

- Min. concrete cover = 1.5 inches
- fy = 60,000 psi

3. Traffic/ Surcharge
   - Traffic live load surcharge = 240 lb/ft^2 or
   - Non traffic live load surcharge =100 lb/ft^2
4. Reinforced Earthfill
   - Unit weight = 120 lb/ft^3
   - Angle of internal friction = 30°, or as determined from Geotechnical analyses (maximum allowed is 36°)
5. Retained Soil
   - Unit weight = 120 lb/ft^3
   - Angle of internal friction = 30°, or as determined from Geotechnical analyses
6. Design Life
   - 75 year minimum for permanent walls
7. Soil Pressure Theory
   - Coulomb's Theory
8. Soil Reinforcement

   For steel or geogrid systems, the minimum soil reinforcement length shall be 70 percent of the wall height and not less than 8 feet. The length of soil reinforcement shall be equal from top to bottom. Soil reinforcement must extend a minimum of 3 feet beyond the failure plane.

9. Summary of Load Combinations and Load Factors

Group	γ_{DC}	γ_{EV}	γ_{LSv}	γ_{LSh}	γ_{EH}	γ_{CT}	Probable use
Strength Ia	0.90	1.00	0.0	1.75	1.50		Sliding, eccentricity
Strength Ib	1.25	1.35	1.75	1.75	1.50		Bearing, wall strength
Extreme IIa	0.90	1.00	-	-	1.00	1.00	Sliding, eccentricity
Extreme IIb	1.25	1.35	-	-	1.00	1.00	Bearing
Service I	1.00	1.00	1.00	1.00	1.00	-	Global, settlement, wall crack control

Table 14.6-4
Load Factor Summary for MSE-External Stability

10. Resistance Factors for External Stability

Stability mode	Condition	Resistance Factor
Sliding		1.00
Bearing		0.65
Overall stability	Geotechnical parameters are well defined and slope does not support a structural element	0.75
	Geotechnical parameters are based on limited information, or the slope supports a structural element	0.65

Table 14.6-5
Resistance Factor Summary for MSE-External Stability
(Source **LRFD [Table 11.5.7-1]**)

14.7 Modular Block Gravity Walls

The proprietary modular blocks used in combination with soil reinforcement "Mechanically Stabilized Earth Retaining Walls with Modular Block Facings" can also be used as pure gravity walls (no soil reinforcement). These walls consist of a single row of dry stacked blocks (without mortar) to resist external pressures. These walls can be formed to a tight radius of curvature of 50 ft. or greater. A drawback is that these walls are settlement sensitive. This wall type should only be considered when adequate provisions are taken to keep the surface water runoff and the ground water seepage away from the wall face.

The material specifications for the blocks used for gravity walls are identical to those for the blocks used for block MSE walls as discussed in 14.6.2.3. The modular block gravity walls are proprietary. The wall supplier is responsible for the design of these walls. Design drawings and calculations must be submitted to WisDOT for approval.

The height to which they can be constructed, is a function of the depth of the blocks, the setback of the blocks, the front slope and backslope angle, the surcharge on the retained soil and the angles of internal friction of the retained soil behind the wall. Walls of this type are limited to a height from top of leveling pad to top of wall of 8 feet or less, and are limited to a maximum differential settlement of 1/200.

Footings for modular block gravity walls are either base aggregate dense 1-¼ inch (Section 305 of the *Standard Specifications)* or Grade A concrete. Minimum footing thickness is 12 inches for aggregate and 6 inches for concrete. The width of the footing equals the width of the bottom block plus 12 inches for aggregate footings and plus 6 inches for concrete footings. The bottom modular block is central on the leveling pad. The standard special provisions for Modular Block Gravity Walls require a concrete footing if any portion of a wall is over 5 feet measured from the top of the footing to the bottom of the wall cap.

The coarse aggregate No. 1 (501.2.5.4 of the *Standard Specifications*), is placed within 1 foot behind the back face of the wall, extending down to the bottom of the footing.

14.7.1 Design Procedure for Modular Block Gravity Walls

All modular block gravity walls shall be designed to resist external pressure caused by the supported earth, surcharge loads, and water in accordance with the design criteria discussed in **LRFD [11.11.4]** and 14.4. The design requires an external stability evaluation including sliding, eccentricity check, and bearing resistance check at the Strength I limit state and the evaluation of wall settlement and overall stability at the Service I limit state.

The design of modular block gravity walls provided by the contractor must be in compliance with the WisDOT special provisions for the project and the policy and procedures as stated in 14.15.2 and 14.16. The design must include an analysis of external stability including sliding, eccentricity, and bearing stress check. Horizontal shear capacity between blocks must also be verified by the contractor.

Settlement and overall stability calculations are the responsibility of the designer. The soil design parameters and allowable bearing capacity for the design are provided by the Geotechnical Engineer, including the minimum required block depth.

14.7.1.1 Initial Sizing and Wall Embedment

The minimum embedment to the top of the footing for modular block gravity walls is the same as stated in **LRFD [11.10.2.2]** for mechanically stabilized earth walls. Wall backfill slope shall not be steeper than 2:1. Where practical, a minimum 4.0 ft wide horizontal bench shall be provided in front of the walls.

Wall embedment for prefabricated modular walls shall meet the requirements discussed in section14.4.7.5. The minimum embedment shall be 1.5 ft. or the requirement of scouring or erosion due to flooding defined in 14.6.3.4.1.

14.7.1.2 External Stability

The external stability analyses shall develop the unfactored and factored loads and include evaluations for sliding, eccentricity check, and bearing resistance in accordance with **LRFD [11.11.4]. LRFD [11.11.4.1]** requires that wall stability be performed at every block level.

14.7.1.2.1 Unfactored and Factored Loads

Unfactored loads and moments shall be computed after establishing the initial wall geometry and using procedures defined in 14.4.5.4.5. A load diagram as shown in Figure 14.4-5 shall be developed. Factored loads and moments shall be computed as discussed in 14.4.6 by multiplying applicable load factors given in Table 14.4-1. A summary of load factors and load combinations as applicable for a typical modular block wall is presented in Table 14.7-1. Computed factored load and moments are used for performing stability checks.

14.7.1.2.2 Sliding Stability

Sliding should be considered for the full height wall and at each block level in the wall. The stability should be computed in accordance with **LRFD [10.6.3.4]**, using the following equation:

$$R_R = \phi R_n = \phi_\tau R_\tau$$

Where:

R_R = Factored resistance against failure by sliding

R_n = Nominal sliding resistance against failure by sliding

ϕ_τ = Resistance factor for shear between soil and foundation per **LRFD [Table 10.5.5.2.2-1]**

ϕ_τ = 0.9 for concrete on sand and 1.0 for soil on soil

R_τ = Nominal sliding resistance between soil and foundation

No passive soil pressure is allowed to resist sliding. The component of the passive resistance shall be ignored due to the possibility that permanent or temporary excavations in front of the

wall could occur during the service life of the structure and lead to partial or complete loss of passive resistance.

Interface sliding resistance between concrete blocks shall be calculated using the corrected wall weight based on the calculated hinge height in accordance with **LRFD [Figure 11.10.6.4.4b-1]**. Interface friction resistance parameters shall be based on NCMA method. Shear between the blocks must be resisted by friction, keys or pins.

14.7.1.2.3 Bearing Resistance

The bearing resistance of the walls shall be computed in accordance with **LRFD [10.6.3.1]**.

Base Pressure, $\sigma_v = \frac{\sum V_{tot}}{(B - 2e)}$

The computed vertical stress shall be compared with factored bearing resistance in accordance with the **LRFD [10.6.3.1]**, using following equation:

$q_r = \phi_b q_n \geq \sigma_v$

Where:

q_n	=	Nominal bearing resistance **LRFD [Equation 10.6.3.1.2a-1]**
$\sum V$	=	Summation of Vertical loads
B	=	Base width
e	=	Eccentricity
ϕ_b	=	0.55 **LRFD [Table 11.5.7-1]**

14.7.1.2.4 Eccentricity Check

The eccentricity check shall be performed in accordance with **LRFD [11.6.3.3].** The location of the resultant force should be within the middle two-thirds of the base width (e<B/3) for footings on soil, and within nine-tenths of the base (e<0.45B) for footings on rock.

14.7.1.3 Settlement

The vertical and lateral displacements of prefabricated modular retaining walls must be evaluated for all applicable dead and live load combinations at Service I limit states using procedures described in 14.4.7.2 and compared with tolerable movement criteria presented in 14.4.7.2.1. In general, lateral movements of walls on shallow foundations can be estimated assuming the wall rotates or translates as a rigid body due to the effects of earth loads and differential settlements along the base of the wall.

14.7.1.4 Overall Stability

The overall (global) stability shall be evaluated in accordance with **LRFD [11.6.2.3]** and in accordance with 14.4.7.3, with the exception that the entire mass of the modular walls (or the "foundation load"), may be assumed to contribute to the overall stability of the slope. The overall stability check shall be performed by the Geotechnical Engineering Unit or Consultant of record.

14.7.1.5 Summary of Design Requirements

1. Stability Evaluations
    - External Stability
        - Eccentricity Check
        - Bearing Check
        - Sliding
    - Settlement
    - Overall/Global
2. Block Data
    - One piece block
    - Minimum thickness of front face = 4 inches
    - Minimum thickness of internal cavity walls other than front face = 2 inches
    - 28 day concrete strength = 5000 psi
    - Maximum water absorption rate by weight = 5%
3. Traffic Surcharge
    - Traffic live load surcharge = 240 lb/ft^2
    - If no traffic live load is present, use 100 lb/ft^2 live load for construction equipment
4. Retained Soil
    - Unit weight γ_f = 120 lb/ft^3
    - Angle of internal friction as determined by Geotechnical Engineer

5. Soil Pressure Theory

   - Use Coulomb Theory

6. Maximum Height = 8 ft.

   (This height is measured from top of leveling pad to bottom of cap. It is not the exposed height). In addition this maximum height may be reduced if there is sloping backfill or a sloping surface in front of the wall.)

7. Load Factors

Group	γ_{DC}	γ_{EV}	γ_{LSv}	γ_{LSh}	γ_{EH}	γ_{CT}	Probable use
Strength Ia	0.90	1.00	0.0	1.75	1.50	-	Sliding, eccentricity
Strength Ib	1.25	1.35	1.75	1.75	1.50	-	Bearing /wall strength
Service I	1.00	1.00	1.00	1.00	1.00	-	Global/settlement/wall crack control

Table 14.7-1
Load Factor Summary for Prefabricated Modular Walls

8. Sliding Resistance Factors

   ϕ_τ = 1.0 **LRFD [Table 11.5.7-1]**

9. Bearing Resistance Factors

   ϕ_b = 0.55 **LRFD [Table 11.5.7-1]**

14.8 Prefabricated Modular Walls

Prefabricated modular walls systems use interconnected structural elements, which use selected in-fill soil or rock fill to resist external pressures by acting as gravity retaining walls. Metal and precast concrete or metal bin walls, crib walls, and gabion walls are considered under the category of prefabricated modular walls. These walls consist of modular elements which are proprietary. The design of these wall systems is provided by the contractor/wall supplier.

Prefabricated modular walls can be used where reinforced concrete walls are considered. Steel modular systems should not be used where aggressive environmental condition including the use of deicing salts or other similar chemicals are used that may corrode steel members and shorten the life of modular wall systems.

14.8.1 Metal and Precast Bin Walls

Metal bin walls generally consist of sturdy, lightweight, modular steel members called as stringers and spacers. The stringers constitute the front and back face of the bin and spacers its sides. The wall is erected by bolting the steel members together. The flexibility of the steel structure allows the wall to flex against minor ground movement. Metal bin walls are subject to corrosion damage from exposure to water, seepage and deicing salts. To improve the service life of metal bin walls, consideration should be given towards increasing the galvanizing requirements and establishing electrochemical requirements for the confined backfill.

Precast concrete bin walls are typically rectangular interlocking prefabricated concrete modules. A common concrete module typically has a face height varying from 4 to 5 feet, a face length up to 8 feet, and a width ranging from 4 to 20 feet. The wall can be assembled vertically or provided with a batter. A variety of surface treatment can be provided to meet aesthetic requirements. A parapet wall can be provided at the top of the wall and held rigidly by a cast in place concrete slab. A reinforced cast-in-place or precast concrete footing is usually placed at the toe and heel of the wall.

Bin walls are not recommended for applications that require a radius of curvature less than 800 ft. The wall face batter shall not be steeper than 10° or 6:1 (V:H). The base width of bin walls is generally 60% of the wall height. Further description and method of construction can be found in FHWA's publication *Earth Retaining Structures* 2008.

14.8.2 Crib Walls

Crib walls are built using prefabricated units which are stacked and interlocked and filled with free draining material. Cribs consist of solid interlocking reinforced concrete members called rails and tiebacks (sometimes called stretchers and headers). The rails run parallel with the wall face at both the front and rear of the cribbing and the tiebacks run transverse to the rails to tie the structure together. Rails and cross sections of tiebacks form the front face of the wall.

The wall face can either be opened or closed. In closed faced cribs, stretchers are placed in contact with each other. In open face cribs, the stretchers are placed at an interval such that

the infill material does not escape through the face. The wall face batter for crib walls shall be no steeper than 4:1.

14.8.3 Gabion Walls

The gabion walls are composed of orthogonal wire cages or baskets tied together and filled with rock fragments. These wire baskets are also known as gabion baskets. The basket size can be varied to suit the terrain with a standard width of 3 feet to standard length varying 3 to 12 feet. The standard height of these baskets may vary from 1 foot to 3 feet. Individual wire baskets are filled with rock fragments ranging in size from 4 to 10 inches. After the baskets are filled, the lids are closed and wired shut to form a relatively rigid block. Succeeding rows of the gabions are laced in the field to the underlying gabions and are filled in the same manner until the wall reaches its design height. The rock filled baskets are closed with lids.

The durability of a gabion wall is dependent upon maintaining the integrity of the gabion baskets. Galvanized steel wire is required for all gabion installations. Although gabions are manufactured from a heavy gage wire, there is a potential for damage due to vandalism. While no known case of such vandalism has occurred on any existing WisDOT gabion walls, the potential for such action should be considered at specific sites.

A height of about 18 feet should be considered as a practical limit for gabion walls. Gabion walls have shown good economy for low to moderate heights but lose this economy as height increases. The front and rear face of the wall may be vertical or stepped. A batter is provided for walls exceeding heights of 10 feet, to improve stability. The wall face step shall not be steeper than 6” or 10:1(V:H). The minimum embedment for gabion walls is 1.5 feet. The ratio of the base width to height will normally range from 0.5 to 0.75 depending on backslope, surcharge and angle of internal friction of retained soil. Gabion walls should be designed in cross section with a horizontal base and a setback of 4 to 6 inches at each basket layer. This setback is an aid to construction and presents a more pleasing appearance. The use of a tipped wall base should not be allowed except in special circumstances.

14.8.4 Design Procedure

All prefabricated modular wall systems shall be designed to resist external pressure caused by the supported earth, surcharge loads, and water in accordance with design criteria discussed in **LRFD [11.11.4]** and 14.4 of this chapter. The design requires an external stability evaluation by the WISDOT/Consultant designer, including sliding, eccentricity, and bearing resistance check at the Strength I limit state and the evaluation of wall settlement and overall stability at the Service I limit state.

In addition, the structures modules of the bin and crib walls shall be designed to provide adequate resistance against structural failure as part of the internal stability evaluations in accordance with the guidelines presented in **LRFD [11.11.5]**.

No separate guidance is provided in the *AASHTO LRFD* for the gabion walls, therefore, gabion walls shall be evaluated for the external stability at Strength I and the settlement and overall stability checks at Service I using similar process as that of a prefabricated modular walls.

Since structure modules of the prefabricated modular walls are proprietary, the contractor/ supplier is responsible for the internal stability evaluation and the structural design of the structural modules. The design by contractor shall also meet the requirements for any special provisions. The external stability, overall stability check and the settlement evaluation will be performed by Geotechnical Engineer.

14.8.4.1 Initial Sizing and Wall Embedment

Wall backfill shall not be steeper than 2:1(V:H). Where practical, a minimum 4.0 feet wide horizontal bench shall be provided in front of the walls. A base width of 0.4 to 0.5 of the wall height can be considered initially for walls with no surcharge. For walls with surcharge loads or larger backslopes, an initial base width of 0.6 to 0.7 times can be considered.

Wall embedment for prefabricated modular walls shall meet the requirements discussed in 14.4.7.5. A minimum embedment shall be 1.5 ft or the requirement for scouring or erosion due to flooding.

14.8.5 Stability checks

Stability computations for crib, bin, and gabion modular wall systems shall be made by assuming that the wall modules and wall acts as a rigid body. Stability of gabion walls shall be performed assuming that gabions are flexible.

14.8.5.1 Unfactored and Factored Loads

All modular walls shall be investigated for lateral earth and water pressure including any live and/or dead load surcharge. Dead load due to self-weight and soil or rock in-fill shall also be included in computing the unfactored loads. Material properties for selected backfill, concrete, and steel shall be in accordance with guidelines suggested in 14.4.6. The properties of prefabricated modules shall be based on the type of wall modules being supplied by the wall suppliers.

The angle of friction δ between the back of the modules and backfill shall be used in accordance with the **LRFD [3.11.5.9]** and **LRFD [Table C3.11.5.9-1]**. Loading and earth pressure distribution diagram shall be developed as shown in Figure 14.4-6 or Figure 14.4-7

Since infill material and backfill materials of the gabion walls are well drained, no hydrostatic pressure is considered for the gabion walls. The unit weight of the rock-filled gabion baskets shall be computed in accordance with following:

$$\gamma_g = (1-\eta_r)G_s\gamma_w$$

Where:

η_r = Porosity of the rock fill

Gs = Specific gravity of the rock

γ_w = Unit weight of water

Free-draining granular material shall be used as backfill material behind the prefabricated modules in a zone of 1:1 from the heel of the wall. The soil design parameters shall be provided by the Geotechnical Engineer.

Factored loads and moments shall be computed as discussed in 14.4.5.5 and shall be multiplied by applicable load factors given in Table 14.4-1. A summary of load factors and load combinations as applicable for a typical modular block wall is presented in Table 14.8-1

14.8.5.2 External Stability

The external stability of the prefabricated modular walls shall be evaluated for sliding, eccentricity check, and bearing resistance in accordance with **LRFD [11.11.4].** It is assumed that the wall acts as a rigid body. **LRFD [11.11.4.1]** requires that wall stability be performed at every module level. The stability can be evaluated using procedure described in 14.7.1.2.

For prefabricated modular walls, the sliding analysis shall be performed by assuming that 80% of the weight of the soil in the modules is transferred to the footing supports with the remaining soil, weight being transferred to the area of the wall between footings.

The load resisting overturning shall also be limited to 80%, because the interior of soil can move with respect to the retaining module.

The bearing resistance shall be evaluated by assuming that 80% weight of the infill soil is transferred to point (or line) supports at the front or rear of the module.

14.8.5.3 Settlement

The vertical and lateral displacements of prefabricated modular retaining walls must be evaluated for all applicable dead and live load combinations at Service I using procedure described in 14.4.7.2 and compared with tolerable movement criteria presented in 14.4.7.2.1. In general, lateral movements of walls on shallow foundations can be estimated assuming the wall rotates or translates as a rigid body due to the effects of earth loads and differential settlements along the base of the wall.

14.8.5.4 Overall Stability

The overall (global) stability shall be evaluated in accordance with **LRFD [11.6.2.3]** and in accordance with 14.4.7.3 with the exception that the entire mass of the modular walls (or the "foundation load"), may be assumed to contribute to the overall stability of the slope. The overall stability check shall be performed by the Geotechnical Engineer.

14.8.5.5 Structural Resistance

Structural design of the modular units or members shall be performed in accordance with **LRFD [11.11.5]**. The design shall be performed using the factored loads developed for the geotechnical design (external stability) and for the factored pressures developed inside the modules in accordance with **LRFD [11.11.5.1]**. Design shall consider any potential failure mode, including tension, compression, shear, bending, and torsion. The contractor/wall supplier is responsible for the structural design of wall components.

14.8.6 Summary of Design Safety Factors and Requirements

Requirements

Stability Checks

- External Stability
  - Sliding
  - Overturning (eccentricity check)
  - Bearing Stress
- Internal Stability
  - Structural Components
- Settlement
- Overall Stability

Foundation Design Parameters

- Use values provided by Geotechnical Engineer

Concrete and steel Design Data

- f'_c = 4000 psi (or as required by design)
- f_y = 60,000 psi

Use uncoated bars or welded wire fabric

Traffic Surcharge

- Traffic live load surcharge = 240 lb/ft^2
- If no traffic live load is present, use 100 lb/ft^2 live load for construction equipment

Retained Soil

- Unit weight = 120 lb/ft^3
- Angle of internal friction =
  - Use value provided by Geotechnical Engineer
- Rock-infill unit weight =
  - Based on porosity and rock type

Soil Pressure Theory

- Coulomb's Theory for prefabricated wall systems
- Rankine theory or Coulomb theory, at the discretion of designer for gabion walls

7 Load Factors

Group	γ_{DC}	γ_{EV}	γ_{LSv}	γ_{LSh}	γ_{EH}	γ_{ES}	Probable use
Strength Ia	0.90	1.00	0.0	1.75	1.50	1.50	Sliding, eccentricity
Strength Ib	1.25	1.35	1.75	1.75	1.50	1.50	Bearing, wall strength
Service I	1.00	1.00	1.00	1.00	1.00		Global, settlement, wall crack control

Table 14.8-1
Load Factor Summary for Prefabricated Modular Walls

14.9 Soil Nail Walls

Soil nail walls consist of installing reinforcement of the ground behind an excavation face, by drilling and installing closely-spaced rows of grouted steel bars (i.e., soil nails). The soil nails are grouted in place and subsequently covered with a facing; used to stabilize the exposed excavation face, support the sub-drainage system (i.e., composite strip drain, collector and drainage pipes), and distribute the soil nail bearing plate load over a larger area. When used for permanent applications, a permanent facing layer, meeting the aesthetic and structural requirement is constructed directly over the temporary facing.

Soil nail walls are typically used to stabilize excavation during construction. Soil nail walls have been used recently with MSE walls to form hybrid wall systems typically known as 'shored walls'. The soil nails are installed as top down construction. Conventional soil nail wall systems are best suited for sites with dense to very dense, granular soil with some apparent cohesion (sands and gravels), stiff to hard, fine-grained soil (silts and clays) of relatively low plasticity (PI<15), or weak, weathered massive rock with no adversely-oriented planes of weakness. Soil nail wall construction requires that open excavations stand unsupported long enough to allow soil nail drilling and grouting, sub-drainage installation, reinforcement, and temporary shotcrete placement. Soil nail walls should not be used below groundwater.

14.9.1 Design Requirements

AASHTO LRFD currently does not include the design and construction of soil nail walls. It is recommended that soil nail walls be designed using methods recommended in *Geotechnical Engineering Circular (GEC) No. 7 – Soil Nail Walls* (FHWA, 2003). The design life of the soil nail walls shall be in accordance with 14.4.3.

The design of the soil nailing walls requires an evaluation of external, internal, and overall stability and facing-connection failure mode as presented in Sections 5.1 thru Sections 5.6 of *(GEC) No. 7 – Soil Nail Walls* (FHWA, 2003).

A permanent wall facing is required for all permanent soil nail walls. Permanent facing is commonly constructed of cast-in-place (CIP) concrete, welded wire mesh (WWM) reinforced concrete and precast fabricated panels. In addition to meeting the aesthetic requirements and providing adequate corrosion protections to the soil nails, design facings for all facing-connection failure modes indicated in FHWA 2003.

Corrosion protection is required for all permanent soil nail wall systems to assure adequate long-term wall durability. . The level of corrosion protection required should be determined on a project-specific basis based on factors such as wall design life, structure criticality and the electrochemical properties of the supporting soil and rock materials. Criteria for classification of the supporting soil and rock materials as "aggressive" or "non-aggressive" are provided in FHWA 2003.

Soil nails are field tested to verify that nail design loads can be supported without excessive movement and with an adequate margin of safety. Perform both verification and proof testing of designated test nails as recommended in FHWA 2003.

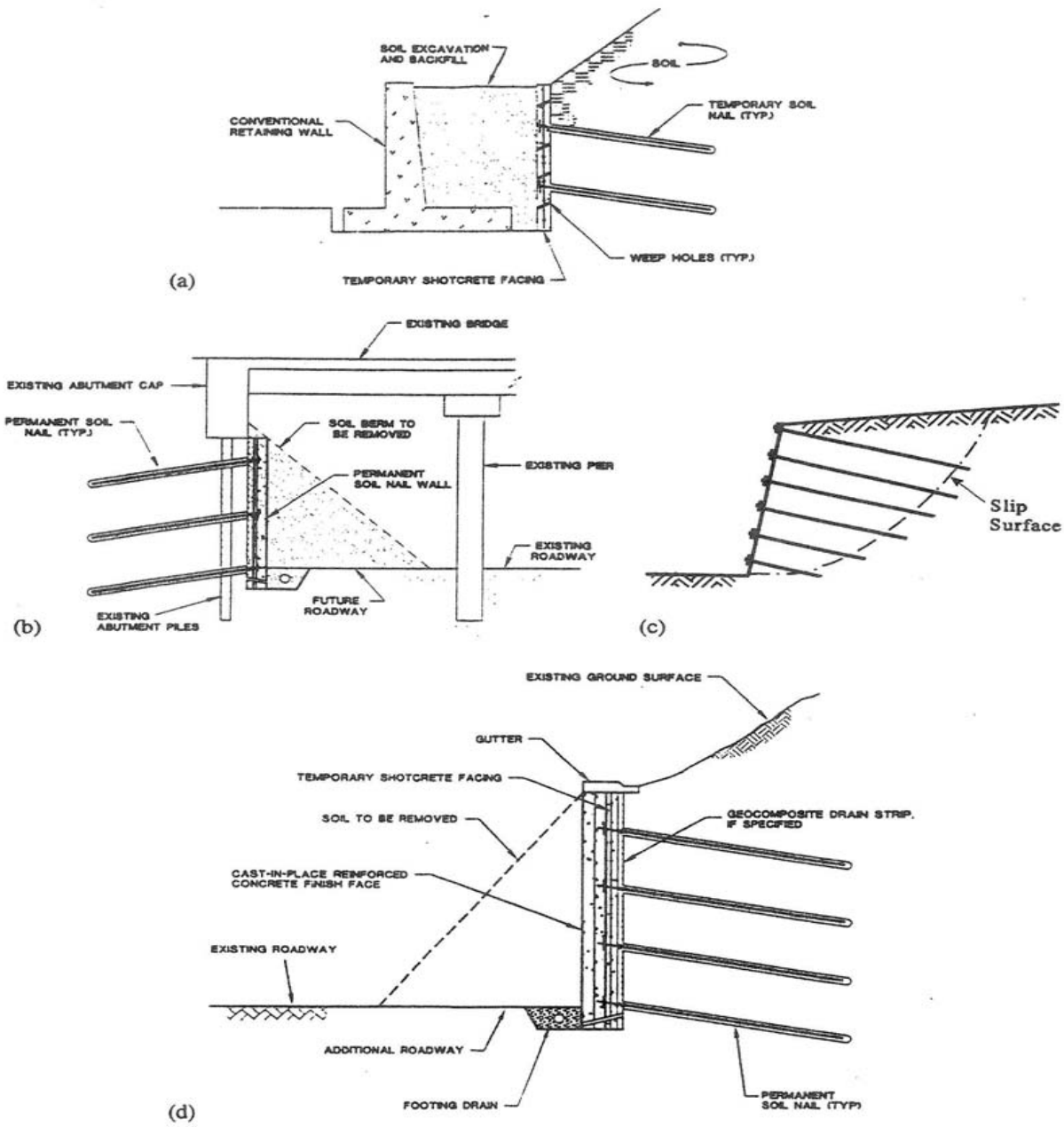

Figure 14.9-1
In-Situ Soil Nailed Walls
(Source: Earth Retaining Structures, 2008)

14.10 Steel Sheet Pile Walls

14.10.1 General

Steel sheet pile walls are a type of non-gravity wall and are typically used as temporary walls, but can also be used for permanent locations.

Sheet piling consists of interlocking steel, precast concrete or wood pile sections driven side by side to form a continuous unit. Steel is used almost exclusively for sheet pile walls. Individual pile sections usually vary from 12 to 21 inches in width, allowing for flexibility and ease of installation. The most common use of sheet piling is for temporary construction of cofferdams, retaining walls or trench shoring. The structural function of sheet piles is to resist lateral pressures due to earth and/or water. The steel manufacturers have excellent design references. Sheet pile walls generally derive their stability from sufficient pile penetration (cantilever walls). When sheet pile walls reach heights in excess of approximately 15 feet, the lateral forces are such that the walls need to be anchored with some form of tieback.

Cofferdams depend on pile penetration, ring action and the tensile strength of the interlocking piles for stability. If a sheet pile cofferdam is to be dewatered, the sheets must extend to a sufficient depth into firm material to prevent a "blow out", that is water coming in from below the base of the excavation. Cross and other bracing rings must be adequate and placed as quickly as excavation permits.

Sheet piling is generally chosen for its efficiency, versatility, and economy. Cofferdam sheet piling and any internal bracing are designed by the Contractor, with the design being accepted by the Department. Other forms of temporary sheet piling are designed by the Department. Temporary sheet piling is not the same as temporary shoring. Temporary shoring is designed by the Contractor and may involve sheet piling or other forms of excavation support.

14.10.2 Sheet Piling Materials

Although sheet piling can be composed of timber or precast concrete members, these material types are seldom, if ever, used on Wisconsin transportation projects.

Steel sheet piles are by far the most extensively used type of sheeting in temporary construction because of their availability, various sizes, versatility and ability to be reused. Also, they are very adaptable to permanent structures such as bulkheads, seawalls and wharves if properly protected from salt water.

Sheet pile shapes are generally Z, arched or straight webbed. The Z and the medium to high arched sections have high section moduli and can be used for substantial cantilever lengths or relatively high lateral pressures. The shallow arched and straight web sections have high interlocking strength and are employed for cellular cofferdams. The Z-section has a ball-and-socket interlock and the arched and straight webbed sections have a thumb-and-finger interlock capable of swinging 10 degrees. The thumb-and-finger interlock provides high tensile strength and considerable contact surface to prevent water passage. Continuous steel sheet piling is not completely waterproof, but does stop most water from passing through the joints. Steel sheet piling is usually 3/8 to 1/2 inch thick. Designers should specify the required

section modulus and embedment depths on the plans, based on bending requirements and also account for corrosion resistance as appropriate.

Refer to steel catalogs for typical sheet pile sections. Contractors are allowed to choose either hot or cold rolled steel sections meeting the specifications. Previously used steel sheet piling may be adequate for some temporary situations, but should not be allowed on permanent applications.

14.10.3 Driving of Sheet Piling

All sheets in a section are generally driven partially to depth before all are driven to the final required depths. There is a tendency for sheet piles to lean in the direction of driving producing a net "gain" over their nominal width. Most of this "gain" can be eliminated if the piles are driven a short distance at a time, say from 6 feet to one third of their length before any single pile is driven to its full length. During driving if some sheet piles strike an obstruction, move to the next pile that can be driven and then return to the piles that resisted driving. With interlock guides on both sides and a heavier hammer, it may be possible to drive the obstructed sheet to the desired depth.

Sheet piles are installed by driving with gravity, steam, air or diesel powered hammers, or by vibration, jacking or jetting depending on the subsurface conditions, and pile type. A vibratory or double acting hammer of moderate size is best for driving sheet piles. For final driving of long heavy piles a single acting hammer may be more effective. A rapid succession of blows is generally more effective when driving in sand and gravel; slower, heavier blows are better for penetrating clay materials. For efficiency and impact distribution, where possible, two sheets are driven together. If sheets adjacent to those being driven tend to move down below the required depth, they are stopped by welding or bolting to the guide wales. When sheet piles are pulled down deeper than necessary by the driving of adjacent piles, it is generally better to fill in with a short length at the top, rather than trying to pull the sheet back up to plan location.

14.10.4 Pulling of Sheet Piling

Vibratory hammers are most effective in removing sheets and typically used. Sheet piles are pulled with air or steam powered extractors or inverted double acting hammers rigged for this application. If piles are difficult to pull, slight driving is effective in breaking them loose. Pulled sheet piling is to be handled carefully since they may be used again; perhaps several times.

14.10.5 Design Procedure for Sheet Piling Walls

A description of sheet pile design is given in **LRFD [3.11.5.6]** as **“**Cantilevered Wall Design" along with the earth pressure diagrams showing some simplified earth pressures. They are also referred to as flexible cantilevered walls. Steel sheet pile walls can be designed as cantilevered walls up to approximately 15 feet in height. Over 15 feet height, steel sheet pile walls may require tie-backs with either prestressed soil anchors, screw anchors, or deadman-type anchors.

The preferred method of designing cantilever sheet piling is by the "Conventional Method" as described in the *United States Steel Sheet Piling Design Manual* (February,1974). The Geotechnical Engineer provides the soil design parameters including cohesion values, angles of internal friction, wall friction angles, soil densities, and water table elevations. The lateral earth pressures for non-gravity cantilevered walls are presented in **LRFD [3.11.5.6].**

Anchored wall design must be in accordance with **LRFD [11.9]**. Anchors for permanent walls shall be fully encapsulated over their entire length. The anchor hardware shall be designed to have a corrosion resistance durability to ensure a minimum design life of 75 years.

All areas of permanent exposed steel sheet piling above the ground line shall be coated or painted prior to driving. Corrosion potential should be considered in all steel sheet piling designs. Special consideration should be given to permanent steel sheet piling used in areas of northern Wisconsin which are inhabited by corrosion causing bacteria (see *Facilities Development Manual*, Procedure 13-1-15).

Permanent sheet pile walls below the watertable may require the use of composite strip drains, collector and drainage pipes before placement of the final concrete facing.

The appearance of permanent steel sheet piling walls may be enhanced by applying either precast concrete panels or cast-in-place concrete surfacing. Welded stud-shear connectors can be used to attach cast-in-place concrete to the sheet piling. Special surface finishes obtained by using form liners or other means and concrete stain or a combination of stain and paint can be used to enhance the concrete facing aesthetics.

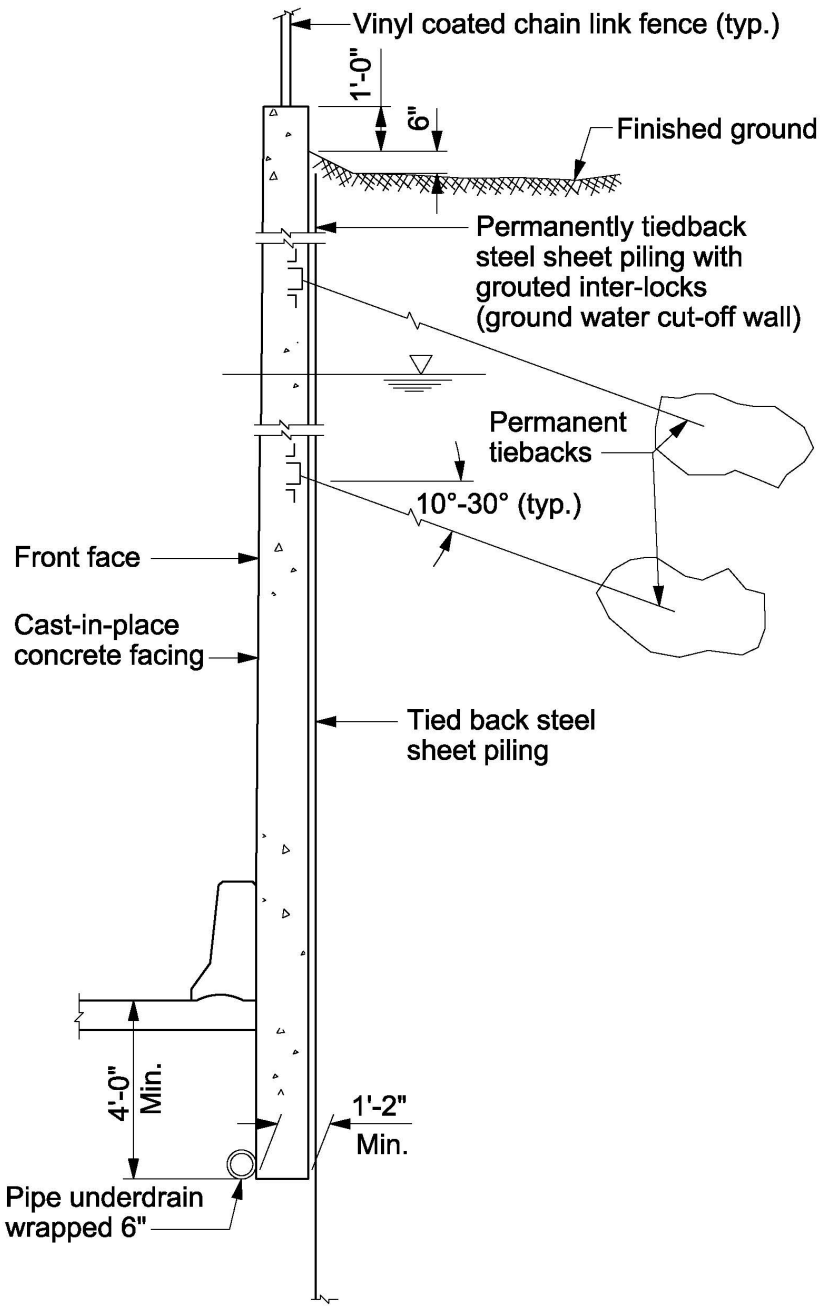

Typical Section - Tiedback Retaining Wall

Figure 14.10-1
Typical Anchored Sheet Pile Wall

14.10.6 Summary of Design Requirements

1. Load and Resistance Factor

Load Combination	Load Factors	Resistance Factor
Strength I (maximum)	EH-Horizontal Earth Pressure: δ =1.50 **LRFD [Table 3.4.1-2]**	----------
Strength I (maximum)	LS-Live Load Surcharge: δ =1.75 **LRFD [Table 3.4.1-1]**	----------
Strength I (maximum)	----------	Passive resistance of vertical elements: ϕ=0.75 **LRFD [Table 11.5.7-1]**
Service I	----------	Overall Stability: ϕ=0.75, when geotechnical parameters are well defined, and the slope does not support or contain a structural element
Service I	----------	Overall Stability: ϕ=0.65, when geotechnical parameters are based on limited information, or the slope does support or contain a structural element

Table 14.10-1
Summary of Design Requirements

2. Foundation design parameters

   Use values provided by the Geotechnical Engineer of record for permanent sheet pile walls. Temporary sheet pile walls are the Contractor's responsibility.

3. Traffic surcharge

   - Traffic live load surcharge = 240 lb/ft^2 or determined by site condition.
   - If no traffic live load is present, use 100 lb/ft^2 live load for construction equipment

4. Retained soil

   - Unit weight = 120 lb/ft^3
   - Angle of internal friction as determined from the Geotechnical Report.

5. Soil pressure theory

Coulomb Theory.

6. Design life for anchorage hardware

   75 years minimum

7. Steel design properties

   Minimum yield strength = 39,000 psi

14.11 Soldier Pile Walls

Soldier pile walls are comprised of discrete vertical elements (usually steel H piles) and facing members (temporary and/or permanent) that extend between the vertical elements.

14.11.1 Design Procedure for Soldier Pile Walls

LRFD [11.8] Non-Gravity Cantilevered Walls covers the design of soldier pile walls. A simplified earth pressure distribution diagram is shown in **LRFD [3.11.5.6]** for permanent soldier pile walls. Another method that may be used is the "Conventional Method" or "Simplified Method" as described in "*United States Steel Sheet Piling Design Manual*", February, 1974. This method must be modified for the fact that it is based on continuous vertical wall elements whereas, soldier pile walls have discrete vertical wall elements. Using "Broms" method for designing drilled shafts is also acceptable.

The maximum spacing between vertical supporting elements (piles) depends on the wall height and the design parameters of the foundation soil. Spacing of 6 to 12 feet is typical. The piles are set in drilled holes and concrete is placed in the hole after the post is set. The pile system must be designed to handle maximum bending moment along length of embedded shaft. The maximum bending moment at any level in the facing can be determined from formulas in **LRFD [11.8.5.1]**. The minimum structural thickness on wall facings shall be 6 inches for precast panels and 10 inches with cast-in-place concrete.

The diameter of the drilled shaft is also dependent on the wall height and the design parameters of the foundation soil. The larger the diameter of the drilled shaft the smaller will be the required embedment of the shaft. The designer should try various shaft diameters to optimize the cost of the drilled shaft considering both material cost and drilling costs. Note that drilling costs are a function of both hole diameter and depth.

If the vertical elements are steel they shall be shop painted. Wall facings are usually given a special surface treatment created by brooming or tining vertically, using form liners, or using a pattern of rustication strips. The portion of the panel receiving the special treatment may be recessed, forming a border around the treated area. Concrete paints or stains may be used for color enhancements. When panel heights exceed 15 feet anchored walls may be needed. Anchored wall design must be in accordance with **LRFD [11.9]**. Anchors for permanent walls shall be fully encapsulated over their entire length. The anchor hardware shall be designed to have a corrosion resistance durability to ensure a minimum design life of 75 years.

The concrete for soldier pile walls shall have a 28 day compressive strength of 4000 psi if non-prestressed and 5000 psi if prestressed except for the drilled shafts. Concrete for the drilled shafts shall have a 28 day compressive strength of 3500 psi. Reinforcement shall be uncoated Grade 60 in drilled shafts. In lieu of drainage aggregate a membrane may be used to seal the joints between the vertical elements and concrete panels to prevent water leakage. The front face of soldier pile walls shall be battered 1/4" per foot to account for short and long term deflection.

14.11.2 Summary of Design Requirements

Requirements

1. Resistance Factors

   - Overall Stability= 0.65 to 0.75 (based on how well defined the geotechnical parameters are and the support of structural elements)
   - Passive Resistance of vertical Elements = 0.75

2. Foundation Design Parameters

   Use values provided by the Geotechnical Engineer (unit weight, angle of internal friction, and cohesion). Both drained and undrained parameters shall be considered.

3. Concrete Design Data

   - f'_c = 3500 psi (for drilled shafts)
   - f'_c = 4000 psi (non-prestressed panel)
   - f'_c = 5000 psi (prestressed panel)
   - f_y = 60,000 psi

4. Load Factors

   - Vertical earth pressure = 1.5
   - Lateral earth pressure = 1.5
   - Live load surcharge = 1.75

5. Traffic Surcharge

   - Traffic live load surcharge = 2 feet = 240 lb/ft^2
   - If no traffic surcharge, use 100 lb/ft^2

6. Retained Soil

   Use values provided by the Geotechnical Engineer (unit weight, angle of internal friction, and cohesion). Both drained and undrained parameters shall be considered.

7. Soil Pressure Theory

   Rankine's Theory or Coulombs Theory at the discretion of the designer.

8. Design Life for Anchorage Hardware

   75 year minimum

9. Steel Design Properties (H-piles)

   Minimum yield strength = 50,000 psi

14.12 Temporary Shoring

This information is provided for guidance. Refer to the *Facilities Development Manual* for further details.

Temporary shoring is used to support a temporary excavation or protect existing transportation facilities, utilities, buildings, or other critical features when safe slopes cannot be made for structural excavations. Shoring may be required within the limits of structures or on the approach roadway due to grade changes or staged construction. Temporary shoring generally includes non-anchored temporary sheet piles, temporary soldier pile walls, temporary soil nails, cofferdam, or temporary mechanically stabilized earth (MSE) walls.

Temporary shoring is designed by the contractor. Shoring should not be required nor paid for when used primarily for the convenience of the contractor.

14.12.1 When Slopes Won't Work

Typically shoring will be required when safe slopes cannot be made due to geometric constraints of existing and proposed features within the available right-of-way. Occupation and Healthy Safety Administration (OSHA) requirements for temporary excavation slopes vary from a 1H:1V to a 2H:1V. The contractor is responsible for determining and constructing a safe slope based on actual site conditions.

In most cases, the designer can assume that an OSHA safe temporary slope can be cut on a 1.5H:1V slope; however other factors such as soil types, soil moisture, surface drainage, and duration of excavation should also be factored into the actual slope constructed. As an added safety factor, a 3-foot berm should be provided next to critical points or features prior to beginning a 1.5H:1V slope to the plan elevation of the proposed structure. Sufficient room should be provided adjacent to the structure for forming purposes (typically 2-3 feet).

14.12.2 Plan Requirements

Contract plans should schematically show in the plan and profile details all locations where the designer has determined that temporary shoring will be required. The plans should note the estimated length of the shoring as well as the minimum and maximum required height of exposed shoring. These dimensions will be used to calculate the horizontal projected surface area projected on a vertical plane of the exposed shoring face.

14.12.3 Shoring Design/Construction

The Contractor is responsible for design, construction, maintenance, and removal of the temporary shoring system in a safe and controlled manner. The adequacy of the design should be determined by a Wisconsin Professional Engineer knowledgeable of specific site conditions and requirements. The temporary shoring should be designed in accordance with the requirements described in 14.4.2 and 14.4.3. A signed and sealed copy of proposed designs must be submitted to the WisDOT Project Engineer for information.

14.13 Noise Barrier Walls

14.13.1 Wall Contract Process

WisDOT has classified all noise walls (both proprietary and non-proprietary) into three wall systems. All proprietary systems must be pre-approved prior to being considered for use on WisDOT projects. The three noise wall systems that are considered for WisDOT projects include the following:

1. Double-sided sound absorptive noise barriers
2. Single-sided sound absorptive noise barriers
3. Reflective noise barriers

If a wall is required, the designer must determine which wall system or systems are suitable for a given wall location. In some locations all wall systems may be suitable, whereas in other locations some wall systems may not be suitable. Information on aesthetic qualities and special finishes and colors of proprietary systems is available from the manufacturers. Information on approved concrete paints, stains and coatings is also available from the Structures Design Section. Designers are encouraged to contact the Structures Design Section (608-266-8494) if they have any questions about the material presented in the *Bridge Manual*.

The step by step process required to select a suitable wall system or systems for a given wall location is as follows:

Step 1: Investigate alternatives

Investigate alternatives to walls such as berms, plantings, etc.

Step 2: Geotechnical analysis

If a wall is required, geotechnical personnel shall conduct a soil investigation at the wall location and determine soil design parameters for the foundation soil. Geotechnical personnel are also responsible for recommending remedial methods of improving soil bearing capacity if required.

Step 3: Evaluate basic wall restrictions

The designer shall examine the list of suitable wall systems using the Geotechnical Report and remove any system that does not meet usage restrictions for the site.

Step 4: Determine suitable wall systems

The designer shall further examine the list of suitable wall systems for conformance to other considerations. Refer to Chapter 2 – General and Chapter 6 – Plan Preparation for a discussion on aesthetic considerations.

Step 5: Determine contract letting

After the designer has established the suitable wall system(s), the method of contract letting can be determined. The designer has several options based on the contents of the list.

Option 1:

The list contains only non-proprietary systems.

Under Option 1, the designer will furnish a complete design for one of the non-proprietary systems.

Option 2:

The list contains proprietary wall systems only or may contain both proprietary and non-proprietary wall systems, but the proprietary wall systems are deemed more appropriate than the non-proprietary systems.

Under Option 2 the designer will not furnish a design for any wall system. The contractor can build any wall system which is included on the list. The contractor is responsible for providing the complete design of the wall system selected, either by the wall supplier for proprietary walls or by the contractor's engineer for non-proprietary walls. Contract special provisions, if not in the Supplemental Specs., must be included in the contract document for each wall system that is allowed. Under Option 2, at least two and preferably three wall suppliers must have an approved product that can be used at the project site. See the *Facilities Development Manual* (Procedure 19-1-5) for any exceptions.

Option 3:

The list contains proprietary wall systems and non-proprietary wall systems and the non-proprietary systems are deemed equal or more appropriate than the proprietary systems.

Under Option 3 the designer will furnish a complete design for one of the non-proprietary systems, and list the other allowable wall systems.

Step 6: Prepare Contract Plans

Refer to section 14.16 for information required on the contract plans for proprietary systems. If a contractor chooses an alternate wall system, the contractor will provide the plans for the wall system chosen.

Step 7: Prepare Contract Special Provisions

The Structures Design Section and Region Offices have Special Provisions for each wall type and a generic Special Provision to be used for each project. The list of proprietary wall suppliers is maintained by the Materials Quality Assurance Unit.

Complete the generic Special Provision for the project by inserting the list of wall systems allowed and specifying the approved list of suppliers if proprietary wall systems are selected.

Step 8: Submit P.S.& E. (Plans, Specifications and Estimates)

When the plans are completed and all other data is completed, submit the project into the P.S.& E. process. Note that there is one bid item, square feet of exposed wall, for all wall quantities.

Step 9: Preconstruction Review

The contractor must supply the name of the wall system supplier and pertinent construction data to the project manager. This data must be accepted by the Office of Design, Contract Plans Section before construction may begin. Refer to the Construction and Materials Manual for specific details.

Step 10: Project Monitoring

It is the responsibility of the project manager to verify that the project is constructed with the previously accepted contract proposal. Refer to the Construction and Materials Manual for monitoring material certification, construction procedures and material requirements.

14.13.2 Pre-Approval Process

The purpose of the pre-approval process is to ascertain that a particular proprietary wall system has the capability of being designed and built according to the requirements and specifications of WisDOT. Any unique design requirements that may be required for a particular system are also identified during the pre-approval process. A design of a pre-approved system is acceptable for construction only after WisDOT has verified that the design is in accordance with the design procedures and criteria stated in the Certification Method of Acceptance for Noise Barrier Walls.

In addition to design criteria, suppliers must provide materials testing data and certification results for the required tests for durability, etc. The submittal requirements for the pre-approval process and other related information are available from the Materials Quality Assurance Unit, Madison, Wisconsin.

14.14 Contract Plan Requirements

The following minimum information shall be required on the plans.

1. Finish grades at rear and front of wall at 25 foot intervals or less.
2. Final cross sections as required for wall designer.
3. Beginning and end stations of wall and offsets from reference line to front face of walls. If reference line is a horizontal curve give offsets from a tangent to the curve.
4. Location of right-of-way boundaries, and construction easements relative to the front face of the walls.
5. Location of utilities if any and indicate whether to remain in place or be relocated or abandoned.
6. Special requirements on top of wall such as copings, railings, or traffic barriers.
7. Footing or leveling pad elevations if different than standard.
8. General notes on standard insert sheets.
9. Soil design parameters for retained soil, backfill soil and foundation soil including angle of internal friction, cohesion, coefficient of sliding friction, groundwater information and ultimate and/or allowable bearing capacity for foundation soil. If piles are required, give skin friction values and end bearing values for displacement piles and/or the allowable steel stress and anticipated driving elevation for end bearing piles.
10. Soil borings.
11. Details of special architectural treatment required for each wall system.
12. Wall systems, system or sub-systems allowed on projects.
13. Abutment details if wall is component of an abutment.
14. Connection and/or joint details where wall joins another structure.
15. Groundwater elevations.
16. Drainage provisions at heel of wall foundations.
17. Drainage at top of wall to divert run-off water.
18. Location of name plate.

14.15 Construction Documents

14.15.1 Bid Items and Method of Measurement

Proprietary retaining walls shall include all required bid items necessary to build the wall system provided by the contractor. The unit of measurement shall be square feet and shall include the exposed wall area between the footing and the top of the wall measured to the top of any copings. For setback walls the area shall be based on the walls projection on a vertical plane. The bid item includes designing the walls preparing plans, furnishing and placing all materials, including all excavations, temporary bracing, piling, (including delivered and driven), poured in place or precast concrete or blocks, leveling pads, soil reinforcement systems, structural steel, reinforcing steel, backfills and infills, drainage systems and aggregate, geotextiles, architectural treatment including painting and/or staining, drilled shafts, wall toppings unless excluded by contract, wall plantings, joint fillers, and all labor, tools, equipment and incidentals necessary to complete the work.

The contractor will be paid for the plan quantity as shown on the plans. (The intent is a lump sum bid item but is bid as square feet of wall). The top of wall coping is any type of cap placed on the wall. It does not include any barriers. Measurement is to the bottom of the barrier when computing exposed wall area.

Non-proprietary retaining walls are bid based on the quantity of materials used to construct the wall such as concrete, reinforcing steel, piling, etc. These walls are:

- Cast-in-Place Concrete Cantilever Walls
- Soldier Pile Walls
- Steel Sheet Piling Walls

14.15.2 Special Provisions

The Bureau of Structures has Special Provisions for:

- Wall Modular Block Gravity Landscape, Item SPV.0165.
- Wall Modular Block Gravity, Item SPV.0165.
- Wall Modular Block Mechanically Stabilized Earth, Item SPV.0165
- Wall Concrete Panel Mechanically Stabilized Earth, Item SPV.0165
- Wall Wire Faced Mechanically Stabilized Earth, Item SPV.0165. and Presstressed Precast Concrete Panel, Item SPV.0165
- Geosynthetic Reinforced Soil Abutment, Item SPV.0165
- Temporary Wall Wire Faced Mechanically Stabilized Earth, Item SPV.0165

- *Wall Gabion**
- *Wall Modular Bin or Crib**
- *Wall CIP Facing Mechanically Stabilized Earth**

** SPV under development. Contact the Bureau of Structures for usage.*

Note that the use of QMP Special Provisions began with the December 2014 letting or prior to December 2014 letting at the Region's request. Special provisions are available on the Wisconsin Bridge Manual website.

The designer determines what wall systems(s) are applicable for the project. The approved names of suppliers are inserted for each eligible wall system. The list of approved proprietary wall suppliers is maintained by the Bureau of Structures which is responsible for the Approval Process for earth retaining walls, 14.16.

14.16 Submittal Requirements for Pre-Approval Process

14.16.1 General

The following four wall systems require the supplier or manufacturer to submit to the Structural Design Section a package that addresses the items specified in 14.16.3.

1. Modular Block Gravity Walls
2. MSE Walls with Modular Block Facings
3. MSE Walls with Precast Concrete Panel Facings
4. Modular Concrete Bin or Crib Walls

14.16.2 General Requirements

Approval of retaining wall systems allows for use of these systems on Wisconsin Department of Transportation (WisDOT) projects upon the manufacturer's certification that the system as furnished to the contractor (or purchasing agency) complies with the design procedures specified in the *Bridge Manual*. WisDOT projects include: State, County and Municipal Federal Aid and authorized County and Municipal State Aid projects in addition to materials purchased directly by the state.

The manufacturer shall perform all specification tests with qualified personnel and maintain an acceptable quality control program. The manufacturer shall maintain records of all its control testing performed in the production of retaining wall systems. These test records shall be available at all times for examination by the Construction Materials Engineer for Highways or designee. Approval of materials will be contingent upon satisfactory compliance with procedures and material conformance to requirements as verified by source and field samples. Sampling will be performed by personnel during the manufacture of project specific materials.

14.16.3 Qualifying Data Required For Approval

Applicants requesting Approval for a specific system shall provide three copies of the documentation showing that they comply with *AASHTO LRFD* and *WisDOT Standard Specifications* and the design criteria specified in the *Bridge Manual*.

1. An overview of the system, including system theory.
2. Laboratory and field data supporting the theory.
3. Detailed design procedures, including sample calculations for installations with no surcharge, level surcharge and sloping surcharge.
4. Details of wall elements, analysis of structural elements, capacity demand ratio, load and resistance factors, estimated life, corrosion design procedure for soil reinforcement elements, procedures for field and laboratory evaluation including instrumentation and special requirements, if any.

5. Sample material and construction control specifications - showing material type, quality, certifications, field testing and placement procedures.

6. A well documented field construction manual describing in detail and with illustrations where necessary, the step by step construction sequence.

7. Details for mounting a concrete traffic barrier on the wall adjoining both concrete and flexible pavements (if applicable).

8. Pullout data for facing block/geogrid connection and soil pullout data (if applicable).

9. Submission of practical application with photos for all materials, surface textures and colors representative of products being certified.

10. Submission, if requested, to an on-site production process control review, and record keeping review.

11. List of installations including owner name and wall location.

12. Limitations of the wall system.

The above materials may be submitted at any time (recommend a minimum of 15 weeks) but, to be considered for a particular WisDOT project, must be approved prior to the bid opening date. The material should be clearly detailed and presented according to the prescribed outline.

After final review and approval of comments with the Bureau of Structures, the manufacturer will be approved to begin presenting the system on qualified projects.

14.16.4 Maintenance of Approval Status as a Manufacturer

The supplier or manufacturer must request to be reapproved bi-annually. The request shall be in writing and certify that the plant production process control and materials testing and design procedures haven't changed since the last review. The request shall be received within two years of the previous approval or the approval status will be terminated. Upon request for re-approval an on-site review of plant process control and materials testing may be conducted by WisDOT personnel. Travel expenses for trips outside the State of Wisconsin involved with this review will be borne by the manufacturer.

For periodic on-site reviews, access to the plant operations and materials records shall be provided to a representative of the Construction Materials Engineer during normal working hours upon request.

If the supplier or manufacturer introduces a new material, or cross-section, or a new design procedure, into its product line, the new feature must be submitted for approval. If the new feature/features are significantly different from the original product, the new product may be subjected to a complete review for approval.

14.16.5 Loss of Approved Status

Approval to deliver the approved system may be withdrawn under the following conditions:

Design Conformance

1. Construction does not follow design procedures.
2. Incorrect design procedures are used on projects.

Materials

3. Inability to consistently supply material meeting specification.
4. Inability to meet test method precision limits for quality control testing.
5. Lack of maintenance of required records.
6. Improper documentation of shipments.
7. Not maintaining an acceptable quality control program.

The decision to remove approval from a manufacturer on a specific system rests with the Construction Materials Engineer for Highways or the State Bridge Engineer.

14.17 References

1. State of Wisconsin, Department of Transportation, *Facilities Development Manual*

2. American Association of State highway and Transportation officials. *Standard Specification for highway Bridges*

3. American Association of State highway and Transportation officials. *AASHTO LRFD Bridge Design Specifications*

4. AASHTO LRFD Bridge Design Specification 4th Edition, 2007, AASHTO, 444 North Capitol Street, N.W., Suite 249, Washington, D.C. 20001.

5. Berg, Christopher and Samtani. *Design and Construction of Mechanically Stabilized Earth Walls and Reinforced Soil Slopes*. Publication No.FHWA-NHI-10-024.2009.

6. Bowles, Joseph E*. Foundation Analysis and Design 4th Edition.* McGraw Hill *1989*

7. Cudoto, Donald P. *Foundation Design Principles and Practices (* 2nd Edition*),* Prentice Halls

8. National Concrete Masonry Association, "Design Manual for Segmental Retaining Walls", 2302 Horse Pen Road, Herndon, Virginia 22071-3406.

9. Lazarte, Elias, Espinoza, Sabatini. *Geotechnical Engineering Circular No 7. Soil Nailing Walls*, FHWA

10. Publication No FHWA-SA-96-069R , "*Manual for design and construction of Soil Nail walls*

11. Publication No.FHWA-HI-98-032, "Load and Resistance Factor Design (LRFD) for Highway Bridge Substructures".

12. Publication No.FHWA-NHI-07-071, "Earth retaining Structures".

13. Publication No.FHWA-NHI-09-083, "Load and Resistance Factor Design (LRFD) for Highway Bridge Substructures".

14. Publication No. FHWA-NHI-09-087, "Corrosion/Degradation of Soil Reinforcements for Mechanically Stabilized Earth Walls and Reinforced slopes"

15. Publication No.FHWA-NHI-10-024, "Design and Construction of Mechanically Stabilized earth Walls and Reinforced Soil Slopes-Volume I".

16. Publication No.FHWA-NHI-10-025, "Design and Construction of Mechanically Stabilized earth Walls and Reinforced Soil Slopes-Volume II".

14.18 Design Examples

E14-1 Cast-In-Place Concrete Cantilever Wall on Spread Footing, LRFD

E14-2 Precast Panel Steel Reinforced MSE Wall, LRFD

E14-3 Modular Block Facing Geogrid Reinforced MSE Wall, LRFD

E14-4 Cast-In-Place Concrete Cantilever Wall on Piles, LRFD

E14-5 Sheet Pile Wall, LRFD

Table of Contents

E14-1 Cast-In-Place Concrete Cantilever Wall on Spread Footing, LRFD 2
E14-1.1 Establish Project Requirements 2
E14-1.2 Design Parameters 3
E14-1.3 Define Wall Geometry 5
E14-1.4 Permanent and Transient Loads 7
E14-1.4.1 Compute Earth Pressure Coefficients 7
E14-1.4.1.1 Compute Active Earth Pressure Coefficient 7
E14-1.4.1.2 Compute Passive Earth Pressure Coefficient 7
E14-1.4.2 Compute Unfactored Loads 8
E14-1.4.3 Summarize Applicable Load and Resistance Factors 12
E14-1.4.4 Compute Factored Loads and Moments 13
E14-1.5 Compute Bearing Resistance, qR 15
E14-1.6 Evaluate External Stability of Wall 17
E14-1.6.1 Bearing Resistance at Base of the Wall 17
E14-1.6.2 Limiting Eccentricity at Base of the Wall 18
E14-1.6.3 Sliding Resistance at Base of the Wall 19
E14-1.7 Evaluate Wall Structural Design 20
E14-1.7.1 Evaluate Heel Strength 20
E14-1.7.1.1 Evaluate Heel Shear Strength 20
E14-1.7.1.2 Evaluate Heel Flexural Strength 21
E14-1.7.2 Evaluate Toe Strength 23
E14-1.7.2.1 Evaluate Toe Shear Strength 23
E14-1.7.2.2 Evaluate Toe Flexural Strength 25
E14-1.7.3 Evaluate Stem Strength 26
E14-1.7.3.1 Evaluate Stem Shear Strength at Footing 26
E14-1.7.3.2 Evaluate Stem Flexural Strength at Footing 28
E14-1.7.3.3 Transfer of Force at Base of Stem 30
E14-1.7.4 Temperature and Shrinkage Steel 30
E14-1.7.4.1 Temperature and Shrinkage Steel for Footing 30
E14-1.7.4.2 Temperature and Shrinkage Steel of Stem 30
E14-1.8 Summary of Results 31
E14-1.8.1 Summary of External Stability 31
E14-1.8.2 Summary of Wall Strength Design 32
E14-1.8.3 Drainage Design 32
E14-1.9 Final CIP Concrete Wall Schematic 32

E14-1 Cast-In-Place Concrete Cantilever Wall on Spread Footing, LRFD

General

This example shows design calculations for a cast-in-place (CIP) concrete wall supported on a spread footing conforming to the LRFD Bridge Design Specifications and the WisDOT Bridge Manual. ***(Example is current through LRFD Seventh Edition - 2016 Interim)***

Sample design calculations for bearing resistance, external stability (sliding, eccentricity and bearing) and wall strength design will be presented. The overall stability and settlement calculations will not be shown in this example, but are required.

Design steps presented in 14.5.2.1 are used for the wall design.

E14-1.1 Establish Project Requirements

The CIP concrete wall shown in Figure E14-1.1-1 will be designed appropriately to accommodate a State Trunk Highway. External stability, overall stability and wall strength are the designer's (WisDOT/Consultant) responsibility.

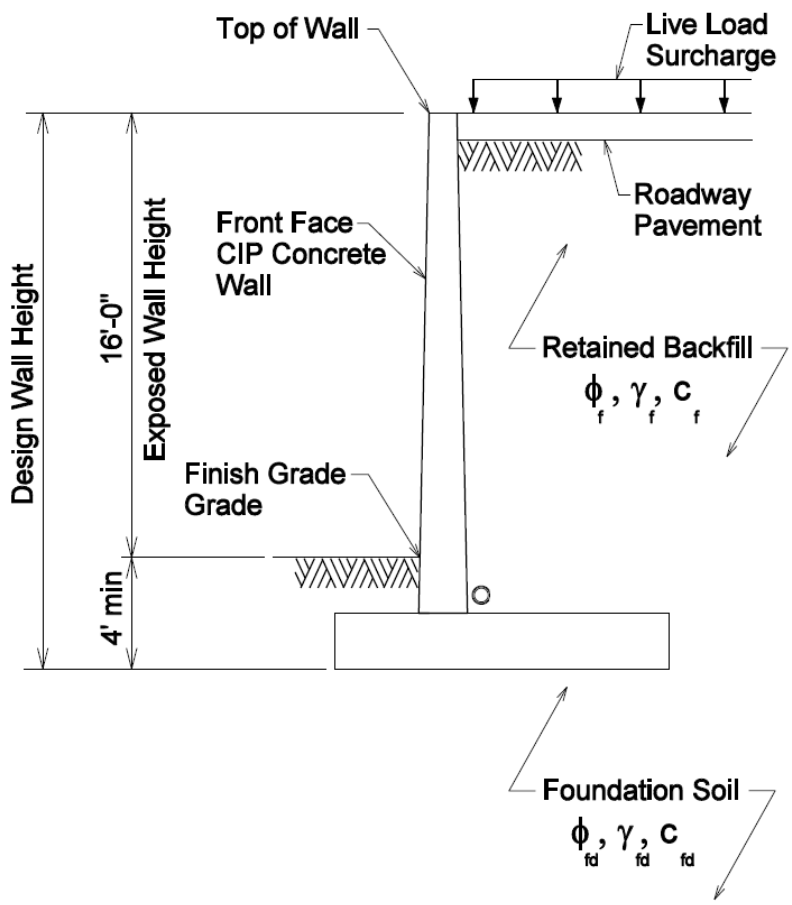

Figure E14-1.1-1
CIP Concrete Wall Adjacent to Highway

E14-1.2 Design Parameters

Project Parameters

$Design_Life = 75$ years — Wall design life (min) **LRFD [11.5.1]**

Soil Properties (From Geotechnical Site Investigation Report)

Designer to determine if long-term or short-term soil strength parameters govern external stability.

Backfill Soil Design Parameters

$\phi_f = 30$ deg — Angle of internal friction

$\gamma_f = 0.120$ — Unit weight, kcf

$c_f = 0$ — Cohesion, ksf

$\delta = 21$ deg — Friction angle between fill and wall

Note: Per WisDOT Bridge Manual and Standard Specifications, structural backfill shall be granular and non-expansive.

Foundation Soil Design Parameters

$\phi_{fd} = 34$ deg — Angle of internal friction

$\gamma_{fd} = 0.120$ — Unit of weight, kcf

$c_{fd} = 0$ — Cohesion, ksf

Reinforced Concrete Parameters

$f'_c = 3.5$ — Concrete compressive design strength, ksi (14.5.9)

$\gamma_c = 0.150$ $\quad w_c = \gamma_c$ — Unit weight of concrete, ksi

$E_c = 33000\, w_c^{1.5} \sqrt{f'_c}$ — Modulus of elasticity of concrete, ksi **LRFD [C5.4.2.4]**

$\boxed{E_c = 3587}$ ksi

$f_y = 60$ — Yield strength of reinforcing bars, ksi (14.5.9)

$E_s = 29000$ — Modulus of elasticity of reinforcing bars, ksi

Live Load Surcharge Parameters

Live load surcharge shall be used when vehicular load is located within H/2 of the backface of the wall **LRFD [3.11.6.4].** The equivalent height of soil for vehicular load, H_{eq}, used for surcharge loads shall be in accordance to **LRFD [Table 3.11.6.4-2]**. However, WisDOT policy for most cases requires an equivalent height of 2.0 feet. The following procedure is used for determining live load surcharge:

$L_{traffic} = 1.0$ Distance from wall backface to edge of traffic, ft

$\frac{H}{2} = 10.00$ Distance from wall backface where live load surcharge shall be considered in the wall design, ft

Note: The wall height used is the exposed height plus an assumed 4 feet embedment ($H=H_e+4$ feet)

Shall live load surcharge be included? check = "YES"

$h_{eq} = 2.0$ Equivalent height of soil for surcharge load, ft (14.4.5.4.2)

Pavement Parameters

$\gamma_p = 0.150$ Pavement unit weight, kcf

Resistance Factors

$\phi_b = 0.55$ Bearing resistance (gravity and semi-gravity walls) **LRFD [Table 11.5.7-1]**

$\phi_s = 1.00$ Sliding resistance **LRFD [Table 11.5.7-1]**

$\phi_\tau = 1.00$ Sliding resistance (shear resistance between soil and foundation) **LRFD [Table 11.5.7-1]**

$\phi_{ep} = 0.50$ Sliding resistance (passive resistance) **LRFD [Table 10.5.5.2.2-1]**

$\phi_F = 0.90$ Concrete flexural resistance (Assuming tension-controlled) **LRFD [5.5.4.2.1]**

$\phi_v = 0.90$ Concrete shear resistance **LRFD [5.5.4.2.1]**

E14-1.3 Define Wall Geometry

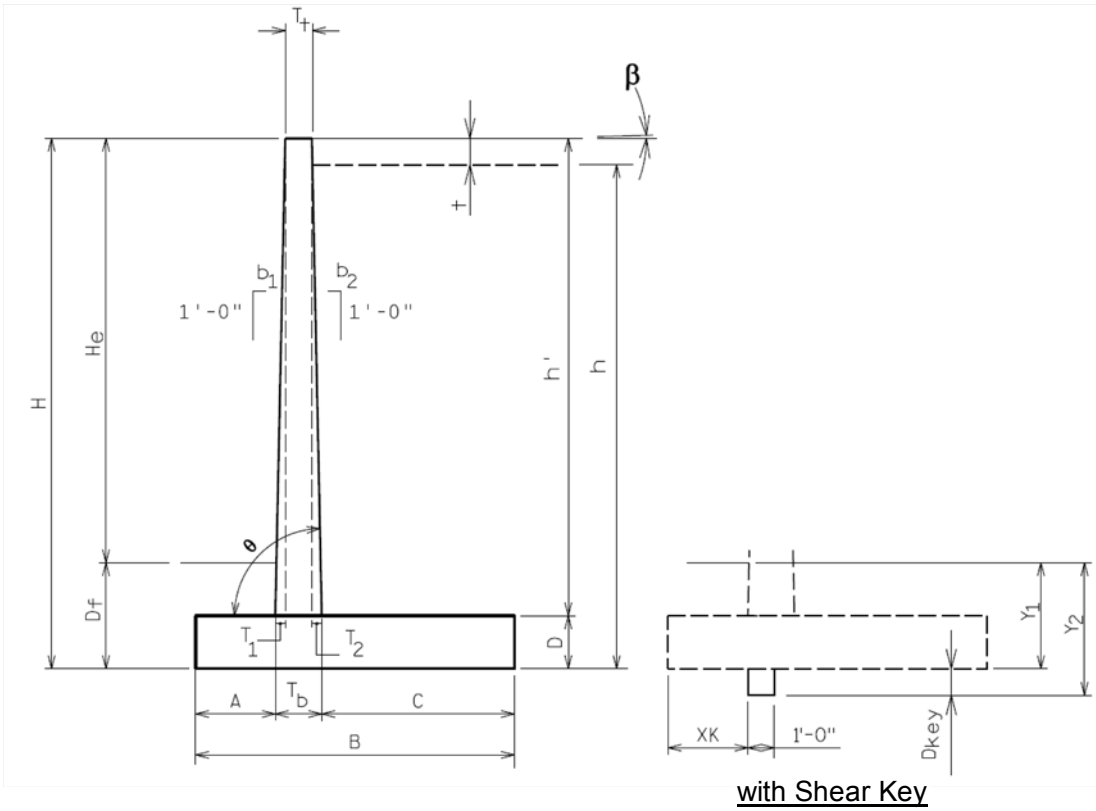

Figure E14-1.3-1
CIP Concrete Wall Geometry

Wall Geometry

$H_e = 16.0$	Exposed wall height, ft
$D_f = 4.0$	Footing cover, ft (WisDOT policy 4'-0" minimum)
$H = H_e + D_f$	Design wall height, ft
$T_t = 1.0$	Stem thickness at top of wall, ft
$b_1 = 0.25$	Front wall batter, in/ft (b_1H:12V)
$b_2 = 0.50$	Back wall batter, in/ft (b_2H:12V)
$\beta = 0$ deg	Inclination of ground slope behind face of wall, deg (horizontal)
$t = 1.0$	Pavement thickness, ft

Preliminary Wall Dimensioning

Selecting the most optimal wall configuration is an iterative process and depends on site conditions, cost considerations, wall geometry and aesthetics. For this example, the iterative process has been completed and the final wall dimensions are used for design checks.

$H = 20.0$	Design wall height, ft	
$B = 10.0$	Footing base width, ft (2/5H to 3/5H)	
$A = 3.5$	Toe projection, ft (H/8 to H/5)	
$D = 2.0$	Footing thickness, ft (H/8 to H/5)	
	WisDOT policy: $H \le 10'\text{-}0''$ $D_{min}=1'\text{-}6''$ $H > 10'\text{-}0''$ $D_{min}=2'\text{-}0''$	

Shear Key Dimensioning

$D_{key} = 1.0$	Depth of shear key from bottom of footing, ft	
$D_w = 1.0$	Width of shear key, ft	
$XK = A$	Distance from toe to shear key, ft	

Other Wall Dimensioning

$h' = H - D$	Stem height, ft	$h' = 18.00$
$T_1 = b_1 \frac{h'}{12}$	Stem front batter width, ft	$T_1 = 0.375$
$T_2 = b_2 \frac{h'}{12}$	Stem back batter width, ft	$T_2 = 0.750$
$T_b = T_1 + T_t + T_2$	Stem thickness at bottom of wall, ft	$T_b = 2.13$
$C = B - A - T_b$	Heel projection, ft	$C = 4.38$
$\theta = \text{atan}\left(\frac{12}{b_2}\right)$	Angle of back face of wall to horizontal	$\theta = 87.6$ deg
$b = 12$	Concrete strip width for design, in	
$y_1 = D_f$	Bottom of footing depth, ft	$y_1 = 4.0$
$y_2 = D_f + D_{key}$	Bottom of shear key depth, ft	$y_2 = 5.0$
$h = H - t + (T_2 + C)\tan(\beta)$	Retained soil height, ft	$h = 19.0$

E14-1.4 Permanent and Transient Loads

In this example, load types DC (dead load components), EV (vertical earth pressure), EH (horizontal earth pressure) and LS (live load surcharge) will be used. Soil above the toe will be ignored as well as its passive resistance. When a shear key is present only the passive soil resistance from the vertical face of the shear key will be included in sliding resistance.

E14-1.4.1 Compute Earth Pressure Coefficients

Active and passive earth pressures

E14-1.4.1.1 Compute Active Earth Pressure Coefficient

Compute the coefficient of active earth pressure using Coulomb Theory **LRFD [Eq 3.11.5.3-1]**

$\phi_f = 30.0$ deg

$\beta = 0.0$ deg

$\theta = 87.6$ deg

$\delta = 21.0$ deg

$$k_a = \frac{\sin(\theta + \phi_f)^2}{\Gamma \sin(\theta)^2 \sin(\theta - \delta)}$$

$$\Gamma = \left(1 + \sqrt{\frac{\sin(\phi_f + \delta)\ \sin(\phi_f - \beta)}{\sin(\theta - \delta)\ \sin(\theta + \beta)}}\right)^2 \qquad \boxed{\Gamma = 2.726}$$

$$k_a = \frac{\sin(\theta + \phi_f)^2}{\Gamma \sin(\theta)^2 \sin(\theta - \delta)} \qquad \boxed{k_a = 0.314}$$

E14-1.4.1.2 Compute Passive Earth Pressure Coefficient

Compute the coefficient of passive earth pressure using Rankine Theory

$$k_p = \tan\left(45\ \text{deg} + \frac{\phi_{fd}}{2}\right)^2 \qquad \boxed{k_p = 3.54}$$

E14-1.4.2 Compute Unfactored Loads

The forces and moments are computed by using Figures E14-1.3-1 and E14-1.3-3 and by their respective load types **LRFD [Tables 3.4.1-1 and 3.4.1-2]**

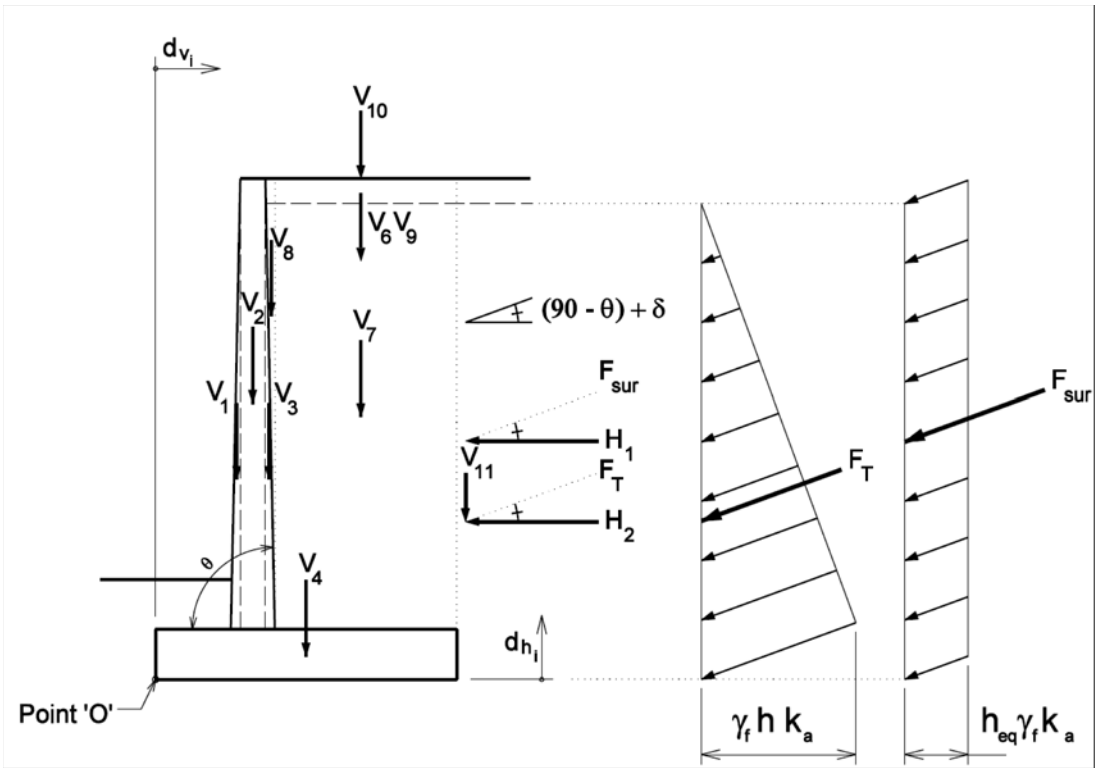

Figure E14-1.4-3
CIP Concrete Wall - External Stability

Active Earth Force Resultant (kip/ft), F_T

$$F_T = \frac{1}{2} \gamma_f h^2 k_a$$

Active earth force resultant (EH) $\boxed{F_T = 6.81}$

Live Load Surcharge Load (kip/ft), F_{sur}

$$F_{sur} = \gamma_f h_{eq} h k_a$$

Live load surcharge resultant (LS) $\boxed{F_{sur} = 1.43}$

Vertical Loads (kip/ft), V_i

$$V_1 = \frac{1}{2} T_1 h' \gamma_c$$

Wall stem front batter (DC) $\boxed{V_1 = 0.51}$

$$V_2 = T_t h' \gamma_c$$

Wall stem (DC) $\boxed{V_2 = 2.70}$

$$V_3 = \frac{1}{2} T_2 h' \gamma_c$$

Wall stem back batter (DC) $\boxed{V_3 = 1.01}$

$V_4 = D\ B\ \gamma_c$ Wall footing (DC) $V_4 = 3.00$

$V_6 = t\left(T_2 + C\right)\gamma_p$ Pavement (DC) $V_6 = 0.77$

$V_7 = C\ (h' - t)\ \gamma_f$ Soil backfill - heel (EV) $V_7 = 8.92$

$V_8 = \frac{1}{2}\ T_2\ (h' - t)\ \gamma_f$ Soil backfill - batter (EV) $V_8 = 0.77$

$V_9 = \frac{1}{2}\left(T_2 + C\right)\left[\left(T_2 + C\right)\tan(\beta)\right]\gamma_f$

Soil backfill - backslope (EV) $V_9 = 0.00$

$V_{10} = h_{eq}\left(T_2 + C\right)\gamma_f$

Live load surcharge (LS) $V_{10} = 1.23$

$V_{11} = F_T\ \sin(90\ \text{deg} - \theta + \delta)$

Active earth force resultant (vertical component - EH) $V_{11} = 2.70$

Moments produced from vertical loads about Point 'O' (kip-ft/ft), MV_i

Moment Arm (ft)		Moment (kip-ft/ft)	
$d_{v1} = A + \frac{2}{3}\ T_1$	$d_{v1} = 3.8$	$MV_1 = V_1\ d_{v1}$	$MV_1 = 1.9$
$d_{v2} = A + T_1 + \frac{T_t}{2}$	$d_{v2} = 4.4$	$MV_2 = V_2\ d_{v2}$	$MV_2 = 11.8$
$d_{v3} = A + T_1 + T_t + \frac{T_2}{3}$	$d_{v3} = 5.1$	$MV_3 = V_3\ d_{v3}$	$MV_3 = 5.2$
$d_{v4} = \frac{B}{2}$	$d_{v4} = 5.0$	$MV_4 = V_4\ d_{v4}$	$MV_4 = 15.0$
$d_{v6} = B - \left(\frac{T_2 + C}{2}\right)$	$d_{v6} = 7.4$	$MV_6 = V_6\ d_{v6}$	$MV_6 = 5.7$
$d_{v7} = B - \frac{C}{2}$	$d_{v7} = 7.8$	$MV_7 = V_7\ d_{v7}$	$MV_7 = 69.7$

$d_{v8} = A + T_1 + T_t + \frac{2T_2}{3}$ $\boxed{d_{v8} = 5.4}$ $MV_8 = V_8\ d_{v8}$ $\boxed{MV_8 = 4.1}$

$d_{v9} = A + T_1 + T_t + \frac{2\left(T_2 + C\right)}{3}$ $\boxed{d_{v9} = 8.3}$ $MV_9 = V_9\ d_{v9}$ $\boxed{MV_9 = 0.0}$

$d_{v10} = B - \left(\frac{T_2 + C}{2}\right)$ $\boxed{d_{v10} = 7.4}$ $MV_{10} = V_{10}\ d_{v10}$ $\boxed{MV_{10} = 9.1}$

$d_{v11} = B$ $\boxed{d_{v11} = 10.0}$ $MV_{11} = V_{11}\ d_{v11}$ $\boxed{MV_{11} = 27.0}$

Horizontal Loads (kip/ft), H_i

$H_1 = F_{sur} \cos(90\ \text{deg} - \theta + \delta)$

Live load surcharge (LS) $\boxed{H_1 = 1.32}$

$H_2 = F_T \cos(90\ \text{deg} - \theta + \delta)$

Active earth force
(horizontal component) (EH) $\boxed{H_2 = 6.25}$

Moments produced from horizontal loads about about Point 'O' (kip-ft/ft), MH_i

Moment Arm (ft)		Moment (kip-ft/ft)	
$d_{h1} = \frac{h}{2}$	$\boxed{d_{h1} = 9.5}$	$MH_1 = H_1\ d_{h1}$	$\boxed{MH_1 = 12.5}$
$d_{h2} = \frac{h}{3}$	$\boxed{d_{h2} = 6.3}$	$MH_2 = H_2\ d_{h2}$	$\boxed{MH_2 = 39.6}$

Summary of Unfactored Forces & Moments:

Load			Moment Arm		Moment		LRFD Load Type
Item	Description	Value (kip/ft)	Item	Value (ft)	Item	Value (kip-ft/ft)	
V_1	Wall stem front batter	0.51	d_{v1}	3.8	MV_1	1.9	DC
V_2	Wall stem	2.70	d_{v2}	4.4	MV_2	11.8	DC
V_3	Wall stem back batter	1.01	d_{v3}	5.1	MV_3	5.2	DC
V_4	Wall footing	3.00	d_{v4}	5.0	MV_4	15.0	DC
V_6	Pavement	0.77	d_{v6}	7.4	MV_6	5.7	DC
V_7	Soil backfill	8.92	d_{v7}	7.8	MV_7	69.7	EV
V_8	Soil backfill	0.77	d_{v8}	5.4	MV_8	4.1	EV
V_9	Soil backfill	0.00	d_{v9}	8.3	MV_9	0.0	EV
V_{10}	Live load surcharge	1.23	d_{v10}	7.4	MV_{10}	9.2	LS
V_{11}	Active earth pressure	2.70	d_{v11}	10.0	MV_{11}	27.0	EH

Table E14-1.4-1
Unfactored Vertical Forces & Moments

Load			Moment Arm		Moment		LRFD Load Type
Item	Description	Value (kip/ft)	Item	Value (ft)	Item	Value (kip-ft/ft)	
H_1	Live load surcharge	1.32	d_{h1}	9.5	MH_1	12.5	LS
H_2	Active earth force	6.25	d_{h2}	6.3	MH_2	39.6	EH

Table E14-1.4-2
Unfactored Horizontal Forces & Moments

E14-1.4.3 Summarize Applicable Load and Resistance Factors

Maximum and minimum load factors shall be used to determine the extreme load effects. WisDOT's policy is to set all the load modifiers to zero($n = 1.0$). Factored loads and moments for each limit state are calculated by applying the appropriate load factors **LRFD [Tables 3.4.1-1 and 3.4.1-2]**. The following load combinations will be used in this example:

Load Combination	γ_{DC}	γ_{EV}	γ_{LS_V}	γ_{LS_H}	γ_{EH}	Application
Strength Ia	0.90	1.00	-	1.75	1.50	Sliding, Eccentricity
Strength Ib	1.25	1.35	1.75	1.75	1.50	Bearing, Wall Strength
Service I	1.00	1.00	1.00	1.00	1.00	Wall Crack Control

Table E14-1.4-3
Load Combinations

Load Combination Assumptions:

- Live load surcharge stabilizing loads (if applicable) are ignored for overturning and sliding analyses. Live load surcharge is used to compute maximum bearing pressure, wall strength and overall (global) stability.
- Minimum horizontal earth pressure ,$\gamma_{EH(min)}$ = 0.9, will not control in this example based on B/H and lateral load inclination, but should be checked.
- Vertical loads from vehicle collision need not be applied with transverse loads. By inspection, transverse loads will control Extreme Event Load Combination for this example.
- Component load factors shall remain consistent throughout calculations. For example, the active earth force resultant (F_T) can be broken into component forces of either $V_{10}\gamma_{EH(max)}$ and $H_2\gamma_{EH(max)}$ or $V_{10}\gamma_{EH(min)}$ and $H_2\gamma_{EH(min)}$, not $V_{10}\gamma_{EH(min)}$ and $H_2\gamma_{EH(max)}$.

The loads discussed and tabulated previously can now be factored by the appropriate load factors and combined to determine the governing limit states for each design check.

E14-1.4.4 Compute Factored Loads and Moments

Unfactored loads by load type (kip/ft)

$V_{DC} = V_1 + V_2 + V_3 + V_4 + V_6$ $\boxed{V_{DC} = 8.0}$

$V_{EV} = V_7 + V_8 + V_9$ $\boxed{V_{EV} = 9.7}$

$V_{LS} = V_{10}$ $\boxed{V_{LS} = 1.2}$

$V_{EH} = V_{11}$ $\boxed{V_{EH} = 2.7}$

$H_{LS} = H_1$ $\boxed{H_{LS} = 1.3}$

$H_{EH} = H_2$ $\boxed{H_{EH} = 6.3}$

Unfactored moments by load type (kip-ft/ft)

$M_{DC} = MV_1 + MV_2 + MV_3 + MV_4 + MV_6$ $\boxed{M_{DC} = 39.6}$

$M_{EV} = MV_7 + MV_8 + MV_9$ $\boxed{M_{EV} = 73.8}$

$M_{LS1} = MV_{10}$ $\boxed{M_{LS1} = 9.1}$

$M_{EH1} = MV_{11}$ $\boxed{M_{EH1} = 27.0}$

$M_{LS2} = MH_1$ $\boxed{M_{LS2} = 12.5}$

$M_{EH2} = MH_2$ $\boxed{M_{EH2} = 39.6}$

Factored vertical loads by limit state (kip/ft)

$V_Ia = n\left(0.90V_{DC} + 1.00V_{EV} + 0.00\ V_{LS} + 1.50\ V_{EH}\right)$ $\boxed{V_Ia = 20.9}$

$V_Ib = n\left(1.25V_{DC} + 1.35V_{EV} + 1.75\ V_{LS} + 1.50\ V_{EH}\right)$ $\boxed{V_Ib = 29.3}$

$V_Ser = n\left(1.00V_{DC} + 1.00V_{EV} + 1.00\ V_{LS} + 1.00\ V_{EH}\right)$ $\boxed{V_Ser = 21.6}$

Factored horizontal loads by limit state (kip/ft)

$H_Ia = n(1.75H_{LS} + 1.50H_{EH})$ $\boxed{H_Ia = 11.7}$

$H_Ib = n(1.75H_{LS} + 1.50H_{EH})$ $\boxed{H_Ib = 11.7}$

$H_Ser = n(1.00H_{LS} + 1.00H_{EH})$ $\boxed{H_Ser = 7.6}$

Factored moments produced by vertical Loads by limit state (kip-ft/ft)

$MV_Ia = n(0.90M_{DC} + 1.00M_{EV} + 0.00M_{LS1} + 1.50\ M_{EH1})$ $\boxed{MV_Ia = 150.0}$

$MV_Ib = n(1.25M_{DC} + 1.35M_{EV} + 1.75M_{LS1} + 1.50\ M_{EH1})$ $\boxed{MV_Ib = 205.8}$

$MV_Ser = n(1.00M_{DC} + 1.00M_{EV} + 1.00M_{LS1} + 1.00\ M_{EH1})$ $\boxed{MV_Ser = 149.6}$

Factored moments produced by horizontal loads by limit state (kip-ft/ft)

$MH_Ia = n(1.75M_{LS2} + 1.50\ M_{EH2})$ $\boxed{MH_Ia = 81.3}$

$MH_Ib = n(1.75M_{LS2} + 1.50\ M_{EH2})$ $\boxed{MH_Ib = 81.3}$

$MH_Ser = n(1.00M_{LS2} + 1.00\ M_{EH2})$ $\boxed{MH_Ser = 52.1}$

Load Combination	Vert. Loads V (kips/ft)	Moments MV (kip-kip/ft)	Horiz. Loads H (kips/ft)	Moments MH (kip-kip/ft)
Strength Ia	20.9	150.0	11.7	81.3
Strength Ib	29.3	205.8	11.7	81.3
Service I	21.6	149.6	7.6	52.1

Table E14-1.4-4
Summary of Factored Loads & Moments

E14-1.5 Compute Bearing Resistance, q_R

Nominal bearing resistance, q_n **LRFD [Eq 10.6.3.1.2a-1]**

$$q_n = c_{fd}\, N_{cm} + \gamma\, D_f\, N_{qm}\, C_{wq} + 0.5\, \gamma\, B'\, N_{\gamma m}\, C_{w\gamma}$$

Compute the resultant location (distance from Point 'O' Figure E14-4.4-3)

$\Sigma M_R = MV_Ib$ $\boxed{\Sigma M_R = 205.8}$ Summation of resisting moments for Strength Ib

$\Sigma M_O = MH_Ib$ $\boxed{\Sigma M_O = 81.3}$ Summation of overturning moments for Strength Ib

$\Sigma V = V_Ib$ $\boxed{\Sigma V = 29.3}$ Summation of vertical loads for Strength Ib

$$x = \frac{\Sigma M_R - \Sigma M_O}{\Sigma V}$$

Distance from Point "O" the resultant intersects the base $\boxed{x = 4.25}$ ft

Compute the wall eccentricity

$$e = \frac{B}{2} - x$$

$\boxed{e = 0.75}$ ft

Define the foundation layout

$B' = B - 2\,e$ Footing width $\boxed{B' = 8.5}$ ft

$L' = 90.0$ Footing length (Assumed) $\boxed{L' = 90.0}$ ft

$H' = H_Ib$ Summation of horizontal loads for Strength Ib $\boxed{H' = 11.7}$ kip/ft

$V' = V_Ib$ Summation of vertical loads for Strength Ib $\boxed{V' = 29.3}$ kip/ft

$D_f = 4.00$ Footing embedment

$\theta' = 90\text{deg}$ Direction of H' and V' resultant measured from wall backface **LRFD [Figure C10.6.3.1.2a-1]** $\boxed{\theta' = 90.0\ \text{deg}}$

Compute bearing capacity factors per **LRFD [Table 10.6.3.1.2a-1]**

$\phi_{fd} = 34.0$ deg $N_q = 29.4$ $N_c = 42.2$ $N_\gamma = 41.1$

Compute shape correction factors per **LRFD [Table 10.6.3.1.2a-3]**

Since the friction angle, ϕ_f, is > 0 the following equations are used:

$$s_c = 1 + \left(\frac{B'}{L'}\right)\left(\frac{N_q}{N_c}\right)$$

$\boxed{s_c = 1.07}$

$$s_q = 1 + \left(\frac{B'}{L'}\tan(\phi_{fd})\right)$$

$\boxed{s_q = 1.06}$

$$s_\gamma = 1 - 0.4\left(\frac{B'}{L'}\right)$$

$\boxed{s_\gamma = 0.96}$

Compute load inclination factors using **LRFD Equations [10.6.3.1.2a-5] thru [10.6.3.1.2a-9]**

$$n = \frac{2 + \frac{L'}{B'}}{1 + \frac{L'}{B'}} \cos(\theta')^2 + \frac{2 + \frac{B'}{L'}}{1 + \frac{B'}{L'}} \sin(\theta')^2$$ $\boxed{n = 1.91}$

$$i_q = \left(1 - \frac{H'}{V' + c_{fd}\, B'\, L' \frac{1}{\tan(\phi_{fd})}}\right)^n$$ $\boxed{i_q = 0.38}$

$$i_\gamma = \left(1 - \frac{H'}{V' + c_{fd}\, B'\, L' \frac{1}{\tan(\phi_{fd})}}\right)^{n+1}$$ $\boxed{i_\gamma = 0.23}$

$$i_c = i_q - \left(\frac{1 - i_q}{N_q - 1}\right)$$ For $\phi_{fd} > 0$: $\boxed{i_c = 0.36}$

Note: The use of load inclination factors shall be determined by the engineer.

Compute depth correction factor per **LRFD [Table 10.6.3.1.2a-4]**. While it can be assumed that the soils above the footing are as competent as beneath the footing, the depth correction factor is taken as 1.0 since D_f/B is less than 1.0.

$d_q = 1.00$

Determine coefficients C_{wq} and $C_{w\gamma}$ assuming that the water depth is greater than 1.5 times the footing base plus the embedment depth per **LRFD [Table 10.6.3.1.2a-2]**

$C_{wq} = 1.0$ where $D_w > 1.5B + D_f$

$C_{w\gamma} = 1.0$ where $D_w > 1.5B + D_f$

Compute modified bearing capacity factors
LRFD [Equation 10.6.3.1.2a-2 to 10.6.3.1.2a-4]

$N_{cm} = N_c\, s_c\, i_c$ $\boxed{N_{cm} = 16.0}$

$N_{qm} = N_q\, s_q\, d_q\, i_q$ $\boxed{N_{qm} = 11.8}$

$N_{\gamma m} = N_\gamma\, s_\gamma\, i_\gamma$ $\boxed{N_{\gamma m} = 9.0}$

Compute nominal bearing resistance, q_n, **LRFD [Eq 10.6.3.1.2a-1]**

$q_n = c_{fd}\, N_{cm} + \gamma_{fd}\, D_f\, N_{qm}\, C_{wq} + 0.5\, \gamma_{fd}\, B'\, N_{\gamma m}\, C_{w\gamma}$ $\boxed{q_n = 10.25}$ ksf/ft

Compute factored bearing resistance, q_R, **LRFD [Eq 10.6.3.1.1]**

$\phi_b = 0.55$

$q_R = \phi_b\, q_n$ $\boxed{q_R = 5.64}$ ksf/ft

E14-1.6 Evaluate External Stability of Wall

Three potential external failure mechanisms will be considered in this example. These failures include bearing, limiting eccentricity and sliding. Global (overall) stability requirements are assumed to have been satisfied in prior calculations. Design calculations will be carried out for the governing limit states only.

E14-1.6.1 Bearing Resistance at Base of the Wall

The following calculations are based on **Strength Ib**:

Compute resultant location (distance from Point 'O' Figure E14-1.4-3)

$\Sigma M_R = MV_Ib$ $\quad \Sigma M_R = 205.8$ kip-ft/ft

$\Sigma M_O = MH_Ib$ $\quad \Sigma M_O = 81.3$ kip-ft/ft

$\Sigma V = V_Ib$ $\quad \Sigma V = 29.3$ kip/ft

$$x = \frac{\Sigma M_R - \Sigma M_O}{\Sigma V}$$

Distance from Point "O" the resultant intersects the base

$\boxed{x = 4.25}$ ft

Compute the wall eccentricity

$$e = \frac{B}{2} - x$$

$\boxed{e = 0.75}$ ft

Note: The vertical stress is assumed to be uniformly distributed over the effective bearing width, B', since the wall is supported by a soil foundation **LRFD [11.6.3.2]**. The effective bearing width is equal to B-2e. When the foundation eccentricity is negative the actual bearing width, B, will be used.

Compute the ultimate bearing stress

$$\sigma_V = \frac{\Sigma V}{B - 2\,e}$$

$\boxed{\sigma_V = 3.44}$ ksf/ft

Factored bearing resistance

$\boxed{q_R = 5.64}$ ksf/ft

<u>Capacity:Demand Ratio (CDR)</u>

$$CDR_{Bearing1} = \frac{q_R}{\sigma_V}$$

$\boxed{CDR_{Bearing1} = 1.64}$

Is the $CDR \geq 1.0$?

$\boxed{check = \text{"OK"}}$

E14-1.6.2 Limiting Eccentricity at Base of the Wall

The location of the resultant of the reaction forces is limited to the middle two-thirds o base width for a soil foundation (i.e., e_{max} = B/3). The following calculations are base

Strength Ia:

Maximum eccentricity

$$e_{max} = \frac{B}{3}$$

$e_{max} = 3.33$ ft

Compute resultant location (distance from Point 'O' Figure E14-1.4.3)

$\Sigma M_R = MV_Ia$ $\Sigma M_R = 150.0$ kip-ft/ft

$\Sigma M_O = MH_Ia$ $\Sigma M_O = 81.3$ kip-ft/ft

$\Sigma V = V_Ia$ $\Sigma V = 20.9$ kip/ft

$$x = \frac{\Sigma M_R - \Sigma M_O}{\Sigma V}$$

Distance from Point "O" the resultant intersects the base

$x = 3.29$ ft

Compute the wall eccentricity

$$e = \frac{B}{2} - x$$

$e = 1.71$ ft

<u>Capacity:Demand Ratio (CDR)</u>

$$CDR_{Eccentricity1} = \frac{e_{max}}{e}$$

$CDR_{Eccentricity1} = 1.94$

Is the $CDR \geq 1.0$?

check = "OK"

E14-1.6.3 Sliding Resistance at Base of the Wall

For sliding failure, the horizontal force effects, R_u, is checked against the sliding resistance, R_R, where $R_R=\phi R_n$ **LRFD [10.6.3.4]**. If sliding resistance is not adequate a shear key will be investigated. The following calculations are based on **Strength Ia**:

Factored Sliding Force, R_u

$R_u = H_Ia$ $\boxed{R_u = 11.7}$ kip/ft

Sliding Resistance, R_R

$$R_R = \phi_s R_n = \phi_\tau R_\tau + \phi_{ep} R_{ep}$$

Compute sliding resistance between soil and foundation, $\phi_\tau R_\tau$

$\Sigma V = V_Ia$ $\boxed{\Sigma V = 20.9}$ kip/ft

$R_\tau = \Sigma V \tan(\phi_{fd})$ $\boxed{R_\tau = 14.1}$ kip/ft

$\phi_\tau = 1.00$ $\boxed{\phi_\tau R_\tau = 14.1}$ kip/ft

Compute passive resistance throughout the design life of the wall, $\phi_{ep} R_{ep}$

$r_{ep1} = k_p \gamma_{fd} y_1$ Nominal passive pressure at y_1 $\boxed{r_{ep1} = 1.70}$ kip/ft

$r_{ep2} = k_p \gamma_{fd} y_2$ Nominal passive pressure at y_2 $\boxed{r_{ep2} = 2.12}$ kip/ft

$R_{ep} = \dfrac{r_{ep1} + r_{ep2}}{2}(y_2 - y_1)$ $\boxed{R_{ep} = 1.9}$ kip/ft

$\phi_{ep} = 0.50$ $\boxed{\phi_{ep} R_{ep} = 1.0}$ kip/ft

Compute nominal resistance against failure by sliding, R_n

$R_n = \phi_\tau R_\tau + \phi_{ep} R_{ep}$ $\boxed{R_n = 15.1}$ kip/ft

Compute factored resistance against failure by sliding, R_R

$\phi_s = 1.00$

$R_R = \phi_s R_n$ $\boxed{R_R = 15.1}$ kip/ft

<u>Capacity:Demand Ratio (CDR)</u>

$CDR_{Sliding1} = \dfrac{R_R}{R_u}$ $\boxed{CDR_{Sliding1} = 1.29}$

Is the $CDR \geq 1.0$? $\boxed{check = \text{"OK"}}$

E14-1.7 Evaluate Wall Structural Design

Note: CIP concrete walls are a non-proprietary wall system and the structural design computations shall be performed by the wall designer.

Wall structural design computations for shear and flexure will be considered in this example. The critical sections for flexure are taken at the front, back and bottom of them stem. For simplicity, critical sections for shear will be taken at the critical sections used for flexsure. In actuality, the toe and stem may be designed for shear at the effective depth away from the face. Crack control and temperature and shrinkage considerations will also be included.

E14-1.7.1 Evaluate Heel Strength

Analyze heel requirements.

E14-1.7.1.1 Evaluate Heel Shear Strength

For **Strength Ib**:

$$V_u = 1.25\left(\frac{C}{B}V_4 + V_6\right) + 1.35\left(V_7 + V_8 + V_9\right) + 1.75\left(V_{10}\right) + 1.50\left(V_{11}\right)$$

$\boxed{V_u = 21.9}$ kip/ft

Nominal shear resistance, V_n, is taken as the lesser of V_{n1} and V_{n2} **LRFD [5.8.3.3]**

$V_{n1} = V_c$ **LRFD [Eq 5.8.3.3-1]**

where: $V_c = 0.0316\ \beta\lambda\sqrt{f'_c}\ b_v\ d_v$

$V_{n2} = 0.25\ f'_c\ b_v\ d_v$ **LRFD [Eq 5.8.3.3-2]**

Compute the shear resistance due to concrete, V_c:

cover = 2.0 in

s = 7.0 in (bar spacing)

$Bar_{No} = 6$ (transverse bar size)

$Bar_D = 0.750$ in (transverse bar diameter)

$Bar_A = 0.440$ in^2 (transverse bar area)

$\alpha_1 = 0.85$ (for $f'_c \leq 10.0$ ksi) **LRFD [5.7.2.2]**

$$A_s = \frac{Bar_A}{\frac{s}{12}}$$

$\boxed{A_s = 0.75}$ in^2/ft

$$d_s = D\ 12 - cover - \frac{Bar_D}{2}$$

$\boxed{d_s = 21.6}$ in

$$a = \frac{A_s\ f_y}{\alpha_1\ f'_c\ b}$$

$\boxed{a = 1.3}$ in

$d_{v1} = d_s - \frac{a}{2}$ $\boxed{d_{v1} = 21.0}$ in

$d_{v2} = 0.9\ d_s$ $\boxed{d_{v2} = 19.5}$ in

$d_{v3} = 0.72\ D\ 12$ $\boxed{d_{v3} = 17.3}$ in

$d_v = \max(d_{v1}, d_{v2}, d_{v3})$ $\boxed{d_v = 21.0}$ in

Nominal shear resistance, V_n, is taken as the lesser of V_{n1} and V_{n2}

$\beta = 2.0$ λ = 1.0 (normal wgt. conc.) **LRFD [5.4.2.8]**

$V_c = 0.0316\ \beta\ \lambda \sqrt{f'_c}\ b\ d_v$ $\boxed{V_c = 29.8}$ kip/ft

$V_{n1} = V_c$ $\boxed{V_{n1} = 29.8}$ kip/ft

$V_{n2} = 0.25\ f'_c\ b\ d_v$ $\boxed{V_{n2} = 220.4}$ kip/ft

$V_n = \min(V_{n1}, V_{n2})$ $\boxed{V_n = 29.8}$ kip/ft

$V_r = \phi_v\ V_n$ $\boxed{V_r = 26.8}$ kip/ft

$\boxed{V_u = 21.9}$ kip/ft

Is V_u less than V_r? $\boxed{\text{check} = \text{"OK"}}$

E14-1.7.1.2 Evaluate Heel Flexural Strength

$V_u = 21.9$ kip/ft

$M_u = V_u \frac{C}{2}$ $\boxed{M_u = 47.9}$ kip-ft/ft

Calculated the capacity of the heel in flexure at the face of the stem:

$M_n = A_s\ f_y \left(d_s - \frac{a}{2}\right) \frac{1}{12}$ $\boxed{M_n = 79.2}$ kip-ft/ft

Calculate the flexural resistance factor ϕ_F:

$\beta_1 = 0.85$

$c = \frac{a}{\beta_1}$ $\boxed{c = 1.49}$ in

$$\phi_F = \begin{cases} 0.75 & \text{if } \frac{d_s}{c} < \frac{5}{3} \\ 0.65 + 0.15\left(\frac{d_s}{c} - 1\right) & \text{if } \frac{5}{3} \le \frac{d_s}{c} \le \frac{8}{3} \\ 0.90 & \text{otherwise} \end{cases}$$

$\boxed{\phi_F = 0.90}$

based on f_y = 60 ksi, **LRFD [5.5.4.2.1], [Table C5.7.2.1-1]**

Note: if $\phi_F = 0.75$ Section is compression-controlled
if $0.75 < \phi_F < 0.90$ Section is in transition
if $\phi_F = 0.90$ Section is tension-controlled

Calculate the flexural factored resistance, M_r:

$M_r = \phi_F M_n$ $\boxed{M_r = 71.2}$ kip-ft/ft

$\boxed{M_u = 47.9}$ kip-ft/ft

Is M_u less than M_r? $\boxed{\text{check} = \text{"OK"}}$

Check the minimum reinforcement limits in accordance with **LRFD [5.7.3.3.2]**:

$f_r = 0.24\,\lambda\sqrt{f'_c}$ = modulus of rupture (ksi) **LRFD [5.4.2.6]**

$f_r = 0.24\sqrt{f'_c}$ λ = 1.0 (normal wgt. conc.) **LRFD [5.4.2.8]** $\boxed{f_r = 0.449}$ ksi

$I_g = \frac{1}{12}\, b\,(D\ 12)^3$ $\boxed{I_g = 13824}$ in^4

$y_t = \frac{1}{2}\, D\ 12$ $\boxed{y_t = 12.00}$ in

$S_c = \frac{I_g}{y_t}$ $\boxed{S_c = 1152}$ in^3

$M_{cr} = \gamma_3(\gamma_1 f_r)\, S_c$ therefore, $M_{cr} = 1.1\, f_r\, S_c$

Where:

$\gamma_1 = 1.6$ flexural cracking variability factor

$\gamma_3 = 0.67$ ratio of specified minimum yield strength to ultimate tensile strength of the reinforcement <u>for A615, Grade 60 reinforcement</u>

$M_{cr} = 1.1\, f_r\, S_c\, \frac{1}{12}$ $\boxed{M_{cr} = 47.4}$ kip-ft/ft

$1.33\ M_u = 63.7$ kip-ft/ft

Is M_r greater than the lesser value of M_{cr} and $1.33*M_u$? check = "OK"

E14-1.7.2 Evaluate Toe Strength

The structural design of the footing toe is calculated using a linear contact stress distribution for bearing for all soil and rock conditions.

E14-1.7.2.1 Evaluate Toe Shear Strength

For **Strength Ib**:

$\Sigma M_R = MV_Ib$ $\Sigma M_R = 205.8$ kip-ft/ft

$\Sigma M_O = MH_Ib$ $\Sigma M_O = 81.3$ kip-ft/ft

$\Sigma V = V_Ib$ $\Sigma V = 29.3$ kip/ft

$$x = \frac{\Sigma M_R - \Sigma M_O}{\Sigma V}$$ $x = 4.3$ ft

$$e = \max\left(0, \frac{B}{2} - x\right)$$ $e = 0.75$ ft

$$\sigma_{max} = \frac{\Sigma V}{B}\left(1 + 6\frac{e}{B}\right)$$ $\sigma_{max} = 4.24$ ksf/ft

$$\sigma_{min} = \frac{\Sigma V}{B}\left(1 - 6\frac{e}{B}\right)$$ $\sigma_{min} = 1.62$ ksf/ft

Calculate the average stress on the toe

$$\sigma_V = \frac{\sigma_{max} + \left[\sigma_{min} + \frac{B - A}{B}\left(\sigma_{max} - \sigma_{min}\right)\right]}{2}$$ $\sigma_V = 3.78$ ksf/ft

$$V_u = \sigma_V A$$ $V_u = 13.2$ kip/ft

Nominal shear resistance, V_n, is taken as the lesser of V_{n1} and V_{n2} **LRFD [5.8.3.3]**

$V_{n1} = V_c$ **LRFD [Eq 5.8.3.3-1]**

in which: $V_c = 0.0316\ \beta\lambda\sqrt{f'_c}\ b_V\ d_V$

$V_{n2} = 0.25\ f'_c\ b_v\ d_v$ **LRFD [Eq 5.8.3.3-2]**

Design footing toe for shear

$cover = 3.0$ in

$s = 9.0$ in (bar spacing)

$Bar_{No} = 5$ (transverse bar size)

$Bar_D = 0.63$ in (transverse bar diameter)

$Bar_A = 0.31$ in^2 (transverse bar area)

$$A_s = \frac{Bar_A}{\frac{s}{12}}$$ $A_s = 0.41$ in^2/ft

$$d_s = D\ 12 - cover - \frac{Bar_D}{2}$$ $d_s = 20.7$ in

$$a = \frac{A_s\ f_y}{\alpha_1\ f'_c\ b}$$ $a = 0.7$ in

$$d_{v1} = d_s - \frac{a}{2}$$ $d_{v1} = 20.3$ in

$$d_{v2} = 0.9\ d_s$$ $d_{v2} = 18.6$ in

$$d_{v3} = 0.72\ D\ 12$$ $d_{v3} = 17.3$ in

$$d_v = \max(d_{v1}, d_{v2}, d_{v3})$$ $d_v = 20.3$ in

Nominal shear resistance, V_n, is taken as the lesser of V_{n1} and V_{n2}

$\beta = 2.0$ λ = 1.0 (normal wgt. conc.) **LRFD [5.4.2.8]**

$$V_c = 0.0316\ \beta\ \lambda\sqrt{f'_c}\ b\ d_v$$ $V_c = 28.9$ kip/ft

$$V_{n1} = V_c$$ $V_{n1} = 28.9$ kip/ft

$$V_{n2} = 0.25\ f'_c\ b\ d_v$$ $V_{n2} = 213.6$ kip/ft

$$V_n = \min(V_{n1}, V_{n2})$$ $V_n = 28.9$ kip/ft

$$V_r = \phi_v\ V_n$$ $V_r = 26.0$ kip/ft

$V_u = 13.2$ kip/ft

Is V_u less than V_r? check = "OK"

E14-1.7.2.2 Evaluate Toe Flexural Strength

$V_u = 13.2$ kip/ft

$M_u = V_u \frac{A}{2}$ $\boxed{M_u = 23.2}$ kip-ft/ft

Calculated the capacity of the toe in flexure at the face of the stem:

$M_n = A_s f_y \left(d_s - \frac{a}{2}\right) \frac{1}{12}$ $\boxed{M_n = 42.0}$ kip-ft/ft

Calculate the flexural resistance factor ϕ_F:

$\beta_1 = 0.85$

$c = \frac{a}{\beta_1}$ $\boxed{c = 0.82}$ in

$$\phi_F = \begin{cases} 0.75 & \text{if } \frac{d_s}{c} < \frac{5}{3} \\ 0.65 + 0.15\left(\frac{d_s}{c} - 1\right) & \text{if } \frac{5}{3} \le \frac{d_s}{c} \le \frac{8}{3} \\ 0.90 & \text{otherwise} \end{cases}$$

$\boxed{\phi_F = 0.90}$

based on f_y = 60 ksi, **LRFD [5.5.4.2.1], [Table C5.7.2.1-1]**

Calculate the flexural factored resistance, M_r:

$M_r = \phi_F M_n$ $\boxed{M_r = 37.8}$ kip-ft/ft

Is M_u less than M_r? $\boxed{\text{check} = \text{"OK"}}$

Check the minimum reinforcement limits in accordance with **LRFD [5.7.3.3.2]**:

$f_r = 0.24\,\lambda\sqrt{f'_c}$ = modulus of rupture (ksi) **LRFD [5.4.2.6]**

$f_r = 0.24\sqrt{f'_c}$ λ = 1.0 (normal wgt. conc.) **LRFD [5.4.2.8]** $\boxed{f_r = 0.449}$ ksi

$I_g = \frac{1}{12} b\,(D\ 12)^3$ $\boxed{I_g = 13824}$ in^4

$y_t = \frac{1}{2} D\ 12$ $\boxed{y_t = 12.00}$ in

$S_c = \frac{I_g}{y_t}$ $\boxed{S_c = 1152}$ in^3

$M_{cr} = 1.1\ f_r\ S_c\ \frac{1}{12}$ from E14-1.7.1.2 $M_{cr} = 47.4$ kip-ft/ft

$1.33\ M_u = 30.8$ kip-ft/ft

Is M_r greater than the lesser value of M_{cr} and $1.33*M_u$?

check = "OK"

E14-1.7.3 Evaluate Stem Strength

Unfactored Stem Horizontal Loads and Moments:

$H_1 = \gamma_f\ h_{eq}\ (h' - t)\ k_a \cos(90\ \text{deg} - \theta + \delta)$ $H_1 = 1.2$ kip/ft

$H_2 = \frac{1}{2}\ \gamma_f\ (h' - t)^2\ k_a \cos(90\ \text{deg} - \theta + \delta)$ $H_2 = 5.0$ kip/ft

$M_1 = H_1 \left(\frac{h' - t}{2}\right)$ $M_1 = 10.0$ kip-ft/ft

$M_2 = H_2 \left(\frac{h' - t}{3}\right)$ $M_2 = 28.4$ kip-ft/ft

Factored Stem Horizontal Loads and Moments:

for **Strength Ib**:

$H_{u1} = 1.75\ H_1 + 1.50\ H_2$ $H_{u1} = 9.6$ kip/ft

$M_{u1} = 1.75\ M_1 + 1.50\ M_2$ $M_{u1} = 60.0$ kip-ft/ft

for **Service I**:

$H_{u3} = 1.00\ H_1 + 1.00\ H_2$ $H_{u3} = 6.2$ kip/ft

$M_{u3} = 1.00\ M_1 + 1.00\ M_2$ $M_{u3} = 38.4$ kip-ft/ft

E14-1.7.3.1 Evaluate Stem Shear Strength at Footing

$V_u = H_{u1}$ $V_u = 9.6$ kip/ft

Nominal shear resistance, V_n, is taken as the lesser of V_{n1} and V_{n2} **LRFD [5.8.3.3]**

$V_{n1} = V_c$ **LRFD [Eq 5.8.3.3-1]**

where: $V_c = 0.0316\ \beta \lambda \sqrt{f'_c}\ b_v\ d_v$

$V_{n2} = 0.25\ f'_c\ b_v\ d_v$ **LRFD [Eq 5.8.3.3-2]**

Compute the shear resistance due to concrete, V_c:

$cover = 2.0$ in

$s = 10.0$ in (bar spacing)

$Bar_{No} = 8$ (transverse bar size)

$Bar_D = 1.00$ in (transverse bar diameter)

$Bar_A = 0.79$ in^2 (transverse bar area)

$$A_s = \frac{Bar_A}{\frac{s}{12}}$$ $A_s = 0.95$ in^2/ft

$$d_s = T_b\ 12 - cover - \frac{Bar_D}{2}$$ $d_s = 23.0$ in

$$a = \frac{A_s\ f_y}{\alpha_1\ f'_c\ b}$$ $a = 1.6$ in

$$d_{v1} = d_s - \frac{a}{2}$$ $d_{v1} = 22.2$ in

$$d_{v2} = 0.9\ d_s$$ $d_{v2} = 20.7$ in

$$d_{v3} = 0.72\ T_b\ 12$$ $d_{v3} = 18.4$ in

$$d_v = \max(d_{v1}, d_{v2}, d_{v3})$$ $d_v = 22.2$ in

Nominal shear resistance, V_n, is taken as the lesser of V_{n1} and V_{n2}

$\beta = 2.0$ $\lambda = 1.0$ (normal wgt. conc.) **LRFD [5.4.2.8]**

$$V_c = 0.0316\ \beta\ \lambda\sqrt{f'_c}\ b\ d_v$$ $V_c = 31.5$ kip/ft

$$V_{n1} = V_c$$ $V_{n1} = 31.5$ kip/ft

$$V_{n2} = 0.25\ f'_c\ b\ d_v$$ $V_{n2} = 233.1$ kip/ft

$$V_n = \min(V_{n1}, V_{n2})$$ $V_n = 31.5$ kip/ft

$$V_r = \phi_v\ V_n$$ $V_r = 28.4$ kip/ft

$V_u = 9.6$ kip/ft

Is V_u less than V_r? $\boxed{\text{check} = \text{"OK"}}$

E14-1.7.3.2 Evaluate Stem Flexural Strength at Footing

$M_u = M_{u1}$ $\boxed{M_u = 60.0}$ kip-ft/ft

Calculate the capacity of the stem in flexure at the face of the footing:

$$M_n = A_s f_y \left(d_s - \frac{a}{2}\right) \frac{1}{12}$$ $\boxed{M_n = 105.2}$ kip-ft/ft

Calculate the flexural resistance factor ϕ_F:

$$\beta_1 = 0.85$$

$$c = \frac{a}{\beta_1}$$ $\boxed{c = 1.87}$ in

$$\phi_F = \begin{cases} 0.75 & \text{if } \frac{d_s}{c} < \frac{5}{3} \\ 0.65 + 0.15\left(\frac{d_s}{c} - 1\right) & \text{if } \frac{5}{3} \le \frac{d_s}{c} \le \frac{8}{3} \\ 0.90 & \text{otherwise} \end{cases}$$

$\boxed{\phi_F = 0.90}$

based on f_y = 60 ksi, **LRFD [5.5.4.2.1], [Table C5.7.2.1-1]**

Calculate the flexural factored resistance, M_r:

$$M_r = \phi_F M_n$$ $\boxed{M_r = 94.7}$ kip-ft/ft

$\boxed{M_u = 60.0}$ kip-ft/ft

Is M_u less than M_r? $\boxed{\text{check} = \text{"OK"}}$

Check the minimum reinforcement limits in accordance with **LRFD [5.7.3.3.2]**:

$f_r = 0.24\,\lambda\sqrt{f'_c}$ = modulus of rupture (ksi) **LRFD [5.4.2.6]**

$f_r = 0.24\sqrt{f'_c}$ λ = 1.0 (normal wgt. conc.) **LRFD [5.4.2.8]** $\boxed{f_r = 0.45}$ ksi

$$I_g = \frac{1}{12} b \left(T_b\ 12\right)^3$$ $\boxed{I_g = 16581}$ in^4

$$y_t = \frac{1}{2} T_b\ 12$$ $\boxed{y_t = 12.8}$ in

$$S_c = \frac{I_g}{y_t}$$ $\boxed{S_c = 1301}$ in^3

$M_{cr_s} = 1.1\ f_r\ S_c\ \frac{1}{12}$ from E14-1.7.1.2 $M_{cr_s} = 53.5$ kip-ft/ft

$1.33\ M_u = 79.9$ kip-ft/ft

Is M_r greater than the lesser value of M_{cr} and $1.33*M_u$? check = "OK"

Check the Service Ib crack control requirements in accordance with **LRFD [5.7.3.4]**

$\rho = \frac{A_s}{d_s\ b}$ $\rho = 0.00343$

$n = \frac{E_s}{E_c}$ $n = 8.09$

$k = \sqrt{(\rho\ n)^2 + 2\ \rho\ n} - \rho\ n$ $k = 0.210$

$j = 1 - \frac{k}{3}$ $j = 0.930$

$d_c = \text{cover} + \frac{Bar_D}{2}$ $d_c = 2.5$ in

$f_{ss} = \frac{M_{u3}}{A_s\ j\ d_s}\ 12 \le 0.6\ f_y$ $f_{ss} = 22.7$ ksi $\le 0.6\ f_y$ O.K.

$h = T_b\ 12$

$\beta_s = 1 + \frac{d_c}{0.7\ (h - d_c)}$ $\beta_s = 1.2$

$\gamma_e = 1.0$ for Class 1 exposure

$s_{max} = \frac{700\ \gamma_e}{\beta_s\ f_{ss}} - 2\ d_c$ $s_{max} = 21.7$ in

$s = 10.0$ in

Is the bar spacing less than s_{max}? check = "OK"

E14-1.7.3.3 Transfer of Force at Base of Stem

Specification requires that the transfer of lateral forces from the stem to the footing be in accordance with the shear-transfer provisions of **LRFD [5.8.4]**. That calculation will not be presented. Refer to E13-1.9.3 for a similar computation.

E14-1.7.4 Temperature and Shrinkage Steel

Look at temperature and shrinkage requirements

E14-1.7.4.1 Temperature and Shrinkage Steel for Footing

The footing will not be exposed to daily temperature changes. Thus temperature and shrinkage steel is not required. However, #4 bars at 18" o.c. (max) are placed longitudinally to serve as spacers.

E14-1.7.4.2 Temperature and Shrinkage Steel of Stem

The stem will be exposed to daily temperature changes. In accordance with **LRFD [5.10.8** the stem shall provide temperature and shrinkage steel on each face and in each direction as calculated below:

$s = 18.0$ in (bar spacing)

$Bar_{No} = 4$ (bar size)

$Bar_D = 0.50$ in (temperature and shrinkage bar diameter)

$Bar_A = 0.20$ in^2 (temperature and shrinkage bar area)

$$A_s = \frac{Bar_A}{\frac{s}{12}}$$ (temperature and shrinkage provided)

$A_s = 0.13$ in^2/ft

$b_s = (H - D)\ 12$ least width of stem $b_s = 216.0$ in

$h_s = T_t\ 12$ least thickness of stem $h_s = 12.0$ in

$$A_{ts} = \frac{1.3\ b_s\ h_s}{2\left(b_s + h_s\right) f_y}$$ Area of reinforcement per foot, on each face and in each direction $A_{ts} = 0.12$ in^2/ft

Is $0.11 \le A_s \le 0.60$? check = "OK"

Is $A_s > A_{ts}$? check = "OK"

Check the maximum spacing requirements

$s_1 = \min(3\ h_s, 18)$ $\boxed{s_1 = 18.0}$ in

$s_2 = \begin{cases} 12 & \text{if } h_s > 18 \\ s_1 & \text{otherwise} \end{cases}$ For walls and footings (in) $\boxed{s_2 = 18.0}$ in

$s_{max} = \min(s_1, s_2)$ $\boxed{s_{max} = 18.0}$ in

Is the bar spacing less than s_{max}? $\boxed{\text{check} = \text{"OK"}}$

E14-1.8 Summary of Results

List all summaries.

E14-1.8.1 Summary of External Stability

Based on the defined project parameters the following external stability checks have been satisfied:

External Check	CDR
	Strength
Sliding	1.29
Eccentricity	1.94
Bearing	1.64

Table E14-1.8-1
Summary of External Stability Computations

E14-1.8.2 Summary of Wall Strength Design

The required wall reinforcing from the previous computations are presented in Figure E14-1.9-1.

E14-1.8.3 Drainage Design

Drainage requirements shall be investigated and detailed accordingly. In this example drainage requirements are met by providing granular, free draining backfill material with a pipe underdrain located at the bottom of the wall (Assumed wall is adjacent to sidewalk) as shown in Figure E14-1.9-1.

E14-1.9 Final CIP Concrete Wall Schematic

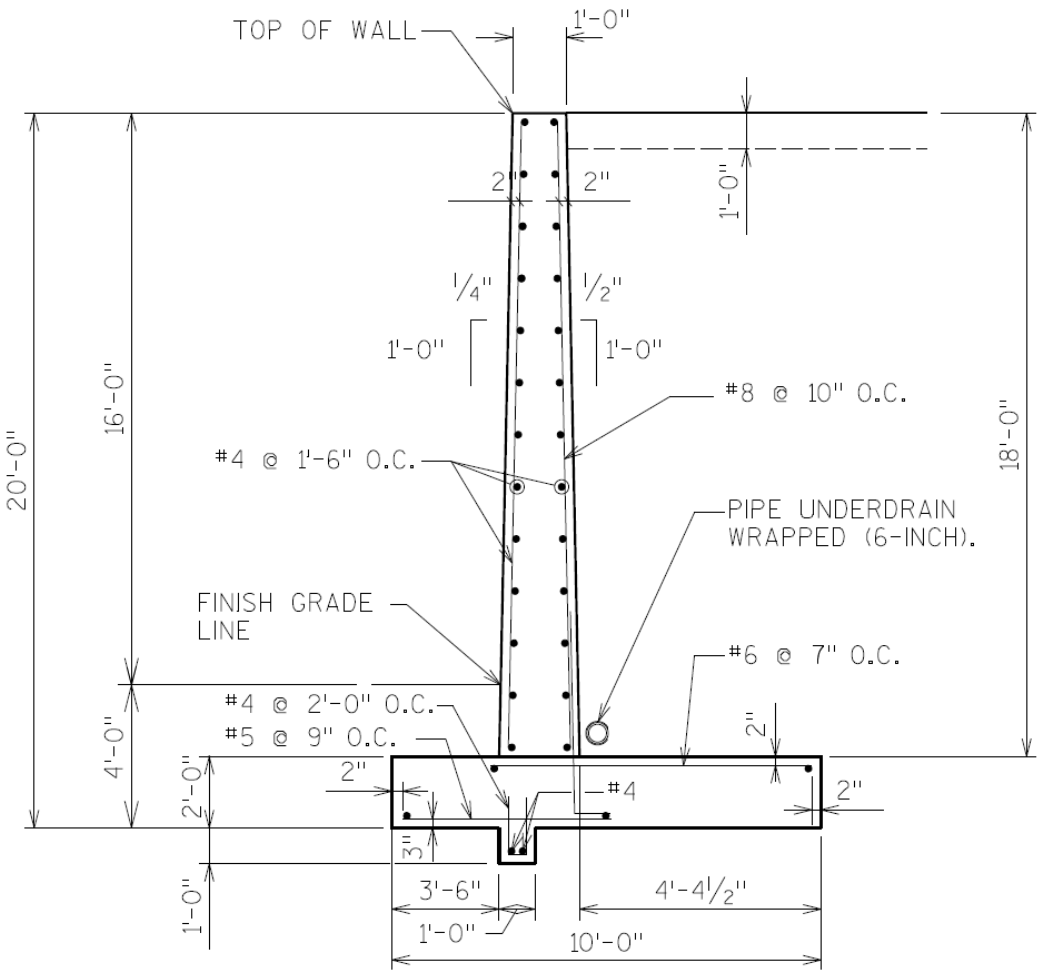

Figure E14-1.9-1
Cast-In-Place Wall Schematic

Table of Contents

E14-2 Precast Panel Steel Reinforced MSE Wall, LRFD 2
E14-2.1 Establish Project Requirements 2
E14-2.2 Design Parameters 3
E14-2.3 Estimate Depth of Embedment and Length of Reinforcement 5
E14-2.4 Permanent and Transient Loads 6
E14-2.4.1 Compute Active Earth Pressure 6
E14-2.4.2 Compute Unfactored Loads 7
E14-2.4.3 Summarize Applicable Load and Resistance Factors 9
E14-2.4.3 Compute Factored Loads and Moments 10
E14-2.5 Evaluate External Stability of MSE Wall 11
E14-2.5.1 Sliding Resistance at Base of MSE Wall 11
E14-2.5.2 Limiting Eccentricity at Base of MSE Wall 12
E14-2.5.3 Bearing Resistance at base of MSE Wall 13
E14-2.6 Evaluate Internal Stability of MSE Wall 14
E14-2.6.1 Establish the Vertical Layout of Soil Reinforcement 15
E14-2.6.2 Compute Horizontal Stress and Maximum Tension, Tmax 16
E14-2.6.3 Establish Nominal and Factored Pullout Resistance of Soil Reinforcement 18
E14-2.6.4 Establish Nominal and Factored Long-term Tensile Resistance of Soil Reinforcement 20
E14-2.6.5 Establish Number of Soil Reinforcing Strips at Z 21
E14-2.7 Summary of Results E14-2.7.1 Summary of External Stability 22
E14-2.7 Summary of Results E14-2.7.1 Summary of External Stability 22
E14-2.7.2 Summary of Internal Stability 22
E14-2.7.3 Element Facings and Drainage Design 23
E14-2.8 Final MSE Wall Schematic 23

E14-2 Precast Panel Steel Reinforced MSE Wall, LRFD

General

This example shows design calculations for MSE wall with precast concrete panel facings conforming to the LRFD Bridge Design Specifications and the WisDOT Bridge Manual. *(Example is current through LRFD Fifth Edition - 2010)*

Sample design calculations for external stability (sliding, eccentricity and bearing) and internal stability (soil reinforcement stress and pullout) will be presented. The overall stability and settlement calculations will not be shown in this example, but are required.

Design steps presented in 14.6.3.3 are used for the wall design.

E14-2.1 Establish Project Requirements

The following MSE wall shall have compacted freely draining soil in the reinforced zone and will be reinforced with metallic (inextensible) strips as shown in Figure E14-2.1-1. External stability is the designer's (WisDOT/Consultant) responsibility and internal stability and structural components are the contractors responsibility.

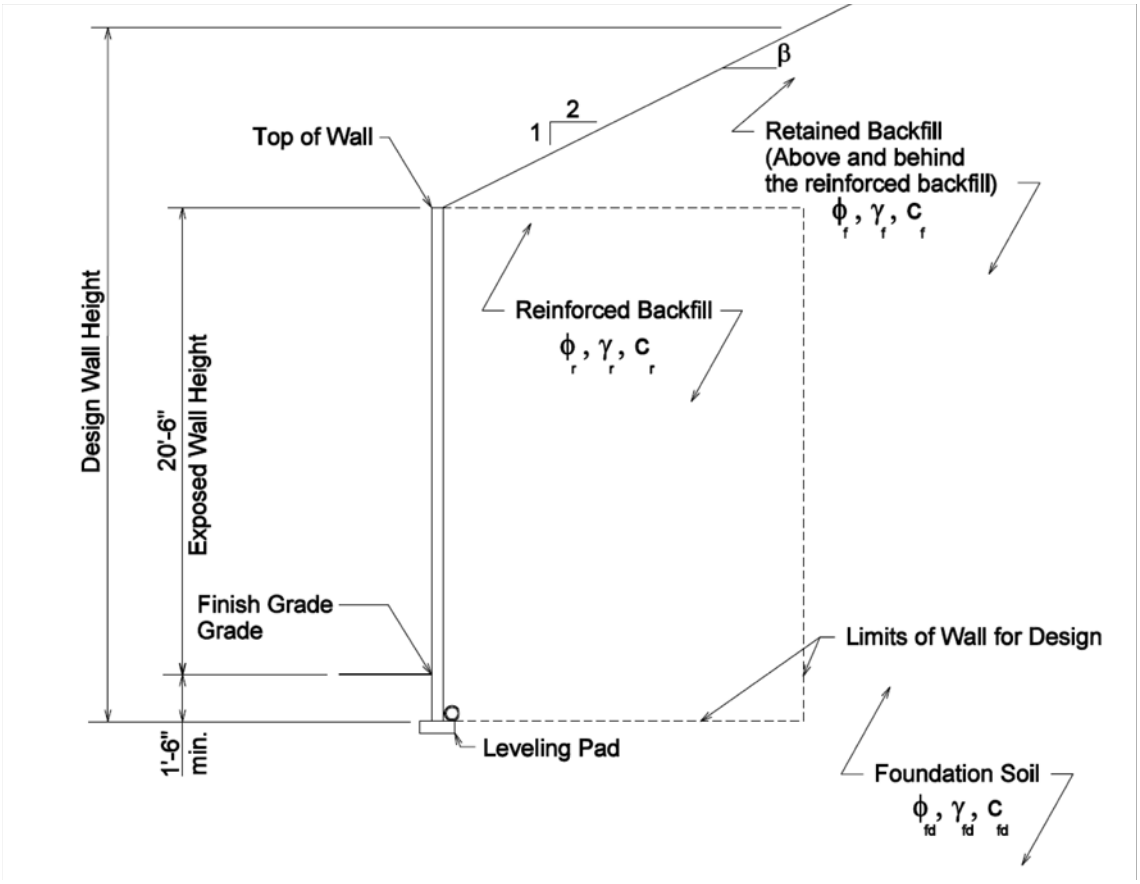

Figure E14-2.1-1
MSE Wall with Sloping Backfill

Wall Geometry

$H_e = 20.5$ Exposed wall height, ft

$H = H_e + 1.5$ Design wall height, ft (assume 1.5 ft wall embedment)

$\theta = 90\ deg$ Angle of back face of wall to horizontal

$\beta = 26.565\ deg$ Inclination of ground slope behind face of wall (2H:1V)

E14-2.2 Design Parameters

Project Parameters

$Design_Life = 75$ Wall design life, years (min) **LRFD [11.5.1]**

Soil Properties (From Geotechnical Site Investigation Report)

Designer to determine if long-term or short-term soil strength parameters govern external stability.

Reinforced Backfill Soil Design Parameters

$\phi_r = 30\ deg$ Angle of internal friction **LRFD [11.10.5.1]**

$\gamma_r = 0.120$ Unit of weight, kcf

$c_r = 0$ Cohesion, psf

Retained Backfill Soil Design Parameters

$\phi_f = 29\ deg$ Angle of internal friction

$\gamma_f = 0.120$ Unit of weight, kcf

$c_f = 0$ Cohesion, psf

Foundation Soil Design Parameters

$\phi_{fd} = 31 deg$ Angle of internal friction

$\gamma_{fd} = 0.125$ Unit of weight, kcf

$c_{fd} = 0$ Cohesion, psf

Factored Bearing Resistance of Foundation Soil

$q_R = 10.0$ Factored resistance at the strength limit state, ksf

Note: The factored bearings resistance, q_R, was assumed to be given in the Site Investigation Report. If not provided q_R shall be determined by calculating the nominal bearing resistance, q_n, per **LRFD [Eq 10.6.3.1.2a-1]** and factored with the bearing resistance factor, ϕ_b, for MSE walls (i.e., $q_R = \phi_b q_n$).

Precast Concrete Panel Facing Parameters

$S_{vt} = 2.5$ Vertical spacing of reinforcement, ft

Note: vertical spacing should not exceed 2.7 ft without full scale test data **LRFD [11.10.6.2.1]**

$w_p = 5.0$ Width of precast concrete panel facing, ft

$h_p = 5.0$ Height of precast concrete panel facing, ft

$t_p = 6.0$ Thickness of precast concrete panel facing, in

Soil Reinforcement Design Parameters

Galvanized steel ribbed strips Reinforcing type

$F_y = 65$ Reinforcing strip yield strength, ksi (Grade 65)

$b_mm = 50$ Reinforcing strip width, mm

$$b = \frac{b_mm}{25.4} \qquad \boxed{b = 1.97} \text{ in}$$

$E_{n_mm} = 4$ Reinforcing strip thickness, mm

$$E_n = \frac{E_{n_mm}}{25.4} \qquad \boxed{E_n = 0.16} \text{ in}$$

$Zinc = 3.4$ Zinc coating, mils (Minimum **LRFD [11.10.6.4.2a]**)

Live Load Surcharge Parameters

$SUR = 0.100$ Live load surcharge for walls without traffic, ksf (14.4.5.4.2)

Resistance Factors

$\phi_s = 1.00$	Sliding of MSE wall at foundation **LRFD [Table 11.5.7-1]**
$\phi_b = 0.65$	Bearing resistance **LRFD [Table 11.5.7-1]**
$\phi_t = 0.75$	Tensile resistance (steel strips) **LRFD [Table 11.5.7-1]**
$\phi_p = 0.90$	Pullout resistance **LRFD [Table 11.5.7-1]**

E14-2.3 Estimate Depth of Embedment and Length of Reinforcement

For this example it is assumed that global stability does not govern the required length of soil reinforcement.

Embedment Depth, d_e

Frost-susceptible material is assumed to be not present or that it has been removed and replaced with nonfrost susceptible material per **LRFD [11.10.2.2]**. There is also no potential for scour. Therefore, the minimum embedment, d_e, shall be the greater of 1.5 ft (14.6.4) or H/20 **LRFD [Table C11.10.2.2-1]**

Note: While AASHTO allows the d_e value of 1.0 ft on level ground, the embedment depth is limited to 1.5 ft by WisDOT policy as stated in Chapter 14.

$$\frac{H}{20} = 1.1 \quad \text{ft}$$

$$d_e = \max\left(\frac{H}{20}, 1.5\right) \qquad \boxed{d_e = 1.50} \text{ ft}$$

Therefore, the initial design wall height assumption was correct.

$$H_e = 20.5 \quad \text{ft}$$

$$H = H_e + 1.5 \qquad \boxed{H = 22.00} \text{ ft}$$

Length of Reinforcement, L

In accordance with **LRFD [11.10.2.1]** the minimum required length of soil reinforcement shall be the greater of 8 feet or 0.7H. Due to the sloping backfill surcharge and live load surcharge a longer reinforcement length of 0.9H will be used in this example. The length of reinforcement will be uniform throughout the entire wall height.

$0.9\,H = 19.8$ ft

$L_{user} = 20.0$ ft

$L = \max(8.0, 0.9\,H, L_{user})$ $\boxed{L = 20.00}$ ft

Height of retained fill at the back of the reinforced soil, h

$h = H + L\tan(\beta)$ $\boxed{h = 32.00}$ ft

E14-2.4 Permanent and Transient Loads

In this example, load types EV (vertical earth pressure), EH (horizontal earth pressure) and LS (live load surcharge) will be used as shown in Figure E14-2.4-1. Due to the relatively thin wall thickness the weight and width of the concrete facing will be ignored. Passive soil resistance will also be ignored.

E14-2.4.1 Compute Active Earth Pressure

Compute the coefficient of active earth pressure (k_a) using Coulomb Theory **LRFD [Eq 3.11.5.3-1]** with the wall backfill material interface friction angle, δ, set equal to β (i.e. $\delta=\beta$) **LRFD [11.10.5.2].** The retained backfill soil will be used (i.e., $k_a=k_{af}$)

$\phi_f = 29$ deg

$\beta = 26.565$ deg

$\theta = 90$ deg

$\delta = \beta$

$$\Gamma = \left(1 + \sqrt{\frac{\sin(\phi_f + \delta)\,\sin(\phi_f - \beta)}{\sin(\theta - \delta)\,\sin(\theta + \beta)}}\right)^2 \qquad \boxed{\Gamma = 1.462}$$

$$k_{af} = \frac{\sin(\theta + \phi_f)^2}{\Gamma\,\sin(\theta)^2\,\sin(\theta - \delta)} \qquad \boxed{k_{af} = 0.585}$$

E14-2.4.2 Compute Unfactored Loads

The forces and moments are computed using Figure E14-2.4-1 by their appropriate LRFD load types **LRFD [Tables 3.4.1-1 and 3.4.1-2]**

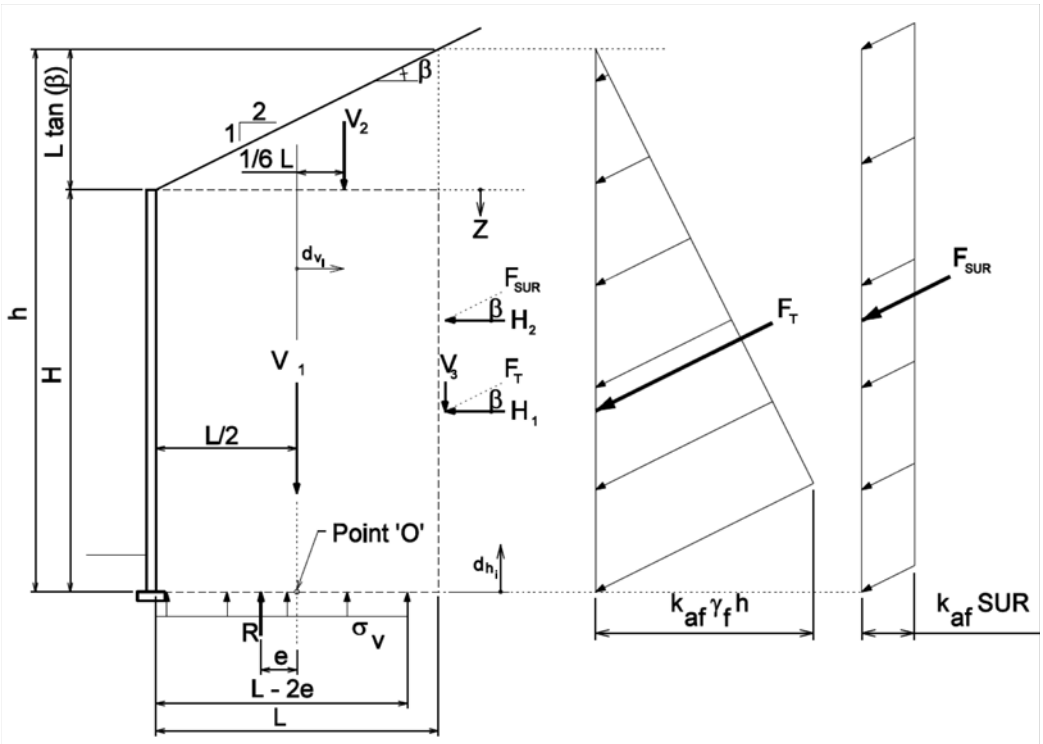

Figure E14-2.4-1
MSE Wall - External Stability

Active Earth Force Resultant, (kip/ft), F_T

$$F_T = \frac{1}{2}\gamma_f h^2 k_{af}$$ Active earth force resultant (EH) $\boxed{F_T = 35.9}$

Live Load Surcharge Resultant, (kip/ft), F_{SUR}

$$F_{SUR} = SUR\ h\ k_{af}$$ Live load surcharge (LS) $\boxed{F_{SUR} = 1.9}$

Vertical Loads, (kip/ft), V_i

$$V_1 = \gamma_r H L$$ Soil backfill - reinforced soil (EV) $\boxed{V_1 = 52.8}$

$$V_2 = \frac{1}{2}\gamma_f L (L \tan(\beta))$$ Soil backfill - backslope (EV) $\boxed{V_2 = 12.0}$

$$V_3 = F_T \sin(\beta)$$ Active earth force resultant (vertical component - EH) $\boxed{V_3 = 16.1}$

Moments produced from vertical loads about Point 'O', (kip-ft/ft) MV_i

Moment Arm		Moment	
$d_{v1} = 0$	$d_{v1} = 0.0$	$MV_1 = V_1\ d_{v1}$	$MV_1 = 0.0$
$d_{v2} = \frac{1}{6}L$	$d_{v2} = 3.3$	$MV_2 = V_2\ d_{v2}$	$MV_2 = 40.0$
$d_{v3} = \frac{L}{2}$	$d_{v3} = 10.0$	$MV_3 = V_3\ d_{v3}$	$MV_3 = 160.7$

Horizontal Loads, (kip/ft), H_i

$H_1 = F_T \cos(\beta)$	Active earth force resultant (horizontal component - EH)	$H_1 = 32.1$
$H_2 = F_{SUR} \cos(\beta)$	Live load surcharge resultant (horizontal component - LS)	$H_2 = 1.7$

Moments produced from horizontal loads about Point 'O', (kip-ft/ft), MH_i

Moment Arm		Moment	
$d_{h1} = \frac{h}{3}$	$d_{h1} = 10.7$	$MH_1 = H_1\ d_{h1}$	$MH_1 = 342.8$
$d_{h2} = \frac{h}{2}$	$d_{h2} = 16.0$	$MH_2 = H_2\ d_{h2}$	$MH_2 = 26.8$

Summary of Unfactored Forces & Moments:

Load			Moment Arm		Moment		LRFD Load Type
Item	Description	Value (kip/ft)	Item	Value (ft)	Item	Value (kip-ft/ft)	
V_1	Soil backfill	52.80	d_{v1}	0.0	MV_1	0.0	EV
V_2	Soil backfill	12.00	d_{v2}	3.3	MV_2	40.0	EV
V_3	Active earth pressure	16.10	d_{v3}	10.0	MV_3	160.7	EH

Table E14-2.4-1
Unfactored Vertical Forces & Moments

Load			Moment Arm		Moment		LRFD Load Type
Item	Description	Value (kip/ft)	Item	Value (ft)	Item	Value (kip-ft/ft)	
H_1	Active earth pressure	32.1	d_{h1}	10.7	MH_1	342.8	EH
H_2	Live load surcharge	1.70	d_{h2}	16.0	MH_2	26.8	LS

Table E14-2.4-2
Unfactored Horizontal Forces & Moments

E14-2.4.3 Summarize Applicable Load and Resistance Factors

Maximum and minimum load factors shall be used to determine the extreme load effects. WisDOT's policy is to set all load modifiers to one ($n = 1.0$). Factored loads and moments for each limit state are calculated by applying the appropriate load factors **LRFD [Tables 3.4.1-1 and 3.4.1-2]**. The following load combinations will be checked in this example:

Load Combination Limit State	EV	LS	EH
Strength Ia (minimum)	$\gamma_{EVmin} = 1.00$	$\gamma_{LSmin} = 1.75$	$\gamma_{EHmin} = 0.90$
Strength Ib (maximum)	$\gamma_{EVmax} = 1.35$	$\gamma_{LSmax} = 1.75$	$\gamma_{EHmax} = 1.50$
Service I (max/min)	$\gamma_{EV} = 1.00$	$\gamma_{LS} = 1.00$	$\gamma_{EH} = 1.00$

Load Combination	γ_{EV}	γ_{LS_V}	γ_{LS_H}	γ_{EH}	Application
Strength Ia	1.00	-	1.75	1.50	Sliding, Eccentricity
Strength Ib	1.35	1.75	1.75	1.50	Bearing, T_{max}
Service I	1.00	1.00	1.00	1.00	Pullout (σ_v)

Table E14-2.4-3
Unfactored Horizontal Forces & Moments

Load Combination Assumptions:

- Live load surcharge stabilizing loads (if applicable) are ignored for overturning and sliding analyses. Live load surcharge is used to compute maximum bearing pressure, wall strength and overall (global) stability.
- Minimum horizontal earth pressure ,$\gamma_{EH(min)} = 0.9$, will not control in this example based on B/H and lateral load inclination, but should be checked.
- Component load factors shall remain consistent throughout calculations. For example, the active earth force resultant (F_T) can be broken into component forces of either $V_3\gamma_{EH(max)}$ and $H_1\gamma_{EH(max)}$ or $V_3\gamma_{EH(min)}$ and $H_1\gamma_{EH(min)}$, not $V_3\gamma_{EH(min)}$ and $H_1\gamma_{EH(max)}$.
- T_{max1} (Pullout) is calculated without live load and T_{max2} (Rupture) is calculated with live load.

The loads discussed and tabulated previously can now be factored by the appropriate load factors and combined to determine the governing limit states for each design check.

E14-2.4.3 Compute Factored Loads and Moments

Unfactored loads by load type (kip/ft)

$V_{EV} = V_1 + V_2$ $\boxed{V_{EV} = 64.8}$

$V_{EH} = V_3$ $\boxed{V_{EH} = 16.1}$

$H_{EH} = H_1$ $\boxed{H_{EH} = 32.1}$

$H_{LS} = H_2$ $\boxed{H_{LS} = 1.7}$

Unfactored moments by load type (kip-ft/ft)

$M_{EV} = MV_1 + MV_2$ $\boxed{M_{EV} = 40.0}$

$M_{EH1} = MV_3$ $\boxed{M_{EH1} = 160.7}$

$M_{EH2} = MH_1$ $\boxed{M_{EH2} = 342.8}$

$M_{LS2} = MH_2$ $\boxed{M_{LS2} = 26.8}$

Factored vertical loads by limit state (kip/ft)

$V_Ia = n\left(1.00V_{EV} + 1.50\ V_{EH}\right)$ $\boxed{V_Ia = 88.9}$

$V_Ib = n\left(1.35V_{EV} + 1.50\ V_{EH}\right)$ $\boxed{V_Ib = 111.6}$

$V_Ser = n\left(1.00V_{EV} + 1.00\ V_{EH}\right)$ $\boxed{V_Ser = 80.9}$

Factored horizontal loads by limit state (kip/ft)

$H_Ia = n\left(1.75H_{LS} + 1.50H_{EH}\right)$ $\boxed{H_Ia = 51.1}$

$H_Ib = n\left(1.75H_{LS} + 1.50H_{EH}\right)$ $\boxed{H_Ib = 51.1}$

$H_Ser = n\left(1.00H_{LS} + 1.00H_{EH}\right)$ $\boxed{H_Ser = 33.8}$

Factored moments produced by vertical Loads by limit state (kip-ft/ft)

$MV_Ia = n\left(1.00M_{EV} + 1.50\ M_{EH1}\right)$ $\boxed{MV_Ia = 281.0}$

$MV_Ib = n\left(1.35M_{EV} + 1.50\ M_{EH1}\right)$ $\boxed{MV_Ib = 295.0}$

$MV_Ser = n\left(1.00M_{EV} + 1.00\ M_{EH1}\right)$ $\boxed{MV_Ser = 200.7}$

Factored moments produced by horizontal loads by limit state (kip-ft/ft)

$MH_Ia = n\left(1.75M_{LS2} + 1.50\ M_{EH2}\right)$ $\boxed{MH_Ia = 561.1}$

$MH_Ib = n\left(1.75M_{LS2} + 1.50\ M_{EH2}\right)$ $\boxed{MH_Ib = 561.1}$

$MH_Ser = n\left(1.00M_{LS2} + 1.00\ M_{EH2}\right)$ $\boxed{MH_Ser = 369.6}$

Summary of Factored Forces & Moments:

Load Combination	Vert. Loads V (kips/ft)	Moments MV (kip-kip/ft)	Horiz. Loads H (kips/ft)	Moments MH (kip-kip/ft)
Strength Ia	88.9	281.0	51.1	561.1
Strength Ib	111.6	295.0	51.1	561.1
Service I	80.9	200.7	33.8	369.6

Table E14-2.4-4
Summary of Factored Loads & Moments

E14-2.5 Evaluate External Stability of MSE Wall

Three potential external failure mechanisms will be considered in this example (sliding at the base, limiting eccentricity and bearing resistance). Global (overall) stability requirements are assumed to have been satisfied in prior calculations. Design calculations will be carried out for the governing limit states only.

E14-2.5.1 Sliding Resistance at Base of MSE Wall

The following calculations are based on **Strength Ia**:

Factored Sliding Force

$R_u = H_Ia$ $\boxed{R_u = 51.14}$ kip/ft

Sliding Resistance

To compute the coefficient of sliding friction for discontinuous reinforcement use the lesser friction angle of the reinforced back fill, ϕ_r , or foundation soil, ϕ_{fd}, **LRFD [11.10.5.3]**.

$\phi_\mu = \min(\phi_r, \phi_{fd})$ $\boxed{\phi_\mu = 30 \text{ deg}}$

$\mu = \tan(\phi_\mu)$ $\boxed{\mu = 0.577}$

$V_Ia = 88.9$ Factored vertical load, kip/ft

$V_{Nm} = \mu\ V_Ia$ $\boxed{V_{Nm} = 51.3}$ kip/ft

$\phi_s = 1.0$

$R_R = \phi_s\ V_{Nm}$ $\boxed{R_R = 51.33}$ kip/ft

<u>Capacity:Demand Ratio (CDR)</u>

$CDR_{Sliding} = \dfrac{R_R}{R_u}$ $\boxed{CDR_{Sliding} = 1.00}$

Is the $CDR \geq 1.0$? $\boxed{\text{check} = \text{"OK"}}$

E14-2.5.2 Limiting Eccentricity at Base of MSE Wall

The location of the resultant of the reaction forces is limited to the middle two-thirds of the base width for a soil foundation (i.e., e_{max} = L/3) **LRFD [11.6.3.3]**. The following calculations are based on **Strength Ia**:

Maximum eccentricity

$$e_{max} = \frac{L}{3}$$

$e_{max} = 6.67$ ft

Compute wall eccentricity (distance from Point 'O' in Figure E14-2.4-1)

$\Sigma M_R = MV_Ia$ Summation of resisting moments for Strength Ia

$\Sigma M_O = MH_Ia$ Summation of overturning moments for Strength Ia

$\Sigma V = V_Ia$ Summation of vertical loads for Strength Ia

$\Sigma M_R = 281.0$ kip-ft/ft

$\Sigma M_O = 561.1$ kip-ft/ft

$\Sigma V = 88.9$ kip/ft

$$e = \frac{\Sigma M_O - \Sigma M_R}{\Sigma V}$$

$e = 3.15$ ft

<u>Capacity:Demand Ratio (CDR)</u>

$$CDR_{Eccentricity} = \frac{e_{max}}{e}$$

$CDR_{Eccentricity} = 2.12$

Is the $CDR \geq 1.0$?

check = "OK"

E14-2.5.3 Bearing Resistance at base of MSE Wall

The following calculations are based on **Strength Ib**:

Compute wall eccentricity (distance from Point 'O' in Figure E14-2.4-1)

$\Sigma M_R = MV_Ib$ Summation of resisting moments for Strength Ib

$\Sigma M_O = MH_Ib$ Summation of overturning moments for Strength Ib

$\Sigma V = V_Ib$ Summation of vertical loads for Strength Ib

$\Sigma M_R = 295.0$ kip-ft/ft

$\Sigma M_O = 561.1$ kip-ft/ft

$\Sigma V = 111.6$ kip/ft

$$e = \frac{\Sigma M_O - \Sigma M_R}{\Sigma V}$$

$e = 2.38$ ft

Compute the ultimate bearing stress

σ_V = Ultimate bearing stress
L = Bearing length
e = Eccentricity (resultant produced by extreme bearing resistance loading)

Note: For the bearing resistance calculations the effective bearing width, B' = L-2e, is used instead of the actual width. Also, when the eccentricity, e, is negative: B'=L. The vertical stress is assumed to be uniformly distributed over the effective bearing width, B', since the wall is supported by a soil foundation **LRFD [11.6.3.2]**.

$$\sigma_V = \frac{\Sigma V}{L - 2\,e}$$

$\sigma_V = 7.33$ ksf/ft

Factored bearing resistance

$q_R = 10.00$ ksf/ft

<u>Capacity:Demand Ratio (CDR)</u>

$$CDR_{Bearing} = \frac{q_R}{\sigma_V}$$

$CDR_{Bearing} = 1.37$

Is the $CDR \geq 1.0$?

check = "OK"

E14-2.6 Evaluate Internal Stability of MSE Wall

Note: MSE walls are a proprietary wall system and the internal stability computations shall be performed by the wall supplier.

Internal stability shall be checked for 1) pullout and 2) rupture in accordance with **LRFD [11.10.6]**. The factored tensile load, T_{max}, is calculated twice for internal stability checks for vertical stress (σ_V) calculations. For pullout T_{max1} is determined by excluding live load surcharge. For rupture T_{max2} is determined by including live load surcharge. In this example, the maximum reinforcement loads are calculated using the Simplified Method.

The location of the potential failure surface for a MSE wall with metallic strip or grid reinforcements (inextensible) is shown in Figure E14-2.6-1.

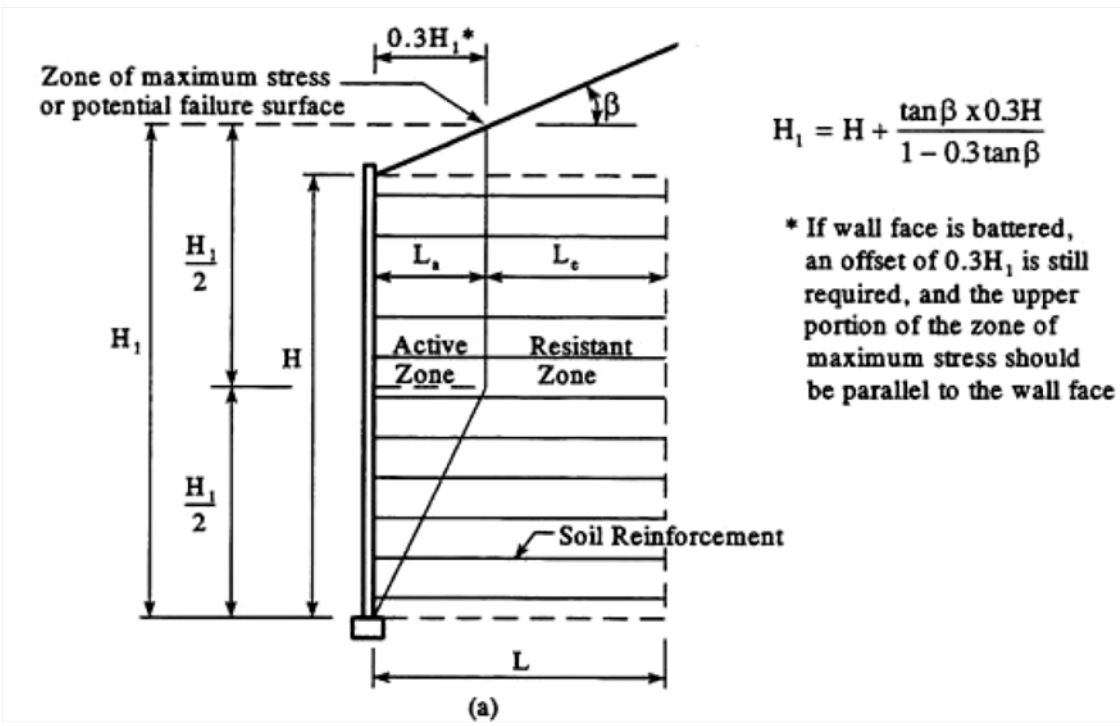

Figure E14-2.6-1
MSE Wall - Internal Stability (Inextensible Reinforcement)
FHWA [Figure 4-9]

E14-2.6.1 Establish the Vertical Layout of Soil Reinforcement

Soil reinforcement layout is shown in Table E14-2.6-1. The location of the reinforcement levels corresponds to the vertical depth, Z, into the reinforced soil. The vertical layout was determined by the industry practice of 2.5 ft vertical spacing for steel ribbed strip reinforcement. The top level vertical spacing was adjusted to fit the height of the wall. Computations for determining the maximum tension, T_{max}, at Z = 8.25 ft are as follows:

$Layer = 4$ Layer of reinforcement (from top)

$Z = 8.25$ Depth below top of wall, ft

$S_{vt} = 2.5$ Vertical spacing of reinforcement, ft

$w_p = 5.00$ Width of precast concrete panel facing, ft

Calculate the upper and lower tributary depths based on the reinforcement vertical spacing

$$Z_{neg} = Z - \frac{S_{vt}}{2} \qquad \boxed{Z_{neg} = 7.0} \text{ ft}$$

$$Z_{pos} = Z + \frac{S_{vt}}{2} \qquad \boxed{Z_{pos} = 9.5} \text{ ft}$$

Layer	Z (ft)	Z^- (ft)	Z^+ (ft)	S_{vt} (ft)
1	0.75	0	0.75+0.5(3.25-0.75)= 2.0	2.00
2	3.25	3.25-0.5(3.25-0.75)= 2.0	3.25+0.5(5.75-3.25)= 4.5	2.50
3	5.75	5.75-0.5(5.75-3.25)= 4.5	5.75+0.5(8.25-5.75)= 7.0	2.50
4	**8.25**	**8.25-0.5(8.25-5.75)= 7.0**	**8.25+0.5(10.75-8.25)= 9.5**	**2.50**
5	10.75	10.75-0.5(10.75-8.25)= 9.5	10.75+0.5(13.25-10.75)= 12.0	2.50
6	13.25	13.25-0.5(13.25-10.75)= 12.0	13.25+0.5(15.75-13.25)= 14.5	2.50
7	15.75	15.75-0.5(15.75-13.25)= 14.5	15.75+0.5(18.25-15.75)= 17.0	2.50
8	18.25	18.25-0.5(18.25-15.75)= 17.0	18.25+0.5(20.75-18.25)= 19.5	2.50
9	20.75	20.75-0.5(20.75-18.25)= 19.5	22	2.50

Table E14-2.6-1
Summary of Computations for Reinforcement Spacing, S_{vt}

E14-2.6.2 Compute Horizontal Stress and Maximum Tension, T_{max}

Factored horizontal stress

$$\sigma_H = \gamma_P (\sigma_v k_r + \Delta\sigma_H)$$ **LRFD [Equation 11.10.6.2.1-1]**

γ_p = Load factor for vertical earth pressure (γ_{EVmax})
k_r = Horizontal pressure coefficient
σ_v = Pressure due to gravity and surcharge for pullout, T_{max1} ($\gamma_r Z_{trib}+\sigma_2$)
σ_v = Pressure due to gravity and surcharge for pullout resistance ($\gamma_r Z_{p\text{-}PO}$)
σ_v = Pressure due to gravity and surcharge for rupture, T_{max2} ($\gamma_r Z_{trib} + \sigma_2 + q$)
$\Delta\sigma_H$ = Horizontal pressure due to concentrated horizontal surcharge load
Z = Reinforcement depth for max stress Figure E14-2.6-2
Z_p = Depth of soil at reinforcement layer potential failure plane
$Z_{p\text{-}ave}$ = Average depth of soil at reinforcement layer in the effective zone
σ_2 = Equivalent uniform stress from backslope $(0.5(0.7)L\tan\beta)\gamma_f$
q = Surcharge load (q = SUR), ksf

To compute the lateral earth pressure coefficient, k_r , a k_a multiplier is used to determine k_r for each of the respective vertical tributary spacing depths (Z_{pos}, Z_{neg}). The k_a multiplier is determined using Figure E14-2.6-2. To calculate k_a it is assumed that $\delta=\beta$ and $\beta = 0$; thus,

$k_a=\tan^2(45-\phi_f/2)$ **LRFD [Equation C11.10.6.2.1-1]**

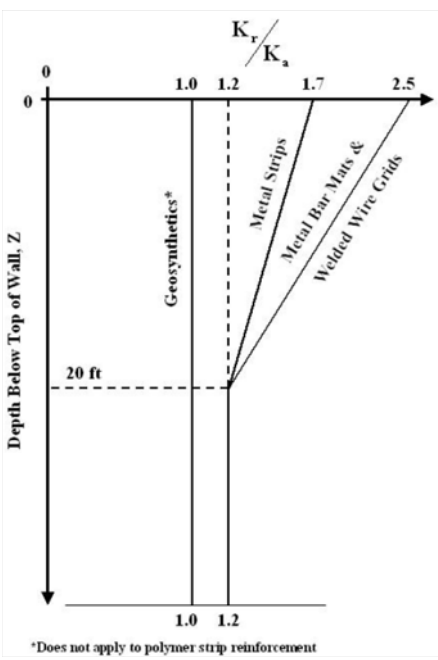

Figure E14-2.6-2
k_r/k_a Variation with MSE Wall Depth
FHWA [Figure 4-10]

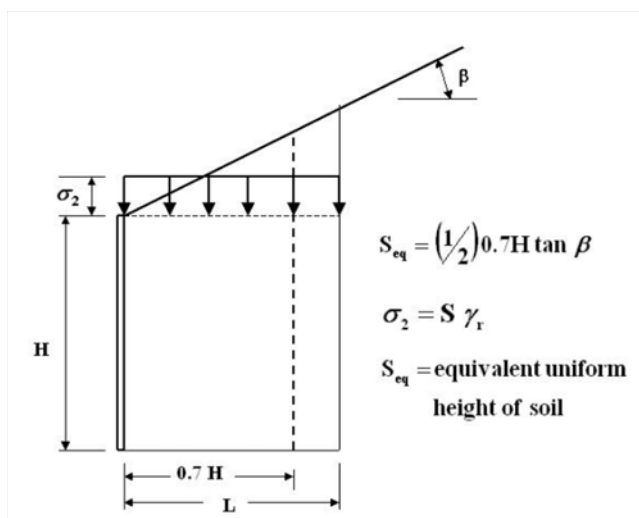

Figure E14-2.6-3
Calculation of Vertical Stress
FHWA [Figure 4-11]

Calculate the coefficient of active earth pressure, k_a

$\phi_f = 29\ \text{deg}$

$$k_a = \tan\left(45\ \text{deg} - \frac{\phi_f}{2}\right)^2$$

$\boxed{k_a = 0.347}$

Compute the internal lateral earth pressure coefficient limits based on applying a k_a multiplier as shown in Figure E14-2.6-2. For inextensible steel ribbed strips the k_a multiplier decreases linearly from the top of the reinforced soil zone to a depth of 20 ft. Thus, the k_a multiplier will vary from 1.7 at Z=0 ft to 1.2 at Z=20 ft. To compute k_r apply these values to the coefficient of active earth pressure.

$k_{r_0ft} = 1.7\ k_a$ $\boxed{k_{r_0ft} = 0.590}$

$k_{r_20ft} = 1.2\ k_a$ $\boxed{k_{r_20ft} = 0.416}$

Compute the internal lateral earth pressure coefficients, k_r, for each of the respective tributary depths. Since both depths, Z_{neg} and Z_{pos}, are less than 20 ft k_r will be interpolated at their respective depths

$$k_{r_neg} = k_{r_20ft} + \frac{(20 - Z_{neg})\,(k_{r_0ft} - k_{r_20ft})}{20}$$ $\boxed{k_{r_neg} = 0.529}$

$$k_{r_pos} = k_{r_20ft} + \frac{(20 - Z_{pos})\,(k_{r_0ft} - k_{r_20ft})}{20}$$ $\boxed{k_{r_pos} = 0.507}$

Compute effective (resisting) length, L_e

$Z = 8.25$ ft Refer to Figure E14-2.6-1. ($\Delta H = H_1 - H$)

$H = 22.0$ ft

$L = 20$ ft

$$\Delta H = \frac{\tan(\beta)\ (0.3\ H)}{1 - 0.3\tan(\beta)}$$ $\boxed{\Delta H = 3.88}$ ft

$$H_1 = H + \Delta H$$ $\boxed{H_1 = 25.9}$ ft

$$L_a = \begin{cases} 0.3\ H_1 & \text{if } Z \le \dfrac{H_1}{2} - \Delta H \\ \dfrac{H - Z}{\frac{H_1}{2}}\left(0.3\ H_1\right) & \text{otherwise} \end{cases}$$ $\boxed{L_a = 7.76}$ ft

$$L_e = \max(L - L_a, 3)$$ $\boxed{L_e = 12.24}$ ft

Note: L_e shall be greater than or equal to 3 feet **LRFD [11.10.6.3.2]**

E14-2.6.3 Establish Nominal and Factored Pullout Resistance of Soil Reinforcement

Compute the factored horizontal stress, σ_H, at Z by averaging the upper and lower tributary values (Z_{neg} and Z_{pos}). Since there is no horizontal stresses from concentrated dead loads values $\Delta\sigma_H$ is set to zero.

$$\sigma_H = \gamma_{EVmax}\,(\gamma_r Z_{trib} + \sigma_2) k_r$$

Surcharge loads

$$\sigma_2 = \frac{1}{2}\,0.7\,H\,\tan(\beta)\,\gamma_f$$ $\sigma_2 = 0.46$ ksf/ft

Horizontal stress at Z_{neg} and Z_{pos}

$$\sigma_{H_neg} = \gamma_{EVmax}\left(\gamma_r Z_{neg} + \sigma_2\right) k_{r_neg}$$ $\sigma_{H_neg} = 0.93$ ksf/ft

$$\sigma_{H_pos} = \gamma_{EVmax}\left(\gamma_r Z_{pos} + \sigma_2\right) k_{r_pos}$$ $\sigma_{H_pos} = 1.10$ ksf/ft

Horizontal stress at Z

$$\sigma_H = 0.5\left(\sigma_{H_pos} + \sigma_{H_neg}\right)$$ $\sigma_H = 1.01$ ksf/ft

Compute the maximum tension, T_{max1} , at Z

$$A_{trib} = S_{vt}\,w_p$$ $A_{trib} = 12.50$ ft^2

$$T_{max1} = \sigma_H\,A_{trib}$$ $T_{max1} = 12.67$ kip/strip

Compute effective vertical stress for pullout resistance, σ_v

$$Z_{p_PO} = Z + 0.5\,\tan(\beta)\left(L_a + L\right)$$ $Z_{p_PO} = 15.2$ ft

$\gamma_{EV} = 1.00$ Unfactored vertical stress for pullout resistance **LRFD [11.10.6.3.2]**

$$\sigma_v = \gamma_{EV}\,\gamma_r\,Z_{p_PO}$$ $\sigma_v = 1.82$ ksf

Compute pullout resistance factor, F*

The coefficient of uniformity, C_u, shall be computed based on backfill gradations D_{60}/D_{10}. If the backfill material is unknown at the time of design a conservative assumption of C_u=4 should be assumed **LRFD [11.10.6.3.2]**.

The pullout resistance factor, F*, for inextensible steel ribbed strips decreases linearly from the top of the intersection of the failure plane with the top of the reinforced soil zone. Thus, F* will vary from 1.2+log C_u (<= 2.0) at Z=0 ft to tan(ϕ_r) at Z=20 ft. Since no product-specific pullout test data is provided at the time of design the default value for F* will be used as provided by **LRFD [Figure 11.10.6.3.2-1]**.

$C_u = 4$ Coefficient of uniformity (C_u=4 default value) **LRFD [11.10.6.3.2]**

$F'_{0ft} = \min(2.00, 1.2 + \log(C_u))$ $\boxed{F'_{0ft} = 1.80}$

$F'_{20ft} = \tan(\phi_r)$ $\boxed{F'_{20ft} = 0.58}$

$$F' = \begin{cases} F'_{20ft} + \dfrac{20.0 - Z}{20}\left(F'_{0ft} - F'_{20ft}\right) & \text{if } Z \le 20.0 \\ \tan(\phi_r) & \text{otherwise} \end{cases}$$

$\boxed{F' = 1.30}$

Compute nominal pullout resistance, P_r

$\alpha = 1.0$ Scale effect correction factor (steel reinforcement $\alpha = 1.0$ default value) **LRFD [Table 11.10.6.3.2-1]**

$C = 2$ Overall reinforcement surface area geometry factor (strip reinforcement C = 2.0) **LRFD [11.10.6.3.2]**

$R_c = 1$ Reinforcement coverage ratio (continuous reinforcement R_c = 1.0) **LRFD [11.10.6.4]**

Note: Using strips are considered discontinuous, however the nominal pullout resistance is based on the actual strip width, rather than a unit width, the reinforcement coverage ratio is 1.

$P_r = F' \alpha \sigma_v C R_c L_e b \frac{1}{12}$ $\boxed{P_r = 9.49}$ kip/strip

Compute factored pullout resistance, P_{rr}

$\phi_p = 0.9$

$P_{rr} = \phi_p P_r$ $\boxed{P_{rr} = 8.54}$ kip/strip

Determine number of soil reinforcing strips based on pullout resistance, N_p

$N_p = \frac{T_{max1}}{P_{rr}}$ $\boxed{N_p = 1.48}$ strips

E14-2.6.4 Establish Nominal and Factored Long-term Tensile Resistance of Soil Reinforcement

Compute the factored horizontal stress, σ_H

$$\sigma_H = \gamma_{EVmax}(\gamma_r Z + \sigma_2 + q)k_r$$

Surcharge loads

$\sigma_2 = 0.46$ ksf/ft

$q = 0.10$ ksf/ft

Horizontal stress at Z_{neg} and Z_{pos}

$\sigma_{H_neg} = \gamma_{EVmax}\left(\gamma_r Z_{neg} + \sigma_2 + q\right) k_{r_neg}$ $\sigma_{H_neg} = 1.00$ ksf/ft

$\sigma_{H_pos} = \gamma_{EVmax}\left(\gamma_r Z_{pos} + \sigma_2 + q\right) k_{r_pos}$ $\sigma_{H_pos} = 1.17$ ksf/ft

Horizontal stress at Z

$\sigma_H = 0.5\left(\sigma_{H_pos} + \sigma_{H_neg}\right)$ $\sigma_H = 1.08$ ksf/ft

Compute the maximum tension, T_{max}, at Z

$A_{trib} = S_{vt}\, w_p$ $A_{trib} = 12.50$ ft^2

$T_{max2} = \sigma_H A_{trib}$ $T_{max2} = 13.55$ kip/strip

E_c = thickness of metal reinforcement at end of service life (mil)
E_n = nominal thickness of steel reinforcement at construction (mil)
E_s = sacrificial thickness of metal lost by corrosion during service life of structure (mil)
b = width of metal reinforcement

$F_y = 65$	Reinforcing strip yield strength, ksi
$\phi_t = 0.75$	Tensile resistance (steel strip)
$E_n = 0.16$	Reinforcing strip thickness, in
$b = 1.97$	Reinforcing strip width, in
$Zinc = 3.4$	Galvanized coating, mils

Compute the design cross-sectional area of the reinforcement after sacrificial thicknesses have been accounted for during the wall design life per **LRFD [11.10.6.4.2a]**. The zinc coating life shall be calculated based on 0.58 mil/yr loss for the first 2 years and 0.16 mil/yr thereafter. After the depletion of the zinc coating, the steel design life is calculated and used to determine the sacrificial steel thickness after the steel design life. The sacrificial thickness of steel is based on 0.47 mil/yr/side loss.

Design_Life = Coating_Life + Steel_Design_Life = 75 years

$$\text{Coating_Life} = 2 + \frac{\text{Zinc} - 2\ 0.58}{0.16}$$ $\boxed{\text{Coating_Life} = 16.0}$ years

$$\text{Steel_Design_Life} = \text{Design_Life} - \text{Coating_Life}$$ $\boxed{\text{Steel_Design_Life} = 59}$ years

$$E_s = \left(\frac{0.47}{1000}\right) \text{Steel_Design_Life}\ (2)$$ $\boxed{E_s = 0.055}$ in

$$E_c = E_n - E_s$$ $\boxed{E_c = 0.102}$ in

$$\text{Design_Strip_Area} = E_c\ b$$ $\boxed{\text{Design_Strip_Area} = 0.201}$ in^2

Compute the Factored Tensile Resistance, T_r

$$T_n = F_y\ \text{Design_Strip_Area}$$ $\boxed{T_n = 13.05}$ kip/strip

$$T_r = \phi_t\ T_n$$ $\boxed{T_r = 9.79}$ kip/strip

Determine the number of soil reinforcing strips based on tensile resistance, N_t

$$N_t = \frac{T_{max2}}{T_r}$$ $\boxed{N_t = 1.38}$ strips

E14-2.6.5 Establish Number of Soil Reinforcing Strips at Z

$N_p = 1.48$ Based on pullout resistance, strips

$N_t = 1.38$ Based on tensile resistance, strips

Required number of strip reinforcements for each panel width (round up), N_g

$$N_g = \text{ceil}\left(\max\left(N_t, N_p\right)\right)$$ $\boxed{N_g = 2}$ strips

Calculate the horizontal spacing of reinforcement, S_h, at Z by dividing the panel width by the required number of strip reinforcements N_g.

$$S_h = \frac{w_p}{N_g}$$ $\boxed{S_h = 2.50}$ ft

Note: The typical horizontal reinforcement spacing, S_h, will be provided at 2.5 ft. This will also be the maximum allowed spacing while satisfying the maximum spacing requirement of 2.7 ft. If the wall requires additional reinforcement the vertical spacing will be maintained and adjustments will be made to the horizontal spacing accordingly.

E14-2.7 Summary of Results

E14-2.7.1 Summary of External Stability

Based on the defined project parameters, embedment depth and length of reinforcement the following external stability checks have been satisfied:

External Check	CDR
Sliding	1.00
Eccentricity	2.12
Bearing	1.37

Table E14-2.7-1
Summary of External Stability Computations

E14-2.7.2 Summary of Internal Stability

Computations for the required number of strip reinforcements at each level is presented in **Table E14-2.7-2**.

		Pullout			Rupture						
Layer	Z	σ_H	T_{max1}	P_{rr}	σ_H	T_{max2}	T_r	N_p	N_t	N_g	S_h
1	0.75	0.46	4.55	5.86	0.53	5.34	9.79	0.78	0.54	2	2.50
2	3.25	0.64	8.05	7.08	0.72	9.00	9.79	1.14	0.92	2	2.50
3	5.75	0.84	10.47	7.98	0.91	11.38	9.79	1.31	1.16	2	2.50
4	**8.25**	**1.01**	**12.67**	**8.54**	**1.08**	**13.55**	**9.79**	**1.48**	**1.38**	**2**	**2.50**
5	10.75	1.17	14.65	9.37	1.24	15.49	9.79	1.56	1.58	2	2.50
6	13.25	1.31	16.42	10.13	1.38	17.22	9.79	1.62	1.76	2	2.50
7	15.75	1.44	17.96	10.46	1.50	18.73	9.79	1.72	1.91	2	2.50
8	18.25	1.54	19.29	10.25	1.60	20.01	9.79	1.88	2.04	3	1.67
9	20.75	1.67	20.84	10.22	1.72	21.55	9.79	2.04	2.20	3	1.67

Table E14-2.7-2
Summary of Internal Stability Computation for Strength I Load Combinations

E14-2.7.3 Element Facings and Drainage Design

The design of element facings will not be examined in this example, but shall be considered in the design. This is to be performed by the wall supplier. This includes, but is not limited to, the structural integrity of the concrete face panels, connections, joint widths, differential settlements and the design of bearing pads used to prevent or minimize point loadings or stress concentrations and to accommodate for small vertical deformations of the panels.

Drainage requirements shall be investigated and detailed accordingly. In this example drainage requirements are meet by including a wrapped pipe underdrain behind the retaining wall as shown in Figure E14-2.8-1.

E14-2.8 Final MSE Wall Schematic

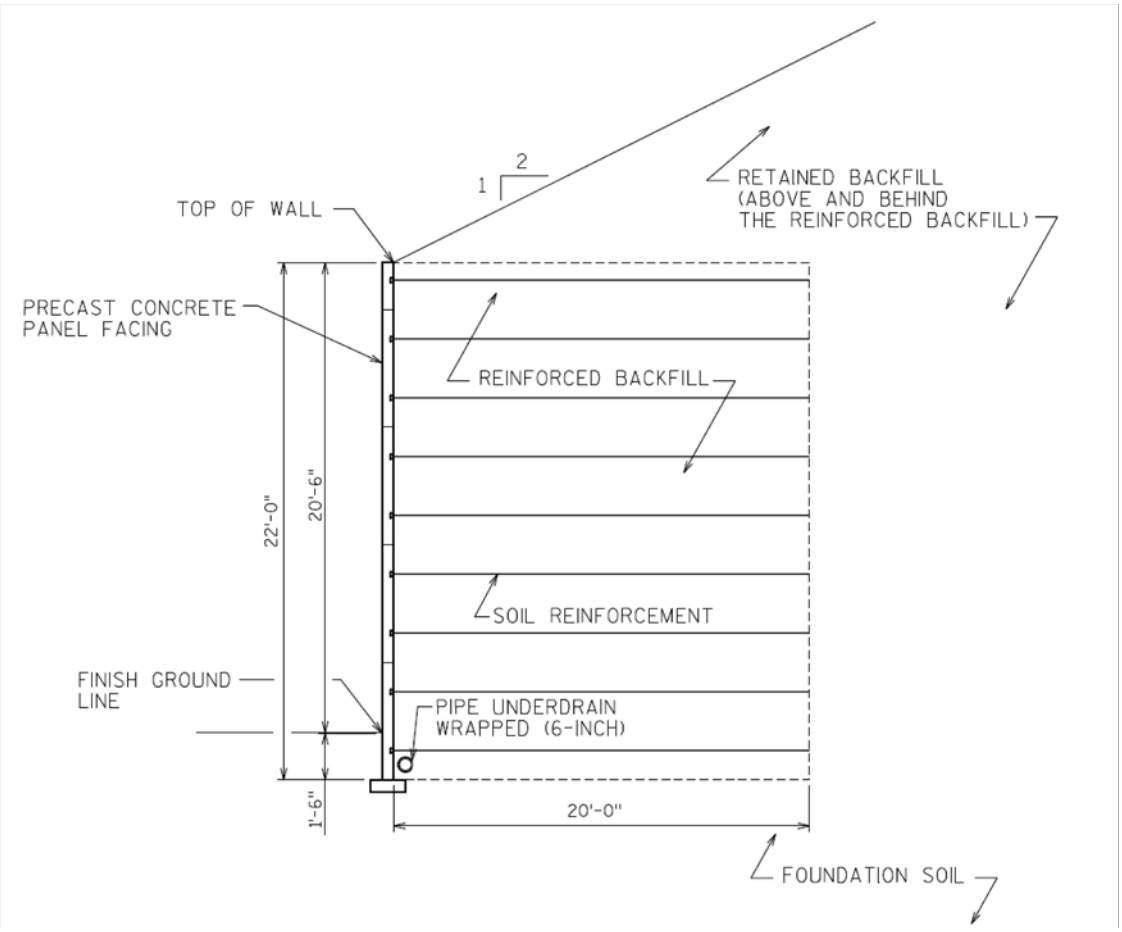

Figure E14-2.8-1
MSE Wall Schematic

This page intentionally left blank.

Table of Contents

E14-3 Modular Block Facing Geogrid Reinforced MSE Wall, LRFD 2
E14-3.1 Establish Project Requirements 2
E14-3.2 Design Parameters 3
E14-3.3 Estimate Depth of Embedment and Length of Reinforcement 5
E14-3.4 Permanent and Transient Loads 5
E14-3.4.1 Compute Active Earth Pressure 6
E14-3.4.2 Compute Unfactored Loads 6
E14-3.4.3 Summarize Applicable Load and Resistance Factors 8
E14-3.4.4 Compute Factored Loads and Moments 10
E14-3.5 Evaluate External Stability of MSE Wall 11
E14-3.5.1 Sliding Resistance at Base of MSE Wall 11
E14-3.5.2 Limiting Eccentricity at Base of MSE Wall 12
E14-3.5.3 Bearing Resistance at base of MSE Wall 13
E14-3.6 Evaluate Internal Stability of MSE Wall 14
E14-3.6.1 Establish the Vertical Layout of Soil Reinforcement 15
E14-3.6.2 Compute Horizontal Stress and Maximum Tension, Tmax 16
E14-3.6.3 Establish Nominal and Factored Pullout Resistance of Soil Reinforcement 18
E14-3.6.4 Establish Nominal and Factored Long-term Tensile Resistance of Soil Reinforcement 19
E14-3.6.5 Establish Grade of Soil Reinforcing Elements at Each Level 21
E14-3.7 Summary of Results E14-3.7.1 Summary of External Stability 21
E14-3.7 Summary of Results E14-3.7.1 Summary of External Stability 21
E14-3.7.2 Summary of Internal Stability 22
E14-3.8 Final MSE Wall Schematic 22

E14-3 Modular Block Facing Geogrid Reinforced MSE Wall, LRFD

General

This example shows design calculations for MSE wall with modular block facings conforming to the LRFD Bridge Design Specifications and the WisDOT Bridge Manual. *(Example is current through LRFD Fifth Edition - 2010)*

Sample design calculations for external stability (sliding, eccentricity and bearing) and internal stability (soil reinforcement stress and pullout) will be presented. The overall stability, settlement and connection calculations will not be shown in this example, but are required.

Design steps presented in 14.6.3.3 are used for the wall design.

E14-3.1 Establish Project Requirements

The following MSE wall shall have compacted freely draining soil in the reinforced zone and will be reinforced with geosynthetic (extensible) strips as shown in Figure E14-3.1-1. External stability is the designer's (WisDOT/Consultant) responsibility and internal stability and structural components are the contractors responsibility.

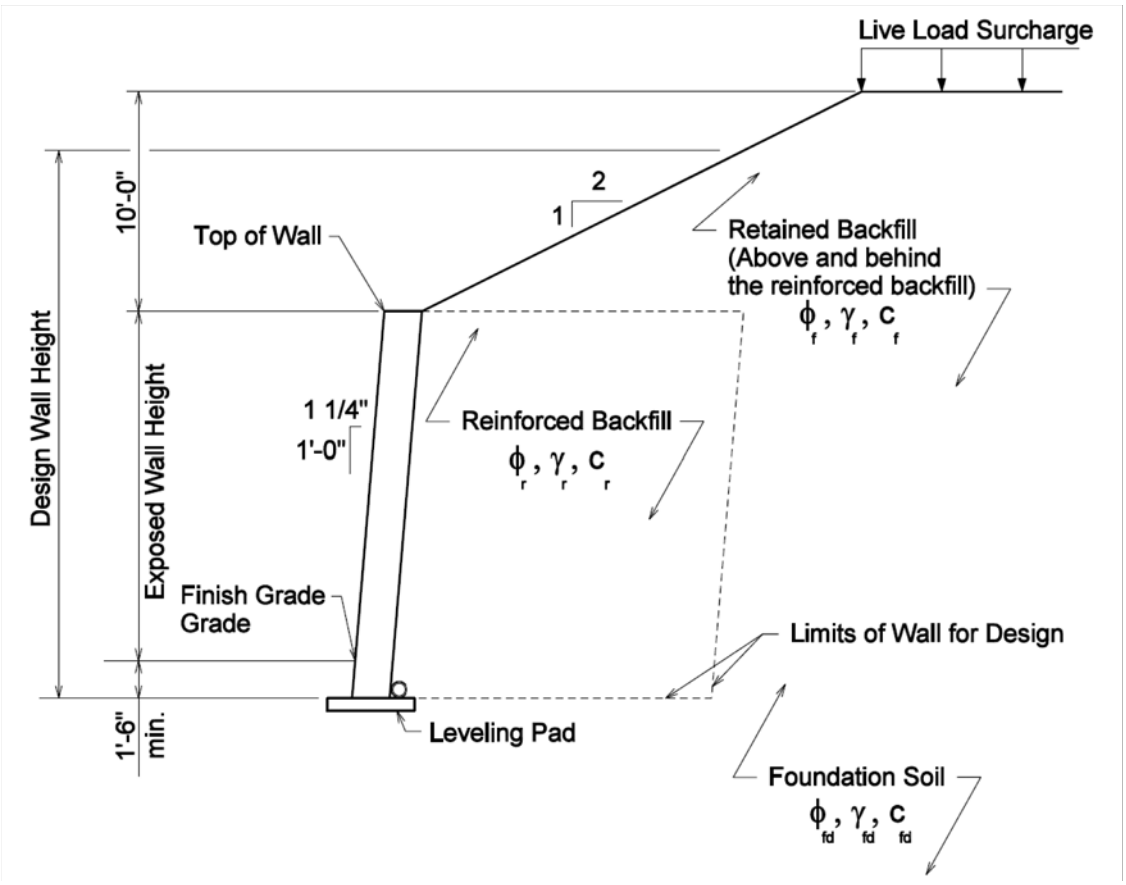

Figure E14-3.1-1
MSE Wall with Broken Backslope & Traffic

Wall Geometry

$H_e = 14.5$ Exposed wall height, ft

$H = H_e + 1.5$ Design wall height, ft (assume 1.5 ft wall embedment)

$\beta = 26.565\ deg$ Inclination of ground slope behind face of wall (2H:1V)

$b_1 = 1.25$ Front wall batter, in/ft (b_1H:12V)

$h_{slope} = 10.0$ Slope height, ft

$Batter = atan\left(\frac{b_1}{12}\right)$ Angle of front face of wall to vertical

$\boxed{Batter = 5.95\ deg}$

Note: Since the wall has less than 10 degrees of batter the wall can be defined as "near vertical" thus θ = 90 degrees and $\beta'=\delta'=I$ for a broken backslope

$\theta = 90\ deg$ Angle of back face of wall to horizontal

$I = atan\left(\frac{h_{slope}}{2\ H}\right)$ Infinite slope angle

$\boxed{I = 17.4\ deg}$

$\beta' = I$ Inclination of ground slope behind face of wall, deg

$\delta' = I$ Friction angle between fill and wall, deg

E14-3.2 Design Parameters

Project Parameters

$Design_Life = 75$ Wall design life, years (min) **LRFD [11.5.1]**

Soil Properties (From Geotechnical Site Investigation Report)

Designer to determine if long-term or short-term soil strength parameters govern external stability.

Reinforced Backfill Soil Design Parameters

$\phi_r = 30\ deg$ Angle of internal friction **LRFD [11.10.5.1]** and (14.4.6)

$\gamma_r = 0.120$ Unit of weight, kcf

$c_r = 0$ Cohesion, psf

Retained Backfill Soil Design Parameters

$\phi_f = 29\ deg$ Angle of internal friction

$\gamma_f = 0.120$ Unit of weight, kcf

$c_f = 0$ Cohesion, psf

Foundation Soil Design Parameters

$\phi_{fd} = 31deg$ Angle of internal friction

$\gamma_{fd} = 0.125$ Unit of weight, kcf

$c_{fd} = 0$ Cohesion, psf

Factored Bearing Resistance of Foundation Soil

$q_R = 6.5$ Factored resistance at the strength limit state, ksf

Note: The factored bearings resistance, q_R, was assumed to be given in the Site Investigation Report. If not provided q_R shall be determined by calculating the nominal bearing resistance, q_n, per **LRFD [Eq 10.6.3.1.2a-1]** and factored with the bearing resistance factor,ϕ_b, for MSE walls (i.e., $q_R=\phi_b q_n$).

Precast Concrete Panel Facing Parameters

$S_v = 1.333$ Vertical spacing of reinforcement, ft

Note: vertical spacing should not exceed 2.7 ft without full scale test data **LRFD [11.10.6.2.1]**

Soil Reinforcement Design Parameters

Geosynthetic - Geogrids Reinforcing type

Note: Product specific information to be defined during internal stability checks

Live Load Surcharge Parameters

$h_{eq} = 2.0$ Equivalent height of soil for surcharge load, ft (14.4.5.4.2)

$SUR = h_{eq}\,\gamma_f$ Live load soil for surcharge load

$\boxed{SUR = 0.240}$ ksf/ft

Resistance Factors

$\phi_s = 1.00$ Sliding of MSE wall at foundation **LRFD [Table 11.5.7-1]**

$\phi_b = 0.65$ Bearing resistance **LRFD [Table 11.5.7-1]**

$\phi_t = 0.90$ Tensile resistance (geosynthetic reinforcement and connectors) **LRFD [Table 11.5.7-1]**

$\phi_p = 0.90$ Pullout resistance **LRFD [Table 11.5.7-1]**

E14-3.3 Estimate Depth of Embedment and Length of Reinforcement

For this example it is assumed that global stability does not govern the required length of soil reinforcement.

Embedment Depth, d_e

Frost-susceptible material is assumed to be not present or that it has been removed and replaced with nonfrost susceptible material per **LRFD [11.10.2.2]**. There is also no potential for scour. Therefore, the minimum embedment, d_e, shall be the greater of 1.5 ft (14.6.4) or H/20 **LRFD [Table C11.10.2.2-1]**

Note: While AASHTO allows the d_e value of 1.0 ft on level ground, the embedment depth is limited to 1.5 ft by WisDOT policy as stated in Chapter 14.

$$\frac{H}{20} = 0.8 \quad \text{ft}$$

$$d_e = \max\left(\frac{H}{20}, 1.5\right) \qquad \boxed{d_e = 1.50} \quad \text{ft}$$

Therefore, the initial design wall height assumption was correct.

$$H_e = 14.5 \quad \text{ft}$$

$$H = H_e + 1.5 \qquad \boxed{H = 16.00} \quad \text{ft}$$

Length of Reinforcement, L

In accordance with **LRFD [11.10.2.1]** the minimum required length of soil reinforcement shall be the greater of 8 feet or 0.7H. Due to the sloping backfill and traffic surcharge a longer reinforcement length of 0.9H will be used in this example. The length of reinforcement will be uniform throughout the entire wall height.

$$0.9\,H = 14.4 \quad \text{ft}$$

$$L_{user} = 14.5 \quad \text{ft}$$

$$L = \max(8.0, 0.9\,H, L_{user}) \qquad \boxed{L = 14.50} \quad \text{ft}$$

Height of retained fill at the back of the reinforced soil, h

$$h = H + L\tan(\beta) \qquad \boxed{h = 23.25} \quad \text{ft}$$

E14-3.4 Permanent and Transient Loads

In this example, load types EV (vertical earth pressure), EH (horizontal earth pressure) and LS (live load surcharge) will be used as shown in Figure E14-3.4-1. No transient loads are present in this example. Due to the relatively thin wall thickness the weight and width of the concrete facing will be ignored. Passive soil resistance will also be ignored.

E14-3.4.1 Compute Active Earth Pressure

Compute the coefficient of active earth pressure (k_a) using Coulomb Theory **LRFD [Eq 3.11.5.3-1]** with the wall backfill material interface friction angle, δ, set equal to β (i.e. $\delta=\beta$) **LRFD [11.10.5.2].** The retained backfill soil will be used (i.e., $k_a=k_{af}$)

$\phi_f = 29$ deg

$\beta' = 17.4$ deg

$\theta = 90$ deg

$\delta' = 17.4$ deg

$$\Gamma = \left(1 + \sqrt{\frac{\sin(\phi_f + \delta')\ \sin(\phi_f - \beta')}{\sin(\theta - \delta')\ \sin(\theta + \beta')}}\right)^2 \qquad \boxed{\Gamma = 1.961}$$

$$k_{af} = \frac{\sin(\theta + \phi_f)^2}{\Gamma\ \sin(\theta)^2\ \sin(\theta - \delta')} \qquad \boxed{k_{af} = 0.409}$$

E14-3.4.2 Compute Unfactored Loads

The forces and moments are computed using Figure E14-3.4-1 by their appropriate LRFD load types **LRFD [Tables 3.4.1-1 and 3.4.1-2]**

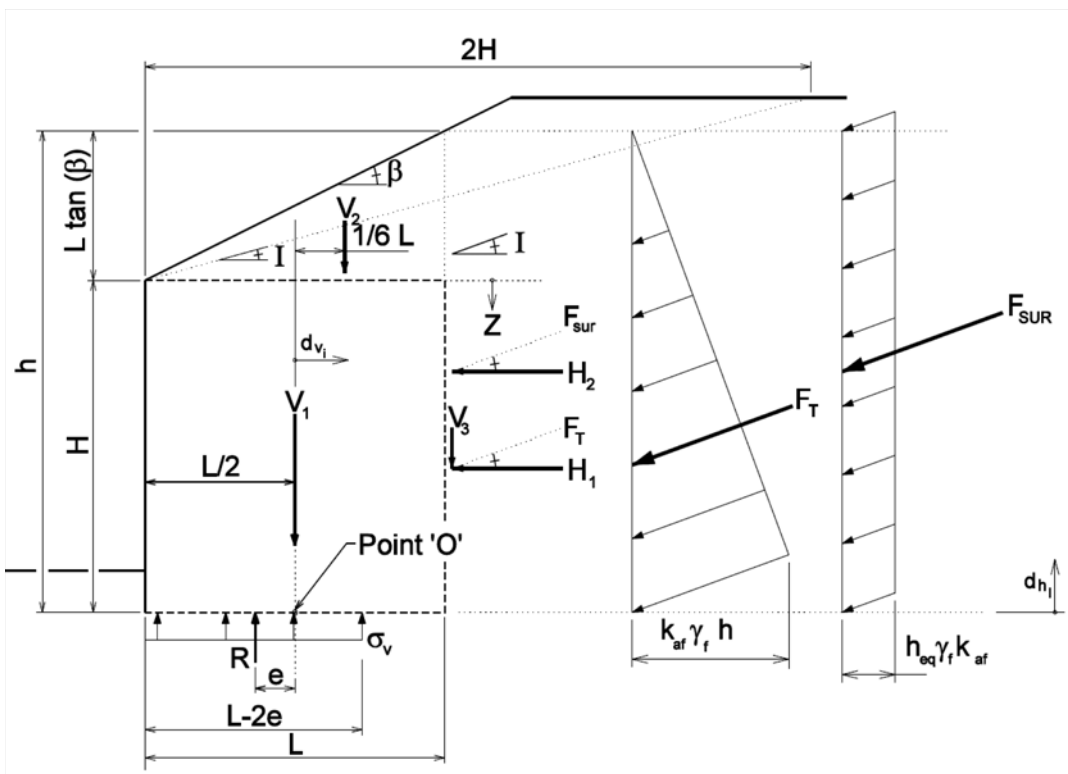

Figure E14-3.4-1
MSE Wall - External Stability

Active Earth Force Resultant, (kip/ft), F_T

$F_T = \frac{1}{2} \gamma_f h^2 k_{af}$ Active earth force resultant (EH) $F_T = 13.3$

Live Load Surcharge, (kip/ft), F_{SUR}

$F_{SUR} = h_{eq} \gamma_f h k_{af}$ Live load surcharge resultant (LS) $F_{SUR} = 2.3$

Vertical Loads, (kip/ft), V_i

$V_1 = \gamma_r H L$ Soil backfill - reinforced soil (EV) $V_1 = 27.8$

$V_2 = \frac{1}{2} \gamma_f L (L \tan(\beta))$ Soil backfill - backslope (EV) $V_2 = 6.3$

$V_3 = F_T \sin(I)$ Active earth force resultant (vertical component - EH) $V_3 = 4$

Moments produced from vertical loads about the center of reinforced soil, (kip-ft/ft) MV_i

Moment Arm		Moment	
$d_{v1} = 0$	$d_{v1} = 0.0$	$MV_1 = V_1 d_{v1}$	$MV_1 = 0.0$
$d_{v2} = \frac{1}{6}L$	$d_{v2} = 2.4$	$MV_2 = V_2 d_{v2}$	$MV_2 = 15.2$
$d_{v3} = \frac{L}{2}$	$d_{v3} = 7.3$	$MV_3 = V_3 d_{v3}$	$MV_3 = 28.7$

Horizontal Loads, (kip/ft), H_i

$H_1 = F_T \cos(I)$ Active earth force resultant (horizontal component - EH) $H_1 = 12.7$

$H_2 = F_{SUR} \cos(I)$ Live load surcharge resultant (LS) $H_2 = 2.2$

Moments produced from horizontal loads about the center of reinforced soil, (kip-ft/ft), MH

Moment Arm		Moment	
$d_{h1} = \frac{h}{3}$	$d_{h1} = 7.7$	$MH_1 = H_1\ d_{h1}$	$MH_1 = 98.0$
$d_{h2} = \frac{h}{2}$	$d_{h2} = 11.6$	$MH_2 = H_2\ d_{h2}$	$MH_2 = 25.3$

Summary of Unfactored Forces & Moments:

Load			Moment Arm		Moment		LRFD Load Type
Item	Description	Value (kip/ft)	Item	Value (ft)	Item	Value (kip-ft/ft)	
V_1	Soil backfill	27.80	d_{v1}	0.0	MV_1	0.0	EV
V_2	Soil backfill	6.30	d_{v2}	2.4	MV_2	15.2	EV
V_3	Active earth pressure	4.00	d_{v3}	7.3	MV_3	28.7	EH

Table E14-3.4-1
Unfactored Vertical Forces & Moments

Load			Moment Arm		Moment		LRFD Load Type
Item	Description	Value (kip/ft)	Item	Value (ft)	Item	Value (kip-ft/ft)	
H_1	Active earth pressure	12.70	d_{h1}	7.7	MH_1	98.0	EH
H_2	Live Load Surcharge	2.20	d_{h2}	11.6	MH_2	25.3	LS

Table E14-3.4-2
Unfactored Horizontal Forces & Moments

E14-3.4.3 Summarize Applicable Load and Resistance Factors

Maximum and minimum load factors shall be used to determine the extreme load effects. WisDOT's policy is to set all load modifiers to one ($n = 1.0$). Factored loads and moments for each limit state are calculated by applying the appropriate load factors **LRFD [Tables 3.4.1-1 and 3.4.1-2]**. The following load combinations will be used in this example:

Load Combination Limit State	EV	LS	EH
Strength Ia (minimum)	$\gamma_{EVmin} = 1.00$	$\gamma_{LSmin} = 1.75$	$\gamma_{EHmin} = 0.90$
Strength Ib (maximum)	$\gamma_{EVmax} = 1.35$	$\gamma_{LSmax} = 1.75$	$\gamma_{EHmax} = 1.50$
Service I (max/min)	$\gamma_{EV} = 1.00$	$\gamma_{LS} = 1.00$	$\gamma_{EH} = 1.00$

Load Combination	γ_{EV}	γ_{LS_V}	γ_{LS_H}	γ_{EH}	Application
Strength Ia	1.00	-	1.75	1.50	Sliding, Eccentricity
Strength Ib	1.35	1.75	1.75	1.50	Bearing, T_{max}
Service I	1.00	1.00	1.00	1.00	Pullout (σ_v)

Table E14-3.4-3
Load Combinations

Load Combination Assumptions:

- Live load surcharge stabilizing loads (if applicable) are ignored for overturning and sliding analyses. Live load surcharge is used to compute maximum bearing pressure, wall strength and overall (global) stability.
- Minimum horizontal earth pressure ,$\gamma_{EH(min)} = 0.9$, will not control in this example based on B/H and lateral load inclination, but should be checked.
- Component load factors shall remain consistent throughout calculations. For example, the active earth force resultant (F_T) can be broken into component forces of either $V_3\gamma_{EH(max)}$ and $H_1\gamma_{EH(max)}$ or $V_3\gamma_{EH(min)}$ and $H_1\gamma_{EH(min)}$, not $V_3\gamma_{EH(min)}$ and $H_1\gamma_{EH(max)}$.
- T_{max1} (Pullout) is calculated without live load and T_{max2} (Rupture) is calculated with live load.

The loads discussed and tabulated previously can now be factored by the appropriate load factors and combined to determine the governing limit states for each design check.

E14-3.4.4 Compute Factored Loads and Moments

Unfactored loads by load type (kip/ft)

$V_{EV} = V_1 + V_2$ $\boxed{V_{EV} = 34.1}$

$V_{EH} = V_3$ $\boxed{V_{EH} = 4.0}$

$H_{EH} = H_1$ $\boxed{H_{EH} = 12.7}$

$H_{LS} = H_2$ $\boxed{H_{LS} = 2.2}$

Unfactored moments by load type (kip-ft/ft)

$M_{EV} = MV_1 + MV_2$ $\boxed{M_{EV} = 15.2}$

$M_{EH1} = MV_3$ $\boxed{M_{EH1} = 28.7}$

$M_{EH2} = MH_1$ $\boxed{M_{EH2} = 98.0}$

$M_{LS2} = MH_2$ $\boxed{M_{LS2} = 25.3}$

Factored vertical loads by limit state (kip/ft)

$V_Ia = n\left(1.00V_{EV} + 1.50\ V_{EH}\right)$ $\boxed{V_Ia = 40.1}$

$V_Ib = n\left(1.35V_{EV} + 1.50\ V_{EH}\right)$ $\boxed{V_Ib = 52.0}$

$V_Ser = n\left(1.00V_{EV} + 1.00\ V_{EH}\right)$ $\boxed{V_Ser = 38.1}$

Factored horizontal loads by limit state (kip/ft)

$H_Ia = n\left(1.75H_{LS} + 1.50H_{EH}\right)$ $\boxed{H_Ia = 22.8}$

$H_Ib = n\left(1.75H_{LS} + 1.50H_{EH}\right)$ $\boxed{H_Ib = 22.8}$

$H_Ser = n\left(1.00H_{LS} + 1.00H_{EH}\right)$ $\boxed{H_Ser = 14.8}$

Factored moments produced by vertical Loads by limit state (kip-ft/ft)

$MV_Ia = n\left(1.00M_{EV} + 1.50\ M_{EH1}\right)$ $\boxed{MV_Ia = 58.2}$

$MV_Ib = n\left(1.35M_{EV} + 1.50\ M_{EH1}\right)$ $\boxed{MV_Ib = 63.6}$

$MV_Ser = n\left(1.00M_{EV} + 1.00\ M_{EH1}\right)$ $\boxed{MV_Ser = 43.9}$

Factored moments produced by horizontal loads by limit state (kip-ft/ft)

$MH_Ia = n\left(1.75M_{LS2} + 1.50\ M_{EH2}\right)$ $\boxed{MH_Ia = 191.3}$

$MH_Ib = n\left(1.75M_{LS2} + 1.50\ M_{EH2}\right)$ $\boxed{MH_Ib = 191.3}$

$MH_Ser = n\left(1.00M_{LS2} + 1.00\ M_{EH2}\right)$ $\boxed{MH_Ser = 123.3}$

Summary of Factored Forces & Moments:

Load Combination	Vert. Loads V (kips/ft)	Moments MV (kip-kip/ft)	Horiz. Loads H (kips/ft)	Moments MH (kip-kip/ft)
Strength Ia	40.1	58.2	22.8	191.3
Strength Ib	52.0	63.6	22.8	191.3
Service I	38.1	43.9	14.8	123.3

Table E14-3.4-4
Summary of Factored Loads & Moments

E14-3.5 Evaluate External Stability of MSE Wall

Three potential external failure mechanisms will be considered in this example (sliding at the base, limiting eccentricity and bearing resistance). Overall (global) stability requirements are not included here. Design calculations will be carried out for the governing limit states only.

E14-3.5.1 Sliding Resistance at Base of MSE Wall

The following calculations are based on **Strength Ia**:

Factored Sliding Force

$R_u = H_Ia$ $\boxed{R_u = 22.8}$ kip/ft

Sliding Resistance

To compute the coefficient of sliding friction for continuous reinforcement use the lesser friction angle of the reinforced back fill, ϕ_r , or the foundation soil, ϕ_{fd}, **LRFD [11.10.5.3]**.

$\phi_\mu = \min(\phi_r, \phi_{fd})$ $\boxed{\phi_\mu = 30 \text{ deg}}$

Note: Since continuous reinforcement is used, a slip plane may occur at the reinforcement layer. The sliding friction angle for this case shall use the lesser of (when applicable) ϕ_r, ϕ_{fd}, and ρ. Where ρ is the soil-reinforcement interface friction angle. Without specific data ρ may equal 2/3 ϕ_f with ϕ_f a maximum of 30 degrees. This check is not made in this example, but is required.

$\mu = \tan(\phi_\mu)$ $\boxed{\mu = 0.577}$

$V_Ia = 40.1$ Factored vertical load, kip/ft

$V_{Nm} = \mu\ V_Ia$ $\boxed{V_{Nm} = 23.1}$ kip/ft

$\phi_s = 1.00$

$R_R = \phi_s\ V_{Nm}$ $\boxed{R_R = 23.1}$ kip/ft

Capacity:Demand Ratio (CDR)

$$CDR_{Sliding} = \frac{R_R}{R_u}$$ $CDR_{Sliding} = 1.02$

Is the $CDR \geq 1.0$? check = "OK"

E14-3.5.2 Limiting Eccentricity at Base of MSE Wall

The location of the resultant of the reaction forces is limited to the middle two-thirds of the base width for a soil foundation (i.e., e_{max} = L/3) **LRFD [11.6.3.3]**. The following calculations are based on **Strength Ia**.

Maximum eccentricity

$$e_{max} = \frac{L}{3}$$ $e_{max} = 4.83$ ft

Compute wall eccentricity (distance from Point 'O' Figure E14-3.4-1)

$\Sigma M_R = MV_Ia$ Summation of resisting moments for Strength Ia

$\Sigma M_O = MH_Ia$ Summation of overturning moments for Strength Ia

$\Sigma V = V_Ia$ Summation of vertical loads for Strength Ia

$\Sigma M_R = 58.2$ kip-ft/ft

$\Sigma M_O = 191.3$ kip-ft/ft

$\Sigma V = 40.1$ kip/ft

$$e = \frac{\Sigma M_O - \Sigma M_R}{\Sigma V}$$ $e = 3.32$ ft

Capacity:Demand Ratio (CDR)

$$CDR_{Eccentricity} = \frac{e_{max}}{e}$$ $CDR_{Eccentricity} = 1.46$

Is the $CDR \geq 1.0$? check = "OK"

E14-3.5.3 Bearing Resistance at base of MSE Wall

The following calculations are based on **Strength Ib**:

Compute wall eccentricity (distance from Point 'O' Figure E14-3.4-1)

$\Sigma M_R = MV_Ib$ Summation of resisting moments for Strength Ib

$\Sigma M_O = MH_Ib$ Summation of overturning moments for Strength Ib

$\Sigma V = V_Ib$ Summation of vertical loads for Strength Ib

$\Sigma M_R = 63.6$ kip-ft/ft

$\Sigma M_O = 191.3$ kip-ft/ft

$\Sigma V = 52.0$ kip/ft

$$e = \frac{\Sigma M_O - \Sigma M_R}{\Sigma V}$$

$e = 2.46$ ft

Compute the ultimate bearing stress

σ_V = Ultimate bearing stress

L = Bearing length

e = Eccentricity (resultant produced by extreme bearing resistance loading)

Note: For the bearing resistance calculations the effective bearing width, B' = L-2e, is used instead of the actual width. Also, when the eccentricity, e, is negative: B'=L. The vertical stress is assumed to be uniformly distributed over the effective bearing width, B', since the wall is supported by a soil foundation **LRFD [11.6.3.2]**.

$$\sigma_V = \frac{\Sigma V}{L - 2\,e}$$

$\sigma_V = 5.43$ ksf/ft

Factored bearing resistance

$q_R = 6.50$ ksf/ft

<u>Capacity:Demand Ratio (CDR)</u>

$$CDR_{Bearing} = \frac{q_R}{\sigma_V}$$

$CDR_{Bearing} = 1.20$

Is the $CDR \geq 1.0$?

check = "OK"

E14-3.6 Evaluate Internal Stability of MSE Wall

Note: MSE walls are a proprietary wall system and the internal stability computations shall be performed by the wall supplier.

Internal stability shall be checked for 1) pullout and 2) rupture in accordance with **LRFD [11.10.6]**. The factored tensile load, T_{max}, is calculated twice for internal stability checks for vertical stress (σ_V) calculations. For pullout T_{max1} is determined by excluding live load surcharge. For rupture T_{max2} is determined by including live load surcharge. In this example, the maximum reinforcement loads are calculated using the Simplified Method.

The location of the potential failure surface for a MSE wall with metallic strip or grid reinforcements (inextensible) is shown in Figure E14-2.6-1.

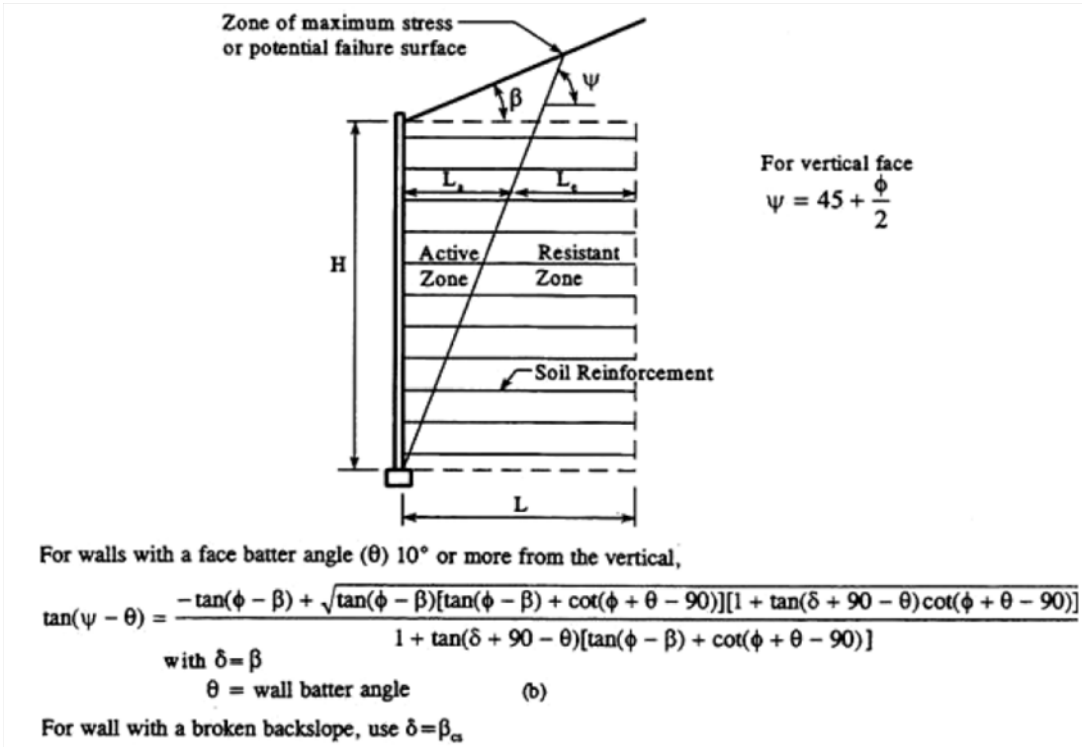

Figure E14-2.6-1
MSE Wall - Internal Stability (Extensible Reinforcement)
FHWA [Figure 4-9]

E14-3.6.1 Establish the Vertical Layout of Soil Reinforcement

Soil reinforcement layouts are shown in Table E14-3.6-1. They were determined by a standard block wall unit thickness of 8-in and a maximum vertical reinforcement spacing of 2.7-ft. The top and bottom level vertical spacing was adjusted to fit the height of the wall. Computations for determining the maximum tension, T_{max}, are taken at each level in the vertical layout.

$Layer = 3$ Layer of reinforcement (from top)

$Z = 3.333$ ft Depth below top of wall, ft

$S_V = 1.33$ ft Vertical spacing of reinforcement, ft

Calculate the upper and lower tributary depths based on the reinforcement vertical spacing

$$Z_{neg} = Z - \frac{S_V}{2} \qquad \boxed{Z_{neg} = 2.67} \text{ ft}$$

$$Z_{pos} = Z + \frac{S_V}{2} \qquad \boxed{Z_{pos} = 4.00} \text{ ft}$$

Layer	Z (ft)	Zneg (ft)	Zpos (ft)
1	0.67	0.00	1.33
2	2.00	1.33	2.67
3	3.33	2.67	4.00
4	4.67	4.00	5.33
5	6.00	5.33	6.67
6	7.33	6.67	8.00
7	8.67	8.00	9.33
8	10.00	9.33	10.67
9	11.33	10.67	12.00
10	12.67	12.00	13.33
11	14.00	13.33	14.67
12	15.33	14.67	16.00

Table E14-3.6-1
Vertical Layout of Soil Reinforcement

E14-3.6.2 Compute Horizontal Stress and Maximum Tension, T_{max}

Factored horizontal stress

$$\sigma_H = \gamma_P (\sigma_v k_r + \Delta\sigma_H) \quad \textbf{LRFD [Eq 11.10.6.2.1-1]}$$

γ_p = Load factor for vertical earth pressure (γ_{EVmax})
k_r = Horizontal pressure coefficient
σ_v = Pressure due to gravity and surcharge for pullout, T_{max1} ($\gamma_r Z_{trib}+\sigma_2$)
σ_v = Pressure due to gravity and surcharge for pullout resistance ($\gamma_r Z_{p\text{-}PO}$)
σ_v = Pressure due to gravity and surcharge for rupture, T_{max2} ($\gamma_r Z_{trib} + \sigma_2 + q$)
$\Delta\sigma_H$ = Horizontal pressure due to concentrated horizontal surcharge load
Z = Reinforcement depth for max stress Figure E14-2.6-2
Z_p = Depth of soil at reinforcement layer potential failure plane
$Z_{p\text{-}ave}$ = Average depth of soil at reinforcement layer in the effective zone
σ_2 = Equivalent uniform stress from backslope ($0.5(0.7)L\tan\beta)\gamma_f$
q = Surcharge load ($q = SUR$), ksf

To compute the lateral earth pressure coefficient, k_r , a k_a multiplier is used to determine k_r for each of the respective vertical tributary spacing depths (Z_{pos}, Z_{neg}). The k_a multiplier is determined using Figure E14-2.6-2. To calculate k_a it is assumed that $\delta=\beta$ and $\beta = 0$; thus,

$k_a=\tan^2(45-\phi_f/2)$ **LRFD [Eq C11.10.6.2.1-1]**

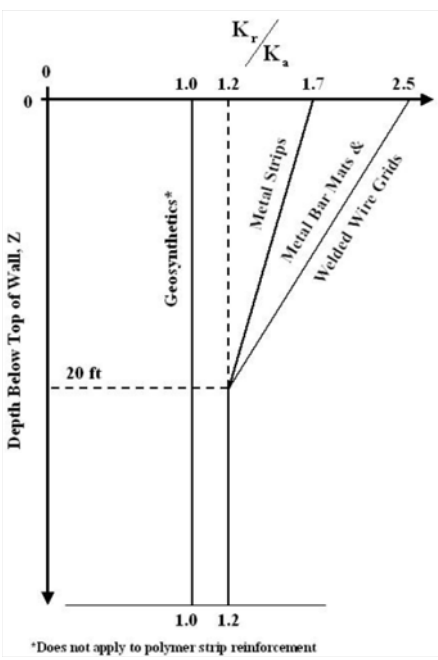

Figure E14-3.6-2
k_r/k_a Variation with MSE Wall Depth
FHWA [Figure 4-10]

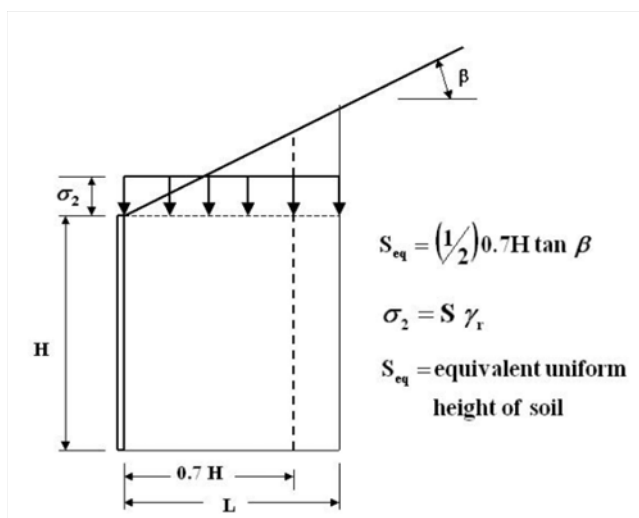

Figure E14-3.6-3
Calculation of Vertical Stress
FHWA [Figure 4-11]

Calculate the coefficient of active earth pressure, k_a

$$\phi_r = 30 \text{ deg}$$

$$k_a = \tan\left(45 \text{ deg} - \frac{\phi_r}{2}\right)^2 \qquad \boxed{k_a = 0.333}$$

The internal lateral earth pressure coefficient, k_r, for geogrids remains constant throughout the reinforced soil zone. k_r will be equal to $k_a(k_r/k_a) = k_a$ at any depth below the top of wall as shown in figure E14-3.6-2 **LRFD [Figure 11.10.6.2.2-3]**.

$$k_r = k_a \qquad \boxed{k_r = 0.333}$$

Compute effective (resisting) length, L_e

$$Z = 3.33 \quad \text{ft}$$

$$H = 16.00 \quad \text{ft}$$

$$L = 14.5 \quad \text{ft}$$

$$\psi = 45 \text{ deg} + \frac{\phi_r}{2} \qquad \boxed{\psi = 60.0 \text{ deg}}$$

$$L_a = \frac{H - Z}{\tan(\psi)} \qquad \boxed{L_a = 7.31}$$

$$L_e = \max(L - L_a, 3) \qquad \boxed{L_e = 7.19}$$

Note: L_e shall be greater than or equal to 3 ft **LRFD [11.10.6.3.2]**

E14-3.6.3 Establish Nominal and Factored Pullout Resistance of Soil Reinforcement

Compute the factored horizontal stress, σ_H, at Z by averaging the upper and lower tributary values (Z_{neg} and Z_{pos}). Since there is no horizontal stresses from concentrated dead loads values $\Delta\sigma_H$ is set to zero.

$$\sigma_H = \gamma_{EVmax}(\gamma_r Z_{trib} + \sigma_2)k_r$$

Surcharge loads

$$\sigma_2 = \frac{1}{2}\, 0.7\, H \tan(\beta)\, \gamma_f$$

$\sigma_2 = 0.336$ ksf/ft

Horizontal stress at Z_{neg} and Z_{pos}

$$\sigma_{H_neg} = \gamma_{EVmax}\left(\gamma_r Z_{neg} + \sigma_2\right) k_r$$

$\sigma_{H_neg} = 0.295$ ksf/ft

$$\sigma_{H_pos} = \gamma_{EVmax}\left(\gamma_r Z_{pos} + \sigma_2\right) k_r$$

$\sigma_{H_pos} = 0.367$ ksf/ft

Horizontal stress at Z

$$\sigma_H = 0.5\left(\sigma_{H_pos} + \sigma_{H_neg}\right)$$

$\sigma_H = 0.331$ ksf/ft

Compute the maximum tension, $T_{max\,1}$, at Z

$S_v = 1.33$ ft

$$T_{max1} = \sigma_H S_v\, 1000.$$

$T_{max1} = 441$ plf

Compute effective vertical stress for pullout resistance, σ_v

$$Z_{p_PO} = Z + 0.5 \tan(\beta)\left(L_a + L\right)$$

$Z_{p_PO} = 8.8$ ft

$\gamma_{EV} = 1.00$ Unfactored vertical stress for pullout resistance **LRFD [11.10.6.3.2]**

$$\sigma_v = \gamma_{EV}\, \gamma_r\, Z_{p_PO}\, 1000$$

$\sigma_v = 1054$ psf

Compute pullout resistance factor, F*

Pullout resistance factor, F*, for extensible geosynthetic reinforcement remains constant throughout the reinforced soil for determining the internal lateral earth pressure. Since no product-specific pullout test data is provided at the time of design F* and the scale effect correction factor,α, default values will be used per **LRFD [Figure 11.10.6.3.2-1 and Table 11.10.6.3.2-1]**.

Use default values for F' and α since product-specific pullout test data has not been provided.

$$F' = 0.67 \tan\left(\phi_r\right)$$

Pullout Friction Factor (Geogrids F*= 0.67tanϕ'_r Default value) **LRFD [Figure 11.10.6.3.2-1]**

$F' = 0.387$

Compute nominal pullout resistance, P_r

$\alpha = 0.8$	Scale effect correction factor (geogrids α = 0.8 default value) **LRFD [Table 11.10.6.3.2-1]**
$C = 2$	Overall reinforcement surface area geometry factor (geogrids C = 2.0) **LRFD [11.10.6.3.2]**
$R_c = 1$	Reinforcement coverage ratio (continuous reinforcement R_c = 1.0) **LRFD [11.10.6.4]**

$P_r = F' \alpha \sigma_v C R_c L_e$ $\boxed{P_r = 4690}$ plf

Compute factored pullout resistance, P_{rr}

$\phi_p = 0.9$

$P_{rr} = \phi_p P_r$ $\boxed{P_{rr} = 4221}$ plf

E14-3.6.4 Establish Nominal and Factored Long-term Tensile Resistance of Soil Reinforcement

Compute the factored horizontal stress, σ_H

$$\sigma_H = \gamma_{EVmax} (\gamma_r Z + \sigma_2 + q) k_r$$

Surcharge loads

$\boxed{\sigma_2 = 0.34}$ ksf/ft

$\boxed{q = 0.24}$ ksf/ft

Horizontal stress at Z_{neg} and Z_{pos}

$\sigma_{H_neg} = \gamma_{EVmax} (\gamma_r Z_{neg} + \sigma_2 + q) k_r$ $\boxed{\sigma_{H_neg} = 0.40}$ ksf/ft

$\sigma_{H_pos} = \gamma_{EVmax} (\gamma_r Z_{pos} + \sigma_2 + q) k_r$ $\boxed{\sigma_{H_pos} = 0.48}$ ksf/ft

Horizontal stress at Z

$\sigma_H = 0.5(\sigma_{H_pos} + \sigma_{H_neg})$ $\boxed{\sigma_H = 0.44}$ ksf/ft

Compute the maximum tension, T_{max2}, at Z

$S_v = 1.33$ ft

$T_{max2} = \sigma_H S_v 1000$ $\boxed{T_{max2} = 585}$ plf

$$T_r = \phi T_{al} = \phi T_{ult}/RF$$

T_r = Factored soil reinforcement tensile resistance
ϕ = Resistance factor
T_{al} = Nominal geosynthetic reinforcement strength
T_{ult} = Ultimate tensile strength
RF_{CR} = Creep reduction factor
RF_D = Durability reduction factor
RF_{ID} = Installation damage reduction factor
RF = Reduction factor (RF_{CR} x RF_D x RF_{ID})

The following calculation for determining the nominal long-term reinforcement tensile strength uses values similar to proprietary product specific data. In any application RF_{ID} nor RF_D shall not be less than 1.1. A single default reduction factor, RF, of 7 may be used for permanent applications if meeting the requirements listed in **LRFD [11.10.6.4.2b and Table 11.10.6.4.2b-1,Table 11.10.6.4.2b-1]**

	Geogrid Type		
	#1	#2	#3
T_{ult} (plf)	2500	5000	7500
RF_{CR}	2.00	2.00	2.00
RF_D	1.15	1.15	1.15
RF_{ID}	1.35	1.35	1.35

Table E14-3.6-2
Geogrid Resistance Properties

Grade = 1

T_{ult} = 2500 plf

RF_{CR} = 2.00

RF_D = 1.15

RF_{ID} = 1.35

$RF = RF_{CR}\ RF_D\ RF_{ID}$ $\boxed{RF = 3.11}$

$T_{al} = \dfrac{T_{ult}}{RF}$ $\boxed{T_{al} = 805}$ plf

$T_r = \phi_t\ T_{al}$ $\boxed{T_r = 725}$ plf

E14-3.6.5 Establish Grade of Soil Reinforcing Elements at Each Level

Based on Pullout Resistance

$$CDR_{pullout} = \frac{P_{rr}}{T_{max1}}$$

$CDR_{pullout} = 9.56$

Is the $CDR \geq 1.0$?

check = "OK"

Based on Tensile Resistance

$$CDR_{tensile} = \frac{T_r}{T_{max2}}$$

$CDR_{tensile} = 1.24$

Is the $CDR \geq 1.0$?

check = "OK"

Note: If the wall requires additional reinforcement the vertical spacing will be maintained and adjustments will be made to the grade (strength) for each layer accordingly.

E14-3.7 Summary of Results

E14-3.7.1 Summary of External Stability

Based on the defined project parameters, embedment depth and length of reinforcement the following external stability checks have been satisfied:

External Check	CDR
Sliding	1.02
Eccentricity	1.46
Bearing	1.20

Table E14-3.7-1
Summary of External Stability Computations

E14-3.7.2 Summary of Internal Stability

Computations for the grades of geogrid reinforcements at each level is presented in Table E14-3.7-2.

		Pullout			Rupture					
Level	Z	σ_H	T_{max1}	P_{rr}	Grade	σ_H	T_{max2}	T_r	CDR_p	CDR_t
1	0.67	187	250	2455	#1	295	394	725	9.84	1.84
2	2.00	259	346	3280	#1	367	490	725	9.49	1.48
3	3.33	331	442	4221	#1	439	586	725	9.56	1.24
4	4.67	403	538	5280	#1	511	682	725	9.82	1.06
5	6.00	475	634	6456	#2	583	778	1449	10.19	1.86
6	7.33	547	730	7750	#2	655	874	1449	10.62	1.66
7	8.67	619	826	9161	#2	727	970	1449	11.10	1.49
8	10.00	691	922	10690	#2	799	1066	1449	11.60	1.36
9	11.33	763	1018	12336	#2	871	1162	1449	12.12	1.25
10	12.67	835	1114	14099	#2	943	1258	1449	12.66	1.15
11	14.00	907	1210	15980	#2	1015	1354	1449	13.21	1.07
12	15.33	979	1306	17978	#3	1087	1450	2174	13.77	1.50

Table E14-3.7.2
Summary of Internal Stability Computations for Strength I Load Combinations

E14-3.8 Final MSE Wall Schematic

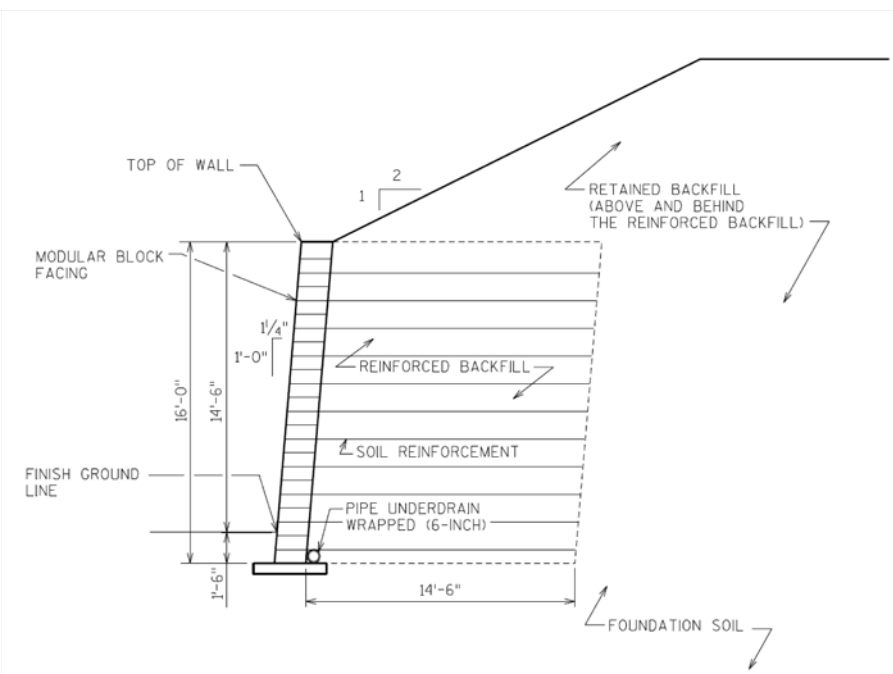

Figure E14-3.8-1
MSE Wall Schematic

Table of Contents

E14-4 Cast-In-Place Concrete Cantilever Wall on Piles, LRFD 2
E14-4.1 Establish Project Requirements 2
E14-4.2 Design Parameters 3
E14-4.3 Define Wall Geometry 4
E14-4.4 Permanent and Transient Loads 8
E14-4.4.1 Compute Active Earth Pressure Coefficient 8
E14-4.4.2 Compute Pile Group Properties 9
E14-4.4.3 Compute Unfactored Loads 10
E14-4.4.4 Summarize Applicable Load and Resistance Factors 14
E14-4.4.5 Compute Factored Loads and Moments 15
E14-4.5 Evaluate Pile Reactions 17
E14-4.6 Evaluate External Stability of Wall 19
E14-4.6.1 Pile Bearing Resistance 19
E14-4.6.2 Pile Sliding Resistance 20
E14-4.7 Evaluate Wall Structural Design 21
E14-4.7.1 Evaluate Wall Footing 21
E14-4.7.1.1 Evalute One-Way Shear 21
E14-4.7.1.2 Evaluate Two-Way Shear 24
E14-4.7.1.3 Evaluate Top Transverse Reinforcement Strength 25
E14-4.7.1.4 Evaluate Bottom Transverse Reinforcement Strength 27
E14-4.7.1.5 Evaluate Longitudinal Reinforcement Strength 29
E14-4.7.2 Evaluate Stem Strength 31
E14-4.7.2.1 Evaluate Stem Shear Strength at Footing 31
E14-4.7.2.2 Evaluate Stem Flexural Strength at Footing 32
E14-4.7.2.3 Transfer of Force at Base of Stem 34
E14-4.7.3 Temperature and Shrinkage Steel 34
E14-4.7.3.1 Temperature and Shrinkage Steel for Footing 34
E14-4.7.3.2 Temperature and Shrinkage Steel of Stem 35
E14-4.8 Summary of Results 36
E14-4.8.1 Summary of External Stability 36
E14-4.8.2 Summary of Wall Strength Design 36
E14-4.8.3 Drainage Design 36
E14-4.9 Final Cast-In-Place Concrete Wall Schematic 37

E14-4 Cast-In-Place Concrete Cantilever Wall on Piles, LRFD

General

This example shows design calculations for a cast-in-place (CIP) concrete wall supported on piles conforming to the LRFD Bridge Design Specifications and the WisDOT Bridge Manual. ***(Example is current through LRFD Seventh Edition - 2016 Interim)***

Sample design calculations for pile capacities and wall strength design will be presented. The overall stability and settlement calculations will not be shown in this example, but are required.

Design steps presented in 14.5.2.1 are used for the wall design.

E14-4.1 Establish Project Requirements

The CIP concrete wall shown in Figure E14-4.1-1 will be designed appropriately to accommodate a horizontal backslope. External stability, overall stability and wall strength are the designer's (WisDOT/Consultant) responsibility.

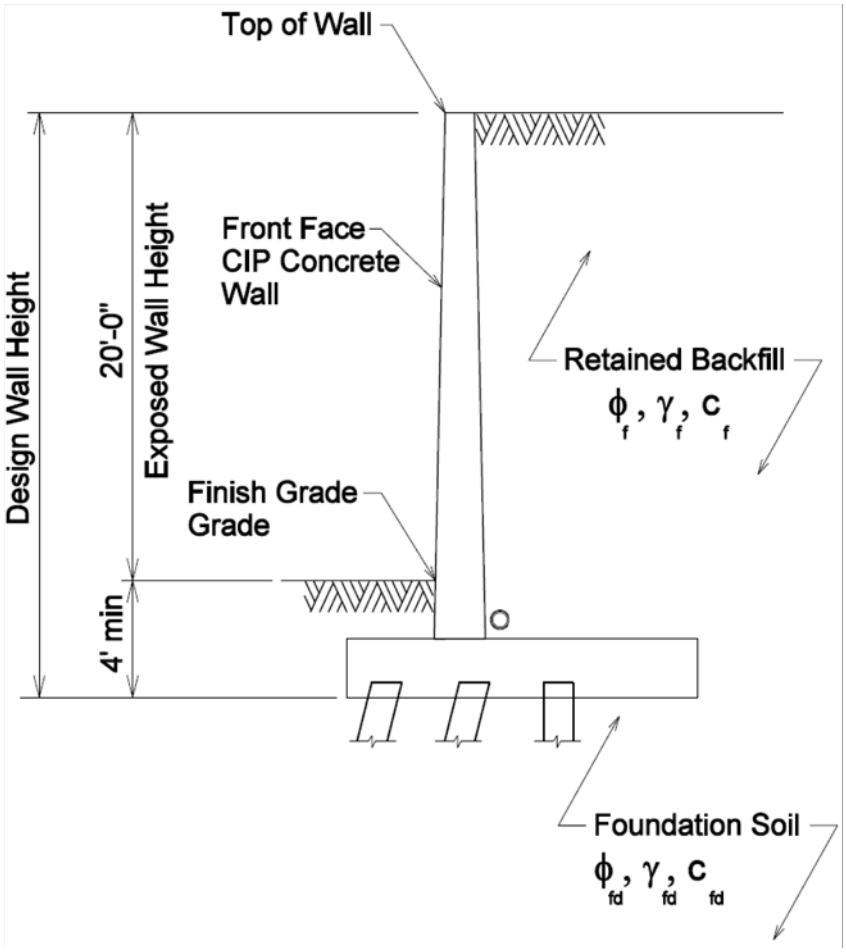

Figure E14-4.1-1
CIP Concrete Wall on Piles

E14-4.2 Design Parameters

Project Parameters

$Design_Life = 75$ years — Wall design life (min) **LRFD [11.5.1]**

Soil Properties (From Geotechnical Site Investigation Report)

Designer to determine if long-term or short-term soil strength parameters govern external stability.

Backfill Soil Design Parameters

$\phi_f = 32$ deg — Angle of internal friction

$\gamma_f = 0.120$ — Unit weight, kcf

$c_f = 0$ — Cohesion, ksf

$\delta = 17$ deg — Friction angle between fill and wall

Note: Per WisDOT Bridge Manual and Standard Specifications, structural backfill shall be granular and non-expansive.

ϕ_f= 32 degrees is used for this example, however ϕ_f=30 degrees is the maximum that should be used without testing.

Foundation Soil Design Parameters

$\phi_{fd} = 29$ deg — Angle of internal friction

$\gamma_{fd} = 0.110$ — Unit of weight, kcf

$c_{fd} = 0$ — Cohesion, ksf

Reinforced Concrete Parameters

$f'_c = 3.5$ — Concrete compressive design strength, ksi (14.5.9)

$\gamma_c = 0.150$ $\quad w_c = \gamma_c$ — Unit weight of concrete, ksf

$E_c = 33000\, w_c^{1.5} \sqrt{f'_c}$ — Modulus of elasticity of concrete, ksi **LRFD [C5.4.2.4]**

$\boxed{E_c = 3587}$ ksi

$f_y = 60$ — Yield strength of reinforcing bars, ksi (14.5.9)

$E_s = 29000$ — Modulus of elasticity of reinforcing bars, ksi

Live Load Surcharge Parameters

Live load surcharge shall be used when vehicular load is located within H/2 of the backface of the wall **LRFD [3.11.6.4].** The equivalent height of soil for vehicular load, H_{eq}, used for surcharge loads shall be in accordance to **LRFD [Table 3.11.6.4-2]**. However, WisDOT policy for most cases requires an equivalent height of 2.0 feet. The following procedure is used for determining live load surcharge:

$L_{traffic} = 100.00$ Distance from wall backface to edge of traffic, ft

$\frac{H}{2} = 12.00$ Distance from wall backface where live load surcharge shall be considered in the wall design, ft

Note: The wall height used is the exposed height plus an assumed 4 feet embedment ($H=H_e+4$ feet).

Shall live load surcharge be included? check = "NO"

$h_{eq} = 0.833$ Equivalent height of soil for surcharge load, ft (14.4.5.4.2)

WisDOT Policy: Wall with live load from traffic use 2.0 feet (240 psf) and walls without traffic use 0.833 feet (100 psf)

E14-4.3 Define Wall Geometry

Wall Geometry

$H_e = 20.00$ Exposed wall height, ft

$D_f = 4.00$ Footing cover, ft (WisDOT policy 4'-0" minimum)

$H = H_e + D_f$ Design wall height, ft

$T_t = 1.00$ Stem thickness at top of wall, ft

$b_1 = 0.25$ Front wall batter, in/ft (b_1H:12V)

$b_2 = 0.50$ Back wall batter, in/ft (b_2H:12V)

$\beta = 0.00$ deg Inclination of ground slope behind face of wall, deg (horizontal)

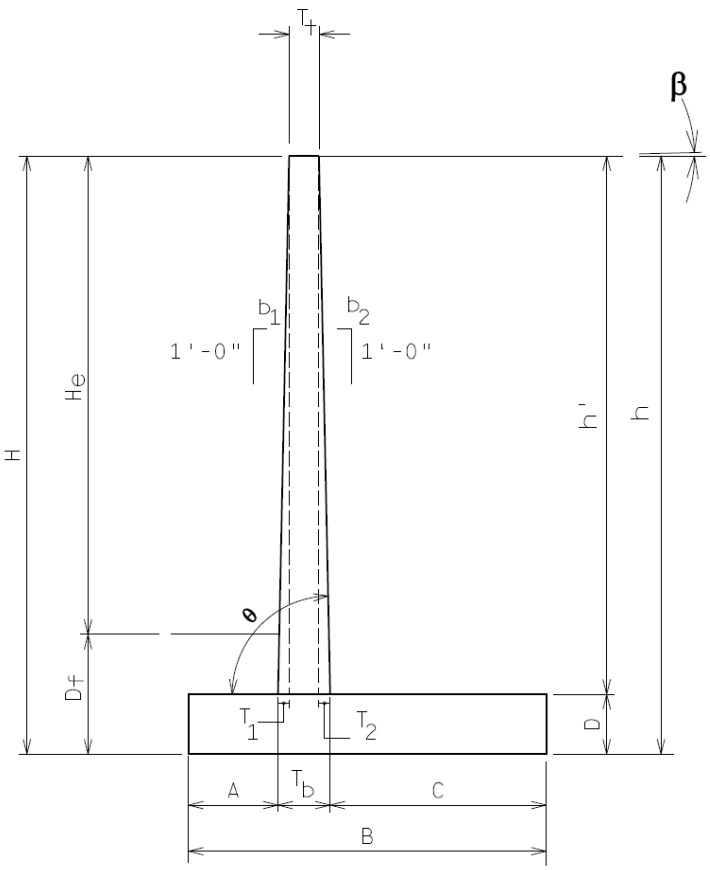

Figure E14-4.3-1
CIP Concrete Wall Geometry

Preliminary Wall Dimensioning

Selecting the most optimal wall configuration is an iterative process and depends on site conditions, cost considerations, wall geometry and aesthetics. For this example, the iterative process has been completed and the final wall dimensions are used for design checks.

H = 24.0	Design wall height, ft
B = 12.00	Footing base width, ft (2/5H to 3/5H)
A = 4.75	Toe projection, ft (H/8 to H/5)
D = 2.50	Footing thickness, ft (H/8 to H/5)

WisDOT policy:

H≤10'-0"	D_{min}=1'-6"
H>10'-0"	D_{min}=2'-0"
On Piles	D_{min}=2'-0"

Other Wall Dimensioning

$h' = H - D$	Stem height, ft	$h' = 21.5$
$T_1 = b_1 \frac{h'}{12}$	Stem front batter width, ft	$T_1 = 0.448$
$T_2 = b_2 \frac{h'}{12}$	Stem back batter width, ft	$T_2 = 0.896$
$T_b = T_1 + T_t + T_2$	Stem thickness at bottom of wall, ft	$T_b = 2.34$
$C = B - A - T_b$	Heel projection, ft	$C = 4.91$
$\theta = \text{atan}\left(\frac{12}{b_2}\right)$	Angle of back face of wall to horizontal	$\theta = 87.6$ deg
$b = 12$	Concrete strip width for design, in	
$h = H + (T_2 + C)\tan(\beta)$	Retained soil height, ft	$h = 24.0$

Pile Dimensioning

$y_{p1} = 1.25$	Distance from Point 'O' to centerline pile row 1, ft
$PS1 = 2.75$	Distance from centerline pile row 1 to centerline pile row 2, ft
$PS2 = 3.00$	Distance from centerline pile row 2 to centerline pile row 3, ft
$P_1 = 8.00$	Spacing between piles in row 1, ft
$P_2 = 8.00$	Spacing between piles in row 2, ft
$P_3 = 8.00$	Spacing between piles in row 3, ft

Pile Parameters (From Geotechnical Site Investigation Report, assuming HP12x53)

$Pile_Axial = 220$	Pile axial capacity (factored), kips
$pile_batter = 4$	Pile batter (pile_batterV:1H)
$H_{r1} = 11$	Pile row 1 lateral capacity (factored), kips*
$H_{r2} = 11$	Pile row 2 lateral capacity (factored), kips*
$H_{r3} = 14$	Pile row 3 lateral capacity (factored), kips*
$B_{xx} = 12.05$	Pile flange width (normal to wall alignment) dimension, in
$B_{yy} = 11.78$	Pile depth (perpendicular to wall alignment) dimension, in

* Based on LPILE or Broms' Method ϕ=1.0

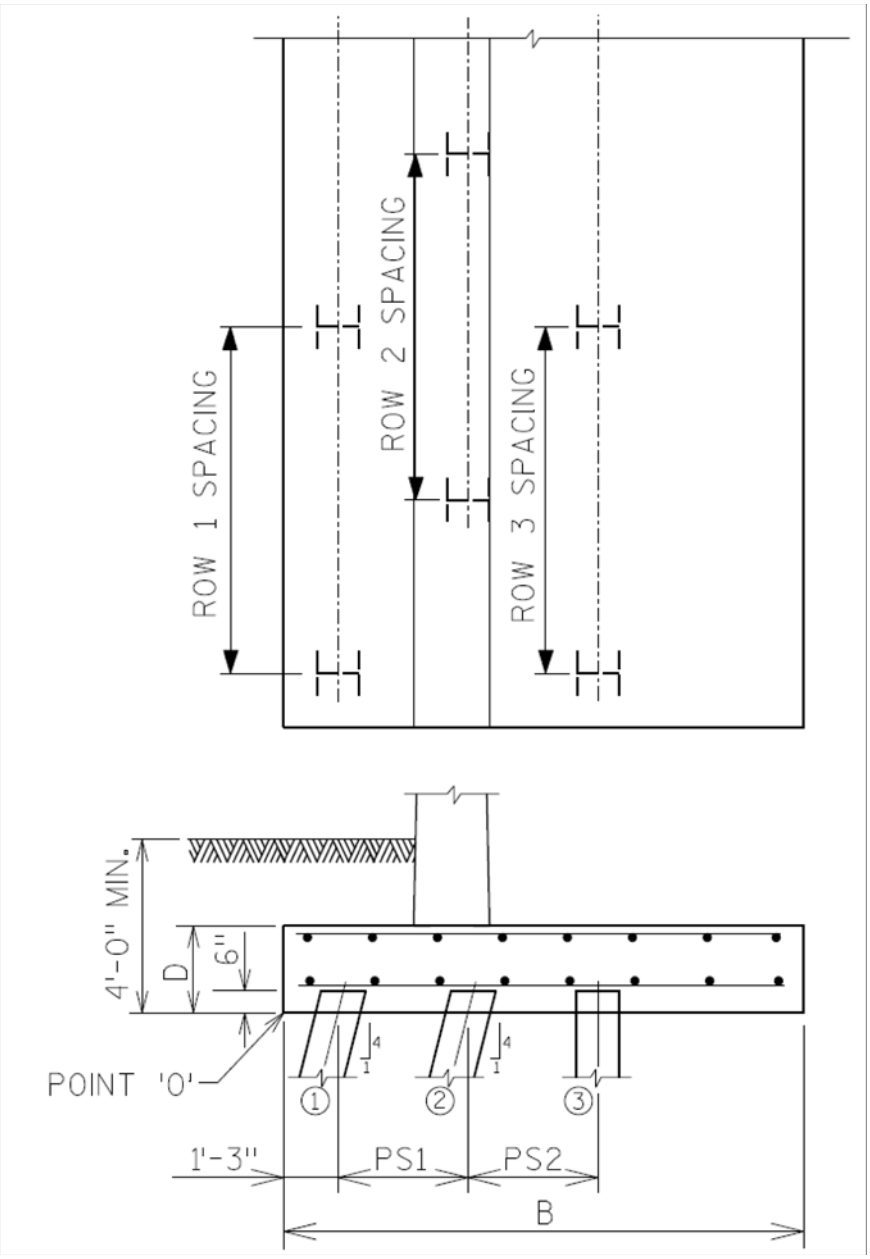

Figure E14-4.3-2
CIP Concrete Pile Geometry

E14-4.4 Permanent and Transient Loads

In this example, load types DC (dead load components), EV (vertical earth pressure), EH (horizontal earth pressure) and LS (live load surcharge) will be used. Passive resistance of the footing will be ignored.

E14-4.4.1 Compute Active Earth Pressure Coefficient

Compute the coefficient of active earth pressure using Coulomb Theory
LRFD [Eq 3.11.5.3-1]

$\phi_f = 32.0$ deg

$\beta = 0.0$ deg

$\theta = 87.6$ deg

$\delta = 17.0$ deg

$$k_a = \frac{\sin(\theta + \phi_f)^2}{\Gamma \sin(\theta)^2 \sin(\theta - \delta)}$$

$$\Gamma = \left(1 + \sqrt{\frac{\sin(\phi_f + \delta)\ \sin(\phi_f - \beta)}{\sin(\theta - \delta)\ \sin(\theta + \beta)}}\right)^2 \qquad \boxed{\Gamma = 2.727}$$

$$k_a = \frac{\sin(\theta + \phi_f)^2}{\Gamma \sin(\theta)^2 \sin(\theta - \delta)} \qquad \boxed{k_a = 0.294}$$

E14-4.4.2 Compute Pile Group Properties

Compute the distance from Point 'O' to the pile row centerlines

$y_{p1} = 1.25$ $\boxed{y_{p1} = 1.25}$ ft

$y_{p2} = y_{p1} + PS1$ $\boxed{y_{p2} = 4.00}$ ft

$y_{p3} = y_{p1} + PS1 + PS2$ $\boxed{y_{p3} = 7.00}$ ft

Compute the effective number of piles in each pile row and overall

$$NP_1 = \begin{cases} \dfrac{1}{P_1} & \text{if } P_1 > 0 \\ 0 & \text{otherwise} \end{cases}$$ $\boxed{NP_1 = 0.13}$ piles/ft

$$NP_2 = \begin{cases} \dfrac{1}{P_2} & \text{if } P_2 > 0 \\ 0 & \text{otherwise} \end{cases}$$ $\boxed{NP_2 = 0.13}$ piles/ft

$$NP_3 = \begin{cases} \dfrac{1}{P_3} & \text{if } P_3 > 0 \\ 0 & \text{otherwise} \end{cases}$$ $\boxed{NP_3 = 0.13}$ piles/ft

$NP = NP_1 + NP_2 + NP_3$ $\boxed{NP = 0.38}$ piles/ft

Compute the centroid of the pile group

$$yy = \begin{cases} \dfrac{y_{p1}\,NP_1 + y_{p2}\,NP_2 + y_{p3}\,NP_3}{NP} & \text{if } NP > 0 \\ 0 & \text{otherwise} \end{cases}$$ $\boxed{yy = 4.08}$ ft

Compute the distance from the centroid to the pile row

$d_{p1} = yy - y_{p1}$ $\boxed{d_{p1} = 2.83}$ ft

$d_{p2} = yy - y_{p2}$ $\boxed{d_{p2} = 0.08}$ ft

$d_{p3} = yy - y_{p3}$ $\boxed{d_{p3} = -2.92}$ ft

Compute the section modulus for each of the pile rows

$$Sxx_1 = \frac{NP_1\,d_{p1}^2 + NP_2\,d_{p2}^2 + NP_3\,d_{p3}^2}{d_{p1}}$$ $\boxed{Sxx_1 = 0.73}$

$$Sxx_2 = \frac{NP_1\,d_{p1}^2 + NP_2\,d_{p2}^2 + NP_3\,d_{p3}^2}{d_{p2}}$$ $\boxed{Sxx_2 = 24.81}$

$$Sxx_3 = \frac{NP_1\,d_{p1}^2 + NP_2\,d_{p2}^2 + NP_3\,d_{p3}^2}{d_{p3}}$$ $\boxed{Sxx_3 = -0.71}$

E14-4.4.3 Compute Unfactored Loads

The forces and moments are computed by using Figures E14-1.3-1 and E14-1.3-3 and by their respective load types **LRFD [Tables 3.4.1-1 and 3.4.1-2]**

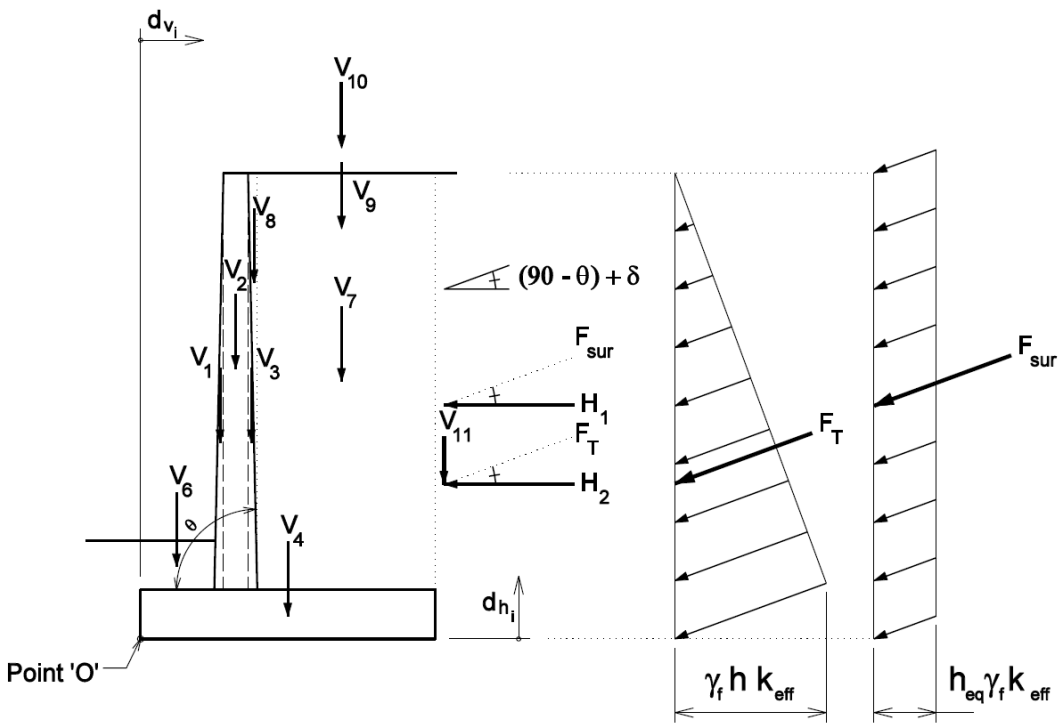

Figure E14-4.4-1
CIP Concrete Wall - External Stability

Active Earth Force Resultant (kip/ft), F_T

$$F_T = \frac{1}{2} \gamma_f h^2 k_a$$

Active earth force resultant (EH) $\boxed{F_T = 10.17}$

Live Load Surcharge Load (kip/ft), F_{sur}

$$F_{sur} = \gamma_f h_{eq} h k_a$$

Live load surcharge resultant (LS) $\boxed{F_{sur} = 0.71}$

Vertical Loads (kip/ft), V_i

$$V_1 = \frac{1}{2} T_1 h' \gamma_c$$

Wall stem front batter (DC) $\boxed{V_1 = 0.72}$

$$V_2 = T_t h' \gamma_c$$

Wall stem (DC) $\boxed{V_2 = 3.23}$

$V_3 = \frac{1}{2} T_2\ h'\ \gamma_c$ Wall stem back batter (DC) $\boxed{V_3 = 1.44}$

$V_4 = D\ B\ \gamma_c$ Wall footing (DC) $\boxed{V_4 = 4.50}$

$V_6 = A\left(D_f - D\right)\gamma_{fd}$ Soil backfill - toe (EV) $\boxed{V_6 = 0.78}$

$V_7 = C\ h'\ \gamma_f$ Soil backfill - heel (EV) $\boxed{V_7 = 12.66}$

$V_8 = \frac{1}{2}\ T_2\ h'\ \gamma_f$ Soil backfill - batter (EV) $\boxed{V_8 = 1.16}$

$V_9 = \frac{1}{2}\left(T_2 + C\right)\left[\left(T_2 + C\right)\tan(\beta)\right]\gamma_f$

Soil backfill - backslope (EV) $\boxed{V_9 = 0.00}$

$V_{10} = h_{eq}\left(T_2 + C\right)\gamma_f$

Live load surcharge (LS) $\boxed{V_{10} = 0.58}$

$V_{11} = F_T \sin[(90\ \text{deg} - \theta) + \delta]$

Active earth force resultant (vertical component - EH) $\boxed{V_{11} = 3.38}$

Moments produced from vertical loads about Point 'O' (kip-ft/ft), MV_i

Moment Arm (ft)		Moment (kip-ft/ft)	
$d_{v1} = A + \frac{2}{3}\ T_1$	$\boxed{d_{v1} = 5.0}$	$MV_1 = V_1\ d_{v1}$	$\boxed{MV_1 = 3.6}$
$d_{v2} = A + T_1 + \frac{T_t}{2}$	$\boxed{d_{v2} = 5.7}$	$MV_2 = V_2\ d_{v2}$	$\boxed{MV_2 = 18.4}$
$d_{v3} = A + T_1 + T_t + \frac{T_2}{3}$	$\boxed{d_{v3} = 6.5}$	$MV_3 = V_3\ d_{v3}$	$\boxed{MV_3 = 9.4}$
$d_{v4} = \frac{B}{2}$	$\boxed{d_{v4} = 6.0}$	$MV_4 = V_4\ d_{v4}$	$\boxed{MV_4 = 27.0}$
$d_{v6} = \frac{A}{2}$	$\boxed{d_{v6} = 2.4}$	$MV_6 = V_6\ d_{v6}$	$\boxed{MV_6 = 1.9}$

$d_{v7} = B - \frac{C}{2}$ $\boxed{d_{v7} = 9.5}$ $MV_7 = V_7\ d_{v7}$ $\boxed{MV_7 = 120.8}$

$d_{v8} = A + T_1 + T_t + \frac{2T_2}{3}$ $\boxed{d_{v8} = 6.8}$ $MV_8 = V_8\ d_{v8}$ $\boxed{MV_8 = 7.9}$

$d_{v9} = A + T_1 + T_t + \frac{2\left(T_2 + C\right)}{3}$ $\boxed{d_{v9} = 10.1}$ $MV_9 = V_9\ d_{v9}$ $\boxed{MV_9 = 0.0}$

$d_{v10} = B - \left(\frac{T_2 + C}{2}\right)$ $\boxed{d_{v10} = 9.1}$ $MV_{10} = V_{10}\ d_{v10}$ $\boxed{MV_{10} = 5.3}$

$d_{v11} = B$ $\boxed{d_{v11} = 12.0}$ $MV_{11} = V_{11}\ d_{v11}$ $\boxed{MV_{11} = 40.5}$

Horizontal Loads (kip/ft), H_i

$H_1 = F_{sur} \cos[(90\ \text{deg} - \theta) + \delta]$ Live load surcharge (LS) $\boxed{H_1 = 0.67}$

$H_2 = F_T \cos[(90\ \text{deg} - \theta) + \delta]$ Active earth force (horizontal component) (EH) $\boxed{H_2 = 9.59}$

Moments produced from horizontal loads about about Point 'O' (kip-ft/ft), MH_i

Moment Arm (ft)		Moment (kip-ft/ft)	
$d_{h1} = \frac{h}{2}$	$\boxed{d_{h1} = 12.0}$	$MH_1 = H_1\ d_{h1}$	$\boxed{MH_1 = 8.0}$
$d_{h2} = \frac{h}{3}$	$\boxed{d_{h2} = 8.0}$	$MH_2 = H_2\ d_{h2}$	$\boxed{MH_2 = 76.8}$

Summary of Unfactored Forces & Moments:

Load			Moment Arm		Moment		LRFD Load Type
Item	Description	Value (kip/ft)	Item	Value (ft)	Item	Value (kip-ft/ft)	
V_1	Wall stem front batter	0.72	d_{v1}	5.0	MV_1	3.6	DC
V_2	Wall stem	3.23	d_{v2}	5.7	MV_2	18.4	DC
V_3	Wall stem back batter	1.44	d_{v3}	6.5	MV_3	9.4	DC
V_4	Wall footing	4.50	d_{v4}	6.0	MV_4	27.0	DC
V_6	Soil backfill - Toe	0.78	d_{v6}	2.4	MV_6	1.9	EV
V_7	Soil backfill - Heel	12.66	d_{v7}	9.5	MV_7	120.8	EV
V_8	Soil backfill - Batter	1.16	d_{v8}	6.8	MV_8	7.9	EV
V_9	Soil backfill - Backslope	0.00	d_{v9}	10.1	MV_9	0.0	EV
V_{10}	Live load surcharge	0.58	d_{v10}	9.1	MV_{10}	5.3	LS
V_{11}	Active earth pressure	3.38	d_{v11}	12.0	MV_{11}	40.5	EH

Table E14-4.4-1
Unfactored Vertical Forces & Moments

Load			Moment Arm		Moment		LRFD Load Type
Item	Description	Value (kip/ft)	Item	Value (ft)	Item	Value (kip-ft/ft)	
H_1	Live load surcharge	0.67	d_{h1}	12.0	MH_1	8.0	LS
H_2	Active earth force	9.59	d_{h2}	8.0	MH_2	76.8	EH

Table E14-4.4-2
Unfactored Horizontal Forces & Moments

E14-4.4.4 Summarize Applicable Load and Resistance Factors

Maximum and minimum load factors shall be used to determine the extreme load effects. WisDOT's policy is to set all the load modifiers to zero($n = 1.0$). Factored loads and moments for each limit state are calculated by applying the appropriate load factors **LRFD [Tables 3.4.1-1 and 3.4.1-2]**. The following load combinations will be used in this example:

Load Combination	γ_{DC}	γ_{EV}	γ_{LS_V}	γ_{LS_H}	γ_{EH}	Application
Strength Ia	0.90	1.00	-	1.75	1.50	Sliding, Eccentricity
Strength Ib	1.25	1.35	1.75	1.75	1.50	Bearing, Wall Strength
Service I	1.00	1.00	1.00	1.00	1.00	Wall Crack Control

Table E14-4.4-3
Load Combinations

Load Combination Assumptions:

- Live load surcharge stabilizing loads (if applicable) are ignored for overturning and sliding analyses. Live load surcharge is used to compute maximum bearing pressure, wall strength and overall (global) stability.
- Minimum horizontal earth pressure ,$\gamma_{EH(min)}$ = 0.9, will not control in this example based on B/H and lateral load inclination, but should be checked.
- Component load factors shall remain consistent throughout calculations. For example, the active earth force resultant (F_T) can be broken into component forces of either $V_{10}\gamma_{EH(max)}$ and $H_2\gamma_{EH(max)}$ or $V_{10}\gamma_{EH(min)}$ and $H_2\gamma_{EH(min)}$, not $V_{10}\gamma_{EH(min)}$ and $H_2\gamma_{EH(max)}$.

The loads discussed and tabulated previously can now be factored by the appropriate load factors and combined to determine the governing limit states for each design check.

E14-4.4.5 Compute Factored Loads and Moments

Unfactored loads by load type (kip/ft)

$V_{DC} = V_1 + V_2 + V_3 + V_4$ $\boxed{V_{DC} = 9.9}$

$V_{EV} = V_6 + V_7 + V_8 + V_9$ $\boxed{V_{EV} = 14.6}$

$V_{LS} = V_{10}$ $\boxed{V_{LS} = 0.6}$

$V_{EH} = V_{11}$ $\boxed{V_{EH} = 3.4}$

$H_{LS} = H_1$ $\boxed{H_{LS} = 0.7}$

$H_{EH} = H_2$ $\boxed{H_{EH} = 9.6}$

Unfactored moments by load type (kip-ft/ft)

$M_{DC} = MV_1 + MV_2 + MV_3 + MV_4$ $\boxed{M_{DC} = 58.4}$

$M_{EV} = MV_6 + MV_7 + MV_8 + MV_9$ $\boxed{M_{EV} = 130.6}$

$M_{LS1} = MV_{10}$ $\boxed{M_{LS1} = 5.3}$

$M_{EH1} = MV_{11}$ $\boxed{M_{EH1} = 40.5}$

$M_{LS2} = MH_1$ $\boxed{M_{LS2} = 8.0}$

$M_{EH2} = MH_2$ $\boxed{M_{EH2} = 76.8}$

Factored vertical loads by limit state (kip/ft)

$V_Ia = n\left(0.90V_{DC} + 1.00V_{EV} + 0.00\ V_{LS} + 1.50\ V_{EH}\right)$ $\boxed{V_Ia = 28.6}$

$V_Ib = n\left(1.25V_{DC} + 1.35V_{EV} + 1.75\ V_{LS} + 1.50\ V_{EH}\right)$ $\boxed{V_Ib = 38.2}$

$V_Ser = n\left(1.00V_{DC} + 1.00V_{EV} + 1.00\ V_{LS} + 1.00\ V_{EH}\right)$ $\boxed{V_Ser = 28.4}$

Factored horizontal loads by limit state (kip/ft)

$H_Ia = n\left(1.75H_{LS} + 1.50H_{EH}\right)$ $\boxed{H_Ia = 15.6}$

$H_Ib = n\left(1.75H_{LS} + 1.50H_{EH}\right)$ $\boxed{H_Ib = 15.6}$

$H_Ser = n\left(1.00H_{LS} + 1.00H_{EH}\right)$ $\boxed{H_Ser = 10.3}$

Factored moments produced by vertical Loads by limit state (kip-ft/ft)

$MV_Ia = n\left(0.90M_{DC} + 1.00M_{EV} + 0.00M_{LS1} + 1.50\ M_{EH1}\right)$ $\boxed{MV_Ia = 243.9}$

$MV_Ib = n\left(1.25M_{DC} + 1.35M_{EV} + 1.75M_{LS1} + 1.50\ M_{EH1}\right)$ $\boxed{MV_Ib = 319.3}$

$MV_Ser = n\left(1.00M_{DC} + 1.00M_{EV} + 1.00M_{LS1} + 1.00\ M_{EH1}\right)$ $\boxed{MV_Ser = 234.8}$

Factored moments produced by horizontal loads by limit state (kip-ft/ft)

$MH_Ia = n\left(1.75M_{LS2} + 1.50\ M_{EH2}\right)$ $\boxed{MH_Ia = 129.1}$

$MH_Ib = n\left(1.75M_{LS2} + 1.50\ M_{EH2}\right)$ $\boxed{MH_Ib = 129.1}$

$MH_Ser = n\left(1.00M_{LS2} + 1.00\ M_{EH2}\right)$ $\boxed{MH_Ser = 84.8}$

Load Combination	Vert. Loads V (kips/ft)	Moments MV (kip-kip/ft)	Horiz. Loads H (kips/ft)	Moments MH (kip-kip/ft)
Strength Ia	28.6	243.9	15.6	129.1
Strength Ib	38.2	319.3	15.6	129.1
Service I	28.4	234.8	10.3	84.8

Table E14-4.4-4
Summary of Factored Loads & Moments

E14-4.5 Evaluate Pile Reactions

Calculated loads for each limit state:

Strength Ia	Strength Ib	Service	
$V_Ia = 28.56$	$V_Ib = 38.15$	$V_Ser = 28.45$	Vertical Load, kip/ft
$H_Ia = 15.56$	$H_Ib = 15.56$	$H_Ser = 10.26$	Horizontal Load, kip/ft
$MV_Ia = 243.90$	$MV_Ib = 319.27$	$MV_Ser = 234.76$	Moments (Vertical) kip-ft/ft
$MH_Ia = 129.13$	$MH_Ib = 129.13$	$MH_Ser = 84.75$	Moments (Horizontal), kip-ft/ft

Compute the eccentricity about Point 'O'

$$e_{toe_Ia} = \frac{MH_Ia - MV_Ia}{V_Ia}$$ Strength Ia $e_{toe_Ia} = -4.02$ ft

$$e_{toe_Ib} = \frac{MH_Ib - MV_Ib}{V_Ib}$$ Strength Ib $e_{toe_Ib} = -4.98$ ft

$$e_{toe_Ser} = \frac{MH_Ser - MV_Ser}{V_Ser}$$ Service $e_{toe_Ser} = -5.27$ ft

Compute the eccentricity about the neutral axis of the pile group

$e_{NA_Ia} = yy + e_{toe_Ia}$ Strength Ia $e_{NA_Ia} = 0.07$ ft

$e_{NA_Ib} = yy + e_{toe_Ib}$ Strength Ib $e_{NA_Ib} = -0.90$ ft

$e_{NA_Ser} = yy + e_{toe_Ser}$ Service $e_{NA_Ser} = -1.19$ ft

Compute the moment about the neutral axis of the pile group

$M_{NA_Ia} = V_Ia\ e_{NA_Ia}$ Strength Ia $M_{NA_Ia} = 1.9$ kip-ft/ft

$M_{NA_Ib} = V_Ib\ e_{NA_Ib}$ Strength Ib $M_{NA_Ib} = -34.4$ kip-ft/ft

$M_{NA_Ser} = V_Ser\ e_{NA_Ser}$ Service $M_{NA_Ser} = -33.9$ kip-ft/ft

Compute the pile reactions for each limit state

Strength Ia

$$P_{U1a} = \frac{V_Ia}{NP} + \frac{M_{NA_Ia}}{Sxx_1}$$ $P_{U1a} = 78.7$ kip/pile

$$P_{U2a} = \frac{V_Ia}{NP} + \frac{M_{NA_Ia}}{Sxx_2}$$ $P_{U2a} = 76.2$ kip/pile

$$P_{U3a} = \frac{V_Ia}{NP} + \frac{M_{NA_Ia}}{Sxx_3}$$ $P_{U3a} = 73.5$ kip/pile

Strength Ib

$$P_{U1b} = \frac{V_Ib}{NP} + \frac{M_{NA_Ib}}{Sxx_1}$$ $P_{U1b} = 54.6$ kip/pile

$$P_{U2b} = \frac{V_Ib}{NP} + \frac{M_{NA_Ib}}{Sxx_2}$$ $P_{U2b} = 100.4$ kip/pile

$$P_{U3b} = \frac{V_Ib}{NP} + \frac{M_{NA_Ib}}{Sxx_3}$$ $P_{U3b} = 150.2$ kip/pile

Service

$$P_{U1_Ser} = \frac{V_Ser}{NP} + \frac{M_{NA_Ser}}{Sxx_1}$$ $P_{U1_Ser} = 29.5$ kip/pile

$$P_{U2_Ser} = \frac{V_Ser}{NP} + \frac{M_{NA_Ser}}{Sxx_2}$$ $P_{U2_Ser} = 74.5$ kip/pile

$$P_{U3_Ser} = \frac{V_Ser}{NP} + \frac{M_{NA_Ser}}{Sxx_3}$$ $P_{U3_Ser} = 123.6$ kip/pile

Load Combination	Row 1 (kip/pile)	Row 2 (kip/pile)	Row 3 (kip/pile)
Strength Ia	78.7	76.2	73.5
Strength Ib	54.6	100.4	150.2
Service I	29.5	74.5	123.6

Table E14-4.5-1
Summary of Factored Pile Reactions (Vertical)

E14-4.6 Evaluate External Stability of Wall

Three potential external failure mechanisms will be considered in this example. These failures include pile bearing resistance, limiting eccentricity and lateral resistance. Global (overall) stability requirements are assumed to have been satisfied in prior calculations. Design calculations will be carried out for the governing limit states only.

E14-4.6.1 Pile Bearing Resistance

Axial and lateral pile capacities from Geotechnical Site Investigation Report:

$Pile_Axial = 220$ Pile axial capacity, kips

$pile_batter = 4$ Pile batter (pile_batter V:1H)

$H_{r1} = 11.00$ Battered pile row 1 lateral capacity, kips/pile

$H_{r2} = 11.00$ Battered pile row 2 lateral capacity, kips/pile

$H_{r3} = 14.00$ Vertical pile row 3 lateral capacity, kips/pile

Determine the horizontal and vertical components of the battered pile

$pile_angle = atan\left(\frac{1}{pile_batter}\right)$ $\boxed{pile_angle = 14.0\ deg}$

$P_{Rb_H} = Pile_Axial \sin(pile_angle)$ $\boxed{P_{Rb_H} = 53.4}$ kips/pile

$P_{Rb_V} = Pile_Axial \cos(pile_angle)$ $\boxed{P_{Rb_V} = 213.4}$ kips/pile

Calculate axial capacity of battered piles

$P_R = P_{Rb_V}$ $\boxed{P_R = 213.4}$ kips/pile

$P_u = \max(P_{U1a}, P_{U2a}, P_{U1b}, P_{U2b})$ $\boxed{P_u = 100.4}$ kips/pile

$CDR_{Brg_B_Pile} = \frac{P_R}{P_u}$ $\boxed{CDR_{Brg_B_Pile} = 2.13}$

Is the $CDR \geq 1.0$? $\boxed{check = \text{"OK"}}$

Calculate axial capacity of vertical piles

$P_R = Pile_Axial$ $\boxed{P_R = 220.0}$

$P_u = \max(P_{U3a}, P_{U3b})$ $\boxed{P_u = 150.2}$

$CDR_{Brg_V_Pile} = \frac{P_R}{P_u}$ $\boxed{CDR_{Brg_V_Pile} = 1.46}$

Is the $CDR \geq 1.0$? $\boxed{check = \text{"OK"}}$

E14-4.6.2 Pile Sliding Resistance

For sliding failure, the horizontal force effects, H_u, is checked against the sliding resistance, H_R, where $H_R = \phi H_n$. The following calculations are based on **Strength Ia**:

Factored Lateral Force, H_u

$H_u = H_Ia$ $\boxed{H_u = 15.6}$ kip/ft

Sliding Resistance, H_R

It is assumed that the P-y method was used for the pile analysis (LPILE), thus group effects shall be considered. Calculate sliding capacity of the effective pile group per **LRFD [Table-10.7.2.4-1]:**

$B_{yy} = 11.78$ Depth of pile, in

$$\frac{PS1 + PS2}{\frac{B_{yy}}{12}} = 5.86$$ Say:5B

Note: It was assumed that pile row 1 and 3 are aligned throughout the pile group and that pile row 2 will not effect the lateral pile group resistance. Pile row 1 and 3 will then be applied row 1 and 2 "5B" multipliers, respectfully.

"5B" Pile multipliers

$row1 = 1.00$

$row2 = 1.00$

$row3 = 0.80$

Lateral group resistance

$H_{R1} = row1\ H_{r1}\ NP_1 + row2\ H_{r2}\ NP_2 + row3\ H_{r3}\ NP_3$ $\boxed{H_{R1} = 4.15}$ kip/ft

Batter resistance

$H_{R2} = P_{Rb_H}\left(NP_1 + NP_2\right)$ $\boxed{H_{R2} = 13.34}$ kip/ft

Compute factored resistance against failure by sliding, R_R

$H_R = H_{R1} + H_{R2}$ $\boxed{H_R = 17.49}$ kip/ft

<u>Capacity:Demand Ratio (CDR)</u>

$$CDR_{Sliding} = \frac{H_R}{H_u}$$ $\boxed{CDR_{Sliding} = 1.12}$

Is the $CDR \geq 1.0$? $\boxed{check = \text{"OK"}}$

E14-4.7 Evaluate Wall Structural Design

Note: CIP concrete walls are a non-proprietary wall system and the structural design computations shall be performed by the wall designer.

Wall structural design computations for shear and flexure will be considered in this example. Crack control and temperature and shrinkage considerations will also be included.

E14-4.7.1 Evaluate Wall Footing

Investigate shear and moment requirements

E14-4.7.1.1 Evalute One-Way Shear

Design for one-way shear in only the transverse direction.

Compute the effective shear depth, d_v, for the heel:

$cover = 2.0$ in

$s = 9.0$ in (bar spacing)

$Bar_{No} = 7$ (transverse bar size)

$Bar_D = 0.875$ in (transverse bar diameter)

$Bar_A = 0.600$ in^2 (transverse bar area)

$$A_{s_heel} = \frac{Bar_A}{\frac{s}{12}}$$ $A_{s_heel} = 0.80$ in^2/ft

$$d_{s_heel} = D\ 12 - cover - \frac{Bar_D}{2}$$ $d_{s_heel} = 27.6$ in

$\alpha_1 = 0.85$ (for $f'_c \le 10.0$ ksi) **LRFD [5.7.2.2]**

$$a_heel = \frac{A_{s_heel}\ f_y}{\alpha_1\ f'_c\ b}$$ $a_heel = 1.3$ in

$$d_{v1} = d_{s_heel} - \frac{a_heel}{2}$$ $d_{v1} = 26.9$ in

$$d_{v2} = 0.9\ d_{s_heel}$$ $d_{v2} = 24.8$ in

$$d_{v3} = 0.72\ D\ 12$$ $d_{v3} = 21.6$ in

$$d_{v_heel} = \max(d_{v1}, d_{v2}, d_{v3})$$ $d_{v_heel} = 26.9$ in

Compute the effective shear depth, d_v, for the toe

$cover = 6.0$ in

$s = 9.0$ in (bar spacing)

$Bar_{No} = 7$ (transverse bar size)

$Bar_D = 0.88$ in (transverse bar diameter)

$Bar_A = 0.60$ in^2 (transverse bar area)

$$A_{s_toe} = \frac{Bar_A}{\frac{s}{12}}$$ $A_{s_toe} = 0.80$ in^2/ft

$$d_{s_toe} = D\ 12 - cover - \frac{Bar_D}{2}$$ $d_{s_toe} = 23.6$ in

$$a_toe = \frac{A_{s_toe}\ f_y}{\alpha_1\ f'_c\ b}$$ $a_toe = 1.3$ in

$$d_{v1} = d_{s_toe} - \frac{a_toe}{2}$$ $d_{v1} = 22.9$ in

$$d_{v2} = 0.9\ d_{s_toe}$$ $d_{v2} = 21.2$ in

$$d_{v_toe} = \max(d_{v1}, d_{v2})$$ $d_{v_toe} = 22.9$ in

Determine the distance from Point 'O' to the critical sections:

$$y_crit_toe = A\ 12 - d_{v_toe}$$ $y_crit_toe = 34.1$ in

$$y_crit_heel = B\ 12 - C\ 12 + d_{v_heel}$$ $y_crit_heel = 112.0$ in

Determine the distance from Point 'O' to the pile limits:

$$y_{v1_neg} = y_{p1}\ 12 - \frac{B_{yy}}{2}$$ $y_{v1_neg} = 9.1$ in

$$y_{v1_pos} = y_{p1}\ 12 + \frac{B_{yy}}{2}$$ $y_{v1_pos} = 20.9$ in

$$y_{v2_neg} = y_{p2}\ 12 - \frac{B_{yy}}{2}$$ $y_{v2_neg} = 42.1$ in

$$y_{v2_pos} = y_{p2}\ 12 + \frac{B_{yy}}{2}$$ $y_{v2_pos} = 53.9$ in

$$y_{v3_neg} = y_{p3}\ 12 - \frac{B_{yy}}{2}$$ $y_{v3_neg} = 78.1$ in

$$y_{v3_pos} = y_{p3}\ 12 + \frac{B_{yy}}{2}$$ $y_{v3_pos} = 89.9$ in

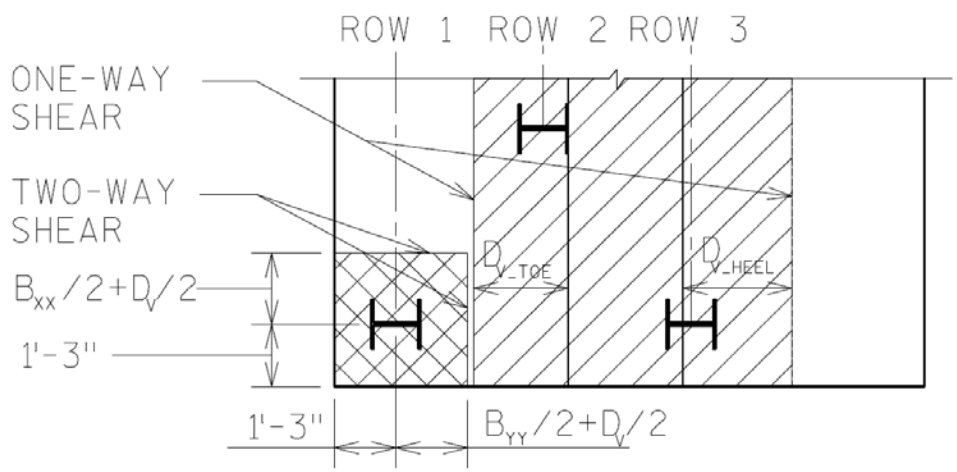

Figure E14-4.7-1
Partial Footing Plan for Critical Shear Sections

Determine if the pile rows are "Outside", "On", or "Inside" the critical sections

Since the pile row 1 falls "Outside" the critical sections, the full row pile reaction will be used for shear

$$P_{U1} = \max(P_{U1a}, P_{U1b})$$ $P_{U1} = 78.7$ kip

$$V_{u_Pile1} = 1.0\ (P_{U1}\ NP_1)$$ $V_{u_Pile1} = 9.8$ kip/ft

Since the pile row 2 and 3 falls "Inside" the critical sections, none of the row pile reactions will be used for shear

The load applied to the critical section is based on the proportion of the piles located outside of the critical toe or heel section. In this case, pile row 1 falls outside the toe critical section and the full row pile reaction will be used for shear.

$V_u = V_{u_Pile1}$ $\boxed{V_u = 9.8}$ kip/ft

Nominal shear resistance, V_n, is taken as the lesser of V_{n1} and V_{n2} **LRFD [5.8.3.3]**

$V_{n1} = V_c$ **LRFD [Eq 5.8.3.3-1]**

where: $V_c = 0.0316\ \beta\lambda\sqrt{f'_c}\ b_v\ d_v$

$V_{n2} = 0.25\ f'_c\ b_v\ d_v$ **LRFD [Eq 5.8.3.3-2]**

Nominal one-way action shear resistance for structures without transverse reinforcement, V_n, is taken as the lesser of V_{n1} and V_{n2}

$\beta = 2.0$ $\lambda = 1.0$ (normal wgt. conc.) **LRFD [5.4.2.8]**

$V_c = 0.0316\ \beta\ \lambda\sqrt{f'_c}\ b\ d_{v_toe}$ $\boxed{V_c = 32.5}$ kip/ft

$V_{n1} = V_c$ $\boxed{V_{n1} = 32.5}$ kip/ft

$V_{n2} = 0.25\ f'_c\ b\ d_{v_toe}$ $\boxed{V_{n2} = 240.3}$ kip/ft

$V_n = \min(V_{n1}, V_{n2})$ $\boxed{V_n = 32.5}$ kip/ft

$\phi_v = 0.90$

$V_r = \phi_v\ V_n$ $\boxed{V_r = 29.2}$ kip/ft

$\boxed{V_u = 9.8}$ kip/ft

Is V_u less than V_r? $\boxed{\text{check} = \text{"OK"}}$

E14-4.7.1.2 Evaluate Two-Way Shear

For two-way action around the maximum loaded pile, the pile critical perimeter, b_o, is located a minimum of $0.5d_v$ from the perimeter of the pile. If portions of the critical perimeter are located off the footing, that portion of the critical perimeter is limited by the footing edge.

Two-way action should be checked for the maximum loaded pile.

$V_u = \max(P_{U1a}, P_{U2a}, P_{U3a}, P_{U1b}, P_{U2b}, P_{U3b})$ $\boxed{V_u = 150.2}$ kip

Determine the location of the pile critical perimeter. Assume that the critical section is outside of the footing and only include the portion of the shear perimeter is located within the footing:

$$b_{o_xx} = 1.25\ 12 + \frac{B_{xx}}{2} + \frac{d_{v_toe}}{2}$$ $b_{o_xx} = 32.5$ in

$$b_{o_yy} = 1.25\ 12 + \frac{B_{yy}}{2} + \frac{d_{v_toe}}{2}$$ $b_{o_yy} = 32.3$ in

$$\beta_{c_pile} = \frac{b_{o_xx}}{b_{o_yy}}$$ $\beta_{c_pile} = 1.004$ in

$$b_{o_pile} = b_{o_xx} + b_{o_yy}$$ $b_{o_pile} = 64.8$ in

Nominal shear resistance, V_n, is taken as the lesser of V_{n1} and V_{n2} **LRFD [5.13.3.6.3]**

λ = 1.0 (normal wgt. conc.) **LRFD [5.4.2.8]**

$$V_{n1} = \left(0.063 + \frac{0.126}{\beta_{c_pile}}\right) \lambda \sqrt{f'_c}\ b_{o_pile}\ d_{v_toe}$$ $V_{n1} = 523.1$ kip/ft

$$V_{n2} = 0.126\ \lambda \sqrt{f'_c}\ b_{o_pile}\ d_{v_toe}$$ $V_{n2} = 349.7$ kip/ft

$$V_n = \min(V_{n1}, V_{n2})$$ $V_n = 349.7$ kip/ft

$$V_r = \phi_v V_n$$ $V_r = 314.7$ kip/ft

$V_u = 150.2$ kip/ft

Is V_u less than V_r? check = "OK"

E14-4.7.1.3 Evaluate Top Transverse Reinforcement Strength

Top transverse reinforcement strength is determined by assuming the heel acts as a cantilever member supporting its own weight and loads acting above it. Pile reactions may be used to decrease this load.

For **Strength Ib**:

$$V_u = 1.25\left(\frac{C}{B} V_4\right) + 1.35\left(V_7 + V_8 + V_9\right) + 1.75\left(V_{10}\right) + 1.50\left(V_{11}\right)$$

$V_u = 27.0$ kip/ft

$$M_u = V_u \frac{C}{2}$$ $M_u = 66.3$ kip-ft/ft

Calculated the capacity of the heel in flexure at the face of the stem:

$$M_n = A_{s_heel} f_y \left(d_{s_heel} - \frac{a_heel}{2}\right) \frac{1}{12}$$ $M_n = 107.6$ kip-ft/ft

Calculate the flexural resistance factor ϕ_F:

$\beta_1 = 0.85$

$c = \dfrac{a_heel}{\beta_1}$ $\boxed{c = 1.58}$ in

$$\phi_F = \begin{cases} 0.75 & \text{if } \dfrac{d_{s_heel}}{c} < \dfrac{5}{3} \\ 0.65 + 0.15\left(\dfrac{d_{s_heel}}{c} - 1\right) & \text{if } \dfrac{5}{3} \le \dfrac{d_{s_heel}}{c} \le \dfrac{8}{3} \\ 0.90 & \text{otherwise} \end{cases}$$

$\boxed{\phi_F = 0.90}$

based on f_y = 60 ksi, **LRFD [5.5.4.2.1], [Table C5.7.2.1-1]**

Note: if $\phi_F = 0.75$ Section is compression-controlled
if $0.75 < \phi_F < 0.90$ Section is in transition
if $\phi_F = 0.90$ Section is tension-controlled

Calculate the flexural factored resistance, M_r:

$M_r = \phi_F M_n$ $\boxed{M_r = 96.8}$ kip-ft/ft

$\boxed{M_u = 66.3}$ kip-ft/ft

Is M_u less than M_r? $\boxed{\text{check} = \text{"OK"}}$

Check the minimum reinforcement limits in accordance with **LRFD [5.7.3.3.2]**:

$f_r = 0.24\,\lambda\sqrt{f'_c}$ = modulus of rupture (ksi) **LRFD [5.4.2.6]**

$f_r = 0.24\sqrt{f'_c}$ λ = 1.0 (normal wgt. conc.) **LRFD [5.4.2.8]** $\boxed{f_r = 0.449}$ ksi

$I_g = \dfrac{1}{12}\, b\,(D\ 12)^3$ $\boxed{I_g = 27000}$ in^4

$y_t = \dfrac{1}{2}\, D\ 12$ $\boxed{y_t = 15.00}$ in

$S_c = \dfrac{I_g}{y_t}$ $\boxed{S_c = 1800}$ in^3

$M_{cr} = \gamma_3(\gamma_1 f_r)\, S_c$ therefore, $M_{cr} = 1.1\, f_r\, S_c$

Where:

$\gamma_1 = 1.6$ flexural cracking variability factor

$\gamma_3 = 0.67$ ratio of specified minimum yield strength to ultimate tensile strength of the reinforcement <u>for A615, Grade 60 reinforcement</u>

$M_{cr} = 1.1\ f_r\ S_c\ \frac{1}{12}$ $\boxed{M_{cr} = 74.1}$ kip-ft/ft

$\boxed{1.33\ M_u = 88.2}$ kip-ft/ft

Is M_r greater than the lesser value of M_{cr} and $1.33*M_u$? $\boxed{check = \text{"OK"}}$

E14-4.7.1.4 Evaluate Bottom Transverse Reinforcement Strength

Bottom transverse reinforcement strength is determined by using the maximum pile reaction.

Determine the moment arms

$arm_v1 = A - y_{p1}$ $\boxed{arm_v1 = 3.5}$ ft

$arm_v2 = A - y_{p2}$ $\boxed{arm_v2 = 0.8}$ ft

Determine the moment for **Strength Ia**:

$V_{u_1a} = P_{U1a}\ NP_1$ $\boxed{V_{u_1a} = 9.8}$ kip/ft

$V_{u_2a} = P_{U2a}\ NP_2$ $\boxed{V_{u_2a} = 9.5}$ kip/ft

$M_{u_Ia} = V_{u_1a}\ arm_v1 + V_{u_2a}\ arm_v2$ $\boxed{M_{u_Ia} = 41.6}$ kip-ft/ft

Determine the moment for **Strength Ib**:

$V_{u_1b} = P_{U1b}\ NP_1$ $\boxed{V_{u_1b} = 6.8}$ kip/ft

$V_{u_2b} = P_{U2b}\ NP_2$ $\boxed{V_{u_2b} = 12.5}$ kip/ft

$M_{u_Ib} = V_{u_1b}\ arm_v1 + V_{u_2b}\ arm_v2$ $\boxed{M_{u_Ib} = 33.3}$ kip-ft/ft

Determine the design moment:

$M_u = \max(M_{u_Ia}, M_{u_Ib})$ $\boxed{M_u = 41.6}$ kip-ft/ft

Calculated the capacity of the toe in flexure at the face of the stem:

$M_n = A_{s_toe}\ f_y \left(d_{s_toe} - \frac{a_toe}{2}\right) \frac{1}{12}$ $\boxed{M_n = 91.6}$ kip-ft/ft

Calculate the flexural resistance factor ϕ_F:

$\beta_1 = 0.85$

$c = \frac{a_toe}{\beta_1}$ $\boxed{c = 1.58}$ in

$$\phi_F = \begin{cases} 0.75 & \text{if } \dfrac{d_{s_toe}}{c} < \dfrac{5}{3} \\ 0.65 + 0.15\left(\dfrac{d_{s_toe}}{c} - 1\right) & \text{if } \dfrac{5}{3} \le \dfrac{d_{s_toe}}{c} \le \dfrac{8}{3} \\ 0.90 & \text{otherwise} \end{cases}$$

$\phi_F = 0.90$

based on f_y = 60 ksi, **LRFD [5.5.4.2.1], [Table C5.7.2.1-1]**

Calculate the flexural factored resistance, M_r:

$M_r = \phi_F M_n$ $M_r = 82.4$ kip-ft/ft

$M_u = 41.6$ kip-ft/ft

Is M_u less than M_r? check = "OK"

Check the minimum reinforcement limits in accordance with **LRFD [5.7.3.3.2]**:

$f_r = 0.24\,\lambda\sqrt{f'_c}$ = modulus of rupture (ksi) **LRFD [5.4.2.6]**

$f_r = 0.24\sqrt{f'_c}$ λ = 1.0 (normal wgt. conc.) **LRFD [5.4.2.8]** $f_r = 0.449$ ksi

$I_g = \dfrac{1}{12}\, b\,(D\ 12)^3$ $I_g = 27000$ in^4

$y_t = \dfrac{1}{2}\, D\ 12$ $y_t = 15.00$ in

$S_c = \dfrac{I_g}{y_t}$ $S_c = 1800$ in^3

$M_{cr} = 1.1\, f_r\, S_c\, \dfrac{1}{12}$ from E14-4.7.1.3 $M_{cr} = 74.1$ kip-ft/ft

$1.33\, M_u = 55.3$ kip-ft/ft

Is M_r greater than the lesser value of M_{cr} and $1.33{*}M_u$? check = "OK"

E14-4.7.1.5 Evaluate Longitudinal Reinforcement Strength

The structural design of the longitudinal reinforcement, assuming the footing acts as a continuous beam over pile supports, is calculated using the maximum pile reactions.

Compute the effective shear depth, d_v ,for the longitudinal reinforcement

$cover = 6.0$ in

$s = 12.0$ in (bar spacing)

$Bar_{No} = 5$ (longitudinal bar size)

$Bar_D = 0.625$ in (longitudinal bar diameter)

$Bar_A = 0.310$ in^2 (longitudinal bar area)

$$A_{s_long} = \frac{Bar_A}{\frac{s}{12}}$$ $A_{s_long} = 0.31$ in^2/ft

$$d_s = D\ 12 - cover - Bar_{D_toe} - \frac{Bar_D}{2}$$ $d_s = 22.8$ in

$$a_long = \frac{A_{s_long}\ f_y}{\alpha_1\ f'_c\ b}$$ $a_long = 0.5$ in

$$d_{v1} = d_s - \frac{a_long}{2}$$ $d_{v1} = 22.6$ in

$$d_{v2} = 0.9\ d_s$$ $d_{v2} = 20.5$ in

$$d_{v3} = 0.72\ D\ 12$$ $d_{v3} = 21.6$ in

$$d_{v_long} = \max(d_{v1}, d_{v2}, d_{v3})$$ $d_{v_long} = 22.6$ in

Calculate the design moment using a uniform vertical load:

$$L_{pile} = \max(P_1, P_2, P_3)$$ $L_{pile} = 8.0$ ft

$$w_u = \frac{V_lb}{B}$$ $w_u = 3.2$ kip/ft/ft

$$M_u = \frac{w_u\ L_{pile}^2}{10}$$ $M_u = 20.3$ kip-ft/ft

Calculated the capacity of the toe in flexure at the face of the stem:

$$M_n = A_{s_long}\, f_y \left(d_s - \frac{a_long}{2}\right) \frac{1}{12}$$ $M_n = 35.0$ kip-ft/ft

Calculate the flexural resistance factor ϕ_F:

$$\beta_1 = 0.85$$

$$c = \frac{a_toe}{\beta_1}$$ $c = 1.58$ in

$$\phi_F = \begin{cases} 0.75 & \text{if } \frac{d_s}{c} < \frac{5}{3} \\ 0.65 + 0.15\left(\frac{d_s}{c} - 1\right) & \text{if } \frac{5}{3} \le \frac{d_s}{c} \le \frac{8}{3} \\ 0.90 & \text{otherwise} \end{cases}$$

$\phi_F = 0.90$

based on f_y = 60 ksi, **LRFD [5.5.4.2.1], [Table C5.7.2.1-1]**

Calculate the flexural factored resistance, M_r:

$$M_r = \phi_F\, M_n$$ $M_r = 31.5$ kip-ft/ft

Is M_u less than M_r? check = "OK"

Check the minimum reinforcement limits in accordance with **LRFD [5.7.3.3.2]**:

$f_r = 0.24\, \lambda \sqrt{f'_c}$ = modulus of rupture (ksi) **LRFD [5.4.2.6]**

$f_r = 0.24 \sqrt{f'_c}$ λ = 1.0 (normal wgt. conc.) **LRFD [5.4.2.8]** $f_r = 0.449$ ksi

$$I_g = \frac{1}{12}\, b\, (D\ 12)^3$$ $I_g = 27000$ in^4

$$y_t = \frac{1}{2}\, D\ 12$$ $y_t = 15.00$ in

$$S_c = \frac{I_g}{y_t}$$ $S_c = 1800$ in^3

$$M_{cr} = 1.1\, f_r\, S_c\, \frac{1}{12}$$ from E14-4.7.1.3 $M_{cr} = 74.1$ kip-ft/ft

$1.33\, M_u = 27.1$ kip-ft/ft

Is M_r greater than the lesser value of M_{cr} and 1.33*M_u? check = "OK"

E14-4.7.2 Evaluate Stem Strength

Unfactored Stem Horizontal Loads and Moments:

$H_1 = \gamma_f\, h_{eq}\, h'\, k_a \cos(90\ \text{deg} - \theta + \delta)$ $\boxed{H_1 = 0.6}$ kip/ft

$H_2 = \frac{1}{2}\, \gamma_f\, h'^2\, k_a \cos(90\ \text{deg} - \theta + \delta)$ $\boxed{H_2 = 7.7}$ kip/ft

$M_1 = H_1 \left(\frac{h'}{2}\right)$ $\boxed{M_1 = 6.4}$ kip-ft/ft

$M_2 = H_2 \left(\frac{h'}{3}\right)$ $\boxed{M_2 = 55.2}$ kip-ft/ft

Factored Stem Horizontal Loads and Moments:

for **Strength Ib**:

$H_{u1} = 1.75\, H_1 + 1.50\, H_2$ $\boxed{H_{u1} = 12.6}$ kip/ft

$M_{u1} = 1.75\, M_1 + 1.50\, M_2$ $\boxed{M_{u1} = 94.0}$ kip-ft/ft

for **Service I**:

$H_{u3} = 1.00\, H_1 + 1.00\, H_2$ $\boxed{H_{u3} = 8.3}$ kip/ft

$M_{u3} = 1.00\, M_1 + 1.00\, M_2$ $\boxed{M_{u3} = 61.6}$ kip-ft/ft

E14-4.7.2.1 Evaluate Stem Shear Strength at Footing

$V_u = H_{u1}$ $\boxed{V_u = 12.6}$ kip/ft

Nominal shear resistance, V_n, is taken as the lesser of V_{n1} and V_{n2} **LRFD [5.8.3.3]**

$V_{n1} = V_c$ **LRFD [Eq 5.8.3.3-1]**

where: $V_c = 0.0316\, \beta \lambda \sqrt{f'_c}\, b_v\, d_v$

$V_{n2} = 0.25\, f'_c\, b_v\, d_v$ **LRFD [Eq 5.8.3.3-2]**

Compute the shear resistance due to concrete, V_c:

cover = 2.0 in

s = 12.0 in (bar spacing)

$Bar_{No} = 9$ (transverse bar size)

$Bar_D = 1.13$ in (transverse bar diameter)

$Bar_A = 1.00$ in^2 (transverse bar area)

$$A_s = \frac{Bar_A}{\frac{s}{12}}$$ $A_s = 1.00$ in^2/ft

$$d_s = T_b\ 12 - cover - \frac{Bar_D}{2}$$ $d_s = 25.6$ in

$$a = \frac{A_s\ f_y}{\alpha_1\ f'_c\ b}$$ $a = 1.7$ in

$$d_{v1} = d_s - \frac{a}{2}$$ $d_{v1} = 24.7$ in

$$d_{v2} = 0.9\ d_s$$ $d_{v2} = 23.0$ in

$$d_{v3} = 0.72\ T_b\ 12$$ $d_{v3} = 20.3$ in

$$d_v = \max(d_{v1}, d_{v2}, d_{v3})$$ $d_v = 24.7$ in

Nominal shear resistance, V_n, is taken as the lesser of V_{n1} and V_{n2}

$\beta = 2.0$ λ = 1.0 (normal wgt. conc.) **LRFD [5.4.2.8]**

$$V_c = 0.0316\ \beta\ \lambda\sqrt{f'_c}\ b\ d_v$$ $V_c = 35.1$ kip/ft

$$V_{n1} = V_c$$ $V_{n1} = 35.1$ kip/ft

$$V_{n2} = 0.25\ f'_c\ b\ d_v$$ $V_{n2} = 259.6$ kip/ft

$$V_n = \min(V_{n1}, V_{n2})$$ $V_n = 35.1$ kip/ft

$$V_r = \phi_v\ V_n$$ $V_r = 31.6$ kip/ft

$V_u = 12.6$ kip/ft

Is V_u less than V_r? check = "OK"

E14-4.7.2.2 Evaluate Stem Flexural Strength at Footing

$$M_u = M_{u1}$$ $M_u = 94.0$ kip-ft/ft

Calculate the capacity of the stem in flexure at the face of the footing:

$$M_n = A_s\ f_y \left(d_s - \frac{a}{2}\right) \frac{1}{12}$$ $M_n = 123.6$ kip-ft/ft

Calculate the flexural resistance factor ϕ_F:

$\beta_1 = 0.85$

$c = \frac{a}{\beta_1}$ $\boxed{c = 1.98}$ in

$$\phi_F = \begin{cases} 0.75 & \text{if } \frac{d_s}{c} < \frac{5}{3} \\ 0.65 + 0.15\left(\frac{d_s}{c} - 1\right) & \text{if } \frac{5}{3} \le \frac{d_s}{c} \le \frac{8}{3} \\ 0.90 & \text{otherwise} \end{cases}$$

$\boxed{\phi_F = 0.90}$

based on f_y = 60 ksi,
LRFD [5.5.4.2.1], [Table C5.7.2.1-1]

Calculate the flexural factored resistance, M_r:

$M_r = \phi_F M_n$ $\boxed{M_r = 111.2}$ kip-ft/ft

$\boxed{M_u = 94.0}$ kip-ft/ft

Is M_u less than M_r? $\boxed{\text{check} = \text{"OK"}}$

Check the minimum reinforcement limits in accordance with **LRFD [5.7.3.3.2]**:

$f_r = 0.24\,\lambda\sqrt{f'_c}$ = modulus of rupture (ksi) **LRFD [5.4.2.6]**

$f_r = 0.24\sqrt{f'_c}$ λ = 1.0 (normal wgt. conc.) **LRFD [5.4.2.8]** $\boxed{f_r = 0.45}$ ksi

$I_g = \frac{1}{12}\, b\,(T_b\ 12)^3$ $\boxed{I_g = 22247}$ in^4

$y_t = \frac{1}{2}\, T_b\ 12$ $\boxed{y_t = 14.1}$ in

$S_c = \frac{I_g}{y_t}$ $\boxed{S_c = 1582}$ in^3

$M_{cr_s} = 1.1\, f_r\, S_c\, \frac{1}{12}$ from E14-4.7.1.3 $\boxed{M_{cr_s} = 65.1}$ kip-ft/ft

$\boxed{1.33\ M_u = 125.0}$ kip-ft/ft

Is M_r greater than the lesser value of M_{cr} and 1.33*M_u? $\boxed{\text{check} = \text{"OK"}}$

Check the Service Ib crack control requirements in accordance with **LRFD [5.7.3.4]**

$$\rho = \frac{A_s}{d_s\ b}$$ $\rho = 0.00326$

$$n = \frac{E_s}{E_c}$$ $n = 8.09$

$$k = \sqrt{(\rho\ n)^2 + 2\ \rho\ n} - \rho\ n$$ $k = 0.205$

$$j = 1 - \frac{k}{3}$$ $j = 0.932$

$$d_c = \text{cover} + \frac{Bar_D}{2}$$ $d_c = 2.6$ in

$$f_{ss} = \frac{M_{u3}}{A_s\ j\ d_s}\ 12 \le 0.6\ f_y$$ $f_{ss} = 31.0$ ksi $\le 0.6\ f_y$ O.K.

$$h = T_b\ 12$$

$$\beta_s = 1 + \frac{d_c}{0.7\left(h - d_c\right)}$$ $\beta_s = 1.1$

$\gamma_e = 1.00$ for Class 1 exposure

$$s_{max} = \frac{700\ \gamma_e}{\beta_s\ f_{ss}} - 2\ d_c$$ $s_{max} = 14.6$ in

$s = 12.0$ in

Is the bar spacing less than s_{max}? check = "OK"

E14-4.7.2.3 Transfer of Force at Base of Stem

Specification requires that the transfer of lateral forces from the stem to the footing be in accordance with the shear-transfer provisions of **LRFD [5.8.4]**. That calculation will not be presented. Refer to E13-1.9.3 for a similar computation.

E14-4.7.3 Temperature and Shrinkage Steel

Evaluate temperature and shrinkage requirements

E14-4.7.3.1 Temperature and Shrinkage Steel for Footing

The footing will not be exposed to daily temperature changes. Thus temperature and shrinkage steel is not required.

E14-4.7.3.2 Temperature and Shrinkage Steel of Stem

The stem will be exposed to daily temperature changes. In accordance with AASTHO **LRFD [5.10.8]** the stem shall provide temperature and shrinkage steel on each face and in each direction as calculated below:

$s = 18.0$ in (bar spacing)

$Bar_{No} = 4$ (bar size)

$Bar_A = 0.20$ in^2 (temperature and shrinkage bar area)

$$A_s = \frac{Bar_A}{\frac{s}{12}}$$ (temperature and shrinkage provided)

$A_s = 0.13$ in^2/ft

$b_s = (H - D)\ 12$ least width of stem $b_s = 258.0$ in

$h_s = T_t\ 12$ least thickness of stem $h_s = 12.0$ in

$$A_{ts} = \frac{1.3\ b_s\ h_s}{2\left(b_s + h_s\right) f_y}$$ Area of reinforcement per foot, on each face and in each direction $A_{ts} = 0.12$ in^2/ft

Is $0.11 \le A_s \le 0.60$? check = "OK"

Is $A_s > A_{ts}$? check = "OK"

Check the maximum spacing requirements

$s_1 = \min\left(3\ h_s, 18\right)$ $s_1 = 18.0$ in

$$s_2 = \begin{cases} 12 & \text{if } h_s > 18 \\ s_1 & \text{otherwise} \end{cases}$$ For walls and footings (in) $s_2 = 18.0$ in

$s_{max} = \min\left(s_1, s_2\right)$ $s_{max} = 18.0$ in

Is the bar spacing less than s_{max}? check = "OK"

E14-4.8 Summary of Results

List summary of results.

E14-4.8.1 Summary of External Stability

Based on the defined project parameters the following external stability checks have been satisfied:

External Check	CDR
	Strength I
Bearing	1.46
Eccentricity	> 10
Sliding	1.12

Table E14-4.8-1
Summary of External Stability Computations

E14-4.8.2 Summary of Wall Strength Design

The required wall reinforcing from the previous computations are presented in Figure E14-6.9-1.

E14-4.8.3 Drainage Design

Drainage requirements shall be investigated and detailed accordingly. In this example drainage requirements are met by providing granular, free draining backfill material with a pipe underdrain located at the bottom of the wall (Assumed wall is adjacent to sidewalk) as shown in Figure E14-4.9-1.

E14-4.9 Final Cast-In-Place Concrete Wall Schematic

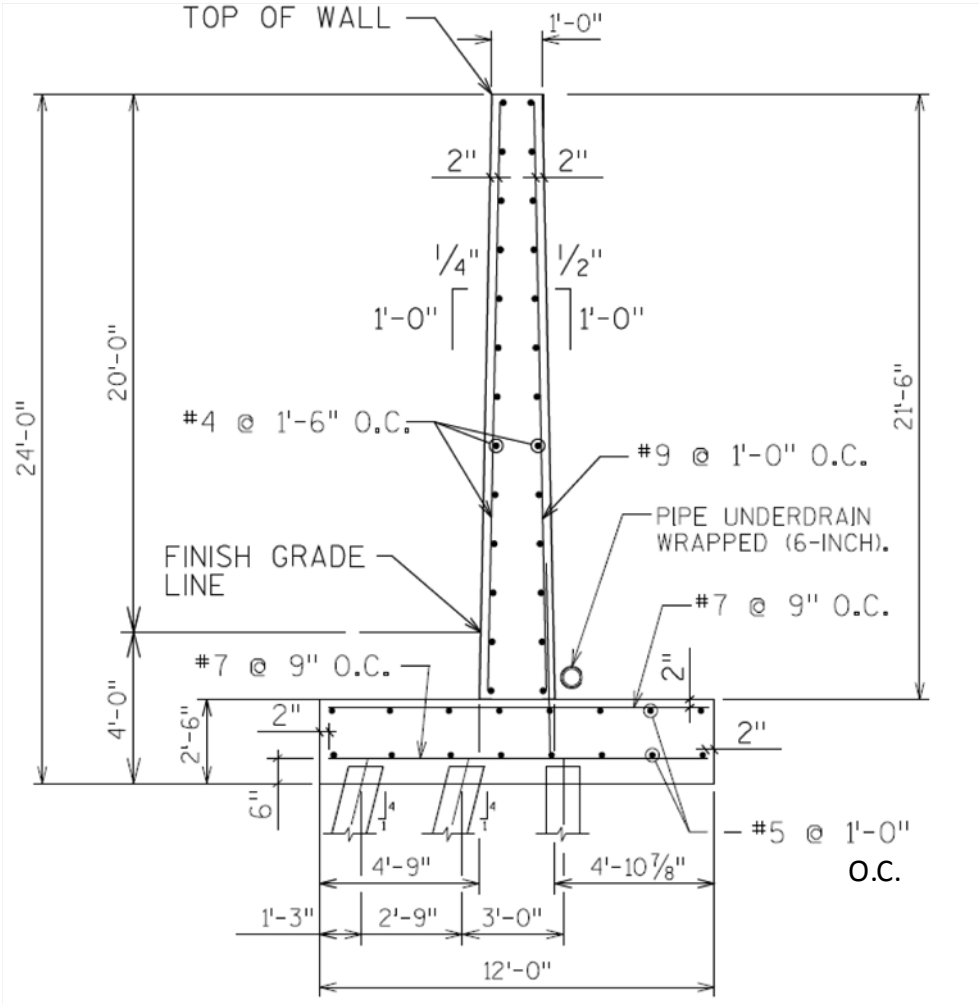

Figure E14-4.9-1
Cast-In-Place Wall Schematic

This page intentionally left blank.

Table of Contents

E14-5 Sheet Pile Wall, LRFD 2
E14-5.1 Establish Project Requirements 2
E14-5.2 Design Parameters 3
E14-5.3 Establish Earth Pressure Diagram 4
E14-5.4 Permanent and Transient Loads 5
E14-5.4.1 Compute Active Earth Pressure 5
E14-5.4.2 Compute Passive Earth Pressure 5
E14-5.4.3 Compute Factored Loads 5
E14-3.5 Compute Wall Embedment Depth and Factored Bending Moment 6
E14-5.6 Compute the Required Flexural Resistance 8
E14-5.7 Final Sheet Pile Wall Schematic 9

E14-5 Sheet Pile Wall, LRFD

General

This example shows design calculations for permanent sheet pile walls conforming to the LRFD Bridge Design Specifications and the WisDOT Bridge Manual. *(Example is current through LRFD Fifth Edition - 2010)*

Sample design calculations for required embedment depth and determining preliminary design sections will be presented. The overall stability and settlement calculations will not be shown in this example, but are required.

Design steps presented in 14.10.5 are used for the wall design.

E14-5.1 Establish Project Requirements

The following example is for a permanent cantilever sheet pile wall penetrating sand and having the low water level at the dredge line as shown in Figure E14-5.1-1. External stability and structural components are the designer's (WisDOT/consultant) responsibility.

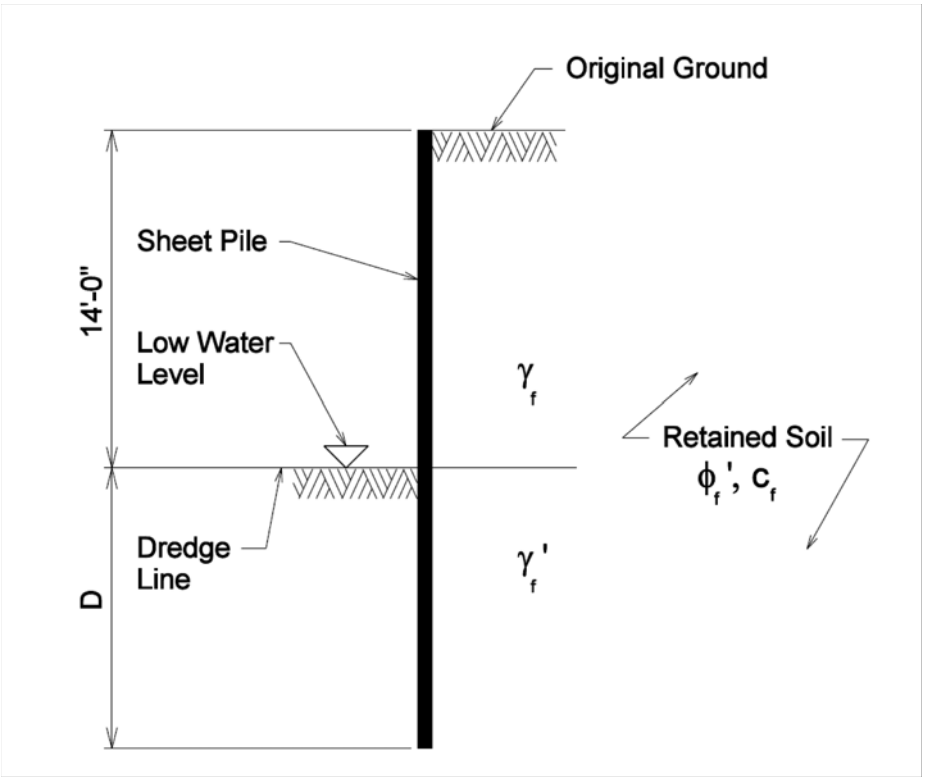

Figure E14-5.1-1
Cantilever Sheet Pile Wall with Horizontal Backslope

Wall Geometry

$H = 14$ Design wall height, ft

$\theta = 90$ deg Angle of back face of wall to horizontal

$\beta = 0$ deg Inclination of ground slope behind face of wall (horizontal)

E14-5.2 Design Parameters

Project Parameters

Design_Life = 75 Wall design life (min), years **LRFD [11.5.1]**

Soil Properties (From Geotechnical Site Investigation Report)

Designer to determine if long-term or short-term soil strength parameters govern external stability.

Soil Design Parameters

$\phi_f = 35$ deg Angle of internal friction

$\gamma = 0.115$ Unit weight of soil, kcf

$\gamma_w = 0.0624$ Unit weight of water, kcf

$\gamma' = \gamma - \gamma_w$ Effective unit weight of soil, kcf

$\boxed{\gamma' = 0.053}$

$c = 0$ psf Cohesion, psf

Live Load Surcharge Parameters

$SUR = 0.100$ Live load surcharge for walls without traffic, ksf (14.4.5.4.2)

E14-5.3 Establish Earth Pressure Diagram

In accordance with **LRFD [3.11.5.6]** "simplified" and "conventional" methods may be used for lateral earth pressure distributions. This example will use the "simplified" method as shown in **LRFD [Figure 3.11.5.3-2]**. The "conventional" method would result in a more exact solution and is based on Figure E14-5.3-1(b) lateral load distributions.

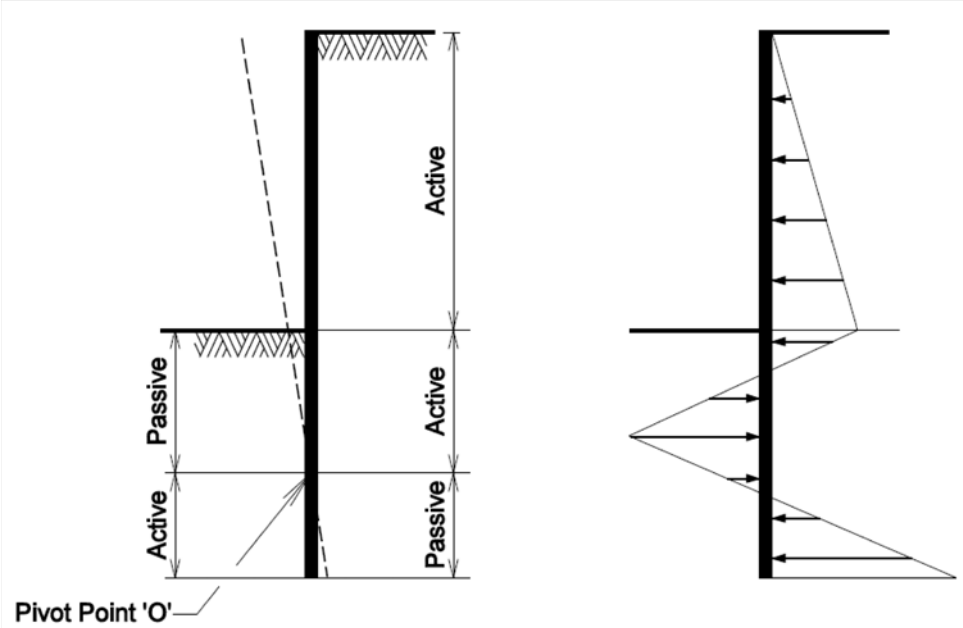

(a) (b)

Figure E14-5.3-1
Cantilever Sheet Pile Wall Penetrating a Sand Layer: (a) Wall Yielding Pattern and Earth Pressure Zones; (b) Conventional Net Earth Pressure Distribution (After Das, 2007).

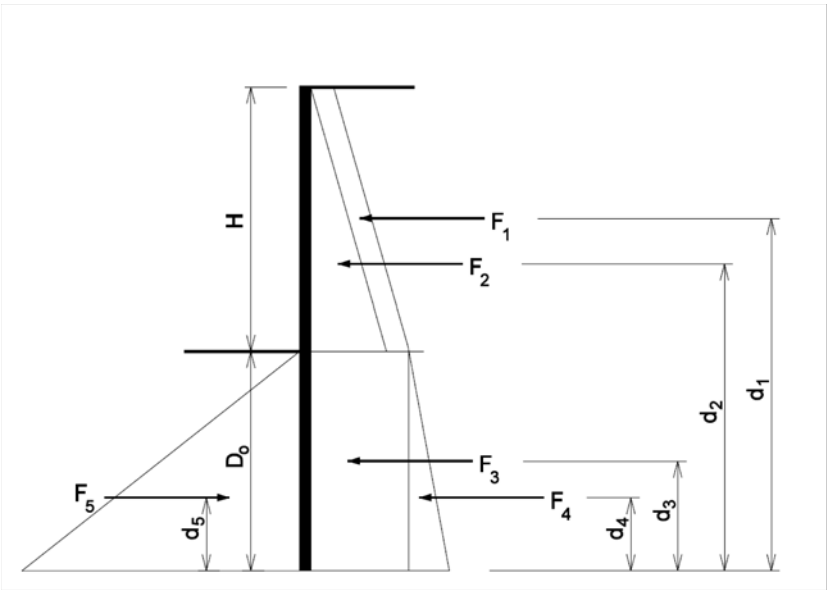

Figure E14-5.3-2
Cantilever Sheet Pile Wall Free-Body Diagram - Simplified Method

E14-5.4 Permanent and Transient Loads

In this example, horizontal earth pressures 'EH' will be used as shown in Figure E14-5.3-1(b). For simplicity, no transient, vertical or surcharge loads are present in this example.

E14-5.4.1 Compute Active Earth Pressure

Compute the coefficient of active earth pressure using Rankine Theory

$$\phi_f = 35 \text{ deg}$$

$$k_a = \tan\left(45 \text{ deg} - \frac{\phi_f}{2}\right)^2 \qquad \boxed{k_a = 0.271}$$

E14-5.4.2 Compute Passive Earth Pressure

Compute the coefficient of passive earth pressure using Rankine Theory

$$\phi_f = 35 \text{ deg}$$

$$k_p = \tan\left(45 \text{ deg} + \frac{\phi_f}{2}\right)^2 \qquad \boxed{k_p = 3.690}$$

E14-5.4.3 Compute Factored Loads

The active earth pressure is factored by its appropriate LRFD load type 'EH' **LRFD [Tables 3.4.1-1 and 3.4.1-2]**. Where as the passive earth pressure is factored by its appropriate resistance factor **LRFD [Table 11.5.7-1]**.

Compute the factored active earth pressure coefficient, K_a

$k_a = 0.271$	Unfactored active earth pressure coefficient	
$\gamma_{EH} = 1.50$	Horizontal earth pressure load factor (maximum)	
$K_a = \gamma_{EH}\, k_a$	Factored active earth pressure coefficient	$K_a = 0.406$

Compute the factored passive earth pressure coefficient, K_p

$k_p = 3.69$	Unfactored passive earth pressure coefficient	
$\phi_p = 0.75$	Nongravity cantilevered wall resistance factored for flexural capacity of a vertical element **LRFD [Table 11.5.7-1]**	
$K_p = \phi_p\, k_p$	Factored passive earth pressure coefficient	$K_p = 2.768$

E14-3.5 Compute Wall Embedment Depth and Factored Bending Moment

Compute the required embedment depth, D_o, corresponding to the depth where the factored active and passive moments are in equilibrium from Figure E14-5.3-2. Trial-and-error is used to determine the depth by adjusting D_o in the following equations:

$D_o = 27.5$ ft

Force (factored)

$F_1 = -(K_a\ SUR)\ H$ $\boxed{F_1 = -0.57}$ kip/ft

$F_2 = \frac{-1}{2}(\gamma\ K_a\ H)\ H$ $\boxed{F_2 = -4.58}$ kip/ft

$F_3 = -(\gamma\ K_a\ H + K_a\ SUR)\ D_o$ $\boxed{F_3 = -19.11}$ kip/ft

$F_4 = \frac{-1}{2}(\gamma'\ K_a\ D_o)\ D_o$ $\boxed{F_4 = -8.08}$ kip/ft

$F_5 = \frac{1}{2}(\gamma'\ K_p\ D_o)\ D_o$ $\boxed{F_5 = 55.05}$ kip/ft

Moment Arm			Moment (factored)		
$d_1 = \frac{H}{2} + D_o$	$\boxed{d_1 = 34.5}$	ft	$M_1 = F_1\ d_1$	$\boxed{M_1 = -19.6}$	kip-ft/ft
$d_2 = \frac{H}{3} + D_o$	$\boxed{d_2 = 32.2}$	ft	$M_2 = F_2\ d_2$	$\boxed{M_2 = -147.4}$	kip-ft/ft
$d_3 = \frac{D_o}{2}$	$\boxed{d_3 = 13.8}$	ft	$M_3 = F_3\ d_3$	$\boxed{M_3 = -262.8}$	kip-ft/ft
$d_4 = \frac{D_o}{3}$	$\boxed{d_4 = 9.2}$	ft	$M_4 = F_4\ d_4$	$\boxed{M_4 = -74.1}$	kip-ft/ft
$d_5 = \frac{D_o}{3}$	$\boxed{d_5 = 9.2}$	ft	$M_5 = F_5\ d_5$	$\boxed{M_5 = 504.6}$	kip-ft/ft

$\Sigma M = M_1 + M_2 + M_3 + M_4 + M_5$ (Approximately equal to zero) $\boxed{\Sigma M = 0.66}$ kip-ft/ft

Capacity:Demand Ratio (CDR) at D_o

$M_a = M_1 + M_2 + M_3 + M_4$ Factored active moments $\boxed{M_a = -503.9}$ kip-ft/ft

$M_p = M_5$ Factored passive moments $\boxed{M_p = 504.6}$ kip-ft/ft

$CDR = \left|\frac{M_p}{M_a}\right|$ $\boxed{CDR = 1.00}$

Is the $CDR \geq 1.0$? $\boxed{\text{check} = \text{"OK"}}$

Compute the required embedment depth, D. Since the wall embedment depth uses the Simplified Method with continuous vertical elements a 20% increase in embedment will be included as shown in **LRFD [Figure 3.11.5.6-3]**.

$D = 1.2\ D_o$ $\boxed{D = 33.00}$ ft

Compute the location of the maximum bending moment, M_{max}, corresponding to the depth where the factored active and passive lateral forces are in equilibrium from Figure E14-5.3-2. Trial-and-error is used to determine the depth by adjusting D_o in the following equations:

$D_o = 16.3$ ft

Force (factored)

$F_1 = -(K_a\ SUR)\ H$ $\boxed{F_1 = -0.57}$ kip/ft

$F_2 = \frac{-1}{2}(\gamma\ K_a\ H)\ H$ $\boxed{F_2 = -4.58}$ kip/ft

$F_3 = -(\gamma\ K_a\ H + K_a\ SUR)\ D_o$ $\boxed{F_3 = -11.33}$ kip/ft

$F_4 = \frac{-1}{2}(\gamma'\ K_a\ D_o)\ D_o$ $\boxed{F_4 = -2.84}$ kip/ft

$F_5 = \frac{1}{2}(\gamma'\ K_p\ D_o)\ D_o$ $\boxed{F_5 = 19.34}$ kip/ft

$\Sigma F = F_1 + F_2 + F_3 + F_4 + F_5$ (Approximately equal to zero) $\boxed{\Sigma F = 0.02}$ kip-ft/ft

Moment Arm			Moment (factored)		
$d_1 = \frac{H}{2} + D_o$	$\boxed{d_1 = 23.3}$	ft	$M_1 = F_1\ d_1$	$\boxed{M_1 = -13.3}$	kip-ft/ft
$d_2 = \frac{H}{3} + D_o$	$\boxed{d_2 = 21.0}$	ft	$M_2 = F_2\ d_2$	$\boxed{M_2 = -96.1}$	kip-ft/ft
$d_3 = \frac{D_o}{2}$	$\boxed{d_3 = 8.2}$	ft	$M_3 = F_3\ d_3$	$\boxed{M_3 = -92.3}$	kip-ft/ft
$d_4 = \frac{D_o}{3}$	$\boxed{d_4 = 5.4}$	ft	$M_4 = F_4\ d_4$	$\boxed{M_4 = -15.4}$	kip-ft/ft
$d_5 = \frac{D_o}{3}$	$\boxed{d_5 = 5.4}$	ft	$M_5 = F_5\ d_5$	$\boxed{M_5 = 105.1}$	kip-ft/ft

$\Sigma M = M_1 + M_2 + M_3 + M_4 + M_5$ $\boxed{\Sigma M = -112.0}$ kip-ft/ft

$M_{max} = |\Sigma M|$ $\boxed{M_{max} = 112.0}$ kip-ft/ft

Figure E14-5.5-1 tabulates the above computations in a spreadsheet for varying embedment depths.

D_o	F_1	F_2	F_3	F_4	F_5	d_1	d_2	d_3	d_4	d_5	Fa	Fp	Fa+Fp	M_1	M_2	M_3	M_4	M_5	M_a	M_p	CDR	M_a+M_p
0	-0.6	-4.6	0.0	0.0	0.0	7.0	4.7	0.0	0.0	0.0	-5.2	0.0	-5.2	-4	-21	0	0	0	-25	0	0.0	-25.4
2	-0.6	-4.6	-1.4	0.0	0.3	9.0	6.7	1.0	0.7	0.7	-6.6	0.3	-6.3	-5	-31	-1	0	0	-37	0	0.0	-36.9
4	-0.6	-4.6	-2.8	-0.2	1.2	11.0	8.7	2.0	1.3	1.3	-8.1	1.2	-6.9	-6	-40	-6	0	2	-52	2	0.0	-50.2
6	-0.6	-4.6	-4.2	-0.4	2.6	13.0	10.7	3.0	2.0	2.0	-9.7	2.6	-7.1	-7	-49	-13	-1	5	-70	5	0.1	-64.3
8	-0.6	-4.6	-5.6	-0.7	4.7	15.0	12.7	4.0	2.7	2.7	-11.4	4.7	-6.7	-9	-58	-22	-2	12	-91	12	0.1	-78.2
10	-0.6	-4.6	-7.0	-1.1	7.3	17.0	14.7	5.0	3.3	3.3	-13.2	7.3	-5.9	-10	-67	-35	-4	24	-115	24	0.2	-90.9
12	-0.6	-4.6	-8.3	-1.5	10.5	19.0	16.7	6.0	4.0	4.0	-15.0	10.5	-4.5	-11	-76	-50	-6	42	-143	42	0.3	-101.4
14	-0.6	-4.6	-9.7	-2.1	14.3	21.0	18.7	7.0	4.7	4.7	-17.0	14.3	-2.7	-12	-86	-68	-10	67	-175	67	0.4	-108.8
16.3	**-0.6**	**-4.6**	**-11.3**	**-2.8**	**19.3**	**23.3**	**21.0**	**8.2**	**5.4**	**5.4**	**-19.3**	**19.3**	**0.0**	**-13**	**-96**	**-92**	**-15**	**105**	**-217**	**105**	**0.5**	**-112.0**
18	-0.6	-4.6	-12.5	-3.5	23.6	25.0	22.7	9.0	6.0	6.0	-21.1	23.6	2.5	-14	-104	-113	-21	142	-251	142	0.6	-110.0
20	-0.6	-4.6	-13.9	-4.3	29.1	27.0	24.7	10.0	6.7	6.7	-23.3	29.1	5.8	-15	-113	-139	-29	194	-296	194	0.7	-101.8
22	-0.6	-4.6	-15.3	-5.2	35.2	29.0	26.7	11.0	7.3	7.3	-25.6	35.2	9.6	-17	-122	-168	-38	258	-345	258	0.7	-86.5
24	-0.6	-4.6	-16.7	-6.2	41.9	31.0	28.7	12.0	8.0	8.0	-28.0	41.9	13.9	-18	-131	-200	-49	335	-398	335	0.8	-63.0
26	-0.6	-4.6	-18.1	-7.2	49.2	33.0	30.7	13.0	8.7	8.7	-30.4	49.2	18.8	-19	-140	-235	-63	426	-457	426	0.9	-30.4
27.5	**-0.6**	**-4.6**	**-19.1**	**-8.1**	**54.9**	**34.5**	**32.1**	**13.7**	**9.2**	**9.2**	**-32.3**	**54.9**	**22.6**	**-20**	**-147**	**-262**	**-74**	**503**	**-503**	**503**	**1.0**	**0.0**
30	-0.6	-4.6	-20.9	-9.6	65.5	37.0	34.7	15.0	10.0	10.0	-35.6	65.5	29.9	-21	-159	-313	-96	655	-589	655	1.1	66.2
32	-0.6	-4.6	-22.2	-10.9	74.5	39.0	36.7	16.0	10.7	10.7	-38.3	74.5	36.2	-22	-168	-356	-117	795	-663	795	1.2	132.2

Results Tabulated Above Values

Required Embedment Depth, D_o (M_p/M_a>1)=	**27.47**	ft
Actual Embedment (1.2*D_o) =	**32.96**	ft
Maximum Factored Moment Location (F_a+F_p=0) =	**16.30**	ft
Maximum Factored Design Moment=	**112.0**	kip-ft/ft

Figure E14-5.5-1
Design Analysis for Cantilever Sheet Pile Wall

E14-5.6 Compute the Required Flexural Resistance

The following is a design check for flexural resistance:

$$M_{max} \leq \phi_f\ M_n \qquad \phi_f M_n = \phi_f F_y Z$$

$M_{max} = 112.0$ kip-ft/ft

$\phi_f = 0.90$ Resistance factor for flexure (based on nongravity cantilevered walls for the flexural capacity of vertical elements **LRFD [Table 11.5.7-1]**)

M_n Nominal flexural resistance of the section

$F_y = 50$ Steel yield stress, ksi (assumed A572 Grade 50)

Z Plastic section modulus (in^3/ft)

$$Z_{reqd} = \frac{M_{max}\ 12}{\phi_f\ F_y} \qquad \boxed{Z_{reqd} = 29.87}\ \text{in}^3/\text{ft}$$

Based on this minimum section modulus a preliminary sheet pile section PZ-27 (Z=36.49 in^3/ft) is selected. Additional design checks shall be made based on project requirements.

E14-5.7 Final Sheet Pile Wall Schematic

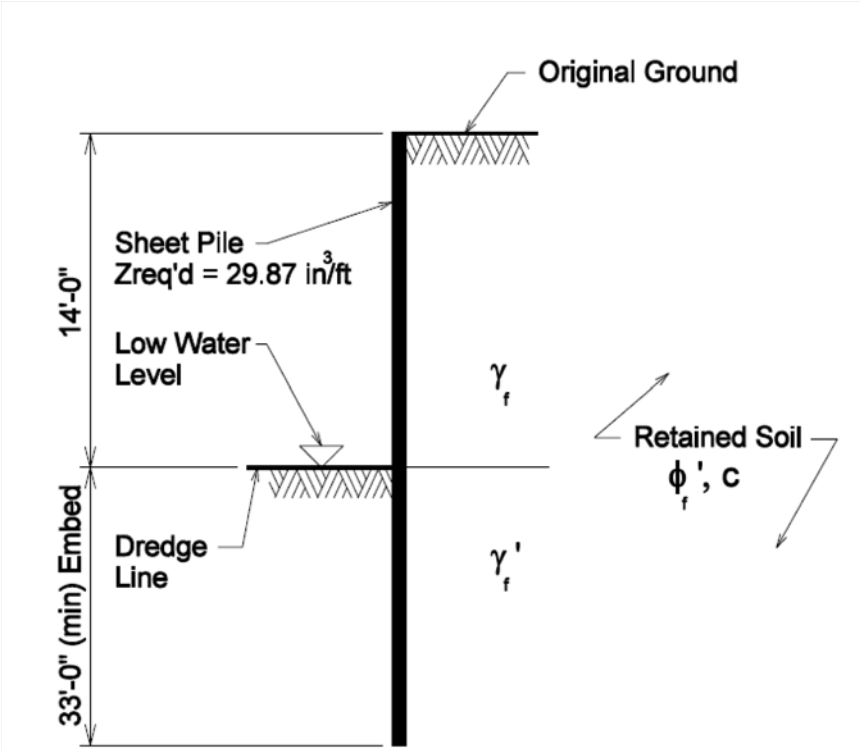

Figure E14-5.7-1
Cantilever Sheet Pile Wall Schematic

This page intentionally left blank.

Table of Contents

15.1 Grade Separations 2
15.2 Stream Crossing 3

15.1 Grade Separations

In general, there are three types of slope paving used at the abutments of grade separation bridges; cast-in-place concrete, bituminous stabilized crushed aggregate, and select crushed material. Concrete cast-in-place is used in urban areas or where appearance is a prime consideration. Bituminous stabilized crushed aggregate or select crushed material is used in rural areas or where appearance is not as important. Select crushed materials is the preferred slope paving type because of its low costs, durability and ease to repair. Refer to Slope Paving Structures standard details for additional information.

Precast concrete blocks (approximately 4 x 16 x 24 inches) were the standard applications during the late 50's and early 60's. Many blocks settled or washed out of place due to erosion of bedding under the blocks. They are no longer specified except on widening jobs to match existing slope paving.

15.2 Stream Crossing

Heavy riprap is used for slope protection at stream crossings due to its superior performance over medium random riprap. In general, due to the favorable performance and relatively low cost of geotextile fabrics, they are used under heavy riprap whenever heavy riprap is specified for a project.

Many factors influence the criteria used to select end slopes. These include:

1. The type of soil. (granular, cohesive, borrow or in-situ)
2. Type and impact of a failure to stream/roadway/structure.
3. Type of abutment foundation support. (spread footings vs. piles)
4. History of the existing slopes at structure replacement sites.
5. Additional bridge costs when structures are lengthened due to flatter slopes.

The current standard for slopes is 1.5:1. However, for conditions where the vertical height of fill from berm to toe of slope exceeds 15 feet, consider flattening slopes to 2:1, or breaking up the slope by providing a plateau area halfway through the slope.

Furthermore, if slope soil materials are “fairly granular”, use current standards. For other soil types, flatten slopes to 2:1. If existing problems are noted or there is no historical information at the site, analyze site geometry to determine slope.

Refer to the Standard for Placement of Heavy Riprap at River Crossings for placement of heavy riprap. Any additional riprap not covered by the standard is not part of the structure plans.

This page intentionally left blank.

Table of Contents

17.1 Design Method 3
17.1.1 Design Requirements 3
17.1.2 Rating Requirements 3
17.1.2.1 Standard Permit Design Check 3
17.2 LRFD Requirements 4
17.2.1 General 4
17.2.2 WisDOT Policy Items 4
17.2.3 Limit States 4
17.2.3.1 Strength Limit State 4
17.2.3.2 Service Limit State 5
17.2.3.3 Fatigue Limit State 5
17.2.3.4 Extreme Event Limit State 6
17.2.4 Design Loads 6
17.2.4.1 Dead Loads 6
17.2.4.2 Traffic Live Loads 8
17.2.4.2.1 Design Truck 8
17.2.4.2.2 Design Tandem 9
17.2.4.2.3 Design Lane 9
17.2.4.2.4 Double Truck 9
17.2.4.2.5 Fatigue Truck 10
17.2.4.2.6 Live Load Combinations 10
17.2.4.3 Multiple Presence Factor 11
17.2.4.4 Dynamic Load Allowance 12
17.2.4.5 Pedestrian Loads 12
17.2.5 Load Factors 13
17.2.6 Resistance Factors 13
17.2.7 Distribution of Loads for Slab Structures 14
17.2.8 Distribution of Loads for Girder Structures 24
17.2.9 Distribution of Dead Load to Substructure Units 37
17.2.10 Distribution of Live Loads to Substructure Units 37
17.2.11 Composite Section Properties 39
17.2.12 Allowable Live Load Deflection 40

17.2.13 Actual Live Load Deflection 40
17.3 Selection of Structure Type 42
17.3.1 Alternate Structure Types 42
17.4 Superstructure Types 44
17.5 Design of Slab on Girders 47
17.5.1 General 47
17.5.2 Two-Course Deck Construction 47
17.5.3 Reinforcing Steel for Deck Slabs on Girders 48
17.5.3.1 Transverse Reinforcement 48
17.5.3.2 Longitudinal Reinforcement 54
17.5.3.3 Empirical Design of Slab on Girders 58
17.6 Cantilever Slab Design 60
17.6.1 Rail Loading for Slab Structures 67
17.6.2 WisDOT Overhang Design Practices 67
17.7 Construction Joints 72
17.8 Bridge Deck Protective Systems 73
17.8.1 General 73
17.8.2 Design Guidance 73
17.9 Bridge Approaches 75
17.10 Design of Precast Prestressed Concrete Deck Panels 76
17.10.1 General 76
17.10.2 Deck Panel Design 76
17.10.3 Transverse Reinforcement for Cast-in-Place Concrete on Deck Panels 78
17.10.3.1 Longitudinal Reinforcement 79
17.10.4 Details 79

17.1 Design Method

17.1.1 Design Requirements

All new structures and deck replacements are to be designed using *AASHTO LRFD Bridge Design Specifications*, hereafter referred to as *AASHTO LRFD*. Bridge rehabilitations and widenings are to be designed using either LFD or LRFD, at the designer's option.

LRFD utilizes load combinations called limit states which represent the various loading conditions which structural materials must be able to withstand. Limit states have been established in four major categories – strength, service, fatigue and extreme event. Different load combinations are used to analyze a structure for certain responses such as deflections, permanent deformations, ultimate strength and inelastic responses without failure. When all applicable limit states and combinations are satisfied, a structure is deemed acceptable under the LRFD design philosophy.

Bridges being designed with staged construction, whether new or rehabilitation, shall satisfy the requirements of LRFD (or LFD, if applicable) for each construction stage. Utilize the same load factors, resistance factors, load combinations, etc. as required for the final configuration, unless approved by Chief Structures Development Engineer at WisDOT.

17.1.2 Rating Requirements

Rating factors, RF, for inventory and operating rating are shown on the plans. Ratings will be based on *The Manual for Bridge Evaluation*, hereafter referred to as *AASHTO MBE*. See Chapter 45 – Bridge Rating for rating requirements. Existing ratings for rehabilitation projects where the final ratings will not change should be taken from HSI and placed on the final plans. See Section 6.2.2.3.4 for more information.

17.1.2.1 Standard Permit Design Check

New structures are also to be checked for the Wisconsin Standard Permit Vehicle (Wis-SPV). The structure should have a minimum capacity to carry a gross vehicle load of 190 kips, while also supporting the future wearing surface. This truck will be designated as a Single Trip Permit Vehicle. It will have no escorts restricting the presence of other traffic on the bridge, no lane position restrictions imposed and no restrictions on speed to reduce the dynamic load allowance, IM.

The maximum Wisconsin Standard Permit Vehicle load that the structure can resist, calculated including current wearing surface loads, is shown on the plans.

See Chapter 45 – Bridge Rating for details about the Wisconsin Standard Permit Vehicle and calculating the maximum load for this permit vehicle.

17.2 LRFD Requirements

17.2.1 General

For superstructure member design, the component dimensions and the size and spacing of reinforcement shall be selected to satisfy the following equation for all appropriate limit states, as presented in **LRFD [1.3.2.1]**:

$$Q = \sum \eta_i \gamma_i Q_i \leq \phi R_n = R_r$$

Where:

η_i	=	Load modifier (a function of η_D, η_R, and η_i)
γ_i	=	Load factor
Q_i	=	Force effect: moment, shear, stress range or deformation caused by applied loads
Q	=	Total factored force effect
ϕ	=	Resistance factor
R_n	=	Nominal resistance: resistance of a component to force effects
R_r	=	Factored resistance = ϕR_n

17.2.2 WisDOT Policy Items

WisDOT policy items:

Set the value of the load modifier, η_i (see **LRFD [1.3.2.1]**), and its factors, η_D, η_R and η_I, all equal to 1.00.

Ignore any influence of ADTT on multiple presence factor, m, in **LRFD [Table 3.6.1.1.2-1]** that would reduce force effects.

17.2.3 Limit States

The following limit states (as defined in **LRFD [3.4.1]**) are utilized by WisDOT in the design of bridge superstructures.

17.2.3.1 Strength Limit State

The strength limit state shall be applied to ensure that strength and stability are provided to resist the significant load combinations that a bridge is expected to experience during its design life. The total factored force effect must not exceed the factored resistance.

Strength I is used for the ultimate capacity of structural members and relates to the normal vehicular use of the bridge without wind.

Strength II is not typically used by WisDOT. However, Wisconsin Standard Permit Vehicle (Wis-SPV) must be checked in accordance with Chapter 45 – Bridge Rating.

Strength III is not typically used as a final-condition design check by WisDOT.

WisDOT policy item:

Strength III is used as a construction check for steel girder bridges with wind load but no live load. When checking this limit state during a deck pour, use a multiplier of 0.3 on the wind speed to account for the unlikelihood that a deck would be poured under extremely windy conditions.

Strength IV is not typically used by WisDOT. Spans > 300 ft. should include this limit state.

Strength V relates to the normal vehicular use of the bridge with wind speed (3-second gust) as specified in **LRFD [3.8]**. This limit state is used in the design of steel structures to check lateral bending stresses in the flanges.

17.2.3.2 Service Limit State

The service limit state shall be applied to restrict stress, deformation and crack width under regular service conditions. The total factored force effect must not exceed the factored resistance.

Service I relates to the normal vehicular use of the bridge. This limit state is used to check general serviceability requirements such as deflections and crack control. This load combination is also used to check compressive stresses in prestressed concrete components.

Service II is intended to control yielding of steel structures and slip of slip-critical connections due to vehicular live loads.

Service III is used to check the tensile stresses in prestressed concrete superstructures with the objective of crack control.

17.2.3.3 Fatigue Limit State

The fatigue limit state shall be applied as a restriction on stress range as a result of a single design truck occurring at the number of expected stress range cycles. The fatigue limit state is intended to limit crack growth under repetitive loads to prevent fracture during the design life of the bridge. The total factored force effect must not exceed the factored resistance.

Fatigue I is related to infinite load-induced fatigue life. This load combination should be checked for longitudinal slab bridge reinforcement and longitudinal continuity reinforcement on prestressed concrete girder and steel girder bridges. Fatigue I is used for steel girder structures to determine whether or not a tensile stress could exist at a particular location. This

load combination is also used for any fracture-critical members as well as components and details not meeting the requirements for Fatigue II.

Fatigue II is related to finite load-induced fatigue life. If the projected 75-year single lane Average Daily Truck Traffic is less than or equal to a prescribed value for a given component or detail, that component or detail should be designed for finite life using the Fatigue II load combination.

17.2.3.4 Extreme Event Limit State

The extreme event limit state shall be applied for deck overhang design as specified in Table 17.6-1. For the extreme limit state, the applied loads for deck overhang design are horizontal and vertical vehicular collision forces. These forces are checked at the inside face of the barrier, the design section for the overhang and the design section for the first bay, as described in 17.6.

Extreme Event II is used to design deck reinforcement due to vehicular collision forces.

17.2.4 Design Loads

In LRFD design, structural materials must be able to resist their applied design loads. Two general types of design loads are permanent and transient. Permanent loads include dead load and earth load. Transient loads include live loads, wind, temperature, braking force and centrifugal force.

17.2.4.1 Dead Loads

Superstructures must be designed to resist dead load effects. In LRFD, dead load components consist of DC and DW dead loads. DC dead loads include structural components and nonstructural attachments, and DW dead loads include wearing surfaces and utilities. Different load factors are used for DC and DW dead loads, as described in 17.2.5, to account for the differences in the predictability of the loading. In addition, some dead loads are resisted by the non-composite section and other dead loads are resisted by the composite section.

Table 17.2-1 summarizes the various dead load components that are commonly included in beam-on-slab superstructure design. For slab structures, all loads presented in this table are resisted by the slab.

Dead Load Resisted By	Type of Load Factor	
	DC	DW
Non-composite section	• Girder • Concrete deck • Concrete haunch • Miscellaneous dead load (including diaphragms, cross-frames, stiffeners, etc.)	
Composite section	• Concrete parapets • Sidewalks • Medians	• Future wearing surface • Utilities

Table 17.2-1
Dead Load Components

In the absence of more precise information, **LRFD [Table 3.5.1-1]** provides some guidance for typical unit weights.

Dead loads should be computed based on the following:

The uniform dead load of the deck or slab is determined using the concrete unit weight and simple beam distribution. A concrete unit weight of 0.150 kcf should be used.

The weight of the concrete haunch is determined by estimating the minimum haunch depth at 2" at the edge of girder and the width equal to the largest top flange of the supporting member. The cross slope, girder camber and profile grade line must be considered.

The weights of steel beams and girders are determined from the AISC Manual of Steel Construction. Haunched webs of plate girders are converted to an equivalent uniform partial dead load.

The weight of secondary steel members such as bracing, shear studs and stiffeners can be estimated at 30 plf for interior girders and 20 plf for exterior girders.

The weight of prestressed concrete girders is presented in the Standard Details.

A dead load of 20 psf is added to account for a future wearing surface. Future wearing surface is applied from face to face of curb and shall not be applied to sidewalks.

The weight of the parapets, sidewalks, barriers and medians shall be based on a unit weight of 0.150 kcf. The weight per foot for the standard parapets are presented in the Standard Details.

17.2.4.2 Traffic Live Loads

The design vehicular load currently used by AASHTO is designated as HL-93, in which "HL" is an abbreviation for highway loading and "93" represents the year of 1993 in which the loading was accepted by AASHTO. The HL-93 live load consists of the following load types:

- Design truck
- Design tandem
- Design lane
- Double truck
- Fatigue truck

Using these basic load types, *AASHTO LRFD* combines and scales them to create live load combinations that apply to different limit states, as described in **LRFD [3.6.1]** and as shown below.

17.2.4.2.1 Design Truck

The design truck has three axles, with axle loads and spacings as presented in Figure 17.2-1.

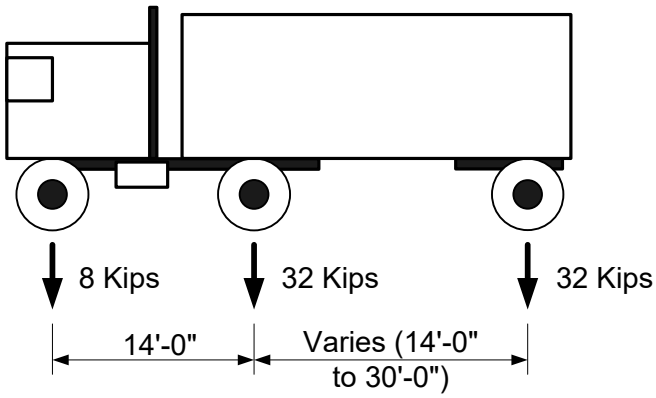

Figure 17.2-1
Design Truck

The axle spacing between the second and third axles is selected such that the maximum effect is achieved. The minimum axle spacing of 14 feet usually controls. However, a situation in which an axle spacing greater than 14 feet may control is for a continuous short-span bridge in which the maximum negative moment at the pier is being computed and the second and third axles are positioned in different spans. The design truck is described in **LRFD [3.6.1.2.2]**.

17.2.4.2.2 Design Tandem

The design tandem has two axles, each with a loading of 25 kips and an axle spacing of 4 feet, as presented in Figure 17.2-2. The design tandem is described in **LRFD [3.6.1.2.3]**.

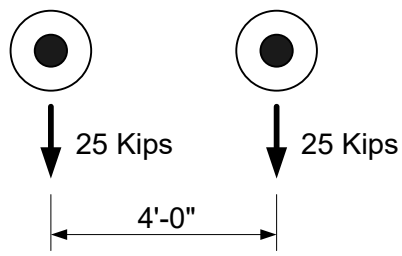

Figure 17.2-2
Design Tandem

WisDOT policy item:

WisDOT does not consider the use of dual tandems for negative moments and reactions, as suggested in **LRFD [C3.6.1.3.1]**. The design engineer shall receive direction from the owner and the BOS if this load is to be applied.

17.2.4.2.3 Design Lane

The design lane has a uniform load of 0.64 kips per linear foot, distributed in the longitudinal direction, as presented in Figure 17.2-3. The design lane is described in **LRFD [3.6.1.2.4]**.

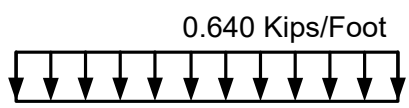

Figure 17.2-3
Design Lane

17.2.4.2.4 Double Truck

For negative moments and reactions at piers, a third condition is also considered. Two design trucks are applied, with a minimum headway between the front and rear axles of the two trucks equal to 50 feet. The rear axle spacing of the two trucks is set at a constant 14 feet. 90% of the effect of the two design trucks is combined with 90% of the design lane load, as presented in Figure 17.2-4. This loading is described in **LRFD [3.6.1.3.1]**.

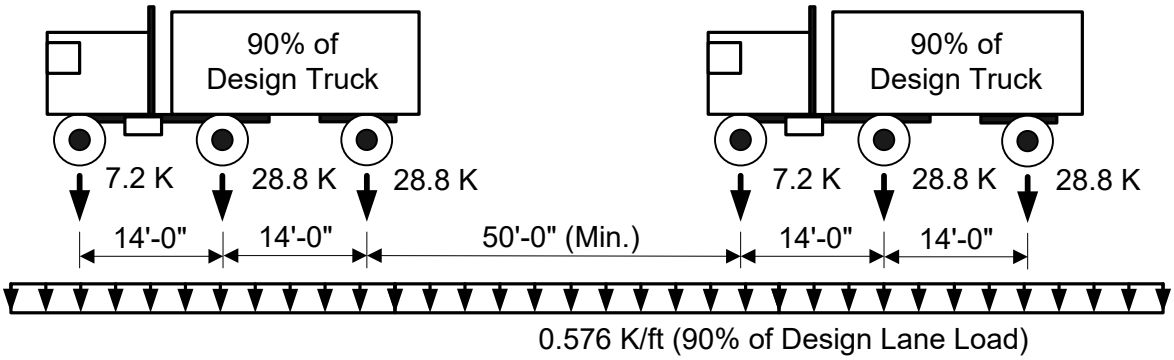

Figure 17.2-4
Double Truck

17.2.4.2.5 Fatigue Truck

The fatigue truck consists of one design truck similar to that described in 17.2.4.2.1 but with a constant spacing of 30 feet between the 32-kip axles, as presented in Figure 17.2-5. The fatigue truck is described in **LRFD [3.6.1.4.1]**.

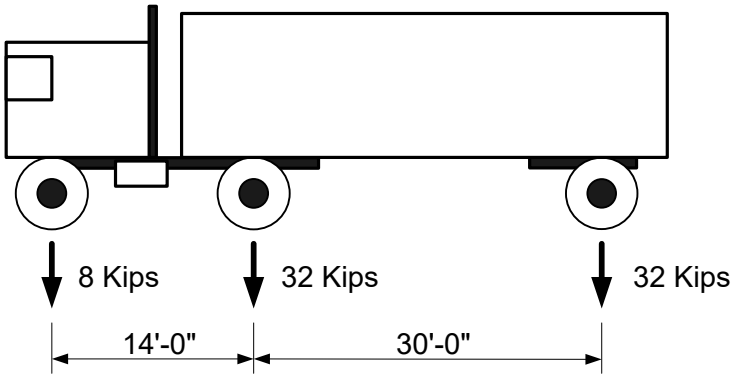

Figure 17.2-5
Fatigue Truck

17.2.4.2.6 Live Load Combinations

The live load combinations used for design are presented in Table 17.2-2.

Live Load Combination	Description	Reference
LL#1	Design tandem (+ IM) + design lane load	**LRFD [3.6.1.3.1]**
LL#2	Design truck (+ IM) + design lane load	**LRFD [3.6.1.3.1]**

LL#3	Double truck [90% of two design trucks (+ IM) + 90% of design lane load] *	**LRFD [3.6.1.3.1]**
LL#4	Fatigue truck (+ IM)	**LRFD [3.6.1.4.1]**
LL#5	Design truck (+ IM)	**LRFD [3.6.1.3.2]**
LL#6	25% [design truck (+ IM)] + design lane load	**LRFD [3.6.1.3.2]**

* LL#3 is used to calculate negative live load moments between points of contraflexure, as well as reactions at interior supports.

Table 17.2-2
Live Load Combinations

The live load combinations are applied to the limit states as follows:

Strength I – The live load force effect, Qi, shall be taken as the larger of LL#1, LL#2 and LL#3.

Strength V – The live load force effect, Qi, shall be taken as the larger of LL#1, LL#2 and LL#3.

Service I – The live load force effect, Qi, shall be taken as the larger of LL#1, LL#2 and LL#3. However, for live load deflection criteria, the force effects shall be taken as the larger of LL#5 and LL#6.

Service II – The live load force effect, Qi, shall be taken as the larger of LL#1, LL#2 and LL#3.

Service III – The live load force effect, Qi, shall be taken as the larger of LL#1, LL#2 and LL#3.

Fatigue (I or II) – The live load force effect, Qi, shall be from a single fatigue truck, LL#4.

Extreme Event II – The live load force effect, Qi, shall be taken as the larger of LL#1 and LL#2.

17.2.4.3 Multiple Presence Factor

The extreme force effect shall be determined by considering each possible combination of the number of loaded lanes multiplied by a corresponding multiple presence factor. This factor accounts for the probability of simultaneous lane occupation by the full HL93 design live load. Note that the multiple presence factor has been included in the approximate equations for distribution factors in **LRFD [4.6.2.2]** and **[4.6.2.3]**, and in 17.2.8 of this manual.

As described in **LRFD [3.6.1.1.2]**, the multiple presence factors, m, have the values as presented in Table 17.2-3

Number of Loaded Lanes	Multiple Presence Factors "m"
1	1.20
2	1.00
3	0.85
>3	0.65

Table 17.2-3
Multiple Presence Factors

17.2.4.4 Dynamic Load Allowance

The HL-93 loading is based on a static live load applied to the bridge. However, in reality, the live load is not static but is moving across the bridge. Since the roadway surface on a bridge is usually not perfectly smooth and the suspension systems of most trucks react to roadway roughness with oscillations, a dynamic load is applied to the bridge and must also be considered with the live load. This is referred to as dynamic load allowance.

As described in **LRFD [3.6.2]**, the dynamic load allowance has values as presented in Table 17.2-4.

Component	Limit State	Dynamic Load Allowance, IM
Deck joints	All limit states	75%
All other components	Fatigue and fracture limit states	15%
	All other limit states	33%

Table 17.2-4
Dynamic Load Allowance

Applying these specifications to the live load combinations listed in Table 17.2-2:

IM = 15% for fatigue truck (LL#4)

IM = 33% for all other live load combinations (LL#1, LL#2, LL#3, LL#5 and LL#6)

Where IM is required, multiply the loads by (1 + IM/100) to include the dynamic effects of the load.

It is important to note that the dynamic load allowance is applied only to the design truck and design tandem. The dynamic load allowance is not applied to the design lane load or to pedestrian loads.

17.2.4.5 Pedestrian Loads

For bridges designed for both vehicular and pedestrian load, a pedestrian load of 75 psf is used, as specified in **LRFD [3.6.1.6]**. However, for bridges designed exclusively for pedestrian

and/or bicycle traffic, a live load of 90 psf is used. Consideration should also be given to maintenance vehicle loads as specified in Chapter 37 – Pedestrian Bridges.

17.2.5 Load Factors

The load factor, γ_i, is used to adjust force effects on a structural element. This factor accounts for variability of loads, lack of accuracy in analysis and the probability of simultaneous occurrence of different loads.

For the design limit states, the values of γ_i for different types of loads are found in **LRFD [Tables 3.4.1-1 and 3.4.1-2]**. Load factors most commonly used for superstructure design are also presented in Table 17.2-5.

Load Combination	Load Factor, γi				
	DC		DW		LL+IM
	Maximum	Minimum	Maximum	Minimum	
Strength I	1.25	0.90	1.50	0.65	1.75
Strength III	1.25	0.90	1.50	0.65	0.00
Strength V	1.25	0.90	1.50	0.65	1.35
Service I	1.00	1.00	1.00	1.00	1.00
Service II	1.00	1.00	1.00	1.00	1.30
Service III	1.00	1.00	1.00	1.00	0.80
Fatigue I	0.00	0.00	0.00	0.00	1.75
Extreme Event II	1.25	0.90	1.50	0.65	0.50

Table 17.2-5
Load Factors

The maximum and minimum values should be used to maximize the intended effect of the load. An example of the use of minimum load factors is the load factor for dead load when uplift is being checked.

17.2.6 Resistance Factors

The resistance factor, ϕ, is used to reduce the computed nominal resistance of a structural element. This factor accounts for variability of material properties, structural dimensions and workmanship, and uncertainty in prediction of resistance.

Resistance factors are presented in **LRFD [1.3.2.1]**, **LRFD [5.5.4.2]**, **LRFD [6.5.4.2]**, **LRFD [6.5.5]** and **LRFD [6.10.1.7]**. The most commonly used resistance factors for superstructure design are also presented in Table 17.2-6.

Limit State	Material	Application	Resistance Factor, ϕ
Strength	Concrete	Flexure (reinforced concrete)	0.90
		Flexure (prestressed concrete)	1.00
		Shear (normal weight)	0.90
		Shear (lightweight)	0.90
	Steel	Flexure	1.00
		Shear	1.00
		Axial compression, steel only	0.90
		Axial compression, composite	0.90
		Tension, fracture in net section	0.80
		Tension, yielding in gross section	0.95
		Bolts bearing on material	0.80
		Shear connectors	0.85
		A325 and A490 bolts in tension	0.80
		A325 and A490 bolts in shear	0.80
		A307 bolts in tension	0.80
		A307 bolts in shear	0.65
		Block shear	0.80
		Web crippling	0.80
		Welds	See **LRFD [6.5.4.2]**
Service	All	All	1.0
Fatigue	All	All	1.0
Extreme Event	All	All	1.0

Table 17.2-6
Resistance Factors

17.2.7 Distribution of Loads for Slab Structures

For slab structures, the distribution of loads is based on strip widths, as illustrated in Figure 17.2-6 through Figure 17.2-11. Figure 17.2-6 and Figure 17.2-7 illustrate the distribution of loads for slab structures with no sidewalks. Figure 17.2-8 and Figure 17.2-9 illustrate the distribution of loads for slab structures with sidewalks. Figure 17.2-10 and Figure 17.2-11 illustrate the distribution of loads for slab structures with raised sidewalks. It should be noted that, although medians are not shown in these figures, medians are treated similar to other superimposed dead loads.

The first step in determining the distribution of loads for slab structures is to compute the strip width, as specified in **LRFD [4.6.2.3]** and **LRFD [4.6.2.1.4]**. Equations for strip widths are also presented in Chapter 18 – Concrete Slab Structure.

For each of the following figures, the distribution of loads for that slab configuration and strip location is described and a general equation is presented immediately below the corresponding figure. In the general equations, it is assumed that dynamic load allowance is applied to the appropriate live load components.

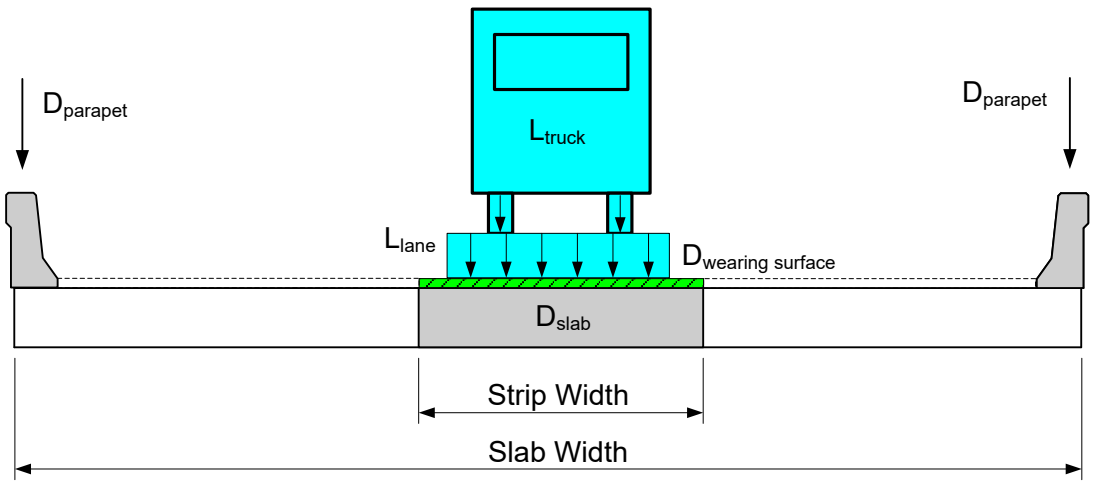

Figure 17.2-6
Distribution of Loads to Interior Strip Width for Slab Structure

The distribution of loads to the interior strip is calculated as follows:

For dead loads, the strip width must resist its self-weight, the future wearing surface and all superimposed dead loads. The superimposed dead loads (including parapets and medians) are distributed uniformly across the entire slab width. The distribution of superimposed dead load to the interior strip width is then computed based on the ratio of the interior strip width to the slab width.

For live loads, one lane of live loading is applied to the interior strip width.

The general equation for loads applied to the interior strip width is as follows:

$$\text{Total Load} = D_{slab} + D_{wearing\ surface} + \left[\left(2\, D_{parapet} \right) \left(\frac{\text{Strip Width}}{\text{Slab Width}} \right) \right] + \left(L_{truck} + L_{lane} \right)$$

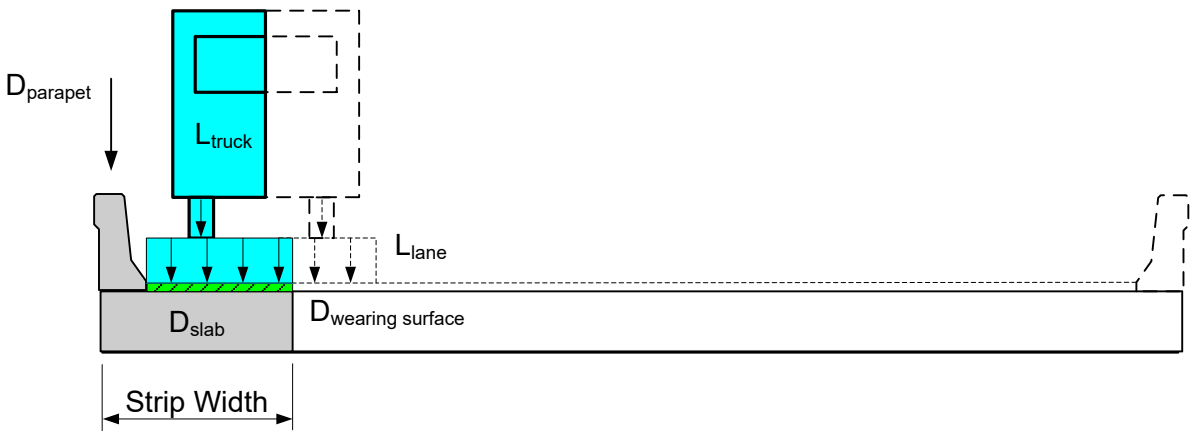

Figure 17.2-7

Distribution of Loads to Exterior Strip Width for Slab Structure

The distribution of loads to the exterior strip is calculated as follows:

For dead loads, the strip width must resist its self-weight and all superimposed dead loads located directly over the strip.

For the design lane load, only the portion of the lane load located directly over the exterior strip width is applied to the exterior strip. For the design vehicle, only half of the axle weights (one line of wheels) are applied to the exterior strip.

The general equation for loads applied to the exterior strip width is as follows:

$$\text{Total Load} = D_{slab} + \left(D_{wearing\ surface} + D_{parapet}\right)_{directly\ over\ strip} + \left(L_{truck} + L_{lane}\right)_{directly\ over\ strip}$$

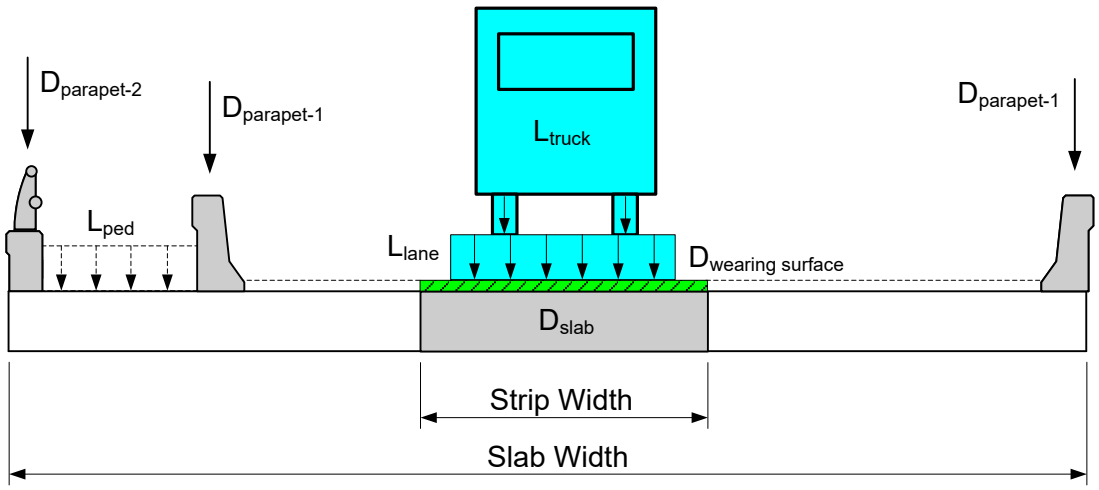

Figure 17.2-8
Distribution of Loads to Interior Strip Width for Slab Structure with Sidewalk

The distribution of loads to the interior strip is calculated as follows:

For dead loads, the strip width must resist its self-weight, future wearing surface, and all superimposed dead loads. The superimposed dead loads (including parapets and medians) are distributed uniformly across the entire slab width. The distribution of superimposed dead load to the interior strip width is then computed based on the ratio of the interior strip width to the slab width. Wearing surface is not applied to sidewalks.

For live loads, one lane of live loading is applied to the interior strip width.

Pedestrian loads are not applied to the interior strip width.

The general equation for loads applied to the interior strip width is as follows:

$$\text{Total Load} = D_{slab} + D_{\text{wearing surface}} + \left[\left(2\,D_{\text{parapet}-1} + D_{\text{parapet}-2} \right) \left(\frac{\text{Strip Width}}{\text{Slab Width}} \right) \right] + \left(L_{truck} + L_{lane} \right)$$

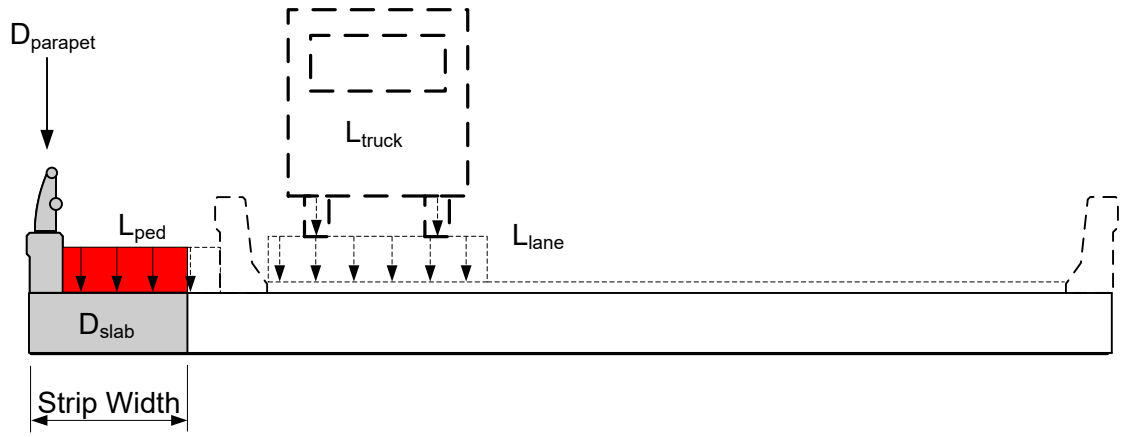

Actual Configuration

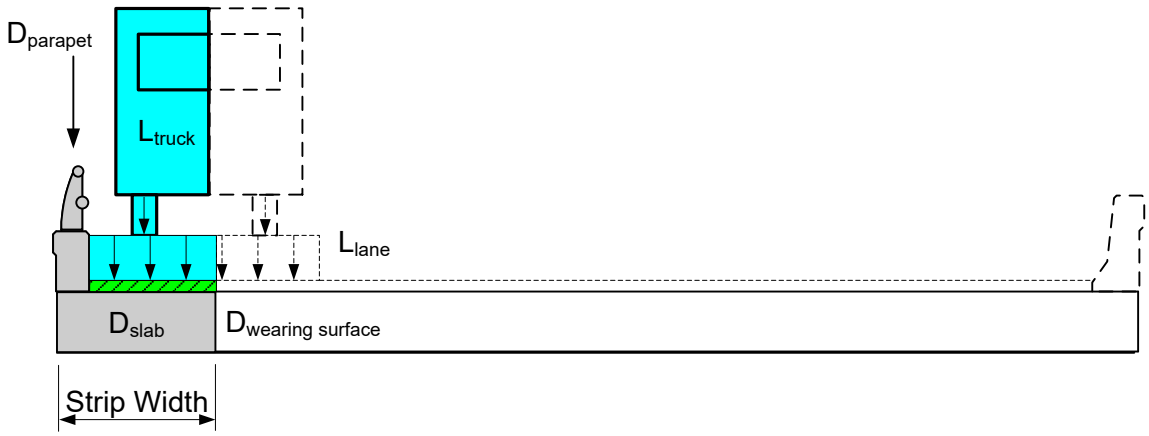

Design Configuration

Figure 17.2-9
Distribution of Loads to Exterior Strip Width for Slab Structure with Sidewalk

The distribution of loads to the exterior strip is calculated as follows:

For dead loads, the strip width must resist its self-weight and all superimposed dead loads located directly over the strip. However, it is assumed that the interior parapet is not present.

For live loads, it is assumed that the interior parapet is not present. Therefore, the vehicle and lane are positioned as shown in the Design Configuration portion of the previous figure. For the design lane load, only the portion of the lane load located directly over the exterior strip width is applied to the exterior strip. For the design vehicle, only half of the axle weights (one line of wheels) are applied to the exterior strip.

For pedestrian loads, it is assumed that none are present due to the assumed absence of the interior parapet and the assumed presence of vehicular live load immediately adjacent to the exterior parapet.

The general equation for loads applied to the exterior strip width is as follows:

$$\text{Total Load} = D_{slab} + \left(D_{wearing\ surface} + D_{parapet}\right)_{directly\ over\ strip} + \left(L_{truck} + L_{lane}\right)_{directly\ over\ strip}$$

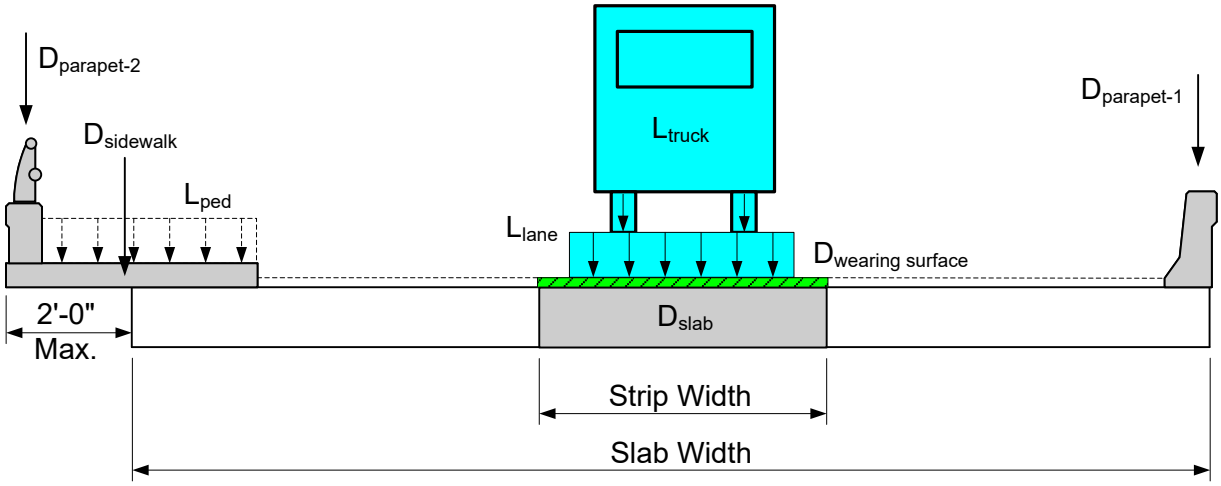

Figure 17.2-10

Distribution of Loads to Interior Strip Width for Slab Structure with Raised Sidewalk

The distribution of loads to the interior strip is calculated as follows:

For dead loads, the strip width must resist its self-weight, future wearing surface and all superimposed dead loads. The superimposed dead loads (including parapets, medians, and sidewalk) are distributed uniformly across the entire slab width. The distribution of superimposed dead load to the interior strip width is then computed based on the ratio of the interior strip width to the slab width. Wearing surface is not applied to sidewalks.

For live loads, one lane of live loading is applied to the interior strip width.

Pedestrian loads are not applied to the interior strip width.

The general equation for loads applied to the interior strip width is as follows:

$$\text{Total Load} = D_{slab} + D_{\text{wearing surface}} + \left[\left(D_{\text{parapet}-1} + D_{\text{parapet}-2} + D_{\text{sidewalk}} \right) \left(\frac{\text{Strip Width}}{\text{Slab Width}} \right) \right] + \left(L_{truck} + L_{lane} \right)$$

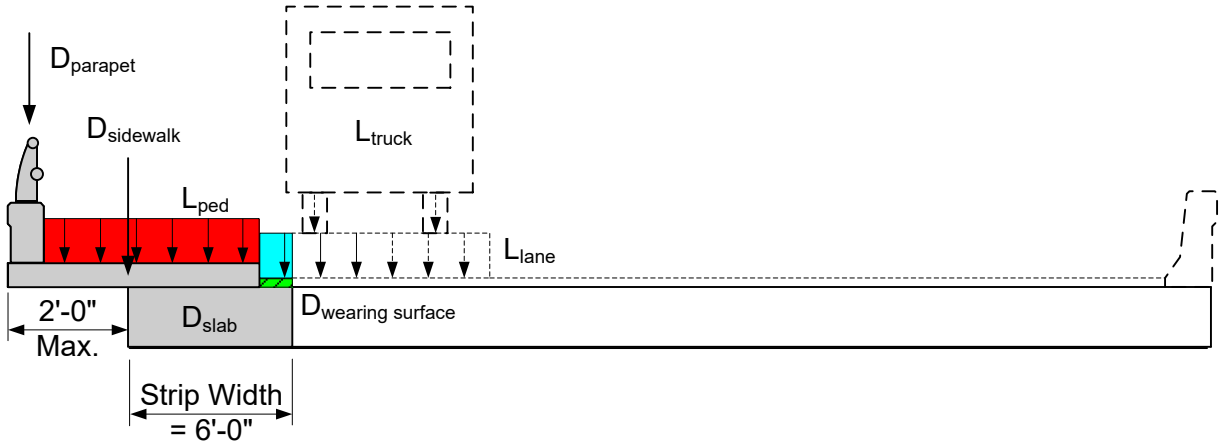

Live Load Case 1

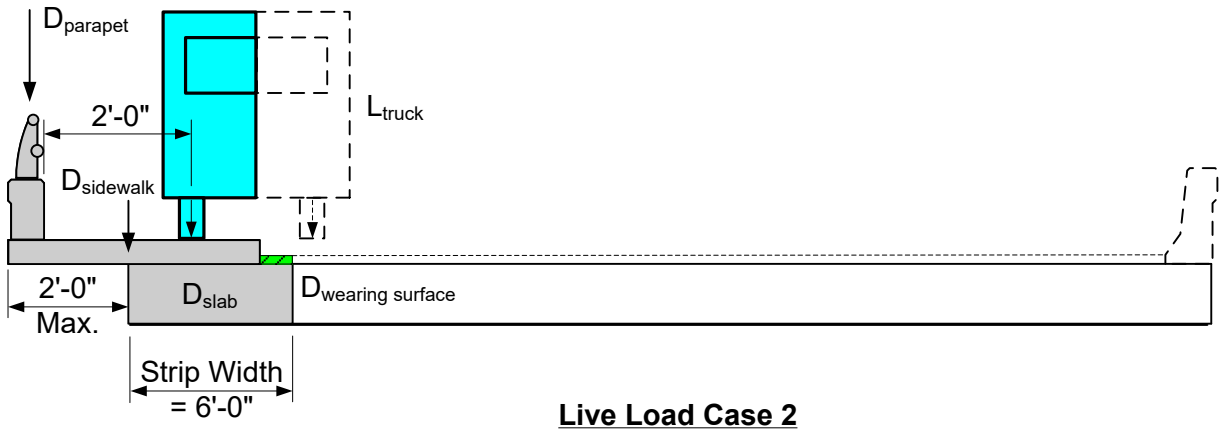

Live Load Case 2

Figure 17.2-11

Distribution of Loads to Exterior Strip Width for Slab Structure with Raised Sidewalk

The distribution of loads to the exterior strip is calculated as follows:

For dead loads, the strip width must resist its self-weight and all superimposed dead loads located directly over the strip and on the cantilevered portion of the sidewalk on that side of the bridge. If the overlap of the sidewalk with the slab is > 6'-0", only apply the sidewalk dead load located directly over the exterior strip width and from the cantilevered portion of the sidewalk, to the exterior strip.

Two live load cases shall be considered. For Live Load Case 1, only the portion of the design lane load located directly over the exterior strip width is applied to the exterior strip. The design truck is not applied for Live Load Case 1 due to typical geometry constraints. For Live Load Case 2, the design lane load is not applied. The design truck (see Figure 17.2-1) is placed on the sidewalk with one wheel located 2 feet from the face of the railing. Due to typical geometry constraints, only one wheel is located directly over the exterior strip; therefore, only half of the axle weights (one line of wheels) are applied to the exterior strip.

For pedestrian loads, two load cases shall be considered as described above. For Live Load Case 1, the pedestrian load located directly over the exterior strip and on the cantilevered portion of the sidewalk shall be applied to the exterior strip. For Live Load Case 2, the pedestrian load shall not be applied.

The general equations for loads applied to the exterior strip width are as follows:

For Live Load Case 1:

$$\text{Total Load} = D_{slab} + \left(D_{wearing\ surface} + D_{parapet} + D_{sidewalk}\right)_{directly\ over\ strip} + \left(L_{ped}\right) + \left(L_{lane}\right)_{directly\ over\ strip}$$

For Live Load Case 2:

$$\text{Total Load} = D_{slab} + \left(D_{wearing\ surface} + D_{parapet} + D_{sidewalk}\right)_{directly\ over\ strip} + \left(L_{truck}\right)_{directly\ over\ strip}$$

17.2.8 Distribution of Loads for Girder Structures

For girder structures, the distribution of dead loads is illustrated in Figure 17.2-12 through Figure 17.2-19. Figure 17.2-12 and Figure 17.2-13 illustrate the distribution of loads for girder structures with no sidewalks. Figure 17.2-14 and Figure 17.2-15 illustrate the distribution of loads for girder structures with sidewalks. Figure 17.2-16 through Figure 17.2-19 illustrate the distribution of loads for girder structures with raised sidewalks. It should be noted that, although medians are not shown in these figures, medians are treated similar to other superimposed dead loads.

For girder structures, distribution of live loads is based on the use of live load distribution factors which are computed as specified in **LRFD [4.6.2.2]** and as summarized in Table 17.2-7. Distribution factors are computed for moment and shear using equations that include girder spacing, span length, deck thickness, the number of girders and the longitudinal stiffness parameter. Separate distribution factors are computed for moment and shear and for interior and exterior girders.

In addition to computing the live load distribution factors, their ranges of applicability should also be checked, as presented in the applicable table in **LRFD [4.6.2.2]**. If the ranges of applicability are not satisfied, then conservative assumptions must be made based on sound engineering judgment.

For girder structures, the most commonly used live load distribution factors are presented in Table 17.2-7.

Application	One Design Lane Loaded	Two or More Design Lanes Loaded
Moment in Interior Girder – **LRFD [Table 4.6.2.2.2b-1]**		
	$0.06+\left(\frac{S}{14}\right)^{0.4}\left(\frac{S}{L}\right)^{0.3}\left(\frac{K_g}{12.0Lt_s^{\ 3}}\right)^{0.1}$	$0.075+\left(\frac{S}{9.5}\right)^{0.6}\left(\frac{S}{L}\right)^{0.2}\left(\frac{K_g}{12.0Lt_s^{\ 3}}\right)^{0.1}$
	For N_b = 3, use the lesser of the values obtained from the equations above with N_b = 3 or the lever rule.	
Shear in Interior Girder – **LRFD [Table 4.6.2.2.3a-1]**		
	$0.36+\frac{S}{25.0}$	$0.2+\frac{S}{12}-\left(\frac{S}{35}\right)^{2.0}$
	For N_b = 3, use the lever rule.	
Moment in Exterior Girder – **LRFD [C4.6.2.2.2d]** and **LRFD [Table 4.6.2.2.2d-1]**		
	Use lever rule	$g=e\cdot g_{interior}$ $e=0.77+\frac{d_e}{9.1}$
		For N_b = 3, use the lesser of the value obtained from the equation above with N_b = 3 or the lever rule.
Shear in Exterior Girder – **LRFD [C4.6.2.2.2d]** and **LRFD [Table 4.6.2.2.3b-1]**		
	Use lever rule	$g=e\cdot g_{interior}$ $e=0.6+\frac{d_e}{10}$
		For N_b = 3, use the lever rule.
Moment Reduction for Skew – **LRFD [Table 4.6.2.2.2e-1]** (not applicable for WisDOT)		
Shear Correction for Skew – **LRFD [Table 4.6.2.2.3c-1]**		

Table 17.2-7
Commonly Used Live Load Distribution Factors for Girder Structures

WisDOT exception to AASHTO:

The rigid cross-section requirement specified in **LRFD [4.6.2.2.2d]** shall not be applied when calculating the distribution factors for exterior girders.

WisDOT exception to AASHTO:

For skewed bridges, WisDOT does not apply skew correction factors for moment reduction, as specified in **LRFD [Table 4.6.2.2.2e-1]**.

WisDOT policy item:

For skewed bridges, WisDOT applies the skew correction factor for shear, as specified in **LRFD [Table 4.6.2.2.3c-1]**, to the *entire span* for *all girders* in a multi-girder bridge.

The following variables are used in Table 17.2-7:

S	=	Spacing of beams (feet)
L	=	Span length (feet)
t_s	=	Depth of concrete slab (inches)
K_g	=	Longitudinal stiffness parameter (inches^4)
N_b	=	Number of beams or girders
g	=	Distribution factor
e	=	Correction factor for distribution
d_e	=	Distance from the exterior web of exterior beam to the interior edge of curb or traffic barrier (feet)

For shear due to live load, in addition to the equations presented in Table 17.2-7, a skew correction factor must be applied in accordance with **LRFD [Table 4.6.2.2.3c-1]**. The skew correction factor equation for shear in girder bridges is as follows:

$$1.0 + 0.20\left(\frac{12.0\,L\,t_s^{\,3}}{K_g}\right)^{0.3} \tan\theta$$

Where:

L	=	Span length (feet)
t_s	=	Depth of concrete slab (inches)
K_g	=	Longitudinal stiffness parameter (inches^4)
θ	=	Skew angle (degrees)

As a general rule of thumb, whenever the live load distribution factors are computed based on the equations presented in *AASHTO LRFD*, the multiple presence factor has already been considered and should not be applied by the engineer. However, when a sketch must be drawn to compute the live load distribution factor, the multiple presence factor must be applied to the computed distribution factor. An example of this principle is in the application of the lever rule.

The multiple presence factor should not be applied to the fatigue limit state for which one design truck is used, regardless of the number of design lanes. However, where the single-lane distribution factor equations are used, as presented in **LRFD [4.6.2.2]** and **LRFD [4.6.2.3]**, the force effects should be divided by 1.20.

For each of the following figures, the distribution of loads for that configuration and girder location is described and a general equation is presented immediately below the corresponding figure. In the general equations, it is assumed that dynamic load allowance is applied to the appropriate live load components.

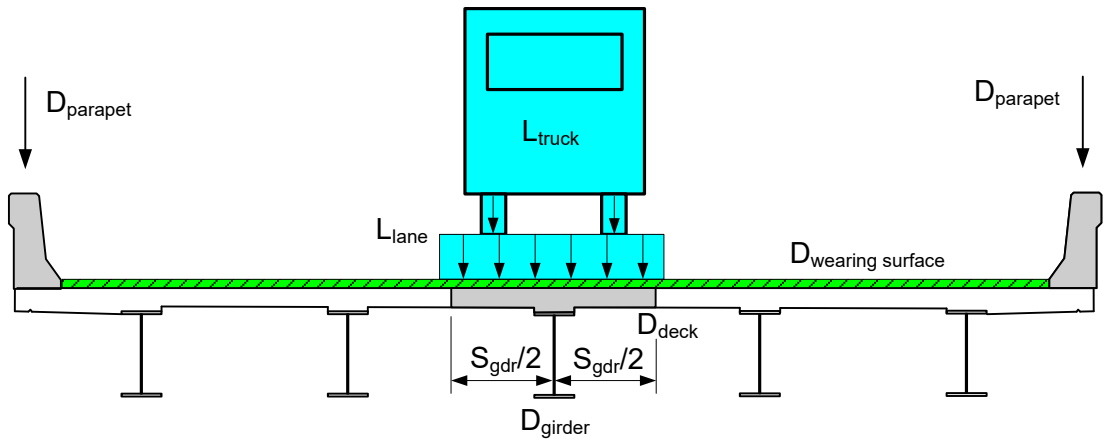

Figure 17.2-12
Distribution of Loads to Interior Girder for Girder Structure

The distribution of loads to the interior girder is calculated as follows:

For dead loads, the interior girder must resist the girder weight (girder self-weight and any other miscellaneous weight applied to the girder), deck weight (including the concrete haunch) and all superimposed dead loads. The distribution of the deck weight is based on the girder spacing. The distribution of all superimposed dead loads is based on equal distribution to all girders.

For live loads, the distribution is based on the live load distribution factors (DF) for interior girders presented in Table 17.2-7.

The general equation for loads applied to the interior girder is as follows:

$$\text{Total Load} = D_{girder} + D_{deck} + \left(\frac{D_{wearing\ surface} + 2D_{parapet}}{\text{No. of Girders}}\right) + \left[(DF_{int})(L_{truck} + L_{lane})\right]$$

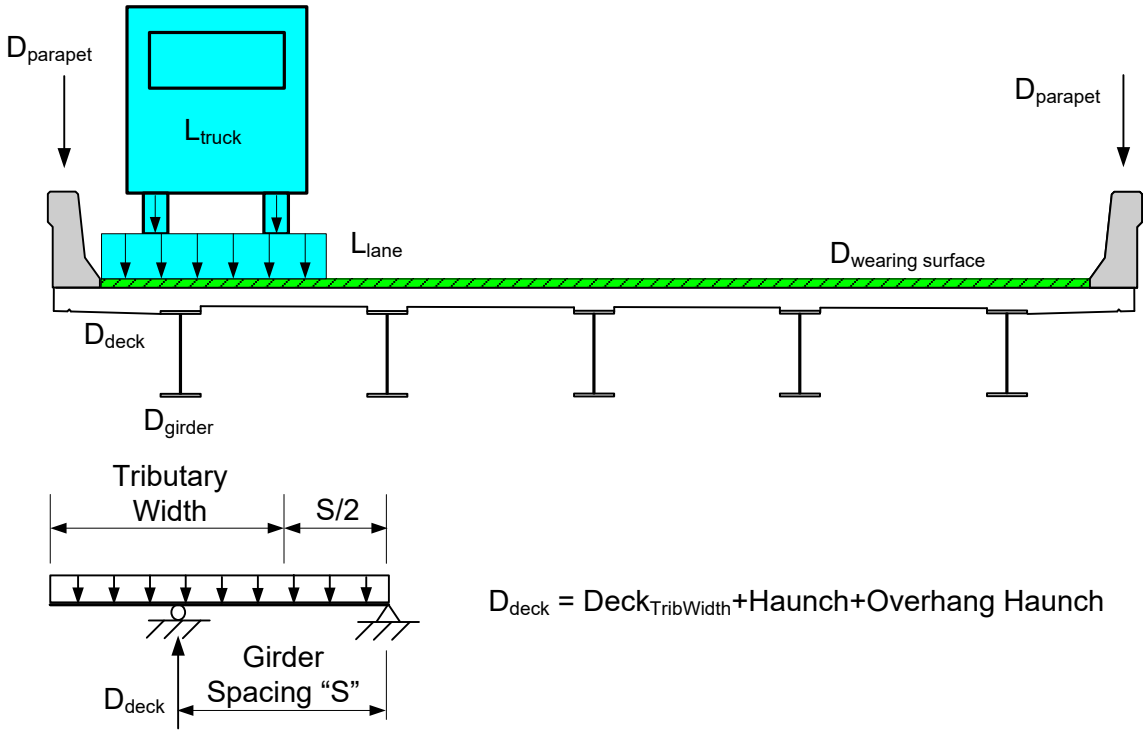

Use Tributary Width for Deck Load

Figure 17.2-13
Distribution of Loads to Exterior Girder for Girder Structure

The distribution of loads to the exterior girder is calculated as follows:

For dead loads, the exterior girder must resist the girder weight (girder self-weight and any other miscellaneous weight applied to the girder), deck weight (including the concrete haunch and overhang haunch) and all superimposed dead loads. The distribution of the deck weight to the exterior girder is based on the tributary width, as shown in the above figure. The distribution of all superimposed dead loads is based on equal distribution to all girders.

For live loads, the distribution is based on the live load distribution factors for exterior girders presented in Table 17.2-7.

The general equation for loads applied to the exterior girder is as follows:

$$\text{Total Load} = D_{girder} + D_{deck} + \left(\frac{D_{wearing\ surface} + 2D_{parapet}}{\text{No. of Girders}}\right) + \left[(DF_{ext})(L_{truck} + L_{lane})\right]$$

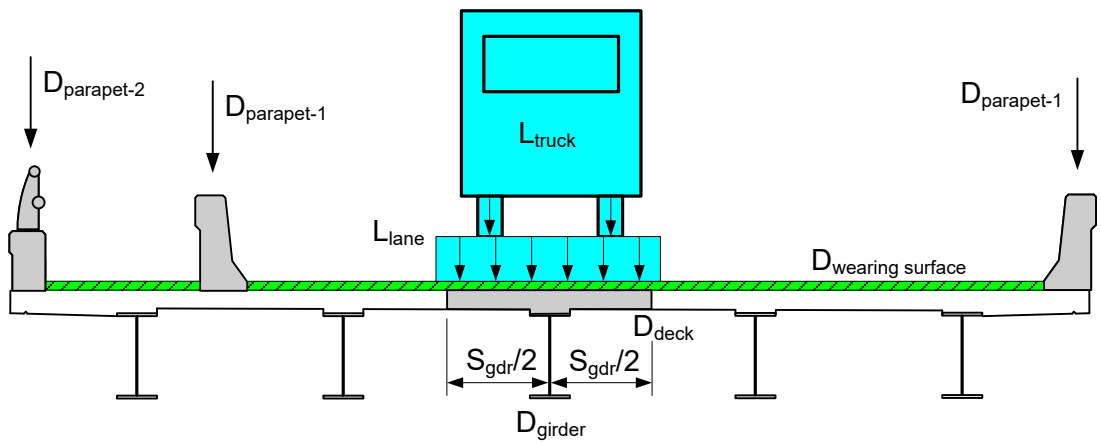

Figure 17.2-14
Distribution of Loads to Interior Girder for Girder Structure with Sidewalk

The distribution of loads to the interior girder is calculated as follows:

For dead loads, the interior girder must resist the girder weight (girder self-weight and any other miscellaneous weight applied to the girder), deck weight (including the concrete haunch) and all superimposed dead loads. The distribution of the deck weight is based on the girder spacing. The distribution of all superimposed dead loads is based on equal distribution to all girders.

For live loads, the distribution is based on the live load distribution factors for interior girders presented in Table 17.2-7.

Pedestrian loads are not applied to the interior girder.

The general equation for loads applied to the interior girder is as follows:

$$\text{Total Load} = D_{\text{girderl}} + D_{\text{deck}} + \left(\frac{D_{\text{wearing surface}} + 2D_{\text{parapet-1}} + D_{\text{parapet-2}}}{\text{No. of Girders}} \right) + \left[(DF_{\text{int}})(L_{\text{truck}} + L_{\text{lane}}) \right]$$

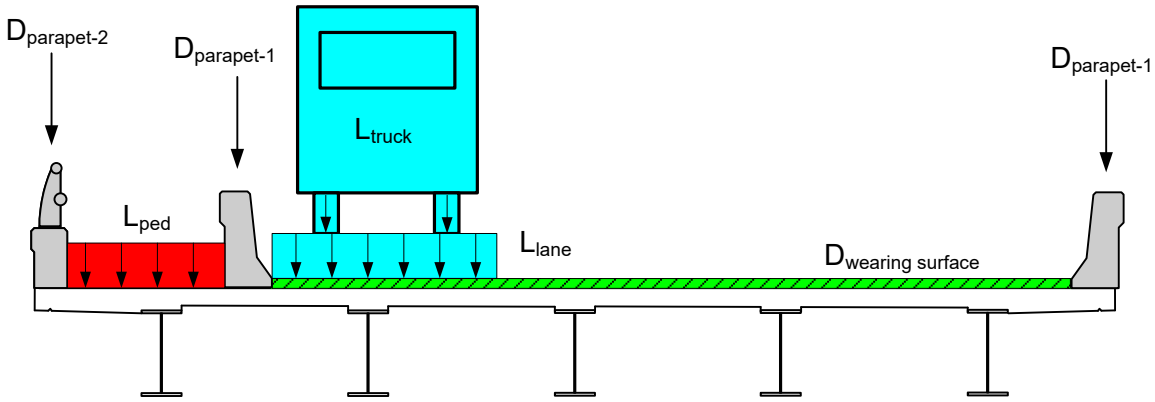

Actual Configuration

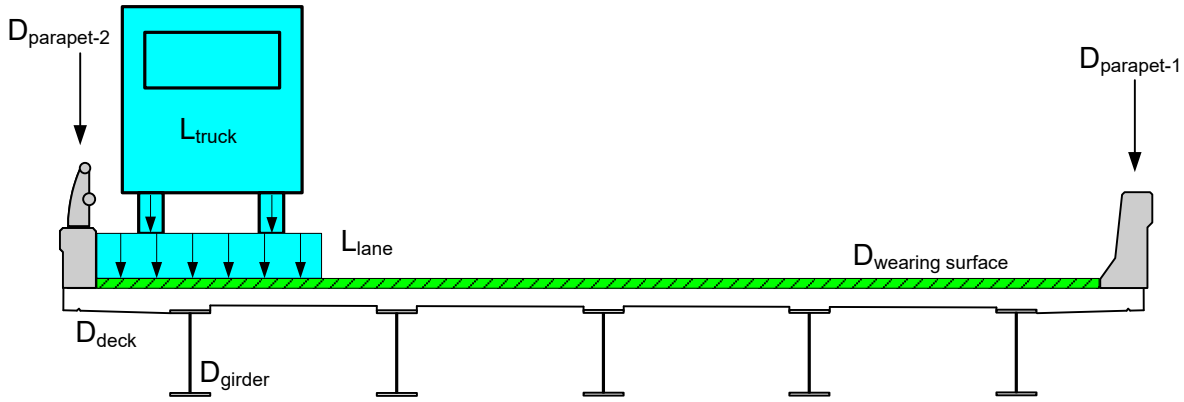

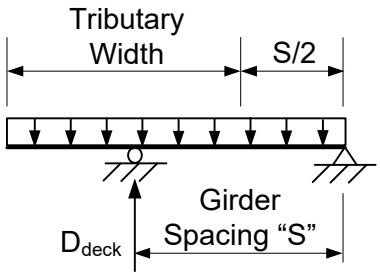

D_{deck} = $Deck_{TribWidth}$+Haunch+Overhang Haunch

Use Tributary Width for Deck Load

Design Configuration

Figure 17.2-15
Distribution of Loads to Exterior Girder for Girder Structure with Sidewalk

The distribution of loads to the exterior girder is calculated as follows:

For dead loads, the exterior girder must resist the girder weight (girder self-weight and any other miscellaneous weight applied to the girder), deck weight (including the concrete haunch and overhang haunch) and all superimposed dead loads. The distribution of the deck weight

to the exterior girder is based on the tributary width, as shown in the previous figure. The distribution of all superimposed dead loads is based on equal distribution to all girders.

For live loads, it is assumed that the interior parapet is not present. Therefore, the truck and lane are positioned as shown in the Design Configuration portion of the previous figure. The distribution is based on the live load distribution factors for exterior girders presented in Table 17.2-7, assuming the truck and lane as positioned in the Design Configuration portion of the figure.

For pedestrian loads, it is assumed that none are present due to the assumed absence of the interior parapet and the assumed presence of vehicular live load immediately adjacent to the exterior parapet.

The general equation for loads applied to the exterior girder is as follows:

$$\text{Total Load} = D_{girder} + D_{deck} + \left(\frac{D_{wearing\ surface} + D_{parapet-1} + D_{parapet-2}}{\text{No. of Girders}} \right) + \left[(DF_{ext})(L_{truck} + L_{lane}) \right]$$

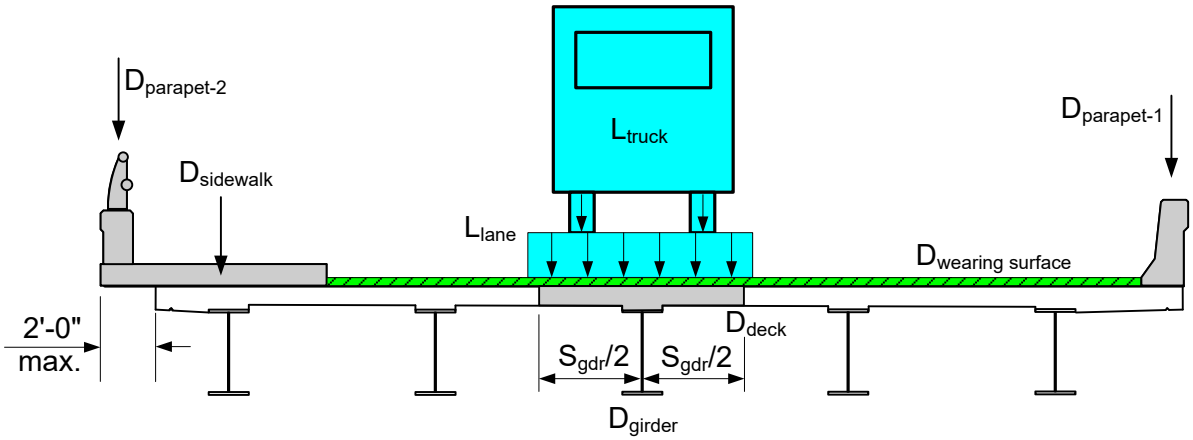

Figure 17.2-16
Distribution of Loads to Interior Girder for Girder Structure with Raised Sidewalk

The distribution of loads to the interior girder is calculated as follows:

For dead loads, the interior girder must resist the girder weight (girder self-weight and any other miscellaneous weight applied to the girder), deck weight (including the concrete haunch) and all superimposed dead loads. The distribution of the deck weight is based on the girder spacing. The distribution of all superimposed dead loads is based on equal distribution to all girders.

For live loads, the distribution is based on the live load distribution factors for interior girders presented in Table 17.2-7.

Pedestrian loads are not applied to the interior girder.

The general equation for loads applied to the interior girder is as follows:

$$\text{Total Load} = D_{girder} + D_{deck} + \left(\frac{D_{wearing\ surface} + D_{sidewalk} + D_{parapet-1} + D_{parapet-2}}{\text{No. of Girders}} \right) + \left[(DF_{int})(L_{truck} + L_{lane}) \right]$$

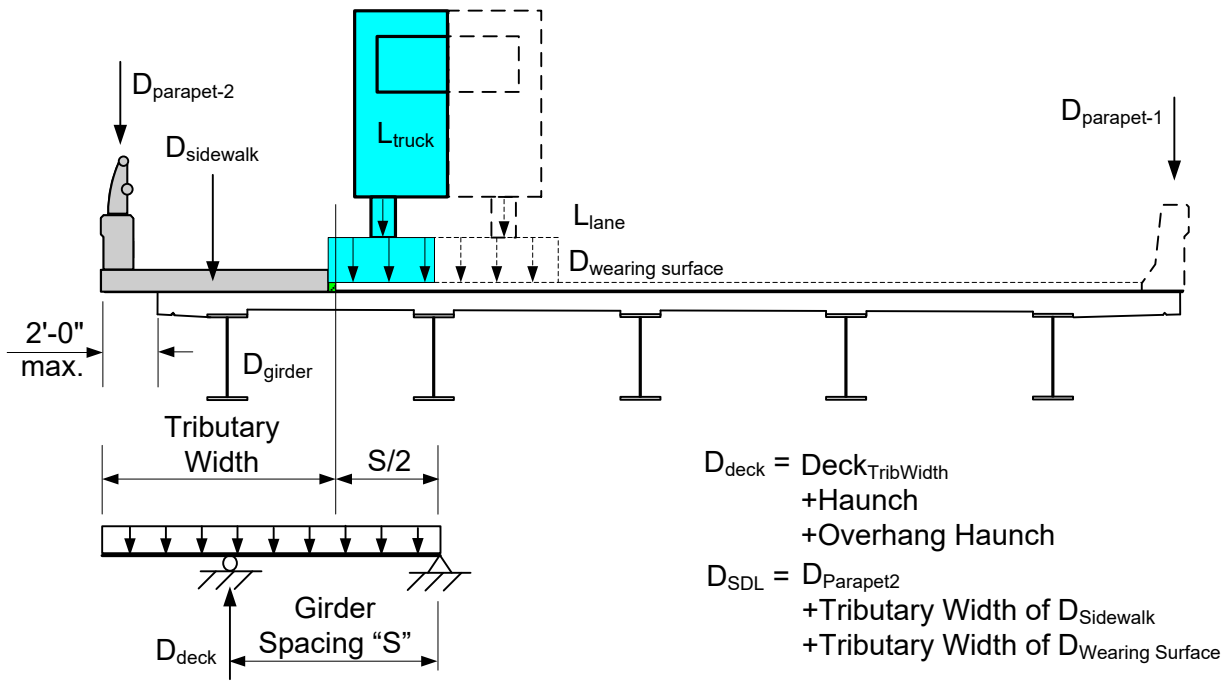

Use Tributary Width for Deck and Superimposed Dead Loads

Figure 17.2-17
Distribution of Loads to Exterior Girder for Girder Structure with Raised Sidewalk
Design Case 1

The distribution of loads to the exterior girder for Design Case 1 is calculated as follows:

For dead loads, the exterior girder must resist the girder weight (girder self-weight and any other miscellaneous weight applied to the girder), deck weight (including the concrete haunch and overhang haunch) and all superimposed dead loads. The distribution of the deck weight and all superimposed dead loads to the exterior girder are based on the tributary width, as shown in the previous figure.

For the live load, the live load distribution factor for Design Case 1 is based only on the application of the lever rule. It is recommended for Design Case 1 lane load to use the same distribution factor as for the truck load. The appropriate multiple presence factor of 1.2 must be applied.

The general equation for loads applied to the exterior girder is as follows:

$$\text{Total Load} = D_{girder} + D_{deck} + D_{superimposed\ DL} + \left[(DF_{ext})(L_{truck} + L_{lane})\right]$$

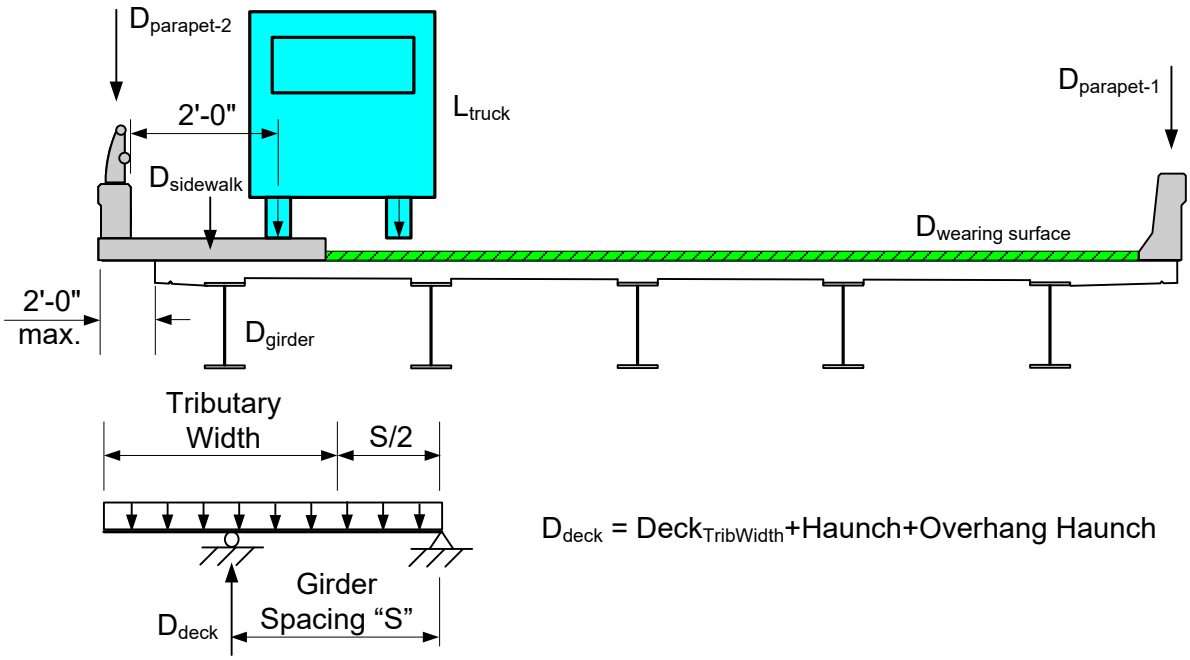

Use Tributary Width for Deck Load

Figure 17.2-18
Distribution of Loads to Exterior Girder for Girder Structure with Raised Sidewalk
Design Case 2

The distribution of loads to the exterior girder for Design Case 2 is calculated as follows:

For dead loads, the exterior girder must resist the girder weight (girder self-weight and any other miscellaneous weight applied to the girder), deck weight (including the concrete haunch and overhang haunch) and all superimposed dead loads. The distribution of the deck weight to the exterior girder is based on the tributary width, as shown in the previous figure. The distribution of all superimposed dead loads is based on equal distribution to all girders.

For the live load, the live load distribution factor for Design Case 2 is based only on the application of the lever rule. The appropriate multiple presence factor of 1.2 must be applied.

The general equation for loads applied to the exterior girder is as follows:

$$\text{Total Load} = D_{girder} + D_{deck} + \left(\frac{D_{wearing\ surface} + D_{sidewalk} + D_{parapet-1} + D_{parapet-2}}{\text{No. of Girders}} \right) + \left[(DF_{ext})(L_{truck}) \right]$$

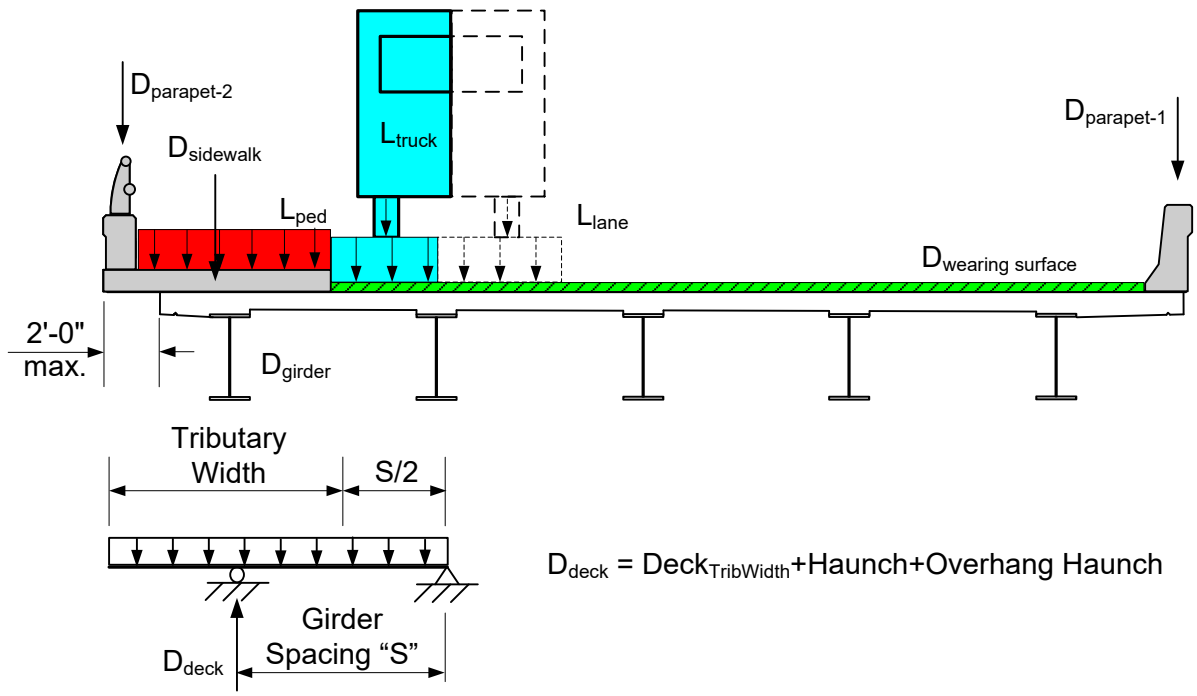

Use Tributary Width for Deck Load

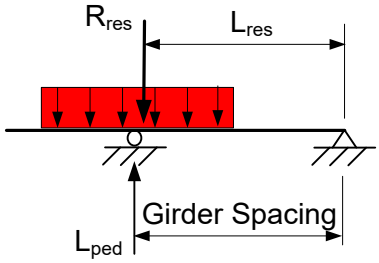

$$L_{ped} = \frac{(R_{res})(L_{res})}{\text{Girder Spacing}}$$

Apply Lever Rule for Pedestrian Load

Figure 17.2-19
Distribution of Loads to Exterior Girder for Girder Structure with Raised Sidewalk
Design Case 3

The distribution of loads to the exterior girder for Design Case 3 is calculated as follows:

For dead loads, the exterior girder must resist the girder weight (girder self-weight and any other miscellaneous weight applied to the girder), deck weight (including the concrete haunch and overhang haunch) and all superimposed dead loads. The distribution of the deck weight to the exterior girder is based on the tributary width, as shown in the previous figure. The distribution of all superimposed dead loads is based on equal distribution to all girders.

For the live load, the live load distribution factor for Design Case 3 is based only on the application of the lever rule. It is recommended for Design Case 3 lane load to use the same distribution factor as for the truck load. The appropriate multiple presence factor of 1.0 must be applied.

For pedestrian loads, the distribution to the exterior girder is based on the lever rule, as shown in the previous figure.

The general equation for loads applied to the exterior girder is as follows:

$$\text{Total Load} = D_{girder} + D_{deck} + \left(\frac{D_{wearing\ surface} + D_{sidewalk} + D_{parapet-1} + D_{parapet-2}}{\text{No. of Girders}} \right) + L_{ped} + \left[(DF_{ext})(L_{truck} + L_{lane}) \right]$$

17.2.9 Distribution of Dead Load to Substructure Units

For abutment design, the composite dead loads may be distributed equally between all of the girders, or uniformly across the slab.

For pier design, the composite dead loads should be distributed equally between all of the girders, or uniformly across the slab, except for bridges with raised sidewalks. For girder bridges with raised sidewalks, follow the aforementioned Design Case 1 & 3 used for exterior girder design. For slab bridges with raised sidewalks, use the loading specified in Live Load Case 1 for exterior strips.

It is acceptable to consider the concrete diaphragm loads to be divided equally between all of the girders and added as point loads to the girder reactions.

17.2.10 Distribution of Live Loads to Substructure Units

See 17.2.9 for additional live load guidance regarding bridges with raised sidewalks. In the transverse direction, the design truck and design tandem should be located in such a way that the effect being considered is maximized. However, the center of any wheel load must not be closer than 2 feet from the edge of the design lane. The transverse live load configuration for a design truck or design tandem is illustrated in Figure 17.2-20. Pedestrian live load may be omitted if trying to maximize positive moment in a multi-columned pier cap.

As a reminder, always be aware to apply loads correctly. For example, for continuous spans the loading to the pier originates from the live load reaction rather than the sum of the live load shears of adjacent spans.

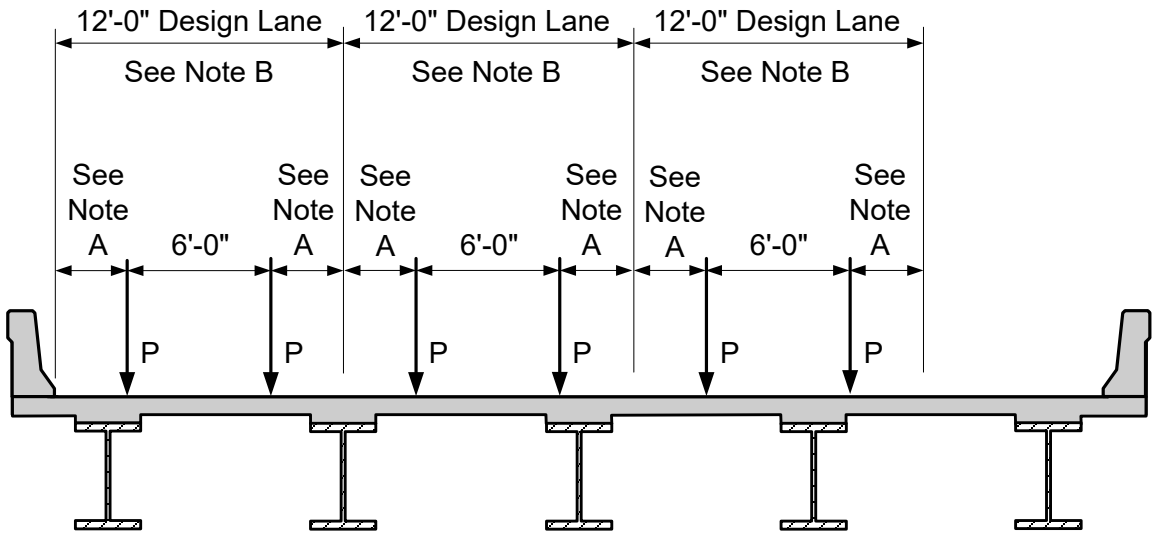

P = Wheel Load

Note A: Position wheel loads within the design lane such that the effect being considered is maximized; minimum = 2'-0".

Note B: Position design lanes across the roadway such that the effect being considered is maximized.

Figure 17.2-20
Transverse Configuration for a Design Truck or Design Tandem

Similarly, the design lane is distributed uniformly over the 10-foot loaded width. Since the design lane is 0.64 kips per linear foot in the longitudinal direction and it acts over a 10-foot width, the design lane load is equivalent to 64 psf. Similar to a design truck or design tandem, the 10-foot loaded width is positioned within the 12-foot design lane such that the effect being considered is maximized, as illustrated in Figure 17.2-21. The 10-foot loaded width may be placed at the edge of the 12-foot design lane.

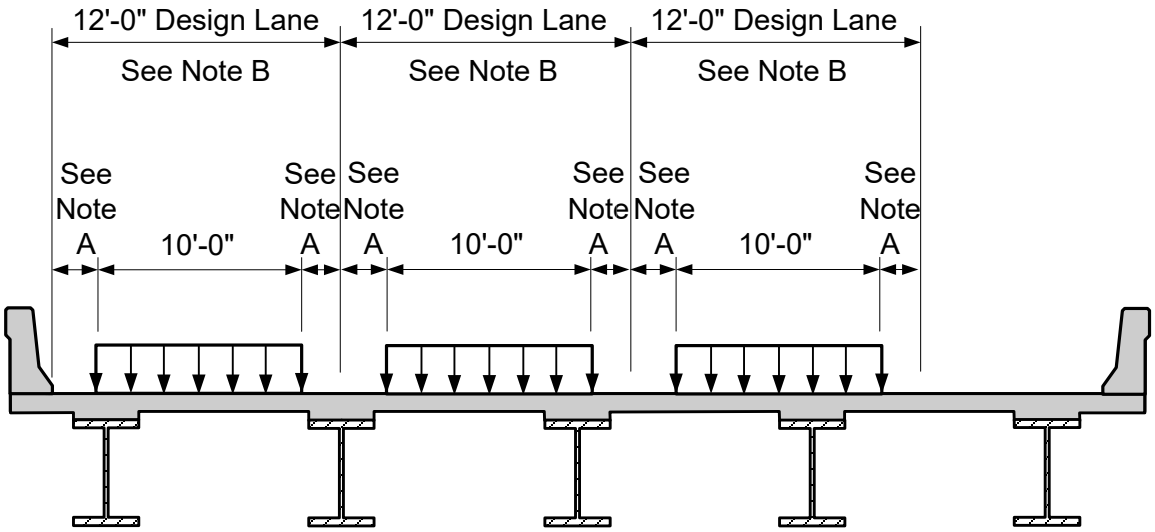

Note A: Position 10'-0" lane loads within the 12'-0" design lane such that the effect being considered is maximized; minimum = 0'.

Note B: Position 12'-0" design lanes across the roadway such that the effect being considered is maximized.

Figure 17.2-21
Transverse Configuration for a Design Lane

When live load reactions are calculated at substructure units different methods of distributing the loads are used for the axles on the substructure and for the axles in the spans. The load to a girder for an axle directly over the substructure unit is based on simple beam distribution between the girders. The reactions for the axles located within the span are based on the shear distribution factors.

WisDOT policy item:

A 10 foot design lane width may be used for the distribution of live loads to a pier cap.

For use in design of the foundations, the live load reactions should be tracked for both the Strength and Service load cases, as well as with and without the dynamic load allowance (IM). Note that the IM is not applied to the lane load portion of the live load reaction, so the reaction without the IM cannot be factored out of the reaction with IM.

17.2.11 Composite Section Properties

The effective flange width is the width of the deck slab that is to be taken as effective in composite action for determining resistance for all limit states. In accordance with **LRFD [4.6.2.6]**, the composite section width is taken as the tributary width perpendicular to the axis of the girder.

For exterior beams, the effective flange width is taken as one-half the effective width of the adjacent interior beam, plus the width of the overhang.

17.2.12 Allowable Live Load Deflection

WisDOT policy item:

LRFD [2.5.2.6.2] specifies optional live load deflection criteria for simple or continuous spans. However, the deflection criteria presented in Table 17.2-8 is required by WisDOT

Structure Type	Allowable Live Load Deflection
Conventional girder structure without pedestrians	L/800
Conventional girder structure with pedestrians	L/1000
Concrete slab structure	L/1200

Table 17.2-8
Allowable Live Load Deflection

17.2.13 Actual Live Load Deflection

The distribution factor for computing live load deflection is not the same as the moment distribution factor, because it is assumed that for straight bridges all beams or girders act together and have an equal deflection. However, for curved bridges, each girder must be checked individually.

For steel girder structures, composite section properties for deflection computations should be based on n rather than 3n. For concrete slab structures, the deflections should be based on the entire slab width acting as a unit, using the gross moment of inertia, I_g.

Using an analysis computer program, the maximum live load deflection can be computed as follows:

All design lanes are loaded and the appropriate multiple presence factor is used.

For composite design, the design cross section includes the entire width of the deck. As specified in AASHTO LRFD, the barriers and sidewalks may be included in the stiffness computations. However, due to the complexity of such computations, this should not be standard practice for WisDOT structures.

The number and position of loaded lanes is selected to provide the worst effect.

The live load portion of Service I limit state is used.

Dynamic load allowance is included.

The live load is taken as live load combinations LL#5: Design Truck + IM or LL#6: 25%(Design Truck + IM)+ Lane from 17.2.4.2.6.

17.3 Selection of Structure Type

The selection of the proposed structure type is determined from evaluation of the Structure Survey Report with accompanying supplemental data, current construction costs and preference based on past experience. In selecting the most economical structure, ease of fabrication and erection, general features of terrain, roadway geometrics, subsurface exploration and geographic location in the State of Wisconsin are considered. The proposed structure must blend into existing site conditions in a manner that does not detract from its surrounding environment. Every attempt should be made to select an aesthetically attractive structure consistent with structural requirements, economy and geographic surroundings. For information about bridge aesthetics, see Chapter 4 – Aesthetics.

The economical span ranges of various types of structures are given in Chapter 5 – Economics and Costs. Superstructure span lengths are related to the cost of the substructure units. If the substructure units are relatively expensive, it is generally more economical to use longer span lengths available for a given structure type. Practicality dictates using the average structure length for twin structures if the preliminary structure lengths are within approximately 3 feet. In addition, a multiple-span structure should be made symmetrical if its end spans are within approximately 3 feet in length of each other.

All structure span lengths are rounded off to the nearest 1 foot, except for stream crossings and multi-span prestressed girder structures where the span lengths are adjusted to maintain equal girder lengths. For example, a typical multiple-span prestressed girder structure has interior spans longer than its exterior spans. Refer to the Standard Details for Pretensioned Girders, Slab and Superstructure Details for details of girder lengths at abutment and piers.

At stream crossings, structure span lengths should be designed to the nearest foot (center-to-center bearing) and skew angles should be designed in multiples of 5°. This results in standardized span lengths and skew angles.

For geometric considerations in structure selection, reference is made to Chapter 3 – Design Criteria. The requirements for structure expansion and fixed pier locations are presented in Chapter 12 – Abutments, and bearing types are described in Chapter 27 – Bearings. Expansion joint types and requirements are specified in Chapter 28 – Expansion Devices. Since the skew angle for most snow plow blades is 35°, it is desirable to avoid this skew angle for bridge joints. This reduces the chances of joint damage resulting from the plow blades dropping into the expansion joints.

Use of non-redundant structures, including single-box and two-box steel box girder bridges, should be avoided unless absolutely necessary. Certain situations, including extreme span length over a navigational channel or tight curvature, may necessitate such bridges.

17.3.1 Alternate Structure Types

When developing bridge plans, consider the following procedures:

- Base preliminary plan development on an engineering and economic evaluation of alternate designs.

- Evaluate alternative designs on the basis of competitive materials appropriate to a specific structure type.

- Do not propose specific construction methods or erection procedures in the plans unless constraints are necessary to meet specific project requirements.

- Make an economic evaluation of preliminary estimates based on state-of-the-art methods of construction for structure types.

- Consider future structure maintenance needs in the structure's design in order to provide life-cycle costing data.

- Consider alternate plans where experience, expertise and knowledge of conditions clearly indicate that they are justified. Alternate plans are not compatible with stage construction and should not be used in these situations.

- Value engineering concepts are recognized as being cost effective. Apply these concepts to the selection of structure type, size and location throughout the plan development process.

17.4 Superstructure Types

Superstructures are classified as deck or through types.

For deck type structures, the roadway is above or on top of the supporting structures. Examples of deck type structures are girder bridges and steel deck-trusses.

For through type structures, the roadway passes between two elements of the superstructure. Examples of through type structures are steel through-trusses and tied-arch bridges.

Through type structures are generally used where long span lengths are required. Deck type structures are more common, because they lend themselves to future widening if increased traffic requires it.

Some of the various types of superstructures used in Wisconsin are as follows:

1. Concrete slab (flat and haunched)

   Concrete slab structures are adaptable to roadways with a high degree of horizontal curvature. This superstructure type is functional for short to medium span lengths and is relatively economical to construct and maintain. The practical range of span lengths for concrete slab structures can be increased by using haunched slab structures.

WisDOT policy item:

Concrete slab structures are limited to sites requiring a skew angle of 30 degrees or less.

   Voided slab structures are not currently being used due to excessive longitudinal cracking over the voids in the negative moment region. For more information about concrete slab structures, refer to Chapter 18 – Concrete Slab Structures.

2. Prestressed concrete girder

   Prestressed concrete girder structures are very competitive from a first cost standpoint and require very little maintenance. Prestressed concrete girders are produced by a fabrication plant certified by WisDOT. Future widening can be accomplished with relative ease. For more information about prestressed concrete girder bridges, refer to Chapter 19 – Prestressed Concrete.

3. Concrete T-beam

WisDOT policy item:

The concrete T-beam has had limited use in Wisconsin during recent years and is no longer used.

4. Prestressed box girder

   Prestressed box girder structures have the advantage of rapid construction where traffic must be diverted. Elimination of the need for falsework is a particular advantage when vertical clearances are critical during the construction phase. Experience indicates that, from a first-cost standpoint, these structures are more expensive to construct than concrete slab structures. For more information, refer to Chapter 19 – Prestressed Concrete.

5. Concrete box girder

   The concrete box girder structure is aesthetically adaptable for urban sites having roadways with a high degree of horizontal curvature or large skew angles. This structure is frequently employed in multi-level interchanges where horizontal clearances are limited, since the pier cap is an integral part of the superstructure. However, problems can be encountered in maintenance with deck replacements requiring shoring.

6. Concrete rigid frame

   The concrete rigid frame is more costly than other superstructure types. However, the concrete rigid frame is known for its aesthetic value and is used primarily in public parks and urban areas where the span lengths are similar to concrete slab structures and where approach embankments are relatively high.

7. Steel rolled section and welded plate girder

   Welded plate girders are less expensive than rolled sections with cover plates because of their reduced allowable design stress resulting from the fatigue criteria. Welded plate girders have greater versatility in allowing variable web thickness and depth, as well as variable flange thicknesses. Future widening can be accomplished with relative ease. For more information, refer to Chapter 24 – Steel Girder Structures and Chapter 38 – Railroad Structures.

8. Steel box girder

   Steel box girder structures have span length capabilities similar to plate girders. Aesthetically, they present a smooth, uncluttered appearance due to their closed box sections. Current experience reveals that steel box girders require more material than conventional steel plate girders. However, due to redundancy concerns, use of single-box and two-box girder bridges should be avoided unless absolutely necessary.

9. Steel tied arch and steel truss

   Unusual bridge sites, such as major river and harbor crossings, may require the use of longer span lengths than conventional deck type superstructures can accommodate. For such conditions, a steel tied arch or a steel truss can be used effectively.

10. Timber longitudinally laminated decks

Timber structures blend well in natural settings and are relatively easy to construct with light construction equipment. Timber longitudinally laminated deck structures have low profiles that generally provide large clearances for high water. Their application is limited by the range of span lengths and economics in comparison to concrete slabs. For more information, refer to Chapter 23 – Timber Structures.

17.5 Design of Slab on Girders

17.5.1 General

The design of concrete decks on prestressed concrete or steel girders is based on **LRFD [4.6.2.1]**. Moments from truck wheel loads (one or two trucks side by side) are distributed over a width of deck which spans perpendicular to the girder. The width of deck or width of equivalent strip is presented in **LRFD [Table 4.6.2.1.3-1]**. Positive moments are distributed over a different deck width than negative moments. The distribution width in inches is equal to 26.0 + 6.6 S for positive moments and 48.0 + 3.0 S for negative moments, where S equals girder spacing in feet.

To minimize transverse deck cracking, a minimum slab thickness of 8 inches is used for all decks on new bridges. For deck replacements, a thinner deck may be used if a reduced dead load is required to increase live load capacity. Research on transverse deck cracking (*NCHRP Report 297*) recommends smaller diameter reinforcement to reduce transverse deck cracking. The maximum size of transverse bars used is #5, with a minimum spacing of 6 inches. Identical bar size and spacing is used for the top and bottom transverse bars with each layer offset half the bar spacing from the other. If top and bottom transverse bars align, they form a weakened section within the concrete that is more susceptible to cracking.

For bridges with deck slabs on girders, the most economical structure can often be achieved by using as few lines of girders as possible. However, for prestressed concrete girders, it is often more economical to add an extra girder line than to use debonded strands with the minimum number of girder lines. After the number of girders has been determined, adjustments in girder spacing should be investigated to see if slab thickness can be minimized.

17.5.2 Two-Course Deck Construction

WisDOT policy item:

The use of two-course deck construction should be avoided and its use requires BOS approval.

For skews of 20 degrees or greater, the machine used to strike off and finish the concrete must have its longitudinal axis within 20 degrees of the centerline of bearing of the substructure units. This produces more equal girder loads in a span during the concrete pour, which results in dead load deflections being closer to the theoretical computed deflections.

However, for steel girders with wide decks and large skews or for continuous long-span steel girders, final dead load deflections may not be within a reasonable allowable variance from the theoretical. By using two-course construction, any discrepancies in deflections in the first pour can be corrected by varying the thickness of the second pour since most of the deflection will occur during the first pour.

When using two-course construction, the first pour is 1 inch less in thickness (1.5” bar cover) than the standard deck thickness and the second pour is a 2” minimum thickness Class E concrete overlay. For two-course deck construction, an additional 20 psf should be added for

a future wearing surface. The top surface of the first pour is given a dragged or broom finish to obtain a roughened surface.

A report by the Kansas DOT entitled "Cracking and Chloride Content in Reinforced Concrete Bridge Decks" (Report No. K-Tran: KU-01-9) has determined that two-course deck construction results in decks that have more severe cracking than monolithic decks. The report also states that the average chloride concentration at crack locations exceeds the corrosion threshold by the end of the first winter season after construction. Some agencies specify a high density second course concrete overlay to provide a more durable riding surface.

17.5.3 Reinforcing Steel for Deck Slabs on Girders

The following sections describe the design requirements for reinforcing steel for deck slabs on girders. Design tables are included that can be used for common superstructure configurations.

17.5.3.1 Transverse Reinforcement

The live load moments used to determine the size and spacing of the transverse bars are presented in **LRFD [Table A4-1]**. This table presents positive and negative live load moments per unit width, in units of kip-feet per foot. Moments are given for girder spacings ranging from 4'-0" to 15'-0" in increments of 3". Negative moments are presented for varying distances from the centerline of girder to the design section.

The negative dead load moment over the support is determined from the following equation:

$$M_{DL} = \frac{W S^2}{10}$$

Where:

W = Uniform dead load of slab and wearing surface

S = Girder spacing

The positive dead load moment is determined using the following equation:

$$M_{DL} = \frac{W S^2}{12.5}$$

WisDOT's current practice is to ignore the moments in the deck (not including in the deck overhang) resulting from superimposed dead loads (such as parapets and medians).

Negative moments at supports are adjusted to equal the moment at the location of the design section being considered.

The distance from the centerline of the girder to the design section is computed in accordance with **LRFD [4.6.2.1.6]**. For steel beams, this distance is equal to one-quarter of the flange width

from the centerline of support. For prestressed concrete girders, this distance is equal to the values presented in Figure 17.5-1, along with bar locations and clearances.

Note: Transverse reinforcing steel requirements (bar size and spacing) are determined for both positive moment requirements and negative moment requirements, and the same reinforcing steel is used in both the top and bottom of slab as shown in Table 17.5-1 and Table 17.5-2. Longitudinal reinforcement in Table 17.5-3 and Table 17.5-4 is based on a percentage of the bottom transverse reinforcement required *by actual design calculations* (not a percentage of what is in the tables). **The tables should be used for deck reinforcement, with continuity bars in prestressed girder bridges being the only deck reinforcement requiring calculation.**

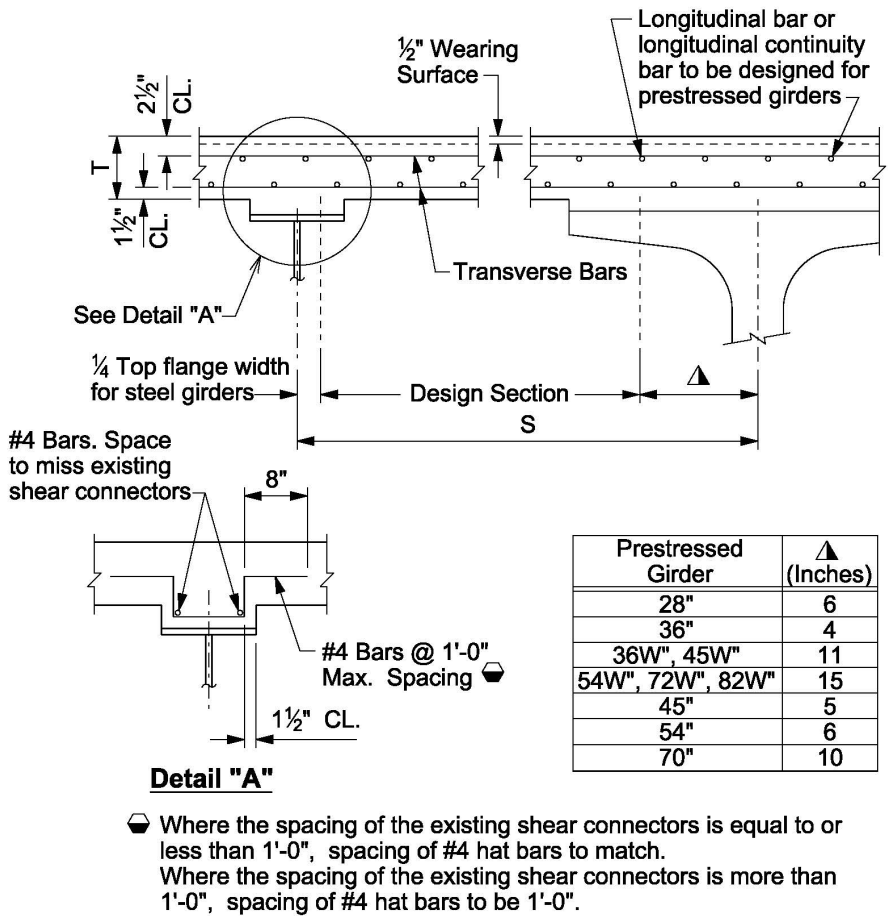

Prestressed Girder	Δ (Inches)
28"	6
36"	4
36W", 45W"	11
54W", 72W", 82W"	15
45"	5
54"	6
70"	10

Where the spacing of the existing shear connectors is equal to or less than 1'-0", spacing of #4 hat bars to match.
Where the spacing of the existing shear connectors is more than 1'-0", spacing of #4 hat bars to be 1'-0".

Figure 17.5-1
Transverse Section thru Slab on Girders

For skews of 20° and under, place transverse bars along the skew. For skews greater than 20°, place transverse bars perpendicular to the girders.

Detail ”A", as presented in Figure 17.5-1, should be used for decks when shear connectors extend less than 2 inches into the slab on steel girder bridges or 3 inches on prestressed concrete girder bridges.

Several transverse reinforcing steel tables are provided in this chapter. The reinforcing steel in Table 17.5-1 and Table 17.5-2 does not account for deck overhangs. However, the minimum amount of reinforcing steel required in the deck overhangs is presented in various design tables in 17.6.

The reinforcement shown in Table 17.5-1 and Table 17.5-2 is based on both the Strength I requirement and crack control requirement.

Crack control was checked in accordance with **LRFD [5.6.7]**. The bar spacing cannot exceed the value from the following formula:

$$s \le \frac{700(\gamma)}{\beta_s f_s} - 2d_c$$

Where:

$$\beta_s = 1 + \frac{d_c}{0.7(h - d_c)}$$

γ	=	0.75 for decks
β_s	=	Ratio of flexural strain at the extreme tension face to the strain at the centroid of the reinforcement layer nearest the tension face
f_s	=	Tensile stress in reinforcement at the service limit state (ksi) ≤ 0.6 f_y
d_c	=	Top concrete cover less ½ inch wearing surface plus ½ bar diameter or bottom concrete cover plus ½ bar diameter (inches)
h	=	Slab depth minus ½ inch wearing surface (inches)

WisDOT policy item:

The thickness of the sacrificial ½-inch wearing surface shall not be included in the calculation of d_c.

Table 17.5-1 and Table 17.5-2 were developed for specified values of the distance from the centerline of girder to the design section for negative moment. Those specified values – 0, 3, 6, 9, 12 and 18 inches – were selected to match values used in **AASHTO [Table A4-1]**. For a girder in which the distance from the centerline of girder to the design section for negative moment is not included in Table 17.5-1 and Table 17.5-2, the engineer may interpolate between the closest two values in the tables or can use the more conservative of the two values.

Transverse Reinforcing Steel for Deck Slabs on Girders for New Bridges and Deck Replacements, HL-93 Loading, Slab Thickness "T" ≥ 8"							
Slab Thickness "T" (Inches)	Girder Spacing "S"	Distance from Centerline of Girder to Design Section					
		0"	3"	6"	9"	12"	18"
8	4'-6"	#4 @ 7	#4 @ 7	#4 @ 7	#4 @ 7	#4 @ 7	#4 @ 7
8	4'-9"	#4 @ 6.5	#4 @ 7	#4 @ 7	#4 @ 7	#4 @ 7	#4 @ 7
8	5'-0"	#4 @ 6.5	#4 @ 7	#4 @ 7	#4 @ 7	#4 @ 7	#4 @ 7
8	5'-3"	#4 @ 6.5	#4 @ 6.5	#4 @ 7	#4 @ 7	#4 @ 7	#4 @ 7
8	5'-6"	#4 @ 6.5	#4 @ 6.5	#4 @ 7	#4 @ 7	#4 @ 7	#4 @ 7
8	5'-9"	#5 @ 8	#4 @ 6.5	#4 @ 6.5	#4 @ 7	#4 @ 7	#4 @ 7
8	6'-0"	#5 @ 7.5	#4 @ 6.5	#4 @ 6.5	#4 @ 6.5	#4 @ 6.5	#4 @ 6.5
8	6'-3"	#5 @ 7	#4 @ 6.5	#4 @ 6.5	#4 @ 6.5	#4 @ 6.5	#4 @ 6.5
8	6'-6"	#5 @ 7	#5 @ 8	#4 @ 6.5	#4 @ 6.5	#4 @ 6.5	#4 @ 6.5
8	6'-9"	#5 @ 7	#5 @ 7.5	#4 @ 6.5	#4 @ 6.5	#4 @ 6.5	#4 @ 6.5
8	7'-0"	#5 @ 6.5	#5 @ 7	#5 @ 8.5	#5 @ 8.5	#5 @ 8.5	#5 @ 8.5
8	7'-3"	#5 @ 6.5	#5 @ 7	#5 @ 8.5	#5 @ 8.5	#5 @ 8.5	#5 @ 8.5
8	7'-6"	#5 @ 6.5	#5 @ 7	#5 @ 8	#5 @ 8.5	#5 @ 8.5	#5 @ 8.5
8	7'-9"	#5 @ 6	#5 @ 7	#5 @ 7.5	#5 @ 8	#5 @ 8	#5 @ 8
8	8'-0"	#6 @ 7.5	#5 @ 6.5	#5 @ 7.5	#5 @ 8	#5 @ 8	#5 @ 8
8.5	8'-3"	#5 @ 6.5	#5 @ 7	#5 @ 8.5	#5 @ 8.5	#5 @ 8.5	#5 @ 8.5
8.5	8'-6"	#5 @ 6.5	#5 @ 7	#5 @ 8.5	#5 @ 8.5	#5 @ 8.5	#5 @ 8.5
8.5	8'-9"	#5 @ 6.5	#5 @ 7	#5 @ 7.5	#5 @ 8	#5 @ 8	#5 @ 8
8.5	9'-0"	#5 @ 6.5	#5 @ 7	#5 @ 7.5	#5 @ 8	#5 @ 8	#5 @ 8
8.5	9'-3"	#5 @ 6.5	#5 @ 7	#5 @ 7.5	#5 @ 8	#5 @ 8	#5 @ 8
9	9'-6"	#5 @ 6.5	#5 @ 7	#5 @ 8	#5 @ 8	#5 @ 8	#5 @ 8
9	9'-9"	#5 @ 6.5	#5 @ 7	#5 @ 7.5	#5 @ 8	#5 @ 8	#5 @ 8
9	10'-0"	#5 @ 6	#5 @ 6.5	#5 @ 7.5	#5 @ 8	#5 @ 8	#5 @ 8
9	10'-3"	#6 @ 7	#5 @ 6.5	#5 @ 7	#5 @ 7.5	#5 @ 8	#5 @ 8
9	10'-6"	#6 @ 7	#5 @ 6.5	#5 @ 7	#5 @ 7.5	#5 @ 7.5	#5 @ 7.5
9.5	10'-9"	#6 @ 7.5	#5 @ 6.5	#5 @ 7	#5 @ 7.5	#5 @ 8	#5 @ 8
9.5	11'-0"	#6 @ 7	#5 @ 6.5	#5 @ 7	#5 @ 7.5	#5 @ 8	#5 @ 8
9.5	11'-3"	#6 @ 7	#5 @ 6	#5 @ 6.5	#5 @ 7.5	#5 @ 7.5	#5 @ 7.5
9.5	11'-6"	#6 @ 7	#6 @ 7.5	#5 @ 6.5	#5 @ 7	#5 @ 7.5	#5 @ 7.5
10	11'-9"	#6 @ 7	#5 @ 6.5	#5 @ 7	#5 @ 7.5	#5 @ 8	#5 @ 8

10	12’-0”	#6 @ 7	#6 @ 7.5	#5 @ 6.5	#5 @ 7	#5 @ 8	#5 @ 8
10	12’-3”	#6 @ 7	#6 @ 7.5	#5 @ 6.5	#5 @ 7	#5 @ 7.5	#5 @ 7.5
10	12’-6”	#6 @ 7	#6 @ 7	#5 @ 6.5	#5 @ 7	#5 @ 7.5	#5 @ 7.5
10.5	12’-9”	#6 @ 7	#6 @ 7.5	#5 @ 6.5	#5 @ 7	#5 @ 7.5	#5 @ 8
10.5	13’-0”	#6 @ 7	#6 @ 7.5	#5 @ 6.5	#5 @ 7	#5 @ 7.5	#5 @ 7.5
10.5	13’-3”	#6 @ 7	#6 @ 7	#5 @ 6.5	#5 @ 6.5	#5 @ 7.5	#5 @ 7.5
10.5	13’-6”	#6 @ 6.5	#6 @ 7	#6 @ 7.5	#5 @ 6.5	#5 @ 7	#5 @ 7.5
11	13’-9”	#6 @ 7	#6 @ 7.5	#5 @ 6.5	#5 @ 7	#5 @ 7.5	#5 @ 7.5
11	14’-0”	#6 @ 7	#6 @ 7	#6 @ 7.5	#5 @ 6.5	#5 @ 7	#5 @ 7.5

Table 17.5-1

Transverse Reinforcing Steel for Deck Slabs on Girders
for New Bridges and Deck Replacements, HL-93 Loading, Slab Thickness “T” ≥ 8”

Transverse Reinforcing Steel for Deck Slabs on Girders for Deck Replacements, HL-93 Loading, Slab Thickness “T” < 8”							
Slab Thickness ”T” (Inches)	Girder Spacing “S”	Distance from Centerline of Girder to Design Section					
		0”	3”	6”	9”	12”	18”
6.5	4’-0”	#5 @ 7.5	#5 @ 7.5	#5 @ 7.5	#5 @ 7.5	#5 @ 7.5	#5 @ 7.5
6.5	4’-3”	#5 @ 7.5	#5 @ 7.5	#5 @ 7.5	#5 @ 7.5	#5 @ 7.5	#5 @ 7.5
6.5	4’-6”	#5 @ 7.5	#5 @ 7.5	#5 @ 7.5	#5 @ 7.5	#5 @ 7.5	#5 @ 7.5
6.5	4’-9”	#5 @ 7	#5 @ 7.5	#5 @ 7.5	#5 @ 7.5	#5 @ 7.5	#5 @ 7.5
6.5	5’-0”	#5 @ 6.5	#5 @ 7.5	#5 @ 7.5	#5 @ 7.5	#5 @ 7.5	#5 @ 7.5
6.5	5’-3”	#5 @ 6	#5 @ 7	#5 @ 7	#5 @ 7	#5 @ 7	#5 @ 7
6.5	5’-6”	#6 @ 7.5	#5 @ 6.5	#5 @ 7	#5 @ 7	#5 @ 7	#5 @ 7
6.5	5’-9”	#6 @ 7	#5 @ 6	#5 @ 7	#5 @ 7	#5 @ 7	#5 @ 7
6.5	6’-0”	#6 @ 6.5	#6 @ 7.5	#5 @ 7	#5 @ 7	#5 @ 7	#5 @ 7
6.5	6’-3”	#6 @ 6.5	#6 @ 7.5	#5 @ 6.5	#5 @ 7	#5 @ 7	#5 @ 7
6.5	6’-6”	#6 @ 6	#6 @ 7	#5 @ 6.5	#5 @ 7	#5 @ 7	#5 @ 7
6.5	6’-9”	(1)	#6 @ 7	#5 @ 6	#5 @ 7	#5 @ 7	#5 @ 7
6.5	7’-0”	(1)	#6 @ 6.5	#6 @ 7.5	#5 @ 6.5	#5 @ 6.5	#5 @ 6.5
7	4’-0”	#5 @ 8	#5 @ 8	#5 @ 8	#5 @ 8	#5 @ 8	#5 @ 8
7	4’-3”	#5 @ 8	#5 @ 8	#5 @ 8	#5 @ 8	#5 @ 8	#5 @ 8
7	4’-6”	#5 @ 8	#5 @ 8	#5 @ 8	#5 @ 8	#5 @ 8	#5 @ 8
7	4’-9”	#5 @ 8	#5 @ 8	#5 @ 8	#5 @ 8	#5 @ 8	#5 @ 8

7	5’-0”	#5 @ 7.5	#5 @ 8	#5 @ 8	#5 @ 8	#5 @ 8	#5 @ 8
7	5’-3”	#5 @ 7	#5 @ 8	#5 @ 8	#5 @ 8	#5 @ 8	#5 @ 8
7	5’-6”	#5 @ 6.5	#5 @ 7.5	#5 @ 8	#5 @ 8	#5 @ 8	#5 @ 8
7	5’-9”	#5 @ 6.5	#5 @ 7	#5 @ 8	#5 @ 8	#5 @ 8	#5 @ 8
7	6’-0”	#6 @ 7.5	#5 @ 7	#5 @ 7.5	#5 @ 7.5	#5 @ 7.5	#5 @ 7.5
7	6’-3”	#6 @ 7.5	#5 @ 6.5	#5 @ 7.5	#5 @ 7.5	#5 @ 7.5	#5 @ 7.5
7	6’-6”	#6 @ 7.5	#5 @ 6.5	#5 @ 7	#5 @ 7.5	#5 @ 7.5	#5 @ 7.5
7	6’-9”	#6 @ 7	#5 @ 6	#5 @ 7	#5 @ 7.5	#5 @ 7.5	#5 @ 7.5
7	7’-0”	#6 @ 6.5	#6 @ 7.5	#5 @ 6.5	#5 @ 7.5	#5 @ 7.5	#5 @ 7.5
7	7’-3”	#6 @ 6.5	#6 @ 7.5	#5 @ 6.5	#5 @ 7	#5 @ 7	#5 @ 7
7	7’-6”	#6 @ 6	#6 @ 7	#5 @ 6.5	#5 @ 7	#5 @ 7	#5 @ 7
7	7’-9”	(1)	#6 @ 6.5	#5 @ 6	#5 @ 7	#5 @ 7	#5 @ 7
7	8’-0”	(1)	#6 @ 6.5	#5 @ 6	#5 @ 7	#5 @ 7	#5 @ 7
7.5	4’-0”	#4 @ 6.5	#4 @ 6.5	#4 @ 6.5	#4 @ 6.5	#4 @ 6.5	#4 @ 6.5
7.5	4’-3”	#4 @ 6.5	#4 @ 6.5	#4 @ 6.5	#4 @ 6.5	#4 @ 6.5	#4 @ 6.5
7.5	4’-6”	#4 @ 6.5	#4 @ 6.5	#4 @ 6.5	#4 @ 6.5	#4 @ 6.5	#4 @ 6.5
7.5	4’-9”	#4 @ 6.5	#4 @ 6.5	#4 @ 6.5	#4 @ 6.5	#4 @ 6.5	#4 @ 6.5
7.5	5’-0”	#4 @ 6.5	#4 @ 6.5	#4 @ 6.5	#4 @ 6.5	#4 @ 6.5	#4 @ 6.5
7.5	5’-3”	#5 @ 8	#4 @ 6.5	#4 @ 6.5	#4 @ 6.5	#4 @ 6.5	#4 @ 6.5
7.5	5’-6”	#5 @ 7.5	#4 @ 6.5	#4 @ 6.5	#4 @ 6.5	#4 @ 6.5	#4 @ 6.5
7.5	5’-9”	#5 @ 7	#5 @ 8.5	#5 @ 8.5	#5 @ 8.5	#5 @ 8.5	#5 @ 8.5
7.5	6’-0”	#5 @ 7	#5 @ 8	#5 @ 8.5	#5 @ 8.5	#5 @ 8.5	#5 @ 8.5
7.5	6’-3”	#5 @ 6.5	#5 @ 7.5	#5 @ 8.5	#5 @ 8.5	#5 @ 8.5	#5 @ 8.5
7.5	6’-6”	#5 @ 6.5	#5 @ 7	#5 @ 8	#5 @ 8	#5 @ 8	#5 @ 8
7.5	6’-9”	#5 @ 6.5	#5 @ 7	#5 @ 8	#5 @ 8	#5 @ 8	#5 @ 8
7.5	7’-0”	#6 @ 7.5	#5 @ 6.5	#5 @ 7.5	#5 @ 8	#5 @ 8	#5 @ 8
7.5	7’-3”	#6 @ 7.5	#5 @ 6.5	#5 @ 7	#5 @ 8	#5 @ 8	#5 @ 8
7.5	7’-6”	#6 @ 7	#5 @ 6.5	#5 @ 7	#5 @ 7.5	#5 @ 7.5	#5 @ 7.5
7.5	7’-9”	#6 @ 7	#5 @ 6	#5 @ 7	#5 @ 7.5	#5 @ 7.5	#5 @ 7.5
7.5	8’-0”	#6 @ 6.5	#6 @ 7.5	#5 @ 7	#5 @ 7.5	#5 @ 7.5	#5 @ 7.5
7.5	8’-3”	#6 @ 6.5	#6 @ 7.5	#5 @ 6.5	#5 @ 7.5	#5 @ 7.5	#5 @ 7.5
7.5	8’-6”	#6 @ 6.5	#6 @ 7.5	#5 @ 6.5	#5 @ 7	#5 @ 7	#5 @ 7
7.5	8’-9”	#6 @ 6.5	#6 @ 7.5	#5 @ 6.5	#5 @ 7	#5 @ 7	#5 @ 7
7.5	9’-0”	#6 @ 6.5	#6 @ 7.5	#5 @ 6.5	#5 @ 7	#5 @ 7	#5 @ 7
7.5	9’-3”	#6 @ 6.5	#6 @ 7	#5 @ 6.5	#5 @ 6.5	#5 @ 6.5	#5 @ 6.5

7.5	9'-6"	#6 @ 6	#6 @ 6.5	#5 @ 6	#5 @ 6.5	#5 @ 6.5	#5 @ 6.5

(1) When these regions are encountered, the next thicker deck section shall be used.

Table 17.5-2
Transverse Reinforcing Steel for Deck Slabs on
Girders for Deck Replacements, HL-93 Loading, Slab Thickness "T" < 8"
(Only use Table 17.5-2 if Bridge Rating is unacceptable with "T" ≥ 8")

The transverse reinforcing steel presented in Table 17.5-1 and Table 17.5-2 is designed in accordance with *AASHTO LRFD*. The tables are developed based on deck concrete with a 28-day compressive strength of f'_c = 4 ksi and reinforcing steel with a yield strength of f_y = 60 ksi. However, the same tables should be used for concrete strength of 5 ksi.

The clearance for the top steel is 2 1/2", and the clearance for the bottom steel is 1 1/2". The dead load includes 20 psf for future wearing surface.

The reinforcing bars shown in the tables are for one layer only. Identical steel should be placed in both the top and bottom layers.

17.5.3.2 Longitudinal Reinforcement

The amount of bottom longitudinal reinforcement required is as specified in **LRFD [9.7.3.2]** and shown in Table 17.5-3 and Table 17.5-4. It is based on a percentage of the transverse reinforcing steel for positive moment. For the main reinforcement perpendicular to traffic, the percentage equals:

$$\frac{220}{\sqrt{S}} \leq 67\%$$

Where:

S = Girder spacing, as calculated based on Figure 17.5-1 (feet)

WisDOT exception to AASHTO:

The girder spacing shall be used in the equation above for calculating the percentage of transverse steel to be used as longitudinal reinforcement. This definition replaces the one stated in **LRFD [9.7.3.2]** to use the effective girder spacing.

The minimum amount of longitudinal reinforcement required for temperature and shrinkage in each of the top and bottom layers is given by **LRFD [5.10.6]** as follows:

$$A_s \geq \frac{1.30bh}{2(b+h)f_y}$$

and

$0.11 \leq A_s \leq 0.60$

Where:

A_s = Area of reinforcement in each direction and each face (in.^{2}/ft.)

f_y = Reinforcing steel yield strength = 60 ksi

b = Width of deck (inches)

h = Thickness of deck (inches)

In addition, the minimum amount of longitudinal steel in both layers used by WisDOT is #4 bars at 9" spacing to reduce transverse deck cracking. Identical amounts of steel are placed in both the top and bottom layer, and the reinforcing bars are uniformly spaced from edge to edge of slab. Table 17.5-3 and Table 17.5-4 use the same longitudinal bar spacings throughout a given bridge deck.

See Chapter 19 – Prestressed Concrete for design guidance regarding continuity reinforcement for prestressed girder bridges.

When continuous steel girders are not designed for negative composite action, **LRFD [6.10.1.7]** requires an area of longitudinal steel in both the top and bottom layer equal to 1% of the cross-sectional area of the slab in the span negative moment regions. The "d" value used for this computation is the total slab thickness excluding the wearing surface. This reinforcing steel is uniformly spaced from edge to edge of slab in the top and bottom layer. It is required that two-thirds of this reinforcement be placed in the top layer. The values shown in Table 17.5-3 and Table 17.5-4 provide adequate reinforcement to cover the requirements of **LRFD [6.10.1.7]**. It is WisDOT practice to abide by **LRFD [6.10.1.7]** for new bridges utilizing negative composite action, as well. See 24.7.6 for determining continuity bar cutoff locations for new bridges and rehabilitation bridges.

Longitudinal Reinforcing Steel for Deck Slabs on Girders for New Bridges and Deck Replacements, HL-93 Loading, Slab Thickness "T" ≥ 8"			
		Bar Size and Spacing (Inches)	
		Prestressed Girder Bridges	Steel Girder Bridges
Slab Thickness "T" (Inches)	Girder Spacing "S"	#4's Top and Bottom, Continuity Reinforcement To Be Designed (Top)	#4's Top and Bottom, Continuity Reinforcement** #6's (Top)
8	4'-6"	9.0	8.5
8	4'-9"	9.0	8.5
8	5'-0"	9.0	8.5
8	5'-3"	9.0	8.5
8	5'-6"	9.0	8.5
8	5'-9"	9.0	8.5
8	6'-0"	9.0	8.5

8	6’-3”	9.0	8.5
8	6’-6”	9.0	8.5
8	6’-9”	9.0	8.5
8	7’-0”	9.0	8.5
8	7’-3”	9.0	8.5
8	7’-6”	8.5	8.5
8	7’-9”	8.5	8.5
8	8’-0”	8.0	8.5
8.5	8’-3”	9.0	8.0
8.5	8’-6”	8.5	8.0
8.5	8’-9”	8.5	8.0
8.5	9’-0”	8.5	8.0
8.5	9’-3”	8.0	8.0
9	9’-6”	9.0	7.5
9	9’-9”	8.5	7.5
9	10’-0”	8.5	7.5
9	10’-3”	8.0	7.5
9	10’-6”	8.0	7.5
9.5	10’-9”	8.0	7.0
9.5	11’-0”	8.0	7.0
9.5	11’-3”	8.0	7.0
9.5	11’-6”	8.0	7.0
10	11’-9”	8.0	6.5
10	12’-0”	8.0	6.5
10	12’-3”	8.0	6.5
10	12’-6”	8.0	6.5
10.5	12’-9”	8.5	6.0
10.5	13’-0”	8.0	6.0
10.5	13’-3”	8.0	6.0
10.5	13’-6”	8.0	6.0
11	13’-9”	8.0	6.0
11	14’-0”	8.0	6.0

Legend:

** Use for deck slabs on steel girders in negative moment regions. New bridge shall be designed for composite action in the negative moment region.

Table 17.5-3

Longitudinal Reinforcing Steel For Deck Slabs on Girders
for New Bridges and Deck Replacements, HL-93 Loading, Slab Thickness “T” ≥ 8”

Longitudinal Reinforcing Steel for Deck Slabs on Girders for Deck Replacements, HL-93 Loading, Slab Thickness "T" < 8"			
Slab Thickness "T" (Inches)	Girder Spacing "S"	Bar Size and Spacing (Inches)	
		Prestressed Girder Bridges	Steel Girder Bridges
		#4's Top and Bottom, Continuity Reinforcement To Be Designed (Top)	#4's Top and Bottom, Continuity Reinforcement** #6's (Top)
6.5	4'-0"	7.0	7.0
6.5	4'-3"	7.0	7.0
6.5	4'-6"	7.0	7.0
6.5	4'-9"	7.0	7.0
6.5	5'-0"	7.0	7.0
6.5	5'-3"	7.0	7.0
6.5	5'-6"	7.0	7.0
6.5	5'-9"	6.5	6.5
6.5	6'-0"	6.5	6.5
6.5	6'-3"	6.5	6.5
6.5	6'-6"	6.5	6.5
6.5	6'-9"	6.0	6.0
6.5	7'-0"	6.0	6.0
7	4'-0"	8.0	8.0
7	4'-3"	8.0	8.0
7	4'-6"	8.0	8.0
7	4'-9"	8.0	8.0
7	5'-0"	8.0	8.0
7	5'-3"	8.0	8.0
7	5'-6"	8.0	8.0
7	5'-9"	7.5	7.5
7	6'-0"	7.5	7.5
7	6'-3"	7.5	7.5
7	6'-6"	7.0	7.0
7	6'-9"	7.0	7.0
7	7'-0"	7.0	7.0
7	7'-3"	6.5	6.5
7	7'-6"	6.5	6.5
7	7'-9"	6.5	6.5
7	8'-0"	6.0	6.0
7.5	4'-0"	9.0	9.0
7.5	4'-3"	9.0	9.0
7.5	4'-6"	9.0	9.0
7.5	4'-9"	9.0	9.0

7.5	5’-0”	9.0	9.0
7.5	5’-3”	9.0	9.0
7.5	5’-6”	9.0	9.0
7.5	5’-9”	8.5	8.5
7.5	6’-0”	8.5	8.5
7.5	6’-3”	8.5	8.5
7.5	6’-6”	8.0	8.0
7.5	6’-9”	8.0	8.0
7.5	7’-0”	7.5	7.5
7.5	7’-3”	7.5	7.5
7.5	7’-6”	7.5	7.5
7.5	7’-9”	7.0	7.0
7.5	8’-0”	7.0	7.0
7.5	8’-3”	6.5	6.5
7.5	8’-6”	6.5	6.5
7.5	8’-9”	6.5	6.5
7.5	9’-0”	6.0	6.0
7.5	9’-3”	6.0	6.0
7.5	9’-6”	5.5	5.5

Legend:

** Use for deck slabs on steel girders in negative moment regions when not designed for negative moment composite action.

Table 17.5-4

Longitudinal Reinforcing Steel for Deck Slabs
on Girders for Deck Replacements, HL-93 Loading, Slab Thickness “T” < 8”
(Only use Table 17.5-4 if Bridge Rating is unacceptable with “T” ≥ 8”)

The longitudinal reinforcing steel presented in Table 17.5-3 and Table 17.5-4 is designed in accordance with *AASHTO LRFD*. The tables are developed based on deck concrete with a 28-day compressive strength of f'_c = 4 ksi and reinforcing steel with a yield strength of f_y = 60 ksi. The dead load includes 20 psf for future wearing surface.

The reinforcing bars presented in the “Bar Size and Spacing” column (the third column) in Table 17.5-3 and Table 17.5-4 are for one layer only. Identical steel should be placed in both the top and bottom layers, except for continuity steel.

17.5.3.3 Empirical Design of Slab on Girders

WisDOT policy item:

Approval from the Bureau of Structures Chief Structural Design Engineer is required for use of the empirical design method.

In addition to the traditional design method for decks, as described above, AASHTO also provides specifications for an empirical design method. This method, which is new to *AASHTO LRFD*, does not require the computation of design moments and is simpler to apply than the traditional design method. However, it is applicable only under specified design conditions. The empirical design method should not be used on bridge decks with heavy truck traffic. The empirical design method is described in **LRFD [9.7.2]**.

17.6 Cantilever Slab Design

For deck slabs on girders, the deck overhang must also be designed. Design of the deck overhang involves the following two steps:

1. Design for flexure in deck overhang based on strength and extreme event limit states.
2. Check for cracking in overhang based on service limit state.

The locations of the design sections are illustrated in Figure 17.6-1.

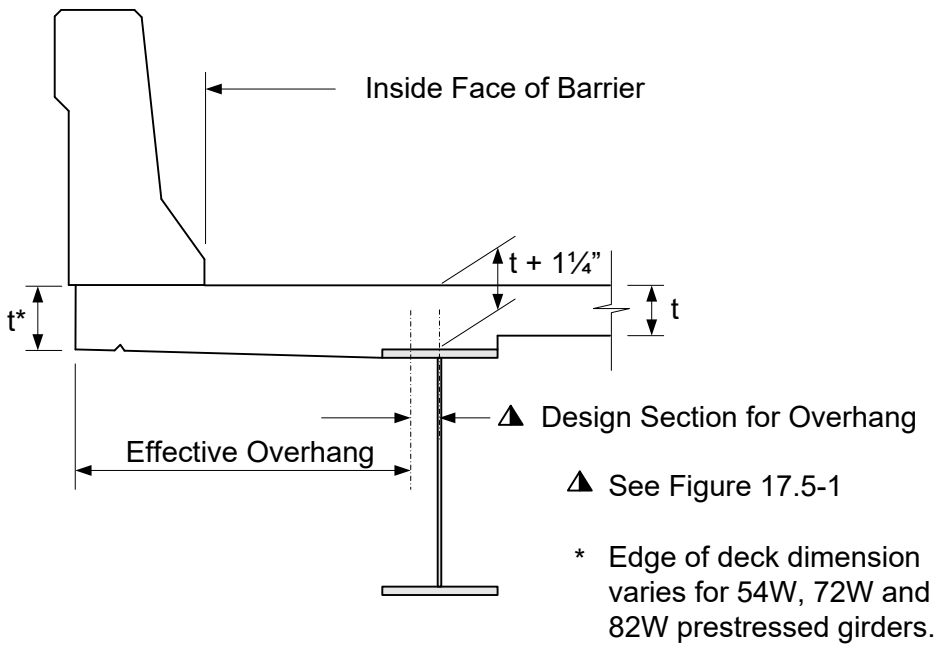

Figure 17.6-1
Deck Overhang Design Section

As described in **LRFD [A13.4]**, deck overhangs must be designed to satisfy three different design cases. These three design cases are summarized in Table 17.6-1.

Design Case	Applied Loads	Limit State	Design Locations
Design Case 1	Horizontal vehicular collision force and dead loads	Extreme Event II	At inside face of barrier At design section for overhang
Design Case 2 (usually does not control)	Vertical vehicular collision force and dead loads	Extreme Event II	At inside face of barrier At design section for overhang
Design Case 3	Dead and vehicle live loads	Strength I	At design section for overhang

Table 17.6-1
Deck Overhang Design Cases

The design load for Design Case 1 is a horizontal vehicular collision force, as illustrated in Figure 17.6-2. The transverse vehicle impact force, F_t, is specified in **LRFD [Table A13.2-1]** for various railing test levels. The force values specified in **LRFD [Table A13.2-1]** represent the total force, and neither dynamic load allowance nor multiple presence factors should be applied to these values.

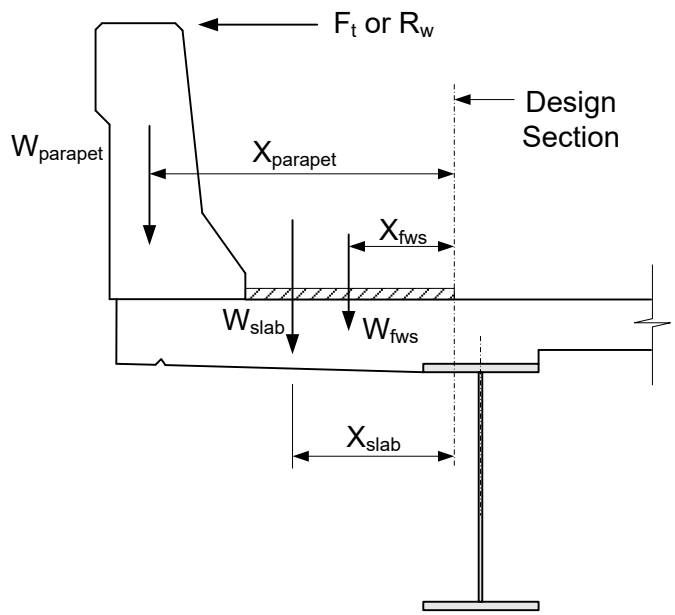

Figure 17.6-2
Design Case 1

The concrete barrier resistance, R_w, and the critical length of wall failure, L_c, are calculated in accordance with **LRFD [A13.3.1]**.

The longitudinal distribution length of the collision force for a continuous concrete barrier is calculated as illustrated in Figure 17.6-3. An angle of 30° is conservatively assumed for the load distribution from the front face of the barrier to the overhang design section.

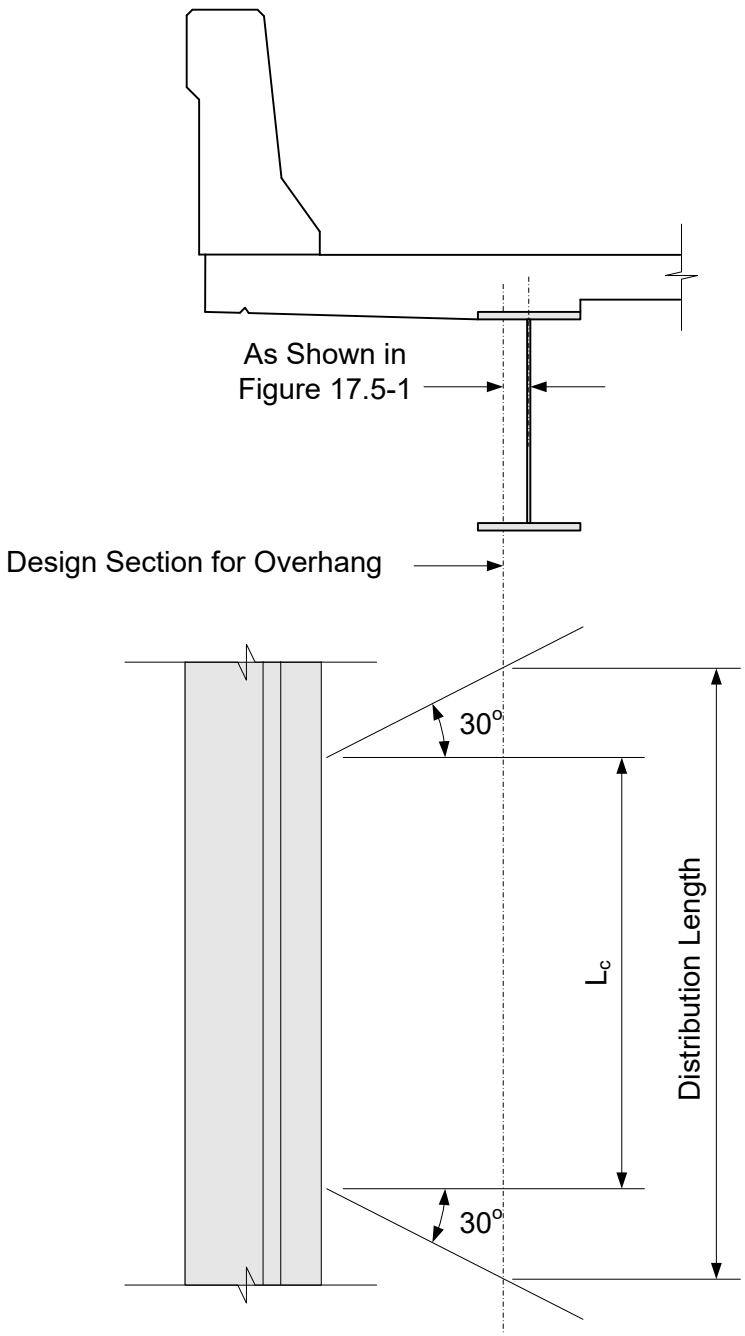

Figure 17.6-3
Assumed Distribution of Collision Moment Load in the Overhang

The design load for Design Case 2 is a vertical vehicular collision force, as illustrated in Figure 17.6-4. The vertical design force, F_v, is specified in **LRFD [Table A13.2-1]** for various railing test levels. The values for F_v specified in **LRFD [Table A13.2-1]** represent the total force, and neither dynamic load allowance nor multiple presence factors should be applied to these values.

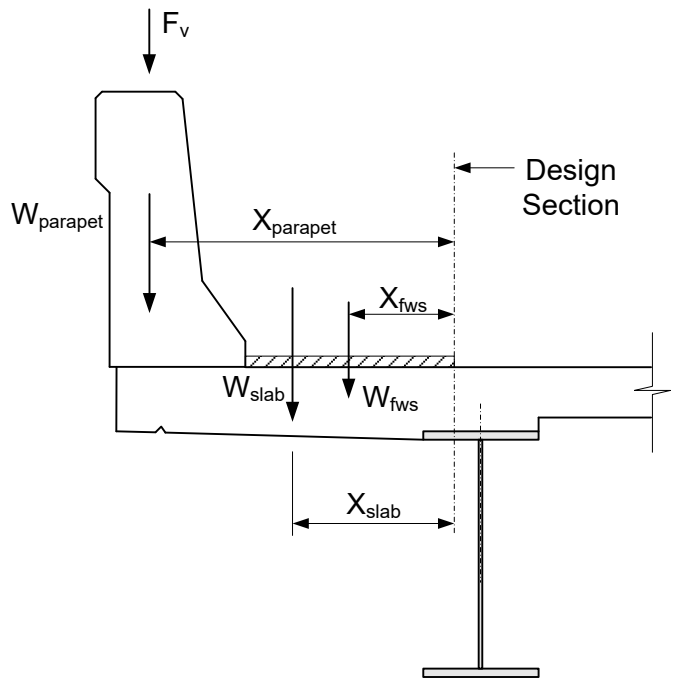

Figure 17.6-4
Design Case 2

For continuous concrete barriers, Design Case 2 generally does not control.

For steel post and beam railing, the overhang design is as specified in **LRFD [A13.4.3.1]**, and the assumed effective length of the cantilever for carrying concentrated post loads (either transverse or vertical) is as shown in Figure 17.6-5.

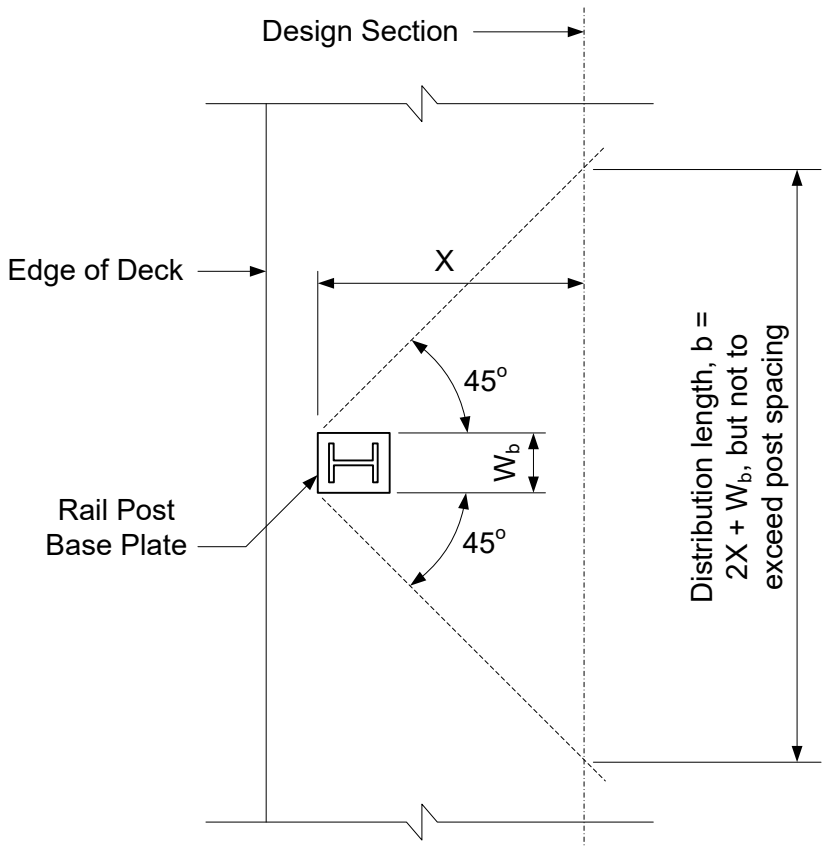

Figure 17.6-5
Effective Length of Cantilever for Carrying Concentrated Post Loads

As used in Figure 17.6-5:

b	=	Effective length of cantilever for carrying concentrated post loads (inches)
W_b	=	Width of base plate (inches)
X	=	Distance from edge of base plate nearest to edge of deck to design section (inches)

For steel post and beam railing, the punching shear force is computed as specified in **LRFD [A13.4.3.2]**, and the assumed distribution of forces for punching shear is as shown in Figure 17.6-6.

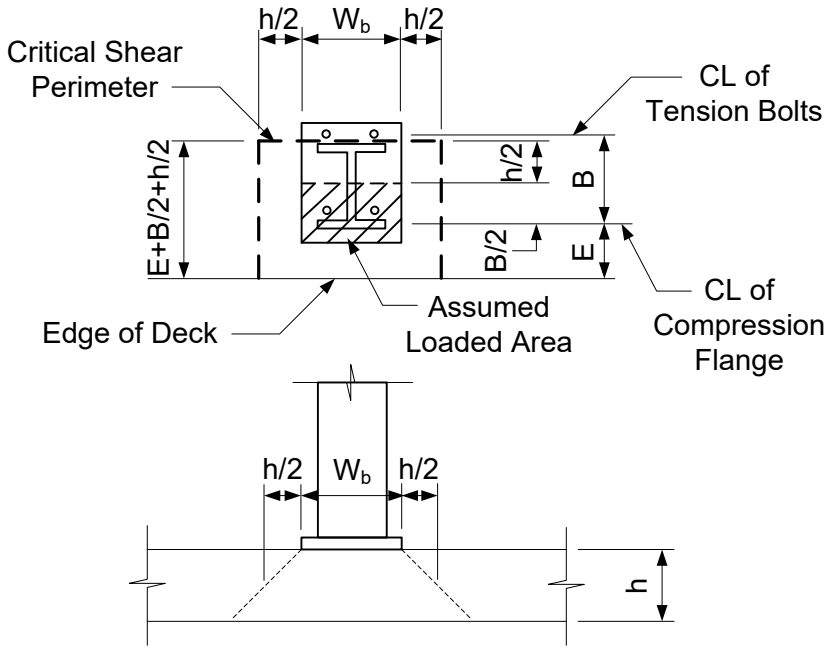

Figure 17.6-6
Assumed Load Distribution for Punching Shear

As used in Figure 17.6-6:

B	=	Distance between centroids of tensile and compressive stress resultants in post (inches)
E	=	Distance from edge of slab to centroid of compressive stress resultant in post (inches)
h	=	Depth of slab (inches)
W_b	=	Width of base plate (inches)

The design loads for Design Case 3 are dead and live loads, as illustrated in Figure 17.6-7.

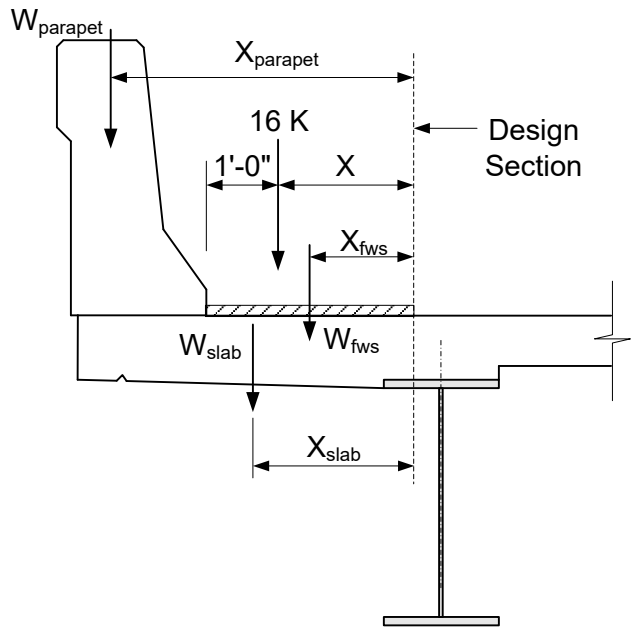

Figure 17.6-7
Design Case 3

As presented in **LRFD [Table 4.6.2.1.3-1]**, the equivalent strip (in the longitudinal direction), in units of inches, for live load on an overhang for Design Case 3 is:

Equivalent strip = 45.0 + 10.0X

Where:

X = Distance from load to point of support (feet), as illustrated in Figure 17.6-7

The multiple presence factor of 1.20 for one lane loaded and a dynamic load allowance of 33% should be applied, and the moment due to live load and dynamic load allowance is then computed.

Based on the computations for the three design cases, the controlling design case and design location are identified. The factored design moment is used to compute the required reinforcing steel. Cracking in the overhang must be checked for the service limit state in accordance with **LRFD [5.6.7]**. The controlling overhang reinforcement for cantilever deck slabs is shown in Table 17.6-2 and Table 17.6-3 for single slope and sloped face concrete parapets, and in Table 17.6-4 and Table 17.6-5 for steel railing Type “NY”/“M”. Type “W” railing is no longer allowed on girder structures.

If the area of reinforcing steel required in the overhang is greater than the area of reinforcing steel provided by the standard transverse reinforcement over the interior girders, it shall be placed as detailed in Figure 17.6-8.

17.6.1 Rail Loading for Slab Structures

For concrete slab superstructures, the designer is required to consider the rail loading and provide adequate transverse reinforcing steel, accordingly. The top transverse slab reinforcement for both concrete parapet and steel railing Type “NY”, "M" or "W" are shown on the Standard Details.

17.6.2 WisDOT Overhang Design Practices

WisDOT policy item:

Current design practice in Wisconsin limits the standard slab overhang length to 3’-7”, measured from the centerline of the exterior girder to the edge of the slab. A 4’-0” overhang is allowed for some wide flange prestressed concrete girders (54W”, 72W”, 82W”). A 4’-6” overhang may be used where a curved roadway is placed on straight girders at the discretion of the designer. The total overhang when a cantilevered sidewalk is used is limited to 5’-0”, measured from the centerline of the exterior girder to the edge of the sidewalk. A minimum of 6” from the edge of the top flange to the edge of the deck should be provided, with 9” preferred.

The overhang length has been limited to prevent rotation of the girder and bending of the girder web during construction caused by the eccentric load from the cantilevered forming brackets. The upper portion of these brackets attaches to the girder top flange, and the lower portion bears against the girder web. If the girder rotates or the web bends at the bracket bearing point, the end of the bracket will move downward because of bracket rotation. If the rails supporting the paving machine are located near the end of the bracket, the paving machine will move downward more than the girder and the anticipated profile grade line will not be achieved. Factors affecting girder rotation are diaphragm spacing, stiffness, connections and girder torsional stiffness. Factors affecting web bending are stiffener spacing and web thickness. Do not place a note or detail on the plan for exterior girder bracing required by the contractor as this is covered by the specs.

In the following tables, the slab thickness, "t", is the slab thickness between interior girders. The area of steel shown in the following tables is the controlling value from Design Case 1, 2 or 3. The value shown is the larger area of steel required at the front face of the barrier or at the design section. Girder Type 1 shall include steel girders and the following prestressed girders; 28-inch, 36-inch, 36W-inch, 45W-inch. Prestressed girders used for rehabilitation projects, 45-inch, 54-inch and 70-inch, shall also be considered to be Girder Type 1. Girder Type 2 shall include the following prestressed girders; 54W-inch, 72W-inch and 82W-inch.

If the area of reinforcing steel required in the overhang is greater than the area of reinforcing steel provided by the standard transverse reinforcement over the interior girders, reinforcement must be added to satisfy the overhang design requirements. The amount of reinforcement that must be added in the overhang is the amount required to satisfy the overhang design requirement minus the amount provided by the standard transverse reinforcement over the interior girders. This additional reinforcement should be carried for the bar development length past the exterior girder centerline. The reinforcement shall be placed as detailed in Figure 17.6-8. Use either a number 4 or 5 bar to satisfy this requirement. The additional bar shall be placed at one or two times the standard transverse bar spacing as required.

Effective Overhang (Feet)	Deck Thickness Between Girders, "t" (Inches)						
	8	8.5	9	9.5	10	10.5	11
1.75	0.749	0.690	0.640	0.597	0.562	0.529	0.514
2.00	0.747	0.690	0.643	0.603	0.568	0.536	0.510
2.25	0.766	0.706	0.655	0.612	0.576	0.545	0.517
2.50	0.781	0.718	0.666	0.622	0.584	0.551	0.523
2.75	0.793	0.728	0.675	0.629	0.591	0.557	0.527
3.00	0.805	0.738	0.682	0.636	0.596	0.562	0.532
3.25	0.815	0.745	0.688	0.642	0.601	0.566	0.535
3.50	0.824	0.752	0.694	0.646	0.605	0.569	0.538
3.75	0.849	0.761	0.700	0.650	0.608	0.572	0.541
4.00	0.959	0.862	0.785	0.688	0.636	0.590	0.544

Table 17.6-2

Reinforcing Steel (in^2/ft) for Cantilever Deck Slabs with Single Slope or Sloped Face Concrete Parapets --- Girder Type 1

Effective Overhang (Feet)	Deck Thickness Between Girders, "t" (Inches)						
	8	8.5	9	9.5	10	10.5	11
1.25	0.749	0.691	0.644	0.603	0.568	0.537	0.511
1.5	0.761	0.700	0.649	0.607	0.570	0.537	0.510
1.75	0.761	0.700	0.649	0.606	0.570	0.537	0.510
2	0.761	0.700	0.649	0.606	0.570	0.537	0.510
2.25	0.740	0.681	0.632	0.591	0.555	0.547	0.526
2.5	0.735	0.678	0.629	0.588	0.553	0.559	0.541
2.75	0.732	0.674	0.626	0.586	0.550	0.549	0.557
3	0.730	0.673	0.626	0.584	0.550	0.539	0.553
3.25	0.729	0.672	0.624	0.584	0.549	0.528	0.543

Table 17.6-3

Reinforcing Steel (in^2/ft) for Cantilever Deck Slabs with Single Slope or Sloped Face Concrete Parapets --- Girder Type 2

Effective Overhang (Feet)	Deck Thickness Between Girders, "t" (Inches)						
	8	8.5	9	9.5	10	10.5	11
1.75	0.277	0.277	0.277	0.277	0.251	0.202	0.159
2.00	0.287	0.287	0.287	0.287	0.264	0.220	0.180
2.25	0.295	0.295	0.295	0.295	0.274	0.234	0.198
2.50	0.302	0.302	0.302	0.302	0.282	0.246	0.212
2.75	0.307	0.307	0.307	0.307	0.290	0.255	0.224
3.00	0.312	0.312	0.312	0.312	0.295	0.278	0.263
3.25	0.394	0.394	0.394	0.394	0.392	0.389	0.340
3.50	0.465	0.465	0.465	0.465	0.464	0.436	0.412
3.75	0.497	0.497	0.497	0.497	0.477	0.489	0.480
4.00	0.567	0.567	0.567	0.567	0.542	0.501	0.504

Table 17.6-4
Reinforcing Steel (in^2/ft) for Cantilever Deck Slabs with Tubular Railing Type "NY"/"M"
Girder Type 1

Effective Overhang (Feet)	Deck Thickness Between Girders, "t" (Inches)						
	8	8.5	9	9.5	10	10.5	11
1.25	0.542	0.435	0.345	0.272	0.213	0.161	0.117
1.5	0.542	0.435	0.345	0.272	0.213	0.161	0.117
1.75	0.525	0.435	0.345	0.272	0.213	0.161	0.117
2	0.423	0.423	0.345	0.269	0.203	0.147	0.096
2.25	0.290	0.280	0.228	0.185	0.146	0.114	0.128
2.5	0.237	0.237	0.217	0.176	0.151	0.146	0.160
2.75	0.275	0.275	0.275	0.263	0.247	0.234	0.222
3	0.269	0.269	0.269	0.269	0.269	0.256	0.244
3.25	0.334	0.334	0.334	0.334	0.334	0.330	0.314

Table 17.6-5
Reinforcing Steel (in^2/ft) for Cantilever Deck Slabs with Tubular Railing Type "NY"/"M"
Girder Type 2

Notes:

1. Tables show the total area of transverse deck reinforcement required per foot.

2. The values in Table 17.6-2, Table 17.6-3, Table 17.6-4 and Table 17.6-5 are based on the following design criteria:

    - f'c = 4 ksi
    - fy = 60 ksi
    - Top steel clearance = 2 1/2"
    - Effective Overhang as illustrated in Figure 17.6-1

3. For Tubular Railing Type "NY"/"M", the No. 6 "U" bars located at the rail post locations should not be included when calculating the total available area of reinforcement.

4. The values in the shaded region are satisfied by the standard transverse reinforcement for all girder spacings and standard transverse deck reinforcement. No additional checks or reinforcement are required.

5. Details for additional overhang reinforcement are shown in Figure 17.6-8. Detail "A" shall be used with Table 17.6-2, Table 17.6-3 and Table 17.6-5. Detail "B" shall be used with Table 17.6-4.

6. For bridge decks with raised sidewalks, the additional reinforcement shown in Table 17.6-2, Table 17.6-3, Table 17.6-4, and Table 17.6-5, need not be used. See Standard Detail 17.01 – Median and Raised Sidewalk Details – for information pertaining to the additional reinforcement to be used at raised sidewalks.

Example Use of Tables:

Given Information:

54W" PSG, 15" from CL girder to Design Section -- (Girder Type 2)

Girder Spacing = 7'-0"

Overhang = 3'-0", Effective Overhang = 1'-9"

Type "NY" rail

From Table 17.5-1:

Deck thickness = 8"

Design Section at 15", use #5's @ 8.5", As provided = 0.43 in^2/ft

From Table 17.6-5:

Transverse area of steel required = 0.542 in^2/ft

Therefore:

Additional area of steel required = 0.542 - 0.43 = 0.112 in^2/ft

Use either one or two times the spacing of the standard transverse reinforcement.

Lapping every other bar: use #4's @ 17", As = 0.14 in^2/ft, use Detail "A".

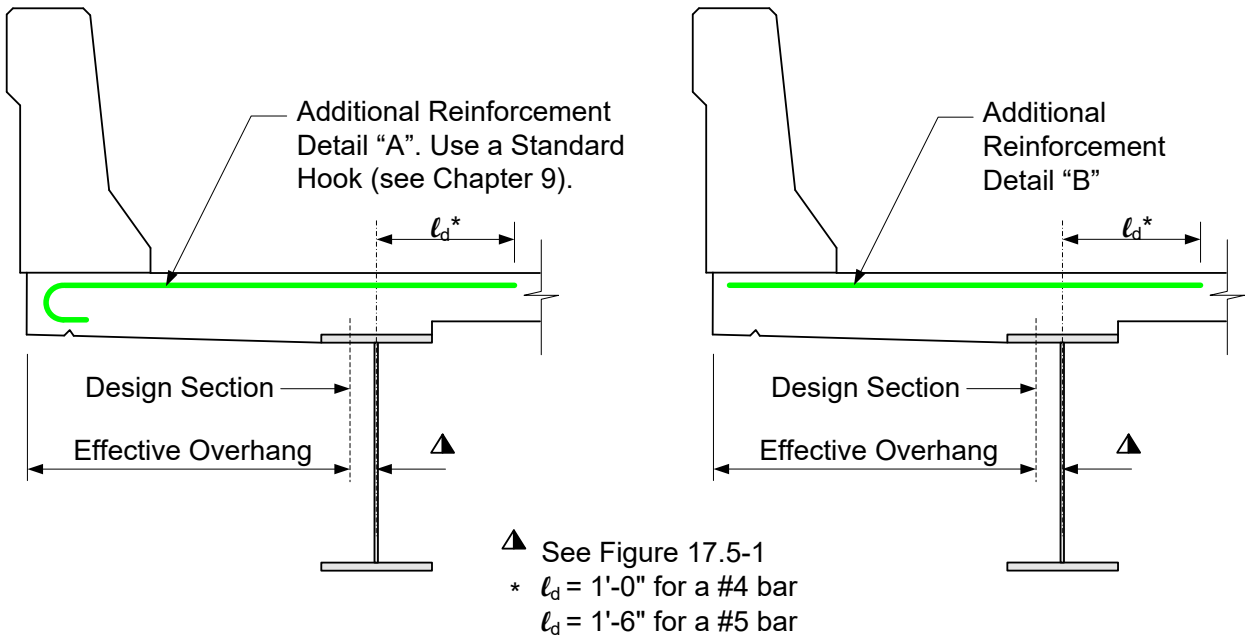

Figure 17.6-8
Overhang Reinforcement Details

To reiterate:

1. Details for additional overhang reinforcement are shown in Figure 17.6-8. Detail "A" shall be used with Table 17.6-2, Table 17.6-3 and Table 17.6-5. Detail "B" shall be used with Table 17.6-4.

2. Girder Type 1 shall include steel girders and the following prestressed girders; 28-inch, 36-inch, 36W-inch, 45W-inch. Prestressed girders used for rehabilitation projects, 45-inch, 54-inch and 70-inch, shall also be considered to be Girder Type 1. Girder Type 2 shall include the following prestressed girders; 54W-inch, 72W-inch and 82W-inch.

17.7 Construction Joints

Optional transverse construction joints are permitted on continuous concrete deck structures to limit the concrete volume in a single pour. Refer to the Standard Detail for Slab Pouring Sequence for the optimum slab pouring sequence. On steel structures over 300 feet long, transverse construction joints, if used, are to be placed at 0.6 of the span length beyond the pier in the direction of the pour. For continuous prestressed concrete girder bridges, optional transverse construction joints should be located midway between the cut-off points for continuity reinforcing steel or at 0.75 of the span, whichever is closest to the pier.

The rate of placing concrete for continuous steel girders shall equal or exceed 0.5 of the span length per hour but need not exceed 100 cubic yards per hour. Transverse construction joints may be omitted with approval of Bureau of Structures.

When the deck width of a girder superstructure exceeds 120 feet or the width of a slab superstructure exceeds 52 feet, a longitudinal construction joint with reinforcement through the joint shall be detailed. For decks between 90 and 120 feet, an optional joint shall be detailed. Longitudinal joints should not be located directly above girders and should be at least 6 inches from the edge of the top flange of the girder. Longitudinal joints are preferably located beneath the median or parapet. Otherwise, the joint should be located along the edge of the lane line or in the middle of the lane. The longitudinal construction joint should be used for staged construction and for other cold joint applications within the deck. Longitudinal construction joint details are provided in Standard Details 24.11 – Slab Pouring Sequence and 18.02 – Continuous Flat Slab.

Optional longitudinal construction joints shall be detailed accordingly in the plans. Longitudinal construction joints requested by the contractor are to be approved by the engineer. Optional and contractor requested joints are to be located as previously mentioned.

Open joints may be used in a median or between parapets. Considerations should be given to sealing open joints with compression seals or other sealants.

The structure plans should permit the contractor to propose an alternate construction joint schedule subject to approval of the engineer.

17.8 Bridge Deck Protective Systems

17.8.1 General

FHWA encourages states that require the use of de-icers to employ bridge deck protective systems. The major problem resulting in bridge deck deterioration is delamination of the concrete near the top mat of the reinforcing steel followed by subsequent spalling of the surface concrete. Research shows that the most prevalent cause of extensive deck deterioration is corrosion of the reinforcing steel due to the intrusion of chlorides into the concrete from repeated de-icer applications during snow and/or ice removal.

Several types of bridge deck protective systems are currently available. Some have been approved by FHWA based on their initial performance. Some of the more common types of protective systems are epoxy coated reinforcing steel, galvanized or stainless steel reinforcing steel, microsilica modified concrete or polymer impregnated concrete, cathodic protection and deck sealers. Epoxy coated reinforcing steel and deck sealers are preferred by WisDOT.

Structures other than box culverts that are designed to carry an earth fill are required to have waterproofing membrane systems on the deck to protect the slab. This includes bridges designed for future grade changes.

17.8.2 Design Guidance

All deck reinforcement bars shall be epoxy coated and the top reinforcing bars shall have a minimum of 2 ½ inches of cover.

All decks shall receive a protective surface treatment. Other locations for protective surface treatment should include: parapet, parapet wing, median, sidewalk and edge of deck/slab and 1’-0” underside of deck/slab when open railings are utilized.

Additional protective systems may be desired to minimize future rehabilitations. One or a combination of systems may be used on large projects such as Mega Projects. Contact the WisDOT Bureau of Structures Design Section for approval and project specific guidance. The following systems are currently being used and should be considered on new structures and deck rehabilitations:

- High Performance Concrete (HPC) – This is typically used within the bridge superstructure (deck, diaphragms, parapets, structural approach slabs, etc.) on urban interchange projects

- Polymer overlays - This system extends the decks service life before rehabilitation is required.

- Stainless steel deck reinforcement – Use of stainless steel in lieu of epoxy bars may be justified for urban interchange projects and complex structures. Savings from reducing the number of rehabilitation projects and user costs can be substantial. Currently, only the enhanced corrosion protection benefits shall be utilized and reinforcement shall be selected per the epoxy coated deck design tables. The use of

stainless reinforcing steel shall be approved by Chief Structures Development or Design Engineer and may require a life cycle analysis.

17.9 Bridge Approaches

The structure approach slab, or approach pavement, is part of the roadway design plans. Structure approach standards are provided in the Facilities Development Manual (FDM).

Guidance for the selection of pavement types for bridge approaches is as shown in FDM 14-10-15.

Considerations for site materials, drainage and backfill are provided in Chapter 12 – Abutments. Most approach pavement failures are related to settlement of embankment or foundation materials. Past experience shows that significant settlement is most likely to occur where marginal materials are used. Designers are encouraged to provide perforated underdrains wrapped in geotextile fabric placed in a trench filled with crushed stone. Also, abutment backfill material should be granular in nature and consolidated under optimum moisture conditions.

17.10 Design of Precast Prestressed Concrete Deck Panels

17.10.1 General

An advantage of stay-in-place forms is that they can be placed in less time than it takes to place the forms for a conventional deck. There is also a labor savings because the extra step of removing deck forms is not required. Stay-in-place forms are often the preferred system for shallow box girders because of the difficulty of removing forms in a confined space.

When determined ideal for a project, precast concrete deck panels should be detailed in the contract documents. The contractor is responsible for the shop plans of the panels and any other changes that may be required to the reinforcing steel in the cast-in-place portion of the deck. Contract documents should also include an option for the contractor to use a conventional deck. Contact the Bureau of Structures Design Section for current precast concrete deck panel Special Provisions and for other considerations.

When a conventional deck is detailed in the contract documents and the contractor is interested in utilizing precast deck panels, the department may consider their usage on a project-specific basis. The contractor would be responsible for the shop plans of the panels and any other changes that may be required to the reinforcing steel in the cast-in-place portion of the deck. Payment to a contractor who chooses to use stay-in-place forms is based on the contract prices bid for the conventional cast-in-place deck.

Deck panels are only used between the inside faces of the exterior girders. The overhangs outside the exterior girders are formed and the concrete placed in the same way as in a conventional cast-in-place deck. On skewed decks, the contractor may form and cast the skewed portion of the deck full depth or they may use skewed end deck panels which may be individually precast or saw-cut from square end planks.

One potential issue with decks formed using concrete deck panels is that cracks often form in the cast-in-place concrete over the transverse joints between panels and along the edges of the panels parallel to the girders. Reflection cracking is less of a problem when these panels are used on prestressed concrete girders than on steel girders. Simple-span prestressed concrete girder bridges have less reflective cracking than continuous-span prestressed concrete girder bridges.

17.10.2 Deck Panel Design

The design of precast prestressed concrete deck panels shown in Table 17.10-1 is based on *AASHTO LRFD* design criteria. These panels were designed for flexure due to the HL-93 design truck live load, dead load of the plastic concrete supported by the panels, a construction load of 50 psf, dead load of the panels and a future wearing surface of 20 psf. The live load moments were obtained from **LRFD [Table A4-1]**.

At the request of precast deck panel fabricators, only two strand sizes are used – 3/8 inch and 1/2 inch. Strand spacing is given in multiples of 2 inches.

WisDOT exception to AASHTO:

A 3-inch minimum panel thickness is used, even though **LRFD [9.7.4.3.1]** specifies a minimum thickness of 3.5 inches.

The decision to use a 3-inch minimum panel was based on the successful use of 3-inch panels by other agencies over many years. In addition, a minimum of 5 inches of cast-in-place concrete is preferred for crack control and reinforcing steel placement. A 3.5-inch panel thickness would require an 8.5-inch deck, which would not allow direct substitution of panels for a traditionally designed 8-inch deck.

A study performed at Iowa State University determined that a 3-inch thick panel with coated 3/8-inch strands at midthickness spaced at 6 inches, along with epoxy-coated 6 x 6 – W2.9 x W2.9 welded wire fabric, was adequate to prevent concrete splitting during strand detensioning. The use of #3 bars placed perpendicular to the strands at 9" spacing also prevents concrete splitting.

Panel thicknesses were increased by ½ -inch whenever a strand spacing of less than 6 inches was required. Strands with a ½-inch diameter were used in panels 3½ inches thick or greater when 3/8-inch strands spaced at 6 inches were not sufficient.

The allowable tensile stress in the panels, as presented in **LRFD [Table 5.9.2.3.2b-1]**, is as follows:

$0.0948\lambda\sqrt{f'_c} \leq 0.3$ ksi ; where λ = conc. density modification factor **LRFD [5.4.2.8]**, and has a value of 1.0 for normal weight conc.

This allowable tensile stress limit is based on f'_c in units of ksi and is for components with bonded prestressing tendons or reinforcement that are subjected to severe corrosive conditions.

The transfer length of the strands is assumed to be 60 strand diameters at a stress of 202.5 ksi. The development length, L_d, of the strands, as presented in **LRFD [5.9.4.3.2]**, is assumed to be as follows:

$$L_d = k\left(f_{ps} - \frac{2}{3}f_{pe}\right)d_b$$

Where:

k	=	1.0 for pretensioned members with a depth less than 24 inches
d_b	=	Nominal strand diameter (inches)
f_{ps}	=	Average stress in prestressing steel at the time when the nominal resistance of the member is required (ksi)

f_{pe} = Effective stress in prestressing steel after losses (ksi)

L_d = Development length beyond critical section (inches)

The minimum panel width is the length required for the panel to extend 4" onto the top flange as shown in Table 17.10-1. A linear reduction in f_{pe} is required if the panel width is less than two times the development length. The values shown in Table 17.10-1 consider this linear reduction.

The designs in Table 17.10-1 are based on uncoated prestressing strands. Grit-impregnated, epoxy-coated strands cost four times as much as uncoated strands but require about half the transfer and development length as uncoated strands. A cover of 1 1/4 inches is adequate to provide protection from chlorides for uncoated strands using a 5 ksi concrete mix. However, for bridges with high traffic volume, a 6 ksi mix is recommended.

LRFD [9.7.4.3.2] specifies that the strands need not extend beyond the panels into the cast-in-place concrete above the beams. This simplifies construction of the panels at the plant since they can be saw cut to the required length. Installation in the field is also simplified because extended strands may interfere with girder shear connectors. As a substitute for the strands that don't extend out of the panels, #4 bars spaced at twice the spacing of the transverse bars are placed on top of the panels over the girders in the cast-in-place concrete. These bars anchor the panels together to prevent or reduce longitudinal cracking over the ends of the panels and also resist any positive continuity moments that may develop. Also by not extending the strands into the cast-in-place concrete, the uncoated strands are not exposed to chlorides that may seep through cracks that may develop in the cast-in-place concrete.

LRFD [5.6.3.3] requires that the moment capacity of a flexural member be greater than the cracking moment based on the modulus of rupture. This requirement may be waived if the moment capacity is greater than 1.33 times the factored design moment. The purpose of this requirement is to provide a minimum amount of reinforcement in a flexural member so that a flexural failure will not be sudden or occur without warning. Tests have shown that for slabs on girders, the failure mode is a punching shear failure and not a flexural failure. ACI 10.5.4 also recognizes the difference between slabs and beams and does not require the same minimum reinforcement for slabs. For these reasons, **LRFD [5.6.3.3]** was not considered in the designs of the panels shown in Table 17.10-1. However, panels with a width of 6 feet or more meet the requirements of **LRFD [5.6.3.3]**.

17.10.3 Transverse Reinforcement for Cast-in-Place Concrete on Deck Panels

The design of the transverse reinforcing steel in the cast-in-place concrete placed on deck panels is based on *AASHTO LRFD*. The live load moments used to determine the size and spacing of the transverse reinforcing bars placed in the top of the cast-in-place concrete are from **LRFD [Table A4-1]**. The reinforcing steel in the cast-in-place concrete is also designed for a future wearing surface of 20 psf. With stay-in-place forms, there are no negative moments from the dead load of the cast-in-place concrete. The required reinforcing steel shown in Table 17.10-2 is based on both the strength requirement and crack control requirement.

Crack control was checked in accordance with **LRFD [5.6.7]** and as shown in 17.5.3.1. A concrete strength of 4 ksi was assumed, and the haunch height over the girders was not considered.

The distance from the centerline of the girder to the design section is from **LRFD [4.6.2.1.6]**. For prestressed concrete girders, use the values in Figure 17.5-1.

The reinforcing steel in Table 17.10-2 does not account for deck overhangs. However, Table 17.6-2, Table 17.6-3, Table 17.6-4 and Table 17.6-5 provide the minimum reinforcing steel required in the overhangs. Also for any portion of a deck not supported by deck panels, use Table 17.5-1 for determining the required reinforcing steel.

17.10.3.1 Longitudinal Reinforcement

For continuous prestressed concrete girders, the longitudinal reinforcing steel over the piers is the same as that required for a conventional deck. For steel girders, see 17.5.3.2 for longitudinal continuity reinforcement.

17.10.4 Details

Precast deck panels should extend a minimum of 1.5 inches beyond the face of concrete diaphragms at the substructure units. The transverse joints between panels in adjacent bays should be staggered, preferably a distance about 1/2 panel length. Staggering the joints helps to minimize transverse reflective cracking.

Panels should never rest directly on a girder flange. According to **LRFD [9.7.4.3.4]**, “The ends of the formwork panels shall be supported on a continuous mortar bed or shall be supported during construction in such a manner that the cast-in-place concrete flows into the space between the panel and the supporting component to form a concrete bedding.” The minimum width of bearing on the flange of a girder for grout support is 3 inches. See Figure 17.10-1 and Figure 17.10-2 for additional information.

High-density expanded polystyrene is used to support the panels prior to the placement of the grout under the panel. The polystyrene is cut to the required haunch height so a constant slab thickness is maintained. Fiber board or sheathing panel supports are not allowed because the slight deflection of polystyrene compresses the concrete underneath the panel and results in less reflective longitudinal cracking along the panel edge.

The main function of the polystyrene is to form the haunch height and to form a dam for the grout placement. The grout must be placed before placement of the deck concrete.

Some agencies specify a maximum haunch height. When it is exceeded, they allow the contractor to thicken the slab. Wisconsin does not specify a maximum haunch height and leaves that decision to the designer, who is better informed to make that decision based on the specific situation of their project.

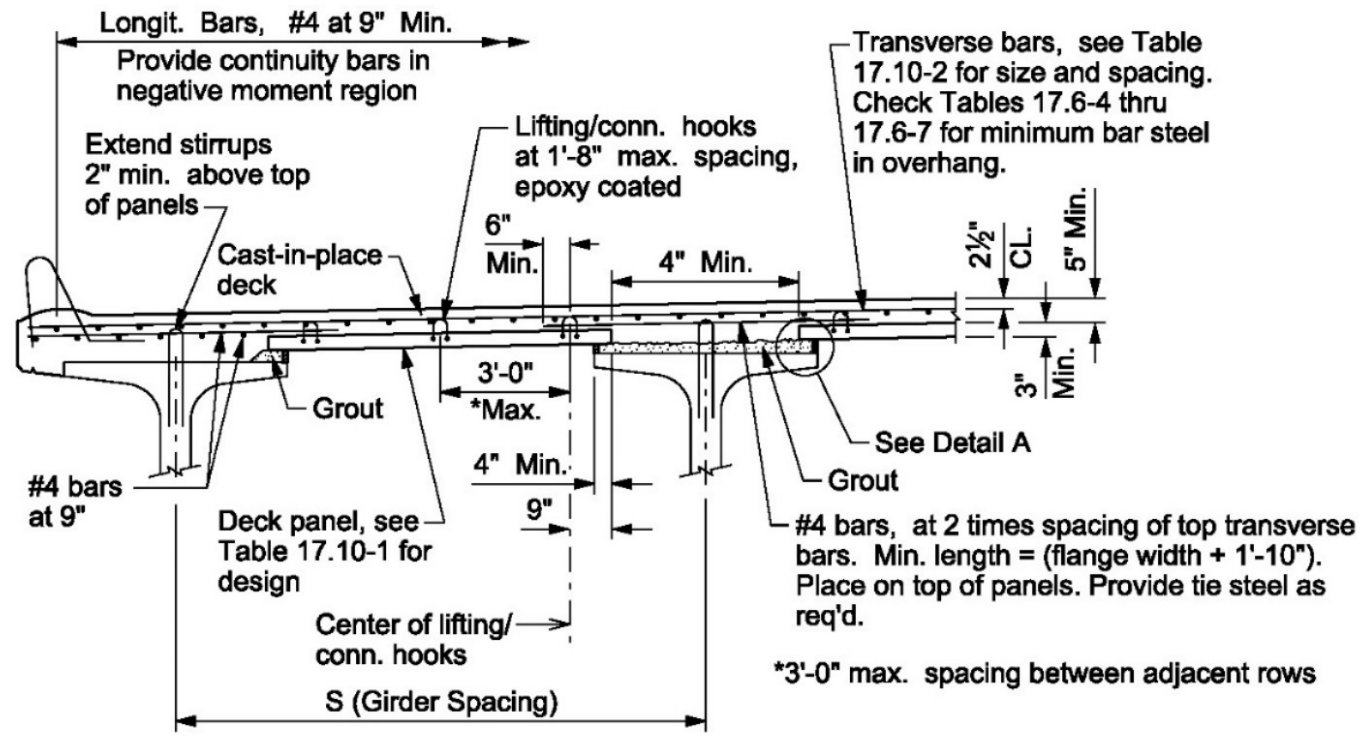

Transverse Section

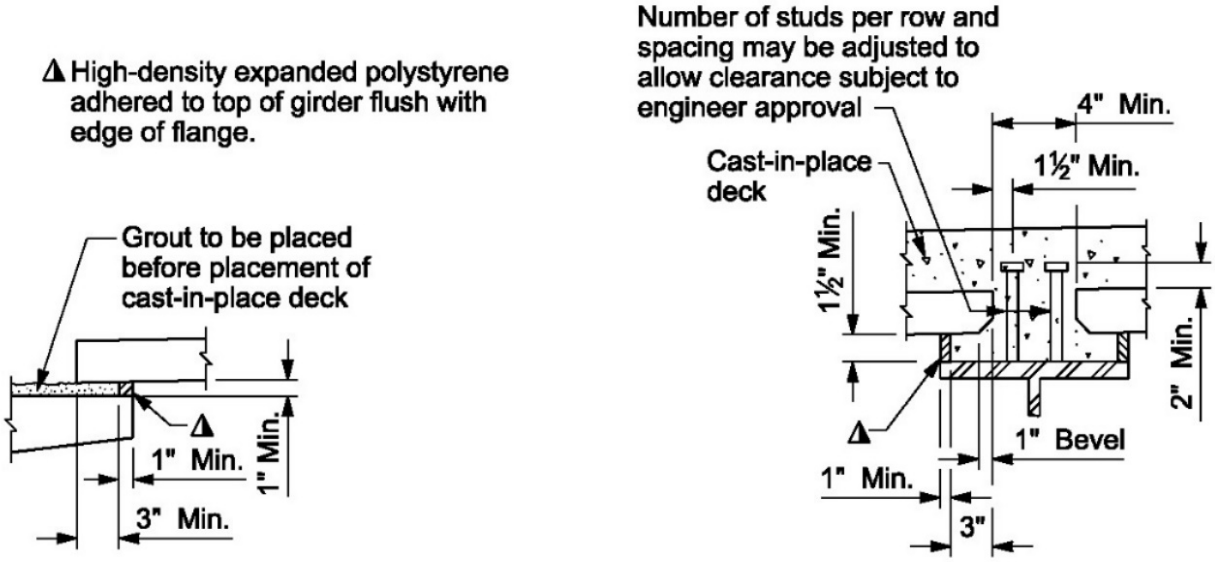

DETAIL A

ALTERNATE DETAIL A STEEL GIRDER

Figure 17.10-1
Transverse Section through Slab on Girders with Deck Panel and Details

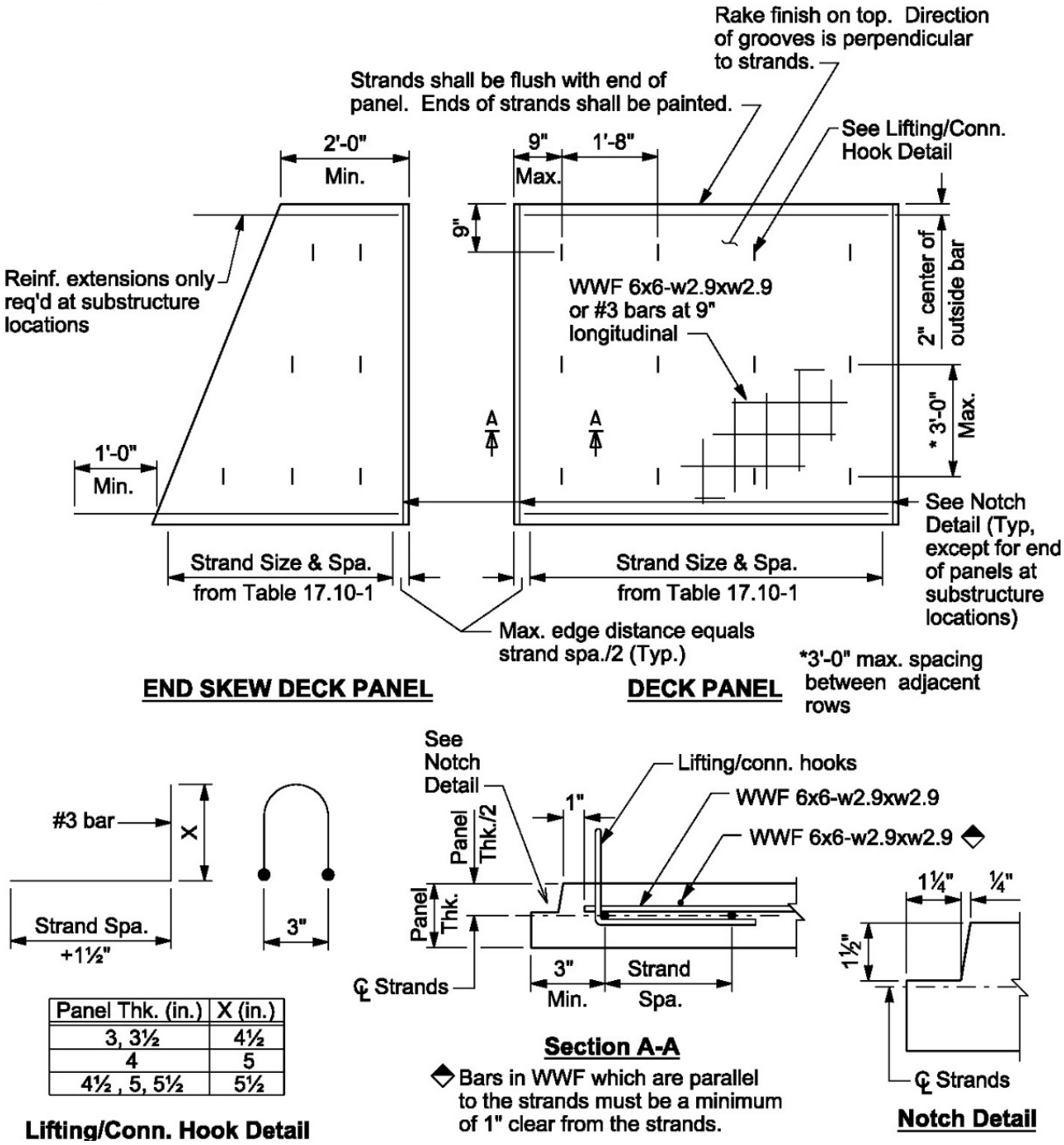

Figure 17.10-2
Deck Panel Details

Girder Spacing "S"	Panel Thick. (Inches)	Total Slab Thick. (Inches)	Top Flange Width (Inches)												
			12		16		18		24		30		48		
			Strand		Strand		Strand		Strand		Strand		Strand		
			Spa. Inches	Pi Kips	Spa. Inches	Pi Kips	Spa. Inches	Pi Kips	Spa. Inches	Pi Kips	Spa. Inches	Pi Kips	Spa. Inches	Pi Kips	
4'-6"	3	8	10	13.17	10	12.33	10	11.92	10	11.08	10	11.08	10	11.08	3/8" Diameter Strands
4'-9"	3	8	10	13.58	10	12.75	10	12.75	10	11.50	10	11.08	10	11.08	
5'-0"	3	8	10	14.42	10	13.58	10	13.17	10	12.33	10	11.08	10	11.08	
5'-3"	3	8	10	14.83	10	14.00	10	13.58	10	12.75	10	11.92	10	11.08	
5'-6"	3	8	10	15.67	10	14.83	10	14.42	10	13.17	10	12.33	10	11.08	
5'-9"	3	8	10	16.50	10	15.67	10	15.25	10	14.00	10	13.17	10	11.50	
6'-0"	3	8	8	14.25	10	16.50	10	16.08	10	14.83	10	13.58	10	11.50	
6'-3"	3	8	8	15.45	8	14.25	10	16.92	10	15.67	10	14.42	10	11.92	
6'-6"	3	8	8	16.12	8	15.45	8	14.78	10	16.50	10	15.25	10	12.33	
6'-9"	3	8	8	17.12	8	16.12	8	15.78	8	14.25	10	16.08	10	13.17	
7'-0"	3	8	6	14.19	8	17.12	8	16.45	8	15.45	8	14.25	10	13.58	
7'-3"	3	8	6	14.94	6	14.19	6	13.62	8	16.12	8	15.12	10	14.42	
7'-6"	3	8	6	15.69	6	14.94	6	14.69	8	17.12	8	15.78	10	15.25	
7'-9"	3	8	6	16.44	6	15.69	6	15.44	6	14.44	8	16.78	10	16.50	
8'-0"	3	8	6	17.19	6	16.44	6	16.19	6	15.19	6	14.19	8	14.25	
8'-3"	3.5	8.5	6	16.76	6	16.01	6	15.76	6	14.76	6	13.47	8	14.14	
8'-6"	3.5	8.5	10	29.48	6	16.76	6	16.51	6	15.51	6	14.51	8	14.97	
8'-9"	3.5	8.5	8	26.44	10	30.06	10	29.06	6	16.26	6	15.26	8	15.97	
9'-0"	3.5	8.5	8	27.44	8	26.44	8	26.10	6	17.01	6	16.01	8	16.64	
9'-3"	3.5	8.5	8	28.77	8	27.77	8	27.10	10	30.06	6	16.76	6	14.01	
9'-6"	4	9	8	27.76	8	26.76	8	25.95	10	29.22	6	16.37	8	17.20	
9'-9"	4	9	8	29.09	8	27.76	8	27.43	10	30.62	6	17.12	6	14.37	
10'-0"	4	9	8	30.09	8	29.09	8	28.43	8	27.09	10	30.20	6	15.12	
10'-3"	4	9	6	25.48	8	30.09	8	29.76	8	28.09	8	26.76	6	15.87	
10'-6"	4	9	6	26.23	6	25.48	8	30.76	8	29.09	8	27.76	6	16.62	
10'-9"	4	9.5	6	26.73	6	25.73	6	25.23	8	29.43	8	27.76	6	16.12	
11'-0"	4	9.5	6	27.48	6	26.73	6	26.23	8	30.43	8	28.76	6	16.87	
11'-3"	4	9.5	6	28.48	6	27.48	6	26.98	6	25.73	8	30.09	10	30.20	1/2" Diameter Strands
11'-6"	4	9.5	6	29.48	6	28.48	6	27.98	6	26.73	6	25.23	8	25.95	
11'-9"	4	10	6	30.23	6	28.98	6	28.48	6	26.98	6	25.48	8	25.95	
12'-0"	4.5	10	6	29.62	6	28.62	6	28.12	6	26.62	6	25.37	8	26.50	
12'-3"	4.5	10	6	30.62	6	29.62	6	29.12	6	27.62	6	26.12	8	27.83	
12'-6"	5	10	6	30.34	6	29.34	6	28.84	6	27.59	6	26.34	8	28.28	
12'-9"	5	10.5	6	30.59	6	29.59	6	29.09	6	27.59	6	26.34	8	27.95	
13'-0"	5.5	10.5	6	30.36	6	29.36	6	29.11	6	27.61	6	26.36	8	28.77	
13'-3"	5.5	10.5	4	23.52	6	30.36	6	29.86	6	28.61	6	27.36	8	29.77	
13'-6"	5.5	10.5	4	24.18	4	23.52	4	23.18	6	29.36	6	28.11	8	30.77	

13'-9"	6	11	4	23.39	6	30.41	6	30.16	6	28.66	6	27.41	8	29.96	
14'-0"	6	11	4	24.06	4	23.39	4	23.06	6	29.66	6	28.16	8	30.96	

Table 17.10-1

Precast Prestressed Concrete Deck Panel Design Table

Notes:

- Designed per AASHTO LRFD Specifications with HL 93 Loading.
- f'c = 6.0 ksi
- f'ci = 4.4 ksi
- f'c slab = 4.0 ksi
- f's = 270 ksi (low relaxation)
- Design loading includes 20 psf for future wearing surface and 50 psf for construction load. Pi's in Table are a minimum and may be increased to a maximum of 0.75 x f_s x A_s. Strands are located at the centroid of the panels.

Girder Spacing "S"	Total Slab Thick. Inches	Distance From C/L of Girder to Design Section (Inches)					
		3	4	5	6	10	15
4'-6"	8	#4 @ 9	#4 @ 9.5	#4 @ 10	#4 @ 10	#4 @ 11.5	#4 @ 12.5
4'-9"	8	#4 @ 8	#4 @ 8.5	#4 @ 9	#4 @ 9.5	#4 @ 11	#4 @ 12.5
5'-0"	8	#4 @ 7	#4 @ 7.5	#4 @ 8	#4 @ 8.5	#4 @ 10.5	#4 @ 12.5
5'-3"	8	#4 @ 6.5	#4 @ 7	#4 @ 7.5	#4 @ 8	#4 @ 10	#4 @ 12
5'-6"	8	#4 @ 6.5	#4 @ 6.5	#4 @ 7	#4 @ 7.5	#4 @ 9.5	#4 @ 12
5'-9"	8	#4 @ 6.5	#4 @ 6.5	#4 @ 6.5	#4 @ 7	#4 @ 9	#4 @ 11.5
6'-0"	8	#4 @ 6.5	#4 @ 6.5	#4 @ 6.5	#4 @ 6.5	#4 @ 8.5	#4 @ 11
6'-3"	8	#4 @ 6.5	#4 @ 6.5	#4 @ 6.5	#4 @ 6.5	#4 @ 8.5	#4 @ 11
6'-6"	8	#4 @ 6.5	#4 @ 6.5	#4 @ 6.5	#4 @ 6.5	#4 @ 8	#4 @ 10.5
6'-9"	8	#4 @ 6	#4 @ 6.5	#4 @ 6.5	#4 @ 6.5	#4 @ 7.5	#4 @ 10.5
7'-0"	8	#5 @ 7.5	#5 @ 8	#4 @ 6.5	#4 @ 6.5	#4 @ 7	#4 @ 10
7'-3"	8	#5 @ 7.5	#5 @ 7.5	#4 @ 6	#4 @ 6.5	#4 @ 6.5	#4 @ 10
7'-6"	8	#5 @ 7.5	#5 @ 7.5	#4 @ 6	#4 @ 6.5	#4 @ 6.5	#4 @ 9.5
7'-9"	8	#5 @ 7	#5 @ 7.5	#5 @ 7.5	#4 @ 6.5	#4 @ 6.5	#4 @ 8.5

8'-0"	8	#5 @ 7	#5 @ 7.5	#5 @ 7.5	#4 @ 6	#4 @ 6.5	#4 @ 8
8'-3"	8.5	#5 @ 7.5	#5 @ 8	#4 @ 6.5	#4 @ 6.5	#4 @ 6.5	#4 @ 8
8'-6"	8.5	#5 @ 7.5	#5 @ 8	#4 @ 6.5	#4 @ 6.5	#4 @ 6.5	#4 @ 8
8'-9"	8.5	#5 @ 7.5	#5 @ 7.5	#4 @ 6.5	#4 @ 6.5	#4 @ 6.5	#4 @ 7.5
9'-0"	8.5	#5 @ 7.5	#5 @ 7.5	#5 @ 8	#4 @ 6.5	#4 @ 6.5	#4 @ 7.5
9'-3"	8.5	#5 @ 7.5	#5 @ 7.5	#5 @ 8	#4 @ 6.5	#4 @ 6.5	#4 @ 7
9'-6"	9	#5 @ 7.5	#5 @ 8	#5 @ 8	#5 @ 8.5	#5 @ 9.5	#4 @ 7
9'-9"	9	#5 @ 7.5	#5 @ 7.5	#5 @ 8	#5 @ 8	#5 @ 9.5	#4 @ 7
10'-0"	9	#5 @ 7	#5 @ 7.5	#5 @ 7.5	#5 @ 8	#5 @ 9	#4 @ 6.5
10'-3"	9	#5 @ 7	#5 @ 7	#5 @ 7.5	#5 @ 7.5	#5 @ 8.5	#5 @ 9.5
10'-6"	9	#5 @ 7	#5 @ 7	#5 @ 7	#5 @ 7.5	#5 @ 8.5	#5 @ 9
10'-9"	9.5	#5 @ 7	#5 @ 7.5	#5 @ 7.5	#5 @ 7.5	#5 @ 8.5	#5 @ 9
11'-0"	9.5	#5 @ 7	#5 @ 7	#5 @ 7.5	#5 @ 7.5	#5 @ 8.5	#5 @ 9
11'-3"	9.5	#5 @ 7	#5 @ 7	#5 @ 7	#5 @ 7.5	#5 @ 8	#5 @ 9
11'-6"	9.5	#5 @ 6.5	#5 @ 7	#5 @ 7	#5 @ 7	#5 @ 8	#5 @ 9
11'-9"	10	#5 @ 7	#5 @ 7	#5 @ 7.5	#5 @ 7.5	#5 @ 8	#5 @ 9
12'-0"	10	#5 @ 7	#5 @ 7	#5 @ 7	#5 @ 7.5	#5 @ 8	#5 @ 9
12'-3"	10	#5 @ 6.5	#5 @ 7	#5 @ 7	#5 @ 7	#5 @ 8	#5 @ 8.5
12'-6"	10	#5 @ 6.5	#5 @ 6.5	#5 @ 7	#5 @ 7	#5 @ 7.5	#5 @ 8.5
12'-9"	10.5	#5 @ 7	#5 @ 7	#5 @ 7	#5 @ 7.5	#5 @ 8	#5 @ 8.5
13'-0"	10.5	#5 @ 6.5	#5 @ 7	#5 @ 7	#5 @ 7	#5 @ 8	#5 @ 8.5
13'-3"	10.5	#5 @ 6.5	#5 @ 6.5	#5 @ 7	#5 @ 7	#5 @ 7.5	#5 @ 8.5
13'-6"	10.5	#5 @ 6.5	#5 @ 6.5	#5 @ 7	#5 @ 7	#5 @ 7.5	#5 @ 8.5
13'-9"	11	#5 @ 6.5	#5 @ 7	#5 @ 7	#5 @ 7	#5 @ 8	#5 @ 8
14'-0"	11	#5 @ 6.5	#5 @ 6.5	#5 @ 7	#5 @ 7	#5 @ 7.5	#5 @ 8

Table 17.10-2

Transverse Reinforcing Steel for Deck Slabs on Precast Concrete Deck Panels

Notes:

- Designed per AASHTO LRFD with HL-93 Loading.
- f'c deck = 4.0 ksi
- fy = 60 ksi
- Steel is 2 ½" clear from top of slab. Designed for 20 psf future wearing surface. "Total Slab Thickness" includes thickness of deck panel and poured in place concrete.
- Overhang deck steel may require greater than the number 4 or 5 bar as indicated in 17.6.2.