Table of Contents

18.1 Introduction 3
18.1.1 General 3
18.1.2 Limitations 3
18.2 Specifications, Material Properties and Structure Type 4
18.2.1 Specifications 4
18.2.2 Material Properties 4
18.2.3 Structure Type and Slab Depth 4
18.3 Limit States Design Method 8
18.3.1 Design and Rating Requirements 8
18.3.2 LRFD Requirements 8
18.3.2.1 General 8
18.3.2.2 Statewide Policy 8
18.3.3 Strength Limit State 9
18.3.3.1 Factored Loads 9
18.3.3.2 Factored Resistance 10
18.3.3.2.1 Moment Capacity 10
18.3.3.2.2 Shear Capacity 12
18.3.3.2.3 Uplift Check 12
18.3.3.2.4 Tensile Capacity – Longitudinal Reinforcement 12
18.3.4 Service Limit State 13
18.3.4.1 Factored Loads 13
18.3.4.2 Factored Resistance 13
18.3.4.2.1 Crack Control Criteria 14
18.3.4.2.2 Live Load Deflection Criteria 14
18.3.4.2.3 Dead Load Deflection (Camber) Criteria 14
18.3.5 Fatigue Limit State 15
18.3.5.1 Factored Loads (Stress Range) 15
18.3.5.2 Factored Resistance 16
18.3.5.2.1 Fatigue Stress Range 16
18.4 Concrete Slab Design Procedure 17
18.4.1 Trial Slab Depth 17
18.4.2 Dead Loads (DC, DW) 17

18.4.3 Live Loads 18
18.4.3.1 Vehicular Live Load (LL) and Dynamic Load Allowance (IM) 18
18.4.3.2 Pedestrian Live Load (PL) 19
18.4.4 Minimum Slab Thickness Criteria 19
18.4.4.1 Live Load Deflection Criteria 19
18.4.4.2 Dead Load Deflection (Camber) Criteria 19
18.4.5 Live Load Distribution 20
18.4.5.1 Interior Strip 20
18.4.5.1.1 Strength and Service Limit State 21
18.4.5.1.2 Fatigue Limit State 21
18.4.5.2 Exterior Strip 22
18.4.5.2.1 Strength and Service Limit State 22
18.4.6 Longitudinal Slab Reinforcement 23
18.4.6.1 Design for Strength 23
18.4.6.2 Check for Fatigue 24
18.4.6.3 Check for Crack Control 25
18.4.6.4 Minimum Reinforcement Check 26
18.4.6.5 Bar Cutoffs 27
18.4.6.5.1 Positive Moment Reinforcement 27
18.4.6.5.2 Negative Moment Reinforcement 27
18.4.7 Transverse Slab Reinforcement 27
18.4.7.1 Distribution Reinforcement 27
18.4.7.2 Reinforcement in Slab over Piers 28
18.4.8 Shrinkage and Temperature Reinforcement 28
18.4.9 Shear Check of Slab 28
18.4.10 Longitudinal Reinforcement Tension Check 29
18.4.11 Uplift Check 29
18.4.12 Deflection Joints and Construction Joints 29
18.4.13 Reinforcement Tables 30
18.5 Design Example 32

18.1 Introduction

18.1.1 General

This chapter considers the following types of concrete structures:

- Flat Slab
- Haunched Slab

A longitudinal slab is one of the least complex types of bridge superstructures. It is composed of a single element superstructure in comparison to the two elements of the transverse slab on girders or the three elements of a longitudinal slab on floor beams supported by girders. Due to simplicity of design and construction, the concrete slab structure is relatively economical. Its limitation lies in the practical range of span lengths and maximum skews for its application. For longer span applications, the dead load becomes too high for continued economy. Application of the haunched slab has increased the practical range of span lengths for concrete slab structures.

18.1.2 Limitations

Concrete slab structure types are not recommended over streams where the normal water freeboard is less than 4 feet; formwork removal requires this clearance. When spans exceed 35 feet, freeboard shall be increased to 5 feet above normal water.

All concrete slab structures are limited to a maximum skew of 30 degrees. Slab structures with skews in excess of 30 degrees, require analysis of complex boundary conditions that exceed the capabilities of the present design approach used in the Bureau of Structures.

Continuous span slabs are to be designed using the following pier types:

- Piers with pier caps (on columns or shafts)
- Wall type piers

These types will allow for ease of future superstructure replacement. Piers that have columns without pier caps, have had the columns damaged during superstructure removal. This type of pier will not be allowed without the approval of the Structures Design Section.

WisDOT policy item:

Slab bridges, due to camber required to address future creep deflection, do not ride ideally for the first few years of their service life and present potential issues due to ponding. As such, if practical (e.g. not excessive financial implications), consideration of other structure types should be given for higher volume/higher speed facilities, such as the Interstate. Understanding these issues, the Regions have the responsibility to make the final decision on structure type with respect to overall project cost, with BOS available for consultation.

18.2 Specifications, Material Properties and Structure Type

18.2.1 Specifications

Reference may be made to the design and construction related material as presented in the following specifications:

- *State of Wisconsin, Department of Transportation Standard Specifications for Highway and Structure Construction*

  Section 502 - Concrete Bridges

  Section 505 - Steel Reinforcement

- Other Specifications as referenced in Chapter 3

18.2.2 Material Properties

The properties of materials used for concrete slab structures are as follows:

f'_c = specified compressive strength of concrete at 28 days, based on cylinder tests

4 ksi, for concrete slab superstructure

3.5 ksi, for concrete substructure units

f_y = 60 ksi, specified minimum yield strength of reinforcement (Grade 60)

E_s = 29,000 ksi, modulus of elasticity of steel reinforcement **LRFD [5.4.3.2]**

E_c = modulus of elasticity of concrete in slab **LRFD [C5.4.2.4]**

= $33{,}000\ K_1\ w_c^{1.5}\ (f'_c)^{1/2} = 3800$ ksi

Where:

K_1 = 1.0

w_c = 0.150 kcf, unit weight of concrete

n = $E_s / E_c = 8$ **LRFD [5.6.1]** (modular ratio)

18.2.3 Structure Type and Slab Depth

Prepare preliminary structure data, looking at the type of structure, span lengths, approximate slab depth, skew, roadway width, etc.. The selection of the type of concrete slab structure

(haunched / flat) is a function of the span lengths selected. Recommended span length ranges and corresponding structure type are shown for single-span and multiple-span slabs in Figure 18.2-1. Estimated slab depths are shown in Table 18.2-1.

Currently, voided slab structures are not allowed. Some of the existing voided slabs have displayed excessive longitudinal cracking over the voids in the negative zone. This may have been caused by the voids deforming or floating-up due to lateral pressure during the concrete pour. Recent research indicates slabs with steel void-formers have large crack widths above the voids due to higher stress concentrations.

If optimum span ratios are selected such that the positive moments in each span are equal, the interior and end span slab depths will be equal, provided Strength Limit State controls. Optimum span ratios are independent of applied live loading.

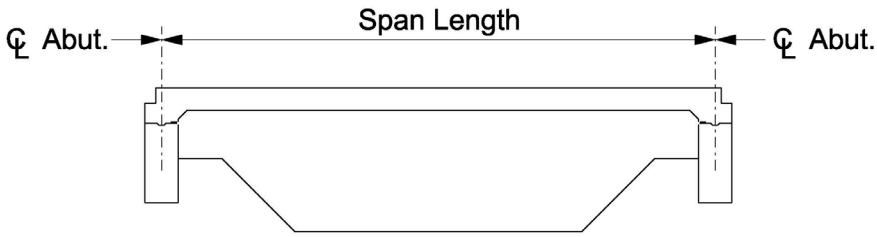

SINGLE SPAN

Span Length < 50 feet: Use Flat Slab

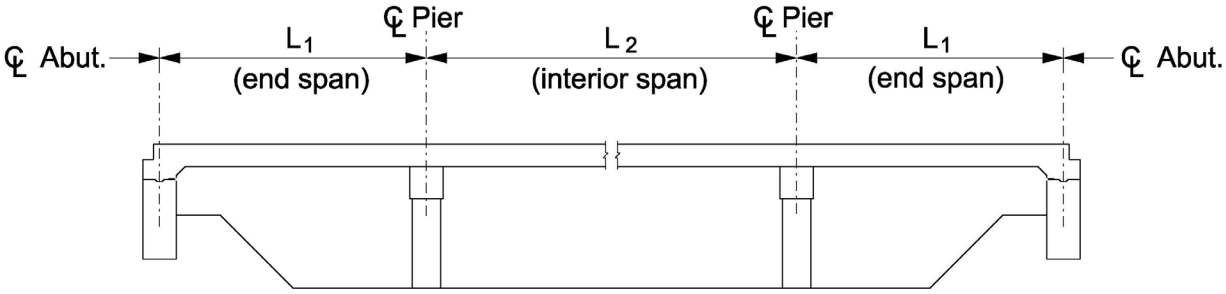

TWO OR MORE SPANS

All Span Lengths < 35 feet ± : Use Flat Slab Throughout
Any Span Length ≥ 45 feet ± < 70 feet: Use Haunched Slab Throughout
Other Spans: Consider Economics, Aesthetics and Clearances

Figure 18.2-1
Span Length vs. Slab Type

For the following optimum span ratio equations based on Strength Limit State controlling, L_1 equals the end span lengths and L_2 equals the interior span length or lengths, for structures with three or more spans.

For flat slabs the optimum span ratio is obtained when $L_2 = 1.25L_1$. The optimum span ratio for a three-span haunched slab results when $L_2 = L_1(1.43 - 0.002L_1)$ and for a four-span haunched slab when $L_2 = 1.39L_1$.

Approximate slab depths for multiple-span flat and haunched slabs can be obtained from Table 18.2-1. These values are to be used for dead load computations and preliminary computations only and the final slab depth is to be determined by the designer.

(s) Span Length (feet)	Slab Depth (inches)	
	Haunched [1]	Flat [4]
20	---	12
25	---	14
30	---	16
35	---	18
40	---	20
45	16 [2]	22
50	17.5 [2]	24
55	19 [2]	26
60	20 [2]	---
65	22 [3]	---
70	25 [3]	---

Table 18.2-1
Span Length vs. Slab Depth

[1] These estimated slab depths at mid-span, apply to interior spans of three or more span structures, with an end span length of approximately 0.7 times the interior span. Depths are based on dead load deflection (camber) and live load deflection limits. Haunch length (L_{haunch}) = 0.167 (L_2), and d_{slab} / D_{haunch} = 0.6 were used. L_2 = interior span length, (d_{slab}) = slab depth in span and (D_{haunch}) = slab depth at haunch. Values in table include ½ inch wearing surface.

[2] Depths controlled by live load deflection criteria

[3] Depths controlled by dead load deflection (camber) criteria

[4] These values represent **LRFD [2.5.2.6.3]** recommended minimum depths for continuous-spans using (s+10)/30. The slab span length (s) in the equation and resulting minimum depths are in feet and are presented in inches in Table 18.2-1. For simple-spans, the Bureau of Structures adds 10% greater depth and checks the criteria in 18.4.4. Values in table include ½ inch wearing surface.

The minimum slab depth is 12 inches. Use increments of ½ inch to select depths > 12 inches.

18.3 Limit States Design Method

18.3.1 Design and Rating Requirements

All new concrete slab structures are to meet design requirements as stated in 17.1.1 and rating requirements as stated in 17.1.2.

18.3.2 LRFD Requirements

18.3.2.1 General

For concrete slab design, the slab dimensions and the size and spacing of reinforcement shall be selected to satisfy the equation below for all appropriate Limit States: **LRFD [1.3.2.1, 5.5.1]**

$$Q = \sum \eta_i \gamma_i Q_i \leq \phi R_n = R_r$$ (Limit States Equation) **LRFD [1.3.2.1, 3.4.1]**

Where:

η_i	=	load modifier (a function of η_D , η_R and η_I) **LRFD [1.3.2.1, 1.3.3, 1.3.4, 1.3.5]**
γ_i	=	load factor
Q_i	=	force effect; moment, shear, stress range or deformation caused by applied loads
Q	=	total factored force effect
ϕ	=	resistance factor
R_n	=	nominal resistance; resistance of a component to force effects
R_r	=	factored resistance = ϕR_n

The Limit States used for concrete slab design are:

- Strength I Limit State
- Service I Limit State
- Fatigue I Limit State

18.3.2.2 Statewide Policy

Current Bureau of Structures policy is :

- Set value of load modifier, η_i , and its factors (η_D , η_R , η_I) all equal to 1.00 for concrete slab design.

- Ignore any influence of ADTT on multiple presence factor, m, in **LRFD [Table 3.6.1.1.2-1]** that would reduce force effects, Q_i , for slab bridges.

- Ignore reduction factor, r, for skewed slab bridges in **LRFD [4.6.2.3]** that would reduce longitudinal force effects, Q_i .

18.3.3 Strength Limit State

Strength I Limit State shall be applied to ensure that strength and stability are provided to resist the significant load combinations that a bridge is expected to experience during its design life **LRFD [1.3.2.4]**. The total factored force effect, Q, must not exceed the factored resistance, R_r , as shown in the equation in 18.3.2.1.

Strength I Limit State **LRFD [3.4.1]** will be used for:

- Designing longitudinal slab reinforcement for flexure

- Designing transverse slab reinforcement over the piers for flexure

- Checking shear (two-way) in slab at the piers

- Checking uplift at the abutments

- Checking longitudinal slab reinforcement for tension from shear

18.3.3.1 Factored Loads

The value of the load modifier, η_i , is 1.00, as stated in 18.3.2.2.

Strength I Limit State will be used to design the structure for force effects, Q_i , due to applied dead loads, DC and DW (including future wearing surface), defined in 18.4.2 and appropriate (HL-93) live loads, LL and IM, defined in 18.4.3.1. When sidewalks are present, include force effects of pedestrian live load, PL, defined in 18.4.3.2.

The load factor, γ_i , is used to adjust force effects on a structural element. This factor accounts for variability of loads, lack of accuracy in analysis, and the probability of simultaneous occurrence of different loads.

For Strength I Limit State, the values of γ_i for each applied load, are found in **LRFD [Tables 3.4.1-1 and 3.4.1-2]** and their values are: γ_{DC} = 1.25/0.90, γ_{DW} = 1.50/0.65, $\gamma_{LL+IM} = \gamma_{PL}$ = 1.75. The values for γ_{DC} and γ_{DW} have a maximum and minimum value.

Therefore, for Strength I Limit State:

$$Q = 1.0 \, [\, 1.25(DC) + 1.50(DW) + 1.75((LL + IM) + PL) \,]$$

Where DC, DW, LL, IM, and PL represent force effects due to these applied loads. The load factors shown for DC and DW are maximum values. Use maximum or minimum values as shown in **LRFD [Table 3.4.1-2]** to calculate the critical force effect.

18.3.3.2 Factored Resistance

The resistance factor, ϕ, is used to reduce the computed nominal resistance of a structural element. This factor accounts for variability of material properties, structural dimensions and workmanship, and uncertainty in prediction of resistance.

The resistance factors, ϕ, for Strength Limit State **LRFD [5.5.4.2]** are:

- ϕ = 0.90 for flexure & tension (for tension-controlled reinforced concrete sections as defined in **LRFD [5.6.2.1]**)
- ϕ = 0.90 for shear and torsion

The factored resistance, R_r (M_r, V_r, T_{cap}), associated with the list of items to be designed/checked using Strength I Limit State in 18.3.3, are described in the following sections.

18.3.3.2.1 Moment Capacity

Stress is assumed proportional to strain below the proportional limit on the stress-strain diagram. Tests have shown that at high levels of stress in concrete, stress is not proportional to strain. Recognizing this fact, strength analysis takes into account the nonlinearity of the stress-strain diagram. This is accomplished by using a rectangular stress block to relate the concrete compressive stress distribution to the concrete strain. The compressive stress block has a uniform value of $\alpha_1 \cdot f'_C$ over a zone bounded by the edges of the cross section and a straight line located parallel to the neutral axis at the distance a = $\beta_1 \cdot$(c) from the extreme compression fiber. The distance (c) is measured perpendicular to the neutral axis. The factor α_1 shall be taken as 0.85 for concrete strengths not exceeding 10.0 ksi and the factor β_1 shall be taken as 0.85 for concrete strengths not exceeding 4.0 ksi **LRFD [5.6.2.2]**. Strength predictions using this method are in agreement with strength test results. The representation of these assumptions is shown in Figure 18.3-1.

The moment capacity (factored resistance) of concrete components shall be based on the conditions of equilibrium and strain compatibility, resistance factors as specified in **LRFD [5.5.4.2]** and the assumptions outlined in **LRFD [5.6.2]**.

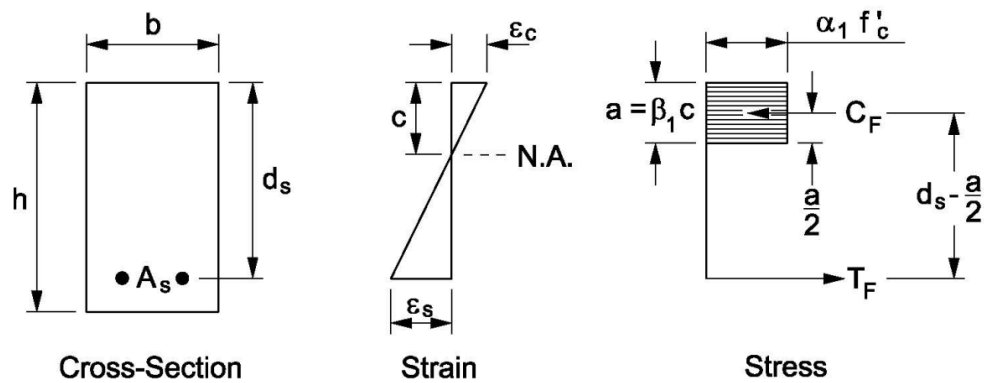

Figure 18.3-1
Stress / Strain on Cross - Section

Referring to Figure 18.3-1, the internal force equations are:

$C_F = \alpha_1 \cdot (f'_c)\ (b)\ (a) = 0.85\ (f'_c)\ (b)\ (a)$

$T_F = (A_s)\ (f_s)$

By equating C_F to T_F, and solving for the compressive stress block depth, (a), gives:

$a = A_s\ f_s\ /\ 0.85\ (f'_c)\ (b)$

Use ($f_s = f_y$) when the steel yields prior to crushing of the concrete. To check for yielding, assume ($f_s = f_y$) and calculate the value for (a). Then calculate the value for $c = a / \beta_1$ and d_s as shown in Figure 18.3-1. If c / d_s does not exceed the value calculated below, then the reinforcement has yielded and the assumption is correct, as stated in **LRFD [5.6.2.1]**.

$c / d_s \leq 0.003 / (0.003 + \varepsilon_{cl})$

ε_{cl} = compression controlled strain limit

for f_y = 60 ksi, ε_{cl} is 0.0020 per **LRFD [Table C5.6.2.1-1]**

if $c / d_s \leq 0.6$, then the reinforcement (f_y = 60 ksi) will yield and ($f_s = f_y$)

For rectangular sections, the nominal moment resistance, M_n , (tension reinforcement only) equals: **LRFD [5.6.3.2.3]**

$M_n = A_s\ f_s\ (d_s - a/2)$

The factored resistance, M_r , or moment capacity, shall be taken as: **LRFD [5.6.3.2.1]**

$M_r = \phi\ M_n = \phi\ A_s\ f_s\ (d_s - a/2)$

For tension-controlled reinforced concrete sections, the resistance factor, ϕ, is 0.90, therefore:

$$M_r = (0.9)\ A_s\ f_s\ (d_s - a/2)$$

18.3.3.2.2 Shear Capacity

The nominal shear resistance, V_n , for two-way action, shall be determined as: **LRFD [5.7.1.4, 5.12.8.6.3]**

$$V_n = (0.063 + 0.126 / \beta_c)\ \lambda\ (f'_c)^{1/2}\ b_o\ d_v \leq 0.126\ \lambda\ (f'_c)^{1/2}\ b_o\ d_v \quad \text{(kips)}$$

Where:

f'_c	=	4.0 ksi (for concrete slab bridges)
β_c	=	ratio of long side to short side of the rectangle through which the concentrated load or reaction force is transmitted
d_v	=	effective shear depth as determined in **LRFD [5.7.2.8]** (in)
b_o	=	perimeter of the critical section (in)
λ	=	conc. density modification factor ; for normal weight conc. = 1.0 , **LRFD [5.4.2.8]**

The factored resistance, V_r , or shear capacity, shall be taken as: **LRFD [5.7.2.1]**

$$V_r = \phi\ V_n$$

The resistance factor, ϕ, is 0.90, therefore:

$$V_r = (0.9)\ V_n$$

18.3.3.2.3 Uplift Check

The check of uplift at abutments does not use a factored resistance, but compares factored dead load and live load reactions.

18.3.3.2.4 Tensile Capacity – Longitudinal Reinforcement

The nominal tensile resistance, T_{nom} , for an area, A_s , of developed reinforcement, equals:

$$T_{nom} = A_s\ f_y$$

The factored resistance, T_{cap} , or tensile capacity, shall be taken as:

$$T_{cap} = \phi\ T_{nom} = \phi\ A_s\ f_y$$

For tension-controlled reinforced concrete sections, the resistance factor, ϕ, is 0.90, therefore:

$T_{cap} = (0.9)\ A_s\ f_y$

18.3.4 Service Limit State

Service I Limit State shall be applied as restrictions on stress, deformation, and crack width under regular service conditions **LRFD [1.3.2.2]**. The total factored force effect, Q, must not exceed the factored resistance, R_r , as shown in the equation in 18.3.2.1.

Service I Limit State **LRFD [3.4.1]** will be used for:

- Checking longitudinal slab reinforcement for crack control criteria
- Checking transverse slab reinforcement over the piers for crack control criteria
- Checking live load deflection criteria
- Checking dead load deflection (camber) criteria

18.3.4.1 Factored Loads

The value of the load modifier, η_i , is 1.00, as stated in 18.3.2.2.

Service I Limit State will be used to analyze the structure for force effects, Q_i , due to applied dead loads, DC and DW (including future wearing surface), defined in 18.4.2 and/or appropriate (HL-93) live loads, LL and IM, defined in 18.4.3.1. When sidewalks are present, include force effects of pedestrian live load, PL, where applicable, defined in 18.4.3.2.

For Service I Limit State, the values of γ_i for each applied load, are found in **LRFD [Table 3.4.1-1]** and their values are: $\gamma_{DC} = \gamma_{DW} = \gamma_{LL+IM} = \gamma_{PL} = 1.0$

Therefore, for Service I Limit State:

$$Q = 1.0\ [\ 1.0(DC) + 1.0(DW) + 1.0((LL + IM) + PL)\ ]$$

Where DC, DW, LL, IM, and PL represent force effects due to these applied loads.

18.3.4.2 Factored Resistance

The resistance factor, ϕ, for Service Limit State, is found in **LRFD [1.3.2.1]** and its value is 1.00.

The factored resistance, R_r , associated with the list of items to be checked using Service I Limit State in 18.3.4, are described in the following sections.

18.3.4.2.1 Crack Control Criteria

All reinforced concrete members are subject to cracking under any load condition, which produces tension in the gross section in excess of the cracking strength of the concrete. Provisions are provided for the distribution of tension reinforcement to control flexural cracking.

Crack control criteria does not use a factored resistance, but calculates a maximum spacing for flexure reinforcement based on service load stress in bars, concrete cover and exposure condition.

18.3.4.2.2 Live Load Deflection Criteria

All concrete slab structures shall be designed to meet live load deflection limits. The Bureau of Structures limits live load deflections for concrete slab structures to L/1200. The deflections are based on entire slab width acting as a unit and gross moment of inertia, I_g .

The nominal resistance, R_n , or deflection limit, is:

$$R_n = L/1200$$

Where:

L = span length

The factored resistance, R_r , is:

$$R_r = \phi R_n = \phi (L/1200)$$

The resistance factor, ϕ, is 1.00, therefore:

$$R_r = (1.0) R_n = (L/1200)$$

18.3.4.2.3 Dead Load Deflection (Camber) Criteria

All concrete slab structures shall be designed to meet dead load deflection (camber) limits. Dead load deflections for concrete slab structures are computed using the gross moment of inertia, I_g . Bureau of Structures calculates full camber based on multiplying the dead load deflection values by a factor of three. A maximum allowable camber has been set for simple-span slabs and continuous-span slabs as shown in 18.4.4.2.

The nominal resistance, R_n , or deflection limit, is:

$$R_n = (\text{maximum allowable camber}) / 3$$

The factored resistance, R_r , is:

$$R_r = \phi R_n = \phi (\text{maximum allowable camber}) / 3$$

The resistance factor, ϕ, is 1.00, therefore:

$R_r = (1.0)\ R_n$ = (maximum allowable camber) / 3

18.3.5 Fatigue Limit State

Fatigue I Limit State shall be applied as a restriction on stress range as a result of a single design truck occurring at the number of expected stress range cycles **LRFD [1.3.2.3]**. The Fatigue I Limit State is intended to limit crack growth under repetitive loads to prevent fracture of the reinforcement during the design life of the bridge. The factored force effect (stress range), Q, must not exceed the factored resistance, R_r , as shown in the equation in 18.3.2.1.

For fatigue considerations, concrete members shall satisfy: **LRFD [5.5.3.1]**

$$\eta_i\ \gamma_i\ (\Delta f) \leq (\Delta F)_{TH}$$

Where:

γ_i	=	Load factor for Fatigue I Limit State
Δf	=	Force effect, live load stress range due to the passage of the fatigue truck (ksi)
$(\Delta F)_{TH}$	=	Constant-amplitude fatigue threshold (ksi)

Fatigue I Limit State **LRFD [3.4.1]** will be used for:

- Checking longitudinal slab reinforcement for fatigue stress range criteria

18.3.5.1 Factored Loads (Stress Range)

The value of the load modifier, η_i , is 1.00, as stated in 18.3.2.2.

Fatigue I Limit State will be used to analyze the structure for force effects, $Q_i = (\Delta f)$, due to applied (Fatigue Truck) live load, LL and IM, defined in 18.4.3.1.

For Fatigue I Limit State, the value of γ_i for the applied live load, is found in **LRFD [Table 3.4.1-1]** and its value is $\gamma_{LL+IM} = 1.75$.

Therefore, for Fatigue I Limit State:

$$Q = 1.0\ [\ 1.75(LL + IM)\ ]$$

Where LL and IM represent force effects, Δf, due to these applied loads.

18.3.5.2 Factored Resistance

The resistance factor, ϕ, for Fatigue Limit State, is found in **LRFD [C1.3.2.1]** and its value is 1.00 .

18.3.5.2.1 Fatigue Stress Range

The nominal resistance, $R_n = (\Delta F)_{TH}$, for fatigue stress range (for straight reinforcement), is: **LRFD [5.5.3.2]**

$$R_n = (\Delta F)_{TH} = 26 - 22\, f_{min} / f_y \quad \text{(ksi)}$$

Where:

f_{min} = the minimum stress resulting from the factored Fatigue Truck live load, combined with the stress from the dead loads on the structure; positive if tension, negative if compression (ksi)

f_y = minimum yield strength (ksi), not to be taken less than 60 ksi nor greater than 100 ksi

The factored resistance, R_r (for f_y = 60 ksi), is:

$$R_r = \phi\, R_n = \phi\, (26 - 0.37\, f_{min})$$

The resistance factor, ϕ, is 1.00, therefore:

$$R_r = (1.0)\, R_n = 26 - 0.37\, f_{min} \quad \text{(ksi)}$$

18.4 Concrete Slab Design Procedure

18.4.1 Trial Slab Depth

Prepare preliminary structure data, looking at the type of structure, span lengths, skew, roadway width, etc.. The selection of the type of concrete slab structure (haunched / flat) is a function of the span lengths selected. Recommended span length ranges and corresponding structure type are shown for single-span and multiple-span slabs in Figure 18.2-1. Optimum span ratios for multiple-span slabs are suggested in 18.2.3. Knowing the span lengths and the structure type, a trial slab depth can be obtained from Table 18.2-1.

For haunched slabs, the haunch depth, D_{haunch} , is proportional to the slab depth, d_{slab} , outside the haunch. A trial haunch depth can be selected as:

$$D_{haunch} = d_{slab} / 0.6$$

An economical haunch length, L_{haunch} , measured from C/L of pier to end of haunch, can be approximated between (0.15 L_2 to 0.18 L_2), where L_2 is the length of an interior span.

NOTE: With preliminary structure sizing complete, check to see if structure exceeds limitations in 18.1.2.

18.4.2 Dead Loads (DC, DW)

Dead loads (permanent loads) are defined in **LRFD [3.3.2]**. Concrete dead load is computed by using a unit weight of 150 pcf, with no adjustment in weight for the bar steel reinforcement.

DC = dead load of structural components and any nonstructural attachments

DW = dead load of future wearing surface (F.W.S.) and utilities

The slab dead load, DC_{slab} , and the section properties of the slab, do not include the ½ inch wearing surface. A post dead load, DW_{FWS} , of 20 psf, for possible future wearing surface (F.W.S.), is required in the design by the Bureau of Structures. The ½ inch wearing surface load, $DC_{1/2"WS}$, of 6 psf must also be included in the design of the slab.

Dead loads, DC, from parapets, medians and sidewalks are uniformly distributed across the full width of the slab when designing an interior strip. For the design of exterior strips (edge beams), any of these dead loads, DC, that are located directly over the exterior strip width and on the cantilevered portion of sidewalks, shall be applied to the exterior strip. For both interior and exterior strips, the future wearing surface, DW, located directly over the strip width shall be applied to it. See 17.2.7 for the distribution of dead loads.

18.4.3 Live Loads

18.4.3.1 Vehicular Live Load (LL) and Dynamic Load Allowance (IM)

The *AASHTO LRFD* Specifications contain several live load components (see 17.2.4.2) that are combined and scaled to create live load combinations that apply to different Limit States **LRFD [3.6.1]**.

The live load combinations used for design are:

LL#1:	Design Tandem (+ IM) + Design Lane Load	**LRFD [3.6.1.3.1]**
LL#2:	Design Truck (+ IM) + Design Lane Load	**LRFD [3.6.1.3.1]**
LL#3:	90% [Double Design Trucks (+ IM) + Design Lane Load]	**LRFD [3.6.1.3.1]**
LL#4:	Fatigue Truck (+ IM)	**LRFD [3.6.1.4.1]**
LL#5:	Design Truck (+ IM)	**LRFD [3.6.1.3.2]**
LL#6:	25% [Design Truck (+ IM)] + Design Lane Load	**LRFD [3.6.1.3.2]**

Table 18.4-1
Live Load Combinations

The dynamic load allowance, IM, **LRFD [3.6.2]** for the live load combinations above, is shown in Table 18.4-2.

Where (IM) is required, multiply the loads by (1 + IM/100) to include the dynamic effects of the load. (IM) is not applied to the Design Lane Load.

The live load combinations are applied to the Limit States as shown in Table 18.4-2.

The live load force effect, Q_i , shall be taken as the largest from the live loads shown in Table 18.4-2 for that Limit State.

Strength I Limit State: [1]	LL#1 , LL#2 , LL#3 [2]	IM = 33%
Service I Limit State: [1] (for crack control criteria)	LL#1 , LL#2 , LL#3 [2]	IM = 33%
Service I Limit State: (for LL deflection criteria)	LL#5 , LL#6	IM = 33%
Fatigue I Limit State: [3]	LL#4 (single Fatigue Truck)	IM = 15%

Table 18.4-2
Live Loads for Limit States

[1] Load combinations shown are used for design of interior strips and exterior strips without raised sidewalks, as shown in Figures 17.2-6 to 10. For an exterior strip with a raised sidewalk,

use Design Lane Load portion of LL#2 for Live Load Case 1 and use Design Truck (+IM) portion of LL#2 for Live Load Case 2, as shown in Figure 17.2-11.

[2] (LL#3) is used to calculate negative live load moments between points of contraflexure and also reactions at interior supports. The points of contraflexure are located by placing a uniform load across the entire structure. For these moments and reactions, the results calculated from (LL#3) are compared with (LL#1) and (LL#2) results, and the critical value is selected.

[3] Used for design of interior strip only.

18.4.3.2 Pedestrian Live Load (PL)

For bridges designed for both vehicular and pedestrian live load, a pedestrian live load, PL, of 75 psf is used. However, for bridges designed exclusively for pedestrian and/or bicycle traffic, see *AASHTO LRFD Guide Specifications for the Design of Pedestrian Bridges* for live load. The dynamic load allowance, IM, is not applied to pedestrian live loads **LRFD [3.6.2]**.

Pedestrian loads are not applied to an interior strip for its design. For the design of exterior strips (edge beams), any pedestrian loads that are located directly over the exterior strip width and on the cantilevered portion of the sidewalk, shall be applied to the exterior strip. See 17.2.7 for the distribution of pedestrian live loads.

18.4.4 Minimum Slab Thickness Criteria

Check adequacy of chosen slab thickness by looking at live load deflection and dead load deflection (camber) criteria, using Service I Limit State.

18.4.4.1 Live Load Deflection Criteria

All concrete slab structures shall be designed to meet live load deflection limits **LRFD [2.5.2.6.2]**. Live load deflections for concrete slab structures are limited to L/1200, by the Bureau of Structures. The live load deflection, Δ_{LL+IM} , shall be calculated using factored loads described in 18.3.4.1 and 18.4.3.1 for Service I Limit State.

Place live loads in each design lane **LRFD [3.6.1.1.1]** and apply a multiple presence factor **LRFD [3.6.1.1.2]**. Use gross moment of inertia, I_g , based on entire slab width acting as a unit. Use modulus of elasticity E_c = 3800 ksi, see 18.2.2. The factored resistance, R_r , is described in 18.3.4.2.2.

Then check that, $\Delta_{LL+IM} \leq R_r$ is satisfied.

18.4.4.2 Dead Load Deflection (Camber) Criteria

All concrete slab structures shall be designed to meet dead load deflection (camber) limits **LRFD [5.6.3.5.2]**. Dead load deflections for concrete slab structures are computed using the gross moment of inertia, I_g . All dead loads are to be uniformly distributed across the width of the slab. These deflections are increased to provide for the time-dependent deformations of creep and shrinkage. Bureau of Structures currently calculates full camber as three times the

dead load deflection. Most of the excess camber is dissipated during the first year of service, which is the time period that the majority of creep and shrinkage deflection occurs. Noticeable excess deflection or structure sag can normally be attributed to falsework settlement. Use modulus of elasticity E_c = 3800 ksi, see 18.2.2 . The dead load deflection, Δ_{DL} , shall be calculated using factored loads described in 18.3.4.1 and 18.4.2. The factored resistance, R_r , is described in 18.3.4.2.3.

WisDOT exception to AASHTO:

Calculating full camber as three times the dead load deflection, as stated in paragraph above, is an exception to **LRFD [5.6.3.5.2]**. This exception, used by the Bureau of Structures, is based on field observations using this method.

Then check that, $\Delta_{DL} \leq R_r$ is satisfied.

A "Camber Diagram" is shown in the plans on the "Superstructure" sheet. Provide camber values, as well as centerline and edge of slab elevations, at 0.1 points of all spans.

Simple-Span Concrete Slabs:

Maximum allowable camber for simple-span slabs is limited to 2 ½ inches. For simple-span slabs, Bureau of Structures practice indicates that using a minimum slab depth (ft) from the equation 1.1(S + 10) / 30, (where S is span length in feet), and meeting the live load deflection and dead load deflection (camber) limits stated in this section, provides an adequate slab section for most cases.

WisDOT exception to AASHTO:

The equation for calculating minimum slab depth for simple-spans, as stated in paragraph above, is an exception to **LRFD [Table 2.5.2.6.3-1]**. This exception, used by the Bureau of Structures, is based on past performance using this equation.

Continuous-Span Concrete Slabs:

Maximum allowable camber for continuous-span slabs is 1 ¾ inches.

18.4.5 Live Load Distribution

Live loads are distributed over an equivalent width, E, as calculated below. The equivalent distribution width applies for both live load moment and shear.

18.4.5.1 Interior Strip

Equivalent interior strip widths for slab bridges are covered in **LRFD [4.6.2.1.2, 4.6.2.3]**.

The live loads to be placed on these widths are axle loads (i.e., two lines of wheels) and the full lane load.

Single-Lane Loading: $E = 10.0 + 5.0\,(L_1\,W_1)^{1/2}$

Multi-Lane Loading: $E = 84.0 + 1.44(L_1\,W_1)^{1/2} \leq 12.0(W)/N_L$

Where:

E	=	equivalent distribution width (in)
L_1	=	modified span length taken equal to the lesser of the actual span or 60.0 ft (ft)
W_1	=	modified edge to edge width of bridge taken to be equal to the lesser of the actual width or 60.0 ft for multi-lane loading, or 30.0 ft for single-lane loading (ft)
W	=	physical edge to edge width of bridge (ft)
N_L	=	number of design lanes as specified in **LRFD [3.6.1.1.1]**

18.4.5.1.1 Strength and Service Limit State

Use the smaller equivalent width (single-lane or multi-lane), when (HL-93) live load is to be distributed, for Strength I Limit State and Service I Limit State.

The distribution factor, DF, is computed for a design slab width equal to one foot.

$$DF = \frac{1}{E}$$

Where:

E	=	equivalent distribution width (ft)

The multiple presence factor, m, has been included in the equations for distribution width, E, and therefore aren't used to adjust the distribution factor, DF, **LRFD [3.6.1.1.2]**.

Look at the distribution factor calculated for each span and select the largest value. This single value is to be applied along the entire length of the bridge.

18.4.5.1.2 Fatigue Limit State

Use equivalent widths from single-lane loading to check fatigue stress range criteria. For the Fatigue Limit State only one design truck (Fatigue Truck) is present **LRFD [3.6.1.4]**. Calculate the distribution factor, DF, and divide it by (1.20) to remove the effects of the multiple presence factor, m, which are present in the equation for equivalent width, E, **LRFD [3.6.1.1.2]**.

The distribution factor, DF, is computed for a design slab width equal to one foot.

$$DF = \frac{1}{E(1.20)}$$

Where:

E = equivalent distribution width (ft)

Look at the distribution factor calculated for each span and select the largest value. This single value is to be applied along the entire length of the bridge.

18.4.5.2 Exterior Strip

Equivalent exterior strip widths for slab bridges are covered in **LRFD [4.6.2.1.4]**.

For Exterior Strips without Raised Sidewalks:

The exterior strip width, E, is assumed to carry one wheel line and a tributary portion of design lane load (located directly over the strip width) as shown in Figures 17.2-7 and 17.2-9.

E equals the distance between the edge of the slab and the inside face of the barrier, plus 12 inches, plus ¼ of the full strip width specified in **LRFD [4.6.2.3]**.

The exterior strip width, E, shall not exceed either ½ the full strip width or 72 inches.

Use the smaller equivalent width (single-lane or multi-lane), for full strip width, when (HL-93) live load is to be distributed, for Strength I Limit State and Service I Limit State.

The multiple presence factor, m, has been included in the equations for full strip width and therefore aren't used to adjust the distribution factor **LRFD [3.6.1.1.2]**.

For Exterior Strips with Raised Sidewalks:

The exterior strip width, E, is to carry a tributary portion of design lane load (when its located directly over the strip width) as in Live Load Case 1 or one wheel line as in Live Load Case 2, as shown in Figure 17.2-11.

The exterior strip width, E, shall be 72 inches.

18.4.5.2.1 Strength and Service Limit State

The distribution factor, DF, is computed for a design slab width equal to one foot.

Compute the distribution factor associated with one truck wheel line, to be applied to axle loads:

$$DF = \frac{(1 \text{ wheel line})}{(2 \text{ wheel lines/lane})(E)}$$

Where:

E = equivalent distribution width (ft)

Look at the distribution factor (for axle loads) calculated for each span and select the largest value. This single value is to be applied along the entire length of the bridge.

Compute the distribution factor associated with tributary portion of design lane load, to be applied to full lane load: **LRFD [3.6.1.2.4]**

$$DF = \frac{\left[\dfrac{(SWL)}{(10\,\text{ft lane load width})}\right]}{(E)}$$

Where:

E = equivalent distribution width (ft)

SWL = Slab Width Loaded (with lane load) (ft) $\geq$ 0.

E – (distance from edge of slab to inside face of barrier) or

E – (distance from edge of slab to inside face of raised sidewalk)

Look at the distribution factor (for lane load) calculated for each span and select the largest value. This single value is to be applied along the entire length of the bridge.

18.4.6 Longitudinal Slab Reinforcement

The concrete cover on the top bars is 2 ½ inches, which includes a ½ inch wearing surface. The bottom bar cover is 1 ½ inches. Minimum clear spacing between adjacent longitudinal bars is 3 ½ inches. The maximum center to center spacing of adjacent bars shall not exceed 1.5 times the thickness of the slab or 18.0 inches **LRFD [5.10.3.2]**. When bundled bars are used, see **LRFD [5.10.3.1.5, 5.10.8.2.3, 5.10.8.4.2a]**.

18.4.6.1 Design for Strength

Strength Limit State considerations and assumptions are detailed in **LRFD [5.5.4, 5.6.2]**.

The area of longitudinal slab reinforcement, A_s , should be designed for strength at maximum moment locations along the structure, and for haunched slab structures, checked for strength at the haunch/slab intercepts. The area should also be checked for strength at bar reinforcement cutoff locations. This reinforcement should be designed for interior and exterior strips (edge beams) in both positive and negative moment regions. The reinforcement in the exterior strip is always equal to or greater than that required for the slab in an interior strip. Compare the reinforcement to be used for each exterior strip and select the strip with the

largest amount of reinforcement (in^2/ft). Use this reinforcement pattern for both exterior strips to keep the bar layout symmetrical. Concrete parapets, curbs, sidewalks and other appurtenances are not to be considered to provide strength to the edge beam **LRFD [9.5.1]**. The total factored moment, M_u , shall be calculated using factored loads described in 18.3.3.1 for Strength I Limit State. Then calculate the coefficient of resistance, R_u :

$$R_u = M_u / \phi\, b\, d_s^2$$

Where:

ϕ	=	0.90 (see 18.3.3.2)
b	=	12 in (for a 1 foot design slab width)
d_s	=	slab depth (excl. ½ inch wearing surface) – bar clearance – ½ bar diameter (in)

Calculate the reinforcement ratio, ρ, using (R_u vs. ρ) Table 18.4-3 .

Then calculate required area,

$$A_s = \rho\, (b)\, (d_s)$$

Area of bar reinforcement per foot of slab width can be found in Table 18.4-4 .

The factored resistance, M_r , or moment capacity, shall be calculated as in 18.3.3.2.1.

Then check that, $M_u \leq M_r$ is satisfied.

The area of longitudinal reinforcement, A_s , should also be checked for moment capacity (factored resistance) along the structure, to make sure it can handle factored moments due to applied dead load (including future wearing surface) and the Wisconsin Standard Permit Vehicle (Wis-SPV) (with a minimum gross vehicle load of 190 kips) on an interior strip. This requirement is stated in 17.1.2.1. See Chapter 45 for details on checking the capacity of the structure for this Permit Vehicle.

18.4.6.2 Check for Fatigue

Fatigue Limit State considerations and assumptions are detailed in **LRFD [5.5.3, 5.6.1, 9.5.3]**

The area of longitudinal slab reinforcement, A_s , should be checked for fatigue stress range at locations where maximum stress range occurs along the structure, and for haunched slab structures, checked at the haunch/slab intercepts. The area should also be checked for fatigue stress range at bar reinforcement cutoff locations using Fatigue I Limit State. Check the reinforcement in an interior strip, where the largest number of fatigue cycles will occur.

Fatigue life of reinforcement is reduced by increasing the maximum stress level, bending of the bars and splicing of reinforcing bars by welding.

In regions where stress reversal takes place, continuous concrete slabs will be doubly reinforced. At these locations, the full stress range in the reinforcing bars from tension to compression is considered.

In regions of compressive stress due to unfactored permanent loads, fatigue shall be considered only if this compressive stress is less than 1.75 times the maximum tensile live load stress from the fatigue truck. The section properties for fatigue investigations shall be based on cracked sections where the sum of stresses, due to unfactored permanent loads, and 1.75 times the fatigue load is tensile and exceeds $0.095 (f'_c)^{1/2}$.

The factored stress range, Q, shall be calculated using factored loads described in 18.3.5.1. The factored resistance, R_r , shall be calculated as in 18.3.5.2.1.

Then check that, Q (factored stress range) $\leq R_r$ is satisfied.

Reference is made to the design example in 18.5 of this chapter for computations relating to reinforcement remaining in tension throughout the fatigue cycle, or going through tensile and compressive stresses during the fatigue cycle.

18.4.6.3 Check for Crack Control

Service Limit State considerations and assumptions are detailed in **LRFD [5.5.2, 5.6.1, 5.6.7]**.

The area of longitudinal slab reinforcement, A_s , should be checked for crack control at locations where maximum tensile stress occurs along the structure, and for haunched slab structures, checked at the haunch/slab intercepts. The area should also be checked for crack control at bar reinforcement cutoff locations using Service I Limit State. Check the reinforcement in an interior and exterior strip (edge beam).

The use of high-strength steels and the acceptance of design methods where the reinforcement is stressed to higher proportions of the yield strength, makes control of flexural cracking by proper reinforcing details more significant than in the past. The width of flexural cracks is proportional to the level of steel tensile stress, thickness of concrete cover over the bars, and spacing of reinforcement. Improved crack control is obtained when the steel reinforcement is well distributed over the zone of maximum concrete tension.

Crack control criteria shall be applied when the tension in the cross-section exceeds 80% of the modulus of rupture, f_r , specified in **LRFD [5.4.2.6]**, for Service I Limit State. The spacing of reinforcement, s, in the layer closest to the tension face shall satisfy:

$$s \leq (700\, \gamma_e / \beta_s f_{ss}) - 2 (d_c) \quad \text{(in)}$$

LRFD [5.6.7]

in which:

$$\beta_s = 1 + (d_c) / 0.7 (h - d_c)$$

Where:

γ_e = 1.00 for Class 1 exposure condition (bottom reinforcement)

γ_e = 0.75 for Class 2 exposure condition (top reinforcement)

d_c = thickness of concrete cover measured from extreme tension fiber to center of the flexural reinforcement located closest thereto, (in). For top reinforcement, d_c , should not include the ½" wearing surface

f_{ss} = tensile stress in steel reinforcement (ksi) $\leq$ $0.6f_y$; use factored loads described in 18.3.4.1 at the Service I Limit State, to calculate (f_{ss})

h = overall depth of the section (in)

18.4.6.4 Minimum Reinforcement Check

The area of longitudinal slab reinforcement, A_s , should be checked for minimum reinforcement requirement at locations along the structure **LRFD [5.6.3.3]**.

The amount of tensile reinforcement shall be adequate to develop a factored flexural resistance, M_r , or moment capacity, at least equal to the lesser of:

M_{cr} (or) 1.33 M_u

$M_{cr} = \gamma_3 (\gamma_1 f_r) S = 1.1 f_r (I_g / c)$; $S = I_g / c$

Where:

f_r = $0.24 \lambda (f'c)^{1/2}$ modulus of rupture (ksi) **LRFD [5.4.2.6]**

γ_1 = 1.6 flexural cracking variability factor

γ_3 = 0.67 ratio of minimum yield strength to ultimate tensile strength; for A615 Grade 60 reinforcement

I_g = gross moment of Inertia (in^4)

c = effective slab thickness/2 (in)

M_u = total factored moment, calculated using factored loads described in 18.3.3.1 for Strength I Limit State

λ = concrete density modification factor ; for normal weight conc. = 1.0, **LRFD [5.4.2.8]**

Select lowest value of [M_{cr} (or) 1.33 M_u] = M_L

The factored resistance, M_r , or moment capacity, shall be calculated as in 18.3.3.2.1.

Then check that, $M_L \leq M_r$ is satisfied.

18.4.6.5 Bar Cutoffs

One-half of the bar steel reinforcement required for maximum moment can be cut off at a point, where the remaining one-half has the moment capacity, or factored resistance, M_r , equal to the total factored moment, M_u , at that point. This is called the theoretical cutoff point.

Select tentative cutoff point at theoretical cutoff point or at a distance equal to the development length from the point of maximum moment, whichever is greater. The reinforcement is extended beyond this tentative point for a distance equal to the effective depth of the slab, 15 bar diameters, or 1/20 of the clear span, whichever is greater. This cutoff point is acceptable, if it satisfies fatigue and crack control criteria. The continuing bars must be fully developed at this point **LRFD [5.10.8.1.2a]**.

18.4.6.5.1 Positive Moment Reinforcement

At least one-third of the maximum positive moment reinforcement in simple-spans and one-fourth of the maximum positive moment reinforcement in continuous-spans is extended along the same face of the slab beyond the centerline of the support **LRFD [5.10.8.1.2b]**.

18.4.6.5.2 Negative Moment Reinforcement

For negative moment reinforcement, the second tentative cutoff point is at the point of inflection. At least one-third of the maximum negative moment reinforcement must extend beyond this point for a distance equal to the effective depth of the slab, 12 bar diameters, or 1/16 of the clear span, whichever is greater **LRFD [5.10.8.1.2c]**.

18.4.7 Transverse Slab Reinforcement

18.4.7.1 Distribution Reinforcement

Distribution reinforcement is placed transversely in the bottom of the slab, to provide for lateral distribution of concentrated loads **LRFD [5.12.2.1]**. The criteria for main reinforcement parallel to traffic is applied. The amount of distribution reinforcement is to be determined as a percentage of the main reinforcing steel required for positive moment as given by the following formula:

$$\text{Percentage} = \frac{100\%}{\sqrt{L}} \leq 50\% \text{ maximum}$$

Where:

L = span length (ft)

The above formula is conservative when applied to slab structures. This specification was primarily drafted for the relatively thin slabs on stringers.

18.4.7.2 Reinforcement in Slab over Piers

If the concrete superstructure rests on a pier cap (with columns) or directly on columns, design of transverse slab reinforcement over the pier is required. A portion of the slab over the pier is designed as a continuous transverse slab member (beam) along the centerline of the substructure. The depth of the assumed section is equal to the depth of the slab or haunch when the superstructure rests directly on columns. When the superstructure rests on a pier cap and the transverse slab member and pier cap act as a unit, the section depth will include the slab or haunch depth plus the cap depth. For a concrete slab, the width of the transverse slab member is equal to one-half the center to center spacing between columns (or 8 foot maximum) for the positive moment zone. The width equals the diameter of the column plus 6 inches for negative moment zone when no pier cap is present. The width equals the cap width for negative moment zone when a pier cap is present. Reference is made to the design example in 18.5 of this chapter for computations relating to transverse reinforcement in slab over the piers.

18.4.8 Shrinkage and Temperature Reinforcement

Reinforcement for shrinkage and temperature stresses shall be provided near surfaces of concrete exposed to daily temperature changes and in structural mass concrete.

The area, A_s , of reinforcement per foot for shrinkage and temperature effects, on each face and in each direction shall satisfy: **LRFD [5.10.6]**

$$A_s \geq 1.30\ (b)\ (h)\ /\ 2\ (b+h)\ (f_y) \quad \text{and} \quad 0.11 \leq A_s \leq 0.60$$

Where:

A_s	=	area of reinforcement in each direction and on each face (in^2/ft)
b	=	least width of component section (in)
h	=	least thickness of component section (in)
f_y	=	specified yield strength of reinforcing bars (ksi) $\leq$ 75 ksi

Shrinkage and temperature reinforcement shall not be spaced farther apart than 3.0 times the component thickness or 18 inches. For components greater than 36 inches thick, the spacing shall not exceed 12 inches.

All longitudinal reinforcement and transverse reinforcement in the slab must exceed required A_s (on each face and in each direction), and not exceed maximum spacing.

18.4.9 Shear Check of Slab

Slab bridges designed for dead load and (HL-93) live load moments in conformance with **LRFD [4.6.2.3]** may be considered satisfactory in shear **LRFD [5.12.2.1]**.

18.4.10 Longitudinal Reinforcement Tension Check

The tensile capacity check of longitudinal reinforcement on the flexural tension side of a member is detailed in **LRFD [5.7.3.5]**.

The area of longitudinal reinforcement (in bottom of slab), A_s , should be checked for tensile capacity at the abutments, for dead load and (HL-93) live load on interior and exterior strips. The reinforcement at these locations shall have the capacity to resist the tension in the reinforcement produced by shear.

The factored shear, V_u , shall be calculated using factored loads described in 18.3.3.1 for Strength I Limit State. The factored tension force, T_{fact} , from shear, to be resisted is from **LRFD [Eq'n. 5.7.3.5-2]**, where $V_s = V_p = 0$, is:

$$T_{fact} = [\ V_u / \phi_v\ ] \cot \theta$$

Assume a diagonal crack would start at the inside edge of the bearing area. Assume the crack angle, θ, is 35 degrees. Calculate the distance from the bottom of slab to center of tensile reinforcement. Determine the distance D_{crack} from the end of the slab to the point at which the diagonal crack will intersect the bottom longitudinal reinforcement. Find the development length, ℓ_d , from Table 9.9-2, Chapter 9.

The nominal tensile resistance, T_{nom} , of the longitudinal bars at the crack location is:

$$T_{nom} = A_s f_y\ [\ D_{crack} - (\text{end cover})]\ /\ \ell_d \ \leq\ A_s f_y$$

Then check that, $T_{fact} \leq T_{nom}$ is satisfied.

If the values for T_{fact} and T_{nom} are close, the procedure for determining the crack angle, θ, as outlined in **LRFD [5.7.3.4.2]** should be used.

18.4.11 Uplift Check

Check for uplift at the abutments for (HL-93) live loads **LRFD [C3.4.1, 5.5.4.3]**. Compare the factored dead load reaction to the factored live load reaction. The reactions shall be calculated using factored loads described in 18.3.3.1 for Strength I Limit State. Place (HL-93) live loads in each design lane **LRFD [3.6.1.1.1]** and apply a multiple presence factor **LRFD [3.6.1.1.2]**.

18.4.12 Deflection Joints and Construction Joints

The designer should locate deflection joints in sidewalks and parapets on concrete slab structures according to the Standard *Vertical Face Parapet 'A'* in Chapter 30.

Refer to Standards *Continuous Haunched Slab* and *Continuous Flat Slab* in Chapter 18, for recommended construction joint guidelines.

18.4.13 Reinforcement Tables

Table 18.4-3 applies to: Rectangular Sections with Tension Reinforcement only

- Reinforcement Yield Strength (f_y) = 60,000 psi
- Concrete Compressive Strength (f'_c) = 4,000 psi

R_u	ρ	R_u	ρ	R_u	ρ	R_u	ρ	R_u	ρ
117.9	0.0020	335.6	0.0059	537.1	0.0098	722.6	0.0137	892.0	0.0176
123.7	0.0021	340.9	0.0060	542.1	0.0099	727.2	0.0138	896.1	0.0177
129.4	0.0022	346.3	0.0061	547.1	0.0100	731.7	0.0139	900.2	0.0178
135.2	0.0023	351.6	0.0062	552.0	0.0101	736.2	0.0140	904.4	0.0179
141.0	0.0024	357.0	0.0063	556.9	0.0102	740.7	0.0141	908.5	0.0180
146.7	0.0025	362.3	0.0064	561.8	0.0103	745.2	0.0142	912.5	0.0181
152.4	0.0026	367.6	0.0065	566.7	0.0104	749.7	0.0143	916.6	0.0182
158.1	0.0027	372.9	0.0066	571.6	0.0105	754.2	0.0144	920.7	0.0183
163.8	0.0028	378.2	0.0067	576.5	0.0106	758.7	0.0145	924.8	0.0184
169.5	0.0029	383.5	0.0068	581.4	0.0107	763.1	0.0146	928.8	0.0185
175.2	0.0030	388.8	0.0069	586.2	0.0108	767.6	0.0147	932.8	0.0186
180.9	0.0031	394.1	0.0070	591.1	0.0109	772.0	0.0148	936.9	0.0187
186.6	0.0032	399.3	0.0071	595.9	0.0110	776.5	0.0149	940.9	0.0188
192.2	0.0033	404.6	0.0072	600.8	0.0111	780.9	0.0150	944.9	0.0189
197.9	0.0034	409.8	0.0073	605.6	0.0112	785.3	0.0151	948.9	0.0190
203.5	0.0035	415.0	0.0074	610.4	0.0113	789.7	0.0152	952.9	0.0191
209.1	0.0036	420.2	0.0075	615.2	0.0114	794.1	0.0153	956.8	0.0192
214.8	0.0037	425.4	0.0076	620.0	0.0115	798.4	0.0154	960.8	0.0193
220.4	0.0038	430.6	0.0077	624.8	0.0116	802.8	0.0155	964.7	0.0194
225.9	0.0039	435.8	0.0078	629.5	0.0117	807.2	0.0156	968.7	0.0195
231.5	0.0040	441.0	0.0079	634.3	0.0118	811.5	0.0157	972.6	0.0196
237.1	0.0041	446.1	0.0080	639.0	0.0119	815.8	0.0158	976.5	0.0197
242.7	0.0042	451.3	0.0081	643.8	0.0120	820.1	0.0159	980.4	0.0198
248.2	0.0043	456.4	0.0082	648.5	0.0121	824.5	0.0160	984.3	0.0199
253.7	0.0044	461.5	0.0083	653.2	0.0122	828.8	0.0161	988.2	0.0200
259.3	0.0045	466.6	0.0084	657.9	0.0123	833.1	0.0162	992.1	0.0201
264.8	0.0046	471.7	0.0085	662.6	0.0124	837.3	0.0163	996.0	0.0202
270.3	0.0047	476.8	0.0086	667.3	0.0125	841.6	0.0164	999.8	0.0203
275.8	0.0048	481.9	0.0087	671.9	0.0126	845.9	0.0165	1003.7	0.0204
281.3	0.0049	487.0	0.0088	676.6	0.0127	850.1	0.0166	1007.5	0.0205
286.8	0.0050	492.1	0.0089	681.3	0.0128	854.3	0.0167	1011.3	0.0206
292.2	0.0051	497.1	0.0090	685.9	0.0129	858.6	0.0168	1015.1	0.0207
297.7	0.0052	502.2	0.0091	690.5	0.0130	862.8	0.0169	1018.9	0.0208
303.1	0.0053	507.2	0.0092	695.1	0.0131	867.0	0.0170	1022.7	0.0209
308.6	0.0054	512.2	0.0093	699.7	0.0132	871.2	0.0171	1026.5	0.0210
314.0	0.0055	517.2	0.0094	704.3	0.0133	875.4	0.0172	1030.3	0.0211
319.4	0.0056	522.2	0.0095	708.9	0.0134	879.5	0.0173	1034.0	0.0212
324.8	0.0057	527.2	0.0096	713.5	0.0135	883.7	0.0174	1037.8	0.0213
330.2	0.0058	532.2	0.0097	718.1	0.0136	887.9	0.0175	----	----

Table 18.4-3

R_u (psi) vs. ρ

R_u = coefficient of resistance (psi) = $M_u / \phi\ b\ d_s^2$ ρ = reinforcement ratio = $A_s / b\ d_s$

Table 18.4-4 can be used to select bar size and bar spacing to provide an adequate area of reinforcement to meet design requirements.

Bar Size Number	Nominal Dia. Inches	4 1/2"	5"	5 1/2"	6"	6 1/2"	7"	7 1/2"	8"	8 1/2"	9"	10"	12"
4	0.500	0.52	0.47	0.43	0.39	0.36	0.34	0.31	0.29	0.28	0.26	0.24	0.20
5	0.625	0.82	0.74	0.67	0.61	0.57	0.53	0.49	0.46	0.43	0.41	0.37	0.31
6	0.750	1.18	1.06	0.96	0.88	0.82	0.76	0.71	0.66	0.62	0.59	0.53	0.44
7	0.875	1.60	1.44	1.31	1.20	1.11	1.03	0.96	0.90	0.85	0.80	0.72	0.60
8	1.000	2.09	1.88	1.71	1.57	1.45	1.35	1.26	1.18	1.11	1.05	0.94	0.79
9	1.128	--	2.40	2.18	2.00	1.85	1.71	1.60	1.50	1.41	1.33	1.20	1.00
10	1.270	--	3.04	2.76	2.53	2.34	2.17	2.02	1.90	1.79	1.69	1.52	1.27
11	1.410	--	3.75	3.41	3.12	2.88	2.68	2.50	2.34	2.21	2.08	1.87	1.56

Table 18.4-4

Area of Bar Reinf. (in^2 / ft) vs. Spacing of Bars (in)

18.5 Design Example

E18-1 Continuous 3-Span Haunched Slab, LRFD

Table of Contents

E18-1 Continuous 3-Span Haunched Slab - LRFD
E18-1.1 Structure Preliminary Data . . . 3
E18-1.2 LRFD Requirements . . . 4
E18-1.3 Trial Slab Depth and Dead Loads (DC, DW) . . . 5
E18-1.4 Vehicular Live Load (LL) and Dynamic Load Allowance (IM) . . . 7
E18-1.5 Minimum Slab Thickness Criteria . . . 8
E18-1.5.1 Live Load Deflection Criteria . . . 8
E18-1.5.2 Dead Load Deflection (Camber) Criteria . . . 9
E18-1.6 Live Load Distribution (Interior Strip) . . . 10
E18-1.6.1 Strength and Service Limit State . . . 10
E18-1.6.2 Fatigue Limit State . . . 11
E18-1.7 Longitudinal Slab Reinforcement (Interior Strip) . . . 13
E18-1.7.1 Positive Moment Reinforcement for Span 1 . . . 13
E18-1.7.1.1 Design for Strength . . . 13
E18-1.7.1.2 Check for Fatigue . . . 15
E18-1.7.1.3 Check Crack Control . . . 17
E18-1.7.1.4 Minimum Reinforcement Check . . . 19
E18-1.7.2 Negative Moment Reinforcement at Piers . . . 20
E18-1.7.2.1 Design for Strength . . . 20
E18-1.7.2.2 Check for Fatigue . . . 20
E18-1.7.2.3 Check Crack Control . . . 21
E18-1.7.2.4 Minimum Reinforcement Check . . . 23
E18-1.7.3 Positive Moment Reinforcement for Span 2 . . . 24
E18-1.7.3.1 Design for Strength . . . 24
E18-1.7.3.2 Check for Fatigue . . . 25
E18-1.7.3.3 Check Crack Control . . . 26
E18-1.7.3.4 Minimum Reinforcement Check . . . 27
E18-1.7.4 Negative Moment Reinforcement at Haunch/Slab Intercepts . . . 27
E18-1.7.5 Bar Steel Cutoffs . . . 28
E18-1.7.5.1 Span 1 Positive Moment Reinforcement (Cutoffs) . . . 28
E18-1.7.5.1.1 Fatigue Check (at Cutoff) (0.74 Pt.) . . . 30
E18-1.7.5.1.2 Crack Control Check (at Cutoff) (0.74 Pt.) . . . 31
E18-1.7.5.1.3 Minimum Reinforcement Check . . . 31
E18-1.7.5.2 Span 2 Positive Moment Reinforcement (Cutoffs) . . . 31
E18-1.7.5.2.1 Fatigue Check (at Cutoff) (0.23 Pt.) . . . 34
E18-1.7.5.2.2 Crack Control Check (at Cutoff) (0.23 Pt.) . . . 36
E18-1.7.5.2.3 Minimum Reinforcement Check . . . 37
E18-1.7.5.3 Span 1 Negative Moment Reinforcement (Cutoffs) . . . 37
E18-1.7.5.3.1 Fatigue Check (at Cutoff) (0.62 Pt.) . . . 39
E18-1.7.5.3.2 Crack Control Check (at Cutoff) (0.62 Pt.) . . . 41
E18-1.7.5.3.3 Minimum Reinforcement Check . . . 42
E18-1.7.5.4 Span 2 Negative Moment Reinforcement (Cutoffs) . . . 42
E18-1.7.5.4.1 Fatigue Check (at Cutoff) (0.25 Pt.) . . . 42
E18-1.7.5.4.2 Crack Control Check (at Cutoff) (0.25 Pt.) . . . 44
E18-1.7.5.4.3 Minimum Reinforcement Check . . . 45
E18-1.8 Evaluation of Longitudinal Reinforcement for Permit Vehicle . . . 45
E18-1.9 Longitudinal Reinforcement in Bottom of Haunch . . . 45
E18-1.10 Live Load Distribution (Exterior Strip) . . . 48
E18-1.10.1 Strength and Service Limit State . . . 48
E18-1.11 Longitudinal Slab Reinforcement (Exterior Strip) . . . 51
E18-1.11.1 Positive Moment Reinforcement for Span 1 . . . 51
E18-1.11.1.1 Design for Strength . . . 51
E18-1.11.1.2 Check Crack Control . . . 52

E18-1.11.1.3 Minimum Reinforcement Check . . . 52
E18-1.11.2 Positive Moment Reinforcement for Span 2 . . . 52
E18-1.11.2.1 Design for Strength . . . 52
E18-1.11.2.2 Check Crack Control . . . 53
E18-1.11.2.3 Minimum Reinforcement Check . . . 53
E18-1.11.3 Negative Moment Reinforcement at Piers . . . 53
E18-1.11.3.1 Design for Strength . . . 53
E18-1.11.3.2 Check Crack Control . . . 54
E18-1.11.3.3 Minimum Reinforcement Check . . . 54
E18-1.11.4 Bar Steel Cutoffs . . . 54
E18-1.11.4.1 Span 1 Positive Moment Reinforcement (Cutoffs) . . . 55
E18-1.11.4.1.1 Check Crack Control . . . 55
E18-1.11.4.2 Span 2 Positive Moment Reinforcement (Cutoffs) . . . 55
E18-1.11.4.2.1 Check Crack Control . . . 55
E18-1.11.4.3 Span 1 Negative Moment Reinforcement (Cutoffs) . . . 55
E18-1.11.4.3.1 Check Crack Control . . . 55
E18-1.11.4.4 Span 2 Negative Moment Reinforcement (Cutoffs) . . . 55
E18-1.11.4.4.1 Check Crack Control . . . 56
E18-1.12 Transverse Distribution Reinforcement . . . 56
E18-1.13 Shrinkage and Temperature Reinforcement Check . . . 56
E18-1.13.1 Longitudinal and Transverse Distribution Reinforcement . . . 57
E18-1.14 Shear Check of Slab . . . 58
E18-1.15 Longitudinal Reinforcement Tension Check . . . 58
E18-1.16 Transverse Reinforcement in Slab over the Piers . . . 59
E18-1.16.1 Dead Load Moments . . . 60
E18-1.16.2 Live Load Moments . . . 62
E18-1.16.3 Positive Moment Reinforcement for Pier Cap . . . 65
E18-1.16.3.1 Design for Strength . . . 65
E18-1.16.4 Negative Moment Reinforcement for Pier Cap . . . 66
E18-1.16.4.1 Design for Strength . . . 66
E18-1.16.5 Positive Moment Reinforcement for Transverse Slab Member . . . 67
E18-1.16.6 Negative Moment Reinforcement for Transverse Slab Member . . . 67
E18-1.16.6.1 Design for Strength . . . 67
E18-1.16.7 Shear Check of Slab at the Pier . . . 67
E18-1.16.8 Minimum Reinforcement Check for Transverse Slab Member . . . 69
E18-1.16.9 Crack Control Check for Transverse Slab Member . . . 71
E18-1.17 Shrinkage and Temperature Reinforcement Check . . . 72
E18-1.17.1 Transverse Slab Member and Other Transverse Reinforcement . . . 72
E18-1.18 Check for Uplift at Abutments . . . 74
E18-1.19 Deflection Joints and Construction Joints . . . 75

E18-1 Continuous 3-Span Haunched Slab - LRFD

A continuous 3-span haunched slab structure is used for the design example. The same basic procedure is applicable to continuous flat slabs. The *AASHTO LRFD Bridge Design Specifications* are followed as stated in the text of this chapter. Design using a slab width equal to one foot. (***Example is current through LRFD Eighth Edition - 2017***)

E18-1.1 Structure Preliminary Data

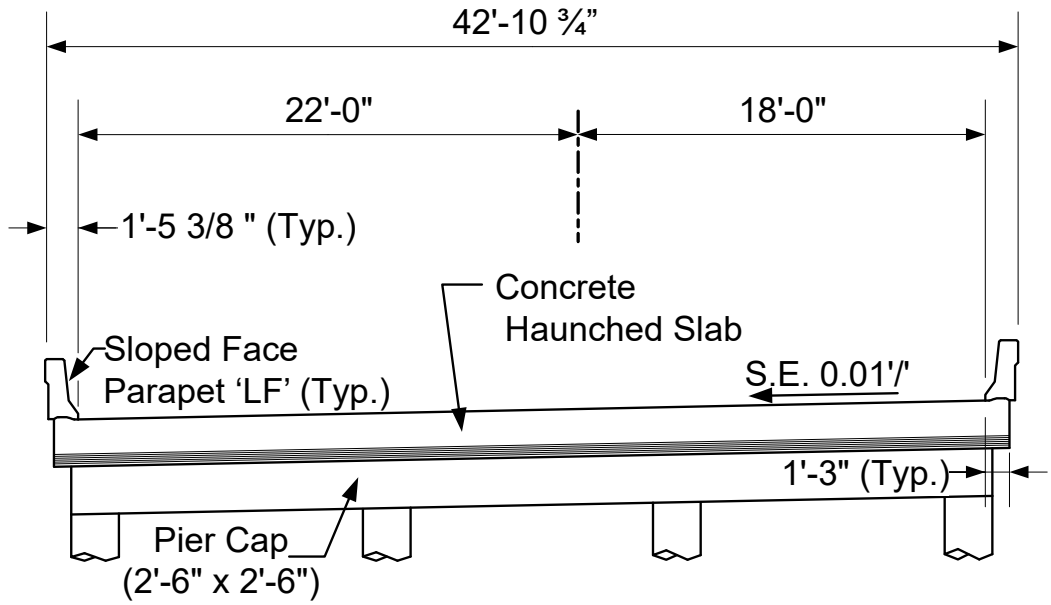

Figure E18.1

Section Perpendicular to Centerline

Live Load: HL-93
(A1) Fixed Abutments at both ends
Parapets placed after falsework is released

Geometry:

$L_1 := 38.0$	ft	Span 1
$L_2 := 51.0$	ft	Span 2
$L_3 := 38.0$	ft	Span 3
$slab_{width} := 42.5$	ft	out to out width of slab
$skew := 6$	deg	skew angle (RHF)
$w_{roadway} := 40.0$	ft	clear roadway width

Material Properties: (See 18.2.2)

$f'_c := 4$	ksi	concrete compressive strength

$f_y := 60$ ksi yield strength of reinforcement

$E_c := 3800$ ksi modulus of elasticity of concrete

$E_s := 29000$ ksi modulus of elasticity of reinforcement

$n := 8$ E_s / E_c (modular ratio)

Weights:

$w_c := 150$ pcf concrete unit weight

$w_{LF} := 387$ plf weight of Type LF parapet (each)

E18-1.2 LRFD Requirements

For concrete slab design, the slab dimensions and the size and spacing of reinforcement shall be selected to satisfy the equation below for all appropriate Limit States: (See 18.3.2.1)

$$Q = \Sigma \eta_i \cdot \gamma_i \cdot Q_i \leq \phi \cdot R_n = R_r \qquad \text{(Limit States Equation)}$$

The value of the load modifier is:

$\eta_i := 1.0$ for all Limit States (See 18.3.2.2)

The force effect, Q_i, is the moment, shear, stress range or deformation caused by applied loads.

The applied loads from **LRFD [3.3.2]** are:

DC = dead load of slab (DC_{slab}), ½ inch wearing surface ($DC_{1/2"WS}$) and parapet dead load (DC_{para}) - (See E18-1.3)

DW = dead load of future wearing surface (DW_{FWS}) - (See E18-1.3)

LL+IM = vehicular live load (LL) with dynamic load allowance (IM) - (See E18-1.4)

The Influence of ADTT and skew on force effects, Q_i, are ignored for slab bridges (See 18.3.2.2).

The values for the load factors, γ_i, (for each applied load) and the resistance factors, ϕ, are found in Table E18.1.

The total factored force effect, Q, must not exceed the factored resistance, R_r. The nominal resistance, R_n, is the resistance of a component to the force effects.

		Strength I	Service I	Fatigue I
Load Factor (DC)	γ_{DC}	LRFD Table 3.4.1-2 0.90 (min.) 1.25 (max.)	LRFD Table 3.4.1-1 1.00	---
Load Factor (DW)	γ_{DW}	LRFD Table 3.4.1-2 0.65 (min.) 1.50 (max.)	LRFD Table 3.4.1-1 1.00	---
Load Factor (LL+IM)	γ_{LL+IM}	LRFD Table 3.4.1-1 1.75	LRFD Table 3.4.1-1 1.00	LRFD Table 3.4.1-1 1.75
Resistance Factor	ϕ	LRFD 5.5.4.2 0.90 flexure[1] 0.90 shear	LRFD 1.3.2.1 1.00	LRFD C1.3.2.1 1.00

Table E18.1
Load and Resistance Factors

[1] All reinforced concrete sections in this example were found to be tension-controlled sections as defined in **LRFD [5.6.2.1]**; therefore $\phi_f = 0.90$

E18-1.3 Trial Slab Depth and Dead Loads (DC, DW)

Refer to Table 18.2-1 in 18.2.3 for an interior span length, L_2, of 51 feet. The trial slab depth, d_{slab} (not including the 1/2 inch wearing surface), is estimated at:

$d_{slab} := 17$ in

The haunch depth, D_{haunch}, is approximately equal to d_{slab} divided by 0.6:

$$D_{haunch} := \frac{d_{slab}}{0.6} \rightarrow \frac{17}{0.6}$$

$D_{haunch} := \text{round}(D_{haunch})$ $\boxed{D_{haunch} = 28}$ in

D_{haunch} does not include the 1/2 inch wearing surface.

The length of the haunch, L_{haunch}, measured from the C/L of pier to the end of haunch, is approximately (0.15 to 0.18)*L_2. (L_2 equals interior span length = 51 feet)

$L_{haunchMin} := 0.15 \cdot L_2$ $\boxed{L_{haunchMin} = 7.65}$ ft

$L_{haunchMax} := 0.18 \cdot L_2$ $\boxed{L_{haunchMax} = 9.18}$ ft

Select the value for L_{haunch} to the nearest foot : $\boxed{L_{haunch} = 8}$ ft

The slab dead load, DC_{slab}, and the section properties of the slab, do not include the 1/2 inch wearing surface.

The dead load for the 17 inch slab depth, for a one foot design width, is calculated as follows:

$$DC_{17slab} := \frac{d_{slab}}{12} \cdot 1.0 \cdot w_c \rightarrow \frac{17}{12} \cdot 1.0 \cdot 150$$

$DC_{17slab} = 213$ plf

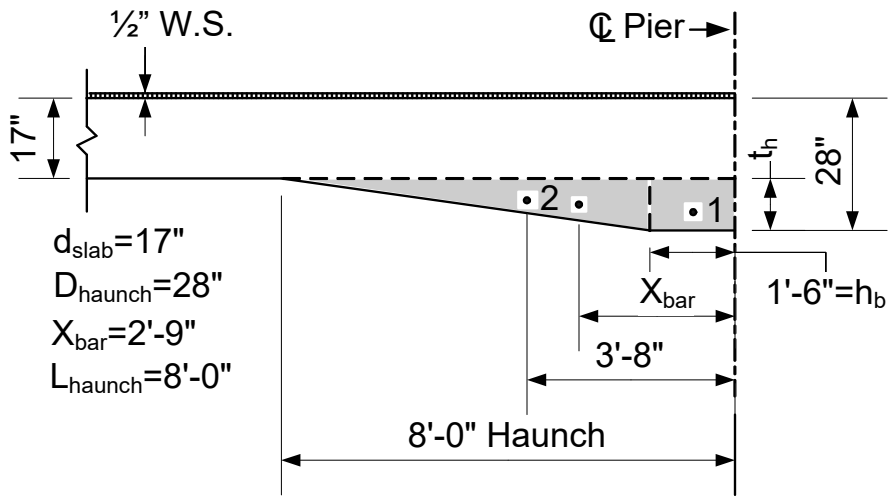

Figure E18.2

Haunched Section at Pier

For hand computations, determine the partial haunch dead load in the shaded area in Figure E18.2. Determine the center of gravity, X_{bar}, for this area and distribute its weight uniformly over twice this distance. Haunch dead load is often computed by computer programs.

The partial haunch thickness, t_h, equals:

$$t_h := D_{haunch} - d_{slab}$$

$t_h = 11$ in

For a 2.5 ft. wide pier cap, the bottom width of the haunch is: $h_b := \frac{2.5}{2} + 0.25$ $h_b = 1.5$ ft

The area of sections (1 & 2) in Figure E18.2 and the location of their center of gravity is:

$$A_1 := h_b \cdot \frac{t_h}{12} \qquad A_2 := \frac{(L_{haunch} - h_b) \cdot \frac{t_h}{12}}{2}$$

$A_1 = 1.38$ ft^2

$A_2 = 2.98$ ft^2

$$X_{bar1} := \frac{h_b}{2} \qquad X_{bar2} := \frac{L_{haunch} - h_b}{3} + h_b$$

$X_{bar1} = 0.75$ ft

$X_{bar2} = 3.67$ ft

The location of the center of gravity, X_{bar}, of the shaded area in Figure E18.2 is:

$$X_{bar} := \frac{A_1 \cdot X_{bar1} + A_2 \cdot X_{bar2}}{A_1 + A_2}$$ $\boxed{X_{bar} = 2.75}$ ft

The haunch dead load is uniformly distributed over a distance of $2 \cdot X_{bar} = 5.5$ feet.
For a one foot design width, its value is calculated as follows:

$$DC_{haunch} := \frac{A_1 + A_2}{2 \cdot X_{bar}} \cdot 1.0 \cdot w_c$$ $\boxed{DC_{haunch} = 119}$ plf

The dead load of the slab, DC_{slab} , is the total dead load from DC_{17slab} and DC_{haunch}.

The parapet dead load is uniformly distributed over the full width of the slab when designing for an interior strip of slab. The parapet dead load on a one foot design width, for an interior strip, is calculated as follows:

$$DC_{para} := \frac{2 \cdot w_{LF}}{slab_{width}} \rightarrow \frac{2 \cdot 387}{42.5}$$ $\boxed{DC_{para} = 18}$ plf

The parapet dead load is uniformly distributed over the exterior strip width of the slab when designing for an exterior strip (edge beam).

The 1/2 inch wearing surface dead load and a possible future wearing surface (FWS) dead load must also be included in the design of the slab. Therefore for a one foot design width:

$DC_{1/2"WS} = (0.5/12)(1.0)(w_c)$ $\boxed{DC_{1/2"WS} = 6}$ plf

$DW_{FWS} = (20)(1.0)$ $\boxed{DW_{FWS} = 20}$ plf

E18-1.4 Vehicular Live Load (LL) and Dynamic Load Allowance (IM)

The live load combinations used for design are:

LL#1:	Design Tandem (+ IM) + Design Lane Load	**LRFD [3.6.1.3.1]**
LL#2:	Design Truck (+ IM) + Design Lane Load	**LRFD [3.6.1.3.1]**
LL#3:	90% [Double Design Trucks (+ IM) + Design Lane Load]	**LRFD [3.6.1.3.1]**
LL#4:	Fatigue Truck (+ IM)	**LRFD [3.6.1.4.1]**
LL#5:	Design Truck (+ IM)	**LRFD [3.6.1.3.2]**
LL#6:	25% [Design Truck (+ IM)] + Design Lane Load	**LRFD [3.6.1.3.2]**

Table E18.2
Live Load Combinations

The live load combinations and dynamic load allowance, IM, **LRFD [3.6.2]** are applied to the Limit States as shown in Table E18.3.

Where (IM) is required, multiply the loads by (1 + IM/100) to include the dynamic effects of the load. (IM) is not applied to the Design Lane Load.

The live load force effect, Q_i, shall be taken as the largest from the live loads shown in Table E18.3 for that Limit State.

Strength I Limit State:	LL#1 , LL#2 , LL#3 [1]	IM = 33%
Service I Limit State: (for crack control criteria)	LL#1 , LL#2 , LL#3 [1]	IM = 33%
Service I Limit State: (for LL deflection criteria)	LL#5 , LL#6	IM = 33%
Fatigue I Limit State:	LL#4 (single Fatigue Truck)	IM = 15%

Table E18.3
Live Loads for Limit States

[1] (LL#3) is used to calculate negative live load moments between points of contraflexure and also reactions at interior supports. The points of contraflexure are located by placing a uniform load across the entire structure. For these moments and reactions, the results calculated from (LL#3) are compared with (LL#1) and (LL#2) results, and the critical value is selected.

E18-1.5 Minimum Slab Thickness Criteria

Check adequacy of chosen slab thickness by looking at live load deflection and dead load deflection (camber) criteria, using Service I Limit State.

E18-1.5.1 Live Load Deflection Criteria

All concrete slab structures shall be designed to meet live load deflection limits **LRFD [2.5.2.6.2]**, using Service I Limit State.

Looking at E18-1.2: $\eta_i := 1.0$ and from Table E18.1: $\gamma_{LLser1} := 1.0$ $\phi_{ser1} := 1.0$

$Q_i = \Delta_{LLser1}$ = largest live load deflection caused by live loads (LL#5 or LL#6)

See Table E18.2 and E18.3 in E18-1.4 for description of live loads and dynamic load allowance (IM)

$Q = \eta_i \cdot \gamma_{LLser1} \cdot \Delta_{LLser1} = (1.0) \cdot (1.0) \cdot \Delta_{LLser1}$

Use (3) design lanes **LRFD [3.6.1.1.1]**, multiple presence of live load factor (m=0.85) **LRFD [3.6.1.1.2]** and gross moment of Inertia, I_g, based on the entire slab width acting as a unit, to calculate live load deflection. Use modulus of elasticity, E_c = 3800 ksi.

$R_n = \frac{L}{1200}$ = max. live load def'l. (L = span length)

$R_r = \phi_{ser1} \cdot R_n = 1.00 \cdot \frac{L}{1200}$

Therefore: $\Delta_{LLser1} \le \frac{L}{1200}$ (Limit States Equation)

The largest live load deflection is caused by live load (LL#5)

Span 1: $\Delta_{LLser1} = 0.29 \text{ in} < \frac{L_1}{1200} = 0.38 \text{ in}$ O.K.

Span 2: $\Delta_{LLser1} = 0.47 \text{ in} < \frac{L_2}{1200} = 0.51 \text{ in}$ O.K.

E18-1.5.2 Dead Load Deflection (Camber) Criteria

All concrete slab structures shall be designed to meet dead load deflection (camber) limits **LRFD [5.6.3.5.2]**, using Service I Limit State. Dead load deflections are computed using the gross moment of inertia, I_g. All dead loads are to be uniformly distributed across the slab width.

Looking at E18-1.2: $\eta_i := 1.0$

and from Table E18.1: $\gamma_{DCser1} := 1.0$ $\gamma_{DWser1} := 1.0$ $\phi_{ser1} := 1.0$

$Q_i = \Delta_{DL}$ = dead load deflection due to applied loads (DC, DW) as stated in E18-1.2.

$Q = \eta_i \cdot \gamma \cdot (\Delta_{DL}) = (1.0) \cdot (1.0) \cdot (\Delta_{DL})$

The Bureau of Structures currently calculates full camber as three times the dead load deflection. The maximum allowable camber for continuous spans is 1 3/4 inches (See 18.4.4.2). Therefore, the allowable dead load deflection is 1/3 of the maximum allowable camber. Use modulus of elasticity, E_c = 3800 ksi.

R_n = (max. allowable camber)/3 = 1 3/4 inches /3 = 0.583 inches

$R_r = \phi_{ser1} \cdot R_n = 1.00 \cdot (0.583) = 0.583 \text{ in}$

Therefore: $\Delta_{DL} \le 0.583 \text{ in}$ (Limit States Equation)

Δ_{DL} (at 0.4 pt Span 1) = 0.17 in < 0.583 in O.K.

Δ_{DL} (at C/L of Span 2) = 0.27 in < 0.583 in O.K.

E18-1.6 Live Load Distribution (Interior Strip)

Live loads are distributed over an equivalent width, E, as calculated below. Equivalent strip widths for slab bridges are covered in **LRFD [4.6.2.1.2, 4.6.2.3].** The live loads to be placed on these widths are axle loads (i.e., two lines of wheels) and the full lane load. The equivalent distribution width applies for both live load moment and shear.

Single - Lane Loading: $E = 10.0 + 5.0 \cdot (L_1 \cdot W_1)^{0.5}$

Multi - Lane Loading: $E = 84.0 + 1.44 \cdot (L_1 \cdot W_1)^{0.5} \leq 12.0 \cdot \frac{W}{N_L}$

Where:

E = equivalent distribution width (in)

L_1 = modified span length taken equal to the lesser of the actual span or 60.0 ft (ft)

W_1 = modified edge to edge width of bridge taken to be equal to the lesser of the actual width or 60.0 ft for multi-lane loading, or 30.0 ft for single-lane loading (ft)

W = physical edge to edge width of bridge (ft)

N_L = number of design lanes as specified in **LRFD [3.6.1.1.1]**

For single-lane loading:

(Span 1, 3) $E := 10.0 + 5.0 \cdot (38 \cdot 30)^{0.5}$ $\boxed{E = 178}$ in

(Span 2) $E := 10.0 + 5.0 \cdot (51 \cdot 30)^{0.5}$ $\boxed{E = 205}$ in

For multi-lane loading:

$$12.0 \cdot \frac{W}{N_L} = 12.0 \cdot \frac{42.5}{3} = 170 \text{ in}$$

(Span 1, 3) $E := 84.0 + 1.44 \cdot (38 \cdot 42.5)^{0.5}$ $\boxed{E = 141}$ in < 170 in O.K.

(Span 2) $E := 84.0 + 1.44 \cdot (51 \cdot 42.5)^{0.5}$ $\boxed{E = 151}$ in < 170 in O.K.

E18-1.6.1 Strength and Service Limit State

Use the smaller equivalent widths, which are from multi-lane loading, when (HL-93) live load is to be distributed, for Strength I Limit State and Service I Limit State.

The distribution factor (DF) is computed for a design slab width equal to one foot.

$$DF = \frac{1}{E} \quad \text{(where E is in feet)}$$

The multiple presence factor (m) has been included in the equations for distribution width (E) and therefore aren't used to adjust the distribution factor (DF) **LRFD [3.6.1.1.2]**.

For spans 1 & 3: (E = 141" = 11.75')

$$DF := \frac{1}{11.75} \qquad \boxed{DF = 0.0851} \ \frac{lanes}{ft - slab}$$

For span 2: (E =151" = 12.583')

$$DF := \frac{1}{12.583} \qquad \boxed{DF = 0.0795} \ \frac{lanes}{ft - slab}$$

Look at the distribution factor calculated for each span and select the largest value. This single value is to be applied along the entire length of the bridge.

Therefore, <u>use DF = 0.0851 lanes/ft-slab</u> for all spans.

E18-1.6.2 Fatigue Limit State

Use equivalent widths from single-lane loading to check fatigue stress range criteria. For the Fatigue Limit State only one design truck (Fatigue Truck) is present **LRFD [3.6.1.4]**. Calculate the distribution factor (DF) and divide it by (1.20) to remove the effects of the multiple presence factor (m), which are present in the equation for equivalent width (E) **LRFD [3.6.1.1.2]**.

The distribution factor (DF) is computed for a <u>design slab width</u> equal to <u>one foot</u>.

$$DF = \frac{1}{E \cdot (1.20)} \qquad \text{(where E is in ft)}$$

For spans 1 & 3: (E = 178" = 14.833')

$$DF := \frac{1}{(14.833) \cdot (1.20)} \qquad \boxed{DF = 0.0562} \ \frac{lanes}{ft - slab}$$

For span 2: (E =205" = 17.083')

$$DF := \frac{1}{(17.083) \cdot (1.20)} \qquad \boxed{DF = 0.0488} \ \frac{lanes}{ft - slab}$$

Look at the distribution factor calculated for each span and select the largest value. This single value is to be applied along the entire length of the bridge.

Therefore, <u>use DF = 0.0562 lanes/ft.-slab</u> for all spans.

Table E18.4 Unfactored Moments (kip - ft) (on a one foot design width) **Interior Strip**

Point	M_{DC} [1]	M_{DW} [2]	DF=0.0851 (IM not used) +Design Lane	DF=0.0851 (IM not used) -Design Lane	DF=0.0851 (incl. IM=33%) +Design Tandem	DF=0.0851 (incl. IM=33%) -Design Tandem
0.1	9.6	0.8	3.2	-1.0	17.2	-3.2
0.2	15.9	1.3	5.5	-1.9	29.0	-6.4
0.3	18.7	1.6	7.1	-2.9	35.5	-9.6
0.4	18.1	1.5	7.9	-3.8	37.5	-12.8
0.5	14.1	1.2	7.9	-4.8	36.2	-16.0
0.6	6.6	0.6	7.2	-5.7	31.9	-19.2
0.7	-4.2	-0.4	5.6	-6.6	24.7	-22.3
0.789	-17.1	-1.5	3.7	-7.6	16.8	-25.1
0.8	-18.5	-1.6	3.5	-7.8	15.8	-25.5
0.9	-36.5	-3.1	2.4	-10.8	8.4	-28.7
1.0	-59.2	-4.9	2.2	-15.5	9.2	-31.9
1.1	-29.8	-2.5	1.9	-8.8	7.6	-21.8
1.157	-16.9	-1.4	2.3	-6.2	13.8	-19.8
1.2	-8.1	-0.7	2.9	-4.9	18.9	-18.4
1.3	7.2	0.6	5.4	-3.8	28.9	-14.9
1.4	16.4	1.4	7.5	-3.8	35.4	-11.4
1.5	19.6	1.6	8.2	-3.8	37.4	-8.0

Point	DF=0.0851 (incl. IM=33%) +Design Truck	DF=0.0851 (incl. IM=33%) -Design Truck	DF=0.0851 [3] (IM not used) (90%) of -Design Lane	DF=0.0851 [3] (incl. IM=33%) (90%) of -Double Design Trucks	DF=0.0562 (incl. IM=15%) +Fatigue Truck	DF=0.0562 (incl. IM=15%) -Fatigue Truck
0.1	18.1	-3.9	---	---	7.7	-1.4
0.2	29.3	-7.7	---	---	12.9	-2.8
0.3	34.4	-11.6	---	---	15.8	-4.2
0.4	35.4	-15.4	---	---	16.7	-5.5
0.5	33.9	-19.3	---	---	16.0	-6.9
0.6	30.7	-23.1	---	---	14.3	-8.4
0.7	23.3	-27.0	-6.0	-24.3	11.3	-9.8
0.789	14.0	-30.5	-6.9	-27.4	7.8	-11.0
0.8	13.0	-30.9	-7.0	-27.8	7.5	-11.2
0.9	9.0	-34.7	-9.7	-31.4	3.9	-16.0
1.0	10.1	-39.9	-13.9	-35.0	3.9	-23.0
1.1	8.0	-23.8	-8.0	-22.6	4.6	-13.6
1.157	12.1	-21.7	-5.6	-20.2	6.9	-9.0
1.2	15.3	-20.1	-4.4	-18.5	8.7	-7.7
1.3	27.7	-16.4	---	---	13.1	-6.3
1.4	35.4	-12.5	---	---	15.9	-4.8
1.5	37.2	-8.8	---	---	16.7	-3.4

Superscripts for Table E18.4 are defined on the following page.

In Table E18.4:

1 M_{DC} is moment due to slab dead load (DC_{slab}), parapet dead load (DC_{para}) after its weight is distributed across width of slab, and 1/2 inch wearing surface ($DC_{1/2"WS}$).

2 M_{DW} is moment due to future wearing surface (DW_{FWS}).

3 The points of contraflexure are located at the (0.66 pt.) of span 1 and the (0.25 pt.) of span 2, when a uniform load is placed across the entire structure. Negative moments in these columns are shown between the points of contraflexture per **LRFD [3.6.1.3.1]**.

E18-1.7 Longitudinal Slab Reinforcement (Interior Strip)

Select longitudinal reinforcement for an Interior Strip.

The concrete cover on the top bars is 2 1/2 inches, which includes a 1/2 inch wearing surface. The bottom bar cover is 1 1/2 inches. (See 18.4.6)

E18-1.7.1 Positive Moment Reinforcement for Span 1

Examine the 0.4 point of span 1

E18-1.7.1.1 Design for Strength

Design reinforcement using Strength I Limit State and considerations and assumptions detailed in **LRFD [5.5.4, 5.6.2]**

Looking at E18-1.2: $\eta_i := 1.0$

and from Table E18.1: $\gamma_{DCmax} := 1.25$ $\gamma_{DWmax} := 1.50$ $\gamma_{LLstr1} := 1.75$ $\phi_f := 0.9$

$Q_i = M_{DC}, M_{DW}, M_{LL+IM}$ **LRFD [3.6.1.2, 3.6.1.3.3]**; moments due to applied loads as stated in E18-1.2

$$Q = M_u = \eta_i\,[\gamma_{DCmax}(M_{DC}) + \gamma_{DWmax}(M_{DW}) + \gamma_{LLstr1}(M_{LL+IM})]$$

$$= 1.0\,[1.25(M_{DC}) + 1.50(M_{DW}) + 1.75(M_{LL+IM})]$$

$$R_n = M_n = A_s \cdot f_s \cdot \left(d_s - \frac{a}{2}\right) \qquad \text{(See 18.3.3.2.1)}$$

$$M_r = \phi_f \cdot M_n = 0.90 \cdot A_s \cdot f_s \cdot \left(d_s - \frac{a}{2}\right)$$

Therefore : $M_u \le M_r$ (Limit States Equation)

$$M_u = 1.25(M_{DC}) + 1.50(M_{DW}) + 1.75(M_{LL+IM}) \le 0.90\,A_s\,f_s\,(d_s - a/2)$$

The positive live load moment shall be the largest caused by live loads (LL#1 or LL#2). See Table E18.2 and E18.3 in E18-1.4 for description of live loads and dynamic load allowance (IM)

From Table E18.4, the largest live load moment is from (LL#1), therefore at (0.4 pt. - span 1):

M_{DC} = 18.1 kip-ft M_{DW} = 1.5 kip-ft M_{LL+IM} = 7.9 + 37.5 = 45.4 kip-ft

$M_u := 1.25\cdot(18.1) + 1.50\cdot(1.5) + 1.75\cdot(45.4)$ $\boxed{M_u = 104.3}$ kip-ft

$b := 12$ inches (for a one foot design width)

$d_s = d_{slab}$ - bott. bar clr. - 1/2 bott. bar dia.

$d_s := 17 - 1.5 - 0.6$ $\boxed{d_s = 14.9}$ in

Calculate R_u, coefficient of resistance:

$$R_u = \frac{M_u}{\phi_f\cdot b\cdot d_s^2} \qquad R_u := \frac{104.3\cdot(12)\cdot 1000}{0.9\cdot(12)\cdot 14.9^2} \qquad \boxed{R_u = 522} \text{ psi}$$

Solve for ρ, reinforcement ratio, using Table 18.4-3 (R_u vs ρ) in 18.4.13;

$\rho := 0.0095$

$$A_s = \rho\cdot(b)\cdot d_s \qquad A_s := 0.0095\cdot(12)14.9 \qquad \boxed{A_s = 1.7} \ \frac{in^2}{ft}$$

Try: #9 at 7" c-c spacing (A_s = 1.71 in^2/ft) from Table 18.4-4 in 18.4.13

Calculate the depth of the compressive stress block.

Assume $f_s = f_y$ (See 18.3.3.2.1) ; for f'_C = 4.0 ksi : $\alpha_1 := 0.85$ and β_1 = 0.85

$$a = \frac{A_s\cdot f_y}{\alpha_1\cdot f'_c\cdot b} \qquad a := \frac{1.71\cdot(60)}{0.85\cdot(4.0)\cdot 12} \qquad \boxed{a = 2.51} \text{ in}$$

If $\frac{c}{d_s} \le 0.6$ for (f_y= 60 ksi) **LRFD [5.6.2.1]**, then reinforcement has yielded and the assumption is correct.

$$\beta_1 := 0.85 \qquad c := \frac{a}{\beta_1} \qquad \boxed{c = 2.96} \text{ in}$$

$\frac{c}{d_s} = 0.2 < 0.6$ therefore, the reinforcement will yield.

$$M_r = 0.90\cdot A_s\cdot f_y\cdot\left(d_s - \frac{a}{2}\right)$$

$$M_r := 0.9\cdot(1.71)\cdot 60.0\cdot\left(\frac{14.9 - \frac{2.51}{2}}{12}\right) \qquad \boxed{M_r = 105} \text{ kip-ft}$$

Therefore, M_u = 104.3 kip-ft < M_r = 105 kip-ft O.K.

E18-1.7.1.2 Check for Fatigue

Check reinforcement using Fatigue I Limit State and considerations and assumptions detailed in **LRFD [5.5.3, 5.6.1, 9.5.3]**.

Looking at E18-1.2: $\eta_i := 1.0$ and from Table E18.1: $\gamma_{LLfatigue} := 1.75$ $\phi_{fatigue} := 1.0$

When reinforcement remains in tension throughout the fatigue cycle,

$Q_i = \Delta f = f_{range}$ = stress range in bar reinforcement due to flexural moment range (M_{range}) caused by Fatigue Truck (LL#4). See Table E18.2 and E18.3 in E18-1.4 for description of live load and dynamic load allowance (IM)

$Q = \eta_i \cdot \gamma_{LLfatigue} \cdot f_{range} = (1.0)\cdot(1.75)\cdot f_{range}$

$R_n = (\Delta F_{TH}) = 26 - 0.37 \cdot f_{min}$ for f_y = 60 ksi (See 18.3.5.2.1)

$R_r = \phi_{fatigue} \cdot R_n = 1.0 \cdot (26 - 0.37 \cdot f_{min})$

Therefore: $1.75 \cdot (f_{range}) \le 26 - 0.37 \cdot f_{min}$ (Limit States Equation)

From Table E18.4, the moments at (0.4 pt.) of span 1 are:

M_{DC} = 18.1 kip-ft M_{DW} = 1.5 kip-ft

+Fatigue Truck = 16.7 kip-ft -Fatigue Truck = -5.5 kip-ft

In regions of tensile stress due to permanent loads, fatigue criteria should be checked.

The section properties for fatigue shall be based on cracked sections where the sum of stresses, due to unfactored permanent loads, and ($\gamma_{LLfatigue}$ = 1.75) times the fatigue load is tensile and exceeds $0.095\sqrt{f'_c}$ **LRFD [5.5.3.1]**

Allowable tensile stress for fatigue (cracking stress):

$f_{tensile} = 0.095\sqrt{f'_c} = 0.095 \cdot \sqrt{4}$ $\boxed{f_{tensile} = 0.19}$ ksi

Calculate fatigue moment and then select section properties:

$M_{fatigue}$ = 1.0(M_{DC}) + 1.0(M_{DW}) +1.75(Fatigue Truck)

$M_{fatigueMax} := 1.0 \cdot (18.1) + 1.0(1.5) + 1.75(16.7)$ $\boxed{M_{fatigueMax} = 48.83}$ kip-ft (tension)

$M_{fatigueMin} := 1.0 \cdot (18.1) + 1.0(1.5) + 1.75(-5.5)$ $\boxed{M_{fatigueMin} = 9.98}$ kip-ft (tension)

Calculate stress due to $M_{fatigue}$: $f_{fatigue} = \frac{M_{fatigue} \cdot (y)}{I_g}$

$y = \frac{d_{slab}}{2} = \frac{17}{2}$ $\boxed{y = 8.5}$ in

$I_g = \frac{1}{12} \cdot b \cdot d_{slab}^3 = \frac{1}{12} \cdot (12)\, 17^3$ $\boxed{I_g = 4913}$ in^4

$f_{fatigueMax} := \frac{M_{fatigueMax} \cdot (y) \cdot 12}{I_g}$ $\boxed{f_{fatigueMax} = 1.01}$ ksi (tension) > $f_{tensile}$ (0.190 ksi)

$f_{fatigueMin} := \frac{M_{fatigueMin} \cdot (y) \cdot 12}{I_g}$ $\boxed{f_{fatigueMin} = 0.21}$ ksi (tension) > $f_{tensile}$ (0.190 ksi)

Values of $f_{fatigue}$ exceed $f_{tensile}$ during the fatigue cycle, therefore analyze fatigue using cracked section properties.

Looking at values of $M_{fatigue}$, shows that the reinforcement remains in tension throughout the fatigue cycle. Therefore:

M_{range} = (+ Fatigue Truck) - (-Fatigue Truck)

$M_{range} := 16.7 - (-5.5)$ $\boxed{M_{range} = 22.2}$ kip-ft

The moment arm used in equations below is: (j) (d_s) Therefore, using:

$A_s = 1.7 \ \frac{in^2}{ft}$ (required for strength), $d_s = 14.9$ in, $n := 8$, and transformed section analysis, gives a value of $j := 0.893$

$f_{range} = \frac{M_{range}}{A_s \cdot (j) \cdot d_s} = \frac{22.2 \cdot 12}{1.7 \cdot (0.893)\, 14.9}$ $\boxed{f_{range} = 11.78}$ ksi

$f_{range1.75} := 1.75 \cdot f_{range}$ $\boxed{f_{range1.75} = 20.61}$ ksi

$f_{min} = \frac{M_{DC} + M_{DW} + 1.75(-FatigueTruck)}{A_s \cdot (j) \cdot d_s}$

$f_{min} := \frac{[18.1 + 1.5 + 1.75 \cdot (-5.5)] \cdot 12}{1.7 \cdot (0.893)\, 14.9}$ $\boxed{f_{min} = 5.29}$ ksi

$R_r := 26 - 0.37 \cdot f_{min}$ $\boxed{R_r = 24.04}$ ksi

Therefore, $1.75 \cdot (f_{range})$ = 20.61 ksi < R_r = 24.04 ksi <u>O.K.</u>

E18-1.7.1.3 Check Crack Control

Check reinforcement using Service I Limit State and considerations and assumptions detailed in **LRFD [5.5.2, 5.6.1, 5.6.7]**

This criteria shall be checked when tension (f_T) in the cross-section exceeds 80% of the modulus of rupture (f_r), specified in **LRFD [5.4.2.6]**; λ = 1.0 (normal wgt. conc.)**LRFD [5.4.2.8]**

$f_r = 0.24 \cdot \lambda \sqrt{f'_c}$ $\boxed{f_r = 0.48}$ ksi $f_{r80\%} := 0.8 \cdot f_r$ $\boxed{f_{r80\%} = 0.38}$ ksi

$$f_T = \frac{M_s \cdot (c)}{I_g}$$

$c := \frac{d_{slab}}{2}$ $\boxed{c = 8.5}$ in $I_g := \frac{1}{12} \cdot b \cdot d_{slab}^3$ $\boxed{I_g = 4913}$ in^4

Looking at E18-1.2: $\eta_i := 1.0$

and from Table E18.1: $\gamma_{DC.ser1} := 1.0$ $\gamma_{DW.ser1} := 1.0$ $\gamma_{LLser1} := 1.0$ $\phi_{ser1} := 1.0$

$Q_i = M_{DC}, M_{DW}, M_{LL+IM}$ **LRFD [3.6.1.2, 3.6.1.3.3]**; moments due to <u>applied loads</u> as stated in E18-1.2

$Q = M_S = \eta_i [\gamma_{DC.ser1} (M_{DC}) + \gamma_{DW.ser1} (M_{DW}) + \gamma_{LLser1}(M_{LL+IM})]$

$= 1.0 [1.0(M_{DC}) + 1.0(M_{DW}) + 1.0(M_{LL+IM})]$

Therefore, M_s becomes:

$M_s = 1.0(M_{DC}) + 1.0(M_{DW}) + 1.0(M_{LL+IM})$ (Factored Load Equation)

Using same moments selected from Table E18.4 for Strength Design in E18-1.7.1.1, at (0.4 pt.) of span 1, provides:

M_{DC} = 18.1 kip-ft M_{DW} = 1.5 kip-ft M_{LL+IM} = 7.9 + 37.5 = 45.4 kip-ft (LL#1)

$M_s := 1.0 \cdot (18.1) + 1.0 \cdot (1.5) + 1.0 \cdot (45.4)$ $\boxed{M_s = 65}$ kip-ft

$f_T = \frac{M_s \cdot (c)}{I_g}$ $f_T := \frac{65.0 \cdot (8.5) \cdot 12}{4913}$ $\boxed{f_T = 1.35}$ ksi

f_T = 1.35 ksi > 80% f_r = 0.38 ksi; therefore, check crack control criteria

Knowing $A_s = 1.7 \frac{in^2}{ft}$ (required for strength)

Try: #9 at 7" c-c spacing (A_s = 1.71 in^2/ft) from Table 18.4-4 in 18.4.13

The spacing (s) of reinforcement in the layer closest to the tension face shall satisfy:

$$s \le \frac{700 \cdot \gamma_e}{\beta_s \cdot f_{ss}} - 2 \cdot (d_c) \qquad \text{in which:} \qquad \beta_s = 1 + \frac{d_c}{0.7 \cdot (h - d_c)}$$

$\gamma_e := 1.00$ for Class 1 exposure condition (bottom reinforcement)

d_c = clr. cover + 1/2 bar dia.
= thickness of concrete cover measured from extreme tension fiber to center of the flexural reinforcement located closest thereto (in). See Figure E18.3

$d_c := 1.5 + \frac{1.128}{2}$ $\boxed{d_c = 2.064}$ in

h = overall depth of the section (in). See Figure E18.3

$h := d_{slab}$ $\boxed{h = 17}$ in

$\beta_s := 1 + \frac{d_c}{0.7 \cdot (h - d_c)}$ $\boxed{\beta_s = 1.2}$

f_{ss} = tensile stress in steel reinforcement at the Service I Limit State (ksi) $\le 0.6\ f_y$

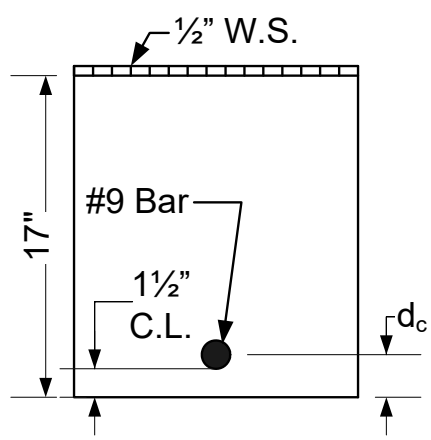

Figure E18.3

Cross Section - (0.4 pt.) Span 1

The moment arm used in the equation below to calculate f_{ss} is: (j) (h - d_c)
As shown in fatigue calculations in E18-1.7.1.2, j = 0.893

$$f_{ss} = \frac{M_s}{A_s \cdot (j) \cdot (h - d_c)} = \frac{65.0 \cdot (12)}{1.71 \cdot (0.893)(17 - 2.064)} \qquad \boxed{f_{ss} = 34.2} \text{ ksi} \le 0.6\ f_y \text{ O.K.}$$

$$s \le \frac{700 \cdot (1.00)}{1.2 \cdot (34.2)} - 2 \cdot (2.064) = 17.0 - 4.1 = 12.9 \quad \text{in}$$

$s \leq 12.9$ in

Therefore, spacing prov'd. = 7 in < 12.9 in O.K.

Use: #9 at 7" c-c spacing in span 1 (Max. positive reinforcement).

E18-1.7.1.4 Minimum Reinforcement Check

The amount of tensile reinforcement shall be adequate to develop a factored flexural resistance (M_r), or moment capacity, at least equal to the lesser of: **LRFD[5.6.3.3]**

M_{cr} (or) $1.33M_u$

$M_{cr} = \gamma_3(\gamma_1 \cdot f_r)S$ where: $S = \frac{I_g}{c}$ therefore, $M_{cr} = 1.1(f_r)\frac{I_g}{c}$

Where:

$\gamma_1 := 1.6$ flexural cracking variability factor

$\gamma_3 := 0.67$ ratio of yield strength to ultimate tensile strength of the reinforcement for A615, Grade 60 reinforcement

$f_r = 0.24\lambda\sqrt{f'_c}$ = modulus of rupture (ksi) **LRFD [5.4.2.6]**

$f_r = 0.24\sqrt{4}$ λ = 1.0 (normal wgt. conc.) **LRFD [5.4.2.8]** $\boxed{f_r = 0.48}$ ksi

$I_g := \frac{1}{12} \cdot b \cdot d_{slab}^3$ $\boxed{I_g = 4913}$ in^4 $c := \frac{d_{slab}}{2}$ $\boxed{c = 8.5}$ in

$M_{cr} = \frac{1.1 f_r \cdot (I_g)}{c} = \frac{1.1 \cdot 0.48 \cdot (4913)}{8.5(12)}$ $\boxed{M_{cr} = 25.43}$ kip-ft

$1.33 \cdot M_u = 138.75$ kip-ft , where M_u was calculated for Strength Design in E18-1.7.1.1 and (M_u = 104.3 kip-ft)

M_{cr} controls because it is less than 1.33 M_u

As shown in E18-1.7.1.1, the reinforcement yields, therefore:

$M_r = 0.90 \cdot A_s \cdot f_y \cdot \left(d_s - \frac{a}{2}\right)$ $\boxed{M_r = 105}$ kip-ft

Therefore, M_{cr} = 25.43 kip-ft < M_r = 105 kip-ft O.K.

E18-1.7.2 Negative Moment Reinforcement at Piers

Examine at C/L of Pier

E18-1.7.2.1 Design for Strength

Following the procedure in E18-1.7.1.1, using Strength I Limit State:

$$M_u = 1.25(M_{DC}) + 1.50(M_{DW}) + 1.75(M_{LL+IM}) \leq 0.90\, A_s\, f_s\, (d_s - a/2)$$

The negative live load moment shall be the largest caused by live loads (LL#1, LL#2 or LL#3). See Table E18.2 and E18.3 in E18-1.4 for description of live loads and dynamic load allowance (IM).

From Table E18.4, the largest live load moment is from (LL#2), therefore at (C/L of Pier):

M_{DC} = -59.2 kip-ft M_{DW} = -4.9 kip-ft M_{LL+IM} = -15.5 + (-39.9) = -55.4 kip-ft

$M_u := 1.25\cdot(-59.2) + 1.50\cdot(-4.9) + 1.75\cdot(-55.4)$ $\boxed{M_u = -178.3}$ kip-ft

$b := 12$ inches (for a one foot design width) and $\boxed{d_s = 25.4}$ in

The coefficient of resistance, R_u, the reinforcement ratio, ρ, and req'd. bar steel area, A_s, are:

$\boxed{R_u = 307.1}$ psi $\boxed{\rho = 0.0054}$ $\boxed{A_s = 1.65}$ $\frac{in^2}{ft}$

Try: #8 at 5 1/2" c-c spacing (A_s = 1.71 in^2/ft) from Table 18.4-4 in 18.4.13

Assume $f_s = f_y$, then the depth of the compressive stress block is: $\boxed{a = 2.51}$ in

Then, $\boxed{c = 2.96}$ in and $\frac{c}{d_s} = 0.12 < 0.6$ therefore, the reinforcement will yield.

The factored resistance is: $\boxed{M_r = 186.6}$ kip-ft

Therefore, M_u = 178.3 kip-ft < M_r = 186.6 kip-ft O.K.

E18-1.7.2.2 Check for Fatigue

Following the procedure in E18-1.7.1.2, using Fatigue I Limit State:

$$1.75\cdot(f_{range}) \leq 26 - 0.37\cdot f_{min} \qquad \text{(for } f_y = 60 \text{ ksi)}$$

From Table E18.4, the moments at (C/L Pier) are:

M_{DC} = -59.2 kip-ft M_{DW} = -4.9 kip-ft

+Fatigue Truck = 3.9 kip-ft -Fatigue Truck = -23.0 kip-ft

In regions of tensile stress due to permanent loads, fatigue criteria should be checked.

Allowable tensile stress for fatigue (cracking stress): $f_{tensile} = 0.19$ ksi

Calculate fatigue moment and then select section properties:

$M_{fatigue} = 1.0(M_{DC}) + 1.0(M_{DW}) + 1.75(\text{Fatigue Truck})$

$M_{fatigueMax} = -104.35$ kip-ft (tension) $M_{fatigueMin} = -57.3$ kip-ft (tension)

Calculate stress due to $M_{fatigue}$, where : $y = 14$ in $I_g = 21952$ in^4

$$f_{fatigue} = \frac{M_{fatigue} \cdot (y) \cdot 12}{I_g}$$

$f_{fatigueMax} = 0.8$ ksi (tension) > $f_{tensile}$ (0.190 ksi)

$f_{fatigueMin} = 0.44$ ksi (tension) > $f_{tensile}$ (0.190 ksi)

Values of $f_{fatigue}$ exceed $f_{tensile}$ during the fatigue cycle, therefore analyze fatigue using cracked section properties.

Looking at values of $M_{fatigue}$, shows that the reinforcement remains in tension throughout the fatigue cycle. Therefore:

M_{range} = (- Fatigue Truck) - (+Fatigue Truck) $M_{range} = -26.9$ kip-ft

The values for A_s, d_s, n and j (from transformed section) used to calculate f_{range} and f_{min} are:

$A_s = 1.65 \ \frac{in^2}{ft}$ (required for strength), $d_s = 25.4$ in , $n := 8$, $j := 0.915$

The values for f_{range}, $f_{range1.75}$, and f_{min} are:

$f_{range} = 8.42$ ksi $f_{range1.75} = 14.73$ ksi $f_{min} = 17.92$ ksi

The factored resistance is: $R_r = 19.37$ ksi

Therefore, $1.75 \cdot (f_{range}) = 14.73$ ksi < $R_r = 19.37$ ksi <u>O.K.</u>

E18-1.7.2.3 Check Crack Control

This criteria shall be checked when tension (f_T) in the cross-section exceeds 80% of the modulus of rupture (f_r), specified in **LRFD [5.4.2.6]**

Following the procedure in E18-1.7.1.3, using Service I Limit State:

$\boxed{f_r = 0.48}$ ksi $\boxed{f_{r80\%} = 0.38}$ ksi $\boxed{c = 14}$ in $\boxed{I_g = 21952}$ in^4

$M_s = 1.0(M_{DC}) + 1.0(M_{DW}) + 1.0(M_{LL+IM})$

Using same moments selected from Table E18.4 for Strength Design in E18-1.7.2.1, at (C/L of Pier), provides:

M_{DC} = -59.2 kip-ft M_{DW} = -4.9 kip-ft M_{LL+IM} = -15.5 + (-39.9) = -55.4 kip-ft (LL#2)

$M_s := 1.0\cdot(59.2) + 1.0\cdot(4.9) + 1.0\cdot(55.4)$ $\boxed{M_s = 119.5}$ kip-ft

$f_T = \dfrac{M_s\cdot c}{I_g}$ $f_T := \dfrac{119.5\cdot(14)\cdot 12}{21952}$ $\boxed{f_T = 0.91}$ ksi

f_T =0.91 ksi > 80% f_r = 0.38 ksi; therefore, check crack control criteria

Knowing $A_s = 1.65 \dfrac{in^2}{ft}$ (required for strength)

Try: #8 at 5 1/2" c-c spacing (A_s = 1.71 in^2/ft) from Table 18.4-4 in 18.4.13

The values for γ_e, d_c, h, and β_s, used to calculate max. spacing (s) of reinforcement are :

$\gamma_e := 0.75$ for Class 2 exposure condition (top reinforcement)

$\boxed{d_c = 2.5}$ in (See Figure E18.4) $\boxed{h = 28}$ in (See Figure E18.4) $\boxed{\beta_s = 1.14}$

f_{ss} = tensile stress in steel reinforcement at the Service I Limit State (ksi) $\leq$ 0.6 f_y

The moment arm used to calculate f_{ss} is: (j) (h - d_c)
As shown in fatigue calculations in E18-1.7.2.2, j = 0.915

The value of f_{ss} and (s) are:

$\boxed{f_{ss} = 35.94}$ ksi $\leq$ 0.6 f_y O.K. $s \leq \dfrac{700\cdot(0.75)}{1.14\cdot(35.94)} - 2\cdot(2.50) = 12.8 - 5.0 = 7.8$ in

$s \leq 7.8$ in

Therefore, spacing prov'd. = 5 1/2 in < 7.8 in <u>O.K.</u>

To insure that the reinforcement has the moment capacity to handle the Wisconsin Standard Permit Vehicle (Wis-SPV), the spacing was reduced to 5 inches. (See E18-1.8)

<u>Use: #8 at 5" c-c spacing at C/L Pier</u> (Max. negative reinforcement), $A_s = 1.88 \dfrac{in^2}{ft}$

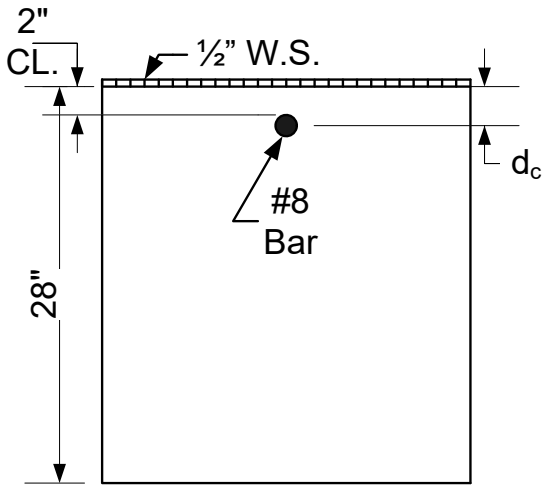

Figure E18.4

Cross Section - (at C/L of Pier)

E18-1.7.2.4 Minimum Reinforcement Check

The amount of tensile reinforcement shall be adequate to develop a factored flexural resistance (M_r), or moment capacity, at least equal to the lesser of: **LRFD [5.6.3.3]**

M_{cr} (or) $1.33M_u$

from E18-1.7.1.4, $M_{cr} = 1.1(f_r)\frac{I_g}{c}$

Where:

$f_r = 0.24\lambda\sqrt{f'_c}$ = modulus of rupture (ksi) **LRFD [5.4.2.6]**

$f_r = 0.24\sqrt{4}$ $\lambda = 1.0$ (normal wgt. conc.) **LRFD [5.4.2.8]** $\boxed{f_r = 0.48}$ ksi

$I_g := \frac{1}{12}\cdot b\cdot D_{haunch}^3$ $\boxed{I_g = 21952}$ in^4 $c := \frac{D_{haunch}}{2}$ $\boxed{c = 14}$ in

$M_{cr} = \frac{1.1 f_r\cdot(I_g)}{c} = \frac{1.1\cdot 0.48\cdot(21952)}{14(12)}$ $\boxed{M_{cr} = 68.99}$ kip-ft

$1.33\cdot M_u = 237.1$ kip-ft , where M_u was calculated for Strength Design in E18-1.7.2.1 and (M_u = 178.3 kip-ft)

M_{cr} controls because it is less than 1.33 M_u

By examining E18-1.7.2.1, the reinforcement yields, therefore:

$$M_r = 0.90 \cdot A_s \cdot f_y \cdot \left(d_s - \frac{a}{2}\right) \qquad \boxed{M_r = 204.1} \text{ kip-ft}$$

Therefore, M_{cr} = 68.99 kip-ft < M_r = 204.1 kip-ft O.K.

E18-1.7.3 Positive Moment Reinforcement for Span 2

Examine the 0.5 point of span 2

E18-1.7.3.1 Design for Strength

Following the procedure in E18-1.7.1.1, using Strength I Limit State:

$$M_u = 1.25(M_{DC}) + 1.50(M_{DW}) + 1.75(M_{LL+IM}) \leq 0.90\, A_s\, f_s\, (d_s - a/2)$$

The positive live load moment shall be the largest caused by live loads (LL#1 or LL#2).
See Table E18.2 and E18.3 in E18-1.4 for description of live loads and dynamic load allowance (IM).

From Table E18.4, the largest live load moment is from (LL#1), therefore at (0.5 pt.) of span 2:

M_{DC} = 19.6 kip-ft M_{DW} = 1.6 kip-ft M_{LL+IM} = 8.2 + 37.4 = 45.6 kip-ft

$$M_u := 1.25 \cdot (19.6) + 1.50 \cdot (1.6) + 1.75 \cdot (45.6) \qquad \boxed{M_u = 106.7} \text{ kip-ft}$$

$b := 12$ inches (for a one foot design width) and $\boxed{d_s = 14.9}$ in

The coefficient of resistance, R_u, the reinforcement ratio, ρ, and req'd. bar steel area, A_s, are:

$\boxed{R_u = 534}$ psi $\boxed{\rho = 0.0097}$ $\boxed{A_s = 1.73}$ $\frac{in^2}{ft}$

Try: #9 at 6" c-c spacing (A_s = 2.00 in^2/ft) from Table 18.4-4 in 18.4.13

Assume $f_s = f_y$, then the depth of the compressive stress block is: $\boxed{a = 2.94}$ in

Then, $\boxed{c = 3.46}$ in and $\frac{c}{d_s} = 0.23 < 0.6$ therefore, the reinforcement will yield.

The factored resistance is: $\boxed{M_r = 120.9}$ kip-ft

Therefore, M_u = 106.7 kip-ft < M_r = 120.9 kip-ft O.K.

E18-1.7.3.2 Check for Fatigue

Following the procedure in E18-1.7.1.2, using Fatigue I Limit State:

$1.75 \cdot (f_{range}) \leq 26 - 0.37 \cdot f_{min}$ (for f_y = 60 ksi)

From Table E18.4, the moments at (0.5 pt.) of span 2 are:

M_{DC} = 19.6 kip-ft M_{DW} = 1.6 kip-ft

+Fatigue Truck = 16.7 kip-ft -Fatigue Truck = -3.4 kip-ft

In regions of tensile stress due to permanent loads, fatigue criteria should be checked.

Allowable tensile stress for fatigue (cracking stress): $\boxed{f_{tensile} = 0.19}$ ksi

Calculate fatigue moment and then select section properties:

$M_{fatigue}$ = 1.0(M_{DC}) + 1.0(M_{DW}) +1.75(Fatigue Truck)

$\boxed{M_{fatigueMax} = 50.42}$ kip-ft (tension) $\boxed{M_{fatigueMin} = 15.3}$ kip-ft (tension)

Calculate stress due to $M_{fatigue}$, where $\boxed{y = 8.5}$ in $\boxed{I_g = 4913}$ in^4

:

$$f_{fatigue} = \frac{M_{fatigue} \cdot (y) \cdot 12}{I_g}$$

$\boxed{f_{fatigueMax} = 1.05}$ ksi (tension) > $f_{tensile}$ (0.190 ksi)

$\boxed{f_{fatigueMin} = 0.32}$ ksi (tension) > $f_{tensile}$ (0.190 ksi)

Values of $f_{fatigue}$ exceed $f_{tensile}$ during the fatigue cycle, therefore analyze fatigue using cracked section properties.

Looking at values of $M_{fatigue}$, shows that the reinforcement remains in tension throughout the fatigue cycle. Therefore:

M_{range} = (+ Fatigue Truck) - (-Fatigue Truck) $\boxed{M_{range} = 20.1}$ kip-ft

The values for A_s, d_s, n and j (from transformed section) used to calculate f_{range} and f_{min} are:

$A_s = 1.73 \ \frac{in^2}{ft}$ (required for strength), $d_s = 14.9$ in, $n := 8$, $j := 0.892$

The values for f_{range}, $f_{range1.75}$, and f_{min} are:

$\boxed{f_{range} = 10.43}$ ksi $\boxed{f_{range1.75} = 18.25}$ ksi $\boxed{f_{min} = 7.96}$ ksi

The factored resistance is: $\boxed{R_r = 23.06}$ ksi

Therefore, $1.75 \cdot (f_{range})$ = 18.25 ksi < R_r = 23.06 ksi <u>O.K.</u>

E18-1.7.3.3 Check Crack Control

This criteria shall be checked when tension (f_T) in the cross-section exceeds 80% of the modulus of rupture (f_r), specified in **LRFD [5.4.2.6]**

Following the procedure in E18-1.7.1.3, using Service I Limit State:

$f_r = 0.48$ ksi $\quad f_{r80\%} = 0.38$ ksi $\quad c = 8.5$ in $\quad I_g = 4913$ in^4

$M_s = 1.0(M_{DC}) + 1.0(M_{DW}) + 1.0(M_{LL+IM})$

Using same moments selected from Table E18.4 for Strength Design in E18-1.7.3.1, at (0.5 pt.) of span 2 provides:

$M_{DC} = 19.6$ kip-ft $\quad M_{DW} = 1.6$ kip-ft $\quad M_{LL+IM} = 8.2 + 37.4 = 45.6$ kip-ft (LL#1)

$M_s := 1.0\cdot(19.6) + 1.0\cdot(1.6) + 1.0\cdot(45.6)$ $\quad M_s = 66.8$ kip-ft

$$f_T = \frac{M_s\cdot c}{I_g} \qquad f_T := \frac{66.8\cdot(8.5)\cdot 12}{4913} \qquad f_T = 1.39 \text{ ksi}$$

f_T =1.39 ksi > 80% f_r = 0.38 ksi; therefore, check crack control criteria

Knowing $A_s = 1.73 \dfrac{\text{in}^2}{\text{ft}}$ (required for strength)

Try: #9 at 6" c-c spacing (A_s = 2.00 in^2/ft) from Table 18.4-4 in 18.4.13

The values for γ_e, d_c, h, and β_s, used to calculate max. spacing (s) of reinforcement are :

$\gamma_e := 1.00$ for Class 1 exposure condition (bottom reinforcement)

$d_c = 2.064$ in (See Figure E18.5) $\quad h = 17$ in (See Figure E18.5) $\quad \beta_s = 1.2$

f_{ss} = tensile stress in steel reinforcement at the Service I Limit State (ksi) $\leq 0.6\, f_y$

The moment arm used to calculate f_{ss} is: (j) (h - d_c)
As shown in fatigue calculations in E18-1.7.3.2, j = 0.892

The value of f_{ss} and (s) are:

$f_{ss} = 30.08$ ksi $\leq 0.6\, f_y$ O.K. $\qquad s \leq \dfrac{700\cdot(1.00)}{1.2\cdot(30.08)} - 2\cdot(2.064) = 19.4 - 4.1 = 15.3$ in

$s \leq 15.3$ in

Therefore, spacing prov'd. = 6 in < 15.3 in <u>O.K.</u>

Use: #9 at 6" c-c spacing in span 2 (Max. positive reinforcement).

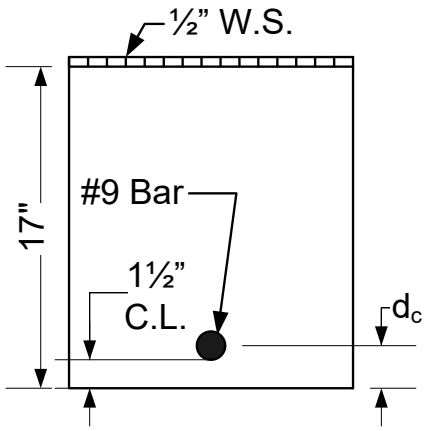

Figure E18.5

Cross Section - (0.5 pt.) Span 2

E18-1.7.3.4 Minimum Reinforcement Check

Following the procedure in E18-1.7.1.4, the minimum reinforcement check was found to be O.K.

E18-1.7.4 Negative Moment Reinforcement at Haunch/Slab Intercepts

Check the longitudinal reinforcement required at the C/L of the pier, to see if its adequate at the haunch/slab intercepts.

The haunch/slab intercepts are at (0.789 pt.) of span 1 and (0.157/0.843 pt.) of span 2. Moments at these locations are shown in Table E18.4.

Check #8 at 5" c-c spacing (as req'd. at Pier); $A_s := 1.88 \frac{in^2}{ft}$

Check for Strength:

Following the procedure in E18-1.7.1.1, using Strength I Limit State O.K.

Check for Fatigue:

Following the procedure in E18-1.7.1.2, using Fatigue I Limit State O.K.

Check Crack Control:

Following the procedure in E18-1.7.1.3, using Service I Limit State O.K.

Minimum Reinforcement Check:

Following the procedure in E18-1.7.1.4 O.K.

E18-1.7.5 Bar Steel Cutoffs

Select longitudinal reinforcement cutoff locations for an Interior Strip.

E18-1.7.5.1 Span 1 Positive Moment Reinforcement (Cutoffs)

Theoretical bar steel cutoff points for positive moment are determined when one-half the steel required at the (0.4 pt.) has the moment capacity, or factored resistance , M_r , equal to the total factored moment , M_u , at these points. However, the remaining bars are to be extended beyond the theoretical cutoff point and must meet the fatigue and crack control requirements at these cutoff locations. The factored moments, M_u , at the 0.1 points and haunch/slab intercepts have been plotted on Figure E18.6. The capacities, M_r , of #9 at 7" and #9 at 14" are also shown. The factored moments, M_u , and capacities, M_r , are based on Strength I Limit State criteria. The positive live load moments, M_{LL+IM} , used to calculate M_u are taken as the largest caused by live loads (LL#1 or LL#2). See Table E18.2 and E18.3 in E18-1.4 for description of live loads and dynamic load allowance (IM). Use maximum or minimum load factors for M_{DC} and M_{DW} (See Table E18.1) to calculate the critical force effect. When value of M_{DW} is (-), assume FWS is not present and ignore it.

Calculate the capacity of #9 at 7" c-c spacing $A_s := 1.71 \frac{in^2}{ft}$ $d_s := 14.9$ in

$b = 12$ inches (for a one foot design width)

As shown in E18-1.7.1.1, reinforcement will yield, therefore: $\boxed{a = 2.51}$ in

$$M_r := 0.9 \cdot (1.71) \cdot 60.0 \cdot \left(\frac{14.9 - \frac{2.51}{2}}{12} \right) \qquad \boxed{M_r = 105} \text{ kip-ft}$$

Calculate the capacity of #9 at 14" c-c spacing $A_s := 0.86 \frac{in^2}{ft}$ $d_s := 14.9$ in

For same section depth and less steel, reinforcement will yield, therefore: $\boxed{a = 1.26}$ in

$$M_r := 0.9 \cdot (0.86) \cdot 60.0 \cdot \left(\frac{14.9 - \frac{1.26}{2}}{12} \right) \qquad \boxed{M_r = 55.2} \text{ kip-ft}$$

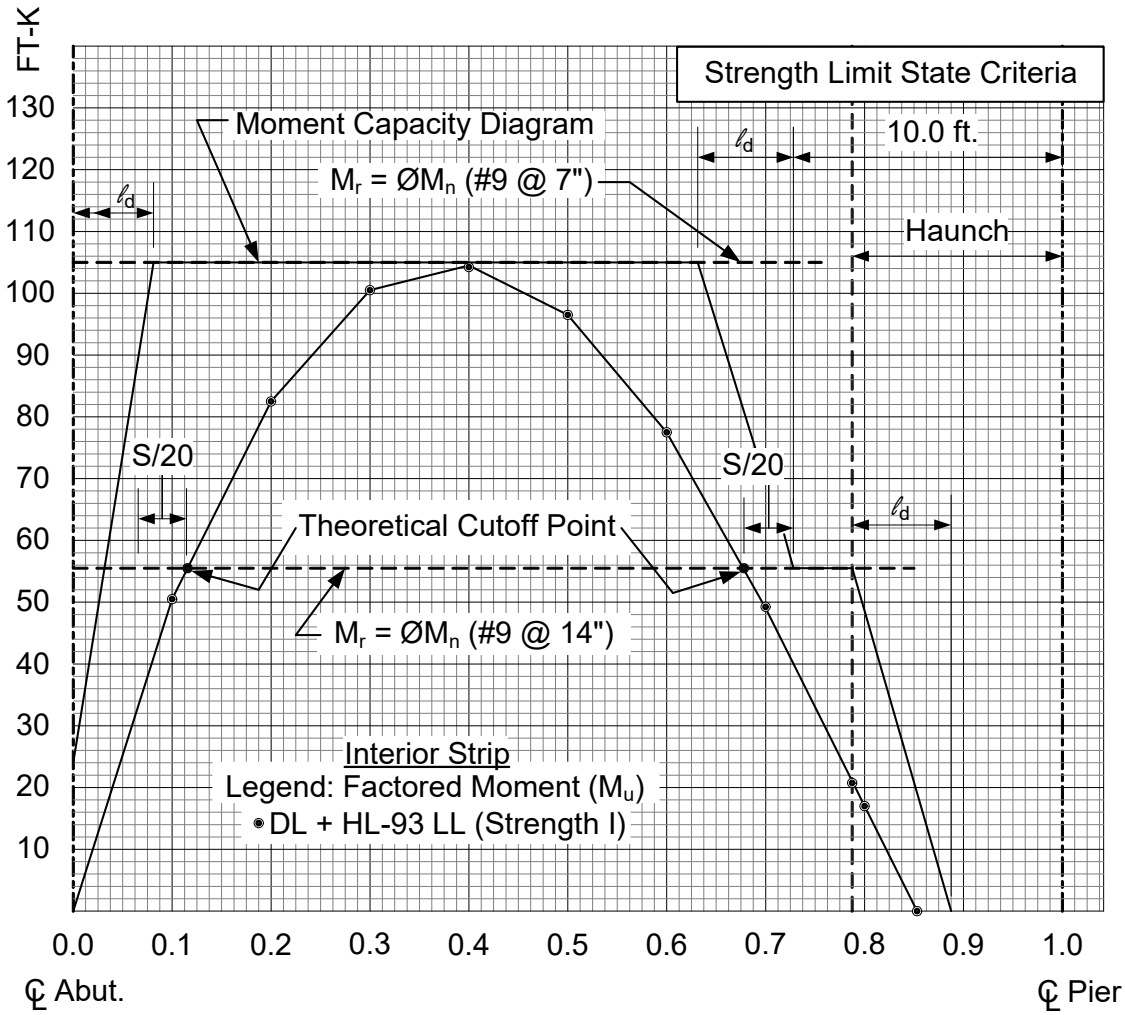

Figure E18.6

Span (1) - Positive Moment Cutoff Diagram

The moment diagram equals the capacity of #9 at 14" at 4.2 (ft) from the C/L of the abutment. Reinforcement shall be extended beyond this point a distance equal to the effective depth of the slab, 15 bar diameters, or 1/20 of the clear span, whichever is greater. **LRFD [5.10.8.1.2a]**

$d_{eff} := 14.9$ in ℓ_d (#9) (See Table 9.9-2, Chapter 9).

$15 \cdot (d_b) = 15 \cdot (1.128) = 16.9$ in

$\frac{S}{20} = \frac{38}{20} = 1.9$ ft <u>controls</u>

Therefore, 1/2 of bars may be cut at 2.0 (ft) from the C/L of the abutment if fatigue and crack control criteria are satisfied.

Because the cutoff point is close to the abutment, don't cut 1/2 of bars, but run all #9 bars into the support. **LRFD [5.10.8.1.2b]**

The moment diagram equals the capacity of #9 at 14" at 12.1 (ft) from the C/L of pier. Reinforcement shall be extended S/20 beyond this point.

Therefore, 1/2 of bars may be cut at 10.0 (ft) from the C/L of pier if fatigue and crack control criteria are satisfied. (Check at 0.74 pt.)

E18-1.7.5.1.1 Fatigue Check (at Cutoff) - (0.74 Pt.)

Following the procedure in E18-1.7.1.2, using Fatigue I Limit State:

$1.75 \cdot (f_{range}) \le 26 - 0.37 \cdot f_{min}$ (for f_y = 60 ksi)

Interpolating from Table E18.4, the moments at (0.74 pt.) of span 1 are:

M_{DC} = -10.0 kip-ft M_{DW} = -0.89 kip-ft

+Fatigue Truck = 9.72 kip-ft -Fatigue Truck = -10.34 kip-ft

In regions of compressive stress due to unfactored permanent loads, fatigue shall be considered only if this compressive stress is less than ($\gamma_{LLfatigue}$ = 1.75) times the maximum tensile stress from the fatigue load. **LRFD [5.5.3.1]**

For simplicity, assume fatigue criteria should be checked.

Calculate fatigue moment: $M_{fatigue} = 1.0(M_{DC}) + 1.0(M_{DW}) + 1.75(\text{Fatigue Truck})$

$M_{fatigueMax} := 1.0 \cdot (-10.0) + 1.0(-0.89) + 1.75(9.72)$ $\boxed{M_{fatigueMax} = 6.12}$ kip-ft (tens.)

$M_{fatigueMin} := 1.0 \cdot (-10.0) + 1.0(-0.89) + 1.75(-10.34)$ $\boxed{M_{fatigueMin} = -28.98}$ kip-ft (compr.)

Looking at values of $M_{fatigue}$ shows that the reinforcement goes through tensile and compressive stress during the fatigue cycle.

Following the procedure outlined in E18-1.7.5.2.1, fatigue criteria at bar cutoff is O.K.

E18-1.7.5.1.2 Crack Control Check (at Cutoff) - (0.74 Pt.)

This criteria shall be checked when tension (f_T) in the cross-section exceeds 80% of the modulus of rupture (f_r), specified in **LRFD [5.4.2.6]**

Following the procedure in E18-1.7.1.3, using Service I Limit State:

$f_r = 0.48$ ksi $\quad f_{r80\%} = 0.38$ ksi $\quad c = 8.5$ in $\quad I_g = 4913$ in^4

$M_s = 1.0(M_{DC}) + 1.0(M_{DW}) + 1.0(M_{LL+IM})$

Interpolating from Table E18.4, the moments at (0.74 pt.) of span 1 are:

M_{DC} = -10.0 kip-ft $\quad M_{DW}$ = -0.89 kip-ft $\quad M_{LL+IM}$ = 4.7 + 21.1 = 25.8 kip-ft (LL#1)

$M_s := 1.0\cdot(-10.0) + 1.0\cdot(25.8)$ $\quad M_s = 15.8$ kip-ft

M_{DW} (FWS) moment was ignored in order to obtain a greater tensile moment

$$f_T = \frac{M_s \cdot c}{I_g} \qquad f_T := \frac{15.8\cdot(8.5)\cdot 12}{4913} \qquad f_T = 0.33 \text{ ksi}$$

f_T =0.33 ksi < 80% f_r = 0.38 ksi; therefore, crack control criteria check not req'd.

Therefore, crack control criteria at bar cutoff is O.K.

E18-1.7.5.1.3 Minimum Reinforcement Check

Following the procedure in E18-1.7.1.4, the minimum reinforcement check was found to be O.K.

Therefore cut 1/2 of bars at 10.0 (ft) from the C/L of pier. Remaining bars are extended (ℓ_d) beyond the haunch/slab intercept as shown on Standard 18.01.

E18-1.7.5.2 Span 2 Positive Moment Reinforcement (Cutoffs)

Theoretical bar steel cutoff points for positive moment are determined when one-half the steel required at the (0.5 pt.) has the moment capacity, or factored resistance , M_r , equal to the total factored moment , M_u , at these points. However, the remaining bars are to be extended

beyond the theoretical cutoff point and must meet the fatigue and crack control requirements at these cutoff locations. The factored moments, M_u, at the 0.1 points and haunch/slab intercepts have been plotted on Figure E18.7. The capacities, M_r, of #9 at 6" and #9 at 12" are also shown. The factored moments, M_u, and capacities, M_r, are based on Strength I Limit State criteria. The positive live load moments, M_{LL+IM}, used to calculate M_u are taken as the largest caused by live loads (LL#1 or LL#2). See Table E18.2 and E18.3 in E18-1.4 for description of live loads and dynamic load allowance (IM). Use maximum or minimum load factors for M_{DC} and M_{DW} (See Table E18.1) to calculate the critical force effect. When value of M_{DW} is (-), assume FWS is not present and ignore it.

Calculate the capacity of #9 at 6" c-c spacing $A_s := 2.00 \frac{in^2}{ft}$ $d_s := 14.9$ in

$b = 12$ inches (for a one foot design width)

As shown in E18-1.7.3.1, reinforcement will yield, therefore: $\boxed{a = 2.94}$ in

$$M_r := 0.9 \cdot (2.00) \cdot 60.0 \cdot \left(\frac{14.9 - \frac{2.94}{2}}{12} \right) \qquad \boxed{M_r = 120.9} \text{ kip-ft}$$

Calculate the capacity of #9 at 12" c-c spacing $A_s := 1.00 \frac{in^2}{ft}$ $d_s := 14.9$ in

For same section depth and less steel, reinforcement will yield, therefore: $\boxed{a = 1.47}$ in

$$M_r := 0.9 \cdot (1.00) \cdot 60.0 \cdot \left(\frac{14.9 - \frac{1.47}{2}}{12} \right) \qquad \boxed{M_r = 63.7} \text{ kip-ft}$$

The moment diagram equals the capacity of #9 at 12" at 14.4 (ft) from the C/L of pier. Reinforcement shall be extended beyond this point a distance equal to the effective depth of the slab, 15 bar diameters, or 1/20 of the clear span, whichever is greater. **LRFD [5.10.8.1.2a]**

$\frac{S}{20} = \frac{51}{20} = 2.55$ ft <u>controls</u> ℓ_d (#9) (See Table 9.9-2, Chapter 9).

Therefore, 1/2 of bars may be cut at 11.5 (ft) from the C/L of each pier if fatigue and crack control criteria are satisfied (Check at 0.23 pt.).

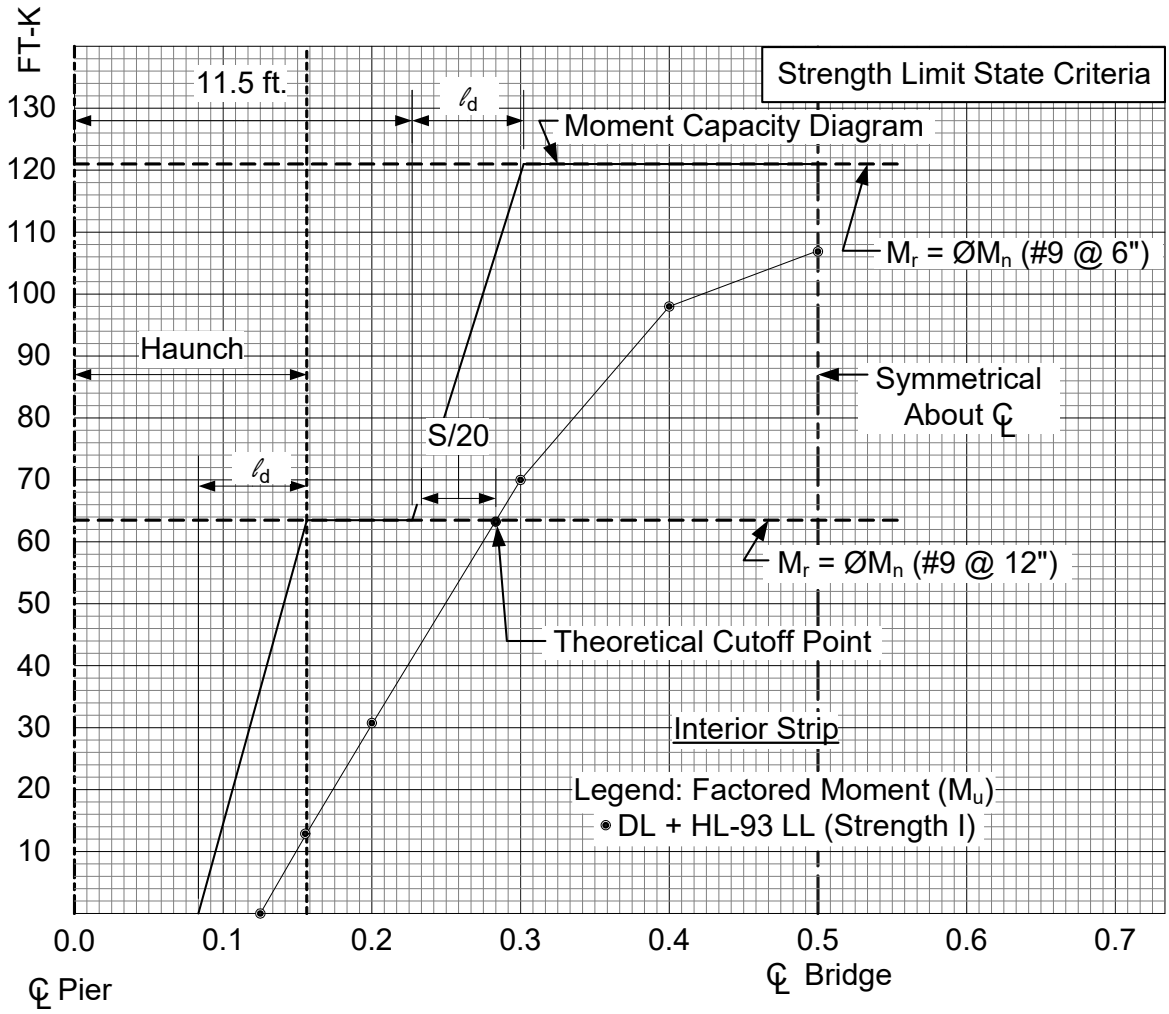

Figure E18.7

Span (2) - Positive Moment Cutoff Diagram

E18-1.7.5.2.1 Fatigue Check (at Cutoff) - (0.23 Pt.)

Looking at E18-1.2: $\eta_i := 1.0$ and from Table E18.1: $\gamma_{LLfatigue} := 1.75$ $\phi_{fatigue} := 1.0$

When reinforcement goes through tensile and compressive stress during the fatigue cycle,

$$Q = f_s + f'_s$$

Where:

f_s = tensile part of stress range in bar reinforcement due to dead load moments from applied loads in E18-1.2 and largest factored tensile moment caused by Fatigue Truck (LL#4)

f'_s = compressive part of stress range in bar reinforcement due to dead load moments from applied loads in E18-1.2 and largest factored compressive moment caused by Fatigue Truck (LL#4)

All live load moments in f_s and f'_s are multiplied by (η_i) and ($\gamma_{LLfatigue}$)

See Table E18.2 and E18.3 in E18-1.4 for description of live load and dynamic load allowance (IM).

$R_n = (\Delta F_{TH}) = 26 - 0.37 \cdot f_{min}$ (for f_y = 60 ksi) (See 18.3.5.2.1)

$R_r = \phi_{fatigue} \cdot R_n = 1.0 \cdot (26 - 0.37 \cdot f_{min})$

Therefore: $f_s + f'_s \le 26 - 0.37 \cdot f_{min}$ (Limit States Equation)

Interpolating from Table E2, the moments at (0.23 pt.) of span 2 are:

M_{DC} = -3.5 kip-ft M_{DW} = -0.31 kip-ft

+Fatigue Truck = 10.02 kip-ft -Fatigue Truck = -7.3 kip-ft

In regions of compressive stress due to unfactored permanent loads, fatigue shall be considered only if this compressive stress is less than ($\gamma_{LLfatigue}$ = 1.75) times the maximum tensile stress from the fatigue load. **LRFD [5.5.3.1]**

The section properties for fatigue shall be based on cracked sections where the sum of stresses, due to unfactored permanent loads, and ($\gamma_{LLfatigue}$ = 1.75) times the fatigue load is tensile and exceeds $0.095\sqrt{f'_c}$.

For simplicity, assume fatigue criteria should be checked and use cracked section properties.

Calculate fatigue moment: $M_{fatigue} = 1.0(M_{DC}) + 1.0(M_{DW}) + 1.75(\text{Fatigue Truck})$

$M_{fatigueMax} := 1.0(-3.5) + 1.75(10.02)$ $\boxed{M_{fatigueMax} = 14.04}$ kip-ft (tension)

$M_{fatigueMin} := 1.0(-3.5) + 1.75(-7.3)$ $\boxed{M_{fatigueMin} = -16.27}$ kip-ft (compression)

M_{DW} (FWS) moment was ignored in order to obtain a greater tensile range.

Looking at values of $M_{fatigue}$, shows that the reinforcement goes through tensile and compressive stress during the fatigue cycle

See Figure E18.8, for definition of d_1, d_2, d', A_s and A'_s.

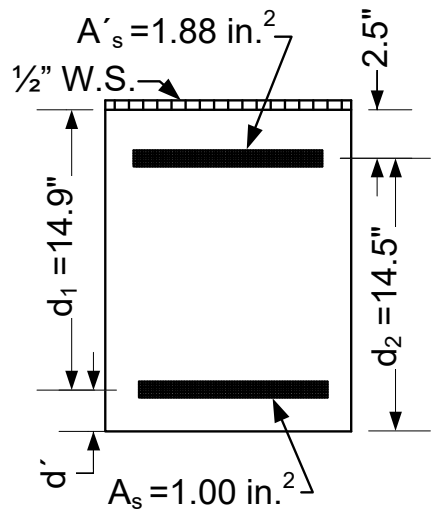

Figure E18.8

Cross Section - (0.23 pt.) Span 2

The moment arm used in equations below is: $(j_1)(d_1)$ for finding f_s
$(j_2)(d_2)$ for finding f'_s

Using: A_s = 1.00 in²/ft, d_1 = 14.9 in, n = 8, and transformed section analysis, gives a value of j_1 = 0.914

Using: A'_s = 1.88 in²/ft, d_2 = 14.5 in, n = 8, and transformed section analysis, gives a value of j_2 = 0.887; k = x/d_2 = 0.34, where x = distance from compression face to neutral axis

The tensile part of the stress range in the bottom bars is computed as:

$$f_s := \frac{M_{fatigueMax} \cdot 12}{A_s \cdot (j_1) \cdot d_1}$$ $\boxed{f_s = 12.37}$ ksi (tension)

The compressive part of the stress range in the bottom bars is computed as:

$$f'_s := \frac{M_{fatigueMin} \cdot 12}{A'_s \cdot (j_2) \cdot d_2} \cdot \frac{k - \left(\frac{d'}{d_2}\right)}{1 - k}$$ $\boxed{f'_s = -2.42}$ ksi (compression)

It is assumed (#8's at 5") req'd. at pier, is present at this location as compression steel (A'_s).

Therefore, total stress range on bottom steel:

$f_s + f'_s = 12.37 - (-2.42) = 14.79$ ksi

$R_r := 26 - 0.37 \cdot f_{min}$ where $f_{min} = f'_s$, therefore: $R_r = 26.9$ ksi

Therefore, $f_s + f'_s = 14.79$ ksi < $R_r = 26.9$ ksi O.K..

E18-1.7.5.2.2 Crack Control Check (at Cutoff) - (0.23 Pt.)

This criteria shall be checked when tension (f_T) in the cross-section exceeds 80% of the modulus of rupture (f_r), specified in **LRFD [5.4.2.6]**.

Following the procedure in E18-1.7.1.3, using Service I Limit State:

$f_r = 0.48$ ksi $f_{r80\%} = 0.38$ ksi $c = 8.5$ in $I_g = 4913$ in^4

$M_s = 1.0(M_{DC}) + 1.0(M_{DW}) + 1.0(M_{LL+IM})$

Interpolating from Table E18.4, the moments at (0.23 pt.) of span 2 are:

M_{DC} = -3.51 kip-ft M_{DW} = -0.31 kip-ft M_{LL+IM} = 3.7 + (21.9) = 25.6 kip-ft (LL#1)

$M_s := 1.0 \cdot (-3.51) + 1.0 \cdot (25.6)$ $M_s = 22.1$ kip-ft

M_{DW} (FWS) moment was ignored in order to obtain a greater tensile moment.

$$f_T = \frac{M_s \cdot c}{I_g} \qquad f_T := \frac{22.1 \cdot (8.5) \cdot 12}{4913} \qquad f_T = 0.46 \text{ ksi}$$

f_T =0.46 ksi > 80% f_r = 0.38 ksi; therefore, check crack control criteria

For: #9 at 12" c-c spacing (A_s = 1.00 in^2/ft)

The values for γ_e, d_c, h, and β_s, used to calculate max. spacing (s) of reinforcement are :

$\gamma_e := 1.00$ for Class 1 exposure condition (bottom reinforcement)

$d_c = 2.064$ in $h = 17$ in $\beta_s = 1.2$

f_{ss} = tensile stress in steel reinforcement at the Service I Limit State (ksi) $\leq 0.6\ f_y$

The moment arm used to calculate f_{ss} is: (j) (h - d_c)

As shown in fatigue calculations in E18-1.7.5.2.1, j = 0.914

The value of f_{ss} and (s) are:

$\boxed{f_{ss} = 19.43}$ ksi $\leq 0.6\ f_y$ O.K. $\quad s \leq \dfrac{700\cdot(1.00)}{1.2\cdot(19.43)} - 2\cdot(2.064) = 30.07 - 4.1 = 26.0$ in

$s \leq 26.0$ in

Therefore, spacing prov'd. = 12 in < 26.0 in O.K.

E18-1.7.5.2.3 Minimum Reinforcement Check

Following the procedure in E18-1.7.1.4, the minimum reinforcement check was found to be O.K.

Therefore, cut 1/2 of bars at 11.5 (ft) from the C/L of each pier. Remaining bars are extended (ℓ_d) beyond the haunch/slab intercept as shown on Standard 18.01.

E18-1.7.5.3 Span 1 Negative Moment Reinforcement (Cutoffs)

Theoretical bar steel cutoff points for negative moment are determined when one-half the steel required at the (C/L Pier) has the moment capacity, or factored resistance , M_r , equal to the total factored moment , M_u , at these points. However, the remaining bars are to be extended beyond the theoretical cutoff point and must meet the fatigue and crack control requirements at these cutoff locations. The factored moments, M_u , at the 0.1 points and haunch/slab intercepts have been plotted on Figure E18.9. The capacities, M_r , of #8 at 5" and #8 at 10" are also shown. The factored moments, M_u , and capacities, M_r , are based on Strength I Limit State criteria. The negative live load moments, M_{LL+IM} , used to calculate M_u are taken as the largest caused by live loads (LL#1, LL#2 or LL#3). See Table E18.2 and E18.3 in E18-1.4 for description of live loads and dynamic load allowance (IM). Use maximum or minimum load factors for M_{DC} and M_{DW} (See Table E18.1) to calculate the critical force effect. When value of M_{DW} is (+), assume FWS is not present and ignore it.

Calculate the capacity of #8 at 5" c-c spacing $\quad A_s := 1.88\ \dfrac{in^2}{ft}$

$b = 12$ inches (for a one foot design width)

As shown in E18-1.7.2.1, reinforcement will yield, therefore: $\boxed{a = 2.76}$ in

$M_r = 204.1$ kip-ft (at C/L pier), $\quad d_s := 25.5$ in

$M_r = 111.0$ kip-ft (in span), $\quad d_s := 14.5$ in

Calculate the capacity of #8 at 10" c-c spacing $\quad A_s := 0.94\ \dfrac{in^2}{ft}$

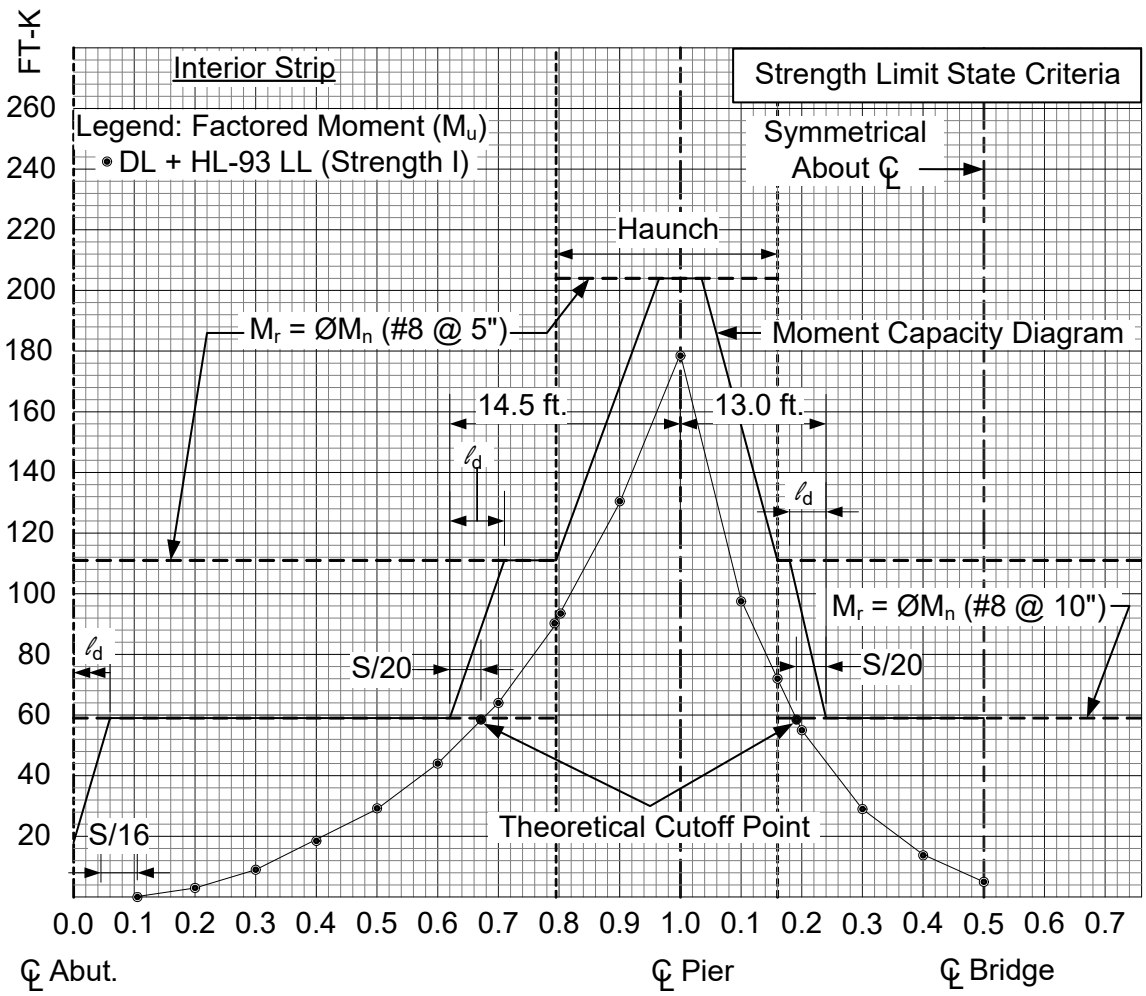

Figure E18.9

Negative Moment Cutoff Diagram

For same section depth and less steel, reinforcement will yield, therefore:

$\boxed{a = 1.38}$ in

M_r = 104.9 kip-ft (at C/L pier), $d_s := 25.5$ in

M_r = 58.4 kip-ft (in span), $d_s := 14.5$ in

The moment diagram equals the capacity of #8 at 10" at 12.5 (ft) from the C/L of pier. Reinforcement shall be extended beyond this point a distance equal to the effective depth of the slab, 15 bar diameters, or 1/20 of the clear span, whichever is greater. **LRFD [5.10.8.1.2a]**

$\frac{S}{20} = \frac{38}{20} = 1.9$ ft <u>controls</u> ℓ_d (#8) (See Table 9.9-2, Chapter 9)

Therefore, 1/2 of bars may be cut at 14.5 (ft) from the C/L of pier if fatigue and crack control criteria are satisfied. (Check at 0.62 pt.)

E18-1.7.5.3.1 Fatigue Check (at Cutoff) - (0.62 Pt.)

Following the procedure in E18-1.7.5.2.1, using Fatigue I Limit State:

$f_s + f'_s \le 26 - 0.37 \cdot f_{min}$ (for f_y = 60 ksi)

Interpolating from Table E18.4, the moments at (0.62 pt.) of span 1 are:

M_{DC} = 4.44 kip-ft M_{DW} = 0.4 kip-ft

+Fatigue Truck = 13.7 kip-ft -Fatigue Truck = -8.68 kip-ft

For simplicity, assume fatigue criteria should be checked and use cracked section properties.

Calculate fatigue moment: $M_{fatigue} = 1.0(M_{DC}) + 1.0(M_{DW}) + 1.75(\text{Fatigue Truck})$

$M_{fatigueMax} := 1.0(4.44) + 1.75(-8.68)$ $\boxed{M_{fatigueMax} = -10.75}$ kip-ft (tension)

$M_{fatigueMin} := 1.0(4.44) + 1.75(13.7)$ $\boxed{M_{fatigueMin} = 28.41}$ kip-ft (compression)

M_{DW} (FWS) moment was ignored in order to obtain a greater tensile range.

Looking at values of $M_{fatigue}$, shows that the reinforcement goes through tensile and compressive stress during the fatigue cycle

See Figure E18.10, for definition of d_1, d_2, d', A_s and A'_s.

The moment arm used in equations below is: $(j_1)(d_1)$ for finding f_s
$(j_2)(d_2)$ for finding f'_s

Using: A_s = 0.94 in^2/ft, d_1 = 14.5 in, n = 8, and transformed section analysis, gives a value of j_1 = 0.915

Using: A'_s =1.71 in^2/ft, d_2 = 14.9 in, n = 8, and transformed section analysis, gives a value of j_2 = 0.893; k = x/d_2 = 0.33, where x = distance from compression face to neutral axis

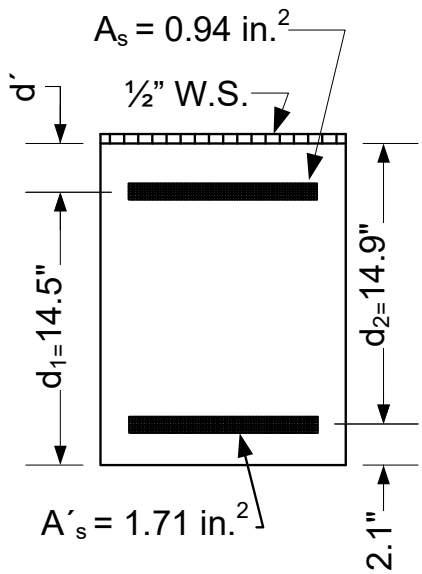

Figure E18.10

Cross Section - (0.62 pt.) Span 1

The tensile part of the stress range in the top bars is computed as:

$$f_s := \frac{M_{fatigueMax} \cdot 12}{A_s \cdot (j_1) \cdot d_1}$$ $f_s = 10.34$ ksi (tension)

The compressive part of the stress range in the top bars is computed as:

$$f'_s := \frac{M_{fatigueMin} \cdot 12}{A'_s \cdot (j_2) \cdot d_2} \cdot \frac{k - \left(\frac{d'}{d_2}\right)}{1 - k}$$ $f'_s = -3.63$ ksi (compression)

It is assumed (#9's at 7") is present at this location as compression steel (A'_s).

Therefore, total stress range on top steel:

$f_s + f'_s$ **=** 10.34 – (–3.63) **=** 13.97 ksi

$R_r := 26 - 0.37 \cdot f_{min}$ where $f_{min} = f'_s$, therefore: $R_r = 27.34$ ksi

Therefore, $f_s + f'_s$ = 13.97 ksi < R_r = 27.34 ksi O.K..

E18-1.7.5.3.2 Crack Control Check (at Cutoff) - (0.62 Pt.)

This criteria shall be checked when tension (f_T) in the cross-section exceeds 80% of the modulus of rupture (f_r), specified in **LRFD [5.4.2.6]**.

Following the procedure in E18-1.7.1.3, using Service I Limit State:

$\boxed{f_r = 0.48}$ ksi $\boxed{f_{r80\%} = 0.38}$ ksi $\boxed{c = 8.5}$ in $\boxed{I_g = 4913}$ in^4

$M_s = 1.0(M_{DC}) + 1.0(M_{DW}) + 1.0(M_{LL+IM})$

Interpolating from Table E18.4, the moments at (0.62 pt.) of span 1 are:

M_{DC} = 4.4 kip-ft M_{DW} = 0.4 kip-ft M_{LL+IM} = -5.88 + (-23.88) = -29.8 kip-ft (LL#2)

$M_s := 1.0\cdot(4.4) + 1.0\cdot(-29.8)$ $\boxed{M_s = -25.4}$ kip-ft

M_{DW} (FWS) moment was ignored in order to obtain a greater tensile moment.

$f_T = \dfrac{M_s \cdot c}{I_g}$ $f_T := \dfrac{25.4\cdot(8.5)\cdot 12}{4913}$ $\boxed{f_T = 0.53}$ ksi

f_T =0.53 ksi > 80% f_r = 0.38 ksi; therefore, check crack control criteria

For: #8 at 10" c-c spacing (A_s = 0.94 in^2/ft)

The values for γ_e , d_c , h , and β_s , used to calculate max. spacing (s) of reinforcement are :

$\gamma_e := 0.75$ for Class 2 exposure condition (top reinforcement)

$\boxed{d_c = 2.5}$ in $\boxed{h = 17}$ in $\boxed{\beta_s = 1.25}$

f_{ss} = tensile stress in steel reinforcement at the Service I Limit State (ksi) $\leq$ 0.6 f_y

The moment arm used to calculate f_{ss} is: (j) (h - d_c)
As shown in fatigue calculations in E18-1.7.5.3.1, j = 0.915

The value of f_{ss} and (s) are:

$\boxed{f_{ss} = 24.44}$ ksi < 0.6 f_y O.K. $s \leq \dfrac{700\cdot(0.75)}{1.25\cdot(24.44)} - 2\cdot(2.50) = 17.2 - 5.0 = 12.2$ in

$s \leq 12.2$ in

Therefore, spacing prov'd. = 10 in < 12.2 in <u>O.K.</u>

E18-1.7.5.3.3 Minimum Reinforcement Check

Following the procedure in E18-1.7.2.4, the minimum reinforcement check was found to be O.K.

Therefore, cut 1/2 of bars at 14.5 (ft) from the C/L of the pier. Remaining bars are extended beyond the point of inflection, a distance equal to the effective depth of the slab, 12 bar diameters, or 1/16 of the clear span, whichever is greater. **LRFD [5.10.8.1.2c]**

$d_{eff} := 14.5$ in ℓ_d (#8) (See Table 9.9-2, Chapter 9)

$12 \cdot (d_b) = 12 \cdot (1.00) = 12.0$ in

$\frac{S}{16} = \frac{38}{16} = 2.38$ ft controls

Looking at the factored moment diagram (M_u) on Figure E18.9, the point of inflection is found at the (0.11 pt.). Therefore, the remaining bars could be terminated at 36.5 (ft) from the C/L of pier and these bars lapped with smaller size bars spaced at 10 inches.

Because this bar termination point is close to the abutment, run remaining bars (#8 at 10" c-c spacing) to the end of the slab.

E18-1.7.5.4 Span 2 Negative Moment Reinforcement (Cutoffs)

Capacities of #8 at 5" and #8 at 10" c-c spacing are stated in E18-1.7.5.3

The moment diagram equals the capacity of #8 at 10 " at 10.0 (ft) from the C/L of pier. Reinforcement shall be extended beyond this point a distance equal to the effective depth of the slab, 15 bar diameters, or 1/20 of the clear span, whichever is greater. **LRFD [5.10.8.1.2a]**

$\frac{S}{20} = \frac{51}{20} = 2.55$ ft controls ℓ_d (#8) (See Table 9.9-2, Chapter 9)

Therefore, 1/2 of bars may be cut at 13.0 (ft) from the C/L of pier if fatigue and crack control criteria are satisfied. (Check at 0.25 pt.)

E18-1.7.5.4.1 Fatigue Check (at Cutoff) - (0.25 Pt.)

Following the procedure in E18-1.7.5.2.1, using Fatigue I Limit State:

$f_s + f'_s \le 26 - 0.37 \cdot f_{min}$ (for f_y = 60 ksi)

Interpolating from Table E18.4, the moments at (0.25 pt.) of span 2 are:

M_{DC} = -0.45 kip-ft M_{DW} = -0.05 kip-ft

+Fatigue Truck = 10.9 kip-ft -Fatigue Truck = -7.0 kip-ft

For simplicity, assume fatigue criteria should be checked and use cracked section properties.

Calculate fatigue moment: $M_{fatigue} = 1.0(M_{DC}) + 1.0(M_{DW}) + 1.75(\text{Fatigue Truck})$

$M_{fatigueMax} := 1.0(-0.45) + 1.0(-0.05) + 1.75(-7.0)$ $\boxed{M_{fatigueMax} = -12.8}$ kip-ft (tension)

$M_{fatigueMin} := 1.0(-0.45) + 1.0(-0.05) + 1.75(10.9)$ $\boxed{M_{fatigueMin} = 18.57}$ kip-ft (compr.)

Looking at values of $M_{fatigue}$, shows that the reinforcement goes through tensile and compressive stress during the fatigue cycle

See Figure E18.11, for definition of d_1, d_2, d', A_s and A'_s.

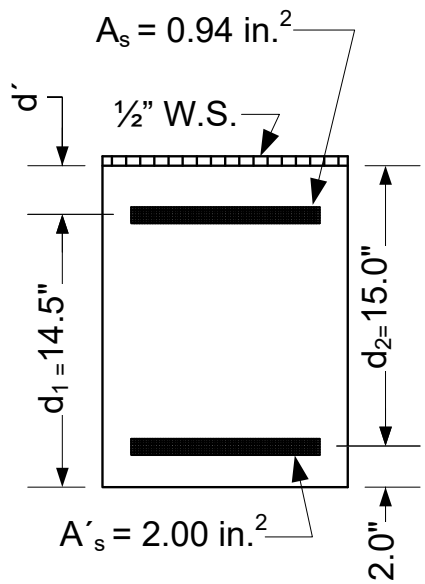

Figure E18.11

Cross Section - (0.25 pt.) Span 2

The moment arm used in equations below is: $(j_1)(d_1)$ for finding f_s
$(j_2)(d_2)$ for finding f'_s

Using: $A_s = 0.94$ in²/ft, $d_1 = 14.5$ in, n = 8, and transformed section analysis, gives a value of $j_1 = 0.915$

Using: $A'_s = 2.00$ in²/ft, $d_2 = 15.0$ in, n = 8, and transformed section analysis, gives a value of $j_2 = 0.886$; $k = x/d_2 = 0.34$, where x = distance from compression face to neutral axis

The tensile part of the stress range in the top bars is computed as:

$$f_s := \frac{M_{fatigueMax} \cdot 12}{A_s \cdot (j_1) \cdot d_1}$$ $\boxed{f_s = 12.27}$ ksi (tension)

The compressive part of the stress range in the top bars is computed as:

$$f'_s := \frac{M_{fatigueMin} \cdot 12}{A'_s \cdot (j_2) \cdot d_2} \cdot \frac{k - \left(\frac{d'}{d_2}\right)}{1 - k}$$ $f'_s = -2.2$ ksi (compression)

It is assumed (#9's at 6") is present at this location as compression steel (A'_s).

Therefore, total stress range on top steel:

$f_s + f'_s$ **=** $12.27 - (-2.20)$ **=** 14.47 ksi

$R_r := 26 - 0.37 \cdot f_{min}$ where $f_{min} = f'_s$, therefore: $R_r = 26.81$ ksi

Therefore, $f_s + f'_s = 14.47$ ksi < $R_r = 26.81$ ksi O.K..

E18-1.7.5.4.2 Crack Control Check (at Cutoff) - (0.25 Pt.)

This criteria shall be checked when tension (f_T) in the cross-section exceeds 80% of the modulus of rupture (f_r), specified in **LRFD [5.4.2.6]**.

Following the procedure in E18-1.7.1.3, using Service I Limit State:

$f_r = 0.48$ ksi $f_{r80\%} = 0.38$ ksi $c = 8.5$ in $I_g = 4913$ in^4

$M_s = 1.0(M_{DC}) + 1.0(M_{DW}) + 1.0(M_{LL+IM})$

Interpolating from Table E18.4, the moments at (0.25 pt.) of span 2 are:

M_{DC} = -0.45 kip-ft M_{DW} = -0.05 kip-ft M_{LL+IM} = -4.35 + (-18.25) = -22.6 kip-ft (LL#2)

$M_s := 1.0 \cdot (0.45) + 1.0(0.05) + 1.0 \cdot (22.6)$ $M_s = 23.1$ kip-ft

$$f_T = \frac{M_s \cdot c}{I_g} \qquad f_T := \frac{23.1 \cdot (8.5) \cdot 12}{4913} \qquad f_T = 0.48 \text{ ksi}$$

f_T =0.48 ksi > 80% f_r = 0.38 ksi; therefore, check crack control criteria

For: #8 at 10" c-c spacing (A_s = 0.94 in^2/ft)

The values for γ_e, d_c, h, and β_s, used to calculate max. spacing (s) of reinforcement are :

$\gamma_e := 0.75$ for Class 2 exposure condition (top reinforcement)

$d_c = 2.5$ in $h = 17$ in $\beta_s = 1.25$

f_{ss} = tensile stress in steel reinforcement at the Service I Limit State (ksi) $\leq 0.6\ f_y$

The moment arm used to calculate f_{ss} is: (j) (h - d_c)
As shown in fatigue calculations in E18-1.7.5.3.1, j = 0.915

The value of f_{ss} and (s) are:

$\boxed{f_{ss} = 22.23}$ ksi < 0.6 f_y O.K. $\quad s \leq \dfrac{700\cdot(0.75)}{1.25\cdot(22.23)} - 2\cdot(2.50) = 19.0 - 5.0 = 14.0$ in

$s \leq 14.0$ in

Therefore, spacing prov'd. = 10 in < 14.0 in O.K.

E18-1.7.5.4.3 Minimum Reinforcement Check

Following the procedure in E18-1.7.2.4, the minimum reinforcement check was found to be O.K.

Therefore, cut 1/2 of bars at 13.0 (ft) from the C/L of the pier. Remaining bars are extended beyond the point of inflection, a distance equal to the effective depth of the slab, 12 bar diameters, or 1/16 of the clear span, whichever is greater. **LRFD [5.10.8.1.2c]**

$\dfrac{S}{16} = \dfrac{51}{16} = 3.19$ ft controls $\quad \ell_d$ (#8) (See Table 9.9-2, Chapter 9)

Looking at the factored moment diagram (M_u) on Figure E18.9, no point of inflection is found in span 2.

Therefore, run the remaining bars (#8 at 10" c-c spacing) to the C/L of span 2 and lap them.

E18-1.8 Evaluation of Longitudinal Reinforcement for Permit Vehicle

Check the adequacy of the longitudinal reinforcement to see if it has the moment capacity to handle factored moments due to applied dead load (including future wearing surface) and the Wisconsin Standard Permit Vehicle (Wis-SPV) (with a minimum gross vehicle load of 190 kips) on an interior strip. This requirement is stated in 17.1.2.1.

The Wisconsin Standard Permit Vehicle load that can be carried by the bridge is 225 kips, when the future wearing surface is present. Details for the calculation of this load are shown in Chapter 45, "Reinforced Concrete Slab Rating" example.

Wisconsin Standard Permit Vehicle (Wis-SPV) load capacity = 225 kips > 190 kips O.K.

E18-1.9 Longitudinal Reinforcement in Bottom of Haunch

At least (1/4) of maximum positive moment reinforcement in continuous-spans shall extend into the support **LRFD [5.10.8.1.2b]**.

Max. positive (A_s) = 2.00 $\frac{in^2}{ft}$ (#9 at 6" c-c spacing, in span 2)

Reinf. req'd. = $0.25 \cdot (2.00) = 0.5 \ \frac{in^2}{ft}$

Therefore, use #7 at 13 in. (0.55 in^2/ft) > reinf. req'd and min. reinf. on Standard 18.01 O.K.

See Figure E18.12 for a summary of longitudinal reinforcement selected and layout of transverse distribution steel selected in E18-1.12.

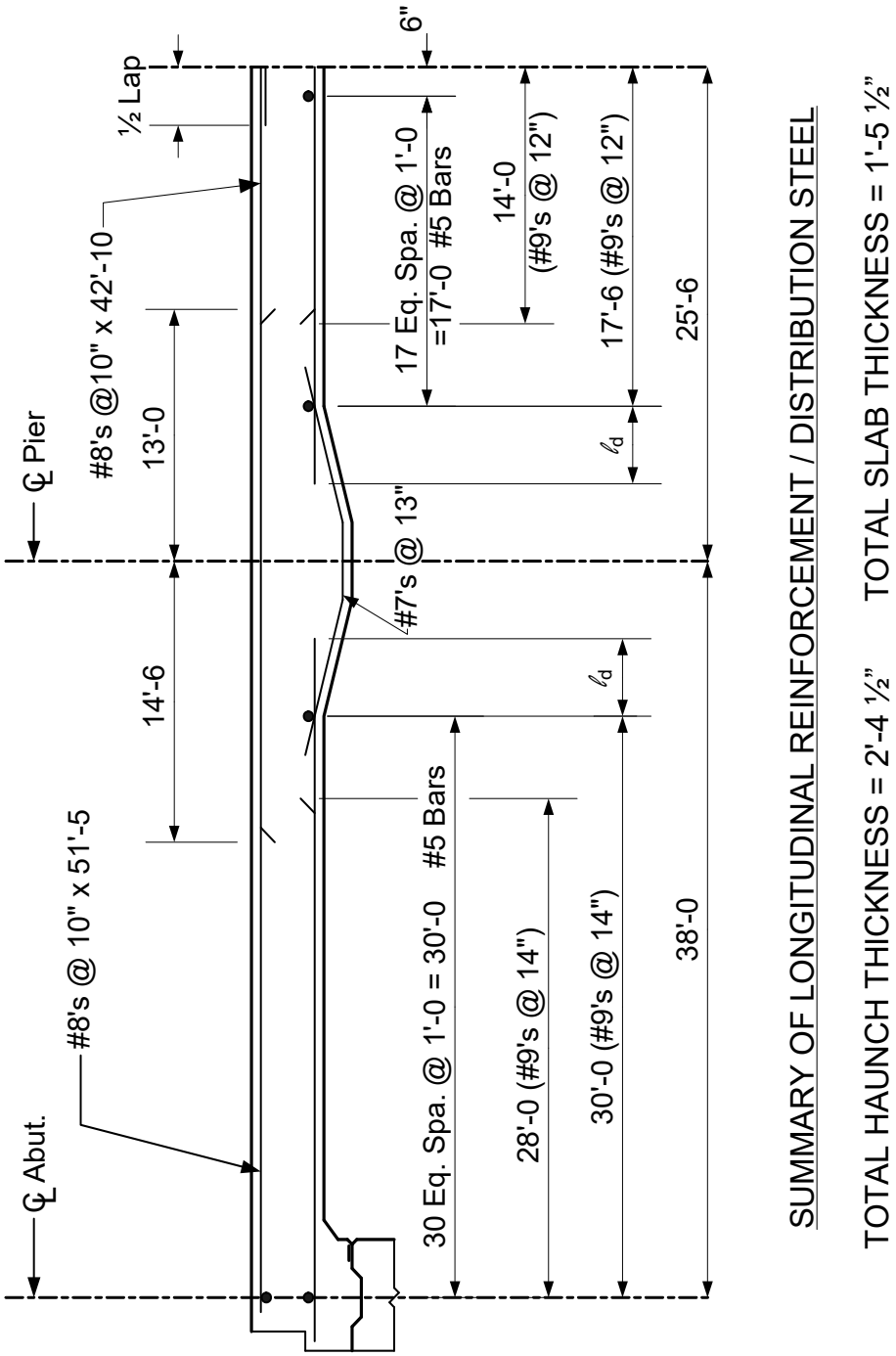

Figure E18.12

Summary of Longitudinal Reinforcement / Distribution Steel

E18-1.10 Live Load Distribution (Exterior Strip)

The exterior strip width (E), is assumed to carry one wheel line and a tributary portion of design lane load **LRFD [4.6.2.1.4]**.

(E) equals the distance between the edge of the slab and the inside face of the barrier, plus 12 inches, plus 1/4 of the full strip width specified in **LRFD [4.6.2.3]**.

The exterior strip width (E) shall not exceed either 1/2 the full strip width or 72 inches.

The distance from the edge of slab to the inside face of barrier = 15 inches

E18-1.10.1 Strength and Service Limit State

Use the smaller equivalent widths, which are from multi-lane loading, for full strip width when (HL-93) live load is to be distributed, for Strength I Limit State and Service I Limit State.

From previous calculations in E18-1.6:

Full strip width = 141 in. (Span 1,3) - multi-lane loading

Full strip width = 151 in. (Span 2) - multi-lane loading

The multiple presence factor (m) has been included in the equations for full strip width and therefore aren't used to adjust the distribution factor. **LRFD [3.6.1.1.2]**

Span 1, 3: $E = 15 + 12 + \frac{141}{4} = 62.2$ in.; but not to exceed $\left(\frac{141}{2}\right.$ in. or 72 in.)

Therefore, E = 62.2 in. (Spans 1, 3)

Span 2: $E = 15 + 12 + \frac{151}{4} = 64.7$ in.; but not to exceed $\left(\frac{151}{2}\right.$ in. or 72 in.)

Therefore, E = 64.7 in. (Span 2)

The distribution factor (DF) is computed for a design slab width equal to one foot.

Compute the distribution factor associated with one truck wheel line, to be applied to axle loads

$$DF = \frac{1\text{wheel_line}}{\left(\frac{2\text{wheel_lines}}{\text{lane}}\right)\cdot E}$$ (where E is in feet)

For Spans 1 & 3: (E = 62.2" = 5.183')

$$DF := \frac{1}{2\cdot(5.183)}$$

$$\boxed{DF = 0.096}\ \frac{\text{lanes}}{\text{ft} - \text{slab}}$$

For Span 2: (E = 64.7" = 5.392')

$$DF := \frac{1}{2\cdot(5.392)} \qquad \boxed{DF = 0.093}\ \frac{lanes}{ft - slab}$$

Look at the distribution factor (for axle loads) calculated for each span and select the largest value. This single value is to be applied along the entire length of the bridge.

Compute the distribution factor associated with tributary portion of design lane load, to be applied to <u>full lane load</u>: **LRFD [3.6.1.2.4]**

$$DF = \left(\frac{\frac{SWL}{10ft_lane_load_width}}{E}\right) \quad \text{(where E is in feet)}$$

SWL = slab width loaded = (E) - (distance from the edge of slab to inside face of barrier) (ft)

= 62.2 - 15 = 47.2 in. = 3.93 ft. (Span 1 & 3)

= 64.7 - 15 = 49.7 in. = 4.14 ft. (Span 2)

For Spans 1 & 3: (E = 5.183' ; SWL = 3.93')

$$DF := \frac{3.93 \div 10}{5.183} \qquad \boxed{DF = 0.076}\ \frac{lanes}{ft - slab}$$

For Span 2: (E = 5.392' ; SWL = 4.14')

$$DF := \frac{4.14 \div 10}{5.392} \qquad \boxed{DF = 0.077}\ \frac{lanes}{ft - slab}$$

Look at the distribution factor (for lane load) calculated for each span and select the largest value. This single value is to be applied along the entire length of the bridge.

Therefore, use : <u>DF = 0.096 lanes/ft.-slab</u>, for Design Truck and Design Tandem Loads

<u>DF = 0.077 lanes/ft.-slab</u>, for Design Lane Load

The concrete parapet is not to be considered to provide strength to the exterior strip (edge beam) **LRFD [9.5.1]**.

TABLE E18.5 Unfactored Moments (kip - ft) (on a one foot design width) **Exterior Strip**

Point	M_{DC} [1]	M_{DW} [2]	DF=0.077 (IM not used) +Design Lane	DF=0.077 (IM not used) -Design Lane	DF=0.096 (incl. IM=33%) +Design Tandem	DF=0.096 (incl. IM=33%) -Design Tandem
0.1	11.9	0.8	2.9	-0.9	19.4	-3.6
0.2	19.6	1.3	5.0	-1.7	32.7	-7.2
0.3	23.0	1.6	6.4	-2.6	40.0	-10.8
0.4	22.2	1.5	7.1	-3.4	42.3	-14.4
0.5	17.3	1.2	7.1	-4.3	40.8	-18.0
0.6	8.1	0.6	6.5	-5.2	36.0	-21.7
0.7	-5.3	-0.4	5.1	-6.0	27.9	-25.2
0.789	-21.1	-1.5	3.3	-6.9	19.0	-28.3
0.8	-22.9	-1.6	3.2	-7.1	17.8	-28.8
0.9	-45.0	-3.1	2.2	-9.8	9.5	-32.4
1.0	-72.6	-4.9	2.0	-14.0	10.4	-36.0
1.1	-36.7	-2.5	1.7	-8.0	8.6	-24.6
1.157	-20.8	-1.4	2.1	-5.6	15.6	-22.3
1.2	-10.1	-0.7	2.6	-4.4	21.3	-20.8
1.3	8.8	0.6	4.9	-3.4	32.6	-16.8
1.4	20.2	1.4	6.8	-3.4	39.9	-12.9
1.5	24.0	1.6	7.4	-3.4	42.2	-9.0

Point	DF=0.096 (incl. IM=33%) +Design Truck	DF=0.096 (incl. IM=33%) -Design Truck	DF=0.077 [3] (IM not used) (90%) of -Design Lane	DF=0.096 [3] (incl. IM=33%) (90%) of -Double Design Trucks
0.1	20.4	-4.4	------	------
0.2	33.1	-8.7	------	------
0.3	38.8	-13.1	------	------
0.4	39.9	-17.4	------	------
0.5	38.2	-21.8	------	------
0.6	34.6	-26.0	------	------
0.7	26.3	-30.5	-5.4	-27.4
0.789	15.8	-34.4	-6.2	-30.9
0.8	14.7	-34.9	-6.4	-31.4
0.9	10.2	-39.1	-8.8	-35.4
1.0	11.4	-45.0	-12.6	-39.5
1.1	9.0	-26.8	-7.2	-25.5
1.157	13.6	-24.5	-5.0	-22.8
1.2	17.3	-22.7	-4.0	-20.9
1.3	31.2	-18.5	------	------
1.4	39.9	-14.1	------	------
1.5	42.0	-9.9	------	------

Superscripts for Table E18.5 are defined on the following page.

In Table E18.5:

1 M_{DC} is moment due to slab dead load (DC_{slab}), parapet dead load (DC_{para}) after its weight is distributed across exterior strip width (E) and 1/2 inch wearing surface ($DC_{1/2"WS}$).

Using average of exterior strip widths: $\frac{62.2 + 64.7}{2}$ = 63.5 in = 5.3 ft

DC_{para} = (Parapet wgt.) / 5.3 ft = (387 plf) / 5.3 ft = 73 plf (on a 1'-0 slab width)

2 M_{DW} is moment due to future wearing surface (DW_{FWS})

3 The points of contraflexure are located at the (0.66 pt.) of span 1 and the (0.25 pt.) of span 2, when a uniform load is placed across the entire structure. Negative moments in these columns are shown between the points of contraflexure per **LRFD [3.6.1.3.1]**.

E18-1.11 Longitudinal Slab Reinforcement (Exterior Strip)

Select longitudinal reinforcement for an Exterior Strip (edge beam) **LRFD [5.12.2.1]**.

The reinforcement in the Exterior Strip is always equal to or greater than that required for the slab in an Interior Strip.

The concrete cover on the top bars is 2 1/2 inches, which includes a 1/2 inch wearing surface. The bottom bar cover is 1 1/2 inches. (See 18.4.6)

E18-1.11.1 Positive Moment Reinforcement for Span 1

Examine the 0.4 point of span 1

E18-1.11.1.1 Design for Strength

Following the procedure in E18-1.7.1.1, using Strength I Limit State:

$$M_u = 1.25(M_{DC}) + 1.50(M_{DW}) + 1.75(M_{LL+IM}) \leq 0.90\, A_s\, f_s\, (d_s - a/2)$$

The positive live load moment shall be the largest caused by live loads (LL#1 or LL#2). See Table E18.2 and E18.3 in E18-1.4 for description of live loads and dynamic load allowance (IM).

From Table E18.5, the largest live load moment is from (LL#1), therefore at (0.4 pt.) of span 1:

M_{DC} = 22.2 kip-ft M_{DW} = 1.5 kip-ft M_{LL+IM} = 7.1 + 42.3 = 49.4 kip-ft

$M_u := 1.25 \cdot (22.2) + 1.50 \cdot (1.5) + 1.75 \cdot (49.4)$ $\boxed{M_u = 116.5}$ kip-ft

$b := 12$ inches (for a one foot design width) and $\boxed{d_s = 14.9}$ in

The coefficient of resistance, R_u, the reinforcement ratio, ρ, and req'd. bar steel area, A_s, are:

$\boxed{R_u = 583}$ psi $\boxed{\rho = 0.0108}$ $\boxed{A_s = 1.93}$ $\frac{in^2}{ft}$

For Span 1 & 3:

A_s (req'd) = 1.93 $\frac{in^2}{ft}$ (to satisfy Exterior Strip requirements)

A_s (prov'd) = 1.71 $\frac{in^2}{ft}$ (#9 at 7" c-c spacing) (to satisfy Interior Strip requirements)

Therefore, <u>use: #9 at 6" c-c spacing</u> (A_s = 2.00 $\frac{in^2}{ft}$) in Exterior Strip width of 5.3 ft.

E18-1.11.1.2 Check Crack Control

Following the procedure in E18-1.7.1.3, the crack control check was found to be <u>O.K.</u>

E18-1.11.1.3 Minimum Reinforcement Check

Following the procedure in E18-1.7.1.4, the minimum reinforcement check was found to be <u>O.K.</u>

E18-1.11.2 Positive Moment Reinforcement for Span 2

<u>Examine the 0.5 point of span 2</u>

E18-1.11.2.1 Design for Strength

Following the procedure in E18-1.7.1.1, using Strength I Limit State:

$$M_u = 1.25(M_{DC}) + 1.50(M_{DW}) + 1.75(M_{LL+IM}) \leq 0.90\, A_s\, f_s\, (d_s - a/2)$$

The positive live load moment shall be the largest caused by live loads (LL#1 or LL#2). See Table E18.2 and E18.3 in E18-1.4 for description of live loads and dynamic load allowance (IM).

From Table E18.5, the largest live load moment is from (LL#1), therefore at (0.5 pt.) of span 2:

M_{DC} = 24.0 kip-ft M_{DW} = 1.6 kip-ft M_{LL+IM} = 7.4 + 42.2 = 49.6 kip-ft

$M_u := 1.25\cdot(24.0) + 1.50\cdot(1.6) + 1.75\cdot(49.6)$ $\boxed{M_u = 119.2}$ kip-ft

$b := 12$ inches (for a one foot design width) and $\boxed{d_s = 14.9}$ in

The coefficient of resistance, R_u, the reinforcement ratio, ρ, and req'd. bar steel area, A_s, are:

$\boxed{R_u = 597}$ psi $\boxed{\rho = 0.011}$ $\boxed{A_s = 1.97}$ $\frac{in^2}{ft}$

For Span 2:

A_s (req'd) = 1.97 $\frac{in^2}{ft}$ (to satisfy Exterior Strip requirements)

A_s (prov'd) = 2.00 $\frac{in^2}{ft}$ (#9 at 6" c-c spacing) (to satisfy Interior Strip requirements)

Therefore, <u>use: #9 at 6" c-c spacing</u> (A_s = 2.00 $\frac{in^2}{ft}$) in both Interior and Exterior Strips.

E18-1.11.2.2 Check Crack Control

Following the procedure in E18-1.7.1.3, the crack control check was found to be <u>O.K.</u>

E18-1.11.2.3 Minimum Reinforcement Check

Following the procedure in E18-1.7.1.4, the minimum reinforcement check was found to be <u>O.K.</u>

E18-1.11.3 Negative Moment Reinforcement at Piers

<u>Examine at C/L of Pier</u>

E18-1.11.3.1 Design for Strength

Following the procedure in E18-1.7.1.1, using Strength I Limit State:

$$M_u = 1.25(M_{DC}) + 1.50(M_{DW}) + 1.75(M_{LL+IM}) \leq 0.90\, A_s\, f_s\, (d_s - a/2)$$

The negative live load moment shall be the largest caused by live loads (LL#1, LL#2 or LL#3). See Table E18.2 and E18.3 in E18-1.4 for description of live loads and dynamic load allowance (IM).

From Table E18.5, the largest live load moment is from (LL#2) and therefore at (C/L of Pier) :

M_{DC} = -72.6 kip-ft M_{DW} = -4.9 kip-ft M_{LL+IM} = -14.0 + (-45.0) = -59.0 kip-ft

$M_u := 1.25\cdot(-72.6) + 1.50\cdot(-4.9) + 1.75\cdot(-59.0)$ $\boxed{M_u = -201.3}$ kip-ft

$b := 12$ inches (for a one foot design width) and $\boxed{d_s = 25.5}$ in

The coefficient of resistance, R_u, the reinforcement ratio, ρ, and req'd. bar steel area, A_s, are:

$\boxed{R_u = 344}$ psi $\boxed{\rho = 0.0061}$ $\boxed{A_s = 1.87}$ $\frac{in^2}{ft}$

At C/L Pier:

A_s (req'd) = 1.87 $\frac{in^2}{ft}$ (to satisfy Exterior Strip requirements)

A_s (prov'd) = 1.88 $\frac{in^2}{ft}$ (#8 at 5" c-c spacing) (to satisfy Interior Strip requirements)

Therefore, <u>use: #8 at 5" c-c spacing</u> (A_s = 1.88 $\frac{in^2}{ft}$) in both Interior and Exterior Strips

E18-1.11.3.2 Check Crack Control

Following the procedure in E18-1.7.1.3, the crack control check was found to be <u>O.K.</u>

E18-1.11.3.3 Minimum Reinforcement Check

Following the procedure in E18-1.7.2.4, the minimum reinforcement check was found to be <u>O.K.</u>

<u>Edge Beam Reinforcement:</u>

The only location where Interior Strip reinforcement is not also placed in the Exterior Strip is in Span 1 and 3 for the bottom bars, as shown in Figure E18.13.

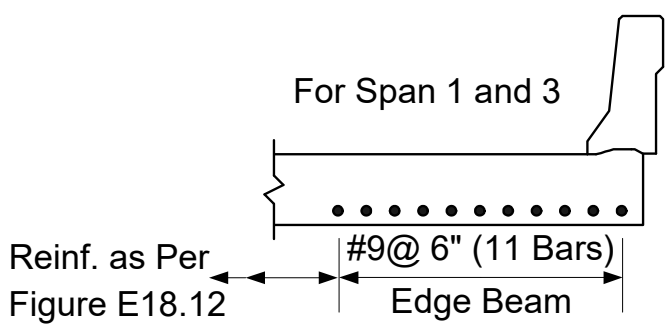

<u>Figure E18.13</u>

Exterior Strip Reinforcement

E18-1.11.4 Bar Steel Cutoffs

Select longitudinal reinforcement cutoff locations for an Exterior Strip.

Follow the procedure in E18-1.7.5, using reinforcement placed in the Exterior Strip. The

cutoff locations must meet crack control requirements (fatigue criteria is not applied to an Exterior Strip).

E18-1.11.4.1 Span 1 Positive Moment Reinforcement (Cutoffs)

It was found that 1/2 of the bars in the Exterior Strip may be cut at 10.5 (ft) from the C/L of pier. The bars in the Interior Strip are to be cut at 10.0 (ft) from the C/L of pier. In order to use the same bar mark for this reinforcement, cut 1/2 of all positive reinforcement in the span at 10.0 (ft) from the C/L of pier, if crack control criteria in Exterior Strip is satisfied. The remaining bars follow the layout as shown in Figure E18.12.

E18-1.11.4.1.1 Check Crack Control

Following the procedure in E18-1.7.1.3, the crack control check was found to be O.K.

E18-1.11.4.2 Span 2 Positive Moment Reinforcement (Cutoffs)

It was found that 1/2 of the bars in the Exterior Strip may be cut at 11.0 (ft) from the C/L of pier. The bars in the Interior Strip are to be cut at 11.5 (ft) from the C/L of pier. In order to use the same bar mark for this reinforcement, cut 1/2 of all positive reinforcement in the span at 11.0 (ft) from the C/L of each pier, if crack control criteria in Exterior Strip is satisfied. The remaining bars follow the layout as shown in Figure E18.12.

E18-1.11.4.2.1 Check Crack Control

Following the procedure in E18-1.7.1.3, the crack control check was found to be O.K.

E18-1.11.4.3 Span 1 Negative Moment Reinforcement (Cutoffs)

It was found that 1/2 of the bars in the Exterior Strip may be cut at 15.5 (ft) from the C/L of pier. The bars in the Interior Strip are to be cut at 14.5 (ft) from the C/L of pier. In order to use the same bar mark for this reinforcement, cut 1/2 of all negative reinforcement in the span at 15.5 (ft) from the C/L of pier, if crack control criteria in Exterior Strip is satisfied. The remaining bars follow the layout as shown in Figure E18.12.

E18-1.11.4.3.1 Check Crack Control

Following the procedure in E18-1.7.1.3, the crack control check was found to be O.K.

E18-1.11.4.4 Span 2 Negative Moment Reinforcement (Cutoffs)

It was found that 1/2 of the bars in the Exterior Strip may be cut at 13.5 (ft) from the C/L of pier. The bars in the Interior Strip are to be cut at 13.0 (ft) from the C/L of pier. In order to use the same bar mark for this reinforcement, cut 1/2 of all negative reinforcement in the span at 13.5

(ft) from the C/L of pier, if crack control criteria in Exterior Strip is satisfied. The remaining bars follow the layout as shown in Figure E18.12.

E18-1.11.4.4.1 Check Crack Control

Following the procedure in E18-1.7.1.3, the crack control check was found to be O.K.

E18-1.12 Transverse Distribution Reinforcement

The criteria for main reinforcement parallel to traffic is applied. The amount of transverse distribution reinforcement (located in bottom of slab) is to be determined as a percentage of the main reinforcing steel required for positive moment **LRFD [5.12.2.1]**.

Spans 1 & 3:

$$\text{Percentage} = \frac{100\%}{\sqrt{L}} \leq 50\% \quad \text{Max.} \quad (\text{L is the span length in feet})$$

Main positive reinforcement equals #9 at 7" c-c spacing ($A_s = 1.7 \frac{in^2}{ft}$)

$$\text{Percentage} = \frac{100\%}{\sqrt{38}} = 16.2\% < 50\% \quad \text{Max.}$$

$A_s := 0.162 \cdot (1.71)$ $\boxed{A_s = 0.28}$ $\frac{in^2}{ft}$

Therefore, use #5 at 12" c-c spacing $A_s = 0.31 \frac{in^2}{ft}$

Span 2:

Main positive reinforcement equals #9 at 6" c-c spacing ($A_s = 2.0 \frac{in^2}{ft}$)

$$\text{Percentage} = \frac{100\%}{\sqrt{51}} = 14.0\% < 50\% \quad \text{Max.}$$

$A_s := 0.140 \cdot (2.00)$ $\boxed{A_s = 0.28}$ $\frac{in^2}{ft}$

Therefore, use #5 at 12" c-c spacing $A_s = 0.31 \frac{in^2}{ft}$

Refer to Standard 18.01 for placement of distribution reinforcement. For simplicity, the distribution reinforcement has been placed as shown in Figure E18.12.

E18-1.13 Shrinkage and Temperature Reinforcement Check

Check shrinkage and temperature reinforcement criteria for the reinforcement selected in preceeding sections.

E18-1.13.1 Longitudinal and Transverse Distribution Reinforcement

The area of reinforcement (A_s) per foot, for shrinkage and temperature effects, on each face and in each direction shall satisfy: **LRFD [5.10.6]**

$$A_s \geq \frac{1.30 \cdot b \cdot (h)}{2 \cdot (b + h) \cdot f_y} \qquad \text{and} \qquad 0.11 \leq A_s \leq 0.60$$

Where:

A_s = area of reinforcement in each direction and each face $\left(\frac{in^2}{ft}\right)$

b = least width of component section (in.)

h = least thickness of component section (in.)

f_y = specified yield strength of reinforcing bars (ksi) $\leq$ 75 ksi

For cross-section of slab away from the haunch, the slab depth is 17 in., therefore:

$b := slab_{width}$ $\boxed{b = 510}$ in

$h := d_{slab}$ $\boxed{h = 17}$ in

$\boxed{f_y = 60}$ ksi

For each face, req'd A_s is:

$$A_s \geq \frac{1.30 \cdot (510) \cdot 17}{2 \cdot (510 + 17) \cdot 60} = 0.178 \ \frac{in^2}{ft} \quad \text{, therefore,} \quad 0.11 \leq A_s \leq 0.60 \quad \underline{\text{O.K.}}$$

For cross-section of slab at C/L of pier, the slab depth is 28 in., therefore:

$b := slab_{width}$ $\boxed{b = 510}$ in

$h := D_{haunch}$ $\boxed{h = 28}$ in

$\boxed{f_y = 60}$ ksi

For each face, req'd A_s is:

$$A_s \geq \frac{1.30 \cdot (510) \cdot 28}{2 \cdot (510 + 28) \cdot 60} = 0.288 \ \frac{in^2}{ft} \quad \text{, therefore,} \quad 0.11 \leq A_s \leq 0.60 \quad \underline{\text{O.K.}}$$

Shrinkage and temperature reinforcement shall not be spaced farther apart than 3.0 times the component thickness or 18 inches.

Max. spa = 3.0(17) = 51 in. or <u>18 in. governs</u>

In **LRFD [5.10.3.2]**, the maximum center to center spacing of adjacent bars is also 18 inches.

All longitudinal reinforcement (top/bottom) and transverse distribution reinforcement (bottom) in the slab exceeds A_s req'd. for each face, and does not exceed maximum spacing. O.K.

E18-1.14 Shear Check of Slab

Slab bridges designed for dead load and (HL-93) live load moments in conformance with **LRFD [4.6.2.3]** may be considered satisfactory in shear. O.K. per **LRFD [5.12.2.1]**

E18-1.15 Longitudinal Reinforcement Tension Check

Check the longitudinal reinforcement (in bottom of slab) located at the abutments for resistance to tension caused by shear **LRFD [5.7.3.5]**, using Strength I Limit State. Calculate shear from dead load and (HL-93) live load on interior and exterior strips. Assume a diagonal crack would start at the inside edge of the bearing area.

The concrete slab rests on an A1 (fixed) abutment, which has a width of 2.5 ft. For a 6 degree skew, the distance along the C/L of the bridge is 2.52 ft. Determine the distance D_{crack} from the end of the slab to the point at which the diagonal crack will intersect the bottom longitudinal reinforcement.

Assume the crack angle is: $\theta := 35$ degrees

The distance from the bottom of slab to the center of tensile reinforcement is 2.06 inches.

$$D_{crack} := (2.52) + \left(\frac{2.06}{12}\right)\cdot\frac{\cot(\theta)}{\cos(6)} \qquad \boxed{D_{crack} = 2.78} \text{ ft}$$

For an interior strip:

The longitudinal reinforcement provided is #9 at 7" c-c spacing ($1.71\ \frac{in^2}{ft}$)

The development length (ℓ_d) from (Table 9.9-2, Chapter 9) is 3'-9" (3.75 ft.)

The nominal tensile resistance (T_{nom}), of the longitudinal bars at the crack location is:

$$T_{nom} = A_s\cdot(f_y)\cdot\left[\frac{D_{crack} - (end_cover)}{dev_length}\right] \le A_s\cdot(f_y) = 102.6 \text{ kips}$$

$$T_{nom} := (1.71)\cdot 60.0\cdot\left(\frac{2.78\cdot 12 - 2}{3.75\cdot 12}\right) \qquad \boxed{T_{nom} = 71.5} \text{ kips}$$

The factored tension force (T_{fact}), from shear, to be resisted is from **LRFD [Eq'n. 5.7.3.5-2]**, where $V_s = V_p = 0$, is:

$$T_{fact} = \left(\frac{V_u}{\phi_v}\right)\cdot\cot(\theta)$$

Looking at E18-1.2: $\eta_i := 1.0$

and from Table E18.1: $\gamma_{DCmax} := 1.25$ $\gamma_{DWmax} := 1.50$ $\gamma_{LLstr1} := 1.75$ $\phi_v := 0.9$

$Q_i = V_{DC}, V_{DW}, V_{LL+IM}$ **LRFD [3.6.1.2, 3.6.1.3.3]**; shear due to applied loads as stated in E18-1.2

$Q = V_u = \eta_i [\gamma_{DCmax}(V_{DC}) + \gamma_{DWmax}(V_{DW}) + \gamma_{LLstr1}(V_{LL+IM})]$

$= 1.0 [1.25(V_{DC}) + 1.50(V_{DW}) + 1.75(V_{LL+IM})]$

Therefore:

$V_u = 1.25(V_{DC}) + 1.50(V_{DW}) + 1.75(V_{LL+IM})$ (Factored Load Equation)

The live load shear shall be the largest caused by live loads (LL#1 or LL#2). See Table E18.2 and E18.3 in E18-1.4 for description of live loads and dynamic load allowance (IM).

From the computer analysis, for a one foot design width:

$V_{DC} = 2.96$ kip $V_{DW} = 0.3$ kip $V_{LL+IM} = 0.94 + 5.68 = 6.62$ kip (LL#2)

$V_u := 1.25 \cdot (2.96) + 1.50 \cdot (0.3) + 1.75 \cdot (6.62)$ $\boxed{V_u = 15.74}$ kips (at C/L abutment)

$T_{fact} := \left(\frac{V_u}{\phi_v}\right) \cdot \cot(\theta)$ $\boxed{T_{fact} = 24.97}$ kips

Therefore: $T_{fact} = 24.97$ kips < $T_{nom} = 71.5$ kips O.K.

For simplicity, the value of V_u at the abutment centerline was used.

If the values for T_{fact} and T_{nom} were close, the procedure for determining the crack angle (θ) as outlined in **LRFD [5.7.3.4.2]** should be used.

The Exterior Strip was also examined and the longitudinal reinforcement was found to be satisfactory. O.K.

E18-1.16 Transverse Reinforcement in Slab over the Piers

The bridge in this example has a pier with (4) circular columns and a (2.5 ft x 2.5 ft) pier cap with rounded cap ends. (See Figure E18.14)

Out to out width of slab = $slab_{width}$ $\boxed{slab_{width} = 42.5}$ ft

Width of slab along skew = $slab_{skew} = \frac{42.5}{\cos(6deg)}$ $\boxed{slab_{skew} = 42.73}$ ft

Using a 6 inch offset from edge of slab to edge of pier cap per Standard 18.02 gives:

Length of Pier cap = cap_{length}

$$cap_{length} = 42.73 - 2\cdot\left(\frac{1.25+0.5}{\cos(6deg)} - 1.25\right) \qquad \boxed{cap_{length} = 41.71} \text{ ft}$$

E18-1.16.1 Dead Load Moments

Find the reaction, S_{DL} , (on a one foot slab width) at the pier due to (DC_{slab}) and ($DC_{1/2"WS}$). This dead load will be carried by the pier cap.

From the computer analysis, $S_{DL} := 12.4 \frac{kip}{ft}$ at the pier.

For a 2.5 ft by 2.5 ft pier cap: $Cap_{DL} := 1.0 \frac{kip}{ft}$

Therefore, the uniform dead load on the pier cap = PDL

$$PDL := S_{DL} + Cap_{DL} \qquad \boxed{PDL = 13.4} \frac{kip}{ft}$$

Calculate the dead load moments at columns (A,B,C & D), as shown in Figure E18.14, using the three-moment equation. The moments at columns (A & D) are equal, therefore:

$$M_A = \frac{1}{2}(PDL)\cdot L^2 \qquad M_A := \frac{1}{2}\cdot(13.4)\cdot 1.25^2 \qquad \boxed{M_A = 10.5} \text{ kip-ft} \qquad \boxed{M_D = 10.5} \text{ kip-ft}$$

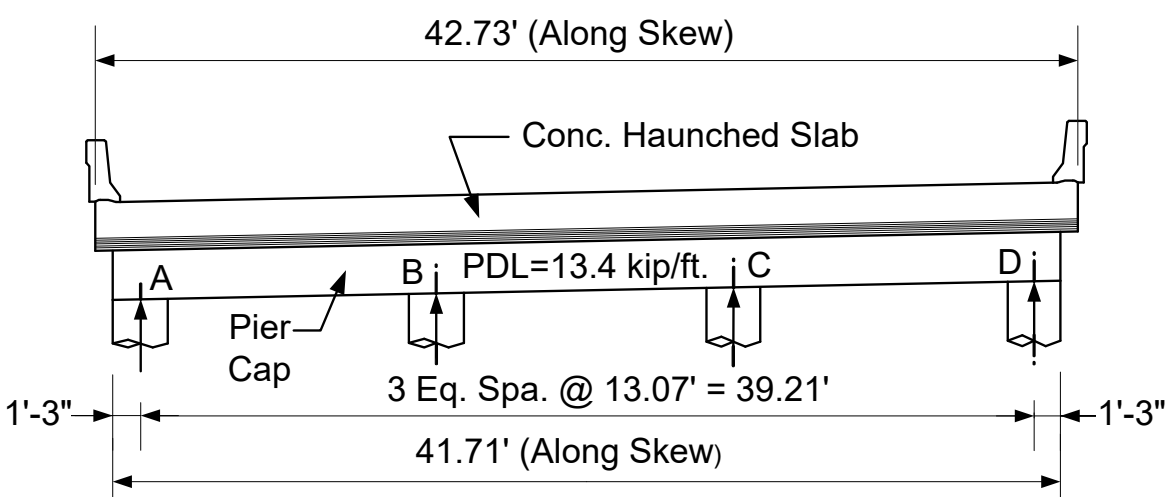

Figure E18.14

Section along C/L of Pier

Applying the three-moment equation for M_B gives values of:

$$\frac{6\cdot A\cdot a}{L} = \frac{6\cdot A\cdot b}{L} = \frac{(PDL)\cdot L^3}{4} \qquad \frac{(PDL)\cdot L^3}{4} = \frac{(13.4)\cdot 13.07^3}{4} = 7480 \text{ kip-ft}$$

The three-moment equation is: $M_A\cdot L_1 + 2\cdot M_B\cdot(L_1 + L_2) + M_c\cdot L_2 + 6\cdot\frac{A_1\cdot a_1}{L_1} + 6\frac{A_2\cdot b_2}{L_2} = 0$

Refer to "Strength of Materials" textbook for derivation of the three-moment equation.

Other methods such as influence tables or moment distribution can also be used to obtain the dead load moments.

If M_A is known and due to symmetry $M_B = M_C$; the above equation reduces to one unknown, M_B, as follows:

$$(-10.5)\cdot 13.07 + 2\cdot M_B\cdot(13.07 + 13.07) + M_B\cdot(13.07) + 7480 + 7480 = 0$$

Therefore, solving for M_B and knowing $M_C = M_B$: $\boxed{M_B = 226.8}$ kip-ft $\boxed{M_C = 226.8}$ kip-ft

Find the reaction (on a one foot slab width) at the pier due to (DC_{FWS}) and (DC_{para}). This dead load will be carried by the pier cap and a transverse beam represented by a portion of the slab over the pier.

From the computer analysis, FWS + para. (DL) = 1.9 $\frac{kip}{ft}$ at the pier.

Using the three-moment equation, $\boxed{M_A = 1.5}$ kip-ft $\boxed{M_D = 1.5}$ kip-ft

$\boxed{M_B = 32.2}$ kip-ft $\boxed{M_C = 32.2}$ kip-ft

The partial dead load moment diagram for "PDL" and "FWS + para (DL)" is shown in Figure E18.15.

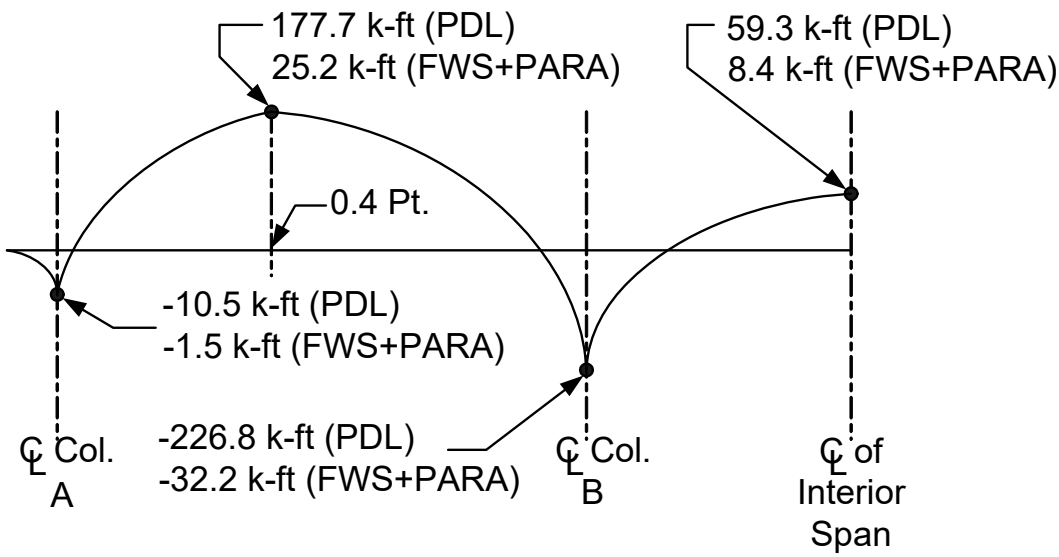

Figure E18.15

Dead Load Moment Diagram

E18-1.16.2 Live Load Moments

The maximum live load reactions at the pier shall be the largest caused by live loads (LL#1, LL#2 or LL#3). See Table E18.2 and E18.3 in E18-1.4 for description of live loads and dynamic load allowance (IM).

The reactions per lane (from computer analysis), before applying the dynamic load allowance (IM) are:

Design Lane Load = 35.1 kips

Design Tandem = 50.0 kips

Design Truck = 68.9 kips

90% Double Design Trucks = 62.1 kips

90% Design Lane Load = 31.6 kips

The largest live load reaction is from: Design Truck + Design Lane Load (LL#2)

The dynamic load allowance (IM) is 33% .

Design Truck Reaction (including IM = 33%):

$$1.33 \cdot (68.9) = 91.64 \ \frac{\text{kip}}{\text{truck}} \text{, therefore, Wheel Load} = \frac{91.64}{2} = 45.8 \ \frac{\text{kip}}{\text{wheel}}$$

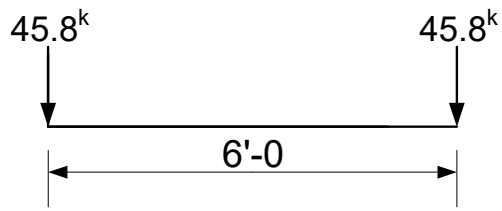

Figure E18.16

Design Truck Reaction

Design Lane Load Reaction (IM not applied to Lane Load):

$$\frac{(35.1)\,\text{kip}}{(10)_\text{ft lane}} = 3.51\,\frac{\text{kip}}{\text{ft}}$$

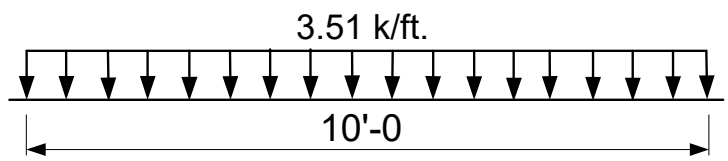

Figure E18.17

Design Lane Load Reaction

This live load is carried by the pier cap and a transverse beam represented by a portion of the slab over the pier.

Using influence lines for a 3-span continuous beam, the following results are obtained. The multiple presence factor (m) is 1.0 for (2) loaded lanes. **LRFD [3.6.1.1.2]**.

Calculate the positive live load moment, M_{LL+IM}, at (0.4 pt.) of Exterior Span

Because lane width of (10 ft) is almost equal to the span length (13.07 ft), for simplicity place uniform lane load reaction across the entire span, as shown in Figure E18.18.

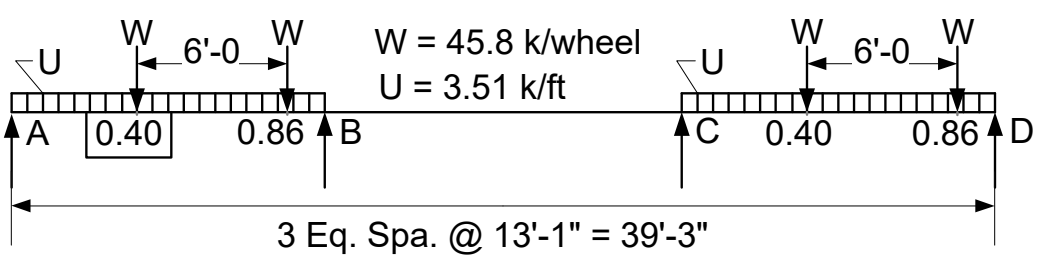

Figure E18.18

Live Load Placement for $+M_{LL+IM}$

M_{LL+IM} = (0.2042 + 0.0328 + 0.0102 + 0.0036)(45.8)(13.07) + (0.100)(3.51)(13.07)^2
= 150.1 + 60.0
= 210.1 kip-ft (Max + M_{LL+IM} in Ext. Span - 0.4 pt.)

Calculate the negative live load moment, M_{LL+IM}, at C/L of column B

Because lane width of (10 ft) is almost equal to the span length (13.07 ft), for simplicity place uniform lane load reaction across the entire span, as shown in Figure E18.19.

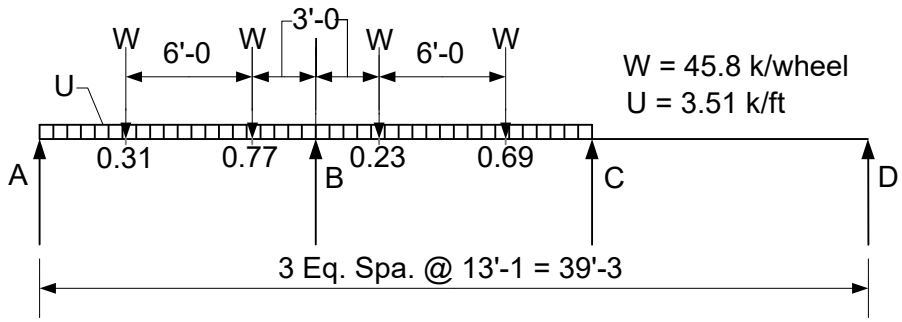

Figure E18.19

Live Load Placement for $-M_{LL+IM}$

M_{LL+IM} = (0.07448 + 0.08232 + 0.0679 + 0.0505)(45.8)(13.07) + (0.1167)(3.51)(13.07)^2
= 164.7 + 70.0
= 234.7 kip-ft (Max - M_{LL+IM} at C/L of column B)

It is assumed for this example that adequate shear transfer has been achieved **LRFD [5.7.4]** between transverse slab member and pier cap and that they will perform as a unit. Therefore, "FWS + para (DL)" and "LL + IM" will be acting on a member made up of the pier cap and the transverse slab member. Designer must insure adequate transfer if using this approach.

Calculate section width, b_{pos}, and effective depth, d_{pos}, in positive moment region, for the pier cap and the transverse slab member acting as a unit (See Figure E18.20):

b_{pos} = width of slab section = 1/2 center to center column spacing or 8 feet, whichever is smaller (See 18.4.7.2).

(C/L - C/L) column spacing x (1/2) = 6.5 ft < 8.0 ft $\boxed{b_{pos} = 78}$ in

$d_{pos} = D_{haunch}$ + cap depth - bott. clr. - stirrup dia. - 1/2 bar dia.

$d_{pos} := 28 + 30 - 1.5 - 0.625 - 0.44$ $\boxed{d_{pos} = 55.44}$ in

Calculate section width, b_{neg}, and effective depth, d_{neg}, in negative moment region, for the pier cap and the transverse slab member acting as a unit (See Figure E18.20):

b_{neg} = width of pier cap = 2.5 ft $\boxed{b_{neg} = 30}$ in

$d_{neg} = D_{haunch}$ + cap depth - top clr. - top bar dia. - 1/2 bar dia.

$d_{neg} := 28 + 30 - 2 - 1 - 0.38$ $\boxed{d_{neg} = 54.62}$ in

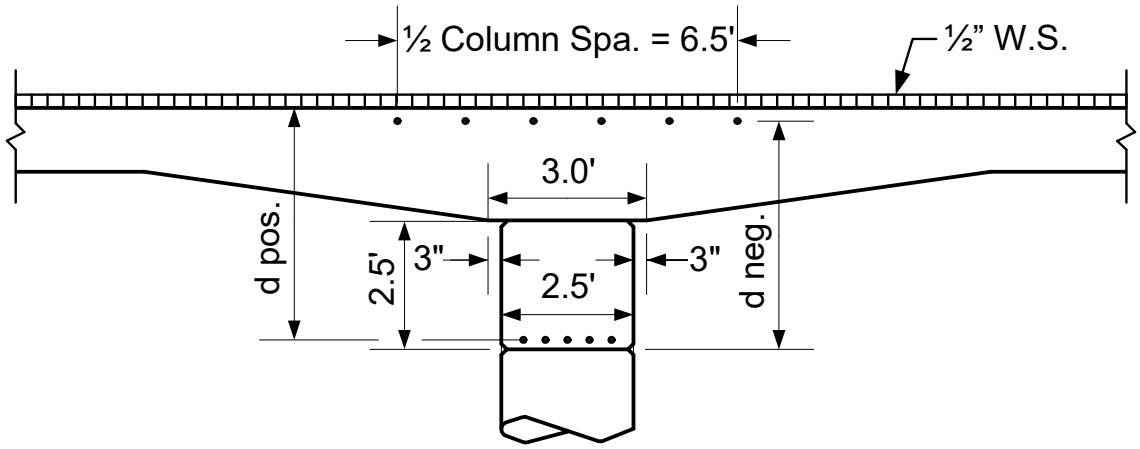

Figure E18.20

Details for Transverse Slab Member

E18-1.16.3 Positive Moment Reinforcement for Pier Cap

Examine the 0.4 point of the Exterior span

E18-1.16.3.1 Design for Strength

The dead load, PDL, carried by the pier cap is from (DC_{slab}) + ($DC_{1/2"WS}$) + Pier Cap DL.

Following the procedure in E18-1.7.1.1, using Strength I Limit State:

$M_u = 1.25(M_{DC}) + 1.50(M_{DW}) + 1.75(M_{LL+IM})$

M_{DC} = 177.7 kip-ft (See Figure E18.15)

$M_u := 1.25 \cdot (177.7)$ (contribution from PDL) $\boxed{M_u = 222.1}$ kip-ft

b_{cap} **=** 2.5ft (pier cap width) $\boxed{b_{cap} = 30}$ in

d_s = pier cap depth - bott. clr. - stirrup dia. - 1/2 bar dia.

$d_s := 30 - 1.5 - 0.625 - 0.44$ $\boxed{d_s = 27.43}$ in

The coefficient of resistance, R_u, the reinforcement ratio, ρ, and req'd. bar steel area, A_{s1}, are:

$R_u = 131$ psi $\rho = 0.00223$ $A_{s1} = 1.84$ in^2

The dead loads (FWS + para DL) and live load (LL+IM) are carried by the pier cap and the transverse slab member acting as a unit.

Split the (FWS + para DL) dead load moment (from Figure E18.15) into components:

$M_{DC} := 11.9$ kip-ft (moment from para DL)

$M_{DW} := 13.3$ kip-ft (moment from FWS)

$M_{LL+IM} = 210.1$ kip-ft

$M_u := 1.25 \cdot (11.9) + 1.50 \cdot (13.3) + 1.75 \cdot (210.1)$ $M_u = 402.5$ kip-ft

$b_{pos} = 78$ in (See E18-1.16.2)

$d_{pos} = 55.44$ in (See E18-1.16.2)

The coefficient of resistance, R_u, the reinforcement ratio, ρ, and req'd. bar steel area, A_{s2}, are:

$R_u = 22.4$ psi $\rho = 0.00037$ $A_{s2} = 1.6$ in^2

$A_{s_total} := A_{s1} + A_{s2}$ $A_{s_total} = 3.44$ in^2

E18-1.16.4 Negative Moment Reinforcement for Pier Cap

Examine at C/L of Column "B"

E18-1.16.4.1 Design for Strength

The dead load, PDL, carried by the pier cap is from (DC_{slab}) + ($DC_{1/2"WS}$) + Pier Cap DL.

Following the procedure in E18-1.7.1.1, using Strength I Limit State:

$M_u = 1.25(M_{DC}) + 1.50(M_{DW}) + 1.75(M_{LL+IM})$

$M_{DC} = 226.8$ kip-ft (See Figure E18.15)

$M_u := 1.25 \cdot (226.8)$ (contribution from PDL) $M_u = 283.5$ kip-ft

$b_{cap} = 30$ in (pier cap width)

d_s = pier cap depth - top clr. - stirrup dia. - 1/2 bar dia.

$d_s := 30 - 1.5 - 0.625 - 0.44$ $d_s = 27.43$ in

The coefficient of resistance, R_u, the reinforcement ratio, ρ, and req'd. bar steel area, A_s, are:

$R_u = 167$ psi $\rho = 0.00286$ $A_s = 2.35$ in^2

E18-1.16.5 Positive Moment Reinforcement for Transverse Slab Member

See Standard 18.01 for minimum reinforcement at this location

E18-1.16.6 Negative Moment Reinforcement for Transverse Slab Member

Examine at C/L of Column "B"

E18-1.16.6.1 Design for Strength

The dead loads (FWS + para DL) and live load (LL+IM) are carried by the pier cap and the transverse slab member acting as a unit.

Following the procedure in E18-1.7.1.1, using Strength I Limit State:

$M_u = 1.25(M_{DC}) + 1.50(M_{DW}) + 1.75(M_{LL+IM})$

Split the (FWS + para DL) dead load moment (from Figure E18.15) into components:

$M_{DC} := 15.2$ kip-ft (moment from para DL)

$M_{DW} := 17.0$ kip-ft (moment from FWS)

$M_{LL+IM} = 234.7$ kip-ft

$M_u := 1.25 \cdot (15.2) + 1.50 \cdot (17.0) + 1.75 \cdot (234.7)$ $M_u = 455.2$ kip-ft

$b_{neg} = 30$ in (See E18-1.16.2)

$d_{neg} = 54.62$ in (See E18-1.16.2)

The coefficient of resistance, R_u, the reinforcement ratio, ρ, and req'd. bar steel area, A_s, are:

$R_u = 67.8$ psi $\rho = 0.00114$ $A_s = 1.87$ in^2

In E18-1.16.8, check to see if this bar area meets the minimum reinforcement criteria. Then the bar size and spacing can be selected.

E18-1.16.7 Shear Check of Slab at the Pier

Check the shear (reaction) in the slab at the pier, using Strength I Limit State.

Due to the geometry and loading, stirrups are generally not required or recommended.

Looking at E18-1.2: $\eta_i := 1.0$

and from Table E18.1: $\gamma_{DCmax} := 1.25$ $\gamma_{DWmax} := 1.50$ $\gamma_{LLstr1} := 1.75$ $\phi_v := 0.9$

$Q_i = V_{DC}, V_{DW}, V_{LL+IM}$ **LRFD [3.6.1.2, 3.6.1.3.3]**; shear (reactions) due to applied loads as stated in E18-1.2

$Q = V_u = \eta_i\,[\gamma_{DCmax}(V_{DC}) + \gamma_{DWmax}(V_{DW}) + \gamma_{LLstr1}(V_{LL+IM})]$

$= 1.0\,[1.25(V_{DC}) + 1.50(V_{DW}) + 1.75(V_{LL+IM})]$

$V_r = \phi_v \cdot V_n$

Therefore: $V_u \le V_r$ (Limit States Equation)

$V_u = 1.25(V_{DC}) + 1.50(V_{DW}) + 1.75(V_{LL+IM}) \le \phi_v V_n = V_r$

Find the dead load reactions at the Pier:

From the computer analysis, for a one foot design width:

V_{DC1} = reaction from (DC_{slab}) + ($DC_{1/2"WS}$) = 12.4 kip/ft

V_{DC2} = reaction from (DC_{para}) = 0.9 kip/ft

Therefore, total reaction (V_{DC}) from these loads across the slab width is:

$V_{DC} := (12.4 + 0.9)\cdot 42.5$ $\boxed{V_{DC} = 565.3}$ kips

V_{DW} = reaction from (DW_{FWS}) future wearing surface = 1.0 kip/ft

Therefore, total reaction (V_{DW}) from this load across the slab width is:

$V_{DW} := 1.0\cdot(42.5)$ $\boxed{V_{DW} = 42.5}$ kips

Find the live load reaction at the Pier:

For live load, use (3) design lanes **LRFD [3.6.1.1.1]** and multiple presence factor (m = 0.85) **LRFD [3.6.1.1.2]**.

From E18-1.16.2: Design Truck Reaction= 91.64 $\frac{\text{kip}}{\text{truck}}$ (for one lane)

Design Lane Load Reaction= 35.1 $\frac{\text{kip}}{\text{lane}}$ (for one lane)

Therefore, total reaction (V_{LL+IM}) from these loads is:

V_{LL+IM} = (91.64 + 35.1)(3 design lanes)(0.85) $\boxed{V_{LL+IM} = 323.2}$ kips

$V_u := 1.25\cdot(565.3) + 1.50\cdot(42.5) + 1.75\cdot(323.2)$ $\boxed{V_u = 1336}$ kips

Check for shear (two-way action): **LRFD [5.12.8.6.3]**

$$V_r = \phi_v \cdot V_n = \phi_v \cdot \left(0.063 + \frac{0.126}{\beta_c}\right) \cdot \lambda \sqrt{f'_c} \cdot (b_o) \cdot (d_v) \le \phi_v \cdot (0.126) \cdot \lambda \sqrt{f'_c} \cdot (b_o) \cdot (d_v)$$

Where:

β_c = ratio of long side to short side of the rectangle through which reaction force is transmitted $\approx$ 41.71 ft. / 2.5 ft. = 16.7

d_v = effective shear depth = dist. between resultant tensile & compressive forces $\approx$ 24 in.

b_o = perimeter of the critical section $\approx$ 1109 in.

λ = concrete density modification factor ; for normal weight conc. = 1.0, **LRFD [5.4.2.8]**

Therefore, $V_r := \phi_v \cdot \left(0.063 + \frac{0.126}{\beta_c}\right) \cdot \sqrt{f'_c} \cdot (b_o) \cdot d_v$ $\boxed{V_r = 3380}$ kips

but $\le \phi_v \cdot 0.126 \cdot \sqrt{f'_c} \cdot (b_o) \cdot d_v$ = 6036 kips

Therefore, V_u = 1336 kips < V_r = 3380 kips <u>O.K.</u>

Note: Shear check and shear reinforcement design for the pier cap is not shown in this example. Also crack control criteria, minimum reinforcement checks, and shrinkage and temperature reinforcement checks are not shown for the pier cap.

E18-1.16.8 Minimum Reinforcement Check for Transverse Slab Member

Check the negative moment reinforcement (at interior column) for minimum reinforcement criteria.

The amount of tensile reinforcement shall be adequate to develop a factored flexural resistance (M_r), or moment capacity, at least equal to the lesser of: **LRFD [5.6.3.3]**

M_{cr} (or) $1.33M_u$

from E18-1.7.1.4, $M_{cr} = 1.1(f_r)\frac{I_g}{c}$

Where:

$f_r = 0.24\lambda\sqrt{f'_c}$ = modulus of rupture (ksi) **LRFD [5.4.2.6]**

$f_r = 0.24\sqrt{4}$ λ = 1.0 (normal wgt. conc.) **LRFD [5.4.2.8]** $\boxed{f_r = 0.48}$ ksi

h = pier cap depth + D_{haunch} (section depth) $\boxed{h = 58}$ in

b_{cap} = pier cap width $\boxed{b_{cap} = 30}$ in

$I_g := \frac{1}{12} \cdot b_{cap} \cdot h^3$ (gross moment of inertia) $\boxed{I_g = 487780}$ in^4

$c := \frac{h}{2}$ (section depth/2) $\boxed{c = 29}$ in

$M_{cr} = \frac{1.1 f_r \cdot (I_g)}{c} = \frac{1.1 \cdot 0.48 \cdot (487780)}{29(12)}$ $\boxed{M_{cr} = 740.1}$ kip-ft

$1.33 \cdot M_u = 605.4$ kip-ft , where M_u was calculated for Strength Design in E18-1.16.6.1 and (M_u = 455.2 kip-ft)

1.33 M_u controls because it is less than M_{cr}

Recalculating requirements for (New moment = $1.33 \cdot M_u$ = 605.4 kip-ft)

$\boxed{b_{neg} = 30}$ in (See E18-1.16.2)

$\boxed{d_{neg} = 54.62}$ in (See E18-1.16.2)

Calculate R_u, coefficient of resistance:

$R_u = \frac{M_u}{\phi f \cdot (b_{neg}) \cdot d_{neg}^2}$ $R_u := \frac{605.4 \cdot (12) \cdot 1000}{0.9(30) \cdot 54.62^2}$ $\boxed{R_u = 90.2}$ psi

Solve for ρ, reinforcement ratio, using Table 18.4-3 (R_u vs ρ) in 18.4.13;

$\rho := 0.00152$

$A_s = \rho \cdot (b_{neg}) \cdot d_{neg}$ $A_s := 0.00152 \cdot (30) 54.62$ $\boxed{A_s = 2.49}$ in^2

Place this reinforcement in a width, centered over the pier, equal to 1/2 the center to center column spacing or 8 feet, whichever is smaller. Therefore, width equals 6.5 feet.

Therefore, 2.49 in^2/6.5 ft. = 0.38 in^2/ft. Try <u>#5 at 9" c-c spacing</u> for a 6.5 ft. transverse width over the pier. This will provide (A_s = 2.79 in^2) in a 6.5 ft. width.

Calculate the depth of the compressive stress block

Assume $f_s = f_y$ (See 18.3.3.2.1) ; for f'_c = 4.0 ksi : $\alpha_1 := 0.85$ and $\beta_1 = 0.85$

$a = \frac{A_s \cdot f_y}{\alpha_1 \cdot f'_c \cdot b_{neg}}$ $a := \frac{2.79 \cdot (60)}{0.85 \cdot (4.0) \cdot 30}$ $\boxed{a = 1.64}$ in

If $\frac{c}{d_s} \le 0.6$ for (f_y = 60 ksi) **LRFD [5.6.2.1]**, then reinforcement has yielded and the assumption is correct.

$\beta_1 := 0.85$ $\quad c := \frac{a}{\beta_1}$ $\quad \boxed{c = 1.93}$ in

$d_s := d_{neg}$ $\quad \boxed{d_s = 54.62}$ in

$\frac{c}{d_s} = 0.04 < 0.6$ therefore, the reinforcement will yield.

$$M_r = 0.90 \cdot A_s \cdot f_y \cdot \left(d_s - \frac{a}{2}\right)$$

$$M_r := 0.9 \cdot (2.79) \cdot 60.0 \cdot \left(\frac{54.62 - \frac{1.64}{2}}{12}\right) \qquad \boxed{M_r = 675.5} \text{ kip-ft}$$

Therefore, 1.33(M_u) = 605.4 kip-ft < M_r = 675.5 kip-ft O.K.

E18-1.16.9 Crack Control Check for Transverse Slab Member

Check the negative moment reinforcement (at interior column).

This criteria shall be checked when tension (f_T) in the cross-section exceeds 80% of the modulus of rupture (f_r), specified in **LRFD [5.4.2.6]**.

Following the procedure in E18-1.7.1.3, using Service I Limit State:

$\boxed{f_r = 0.48}$ ksi $\quad \boxed{f_{r80\%} = 0.38}$ ksi $\quad \boxed{c = 29}$ in $\quad \boxed{I_g = 487780}$ in^4

$M_s = 1.0(M_{DC}) + 1.0(M_{DW}) + 1.0(M_{LL+IM})$

Using same moments selected for Strength Design in E18-1.16.6, at (interior column), provides

M_{DC} = 15.2 kip-ft $\quad M_{DW}$ = 17.0 kip-ft $\quad M_{LL+IM}$ = 234.7 kip-ft

$M_s := 1.0 \cdot (15.2) + 1.0(17.0) + 1.0 \cdot (234.7)$ $\quad \boxed{M_s = 266.9}$ kip-ft

$f_T = \frac{M_s \cdot c}{I_g}$ $\quad f_T := \frac{266.9 \cdot (29) \cdot 12}{487780}$ $\quad \boxed{f_T = 0.19}$ ksi

f_T =0.19 ksi < 80% f_r = 0.38 ksi; therefore, crack control criteria check is not req'd.

Therefore, crack control criteria for transverse slab reinforcement is O.K.

Use: #5 at 9" c-c spacing for a 6.5 ft. transverse width over the pier.

The transverse slab member reinforcement (top/bottom), and the remainder of the transverse reinforcement is shown in Figure E18.21.

E18-1.17 Shrinkage and Temperature Reinforcement Check

Check shrinkage and temperature reinforcement criteria for the remaining transverse reinforcement.

E18-1.17.1 Transverse Slab Member and Other Transverse Reinforcement

Following the procedure in E18-1.13.1:

All transverse slab member reinforcement (top/bottom) and remainder of transverse reinforcement in slab exceeds A_s req'd. for each face, and does not exceed maximum spacing.

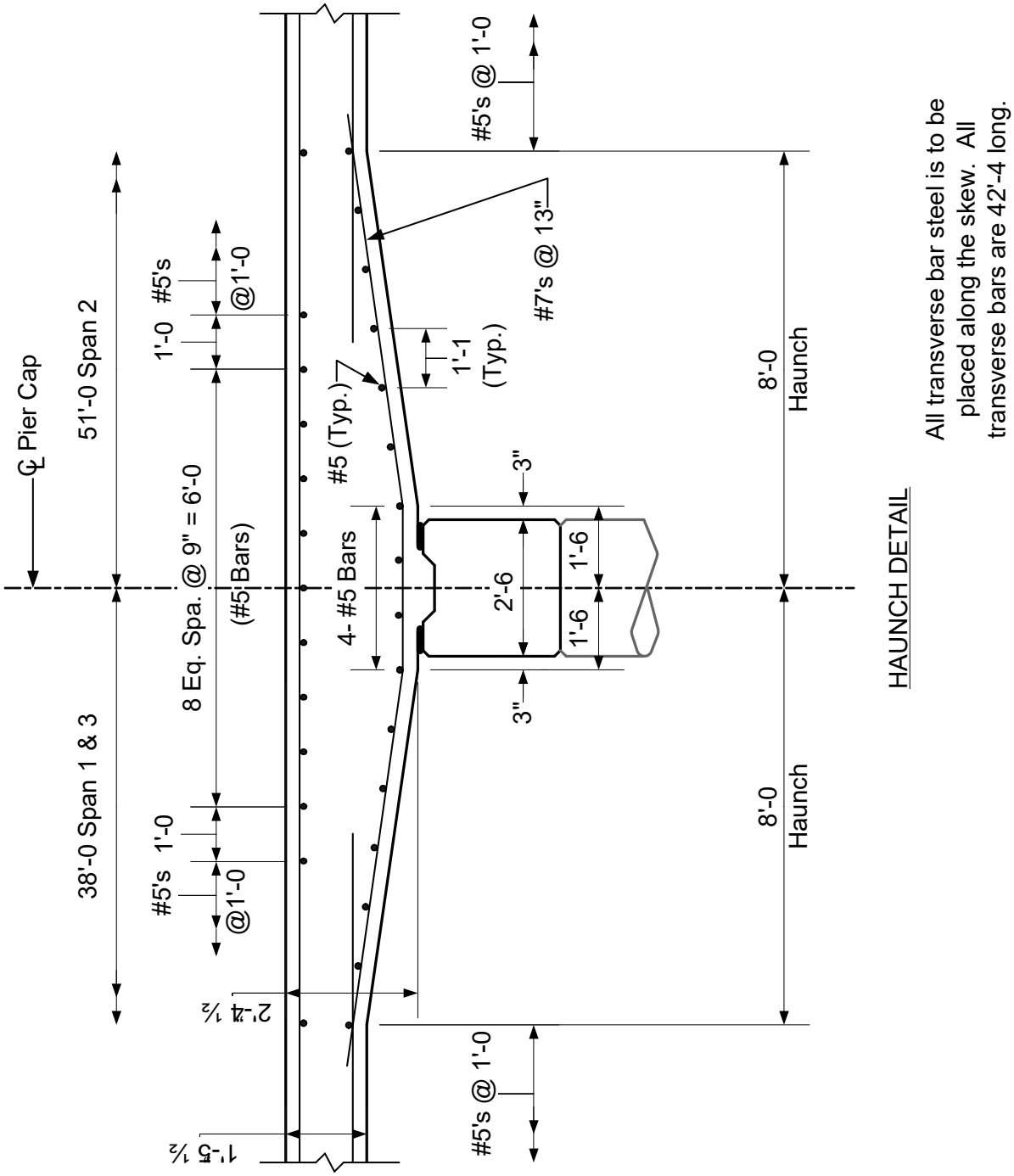

Figure E18.21

Haunch Detail

E18-1.18 Check for Uplift at Abutments

Check for uplift at the abutments, using Strength I Limit State **LRFD [C3.4.1, 5.5.4.3, 14.6.1]**

The maximum uplift at the abutments from live load is obtained from the following influence line and shall be the largest caused by live loads (LL#1 or LL#2) in each design lane (See Figure E18.22). See Table E18.2 and E18.3 in E18-1.4 for description of live loads and dynamic load allowance (IM).

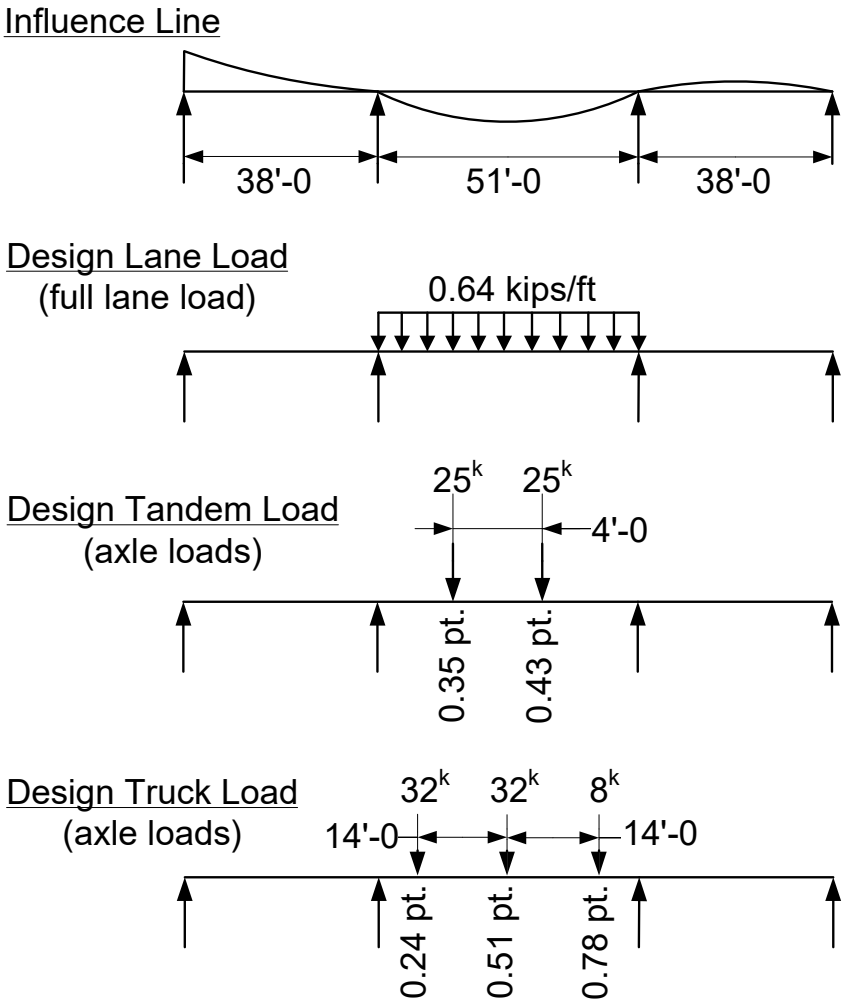

Figure E18.22

Influence Line and Live Loads for Uplift

Tables of influence line coefficients are used to calculate live load reactions at the abutment. The reactions per lane, before applying the dynamic load allowance (IM) are:

Design Lane Load Reaction = (0.1206)(0.64)(38.0) = 2.9 kips

Design Truck Reaction = (0.1290 + 0.1360)(32) + (0.060)(8) = 9.0 kips

Design Tandem Reaction = (0.149 + 0.148)(25) = 7.4 kips

The largest live load reaction is from: Design Truck + Design Lane Load (LL#2)

The dynamic load allowance (IM) is 33% ; (applied to Design Truck)

Therefore, total live load reaction (R_{LL+IM}) from these loads is:

R_{LL+IM} = 9.0(1.33) + 2.9 = 14.87 kips (for one lane)

Find the dead load reactions at the abutment:

From the computer analysis, for a <u>one foot design width</u>:

R_{DC1} = reaction from (DC_{slab}) + ($DC_{1/2"WS}$) = 2.8 kip/ft

R_{DC2} = reaction from (DC_{para}) = 0.3 kip/ft

Therefore, total dead load reaction (R_{DC}) from these loads across the slab width is:

$R_{DC} := (2.8 + 0.3) \cdot 42.5$ $\boxed{R_{DC} = 131.75}$ kips

Total dead load reaction ignores (DW_{FWS}) because it reduces uplift.

Check uplift for Strength I Limit State:

Looking at E18-1.2: $\eta_i := 1.0$ and Table E18.1: $\gamma_{DCmin} := 0.90$ $\gamma_{LLstr1} := 1.75$

Dead Load Reaction at Abutments = $\gamma_{DCmin}(R_{DC})$ = 0.90(131.75) = <u>118.6 kips</u>

Uplift from Live Load = $\gamma_{LLstr1}(R_{LL+IM})$(# lanes loaded)(m)

Use (3) design lanes **LRFD [3.6.1.1.1]** and multiple presence factor (m = 0.85) **LRFD [3.6.1.1.2]**

Uplift from Live Load = 1.75(14.87)(3 design lanes)(0.85) = <u>66.4 kips</u>

Therefore, Uplift = 66.4 kips < Dead Load Reaction = 118.6 kips <u>O.K.</u>

Because dead load reaction at abutments exceeds uplift from live load, the existing dowels (#5 at 1'-0 spa.) are adequate. (See Standard 12.01)

E18-1.19 Deflection Joints and Construction Joints

Locate deflection joints for concrete slab structures according to Standard 30.07. Refer to Standards 18.01/18.02 for recommended construction joint guidelines.

Note: See Standard 18.01/18.02 for required notes and other details

This page intentionally left blank.

Table of Contents

19.1 Introduction 3
19.1.1 Pretensioning 3
19.1.2 Post-Tensioning 3
19.2 Basic Principles 4
19.3 Pretensioned Member Design 7
19.3.1 Design Strengths 7
19.3.2 Loading Stages 8
19.3.2.1 Prestress Transfer 8
19.3.2.2 Losses 8
19.3.2.2.1 Elastic Shortening 8
19.3.2.2.2 Time-Dependent Losses 9
19.3.2.2.3 Fabrication Losses 9
19.3.2.3 Service Load 10
19.3.2.3.1 Prestressed I-Girder 10
19.3.2.3.2 Prestressed Box Girder 11
19.3.2.4 Factored Flexural Resistance 11
19.3.2.5 Fatigue Limit State 12
19.3.3 Design Procedure 12
19.3.3.1 Prestressed I-Girder Member Spacing 12
19.3.3.2 Prestressed Box Girder Member Spacing 12
19.3.3.3 Dead Load 13
19.3.3.4 Live Load 13
19.3.3.5 Live Load Distribution 13
19.3.3.6 Dynamic Load Allowance 14
19.3.3.7 Prestressed I-Girder Deck Design 14
19.3.3.8 Composite Section 14
19.3.3.9 Design Stress 15
19.3.3.10 Prestress Force 16
19.3.3.11 Service Limit State 17
19.3.3.12 Raised, Draped or Partially Debonded Strands 18
19.3.3.12.1 Raised Strand Patterns 19
19.3.3.12.2 Draped Strand Patterns 19

19.3.3.12.3 Partially Debonded Strand Patterns 21
19.3.3.13 Strength Limit State 22
19.3.3.13.1 Factored Flexural Resistance 22
19.3.3.13.2 Minimum Reinforcement 25
19.3.3.14 Non-prestressed Reinforcement 26
19.3.3.15 Horizontal Shear Reinforcement 26
19.3.3.16 Web Shear Reinforcement 28
19.3.3.17 Continuity Reinforcement 31
19.3.3.18 Camber and Deflection 33
19.3.3.18.1 Prestress Camber 34
19.3.3.18.2 Dead Load Deflection 37
19.3.3.18.3 Residual Camber 38
19.3.4 Prestressed I-Girder Deck Forming 38
19.3.4.1 Equal-Span Continuous Structures 39
19.3.4.2 Unequal Spans or Curve Combined With Tangent 40
19.3.5 Construction Joints 40
19.3.6 Strand Types 40
19.3.7 Construction Dimensional Tolerances 41
19.3.8 Prestressed I-Girder Sections 41
19.3.8.1 Prestressed I-Girder Standard Strand Patterns 45
19.3.9 Prestressed Box Girders Post-Tensioned Transversely 45
19.3.9.1 Available Prestressed Box Girder Sections and Maximum Span Lengths 46
19.3.9.2 Decks and Overlays 47
19.3.9.3 Grout between Prestressed Box Girders 47
19.4 Field Adjustments of Pretensioning Force 48
19.5 References 50
19.6 Design Examples 51

19.1 Introduction

This chapter provides information intended for prestressed I-girders. Prestressed box girders and general prestressed concrete guidelines are also included in this chapter.

The definition of prestressed concrete as given by the ACI Committee on Prestressed Concrete is:

> "Concrete in which there has been introduced internal stresses of such magnitude and distribution that the stresses resulting from given external loadings are counteracted to a desired degree. In reinforced concrete members the prestress is commonly introduced by tensioning the steel reinforcement."

This internal stress is induced into the member by either of the following prestressing methods.

19.1.1 Pretensioning

In pretensioning, the tendons are first stressed to a given level and then the concrete is cast around them. The tendons may be composed of wires, bars or strands.

The most common system of pretensioning is the long line system, by which a number of units are produced at once. First the tendons are stretched between anchorage blocks at opposite ends of the long stretching bed. Next the spacers or separators are placed at the desired member intervals, and then the concrete is placed within these intervals. When the concrete has attained a sufficient strength, the steel is released and its stress is transferred to the concrete via bond.

19.1.2 Post-Tensioning

In post-tensioning, the concrete member is first cast with one or more post-tensioning ducts or tubes for future insertion of tendons. Once the concrete is sufficiently strong, the tendons are stressed by jacking against the concrete. When the desired prestress level is reached, the tendons are locked under stress by means of end anchorages or clamps. Subsequently, the duct is filled with grout to protect the steel from corrosion and give the added safeguard of bond.

In contrast to pretensioning, which is usually incorporated in precasting (casting away from final position), post-tensioning lends itself to cast-in-place construction.

19.2 Basic Principles

This section defines the internal stress that results from either prestressing method.

First consider the simple beam shown in Figure 19.2-1.

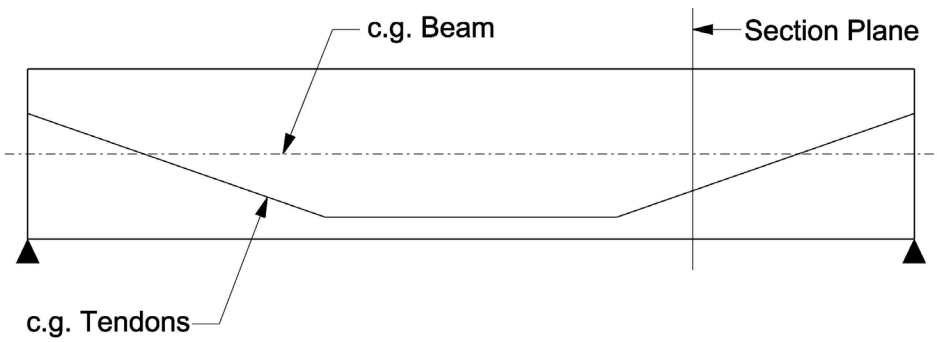

Figure 19.2-1
Simple Span Prestressed Concrete Beam

The horizontal component, P, of the tendon force, F, is assumed constant at any section along the length of the beam.

Also, at any section of the beam the forces in the beam and in the tendon are in equilibrium. Forces and moments may be equated at any section.

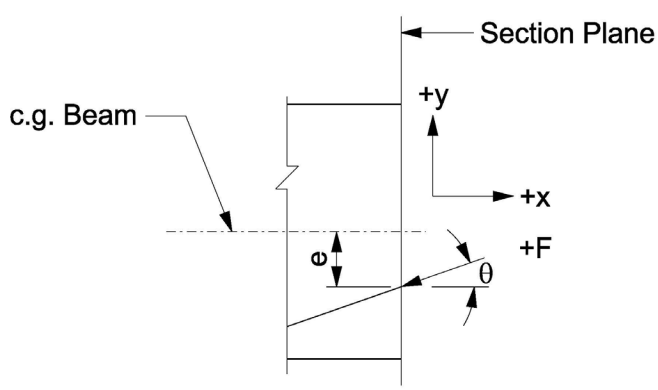

Figure 19.2-2
Assumed Sign Convention for Section Forces

The assumed sign convention is as shown in Figure 19.2-2 with the origin at the intersection of the section plane and the center of gravity (centroidal axis) of the beam. This convention indicates compression as positive and tension as negative.

The eccentricity of the tendon can be either positive or negative with respect to the center of gravity; therefore it is unsigned in the general equation. The reaction of the tendon on the beam is always negative; therefore the horizontal component is signed as:

$$P = F\cos\theta$$

Then, by equating forces in the x-direction, the reaction, P, of the tendon on the concrete produces a compressive stress equal to:

$$f_1 = \frac{P}{A}$$

Where:

A = Cross-sectional area of the beam

Since the line of action of the reaction, P, is eccentric to the centroidal axis of the beam by the amount e, it produces a bending moment.

$$M = Pe$$

This moment induces stresses in the beam given by the flexure formula:

$$f_2 = \frac{My}{I} = \frac{Pey}{I}$$

Where:

y = Distance from the centroidal axis to the fiber under consideration, with an unsigned value in the general equations

I = Moment of inertia of the section about its centroidal axis

The algebraic sum of f_1 and f_2 yields an expression for the total prestress on the section when the beam is not loaded.

$$f_p = f_1 + f_2 = \frac{P}{A} + \frac{Pey}{I}$$

Now, by substituting $I = Ar^2$, where r is the radius of gyration, into the above expression and arranging terms, we have:

$$f_p = \frac{P}{A}\left(1 + \frac{ey}{r^2}\right)$$

These stress conditions are shown in Figure 19.2-3.

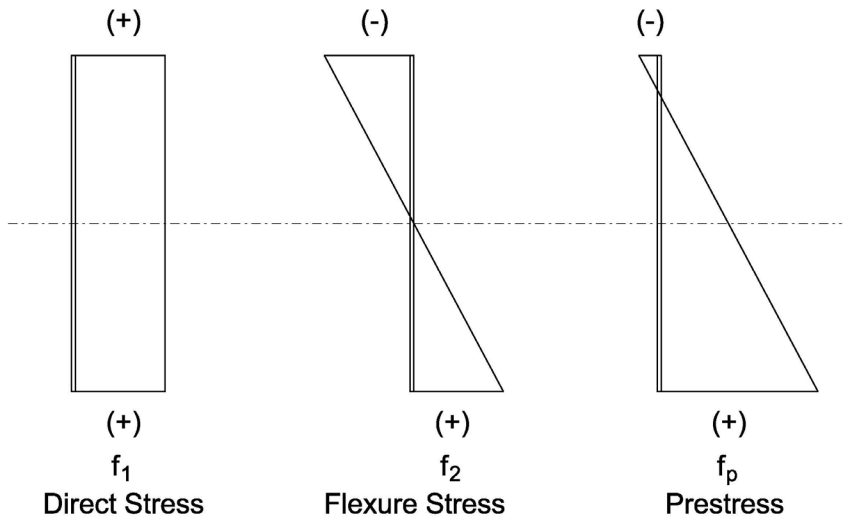

Figure 19.2-3
Calculation of Concrete Stress Due to Prestress Force

Finally, we equate forces in the y-direction which yields a shear force, V, over the section of the beam due to the component of the tendon reaction.

$$V = F \sin\theta = P \tan\theta$$

19.3 Pretensioned Member Design

This section outlines several important considerations associated with the design of conventional pretensioned members.

19.3.1 Design Strengths

The typical specified design strengths for pretensioned members are:

Prestressed I-girder concrete:	f'_c	= 6 to 8 ksi
Prestressed box girder concrete:	f'_c	= 5 ksi
Prestressed concrete (at release):	f'_{ci}	= 0.80 to 0.85 $f'_c \leq$ 6.8 ksi
Deck and diaphragm concrete:	f'_c	= 4 ksi
Prestressing steel:	f_{pu}	= 270 ksi
Grade 60 reinforcement:	f_y	= 60 ksi

The *actual required* compressive strength of the concrete at prestress transfer, f'_{ci}, is to be stated on the plans.

WisDOT policy item:

For prestressed I-girders, the use of concrete with strength greater than 8 ksi is only allowed with the prior approval of the BOS Development Section. Occasional use of strengths up to 8.5 ksi may be allowed. Strengths exceeding these values are difficult for local fabricators to consistently achieve as the coarse aggregate strength becomes the controlling factor.

For prestressed box girders, the use of concrete with strength greater than 5 ksi is only allowed with prior approval of the BOS Development Section.

The use of 8 ksi concrete for prestressed I-girders and 6.8 ksi for f'_{ci} still allows the fabricator to use a 24-hour cycle for girder fabrication. There are situations in which higher strength concrete in the prestressed I-girders may be considered for economy, provided that f'_{ci} does not exceed 6.8 ksi. Higher strength concrete may be considered if the extra strength is needed to avoid using a less economical superstructure type or if a shallower girder can be provided and its use justified for sufficient reasons (min. vert. clearance, etc.) Using higher strength concrete to eliminate a girder line is not the preference of the Bureau of Structures. It is often more economical to add an extra girder line than to use debonded strands with the minimum number of girder lines. After the number of girders has been determined, adjustments in girder spacing should be investigated to see if slab thickness can be minimized and balance between interior and exterior girders optimized.

Prestressed I-girders below the required 28-day concrete strength (or 56-day concrete strength for f'_c = 8 ksi) will be accepted if they provide strength greater than required by the design and at the reduction in pay schedule in the *Wisconsin Standard Specifications for Highway and Structure Construction*.

Low relaxation prestressing strands are required.

19.3.2 Loading Stages

The loads that a member is subjected to during its design life and those stages that generally influence the design are discussed in **LRFD [5.9]** and in the following sections. The allowable stresses at different loading stages are defined in **LRFD [5.9.2.2]** and **LRFD [5.9.2.3]**.

19.3.2.1 Prestress Transfer

Prestress transfer is the initial condition of prestress that exists immediately following the release of the tendons (transfer of the tendon force to the concrete). The eccentricity of the prestress force produces an upward camber. In addition, a stress due to the dead load of the member itself is also induced. This is a stage of temporary stress that includes a reduction in prestress due to elastic shortening of the member.

19.3.2.2 Losses

After elastic shortening losses, the external loading is the same as at prestress transfer. However, the internal stress due to the prestressing force is further reduced by losses resulting from relaxation due to creep of the prestressing steel together with creep and shrinkage of the concrete. It is assumed that all losses occur prior to application of service loading.

LRFD [5.9.3] provides guidance about prestress losses for both pretensioned and post-tensioned members. This section presents a refined and approximate method for the calculation of time-dependent prestress losses such as concrete creep and shrinkage and prestressing steel relaxation.

<u>WisDOT policy item:</u>

WisDOT policy is to use the approximate method described in **LRFD [5.9.3.3]** to determine time-dependent losses, since this method does not require the designer to assume the age of the concrete at the different loading stages.

Losses for pretensioned members that are considered during design are listed in the following sections.

19.3.2.2.1 Elastic Shortening

Per **LRFD [5.9.3.2.3a]**, the loss due to elastic shortening, Δf_{pES1} (ksi), in pretensioned concrete members shall be taken as:

$$\Delta f_{pES1} = \frac{E_p}{E_{ct}} f_{cgp}$$

Where:

E_p	=	Modulus of elasticity of prestressing steel = 28,500 ksi **LRFD [5.4.4.2]**
E_{ct}	=	Modulus of elasticity of concrete at transfer or time of load application in ksi (see 19.3.3.8)
f_{gcp}	=	Concrete stress at the center of gravity of prestressing tendons due to the prestressing force immediately after transfer and the self-weight of the member at the section of maximum moment (ksi)

19.3.2.2.2 Time-Dependent Losses

Per **LRFD [5.9.3.3],** an estimate of the long-term losses due to steel relaxation as well as concrete creep and shrinkage on standard precast, pretensioned members shall be taken as:

$$\Delta f_{pLT} = 10.0\frac{f_{pi}A_{ps}}{A_g}\gamma_h\gamma_{st} + 12.0\gamma_h\gamma_{st} + \Delta f_{pR}$$

Where:

$$\gamma_h = 1.7 - 0.01H$$

$$\gamma_{st} = \frac{5}{(1+f'_{ci})}$$

f_{pi}	=	Prestressing steel stress immediately prior to transfer (ksi)
H	=	Average annual ambient relative humidity in %, taken as 72% in Wisconsin
Δf_{pR}	=	Relaxation loss estimate taken as 2.4 ksi for low relaxation strands or 10.0 ksi for stress-relieved strands (ksi)

The losses due to elastic shortening must then be added to these time-dependent losses to determine the total losses. For non-standard members with unusual dimensions or built using staged segmental construction, the refined method of **LRFD [5.9.3.4]** shall be used. For prestressed box girders time-dependent losses shall be determined using the refined method of **LRFD [5.9.3.4]**.

19.3.2.2.3 Fabrication Losses

Fabrication losses are not considered by the designer, but they affect the design criteria used during design. Anchorage losses which occur during stressing and seating of the prestressed strands vary between 1% and 4%. Losses due to temperature change in the strands during cold weather prestressing are 6% for a 60°F change. The construction specifications permit a 5% difference in the jack pressure and elongation measurement without any adjustment.

19.3.2.3 Service Load

During service load, the member is subjected to the same loads that are present after prestress transfer and losses occur, in addition to the effects of the prestressed I-girder and prestressed box girder load-carrying behavior described in the next two sections.

19.3.2.3.1 Prestressed I-Girder

In the case of a prestressed I-girder, the dead load of the deck and diaphragms are always carried by the basic girder section on a simple span. At strand release, the girder dead load moments are calculated based on the full girder length. For all other loading stages, the girder dead load moments are based on the span length. This is due to the type of construction used (that is, unshored girders simply spanning from one substructure unit to another for single-span as well as multi-span structures).

The live load plus dynamic load allowance along with any superimposed dead load (curb, parapet or median strip which is placed after the deck concrete has hardened) are carried by the continuous composite section.

WisDOT exception to AASHTO:

The standard pier diaphragm is considered to satisfy the requirements of **LRFD [5.12.3.3.5]** and shall be considered to be fully effective.

In the case of multi-span structures with fully effective diaphragms, the longitudinal distribution of the live load, dynamic load allowance and superimposed dead loads are based on a continuous span structure. This continuity is achieved by:

a. Placing non-prestressed (conventional) reinforcement in the deck area over the interior supports.

b. Casting concrete between and around the abutting ends of adjacent girders to form a diaphragm at the support. Girders shall be in line at interior supports and equal numbers of girders shall be used in adjacent spans. The use of variable numbers of girders between spans requires prior approval by BOS.

It is preferred, but not required, to have a length ratio of two adjacent spans not exceeding 1.5. Short end spans, especially with expansion abutments, can be problematic with regards to having enough dead load to utilize non-anchored laminated elastomeric bearings.

If girder depth changes, the girders would be designed as if the bridge was discontinuous at the shared pier; however, the continuity reinforcement should be designed as if the bridge was being designed continuous at the shared pier. The loads to the shared pier should be determined as if for a continuous bridge (i.e. simple span for non-composite loads and continuous for composite loads).

Bridges may have varying girder spacing between spans. A historically common configuration in Wisconsin for prestressed I-girder superstructures is a four-span bridge with continuous

girders in spans 2 & 3 and different (wider) girder spacing in spans 1 & 4 (Note: this configuration is not recommended for new structures). A replacement deck for such bridges would be designed as continuous, although the rating would be as for separate units – single span, two-span and single span.

19.3.2.3.2 Prestressed Box Girder

In the case of prestressed box girders with a thin concrete overlay, the dead load together with the live load and dynamic load allowance are carried by the basic girder section.

When this girder type has a composite section, the dead load of the deck is carried by the basic section and the live load, dynamic load allowance and any superimposed dead loads are carried by the composite section. A composite section shall consist of a reinforced deck, 6" minimum thickness, with composite shear reinforcement extending into the deck.

WisDOT policy item:

The use of prestressed box girders is subject to prior-approval by the Bureau of Structures. These structures are currently limited to the following requirements:

- Single spans
- Composite section details (design and rating based on non-composite section)
- 30 degree maximum skew
- AADT < 3,500 on non-NHS roadways

Variations to these requirements require approval by the Bureau of Structures.

19.3.2.4 Factored Flexural Resistance

At the final stage, the factored flexural resistance of the composite section is considered. Since the member is designed on a service load basis, it must be checked for its factored flexural resistance at the Strength I limit state. See section 17.2.3 for a discussion on limit states.

The need for both service load and strength computations lies with the radical change in a member's behavior when cracks form. Prior to cracking, the gross area of the member is effective. As a crack develops, all the tension in the concrete is picked up by the reinforcement. If the percentage of reinforcement is small, there is very little added capacity between cracking and failure.

19.3.2.5 Fatigue Limit State

At the final stage, the member is checked for the Fatigue I limit state. See section 17.2.3 for a discussion on limit states. Allowable compressive stresses in the concrete and tensile stresses in the non-prestressed reinforcement are checked.

19.3.3 Design Procedure

The intent of this section is to provide the designer with a general outline of steps for the design of pretensioned members. Sections of interest during design include, but are not limited to, the following locations:

- 10th points
- Hold-down points
- Regions where the prestress force changes (consider the effects of transfer and development lengths, as well as the effects of debonded strands)
- Critical section(s) for shear

The designer must consider the amount of prestress force at each design section, taking into account the transfer length and development length, if appropriate.

19.3.3.1 Prestressed I-Girder Member Spacing

A trial prestressed I-girder arrangement is made by using Table 19.3-1 and Table 19.3-2 as a guide. An ideal spacing results in equal strands for interior and exterior girders, together with an optimum slab thickness. Current practice is to use a minimum haunch of (1-1/4" plus deck cross slope times one-half top flange width) for section property calculations and then use a 3" average haunch for concrete preliminary quantity calculations. After preliminary design this value should be revised as needed as outlined in 19.3.4. The maximum slab overhang dimensions are detailed in 17.6.2.

For prestressed I-girder bridges, other than pedestrian or other unusual structures, four or more girders shall be used.

19.3.3.2 Prestressed Box Girder Member Spacing

The prestressed box girder is used in an adjacent multi-beam system only. Precast units are placed side by side and locked (post-tensioned) together. The span length, desired roadway width and live loading control the size of the member.

When selecting a 3' wide section vs. 4' wide section, do not mix 3' wide and 4' wide sections across the width of the bridge. Examine the roadway width produced by using all 3' wide sections or all 4' wide sections and choose the system that is the closest to but greater than the required roadway width. While 3' wide sections may produce a slightly narrower roadway width 4' wide sections are still preferred since they require fewer sections. Verify the required

roadway width is possible when considerations are made for the roadway cross-slope. Table 19.3-3 states the approximate span limitations for each section depth. Coordinate roadway width with roadway designers and consider some variability. See the Standards for prestressed box girder details.

19.3.3.3 Dead Load

For a detailed discussion of the application of dead load, refer to 17.2.4.1.

The dead load moments and shears due to the girder and concrete deck are computed for simple spans. When superimposed dead loads are considered, the superimposed dead load moments are based on continuous spans.

A superimposed dead load of 20 psf is to be included in all designs which account for a possible future concrete overlay wearing surface. The future wearing surface shall be applied between the faces of curbs or parapets and shall be equally distributed among all the girders in the cross section.

For a cross section without a sidewalk, any curb or parapet dead load is distributed equally to all girders.

For a cross section with a sidewalk and barrier on the overhang, sidewalk and barrier dead loads shall be applied to the exterior girder by the lever rule. These loads shall also be applied to the interior girder by dividing the weight equally among all the girders. A more detailed discussion of dead load distribution can be found in 17.2.8.

19.3.3.4 Live Load

The HL-93 live load shall be used for all new bridges. Refer to section 17.2.4.2 for a detailed description of the HL-93 live load, including the design truck, design tandem, design lane, and double truck.

19.3.3.5 Live Load Distribution

The live load distribution factors shall be computed as specified in **LRFD [4.6.2.2].** Table 17.2-7 summarizes the equations required for prestressed I-girders. The moment and shear distribution factors for prestressed I-girders are determined using equations that consider girder spacing, span length, deck thickness, the number of girders, skew and the longitudinal stiffness parameter. See the WisDOT policy item for live load distribution factors for prestressed box girders.

Separate shear and moment distribution factors are computed for interior and exterior girders. The applicability ranges of the distribution factors shall also be considered. If the applicability ranges are not satisfied, then conservative assumptions must be made based on sound engineering judgment.

WisDOT policy item:

The typical cross section for prestressed box girders shall be type "g" as illustrated in **LRFD [Table 4.6.2.2.1-1]**.

For prestressed box girders, the St. Venant torsional inertia, J, may be calculated as closed thin-walled sections for sections with voids, and as solid sections for sections without voids in accordance with **LRFD [C4.6.2.2.1]**.

See 17.2.8 for additional information regarding live load distribution.

19.3.3.6 Dynamic Load Allowance

The dynamic load allowance, IM, is given by **LRFD [3.6.2]**. Dynamic load allowance equals 33% for all live load limit states except the fatigue limit state and is not applied to pedestrian loads or the lane load portion of the HL-93 live load. See 17.2.4.3 for further information regarding dynamic load allowance.

19.3.3.7 Prestressed I-Girder Deck Design

The design of concrete decks on prestressed I-girders is based on **LRFD [4.6.2.1]**. Moments from truck wheel loads are distributed over a width of deck which spans perpendicular to the girders. This width is known as the distribution width and is given by **LRFD [Table 4.6.2.1.3-1]**. See 17.5 for further information regarding deck design.

19.3.3.8 Composite Section

The effective flange width is the width of the deck slab that is to be taken as effective in composite action for determining resistance for all limit states. The effective flange width, in accordance with **LRFD [4.6.2.6]**, is equal to the tributary width of the girder for interior girders. For exterior girders, it is equal to one half the effective flange width of the adjacent interior girder plus the overhang width. The effective flange width shall be determined for both interior and exterior beams.

Since the deck concrete has a lower strength than the girder concrete, it also has a lower modulus of elasticity. Therefore, when computing composite section properties, the effective flange width (as stated above) must be reduced by the ratio of the modulus of elasticity of the deck concrete divided by the modulus of elasticity of the girder concrete.

WisDOT exception to AASHTO:

WisDOT uses the formulas shown below to determine E_c for prestressed girder design. For 6 ksi girder concrete, E_c is 5,500 ksi, and for 4 ksi deck concrete, E_c is 4,125 ksi. The E_c value of 5,500 ksi for 6 ksi girder concrete strength was determined from deflection studies. These equations are used in place of those presented in **LRFD [5.4.2.4]** for the following calculations: strength, section properties, and deflections due to externally applied dead and live loads.

For slab concrete strength other than 4 ksi, E_c is calculated from the following formula:

$$E_c = \frac{4{,}125\sqrt{f'_c}}{\sqrt{4}} \text{ (ksi)}$$

For girder concrete strengths other than 6 ksi, E_c is calculated from the following formula:

$$E_c = \frac{5{,}500\sqrt{f'_c}}{\sqrt{6}} \text{ (ksi)}$$

WisDOT policy item:

WisDOT uses the equation presented in **LRFD [5.4.2.4]** (and shown below) to calculate the modulus of elasticity at the time of release using the specified value of f'ci. This value of E_i is used for loss calculations and for girder camber due to prestress forces and girder self-weight.

$$E_c = 33{,}000 \cdot K_1 \cdot w_c^{1.5} \sqrt{f'_{ci}}$$

Where:

K_1	=	Correction factor for source of aggregate, use 1.0 unless previously approved by BOS.
w_c	=	Unit weight of concrete, 0.150 (kcf)
f'_{ci}	=	Specified compressive strength of concrete at the time of release (ksi)

19.3.3.9 Design Stress

In many cases, stress at the Service III limit state in the bottom fiber at or near midspan after losses will control the flexural design. Determine a trial strand pattern for this condition and proceed with the flexural design, adjusting the strand pattern if necessary.

The design stress is the sum of the Service III limit state bottom fiber stresses due to non-composite dead load on the basic girder section, plus live load, dynamic load allowance and superimposed dead load on the composite section, as follows:

$$f_{des} = \frac{M_{d(nc)}}{S_{b(nc)}} + \frac{M_{d(c)} + M_{(LL+IM)}}{S_{b(c)}}$$

Where:

f_{des}	=	Service III design stress at section (ksi)
$M_{d(nc)}$	=	Service III non-composite dead load moment at section (k-in)
$M_{d(c)}$	=	Service III superimposed dead load moment at section (k-in)
$M_{(LL+IM)}$	=	Service III live load plus dynamic load allowance moment at section (k-in)

$S_{b(nc)}$	=	Non-composite section modulus for bottom of basic beam (in^3)
$S_{b(c)}$	=	Composite section modulus for bottom of basic beam (in^3)

The point of maximum stress is generally 0.5 of the span for both end and intermediate spans. But for longer spans (over 100'), the 0.4 point of the end span may control and should be checked.

19.3.3.10 Prestress Force

With f_{des} known, compute the required effective stress in the prestressing steel after losses, f_{pe}, needed to counteract all the design stress except an amount of tension equal to the tensile stress limit listed in **LRFD [Table 5.9.2.3.2b-1]**. The top of the girder is subjected to severe corrosion conditions and the bottom of the girder is subjected to moderate exposure. The Service III tensile stress at the bottom fiber after losses for pretensioned concrete shall not exceed $0.19\lambda\sqrt{f'_c}$ (or 0.6 ksi) ; where λ = concrete density modification factor **LRFD [5.4.2.8]**, and has a value of 1.0 for normal weight concrete. Therefore:

$$f_{pe} = f_{des} - \min(0.19\sqrt{f'_c} \text{ or } 0.6 \text{ ksi})$$

Note: A conservative approach used in hand calculations is to assume that the allowable tensile stress equals zero.

Applying the theory discussed in 19.2:

$$f_{pe} = \frac{P_{pe}}{A}\left(1 + \frac{ey}{r^2}\right)$$

Where:

P_{pe}	=	Effective prestress force after losses (kips)
A	=	Basic beam area (in^2)
e	=	Eccentricity of prestressing strands with respect to the centroid of the basic beam at section (in)
r	=	$\sqrt{\frac{I}{A}}$ of the basic beam (in)

For prestressed box girders, assume an e and apply this to the above equation to determine P_{pe} and the approximate number of strands. Then a trial strand pattern is established using the Standard Details as a guide, and a check is made on the assumed eccentricity. For prestressed

I-girders, f_{pe} is solved for several predetermined patterns and is tabulated in the Standard Details.

Present practice is to detail all spans of equal length with the same number of strands, unless a span requires more than three additional strands. In this case, the different strand arrangements are detailed along with a plan note stating: "The manufacturer may furnish all girders with the greater number of strands."

19.3.3.11 Service Limit State

Several checks need to be performed at the service limit state. Refer to the previous narrative in 19.3.3 for sections to be investigated and section 17.2.3.2 for discussion on the service limit state. Note that Service I limit state is used when checking compressive stresses and Service III limit state is used when checking tensile stresses.

The following should be verified by the engineer:

- Verify that the Service III tensile stress due to beam self-weight and prestress applied to the basic beam at transfer does not exceed the limits presented in **LRFD [Table 5.9.2.3.1b-1]**, which depend upon whether or not the strands are bonded and satisfy stress requirements. This will generally control at the top of the beam near the beam ends where the dead load moment approaches zero and is not able to counter the tensile stress at the top of the beam induced by the prestress force. When the calculated tensile stress exceeds the stress limits, the strand pattern must be modified by draping or partially debonding the strand configuration.

- Verify that the Service I compressive stress due to beam self-weight and prestress applied to the basic beam at transfer does not exceed 0.65 f'_{ci}, as presented in **LRFD [5.9.2.3.1a]**. This will generally control at the bottom of the beam near the beam ends or at the hold-down point if using draped strands.

- Verify that the Service III tensile stress due to all dead and live loads applied to the appropriate sections after losses does not exceed the limits presented in **LRFD [Table 5.9.2.3.2b-1]**. No tensile stress shall be permitted for unbonded strands. The tensile stress of bonded strands shall not exceed $0.19\lambda\sqrt{f'_c}$ (or 0.6 ksi) as all strands shall be considered to be in moderate corrosive conditions. This will generally control at the bottom of the beam near midspan and at the top of the continuous end of the beam. The value of λ is 1.0 for normal weight concrete **LRFD [5.4.2.8]**.

- Verify that the Service I compressive stress due to all dead and live loads applied to the appropriate sections after losses does not exceed the limits presented in **LRFD [Table 5.9.2.3.2a-1]**. Two checks need to be made for girder bridges. The compressive stress due to the sum of effective prestress and permanent loads shall not exceed 0.45 f'_c (ksi). The compressive stress due to the sum of effective prestress, permanent loads and transient loads shall not exceed $0.60\phi_w f'_c$ (ksi). The term ϕ_w, a reduction factor applied to thin-walled box girders, shall be 1.0 for WisDOT standard girders.

- Verify that Fatigue I compressive stress due to fatigue live load and one-half the sum of effective prestress and permanent loads does not exceed 0.40 f'_c (ksi) **LRFD [5.5.3.1]**.

- Verify that the Service I compressive stress at the top of the deck due to all dead and live loads applied to the appropriate sections after losses does not exceed 0.40 f'_c.

WisDOT policy item:

The top of the prestressed I-girders at interior supports shall be designed as reinforced concrete members at the strength limit state in accordance with **LRFD [5.12.3.3.6]**. In this case, the stress limits for the service limit state shall not apply to this region of the precast girder.

19.3.3.12 Raised, Draped or Partially Debonded Strands

When straight strands are bonded for the full length of a prestressed girder, the tensile and compressive stresses near the ends of the girder will likely exceed the allowable service limit state stresses. This occurs because the strand pattern is designed for stresses at or near midspan, where the dead load moment is highest and best able to balance the effects of the prestress. Near the ends of the girder this dead load moment approaches zero and is less able to balance the prestress force. This results in tensile stresses in the top of the girder and compressive stresses in the bottom of the girder. The allowable initial tensile and compressive stresses are presented in the first two bullet points of 19.3.3.11. These stresses are a function of f'_{ci}, the compressive strength of concrete at the time of prestress force transfer. Transfer and development lengths should be considered when checking stresses near the ends of the girder.

The designer should start with a straight (raised), fully bonded strand pattern. If this overstresses the girder near the ends, the following methods shall be utilized to bring the girder within the allowable stresses. These methods are listed in order of preference and discussed in the following sections:

1. Use raised strand pattern (If excessive top flange reinforcement or if four or more additional strands versus a draped strand pattern are required, consider the draped strand alternative)

2. Use draped strand pattern

3. Use partially debonded strand pattern (to be used sparingly)

Only show one strand pattern per span (i.e. Do not show both raised and draped span alternatives for a given span).

A different girder spacing may need to be selected. It is often more economical to add an extra girder line than to maximize the number of strands and use debonding.

Prestressed box girders strands are to be straight, bonded, and located as shown in the Standard Details.

19.3.3.12.1 Raised Strand Patterns

Some of the standard strand patterns listed in the Standard Details show a raised strand pattern. Generally strands are placed so that the center of gravity of the strand pattern is as close as possible to the bottom of the girder. With a raised strand pattern, the center of gravity of the strand pattern is raised slightly and is a constant distance from the bottom of the girder for its entire length. Present practice is to show a standard raised arrangement as a preferred alternate to draping for short spans. For longer spans, debonding at the ends of the strands is an alternate (see 19.3.3.12.3). Use 0.6" strands for all raised patterns.

19.3.3.12.2 Draped Strand Patterns

Draping some of the strands is another available method to decrease stresses from prestress at the ends of the I-beam where the stress due to applied loads are minimum.

The typical strand profile for this technique is shown in Figure 19.3-1.

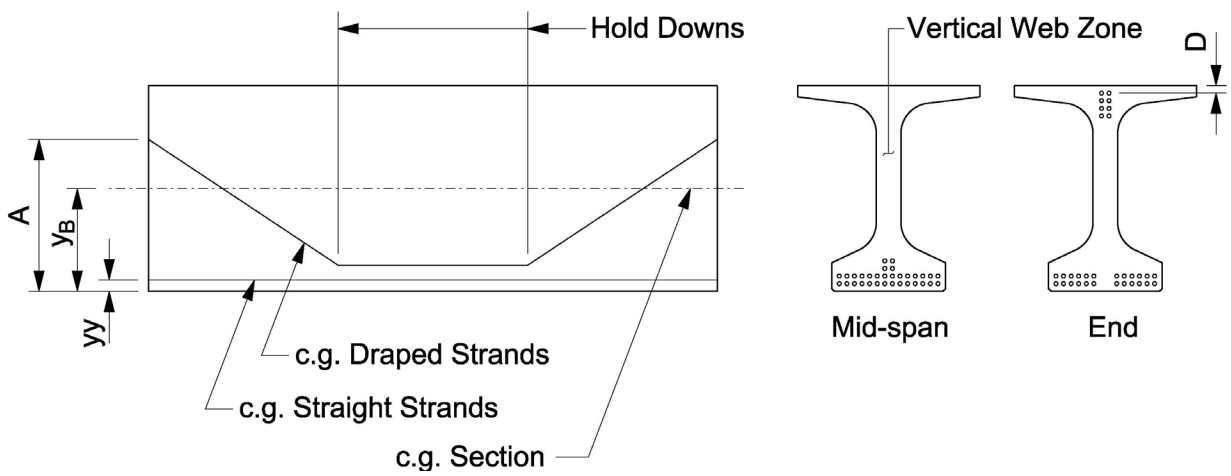

Figure 19.3-1
Typical Draped Strand Profile

Note that all the strands that lie within the "vertical web zone" of the mid-span arrangement are used in the draped group.

The engineer should show only one strand size for the draped pattern on the plans. Use only 0.5" strands for the draped pattern on 28" and 36" prestressed I-girders and 0.6" strands for all raised (straight) patterns for these shapes. Use 0.6" strands, only, for 36W", 45W", 54W", 72W" and 82W" prestressed I-girders. See Chapter 40 standards for 45", 54" and 70" prestressed I-girders.

Hold-down points for draped strands are located approximately between the 1/3 point and the 4/10 point from each end of the girder. The Standard Details, Prestressed Girder Details, show B values at the 1/4 point of the girder. On the plan sheets provide values for B_{min} and B_{max} as determined by the formulas shown on the Standards.

The maximum slope specified for draped strands is 12%. This limit is determined from the safe uplift load per strand of commercially available strand restraining devices used for hold-downs. The minimum distance, D, allowed from center of strands to top of flange is 2”. For most designs, the maximum allowable slope of 12% will determine the location of the draped strands. Using a maximum slope will also have a positive effect on shear forces.

Initial girder stresses are checked at the end of the transfer length, which is located 60 strand diameters from the girder end. The transfer length is the embedment length required to develop f_{pe}, the effective prestressing steel stress (ksi) after losses. The prestressing steel stress varies linearly from 0.0 to f_{pe} along the transfer length.

The longer full development length of the strand is required to reach the larger prestressing steel stress at nominal resistance, f_{ps} (ksi). The strand stress is assumed to increase linearly from f_{pe} to f_{ps} over the distance between the transfer length and development length.

Per **LRFD [5.9.4.3.2]**, the development length is:

$$\ell_d \geq \kappa\left(f_{ps} - \frac{2}{3}f_{pe}\right)d_b$$

Where:

d_b	=	Nominal strand diameter (in)
κ	=	1.0 for members with a depth less than or equal to 24”, and 1.6 for members with a depth of greater than 24”

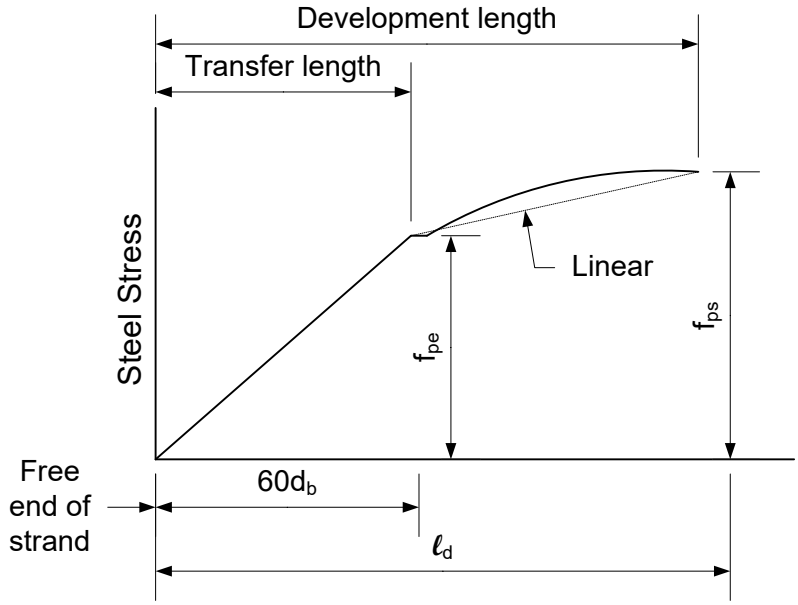

Figure 19.3-2
Transfer and Development Length

19.3.3.12.3 Partially Debonded Strand Patterns

The designer may use debonded strands if a raised or draped strand configuration fails to meet the allowable service stresses. The designer should exercise caution when using debonded strands as this may not result in the most economical design. Partially debonded strands are fabricated by wrapping sleeves around individual strands for a specified length from the ends of the girder, rendering the bond between the strand and the girder concrete ineffective for the wrapped, or shielded, length.

Bond breakers should only be applied to interior strands as girder cracking has occurred when they were applied to exterior strands. In computing bond breaker lengths, consideration is given to the theoretical stresses at the ends of the girder. These stresses are due entirely to prestress. As a result, the designer may compute a stress reduction based on certain strands having bond breakers. This reduction can be applied along the length of the debonded strands.

Partially debonded strands must adhere to the requirements listed in **LRFD [5.9.4.3.3]**. The list of requirements is as follows:

- The development length of partially debonded strands shall be calculated in accordance with **LRFD [5.9.4.3.2]** with $\kappa = 2.0$.
- The number of debonded strands shall not exceed 25% of the total number of strands.

- The number of debonded strands in any horizontal row shall not exceed 40% of the strands in that row.
- The length of debonding shall be such that all limit states are satisfied with consideration of the total developed resistance (transfer and development length) at any section being investigated.
- Not more than 40% of the debonded strands, or four strands, whichever is greater, shall have debonding terminated at any section.
- The strand pattern shall be symmetrical about the vertical axis of the girder. The consideration of symmetry shall include not only the strands being debonded but their debonded length as well, with the goal of keeping the center of gravity of the prestress force at the vertical centerline of the girder at any section. If the center of gravity of the prestress force deviates from the vertical centerline of the girder, the girder will twist, which is undesirable.
- Exterior strands in each horizontal row shall be fully bonded for crack control purposes.

19.3.3.13 Strength Limit State

The design factored positive moment is determined using the following equation:

$$M_u = 1.25DC + 1.50DW + 1.75(LL + IM)$$

The Strength I limit state is applied to both simple and continuous span structures. See 17.2.4 for further information regarding loads and load combinations.

19.3.3.13.1 Factored Flexural Resistance

The nominal flexural resistance assuming rectangular behavior is given by **LRFD [5.6.3.2.3]** and **LRFD [5.6.3.2.2]**.

The section will act as a rectangular section as long as the depth of the equivalent stress block, a, is less than or equal to the depth of the compression flange (the structural deck thickness). Per **LRFD [5.6.3.2.2]**:

$$a = c\beta_1$$

Where:

c	=	Distance from extreme compression fiber to the neutral axis assuming the tendon prestressing steel has yielded (in)
β_1	=	Stress block factor **LRFD [5.6.2.2]**

By neglecting the area of mild compression and tension reinforcement, the equation presented in **LRFD [5.7.3.1.1]** for rectangular section behavior reduces to:

$$c = \frac{A_{ps} f_{pu}}{\alpha_1 f'_c \beta_1 b + k A_{ps} \frac{f_{pu}}{d_p}}$$

Where:

A_{ps}	=	Area of prestressing steel (in^2)
f_{pu}	=	Specified tensile strength of prestressing steel (ksi)
f'_c	=	Compressive strength of the flange ($f'_{c(deck)}$ for rectangular section) (ksi)
b	=	Width of compression flange (in)
k	=	0.28 for low relaxation strand per **LRFD [C5.6.3.1.1]**
d_p	=	Distance from extreme compression fiber to the centroid of the prestressing tendons (in)

α_1 = Stress block factor; equals 0.85 (for $f'_C \leq 10.0$ ksi) **LRFD [5.6.2.2]**

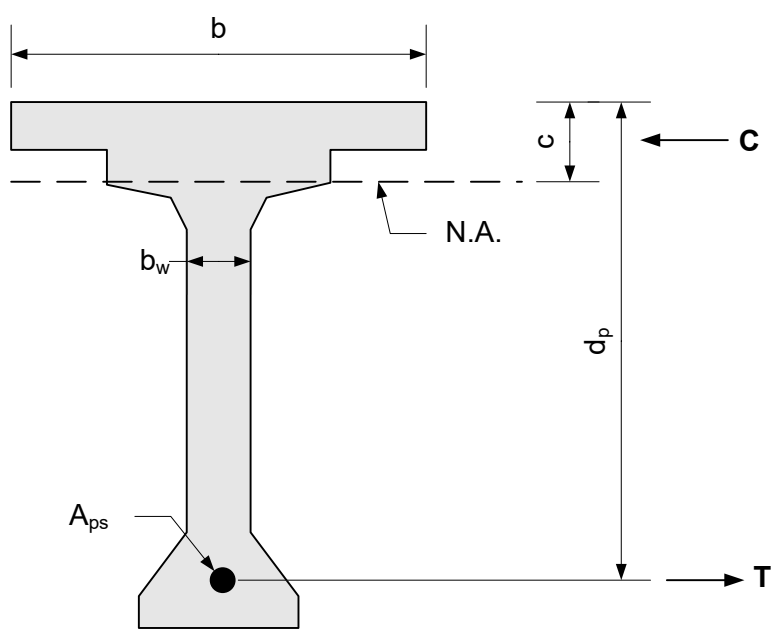

Figure 19.3-3
Depth to Neutral Axis, c

Verify that rectangular section behavior is allowed by checking that the depth of the equivalent stress block, a, is less than or equal to the structural deck thickness. If it is not, then T-section behavior provisions should be followed. If the T-section provisions are used, the compression block will be composed of two different materials with different compressive strengths. In this situation, **LRFD [C5.6.2.2]** recommends using β_1 and α_1 corresponding to the lower f'_c. The following equation for c shall be used for T-section behavior: **LRFD [5.6.3.1.1]**

$$c = \frac{A_{ps} f_{pu} - \alpha_1 f'_c (b - b_w) h_f}{\alpha_1 f'_c \beta_1 b_w + k A_{ps} \frac{f_{pu}}{d_p}}$$

Where:

b_w	=	Width of web (in) – use the top flange width if the compression block does not extend below the haunch.
h_f	=	Depth of compression flange (in)

The factored flexural resistance presented in **LRFD [5.6.3.2.2]** is simplified by neglecting the area of mild compression and tension reinforcement. Furthermore, if rectangular section behavior is allowed, then $b_w = b$, where b_w is the web width as shown in Figure 19.3-3. The equation then reduces to:

$$M_r = \phi A_{ps} f_{ps} \left(d_p - \frac{a}{2} \right)$$

Where:

M_r	=	Factored flexural resistance (kip-in)
ϕ	=	Resistance factor
f_{ps}	=	Average stress in prestressing steel at nominal bending resistance (refer to **LRFD [5.6.3.1.1]**) (ksi)

If the T-section provisions must be used, the factored moment resistance equation is then:

$$M_r = \phi A_{ps} f_{ps} \left(d_p - \frac{a}{2} \right) + \alpha_1 \phi f'_c (b - b_w) h_f \left(\frac{a}{2} - \frac{h_f}{2} \right)$$

Where:

h_f	=	Depth of compression flange with width, b (in)

The engineer must then verify that M_r is greater than or equal to M_u.

WisDOT exception to AASHTO:

WisDOT standard prestressed I-girders and strand patterns are tension-controlled. The ε_t check, as specified in **LRFD [5.6.2.1]**, is not required when the standard girders and strand patterns are used, and $\phi = 1$.

19.3.3.13.2 Minimum Reinforcement

Per **LRFD [5.6.3.3]**, the minimum amount of prestressed reinforcement provided shall be adequate to develop a M_r at least equal to the lesser of M_{cr}, or $1.33M_u$.

M_{cr} is the cracking moment, and is given by:

$$M_{cr} = \gamma_3 [S_c (\gamma_1 f_r + \gamma_2 f_{cpe}) - 12M_{dnc} [(S_c/S_{nc}) - 1]]$$

Where:

S_c	=	Section modulus for the extreme fiber of the composite section where tensile stress is caused by externally applied loads (in^3)
f_r	=	Modulus of rupture (ksi)
f_{cpe}	=	Compressive stress in concrete due to effective prestress forces only (after losses) at extreme fiber of section where tensile stress is caused by externally applied loads (ksi)
M_{dnc}	=	Total unfactored dead load moment acting on the basic beam (k-ft)
S_{nc}	=	Section modulus for the extreme fiber of the basic beam where tensile stress is caused by externally applied loads (in^3)
γ_1	=	1.6 flexural cracking variability factor
γ_2	=	1.1 prestress variability factor
γ_3	=	1.0 for prestressed concrete structures

Per **LRFD [5.4.2.6]**, the modulus of rupture for normal weight concrete is given by:

$f_r = 0.24\lambda\sqrt{f'_c}$; where λ = conc. density modification factor **LRFD [5.4.2.8]**, and has a value of 1.0 for normal weight conc.

19.3.3.14 Non-prestressed Reinforcement

Non-prestressed reinforcement consists of bar steel reinforcement used in the conventional manner. It is placed longitudinally along the top of the member to carry any tension which may develop after transfer of prestress. The designer should completely detail all rebar layouts including stirrups.

The amount of reinforcement is that which is sufficient to resist the total tension force in the concrete based on the assumption of an uncracked section.

For draped designs, the control is at the hold-down point of the girder. At the hold-down point, the initial prestress is acting together with the girder dead load stress. This is where tension due to prestress is still maximum and compression due to girder dead load is decreasing.

For non-draped designs, the control is at the end of the member where prestress tension exists but dead load stress does not.

Note that a minimum amount of reinforcement is specified in the Standards. This is intended to help prevent serious damage due to unforeseeable causes like improper handling or storing.

19.3.3.15 Horizontal Shear Reinforcement

The horizontal shear reinforcement resists the Strength I limit state horizontal shear that develops at the interface of the slab and girder in a composite section. The dead load used to calculate the horizontal shear should only consider the DC and DW dead loads that act on the composite section. See 17.2.4 for further information regarding the treatment of dead loads and load combinations.

$$V_u = 1.25DC + 1.50DW + 1.75(LL + IM)$$

$$V_{ni} \geq V_{ui} / \phi$$

Where:

V_u	=	Maximum strength limit state vertical shear (kips)
V_{ui}	=	Strength limit state horizontal shear at the girder/slab interface (kips)
V_{ni}	=	Nominal interface shear resistance (kips)
ϕ	=	0.90 per **LRFD [5.5.4.2]**

The shear stress at the interface between the slab and the girder is given by:

$$v_{ui} = \frac{V_u}{b_{vi} d_v}$$

Where:

v_{ui}	=	Factored shear stress at the slab/girder interface (ksi)
b_{vi}	=	Interface width to be considered in shear transfer (in)
d_v	=	Distance between the centroid of the girder tension steel and the mid-thickness of the slab (in)

The factored horizontal interface shear shall then be determined as:

$$V_{ui} = 12 v_{ui} b_{vi}$$

The nominal interface shear resistance shall be taken as:

$$V_{ni} = cA_{cv} + \mu\left[A_{vf} f_y + P_c\right]$$

Where:

A_{cv}	=	Concrete area considered to be engaged in interface shear transfer. This value shall be set equal to $12b_{vi}$ (ksi)
c	=	Cohesion factor specified in **LRFD [5.7.4.4]**. This value shall be taken as 0.28 ksi for WisDOT standard girders with a cast-in-place deck
μ	=	Friction factor specified in **LRFD [5.7.4.4]**. This value shall be taken as 1.0 for WisDOT standard girders with a cast-in-place deck (dim.)
A_{vf}	=	Area of interface shear reinforcement crossing the shear plan within the area A_{cv} (in^2)
f_y	=	Yield stress of shear interface reinforcement not to exceed 60 (ksi)
P_c	=	Permanent net compressive force normal to the shear plane (kips)

P_c shall include the weight of the deck, haunch, parapets, and future wearing surface. A conservative assumption that may be considered is to set $P_c = 0.0$.

The nominal interface shear resistance, V_{ni}, shall not exceed the lesser of:

$$V_{ni} \le K_1 f'_c A_{cv} \quad \text{or} \quad V_{ni} \le K_2 A_{cv}$$

Where:

K_1	=	Fraction of concrete strength available to resist interface shear as specified in **LRFD [5.7.4.4]**. This value shall be taken as 0.3 for WisDOT standard girders with a cast-in-place deck (dim.)
K_2	=	Limiting interface shear resistance as specified in **LRFD [5.7.4.4]**. This value shall be taken as 1.8 ksi for WisDOT standard girders with a cast-in-place deck

WisDOT policy item:

The stirrups that extend into the deck slab presented on the Standards are considered adequate to satisfy the minimum reinforcement requirements of **LRFD [5.7.4.2]**

19.3.3.16 Web Shear Reinforcement

Web shear reinforcement consists of placing conventional reinforcement perpendicular to the axis of the girder.

WisDOT policy item:

Web shear reinforcement shall be designed by **LRFD [5.7.3.4.2]** (General Procedure) using the Strength I limit state for WisDOT standard girders.

WisDOT prefers girders with spacing symmetrical about the midspan in order to simplify design and fabrication. The designer is encouraged to simplify the stirrup arrangement as much as possible. For vertical stirrups, the required area of web shear reinforcement is given by the following equation:

$$A_v \geq \frac{(V_n - V_c)s}{f_y d_v \cot\theta} \quad \text{(or } 0.0316\lambda\sqrt{f'_c}\frac{b_v s}{f_y} \text{ minimum , } \textbf{LRFD [5.7.2.5]}\text{)}$$

Where:

A_v	=	Area of transverse reinforcement within distance, s (in^2)
V_n	=	Nominal shear resistance (kips)
V_c	=	Nominal shear resistance of the concrete (kips)
s	=	Spacing of transverse reinforcement (in)
f_y	=	Specified minimum yield strength of transverse reinforcement (ksi)
d_v	=	Effective shear depth as determined in **LRFD [5.7.2.8]** (in)
θ	=	Angle of inclination of diagonal compressive stresses as determined in **LRFD 5.7.3.4** (degrees)
b_v	=	Minimum web width within the depth d_v, (in)
λ	=	Concrete density modification factor; for normal weight conc. = 1.0, **LRFD [5.4.2.8]**

θ shall be taken as follows:

$$\theta = 29 + 3500\varepsilon_s$$

Where:

ε_s = Net longitudinal tensile strain in the section at the centroid of the tension reinforcement.

$$= \frac{\left(\frac{|M_u|}{d_v} + 0.5N_u + |V_u - V_p| - A_{ps}f_{po}\right)}{E_sA_s + E_pA_{ps}}$$

Where:

$|M_u|$ = Absolute value of the factored moment at the section, not taken less than $|V_u - V_p|d_v$ (kip-in.)

N_u = Factored axial force, taken as positive if tensile and negative if compression (kip)

V_p = Component of prestressing force in the direction of the shear force; positive if resisting the applied shear (kip)

A_{ps} = Area of prestressing steel on the flexural tension side of the member (in^2).

A_s = Area of nonprestressing steel on the flexural tension side of the member (in^2).

f_{po} = A parameter taken as modulus of elasticity of prestressing steel multiplied by the locked-in difference in strain between the prestressing steel and the surrounding concrete (ksi).

$$V_u = 1.25DC + 1.5DW + 1.75(LL + IM)$$
$$V_n = V_u / \phi$$

Where:

V_u = Strength I Limit State shear force (kips)

ϕ = 0.90 per **LRFD [5.5.4.2]**

See 17.2 for further iformation regarding load combinations.

Per **LRFD [5.7.3.3]**, determine V_c as given by:

$$V_c = 0.0316\beta\lambda\sqrt{f'_c}\, b_v d_v$$

Where:

β = Factor indicating ability of diagonally cracked concrete to transmit tension and shear. **LRFD [5.7.3.4]**

λ = Concrete density modification factor; for normal weight conc. = 1.0, **LRFD [5.4.2.8]**

Where:

$\beta = \frac{4.8}{(1+750\varepsilon_s)}$ (For sections containing at least the minimum amount of transverse reinforcement specified in **LRFD [5.7.2.5]**)

WisDOT policy item:
Based on past performance, for prestressed I-girders the upper limit for web reinforcement spacing, s_{max}, per **LRFD [5.7.2.6]** will be reduced to 18 inches.

When determining shear reinforcement, spacing requirements as determined by analysis at 1/10th points, for example, should be carried-out to the next 1/10th point. As an illustration, spacing requirements for the 1/10th point should be carried out to very close to the 2/10th point, as the engineer, without a more refined analysis, does not know what the spacing requirements would be at the 0.19 point. For the relatively small price of stirrups, don't shortchange the shear capacity of the prestressed girder.

The web reinforcement spacing shall not exceed the maximum permitted spacing determined as:

- If $\upsilon_u < 0.125f'_c$, then $s_{max} = 0.8d_v \leq 18"$
- If $\upsilon_u \geq 0.125f'_c$, then $s_{max} = 0.4d_v \leq 12"$

Where:

$$\upsilon_u = \frac{V_u - \phi V_p}{\phi b_v d_v}$$ per **LRFD [5.7.2.8]**.

The nominal shear resistance, $V_c + V_s$, is limited by the following:

$$V_c + \frac{A_v f_y d_v \cot\theta}{s} \leq 0.25f'_c b_v d_v$$

Reinforcement in the form of vertical stirrups is required at the extreme ends of the girder. The stirrups are designed to resist 4% of the total prestressing force at transfer at a unit stress of 20 ksi and are placed within h/4 of the girder end, where h is the total girder depth. For a distance of 1.5d from the ends of the beams, reinforcement shall be placed to confine the prestressing steel in the bottom flange. The reinforcement shall be shaped to enclose the strands, shall be a #3 bar or greater and shall be spaced at less than or equal to 6". Note that the reinforcement shown on the Standard Details sheets satisfies these requirements.

Welded wire fabric may be used for the vertical reinforcement. It must be deformed wire with a minimum size of D18.

Per **LRFD [5.7.3.5]**, at the inside edge of the bearing area to the section of critical shear, the longitudinal reinforcement on the flexural tension side of the member shall satisfy:

$$A_s f_y + A_{ps} f_{ps} \geq \left(\frac{V_u}{\phi} - 0.5V_s \right) \cot\theta$$

In the above equation, $\cot\theta$ is as defined in the V_c discussion above, and V_s is the shear reinforcement resistance at the section considered. Any lack of full reinforcement development shall be accounted for. Note that the reinforcement shown on the Standard Detail sheets satisfies these requirements.

19.3.3.17 Continuity Reinforcement

The design of non-prestressed reinforcement for negative moment at the support is based on the Strength I limit state requirements of **LRFD [5.6.3]**:

$$M_u = 1.25DC + 1.50DW + 1.75(LL + IM)$$

LRFD [5.5.4.2] allows a ϕ factor equal to 0.9 for tension-controlled reinforced concrete sections such as the bridge deck.

The continuity reinforcement consists of mild steel reinforcement in the deck in the negative moment region over the pier. Consider both the non-composite and the superimposed dead loads and live loads for the Strength I design of the continuity reinforcement in the deck.

Moment resistance is developed in the same manner as shown in 19.3.3.13.1 for positive moments, except that the bottom girder flange is in compression and the deck is in tension. The moment resistance is formed by the couple resulting from the compression force in the bottom flange and the tension force from the longitudinal deck steel. Consider A_s to consist of the longitudinal deck steel present in the deck slab effective flange width as determined in 19.3.3.8. The distance, d_p, is taken from the bottom of the girder flange to the center of the longitudinal deck steel.

WisDOT exception to AASHTO:

Composite sections formed by WisDOT standard prestressed I-girders shall be considered to be tension-controlled for the design of the continuity reinforcement. The ε_t check, as specified in **LRFD [5.6.2.1]**, is not required, and $\phi = 0.9$.

WisDOT policy item:

New bridge designs shall consider only the top mat of longitudinal deck steel when computing the continuity reinforcement capacity.

WisDOT policy item:

The continuity reinforcement shall be based on the greater of either the interior girder design or exterior girder and detailed as typical reinforcement for the entire width of the bridge deck. However, do not design the continuity steel based on the exterior girder design beneath a raised sidewalk. The continuity steel beneath a raised sidewalk should not be used for rating.

Based on the location of the neutral axis, the bottom flange compressive force may behave as either a rectangle or a T-section. On WisDOT standard prestressed I-girders, if the depth of the compression block, a, falls within the varying width of the bottom flange, the compression block acts as an idealized T-section. In this case, the width, b, shall be taken as the bottom flange width, and the width, b_w, shall be taken as the bottom flange width at the depth "a". During T-section behavior, the depth, h_f, shall be taken as the depth of the bottom flange of full width, b. See Figure 19.3-4 for details. Ensure that the deck steel is adequate to satisfy $M_r \geq M_u$.

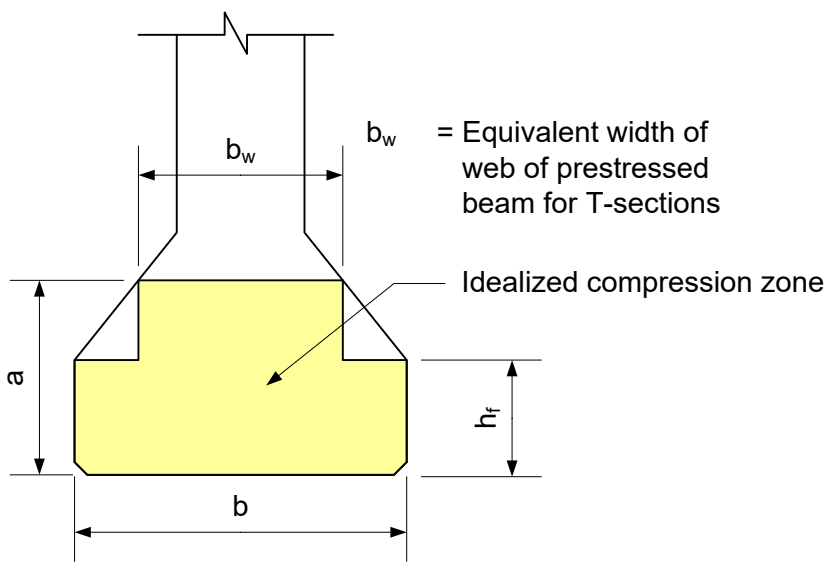

Figure 19.3-4
T-Section Compression Flange Behavior

The continuity reinforcement should also be checked to ensure that it meets the crack control provisions of **LRFD [5.6.7]**. This check shall be performed assuming severe exposure conditions. Only the superimposed loads shall be considered for the Service and Fatigue requirements.

The concrete between the abutting girder ends is usually of a much lesser strength than that of the girders. However, tests[1] have shown that, due to lateral confinement of the diaphragm concrete, the girder itself fails in ultimate negative compression rather than failure in the material between its ends. Therefore the ultimate compressive stress, f'_c, of the girder concrete is used in place of that of the diaphragm concrete.

This assumption has only a slight effect on the computed amount of reinforcement, but it has a significant effect on keeping the compression force within the bottom flange.

The continuity reinforcement shall conform to the Fatigue provisions of **LRFD [5.5.3]**.

The transverse spacing of the continuity reinforcement is usually taken as the whole or fractional spacing of the D bars as given in 17.5.3.2. Grade 60 bar steel is used for continuity reinforcement. Required development lengths for deformed bars are given in Chapter 9 – Materials.

WisDOT exception to AASHTO:

The continuity reinforcement is not required to be anchored in regions of the slab that are in compression at the strength limit state as stated in **LRFD [5.12.3.3]**. The following locations shall be used as the cut off points for the continuity reinforcement:

1. When ½ the bars satisfy the Strength I moment envelope (considering both the non-composite and composite loads) as well as the Service and Fatigue moment envelopes (considering only the composite moments), terminate ½ of the bars. Extend these bars past this cutoff point a distance not less than the girder depth or 1/16 the clear span for embedment length requirements.

2. Terminate the remaining one-half of the bars an embedment length beyond the point of inflection. The inflection point shall be located by placing a 1 klf load on the composite structure. This cut-off point shall be at least 1/20 of the span length or 4' from point 1, whichever is greater.

Certain secondary features result when spans are made continuous. That is, positive moments develop over piers due to creep[5], shrinkage and the effects of live load and dynamic load allowance in remote spans. The latter only exists for bridges with three or more spans.

These positive moments are somewhat counteracted by negative moments resulting from differential shrinkage[4] between the cast-in-place deck and precast girders along with negative moments due to superimposed dead loads. However, recent field observations cited in **LRFD [C5.12.3.3.2]** suggest that these moments are less than predicted by analysis. Therefore, negative moments caused by differential shrinkage should be ignored in design.

WisDOT exception to AASHTO:

WisDOT requires the use of a negative moment connection only. The details for a positive moment connection per **LRFD [5.12.3.3]** are not compatible with the Standard Details and should not be provided.

19.3.3.18 Camber and Deflection

The prestress camber and dead load deflection are used to establish the vertical position of the deck forms with respect to the girder. The theory presented in the following sections apply to a narrow set of circumstances. The designer is responsible for ensuring that the theoretical camber accounts for the loads applied to the girder. For example, if the diaphragms of a prestressed I-girder are configured so there is one at each of the third points instead of one at

midspan, the term in the equation for $\Delta_{nc(DL)}$ related to the diaphragms in 19.3.3.18.2 would need to be modified to account for two point loads applied at the third points instead of one point load applied at midspan.

Deflection effects due to individual loads may be calculated separately and superimposed, as shown in this section. The *PCI Design Handbook* provides design aids to assist the designer in the evaluation of camber and deflection, including cambers for prestress forces and loads, and beam design equations and diagrams.

Figure 19.3-5 illustrates a typical prestressed I-girder with a draped strand profile.

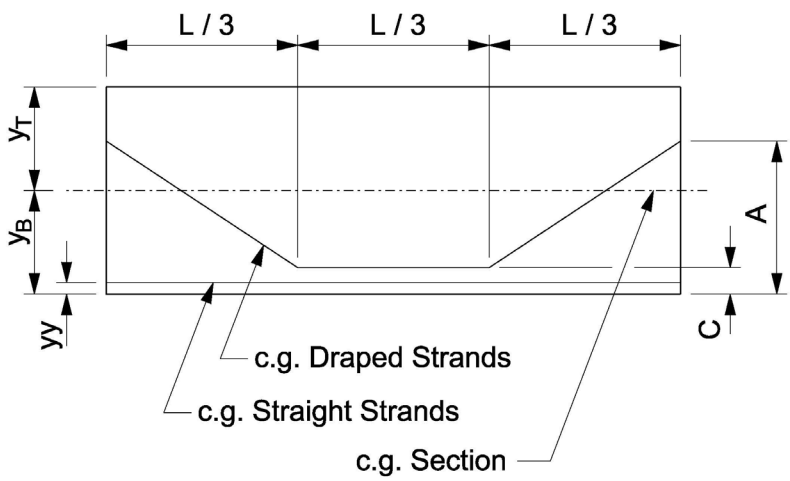

Figure 19.3-5
Typical Draped Strand Profile

19.3.3.18.1 Prestress Camber

The prestressing strands produce moments in the girder as a result of their eccentricity and draped pattern. These moments induce a camber in the girder. The values of the camber are calculated as follows:

Eccentric straight strands induce a constant moment of:

$$M_1 = \frac{1}{12}\left(P_i^s\left(y_B - yy\right)\right)$$

Where:

M_1	=	Moment due to initial prestress force in the straight strands minus the elastic shortening loss (k-ft)
P_i^s	=	Initial prestress force in the straight strands minus the elastic shortening loss (kips)
y_B	=	Distance from center of gravity of beam to bottom of beam (in)

yy	=	Distance from center of gravity of straight strands to bottom of beam (in)

This moment produces an upward deflection at midspan which is given by:

$$\Delta_s = \frac{M_1 L^2}{8E_i I_b} \quad \text{(with all units in inches and kips)}$$

For moments expressed in kip-feet and span lengths expressed in feet, this equation becomes the following:

$$\Delta_s = \frac{M_1 L^2}{8E_i I_b}\left(\frac{12}{1}\right)\left(\frac{12^2}{1}\right) = \frac{M_1 L^2}{8E_i I_b}\left(\frac{1728}{1}\right)$$

$$\Delta_s = \frac{216 M_1 L^2}{E_i I_b} \quad \text{(with units as shown below)}$$

Where:

Δ_s	=	Deflection due to force in the straight strands minus elastic shortening loss (in)
L	=	Span length between centerlines of bearing (ft)
E_i	=	Modulus of elasticity at the time of release (see 19.3.3.8) (ksi)
I_b	=	Moment of inertia of basic beam (in^4)

The draped strands induce the following moments at the ends and within the span:

$$M_2 = \frac{1}{12}\left(P_i^D (A - C)\right), \text{ which produces upward deflection, and}$$

$$M_3 = \frac{1}{12}\left(P_i^D (A - y_B)\right), \text{ which produces downward deflection when A is greater than } y_B$$

Where:

M_2, M_3	=	Components of moment due to initial prestress force in the draped strands minus the elastic shortening loss (k-ft)
P_i^D	=	Initial prestress force in the draped strands minus the elastic shortening loss (kips)
A	=	Distance from bottom of beam to center of gravity of draped strands at centerline of bearing (in)
C	=	Distance from bottom of beam to center of gravity of draped strands between hold-down points (in)

These moments produce a net upward deflection at midspan, which is given by:

$$\Delta_D = \frac{216L^2}{E_i I_b}\left(\frac{23}{27}M_2 - M_3\right)$$

Where:

Δ_D = Deflection due to force in the draped strands minus elastic shortening loss (in)

The combined upward deflection due to prestress is:

$$\Delta_{PS} = \Delta_s + \Delta_D = \frac{216L^2}{E_i I_b}\left(M_1 + \frac{23}{27}M_2 - M_3\right)$$

Where:

Δ_{PS} = Deflection due to straight and draped strands (in)

The downward deflection due to beam self-weight at release is:

$$\Delta_{o(DL)} = \frac{5W_b L^4}{384E_i I_b} \quad \text{(with all units in inches and kips)}$$

Using unit weights in kip per foot, span lengths in feet, E in ksi and I_b in inches^4, this equation becomes the following:

$$\Delta_s = \frac{5W_b L^4}{384E_i I_b}\left(\frac{1}{12}\right)\left(\frac{12^4}{1}\right) = \frac{5W_b L^4}{384E_i I_b}\left(\frac{20736}{12}\right)$$

$$\Delta_{o(DL)} = \frac{22.5W_b L^4}{E_i I_b} \quad \text{(with units as shown below)}$$

Where:

$\Delta_{o(DL)}$ = Deflection due to beam self-weight at release (in)

W_b = Beam weight per unit length (k/ft)

Therefore, the anticipated prestress camber at release is given by:

$$\Delta_i = \Delta_{PS} - \Delta_{o(DL)}$$

Where:

Δ_i = Prestress camber at release (in)

Camber, however, continues to grow after the initial strand release. For determining substructure beam seats, average concrete haunch values (used for both DL and quantity calculations) and the required projection of the vertical reinforcement from the tops of the prestressed girders, **a camber multiplier of 1.4 shall be used**. This value is multiplied by the theoretical camber at release value.

19.3.3.18.2 Dead Load Deflection

The downward deflection of a prestressed I-girder due to the dead load of the deck and a midspan diaphragm is:

$$\Delta_{nc(DL)} = \frac{5W_{deck}L^4}{384EI_b} + \frac{P_{dia}L^3}{48EI_b} \quad \text{(with all units in inches and kips)}$$

Using span lengths in units of feet, unit weights in kips per foot, E in ksi, and I_b in inches^4, this equation becomes the following:

$$\Delta_s = \frac{5W_{deck}L^4}{384EI_b}\left(\frac{1}{12}\right)\left(\frac{12^4}{1}\right) + \frac{P_{dia}L^3}{48EI_b}\left(\frac{12^3}{1}\right) = \frac{5W_{deck}L^4}{384EI_b}\left(\frac{20736}{12}\right) + \frac{P_{dia}L^3}{48EI_b}\left(\frac{1728}{1}\right)$$

$$\Delta_{o(DL)} = \frac{22.5W_bL^4}{EI_b} + \frac{36P_{dia}L^3}{EI_b} \quad \text{(with units as shown below)}$$

Where:

$\Delta_{nc(DL)}$	=	Deflection due to non-composite dead load (deck and midspan diaphragm) (in)
W_{deck}	=	Deck weight per unit length (k/ft)
P_{dia}	=	Midspan diaphragm weight (kips)
E	=	Girder modulus of elasticity at final condition (see 19.3.3.8) (ksi)

A similar calculation is done for parapet and sidewalk loads on the composite section. Provisions for deflections due to future wearing surface shall not be included.

For girder structures with raised sidewalks, loads shall be distributed as specified in Chapter 17, and separate deflection calculations shall be performed for the interior and exterior girders.

19.3.3.18.3 Residual Camber

Residual camber is the camber that remains after the prestress camber has been reduced by the composite and non-composite dead load deflection. Residual camber is computed as follows:

$$RC = \Delta_i - \Delta_{nc(DL)} - \Delta_{c(DL)}$$

19.3.4 Prestressed I-Girder Deck Forming

Deck forming requires computing the relationship between the top of girder and bottom of deck necessary to achieve the desired vertical roadway alignment. Current practice for design is to use a minimum haunch of 2" at the edge of the girder flange. This will facilitate current deck forming practices which use 1/2" removable hangers and 3/4" plywood, and it will allow for variations in prestress camber. Also, future deck removal will be less likely to damage the top girder flanges. See 19.3.3.1 for the method to determine haunch height for section properties. An average haunch height of 3 inches minimum can be used for determining haunch weight for preliminary design. It should be noted that the actual haunch values for weight calculations should be compared with the estimated values during final design. If there are significant differences in these values, the design should be revised. The actual average haunch height should be used to calculate the concrete quantity reported on the plans as well as the value reported on the prestressed girder details sheet. The actual haunch values at the girder ends shall be used for determining beam seat elevations.

For designs involving vertical curves, Figure 19.3-6 shows two different cases.

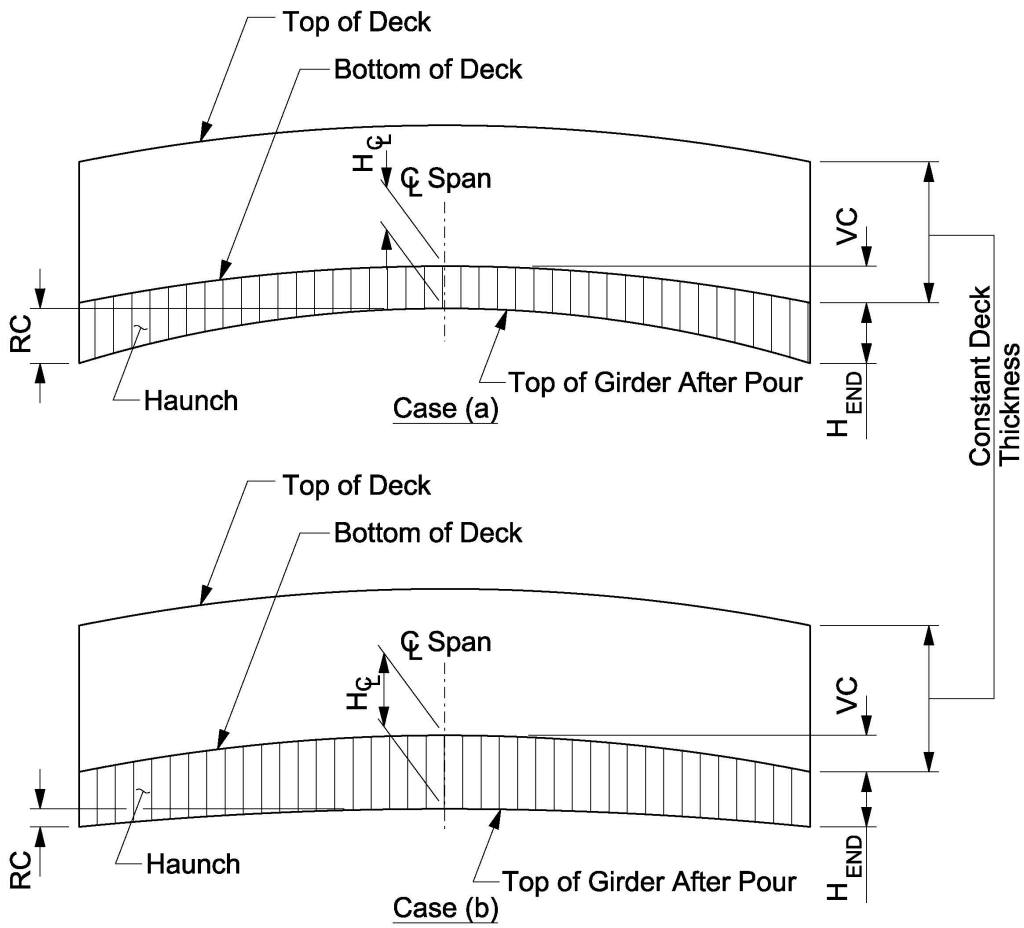

Figure 19.3-6
Relationship between Top of Girder and Bottom of Deck

In Case (a), VC is less than the computed residual camber, RC, and the minimum haunch occurs at midspan. In Case (b), VC is greater than RC and the minimum haunch occurs at the girder ends.

Deck forms are set to accommodate the difference between the bottom of the deck and the top of the girder under all dead loads placed at the time of construction, including the wet deck concrete and superimposed parapet and sidewalk loads. The deflection of superimposed future wearing surface and live loads are not included.

19.3.4.1 Equal-Span Continuous Structures

For equal-span continuous structures having all spans on the same vertical alignment, the deck forming is the same for each span. This is due to the constant change of slope of the vertical curve or tangent and the same RC per span.

The following equation is derived from Figure 19.3-6:

$$+H_{END} = RC - VC + (+H_{CL})$$

Where:

H_{END}	=	See Figure 19.3-6 (in)
RC	=	Residual camber, positive for upward (in)
VC	=	Difference in vertical curve, positive for crest vertical curves and negative for sag vertical curves (in)
H_{CL}	=	See Figure 19.3-6 (in)

19.3.4.2 Unequal Spans or Curve Combined With Tangent

For unequal spans or when some spans are on a vertical curve and others are on a tangent, a different approach is required. Generally the longer span or the one off the curve dictates the haunch required at the common support. Therefore, it is necessary to pivot the girder about its midspan in order to achieve an equal condition at the common support. This is done mathematically by adding together the equation for each end (abutment and pier), as follows:

$$(+H_{LT}) + (+H_{RT}) = 2[RC - VC + (+H_{CL})]$$

Where:

H_{LT}	=	H_{END} at left (in)
H_{RT}	=	H_{END} at right (in)

With the condition at one end known due to the adjacent span, the condition at the other end is computed.

19.3.5 Construction Joints

The transverse construction joints should be located in the deck midway between the cut-off points of the continuity reinforcement or at the 0.75 point of the span, whichever is closest to the pier. The construction joint should be located at least 1' from the cut-off points.

This criteria keeps stresses in the slab reinforcement due to slab dead load at a minimum and makes deflections from slab dead load closer to the theoretical value.

19.3.6 Strand Types

Low relaxation strands (0.5” and 0.6” in diameter) are currently used in prestressed I-girder and prestressed box girder designs and are shown on the plans. Strand patterns and initial prestressing forces are given on the plans, and deflection data is also shown.

19.3.7 Construction Dimensional Tolerances

Refer to the *AASHTO LRFD Bridge Construction Specifications* for the required dimensional tolerances.

19.3.8 Prestressed I-Girder Sections

WisDOT BOS employs two prestress I-girder section families. One I section family follows the AASHTO standard section, while the other section family follows a wide flange bulb-tee, see Figure 19.3-7. These sections employ draped strand patterns with undraped alternates where feasible. Undraped strand patterns, when practical, should be specified on the designs. For these sections, the cost of draping far exceeds savings in strands. See the Standard Details for the prestressed I-girder sections' draped and undraped strand patterns. Note, for the 28" prestressed I-girder section the 16 and 18 strand patterns require bond breakers.

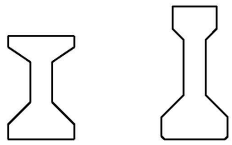

WisDOT Standard Girder Shapes

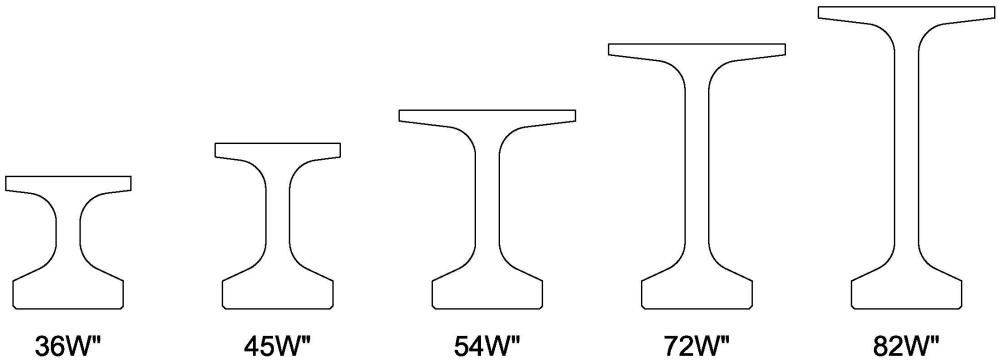

WisDOT Wide Flange Girder Shapes

Figure 19.3-7
Prestressed I-Girder Family Details

Table 19.3-1 and Table 19.3-2 provide span lengths versus interior girder spacings for HL-93 live loading on single-span and multiple-span structures for prestressed I-girder sections. Girder spacings are based on using low relaxation strands at $0.75f_{pu}$, concrete haunch thicknesses, slab thicknesses from Chapter 17 – Superstructures - General and a future wearing surface. For these tables, a line load of 0.300 klf is applied to the girder to account for superimposed dead loads.

Several girder shapes have been retired from standard use on new structures. These include the following sizes; 45-inch, 54-inch and 70-inch. These girder shapes are used for girder replacements, widening and for curved new structures where the wide flange sections are not practical. See Chapter 40 – Bridge Rehabilitation for additional information on these girder shapes.

Due to the wide flanges on the 54W, 72W and 82W and the variability of residual camber, haunch heights frequently exceed 2”. An average haunch of 4” was used for all wide flange girders in the following tables. **Do not push the span limits/girder spacing during preliminary design.** See Table 19.3-2 for guidance regarding use of excessively long prestressed I-girders.

Tables are based on:

- Interior prestressed I-girders, 0.5” or 0.6” dia. strands (in accordance with the Standard Details).
- f'_c girder = 8,000 psi
- f'_c slab = 4,000 psi
- Haunch height (dead load) = 2 ½” for 28” and 36” girders

  = 4” for 45W”,54W”,72W” and 82W” girders
- Haunch height (section properties) = 2”
- Required f'_c girder at initial prestress < 6,800 psi

28" Prestressed I-Girder		
Girder Spacing	Single Span	2 Equal Spans
6’-0”	59	65
6’-6”	58	63
7’-0”	56	62
7’-6”	55	60
8’-0”	54	59
8’-6”	52	57
9’-0”	51	56
9’-6”	50	54
10’-0”	49	53
10’-6”	48	52
11’-0”	47	51
11’-6”	46	50
12’-0”	45	48

36" Prestressed I-Girder		
Girder Spacing	Single Span	2 Equal Spans
6’-0”	76	82
6’-6”	74	80
7’-0”	69	78
7’-6”	66	76
8’-0”	65	75
8’-6”	63	69
9’-0”	62	67
9’-6”	60	65
10’-0”	59	64
10’-6”	58	63
11’-0”	51	61
11’-6”	50	60
12’-0”	49	58

36W" Prestressed I-Girder		
Girder Spacing	Single Span	2 Equal Spans
6’-0”	94	101
6’-6”	92	99
7’-0”	90	97
7’-6”	88	95
8’-0”	87	93
8’-6”	85	91
9’-0”	83	90
9’-6”	82	87
10’-0”	80	86
10’-6”	79	84
11’-0”	77	82
11’-6”	76	81
12’-0”	73	79

45W" Prestressed I-Girder		
Girder Spacing	Single Span	2 Equal Spans
6’-0”	111	120
6’-6”	109	117
7’-0”	107	115
7’-6”	105	113
8’-0”	103	111
8’-6”	101	108
9’-0”	99	106
9’-6”	97	104
10’-0”	95	102
10’-6”	94	100
11’-0”	92	98
11’-6”	90	96
12’-0”	88	94

Table 19.3-1
Maximum Span Length vs. Girder Spacing

54W" Prestressed I-Girder		
Girder Spacing	Single Span	2 Equal Spans
6'-0"	125	134
6'-6"	123	132
7'-0"	120	129
7'-6"	118	127
8'-0"	116	125
8'-6"	114	122
9'-0"	112	120
9'-6"	110	117
10'-0"	108	115
10'-6"	106	114
11'-0"	104	111
11'-6"	103	110
12'-0"	100	107

72W" Prestressed I-Girder		
Girder Spacing	Single Span	2 Equal Spans
6'-0"	153*	164*⊗
6'-6"	150	161*⊗
7'-0"	148	158*
7'-6"	145	156*
8'-0"	143	153*
8'-6"	140	150
9'-0"	138	148
9'-6"	135	144
10'-0"	133	142
10'-6"	131	140
11'-0"	129	137
11'-6"	127	135
12'-0"	124	132

82W" Prestressed I-Girder		
Girder Spacing	Single Span	2 Equal Spans
6'-0"	166*⊗	177*⊗
6'-6"	163*⊗	174*⊗
7'-0"	161*⊗	172*⊗
7'-6"	158*	169*⊗
8'-0"	156*	166*⊗
8'-6"	152	163*⊗
9'-0"	150	160*⊗
9'-6"	147	157*
10'-0"	145	154*
10'-6"	143	152
11'-0"	140	149
11'-6"	138	147
12'-0"	135	144

Table 19.3-2
Maximum Span Length vs. Girder Spacing

* For lateral stability during lifting these girder lengths may require pick-up point locations greater than distance d (girder depth) from the ends of the girder. The designer shall assume that the pick-up points will be at the 1/10 points from the end of the girder and provide extra non-prestressed steel in the top flange, if required, and check the concrete strength near the

lift location based on f'_{ci}. A note should be placed on the girder details sheet to reflect that the girder was analyzed for a potential lift at the 1/10 point.

⊗ Due to difficulty manufacturing, transporting and erecting excessively long prestressed girders, consideration should be given to utilizing an extra pier to minimize use of such girders. Approval from the Bureau of Structures is required to utilize any girder over 158 ft. long. (Currently, there is still a moratorium on the use of all 82W"). Steel girders may be considered if the number of piers can be reduced enough to offset the higher costs associated with a steel superstructure.

19.3.8.1 Prestressed I-Girder Standard Strand Patterns

The standard strand patterns presented in the Standard Details were developed to eliminate some of the trial and error involved in the strand pattern selection process. These standard strand patterns should be used whenever possible, with a straight strand arrangement preferred over a draped strand arrangement. The designer is responsible for ensuring that the selected strand pattern meets all LRFD requirements.

Section 19.3.3 discusses the key parts of the design procedure, and how to effectively use the standard strand patterns along with Table 19.3-1 and Table 19.3-2.

The amount of drape allowed is controlled by the girder size and the 2" clearance from center of strand to top of girder. See the appropriate Standard Girder Details for guidance on draping.

19.3.9 Prestressed Box Girders Post-Tensioned Transversely

These sections may be used for skews up to 30° with the transverse post-tensioning ducts placed along the skew. Skews over 30° are not recommended, but if absolutely required the transverse post-tensioning ducts should be placed perpendicular to the prestressed sections. Also for skews over 30° a more refined method of analysis should be used such as an equivalent plate analysis or a finite element analysis.

Details for transverse post-tensioning are shown in the Standard Details. Each post-tensioning duct contains three ½" diameter strands which produce a total post-tensioning force per duct of 86.7 kips.

Prestressed box girders are subject to high chloride ion exposure because of longitudinal cracking that sometimes occurs between the boxes or from drainage on the fascia girders when an open steel railing system is used. To reduce permeability the concrete mix is required to contain fly ash as stated in 503.2.2 of the Standard Specifications.

When these sections are in contact with water for 5-year flood events or less, the sections must be cast solid for long term durability. When these sections are in contact with water for the 100-year flood event or less, any voids in the section must be cast with a non-water-absorbing material.

Table 19.3-3 provides approximate span limitations for prestressed box girder sections. It also gives the section properties associated with these members. Criteria for developing these tables are shown below Table 19.3-3.

19.3.9.1 Available Prestressed Box Girder Sections and Maximum Span Lengths

Precasters have forms available to make six prestressed girder box sections ranging in depth from 12” to 42”. Each section can be made in widths of 36” and 48”, but 48” is more efficient and is the preferred width. Typical box section information is shown in the Standard Details.

Table 19.3-3 shows available section depths, section properties, and maximum span length. All sections have voids except the 12” deep section.

	Section No.	Section Depth (inches)	Section Area, A, (in^2)	Moment of Inertia, I, (in^4)	Section Modulus, (in^3)		Torsional Inertia, J, (in^4)	Max. Span (ft)
					S_{Top}	S_{Bottom}		
3’-0” Section Width	1	12	422	5,101	848	852	15,955	24
	2	17	452	14,047	1,648	1,657	23,797	40
	3	21	492	25,240	2,398	2,410	39,928	49
	4	27	565	50,141	3,706	3,722	68,925	58
	5	33	625	85,010	5,142	5,162	102,251	64
	6	42	715	158,749	7,546	7,573	158,033	77
4’-0” Section Width	1	12	566	6,829	1,136	1,140	22,600	25
	2	17	584	18,744	2,201	2,210	38,427	39
	3	21	624	33,501	3,184	3,197	65,395	49
	4	27	697	65,728	4,860	4,877	114,924	59
	5	33	757	110,299	6,674	6,696	173,031	68
	6	42	847	203,046	9,655	9,683	272,267	80

Table 19.3-3
Prestressed Box Girder Section Properties and Maximum Span Length

Table based on:

- HL93 loading and AASHTO LRFD Bridge Design Specifications
- Simple span
- f'_c = 5 ksi and f'_{ci} = 4.25 ksi
- 0.5” dia. or 0.6” dia., low relaxation prestressing strands at $0.75f'_s$
- f'_s = 270.0 ksi
- 6” min. concrete deck (which doesn’t contribute to stiffness of section)
- Single slope parapet 42SS weight distributed evenly to all girder sections
- 30° skew used to compute diaphragm weight

- 2 ¾” of grout between sections
- Post-tensioning diaphragms located as stated in the Standard Details
- 30’-0” minimum clear bridge width (eleven 3’-0” sections, eight 4’-0” sections)

19.3.9.2 Decks and Overlays

There are three types of systems.

1. Reinforced Concrete Deck (design non-composite, detail composite)
2. Concrete Overlay, Grade E or C (non-composite)
3. Asphaltic Overlay with Waterproofing Membrane (not allowed)

19.3.9.3 Grout between Prestressed Box Girders

These sections are set 1” apart with a ±¼” tolerance. The space between sections is filled with a grout mix prior to post-tensioning the sections transversely. Post-tensioning is not allowed until the grout has cured for at least 48 hours and has attained a compressive strength of 3000psi.

19.4 Field Adjustments of Pretensioning Force

When strands are tensioned in open or unheated areas during cold weather they are subject to loss due to change in temperature. This loss can be compensated for by noting the change in temperature of the strands between tensioning and initial set of the concrete. For purposes of uniformity the strand temperature at initial concrete set is taken as 80°F.

Minor changes in temperature have negligible effects on the prestress force, therefore only at strand temperatures of 50°F and lower are increases in the tensioning force made.

Since plan prestress forces are based on 75% of the ultimate for low relaxation strands it is necessary to utilize the AASHTO allowable of temporarily overstressing up to 80% to provide for the losses associated with fabrication.

The following example outlines these losses and shows the elongation computations which are used in conjunction with jack pressure gages to control the tensioning of the strands.

Computation for Field Adjustment of Prestress Force

Known:

22 - 1/2", 7 wire low relaxation strands, A_{ps} = 0.1531 in^2

P_{pj} = 710.2 kips (jacking force from plan)

T_1 = 40°F (air temperature at strand tensioning)

T_2 = 80°F (concrete temperature at initial set)

L = 300' = 3,600" (distance from anchorage to reference point)

L_1 = 240' = 2,880" (length of cast segment)

E_p = 29,000 ksi (of prestressing tendons, sample tested from each spool)

C = 0.0000065 (coefficient of thermal expansion for steel, per degree F.)

COMPUTE:

jacking force per strand = P_{pj} = 710.2/22 = 32.3 kips

DL_1 = PL/AE = 32.3 x 3600/(0.1531 x 29,000) = 26.1"

Initial Load of 1.5 Kips to set the strands

DL_2 = 1.5 x 3600/(0.1531 x 29000) = 1.22"

DL_3 = Slippage in Strand Anchors = 0.45" (Past Experience)

DL_4 = Movement in Anchoring Abutments = 0.25" (Past Experience)

$DL_5 = C \times L_1 \times (T_2 - T_1) = 0.0000065 \times 2880 \times 40 = 0.75"$

$P_{Loss} = DL_5 \times A \times E/L = 0.749 \times 0.1531 \times 29000/3600 = 0.9$ Kips

Total Prestress Force = $P + P_{Loss} = 32.3 + 0.9 = 33.2$ Kips

Total Elongation = $DL_1 + DL_3 + DL_4 + DL_5 = 27.55"$

Elongation After Initial Load = 27.55 - 1.22 = 26.33"

19.5 References

1. Whitney, C. S., "*Plastic Theory of Reinforced Concrete Design*", ASCE Trans., 107, 1942, p. 251.

2. Karr, P. H., Kriz, L. B. and Hognestad, E., "*Precast-Prestressed Concrete Bridges 1. Pilot Tests of Continuous Beams*", Portland Cement Association Development Department, Bulletin D34.

3. Mattock, A. H. and Karr, P. H., "*Precast-Prestressed Concrete Bridges 3. Further Tests of Continuous Girders*", Portland Cement Association Development Department, Bulletin D43.

4. Freyermuth, Clifford L., "*Design of Continuous Highway Bridges with Precast, Prestressed Concrete Girders (EB014.01E)*", Portland Cement Association, 1969.

5. Lin, T. Y. and Burns, N. H., "*Design of Prestressed Concrete Structures*", Third Edition, J. Wiley, 1981.

19.6 Design Examples

E19-1 Single Span Bridge, 72W Girders, LRFD

E19-2 2 Span Bridge, 54W Girders, Continuity Reinforcement, LRFD

E19-3 Single Span Adjacent Box Beam, LRFD

E19-4 Lifting Check for Prestressed Girders, LRFD

This page intentionally left blank.

Table of Contents

E19-1 Single Span Bridge, 72W" Prestressed Girders LRFD 2
E19-1.1 Design Criteria 2
E19-1.2 Modulus of Elasticity of Beam and Deck Material. 3
E19-1.3 Section Properties 3
E19-1.4 Girder Layout 4
E19-1.5 Loads 4
E19-1.5.1 Dead Loads. 5
E19-1.5.2 Live Loads 5
E19-1.6 Load Distribution to Girders 6
E19-1.6.1 Distribution Factors for Interior Beams:. 7
E19-1.6.2 Distribution Factors for Exterior Beams:. 7
E19-1.6.3 Distribution Factors for Fatigue:. 9
E19-1.7 Limit States and Combinations 9
E19-1.7.1 Load Factors 9
E19-1.7.2 Dead Load Moments 10
E19-1.7.3 Live Load Moments 10
E19-1.7.4 Factored Moments 11
E19-1.8 Composite Girder Section Properties 12
E19-1.9 Preliminary Design Information 13
E19-1.10 Preliminary Design Steps 16
E19-1.10.1 Determine Amount of Prestress. 16
E19-1.10.2 Prestress Loss Calculations 18
E19-1.10.2.1 Elastic Shortening Loss. 18
E19-1.10.2.2 Approximate Estimate of Time Dependant Losses. 19
E19-1.10.3 Design of Strand Drape. 20
E19-1.10.4 Stress Checks at Critical Sections. 26
E19-1.11 Calculate Jacking Stress. 31
E19-1.12 Flexural Strength Capacity at Midspan. 32
E19-1.13 Shear Analysis 37
E19-1.14 Longitudinal Tension Flange Capacity 46
E19-1.15 Composite Action Design for Interface Shear Transfer. 47
E19-1.16 Deflection Calculations 49
E19-1.17 Camber Calculations 49

E19-1 Single Span Bridge, 72W" Prestressed Girders - LRFD

This example shows design calculations for a single span prestressed gider bridge. The *AASHTO LRFD Bridge Design Specifications* are followed as stated in the text of this chapter. ***(Example is current through LRFD Eighth Edition - 2017)***

E19-1.1 Design Criteria

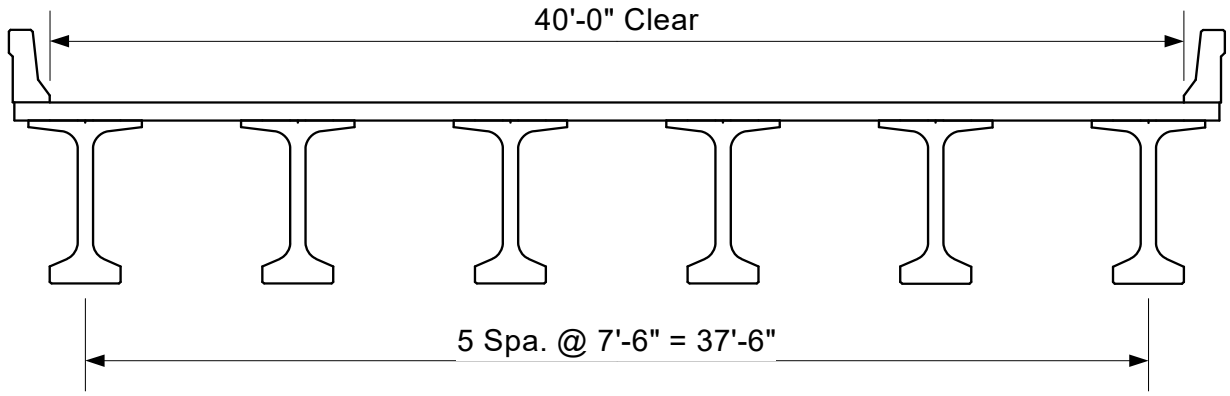

$L := 146$	center to center of bearing, ft	
$L_g := 147$	total length of the girder (the girder extends 6 inches past the center of bearing at each abutment).	
$w_b := 42.5$	out to out width of deck, ft	
$w := 40$	clear width of deck, 2 lane road, 3 design lanes, ft	
$f'_c := 8$	girder concrete strength, ksi	
$f'_{ci} := 6.8$	girder initial concrete strength, ksi	New limit for release strength.
$f'_{cd} := 4$	deck concrete strength, ksi	
$f_{pu} := 270$	low relaxation strand, ksi	
$d_b := 0.6$	strand diameter, inches	
$A_{strand} := 0.217$	area of strand, in^2	
$w_p := 0.387$	weight of Wisconsin Type LF parapet, klf	
$t_s := 8$	slab thickness, in	
$t_{se} := 7.5$	effective slab thickness, in	
$skew := 20$	skew angle, degrees	
$E_s := 28500$	ksi, Modulus of Elasticity of the Prestressing Strands	
$w_c := 0.150$	kcf	

E19-1.2 Modulus of Elasticity of Beam and Deck Material

Based on past experience, the modulus of elasticity for the precast and deck concrete are given in Chapter 19 as $E_{beam6} := 5500\,ksi$ and $E_{deck4} := 4125\,ksi$ for concrete strengths of 6 and 4 ksi respectively. The values of E for different concrete strengths are calculated as follows (ksi):

$$E_{beam8} := 5500 \cdot \frac{\sqrt{f'_c \cdot 1000}}{\sqrt{6000}} \qquad \boxed{E_{beam8} = 6351} \qquad E_B := E_{beam8}$$

$$E_D := E_{deck4}$$

$$n := \frac{E_B}{E_D} \qquad \boxed{n = 1.540}$$

Note that this value of E_B is used for strength, composite section property, and long term deflection (deck and live load) calculations.

The value of the modulus of elasticity at the time of release is calculated in accordance with **LRFD [C5.4.2.4]**. This value of E_{ct} is used for loss and instantaneous deflection (due to prestress and dead load of the girder) calculations.

$$E_{beam6.8} := 33000 \cdot w_c^{1.5} \cdot \sqrt{f'_{ci}} \qquad \boxed{E_{beam6.8} = 4999} \qquad E_{ct} := E_{beam6.8}$$

E19-1.3 Section Properties

72W Girder Properties:

$w_{tf} := 48$	in		
$t_t := 5.5$	in		
$t_w := 6.5$	in		
$t_b := 13$	in		
$ht := 72$	in		
$b_w := 30$	width of bottom flange, in		
$A_g := 915$	in^2		
$r_{sq} := 717.5$	in^2	$y_b := -34.87$	in
$I_g := 656426$	in^4	$S_t := 17680$	in^3
$y_t := 37.13$	in	$S_b := -18825$	in^3

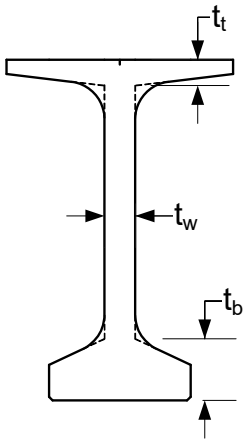

$e_g := y_t + 2 + \frac{t_{se}}{2}$ $\boxed{e_g = 42.88}$ in

Web Depth: $d_w := ht - t_t - t_b$ $\boxed{d_w = 53.50}$ in

$K_g := n \cdot \left(I_g + A_g \cdot e_g^2\right)$ **LRFD [Eq 4.6.2.2.1-1]** $\boxed{K_g = 3600866}$ in^4

E19-1.4 Girder Layout

Chapter 19 suggests that at a 146 foot span, the girder spacing should be approximately 7'-6" with 72W girders.

$S := 7.5$ ft

Assume a minimum overhang of 2.5 feet (2 ft flange + 6" overhang), $s_{oh} := 2.5$

$n_{spa} := \frac{w_b - 2 \cdot s_{oh}}{S}$ $\boxed{n_{spa} = 5.000}$

Use the next lowest integer: $n_{spa} := \text{ceil}(n_{spa})$ $\boxed{n_{spa} = 5}$

Number of girders: $ng := n_{spa} + 1$ $\boxed{ng = 6}$

Overhang Length: $s_{oh} := \frac{w_b - S \cdot n_{spa}}{2}$ $\boxed{s_{oh} = 2.50}$ ft

Recalculate the girder spacing based on a minimum overhang, $s_{oh} := 2.5$

$S := \frac{w_b - 2 \cdot s_{oh}}{n_{spa}}$ $\boxed{S = 7.50}$ ft

E19-1.5 Loads

$w_g := 0.953$	weight of 72W girders, klf
$w_d := 0.100$	weight of 8-inch deck slab (interior), ksf
$w_h := 0.125$	weight of 2.5-in haunch, klf
$w_{di} := 0.460$	weight of diaphragms on interior girder (assume 2), kips
$w_{dx} := 0.230$	weight of diaphragms on exterior girder, kips
$w_{ws} := 0.020$	future wearing surface, ksf
$w_p = 0.387$	weight of parapet, klf

E19-1.5.1 Dead Loads

Dead load on non-composite (DC):

exterior:

$$w_{dlxi} := w_g + w_d \cdot \left(\frac{S}{2} + s_{oh}\right) + w_h + 2 \cdot \frac{w_{dx}}{L}$$

$w_{dlxi} = 1.706$ klf

interior:

$$w_{dlii} := w_g + w_d \cdot S + w_h + 2 \cdot \frac{w_{di}}{L}$$

$w_{dlii} = 1.834$ klf

* Dead load on composite (DC):

$$w_p := \frac{2 \cdot w_p}{ng}$$

$w_p = 0.129$ klf

* Wearing Surface (DW):

$$w_{ws} := \frac{w \cdot w_{ws}}{ng}$$

$w_{ws} = 0.133$ klf

* **LRFD [4.6.2.2.1]** states that permanent loads on the deck may be distributed uniformly among the beams. This method is used for the parapet and future wearing surface loads.

E19-1.5.2 Live Loads

For Strength 1 and Service 1 and 3:

HL-93 loading = truck + lane **LRFD [3.6.1.3.1]**

tandem + lane

DLA of 33% applied to truck or tandem, but not to lane per **LRFD [3.6.2.1].**

For Fatigue:

LRFD [5.5.3] states that fatigue of the reinforcement need not be checked for fully prestressed components designed to have extreme fiber tensile stress due to Service III Limit State within the tensile stress limit specified in **LRFD [Table 5.9.2.3.2b-1]**.

For fully prestressed components, the compressive stress due to the Fatigue I load combination and one half the sum of effective prestress and permanent loads shall not exceed 0.40 f'c after losses.

DLA of 15% applied to design truck with a 30 foot axle spacing.

For the Wisconsin Standard Permit Vehicle (Wis-250) Check:

The Wis-250 vehicle is to be checked during the design calculations to make sure it can carry a minimum vehicle weight of 190 kips. See Chapter 45 - Bridge Ratings for calculations.

E19-1.6 Load Distribution to Girders

In accordance with **LRFD [Table 4.6.2.2.1-1]**, this structure is a Type "K" bridge.

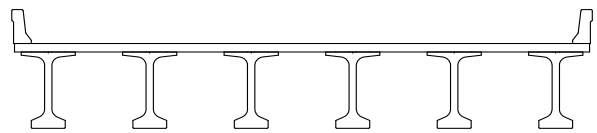

Distribution factors are in accordance with **LRFD [Table 4.6.2.2.2b-1]**. For an interior beam, the distribution factors are shown below:

For one Design Lane Loaded:

$$0.06 + \left(\frac{S}{14}\right)^{0.4} \cdot \left(\frac{S}{L}\right)^{0.3} \cdot \left(\frac{K_g}{12.0 \cdot L \cdot t_{se}^{\ 3}}\right)^{0.1}$$

For Two or More Design Lanes Loaded:

$$0.075 + \left(\frac{S}{9.5}\right)^{0.6} \cdot \left(\frac{S}{L}\right)^{0.2} \cdot \left(\frac{K_g}{12.0 \cdot L \cdot t_{se}^{\ 3}}\right)^{0.1}$$

Criteria for using distribution factors - Range of Applicability per **LRFD [Table 4.6.2.2.2b-1]**.

$$DeckSpan := \begin{cases} \text{"OK"} & \text{if } 3.5 \le S \le 16 \\ \text{"NG"} & \text{otherwise} \end{cases}$$

$$DeckThickness := \begin{cases} \text{"OK"} & \text{if } 4.5 \le t_{se} \le 12 \\ \text{"NG"} & \text{otherwise} \end{cases}$$

$$BridgeSpan := \begin{cases} \text{"OK"} & \text{if } 20 \le L \le 240 \\ \text{"NG"} & \text{otherwise} \end{cases}$$

$$NoBeams := \begin{cases} \text{"OK"} & \text{if } ng \ge 4 \\ \text{"NG"} & \text{otherwise} \end{cases}$$

$$LongitStiffness := \begin{cases} \text{"OK"} & \text{if } 10000 \le K_g \le 7000000 \\ \text{"NG"} & \text{otherwise} \end{cases}$$

$$x := \begin{pmatrix} S & \text{DeckSpan} \\ t_{se} & \text{DeckThickness} \\ L & \text{BridgeSpan} \\ ng & \text{NoBeams} \\ K_g & \text{LongitStiffness} \end{pmatrix} \qquad x = \begin{pmatrix} 7.5 & \text{"OK"} \\ 7.5 & \text{"OK"} \\ 146.0 & \text{"OK"} \\ 6.0 & \text{"OK"} \\ 3600866.5 & \text{"OK"} \end{pmatrix}$$

E19-1.6.1 Distribution Factors for Interior Beams:

One Lane Loaded:

$$g_{i1} := 0.06 + \left(\frac{S}{14}\right)^{0.4} \cdot \left(\frac{S}{L}\right)^{0.3} \cdot \left(\frac{K_g}{12.0 \cdot L \cdot t_{se}^{\,3}}\right)^{0.1} \qquad \boxed{g_{i1} = 0.435}$$

Two or More Lanes Loaded:

$$g_{i2} := 0.075 + \left(\frac{S}{9.5}\right)^{0.6} \cdot \left(\frac{S}{L}\right)^{0.2} \cdot \left(\frac{K_g}{12.0 \cdot L \cdot t_{se}^{\,3}}\right)^{0.1} \qquad \boxed{g_{i2} = 0.636}$$

$$g_i := \max(g_{i1}, g_{i2}) \qquad \boxed{g_i = 0.636}$$

Note: The distribution factors above already have a multiple presence factor included that is used for service and strength limit states. For fatigue limit states, the 1.2 multiple presence factor should be divided out.

E19-1.6.2 Distribution Factors for Exterior Beams:

Two or More Lanes Loaded:

Per **LRFD [Table 4.6.2.2.2d-1]** the distribution factor shall be calculated by the following equations:

$$w_{parapet} := \frac{w_b - w}{2}$$ Width of parapet overlapping the deck $\boxed{w_{parapet} = 1.250}$ ft

$$d_e := s_{oh} - w_{parapet}$$ Distance from the exterior web of exterior beam to the interior edge of parapet, ft. $\boxed{d_e = 1.250}$ ft

Note: Conservatively taken as the distance from the center of the exterior girder.

Check range of applicability for de:

$$d_{e_check} := \begin{cases} \text{"OK"} & \text{if } -1.0 \le d_e \le 5.5 \\ \text{"NG"} & \text{otherwise} \end{cases}$$

$d_{e_check} = \text{"OK"}$

Note: While AASHTO allows the d_e value to be up to 5.5, the deck overhang (from the center of the exterior girder to the edge of the deck) is limited by WisDOT policy as stated in Chapter 17 of the Bridge Manual.

$$e := 0.77 + \frac{d_e}{9.1}$$

$e = 0.907$

$$g_{x2} := e \cdot g_i$$

$g_{x2} = 0.577$

One Lane Loaded:

Per **LRFD [Table 4.6.2.2.2d-1]** the distribution factor shall be calculated by the Lever Rule.

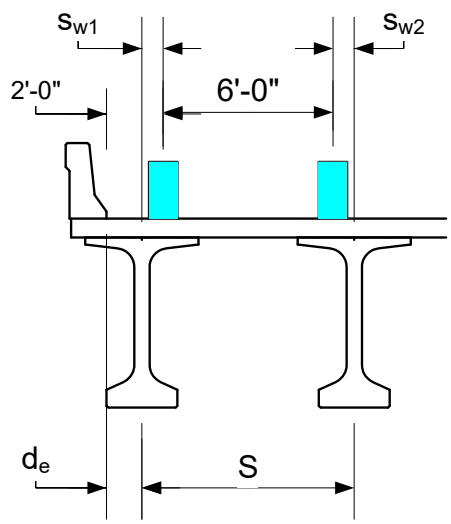

$s_{w1} := d_e - 2$ Distance from center of exterior girder to outside wheel load, ft. $s_{w1} = -0.750$ ft

$s_{w2} := S + s_{w1} - 6$ Distance from wheel load to first interior girder, ft. $s_{w2} = 0.750$ ft

$$R_x := \frac{S + s_{w1} + s_{w2}}{S \cdot 2}$$

$R_x = 0.500$ % of a lane load

Add the single lane multi-presence factor, $m := 1.2$

$$g_{x1} := R_x \cdot 1.2$$

$g_{x1} = 0.600$

The exterior girder distribution factor is the maximum value of the One Lane Loaded case and the Two or More Lanes Loaded case:

$g_x := \max(g_{x1}, g_{x2})$ $\boxed{g_x = 0.600}$

Note: The interior girder has a larger live load distribution factor and a larger dead load than the exterior girder. Therefore, for this example, the interior girder is likely to control.

E19-1.6.3 Distribution Factors for Fatigue:

The distribution factor for fatigue is the single lane distribution factor with the multi-presence factor, $m = 1.200$, removed:

$g_{if} := \frac{g_{i1}}{1.2}$ $\boxed{g_{if} = 0.362}$

E19-1.7 Limit States and Combinations

The limit states, load factors and load combinations shall be applied as required and detailed in chapter 17 of this manual and as indicated below.

E19-1.7.1 Load Factors

From **LRFD [Table 3.4.1-1 & Table 3.4.1-4]**:

	DC	DW	LL
Strength 1	$\gamma st_{DC} := 1.25$	$\gamma st_{DW} := 1.50$	$\gamma st_{LL} := 1.75$
Service 1	$\gamma s1_{DC} := 1.0$	$\gamma s1_{DW} := 1.0$	$\gamma s1_{LL} := 1.0$
Service 3	$\gamma s3_{DC} := 1.0$	$\gamma s3_{DW} := 1.0$	$\gamma s3_{LL} := 0.8$
			Check Tension Stress
Fatigue I			$\gamma f_{LL} := 1.75$

Dynamic Load Allowance (IM) is applied to the truck and tandem.

E19-1.7.2 Dead Load Moments

The unfactored dead load moments are listed below (values are in kip-ft):

Unfactored Dead Load Interior Girder Moments (kip-ft)				
Tenth Point (Along Span)	DC girder at release	DC non-composite	DC composite	DW composite
0	35	0	0	0
0.1	949	1759	124	128
0.2	1660	3128	220	227
0.3	2168	4105	289	298
0.4	2473	4692	330	341
0.5	2574	4887	344	355

The DC_{nc} values are the component non-composite dead loads and include the weight of the girder, haunch, diaphragms and the deck.

The DC_c values are the component composite dead loads and include the weight of the parapets.

The DW_c values are the composite dead loads from the future wearing surface.

Note that the girder dead load moments at release are calculated based on the girder length. The moments for other loading conditions are calculated based on the span length (center to center of bearing).

E19-1.7.3 Live Load Moments

The unfactored live load load moments (per lane including impact) are listed below (values are in kip-ft). Note that the impact factor is applied only to the truck portion of the HL-93 loads. A separate analysis run will be required if results without impact are desired.

Unfactored Live Load + Impact Moments per Lane (kip-ft)			
Tenth Point	Truck	Tandem	Fatigue
0	0	0	0
0.1	1783	1474	937
0.2	2710	2618	1633
0.3	4100	3431	2118
0.4	4665	3914	2383
0.5	4828	4066	2406

The Wisconsin Standard Permit Vehicle should also be checked. See Chapter 45 - Bridge Rating for further information.

The unfactored live load moments per lane are calculated by applying the appropriate distribution factor to the controlling moment. For the interior girder:

$g_i = 0.636$

$M_{LL} = g_i \cdot 4828$ $\boxed{M_{LL} = 3072.8}$ kip-ft

$\boxed{g_{if} = 0.362}$

$M_{LLfat} := g_{if} \cdot 2406$ $\boxed{M_{LLfat} = 871.4}$ kip-ft

E19-1.7.4 Factored Moments

WisDOT's policy is to set all of the load modifiers, η, equal to 1.0. The factored moments for each limit state are calculated by applying the appropriate load factor to the girder moments. For the interior girder:

Strength 1

$$M_{str} := \eta \cdot \left[\gamma st_{DC} \cdot \left(M_{DLnc} + M_{DLc}\right) + \gamma st_{DW} \cdot M_{DWc} + \gamma st_{LL} \cdot M_{LL}\right]$$

$$= 1.0 \cdot \left[1.25 \cdot \left(M_{DLnc} + M_{DLc}\right) + 1.50 \cdot M_{DWc} + 1.75 \cdot M_{LL}\right]$$ $\boxed{M_{str} = 12449.3}$ kip-ft

Service 1 (for compression checks)

$$M_{s1} := \eta \cdot \left[\gamma s1_{DC} \cdot \left(M_{DLnc} + M_{DLc}\right) + \gamma s1_{DW} \cdot M_{DWc} + \gamma s1_{LL} \cdot M_{LL}\right]$$

$$= 1.0 \cdot \left[1.0 \cdot \left(M_{DLnc} + M_{DLc}\right) + 1.0 \cdot M_{DWc} + 1.0 \cdot M_{LL}\right]$$ $\boxed{M_{s1} = 8659.3}$ kip-ft

Service 3 (for tension checks)

$$M_{s3} := \eta \cdot \left[\gamma s3_{DC} \cdot \left(M_{DLnc} + M_{DLc}\right) + \gamma s3_{DW} \cdot M_{DWc} + \gamma s3_{LL} \cdot M_{LL}\right]$$

$$= 1.0 \cdot \left[1.0 \cdot \left(M_{DLnc} + M_{DLc}\right) + 1.0 \cdot M_{DWc} + 0.8 \cdot M_{LL}\right]$$ $\boxed{M_{s3} = 8044.7}$ kip-ft

Service 1 and 3 non-composite DL alone

$M_{nc} := \eta \cdot \gamma s1_{DC} \cdot M_{DLnc}$ $\boxed{M_{nc} = 4887.5}$ kip-ft

Fatigue 1

$M_{fat} := \eta \cdot \gamma f_{LL} \cdot M_{LLfat}$ $\boxed{M_{fat} = 1524.9}$ kip-ft

E19-1.8 Composite Girder Section Properties

Calculate the effective flange width in accordance with **LRFD [4.6.2.6]** and section 17.2.11 of the Wisconsin Bridge Manual:

$w_e := S \cdot 12$ $\boxed{w_e = 90.00}$ in

The effective width, w_e, must be adjusted by the modular ratio, n, to convert to the same concrete material (modulus) as the girder.

$w_{eadj} := \frac{w_e}{n}$ $\boxed{w_{eadj} = 58.46}$ in

Calculate the composite girder section properties:

effective slab thickness; $\boxed{t_{se} = 7.50}$ in

effective slab width; $\boxed{w_{eadj} = 58.46}$ in

haunch thickness; $hau := 2.00$ in

total height; $h_c := ht + hau + t_{se}$

$\boxed{h_c = 81.50}$ in

$\boxed{n = 1.540}$

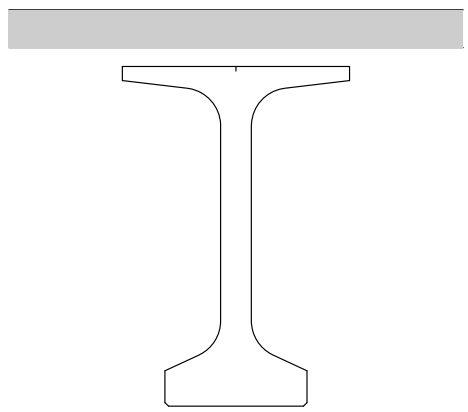

Note: The area of the concrete haunch is not included in the calculation of the composite section properties.

Component	Ycg	A	AY	AY^2	I	$I+AY^2$
Deck	77.75	438	34088	2650309	2055	2652364
Girder	34.87	915	31906	1112564	656426	1768990
Haunch	73	0	0	0	0	0
Summation		1353	65994			4421354

$\boxed{\Sigma A = 1353}$ in^2

$\boxed{\Sigma AY = 65994}$ in^3

$\boxed{\Sigma IplusAYsq = 4421354}$ in^4

$y_{cgb} := \frac{-\Sigma AY}{\Sigma A}$ $\boxed{y_{cgb} = -48.8}$ in

$y_{cgt} := ht + y_{cgb}$ $\boxed{y_{cgt} = 23.2}$ in

$A_{cg} := \Sigma A$ $\boxed{A_{cg} = 1353}$ in^2

$I_{cg} := \Sigma IplusAYsq - A_{cg} \cdot y_{cgb}^2$ $\boxed{I_{cg} = 1203475}$ in^4

$S_{cgt} := \frac{I_{cg}}{y_{cgt}}$ $\boxed{S_{cgt} = 51786}$ in^3

$S_{cgb} := \frac{I_{cg}}{y_{cgb}}$ $\boxed{S_{cgb} = -24681}$ in^3

Deck:

$S_{cgdt} := n \cdot \frac{I_{cg}}{y_{cgt} + hau + t_{se}}$ $\boxed{S_{cgdt} = 56594}$ in^3

$S_{cgdb} := n \cdot \frac{I_{cg}}{y_{cgt} + hau}$ $\boxed{S_{cgdb} = 73411}$ in^3

E19-1.9 Preliminary Design Information

Calculate initial girder loads, service loads, and estimate prestress losses. This information will be utilized in the preliminary design steps.

Note: The initial girder loads will be used to check stresses at transfer (before losses) and the service loads will be used to check stresses while in service (after losses). These calculations and the estimated prestress losses will then be used to select the number of strands for final design calculations.

At transfer (Interior Girder):

$M_{iend} := 0$ kip-ft

$M_g := w_g \cdot \frac{L_g^2}{8}$ $\boxed{M_g = 2574.2}$ kip-ft

At service (Interior Girder):

Service 1 Moment $\boxed{M_{s1} = 8659.3}$ kip-ft

Service 3 Moment $\boxed{M_{s3} = 8044.7}$ kip-ft

Service 1 Moment Components:

non-composite moment (girder + deck) $M_{nc} = 4887.5$ kip-ft

composite moment (parapet, FWS and LL)

$M_{1c} := M_{s1} - M_{nc}$ $M_{1c} = 3771.8$ kip-ft

Service 3 Moment Components:

non-composite moment (girder + deck) $M_{nc} = 4887.5$ kip-ft

composite moment (parapet, FWS and LL)

$M_{3c} := M_{s3} - M_{nc}$ $M_{3c} = 3157.2$ kip-ft

At service the prestress has decreased (due to CR, SH, RE):

Estimated time dependant losses $F_{Delta} := 32.000$ ksi

Note: The estimated time dependant losses (for low relaxation strands) will be re-calculated using the approximate method in accordance with **LRFD [5.9.3.3]** once the number of strands has been determined.

Assume an initial strand stress; $f_{tr} := 0.75 \cdot f_{pu}$ $f_{tr} = 202.500$ ksi

Based on experience, assume $\Delta f_{pES_est} := 18$ ksi loss from elastic shortening. As an alternate initial estimate, **LRFD [C.5.9.3.2.3a]** suggests assuming a 10% ES loss.

$ES_{loss} := \frac{\Delta f_{pES_est}}{f_{tr}} \cdot 100$ $ES_{loss} = 8.889$ %

$f_i := f_{tr} - \Delta f_{pES_est}$ $f_i = 184.500$ ksi

The total loss is the time dependant losses plus the ES losses:

$loss := F_{Delta} + \Delta f_{pES_est}$ $loss = 50.0$ ksi

$loss_{\%} := \frac{loss}{f_{tr}} \cdot 100$ $loss_{\%} = 24.7$ % (estimated)

If T_o is the initial prestress, then (1-loss)*T_o is the remaining:

$$T = \left(1 - loss_{\%}\right) \cdot T_O$$

$$ratio := 1 - \frac{loss_{\%}}{100}$$

$$\boxed{ratio = 0.753}$$

$$T = ratio \cdot T_O$$

E19-1.10 Preliminary Design Steps

The following steps are utilized to design the prestressing strands:

1) Design the amount of prestress to prevent tension at the bottom of the beam under the full load at center span after losses.

2) Calculate the prestress losses and check the girder stresses at mid span at the time of transfer.

3) Design the eccentricity of the strands at the girder end to avoid tension or compression over-stress at the time of transfer.

4) If required, design debonding of strands to prevent over-stress at the girder ends.

5) Check resulting stresses at the critical sections of the girder at the time of transfer and after losses.

E19-1.10.1 Determine Amount of Prestress

Design the amount of prestress to prevent tension at the bottom of the beam under the full load (at center span) after losses.

Near center span, after losses, T = the remaining effective prestress, aim for no tension at the bottom. Use Service I for compression and Service III for tension.

For this example, the interior girder has the controlling moments.

Calculate the stress at the bottom of the beam due to combination of non-composite and composite loading (Service 3 condition):

$$f_b := \frac{M_{nc} \cdot 12}{S_b} + \frac{M_{3c} \cdot 12}{S_{cgb}} \qquad \boxed{f_b = -4.651} \text{ ksi}$$

Stress at bottom due to prestressing (after losses):

$$f_{bp} = \frac{T}{A} \cdot \left(1 + e \cdot \frac{y_b}{r^2}\right) \qquad \text{where } T = \left(1 - loss_{\%}\right) \cdot T_o$$

and $f_{bp} := -f_b$ desired final prestress.

We want this to balance out the tensile stress calculated above from the loading, i.e. an initial compression. Since we are making some assumptions on the actual losses, we are ignoring the allowable tensile stress in the concrete for these calculations.

$$f_{bp} = \frac{\left(1 - loss_{\%}\right) \cdot T_o}{A} \cdot \left(1 + e \cdot \frac{y_b}{r^2}\right) \qquad \text{(after losses)}$$

OR:

$$\frac{f_{bp}}{1 - loss_{\%}} = \frac{T_o}{A} \cdot \left(1 + e \cdot \frac{y_b}{r^2}\right)$$

$$f_{bpi_1} := \frac{f_{bp}}{1 - \frac{loss_{\%}}{100}}$$

$f_{bpi_1} = 6.175$ ksi

desired bottom initial prestress (before losses)

If we use the actual allowable tensile stress in the concrete, the desired bottom initial prestress is calculated as follows:

The allowable tension, from **LRFD [5.9.2.3.2b]**, is:

$f_{tall} := 0.19 \cdot \lambda \sqrt{f'_c} \le 0.6$ ksi; $\lambda = 1.0$ (norm. wgt. conc.) **LRFD [5.4.2.8]**

$f_{tall} = 0.537$ ksi

The desired bottom initial prestress (before losses):

$f_{bpi_2} := f_{bpi_1} - f_{tall}$

$f_{bpi_2} = 5.638$ ksi

Determine the stress effects for different strand patterns on the 72W girder:

$A_{strand} = 0.21 in^2$

$f'_s := 270000$ psi

$f_s := 0.75 \cdot f'_s$

$f_s = 202500$ psi

$P := A_{strand} \cdot \frac{f_s}{1000}$

$P = 43.94$ kips

$$f_{bpi} := \frac{P \cdot N}{A_g} \cdot \left(1 + e \cdot \frac{y_b}{r_{sq}}\right)$$

(bottom initial prestress - before losses)

The values of f_{bpi} for various strand patterns is shown in the following table.

72W Stress Effects		
Pi (per strand) = 43.94 kips		
No. Strands	e (in)	bottom stress (ksi)
36	-31.09	4.3411
38	-30.98	4.5726
40	-30.87	4.8030
42	-30.77	5.0333
44	-30.69	5.2648
46	-30.52	5.4858
48	-30.37	5.7075
50	-30.23	5.9290
52	-30.10	6.1504

Solution:
Try $ns := 44$ strands, 0.6 inch diameter.
Initial prestress at bottom $f_{bpi} := 5.2648$ ksi,
Eccentricity, $e_s := -30.69$ inches; actual tension should be less than allowed.

E19-1.10.2 Prestress Loss Calculations

The loss in prestressing force is comprised of the following components:

1) Elastic Shortening (ES), shortening of the beam as soon as prestress is applied.

2) Shrinkage (SH), shortening of the concrete as it hardens, time function.

3) Creep (CR), slow shortening of concrete due to permanent compression stresses in the beam, time function.

4) Relaxation (RE), the tendon slowly accommodates itself to the stretch and the internal stress drops with time

E19-1.10.2.1 Elastic Shortening Loss

at transfer (before ES loss) **LRFD [5.9.2.2]**

$$T_{oi} := ns \cdot f_{tr} \cdot A_{strand} \qquad \boxed{= 44 \cdot 0.75 \cdot 270 \cdot A_{strand} = 1933} \text{ kips}$$

The ES loss estimated above was: $\Delta f_{pES_est} = 18.0$ ksi, or $ES_{loss} = 8.889$ %. The resulting force in the strands after ES loss:

$$T_o := \left(1 - \frac{ES_{loss}}{100}\right) \cdot T_{oi} \qquad \boxed{T_o = 1761.6} \text{ kips}$$

If we assume all strands are straight we can calculate the initial elastic shortening loss;

$$f_{cgp} := \frac{T_o}{A_g} + \left(T_o \cdot e_s\right) \cdot \frac{e_s}{I_g} + M_g \cdot 12 \cdot \frac{e_s}{I_g} \qquad \boxed{f_{cgp} = 3.009} \text{ ksi}$$

$$\boxed{E_{ct} = 4999} \text{ ksi}$$

$$E_p := E_s \qquad \boxed{E_p = 28500} \text{ ksi}$$

$$\Delta f_{pES} := \frac{E_p}{E_{ct}} \cdot f_{cgp} \qquad \boxed{\Delta f_{pES} = 17.152} \text{ ksi}$$

This value of Δf_{pES} is in agreement with the estimated value above; $\Delta f_{pES_est} = 18.00$ ksi. If these values did not agree, T_o would have to be recalculated using f_{tr} minus the new value of Δf_{pES}, and a new value of f_{cgp} would be determined. This iteration would continue until the assumed and calculated values of Δf_{pES} are in agreement.

The initial stress in the strand is:

$$f_i := f_{tr} - \Delta f_{pES}$$

$f_i = 185.348$ ksi

The force in the beam after transfer is:

$$T_o := ns \cdot A_{strand} \cdot f_i$$

$T_o = 1770$ kips

Check the design to avoid premature failure at the center of the span at the time of transfer.
Check the stress at the center span (at the plant) at both the top and bottom of the girder.

$$f_{ttr} := \frac{T_o}{A_g} + \frac{T_o \cdot e_s}{S_t} + \frac{M_g \cdot 12}{S_t}$$

$f_{ttr} = 0.609$ ksi

$$f_{btr} := \frac{T_o}{A_g} + \frac{T_o \cdot e_s}{S_b} + \frac{M_g \cdot 12}{S_b}$$

$f_{btr} = 3.178$ ksi

temporary allowable stress (compression) **LRFD [5.9.2.3.1a]**:

$$f_{ciall} := 0.65 \cdot f'_{ci}$$

$f_{ciall} = 4.420$ ksi

Is the stress at the bottom of the girder less than the allowable? check = "OK"

E19-1.10.2.2 Approximate Estimate of Time Dependant Losses

Calculate the components of the time dependant losses; shrinkage, creep and relaxation, using the approximate method in accordance with **LRFD [5.9.3.3]**.

$$\Delta f_{pLT} = 10.0 \cdot \frac{f_{pi} \cdot A_{strand}}{A_g} \cdot \gamma_h \cdot \gamma_{st} + 12.0 \cdot \gamma_h \cdot \gamma_{st} + \Delta f_{pR}$$

From **LRFD [Figure 5.4.2.3.3-1]**, the average annual ambient relative humidity, $H := 72$ %.

$\gamma_h := 1.7 - 0.01 \cdot H$ $\boxed{\gamma_h = 0.980}$

$\gamma_{st} := \dfrac{5}{1 + f'_{ci}}$ $\boxed{\gamma_{st} = 0.641}$

$\Delta f_{pR} := 2.4$ ksi for low relaxation strands

$\Delta f_{pCR} := 10.0 \cdot \dfrac{f_{tr} \cdot A_{strand} \cdot ns}{A_g} \cdot \gamma_h \cdot \gamma_{st}$ $\boxed{\Delta f_{pCR} = 13.274}$ ksi

$\Delta f_{pSR} := 12.0 \cdot \gamma_h \cdot \gamma_{st}$ $\boxed{\Delta f_{pSR} = 7.538}$ ksi

$\Delta f_{pRE} := \Delta f_{pR}$ $\boxed{\Delta f_{pRE} = 2.400}$ ksi

$\Delta f_{pLT} := \Delta f_{pCR} + \Delta f_{pSR} + \Delta f_{pRE}$ $\boxed{\Delta f_{pLT} = 23.213}$ ksi

The total estimated prestress loss (Approximate Method):

$\Delta f_p := \Delta f_{pES} + \Delta f_{pLT}$ $\boxed{\Delta f_p = 40.365}$ ksi

$\boxed{\dfrac{\Delta f_p}{f_{tr}} \cdot 100 = 19.93}$ % total prestress loss

This value is slightly less than but in general agreement with the initial estimated $loss_{\%} = 24.691$.

The remaining stress in the strands and total force in the beam after all losses is:

$f_{pe} := f_{tr} - \Delta f_p$ $\boxed{f_{pe} = 162.13}$ ksi

$T := ns \cdot A_{strand} \cdot f_{pe}$ $\boxed{T = 1548}$ kips

E19-1.10.3 Design of Strand Drape

Design the eccentricity of the strands at the end to avoid tension or compression over stress at the time of transfer. Check the top stress at the end. If the strands are straight, $M_g = 0$.

top:

$f_{tetr} := \dfrac{T_o}{A_g} + \dfrac{T_o \cdot e_s}{S_t}$ $\boxed{f_{tetr} = -1.138}$ ksi

high tension stress

In accordance with **LRFD [Table 5.9.2.3.1b]**, the temporary allowable tension stress is calculated as follows (assume there is no bonded reinforcement):

$f_{tiall} := -\min\left(0.0948 \cdot \lambda \sqrt{f'_{ci}}, 0.2\right)$ λ = 1.0 (normal wgt. conc.) **LRFD [5.4.2.8]** $f_{tiall} = -0.200$ ksi

bottom:

$$f_{betr} := \frac{T_o}{A_g} + \frac{T_o \cdot e_s}{S_b}$$

$f_{betr} = 4.819$ ksi

$f_{ciall} = 4.420$ ksi

high compressive stress

The tension at the top is too high, and the compression at the bottom is also too high!!

Drape some of the strands upward to decrease the top tension and decrease the compression at the bottom.

Find the required position of the steel centroid to avoid tension at the top. Conservatively set the top stress equal to zero and solve for "e":

$$f_{tetr} = \frac{T_o}{A_g} + \frac{T_o \cdot e_s}{S_t}$$

$$e_{sendt} := \frac{S_t}{T_o} \cdot \left(0 - \frac{T_o}{A_g}\right)$$

$e_{sendt} = -19.32$ inches or higher

Therefore, we need to move the resultant centroid of the strands up:

$move := e_{sendt} - e_s$ $move = 11.37$ inches upward

Find the required position of the steel centroid to avoid high compression at the bottom of the beam. Set the bottom compression equal to the allowable stress and find where the centroid of $ns = 44$ strands needs to be:

$$f_{betr} = \frac{T_o}{A_g} + \frac{T_o \cdot e_s}{S_b}$$

Set equal to allowed: $f_{betr} := f_{ciall}$

$$e_{sendb} := \frac{S_b}{T_o} \cdot \left(f_{ciall} - \frac{T_o}{A_g}\right)$$

$e_{sendb} = -26.44$ inches or higher

Top stress condition controls:

$e_{send} := \max\left(e_{sendt}, e_{sendb}\right)$ $e_{send} = -19.32$ inches

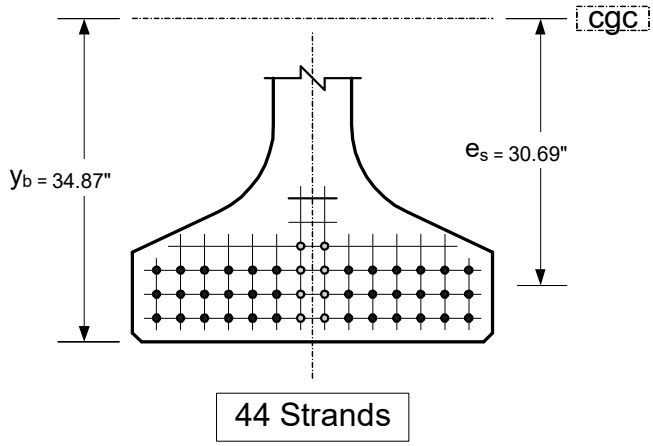

36 undraped strands
8 draped strands

LRFD [Table 5.10.1-1] requires 2 inches of cover. However, WisDOT uses 2 inches to the center of the strand, and 2 inch spacing between centers.

The center $ns_d := 8$ strands will be draped at the end of the girder.

Find the center of gravity of the remaining $ns_s = 36$ straight strands from the bottom of the girder:

$$Y_s := \frac{12 \cdot 2 + 12 \cdot 4 + 12 \cdot 6}{ns_s}$$

$Y_s = 4.00$ inches from the bottom of the girder

OR:

$$y_s := y_b + Y_s$$

$y_s = -30.87$ inches from the center of gravity of the girder (cgc)

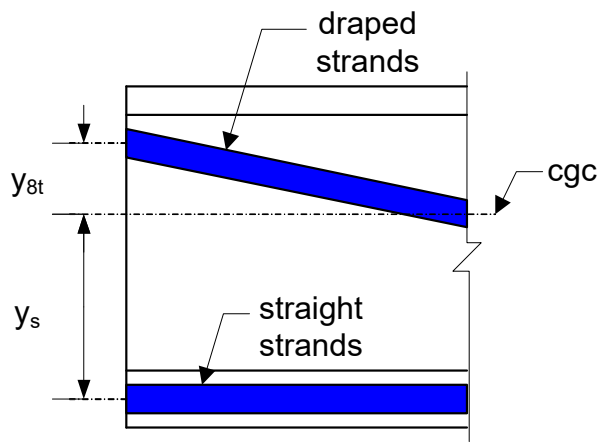

y_{8t} is the eccentricity of the draped strands at the end of the beam. We want the eccentricity of all of the strands at the end of the girder to equal, $e_{send} = -19.322$ inches for stress control.

$$e_{send} = \frac{ns_s \cdot y_s + ns_d \cdot y_{8t}}{ns}$$

$$y_{8t} := \frac{ns \cdot e_{send} - ns_s \cdot y_s}{ns_d}$$ $y_{8t} = 32.64$ inches above the cgc

However, $y_t = 37.13$ inches to the top of the beam. If the draped strands are raised $y_{8t} = 32.64$ inches or more above the cgc, the stress will be OK.

Drape the center strands the maximum amount: Maximum drape for $ns_d = 8$ strands:

$y_{8t} := y_t - 5$ $y_{8t} = 32.13$ in

$e_s = -30.69$ in

$y_{8t} - e_s = 62.82$ in

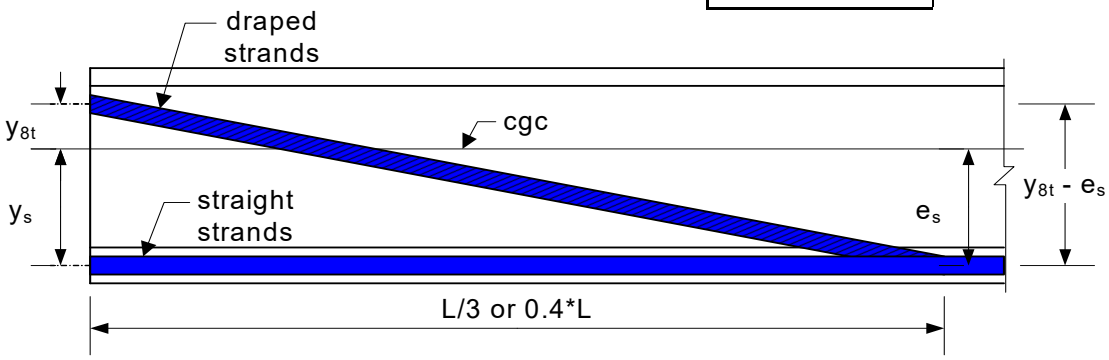

Try a drape length of: $\frac{L_g}{3} = 49.00$ feet $HD := \frac{L_g}{3}$

The eccentricity of the draped strands at the hold down point:

$e_{8hd} := y_b + 5$ $e_{8hd} = -29.870$ in

Strand slope, $slope := \frac{y_{8t} - e_{8hd}}{(HD \cdot 12)} \cdot 100$ $slope = 10.54$ %

Is the slope of the strands less than 12%? check = "OK"

12% is a suggested maximum slope, actual acceptable slope is dependant on the form capacity or on the fabricator.

Calculate the values of A, B_{min}, B_{max} and C to show on the plans:

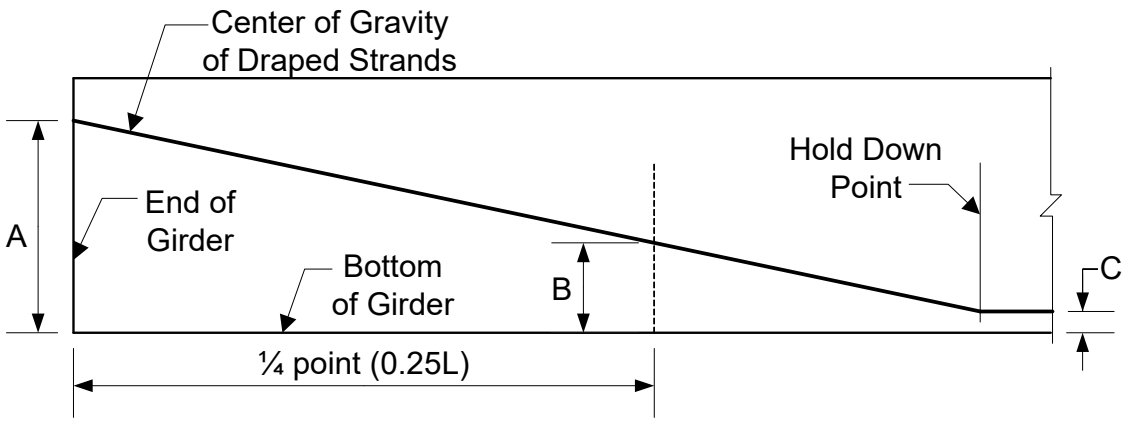

$A := |y_b| + y_{8t}$ $\quad A = 67.00$ in

$C := 5.00$ in

$B_{min} := \frac{A + 3C}{4}$ $\quad B_{min} = 20.50$ in

$B_{max} := B_{min} + 3$ $\quad B_{max} = 23.50$ in

Check hold down location for B_{max} to make sure it is located between $L_g/3$ and $0.4*L_g$:

$slope_{Bmax} := \frac{A - B_{max}}{0.25 \cdot L_g \cdot 12}$ $\quad slope_{Bmax} = 0.099$ ft/ft

$x_{Bmax} := \frac{A - C}{slope_{Bmax}} \cdot \frac{1}{12}$ $\quad x_{Bmax} = 52.38$ ft

$L_g \cdot 0.4 = 58.80$ ft

Is the resulting hold down location less than $0.4*L_g$? $\quad$ check = "OK"

Check the girder stresses at the end of the transfer length of the strands at release:

Minimum moment on section = girder moment at the plant

The transfer length may be taken as:

$l_{tr} := 60 \cdot d_b$ $\quad l_{tr} = 36.00$ in

$x := \frac{l_{tr}}{12}$ $\quad x = 3.00$ feet

The eccentricity of the draped strands and the entire strand group at the transfer length is:

$$y_{8tt} := y_{8t} - \frac{slope}{100} \cdot x \cdot 12$$

$y_{8tt} = 28.334$ in

$$e_{st} := \frac{ns_s \cdot y_s + 8 \cdot y_{8tt}}{ns}$$

$e_{st} = -20.106$ in

The moment at the end of the transfer length due to the girder dead load:

$$M_{gt} := \frac{w_g}{2} \cdot \left(L_g \cdot x - x^2\right)$$

$M_{gt} = 206$ kip-ft

The girder stresses at the end of the transfer length:

$$f_{tt} := \frac{T_o}{A_g} + \frac{T_o \cdot e_{st}}{S_t} + \frac{M_{gt} \cdot 12}{S_t}$$

$f_{tt} = 0.061$ ksi

$f_{tiall} = -0.200$ ksi

Is f_{tt} less than f_{tiall}?

check = "OK"

$$f_{bt} := \frac{T_o}{A_g} + \frac{T_o \cdot e_{st}}{S_b} + \frac{M_{gt} \cdot 12}{S_b}$$

$f_{bt} = 3.693$ ksi

$f_{ciall} = 4.420$ ksi

Is f_{bt} less than f_{ciall}?

check = "OK"

E19-1.10.4 Stress Checks at Critical Sections

Critical Sections	Critical Conditions		
	At Transfer	Final	Fatigue
Girder Ends	X		
Midspan	X	X	X
Hold Down Points	X	X	X

Data:

$T_o = 1770$ kips $T = 1548$ kips

$M_{nc} = 4887$ kip-ft $M_{s3} = 8045$ kip-ft

$M_{s1} = 8659$ kip-ft $M_g = 2574$ kip-ft

Need moments at hold down points: $\frac{L_g}{3} = 49.00$ feet, from the end of the girder.

girder: $M_{ghd} = 2288$ kip-ft

non-composite: $M_{nchd} = 4337$ kip-ft

Service I composite: $M_{1chd} = 3371$ kip-ft

Service III composite: $M_{3chd} = 2821$ kip-ft

Note: The release girder moments shown above at the hold down location are calculated based on the total girder length.

Check the girder at the end of the beam (at the transfer length):

$e_{st} = -20.11$ inches $f_{tiall} = -0.200$ ksi $f_{ciall} = 4.420$ ksi

At transfer, $M_{gt} = 206$ kip-ft

Top of girder (Service 3):

$$f_{tei} := \frac{T_o}{A_g} + \frac{T_o \cdot e_{st}}{S_t} + \frac{M_{gt} \cdot 12}{S_t}$$

$f_{tei} = 0.061$ ksi

Is f_{tei} greater than f_{tiall}? check = "OK"

Bottom of girder (Service 1):

$$f_{bei} := \frac{T_o}{A_g} + \frac{T_o \cdot e_{st}}{S_b} + \frac{M_{gt} \cdot 12}{S_b}$$

$f_{bei} = 3.693$ ksi

Is f_{bei} less than f_{ciall}? check = "OK"

Check at the girder and deck at midspan:

$e_s = -30.69$ inches

Initial condition at transfer: $f_{tiall} = -0.200$ ksi $f_{ciall} = 4.420$ ksi

Top of girder stress (Service 3):

$$f_{ti} := \frac{T_o}{A_g} + \frac{T_o \cdot e_s}{S_t} + \frac{M_g \cdot 12}{S_t}$$ $f_{ti} = 0.609$ ksi

Is f_{ti} greater than f_{tiall}? check = "OK"

Bottom of girder stress (Service 1):

$$f_{bi} := \frac{T_o}{A_g} + \frac{T_o \cdot e_s}{S_b} + \frac{M_g \cdot 12}{S_b}$$ $f_{bi} = 3.178$ ksi

Is f_{bi} less than f_{ciall}? check = "OK"

Final condition:

Allowable Stresses,**LRFD [5.9.2.3.2]**:

There are two compressive stress limits: (Service 1) **LRFD [5.9.2.3.2a]**

$f_{call1} := 0.45 \cdot f'_c$ PS + DL $f_{call1} = 3.600$ ksi

$f_{call2} := 0.60 \cdot f'_c$ LL + PS + DL $f_{call2} = 4.800$ ksi

(Service 3) **LRFD [5.9.2.3.2b]** (Moderate Corrosion Condition)

tension: $f_{tall} = -0.19 \cdot \lambda \sqrt{f'_c}$ $\lambda = 1.0$ (normal wgt. conc.) **LRFD [5.4.2.8]**

$f_{tall} := -0.19 \cdot \sqrt{f'_c}$ $|f_{tall}| \le 0.6$ ksi $f_{tall} = -0.537$ ksi

Allowable Stresses (Fatigue),**LRFD [5.5.3]**:

Fatige compressive stress limit:

$f_{call_fat} := 0.40 \cdot f'_c$ LLfat + 1/2(PS + DL) $f_{call_fat} = 3.200$ ksi

Top of girder stress (Service 1):

$$f_{t1} := \frac{T}{A_g} + \frac{T \cdot e_s}{S_t} + \frac{M_{DLnc} \cdot 12}{S_t} + \frac{(M_{DLc} + M_{DWc}) \cdot 12}{S_{cgt}}$$

$f_{t1} = 2.484$ ksi

$$f_{t2} := \frac{T}{A_g} + \frac{T \cdot e_s}{S_t} + \frac{M_{DLnc} \cdot 12}{S_t} + \frac{(M_{DLc} + M_{DWc} + M_{LL}) \cdot 12}{S_{cgt}}$$

$f_{t2} = 3.196$ ksi

Is f_t less than f_{call}?

check1 = "OK"

check2 = "OK"

Top of girder stress (Fatigue 1):

$$f_{tfat} := \frac{1}{2}\left(\frac{T}{A_g} + \frac{T \cdot e_s}{S_t} + \frac{M_{DLnc} \cdot 12}{S_t}\right) + \frac{\left[\frac{1}{2}(M_{DLc} + M_{DWc}) + M_{LLfat}\right] \cdot 12}{S_{cgt}}$$

$f_{tfat} = 1.444$ ksi

Is f_{tfat} less than f_{call_fat}?

check = "OK"

Bottom of girder stress (Service 3):

$$f_b := \frac{T}{A_g} + \frac{T \cdot e_s}{S_b} + \frac{M_{nc} \cdot 12}{S_b} + \frac{(M_{s3} - M_{nc}) \cdot 12}{S_{cgb}}$$

$f_b = -0.435$ ksi

Is f_{tb} greater than f_{tall}?

check = "OK"

Top of deck stress (Service 1):

$f_{dall} := 0.40 \cdot f'_{cd}$

$f_{dall} = 1.600$ ksi

$$f_{dt} := \frac{(M_{s1} - M_{nc}) \cdot 12}{S_{cgdt}}$$

$f_{dt} = 0.800$ ksi

Is f_{dt} less than f_{dall}?

check = "OK"

Bottom of deck stress (Service 1):

$$f_{db} := \frac{(M_{s1} - M_{nc}) \cdot 12}{S_{cgdb}}$$

$f_{db} = 0.617$ ksi

Is f_{db} less than f_{dall}?

check = "OK"

Check at hold-down location:

At transfer: $f_{tiall} = -0.200$ ksi $f_{ciall} = 4.420$ ksi

Top of girder stress (Service 3):

$$f_{t3i} := \frac{T_o}{A_g} + \frac{T_o \cdot e_s}{S_t} + \frac{M_{ghd} \cdot 12}{S_t}$$

$f_{t3i} = 0.415$ ksi

Is f_{t3i} greater than f_{tiall}?

check = "OK"

Bottom of girder stress (Service 1):

$$f_{b3i} := \frac{T_o}{A_g} + \frac{T_o \cdot e_s}{S_b} + \frac{M_{ghd} \cdot 12}{S_b}$$

$f_{b3i} = 3.361$ ksi

Is f_{b3i} less than f_{ciall}?

check = "OK"

Final condition, after losses, full load: $f_{tall} = -0.537$ ksi $f_{call2} = 4.800$ ksi

Top of girder stress (Service 1):

$$f_{t3} := \frac{T}{A_g} + \frac{T \cdot e_s}{S_t} + \frac{M_{nchd} \cdot 12}{S_t} + \frac{M_{1chd} \cdot 12}{S_{cgt}}$$

$f_{t3} = 2.729$ ksi

Is f_{t3} less than f_{call2}?

check = "OK"

Top of girder stress (Fatigue 1):

$$f_{tfat} := \frac{1}{2} \cdot \left(\frac{T}{A_g} + \frac{T \cdot e_s}{S_t} + \frac{M_{nchd} \cdot 12}{S_t} \right) + \frac{M_{fatchd} \cdot 12}{S_{cgt}}$$

$f_{tfat} = 1.373$ ksi

Is f_{tfat} less than f_{call_fat}?

check = "OK"

Bottom of girder stress (Service 3):

$$f_{b3} := \frac{T}{A_g} + \frac{T \cdot e_s}{S_b} + \frac{M_{nchd} \cdot 12}{S_b} + \frac{M_{3chd} \cdot 12}{S_{cgb}}$$

$f_{b3} = 0.080$ ksi

Is f_{b3} greater than f_{tall}?

check = "OK"

$f_{dall} = 1.600$ ksi

Top of deck stress (Service 1):

$$f_{dt3} := \frac{(M_{1chd}) \cdot 12}{S_{cgdt}}$$

$f_{dt3} = 0.715$ ksi

Is f_{dt} less than f_{dall}?

check = "OK"

Bottom of deck stress (Service 1):

$$f_{db3} := \frac{(M_{1chd}) \cdot 12}{S_{cgdb}}$$

$f_{db3} = 0.551$ ksi

Is f_{db} less than f_{dall}?

check = "OK"

Summary of Design Stresses:

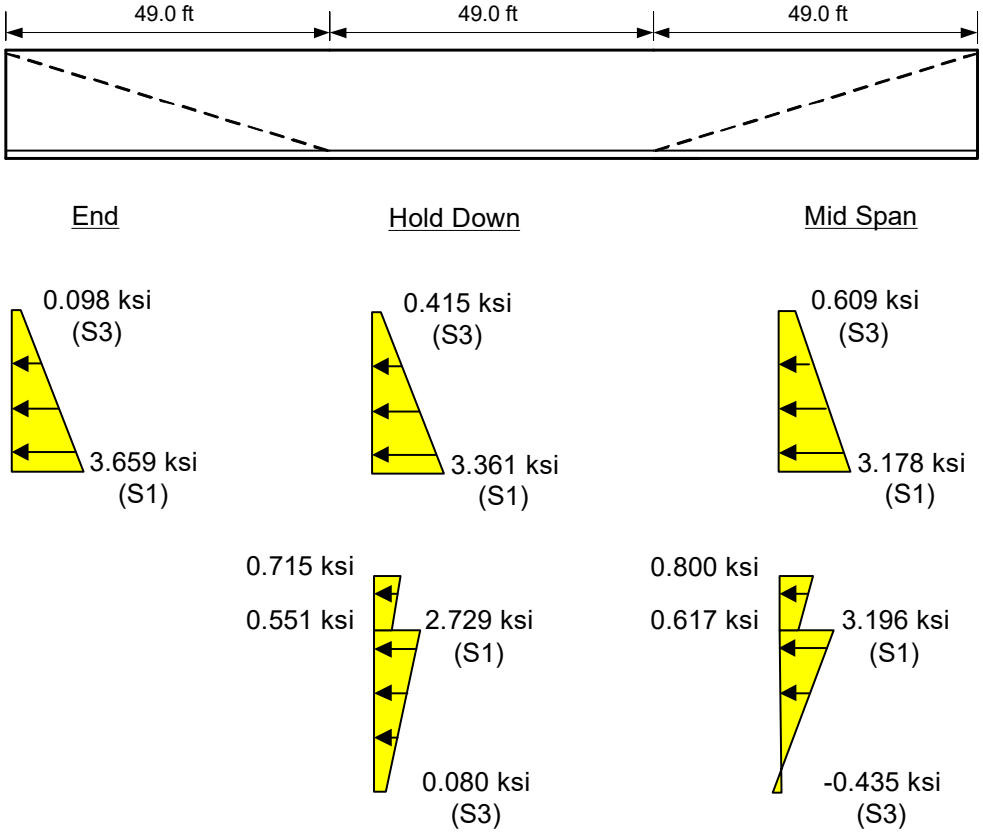

Initial Allowable:

compression := f_{ciall} = 4.42 ksi

Final Allowable:

$compression_1 := f_{call1} = 3.6$ ksi

$compression_2 := f_{call2} = 4.8$ ksi

compression_fatigue := $f_{call_fat} = 3.2$ ksi

tension = $f_{tall} = -0.537$ ksi **All stresses are acceptable!**

E19-1.11 Calculate Jacking Stress

The fabricator is responsible for calculation of the jacking force. See **LRFD [5.9.2]** for equations for low relaxation strands.

E19-1.12 Flexural Strength Capacity at Midspan

Check f_{pe} in accordance with **LRFD [5.6.3.1.1]**:

$f_{pe} = 162.13$ ksi $\qquad 0.5 \cdot f_{pu} = 135.00$ ksi

Is $0.5 * f_{pu}$ less than f_{pe}? $\qquad$ check = "OK"

Then at failure, we can assume that the tendon stress is:

$$f_{ps} = f_{pu}\left(1 - k \cdot \frac{c}{d_p}\right)$$

where:

$$k = 2\left(1.04 - \frac{f_{py}}{f_{pu}}\right)$$

From **LRFD [Table C5.6.3.1.1-1]**, for low relaxation strands, $k := 0.28$.

"c" is defined as the distance between the neutral axis and the compression face (inches).

Assumed dimensions:

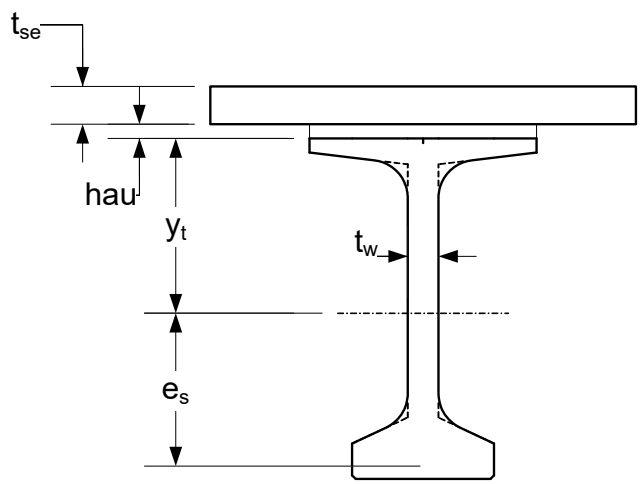

Assume that the compression block is in the deck. Calculate the capacity as if it is a rectangular section (with the compression block in the flange). The neutral axis location,calculated in accordance with **LRFD [5.6.3.1.1]** for a rectangular section, is:

$$c = \frac{A_{ps} \cdot f_{pu}}{\alpha_1 \cdot f'_{cd} \cdot \beta_1 \cdot b + k \cdot A_{ps} \cdot \frac{f_{pu}}{d_p}}$$

where:

$A_{ps} := ns \cdot A_{strand}$ $\boxed{A_{ps} = 9.55}$ in^2

$b := w_e$ $\boxed{b = 90.00}$ in

LRFD [5.6.2.2] $\alpha_1 := 0.85$ (for $f'_{cd} \le 10.0$ ksi)

$\beta_1 := \max\left[0.85 - \left(f'_{cd} - 4\right) \cdot 0.05, 0.65\right]$ $\boxed{\beta_1 = 0.850}$

$d_p := y_t + hau + t_{se} - e_s$ $\boxed{d_p = 77.32}$ in

$$c := \frac{A_{ps} \cdot f_{pu}}{\alpha_1 \cdot f'_{cd} \cdot \beta_1 \cdot b + k \cdot A_{ps} \cdot \frac{f_{pu}}{d_p}}$$ $\boxed{c = 9.57}$ in

$a := \beta_1 \cdot c$ $\boxed{a = 8.13}$ in

The calculated value of "a" is greater than the deck thickness. Therefore, the rectangular assumption is incorrect and the compression block extends into the haunch. Calculate the neutral axis location and capacity for a flanged section:

$h_f := t_{se}$ depth of compression flange $\boxed{h_f = 7.500}$ in

$w_{tf} = 48.00$ width of top flange, inches

$$c := \frac{A_{ps} \cdot f_{pu} - \alpha_1 \cdot f'_{cd} \cdot \left(b - w_{tf}\right) \cdot h_f}{\alpha_1 \cdot f'_{cd} \cdot \beta_1 \cdot w_{tf} + k \cdot A_{ps} \cdot \frac{f_{pu}}{d_p}}$$ $\boxed{c = 10.178}$ in

$a := \beta_1 \cdot c$ $\boxed{a = 8.65}$ in

This is within the depth of the haunch (9.5 inches). Therfore our assumption is OK.

Now calculate the effective tendon stress at ultimate:

$$f_{ps} := f_{pu} \cdot \left(1 - k \cdot \frac{c}{d_p}\right)$$ $\boxed{f_{ps} = 260.05}$ ksi

$T_u := f_{ps} \cdot A_{ps}$ $\boxed{T_u = 2483}$ kips

Calculate the nominal moment capacity of the composite section in accordance with **LRFD [5.6.3.2]; [5.6.3.2.2]**

$$M_n := \left[A_{ps} \cdot f_{ps} \cdot \left(d_p - \frac{a}{2}\right) + \alpha_1 \cdot f'_{cd} \cdot (b - w_{tf}) \cdot h_f \cdot \left(\frac{a}{2} - \frac{h_f}{2}\right)\right] \cdot \frac{1}{12}$$

$M_n = 15155$ kip-ft

For prestressed concrete, $\phi_f := 1.00$, **LRFD [5.5.4.2]**. Therefore the usable capacity is:

$M_r := \phi_f \cdot M_n$ $M_r = 15155$ kip-ft

The required capacity:

Interior Girder Moment $M_{str} = 12449$ kip-ft

Exterior Girder Moment $M_{strx} = 11183$ kip-ft

Check the section for minimum reinforcement in accordance with **LRFD [5.6.3.3]** for the interior girder:

$1.33 \cdot M_{str} = 16558$ kip-ft

$f_r = 0.24 \cdot \lambda \sqrt{f'_c}$ = modulus of rupture (ksi) **LRFD [5.4.2.6]**

$f_r := 0.24 \cdot \sqrt{f'_c}$ λ = 1.0 (normal wgt. conc.) **LRFD [5.4.2.8]** $f_r = 0.679$ ksi

$$f_{cpe} := \frac{T}{A_g} + \frac{T \cdot e_s}{S_b}$$

$f_{cpe} = 4.216$ ksi

$M_{dnc} := M_{nc}$ $M_{dnc} = 4887$ kip-ft

$S_c := -S_{cgb}$ $S_c = 24681$ in^3

$S_{nc} := -S_b$ $S_{nc} = 18825$ in^3

$\gamma_1 := 1.6$ flexural cracking variability factor

$\gamma_2 := 1.1$ prestress variability factor

$\gamma_3 := 1.0$ for prestressed concrete structures

$$M_{cr} := \gamma_3 \cdot \left[S_c \cdot \left(\gamma_1 \cdot f_r + \gamma_2 \cdot f_{cpe} \right) \cdot \frac{1}{12} - M_{dnc} \cdot \left(\frac{S_c}{S_{nc}} - 1 \right) \right]$$ $M_{cr} = 10251$ kip-ft

Is M_r greater than the lesser value of M_{cr} and 1.33*M_{str}? check = "OK"

The moment capacity looks good, with some over strength for the interior girder. However, we must check the capacity of the exterior girder since the available flange width is less.

Check the exterior girder capacity:

The effective flange width for exterior girder is calculated in accordance with **LRFD [4.6.2.6]** as one half the effective width of the adjacent interior girder plus the overhang width :

$$w_{ex_oh} := s_{oh} \cdot 12$$ $w_{ex_oh} = 30.0$ in

$$w_{ex} := \frac{w_e}{2} + w_{ex_oh}$$ $w_{ex} = 75.00$ in

$b_x := w_{ex}$ effective deck width of the compression flange.

Calculate the neutral axis location for a flanged section:

LRFD [5.6.2.2] $\alpha_1 = 0.850$ $\beta_1 = 0.850$

$$c_x := \frac{A_{ps} \cdot f_{pu} - \alpha_1 \cdot f'_{cd} \cdot \left(b_x - w_{tf} \right) \cdot h_f}{\alpha_1 \cdot f'_{cd} \cdot \beta_1 \cdot w_{tf} + k \cdot A_{ps} \cdot \frac{f_{pu}}{d_p}}$$ $c_x = 12.76$ in

$$a_x := \beta_1 \cdot c_x$$ $a_x = 10.85$ in

Now calculate the effective tendon stress at ultimate:

$$f_{ps_x} := f_{pu} \cdot \left(1 - k \cdot \frac{c_x}{d_p} \right)$$ $f_{ps_x} = 257.52$ ksi

The nominal moment capacity of the composite section (exterior girder) ignoring the increased strength of the concrete in the girder flange:

$$M_{n_x} := \left[A_{ps} \cdot f_{ps} \cdot \left(d_p - \frac{a_x}{2} \right) + \alpha_1 \cdot f'_{cd} \cdot \left(b_x - w_{tf} \right) \cdot h_f \cdot \left(\frac{a_x}{2} - \frac{h_f}{2} \right) \right] \cdot \frac{1}{12}$$

$M_{n_x} = 14972$ kip-ft

$M_{r_x} := \phi_f \cdot M_{n_x}$ $\boxed{M_{r_x} = 14972}$ kip-ft

$\boxed{1.33M_{strx} = 14874}$ kip-ft

Is M_{r_x} greater than $1.33*M_{strx}$? $\boxed{check = \text{"OK"}}$

Since M_{r_x} is greater than $1.33*M_{strx}$, the check for M_{cr} does not need to be completed.

E19-1.13 Shear Analysis

A separate analysis must be conducted to estimate the total shear force in each girder for shear design purposes.

Calculate the shear distribution to the girders, **LRFD [Table 4.6.2.2.3a-1]**:

Interior Beams:

One lane loaded:

$$g_{vi1} := 0.36 + \frac{S}{25}$$ $$g_{vi1} = 0.660$$

Two or more lanes loaded:

$$g_{vi2} := 0.2 + \frac{S}{12} - \left(\frac{S}{35}\right)^2$$ $$g_{vi2} = 0.779$$

$$g_{vi} := \max(g_{vi1}, g_{vi2})$$ $$g_{vi} = 0.779$$

Note:The distribution factors above include the multiple lane factor. The skew correction factor, is required by a WisDOT policy item for all girders.

Apply the shear magnification factor in accordance with **LRFD [4.6.2.2.3c]**.

$$skew_{correction} := 1.0 + 0.2 \cdot \left(\frac{12L \cdot t_{se}^3}{K_g}\right)^{0.3} \cdot \tan\left(skew \cdot \frac{\pi}{180}\right)$$

$$L = 146.00$$

$$t_s = 8.00$$

$$K_g = 3600866$$

$$skew = 20.000$$ $$skew_{correction} = 1.045$$

$$g_{vi} := g_{vi} \cdot skew_{correction}$$ $$g_{vi} = 0.814$$

Exterior Beams:

Two or more lanes loaded:

The distance from the centerline of the exterior beam to the inside edge of the parapet, $d_e = 1.25$ feet.

$e_v := 0.6 + \frac{d_e}{10}$ $\boxed{e_v = 0.725}$

$g_{vx2} := e_v \cdot g_{vi}$ $\boxed{g_{vx2} = 0.590}$

With a single lane loaded, we use the lever rule (same as before). Note that the multiple presence factor has already been applied to g_{x2}..

$g_{vx1} := g_{x1} = e \cdot g_i$ $\boxed{g_{vx1} = 0.600}$

$g_{vx} := \max(g_{vx1}, g_{vx2})$ $\boxed{g_{vx} = 0.600}$

$g_{vx} := g_{vx} \cdot skew_{correction}$ $\boxed{g_{vx} = 0.627}$

The interior girder will control. It has a larger distribution factor and a larger dead load.

Conduct a bridge analysis as before with similar load cases for the maximum girder shear forces. We are interested in the Strength 1 condition now for shear design.

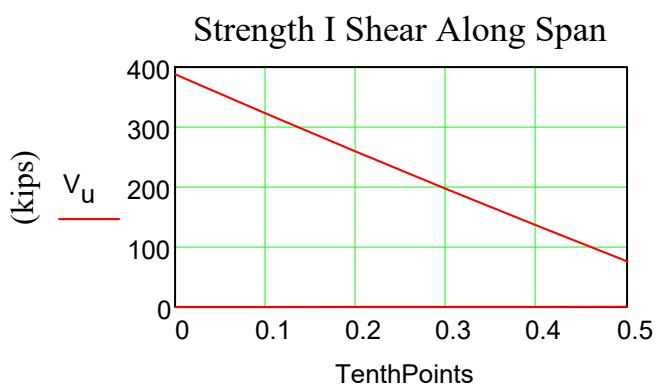

$\boxed{Vu_{0.0} = 388.1}$ kips

$\boxed{Vu_{0.5} = 76.2}$ kips

General Procedure for Prestressed Sections, **LRFD [5.7.3.4.2]**

$b_v := t_w$ $\boxed{b_v = 6.50}$ in

The critical section for shear is taken at a distance of d_v from the face of the support, **LRFD [5.7.3.2]**.

d_v = effective shear depth taken as the distance between the resultants of the tensile and compressive forces due to flexure. It need not be taken less than the greater of $0.9*d_e$ or 0.72h (inches). **LRFD [5.7.2.8]**

The first estimate of d_v is calculated as follows:

$$d_v := -e_s + y_t + hau + t_{se} - \frac{a}{2} \qquad \boxed{d_v = 72.99} \quad \text{in}$$

However, since there are draped strands for a distance of $HD = 49.00$ feet from the end of the girder, a revised value of e_s should be calculated based on the estimated location of the critical section. Since the draped strands will raise the center of gravity of the strand group near the girder end, try a smaller value of "d_v" and recalculate "e_s" and "a".

Try $d_v := 64.50$ inches.

For the standard bearing pad of width, $w_{brg} := 8$ inches, the distance from the end of the girder to the critical section:

$$L_{crit} := \left(\frac{w_{brg}}{2} + d_v\right)\cdot\frac{1}{12} + 0.5 \qquad \boxed{L_{crit} = 6.21} \text{ ft}$$

Calculate the eccentricity of the strand group at the critical section.

$$y_{8t_crit} := y_{8t} - \frac{slope}{100}\cdot L_{crit}\cdot 12 \qquad \boxed{y_{8t_crit} = 24.27} \text{ in}$$

$$e_{s_crit} := \frac{ns_s\cdot y_s + ns_d\cdot y_{8t_crit}}{ns_s + ns_d} \qquad \boxed{e_{s_crit} = -20.84} \text{ in}$$

Calculation of compression stress block based on revised eccentricity:

$$d_{p_crit} := y_t + hau + t_{se} - e_{s_crit} \qquad \boxed{d_{p_crit} = 67.47} \text{ in}$$

$$A_{ps_crit} := \left(ns_d + ns_s\right)\cdot A_{strand} \qquad \boxed{A_{ps_crit} = 9.55} \text{ in}^2$$

Also, the value of f_{pu}, should be revised if the critical section is located less than the development length from the end of the beam. The development length for a prestressing strand is calculated in accordance with **LRFD [5.9.4.3.2]**:

$K := 1.6$ for prestressed members with a depth greater than 24 inches

$\boxed{d_b = 0.600}$ in

$$l_d := K\cdot\left(f_{ps} - \frac{2}{3}\cdot f_{pe}\right)\cdot d_b \qquad \boxed{l_d = 145.9} \text{ in}$$

The transfer length may be taken as: $l_{tr} := 60\cdot d_b$ $\boxed{l_{tr} = 36.00}$ in

Since $L_{crit} = 6.208$ feet is between the transfer length and the development length, the design stress in the prestressing strand is calculated as follows:

$$f_{pu_crit} := f_{pe} + \frac{L_{crit}\cdot 12 - l_{tr}}{l_d - l_{tr}}\cdot\left(f_{ps} - f_{pe}\right) \qquad \boxed{f_{pu_crit} = 196} \text{ ksi}$$

For rectangular section behavior:

LRFD [5.6.2.2] $\alpha_1 = 0.850$ $\beta_1 = 0.850$

$$c := \frac{A_{ps_crit} \cdot f_{pu_crit}}{\alpha_1 \cdot f'_{cd} \cdot \beta_1 \cdot b + k \cdot A_{ps_crit} \cdot \frac{f_{pu_crit}}{d_{p_crit}}}$$

$c = 7.002$ in

$$a_{crit} := \beta_1 \cdot c$$

$a_{crit} = 5.951$ in

Calculation of shear depth based on refined calculations of e_s and a:

$$d_{v_crit} := -e_{s_crit} + y_t + hau + t_{se} - \frac{a_{crit}}{2}$$

$d_{v_crit} = 64.50$ in

This value matches the assumed value of d_v above. OK!

The nominal shear resistance of the section is calculated as follows, **LRFD [5.8.3.3]**:

$$V_n = \min\left(V_c + V_s + V_p, 0.25 \cdot f'_c \cdot b_v \cdot d_v + V_p\right)$$

The nominal shear resistance of the concrete is calculated as follows:

$$V_c = 0.0316 \cdot \beta \cdot \lambda \cdot \sqrt{f'_c} \cdot b_v \cdot d_v$$

where:

$$\beta = \frac{4.8}{1 + 750 \cdot \varepsilon_s}$$

$$\varepsilon_s = \frac{\frac{|M_u|}{d_v} \cdot 0.5 \cdot N_u + |V_u - V_p| - A_{ps} \cdot f_{po}}{E_s \cdot A_s + E_p \cdot A_{ps}}$$

ε_s = Net longitudinal tensile strain in the section at the centroid of the tension reinforcement.

$|M_u|$ = Absolute value of the factored moment at the section, not taken less than $|V_u - V_p| d_v$ (kip-in)

N_u = Factored axial force, taken as positive if tensile and negative if compression (kips).

V_p = Componet of prestressing force in the direction of the shear force positive if resisiting the applied shear(kips)

f_{po} = A parameter taken as modulus of elasticity of prestressing steel multiplied by the locked-in difference in strain between the prestressing steel and the surrounding concrete (ksi).

Values at the critical section, $L_{crit} = 6.21$ feet from the end of the girder at the abutment, are as follows:

$d_v = 64.50$

$N_u := 0$ kips

$V_u \equiv 360.4$ kips

$V_p := ns_d \cdot A_{strand} \cdot f_{pe} \cdot \frac{slope}{100}$ $V_p = 29.68$ kips

$f_{po} := 0.70 \cdot f_{pu}$ $f_{po} = 189.00$ ksi

$M_u = \max(M_{u1}, M_{u2}) \cdot 12$

$M_{u1} := 1880.2$ kip-ft

$M_{u2} := |V_u - V_p| \cdot \frac{d_v}{12} = 1777.6$ kip-ft

$M_u := \max(M_{u1}, M_{u2}) \cdot 12 = 22562.40$ kip-in

$A_{ps} \equiv 5.78$ area of prestressing steel on the flexural tension side, in^2

$A_s := 0.0$ area of nonprestressing steel on the flexural tension side, in^2

$A_{ct} := 505.8$ area of concrete on the flexural tension side, in^2

Calculation of net longitudinal tensile strain at the centroid of the tension reinforcement per **LRFD [5.7.3.4.2]**:

$$\varepsilon_{s1} := \frac{\frac{|M_u|}{d_v} + 0.5 \cdot N_u + |V_u - V_p| - A_{ps} \cdot f_{po}}{E_s \cdot A_s + E_p \cdot A_{ps}} \qquad \varepsilon_{s1} = -0.0025$$

Since the value is negative, recalculate the strain value using the concrete term shown below:

$$\varepsilon_{s2} := \frac{\frac{|M_u|}{d_v} + 0.5 \cdot N_u + |V_u - V_p| - A_{ps} \cdot f_{po}}{E_s \cdot A_s + E_p \cdot A_{ps} + E_c \cdot A_{ct}} \qquad \varepsilon_{s2} = -0.000122$$

Strain limits: $-0.0004 < \varepsilon_s < 0.006$

$$\varepsilon_s := \begin{cases} \min(\varepsilon_{s1}, 0.006) & \text{if } \varepsilon_{s1} > 0 \\ \max(\varepsilon_{s2}, -0.00040) & \text{otherwise} \end{cases} \qquad \varepsilon_s = -0.000122$$

$$\beta := \frac{4.8}{1 + 750 \cdot \varepsilon_s} \qquad \beta = 5.283$$

Calculate the nominal shear resistance of the concrete:

$$V_c := 0.0316 \cdot \beta \cdot \lambda \cdot \sqrt{f'_c} \cdot b_v \cdot d_v \qquad V_c = 198.0 \text{ kips}$$

Calculate the required shear resistance:

$\phi_v := 0.9$ **LRFD [5.5.4.2]**

$V_{u_crit} = \gamma st_{DC} \cdot (V_{DCnc} + V_{DCc}) + \gamma st_{DW} \cdot V_{DWc} + \gamma st_{LL} \cdot Vu_{LL}$

where:

$V_{DCnc} = 123.43$ kips

$V_{DCc} = 8.68$ kips

$V_{DWc} = 8.97$ kips

$Vu_{LL} = 105.05$ kips

$V_{u_crit} = 362.4$ kips $V_n := \frac{V_{u_crit}}{\phi_v}$ $V_n = 402.7$ kips

Transverse Reinforcing Design at Critical Section:

The required steel capacity:

$V_s := V_n - V_c - V_p$ $V_s = 175.1$ kips

$A_v := 0.40$ in^2 for #4 rebar

$f_y := 60$ ksi

Transverse Reinforcing Design at Critical Section:

$d_v = 64.50$ in

$\theta := 29 + 3500 \cdot \varepsilon_s$ **LRFD [5.7.3.4.2]** $\theta = 28.573$

$\cot\theta = 1.836$

$V_s = A_v \cdot f_y \cdot d_v \cdot \frac{\cot\theta}{s}$ **LRFD [Eq 5.7.3.3-4]** reduced when α = 90 degrees.

$s := A_v \cdot f_y \cdot d_v \cdot \frac{\cot\theta}{V_s}$ $s = 16.24$ in

Check Maximum Spacing, **LRFD [5.7.2.6]**:

$v_u := \frac{V_{u_crit}}{\phi_v \cdot b_v \cdot d_v}$ $v_u = 0.961$ ksi

Max. stirrup spacing per WisDOT policy item is 18" $0.125 \cdot f'_c = 1.000$ ksi

$s_{max1} := \begin{cases} \min(0.8 \cdot d_v, 18) & \text{if } v_u < 0.125 \cdot f'_c \\ \min(0.4 \cdot d_v, 12) & \text{if } v_u \geq 0.125 \cdot f'_c \end{cases}$ $s_{max1} = 18.00$ in

Check Minimum Reinforcing, **LRFD [5.7.2.5]**:

$$s_{max2} := \frac{A_v \cdot f_y}{0.0316 \cdot \lambda \sqrt{f'_c} \cdot b_v}$$

λ = 1.0 (normal wgt. conc.) **LRFD [5.4.2.8]**

$s_{max2} = 41.31$ in

$$s_{max} := \min(s_{max1}, s_{max2})$$

$s_{max} = 18.00$ in

The critical section for shear is located within the predetermined stirrup spacing provided on the Standard Detail.

Therefore use the maximum spacing of $s := 16.0$ inches.

$$V_s := A_v \cdot f_y \cdot d_v \cdot \frac{\cot\theta}{s}$$

$V_s = 177.7$ kips

Check V_n requirements:

$$Vn_1 := V_c + V_s + V_p$$

$Vn_1 = 405.3$ kips

$$Vn_2 := 0.25 \cdot f'_c \cdot b_v \cdot d_v + V_p$$

$Vn_2 = 868.2$ kips

$$V_n := \min(Vn_1, Vn_2)$$

$V_n = 405.3$ kips

$$V_r := \phi_v \cdot V_n$$

$V_r = 364.8$ kips

$V_{u_crit} = 362.4$ kips

Is V_{u_crit} less than V_r?

check = "OK"

Web reinforcing is required in accordance with **LRFD [5.7.2.3]** whenever:

$$V_u \geq 0.5 \cdot \phi_v \cdot (V_c + V_p)$$

(all values shown are in kips)

At critical section from end of girder: $V_{u_crit} = 362.4$ $\quad 0.5 \cdot \phi_v \cdot (V_c + V_p) = 102.4$

From calculations similar to those shown above,

At hold down point: $V_{u_hd} = 177.2$ $\quad 0.5 \cdot \phi_v \cdot (V_{c_hd} + V_{p_hd}) = 62.6$

At mid-span: $V_{u_mid} = 76.2$ $\quad 0.5 \cdot \phi_v \cdot (V_{c_mid} + V_{p_mid}) = 36.2$

Therefore, use web reinforcing over the entire beam.

Resulting Shear Design:

Use #4 U shaped stirrups at 18-inch spacing between the typical end sections. Unless a large savings in rebar can be realized, use a single stirrup spacing between the standard end sections.

E19-1.14 Longitudinal Tension Flange Capacity

The tensile capacity of the longitudinal reinforcement must meet the requirements of **LRFD [5.7.3.5].**

The tensile force is checked at the critical section for shear:

The values of M_u, d_v, V_u, V_s, V_p and θ are taken at the location of the critical section. $N_u = 0$

$$T_{ps_crit} = \frac{|M_u|}{d_v \cdot \phi_f} + \frac{0.5 \cdot N_u}{\phi_v} + \left(\left| \frac{V_u}{\phi_f} - V_p \right| - 0.5 \cdot V_s \right) \cdot \cot\theta \qquad T_{ps_crit} = 798.1 \text{ kips}$$

actual capacity of the straight strands:

$$ns_s \cdot A_{strand} \cdot f_{pu_crit} = 1534.6 \text{ kips}$$

Is the capacity of the straight strands greater than T_{ps}? check = "OK"

The tensile force is checked at the edge of the bearing:

The strand is anchored $l_{px} := 10$ inches. The transfer and development lengths for a prestressing strand are calculated in accordance with **LRFD [5.9.4.3.2]**:

$l_{tr} = 36.00$ in

$l_d = 145.9$ in

Since l_{px} is less than the transfer length, the design stress in the prestressing strand is calculated as follows:

The assumed crack plane crosses the centroid of the straight strands at

$$l_{px'} := l_{px} + Y_s \cdot \cot\theta \qquad Y_s = 4.00 \text{ in} \qquad l_{px'} = 17.34 \text{ in}$$

$$f_{pb} := \frac{f_{pe} \cdot l_{px'}}{60 \cdot d_b} \qquad f_{pb} = 78.12 \text{ ksi}$$

Tendon capacity of the straight strands: $ns_s \cdot A_{strand} \cdot f_{pb} = 610.2$ kips

The values of V_u, V_s, V_p and θ may be taken at the location of the critical section.

Over the length d_v, the average spacing of the stirrups is:

$$s_{ave} := \frac{6 \cdot 4.25 + 6 \cdot 5.0}{12} \qquad s_{ave} = 4.63 \text{ in}$$

$$V_s := A_v \cdot f_y \cdot d_v \cdot \frac{\cot\theta}{s_{ave}} \qquad V_s = 614.6 \text{ kips}$$

The vertical component of the draped strands is: $V_p = 29.7$ kips

The factored shear force at the critical section is: $V_u = 360.4$ kips

Minimum capacity required at the front of the bearing:

$$T_{breqd} := \left(\frac{V_u}{\phi_v} - 0.5 \cdot V_s - V_p\right) \cdot \cot\theta$$

$T_{breqd} = 116.6$ kips

Is the capacity of the straight strands greater than T_{breqd}? check = "OK"

E19-1.15 Composite Action - Design for Interface Shear Transfer

The total shear to be transferred to the flange between the end of the beam and mid-span is equal to the compression force in the compression block of the flange and haunch in strength condition. For slab on girder bridges, the shear interface force is calculated in accordance with **LRFD [5.7.4.5]**.

$b_{vi} := 18$ in width of top flange available to bond to the deck

$d_v = 64.50$ in

$$v_{ui} := \frac{V_{u_crit}}{b_{vi} \cdot d_v}$$

$v_{ui} = 0.312$ ksi

$V_{ui} := v_{ui} \cdot 12 \cdot b_{vi}$ $V_{ui} = 67.4$ kips/ft

$V_n = c \cdot A_{cv} + \mu \cdot (A_{vf} \cdot f_y + P_c)$ **LRFD [5.7.4.3]**

The nominal shear resistance, V_n, used in design shall not be greater than the lesser of:

$V_{n1} = K_1 \cdot f'_{cd} \cdot A_{cv}$ or $V_{n2} = K_2 \cdot A_{cv}$

$c := 0.28$ ksi

$\mu := 1.0$

$K_1 := 0.3$

$K_2 := 1.8$

$A_{cv} := b_{vi} \cdot 12$ Area of concrete considered to be engaged in interface shear transfer. $A_{cv} = 216$ in²/ft

$P_c := 0.0$ kips/ft Conservatively set the permanent net compressive force normal to the shear plane to zero.

From earlier calculations, the maximum #4 stirrup spacing used is $s = 18.0$ inches.

$A_{vf} := \frac{A_v}{s} \cdot 12$ $\boxed{A_{vf} = 0.267}$ in²/ft

$V_n := c \cdot A_{cv} + \mu \cdot (A_{vf} \cdot f_y + P_c)$ $\boxed{V_n = 76.5}$ kips/ft

$V_{n1} := K_1 \cdot f'_{cd} \cdot A_{cv}$ $\boxed{V_{n1} = 259.2}$ kips/ft

$V_{n2} := K_2 \cdot A_{cv}$ $\boxed{V_{n2} = 388.8}$ kips/ft

$V_n := \min(V_n, V_{n1}, V_{n2})$ $\boxed{V_n = 76.5}$ kips/ft

$V_r := \phi_v \cdot V_n$ $\boxed{V_r = 68.8}$ kips/ft

$\boxed{V_{ui} = 67.4}$ kips/ft

Is V_r greater than V_{ui}? $\boxed{\text{check} = \text{"OK"}}$

Solution:
#4 stirrups spaced at $s = 18.0$ inches is adequate to develop the required interface shear resistance for the entire length of the girder.

E19-1.16 Deflection Calculations

Check the Live Load deflection with the vehicle loading as specified in **LRFD [3.6.1.3.2]**; design truck alone or 25% of the design truck + the lane load.

The deflection shall be limited to L/800.

The moment of inertia of the entire bridge shall be used.

$\Delta_{limit} := \frac{L \cdot 12}{800}$ $\boxed{\Delta_{limit} = 2.190}$ inches

$I_{cg} = 1203475.476$

$ng = 6$ number of girders

$I_{bridge} := I_{cg} \cdot ng$ $\boxed{I_{bridge} = 7220853}$ in^4

From CBA analysis with 3 lanes loaded, the truck deflection controlled:

$\Delta_{truck} := 0.648$ in

Applying the multiple presence factor from **LRFD Table [3.6.1.1.2-1]** for 3 lanes loaded:

$\Delta := 0.85 \cdot \Delta_{truck}$ $\boxed{\Delta = 0.551}$ in

Is the actual deflection less than the allowable limit, $\Delta < \Delta$ limit? $\boxed{check = \text{"OK"}}$

E19-1.17 Camber Calculations

Moment due to straight strands:

Number of straight strands: $\boxed{ns_s = 36}$

Eccentricity of the straight strands: $\boxed{y_s = -30.87}$ in

$P_{i_s} := ns_s \cdot A_{strand} \cdot (f_{tr} - \Delta f_{pES})$ $\boxed{P_{i_s} = 1448}$ kips

$M_1 := P_{i_s} \cdot |y_s|$ $\boxed{M_1 = 44698}$ kip-in

Upward deflection due to straight strands:

Length of the girder: $\boxed{L_g = 147}$ ft

Modulus of Elasticity of the girder at release: $\boxed{E_{ct} = 4999}$ ksi

Moment of inertia of the girder: $\boxed{I_g = 656426}$ in^4

$\Delta_s := \frac{M_1 \cdot L_g^2}{8 \cdot E_{ct} \cdot I_g} \cdot 12^2$ $\boxed{\Delta_s = 5.298}$ in

Moment due to draped strands:

$P_{i_d} := ns_d \cdot A_{strand} \cdot (f_{tr} - \Delta f_{pES})$ $\boxed{P_{i_d} = 321.8}$ kips

$\boxed{A = 67.00}$ in

$\boxed{C = 5.00}$ in

$M_2 := P_{i_d} \cdot (A - C)$ $\boxed{M_2 = 19949.4}$ kip-in

$M_3 := P_{i_d} \cdot (A - |y_b|)$ $\boxed{M_3 = 10338.3}$ kip-in

Upward deflection due to draped strands:

$$\Delta_d := \frac{L_g^2}{8 \cdot E_{ct} \cdot I_g} \cdot \left(\frac{23}{27} \cdot M_2 - M_3\right) \cdot 12^2$$ $\boxed{\Delta_d = 0.789}$ in

Total upward deflection due to prestress:

$\Delta_{PS} := \Delta_s + \Delta_d$ $\boxed{\Delta_{PS} = 6.087}$ in

Downward deflection due to beam self weight at release:

$$\Delta_{gi} := \frac{5 \cdot w_g \cdot L^4}{384 \cdot E_{ct} \cdot I_g} \cdot 12^3$$ $\boxed{\Delta_{gi} = 2.969}$ in

Anticipated prestress camber at release:

$\Delta_i := \Delta_{PS} - \Delta_{gi}$ $\boxed{\Delta_i = 3.118}$ in

The downward deflection due to the dead load of the deck and diaphragms:

Calculate the additional non-composite dead loads for an interior girder:

$w_{nc} := w_{dlii} - w_g$ $\boxed{w_{nc} = 0.881}$ klf

Modulus of Elasticity of the beam at final strength $\boxed{E_B = 6351}$ ksi

$$\Delta_{nc} := \frac{5 \cdot w_{nc} \cdot L^4}{384 \cdot E_B \cdot I_g} \cdot 12^3$$ $\boxed{\Delta_{nc} = 2.161}$ in

The downward deflection due to the dead load of the parapets is calculated as follows. Note that the deflections due to future wearing surface loads are not considered.

Calculate the composite dead loads for an interior girder:

$w_{ws} := 0$ klf

$w_c := w_p + w_{ws}$ $\boxed{w_c = 0.129}$ klf

$$\Delta_c := \frac{5 \cdot w_c \cdot L^4}{384 \cdot E_B \cdot I_{cg}} \cdot 12^3$$ $\boxed{\Delta_c = 0.173}$ in

The total downward deflection due to dead loads acting on an interior girder:

$$\Delta_{DL} := \Delta_{nc} + \Delta_c$$ $\boxed{\Delta_{DL} = 2.334}$ in

The residual camber for an interior girder:

The anticipated prestress camber at release shall be multiplied by a camber multiplier (1.4) for calculating haunch heights.

$$RC := 1.4 \cdot \Delta_i - \Delta_{DL}$$ $\boxed{RC = 2.031}$ in

This page intentionally left blank.

Table of Contents

E19-2 Two-Span 54W" Girder, Continuity Reinforcement - LRFD 2
E19-2.1 Design Criteria 2
E19-2.2 Modulus of Elasticity of Beam and Deck Material. 3
E19-2.3 Section Properties 3
E19-2.4 Girder Layout 4
E19-2.5 Loads 4
E19-2.5.1 Dead Loads. 4
E19-2.5.2 Live Loads 5
E19-2.6 Load Distribution to Girders 5
E19-2.6.1 Distribution Factors for Interior Beams:. 6
E19-2.6.2 Distribution Factors for Exterior Beams:. 7
E19-2.7 Load Factors. 9
E19-2.8 Dead Load Moments 9
E19-2.9 Live Load Moments 10
E19-2.10 Factored Moments. 10
E19-2.11 Composite Girder Section Properties. 11
E19-2.12 Flexural Strength Capacity at Pier 12
E19-2.13 Bar Cut Offs 17

E19-2 Two-Span 54W" Girder, Continuity Reinforcement - LRFD

This example shows design calculations for the continuity reinforcement for a two span prestressed girder bridge. The *AASHTO LRFD Bridge Design Specifications* are followed as stated in the text of this chapter.***(Example is current through LRFD Eighth Ed. - 2017)***

E19-2.1 Design Criteria

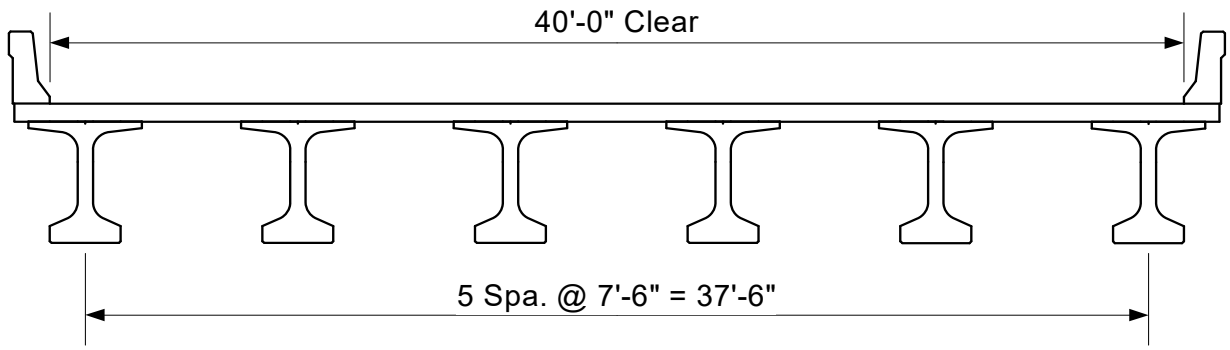

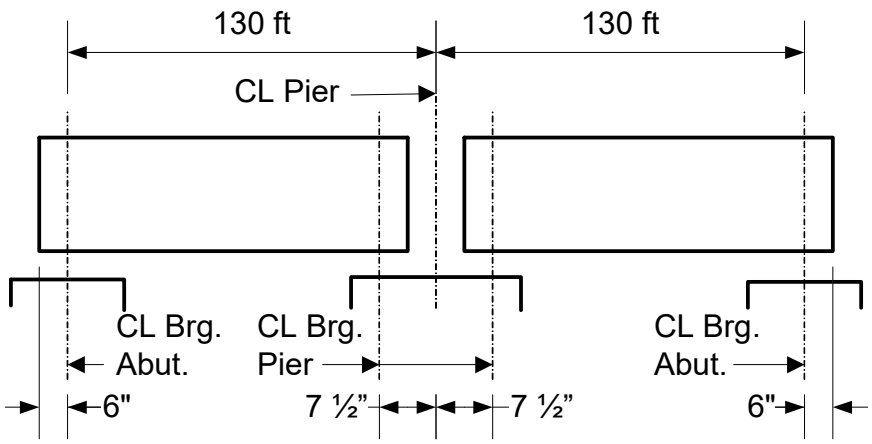

$L := 130$	center of bearing at abutment to CL pier for each span, ft
$L_g := 130.375$	total length of the girder (the girder extends 6 inches past the center of bearing at the abutment and 1.5" short of the center line of the pier).
$w_b := 42.5$	out to out width of deck, ft
$w := 40$	clear width of deck, 2 lane road, 3 design lanes, ft
$f'_c := 8$	girder concrete strength, ksi
$f'_{cd} := 4$	deck concrete strength, ksi
$f_y := 60$	yield strength of mild reinforcement, ksi

$w_p := 0.387$	weight of Wisconsin Type LF parapet, klf
$t_s := 8$	slab thickness, in
$t_{se} := 7.5$	effective slab thickness, in
$skew := 0$	skew angle, degrees
$w_c := 0.150$	kcf
$E_s := 29000$	ksi, Modulus of Elasticity of the reinforcing steel

E19-2.2 Modulus of Elasticity of Beam and Deck Material

Based on past experience, the modulus of elasticity for the precast and deck concrete are given in Chapter 19 as $E_{beam6} := 5500$ ksi and $E_{deck4} := 4125$ ksi for concrete strengths of 6 and 4 ksi respectively. The values of E for different concrete strengths are calculated as follows (ksi):

$$E_{beam8} := 5500 \cdot \frac{\sqrt{f'_c \cdot 1000}}{\sqrt{6000}} \qquad \boxed{E_{beam8} = 6351} \qquad E_B := E_{beam8}$$

$$E_D := E_{deck4}$$

$$n := \frac{E_B}{E_D} \qquad \boxed{n = 1.540}$$

E19-2.3 Section Properties

54W Girder Properties:

$w_{tf} := 48$	in
$t_t := 4.625$	in
$t_w := 6.5$	in
$t_b := 10.81$	in
$ht := 54$	in
$b_w := 30$	width of bottom flange, in
$A_g := 798$	in^2
$I_g := 321049$	in^4
$y_t := 27.70$	in
$y_b := -26.30$	in

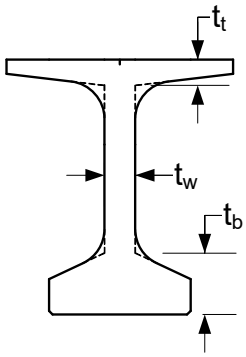

$$e_g := y_t + 2 + \frac{t_{se}}{2} \qquad \boxed{e_g = 33.45} \quad \text{in}$$

$S_t := 11592$ in³

$S_b := -12205$ in³

LRFD [Eq 4.6.2.2.1-1]

$K_g := n \cdot \left(I_g + A_g \cdot e_g^2\right)$ $\boxed{K_g = 1868972}$ in⁴

E19-2.4 Girder Layout

Chapter 19 suggests that at a 130 foot span, the girder spacing should be 7'-6" with 54W girders.

$S := 7.5$ ft

Assume a minimum overhang of 2.5 feet (2 ft flange + 6" overhang), $s_{oh} := 2.5$

$ns := \frac{w_b - s_{oh}}{S}$ $\boxed{ns = 5.333}$

Use the lowest integer: $ns := \text{floor}(ns)$ $\boxed{ns = 5}$

Number of girders: $ng := ns + 1$ $\boxed{ng = 6}$

Overhang Length: $s_{oh} := \frac{w_b - S \cdot ns}{2}$ $\boxed{s_{oh} = 2.50}$ ft

E19-2.5 Loads

$w_g := 0.831$ weight of 54W girders, klf

$w_d := 0.100$ weight of 8-inch deck slab (interior), ksf

$w_h := 0.100$ weight of 2-in haunch, klf

$w_{di} := 0.410$ weight of diaphragms on interior girder (assume 2), kips

$w_{dx} := 0.205$ weight of diaphragms on exterior girder, kips

$w_{ws} := 0.020$ future wearing surface, ksf

$w_p = 0.387$ weight of parapet, klf

E19-2.5.1 Dead Loads

Dead load on non-composite (DC):

exterior:

$w_{dlxi} := w_g + w_d \cdot \left(\frac{S}{2} + s_{oh}\right) + w_h + 2 \cdot \frac{w_{dx}}{L}$ $\boxed{w_{dlxi} = 1.559}$ klf

interior:

$$w_{dlii} := w_g + w_d \cdot S + w_h + 2 \cdot \frac{w_{di}}{L}$$ $\boxed{w_{dlii} = 1.687}$ klf

* Dead load on composite (DC):

$$w_p := \frac{2 \cdot w_p}{ng}$$ $\boxed{w_p = 0.129}$ klf

* Wearing Surface (DW):

$$w_{ws} := \frac{w \cdot w_{ws}}{ng}$$ $\boxed{w_{ws} = 0.133}$ klf

* **LRFD [4.6.2.2.1]** states that permanent loads on the deck may be distributed uniformly among the beams. This method is used for the parapet and future wearing surface loads.

E19-2.5.2 Live Loads

For Strength 1 and Service 1:

HL-93 loading = truck + lane **LRFD [3.6.1.3.1]**

truck pair + lane

DLA of 33% applied to truck or tandem, but not to lane per **LRFD [3.6.2.1].**

For Fatigue 1:

HL-93 truck (no lane) with 15% DLA and 30 ft rear axle spacing per **LRFD [3.6.1.4.1].**

E19-2.6 Load Distribution to Girders

In accordance with **LRFD [Table 4.6.2.2.1-1]**, this structure is a Type "K" bridge.

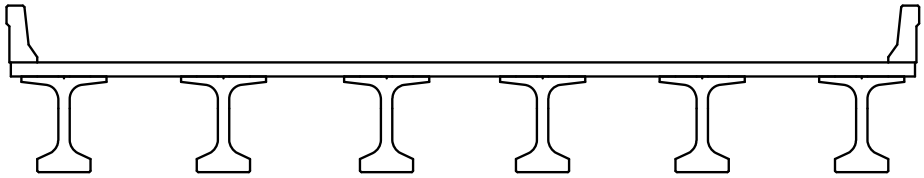

Distribution factors are in accordance with **LRFD [Table 4.6.2.2.2b-1]**. For an interior beam, the distribution factors are shown below:

For one Design Lane Loaded:

$$0.06 + \left(\frac{S}{14}\right)^{0.4} \cdot \left(\frac{S}{L}\right)^{0.3} \cdot \left(\frac{K_g}{12.0 \cdot L \cdot t_{se}^{\,3}}\right)^{0.1}$$

For Two or More Design Lanes Loaded:

$$0.075 + \left(\frac{S}{9.5}\right)^{0.6} \cdot \left(\frac{S}{L}\right)^{0.2} \cdot \left(\frac{K_g}{12.0 \cdot L \cdot t_{se}^{\,3}}\right)^{0.1}$$

Criteria for using distribution factors - Range of Applicability per **LRFD [Table 4.6.2.2.2b-1]**.

$$DeckSpan := \begin{cases} \text{"OK"} & \text{if } 3.5 \le S \le 16 \\ \text{"NG"} & \text{otherwise} \end{cases}$$

$$DeckThickness := \begin{cases} \text{"OK"} & \text{if } 4.5 \le t_{se} \le 12 \\ \text{"NG"} & \text{otherwise} \end{cases}$$

$$BridgeSpan := \begin{cases} \text{"OK"} & \text{if } 20 \le L \le 240 \\ \text{"NG"} & \text{otherwise} \end{cases}$$

$$NoBeams := \begin{cases} \text{"OK"} & \text{if } ng \ge 4 \\ \text{"NG"} & \text{otherwise} \end{cases}$$

$$LongitStiffness := \begin{cases} \text{"OK"} & \text{if } 10000 \le K_g \le 7000000 \\ \text{"NG"} & \text{otherwise} \end{cases}$$

$$x := \begin{pmatrix} S & DeckSpan \\ t_{se} & DeckThickness \\ L & BridgeSpan \\ ng & NoBeams \\ K_g & LongitStiffness \end{pmatrix} \qquad x = \begin{pmatrix} 7.5 & \text{"OK"} \\ 7.5 & \text{"OK"} \\ 130.0 & \text{"OK"} \\ 6.0 & \text{"OK"} \\ 1868972.4 & \text{"OK"} \end{pmatrix}$$

E19-2.6.1 Distribution Factors for Interior Beams:

One Lane Loaded:

$$g_{i1} := 0.06 + \left(\frac{S}{14}\right)^{0.4} \cdot \left(\frac{S}{L}\right)^{0.3} \cdot \left(\frac{K_g}{12.0 \cdot L \cdot t_{se}^{\,3}}\right)^{0.1} \qquad \boxed{g_{i1} = 0.427}$$

Two or More Lanes Loaded:

$$g_{i2} := 0.075 + \left(\frac{S}{9.5}\right)^{0.6} \cdot \left(\frac{S}{L}\right)^{0.2} \cdot \left(\frac{K_g}{12.0 \cdot L \cdot t_{se}^{\ 3}}\right)^{0.1}$$ $\boxed{g_{i2} = 0.619}$

$$g_i := \max(g_{i1}, g_{i2})$$ $\boxed{g_i = 0.619}$

Note: The distribution factors above already have a multiple lane factor included that is used for service and strength limit states. The distribution factor for One Lane Loaded should be used for the fatigue vehicle and the 1.2 multiple presence factor should be divided out.

E19-2.6.2 Distribution Factors for Exterior Beams:

Two or More Lanes Loaded:

Per **LRFD [Table 4.6.2.2.2d-1]** the distribution factor shall be calculated by the following equations:

$$w_{parapet} := \frac{w_b - w}{2}$$ Width of parapet overlapping the deck $\boxed{w_{parapet} = 1.250}$ ft

$$d_e := s_{oh} - w_{parapet}$$ Distance from the exterior web of exterior beam to the interior edge of parapet, ft. $\boxed{d_e = 1.250}$ ft

Note: Conservatively taken as the distance from the center of the exterior girder.

Check range of applicability for de:

$$d_{e_check} := \begin{cases} \text{"OK"} & \text{if } -1.0 \le d_e \le 5.5 \\ \text{"NG"} & \text{otherwise} \end{cases}$$ $\boxed{d_{e_check} = \text{"OK"}}$

Note: While AASHTO allows the d_e value to be up to 5.5, the deck overhang (from the center of the exterior girder to the edge of the deck) is limited by WisDOT policy as stated in Chapter 17 of the Bridge Manual.

$$e := 0.77 + \frac{d_e}{9.1}$$ $\boxed{e = 0.907}$

$$g_{x1} := e \cdot g_i$$ $\boxed{g_{x1} = 0.562}$

One Lane Loaded:

Per **LRFD [Table 4.6.2.2.2d-1]** the distribution factor shall be calculated by the Lever Rule.

Calculate the distribution factor by the Lever Rule:

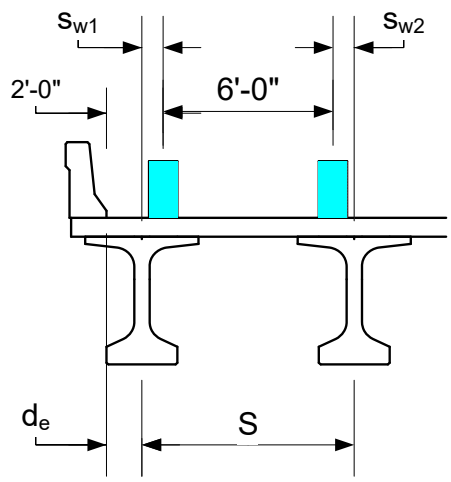

$s_{w1} := d_e - 2$ Distance from center of exterior girder to outside wheel load, ft. $s_{w1} = -0.75$ ft

$s_{w2} := S + s_{w1} - 6$ Distance from wheel load to first interior girder, ft. $s_{w2} = 0.75$ ft

$$R_x := \frac{S + s_{w1} + s_{w2}}{S \cdot 2}$$ $R_x = 0.500$ % of a lane load

Add the single lane multi-presence factor, $m := 1.2$

$g_{x2} := R_x \cdot 1.2$ $g_{x2} = 0.600$

The exterior girder distribution factor is the maximum value of the One Lane Loaded case and the Two or More Lanes Loaded case:

$g_x := \max(g_{x1}, g_{x2})$ $g_x = 0.600$

Note: The interior girder has a larger live load distribution factor and a larger dead load than the exterior girder. Therefore, for this example, the interior girder is likely to control.

E19-2.7 Load Factors

From **LRFD [Table 3.4.1-1]**:

	DC	DW	LL
Strength 1	$\gamma st_{DC} := 1.25$	$\gamma st_{DW} := 1.50$	$\gamma st_{LL} := 1.75$
Service 1	$\gamma s1_{DC} := 1.0$	$\gamma s1_{DW} := 1.0$	$\gamma s1_{LL} := 1.0$
Fatigue 1	$\gamma f_{DC} := 1.0$	$\gamma f_{DW} := 1.0$	$\gamma f_{LL} := 1.75$

Impact factor (DLA) is applied to the truck and tandem.

E19-2.8 Dead Load Moments

The unfactored dead load moments are listed below (values are in kip-ft):

Unfactored Dead Load Interior Girder Moments (ft-kips)			
Tenth Point	DC non-composite	DC composite	DW composite
0.5	3548	137	141
0.6	3402	99	102
0.7	2970	39	40
0.8	2254	-43	-45
0.9	1253	-147	-151
1.0	0	-272	-281

The DC_{nc} values are the component non-composite dead loads and include the weight of the girder, haunch, diaphragms and the deck.

The DC_c values are the component composite dead loads and include the weight of the parapets.

The DW_c values are the composite dead loads from the future wearing surface.

Note that the girder dead load moments (a portion of DC_{nc}) are calculated based on the CL bearing to CL bearing length. The other DC_{nc} moments are calculated based on the span length (center of bearing at the abutment to centerline of the pier).

E19-2.9 Live Load Moments

The unfactored live load moments (per lane including impact) are listed below (values are in kip-ft). Note that the impact factor is applied only to the truck portion of the HL-93 loads. A separate analysis run will be required if results without impact are desired.

Unfactored Live Load + Impact Moments per Lane (kip-ft)				
Tenth Point	Truck Pair	Truck + Lane	- Fatigue	+ Fatigue
0.5	--	-921	-476	1644
0.6	--	-1106	-572	1497
0.7	--	-1290	-667	1175
0.8	-1524	-1474	-762	718
0.9	-2046	-1845	-857	262
1	-3318	-2517	-953	0

The unfactored live load moments per lane are calculated by applying the appropriate distribution factor to the controlling moment. For the interior girder:

$$g_i = 0.619$$

$$M_{LL} = g_i \cdot -3317.97 \qquad \boxed{M_{LL} = -2055} \quad \text{kip-ft}$$

The single lane distribution factor should be used and the multiple presence factor of 1.2 must be removed from the fatigue moments.

$$M_{LLfatigue} = g_{i1} \cdot -952.64 \cdot \frac{1}{1.2} \qquad \boxed{M_{LLfatigue} = -339} \quad \text{kip-ft}$$

E19-2.10 Factored Moments

The factored moments for each limit state are calculated by applying the appropriate load factor to the girder moments. For the interior girder:

Strength 1

$$M_u := \eta \cdot \left(\gamma st_{DC} \cdot M_{DCc} + \gamma st_{DW} \cdot M_{DWc} + \gamma st_{LL} \cdot M_{LL}\right)$$

$$= 1.0 \cdot \left(1.25 \cdot M_{DCc} + 1.50 \cdot M_{DWc} + 1.75 \cdot M_{LL}\right) \qquad \boxed{M_u = -4358} \quad \text{kip-ft}$$

Service 1 (for compression checks in prestress and crack control in deck)

$$M_{s1} := \eta \cdot \left(\gamma s1_{DC} \cdot M_{DCc} + \gamma s1_{DW} \cdot M_{DWc} + \gamma s1_{LL} \cdot M_{LL}\right)$$

$$= 1.0 \cdot \left(1.0 \cdot M_{DCc} + 1.0 \cdot M_{DWc} + 1.0 \cdot M_{LL}\right) \qquad \boxed{M_{s1} = -2608} \quad \text{kip-ft}$$

Fatigue 1

$M_f := \eta \cdot (\gamma f_{DC} \cdot M_{DCc} + \gamma f_{DW} \cdot M_{DWc} + \gamma f_{LL} \cdot M_{LLfatigue})$

$= 1.0 \cdot (1.0 \cdot M_{DCc} + 1.0 \cdot M_{DWc} + 1.75 \cdot M_{LLfatigue})$ $\boxed{M_f = -1147}$ kip-ft

$Mf_{DL} := \eta \cdot (\gamma f_{DC} \cdot M_{DCc} + \gamma f_{DW} \cdot M_{DWc})$ $\boxed{Mf_{DL} = -553}$ kip-ft

$Mf_{LL} := \eta \cdot \gamma f_{LL} \cdot M_{LLfatigue}$ $\boxed{Mf_{LL} = -594}$ kip-ft

E19-2.11 Composite Girder Section Properties

Calculate the effective flange width in accordance with Chapter 17.2.11.

$w_e := S \cdot 12$ $\boxed{w_e = 90.00}$ in

The effective width, w_e, must be adjusted by the modular ratio, $n = 1.54$, to convert to the same concrete material (modulus) as the girder.

$w_{eadj} := \frac{w_e}{n}$ $\boxed{w_{eadj} = 58.46}$ in

Calculate the composite girder section properties:

effective slab thickness; $\boxed{t_{se} = 7.50}$ in

effective slab width; $\boxed{w_{eadj} = 58.46}$ in

haunch thickness; $hau := 2.00$ in

total height; $h_c := ht + hau + t_{se}$

$\boxed{h_c = 63.50}$ in

$\boxed{n = 1.540}$

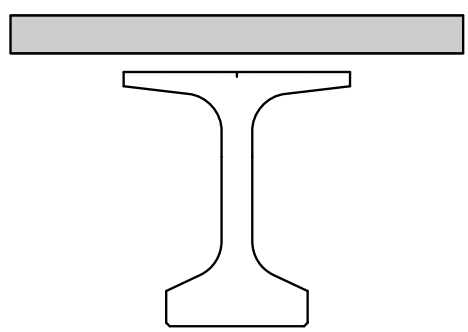

Note: The area of the concrete haunch is not included in the calculation of the composite section properties.

Component	Ycg	A	AY	AY^2	I	$I+AY^2$
Deck	59.75	438	26197	1565294	2055	1567349
Girder	26.3	798	20987	551969	321049	873018
Haunch	55	0	0	0	0	0
Summation		1236	47185			2440367

$\Sigma A := 1236$ in^2

$\Sigma AY := 47185$ in^4

$\Sigma IplusAYsq := 2440367$ in^4

$y_{cgb} := \frac{-\Sigma AY}{\Sigma A}$ $\boxed{y_{cgb} = -38.2}$ in

$y_{cgt} := ht + y_{cgb}$ $\boxed{y_{cgt} = 15.8}$ in

$A_{cg} := \Sigma A$ in^2

$I_{cg} := \Sigma IplusAYsq - A_{cg} \cdot y_{cgb}^2$ $\boxed{I_{cg} = 639053}$ in^4

Deck:

$S_c := n \cdot \frac{I_{cg}}{y_{cgt} + hau + t_{se}}$ $\boxed{S_c = 38851}$ in^4

E19-2.12 Flexural Strength Capacity at Pier

All of the continuity reinforcement shall be placed in the top mat. Therefore the effective depth of the section at the pier is:

$cover := 2.5$ in

$bar_{trans} := 5$ (transverse bar size)

$Bar_D(bar_{trans}) = 0.625$ in (transverse bar diameter)

$Bar_{No} = 9$

$Bar_D(Bar_{No}) = 1.13$ in (Assumed bar size)

$$d_e := ht + hau + t_s - cover - Bar_D(bar_{trans}) - \frac{Bar_D(Bar_{No})}{2}$$ $d_e = 60.31$ in

For flexure in non-prestressed concrete, $\phi_f := 0.9$.

The width of the bottom flange of the girder, $b_w = 30.00$ inches.

$$R_u := \frac{M_u \cdot 12}{\phi_f \cdot b_w \cdot d_e^2}$$ $R_u = 0.532$ ksi

$$\rho := 0.85 \frac{f'_c}{f_y} \cdot \left(1 - \sqrt{1 - \frac{2 \cdot R_u}{0.85 \cdot f'_c}}\right)$$ $\rho = 0.00925$

$$A_s := \rho \cdot b_w \cdot d_e$$ $A_s = 16.74$ in^2

This reinforcement is distributed over the effective flange width calculated earlier, $w_e = 90.00$ inches. The required continuity reinforcement in in^2/ft is equal to:

$$As_{req} := \frac{A_s}{\frac{w_e}{12}}$$ $As_{req} = 2.232$ in^2/ft

From Chapter 17, Table 17.5-3, for a girder spacing of $S = 7.5$ feet and a deck thickness of $t_s = 8.0$ inches, use a longitudinal bar spacing of #4 bars at $s_{longit} := 8.5$ inches. The continuity reinforcement shall be placed at 1/2 of this bar spacing, .

#9 bars at 4.25 inch spacing provides an $As_{prov} = 2.82$ in^2/ft, or the total area of steel provided:

$$As := As_{prov} \cdot \frac{w_e}{12}$$ $As = 21.18$ in^2

Calculate the capacity of the section in flexure at the pier:

Check the depth of the compression block:

Assume $f_s = f_y$ **LRFD [5.6.2.2]** $\alpha_1 := 0.85$ (for $f'_c \leq 10.0$ ksi)

$$a := \frac{As \cdot f_y}{\alpha_1 \cdot b_w \cdot f'_c}$$ $a = 6.228$ in

This is within the thickness of the bottom flange height of 7.5 inches.

If $\frac{c}{d_s} \leq 0.6$ for ($f_y = 60$ ksi) **LRFD [5.6.2.1]**, the reinforcement has yielded and the assumption is correct.

LRFD [5.7.2.2] $\beta_1 := 0.65$; $c := \frac{a}{\beta_1}$ $\boxed{c = 9.582}$ in

$\frac{c}{d_s} = 0.16 < 0.6$ therefore, the reinforcement will yield

$M_n := As \cdot f_y \cdot \left(d_e - \frac{a}{2}\right) \cdot \frac{1}{12}$ $\boxed{M_n = 6056}$ kip-ft

$M_r := \phi_f \cdot M_n$ $\boxed{M_r = 5451}$ kip-ft

$\boxed{M_u = 4358}$ kip-ft

Is M_u less than M_r? $\boxed{\text{check} = \text{"OK"}}$

Check the minimum reinforcement limits in accordance with **LRFD [5.6.3.3]**:

$f_r = 0.24 \cdot \lambda \sqrt{f'_{cd}}$ = modulus of rupture (ksi) **LRFD [5.4.2.6]**

$f_r := 0.24 \cdot \sqrt{f'_{cd}}$ $\lambda = 1.0$ (normal wgt. conc.) **LRFD [5.4.2.8]** $\boxed{f_r = 0.480}$ ksi

$M_{cr} = \gamma_3 (\gamma_1 \cdot f_r) S_c$

Where:

$\gamma_1 := 1.6$ flexural cracking variability factor

$\gamma_3 := 0.67$ ratio of yield strength to ultimate tensile strength of the reinforcement for A615, Grade 60 reinforcement

$M_{cr} := 1.1 f_r \cdot S_c \cdot \frac{1}{12}$ $\boxed{M_{cr} = 1709}$ kip-ft

$\boxed{1.33 \cdot M_u = 5796}$ kip-ft

Is M_r greater than the lesser value of M_{cr} and $1.33 * M_u$? $\boxed{\text{check} = \text{"OK"}}$

Check the Service I crack control requirements in accordance with **LRFD [5.6.7]**:

$\rho := \frac{As}{b_w \cdot d_e}$ $\boxed{\rho = 0.01170}$

$n := \frac{E_s}{E_B}$ $\boxed{n = 4.566}$

$k := \sqrt{(\rho \cdot n)^2 + 2 \cdot \rho \cdot n} - \rho \cdot n$ $\boxed{k = 0.278}$

$j := 1 - \frac{k}{3}$ $\boxed{j = 0.907}$

Note that the value of d_c should not include the 1/2-inch wearing surface.

$d_c := cover - 0.5 + Bar_D(bar_{trans}) + \frac{Bar_D(Bar_{No})}{2}$ $\boxed{d_c = 3.19}$ in

$\boxed{M_{s1} = 2608}$ kip-ft

$f_s := \frac{M_{s1}}{As \cdot j \cdot d_e} \cdot 12 \le 0.6 f_y$ $\boxed{f_s = 27.006}$ ksi $\le 0.6 f_y$ O.K.

The height of the composite section, h, is:

$h := ht + hau + t_{se}$ $\boxed{h = 63.500}$ in

$\beta := 1 + \frac{d_c}{0.7 \cdot (h - d_c)}$ $\boxed{\beta = 1.076}$

$\gamma_e := 0.75$ for Class 2 exposure

$S_{max} := \frac{700 \gamma_e}{\beta \cdot f_s} - 2 \cdot d_c$ $\boxed{S_{max} = 11.70}$ in

$\boxed{spa = 4.25}$ in

Is the bar spacing less than S_{max}? $\boxed{check = \text{"OK"}}$

Check the Fatigue 1 reinforcement limits in accordance with **LRFD [5.5.3]**:

$\gamma f_{LL} \cdot \Delta f \le \Delta F_{TH}$ where $\Delta F_{TH} := 26 - 22 \frac{f_{min}}{f_y}$

$\Delta F_{TH} := 26 - 0.367 f_{min}$ (for $f_y = 60$ ksi)

f_{min} is equal to the stress in the reinforcement due to the moments from the permanent loads combined with the Fatigue I load combination. Δf is the stress range resulting from the fatigue vehicle.

Check stress in section for determination of use of cracked or uncracked section properties:

$f_{top} := \frac{M_f}{S_c} \cdot 12$ $\boxed{f_{top} = 0.354}$ ksi

$f_{limit} := 0.095 \cdot \sqrt{f'_c}$ $\boxed{f_{limit} = 0.269}$ ksi

Therefore: $\boxed{SectionProp = \text{"Cracked"}}$

If we assume the neutral axis is in the bottom flange, the distance from cracked section neutral axis to bottom of compression flange, y_{cr}, is calculated as follows:

$$\frac{b_w \cdot y_{cr}^2}{2} = n \cdot As \cdot (d_e - y_{cr})$$

$$y_{cr} := \frac{n \cdot As}{b_w} \cdot \left(\sqrt{1 + \frac{2 \cdot b_w \cdot d_e}{n \cdot As}} - 1 \right)$$ $\boxed{y_{cr} = 16.756}$ in <u>No Good</u>

Assume the neutral axis is in the web:

$t_{bf_min} := 7.5$

$t_{bf_max} := 15$ $t_{taper} := t_{bf_max} - t_{bf_min}$ $\boxed{t_{taper} = 7.500}$

$t_{web} := 7$ $w_{taper} := b_w - t_w$ $\boxed{w_{taper} = 23.500}$

$$(w_{taper}) \cdot t_{bf_min} \cdot \left(x - \frac{t_{bf_min}}{2} \right) + t_w \cdot \frac{x^2}{2} \ldots$$
$$+ \left(\frac{w_{taper} \cdot t_{taper}}{2} \right) \cdot \left(x - t_{bf_min} - \frac{t_{taper}}{3} \right) - n \cdot As \cdot (d_e - x) = 0$$

CG of cracked section, $\boxed{x = 17.626}$ in

Cracked section moment of inertia:

$$I_{cr} := \frac{w_{taper} \cdot t_{bf_min}^3}{12} + w_{taper} \cdot t_{bf_min} \cdot \left(x - \frac{t_{bf_min}}{2} \right)^2 + \frac{t_{web} \cdot x^3}{3} \ldots$$
$$+ \frac{w_{taper} \cdot t_{taper}^3}{36} + \frac{w_{taper} \cdot t_{taper}}{2} \cdot \left(x - t_{bf_min} - \frac{t_{taper}}{2} \right)^2 + n \cdot As \cdot (d_e - x)^2$$

$\boxed{I_{cr} = 227583}$ in^4

Distance from centroid of tension reinforcement to the cracked section neutral axis:

$y_{rb} := d_e - x$ $\quad y_{rb} = 42.685$ in

$f_{min} := n \cdot \frac{M_f \cdot y_{rb}}{I_{cr}} \cdot 12$ $\quad f_{min} = 11.785$ ksi

$\Delta F_{TH} := 26 - 0.367 \cdot f_{min}$ (for $f_y = 60$ ksi) $\quad \Delta F_{TH} = 21.675$ ksi

$\Delta f := n \cdot \frac{|M_{LLfatigue}| \cdot y_{rb}}{I_{cr}} \cdot 12$ $\quad \Delta f = 3.488$ ksi

$\gamma f_{LL} \cdot \Delta f = 6.104$ ksi

Is $\gamma f_{LL} \cdot \Delta f$ less than ΔF_{TH}? $\quad$ check = "OK"

E19-2.13 Bar Cut Offs

The first cut off is located where half of the continuity reinforcement satisfies the moment diagram. Non-composite moments from the girder and the deck are considered along with the composite moments when determining the Strength I moment envelope. (It should be noted that since the non-composite moments are opposite in sign from the composite moments in the negative moment region, the minimum load factor shall be applied to the non-composite moments.) Only the composite moments are considered when checking the Service and Fatigue requirements.

$spa' := spa \cdot 2$ $\quad spa' = 8.50$ in

$As' := \frac{As}{2}$ $\quad As' = 10.588$ in^2

$a' := \frac{As' \cdot f_y}{\alpha_1 \cdot b_w \cdot f'_c}$ $\quad a' = 3.11$ in

$M_{n'} := As' \cdot f_y \cdot \left(d_e - \frac{a'}{2}\right) \cdot \frac{1}{12}$ $\quad M_{n'} = 3111$ kip-ft

$M_{r'} := \phi_f \cdot M_{n'}$ $M_{r'} = 2799$ kip-ft

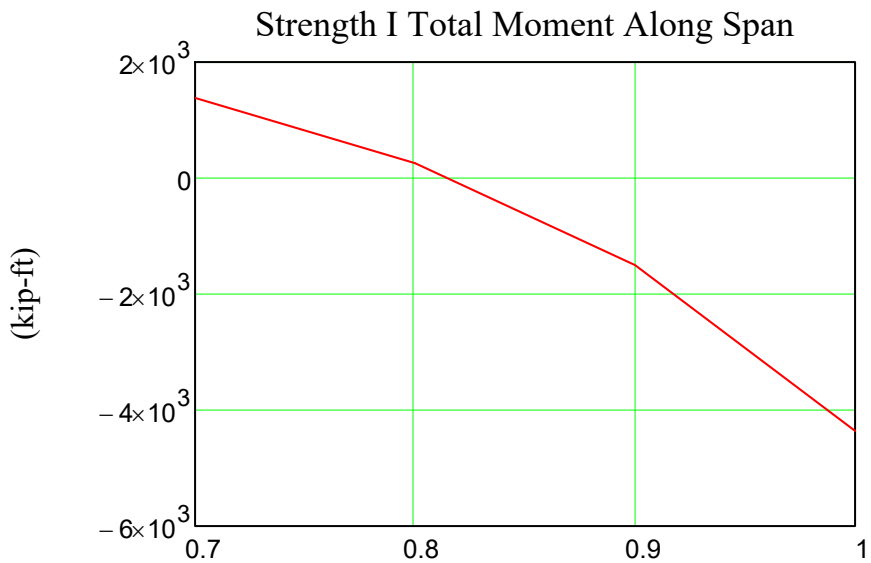

Based on the moment diagram, try locating the first cut off at $cut_1 := 0.90$ span. Note that the Service I crack control requirements control the location of the cut off.

$M_{r'} = 2799$ kip-ft

$Mu_{cut1} = 1501$ kip-ft

$Ms_{cut1} = 1565$ kip-ft

Is Mu_{cut1} less than $M_{r'}$? check = "OK"

Check the minimum reinforcement limits in accordance with **LRFD [5.6.3.3]**:

$M_{cr} = 1709$ kip-ft

$1.33 \cdot Mu_{cut1} = 1996$ kip-ft

Is $M_{r'}$ greater than the lesser value of M_{cr} and $1.33*Mu_{cut1}$? check = "OK"

Check the Service I crack control requirements in accordance with **LRFD [5.6.7]**:

$\rho' := \frac{As'}{b_w \cdot d_e}$ $\rho' = 0.00585$

$k' := \sqrt{(\rho' \cdot n)^2 + 2 \cdot \rho' \cdot n} - \rho' \cdot n$ $k' = 0.206$

$j' := 1 - \frac{k'}{3}$ $j' = 0.931$

$Ms_{cut1} = 1565$ kip-ft

$f_{s'} := \frac{Ms_{cut1}}{As' \cdot j' \cdot d_e} \cdot 12 \quad \le 0.6 f_y$ $f_{s'} = 31.582$ ksi $\le 0.6 f_y$ O.K.

$\beta = 1.076$

$\gamma_e = 0.750$

$S_{max'} := \frac{700 \gamma_e}{\beta \cdot f_{s'}} - 2 \cdot d_c$ $S_{max'} = 9.08$ in

$spa' = 8.50$ in

Is the bar spacing less than S_{max}? check = "OK"

Check the Fatigue 1 reinforcement limits in accordance with **LRFD [5.5.3]**:

The factored moments at the cut off are: $Mf_{DLcut1} = 298$ kip-ft

$Mf_{LLcut1} = 534$ kip-ft

$Mfpos_{LLcut1} = 163$ kip-ft

$Mf_{cut1} := Mf_{DLcut1} + Mf_{LLcut1}$ $Mf_{cut1} = 833$ kip-ft

Check stress in section for determination of use of cracked or uncracked section properties:

$f_{top_cut1} := \frac{Mf_{cut1}}{S_c} \cdot 12$ $f_{top_cut1} = 0.257$ ksi

$f_{limit} := 0.095 \cdot \sqrt{f'_c}$ $f_{limit} = 0.269$ ksi

Therefore: SectionProp = "Un-Cracked"

$f_{min_cut1} := n \cdot \frac{Mf_{cut1}}{S_c} \cdot 12$ $f_{min_cut1} = 1.174$ ksi

$\Delta F_{TH_cut1} := 26 - 0.367 \cdot f_{min_cut1}$ (for $f_y = 60$ ksi) $\Delta F_{TH_cut1} = 25.569$ ksi

The live load range is the sum of the positive and negative fatigue moments:

$Mf_{LLrange} := Mf_{LLcut1} + Mfpos_{LLcut1}$ $Mf_{LLrange} = 698$ kip-ft

$\gamma fLL\Delta f_cut1 := n \cdot \frac{Mf_{LLrange}}{S_c} \cdot 12$ $\gamma fLL\Delta f_cut1 = 0.984$ ksi

Is $\gamma f_{LL} \cdot \Delta f$ less than ΔF_{TH}? check = "OK"

Therefore this cut off location, $cut_1 = 0.90$, is OK. The bar shall be extended past the cut off point a distance not less than the maximum of the following, **LRFD [5.10.8.1.2c]**:

$$extend := \begin{pmatrix} d_e \\ 12 \cdot Bar_D(Bar_{No}) \\ 0.0625 \cdot L \cdot 12 \end{pmatrix} \qquad extend = \begin{pmatrix} 60.311 \\ 13.536 \\ 97.500 \end{pmatrix}$$

$\frac{\max(extend)}{12} = 8.13$ ft

$X_1 := L \cdot (1 - cut_1) + \frac{\max(extend)}{12}$ $X_1 = 21.12$ feet

USE $X_1 = 22$ feet from the CL of the pier.

The second bar cut off is located at the point of inflection under a uniform 1.0 klf composite dead load. At $cut_2 = 0.750$, $M_{cut2} = (79)$ kip-ft. Extend the bar the max(extend) distance calculated above past this point, or 4 feet past the first cut off, whichever is greater.

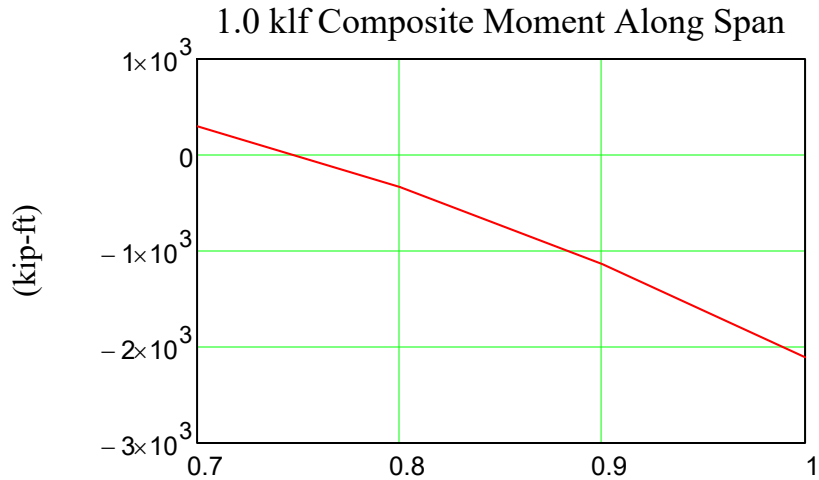

$X_{2a} := L \cdot (1 - cut_2) + \frac{max(extend)}{12}$ $\boxed{X_{2a} = 40.63}$ feet from the center of the pier

$X_{2b} := X_1 + 4$ $\boxed{X_{2b} = 26.00}$ feet from the center of the pier

$X_2 := max(X_{2a}, X_{2b})$ $\boxed{X_2 = 40.63}$ feet

USE $\boxed{X_2 = 41}$ feet from the CL of the pier.

This page intentionally left blank.

Table of Contents

E19-3 Box Section Beam 2
E19-3.1 Preliminary Structure Data 2
E19-3.2 Live Load Distribution 4
E19-3.2.1 Distribution for Moment 4
E19-3.2.2 Distribution for Shear 5
E19-3.3 Live Load Moments 7
E19-3.4 Dead Loads 7
E19-3.5 Dead Load Moments 9
E19-3.6 Design Moments 10
E19-3.7 Load Factors 11
E19-3.8 Factored Moments 11
E19-3.9 Allowable Stress 12
E19-3.9.1 Temporary Allowable Stresses 12
E19-3.9.2 Final Condition Allowable Stresses 12
E19-3.10 Preliminary Design Steps 13
E19-3.10.1 Determine Amount of Prestress 13
E19-3.10.1.1 Estimate the Prestress Losses 14
E19-3.10.1.2 Determine Number of Strands 15
E19-3.10.2 Prestress Loss Calculations 16
E19-3.10.2.1 Elastic Shortening Loss 16
E19-3.10.2.2 Approximate Estimate of Time Dependant Losses 17
E19-3.10.3 Check Stresses at Critical Locations 18
E19-3.11 Flexural Capacity at Midspan 21
E19-3.12 Shear Analysis 23
E19-3.13 Non-Prestressed Reinforcement (Required near top of girder) 29
E19-3.14 Longitudinal Tension Flange Capacity: 30
E19-3.15 Live Load Deflection Calculations 31
E19-3.16 Camber Calculations 32

E19-3 Box Section Beam

This example shows design calculations for a single span prestressed box multi-beam bridge having a 2" concrete overlay and is designed for a 20 pound per square foot future wearing surface. The *AASHTO LRFD Bridge Design Specifications* are followed as stated in the text of this chapter. ***(Example is current through LRFD Seventh Edition - 2016 Interim. Note: Example has not been updated to current Bridge Manual guidance and should be used for informational purposes only)***

E19-3.1 Preliminary Structure Data

Design Data
A-1 Abutments at both ends
Skew: 0 degrees
Live Load: HL-93
Roadway Width: 28 ft. minimum clear

$L := 44$	Span Length, single span, ft
$L_g := 44.5$	Girder Length, the girder extends 3" past the CL bearing at each abutment, single span, ft
$N_L := 2$	Number of design lanes
$t_{overlay} := 2$	Minimum overlay thickness, inches
$f_{pu} := 270$	Ultimate tensile strength for low relaxation strands, ksi
$d_s := 0.5$	Strand diameter, inches
$A_s := 0.1531$	Area of prestressing strands, in^2
$E_s := 28500$	Modulus of elasticity of the prestressing strands, ksi
$f'_c := 5$	Concrete strength (prestressed box girder), ksi
$f'_{ci} := 4.25$	Concrete strength at release, ksi
$K_1 := 1.0$	Aggregate correction factor
$w_c := 0.150$	Unit weight of concrete for box girder, overlay, and grout, kcf
$fy := 60$	Bar steel reinforcement, Grade 60, ksi.
$w_{rail} := 0.075$	Weight of Type "M" rail, klf
$Wh_{rail} := 0.42$	Width of horizontal members of Type "M" rail, feet
$\mu := 0.20$	Poisson's ratio for concrete, **LRFD [5.4.2.5]**

Based on past experience, the modulus of elasticity for the precast concrete are given in Chapter 19 as $E_{beam6} := 5500$ ksi for a concrete strength of 6 ksi. The values of E for different concrete strengths are calculated as follows:

$E_{beam5} := 5500 \cdot \frac{\sqrt{f'_c \cdot 1000}}{\sqrt{6000}}$ $\boxed{E_{beam5} = 5021}$ ksi

$E_B := E_{beam5}$

The modulus of elasticity at the time of release is calculated in accordance with **LRFD [C5.4.2.4]**.

$E_{beam4.25} := 33000 \cdot K_1 \cdot w_c^{1.5} \cdot \sqrt{f'_{ci}}$ $\boxed{E_{beam4.25} = 3952}$ ksi

$E_{ct} := E_{beam4.25}$

Based on the preliminary data, Section 19.3.9 of this chapter and Table 19.3-3, select a 4'-0" wide pretensioned box section having a depth of 1'-9" (Section 3), as shown on Bridge Manual Standard 19.15. The actual total deck width provided is calculated below.

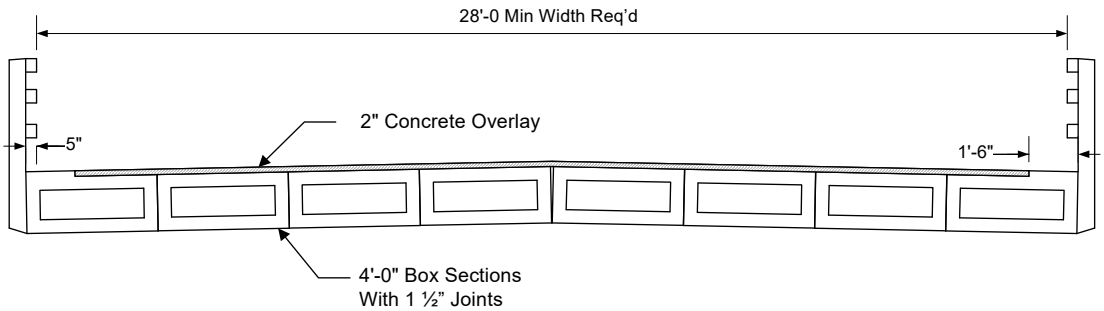

$n_{beams} := 8$

$n_{joints} := n_{beams} - 1$ $\boxed{n_{joints} = 7}$

$W_s := 4$ Width of section, ft

$W_j := 1.5$ Width of joints, inches

Overall width of the bridge, ft

$W_b := n_{beams} \cdot W_s + n_{joints} \cdot \frac{W_j}{12}$ $\boxed{W_b = 32.875}$ feet

Clear width of the bridge, ft

$W_{b_clear} := W_b - 2 \cdot Wh_{rail}$ $\boxed{W_{b_clear} = 32.035}$ feet

$W_{curb} := 1.5$ Width of curb on exterior girder (for steel rails), feet

$S := W_s + \frac{W_j}{12}$ Effective spacing of sections $\boxed{S = 4.125}$ feet

Section Properties, 4 ft x 1'-9" deep Box, Section 3

$D_s := 1.75$ Depth of section, ft

$A := 595$ Area of the box girder, in^2

$t_w := 5$ Thickness of each vertical element, in

$r_{sq} := 55.175$ in^2

$y_t := 10.5$ in

$y_b := -10.5$ in

$S_t := 3137$ Section modulus, in^3

$S_b := -3137$ Section modulus, in^3

$I := 32942$ Moment of inertia, in^4

$J := 68601$ St. Venant's torsional inertia, in^4

E19-3.2 Live Load Distribution

The live load distribution for adjacent box beams is calculated in accordance with **LRFD [4.6.2.2.2]**. Note that if the section does not fall within the applicability ranges, the lever rule shall be used to determine the distribution factor.

E19-3.2.1 Distribution for Moment

For interior beams, the live load moment distribution factor is calculated as indicated in **LRFD [Table 4.6.2.2.2b-1]** for cross section type "g" if connected only enough to prevent relative vertical displacement. This distribution factor applies regardless of the number of lanes loaded.

$K := \sqrt{\frac{(1+\mu)\cdot I}{J}}$ $\boxed{K = 0.759}$

$C := \min\left[K\cdot\left(\frac{W_b}{L}\right), K\right]$ $\boxed{C = 0.567}$

When C is less than 5:

$D := 11.5 - N_L + 1.4\cdot N_L\cdot(1 - 0.2\cdot C)^2$ $\boxed{D = 11.701}$

$g_{int_m} := \frac{S}{D}$ $\boxed{g_{int_m} = 0.353}$

For exterior beams, the live load moment distribution factor is calculated as indicated in **LRFD [Table 4.6.2.2.2d-1]** for cross section type "g".

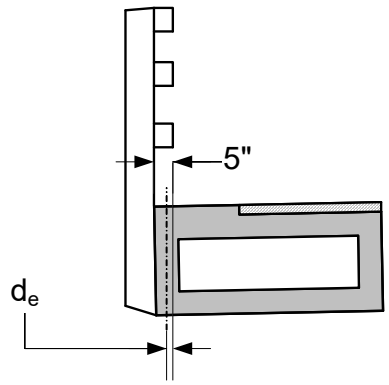

$$d_e := \frac{5}{12} \cdot \frac{1}{2} - Wh_{rail}$$

Distance from the center of the exterior web to the face of traffic barrier, ft.

$$d_e = -0.212 \text{ feet}$$

For one design lane loaded:

$$e_1 := \max\left(1.125 + \frac{d_e}{30}, 1\right) \qquad e_1 = 1.118$$

$$g_{ext1} := g_{int_m} \cdot e_1 \qquad g_{ext1} = 0.394$$

For two or more design lanes loaded:

$$e_2 := \max\left(1.04 + \frac{d_e}{25}, 1\right) \qquad e_2 = 1.032$$

$$g_{ext2} := g_{int_m} \cdot e_2 \qquad g_{ext2} = 0.364$$

Use the maximum value from the above calculations to determine the controlling exterior girder distribution factor for moment.

$$g_{ext_m} := \max(g_{ext1}, g_{ext2}) \qquad g_{ext_m} = 0.394$$

The distribution factor for fatigue is the single lane distribution factor with the multi-presence factor, $m := 1.2$, removed:

$$g_f := \frac{g_{ext1}}{1.2} \qquad g_f = 0.328$$

E19-3.2.2 Distribution for Shear

Interior Girder

This section does not fall in the range of applicability for shear distribution for interior girders of bridge type "g". I = 32942 in^4 and the limit is 40000 < I < 610,000, per **LRFD [Table 4.6.2.2.3a-1]**. Therefore, use the lever rule.

For the single lane loaded, only one wheel can be located on the box section. With the single lane multi presence factor, the interior girder shear distribution factor is:

$g_{int_v1} := 0.5 \cdot 1.2$ $\boxed{g_{int_v1} = 0.600}$

For two or more lanes loaded, center adjacent vehicles over the beam. One load from each vehicle acts on the beam.

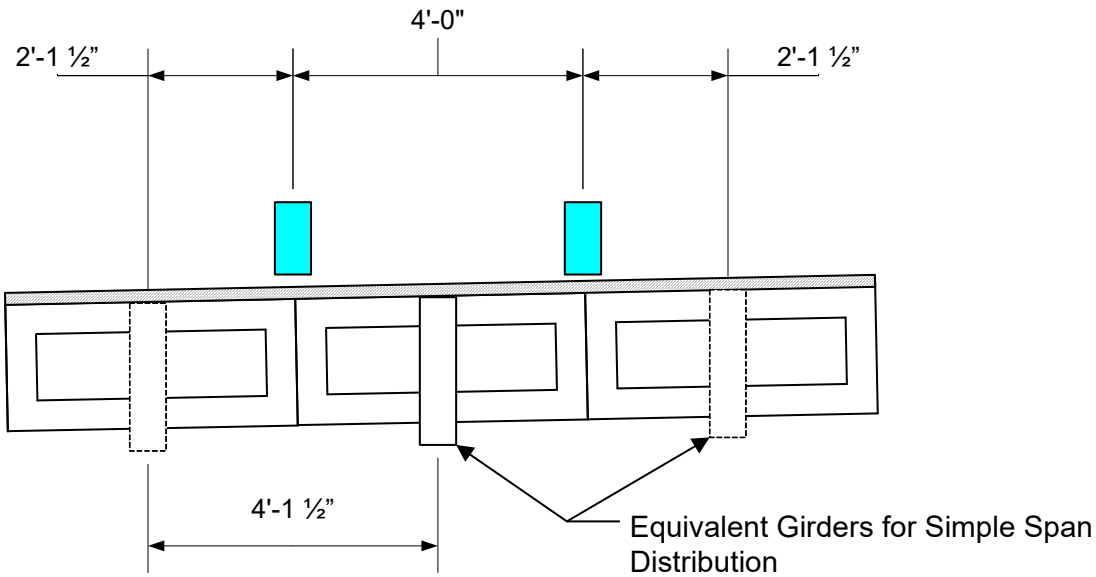

$g_{int_v2} := 0.5 \cdot \frac{2.125}{4.125} \cdot 2$ $\boxed{g_{int_v2} = 0.515}$

$g_{int_v} := \max(g_{int_v1}, g_{int_v2})$ $\boxed{g_{int_v} = 0.600}$

Exterior Girder

For the exterior girder, the range of applicability of **LRFD [T-4.6.2.2.3b-1]** for bridge type "g" is satisfied.

For the single lane loaded:

$e_{v1} := \max\left(1.25 + \frac{d_e}{20}, 1.0\right)$ $\boxed{e_{v1} = 1.239}$

$g_{ext_v1} := e_{v1} \cdot g_{int_v1}$ $\boxed{g_{ext_v1} = 0.744}$

For two or more lanes loaded:

$b := W_s \cdot 12$ $\boxed{b = 48}$ inches

$$e_{v2} := \max\left[1 + \left(\frac{d_e + \frac{b}{12} - 2.0}{40}\right)^{0.5}, 1.0\right]$$ $e_{v2} = 1.211$

$$g_{ext_v2} := e_{v2} \cdot g_{int_v2}$$ $g_{ext_v2} = 0.624$

$$g_{ext_v} := \max(g_{ext_v1}, g_{ext_v2})$$ $g_{ext_v} = 0.744$

E19-3.3 Live Load Moments

The HL-93 live load moment per lane on a 44 foot span is controlled by the design tandem plus lane. The maximum value at mid-span, including a dynamic load allowance of 33%, is $M_{LL_lane} := 835.84$ kip-ft per lane.

$$M_{LLint} := M_{LL_lane} \cdot g_{int_m}$$ $M_{LLint} = 294.7$ kip-ft

$$M_{LLext} := M_{LL_lane} \cdot g_{ext_m}$$ $M_{LLext} = 329.4$ kip-ft

The Fatige live load moment per lane on a 44 foot span at mid-span, including a dynamic load allowance of 15%, is $M_{LLfat_lane} := 442.4$ kip-ft per lane.

$$M_{LLfat} := M_{LLfat_lane} \cdot g_f$$ $M_{LLfat} = 145.3$ kip-ft

E19-3.4 Dead Loads

Interior Box Girders

Box Girder $w_g := \frac{A}{12^2} \cdot w_c$ $w_g = 0.620$ klf

Internal Concrete Diaphragm (at center of span)

$$w_{diaph} := 1.17 \cdot \left(D_s - \frac{10}{12}\right) \cdot \left(W_s - \frac{10}{12}\right) \cdot w_c$$ $w_{diaph} = 0.509$ kips

Equivalent uniform load: $w_{d_mid} := 2 \cdot \frac{w_{diaph}}{L}$ $w_{d_mid} = 0.023$ klf

Internal Concrete Diaphragm (at ends of span)

$$w_{diaph_end} := 2.83 \cdot \left(D_s - \frac{10}{12}\right) \cdot \left(W_s - \frac{10}{12}\right) \cdot w_c \qquad \boxed{w_{diaph_end} = 1.232} \text{ kips}$$

Equivalent uniform load:

$$w_{d_end} := 8 \cdot \frac{w_{diaph_end} \cdot 1.17}{L^2} \qquad \boxed{w_{d_end} = 0.006} \text{ klf}$$

$$w_d := w_{d_mid} + w_{d_end} \qquad \boxed{w_d = 0.029} \text{ klf}$$

For the interior girders, all dead loads applied after the post tensioning has been completed are distributed equally to all of the girders.

Overlay

$$w_o := \frac{\frac{t_{overlay}}{12} \cdot \left(W_b - W_{curb} \cdot 2\right) \cdot w_c}{n_{beams}} \qquad \boxed{w_o = 0.093} \text{ klf}$$

Joint Grout

$$w_j := \frac{W_j}{12} \cdot \left(D_s + \frac{t_{overlay}}{12}\right) \cdot w_c \cdot \frac{n_{joints}}{n_{beams}} \qquad \boxed{w_j = 0.031} \text{ klf}$$

"M" Rail

$$w_r := \frac{2 \cdot w_{rail}}{n_{beams}} \qquad \boxed{w_r = 0.019} \text{ klf}$$

Future Wearing Surface

$$w_{fws} := \frac{W_b \cdot 0.020}{n_{beams}} \qquad \boxed{w_{fws} = 0.082} \text{ klf}$$

$$w_{DCint} := w_g + w_d + w_o + w_j + w_r \qquad \boxed{w_{DCint} = 0.792} \text{ klf}$$

$$w_{DWint} := w_{fws} \qquad \boxed{w_{DWint} = 0.082} \text{ klf}$$

Exterior Box Girders

Box Girder $w_{g_ext} := \frac{A + 2 \cdot W_{curb} \cdot 12}{12^2} \cdot w_c$ $w_{g_ext} = 0.657$ klf

Internal Concrete Diaphragms $w_d = 0.029$ klf

For the exterior girders, all dead loads applied directly to the girder are applied.

Overlay $w_{o_ext} := \frac{t_{overlay}}{12} \cdot (S - W_{curb}) \cdot w_c$ $w_{o_ext} = 0.066$ klf

Joint Grout $w_{j_ext} := \frac{1}{2} \cdot \frac{W_j}{12} \cdot \left(D_s + \frac{t_{overlay}}{12}\right) \cdot w_c$ $w_{j_ext} = 0.018$ klf

Type M Rail $w_{r_ext} := w_{rail}$ $w_{r_ext} = 0.075$ klf

Future Wearing Surface

$w_{fws_ext} := S \cdot 0.020$ $w_{fws_ext} = 0.083$ klf

$w_{DCext} := w_{g_ext} + w_d + w_{o_ext} + w_{j_ext} + w_{r_ext}$

$w_{DCext} = 0.845$ klf

$w_{DWext} := w_{fws_ext}$ $w_{DWext} = 0.083$ klf

E19-3.5 Dead Load Moments

Moment of the girder and internal diaphragms alone, based on total girder length.

$M_{gi} := (w_g + w_d) \cdot \frac{L_g^2}{8}$ $M_{gi} = 160.6$ kip-ft

$M_{gext} := (w_{g_ext} + w_d) \cdot \frac{L_g^2}{8}$ $M_{gext} = 169.9$ kip-ft

Interior Girder

$M_{DCint} := w_{DCint} \cdot \frac{L^2}{8}$ $\boxed{M_{DCint} = 191.8}$ kip-ft

$M_{DWint} := w_{DWint} \cdot \frac{L^2}{8}$ $\boxed{M_{DWint} = 19.9}$ kip-ft

Exterior Girder

$M_{DCext} := w_{DCext} \cdot \frac{L^2}{8}$ $\boxed{M_{DCext} = 204.5}$ kip-ft

$M_{DWext} := w_{DWext} \cdot \frac{L^2}{8}$ $\boxed{M_{DWext} = 20.0}$ kip-ft

E19-3.6 Design Moments

Calculate the total moments on the interior and exterior girders to determine which girder will control the design.

$M_{T_int} := M_{DCint} + M_{DWint} + M_{LLint}$ $\boxed{M_{T_int} = 506.3}$ kip-ft

$M_{T_ext} := M_{DCext} + M_{DWext} + M_{LLext}$ $\boxed{M_{T_ext} = 553.9}$ kip-ft

Since the Dead Load moments are very close and the exterior Live Load moments are greater than the interior moments, the exterior girder controls for this design example. Note: an interior box girder section design will not be provided in this example. However, the interior girder shall not have less load carrying capacity then the exterior girder.

$M_{DC} := M_{DCext}$ $\boxed{M_{DC} = 204.5}$ kip-ft

$M_{DW} := M_{DWext}$ $\boxed{M_{DW} = 20}$ kip-ft

$M_{LL} := M_{LLext}$ $\boxed{M_{LL} = 329.4}$ kip-ft

$M_{LLf} := M_{LLfat}$ $\boxed{M_{LLf} = 145.3}$ kip-ft

E19-3.7 Load Factors

From **LRFD [Table 3.4.1-1 & Table 3.4.1-4]**:

	DC	DW	LL
Strength 1	$\gamma st_{DC} := 1.25$	$\gamma st_{DW} := 1.50$	$\gamma st_{LL} := 1.75$
Service 1	$\gamma s1_{DC} := 1.0$	$\gamma s1_{DW} := 1.0$	$\gamma s1_{LL} := 1.0$
Service 3	$\gamma s3_{DC} := 1.0$	$\gamma s3_{DW} := 1.0$	$\gamma s3_{LL} := 0.8$
Fatigue 1			$\gamma f_{LL} := 1.5$

E19-3.8 Factored Moments

WisDOT's policy is to set all of the load modifiers, η, equal to 1.0. The factored moments for each limit state are calculated by applying the appropriate load factor to the girder moments. For the exterior girder:

Strength 1

$$M_{str} := \eta \cdot \left(\gamma st_{DC} \cdot M_{DC} + \gamma st_{DW} \cdot M_{DW} + \gamma st_{LL} \cdot M_{LL}\right)$$

$$= 1.0 \cdot \left(1.25 \cdot M_{DC} + 1.50 \cdot M_{DW} + 1.75 \cdot M_{LL}\right) \qquad \boxed{M_{str} = 862} \quad \text{kip-ft}$$

Service 1 (for compression checks)

$$M_{s1} := \eta \cdot \left(\gamma s1_{DC} \cdot M_{DC} + \gamma s1_{DW} \cdot M_{DW} + \gamma s1_{LL} \cdot M_{LL}\right)$$

$$= 1.0 \cdot \left(1.0 \cdot M_{DC} + 1.0 \cdot M_{DW} + 1.0 \cdot M_{LL}\right) \qquad \boxed{M_{s1} = 554} \quad \text{kip-ft}$$

Service 3 (for tension checks)

$$M_{s3} := \eta \cdot \left(\gamma s3_{DC} \cdot M_{DC} + \gamma s3_{DW} \cdot M_{DW} + \gamma s3_{LL} \cdot M_{LL}\right)$$

$$= 1.0 \cdot \left(1.0 \cdot M_{DC} + 1.0 \cdot M_{DW} + 0.8 \cdot M_{LL}\right) \qquad \boxed{M_{s3} = 488} \quad \text{kip-ft}$$

Fatigue 1 (for compression checks)

$$M_{f1} := \eta \cdot \left[\frac{1}{2} \cdot \left(M_{DC} + M_{DW}\right) + \gamma f_{LL} \cdot M_{LLf}\right]$$

$$= 1.0 \cdot \left[\frac{1}{2} \cdot \left(M_{DC} + M_{DW}\right) + 1.5 \cdot M_{LLf}\right] \qquad \boxed{M_{f1} = 330} \quad \text{kip-ft}$$

E19-3.9 Allowable Stress

Allowable stresses are determined for 2 stages for prestressed girders. Temporary allowable stresses are set for the loading stage at release of the prestressing strands. Final condition allowable stresses are checked at service.

E19-3.9.1 Temporary Allowable Stresses

The temporary allowable stress (compression) **LRFD [5.9.4.1.1]**:

$f_{ciall} := 0.65 \cdot f'_{ci}$ $\boxed{f_{ciall} = 2.763}$ ksi

In accordance with **LRFD [Table 5.9.4.1.2-1]**, the temporary allowable tension stress is calculated as follows (assume there is no bonded reinforcement):

$f_{tiall} := -\min\left(0.0948 \cdot \lambda \sqrt{f'_{ci}}, 0.2\right)$ λ = 1.0 (normal wgt. conc.) **LRFD [5.4.2.8]** $\boxed{f_{tiall} = -0.195}$ ksi

If bonded reinforcement is present in the top flange, the temporary allowable tension stress is calculated as follows:

$f_{tiall_bond} := -0.24 \cdot \lambda \sqrt{f'_{ci}}$ λ = 1.0 (normal wgt. conc.) **LRFD [5.4.2.8]** $\boxed{f_{tiall_bond} = -0.495}$ ksi

E19-3.9.2 Final Condition Allowable Stresses

Allowable Stresses,**LRFD [5.9.4.2.1]**:

There are two compressive service stress limits:

$f_{call1} := 0.45 \cdot f'_c$ PS + DL $\boxed{f_{call1} = 2.250}$ ksi

$f_{call2} := 0.60 \cdot f'_c$ LL + PS + DL $\boxed{f_{call2} = 3.000}$ ksi

There is one tension service stress limit **LRFD [5.9.4.2.2]**:

$f_{tall} = -0.19 \cdot \lambda \sqrt{f'_c}$ λ = 1.0 (normal wgt. conc.) **LRFD [5.4.2.8]**

$f_{tall} := -0.19 \cdot \sqrt{f'_c}$ LL + PS + DL $|f_{tall}| \le 0.6$ ksi $\boxed{f_{tall} = -0.425}$ ksi

There is one compressive fatigue stress limit **LRFD [5.5.3.1]**:

$f_{call_f} := 0.40 \cdot f'_c$ LLf + 1/2(PS + DL) $\boxed{f_{call_f} = 2.000}$ ksi

E19-3.10 Preliminary Design Steps

The following steps are utilized to design the prestressing strands:

1) Design the amount of prestress to prevent tension at the bottom of the beam under the full load at center span after losses.

2) Calculate the prestress losses and check the girder stresses at mid span at the time of transfer.

3) Check resulting stresses at the critical sections of the girder at the time of transfer (before losses and while in service (after losses).

E19-3.10.1 Determine Amount of Prestress

Design the amount of prestress to prevent tension at the bottom of the beam under the full loac (at center span) after losses.

Near center span, after losses, T = the remaining effective prestress, aim for no tension at the bottom. Use Service I for compression and Service III for tension.

For this example, the exterior girder has the controlling moments.

Calculate the stress at the bottom of the beam due to the Service 3 loading:

$$f_b := \frac{M_{s3} \cdot 12}{S_b} \qquad \boxed{f_b = -1.867} \text{ ksi}$$

Stress at bottom due to prestressing:

$$f_{bp} = \frac{T}{A} \cdot \left(1 + e \cdot \frac{y_b}{r^2}\right)$$

and $f_{bp} := \left|f_b\right|$ desired final prestress.

We want this to balance out the tensile stress calculated above from the loading, i.e. an initial compression. The required stress due to prestress force at bottom of section to counteract the Service 3 loads:

$$\boxed{f_{bp} = 1.867} \text{ ksi}$$

E19-3.10.1.1 Estimate the Prestress Losses

At service the prestress has decreased (due to CR, SH, RE):

Estimated time dependant losses $F_{Delta} \equiv 30$ ksi

Note: The estimated time dependant losses (based on experience for low relaxation strands) will be re-calculated using the approximate method in accordance with **LRFD [5.9.5.3]** once the number of strands has been determined.

Assume an initial strand stress; $f_{tr} := 0.75 \cdot f_{pu}$ $f_{tr} = 202.5$ ksi

Based on experience, assume $\Delta f_{pES_est} := 9.1$ ksi loss from elastic shortening. As an alternate initial estimate, **LRFD [C.5.9.5.2.3a]** suggests assuming a 10% ES loss.

$$ES_{loss} := \frac{\Delta f_{pES_est}}{f_{tr}} \cdot 100$$ $ES_{loss} = 4.494$ %

$$f_i := f_{tr} - \Delta f_{pES_est}$$ $f_i = 193.4$ ksi

The total loss is the time dependant losses plus the ES losses:

$$loss := F_{Delta} + \Delta f_{pES_est}$$ $loss = 39.1$ ksi

$$loss_{\%} := \frac{loss}{f_{tr}} \cdot 100$$ $loss_{\%} = 19.309$ % (estimated)

If T_o is the initial prestress, then (1-loss)*T_o is the remaining:

$$T = \left(1 - loss_{\%}\right) \cdot T_o$$

$$ratio := 1 - \frac{loss_{\%}}{100}$$ $ratio = 0.807$

$$T = ratio \cdot T_o$$

$$f_{bp} = \frac{\left(1 - loss_{\%}\right) \cdot T_o}{A} \cdot \left(1 + e \cdot \frac{y_b}{r^2}\right)$$

OR:

$$\frac{f_{bp}}{1 - loss_{\%}} = \frac{T_o}{A} \cdot \left(1 + e \cdot \frac{y_b}{r^2}\right)$$

$$f_{bpi} := \frac{f_{bp}}{1 - \frac{loss_{\%}}{100}}$$

$f_{bpi} = 2.313$ ksi

desired bottom initial prestress

E19-3.10.1.2 Determine Number of Strands

$A_s = 0.153$ in^2

$f_{pu} = 270$ ksi

$f_s := 0.75 \cdot f_{pu}$

$f_s = 202.5$ ksi

$P := A_s \cdot f_s$

$P = 31.003$ kips per strand

$$f_{bp} := \frac{P \cdot N}{A} \cdot \left(1 + e \cdot \frac{y_b}{r_{sq}}\right)$$

$y_b = -10.5$ Distance from the centroid of the 21" depth to the bottom of the box section, in.

For the 4'-0 wide box sections, there can be up to 22 strands in the bottom row and 2 rows of strands in the sides of the box. Calculate the eccentricity for the maximum number of strands that can be placed in the bottom row of the box:

$e_b := y_b + 2$ $e_b = -8.5$ Eccentricity to the bottom row of strands, inches

$e_s := e_b$

$e_s = -8.5$ inches

$$N_{req} := \frac{f_{bpi} \cdot A}{P} \cdot \frac{1}{1 + e_s \cdot \frac{y_b}{r_{sq}}}$$

$N_{req} = 17$ strands

Therefore, try $N := 16$ strands since some final tension in the bottom of the girder is allowed.

Place 2 of the strands in the second row:

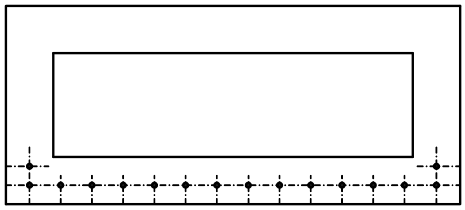

$$e_s := \frac{e_b \cdot 14 + (e_b + 2) \cdot 2}{16}$$

$e_s = -8.25$ inches

E19-3.10.2 Prestress Loss Calculations

The loss in prestressing force is comprised of the following components:

1) Elastic Shortening (ES), shortening of the beam as soon as prestress is applied. Can this be compensated for by overstressing?

2) Shrinkage (SH), shortening of the concrete as it hardens, time function.

3) Creep (CR), slow shortening of concrete due to permanent compression stresses in the beam, time function.

4) Relaxation (RE), the tendon slowly accommodates itself to the stretch and the internal stress drops with time

E19-3.10.2.1 Elastic Shortening Loss

at transfer (before ES loss) **LRFD [5.9.5.2]**

$T_{oi} := N \cdot f_{tr} \cdot A_s$ $= 16 \cdot 0.75 \cdot 270 \cdot 0.1531 = 496$ kips

The ES loss estimated above was: $\Delta f_{pES_est} = 9.1$ ksi, or $ES_{loss} = 4.494$ %. The resulting force in the strands after ES loss:

$$T_o := \left(1 - \frac{ES_{loss}}{100}\right) \cdot T_{oi}$$

$T_o = 474$ kips

Since all strands are straight, we can calculate the initial elastic shortening loss;

$$f_{cgp} := \frac{T_o}{A} + (T_o \cdot e_s) \cdot \frac{e_s}{I} + M_{gi} \cdot 12 \cdot \frac{e_s}{I}$$

$f_{cgp} = 1.264$ ksi

$E_{ct} = 3952$ ksi

$E_p := E_s$

$E_p = 28500$ ksi

$$\Delta f_{pES} := \frac{E_p}{E_{ct}} \cdot f_{cgp}$$ $\Delta f_{pES} = 9.118$ ksi

This value of Δf_{pES} is in agreement with the estimated value above; $\Delta f_{pES_est} = 9.10$ ksi. If these values did not agree, T_o would have to be recalculated using f_{tr} minus the new value of Δf_{pES}, and a new value of f_{cgp} would be determined. This iteration would continue until the assumed and calculated values of Δf_{pES} are in agreement.

The initial stress in the strand is:

$$f_i := f_{tr} - \Delta f_{pES}$$ $f_i = 193.382$ ksi

The force in the beam after transfer is:

$$T_o := N \cdot A_s \cdot f_i$$ $T_o = 474$ kips

Check the design to avoid premature failure at the center of the span at the time of transfer. Check the stress at the center span (at the plant) at both the top and bottom of the girder.

$$f_{ttr} := \frac{T_o}{A} + \frac{T_o \cdot e_s}{S_t} + \frac{M_{gi} \cdot 12}{S_t}$$ $f_{ttr} = 0.200$ ksi

$$f_{btr} := \frac{T_o}{A} + \frac{T_o \cdot e_s}{S_b} + \frac{M_{gi} \cdot 12}{S_b}$$ $f_{btr} = 1.392$ ksi

temporary allowable stress (tension) $f_{tiall} = -0.195$ ksi

temporary allowable stress (compression) $f_{ciall} = 2.763$ ksi

Is the stress at the top of the girder less than the allowable? check = "OK"

Is the stress at the bottom of the girder less than the allowable? check = "OK"

E19-3.10.2.2 Approximate Estimate of Time Dependant Losses

Calculate the components of the time dependant losses; shrinkage, creep and relaxation, using the approximate method in accordance with **LRFD [5.9.5.3]**.

$$\Delta f_{pLT} = 10.0 \cdot \frac{f_{pi} \cdot A_s}{A_g} \cdot \gamma_h \cdot \gamma_{st} + 12.0 \cdot \gamma_h \cdot \gamma_{st} + \Delta f_{pR}$$

From **LRFD [Figure 5.4.2.3.3-1]**, the average annual ambient relative humidity, $H := 72$ %.

$\gamma_h := 1.7 - 0.01 \cdot H$ $\quad \gamma_h = 0.980$

$\gamma_{st} := \dfrac{5}{1 + f'_{ci}}$ $\quad \gamma_{st} = 0.952$

$\Delta f_{pR} := 2.4$ ksi for low relaxation strands

$\Delta f_{pCR} := 10.0 \cdot \dfrac{f_{tr} \cdot A_s \cdot N}{A} \cdot \gamma_h \cdot \gamma_{st}$ $\quad \Delta f_{pCR} = 7.781$ ksi

$\Delta f_{pSR} := 12.0 \cdot \gamma_h \cdot \gamma_{st}$ $\quad \Delta f_{pSR} = 11.200$ ksi

$\Delta f_{pRE} := \Delta f_{pR}$ $\quad \Delta f_{pRE} = 2.400$ ksi

$\Delta f_{pLT} := \Delta f_{pCR} + \Delta f_{pSR} + \Delta f_{pRE}$ $\quad \Delta f_{pLT} = 21.381$ ksi

The total estimated prestress loss (Approximate Method):

$\Delta f_p := \Delta f_{pES} + \Delta f_{pLT}$ $\quad \Delta f_p = 30.499$ ksi

$\dfrac{\Delta f_p}{f_{tr}} \cdot 100 = 15.061$ % total prestress loss

This value is less than but in general agreement with the initial estimated $loss_{\%} = 19.3$.

The remaining stress in the strands and total force in the beam after all losses is:

$f_{pe} := f_{tr} - \Delta f_p$ $\quad f_{pe} = 172.00$ ksi

$T := N \cdot A_s \cdot f_{pe}$ $\quad T = 421$ kips

E19-3.10.3 Check Stresses at Critical Locations

Check the girder stresses at the end of the transfer length of the strands at release:

Minimum moment on section = girder moment at the plant

$$M_{gz} = \frac{w_g}{2} \cdot \left(L_g \cdot z - z^2\right)$$

Stress in the bottom fiber at transfer:

$$f_{bz} = \frac{T_o}{A} + \frac{T_o \cdot e_{sz}}{S_b} + \frac{M_{gz}}{S_b}$$

The transfer length may be taken as:

$l_{tr} := 60 \cdot d_s$ $\boxed{l_{tr} = 30.00}$ in

$x := \frac{l_{tr}}{12}$ $\boxed{x = 2.50}$ feet

The moment at the end of the transfer length due to the girder dead load:

$$M_{gt} := \frac{w_{g_ext}}{2} \cdot \left(L_g \cdot x - x^2\right) + \left(\frac{w_{diaph} \cdot x}{2} + w_{diaph_end} \cdot x\right)$$

$\boxed{M_{gt} = 38}$ kip-ft

The girder stresses at the end of the transfer length:

$$f_{tt} := \frac{T_o}{A} + \frac{T_o \cdot e_s}{S_t} + \frac{M_{gt} \cdot 12}{S_t}$$

$\boxed{f_{tt} = -0.303}$ ksi

$\boxed{f_{tiall} = -0.195}$ ksi

$\boxed{check = \text{"NG"}}$

If bonded reinforcement is provided in the top flange, the allowable stress is:

$f_{tiall_bond} = -0.495$ ksi

Is f_{tt} less than f_{tiall_ond}? $\boxed{check = \text{"OK"}}$

$$f_{bt} := \frac{T_o}{A} + \frac{T_o \cdot e_s}{S_b} + \frac{M_{gt} \cdot 12}{S_b}$$

$\boxed{f_{bt} = 1.896}$ ksi

$\boxed{f_{ciall} = 2.763}$ ksi

Is f_{bt} less than f_{ciall}? $\boxed{check = \text{"OK"}}$

Check final stresses after all losses at the mid-span of the girder:

Top of girder stress (Compression - Service 1):

$$f_{t1} := \frac{T}{A} + \frac{T \cdot e_s}{S_t} + \frac{\left(M_{DC} + M_{DW}\right) \cdot 12}{S_t}$$

PS + DL $\boxed{f_{t1} = 0.459}$ ksi

$\boxed{check = \text{"OK"}}$

$$f_{t2} := \frac{T}{A} + \frac{T \cdot e_s}{S_t} + \frac{M_{s1} \cdot 12}{S_t}$$ LL + PS + DL $f_{t2} = 1.719$ ksi

check = "OK"

Bottom of girder stress (Compression - Service 1):

$$f_{b1} := \frac{T}{A} + \frac{T \cdot e_s}{S_b} + \frac{(M_{DC} + M_{DW}) \cdot 12}{S_b}$$ PS + DL $f_{b1} = 0.958$ ksi

check = "OK"

Bottom of girder stress (Tension - Service 3):

$$f_b := \frac{T}{A} + \frac{T \cdot e_s}{S_b} + \frac{M_{s3} \cdot 12}{S_b}$$ $f_b = -0.051$ ksi

check = "OK"

Top of girder stress (Compression - Fatigue 1):

$$f_{tf1} := \frac{1}{2} \cdot \left[\frac{T}{A} + \frac{T \cdot e_s}{S_t} + \frac{(M_{DC} + M_{DW}) \cdot 12}{S_t} \right] + \frac{M_{LLf} \cdot 12}{S_t}$$ 1/2(PS + DL) + LLf

$f_{t1} = 0.459$ ksi

check = "OK"

allowable stress (tension) $f_{tall} = -0.425$ ksi

allowable stress (compression) $f_{call1} = 2.250$ ksi

$f_{call2} = 3.000$ ksi

$f_{call_f} = 2.000$ ksi

E19-3.11 Flexural Capacity at Midspan

Check f_{pe} in accordance with **LRFD [5.7.3.1.1]**:

$f_{pe} = 172$ ksi $0.5 \cdot f_{pu} = 135$ ksi

Is $0.5 * f_{pu}$ less than f_{pe}? check = "OK"

Then at failure, we can assume that the tendon stress is:

$$f_{ps} = f_{pu}\left(1 - k \cdot \frac{c}{d_p}\right)$$

where:

$$k = 2\left(1.04 - \frac{f_{py}}{f_{pu}}\right)$$

From **LRFD [Table C5.7.3.1.1-1]**, for low relaxation strands, $k := 0.28$.

"c" is defined as the distance between the neutral axis and the compression face (inches).

Assume that the compression block is in the top section of the box. Calculate the capacity as if it is a rectangular section. The neutral axis location,calculated in accordance with **LRFD 5.7.3.1.1** for a rectangular section, is:

$$c = \frac{A_{ps} \cdot f_{pu}}{\alpha_1 \cdot f'_c \cdot \beta_1 \cdot b + k \cdot A_{ps} \cdot \frac{f_{pu}}{d_p}}$$

where:

$A_{ps} := N \cdot A_s$ $A_{ps} = 2.45$ in^2

$b := W_s \cdot 12$ $b = 48.00$ in

LRFD [5.7.2.2] $\alpha_1 := 0.85$ (for $f'_c \leq 10.0$ ksi)

$\beta_1 := \max\left[0.85 - \left(f'_c - 4\right) \cdot 0.05, 0.65\right]$ $\beta_1 = 0.800$

$d_p := y_t - e_s$ $d_p = 18.75$ in

$$c := \frac{A_{ps} \cdot f_{pu}}{\alpha_1 \cdot f'_c \cdot \beta_1 \cdot b + k \cdot A_{ps} \cdot \frac{f_{pu}}{d_p}}$$ $c = 3.82$ in

$a := \beta_1 \cdot c$ $a = 3.06$ in

This is within the depth of the top slab (5-inches). Therefore our assumption is OK.

Now calculate the effective tendon stress at ultimate:

$$f_{ps} := f_{pu} \cdot \left(1 - k \cdot \frac{c}{d_p}\right)$$ $f_{ps} = 254.6$ ksi

$$T_u := f_{ps} \cdot A_{ps}$$ $T_u = 624$ kips

Calculate the nominal moment capacity of the section in accordance with **LRFD [5.7.3.2]**:

$$M_n := \left[A_{ps} \cdot f_{ps} \cdot \left(d_p - \frac{a}{2}\right)\right] \cdot \frac{1}{12}$$

$M_n = 895$ kip-ft

For prestressed concrete, $\phi_f := 1.00$, **LRFD [5.5.4.2.1]**. Therefore the usable capacity is:

$$M_r := \phi_f \cdot M_n$$ $M_r = 895$ kip-ft

The required capacity:

Exterior Girder Moment

$$M_u := M_{str}$$ $M_u = 862$ kip-ft

Check the section for minimum reinforcement in accordance with **LRFD [5.7.3.3.2]** for the interior girder:

$1.33 \cdot M_u = 1147$ kip-ft

$f_r = 0.24 \cdot \lambda \sqrt{f'_c}$ = modulus of rupture (ksi) **LRFD [5.4.2.6]**

$f_r := 0.24 \cdot \sqrt{f'_c}$ $\lambda = 1.0$ (normal wgt. conc.) **LRFD [5.4.2.8]** $f_r = 0.537$ ksi

$$f_{cpe} := \frac{T}{A} + \frac{T \cdot e_s}{S_b}$$ $f_{cpe} = 1.816$ ksi

$$S_c := -S_b$$ $S_c = 3137$ ksi

$\gamma_1 := 1.6$ flexural cracking variability factor

$\gamma_2 := 1.1$ prestress variability factor

$\gamma_3 := 1.0$ for prestressed concrete structures

$M_{cr} := \gamma_3 \cdot \left[S_c \cdot \left(\gamma_1 \cdot f_r + \gamma_2 \cdot f_{cpe} \right) \cdot \frac{1}{12} \right]$ $M_{cr} = 747$ kip-ft

Is M_r greater than the lesser value of M_{cr} and $1.33*M_u$? check = "OK"

E19-3.12 Shear Analysis

A separate analysis must be conducted to estimate the total shear force in each girder for shear design purposes.

The live load shear distribution factors to the girders are calculated above in E19-3.2.2.

$g_{int_v} = 0.600$

$g_{ext_v} = 0.744$

From section E19-3.4, the uniform dead loads on the girders are:

Interior Girder

$w_{DCint} = 0.792$ klf

$w_{DWint} = 0.082$ klf

Exterior Girder

$w_{DCext} = 0.845$ klf

$w_{DWext} = 0.083$ klf

However, the internal concrete diaphragms were applied as total equivalent uniform loads to determine the maximum mid-span moment. The diaphragm weights should be applied as poin loads for the shear calculations.

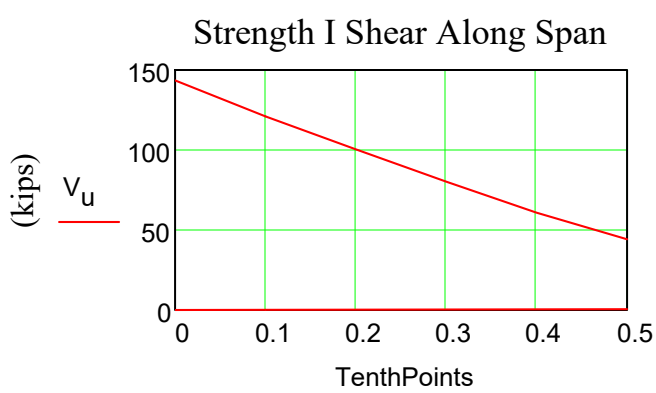

$Vu_{0.0} = 143.5$ kips

$Vu_{0.5} = 44.2$ kips

Simplified Procedure for Prestressed and Nonprestressed Sections, **LRFD [5.8.3.4.3]**

$b_v := 2t_w$ $\boxed{b_v = 10.00}$ in

The critical section for shear is taken at a distance of d_v from the face of the support, **LRFD [5.8.3.2]**.

d_v = effective shear depth taken as the distance between the resultants of the tensile and compressive forces due to flexure. It need not be taken less than the greater of $0.9*d_e$ or 0.72h (inches). **LRFD [5.8.2.9]**

The first estimate of d_v is calculated as follows:

$d_v := -e_s + y_t - \frac{a}{2}$ $\boxed{d_v = 17.22}$ in

For the standard bearing pad of width, $w_{brg} := 8$ inches, the distance from the end of the girder to the critical section:

$L_{crit} := (w_{brg} + d_v) \cdot \frac{1}{12}$ $\boxed{L_{crit} = 2.10}$ ft

The eccentricity of the strand group at the critical section is:

$\boxed{e_s = -8.25}$ in

Calculation of compression stress block:

$\boxed{d_p = 18.75}$ in

$\boxed{A_{ps} = 2.45}$ in^2

Also, the value of f_{pu}, should be revised if the critical section is located less than the development length from the end of the beam. The development length for a prestressing strand is calculated in accordance with **LRFD [5.11.4.2]**:

$K := 1.0$ for prestressed members with a depth less than 24 inches

$\boxed{d_s = 0.5}$ in

$l_d := K \cdot \left(f_{ps} - \frac{2}{3} \cdot f_{pe}\right) \cdot d_s$ $\boxed{l_d = 70.0}$ in

The transfer length may be taken as: $l_{tr} := 60 \cdot d_s$ $\boxed{l_{tr} = 30.00}$ in

Since $L_{crit} = 2.102$ feet is between the transfer length and the development length, the design stress in the prestressing strand is calculated as follows:

$f_{pu_crit} := f_{pe} \cdot \frac{L_{crit} \cdot 12}{l_{tr}}$ $\boxed{f_{pu_crit} = 145}$ ksi

$T_{crit} := N \cdot A_s \cdot f_{pu_crit}$ $\boxed{T_{crit} = 354}$ kips

For rectangular section behavior:

$\boxed{\alpha_1 = 0.850}$ $\boxed{\beta_1 = 0.800}$

$c_{crit} := \frac{A_{ps} \cdot f_{pu_crit}}{\alpha_1 \cdot f'_c \cdot \beta_1 \cdot b + k \cdot A_{ps} \cdot \frac{f_{pu_crit}}{d_p}}$ $\boxed{c_{crit} = 2.102}$ in

$a_{crit} := \beta_1 \cdot c_{crit}$ $\boxed{a_{crit} = 1.682}$ in

Calculation of shear depth based on refined calculations of a:

$d_{v_crit} := -e_s + y_t - \frac{a_{crit}}{2}$ $\boxed{d_{v_crit} = 17.91}$ in

This value matches the assumed value of d_v above. OK!

$d_v := d_{v_crit}$

The location of the critical section from the end of the girder is:

$L_{crit} := (w_{brg} + d_v) \cdot \frac{1}{12}$ $\boxed{L_{crit} = 2.159}$ ft

The location of the critical section from the center line of bearing at the abutment is:

$crit := L_{crit} - 0.25$ $\boxed{crit = 1.909}$ ft

The nominal shear resistance of the section is calculated as follows, **LRFD [5.8.3.3]**:

$$V_n = \min\left(V_c + V_s + V_p, 0.25 \cdot f'_c \cdot b_v \cdot d_v + V_p\right)$$

where $V_p := 0$ in the calculation of V_n, if the simplified procedure is used (**LRFD [5.8.3.4.3]**).

Note, the value of V_p does not equal zero in the calculation of V_{cw}.

V_d = shear force at section due to unfactored dead load and includes both DC and DW (kips)

V_i = factored shear force at section due to externally applied loads (Live Loads) occurring simultaneously with M_{max} (kips). (Not necessarily equal to V_u.)

M_{cre} = moment causing flexural cracking at section due to externally applied loads (kip-in)

M_{max} = maximum factored moment at section due to externally applied loads (Live Loads) (kip-in)

M_{dnc} = total unfactored dead load moment acting on the noncomposite section (kip-ft)

Values for the following moments and shears are at the critical section, $L_{crit} = 2.16$ feet from the end of the girder at the abutment.

$\boxed{V_d = 18.3}$ kips

$\boxed{V_i = 109.5}$ kips

$\boxed{M_{dnc} = 37.3}$ kip-ft

$\boxed{M_{max} = 111.7}$ kip-ft

However, the equations below require the value of M_{max} to be in kip-in:

$\boxed{M_{max} = 1340}$ kip-in

$f_r = -0.20 \cdot \lambda \sqrt{f'_c}$ = modulus of rupture (ksi) **LRFD [5.4.2.6]**

$f_r := -0.20 \cdot \sqrt{f'_c}$ λ = 1.0 (normal wgt. conc.) **LRFD [5.4.2.8]** $\boxed{f_r = -0.447}$ ksi

$\boxed{T = 421}$ kips

$$f_{cpe} := \frac{T_{crit}}{A} + \frac{T_{crit} \cdot e_s}{S_b}$$

$\boxed{f_{cpe} = 1.527}$ ksi

$\boxed{M_{dnc} = 37}$ kip-ft

$\boxed{M_{max} = 1340}$ kip-in

$S_c := S_b$ $\boxed{S_c = -3137}$ in^3

$S_{nc} := S_b$ $\boxed{S_{nc} = -3137}$ in^3

$$M_{cre} := S_c \cdot \left(f_r - f_{cpe} - \frac{12 M_{dnc}}{S_{nc}} \right)$$

$\boxed{M_{cre} = 5746}$ kip-in

Calculate V_{ci}, **LRFD [5.8.3.4.3]** λ = 1.0 (normal wgt. conc.) **LRFD [5.4.2.8]**

$V_{ci1} := 0.06 \cdot \lambda \sqrt{f'_c} \cdot b_v \cdot d_v$ $\boxed{V_{ci1} = 24.0}$ kips

$V_{ci2} := 0.02 \cdot \lambda \sqrt{f'_c} \cdot b_v \cdot d_v + V_d + \frac{V_i \cdot M_{cre}}{M_{max}}$ $\boxed{V_{ci2} = 495.9}$ kips

$V_{ci} := \max(V_{ci1}, V_{ci2})$ $\boxed{V_{ci} = 495.9}$ kips

$f_t := \frac{T_{crit}}{A} + \frac{T_{crit} \cdot e_s}{S_t} + \frac{M_{dnc} \cdot 12}{S_t}$ $\boxed{f_t = -0.194}$ ksi

$f_b := \frac{T_{crit}}{A} + \frac{T_{crit} \cdot e_s}{S_b} + \frac{M_{dnc} \cdot 12}{S_b}$ $\boxed{f_b = 1.384}$ ksi

$\boxed{y_b = -10.50}$ in

$\boxed{h = 21.00}$ in

$f_{pc} := f_b - y_b \cdot \frac{f_t - f_b}{h}$ $\boxed{f_{pc} = 0.595}$ ksi

$V_{p_cw} := 0$ (no strands are draped) $\boxed{V_{p_cw} = 0.0}$ kips

Calculate V_{cw}, **LRFD [5.8.3.4.3]** $\lambda = 1.0$ (normal wgt. conc.) **LRFD [5.4.2.8]**

$V_{cw} := \left(0.06 \cdot \lambda \sqrt{f'_c} + 0.30 \cdot f_{pc}\right) \cdot b_v \cdot d_v + V_{p_cw}$ $\boxed{V_{cw} = 56.0}$ kips

$V_c := \min(V_{ci}, V_{cw})$ $\boxed{V_c = 56.0}$ kips

Calculate the required shear resistance:

$\phi_v := 0.9$ **LRFD [5.5.4.2]**

$V_{u_crit} = \gamma st_{DC} \cdot V_{DCnc} + \gamma st_{DW} \cdot V_{DWnc} + \gamma st_{LL} \cdot Vu_{LL}$

$V_n := \frac{V_{u_crit}}{\phi_v}$ $\boxed{V_n = 147.6}$ kips

Transverse Reinforcing Design at Critical Section:

The required steel capacity:

$V_s := V_n - V_c - V_p$ $\boxed{V_s = 91.6}$ kips

$A_v := 0.40$ in^2 for 2 - #4 rebar

$f_y := 60$ ksi

$\boxed{d_v = 17.91}$ in

$$\cot\theta := \begin{cases} 1 & \text{if } V_{ci} < V_{cw} \\ \min\left(1.0 + 3\cdot\frac{f_{pc}}{\sqrt{f'_c}}, 1.8\right) & \text{otherwise} \end{cases}$$

$\boxed{\cot\theta = 1.799}$

$$V_s = A_v\cdot f_y\cdot d_v\cdot\frac{\cot\theta}{s}$$

LRFD Eq 5.8.3.3-4 reduced per **C5.8.3.3-1** when α = 90 degrees.

$$s := A_v\cdot f_y\cdot d_v\cdot\frac{\cot\theta}{V_s}$$

$\boxed{s = 8.441}$ in

Check Maximum Spacing, **LRFD [5.8.2.7]**:

$$v_u := \frac{V_{u_crit}}{\phi_v\cdot b_v\cdot d_v}$$

$\boxed{v_u = 0.824}$ ksi

$\boxed{0.125\cdot f'_c = 0.625}$

$$s_{max1} := \begin{cases} \min(0.8\cdot d_v, 24) & \text{if } v_u < 0.125\cdot f'_c \\ \min(0.4\cdot d_v, 12) & \text{if } v_u \geq 0.125\cdot f'_c \end{cases}$$

$\boxed{s_{max1} = 7.16}$ in

Check Minimum Reinforcing, **LRFD [5.8.2.5]**:

$$s_{max2} := \frac{A_v\cdot f_y}{0.0316\cdot\lambda\sqrt{f'_c}\cdot b_v}$$

λ = 1.0 (normal wgt. conc.) **LRFD [5.4.2.8]**

$\boxed{s_{max2} = 33.97}$ in

$$s_{max} := \min(s_{max1}, s_{max2})$$

$\boxed{s_{max} = 7.16}$ in

Therefore use a maximum spacing of $s := 7$ inches.

$$V_s := A_v\cdot f_y\cdot d_v\cdot\frac{\cot\theta}{s}$$

$\boxed{V_s = 110.4}$ kips

Check V_n requirements:

$$Vn_1 := V_c + V_s + V_p$$

$\boxed{Vn_1 = 166}$ kips

$$Vn_2 := 0.25\cdot f'_c\cdot b_v\cdot d_v + V_p$$

$\boxed{Vn_2 = 224}$ kips

$$V_n := \min(Vn_1, Vn_2)$$

$\boxed{V_n = 166}$ kips

$$V_r := \phi_v\cdot V_n$$

$\boxed{V_r = 149.81}$ kips

$V_{u_crit} = 132.85$ kips

Is V_{u_crit} less than V_r? check = "OK"

Web reinforcing is required in accordance with **LRFD [5.8.2.4]** whenever:

$$V_u \geq 0.5 \cdot \phi_v \cdot (V_c + V_p)$$ (all values shown are in kips)

At critical section from end of girder: $V_{u_crit} = 133$ $0.5 \cdot \phi_v \cdot (V_c + V_p) = 25$

Therefore, use web reinforcing over the entire beam.

Resulting Shear Design:

Use #4 U shaped stirrups at 7-inch spacing between the typical end sections. Unless a large savings in rebar can be realized, use a single stirrup spacing between the standard end sections.

E19-3.13 Non-Prestressed Reinforcement (Required near top of girder)

The following method is used to calculate the non-prestressed reinforcement in the top flange at the end of the girder. **LRFD [T-5.9.4.1.2-1]**

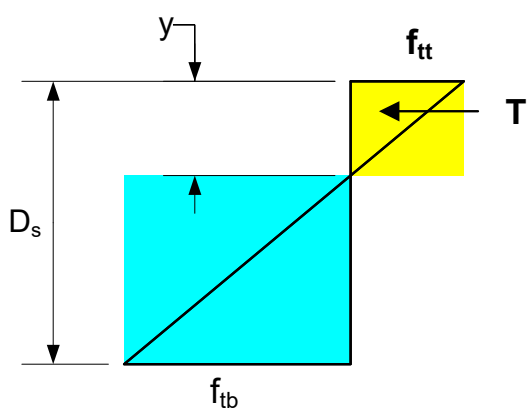

$f_{tt} = -0.303$ ksi

$f_{bt} = 1.896$ ksi

$D_s = 1.75$ feet

$b = 48$ inches

$$Y := \frac{f_{tt} \cdot D_s \cdot 12}{f_{tt} - f_{bt}}$$ $Y = 2.898$ inches

$$T := \frac{|f_{tt}| \cdot b \cdot Y}{2}$$ $T = 21.101$ kips

$f_y = 60$

$$A_{reqd} := \frac{T}{0.5 \cdot f_y}$$ $A_{reqd} = 0.703$ in^2

Therefore, use standard reinforcement; 5 #4 bars, As = 5*0.20 = 1.00 in^2

E19-3.14 Longitudinal Tension Flange Capacity:

The total capacity of the tension reinforcing must meet the requirements of **LRFD [5.8.3.5].** The capacity is checked at the critical section for shear:

$$T_{ps} := \frac{M_{max}}{d_v \cdot \phi_f} + \left(\left| \frac{V_{u_crit}}{\phi_v} - V_{p_cw} \right| - 0.5 \cdot V_s \right) \cdot \cot\theta \qquad \boxed{T_{ps} = 241} \quad \text{kips}$$

actual capacity of the straight strands:

$$\boxed{N \cdot A_s \cdot f_{pu_crit} = 354} \qquad \text{kips}$$

Is the capacity of the straight strands greater than T_{ps}? $\boxed{check = \text{"OK"}}$

Check the tension capacity at the edge of the bearing:

The strand is anchored $l_{px} := 8$ inches. The transfer and development lengths for a prestressing strand are calculated in accordance with **LRFD [5.11.4.2]**:

$$\boxed{l_{tr} = 30.00} \quad \text{in}$$

$$\boxed{l_d = 70.0} \quad \text{in}$$

Since l_{px} is less than the transfer length, the design stress in the prestressing strand is calculated as follows:

The assumed crack plane crosses the centroid of the straight strands at

$$Y_s := \left| y_b - e_s \right| \qquad \boxed{Y_s = 2.25} \quad \text{in}$$

$$l_{px'} := l_{px} + Y_s \cdot \cot\theta \qquad \boxed{l_{px'} = 12.05} \quad \text{in}$$

$$f_{pb} := \frac{f_{pe} \cdot l_{px'}}{60 \cdot d_s} \qquad \boxed{f_{pb} = 69.07} \quad \text{ksi}$$

Tendon capacity of the straight strands: $\boxed{N \cdot A_s \cdot f_{pb} = 169}$ kips

The values of V_u, V_s, V_p and θ may be taken at the location of the critical section.

Over the length d_v, the average spacing of the stirrups is:

$s_{ave} := s$ $\boxed{s_{ave} = 7.00}$ in

$V_s := A_v \cdot f_y \cdot d_v \cdot \frac{\cot\theta}{s_{ave}}$ $\boxed{V_s = 110}$ kips

The vertical component of the draped strands is: $\boxed{V_{p_cw} = 0}$ kips

The factored shear force at the critical section is: $\boxed{V_{u_crit} = 133}$ kips

Minimum capacity required at the front of the bearing:

$T_{breqd} := \left(\frac{V_{u_crit}}{\phi_v} - 0.5 \cdot V_s - V_{p_cw}\right) \cdot \cot\theta$ $\boxed{T_{breqd} = 166}$ kips

Is the capacity of the straight strands greater than T_{breqd}? $\boxed{check = \text{"OK"}}$

E19-3.15 Live Load Deflection Calculations

Check the Live Load deflection with the vehicle loading as specified in **LRFD [3.6.1.3.2]**; design truck alone or 25% of the design truck + the lane load.

The deflection shall be limited to L/800.

The moment of inertia of the entire bridge shall be used.

$\Delta_{limit} := \frac{L \cdot 12}{800}$ $\boxed{\Delta_{limit} = 0.660}$ inches

$\boxed{I = 32942}$ in^4

$\boxed{n_{beams} = 8}$

$I_{bridge} := I \cdot n_{beams}$ $\boxed{I_{bridge} = 263536}$ in^4

From CBA analysis with 2 lanes loaded, the truck deflection controlled:

$\Delta_{truck} := 0.347$ in

Applying the multiple presence factor from **LRFD [Table 3.6.1.1.2-1]** for 2 lanes loaded:

$\Delta := 1.0 \cdot \Delta_{truck}$ $\boxed{\Delta = 0.347}$ in

Is the actual deflection less than the allowable limit, $\Delta < \Delta$ limit? $\boxed{check = "OK"}$

E19-3.16 Camber Calculations

Moment due to straight strands:

Number of straight strands: $\boxed{N = 16}$

Eccentricity of the straight strands: $\boxed{e_s = -8.25}$ in

$P_{i_s} := N \cdot A_s \cdot (f_{tr} - \Delta f_{pES})$ $\boxed{P_{i_s} = 474}$ kips

$M_1 := P_{i_s} \cdot |e_s|$ $\boxed{M_1 = 3908}$ kip-in

Upward deflection due to straight strands:

Length of the girder: $\boxed{L_g = 45}$ ft

Modulus of Elasticity of the girder at release: $\boxed{E_{ct} = 3952}$ ksi

Moment of inertia of the girder: $\boxed{I = 32942}$ in^4

$$\Delta_s := \frac{M_1 \cdot L_g^2}{8 \cdot E_{ct} \cdot I} \cdot 12^2$$ $\boxed{\Delta_s = 1.07}$ in

Total upward deflection due to prestress:

$\Delta_{PS} := \Delta_s$ $\boxed{\Delta_{PS} = 1.07}$ in

Downward deflection due to beam self weight at release:

$$\Delta_{gi} := \frac{5 \cdot (w_g + w_d) \cdot L_g^4}{384 \cdot E_{ct} \cdot I} \cdot 12^3$$ $\boxed{\Delta_{gi} = 0.44}$ in

Anticipated prestress camber at release:

$\Delta_i := \Delta_{PS} - \Delta_{gi}$ $\boxed{\Delta_i = 0.63}$ in

The downward deflection due to the dead load of the joint grout, overlay, railing and future wearing surface:

Calculate the additional non-composite dead loads for an exterior girder:

$w_{nc} := w_{j_ext} + w_{o_ext} + w_{r_ext} + w_{fws_ext}$ $\boxed{w_{nc} = 0.241}$ klf

Modulus of Elasticity of the beam at final strength $\boxed{E_B = 5021}$ ksi

$$\Delta_{nc} := \frac{5 \cdot w_{nc} \cdot L^4}{384 \cdot E_B \cdot I} \cdot 12^3$$

$\boxed{\Delta_{nc} = 0.123}$ in

The residual camber for an exterior girder:

$$RC := \Delta_i - \Delta_{nc}$$

$\boxed{RC = 0.507}$ in

This page intentionally left blank.

Table of Contents

E19-4 Lifting Check for Prestressed Girders, LRFD 2
E19-4.1 Design Criteria 2
E19-4.2 Lifting Stresses 2
E19-4.3 Check Compression Stresses due to Lifting 4
E19-4.4 Check Tension Stresses due to Lifting 4
E19-4.5 Design Top Flange Reinforcement 4

E19-4 Lifting Check for Prestressed Girders, LRFD

This example shows design calculations for the lifting check for the girder in design example E19-1. The *AASHTO LRFD Bridge Design Specifications* are followed as stated in the text of this chapter. ***(Example is current through LRFD Seventh Edition - 2016 Interim)***

E19-4.1 Design Criteria

$L_{girder} := 146$ feet

$f'_{ci} := 6.8$ ksi $\qquad f_y := 60$ ksi

girder_size = "72W-inch"

$w_{top_flg} = 48$ inches $\qquad w_{girder} = 0.953$ kips/ft

$t_{top_flg_min} = 3$ inches $\qquad S_{bot} = -18825$ in^3

$t_{top_flg_max} = 5.5$ inches $\qquad S_{top} = 17680$ in^3

$t_w = 6.5$ inches

Lift point is assumed to be at the 1/10th point of the girder length.

E19-4.2 Lifting Stresses

Initial Girder Stresses (Taken from Prestressed Girder Output):

At the 1/10th Point, (positive values indicate compression)

$f_{i_top_0.1} := 0.284$ ksi

$f_{i_bot_0.1} := 3.479$ ksi

The initial stresses in the girder (listed above) are due to the prestressed strands and girder dead load moment. The girder dead load moment and resulting stresses are based on the girder being simply supported at the girder ends. These resulting stresses are subtracted from the total initial stresses to give the stresses resulting from the pressing force alone.

Moments and Shears due to the girder self weight:

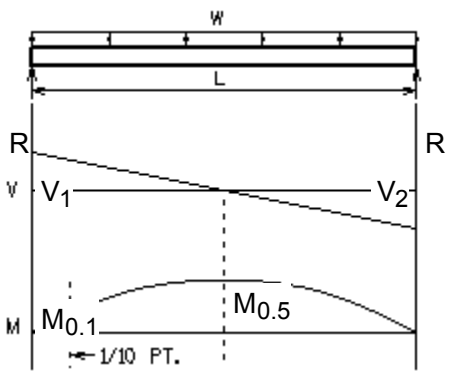

$R := \frac{1}{2} \cdot (w_{girder}) \cdot L_{girder}$ $\boxed{R = 69.569}$ kips

$V_1 := R$ $\boxed{V_1 = 69.569}$ kips

$V_2 := R$ $\boxed{V_2 = 69.569}$ kips

$$M_{gird0.1} := \frac{(w_{girder}) \cdot (0.1 \cdot L_{girder})}{2} \cdot (L_{girder} - 0.1 L_{girder})$$

$\boxed{M_{gird0.1} = 914.14}$ kip-ft

Top of girder stresses due to prestress forces:

$$f_{top_prestr} := f_{i_top_0.1} - \frac{M_{gird0.1} \cdot 12}{S_{top}}$$ $\boxed{f_{top_prestr} = -0.336}$ ksi

$$f_{bot_prestr} := f_{i_bot_0.1} - \frac{M_{gird0.1} \cdot 12}{S_{bot}}$$ $\boxed{f_{bot_prestr} = 4.062}$ ksi

The girder dead load moment and resulting stresses are calculated based on the girder being supported at the lift points. The resulting stresses are added to the stresses due to the prestress forces to give the total stresses during girder picks.

Moments and Shears at the Lift Points, 1/10 point, due to the girder self weight.

$\boxed{R = 69.569}$ kips

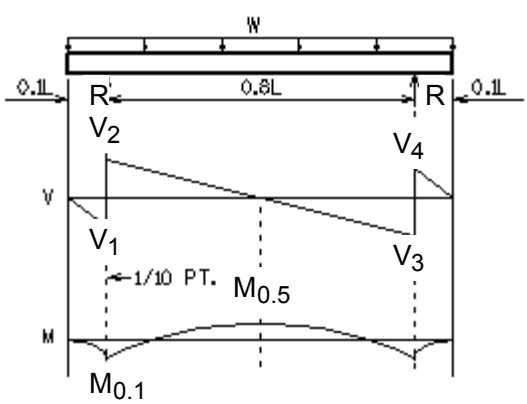

$V'_1 := -w_{girder} \cdot 0.1 \cdot L_{girder}$

$\boxed{V'_1 = -13.914}$ kips

$V'_2 := V'_1 + R$ $\boxed{V'_2 = 55.655}$ kips

$V'_3 := V'_2 - (w_{girder} \cdot 0.8 \cdot L_{girder})$

$\boxed{V'_3 = -55.655}$ kips

$V'_4 := V'_3 + R$ $\boxed{V'_4 = 13.914}$ kips

$$M_{gird0.1_Lift} := \frac{1}{2} \cdot V'_1 \cdot (L_{girder} \cdot 0.1)$$ $\boxed{M_{gird0.1_Lift} = -101.57}$ kip-ft

Top of girder stresses due to lifting forces (postive stress values indicate compression.):

$f_{top_Lift} := f_{top_prestr} + \frac{M_{gird0.1_Lift} \cdot 12}{S_{top}}$ $\boxed{f_{top_Lift} = -0.405}$ ksi

$f_{bot_Lift} := f_{bot_prestr} + \frac{M_{gird0.1_Lift} \cdot 12}{S_{bot}}$ $\boxed{f_{bot_Lift} = 4.126}$ ksi

E19-4.3 Check Compression Stresses due to Lifting

Check temporary allowable stress (compression) **LRFD [5.9.4.1.1]**:

$f_{ciall} := 0.65 \cdot f'_{ci}$ where $f'_{ci} = 6.8$ ksi $\boxed{f_{ciall} = 4.42}$ ksi

Is the stress at the bottom of the girder less than the allowable? $\boxed{check_{f_bot} = \text{"OK"}}$

If stress at the bottom of girder is greater than allowable, calculate f'_{ci_reqd}

$f'_{ci_reqd} := \frac{f_{bot_Lift}}{0.65}$

E19-4.4 Check Tension Stresses due to Lifting

The temporary allowable tension, from **LRFD [Table 5.9.4.1.2-1]**, is:

$f_{tall} := -0.24 \cdot \lambda \sqrt{f'_{ci}}$ $\lambda = 1.0$ (normal wgt. conc.) **LRFD [5.4.2.8]** $\boxed{f_{tall} = -0.626}$ ksi

$\boxed{f_{top_Lift} = -0.405}$ ksi

Is the stress at the top of the girder less than the allowable? $\boxed{check_{f_top} = \text{"OK"}}$

Therefore, proportion the reinforcement in the top flange using an allowable stress of:

$f_s := \min(0.5 \cdot f_y, 30)$ $\boxed{f_s = 30}$ ksi

E19-4.5 Design Top Flange Reinforcement

Calculate the location of the neutral axis:

$h_{girder} = 72$ in

$f_{top_Lift} = -0.405$ ksi

$f_{bot_Lift} = 4.126$ ksi

$$y = h_{girder} \cdot \frac{f_{top_Lift}}{f_{top_Lift} - f_{bot_Lift}}$$

$y = 6.441$ in

$y_{Location}$ = "Y is located in the girder web."

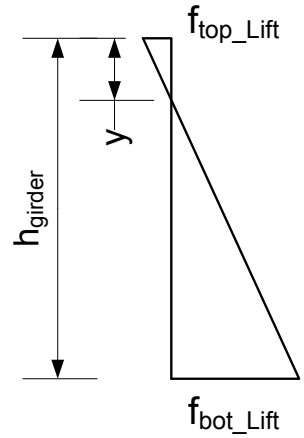

Calculate the average flange thickness:

$$A_1 = \frac{1}{2} \cdot (t_{top_flg_min} + t_{top_flg_max}) \cdot (w_{top_flg} - t_w)$$ $A_1 = 176.375$ in^2

$$t_1 = \frac{1}{2} \cdot (t_{top_flg_min} + t_{top_flg_max})$$ $t_1 = 4.25$ in

$$A_2 = t_{top_flg_max} \cdot t_w$$ $A_2 = 35.75$ in^2

$$t_2 = t_{top_flg_max}$$ $t_2 = 5.5$ in

$$t_{top_flg_avg} = \frac{A_1 \cdot t_1 + A_2 \cdot t_2}{A_1 + A_2}$$ $t_{top_flg_avg} = 4.461$ in

Determine the values of the stress at the average flange thickness.

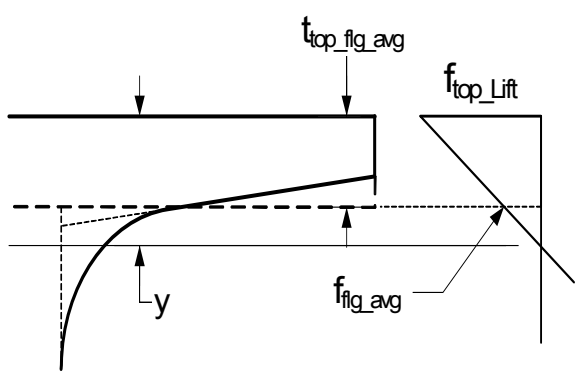

At $t_{top_flg_avg} = 4.461$ inches from the top of the girder:

$$f_{flg_avg} = \frac{f_{top_Lift}}{y} \cdot (y - t_{top_flg_avg})$$ $f_{flg_avg} = -0.125$ ksi

Calculate the tension force in the girder flange.

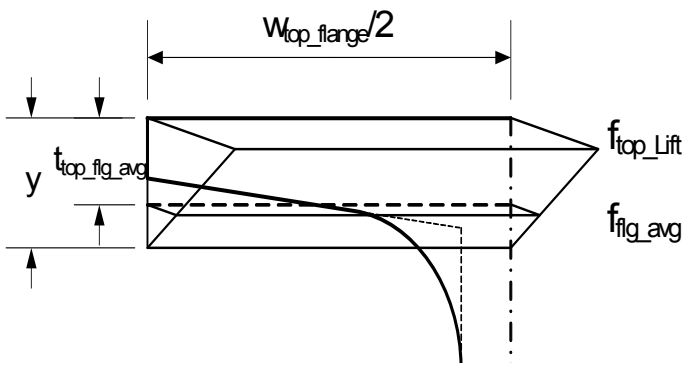

$$T_{flg_avg} = \frac{1}{2} \cdot (f_{top_Lift} + f_{flg_avg}) \cdot t_{top_flg_avg} \cdot w_{top_flg}$$ $T_{flg_avg} = -56.742$ kips

Calculate the tension force in the girder web (this minor force can be ignored for simplification).

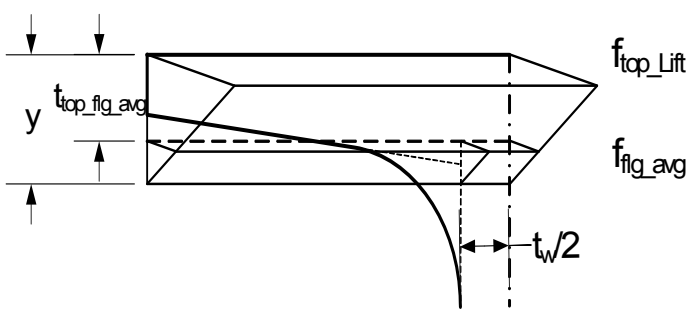

$$T_{web} = \frac{1}{2} \cdot f_{flg_avg} \cdot (y - t_{top_flg_avg}) \cdot t_w$$ $T_{web} = -0.802$ kips

$$T_{total} = T_{flg_avg} + T_{web}$$ $T_{total} = -57.544$ kips

$T = 57.544$ kips

$$As_{Reqd} := \frac{T}{f_s}$$ $As_{Reqd} = 1.918$ in^2

Use 6 bars in the Top Flange: $Number_Bars := 6$

Try #6 Bars: $Bar_{No} \equiv 6$

$A_s := \frac{As_{Reqd}}{Number_Bars}$ $\boxed{A_s = 0.32}$ in^2 per bar

Area of a #6 Bar: $\boxed{Bar_A(Bar_{No}) = 0.442}$ in^2 per bar

Is the area of steel per bar greater than required? $\boxed{check_{As} = \text{"OK"}}$

Therefore, use 6 - #6 Bars in Top Flange of Girder for 0.1 point lifting locations.

Note that these bars should be terminated where no longer required by design and lapped with 6 #4 bars as shown on the Standard Details.

This page intentionally left blank.

Table of Contents

23.1 Introduction 3
23.1.1 General 3
23.1.2 Limitations 3
23.2 Specifications, Material Properties and Deck Thickness 4
23.2.1 Specifications 4
23.2.2 Material Properties 4
23.2.2.1 Reference Design Values 4
23.2.2.2 Adjusted Design Values 4
23.2.2.2.1 Format Conversion Factor, C_{KF} 5
23.2.2.2.2 Wet Service Factor, C_M 5
23.2.2.2.3 Size Factor for Sawn Lumber, C_F 5
23.2.2.2.4 Volume Factor, C_v , (Glulam) 6
23.2.2.2.5 Flat Use Factor, C_{fu} 6
23.2.2.2.6 Incising Factor, C_i 6
23.2.2.2.7 Deck Factor, C_d 6
23.2.2.2.8 Time Effect Factor, C_λ 6
23.2.3 Deck Thickness 6
23.3 Limit States Design Method 7
23.3.1 Design and Rating Requirements 7
23.3.2 LRFD Requirements 7
23.3.2.1 General 7
23.3.2.2 Statewide Policy 7
23.3.3 Strength Limit State 8
23.3.3.1 Factored Loads 8
23.3.3.2 Factored Resistance 9
23.3.3.2.1 Moment Capacity 9
23.3.3.2.2 Shear Capacity 10
23.3.3.2.3 Compression Perpendicular to Grain Capacity 10
23.3.4 Service Limit State 11
23.3.4.1 Factored Loads 11
23.3.4.2 Factored Resistance 11
23.3.4.2.1 Live Load Deflection Criteria 11

23.3.5 Fatigue Limit State 12
23.4 Laminated Deck Design Procedure 13
23.4.1 Trial Deck Depth 13
23.4.2 Dimensions 13
23.4.3 Dead Loads (DC, DW) 13
23.4.4 Live Loads 13
23.4.4.1 Vehicular Live Load (LL) and Dynamic Load Allowance (IM) 13
23.4.4.2 Pedestrian Live Load (PL) 14
23.4.5 Minimum Deck Thickness Criteria 15
23.4.5.1 Live Load Deflection Criteria 15
23.4.6 Live Load Distribution 15
23.4.6.1 Interior Strip 15
23.4.6.1.1 Strength Limit State 16
23.4.6.2 Exterior Strip 16
23.4.6.2.1 Strength Limit State 16
23.4.7 Design Deck for Strength in Bending 17
23.4.8 Check for Shear 17
23.4.9 Check Compression Perpendicular to Grain 18
23.4.10 Check Spacing of Drive Spikes at Ship-Lap Joint 18
23.4.11 Fabrication of Deck Panels 18
23.4.12 Thermal Expansion 19
23.4.13 Wearing Surfaces 19
23.4.14 Deck Tie-Downs 19
23.4.15 Transverse Stiffener Beam 19
23.4.16 Metal Fasteners and Hardware 19
23.4.17 Preservative Treatment 19
23.4.18 Timber Rail System 20
23.4.19 Rating of Superstructure 20
23.5 References 21
23.6 Design Example 22

23.1 Introduction

23.1.1 General

This chapter covers the design of spike “laminated deck” superstructures made of timber. This type of structure has a laminated wood deck, where a series of laminations are placed edgewise and oriented in the direction of the span of the bridge. They are spiked together on their wide face with deformed spikes to create a laminated deck panel. These deck panels are prefabricated at a plant in panels less than 7'-6" wide, so they can be easily shipped to the bridge site. At the bridge site the panels are joined together by driving spikes through the ship-lap joint. To assist in spreading applied loads transversely across the deck, stiffener beams are provided. These beams are attached to the underside of each deck panel near its edges and at intermediate points. The timber deck members are treated with a preservative prior to shipping. This will protect the timber against decay and insects, and it will also retard weathering and checking. A bituminous overlay or wearing surface is placed on top of the deck to provide a good riding surface and to protect the deck.

Other types of timber bridges not discussed in this chapter include timber trusses, arches, box culverts, girders, glu-laminated girders and parallel chord timber bridges.

The spike “laminated deck” is one of the least complex bridge types to construct. It is composed of simple spans between each support. It has a superstructure composed of a single material which is easy to fabricate and install. Its limitation lies in the practical range of span lengths for its application.

Timber bridges are aesthetically pleasing and blend well in natural surroundings. These bridges can be constructed in any weather, including cold and wet conditions, without detrimental effects. They are resistant to the effects of deicing agents. The lighter weight of timber allows for easier fabrication and construction since smaller equipment can be used to lift the members into place. Timber bridges tend to deteriorate faster if subjected to high repetitions of heavy loads. Their cost effectiveness should also be evaluated for each site.

23.1.2 Limitations

Timber bridges are not recommended over streams where the 100 year (Q_{100}) frequency flood discharge provides a freeboard less than 24 inches.

They are also not recommended on highways where the Average Daily Traffic (ADT) is greater than 400 vehicles per day The Average Daily Truck Traffic (ADTT) should be significantly less than 100 trucks per day before these timber bridges are allowed **LRFD [9.9.6.1]**.

23.2 Specifications, Material Properties and Deck Thickness

23.2.1 Specifications

Reference may be made to the design and construction related material as presented in the following specifications:

- *State of Wisconsin, Department of Transportation Standard Specifications for Highway and Structure Construction*

  Section 507 Timber Structures

- Other Specifications as referenced in Chapter 3
- *National Design Specifications for Wood Construction (NDS)*
- *American Institute of Timber Construction (Manual) - (AITC)*

23.2.2 Material Properties

23.2.2.1 Reference Design Values

The reference design values for timber members used in laminated deck panels are defined as follows:

Douglas Fir – Larch (No. 1 & Better) – Visually Graded Sawn Lumber **LRFD [Table 8.4.1.1.4-1]**

F_{bo} = 1.20 ksi = reference design value in bending (flexure)

F_{vo} = 0.180 ksi = reference design value in shear

F_{cpo} = 0.625 ksi = reference design value in compression perpendicular to grain

E_o = 1800 ksi = reference modulus of elasticity

Reference design values are based on dry-use conditions, with the wood moisture content not exceeding 19 percent for sawn lumber **LRFD [C8.4.1]**. Reference design values also apply to material treated with preservatives in accordance with *AASHTO Standard Specifications for Transportation Materials* M133 **LRFD [8.4.1]**.

23.2.2.2 Adjusted Design Values

Adjusted design values shall be obtained by multiplying the reference design values by applicable adjustment factors in accordance with **LRFD [8.4.4]** and shown below. All units are in ksi.

$F_b = F_{bo}\ C_{KF}\ C_M\ (\ C_F \text{ or } C_v\ )\ C_{fu}\ C_i\ C_d\ C_\lambda$ = adjusted design value in bending (flexure)

$F_v = F_{vo}\ C_{KF}\ C_M\ C_i\ C_\lambda$ = adjusted design value in shear

$F_{cp} = F_{cpo}\ C_{KF}\ C_M\ C_i\ C_\lambda$ = adjusted design value in compression perpendicular to grain

$E = E_o\ C_M\ C_i$ = adjusted modulus of elasticity

Where:

C_{KF}	=	Format conversion factor specified in **LRFD [8.4.4.2]**
C_M	=	Wet service factor specified in **LRFD [8.4.4.3]**
C_F	=	Size factor for visually graded dimension lumber and sawn timbers specified in **LRFD [8.4.4.4]**
C_v	=	Volume factor for structural glued laminated timber specified in **LRFD [8.4.4.5]**
C_{fu}	=	Flat use factor specified in **LRFD [8.4.4.6]**
C_i	=	Incising factor specified in **LRFD [8.4.4.7]**
C_d	=	Deck factor specified in **LRFD [8.4.4.8]**
C_λ	=	Time effect factor specified in **LRFD [8.4.4.9]**

23.2.2.2.1 Format Conversion Factor, C_{KF}

The reference design value is multiplied by the format conversion factor, C_{KF} , to go from a value that is used in allowable stress design to a value that is used with load and resistance factor design **LRFD [8.4.4.2]**. Use a C_{KF} value of $2.5/\phi$, except for compression perpendicular to the grain which shall use a value of $2.1/\phi$. The resistance factors, ϕ , are provided in **LRFD [8.5.2.2]**.

23.2.2.2.2 Wet Service Factor, C_M

The reference design value is based on dry use resistance and shall be modified for moisture content using the wet service factor, C_M. For sawn lumber with an in-service moisture content of 19% or less, use a C_M value of 1.0. Otherwise, see **LRFD [8.4.4.3]**.

23.2.2.2.3 Size Factor for Sawn Lumber, C_F

The size factor, C_F , shall have a value of 1.0, unless otherwise specified by **LRFD [Table 8.4.4.4-1]**.

23.2.2.2.4 Volume Factor, C_v , (Glulam)

The volume factor, C_v , doesn't apply to laminated deck structures, but to horizontally laminated glulam members **LRFD [8.4.4.5]**.

23.2.2.2.5 Flat Use Factor, C_{fu}

The flat use factor, C_{fu} , doesn't apply to laminated deck structures, but to specific grades of planks with load applied to the wide face and vertically laminated glulam with loads applied parallel to the wide face of laminations **LRFD [8.4.4.6]**.

23.2.2.2.6 Incising Factor, C_i

The reference design values for dimension lumber shall be multiplied by the incising factor specified in **LRFD [Table 8.4.4.7-1]** when members are incised parallel to the grain a maximum depth of 0.4 inches, a maximum length of 3/8 inches, and a density of incisions up to 1100/ft^2.

23.2.2.2.7 Deck Factor, C_d

For spike "laminated decks" constructed of solid sawn lumber 2 to 4 inches thick, F_{bo} may be adjusted by multiplying it by C_d as specified in **LRFD [Table 8.4.4.8-1]**. Laminated decks exhibit an increased resistance in bending. The value for C_d in this table is 1.15.

23.2.2.2.8 Time Effect Factor, C_λ

The time effect factor, C_λ , shall be chosen to respond to the appropriate strength limit state as specified in **LRFD [Table 8.4.4.9-1]**. For Strength I Limit State the value for C_λ is 0.8.

23.2.3 Deck Thickness

Deck Thickness (inches)	Effective Span (L) [1] (feet)
10	L = 17
12	17 < L ≤ 25
14	25 < L ≤ 30
16	30 < L ≤ 36

Table 23.2-1
Deck Thickness vs. Effective Span

[1] The effective span shall be taken as the clear distance between supports plus one half the width of one support, but not to exceed the clear span plus the deck thickness.

23.3 Limit States Design Method

23.3.1 Design and Rating Requirements

All new laminated deck structures are to meet design requirements as stated in 17.1.1 and rating requirements as stated in 17.1.2.

23.3.2 LRFD Requirements

23.3.2.1 General

For laminated deck design, the deck dimensions, length of bearing at support and the spacing of spikes at the ship-lap joint shall be selected to satisfy the equation below for all appropriate Limit States: **LRFD [1.3.2.1]**

$$Q = \sum \eta_i \gamma_i Q_i \leq \phi R_n = R_r \qquad \text{(Limit States Equation)}$$ **LRFD [1.3.2.1, 3.4.1]**

Where:

η_i	=	Load modifier (a function of η_D , η_R and η_I) **LRFD [1.3.2.1, 1.3.3, 1.3.4, 1.3.5]**
γ_i	=	Load factor
Q_i	=	Force effect; moment, shear or deformation caused by applied loads
Q	=	Total factored force effect
ϕ	=	Resistance factor
R_n	=	Nominal resistance; resistance of a component to force effects
R_r	=	Factored resistance = ϕR_n

The Limit States used for laminated deck design are:

- Strength I Limit State
- Service I Limit State

23.3.2.2 Statewide Policy

Current Bureau of Structures policy is :

- Set value of load modifier, η_i , and its factors (η_D , η_R , η_I) all equal to 1.00 for laminated deck design.

- Ignore any influence of ADTT on multiple presence factor, m, in **LRFD [Table 3.6.1.1.2-1]** that would reduce force effects, Q_i , for laminated deck bridges.

- Ignore reduction factor, r, for skewed laminated deck bridges in **LRFD [4.6.2.3]** that would reduce longitudinal force effects, Q_i .

23.3.3 Strength Limit State

Strength I Limit State shall be applied to ensure that strength and stability are provided to resist the significant load combinations that a bridge is expected to experience during its design life **LRFD [1.3.2.4]**. The total factored force effect, Q, must not exceed the factored resistance, R_r , as shown in the equation in 23.3.2.1.

Strength I Limit State **LRFD [3.4.1]** will be used for:

- Designing laminated deck for bending (flexure)

- Checking horizontal shear in laminated deck near the supports

- Checking compression perpendicular to grain in laminated deck at the supports

- Checking spacing of drive spikes at ship-lap joint

23.3.3.1 Factored Loads

The value of the load modifier, η_i , is 1.00, as stated in 23.3.2.2.

Strength I Limit State will be used to design the structure for force effects, Q_i , due to applied dead loads, DC and DW (including future wearing surface), defined in 23.4.3 and appropriate (HL-93) live loads, LL and IM, defined in 23.4.4.1. When sidewalks are present, include force effects of pedestrian live load, PL, defined in 23.4.4.2.

The load factor, γ_i , is used to adjust force effects on a structural element. This factor accounts for variability of loads, lack of accuracy in analysis, and the probability of simultaneous occurrence of different loads.

For Strength I Limit State, the values of γ_i for each applied load, are found in **LRFD [Tables 3.4.1-1 and 3.4.1-2]** and their values are: γ_{DC} = 1.25/0.90, γ_{DW} = 1.50/0.65, $\gamma_{LL+IM} = \gamma_{PL}$ = 1.75. The values for γ_{DC} and γ_{DW} have a maximum and minimum value.

Therefore, for Strength I Limit State:

$$Q = 1.0 \, [\, 1.25(DC) + 1.50(DW) + 1.75((LL + IM) + PL) \,]$$

Where DC, DW, LL, IM, and PL represent force effects due to these applied loads. The load factors shown for DC and DW are maximum values. Use maximum or minimum values as shown in **LRFD [Table 3.4.1-2]** to calculate the critical force effect.

23.3.3.2 Factored Resistance

The resistance factor, ϕ, is used to reduce the computed nominal resistance of a structural element. This factor accounts for variability of material properties, structural dimensions and workmanship, and uncertainty in prediction of resistance.

The resistance factors, ϕ, for Strength Limit State **LRFD [8.5.2.2]** are:

- ϕ = 0.85 for flexure
- ϕ = 0.75 for shear
- ϕ = 0.90 for compression perpendicular to grain
- ϕ = 0.65 for connections

The factored resistance, R_r (M_r , V_r , P_r), associated with the list of items to be designed/checked using Strength I Limit State in 23.3.3, are described in the following sections.

23.3.3.2.1 Moment Capacity

For rectangular sections, the nominal moment resistance, M_n , equals: **LRFD [8.6.2]**

$$M_n = F_b\ S\ C_L$$

Where:

F_b	=	Adjusted design value in bending (flexure) specified in **LRFD [8.4.4.1]** (ksi)
S	=	Section modulus = $b\ d^2 / 6$ (in^3)
b	=	Net width, as specified in **LRFD [8.4.1.1.2]** (in)
d	=	Net depth, as specified in **LRFD [8.4.1.1.2]** (in)
C_L	=	Beam stability factor

The factored resistance, M_r , or moment capacity, shall be taken as: **LRFD [8.6.1]**

$$M_r = \phi\ M_n = \phi\ F_b\ S\ C_L$$

For timber members in flexure, the resistance factor, ϕ, is 0.85 and for spike “laminated decks” the value for C_L is 1.0, therefore:

$$M_r = (0.85)\ F_b\ S$$

23.3.3.2.2 Shear Capacity

The nominal shear resistance, V_n , shall be determined as: **LRFD [8.7]**

$V_n = F_v\ b\ d / 1.5$ (kips)

Where:

F_v = Adjusted design value in shear, specified in **LRFD [8.4.4.1]** (ksi)

b = Net width, as specified in **LRFD [8.4.1.1.2]** (in)

d = Net depth, as specified in **LRFD [8.4.1.1.2]** (in)

The factored resistance, V_r , or shear capacity of a component of rectangular cross-section, shall be taken as: **LRFD [8.7]**

$V_r = \phi\ V_n = \phi\ F_v\ b\ d / 1.5$

The resistance factor for shear, ϕ, is 0.75, therefore:

$V_r = (0.75)\ F_v\ b\ d / 1.5$

23.3.3.2.3 Compression Perpendicular to Grain Capacity

The nominal resistance, P_n , of a member in compression perpendicular to grain shall be taken as: **LRFD[8.8.3]**

$P_n = F_{cp}\ A_b\ C_b$

Where:

F_{cp} = Adjusted design value in compression perpendicular to grain as specified in **LRFD [8.4.4.1]** (ksi)

A_b = Bearing area (in^2)

C_b = Bearing adjustment factor as specified in **LRFD [Table 8.8.3-1]**

When the bearing area is in a location of high flexural stress or is closer than 3 inches from the end of the component, C_b , shall be taken as 1.0. In all other cases, C_b , shall be as specified in **LRFD [Table 8.8.3-1]**.

The factored resistance, P_r , or compression capacity, shall be taken as: **LRFD [8.8.1]**

$P_r = \phi\ P_n = \phi\ F_{cp}\ A_b\ C_b$

For compression perpendicular to grain, the resistance factor, ϕ, is 0.90, therefore:

$P_r = (0.9)\ F_{cp}\ A_b\ C_b$

23.3.4 Service Limit State

Service I Limit State shall be applied as a restriction on deformation under regular service conditions **LRFD [1.3.2.2]**. The total factored force effect, Q, must not exceed the factored resistance, R_r , as shown in the equation in 23.3.2.1.

Service I Limit State **LRFD [3.4.1]** will be used for:

- Checking live load deflection criteria

23.3.4.1 Factored Loads

The value of the load modifier, η_i , is 1.00, as stated in 23.3.2.2.

Service I Limit State will be used to analyze the structure for force effects, Q_i , due to appropriate (HL-93) live loads, LL and IM, defined in 23.4.4.1.

For Service I Limit State, the value of γ_i for applied live load, is found in **LRFD [Table 3.4.1-1]** and its value is: $\gamma_{LL+IM} = 1.0$

Therefore, for Service I Limit State:

$Q = 1.0\ [\ 1.0(LL + IM)\ ]$

Where LL and IM represent force effects due to these applied loads.

23.3.4.2 Factored Resistance

The resistance factor, ϕ, for Service Limit State, is found in **LRFD [1.3.2.1]** and its value is 1.00.

The factored resistance, R_r , associated with the checking of live load deflection using Service I Limit State is described below.

23.3.4.2.1 Live Load Deflection Criteria

All spike “laminated deck” structures shall be designed to meet live load deflection limits. Large deflections in wood components can cause fasteners to loosen and wearing surfaces to deteriorate. The limit for live load deflections for laminated deck structures is L/425 for vehicular and pedestrian loads **LRFD [2.5.2.6.2]**. The deflections are based on entire deck width acting as a unit and net-section moment of inertia, I_{net} .

The nominal resistance, R_n , or deflection limit, is:

$R_n = L/425$

Where:

L = Span length

The factored resistance, R_r , is:

$R_r = \phi R_n = \phi (L/425)$

The resistance factor, ϕ, is 1.00, therefore:

$R_r = (1.0) R_n = (L/425)$

23.3.5 Fatigue Limit State

Fatigue need not be investigated for wood decks (laminated decks) as described in **LRFD [9.5.3, 9.9]**

23.4 Laminated Deck Design Procedure

23.4.1 Trial Deck Depth

Prepare preliminary structure data, looking at the type of structure, span lengths, skew, roadway width, etc.. Knowing the span lengths, a trial deck depth can be obtained from Table 23.2-1.

NOTE: With preliminary structure sizing complete, check to see if structure exceeds limitations in 23.1.2.

23.4.2 Dimensions

Structural calculations shall be based on the actual net dimensions for the anticipated use conditions. These net dimensions depend on the type of surfacing used on the timber member. See **LRFD [8.4.1.1.2]** for a description of dimensions to use.

23.4.3 Dead Loads (DC, DW)

Dead loads (permanent loads) are defined in **LRFD [3.3.2]**. Timber dead load is computed by using a unit weight of 50 pcf **LRFD [3.5.1]**. This value includes the weight of mandatory preservatives used to treat the wood. The bituminous wearing surface load is computed by using a unit weight of 150 pcf.

DC	=	dead load of structural components and any nonstructural attachments
DW	=	dead load of bituminous wearing surface, future wearing surface (F.W.S.) and utilities

The laminated deck dead load, DC_{deck} , and the bituminous wearing surface load, DW_{bitws} , are included in the design. A post dead load, DW_{FWS} , of 20 psf, for possible future wearing surface (F.W.S.), is required in the design by the Bureau of Structures.

Dead loads, DC, from railings, curbs and scupper blocks are uniformly distributed across the full width of the deck when designing an interior strip. For the design of exterior strips, any of these dead loads, DC, that are located directly over the exterior strip width shall be applied to the exterior strip. For both interior and exterior strips, the future wearing surface, DW_{FWS} , and bituminous wearing surface, DW_{bitws} , located directly over the strip width shall be applied to it.

23.4.4 Live Loads

23.4.4.1 Vehicular Live Load (LL) and Dynamic Load Allowance (IM)

The *AASHTO LRFD Specifications* contain several live load components (see 17.2.4.2) that are combined and scaled to create live load combinations that apply to different Limit States **LRFD [3.6.1]**. Where the equivalent strip method is used as described in 23.4.6, and the span exceeds 15 feet, all of the live loads specified in **LRFD [3.6.1.2]** shall be applied **LRFD**

[3.6.1.3.3]. Live load combinations (LL#3 and LL#4) as shown in 17.2.4.2.6, do not apply because all spans in laminated deck structures are simple spans and the Fatigue Limit State does not apply to laminated decks.

The live load combinations used for design are:

LL#1:	Design Tandem (+ IM) + Design Lane Load	**LRFD [3.6.1.3.1]**
LL#2:	Design Truck (+ IM) + Design Lane Load	**LRFD [3.6.1.3.1]**
LL#5:	Design Truck (+ IM)	**LRFD [3.6.1.3.2]**
LL#6:	25% [Design Truck (+ IM)] + Design Lane Load	**LRFD [3.6.1.3.2]**

Table 23.4-1
Live Load Combinations

The dynamic load allowance, IM, **LRFD [3.6.2.3]** need not be applied to wood components. Wood structures are known to experience reduced dynamic wheel load effects due to internal friction between the components and the damping characteristics of wood. Additionally, wood is stronger for short duration loads, as compared to longer duration loads. This increase in strength is greater than the increase in force effects resulting from the dynamic load allowance.

The live load combinations are applied to the Limit States as shown in Table 23.4-2.

The live load force effect, Q_i , shall be taken as the largest from the live loads shown in Table 23.4-2 for that Limit State.

Strength I Limit State: [1]	LL#1 , LL#2	IM = 0%
Service I Limit State: (for LL deflection criteria)	LL#5 , LL#6	IM = 0%

Table 23.4-2
Live Loads for Limit States

[1] Load combinations shown are used for design of interior strips and exterior strips.

23.4.4.2 Pedestrian Live Load (PL)

For bridges designed for both vehicular and pedestrian live load, a pedestrian live load, PL, of 75 psf is used. However, for bridges designed exclusively for pedestrian and/or bicycle traffic, a live load of 85 psf is used **LRFD [3.6.1.6]**. The dynamic load allowance, IM, is not applied to pedestrian live loads **LRFD [3.6.2]**.

Pedestrian loads are not applied to an interior strip for its design. For the design of exterior strips, any pedestrian loads that are located directly over the exterior strip width shall be applied to the exterior strip.

23.4.5 Minimum Deck Thickness Criteria

Check adequacy of chosen deck thickness by looking at live load deflection criteria, using Service I Limit State.

23.4.5.1 Live Load Deflection Criteria

All laminated deck structures shall be designed to meet live load deflection limits **LRFD [2.5.2.6.2, 9.9.3.3]**. Live load deflections for laminated deck structures are limited to L/425. The live load deflection, Δ_{LL+IM} , shall be calculated using factored loads described in 23.3.4.1 and 23.4.4.1 for Service I Limit State.

Place live loads in each design lane **LRFD [3.6.1.1.1]** and apply a multiple presence factor **LRFD [3.6.1.1.2]**. Use net-section moment of inertia, I_{net} , based on entire deck width acting as a unit. Use adjusted modulus of elasticity, E as described in 23.2.2.2. The factored resistance, R_r , is described in 23.3.4.2.1.

Then check that, $\Delta_{LL+IM} \leq R_r$ is satisfied.

23.4.6 Live Load Distribution

Live loads are distributed over an equivalent width, E, as calculated below. The equivalent distribution width applies for both live load moment and shear.

23.4.6.1 Interior Strip

Equivalent interior strip widths for laminated deck bridges are covered in **LRFD [4.6.2.1.2, 4.6.2.3]** for spans more than 15 feet.

The live loads to be placed on these widths are <u>axle loads</u> (i.e., two lines of wheels) and the <u>full lane load</u>.

Single-Lane Loading: $E = 10.0 + 5.0\,(L_1\,W_1)^{1/2}$

Multi-Lane Loading: $E = 84.0 + 1.44(L_1\,W_1)^{1/2} \leq 12.0(W)/N_L$

Where:

E	=	Equivalent distribution width (in)
L_1	=	Modified span length taken equal to the lesser of the actual span or 60.0 ft (ft)
W_1	=	Modified edge to edge width of bridge taken to be equal to the lesser of the actual width or 60.0 ft for multi-lane loading, or 30.0 ft for single-lane loading (ft)

W = Physical edge to edge width of bridge (ft)

N_L = Number of design lanes as specified in **LRFD [3.6.1.1.1]**

23.4.6.1.1 Strength Limit State

Use the smaller equivalent width (single-lane or multi-lane), when (HL-93) live load is to be distributed for Strength I Limit State.

The distribution factor, DF, is computed for a design deck width equal to one foot.

$$DF = \frac{1}{E}$$

Where:

E = Equivalent distribution width (ft)

The multiple presence factor, m, has been included in the equations for distribution width, E, and therefore aren't used to adjust the distribution factor, DF, **LRFD [3.6.1.1.2]**.

23.4.6.2 Exterior Strip

Equivalent exterior strip widths for laminated deck bridges are covered in **LRFD [4.6.2.1.4]**.

The exterior strip width, E, is assumed to carry one wheel line and a tributary portion of design lane load (located directly over the strip width).

E equals the distance between the edge of the deck and the inside face of the barrier, plus 12 inches, plus ¼ of the full strip width specified in **LRFD [4.6.2.3]**.

The exterior strip width, E, shall not exceed either ½ the full strip width or 72 inches.

Use the smaller equivalent width (single-lane or multi-lane), for full strip width, when (HL-93) live load is to be distributed for Strength I Limit State.

The multiple presence factor, m, has been included in the equations for full strip width and therefore aren't used to adjust the distribution factor **LRFD [3.6.1.1.2]**.

23.4.6.2.1 Strength Limit State

The distribution factor, DF, is computed for a design deck width equal to one foot.

Compute the distribution factor associated with one truck wheel line, to be applied to axle loads:

$$DF = \frac{(1 \text{ wheel line})}{(2 \text{ wheel lines/lane})(E)}$$

Where:

E = Equivalent distribution width (ft)

Compute the distribution factor associated with tributary portion of design lane load, to be applied to full lane load: **LRFD [3.6.1.2.4]**

$$DF = \frac{\left[\dfrac{(SWL)}{(10\,\text{ft lane load width})}\right]}{(E)}$$

Where:

E = Equivalent distribution width (ft)

SWL = Deck width loaded (ft)

= E – (distance from edge of deck to inside face of barrier or curb) (ft)

23.4.7 Design Deck for Strength in Bending

The total factored moment, M_u , shall be calculated using factored loads described in 23.3.3.1 for Strength I Limit State.

The factored resistance, M_r , or moment capacity, shall be calculated as in 23.3.3.2.1.

Then check that, $M_u \leq M_r$ is satisfied.

The laminated deck should also be checked for moment capacity (factored resistance), to make sure it can handle factored moments due to applied dead load (including future wearing surface) and the Wisconsin Standard Permit Vehicle (Wis-SPV) (with a minimum gross vehicle load of 190 kips) on an interior strip. This requirement is stated in 17.1.2.1.

23.4.8 Check for Shear

Shear shall be investigated at a distance away from the face of support equal to the depth of the component. When calculating the maximum design shear, the live load shall be placed so as to produce the maximum shear at a distance from the support equal to the lesser of either three times the depth, d , of the component or one-quarter of the span L.

The critical section is between one and three depths from the support.

The critical shear in flexural components is horizontal shear acting parallel to the grain of the component. The resistance of bending components in shear perpendicular to grain need not be investigated.

The factored shear, V_u , shall be calculated using factored loads described in 23.3.3.1 for Strength I Limit State.

The factored resistance, V_r , or shear capacity, shall be calculated as in 23.3.3.2.2.

Then check that, $V_u \leq V_r$ is satisfied.

The laminated deck should have the shear capacity to handle the dead loads and Permit Vehicle as discussed in 23.4.7.

23.4.9 Check Compression Perpendicular to Grain

The factored compression perpendicular to the grain, P_u , shall be calculated using factored loads described in 23.3.3.1 for Strength I Limit State.

The factored resistance, P_r , or compression capacity, shall be calculated as in 23.3.3.2.3.

Then check that, $P_u \leq P_r$ is satisfied.

The laminated deck should have the compression capacity to handle the dead loads and Permit Vehicle as discussed in 23.4.7.

23.4.10 Check Spacing of Drive Spikes at Ship-Lap Joint

Check the spacing of drive spikes at the ship-lap joint to make sure it is adequate to provide sufficient capacity to resist the factored horizontal shear forces along the length of the span.

23.4.11 Fabrication of Deck Panels

The laminations in deck panels are spiked together on their wide faces with deformed spikes of sufficient length to fully penetrate four laminations. The spikes shall be placed in lead holes that are bored through pairs of laminations at each end and at intervals not greater than 12 inches in an alternating pattern near the top and bottom of the laminations, as shown in **LRFD [9.9.6]**. Laminations shall not be butt spliced within their unsupported length. The typical thickness of the laminations is 4 inches. The deck panels are prefabricated at a plant in panel widths less than 7’-6” wide, so it can easily be shipped to the bridge site. The specified design details for lamination arrangement and spiking are based upon current practice. It is important that the spike lead holes provide a tight fit to ensure proper load transfer between laminations and to minimize mechanical movements. See **LRFD [9.9.6]** for spike layout for spike “laminated decks.”

23.4.12 Thermal Expansion

Thermal expansion may be neglected in spike "laminated decks". Generally, thermal expansion has not presented problems in wood deck systems. Most wood decks inherently contain gaps at the butt joints that can absorb thermal movements **LRFD [9.9.3.4]**.

23.4.13 Wearing Surfaces

Laminated decks shall be provided with a wearing surface conforming to the provisions of **LRFD [9.9.8]**. Experience has shown that unprotected wood deck surfaces are vulnerable to wear and abrasion and/or may become slippery when wet.

23.4.14 Deck Tie-Downs

Where deck panels are attached to wood supports, the tie-downs shall consist of metal brackets that are bolted through the deck and attached to the sides of the supporting component. Lag screws or deformed shank spikes may be used to tie panels down to the wood support **LRFD [9.9.4.2]**.

23.4.15 Transverse Stiffener Beam

Interconnection of panels should be made with transverse stiffener beams attached to the underside of the deck. The distance between stiffener beams shall not exceed 8 feet, and the rigidity, EI, of each stiffener beam shall not be less than 80,000 kip-in^2. The beams shall be attached to each deck panel near the panel edges and at intervals not exceeding 15 inches **LRFD [9.9.4.3.1]**.

23.4.16 Metal Fasteners and Hardware

Attachments and fasteners used in wood construction shall be of stainless steel , malleable iron, aluminum or steel that is galvanized, cadmium plated, or otherwise coated to provide durability **LRFD [2.5.2.1.1]**. Material property requirements for metal fasteners and hardware are covered in **LRFD [8.4.2]**. The design of fasteners and connections is covered in **LRFD [8.13]**.

23.4.17 Preservative Treatment

All wood used for permanent applications shall be pressure impregnated with wood preservatives in accordance with the requirements of *AASHTO Standard Specifications for Transportation Materials* M133. Insofar as is practicable, all wood components shall be designed and detailed to be cut, drilled, and otherwise fabricated prior to pressure treatment with wood preservatives. When cutting, boring or other fabrication is necessary after preservative treatment, exposed, untreated wood shall be specified to be treated in accordance with the requirements of *AASHTO* M133. See **LRFD [8.4.3]** for other preservative treatment requirements.

23.4.18 Timber Rail System

Use approved crash-tested rail systems only.

23.4.19 Rating of Superstructure

Refer to *AASHTO Manual for Bridge Evaluation (MBE)* and also the example that follows.

23.5 References

1. Wipf, T. J., "Load *Distribution Criteria for Glued Laminated Longitudinal Timber Deck Highway Bridges*", Engineering Research Institute, Iowa State University. 1985.

2. Transportation Research Board, "*Timber Bridges*", (Transportation Research Record #1053). 1989.

3. Forest Products Laboratory, "Design*, Fabrication, Testing, and Installation of a Press-Lam Bridges*", (Research Paper FPL-332) 1979.

4. AITC, "*Modern Timber Highway Bridges, A State of the Art Report*", (American Institute of Timber Construction, July 1, 1973).

5. Bohannan, Bill, "*FLP Timber Bridge Deck Research*," Journal of the Structural Division, ASCE, Vol. 98 No. ST3, Proc. Paper 8779, March, 1972, pp. 729-740.

6. Forest Products Laboratory, "*Procedure for Design of Glued-Laminated Orthotropic Bridge Decks*", (Research Paper FPL-210) 1973.

7. Forest Products Laboratory, "*Erection Procedure for Glued-Laminated Timber Bridge Decks with Dowel Connectors*", (Research Paper FPL-263) 1970.

8. Ou, Fong L., Ph.D., P.E., "*An Overview of Timber Bridges*", Engineering Staff Forest Service. (Transportation Research Board Paper-65th Annual Meeting) 1986.

23.6 Design Example

E23-1 Two-Span Timber Bridge, 14 inch Deck, LRFD

(This Design Example will be added in the future)

Table of Contents

24.1 Introduction 5
24.1.1 Types of Steel Girder Structures 5
24.1.2 Structural Action of Steel Girder Structures 5
24.1.3 Fundamental Concepts of Steel I-Girders 5
24.2 Materials 11
24.2.1 Bars and Plates 12
24.2.2 Rolled Sections 12
24.2.3 Threaded Fasteners 12
24.2.3.1 Bolted Connections 13
24.2.4 Quantity Determination 14
24.3 Design Specification and Data 15
24.3.1 Specifications 15
24.3.2 Resistance 15
24.3.3 References for Horizontally Curved Structures 15
24.3.4 Design Considerations for Skewed Supports 15
24.4 Design Considerations 20
24.4.1 Design Loads 20
24.4.1.1 Dead Load 20
24.4.1.2 Traffic Live Load 21
24.4.1.3 Pedestrian Live Load 21
24.4.1.4 Temperature 21
24.4.1.5 Wind 21
24.4.2 Minimum Depth-to-Span Ratio 21
24.4.3 Live Load Deflections 22
24.4.4 Uplift and Pouring Diagram 22
24.4.5 Bracing 23
24.4.5.1 Intermediate Diaphragms and Cross Frames 23
24.4.5.2 End Diaphragms 25
24.4.5.3 Lower Lateral Bracing 25
24.4.6 Girder Selection 26
24.4.6.1 Rolled Girders 26
24.4.6.2 Plate Girders 26

24.4.7 Welding 28
24.4.8 Dead Load Deflections, Camber and Blocking 32
24.4.9 Expansion Hinges 33
24.5 Repetitive Loading and Toughness Considerations 34
24.5.1 Fatigue Strength 34
24.5.2 Charpy V-Notch Impact Requirements 35
24.5.3 Non-Redundant Type Structures 35
24.6 Design Approach - Steps in Design 37
24.6.1 Obtain Design Criteria 37
24.6.2 Select Trial Girder Section 38
24.6.3 Compute Section Properties 39
24.6.4 Compute Dead Load Effects 40
24.6.5 Compute Live Load Effects 40
24.6.6 Combine Load Effects 41
24.6.7 Check Section Property Limits 41
24.6.8 Compute Plastic Moment Capacity 42
24.6.9 Determine If Section is Compact or Non-compact 42
24.6.10 Design for Flexure – Strength Limit State 42
24.6.11 Design for Shear 42
24.6.12 Design Transverse Intermediate Stiffeners and/or Longitudinal Stiffeners 43
24.6.13 Design for Flexure – Fatigue and Fracture 43
24.6.14 Design for Flexure – Service Limit State 43
24.6.15 Design for Flexure – Constructability Check 43
24.6.16 Check Wind Effects on Girder Flanges 44
24.6.17 Draw Schematic of Final Steel Girder Design 44
24.6.18 Design Bolted Field Splices 44
24.6.19 Design Shear Connectors 44
24.6.20 Design Bearing Stiffeners 44
24.6.21 Design Welded Connections 44
24.6.22 Design Diaphragms, Cross-Frames and Lateral Bracing 45
24.6.23 Determine Deflections, Camber, and Elevations 45
24.7 Composite Design 46
24.7.1 Composite Action 46

24.7.2 Values of n for Composite Design 46
24.7.3 Composite Section Properties 47
24.7.4 Computation of Stresses 47
24.7.4.1 Non-composite Stresses 47
24.7.4.2 Composite Stresses 47
24.7.5 Shear Connectors 48
24.7.6 Continuity Reinforcement 49
24.8 Field Splices 51
24.8.1 Location of Field Splices 51
24.8.2 Splice Material 51
24.8.3 Design 51
24.8.3.1 Obtain Design Criteria 51
24.8.3.1.1 Section Properties Used to Compute Stresses 51
24.8.3.1.2 Constructability 52
24.8.3.2 Compute Flange Splice Design Loads 53
24.8.3.2.1 Factored Loads 53
24.8.3.2.2 Section Properties 53
24.8.3.2.3 Factored Stresses 53
24.8.3.2.4 Controlling Flange 54
24.8.3.2.5 Flange Splice Design Forces 54
24.8.3.3 Design Flange Splice Plates 54
24.8.3.3.1 Yielding and Fracture of Splice Plates 55
24.8.3.3.2 Block Shear 56
24.8.3.3.3 Net Section Fracture 57
24.8.3.3.4 Fatigue of Splice Plates 57
24.8.3.3.5 Control of Permanent Deformation 57
24.8.3.4 Design Flange Splice Bolts 58
24.8.3.4.1 Shear Resistance 58
24.8.3.4.2 Slip Resistance 58
24.8.3.4.3 Bolt Spacing 58
24.8.3.4.4 Bolt Edge Distance 59
24.8.3.4.5 Bearing at Bolt Holes 59
24.8.3.5 Compute Web Splice Design Loads 59

24.8.3.5.1 Girder Shear Forces at the Splice Location 60
24.8.3.5.2 Web Moments and Horizontal Force Resultant 60
24.8.3.6 Design Web Splice Plates 60
24.8.3.6.1 Shear Yielding of Splice Plates 61
24.8.3.6.2 Fracture and Block Shear Rupture of the Web Splice Plates 61
24.8.3.6.3 Flexural Yielding of Splice Plates 62
24.8.3.6.4 Fatigue of Splice Plates 62
24.8.3.7 Design Web Splice Bolts 63
24.8.3.7.1 Shear in Web Splice Bolts 63
24.8.3.7.2 Bearing Resistance at Bolt Holes 64
24.8.3.8 Schematic of Final Splice Configuration 65
24.9 Bearing Stiffeners 67
24.9.1 Plate Girders 67
24.9.2 Rolled Beams 67
24.9.3 Design 67
24.9.3.1 Projecting Width 67
24.9.3.2 Bearing Resistance 68
24.9.3.3 Axial Resistance 69
24.9.3.4 Effective Column Section 69
24.10 Transverse Intermediate Stiffeners 71
24.10.1 Proportions 72
24.10.2 Moment of Inertia 72
24.11 Longitudinal Stiffeners 75
24.11.1 Projecting Width 76
24.11.2 Moment of Inertia 76
24.11.3 Radius of Gyration 77
24.12 Construction 79
24.12.1 Web Buckling 80
24.12.2 Deck Placement Analysis 81
24.13 Painting 89
24.14 Floor Systems 90
24.15 Box Girders 91
24.16 Design Examples 93

24.1 Introduction

Steel girders are recommended due to depth of section considerations for short span structures and due to their economy in comparison with other materials or structure types for longer span structures.

24.1.1 Types of Steel Girder Structures

This chapter considers the following common types of steel girder structures:

- Plate girder
- Rolled girder
- Box girder

A plate girder structure is selected over a rolled girder structure for longer spans or when greater versatility is required. Generally rolled girders are used for web depths less than 36" on short span structures of 80' or less.

24.1.2 Structural Action of Steel Girder Structures

Box girder, rolled girder and plate girder bridges are primarily flexural structures which carry their loads by bending between the supports. The degree of continuity of the steel girders over their intermediate supports determines the structural action within the steel bridge. The main types of structural action are as follows:

- Simply-supported structures
- Multiple-span continuous structures
- Multiple-span continuous hinged structures

Simply-supported structures are generally used for single, short-span structures. Multiple-span steel girder structures are designed as continuous spans. When the overall length of the continuous structure exceeds approximately 900', a transverse expansion joint is provided by employing girder hinges and a modular watertight expansion device.

The 900' guideline is based on the abutments having expansion bearings and a pier or piers near the center of the continuous segment having fixed bearings. More than one fixed pier shall be used when four or more piers are utilized or when a steep grade (greater than 3%) exists. When one abutment has fixed bearings, see Chapter 12 – Abutments for the limitation on the length of a continuous segment.

24.1.3 Fundamental Concepts of Steel I-Girders

This section describes basic concepts of I-girder sections to aid in understanding the design provisions for steel I-sections presented in *AASHTO LRFD*. This section is cursory in nature.

The behavior of non-composite steel I-section members subject to flexure is similar to the behavior of composite I-section members in negative flexure. A qualitative bending moment versus rotation relationship for a homogeneous compact web section is presented Figure 24.1-1.

A homogeneous section is defined as a section in which the flanges and web have the same nominal yield strength.

In *AASHTO LRFD*, a compact web section is defined as a non-composite section (or a composite section in negative flexure) that has a web with a slenderness at or below which the section can achieve a maximum flexural resistance, M_{max}, equal to the plastic moment, M_p, prior to web bend-buckling having a statistically significant influence on the response. In addition, specific steel grade, ductility, flange slenderness and lateral bracing requirements must also be satisfied. Compact web sections are typically shallower sections, with thicker webs, than non-compact sections. Compact web sections are often rolled beams or welded girder sections with proportions similar to rolled beams.

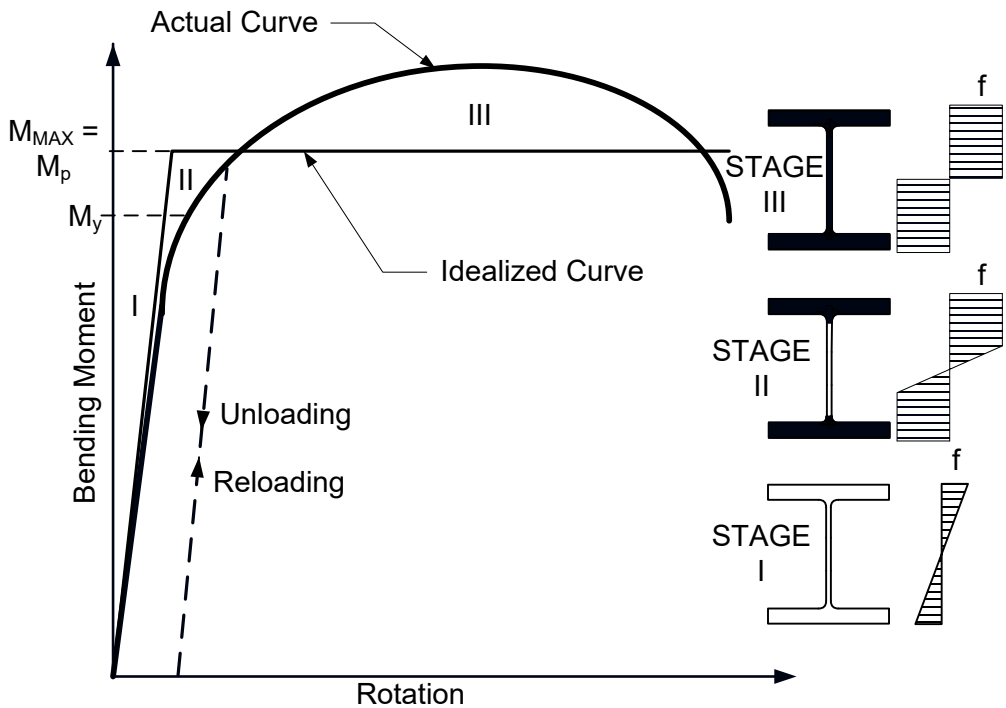

Figure 24.1-1
Bending Moment versus Rotation for Homogeneous Compact Web Section

Proceeding along the actual curve shown in Figure 24.1-1, the initial Stage I behavior represents completely elastic behavior. As the section approaches the theoretical yield moment, M_y, the presence of residual stresses will result in some inelastic behavior in the outer fibers of the cross section before the calculated M_y is reached. At Stage II, yielding continues and begins to progress throughout the section as the section approaches the plastic moment, M_p. At Stage III, the entire cross section has yielded; that is, each component of the cross

section is assumed to be at F_y. The idealized curve shown in Figure 24.1-1 is assumed for design. The dotted line shown in Figure 24.1-1 illustrates the behavior of a member that is loaded with a moment greater than M_y and then unloaded.

Figure 24.1-2 shows a moment versus rotation relationship for a homogeneous slender web section. In *AASHTO LRFD*, a slender web section is defined as a non-composite section (or a composite section in negative flexure) that has a web with a slenderness at or above which the theoretical elastic bend-buckling stress in flexure is reached in the web prior to reaching the yield strength of the compression flange. Because web bend-buckling is assumed to occur in such sections, a web load-shedding factor, R_b, must be introduced to account for the effect of the post-bend-buckling resistance or redistribution of the web compressive stresses to the compression flange resulting from the bend-buckling of the web.

The maximum flexural resistance, M_{max}, is taken as the smaller of R_bM_{yc} and M_{yt} for a homogeneous slender-web section, where M_{yc} and M_{yt} are the yield moments with respect to the compression and tension flanges, respectively. Like a compact web section, residual stresses will contribute to yielding and some inelastic behavior will occur prior to reaching M_{max}, as shown in Figure 24.1-2. However, unlike a compact web section, a slender web section has little or no available inelastic rotation capacity after reaching M_{max}. Therefore, the flexural resistance drops off quite rapidly after reaching M_{max}, and redistribution of moments is not permitted when these sections are used at interior piers.

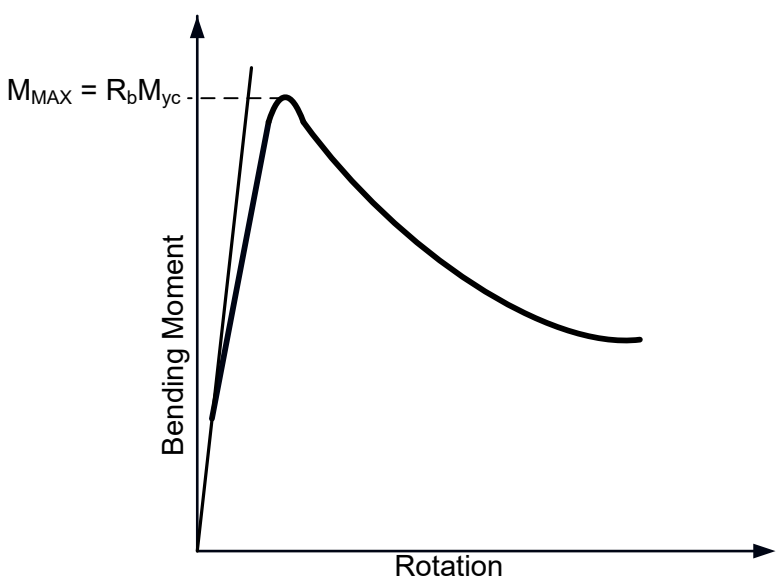

Figure 24.1-2
Moment versus Curvature for Homogeneous Slender Web Section

Sections with a web slenderness between the slenderness limits for a compact web and a slender web section are termed non-compact web sections. This represents a change from previous AASHTO Specifications, which defined sections as either compact or non-compact and did not distinguish between a non-compact and a slender web.

In *AASHTO LRFD*, a non-compact web section is defined as a non-composite section (or a composite section in negative flexure) that has a web satisfying steel grade requirements and with a slenderness at or below the limit at which theoretical elastic web bend-buckling does not occur for elastic stress levels, computed according to beam theory, smaller than the limit of the nominal flexural resistance.

Because web bend-buckling is not assumed to occur, R_b is taken equal to 1.0 for these sections. The maximum flexural resistance of a non-compact web section, M_{max}, is taken as the smaller of $R_{pc}M_{yc}$ and $R_{pt}M_{yt}$. It falls between M_{max} for a compact web and a slender web section as a linear function of the web slenderness ratio. R_{pc} and R_{pt} are termed web plastification factors for the compression and tension flange, respectively. The web plastification factors are essentially effective shape factors that define a smooth linear transition in the maximum flexural resistance between M_y and M_p.

The basic relationship between M_{max} and the web slenderness $2D_c/t_w$ given in *AASHTO LRFD* is presented in Figure 24.1-3. Figure 24.1-3 assumes that yielding with respect to the compression flange controls. The relationship between M_{max} and web slenderness is defined in terms of all three types of sections – compact web, non-compact web and slender web.

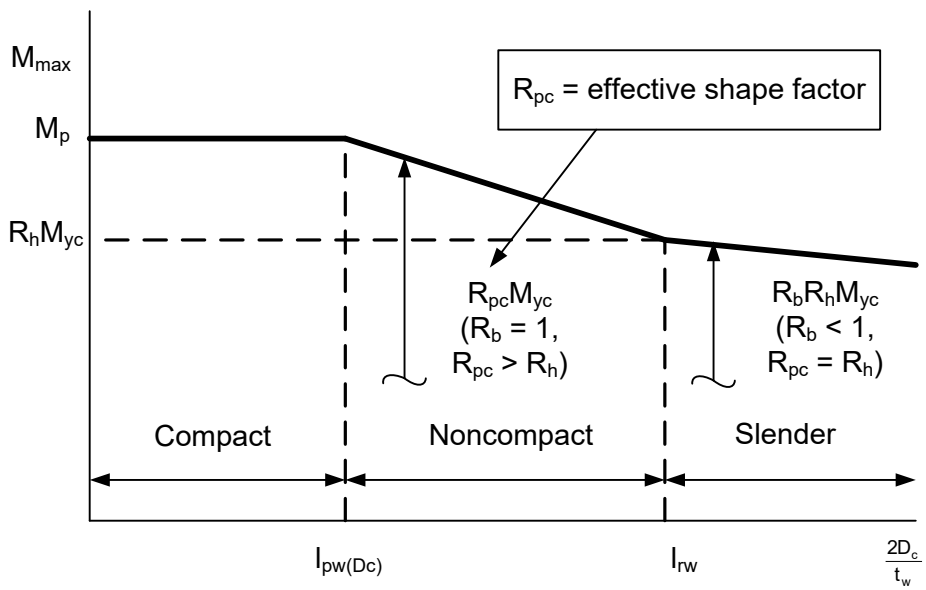

Figure 24.1-3
M_{max} versus Web Slenderness

In *AASHTO LRFD*, the flexural resistance for slender web sections is expressed in terms of stress. For compact web and non-compact web sections, in which the maximum potential flexural resistance equals or exceeds M_y, the resistance equations are more conveniently expressed in terms of bending moment.

Lateral torsional buckling can result if the compression flange of an I-section member does not have adequate lateral support. The member deflects laterally in a torsional mode before the

compressive bending stress reaches the yield stress. Lateral torsional buckling is illustrated in Figure 24.1-4.

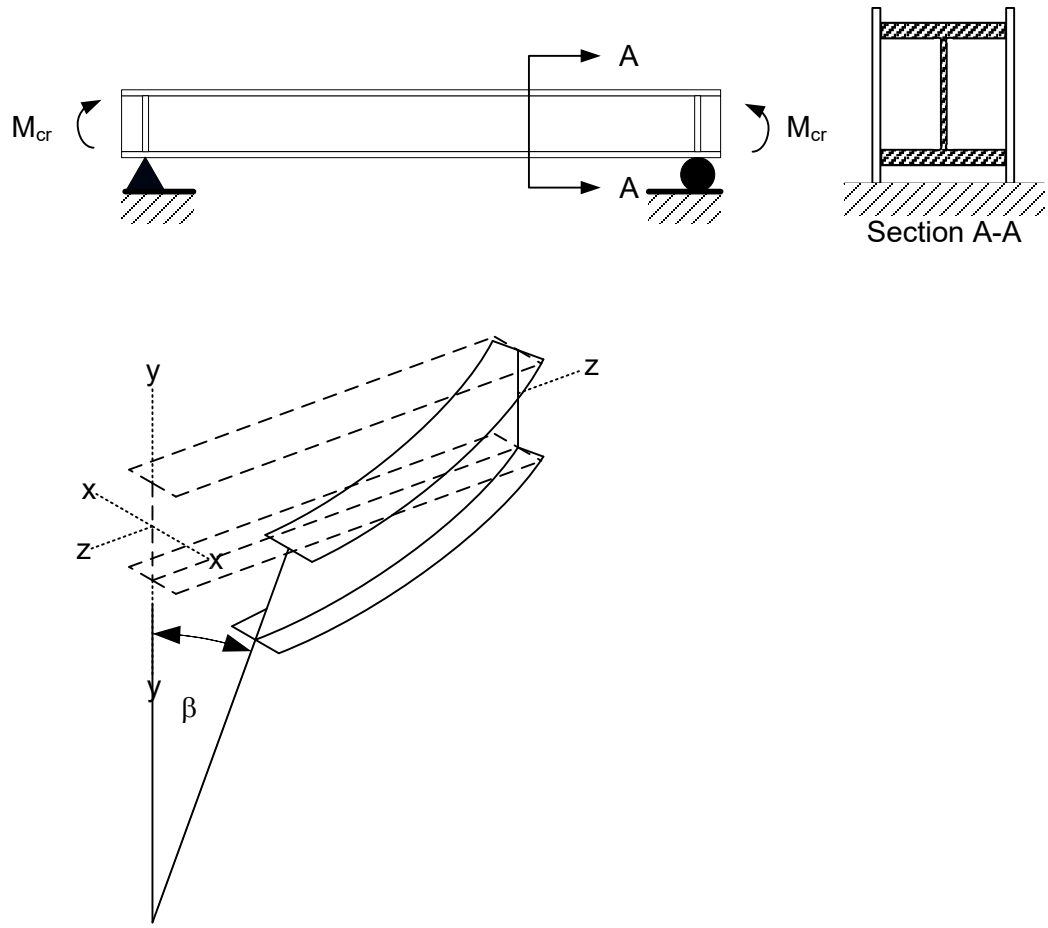

Figure 24.1-4
Lateral Torsional Buckling in a Doubly Symmetric I-section Member

As presented in Figure 24.1-5, *AASHTO LRFD* has adopted a simple linear expression to approximate the lateral-torsional buckling resistance of discretely braced compression flanges in the inelastic range. Figure 24.1-5 also shows the basic form of the flange local buckling equations in *AASHTO LRFD*, which is similar to the form of the lateral-torsional buckling equations.

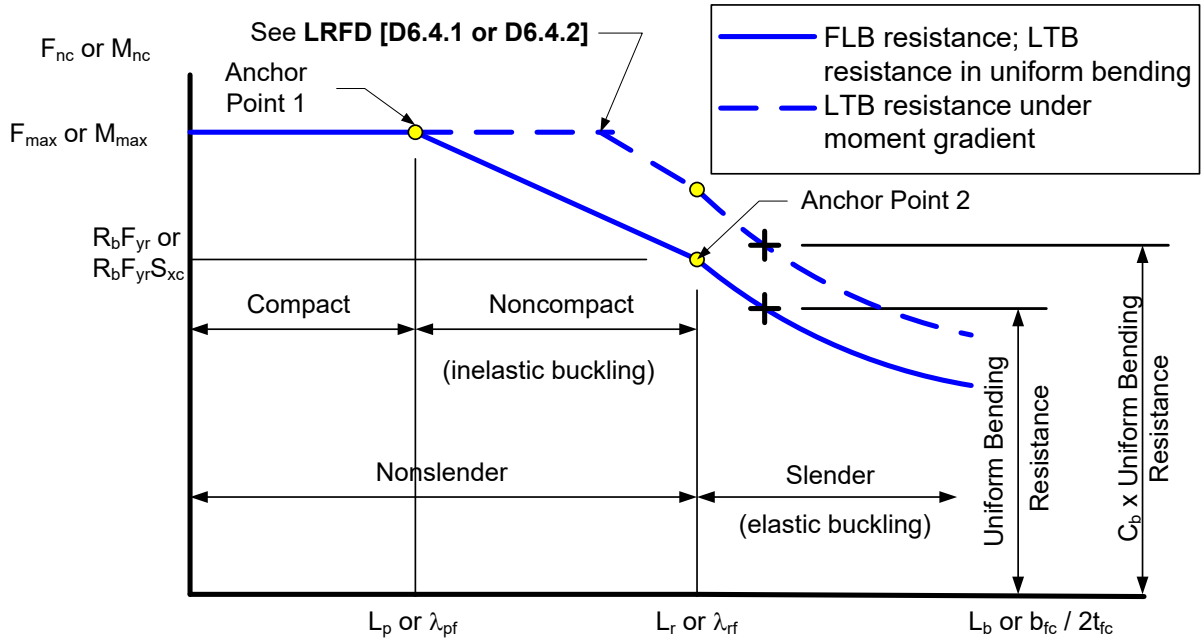

Figure 24.1-5
Form of the Compression-Flange Resistance Equations in *AASHTO LRFD*

24.2 Materials

Structural steels currently used conform to ASTM A709 Specifications designated Grades 36, 50 and 50W. *AASHTO LRFD* gives the necessary design information for each grade of steel. Steel girders may utilize High-Performance Steel (HPS); however it may come at a premium price due to the limited number of mills that are rolling HPS. The limited number of mills may also have adverse effects on the delivery schedule.

HPS is currently produced by either quenching and tempering (Q&T) or by thermo-mechanical-controlled-processing (TMCP). TMCP HPS is currently available in plate thicknesses up to 2" and in maximum plate lengths from approximately 50' to 125' depending on weights. Q&T HPS is available in plate thicknesses from 2" to 4" (or less for larger plate widths), but because of the furnaces that are used in the tempering process, it is subject to a maximum plate-length limitation of 600" (50') or less, depending on weights. Therefore, whenever Q&T HPS is used (generally when HPS plates over 2" in thickness are specified), the maximum plate-length limitation should be considered when laying out flange (and web) transitions in a girder.

For fracture toughness, HPS provides significant toughness improvements given, that by default, Charpy V-notch requirements satisfy the more stringent Zone 3 requirements in all temperature zones. For welding, most of the bridge steels specified in the ASTM A709 Specifications can be welded without special precautions or procedures. However, special procedures should be followed to improve weldability and ensure high-quality welds when HPS is used.

Hybrid girder design utilizing HPS Grade 70 steel (Grade 70 is only available in HPS) for the flanges and Grade 50 steel for the web may be considered as a viable alternative. Such an arrangement has recently proven to be a popular option, primarily in regions of negative flexure.

For unpainted structures over stream crossings, Grade 50W weathering steel is recommended throughout.

Cracks have been observed in steel girders due to fabrication, fatigue, brittle fractures and stress corrosion. To insure against structural failure, the material is tested for plane-strain fracture toughness. As a result of past experience, the Charpy V-notch test is currently required on all grades of steel used for girders.

Plate width and length availability is an important consideration when it comes to sizing girder flanges. The availability of plate material varies from mill to mill. Generally, plates are available in minimum widths ranging from 48" to 60" and in maximum widths ranging from 150" to 190". *AASHTO/NSBA Steel Bridge Collaboration*, "*Guidelines to Design for Constructibility, G12.1*" (2016) contains some example plate length and width availability information from a single mill. However, a fabricator and/or mill should be consulted regarding the most up-to-date plate availability information. The maximum available plate length is generally a function of the plate width and thickness, steel grade and production process.

For additional information about plate widths and lengths, including maximum sizes for shipping and erection, see 24.4.6.2.

For additional information about materials, see Chapter 9 – Materials.

24.2.1 Bars and Plates

Bars and plates are grouped under flat rolled steel products that are designated by size as follows:

- Bars – 8" or less in width
- Plates – over 8" in width

WisDOT policy item:

AASHTO LRFD allows a minimum thickness of 5/16" for most structural steel members. Current WisDOT policy is to employ a minimum thickness of 7/16" for primary members and a minimum of 3/8" for secondary structural steel members.

Optional splices are permitted on plates which are detailed over 60' long. Refer to the latest steel product catalogs for steel sections and rolled stock availability.

24.2.2 Rolled Sections

A wide variety of structural steel shapes are produced by steel manufacturers. Design and detail information is available in the *AISC Manual of Steel Construction*, and information on previously rolled shapes is given in *AISC Iron and Steel Beams 1873 to 1952*. Refer to the latest steel product catalogs for availability and cost, as some shapes are not readily available and their use could cause costly construction delays.

24.2.3 Threaded Fasteners

The design of bolted connections is covered in **LRFD [6.13.2]**. As specified in **LRFD [6.13.2.1]**, bolted steel parts must fit solidly together after the bolts are tightened. The bolted parts may be coated or uncoated. It must be specified in the contract documents that all joint surfaces, including surfaces adjacent to the bolt head and nut, be free of scale (except for tight mill scale), dirt or other foreign material. All material within the grip of the bolt must be steel.

High-strength bolts are installed to have a specified initial tension, which results in an initial pre-compression between the joined parts. At service load levels, the transfer of the loads between the joined parts may then occur entirely via friction, with no bearing of the bolt shank against the side of the hole. Until the friction force is overcome, the shear resistance of the bolt and the bearing resistance of the bolt hole will not affect the ability to transfer the load across the shear plane between the joined parts.

In general, high-strength bolted connections designed according to *AASHTO LRFD* will have a higher reliability than the connected parts because the resistance factors for the design of bolted connections were selected to provide a higher level of reliability than those chosen for member design. Also, the controlling strength limit state in the connected part (for example, yielding or deflection) is typically reached well before the controlling strength limit state in the

connection (for example, the bolt shear resistance or the bearing resistance of the connected material).

AASHTO LRFD recognizes two types of high-strength bolted connections – slip-critical connections and bearing-type connections. The resistance of all high-strength bolted connections in transmitting shear across a shear plane between bolted steel parts is the same whether the connection is a slip-critical or bearing-type connection. The slip-critical connection has an additional requirement that slip must not occur between the joined parts at service load levels.

Slip-critical (or friction) type connections are used on bridges since the connections are subject to stress reversals and bolt slippage is undesirable. High strength bolts in friction type connections are not designed for fatigue. The allowable unit stresses, minimum spacing and edge distance as given in *AASHTO LRFD* are used in designing and detailing the required number of bolts. A490 bolts, conforming to ASTM F3125, shall not be used in tension connections due to their low fatigue strength. Generally, A325 bolts, conforming to ASTM F3125, are used for steel connections unless the higher strength A490 bolt is warranted. If at all possible, avoid specifying A490, Type 3 bolts on plans for unpainted structures. All bolt threads should be clean and lubricated with oil or wax prior to tightening.

Steel connections shall be made with high strength bolts conforming to A325 and A490. Galvanized A490 bolts cannot be substituted for A325 bolts; if A490 bolts are galvanized, failure may occur due to hydrogen embrittlement. ASTM specifications limit galvanizing to A325 or lower strength fasteners. All bolts for a given project should be from the same location and manufacturer.

High strength pin bolts may be used as an alternate to A325 bolts. The shank and head of the high strength steel pin bolt and the collar fasteners shall meet the chemical composition and mechanical property requirements of A325, Types 1 or 3 (weathering).

24.2.3.1 Bolted Connections

Bolted connections shall be designed as follows:

1. All field connections are made with 3/4" high strength bolts unless noted or shown otherwise.

2. Holes for bolted connections shall not be more than 1/16" greater than the nominal bolt diameter.

3. Faying surfaces of friction type connections are blast cleaned and free from all foreign material. Note that AASHTO LRFD allows various design stresses depending on surface condition of bolted parts.

4. Bolts are installed with a flat, smooth, hardened circular washer under the nut or bolt head, whichever element is turned in tightening the connection.

5. A smooth, hardened, bevel washer is used where bolted parts in contact exceed a 1 to 20 maximum slope.

6. Where clearance is required, washers are clipped on one side to a point not closer than seven-eighths of the bolt diameter from the center of the washer.

7. After all bolts in the connections are installed, each fastener shall be tightened equal to the proof load for the given bolt diameter as specified by ASTM A490 bolts and galvanized A325 bolts shall not be reused.

Retightening previously tightened bolts which may have been loosened by tightening of adjacent bolts is not considered a reuse.

24.2.4 Quantity Determination

For information about determining structural steel and bolt weight, see subsection 506.4 of the *State of Wisconsin Standard Specification for Highway and Structure Construction.*

For new structures, the bolt length is not required on the plans. For rehabilitation plans, when connecting new steel to existing steel, indicate either the required grip or the thickness of the existing material, in addition to the bolt diameter. Bolt weight should be included with the specified structural steel of the lower strength material being joined.

24.3 Design Specification and Data

24.3.1 Specifications

Refer to the design and construction related materials as presented in the following specifications:

1. Bridge Welding Code: AASHTO/AWS-D1.5.

2. American Institute of Steel Construction (AISC) Manual of Steel Construction.

24.3.2 Resistance

Material properties required to compute the nominal and factored resistance values are given in *AASHTO LRFD*. Information for the more common structural components used on bridges is provided in Chapter 9 - Materials.

24.3.3 References for Horizontally Curved Structures

Standard for Girder Layout on Curve shows the method for laying out kinked steel girders on horizontally curved bridges. For horizontally curved structures, girders can either be kinked at field splice locations or they can be curved throughout. Curved girders are generally preferable because they result in a constant overhang and are generally more aesthetically pleasing. For a kinked girder, lateral bending may be concentrated at the location of the kink.

For horizontally curved steel girders, **LRFD [2.5.2.6.3]** suggests that the maximum span-to-depth ratio for the steel girder be limited to ArcSpan/25 (or less depending on certain conditions). An increase in the preferred minimum depth for curved steel girders reflects the fact that the outermost curved girder receives a disproportionate share of the load and needs to be stiffer. Increasing the depth and stiffness of all the girders in a curved-bridge system leads to smaller relative deflections between girders and to smaller cross-frame forces as a result. Deeper girders also result in reduced out-of-plane girder rotations, which may make the bridge easier to erect. Similarly, in curved and straight steel bridges with skewed supports, cross-frame forces are directly related to the relative girder deflections, and increasing the girder depth and stiffness can help control the relative deflections. For additional information about cross frames and diaphragms, see 24.4.5.

24.3.4 Design Considerations for Skewed Supports

Modern highway design must recognize vehicle speed and right-of-way cost. These factors have reversed the position of the bridge designer from determining the layout of a bridge, including the approaching roadway and span arrangement, to designing bridges for a predetermined space. This allotted space may limit bridge depth, span arrangement and pier location. Additional constraints on the design include sight distances, setbacks and other constraints such as environmental and aesthetic factors. This plethora of constraining factors makes the design of bridges more challenging rather than limiting. Skewed supports are one of the most common factors introduced in modern bridge design. Spanning streams or

highways not perpendicular to the bridge alignment frequently requires the introduction of skewed supports.

The engineer is best served if the skew of the supports can be reduced. Reduction of the skew often involves increasing the span, which may lead to deeper girders. When girder depth is limited, this may not be a practical solution. However, reduction of skew has the advantage of reducing abutment and/or pier length. This cost reduction should always be balanced against any increase in superstructure cost related to the use of longer spans. Simply minimizing the square footage of the bridge deck is often not the most economical solution.

One of the most problematic skew arrangements is variable skew of adjacent substructure units. This arrangement leads to different length girders with different stiffnesses, and subsequently, different vertical deflections. Hence, reduction of skew on one support while it remains on the other is not a desirable way to address skew, and such a skew arrangement should be used only as a last resort.

Multi-girder bridges are integral structures with transverse elements. Analysis of the structure must acknowledge the restoring forces in the transverse members. In multi-girder bridges with right supports and equal-stiffness girders, the action of these restoring forces is implied within the wheel-load distribution factors that are often employed. Parallel skews have equal length girders with equal stiffnesses. However, when the relative stiffness of points on adjacent girders attached by cross frames or diaphragms is different (for example, when the cross frames or diaphragms are perpendicular to the girders), the design becomes more problematic. The skew affects the analysis of these types of skewed bridges by the difference in stiffness at points connected by perpendicular cross frames.

It should be noted that dead load as well as live load is affected by skew. The specifications address the effect of skew on live load by providing correction factors to account for the effect of skew on the wheel-load distribution factors for bending moment and end support shear in the obtuse corner (see **LRFD [Table 4.6.2.2.2e-1]** and **LRFD [Table 4.6.2.2.3c-1]**, respectively). There is currently no provision requiring dead load on skewed bridges to be addressed differently than for other bridges. For additional information about the effects of skew on live load distribution factors, see 17.2.8.

The effect of skew is far from constant on all bridges. The significance of skew is increased with increasing skew with respect to the girder line, with increased deflections and in simple spans. Skewed simple spans seem to be more problematic than continuous spans with the same skew.

Arrangement of cross frames and diaphragms is challenging for sharply skewed girder bridges. If the skew is 15 degrees or less and both supports have the same skew, it is usually desirable to skew the cross frames or diaphragms to be parallel with the supports. This arrangement permits the cross frames or diaphragms to be attached to the girders at points of equal stiffness, thus reducing the relative deflection between cross frame and diaphragm ends, and thus, the restoring forces in these members. *AASHTO LRFD* permits parallel skews up to 20 degrees.

WisDOT policy item:

For skews greater than 15 degrees, the cross frames and diaphragms must be placed perpendicular to the girders.

Typically, the cross frames or diaphragms can be staggered. This arrangement reduces the transverse stiffness because the flanges flex laterally and relieve some of the force in the cross frames or diaphragms. There is a resultant increase in lateral bending moment in the flanges. Often, this lateral bending is not critical and the net result is a desirable reduction in cross-frame forces or diaphragm forces. Smaller cross-frame forces or diaphragm forces permit smaller cross-frame or diaphragm members and smaller, less expensive cross-frame or diaphragm connections. Alternatively, they are placed in a contiguous pattern with the cross frames or diaphragms matched up on both sides of the interior girders, except near the bearings. This arrangement provides the greatest transverse stiffness. Thus, cross-frame forces or diaphragm forces are relatively large, and the largest amount of load possible is transferred across the bridge. This results in the largest reduction of load in the longitudinal members (that is, the girders). The bearings at oblique points receive increased load.

The exterior girders always have cross frames or diaphragms on one side, but since there are no opposing cross frames or diaphragms on the other side, lateral flange bending is usually small in these girders, which often have critical vertical bending moments compared to the interior girders. Interior girders are generally subjected to larger lateral flange bending moments when a staggered cross-frame arrangement is employed.

In lieu of a refined analysis, **LRFD [C6.10.1]** contains a suggested estimate of 10.0 ksi for the total unfactored lateral flange bending stress, f_ℓ, due to the use of discontinuous cross-frame or diaphragm lines in conjunction with a skew angle exceeding 15 degrees. It is further suggested that this value be proportioned to dead and live load in the same proportion as the unfactored major-axis dead and live load bending stresses. It is currently presumed that the same value of the flange lateral buckling, f_ℓ, should be applied to interior and exterior girders, although the suggested value is likely to be conservative for exterior girders for the reason discussed previously. Therefore, lateral flange bending due to discontinuous cross-frame lines in conjunction with skew angles exceeding 15 degrees is best handled by a direct structural analysis of the bridge superstructure.

At piers, it is usually not necessary to use a cross-frame or diaphragm line along the pier. Nor is it necessary to have a cross frame or diaphragm at each bearing. It is necessary to have a perpendicular cross frame or diaphragm at each bearing that is fixed laterally in order to transfer loads into the bearing. Otherwise, lateral bending in the bottom flange is excessive. Some means should be provided to allow for jacking the girder to replace bearings. At abutments and other simple supports, a row of cross frames or diaphragms is always required to support the free edge of the deck. The end rotation of the girders creates forces in these cross frames or diaphragms, which in turn create end moments in the girders. Usually the end moments are negative. Note that the larger the rotation and deflection of the girders, the larger the end moments. In some cases, these end moments are important. Generally, they cannot be avoided. However, by placing the deck at the ends of the bridge last, the tensile stresses in the deck can be minimized.

Differential deflections between the ends of the cross frames in skewed bridges along with differential rotations of the girders (about an axis transverse to the longitudinal axis of the girders) result in twist of the girders, which can make girder erection and fit-up of the cross-frame connections more difficult as the dead load is applied. As discussed in **LRFD [C6.7.2]**, in order for the girder webs of straight skewed I-girder bridges to end up theoretically vertical (or plumb) at the bearings under either the steel or full dead load condition, the cross frames or diaphragms must be detailed for that condition in order to introduce the necessary reverse twist into the girders during the erection so that the girders will rotate back to a theoretically plumb position as the corresponding dead load is applied. The steel dead load condition refers to the condition after the erection of the steel is completed. The full dead load condition refers to the condition after the full non-composite dead load, including the concrete deck, is applied. The cross frames or diaphragms may have to be forced into position in this case, but this can usually be accomplished in straight skewed I-girder bridges without inducing significant locked-in stresses in the girder flanges or the cross frames or diaphragms. The twist, ϕ, of the girders at the end supports in a straight skewed I-girder bridge can either be determined from a refined analysis, or it can be approximated from the following equation:

$$\phi = \frac{\left[\mathrm{Sin}\left(\mathrm{Tan}^{-1}\theta\right)d\right]}{\mathrm{Tan}\ \alpha}$$

Where:

α	=	Skew angle of the end support measured with respect to the longitudinal axis of the girder (radians)
θ	=	Girder end rotation due to the appropriate dead load about an axis transverse to the longitudinal axis of the girder (radians)
d	=	Girder depth (in.)

Alternatively, the girders may be erected in the no-load condition (that is, the condition where the girders are erected plumb under a theoretically zero-stress condition neglecting any stress due to the weight of the steel acting between points of temporary support), with the cross frames or diaphragms detailed to fit theoretically stress-free. In this case, the girders will rotate out-of-plumb as the corresponding dead load is applied. Therefore, the engineer should consider the effect of any potential errors in the horizontal roadway alignment under the full dead load condition resulting from the girder rotations. Also, it should be ensured that the rotation capacity of the bearings is sufficient to accommodate the twist or that the bearings are installed so that their rotation capacities are not exceeded.

For straight skewed I-girder bridges, **LRFD [6.7.2]** requires that the contract documents clearly state an intended erected position of the girders (that is, either girder webs theoretically plumb or girder webs out-of-plumb) and the condition under which that position is to be theoretically achieved (that is, either the no-load condition, steel dead load condition or full dead load condition). The provisions of **LRFD [2.5.2.6.1]** related to bearing rotations for straight skewed I-girder bridges are also to be applied. These provisions are intended to ensure that the computed girder rotations at bearings for the accumulated factored loads corresponding to the

engineer's assumed construction sequence do not exceed the specified rotational capacity of the bearings.

It should be apparent that all of the issues relating to skewed bridges are related to deflection. The smaller the deflections, both dead load and live load, the less critical are the above issues. Thus, deep girders and low design stresses are beneficial to skewed bridges.

For additional information about bracing, including cross frames and diaphragms, see 24.4.5.

24.4 Design Considerations

Steel girder structures are analyzed and designed using LRFD. *AASHTO LRFD* provides the details for designing simple and continuous steel girders for various span lengths using LRFD.

WisDOT Policy Item:

Do no utilize optional **LRFD (Appendix A6)** providing Flexural Resistance of Straight Composite I-Sections in Negative Flexure and Straight Non-composite I-Sections with Compact or Non-compact Webs.

Design considerations common to all superstructure types, including distribution of loads, dead load, traffic live load, pedestrian load and wind load, are presented in Chapter 17 – Superstructures - General.

24.4.1 Design Loads

24.4.1.1 Dead Load

For steel girder structures, dead loads should be computed based on the following:

1. The weight of the concrete haunch is determined by estimating the haunch depth at 2-1/2" and the width equal to a weighted average of the top flange width.

2. The weight of steel beams and girders is determined from the AISC Manual of Steel Construction. Haunched webs of plate girders are converted to an equivalent uniform partial dead load.

3. The weight of secondary steel members such as bracing, shear studs and stiffeners can be estimated at 30 plf for interior girders and 20 plf for exterior girders.

4. A dead load of 20 psf carried by the composite section is added to account for a future wearing surface.

AASHTO LRFD specifies that the effect of creep is to be considered in the design of composite girders which have dead loads acting on the composite sections. As specified in **LRFD [6.10.1.1.1a]** and **LRFD [6.10.1.1.1b]**, for the calculation of the stresses in a composite girder, the properties of the steel section alone should be used for permanent loads applied before the concrete deck has hardened or is made composite. The properties of the long-term 3n composite section should be used for permanent loads applied after the concrete deck has hardened or is made composite. The properties of the short-term n composite section should be used for transient loads applied after the concrete deck is made composite. **LRFD [6.10.1.1.1d]** requires that n be used to compute concrete deck stresses due to all permanent and transient loads.

Information regarding dead load deflections is given in 24.4.8

24.4.1.2 Traffic Live Load

For information about LRFD traffic live load, see 17.2.4.2.

24.4.1.3 Pedestrian Live Load

For information about LRFD pedestrian live load, see 17.2.4.4.

24.4.1.4 Temperature

Steel girder bridges are designed for a coefficient of linear expansion equal to .0000065/°F at a temperature range from -30 to 120°F. Refer to Chapter 28 – Expansion Devices for expansion joint requirements, and refer to Chapter 27 – Bearings for the effect of temperature forces on bearings.

24.4.1.5 Wind

For information about LRFD wind load, see Chapter 17 – Superstructures – General, including the WisDOT Policy item in 17.2.3.1 regarding wind speeds during a deck pour. In addition, see 24.6.16 for wind effects on girder flanges and 24.6.22 for design of bracing.

24.4.2 Minimum Depth-to-Span Ratio

Traditional minimum depths for constant depth superstructures are provided in **LRFD [Table 2.5.2.6.3-1]**. For steel simple-span superstructures, the minimum overall depth of the composite girder (concrete slab plus steel girder) is 0.040L and the minimum depth of the I-beam portion of the composite girder is 0.033L. For steel continuous-span superstructures, the minimum overall depth of the composite girder (concrete slab plus steel girder) is 0.032L and the minimum depth of the I-beam portion of the composite girder is 0.027L. For trusses, the minimum depth is 0.100L.

For a given span length, a preliminary, approximate steel girder web depth can be determined by referring to Table 24.4-1. This table is based on previous design methods and should therefore be used for preliminary purposes only. However, it remains a useful tool for approximating an estimated range of web depths for a given span length. Recommended web depths are given for parallel flanged steel girders. The girder spacings and web depths were determined from an economic study, deflection criteria and load-carrying capacity of girders for a previous design method.

From a known girder spacing, the effective span is computed as shown in Figure 17.5-1. From the effective span, the slab depth and required slab reinforcement are determined from tables in Chapter 17 – Superstructures - General, as well as the additional slab reinforcement required due to slab overhang.

10' Girder Spacing, 9" Deck		12' Girder Spacing, 10" Deck	
Span Lengths (Ft.)	Web Depth (In.)	Span Lengths (Ft.)	Web Depth (In.)
90 – 115	48	90 – 103	48
116 – 131	54	104 – 119	54
132 – 140	60	120 – 127	60
141 – 149	66	128 – 135	66
150 – 163	72	136 – 146	72
164 – 171	78	147 – 153	78
172 – 180	84	154 – 163	84
181 – 190	90	164 – 170	90
191 – 199	96	171 – 177	96
200 – 207	102	178 – 184	102
208 – 215	108	185 – 192	108

Table 24.4-1
Parallel Flange Girder Recommended Depths
For 2-Span Bridges with Equal Span Lengths)

24.4.3 Live Load Deflections

WisDOT requirements for allowable live load deflection are described in 17.2.12, and the computation of actual live load deflection is explained in 17.2.13.

Limiting the live load deflection ensures a minimum degree of stiffness in the steel girders and helps when constructing the bridge. This is especially important when using higher-strength high-performance steels which can result in shallower and more flexible girders, particularly on curved and/or skewed bridges.

24.4.4 Uplift and Pouring Diagram

Permanent hold-down devices are used to attach the superstructure to the substructure at the bearing when any combination of loading using Strength I loading combination (see **LRFD [C3.4.1]**) produces uplift. Also, permanent hold-down devices are required on alternate girders that cross over streams with less than 2' clearance for a 100-year flood where expansion bearings are used. These devices are required to prevent the girder from moving off the bearings during extreme flood conditions.

Uplift generally occurs under live loading on continuous spans when the span ratio is greater than 1 to 1.75. However, a span ratio of 1.75 should be avoided. Under extreme span ratios,

the structure may be in uplift for dead load. When this occurs, it is necessary to jack the girders upward at the bearings and insert shim plates to produce a downward dead load reaction. The use of simple spans or hinged continuous spans is also considered for this case.

On two-span bridges of unequal span lengths, the slab is poured in the longer span first. Cracking of the concrete slab in the positive moment region has occurred on bridges with extreme span ratios when the opposite pouring sequence has been followed. When the span exceeds 120', consider some method to control positive cracking such as limited pouring time, the use of retarders and sequence of placing.

On multiple-span structures, determine a pouring sequence that causes the least structure deflections and permits a reasonable construction sequence. Refer to Standard for Slab Pouring Sequence for concrete slab pouring requirements. Temporary hold-down devices are placed at the ends of continuous girders where the slab pour ends if permanent hold-down devices are not required. The temporary hold-down devices prevent uplift and unseating of the girders at the bearings during the pouring sequence. Consideration should be given to including temporary hold-down devices at the end of the bridge where deck removal begins on deck replacement projects.

Standard hold-down devices having a capacity of 20 kips are attached symmetrically to alternate girders or to all the girders as required. Hold-down devices are designed by considering line bearing acting on a pin. Refer to Standard for Hold Down Devices for permanent and temporary hold-down details. To compute uplift, a shear influence line is first obtained. Next the wheel load distribution factor is determined in the same manner as for live load deflection. The number of loaded lanes is based on the width of the bridge between curbs. The live load plus dynamic load allowance is uniformly distributed to all the girders and is adjusted based on the appropriate multiple presence factor (see **LRFD [3.6.1.1.2]**). The live load is increased 100 percent and applied to the shear influence line to produce maximum uplift. The allowance for future wearing surface should not be included in uplift computations when this additional dead load increases the end reaction.

For additional information about construction and constructability verifications, see 24.12.

24.4.5 Bracing

All bracing systems must be attached to the main girder connection stiffener by bolted connections.

24.4.5.1 Intermediate Diaphragms and Cross Frames

Diaphragms or cross frames are required at each support and at regular intervals throughout the span in all bays. Although not explicitly stated in *AASHTO LRFD*, a common rule of thumb, based on previous editions of the *AASHTO Specifications*, is to use a maximum cross-frame spacing of 25 feet. The cross-frame spacing can affect the required flange thicknesses, as well as constructability checks for stability before the deck is cured. Currently, stay-in-place forms should not be considered to provide adequate bracing to the top flange.

The spacing should be adjusted to miss any splice material. The transverse bracing is placed parallel to the skew for angles up to and including 15 degrees. Transverse bracing is placed

normal to the girders for skew angles greater than 15 degrees. When diaphragms are stepped slightly out of straight through alignment, the girder flanges will experience the greatest torsional stress. Larger steps in diaphragm spacing allow the torsional moment to distribute over a longer girder section. On curved girder structures, the diaphragms are placed straight through radial lines to minimize the effects of torsion since the diaphragms or cross frames are analyzed as primary load-carrying members.

Diaphragm details and dimensions are given on Standards for Plate Girder Diaphragms & Cross Frames and Rolled Girder Diaphragms. Diaphragms carry moment and tensile stresses caused by girder deflections. In the composite slab region, the steel section acts similar to the lower chord of a vierendeel truss and is in tension. A rigidly connected diaphragm resists bending due to girder deflection and tends to distribute the load. It is preferable to place diaphragms at the 0.4 point of the end spans on continuous spans and at the center of interior spans when this can be accomplished without an increase in total number. Also, if practical, place diaphragms adjacent to a field splice between the splice and the pier. Bolted diaphragm connections are used in place of welded diaphragm connections. All cross framing is attached to this main girder connection stiffener using bolted gusset plates.

Cross framing is used for web depths over 48". The bracing consists of two diagonal members connected at their intersection and one bottom chord member. The bottom chord is designed as a secondary compression member. The diagonals are designed as secondary tension members. The length of a minimum 1/4" fillet weld size is determined for each member based on a minimum of 75 percent of the member strength.

On spans over 200' in length, the stresses caused by wind load on part of the erected girders without the slab in place may control the size of the members. Construction loads are also considered in determining member size.

On girders where longitudinal stiffeners are used, the relative position of the stiffener to the cross frame is checked. When the longitudinal stiffener interferes with the cross frame, cope the gusset plate attached to the vertical stiffener and attach the cross frame to the gusset plates, as shown in Figure 24.4-1.

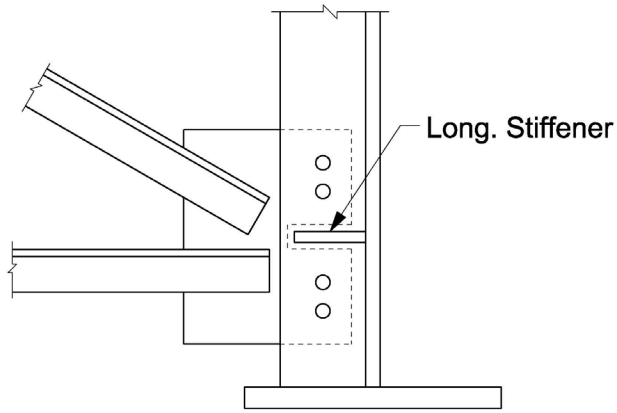

Figure 24.4-1
Cross Frame Where Longitudinal Stiffener is Used

24.4.5.2 End Diaphragms

End diaphragms are placed horizontally along the abutment end of beams or girders and at other points of discontinuity in the structure. Channel sections are generally used for end diaphragms, and they are designed as simply-supported edge beams. The live load moment plus dynamic load allowance is determined by placing one wheel load or two wheel loads 4' apart and correcting for the skew angle at the center line of the member. Generally, the dead load moment of the overlying slab and diaphragm is insignificant and as such is neglected. End diaphragm details and dimensions are given on Standard for End Diaphragms.

End diaphragms are either bolted or welded to gussets attached to the girders at points of discontinuity in the superstructure. The gusset plates are bolted to the bearing stiffeners. The same connection detail is used throughout the structure. The connections are designed for shear only where joined at a web since very little moment is transferred without a flange connection. The connection is designed for the shear due to live load plus dynamic load allowance from the wheel loads.

24.4.5.3 Lower Lateral Bracing

Lateral bracing requirements for the bottom flanges are to be investigated. Bureau of Structures (BOS) practice is to eliminate the need for bracing by either increasing flange sizes or reducing the distance between cross frames. The controlling case for this stress is usually at a beam cutoff point. At cutoff points, the condition of maximum stress exists with the smallest flange size, where wind loads have the greatest effect. A case worth examining is the temporary stress that exists in top flanges during construction. Top flange plates, which are often only 12" wide, can be heavily stressed by wind load. A temporary bracing system placed by the contractor may be in order.

On an adjacent span to one requiring lower lateral bracing, the bracing is extended one or two panel lengths into that span. The lower lateral bracing system is placed in the exterior bays of

the bridge and in at least 1/3 of the bays of the bridge. On longer spans, the stresses caused by wind load during construction will generally govern the member size.

Curved girders in Wisconsin generally do not have extremely long span lengths, and the curvature of the girders forms an arch which is usually capable of resisting the wind forces prior to placing the slab.

24.4.6 Girder Selection

The exterior girder section is always designed and detailed such that it is equal to or larger than the interior girder sections. Guidelines for ratios of girder depth to length of span are provided in 24.4.2. The following criteria are used to determine the selection and sizes of girder sections. For additional rules of thumb regarding economical design considerations, see 24.6.2.

24.4.6.1 Rolled Girders

Rolled girders without cover plates are preferred. Cover plates are not recommended due to fatigue considerations and higher fabrication costs.

24.4.6.2 Plate Girders

Basic cross-section proportion limits for flanges of steel I-girders are specified in **LRFD [6.10.2.2]**. The limits apply to both tension and compression flanges. The minimum width of flanges, b_f, is specified as:

$$b_f \geq D/6$$

Where:

D = Web depth

This limit is a lower limit, and flange widths should not be set based on this limit. Practical size flanges should easily satisfy this limitation based on satisfaction of other design criteria. Fabricators prefer that flange widths never be less than 12” to prevent distortion and cupping of the flanges during welding, which sets a practical lower limit.

Composite design has led to a significant reduction in the size of compression flanges in regions of positive flexure as economical composite girders normally have smaller top flanges than bottom flanges. In regions of positive flexure during deck placement, more than half the web is typically in compression. As a result, maximum moments generated during the deck-casting sequence, coupled with top compression flanges that are too narrow, can lead to out-of-plane distortions of the compression flanges and web during construction. The following relationship from **LRFD [C6.10.3.4]** is a suggested guideline on the minimum top compression flange width, b_{fc}, that should be provided in these regions to help minimize potential problems in these cases:

$$b_{fc} \geq L/85$$

Where:

L = Length of the girder shipping piece

Satisfaction of this simple guideline can also help ensure that individual field sections will be stable for handling both in the fabrication shop and in the field. Adherence to this guideline can also facilitate erection without any required special stiffening trusses or falsework. It is recommended that the above two equations be used to establish a minimum required top-flange width in regions of positive flexure in composite girders.

As a practical matter, fabricators order flange material from wide plate, typically between 72" and 96" wide. They either weld the shop splices in the individual flanges after cutting them to width or they weld the different thickness plates together to form one wide plate and then strip the individual flanges. In the latter case, the individual flange widths must be kept constant within an individual shipping piece, which is preferred. Changing of flange widths at shop splices should be avoided if at all possible. Stripping the individual flanges from a single wide plate allows for fewer weld starts and stops and results in only one set of run-on and run-off tabs. It is estimated that up to 35% of the labor required to join the flanges can be saved by specifying changes in thickness rather than width within a field section.

A fabricator will generally order plate with additional width and length for cutting tolerance, sweep tolerance and waste. Waste is a particular concern when horizontally curved flanges are cut curved. The engineer should give some consideration as to how the material might be ordered and spliced; a fabricator can always be consulted for assistance. Flanges should be sized (including width, thickness and length) so that plates can be ordered and spliced with minimal waste. *AASHTO/NSBA Steel Bridge Collaboration*, "*Guidelines to Design for Constructability, G12.1*" (2016) is a free publication available from AASHTO which contains some specific recommendations and illustrative examples related to this issue.

The following additional guidelines are used for plate girder design and detailing:

1. Maximum change in flange plate thickness is 1" and preferably less.
2. The thinner plate is not less than 1/2 the thickness of the thicker flange plate.
3. Plate thicknesses are given in the following increments:
4. 1/16" up to 1"
5. 1/8" between 1" and 2"
6. 1/4" above 2"
7. Minimum plate size on the top flange of a composite section in the positive moment region is variable depending on the depth of web, but not less than 12" x ¾" for web

depths less than or equal to 66” and 14” x ¾” for web depths greater than 66”. Thinner plates become wavy and require extra labor costs to straighten within tolerances.

8. For plate girder flange widths, use 2” increments.

9. For plate girder web depths, use 3” increments.

10. Changes in plate widths or depths are to follow recommended standard transition distances and/or radii. The minimum size flange plates of 16" x 1 1/2" at the point of maximum negative moment and 16" x 1" for the bottom flange at the point of maximum positive moment are recommended for use on plate girders. The use of a minimum flange width on plate girders is necessary to maintain adequate stiffness in the girder so it can be fabricated, transported and erected. Deeper web plates with small flanges may use less steel, but they create problems during fabrication and construction. However, flange sizes on plate girders with web depths 48" or less may be smaller.

11. Flange plate sizes are detailed based on recommended maximum span lengths given in Table 24.4-1 for parallel flanged girders. The most economical girder is generally the one having the least total weight but is determined by comparing material costs and welding costs for added stiffener details. Plates over 60'-90’ (depending on thickness and material) are difficult to obtain, and butt splices are detailed to limit flange plates to these lengths or less. It is better to detail more flange butt splices than required and leave the decision to utilize them up to the fabricator. All butt splices are made optional to the extent of available lengths, and payment is based on the plate sizes shown on the plans. As previously described, detail flange plates to the same width and vary the thicknesses. This allows easier fabrication when cutting plate widths. Change widths, if necessary, only at field splices.

12. Minimum web thickness is 7/16" for girder depths less than or equal to 60". An economical web thickness usually has a few transverse stiffeners. Refer to 24.10 for transverse stiffener requirements. Due to fatigue problems, use of longitudinal stiffeners for plate girders is not encouraged.

24.4.7 Welding

Welding design details shall conform to current requirements of *Bridge Welding Code: AASHTO/AWS-D1.5*. Weld details are not shown on the plans but are specified by using standard symbols as given on Figure 24.4-2 and Figure 24.4-3. Weld sizes are based on the size required due to stress or the minimum size for plate thicknesses being connected.

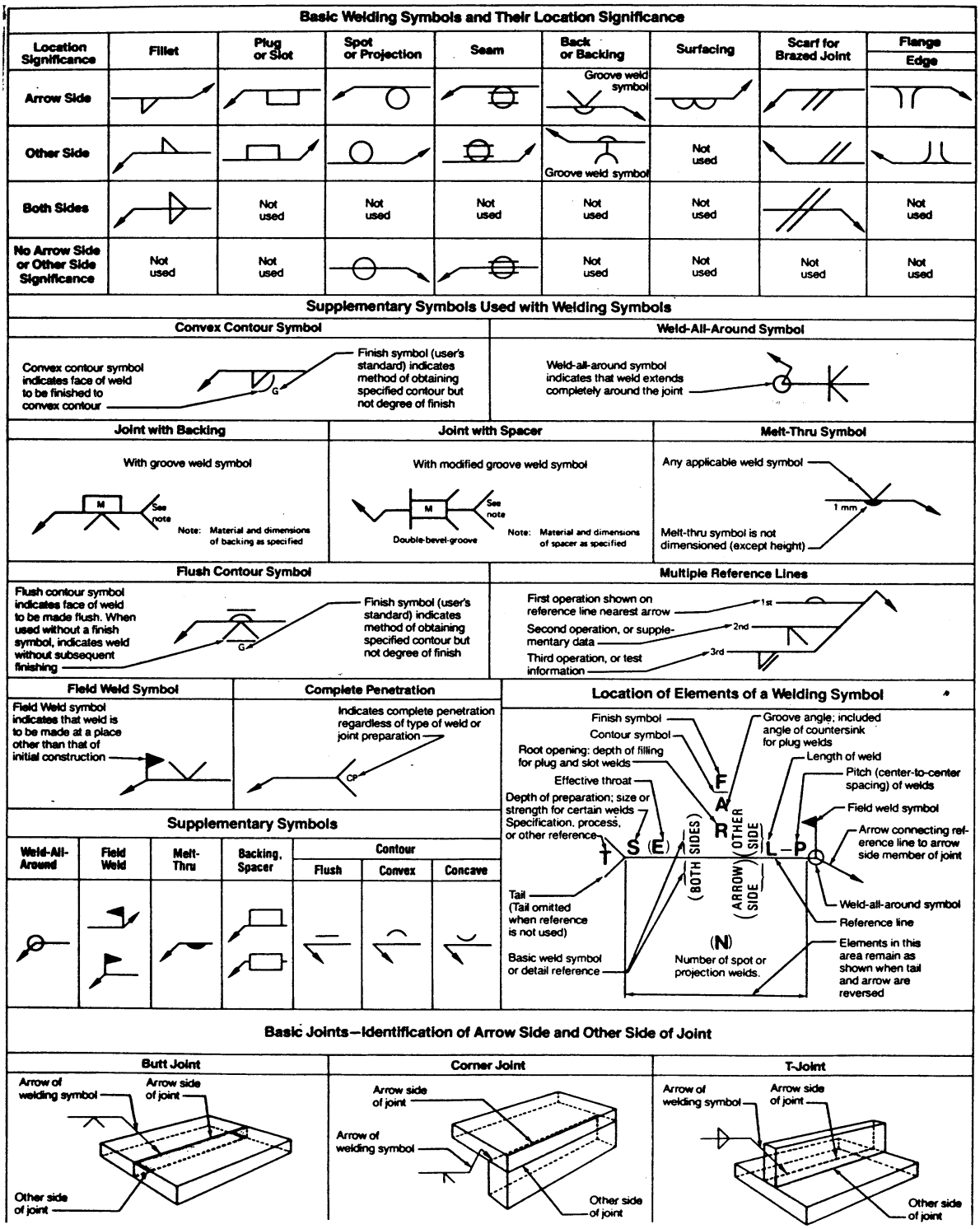

Figure 24.4-2
Basic Welding Symbols

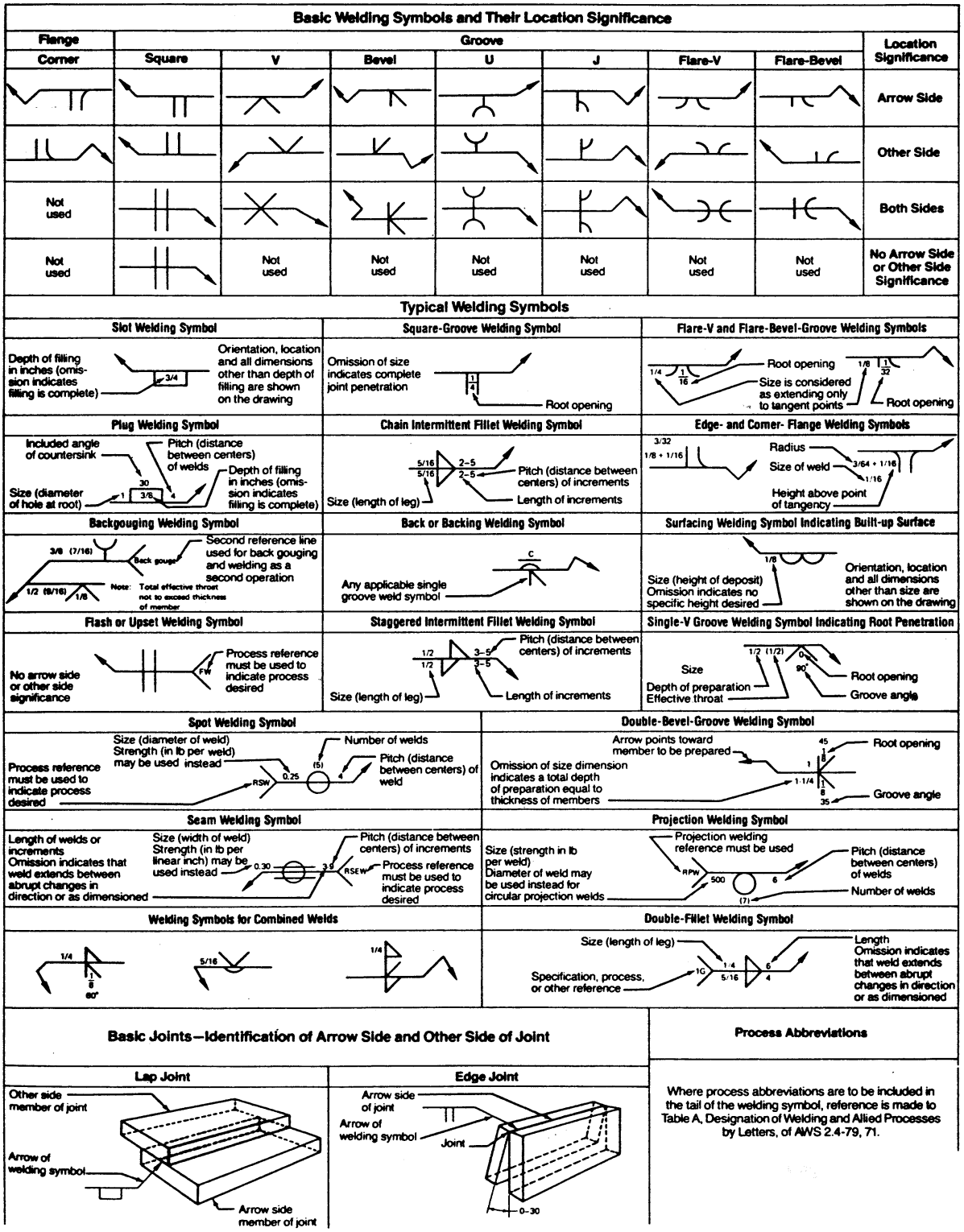

Figure 24.4-3
Basic Welding Symbols (Continued)

Fillet welds are the most widely used welds due to their ease of fabrication and overall economy. Fillet welds generally require less precision during fit-up, and the edges of the joined pieces seldom need special preparation such as beveling or squaring. Fillet welds have a triangular cross section and do not fully fuse the cross-sectional area of the parts they join, although full-strength connections can be developed with fillet welds.

The size of a fillet weld is given as the leg size of the fillet. The effective area of a fillet weld is taken equal to the effective length of the weld times the effective throat (**LRFD [6.13.3.3]**). The effective length is to be taken as the overall length of the full-size fillet. The effective throat dimension of a fillet weld is nominally the shortest distance from the joint root to the weld face, which for a typical fillet weld with equal legs of nominal size, a, is taken equal to 0.707a.

When placing a fillet weld, the welder builds up the weld to the full dimension as near to the beginning of the weld as possible. However, there is always a slight tapering off of the weld where the weld starts and ends. Therefore, a minimum effective length of the weld is required. As specified in **LRFD [6.13.3.5]**, the minimum effective length of a fillet weld is to be taken as four times its leg size, but not less than 1.5 inches.

As specified in **LRFD [6.13.3.4]**, maximum thickness (size) requirements for fillet welds along edges of connected parts depend on the thickness of the parts being connected (unless the weld is specifically designated on the contract documents to be built out to obtain full throat thickness).

The minimum thickness (size) of a fillet weld is based on the thickness of the thicker part joined, as specified on Standard for Plate Girder Details and in Table 24.4-2.

Base Metal Thickness of Thicker Part Joined	Minimum Size of Fillet Weld
Up to ½”	3/16”
Over ½” to ¾”	1/4”
Over ¾” to 1½”	5/16”
Over 1½” to 2¼”	3/8”
Over 2¼” to 6”	1/2”

Table 24.4-2
Minimum Size of Fillet Welds

The fillet weld size is not required to exceed the thickness of the thinner part joined. Refer to *AASHTO LRFD* for minimum effective fillet weld length and end return requirements.

According to **LRFD [6.13.3.2.4a]**, the factored resistance, R_r, of fillet-welded connections at the strength limit state subject to tension or compression parallel to the axis of the weld is to be taken as the corresponding factored resistance of the base metal. Note that fillet welds joining component elements of built-up members (such as girder flange-to-web welds) need not be designed for the tensile or compressive stress in those elements parallel to the axis of

the welds. According to **LRFD [6.13.3.2.4b]**, the factored resistance, R_r, of fillet-welded connections at the strength limit state subject to shear on the effective area is to be taken as follows:

$$Rr = 0.6\phi_{e2}F_{exx}$$

Where:

ϕ_{e2} = Resistance factor for shear on the throat of the weld metal in fillet welds specified in **LRFD [6.5.4.2]** (= 0.80)

F_{exx} = Classification strength of the weld metal (ksi) (for example, for E70 weld metal, F_{exx} = 70 ksi)

If a certain size fillet weld must be used in adjacent areas of a particular joint, it is desirable to use the same size weld to allow the same electrodes and welding equipment to be used for that joint and to simplify the inspection.

24.4.8 Dead Load Deflections, Camber and Blocking

Show the total dead load deflections, including composite dead load (without future wearing surface) acting on the composite section, at tenth points of each span. Distribute the composite dead load evenly to all girders and provide one deflection value for a typical interior girder. Chapter 17 – Superstructure-General illustrates three load cases for exterior girder design with raised sidewalks, cases that provide a conservative envelope to ensure adequate girder capacity. However, the above composite dead load distribution should be used for deflection purposes. Total deflections and deflections for concrete only are computed to the nearest 0.1" and shown on a deflection diagram.

A separate deflection value for interior and exterior girders *may* be provided if the difference, accounting for load transfer between girders, warrants multiple values. A weighted distribution of composite dead load could be used for deflection purposes *only*. For example, an extremely large composite load over the exterior girder could be distributed as 40-30-30 percent to the exterior and first two interior girders respectively. Use good engineering judgment whether to provide separate deflection values for individual girder lines. In general, this is not necessary.

When straight girder sections between splice joints are erected, final girder elevations usually vary in height between the girder and roadway elevations due to dead load deflections and vertical curves. Since a constant slab thickness is detailed, a concrete haunch between the girder and slab is used to adjust these variations. If these variations exceed 3/4", the girder is cambered to reduce the variation of thickness in the haunch. This is done for all new girders, including widenings. Straight line chords between splice points are sometimes used to create satisfactory camber. If separate deflections are required for exterior girders, as described in Chapter 6 – Plan Preparation and Chapter 17 – Superstructure-General, provide only one camber value for all girders that is a best fit.

Welded girders are cambered by cutting the web plates to a desired curvature. During fabrication, all web plates are cut to size since rolled plates received from the mill are not

straight. There is a problem in fabricating girders that have specified cambers less than 3/4", so they are not detailed.

Rolled sections are cambered by the application of heat in order that less camber than recommended by AISC specifications may be used. The concrete haunch is used to control the remaining thickness variations.

A blocking diagram is given for all continuous steel girder bridges on a vertical curve. Refer to Standard for Blocking & Slab Haunch Details for blocking and slab haunch details. Blocking heights to the nearest 1/16" are given at all bearings, field splices and shop splice points. The blocking dimensions are from a horizontal base line passing through the lower end of the girder at the centerline of bearing.

The plans should show in a table the top of steel elevations after erection at each field splice and at the centerline of all bearings.

It should be noted that the plans are detailed for horizontal distances. The fabricator must detail all plates to the erected position considering dead loads. Structure erection considerations are three-dimensional, considering slope lengths and member rotation for member end cuts.

24.4.9 Expansion Hinges

The expansion hinge as shown on Standard for Expansion Hinge Joint Details is used where pin and hanger details were previously used. The expansion hinge is more redundant and, if necessary, the bearings can easily be replaced.

24.5 Repetitive Loading and Toughness Considerations

AASHTO LRFD specifies requirements for repetitive loading and toughness considerations. Fatigue design and detail guidelines are provided, and material impact testing for fracture toughness is required. These requirements are based on performance evaluations over the past several decades on existing highways and bridges under the effects of repetitive vehicle loading.

The direct application of fatigue specifications to main load-carrying members has generally been apparent to most bridge designers. Therefore, main members have been designed with the appropriate details. However, fatigue considerations in the design of secondary members and connections have not always been so obvious. Many of these members interact with main members and receive more numerous cycles of load at a higher level of stress range than assumed. As a result, most of the fatigue problems surfacing in recent years have involved cracking initiated by secondary members.

24.5.1 Fatigue Strength

In *AASHTO LRFD*, fatigue is defined as the initiation and/or propagation of cracks due to repeated variation of normal stress with a tensile component. The fatigue life of a detail is defined as the number of repeated stress cycles that results in fatigue failure of a detail, and the fatigue design life is defined as the number of years that a detail is expected to resist the assumed traffic loads without fatigue cracking. In *AASHTO LRFD*, the fatigue design life is based on either Fatigue I for infinite load-induced fatigue life or Fatigue II for finite load-induced fatigue life.

WisDOT Policy Item

Only consider the Fatigue I limit state for steel design.

The main factors governing fatigue strength are the applied stress, the number of loading cycles and the type of detail. The designer has the option of either limiting the stress range to acceptable levels or choosing details which limit the severity of the stress concentrations.

Details involving connections that experience fatigue crack growth from weld toes and weld ends where there is high stress concentration provide the lowest allowable stress range. This applies to both fillet and groove welded details. Details which serve the intended function and provide the highest fatigue strength are recommended.

Generally, details involving failure from internal discontinuities such as porosity, slag inclusion, cold laps and other comparable conditions will have a high allowable stress range. This is primarily due to the fact that geometrical stress concentrations at such discontinuities do not exist, other than the effect of the discontinuity itself.

AASHTO LRFD provides the designer with eight basic design range categories for redundant and non-redundant load path structures. The stress range category is selected based on the highway type and the detail employed. The designer may wish to make reference to *Bridge Fatigue Guide Design and Details*, by John W. Fisher.

24.5.2 Charpy V-Notch Impact Requirements

Recognizing the need to prevent brittle fracture failures of main load-carrying structural components, AASHTO adopted provisions for Charpy V-Notch impact testing in 1974. Impact testing offers an important measure of material quality, particularly in terms of ductility. Brittleness is detected prior to placing the material in service to prevent member service failures. Wisconsin *Standard Specifications for Highway and Structure Construction* require Charpy V-Notch tests on all girder flange and web plates, flange splice plates, hanger bars, links, rolled beams and flange cover plates. Special provisions require higher Charpy V-Notch values for non-redundant structure types.

For the Charpy V-Notch impact test, small, notched steel specimens are loaded at very high strain rates as the specimen absorbs the impact from a pendulum. The maximum height the pendulum rises after impact measures the amount of energy absorbed in foot-pounds.

The AASHTO fracture control plan uses three different temperature zones (designated Zones 1, 2 and 3) to qualify the fracture toughness of bridge steels. The three zones are differentiated by their minimum operating (or service) temperatures, which are given in **LRFD [Table 6.6.2-1]**. In Wisconsin, use Zone 2 requirements.

Separate fracture toughness requirements are given in **LRFD [Table 6.6.2-2]** for non-fracture-critical and fracture-critical members (or components). A fracture-critical member (FCM) is defined as a component in tension whose failure is expected to result in the collapse of the bridge or the inability of the bridge to perform its function. FCMs are subject to more stringent Charpy V-Notch fracture toughness requirements than non-fracture-critical members. For FCMs, High Performance Steel (HPS) shall be used with Zone 2 requirements.

According to **LRFD [6.6.2]**, the engineer has the responsibility to identify all bridge members or components that are fracture critical and clearly delineate their location on the contract plans. Examples of FCMs in bridges include certain truss members in tension, suspension cables, tension components of girders in two-girder systems, pin and link systems in suspended spans, cross girders and welded tie girders in tied-arches. In addition, any attachment having a length in the direction of the tension stress greater than 4 inches and welded to the tension area of a component of a FCM is also to be considered fracture critical.

24.5.3 Non-Redundant Type Structures

Previous AASHTO fatigue and fracture toughness provisions provided satisfactory fracture control for multi-girder structures when employed with good fabrication and inspection practices. However, concern existed that some additional factor of safety against the possibility of brittle fracture should be provided in the design of non-redundant type structures such as single-box and two-box girders, two-plate girders or truss systems where failure of a single element could cause collapse of the structure. A case in point was the collapse of the Point Pleasant Bridge over the Ohio River. HPS shall be used for non-redundant structures.

Primary factors controlling the susceptibility of non-redundant structures to brittle fracture are the material toughness, flaw size and stress level. One of the most effective methods of reducing brittle fracture is lowering the stress range imposed on the member. AASHTO provides an increased safety factor for non-redundant members by requiring a shift of one

range of loading cycles for fatigue design with corresponding reduction of stress range for critical stress categories. The restrictive ranges for certain categories require the designer to investigate the use of details which do not fall in critical stress categories or induce brittle fracture. For non-fracture-critical members including bolted tie girders found in tied arch bridges, multiple box girder structures (3 boxes) and hanger plates, HPS shall also be used.

As per a FHWA directive, two-girder box girder structures are to be considered non-redundant.

For I-girder bridges, other than pedestrian or other unusual structures, four or more girders shall be used.

24.6 Design Approach - Steps in Design

24.6.1 Obtain Design Criteria

The first design step for a steel girder is to choose the correct design criteria. The design criteria include the following:

- Number of spans
- Span lengths
- Skew angles
- Number of girders
- Girder spacing
- Deck overhang
- Cross-frame spacing
- Flange and web yield strengths
- Deck concrete strength
- Deck reinforcement strength
- Deck thickness
- Dead loads
- Roadway geometry
- Haunch depth

For steel girder design, the following load combinations are generally considered:

- Strength I
- Service II
- Fatigue I

The extreme event limit state (including earthquake load) is generally not considered for a steel girder design.

The following steps are taken in determining the girder or beam spacing and the slab thickness:

1. The girder spacing (and the resulting number of girders) for a structure is determined by considering the desirable girder depth and the span lengths. Refer to 24.4.2 for design aids. Where depth or deflection limitations do not control the design, it is usually more economical to use fewer girders with a wider spacing and a thicker slab. Four girders are generally considered to be the minimum, and five girders are desirable to facilitate future redecking.

2. The slab overhang on exterior girders is limited to 3'-7" measured from the girder centerline to the edge of slab. The overhang is limited to prevent rotation and bending of the web during construction caused by the forming brackets. The overhang width is generally determined such that the moments and shears in the exterior girder are similar to those in the interior girder. In addition, the overhang is set such that the positive and negative moments in the deck slab are balanced. A common rule of thumb is to make the overhang approximately 0.28 to 0.5 times the girder spacing. For girders less than, or equal to 36-inches in depth, limit the overhang to the girder depth, and preferably no wider than 0.80 the girder depth. The limits for raised sidewalk overhangs on the Standard for Median and Raised Sidewalk Details are likely excessive for such shallow girders.

3. Check if a thinner slab and the same number of members can be used by slightly reducing the spacing.

24.6.2 Select Trial Girder Section

Before the dead load effects can be computed, a trial girder section must be selected. This trial girder section is selected based on previous experience and based on preliminary design. Based on this trial girder section, section properties and dead load effects will be computed. Then specification checks will be performed to determine if the trial girder section successfully resists the applied loads. If the trial girder section does not pass all specification checks or if the girder optimization is not acceptable, then a new trial girder section must be selected and the design process must be repeated.

The following tips are presented to help bridge designers in developing an economical steel girder for most steel girder designs. Other design tips are available in various publications from the American Institute of Steel Construction (AISC) and from steel fabricators.

- Girder depth – The minimum girder depth is specified in **LRFD [2.5.2.6.3]**. An estimate of the optimum girder depth can be obtained from trial runs using design software. The web depth may be varied by several inches more or less than the optimum without significant cost penalty. Refer to 24.4.2 for recommended girder depths for a given girder spacing and span length.

- Web thickness – A "nominally stiffened" web (approximately 1/16 inch thinner than "unstiffened") will generally provide the least cost alternative or very close to it. However, for web depths of approximately 50” or less, unstiffened webs may be more economical.

- Plate transitions – For rolled sections, a change in section should occur only at field splice locations. For plate girders, include the change in section at butt splices and

check the maximum rolling lengths of plates to see if additional butt splices are required. The fabricator may assume the cost of extending the heavier plate and eliminating the butt splice; this option has been used by fabricators on numerous occasions. Shim plates are provided at the bearing to allow for either option. A common rule of thumb is to use no more than three plates (two shop splices) in the top or bottom flange of field sections up to 130 feet long. In some cases, a single flange plate size can be carried through the full length of the field section. Estimate field splice locations at approximately the 7/10 point of continuous spans.

- Flange widths – Flange widths should remain constant within field sections. The use of constant flange widths simplifies construction of the deck. The unsupported length in compression of the shipping piece divided by the minimum width of the compression flange in that piece should be less than approximately 85. High bearing reactions at the piers of continuous girders may govern the width of the bottom flange.

- Flange transitions – It is good design practice to reduce the flange cross-sectional area by no more than approximately one-half of the area of the heavier flange plate. This reduces the build-up of stress at the transition.

- Haunched girders – On haunched plate girders, the length of the parabolic haunch is approximately 1/4 of the span length. The haunch depth is 1 1/2 times the midspan depth.

It should be noted that during the optimization process, minor adjustments can be made to the plate sizes and transition locations without needing to recompute the analysis results. However, if significant adjustments are made, such that the moments and shears would change significantly, then a revised analysis is required.

24.6.3 Compute Section Properties

See 17.2.11 for determining composite slab width.

For a composite superstructure, several sets of section properties must be computed. The initial dead loads (or the non-composite dead loads) are applied to the girder-only section. The superimposed dead loads are applied to the composite section based on a modular ratio of 3n, as described in **LRFD [6.10.1.1.1]**. The live loads are applied to the composite section based on a modular ratio of n.

For girders with shear connectors provided throughout their entire length and with slab reinforcement satisfying the provisions of **LRFD [6.10.1.7]**, stresses due to loads applied to the composite section for the Fatigue I and Service II limit states may be computed using the short-term composite section, based on a modular ratio of n, assuming the concrete slab to be fully effective for both positive and negative flexure.

For the strength limit state, since the deck concrete is in tension in the negative moment region, the deck reinforcing steel contributes to the composite section properties and the deck concrete does not.

For LRFD, Wisconsin places shear connectors in both the positive and negative moment regions of continuous steel girder bridges, and both regions are considered composite in analysis and design computations. Negative flexure concrete deck reinforcement is considered in the section property calculations.

24.6.4 Compute Dead Load Effects

The girder must be designed to resist the dead load effects, as well as the other load effects. Various types of dead loads and their corresponding load factors are described in 17.2.4 and 17.2.5.

For the steel girder, the dead load per unit length varies due to the change in plate sizes. The moments and shears due to the weight of the steel girder can be computed using analysis software. Since the actual plate sizes are entered as input, the moments and shears are computed based on the actual, varying plate sizes.

Distribution of dead load to the girders is described in 17.2.8.

The stiffness of the composite section is used for determining live load and composite dead load moments and shears. When computing live load values, the composite section is based on n, and when computing composite dead load values, the composite section is based on 3n. Non-composite dead load moments and shears are computed based on the stiffness of the non-composite steel section.

24.6.5 Compute Live Load Effects

The girder must also be designed to resist the live load effects. The live load consists of an HL-93 loading. Similar to the dead load, the live load moments and shears for an HL-93 loading can be obtained from an analysis computer program.

For all limit states other than fatigue and fracture, the dynamic load allowance, IM, is 0.33. However, it is important to note that the dynamic load allowance is applied only to the design truck or tandem. The dynamic load allowance is not applied to pedestrian loads or to the design lane load.

Live load distribution factors must be computed as specified in **LRFD [4.6.2.2]**, as shown in Table 24.6-1.

WisDOT Policy Item

For beams with variable moment of inertia, the longitudinal stiffness parameter, Kg (**LRFD [4.6.2.2.1-1]**), shall be based on a weighted average of properties, over the entire length of the bridge.

In addition to computing the live load distribution factors, their ranges of applicability must also be checked. If they are not satisfied, then conservative assumptions must be made based on sound engineering judgment. Additional information about distribution of live load to the girders is presented in 17.2.8.

For skewed bridges, WisDOT does not consider skew correction factors for moment.

Live Load Distribution Factor	AASHTO LRFD Reference
Moments in Interior Beams	**LRFD [Table 4.6.2.2.2b-1]**
Moments in Exterior Beams	**LRFD [C4.6.2.2.2d]** and **LRFD [Table 4.6.2.2.2d-1]**
Moment Reduction for Skew	Not Applicable for WisDOT
Shear in Interior Beams	**LRFD [Table 4.6.2.2.3a-1]**
Shear in Exterior Beams	**LRFD [C4.6.2.2.2d]** and **LRFD [Table 4.6.2.2.3b-1]**
Shear Correction for Skew	**LRFD [Table 4.6.2.2.3c-1]**

Table 24.6-1
Live Load Distribution Factors

24.6.6 Combine Load Effects

The next step is to combine the load effects for each of the applicable limit states. Load effects are combined in accordance with **LRFD [Table 3.4.1-1]** and **LRFD [Table 3.4.1-2]**.

After combining load effects, the next ten design steps consist of verifying the structural adequacy of the steel girder using appropriate sections of *AASHTO LRFD*. For steel girder designs, specification checks are generally performed at the following locations:

- Span tenth points
- Locations of plate transitions
- Locations of stiffener spacing transitions

However, it should be noted that the maximum moment within a span may not necessarily occur at any of the above locations.

Check the loads of the interior and exterior members to see if one or both members are to be designed.

24.6.7 Check Section Property Limits

Several checks are required to ensure that the proportions of the girder section are within specified limits, as presented in **LRFD [6.10.2]**. The first section proportion check relates to the web slenderness, and the second set of section proportion checks relate to the general proportions of the section.

24.6.8 Compute Plastic Moment Capacity

For composite sections, the plastic moment, M_p, must be calculated as the first moment of plastic forces about the plastic neutral axis. The methodology for the plastic moment capacity computations is presented in **LRFD [Appendix D6.1]**.

24.6.9 Determine If Section is Compact or Non-compact

The next step in the design process is to determine if the section is compact or non-compact, as described in **LRFD [6.10.6.2.2]**. This, in turn, will determine which formulae should be used to compute the flexural capacity of the girder.

24.6.10 Design for Flexure – Strength Limit State

The next step is to compute the flexural resistance of the girder at each section. These computations vary, depending on whether the section is composite or non-composite, whether the section is compact or non-compact, and whether the section is in positive flexure or negative flexure. The following sections of *AASHTO LRFD* can be used:

- Compact, composite section in positive flexure – **LRFD [6.10.7.1]**
- Non-compact, composite section in positive flexure – **LRFD [6.10.7.2]**
- Composite sections in negative flexure – **LRFD [6.10.8]**
- Non-composite sections – **LRFD [6.10.8]**

WisDOT Policy Item:

Do not utilize optional **LRFD [Appendix B6]** for Moment Redistribution from Interior-Pier I-Sections in Straight Continuous-Span Bridges.

24.6.11 Design for Shear

Shear must be checked at each section of the girder. However, shear is generally maximum at or near the supports.

The first step in the design for shear is to check if the web must be stiffened. A "nominally stiffened" web (approximately 1/16 inch thinner than "unstiffened") will generally provide the least cost alternative or very close to it. However, for web depths of approximately 50 inches or less, unstiffened webs may be more economical.

It should be noted that in end panels, the shear is limited to either the shear yield or shear buckling in order to provide an anchor for the tension field in adjacent interior panels. Tension field is not allowed in end panels. The design procedure for shear in the end panel is presented in **LRFD [6.10.9.3.3]**.

24.6.12 Design Transverse Intermediate Stiffeners and/or Longitudinal Stiffeners

If transverse intermediate stiffeners and/or longitudinal stiffeners are used, they must be designed. The design of transverse intermediate stiffeners is described in 24.10, and the design of longitudinal stiffeners is described in 24.11.

24.6.13 Design for Flexure – Fatigue and Fracture

Load-induced fatigue must be considered in a steel girder design. Fatigue considerations may include:

- Welds connecting the shear studs to the girder
- Welds connecting the flanges and the web
- Welds connecting stiffeners to the girder

The specific fatigue considerations depend on the unique characteristics of the girder design. Specific fatigue details and detail categories are explained and illustrated in **LRFD [Table 6.6.1.2.3-1]**.

In addition to the nominal fatigue resistance computations, fatigue requirements for webs must also be checked. These checks are required to control out-of-plane flexing of the web due to flexure or shear under repeated live loading.

24.6.14 Design for Flexure – Service Limit State

The girder must be checked for service limit state control of permanent deflection. This check is intended to prevent objectionable permanent deflections due to expected severe traffic loadings that would impair rideability. Service II is used for this check.

In addition to the check for service limit state control of permanent deflection, the girder must also be checked for live load deflection, as described in 24.4.3.

24.6.15 Design for Flexure – Constructability Check

The girder must also be checked for flexure during construction. The girder has already been checked in its final condition when it behaves as a composite section. It is the responsibility of the contractor to ensure that allowable stresses aren't exceeded during steel erection. The engineer is to make certain allowable stresses aren't exceeded from the time the steel erection is complete through final service, including during the deck pour. In addition, check the lateral bracing without the deck slab.

Before constructability checks can be performed, the slab pouring sequence must be determined. Refer to Standard for Slab Pouring Sequence. Determine the maximum amount of concrete that can be poured in a day. Determine deflections based on the proposed pouring sequence. The effects of the deck pouring sequence will often control the design of the top flange in the positive moment regions of composite girders.

Lateral torsional buckling can occur when the compression flange is not laterally supported. The laterally unsupported compression flange tends to buckle out-of-plane between the points of lateral support. Because the tension flange is kept in line, the girder section twists when it moves laterally. This behavior is commonly referred to as lateral torsional buckling. Lateral torsional buckling is generally most critical for the moments induced during the deck pouring sequence. If lateral torsional buckling occurs, the plastic moment resistance, Mp, cannot be reached.

In addition to checking the nominal flexural resistance during construction, the nominal shear resistance must also be checked.

24.6.16 Check Wind Effects on Girder Flanges

The next step is to check wind effects on the girder flanges. Wind effects generally do not control a steel girder design, and they are generally considered for the exterior girders only.

24.6.17 Draw Schematic of Final Steel Girder Design

If all of the above specification checks are satisfied, then the trial girder section is acceptable and can be considered the final girder section. It is often useful to draw a schematic summarizing the design of the final girder section.

However, if any of the specification checks are not satisfied or if the design is found to be overly conservative, then the trial girder section must be revised appropriately, and the specification checks must be repeated for the new trial girder section.

24.6.18 Design Bolted Field Splices

If bolted field splices are used, they must be designed, as described in 24.8.

24.6.19 Design Shear Connectors

For a composite steel girder, the shear connectors must be designed, as described in 24.7.5. The shear connector spacing must be computed based on fatigue and strength limit states.

24.6.20 Design Bearing Stiffeners

The next step is to design the bearing stiffeners, as described in 24.9.

24.6.21 Design Welded Connections

Welded connections are required at several locations on the steel superstructure, and all welds must be designed. Base metal, weld metal and welding design details must conform to the requirements of the *ANSI/AASHTO/AWS Bridge Welding Code D1.5*.

In most cases, the minimum weld thickness provides a welded connection that satisfies all design requirements. Therefore, the minimum weld thickness is generally a good starting point when designing a fillet weld.

Determine the distance from the piers where field welding to the top flange for construction purposes is not permitted (other than for shear studs).

24.6.22 Design Diaphragms, Cross-Frames and Lateral Bracing

Diaphragms and cross-frames must be designed in accordance with **LRFD [6.7.4]**. Diaphragms and cross-frames may be placed at the following locations along the bridge:

- At the end of the structure
- Across interior supports
- Intermittently along the span

When investigating the need for diaphragms or cross-frames and when designing them, the following must be considered:

- Transfer of lateral wind loads from the bottom of the girder to the deck and from the deck to the bearings
- Stability of the bottom flange for all loads when it is in compression
- Stability of the top flange in compression prior to curing of the deck
- Distribution of vertical dead and live loads applied to the structure

Diaphragms or cross-frames can be specified as either temporary (if they are required only during construction) or permanent (if they are required during construction and in the bridge's final condition).

At a minimum, *AASHTO LRFD* requires that diaphragms and cross-frames be designed for the following transfer of wind loads based on **LRFD [4.6.2.7]** and for applicable slenderness requirements in accordance with **LRFD [6.8.4]** or **LRFD [6.9.3]**. In addition, connection plates must satisfy the requirements of **LRFD [6.6.1.3.1]**.

Refer to Standards 24.03 through 24.06 for information about the design of lateral bracing and end diaphragms. Consideration must be given to connection details susceptible to fatigue crack growth.

24.6.23 Determine Deflections, Camber, and Elevations

Determine the dead load deflections, blocking, camber, top of steel elevations and top of slab elevations. Camber and blocking are described in 24.4.8.

24.7 Composite Design

24.7.1 Composite Action

Composite action is present in steel girder superstructures when the steel beams or girders feature shear connectors which are embedded within the concrete slab. The shear connectors prevent slip and vertical separation between the bottom of the slab and the top of the steel member. Unless temporary shoring is used, the steel members deflect under the dead load of the wet concrete before the shear connectors become effective. However, since temporary shoring is not used in Wisconsin, composite action applies only to live loads and to portions of dead load placed after the concrete deck has hardened.

In the positive moment region, the concrete deck acts in compression and the composite section includes the slab concrete. However, in the negative moment region, the concrete deck acts in tension and the composite section includes the bar steel reinforcement in the slab.

As previously described, for LRFD, Wisconsin places shear connectors in both the positive and negative moment regions of continuous steel girder bridges, and both regions are considered composite in analysis and design computations. Negative flexure concrete deck reinforcement is considered in the section property calculations.

WisDOT policy item:

For rehabilitation projects, do not add shear studs in the negative moment region if none exist. Likewise, do not add additional studs in the positive moment region if shear connectors are provided and were designed for shear (not slab anchors on approximately 3'-0" to 4'-0" spacing).

If slab anchors are provided, consider as non-composite and add shear connectors if necessary for rating purposes. If adequate shear connector embedment into the deck is not achieved, additional reinforcement should be provided as per Figure 17.5-1.

24.7.2 Values of n for Composite Design

The effective composite concrete slab is converted to an equivalent steel area by dividing by n. For f'_c = 4 ksi, use n = 8.

f'_c	=	Minimum ultimate compressive strength of the concrete slab at 28 days
n	=	Ratio of modulus of elasticity of steel to that of concrete

The actual calculation of creep stresses in composite girders is theoretically complex and not necessary for the design of composite girders. Instead, a simple approach has been adopted for design in which a modular ratio appropriate to the duration of the load is used to compute the corresponding elastic section properties. As specified in **LRFD [6.10.1.1.1b]**, for transient loads applied to the composite section, the so-called ″short-term″ modular ratio, n, is used. However, for permanent loads applied to the composite section, the so-called ″long-term″ modular ratio, 3n, is used. The short-term modular ratio is based on the initial tangent modulus, E_c, of the concrete, while the long-term modular ratio is based on an effective apparent

modulus, E_c/k, to account for the effects of creep. In U.S. practice, a value of k equal to 3 has been accepted as a reasonable value.

24.7.3 Composite Section Properties

The minimum effective slab thickness is equal to the nominal slab thickness minus 1/2" for wearing surface. The maximum effective slab width is defined in **LRFD [4.6.2.6]**.

24.7.4 Computation of Stresses

24.7.4.1 Non-composite Stresses

For non-composite sections, flexural stresses are computed using only non-composite (steel-only) section properties, as follows:

$$f_b = \frac{\text{DLM (DC1)}}{\text{S(steel only)}} + \frac{\text{DLM (DC2 \& DW)}}{\text{S(steel only)}} + \frac{\text{LLM (Traffic)}}{\text{S(steel only)}} + \frac{\text{LLM (Pedestrian)}}{\text{S(steel only)}}$$

24.7.4.2 Composite Stresses

For composite sections, flexural stresses in the steel girder subjected to positive flexure are computed using appropriate non-composite (steel-only) and composite section properties, as follows:

$$f_b = \frac{\text{DLM (DC1)}}{\text{S(steel only)}} + \frac{\text{DLM (DC2 \& DW)}}{\text{S(composite,3n)}} + \frac{\text{LLM (Traffic)}}{\text{S(composite,n)}} + \frac{\text{LLM (Pedestrian)}}{\text{S(composite,n)}}$$

For composite sections, flexural stresses in the concrete deck subjected to positive flexure are computed as follows:

$$f_b = \frac{\text{DLM(DC2 + DW)}}{\text{S(composite,n)}} + \frac{\text{LLM(Traffic)}}{\text{S(composite,n)}} + \frac{\text{LLM(Pedestrian)}}{\text{S(Composite,n)}}$$

Where:

f_b	=	Computed steel flexural stress
DLM	=	Dead lead moment
LLM	=	Live load moment
S	=	Elastic section modulus
DC1	=	DC dead load resisted by the steel section only (for example, steel girder, concrete deck, concrete haunch, cross-frames and stiffeners)

DC2	=	DC dead load resisted by the composite section (for example, concrete parapets)
DW	=	Dead load due to future wearing surface and utilities

24.7.5 Shear Connectors

Refer to Standard for Plate Girder Details for shear connector details. Three shop or field welded 7/8" diameter studs at a length of 5" are placed on the top flange. The studs are equally spaced with a minimum clearance of 1 1/2" from the edge of the flange. On girders having thicker haunches where stud embedment is less than 2" into the slab, longer studs should be used to obtain the minimum embedment of 2".

Connectors which fall on the flange field splice plates should be repositioned near the ends of the splice plate. The maximum spacing of shear connectors is 2'. Connector spacings should begin a minimum of 9" from the centerline of abutments.

To determine the locations of shear connectors along the length of the girder, two general requirements must be satisfied:

- Spacing (or pitch) requirements governed by fatigue, as presented in **LRFD [6.10.10.1]**
- Number of connector requirements governed by strength, as presented in **LRFD [6.10.10.4]**

For the fatigue limit state, the pitch, p, of the shear connectors must satisfy the following equation:

$$p \leq \frac{nZ_r}{V_{sr}}$$

Where:

N	=	Number of shear connectors in a cross section
V_{sr}	=	Horizontal fatigue shear range per unit length (kips/in.)
Z_r	=	Shear fatigue resistance of an individual shear connector determined as specified in **LRFD [6.10.10.2]** (kips)

When computing the value for V_{sr}, the maximum value of composite moment of inertia in the span can be used.

For the strength limit state, the minimum number of required shear connectors, n, is computed for a given region according to the following equation:

$$n = \frac{P}{Q_r}$$

Where:

P = Total nominal shear force determined as specified in **LRFD [6.10.10.4.2]** (kips)

Q_r = Factored shear resistance of one shear connector (kips)

The given regions over which the required number of shear connectors is distributed are defined based on the point of maximum moment due to live load plus dynamic load allowance. This value is used because it applies to the composite section and is easier to locate than a maximum of the sum of all the moments acting on the composite section.

In most cases, the connector spacing (using three connectors per row) based on fatigue requirements is more than adequate for the strength design requirements. However for relatively long spans, additional shear connectors may be required to satisfy the strength design requirements.

In addition to the above general requirements, special shear connector requirements at points of permanent load contraflexure are presented in **LRFD [6.10.10.3]**.

Additional information and equations used for LRFD design of shear connectors are presented in **LRFD [6.10.10]**. In addition, a design example for shear connectors is also provided in this *Bridge Manual*.

24.7.6 Continuity Reinforcement

For continuous steel girder bridges, continuity reinforcement in the concrete deck must be considered in regions of negative flexure, as specified in **LRFD [6.10.1.7]**. Continuity reinforcement consisting of small bars with close spacing is intended to control concrete deck cracking.

If the longitudinal tensile stress in the concrete deck due to either the factored construction loads or the Service II load combination exceeds ϕf_r, then the following continuity reinforcement requirements must be satisfied:

- The total cross-sectional area of the longitudinal reinforcement in the deck shall be greater than or equal to one percent of the total cross-sectional area of the concrete deck.
- The required reinforcement shall be placed in two layers uniformly distributed across the deck width, with two-thirds being in the top layer and one-third in the bottom layer.

- The specified minimum yield strength, fy, of the reinforcing steel shall not be less than 60 ksi.
- The size of the reinforcement bars shall not exceed No. 6 bars.
- The spacing of the reinforcement bars shall not exceed 12 inches.

Tables 17.5-3 and 17.5-4 meet the criteria specified above.

In computing ϕf_r, f_r shall be taken as the modulus of rupture of the concrete (see **LRFD [5.4.2.6]**) and ϕ shall be taken as 0.90, which is the appropriate resistance factor for concrete in tension (see **LRFD [5.5.4.2]**). The longitudinal stresses in the concrete deck are computed as specified in **LRFD [6.10.1.1.1d]**. Superimposed dead loads and live loads are considered to be resisted by the composite section using the short-term modular ratio, n. Non-composite dead loads are supported by the girders alone.

Terminate the continuity reinforcement at the point of non-composite dead load contraflexure plus a development length. The bars are lapped to No. 4 bars.

For non-composite slabs in the negative moment region (on rehabilitation projects), extend the longitudinal reinforcement in Tables 17.5-3 and 17.5-4 a development length beyond the first shear connectors.

24.8 Field Splices

24.8.1 Location of Field Splices

Field splices shall be placed at the following locations whenever it is practical:

- At or near a point of dead load contraflexure for continuous spans
- Such that the maximum rolling length of the flange plates is not exceeded, thus eliminating one or more butt splices
- At a point where the fatigue in the net section of the base metal is minimized
- Such that section lengths between splices are limited to 120', unless special conditions govern

24.8.2 Splice Material

For homogeneous girders, the splice material is the same as the members being spliced. Generally, 3/4" diameter high-strength A325 bolted friction-type connectors, conforming to ASTM F3125, are used unless the proportions of the structure warrant larger diameter bolts.

24.8.3 Design

The following is a general description of the basic steps required for field splice design. These procedures and the accompanying equations are described in greater detail in **LRFD [6.13.6]**.

24.8.3.1 Obtain Design Criteria

The first design step is to identify the appropriate design criteria. This includes defining material properties, identifying relevant superstructure information and determining the splice location based on the criteria presented in 24.8.1.

Resistance factors used for field splice design are as presented in 17.2.6.

When calculating the nominal slip resistance of a bolt in a slip-critical connection, the value of the surface condition factor, K_s, shall be taken as follows for the surfaces in contact (faying):

- For steel with fully painted surfaces, use Ks = 0.30.
- For unpainted, blast-cleaned steel or steel with organic zinc paint, use Ks = 0.50.

Where a section changes at a splice, the smaller of the two connected sections should be used in the design, as specified in **LRFD [6.13.6.1.1]**.

24.8.3.1.1 Section Properties Used to Compute Stresses

The section properties used to compute stresses are described in **LRFD [6.10.1.1.1]**.

For calculating flexural stresses in sections subjected to positive flexure, the composite sections for short-term (transient) and long-term (permanent) moments shall be based on n and 3n, respectively.

For calculating flexural stresses in sections subjected to negative flexure, the composite section for both short-term and long-term moments shall consist of the steel section and the longitudinal reinforcement within the effective width of the concrete deck, except as specified otherwise in **LRFD [6.6.1.2.1]**, **LRFD [6.10.1.1.1d]** or **LRFD [6.10.4.2.1]**.

WisDOT policy item:

When computing composite section properties based on the steel section and the longitudinal reinforcement within the effective width of the concrete deck, only the top layer of reinforcement shall be considered.

Where moments due to short-term and long-term loads are of opposite sign at the strength limit state, the associated composite section may be used with each of these moments if the resulting net stress in the concrete deck due to the sum of the factored moments is compressive. Otherwise, the provisions of **LRFD [6.10.1.1.1c]** shall be used to determine the stresses in the steel section. Stresses in the concrete deck shall be determined as specified in **LRFD [6.10.1.1.1d]**.

However, for members with shear connectors provided throughout their entire length that also satisfy the provisions of **LRFD [6.10.1.7]**:

- Flexural stresses caused by Service II loads applied to the composite section may be computed using the short-term or long-term composite section, as appropriate, assuming the concrete deck is effective for both positive and negative flexure, as described in **LRFD [6.10.4.2.1]**.

- Live load stresses and stress ranges for fatigue design may be computed using the short-term composite section assuming the concrete deck to be effective for both positive and negative flexure, as described in **LRFD [6.6.1.2.1]**.

WisDOT policy item:

When stresses at the top and bottom of the web are required for web splice design, the flange stresses at the mid-thickness of the flanges can be conservatively used. This allows use of the same stress values for both the flange and web splices, which simplifies the calculations.

24.8.3.1.2 Constructability

As described in **LRFD [6.13.6.1.4a]**, splice connections shall be proportioned to prevent slip during the erection of the steel and during the casting of the concrete deck.

24.8.3.2 Compute Flange Splice Design Loads

Commercially available software programs can be used to obtain the design dead loads and live loads at the splice. The live loads should include dynamic load allowance and distribution factors.

Splices are typically designed for the Strength I, Service II and Fatigue I load combinations. The load factors for these load combinations are presented in 17.2.5. The stresses corresponding to these load combinations should be computed at the mid-thickness of the top and bottom flanges.

24.8.3.2.1 Factored Loads

For the Strength I and Service II load combinations, factored loads must be computed for the following two cases:

- Case 1: Dead load + Positive live load
- Case 2: Dead load + Negative live load

For the Fatigue I load combination, the following two load cases are used to compute the factored loads:

- Case 1: Positive live load
- Case 2: Negative live load

Minimum and maximum load factors are applied as appropriate to compute the controlling loading.

24.8.3.2.2 Section Properties

Section properties based on the gross area of the steel girder are used for computation of the maximum flexural stresses due to the factored loads for the Strength I, Service II and Fatigue I load combinations, as described in **LRFD [6.13.6.1.4a]** and **LRFD [C6.13.6.1.4a]**.

24.8.3.2.3 Factored Stresses

After the factored loads and section properties have been computed, factored stresses must be computed for each of the following cases:

- Strength I load combination – Dead load + Positive live load
- Strength I load combination – Dead load + Negative live load
- Service II load combination – Dead load + Positive live load
- Service II load combination – Dead load + Negative live load

- Fatigue I load combination – Positive live load
- Fatigue I load combination – Negative live load

Factored stresses are computed by dividing the factored moments by the appropriate section moduli.

24.8.3.2.4 Controlling Flange

As described in **LRFD [C6.13.6.1.4c]**, the controlling flange is defined as either the top or bottom flange for the smaller section at the point of splice, whichever flange has the maximum ratio of the elastic flexural stress at its mid-thickness due to the factored loads for the loading condition under investigation to its factored flexural resistance. The other flange is termed the non-controlling flange. In areas of stress reversal, the splice must be checked independently for both positive and negative flexure. For composite sections in positive flexure, the controlling flange is typically the bottom flange. For sections in negative flexure, either flange may qualify as the controlling flange.

24.8.3.2.5 Flange Splice Design Forces

After the factored stresses have been computed, the flange splice design forces can be computed as specified in **LRFD [6.13.6.1.4c]**. The design forces are computed for both the top and bottom flange for each load case (positive and negative live load). For the Strength I load combination, the design force is computed as the design stress times the smaller effective flange area on either side of the splice. When a flange is in compression, the gross flange area is used.

Service II load combination design forces must also be computed. As specified in **LRFD [6.13.6.1.4c]**, bolted connections for flange splices should be designed as slip-critical connections for the service level flange design force. This design force is computed as the Service II design stress multiplied by the smaller gross flange area on either side of the splice.

The flange slip resistance must exceed the larger of the following:

- Service II flange forces
- Factored flange forces from the moments at the splice due to constructability (erection and/or deck pouring sequence), as described in **LRFD [6.13.6.1.4a]**

For the Fatigue I load combination, the stress range at the mid-thickness of both flanges must be computed.

24.8.3.3 Design Flange Splice Plates

The next step is to design the flange splice plates. The width of the outside plate should be at least as wide as the width of the narrowest flange at the splice. The width of the inside plate must allow sufficient clearance for the web and for inserting and tightening the web and flange

splice bolts. Fill plates are used when the flange plate thickness changes at the splice location. A typical flange splice configuration is presented in Figure 24.8-1.

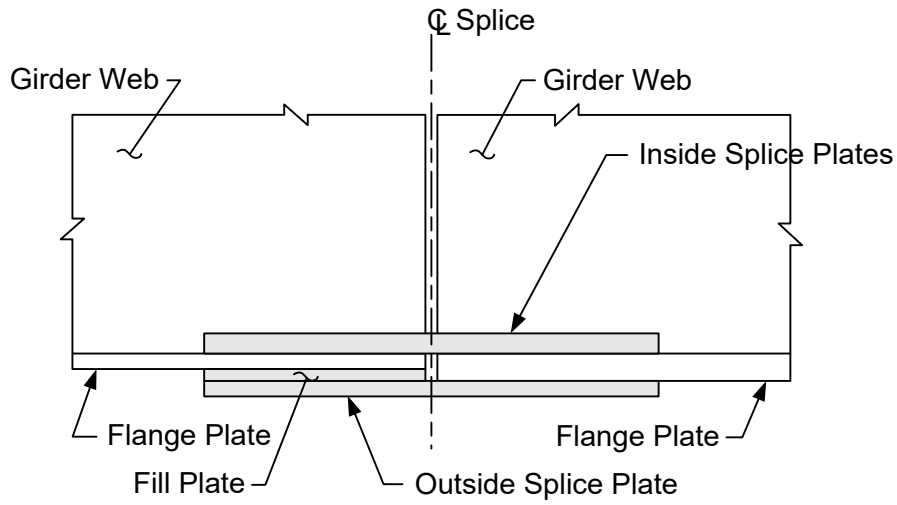

Figure 24.8-1
Bottom Flange Splice Configuration

If the combined area of the inside splice plates is within ten percent of the area of the outside splice plate, then both the inside and outside splice plates may be designed for one-half the flange design force, as described in **LRFD [C6.13.6.1.4c]**. However, if the areas of the inside and outside splice plates differ by more than ten percent, then the flange design force should be proportioned to the inside and outside splice plates. This is calculated by multiplying the flange design force by the ratio of the area of the splice plate under consideration to the total area of the inner and outer splice plates.

24.8.3.3.1 Yielding and Fracture of Splice Plates

The design force in the splice plates at the Strength I load combination shall not exceed the factored resistances for yielding and fracture, as described in **LRFD [6.13.5.2]** and **LRFD [6.8.2]**.

For a tension member, the net width shall be determined for each chain of holes extending across the member along any transverse, diagonal or zigzag line. This is determined by subtracting from the width of the element the sum of the width of all holes in the chain and adding the quantity $s^2/4g$ for each space between consecutive holes in the chain. For non-staggered holes, the minimum net width is the width of the element minus the width of bolt holes in a line straight across the width.

For a compression member, the gross area is used for these design checks.

24.8.3.3.2 Block Shear

All tension connections, including connection plates, splice plates and gusset plates, shall be investigated to ensure that adequate connection material is provided to develop the factored resistance of the connection. Block shear rupture resistance is described in **LRFD [6.13.4]**. A bolt pattern must be assumed prior to checking an assumed block shear failure mode.

Block shear rupture will usually not govern the design of splice plates of typical proportion.

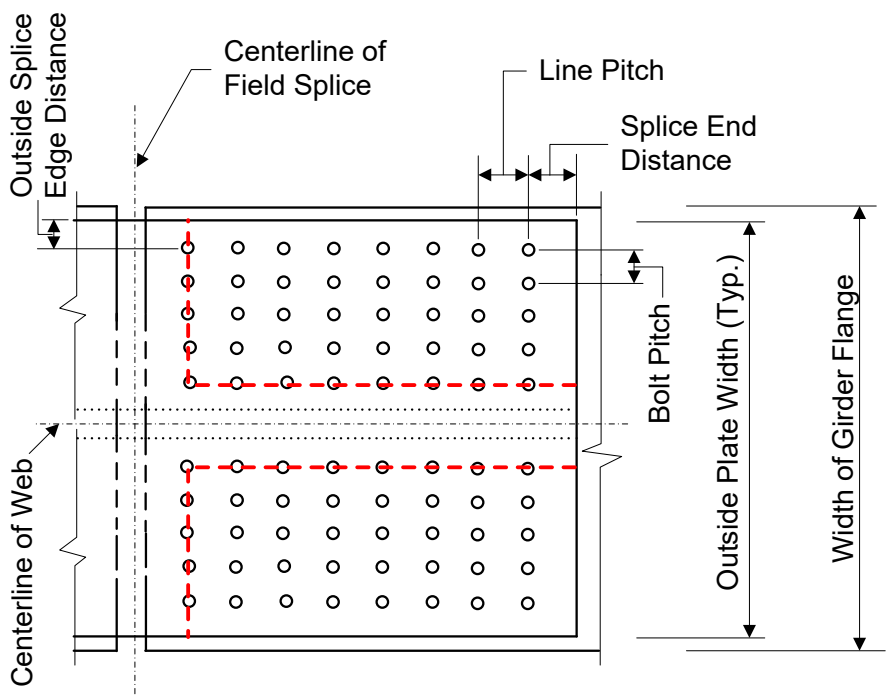

Figure 24.8-2
Double – L Block Shear Path, Flange and Splice Plates

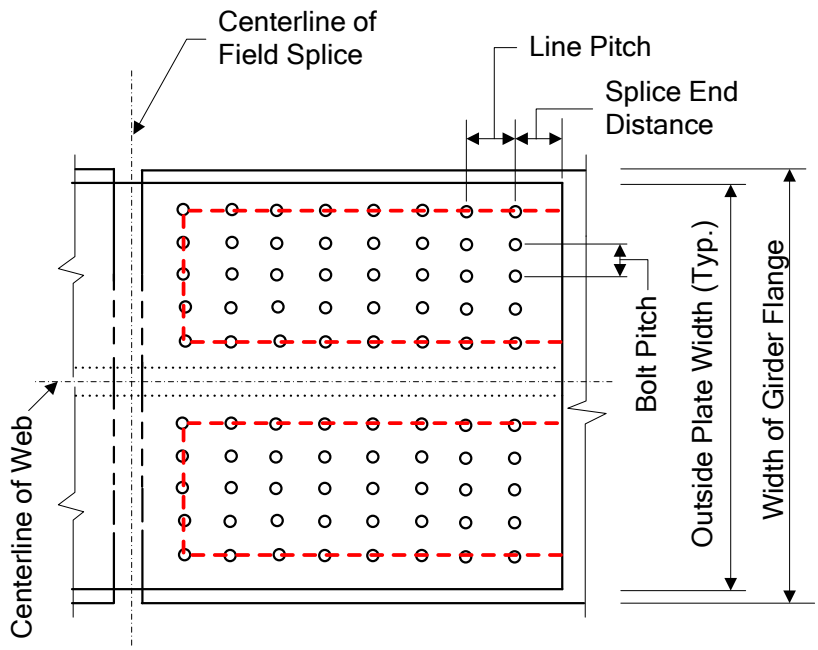

Figure 24.8-3
Double – U Block Shear Path, Flange and Splice Plates

24.8.3.3.3 Net Section Fracture

When checking flexural members at the Strength I load combination or for constructability, all cross sections containing holes in the tension flange must satisfy the fracture requirements of **LRFD [6.10.1.8]**.

24.8.3.3.4 Fatigue of Splice Plates

Check the fatigue stresses in the base metal of the flange splice plates adjacent to the slip-critical connections. Fatigue normally does not govern the design of the splice plates. However, a fatigue check of the splice plates is recommended whenever the area of the flange splice plates is less than the area of the smaller flange to which they are attached.

The fatigue detail category under the condition of Mechanically Fastened Connections for checking the base metal at the gross section of high-strength bolted slip-resistant connections is Category B.

24.8.3.3.5 Control of Permanent Deformation

A check of the flexural stresses in the splice plates at the Service II load combination is not explicitly specified in *AASHTO LRFD*. However, whenever the combined area of the inside and outside flange splice plates is less than the area of the smaller flange at the splice, such a check is recommended.

24.8.3.4 Design Flange Splice Bolts

After the flange splice plates have been designed, the flange splice bolts must be designed for shear, slip resistance, spacing, edge distance and bearing requirements.

24.8.3.4.1 Shear Resistance

Shear resistance computations for bolted connections are described in **LRFD [6.13.2.7]**. The first step is to determine the number of bolts for the flange splice plates that are required to develop the Strength I design force in the flange in shear, assuming the bolts in the connection have slipped and gone into bearing. A minimum of two rows of bolts should be provided to ensure proper alignment and stability of the girder during construction.

The factored resistance of the bolts in shear must be determined, assuming the threads are excluded from the shear planes. For the flange splice bolts, the number of bolts required to provide adequate shear strength is determined by assuming the design force acts on two shear planes, known as double shear.

Requirements for filler plates are presented in **LRFD [6.13.6.1.5]**. When bolts carrying loads pass through fillers 0.25 inches or more in thickness in axially loaded connections, including girder flange splices, either of the following is required:

- The fillers shall be extended beyond the gusset or splice material and shall be secured by enough additional bolts to distribute the total stress in the member uniformly over the combined section of the member and the filler.

- The fillers need not be extended and developed provided that the factored resistance of the bolts in shear at the Strength I load combination is reduced by the factor presented in **LRFD [6.13.6.1.5]**.

24.8.3.4.2 Slip Resistance

As specified in **LRFD [6.13.6.1.4c]**, bolted connections for flange splices shall be designed as slip-critical connections for the Service II flange design force or the flange design force from constructability, whichever governs. Slip resistance computations for bolted connections are described in **LRFD [6.13.2.8]**.

When checking for slip of the bolted connection for a flange splice with inner and outer splice plates, the slip resistance should always be determined by dividing the flange design force equally to the two slip planes, regardless of the ratio of the splice plate areas. Slip of the connection cannot occur unless slip occurs on both planes.

24.8.3.4.3 Bolt Spacing

The minimum spacing between centers of bolts in standard holes shall be no less than three times the diameter of the bolt.

The maximum spacing for sealing must be checked to prevent penetration of moisture in the joints, in accordance with **LRFD [6.13.2.6.2]**. Sealing must be checked for a single line adjacent to a free edge of an outside plate or shape (for example, when the bolts along the edges of the plate are parallel to the direction of the applied force) and along the free edge at the end of the splice plate.

24.8.3.4.4 Bolt Edge Distance

Edge distance requirements must be checked as specified in **LRFD [6.13.2.6.6]**. The minimum required edge distance is measured as the distance from the center of any bolt in a standard hole to an edge of the plate.

The maximum edge distance shall not be more than eight times the thickness of the thinnest outside plate or 5.0 inches.

24.8.3.4.5 Bearing at Bolt Holes

Finally, bearing at the bolt holes must be checked, as specified in **LRFD [6.13.2.9]**. The flange splice bolts are checked for bearing of the bolts on the connected material under the maximum Strength I design force. The design bearing strength of the connected material is calculated as the sum of the bearing strengths of the individual bolt holes parallel to the line of the applied force.

If the bearing resistance is exceeded, it is recommended that the edge distance be increased slightly, in lieu of increasing the number of bolts or thickening the flange splice plates.

24.8.3.5 Compute Web Splice Design Loads

The next step is to compute the web splice design loads for each of the following cases:

- Strength I load combination – Dead load + Positive live load
- Strength I load combination – Dead load + Negative live load
- Service II load combination – Dead load + Positive live load
- Service II load combination – Dead load + Negative live load
- Fatigue I load combination – Positive live load
- Fatigue I load combination – Negative live load

As specified in **LRFD [6.13.6.1.4b]**, web splice plates and their connections shall be designed for the following loads:

- Girder shear forces at the splice location
- Moment due to the eccentricity of the shear at the point of splice

- The portion of the flexural moment assumed to be resisted by the web at the point of the splice

24.8.3.5.1 Girder Shear Forces at the Splice Location

As previously described, any number of commercially available software programs can be used to obtain the design dead loads and live loads at the splice. The live loads must include dynamic load allowance and distribution factors.

24.8.3.5.2 Web Moments and Horizontal Force Resultant

Because the portion of the flexural moment assumed to be resisted by the web is to be applied at the mid-depth of the web, a horizontal design force resultant must also be applied at the mid-depth of the web to maintain equilibrium. The web moment and horizontal force resultant are applied together to yield a combined stress distribution equivalent to the unsymmetrical stress distribution in the web. For sections with equal compressive and tensile stresses at the top and bottom of the web (that is, with the neutral axis located at the mid-depth of the web), the horizontal design force resultant will equal zero.

In the computation of the portion of the flexural moment assumed to be resisted by the web and the horizontal design force resultant in the web, the flange stresses at the midthickness of the flanges can be conservatively used, as described in **LRFD [C6.13.6.1.4b]**. This allows use of the same stress values for both the flange and web splices, which simplifies the calculations.

The moment due to the eccentricity of the design shear is resisted solely by the web and always acts about the mid-depth of the web (that is, the horizontal force resultant is zero). This moment is computed as the design shear times the distance from the centerline of the splice to the centroid of the connection on the side of the joint under consideration.

The total web moment for each load case is computed as the sum of these two moments.

In general, the web splice is designed under the conservative assumption that the maximum moment and shear at the splice will occur under the same loading condition.

24.8.3.6 Design Web Splice Plates

After the web splice design forces are computed, the web splice must be designed. First, a preliminary web splice bolt pattern is determined. The outermost rows of bolts in the web splice plate must provide sufficient clearance from the flanges to provide clearance for assembly (see the *AISC Manual of Steel Construction* for required bolt assembly clearances). The web is spliced symmetrically by plates on each side with a thickness not less than one-half the thickness of the web. A typical web splice configuration is presented in Figure 24.8-4.

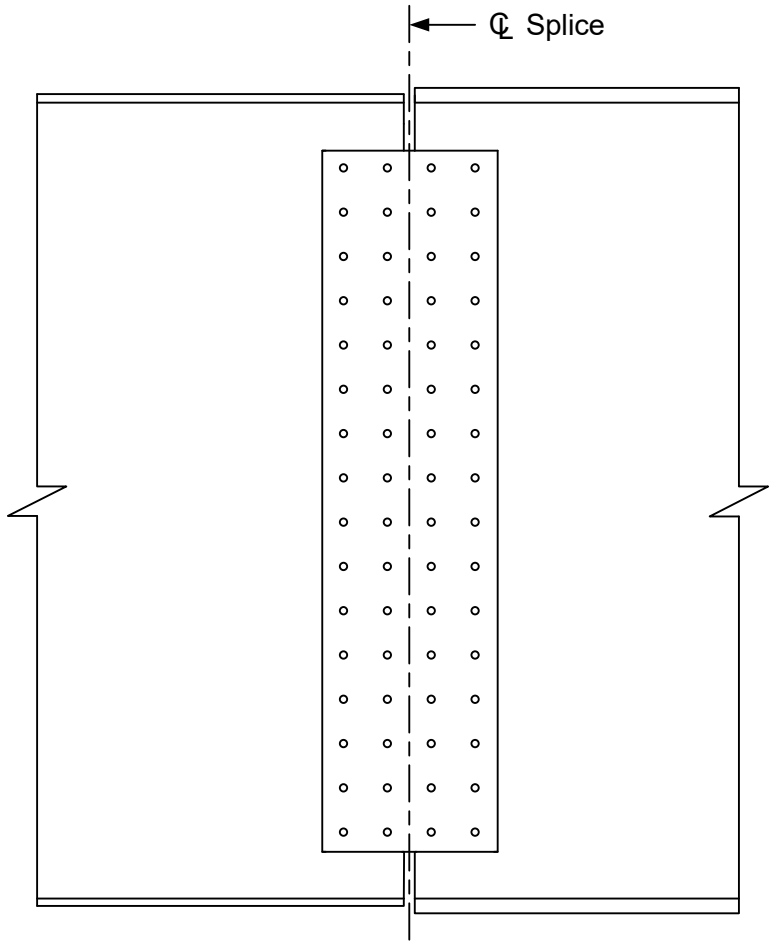

Figure 24.8-4
Web Splice Configuration

The web splice plates should be extended as near as practical the full depth of the web between flanges without impinging on bolt assembly clearances. Also, at least two vertical rows of bolts in the web on each side of the splice should be used. This may result in an over-designed web splice, but it is considered good engineering practice.

24.8.3.6.1 Shear Yielding of Splice Plates

Shear yielding on the gross section of the web splice plates must be checked under the Strength I design shear force, as specified in **LRFD [6.13.6.1.4b]**.

24.8.3.6.2 Fracture and Block Shear Rupture of the Web Splice Plates

Fracture must be investigated on the net section extending across the full plate width, in accordance with **LRFD [6.13.6.1.4b]**. In addition, block shear rupture resistance must be checked in accordance with **LRFD [6.13.4]**. Connection plates, splice plates and gusset plates shall be investigated to ensure that adequate connection material is provided to develop the

factored resistance of the connection. Strength I load combination checks for fracture on the net section of web splice plates and block shear rupture normally do not govern for plates of typical proportion.

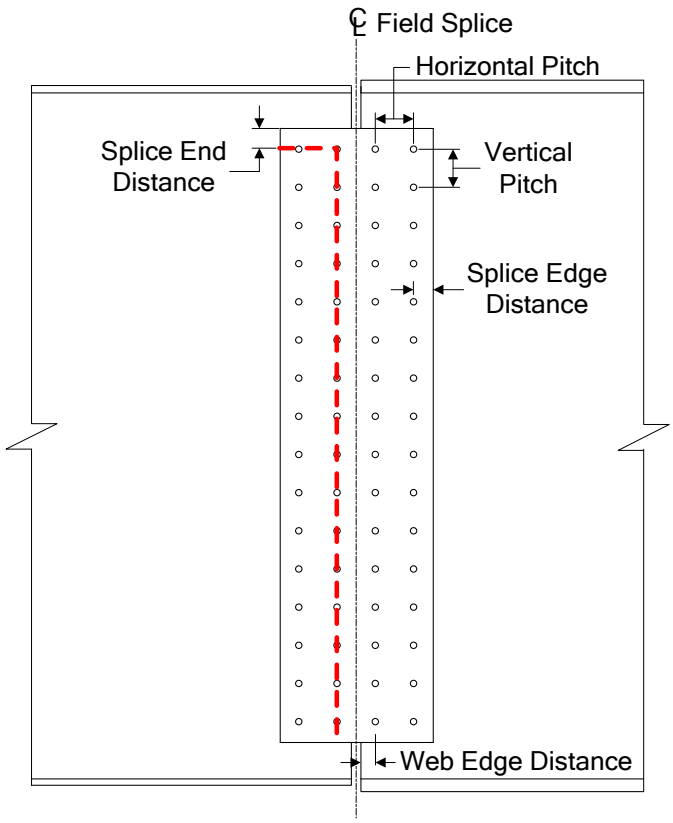

Figure 24.8-5
Block Shear Path, Web Splice

24.8.3.6.3 Flexural Yielding of Splice Plates

Flexural yielding on the gross section of the web splice plates must be checked for the Strength I load combination due to the total web moment and the horizontal force resultant. Flexural yielding must be checked for dead load and positive live load, as well as dead load and negative live load. Flexural yielding of splice plates is checked in accordance with **LRFD [6.13.6.1.4b]**.

24.8.3.6.4 Fatigue of Splice Plates

In addition, fatigue of the splice plates must be checked. Fatigue is checked at the edge of the splice plates which is subject to a net tensile stress. The normal stresses at the edge of the splice plates due to the total positive and negative fatigue load web moments and the corresponding horizontal force resultants are computed.

Check the fatigue stresses in the base metal of the web splice plates adjacent to the slip-critical connections. Fatigue normally does not govern the design of the splice plates. However, a fatigue check of the splice plates is recommended whenever the area of the web splice plates is less than the area of the web at the splice.

The fatigue detail category under the condition of Mechanically Fastened Connections for checking the base metal at the gross section of high-strength bolted slip-resistant connections is Category B.

WisDOT policy item:

For the Fatigue I load combination, the stress range at the mid-thickness of both flanges may be used when checking fatigue in the web.

24.8.3.7 Design Web Splice Bolts

Similar to the flange splice bolts, the web splice bolts must be designed for shear, slip resistance, spacing, edge distance and bearing requirements. These bolt requirements are described in 24.8.3.4.

24.8.3.7.1 Shear in Web Splice Bolts

Shear in the web splice bolts is checked in accordance with **LRFD [6.13.6.1.4b]**. The polar moment of inertia, I_p, of the bolt group on each side of the web centerline with respect to the centroid of the connection is computed as follows:

$$I_p = \frac{n \cdot m}{12} \cdot \left[s^2 \cdot \left(n^2 - 1\right) + g^2 \cdot \left(m^2 - 1\right)\right]$$

Where:

n	=	Number of bolts in each vertical row
m	=	Number of vertical rows of bolts
s	=	Vertical pitch of bolts (inches)
g	=	Horizontal pitch of bolts (inches)

The polar moment of inertia is required to determine the shear force in a given bolt due to the applied web moments. Shear in the web splice bolts is checked for each of the following cases:

- Strength I load combination – Dead load + Positive live load
- Strength I load combination – Dead load + Negative live load
- Service II load combination – Dead load + Positive live load

- Service II load combination – Dead load + Negative live load

Under the most critical combination of the design shear, moment and horizontal force, it is assumed that the bolts in the web splice have slipped and gone into bearing. The shear strength of the bolts are computed assuming double shear and assuming the threads are excluded from the shear planes.

Since the bolt shear strength for both the flange and web splices is based on the assumption that the threads are excluded from the shear planes, an appropriate note should be placed on the drawings to ensure that the splice is detailed to exclude the bolt threads from the shear planes.

24.8.3.7.2 Bearing Resistance at Bolt Holes

Bearing of the web splice bolts on the connected material must be checked for the Strength I load combination, assuming the bolts have slipped and gone into bearing, as specified in **LRFD [6.13.2.9]**. The design bearing strength of the girder web at the location of the extreme bolt in the splice is computed as the minimum resistance along the two orthogonal shear failure planes shown in Figure 24.8-6. The maximum force (vector resultant) acting on the extreme bolt is compared to this calculated strength, which is conservative since the components of this force parallel to the failure surfaces are smaller than the maximum force.

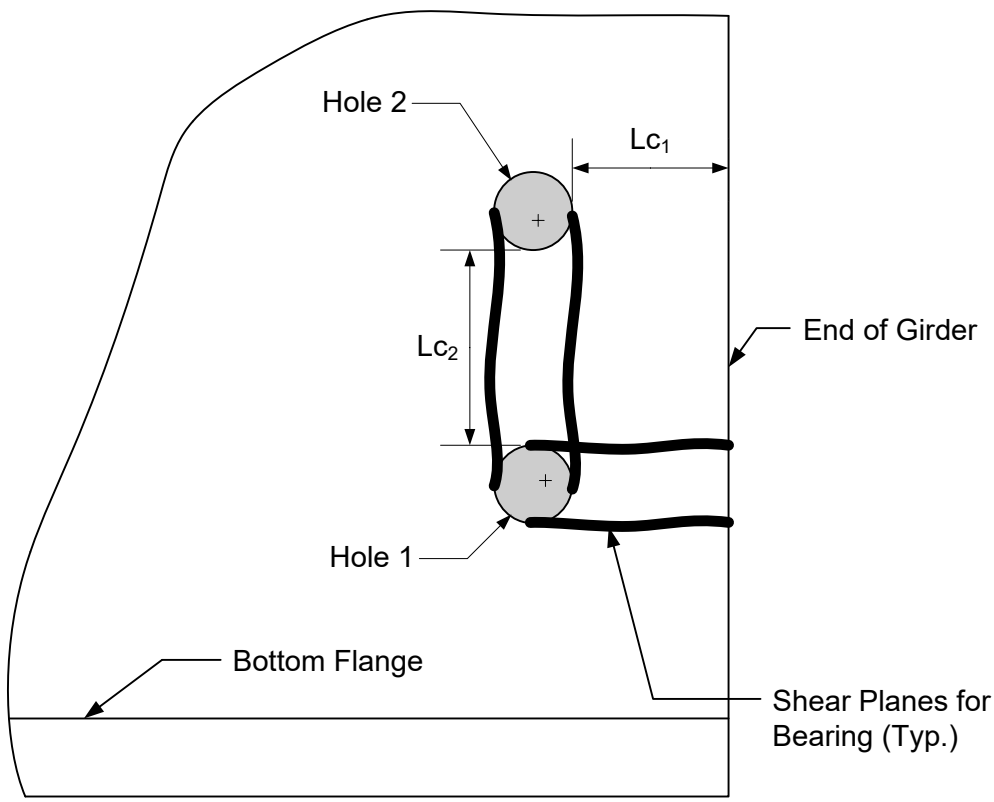

Figure 24.8-6
Bearing Resistance at Girder Web Bolt Holes

To determine the applicable equation for the calculation of the nominal bearing resistance, the clear distance between holes and the clear end distance must be calculated and compared to the value of two times the nominal diameter of the bolt. If the bearing resistance is exceeded, it is recommended that the edge distance be increased slightly, in lieu of increasing the number of bolts or thickening the web splice plates.

24.8.3.8 Schematic of Final Splice Configuration

After the flange splice plates, flange splice bolts, web splice plates and web splice bolts have been designed and detailed, a schematic of the final splice configuration can be developed. A sample schematic of a final splice configuration is presented in Figure 24.8-7.

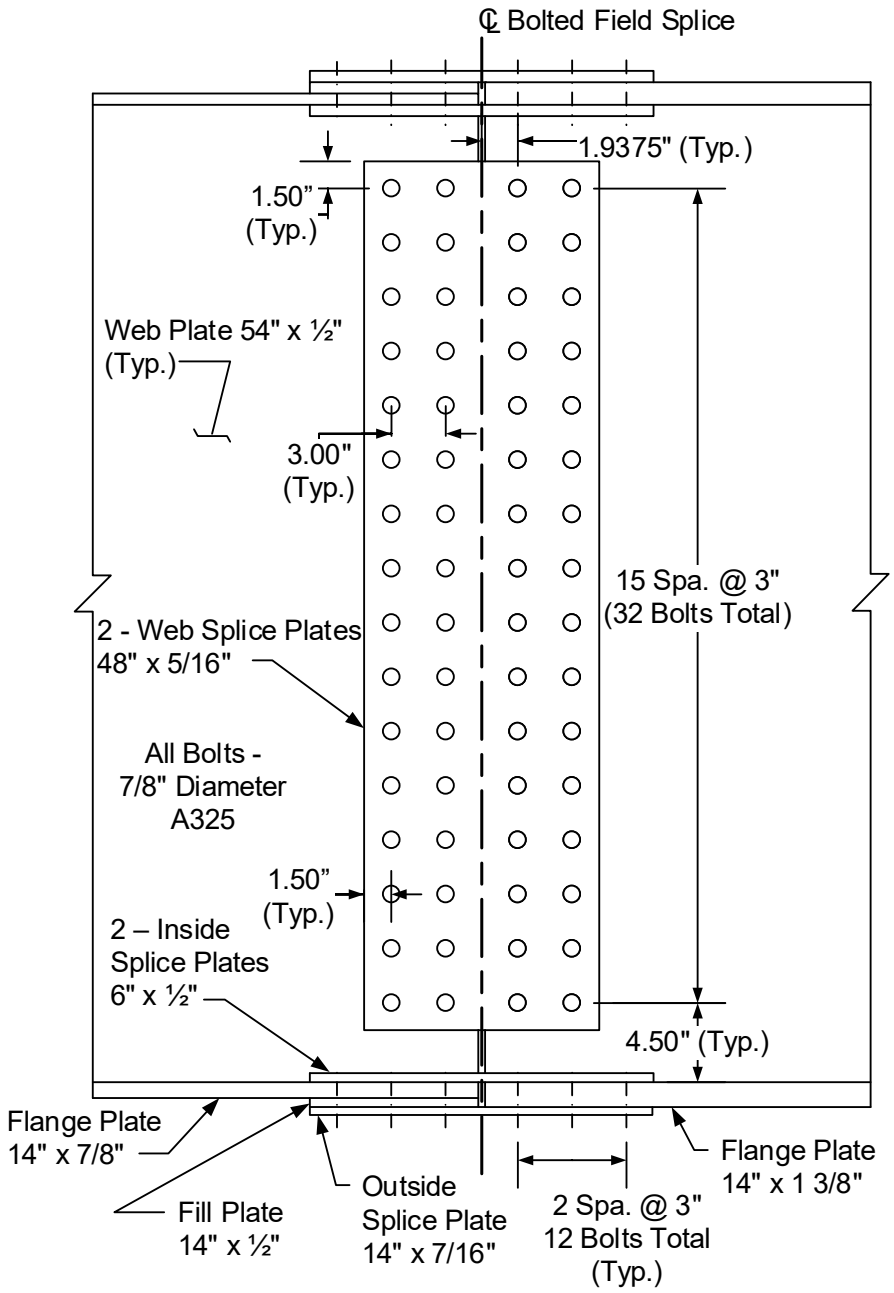

Figure 24.8-7
Sample Schematic of Final Splice Configuration

The schematic includes all plates, dimensions, bolt spacings, edge distances and bolt material and diameter.

A design example for field splices is provided in this *Bridge Manual*.

24.9 Bearing Stiffeners

For skew angles greater than 15°, bearing stiffeners are placed normal to the web of the girder. However, for skew angles of 15° or less, they may be placed parallel to the skew at the abutments and piers to support the end diaphragms or cross framing.

For structures on grades of 3 percent or greater, the end of the girder section at joints is to be cut vertical. This eliminates the large extension and clearance problems at the abutments.

24.9.1 Plate Girders

As specified in **LRFD [6.10.11.2.1]**, bearing stiffeners must be placed on the webs of built-up sections at all bearing locations. Bearing stiffeners are placed over the end bearings of welded plate girders and over the intermediate bearings of continuous welded plate girders. The bearing stiffeners extend as near as practical to the outer edges of the flange plate. They consist of two or more plates placed on both sides of the web. They are ground to a tight fit and fillet welded at the top flange, welded to the web on both sides with the required fillet weld and attached to the bottom flange with full penetration groove welds.

24.9.2 Rolled Beams

At bearing locations on rolled shapes and at other locations on built-up sections or rolled shapes subjected to concentrated loads, where the loads are not transmitted through a deck or deck system, either bearing stiffeners must be provided or else the web must satisfy the provisions of **LRFD [D6.5]** (Appendix D to Section 6). According to the provisions of **LRFD [D6.5]**, webs without bearing stiffeners at the indicated locations are to be investigated for the limit states of web local yielding and web crippling. The section must either be modified to comply with these requirements or else bearing stiffeners must be placed on the web at the locations under consideration.

24.9.3 Design

The design of bearing stiffeners is covered in **LRFD [6.10.11.2]**. Bearing stiffeners, which are aligned vertically on the web, are designed as columns to resist the reactions at bearing locations and at other locations subjected to concentrated loads where the loads are not transmitted through a deck or deck system.

24.9.3.1 Projecting Width

As specified in **LRFD [6.10.11.2.2]**, the projecting width, b_t, of each bearing stiffener element must satisfy the following requirement in order to prevent local buckling of the bearing stiffener plates:

$$b_t \leq 0.48 t_p \sqrt{\frac{E}{F_{ys}}}$$

Where:

t_p = Thickness of the projecting stiffener element (in.)

E = Modulus of elasticity of stiffener (ksi)

F_{ys} = Specified minimum yield strength of the stiffener (ksi)

The projecting width and thickness of the projecting stiffener element are illustrated in Figure 24.9-1.

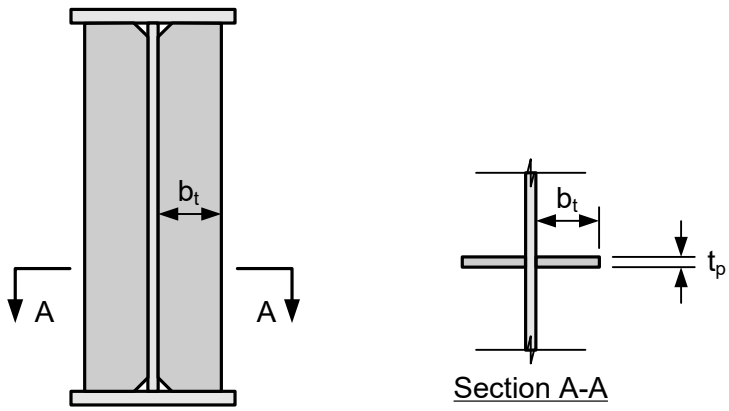

Figure 24.9-1
Projecting Width of a Bearing Stiffener

24.9.3.2 Bearing Resistance

Bearing stiffeners must be clipped to clear the web-to-flange fillet welds and to bring the stiffener plates tight against the flange through which they receive their load. As a result, the area of the plates in direct bearing on the flange is less than the gross area of the plates. As specified in **LRFD [6.10.11.2.3]**, the factored bearing resistance, $(R_{sb})_r$, of the fitted ends of bearing stiffeners is to be taken as:

$$(R_{sb})_r = \phi_b (R_{sb})_n$$

Where:

ϕ_b = Resistance factor for bearing on milled surfaces specified in **LRFD [6.5.4.2]** (= 1.0)

$(R_{sb})_n$ = Nominal bearing resistance for the fitted ends of bearing stiffeners (kips) = 1.4 $A_{pn}F_{ys}$ (**LRFD [6.10.11.2.3-2]**)

A_{pn} = Area of the projecting elements of the stiffener outside of the web-to-flange fillet welds but not beyond the edge of the flange (in^2)

F_{ys} = Specified minimum yield strength of the stiffener (ksi)

24.9.3.3 Axial Resistance

As previously mentioned, bearing stiffeners are designed as columns. As specified in **LRFD [6.10.11.2.4a]**, the factored axial resistance of the stiffeners, P_r, is to be determined as specified in **LRFD [6.9.2.1]** using the specified minimum yield strength of the stiffener plates, F_{ys}, in order to account for the effect of any early yielding of lower strength stiffener plates. The factored resistance of components in axial compression is given in **LRFD [6.9.2.1]** as:

$$P_r = \phi_c P_n$$

Where:

ϕ_c = Resistance factor for axial compression specified in **LRFD [6.5.4.2]** (= 0.90)

P_n = Nominal compressive resistance specified in **LRFD [6.9.4.1]** (kips)

For bearing stiffeners, the nominal compressive resistance, P_n, is computed as follows, based on **LRFD [6.9.4.1]**:

If $\lambda \leq 2.25$, then: $P_n = 0.66^{\lambda} F_{ys} A_s$

If $\lambda > 2.25$, then: $P_n = \dfrac{0.88 F_{ys} A_s}{\lambda}$

Where:

$$\lambda = \left(\frac{K\ell}{r_s \pi}\right)\frac{F_{ys}}{E}$$

F_{ys} = Specified minimum yield strength of the stiffener (ksi)

A_s = Area of effective column section of the bearing stiffeners (see below) (in.^{2})

$K\ell$ = Effective length of the effective column taken as 0.75D, where D is the web depth (refer to **LRFD [6.10.11.2.4a]**) (in.)

r_s = Radius of gyration of the effective column about the plane of buckling computed about the mid-thickness of the web (refer to **LRFD [6.10.11.2.4a]**) (in.)

24.9.3.4 Effective Column Section

The effective column section of the bearing stiffeners is defined in **LRFD [6.10.11.2.4b]**. For stiffeners bolted to the web, the effective column section is to consist of only the stiffener

elements. For stiffeners consisting of two plates welded to the web, the effective column section is to consist of the two stiffener plates, plus a centrally located strip of web extending not more than $9t_w$ on each side of the stiffeners, as illustrated in Figure 24.9-2.

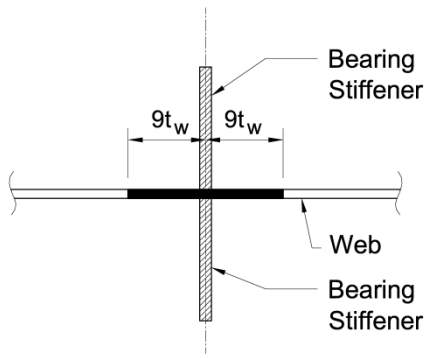

Figure 24.9-2
Effective Column Section for Welded Bearing Stiffener Design (One Pair of Stiffeners)

If more than one pair of stiffeners is used, the effective column section is to consist of all the stiffener plates, plus a centrally located strip of web extending not more than $9t_w$ on each side of the outer projecting elements of the group.

Additional information and equations used for LRFD design of bearing stiffeners are presented in **LRFD [6.10.11.2]**. In addition, a design example for bearing stiffeners is also provided in this *Bridge Manual*.

24.10 Transverse Intermediate Stiffeners

The design of transverse web stiffeners is specified in **LRFD [6.10.11.1]**. Transverse stiffeners are used to increase the shear resistance of a girder and are aligned vertically on the web.

The term connection plate is given to a transverse stiffener to which a cross-frame or diaphragm is connected. A connection plate can serve as a transverse stiffener for shear design calculations.

As specified in **LRFD [6.10.11.1.1]**, stiffeners used as connection plates must be attached to both flanges. According to **LRFD [6.6.1.3.1]**, attachment of the connection plate to the flanges must be made by welding or bolting. When the diaphragms are connected to the transverse intermediate stiffeners, the stiffeners are welded to both the tension and compression flanges. Flange stresses are usually less than the Category C allowable fatigue stresses produced by this detail which the designer should verify.

Stiffeners in straight girders not used as connection plates are to be welded to the compression flange and tight fit to the tension flange. A tight fit can help straighten the flange tilt without the application of heat. According to **LRFD [6.10.11.1.1]**, single-sided stiffeners on horizontally curved girders should be attached to both flanges to help retain the cross-sectional shape of the girder when subjected to torsion and to avoid high localized bending within the web, particularly near the top flange due to the torsional restraint of the concrete deck. For the same reason, it is required that pairs of transverse stiffeners on horizontally curved girders be tight fit or attached to both flanges.

Indicate on the plans the flange to which stiffeners are welded. The stiffeners are attached to the web with a continuous fillet weld. The dead load moment diagram is used to define the compression flange.

In the fabrication of tub sections, webs are often joined to top flanges and the connection plates and transverse stiffeners (not serving as connection plates) are installed, and then these assemblies are attached to a common box flange. The details in this case must allow the welding head to clear the bottom of the connection plates and stiffeners so the webs can be welded continuously to the box flange inside the tub section. A detail must also be provided to permit the subsequent attachment of the connection plates to the box flange (and any other transverse stiffeners that are to be attached to the box flange).

In Wisconsin, if longitudinal stiffeners are required, the transverse stiffeners are placed on one side of the web of the interior member and the longitudinal stiffener on the opposite side of the web. Place intermediate stiffeners on one side of interior members when longitudinal stiffeners are not required. Transverse stiffeners are placed on the inside web face of exterior members. If longitudinal stiffeners are required, they are placed on the outside web face of exterior members as shown on Standard for Plate Girder Details.

Transverse stiffeners can be eliminated by increasing the thickness of the web. On plate girders under 50" in depth, consider thickening the web to eliminate all transverse stiffeners. Within the constant depth portion of haunched plate girders over 50" deep, consider thickening the web to eliminate the longitudinal stiffener and most, but likely not all, of the transverse stiffeners within the span. The minimum size of transverse stiffeners is 5 x ½".

Transverse stiffeners are placed on the inside face of all exterior girders where the slab overhang exceeds 1'-6" as shown on Standard for Plate Girder Details. The stiffeners are to prevent web bending caused by construction of the deck slab where triangular overhang brackets are used to support the falsework.

If slab overhang is allowed to exceed the recommended 3'-7" on exterior girders, the web and stiffeners should be analyzed to resist the additional bending during construction of the deck. Overhang construction brackets may overstress the stiffeners. It may also be necessary to provide longitudinal bracing between stiffeners to prevent localized web deformations which did occur on a structure having 5' overhangs.

24.10.1 Proportions

As specified in **LRFD [6.10.11.1.2]**, the width, b_t, of each projecting transverse stiffener element must satisfy requirements related to the web depth, the flange width and the thickness of the projecting stiffener elements. The width, b_t, is illustrated in Figure 24.10-1.

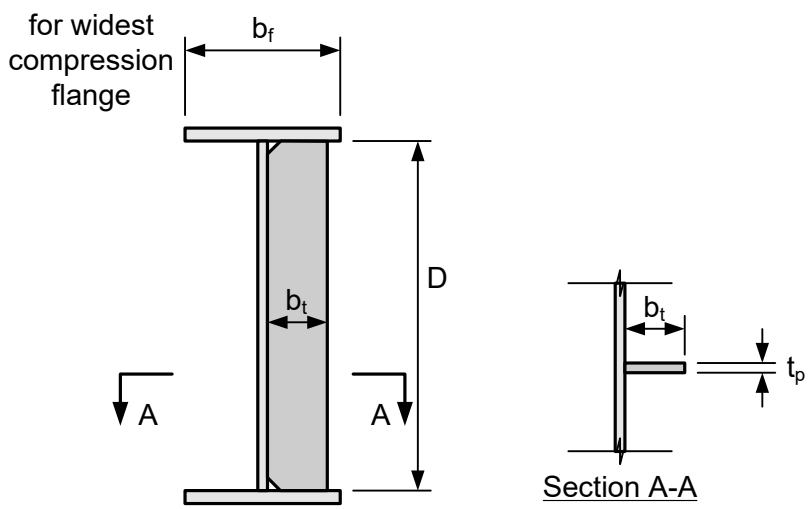

Figure 24.10-1
Projecting Width of Transverse Stiffeners

Fabricators generally prefer a ½" minimum thickness for stiffeners and connection plates.

24.10.2 Moment of Inertia

For the web to adequately develop the shear-buckling resistance, or the combined shear-buckling and post-buckling tension-field resistance, the transverse stiffener must have sufficient rigidity to maintain a vertical line of near zero lateral deflection of the web along the line of the stiffener. Therefore, the bending rigidity (or moment of inertia) is the dominant parameter governing the performance of transverse stiffeners.

As specified in **LRFD [6.10.11.1.3]**, for transverse stiffeners adjacent to web panels in which neither panel supports shear forces larger than the shear-buckling resistance, the moment of inertia of the transverse stiffener, I_t, must satisfy the smaller of the following two equations:

$$I_t \geq bt_w^3 J$$

and

$$I_t \geq \frac{D^4 \rho_t^{1.3}}{40}\left(\frac{F_{yw}}{E}\right)^{1.5}$$

Where:

I_t	=	Moment of inertia of the transverse stiffener taken about the edge in contact with the web for single stiffeners and about the mid-thickness of the web for stiffener pairs (in.^{4})
B	=	Smaller of d_o and D (in.)
d_o	=	Smaller of the adjacent panel widths (in.)
D	=	Web depth (in.)
t_w	=	Web thickness (in.)
J	=	Stiffener bending rigidity parameter taken as follows:

$$J = \frac{2.5}{\left(d_o/D\right)^2} - 2.0 \geq 0.5$$

ρ_t	=	Larger of F_{yw}/F_{crs} and 1.0
F_{yw}	=	Specified minimum yield strength of the web (ksi)
F_{crs}	=	Local buckling stress for the stiffener (ksi) taken as follows:

$$Fcrs = \frac{0.31E}{\left(b_t/t_p\right)^2} \leq F_{ys}$$

F_{ys}	=	Specified minimum yield strength of the stiffener (ksi)
b_t	=	Projecting width of the stiffener (in.)

t_p = Thickness of the projecting stiffener element (in.)

If the shear force in one of both panels is such that the web post-buckling or tension-field resistance is required, the moment of inertia of the transverse stiffener need only satisfy the second equation presented above.

For single-sided stiffeners, a significant portion of the web is implicitly assumed to contribute to the bending rigidity so that the neutral axis of the stiffener is assumed to be located close to the edge in contact with the web. Therefore, for this case, the moment of inertia is taken about this edge and the contribution of the web to the moment of inertia about the neutral axis is neglected for simplicity.

Transverse stiffeners used in panels with longitudinal web stiffeners must also satisfy the following relationship:

$$I_t \geq \left(\frac{b_t}{b_\ell}\right)\left(\frac{D}{3d_o}\right)I_\ell$$

Where:

I_t = Moment of inertia of the transverse web stiffener taken about the edge in contact with the web for single stiffeners and about the mid-thickness of the web for stiffener pairs (in.^{4})

b_t = Projecting width of the transverse stiffener (in.)

b_ℓ = Projecting width of the longitudinal stiffener (in.)

D = Web depth (in.)

d_o = Smaller of the adjacent web panel widths (in.)

I_ℓ = Moment of inertia of the longitudinal stiffener determined as specified in **LRFD [6.10.11.3.3]** (in.^{4})

Additional information and equations used for LRFD design of transverse intermediate stiffeners are presented in **LRFD [6.10.11.1]**. In addition, a design example for transverse intermediate stiffeners is also provided in this *Bridge Manual*.

24.11 Longitudinal Stiffeners

The design of longitudinal web stiffeners is specified in **LRFD [6.10.11.3]**. Longitudinal stiffeners are aligned horizontally on the web along the length of the girder and divide the web panel into smaller sub-panels. As specified in **LRFD [6.10.2.1]**, longitudinal stiffeners are required whenever the web slenderness D/t_w exceeds 150. They are used to provide additional bend-buckling resistance to the webs of deeper girders. Longitudinal stiffeners, where required, are to consist of a plate welded to one side of the web or a bolted angle.

As specified in **LRFD [6.10.11.3.1]**, longitudinal stiffeners are to be located vertically on the web such that adequate web bend-buckling resistance is provided for constructability and at the service limit state. It also must be verified that the section has adequate nominal flexural resistance at the strength limit state with the longitudinal stiffener in the selected position.

At composite sections in negative flexure and non-composite sections, it is recommended that the longitudinal stiffener initially be located at $0.4D_c$ from the inner surface of the compression flange. For composite sections in negative flexure, D_c would be conservatively calculated for the section consisting of the steel girder plus the longitudinal reinforcement. For non-composite sections, D_c would be based on the section consisting of the steel girder alone. As a preliminary approximation, a distance of 1/5 of the depth of the web may be used as the distance from the longitudinal stiffener to the inner surface of the compression flange.

On the exterior members, the longitudinal stiffeners are placed on the outside face of the web as shown on Standard for Plate Girder Details. If the longitudinal stiffener is required throughout the length of span on an interior member, the longitudinal stiffener is placed on one side of the web and the transverse stiffeners on the opposite side of the web. Longitudinal stiffeners are normally used in the haunch area of long spans and on a selected basis in the uniform depth section.

Where longitudinal stiffeners are used, place intermediate transverse stiffeners next to the web splice plates at a field splice. The purpose of these stiffeners is to prevent web buckling before the girders are erected and spliced.

In some cases, particularly in regions of stress reversal, it may be necessary or desirable to use two longitudinal stiffeners on the web. It is possible to have an overlap of longitudinal stiffeners near the top flange and near the bottom flange due to the variation between maximum positive and maximum negative moment.

It is preferred that longitudinal stiffeners be placed on the opposite side of the web from transverse stiffeners. At bearing stiffeners and connection plates where the longitudinal stiffener and transverse web element must intersect, a decision must be made as to which element to interrupt. According to **LRFD [6.10.11.3.1]**, wherever practical, longitudinal stiffeners are to extend uninterrupted over their specified length, unless otherwise permitted in the contract documents, since longitudinal stiffeners are designed as continuous members to improve the web bend buckling resistance. In such cases, the interrupted transverse elements must be fitted and attached to both sides of the longitudinal stiffener with connections sufficient to develop the flexural and axial resistance of the transverse element. If the longitudinal stiffener is interrupted instead, it should be similarly attached to all transverse elements. All interruptions must be carefully designed with respect to fatigue, especially if the longitudinal

stiffener is not attached to the transverse web elements, as a Category E or E′ detail may exist at the termination points of each longitudinal stiffener-to-web weld. Copes should always be provided to avoid intersecting welds.

Longitudinal stiffeners are subject to the same flexural strain as the web at their vertical position on the web. As a result, the stiffeners must have sufficient strength and rigidity to resist bend buckling of the web (at the appropriate limit state) and to transmit the stresses in the stiffener and an effective portion of the web as an equivalent column. Therefore, as specified in **LRFD [6.10.11.3.1]**, the flexural stress in the longitudinal stiffener due to the factored loads, f_s, must satisfy the following at the strength limit state and when checking constructability:

$$f_s \leq \phi_f R_h F_{ys}$$

Where:

ϕ_f	=	Resistance factor for flexure specified in **LRFD [6.5.4.2]** (= 1.0)
R_h	=	Hybrid factor specified in **LRFD [6.10.1.10.1]**
F_{ys}	=	Specified minimum yield strength of the longitudinal stiffener (ksi)

24.11.1 Projecting Width

As specified in **LRFD [6.10.11.3.2]**, the projecting width, b_ℓ, of the longitudinal stiffener must satisfy the following requirement in order to prevent local buckling of the stiffener plate:

$$b_\ell \leq 0.48 t_s \sqrt{\frac{E}{F_{ys}}}$$

Where:

t_s	=	Thickness of the longitudinal stiffener (in.)
F_{ys}	=	Specified minimum yield strength of the stiffener (ksi)

24.11.2 Moment of Inertia

As specified in **LRFD [6.10.11.3.3]**, to ensure that a longitudinal stiffener will have adequate rigidity to maintain a horizontal line of near zero lateral deflection in the web to resist bend buckling of the web (at the appropriate limit state), the moment of inertia of the stiffener acting in combination with an adjacent strip of web must satisfy the following requirement:

$$I_\ell \geq D t_w^3 \left[2.4 \left(\frac{d_o}{D} \right)^2 - 0.13 \right] \beta$$

Where:

I_ℓ	=	Moment of inertia of the longitudinal stiffener including an effective width of the web equal to $18t_w$ taken about the neutral axis of the combined section (in.^{4}). If F_{yw} is smaller than F_{ys}, the strip of web included in the effective section must be reduced by the ratio of F_{yw}/F_{ys}.
D	=	Web depth (in.)
t_w	=	Web thickness (in.)
d_o	=	Transverse stiffener spacing (in.)
β	=	Curvature correction factor for longitudinal stiffener rigidity (equal to 1.0 for longitudinal stiffeners on straight webs)

Longitudinal stiffeners on horizontally curved webs require greater rigidity than on straight webs because of the tendency of curved webs to bow. This is reflected by including the factor β in the above equation, which is a simplification of a requirement for longitudinal stiffeners on curved webs. For longitudinal stiffeners on straight webs, β equals 1.0.

The moment of inertia (and radius of gyration) of the longitudinal stiffener is taken about the neutral axis of an equivalent column cross section consisting of the stiffener and an adjacent strip of web with a width of $18t_w$.

24.11.3 Radius of Gyration

As specified in **LRFD [6.10.11.3.3]**, to ensure that the longitudinal stiffener acting in combination with an adjacent strip of web as an effective column section can withstand the axial compressive stress without lateral buckling, the radius of gyration, r, of the effective column section must satisfy the following requirement:

$$r \geq \frac{0.16 d_o \sqrt{\frac{F_{ys}}{E}}}{\sqrt{1 - 0.6 \frac{F_{yc}}{R_h F_{ys}}}}$$

Where:

r	=	Radius of gyration of the longitudinal stiffener including an effective width of the web equal to $18t_w$ taken about the neutral axis of the combined section (in.)
d_o	=	Transverse stiffener spacing (in.)
F_{ys}	=	Specified minimum yield strength of the longitudinal stiffener (ksi)

F_{yc} = Specified minimum yield strength of the compression flange (ksi)

R_h = Hybrid factor determined as specified in **LRFD [6.10.1.10.1]**

Additional information and equations used for LRFD design of longitudinal stiffeners are presented in **LRFD [6.10.11.3]**.

24.12 Construction

When the deck slab is poured, the exterior girder tends to rotate between the diaphragms. This problem may result if the slab overhang is greater than recommended and/or if the girders are relatively shallow in depth. This rotation causes the rail supporting the finishing machine to deflect downward and changes the roadway grade unless the contractor provides adequate lateral timber bracing.

Stay-in-place steel forms are not recommended for use. Steel forms have collected water that permeates through the slab and discharges across the top flanges of the girders. As a result, flanges frequently corrode. Since there are cracks in the slab, this is a continuous problem.

Where built-up box sections are used, full penetration welds provide a stronger joint than fillet welds and give a more aesthetically pleasing appearance. However, they are also more costly.

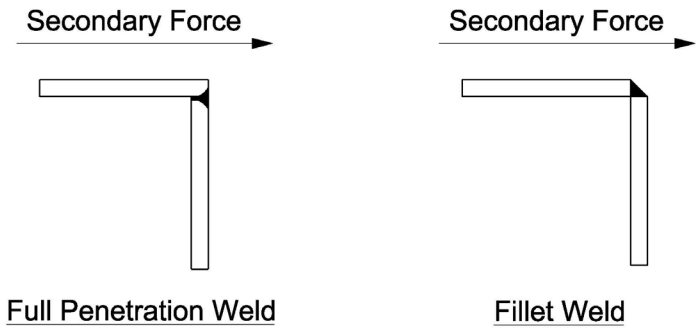

Figure 24.12-1
Welds for Built-up Box Sections

The primary force of the member is tension or compression along the axis of the member. The secondary force is a torsional force on the member cross section which produces a shearing force across the weld.

During construction, holes may be drilled in the top flanges in the compression zone to facilitate anchorage of posts for safety lines. The maximum hole size is 3/4" diameter, and prior to pouring the concrete deck, a bolt must be placed in each hole.

LRFD [6.10.3] describes the constructability design requirements for a steel girder bridge. Provisions are provided for the following constructability checks:

- Nominal yielding
- Reliance on post-buckling resistance
- Potential uplift at bearings
- Webs without bearings stiffeners
- Holes in tension flanges

- Load-resisting bolted connections
- Flexure in discretely braced flanges
- Flexure in continuously braced flanges
- Shear in interior panels of webs with transverse stiffeners
- Dead load deflections

24.12.1 Web Buckling

The buckling behavior of a slender web plate subject to pure bending is similar to the buckling behavior of a flat plate. Through experimental tests, it has been observed that web bend-buckling behavior is essentially a load-deflection rather than a bifurcation phenomenon; that is, a distinct buckling load is not observed.

Since web plates in bending do not collapse when the theoretical buckling load is reached, the available post-buckling strength can be considered in determining the nominal flexural resistance of sections with slender webs at the strength limit state. However, during the construction condition, it is desirable to limit the bending deformations and transverse displacements of the web.

The advent of composite design has led to a significant reduction in the size of compression flanges in regions of positive flexure. As a result, more than half of the web of the non-composite section will be in compression in these regions during the construction condition before the concrete deck has hardened or is made composite. As a result, the web is more susceptible to bend-buckling in this condition.

To control the web plate bending strains and transverse displacements during construction, *AASHTO LRFD* uses the theoretical web bend-buckling load as a simple index. The web bend-buckling resistance, F_{crw}, is specified in **LRFD [6.10.1.9.1]** as follows:

$$Fcrw = \frac{0.9Ek}{\left(D/t_w\right)^2}$$

Where:

E	=	Modulus of elasticity of the steel (ksi)
K	=	Bend-buckling coefficient (see below)
D	=	Depth of web (in.)
t_w	=	Thickness of web (in.)

For webs without longitudinal stiffeners, the bend-buckling coefficient, k, is as follows:

$$k = \frac{9}{(D_c/D)^2}$$

Where:

D_c = Depth of web in compression in the elastic range (in.)

F_{crw} is not to exceed the smaller of R_hF_{yc} and $F_{yw}/0.7$, where F_{yc} and F_{yw} are the specified minimum yield strengths of the compression flange and web, respectively, and R_h is the hybrid factor.

According to **LRFD [6.10.3.2]**, the maximum compression-flange stress in a non-composite I-section due to the factored loads, calculated without consideration of flange lateral bending, must not exceed the resistance factor for flexure, ϕ_f, times F_{crw} for all critical stages of construction. This requirement also applies at sections where top flanges of tub girders are subject to compression during construction. For closed-box sections, **LRFD [6.11.3.2]** states that the maximum longitudinal flange stress due to the factored loads, calculated without consideration of longitudinal warping, must not exceed ϕ_fF_{crw} at sections where non-composite box flanges are subject to compression during construction. (A box flange is defined in *AASHTO LRFD* as a flange connected to two webs.) For tub or closed-box sections with inclined webs, D_c should be taken as the depth of the web in compression measured along the slope (that is, D_c divided by the cosine of the angle of inclination of the web plate with respect to the vertical) when computing F_{crw}. Should F_{crw} be exceeded for the construction condition, the engineer has several options to consider:

- Provide a larger compression flange or a smaller tension flange to reduce D_c.
- Adjust the deck-placement sequence to reduce the compressive stress in the web.
- Provide a thicker web.
- As a last resort, should the previous options not prove practical or cost-effective, provide a longitudinal web stiffener.

24.12.2 Deck Placement Analysis

Depending on the length of the bridge, the construction of the deck may require placement in sequential stages. Therefore, certain sections of the steel girders will become composite before other sections. If certain placement sequences are followed, temporary moments induced in the girders during the deck placement can be significantly higher than the final non-composite dead load moments after the sequential placement is complete.

Therefore, **LRFD [6.10.3.4]** requires that sections in positive flexure that are non-composite during construction but composite in the final condition must be investigated for flexure according to the provisions of **LRFD [6.10.3.2]** during the various stages of the deck

placement. Furthermore, changes in the load, stiffness and bracing during the various stages are to be considered in the analysis.

Example:

Consider the sample deck placement shown in Figure 24.12-2 for a three-span continuous bridge. The deck placement sequence is based on Standard for Slab Pouring Sequence.

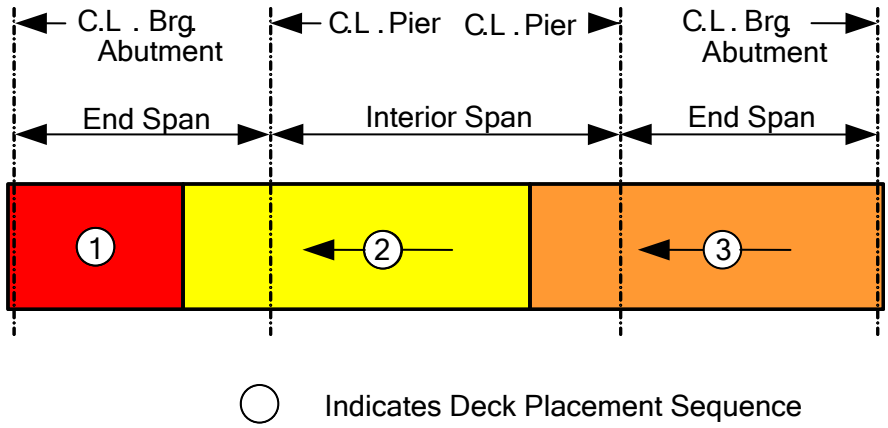

Figure 24.12-2
Deck Placement Sequence

Figure 24.12-3 through Figure 24.12-6 show elevation views of a girder which will be used to show the results for each stage of the deck placement sequence assumed for this example in Figure 24.12-2. In Figure 24.12-3, the girders are in place but no deck concrete has yet been placed. The entire girder length is non-composite at this stage. Before the deck is placed, the non-composite girder must resist the moments due to the girder self-weight and any additional miscellaneous steel weight. The moments due to these effects are shown at Location A, which is the location of maximum positive moment in the first end span.

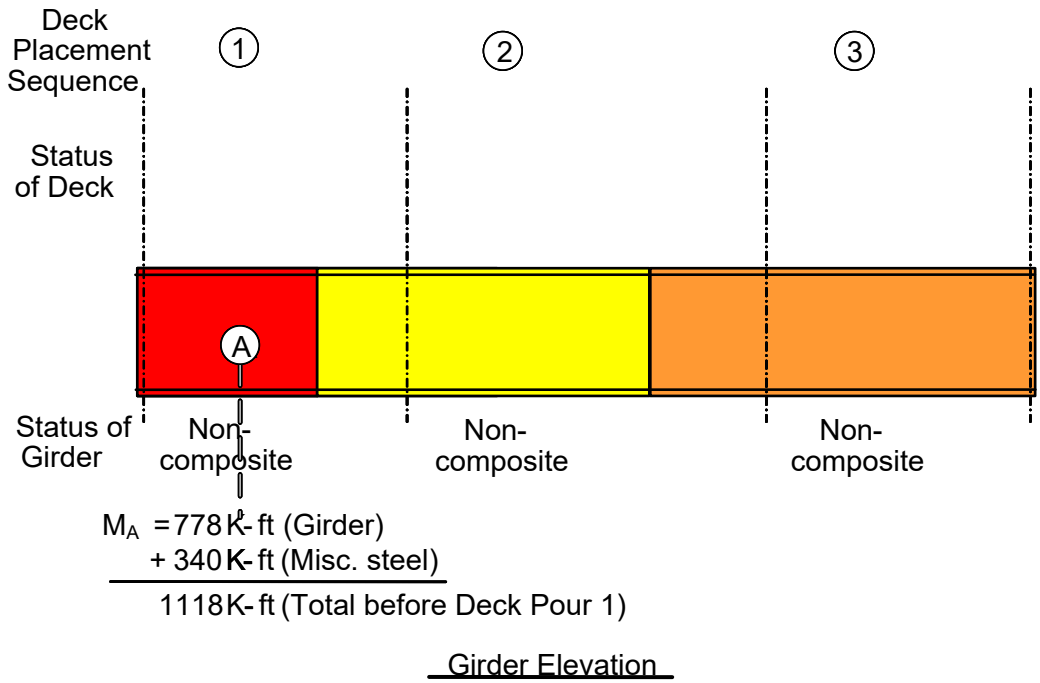

Figure 24.12-3
Girder Elevation View

Figure 24.12-4 shows the first deck placement (Cast 1), which is cast in the first portion of the first span. The moment due to the wet concrete load, which consists of the weight of the deck and deck haunches, is added to the moments due to the girder self-weight and miscellaneous steel weight. Since the concrete in this first placement has not yet hardened, the moment due to the first deck placement is resisted by the non-composite girder. The cumulative positive moment in the girder at Location A after the first deck placement is +3,565 kip-ft, which is the maximum positive moment this section will experience during the assumed placement sequence. This moment is larger than the moment of +3,542 kip-ft that would be computed at this location assuming a simultaneous placement of the entire deck (that is, ignoring the sequential stages).

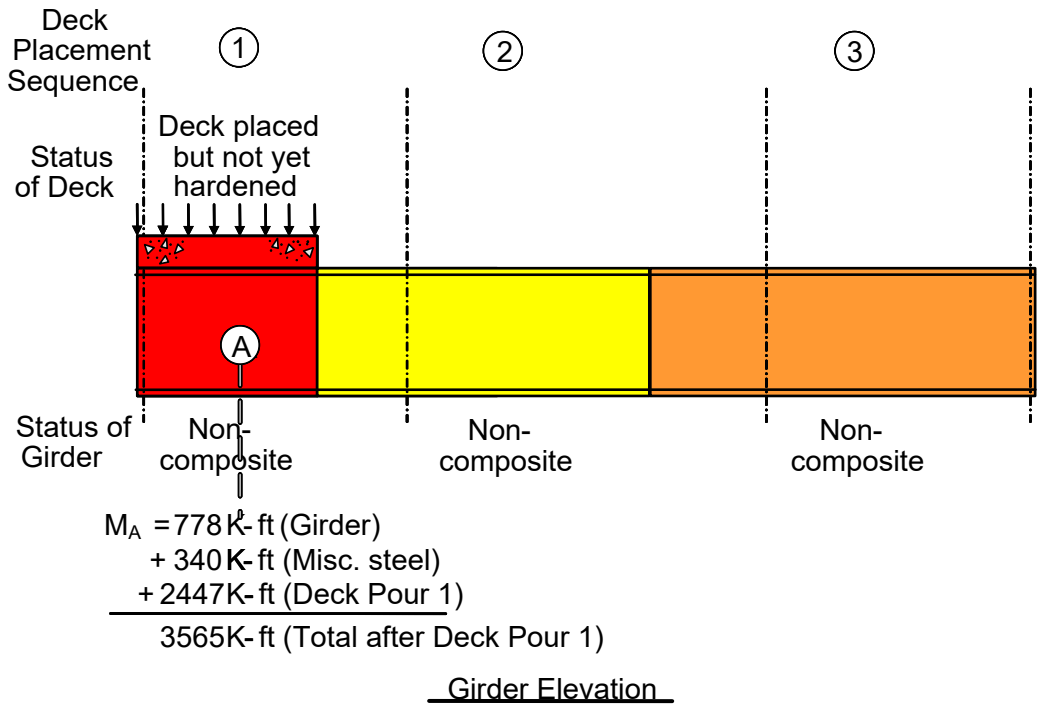

Figure 24.12-4
Deck Placement Analysis 1

The next deck placement (Cast 2) is located immediately adjacent to Cast 1, as shown in Figure 24.12-5. The concrete in the first placement is now assumed to be hardened so that those portions of the girder are now composite. Therefore, as required in **LRFD [6.10.3.4]**, those portions of the girder are assumed composite in the analysis for this particular deck placement. The remainder of the girder is non-composite. Since the deck casts are relatively short-term loadings, the short-term modular ratio, n, is used to compute the composite stiffness. The previous casts are assumed to be fully hardened in this case, but adjustments to the composite stiffness to reflect the actual strength of the concrete in the previous casts at the time of this particular placement could be made, if desired. The cumulative moment at Location A has decreased from +3,565 kip-ft after Cast 1 to +3,449 kip-ft after Cast 2, because the placement in Cast 2 causes a negative moment in the end spans.

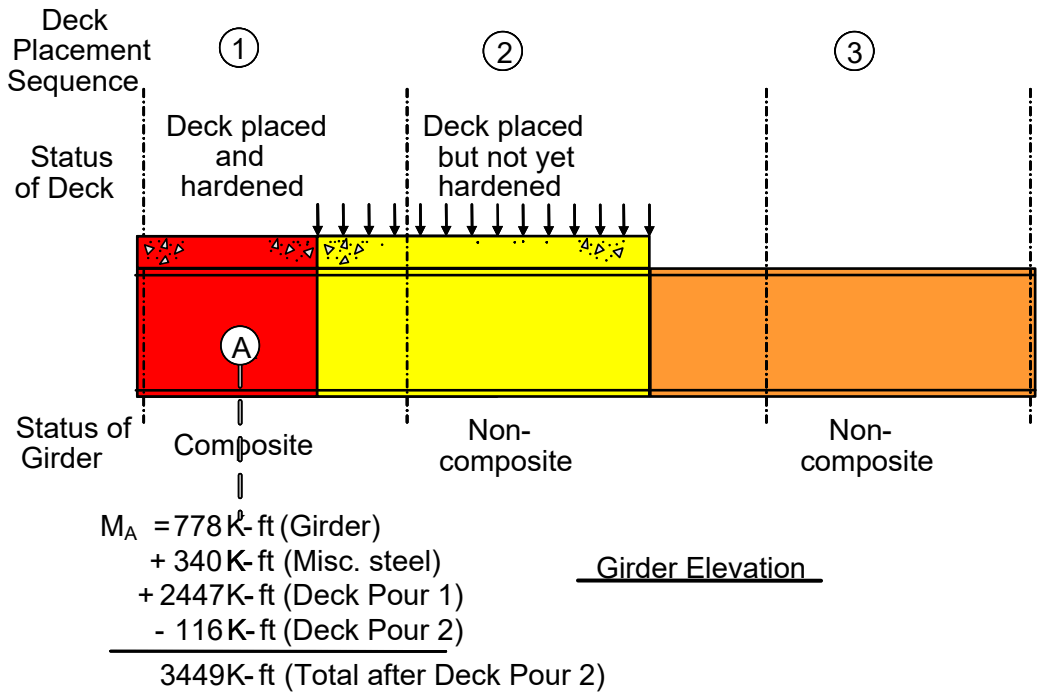

Figure 24.12-5
Deck Placement Analysis 2

The last deck placement (Cast 3) is located immediately adjacent to Cast 2, as presented in Figure 24.12-6. Again, the concrete in Casts 1 and 2 is assumed to be fully hardened in the analysis for Cast 3. The cumulative moment at Location A has increased slightly from +3,449 kip-ft to +3,551 kip-ft, which is less than the moment of +3,565 kip-ft experienced at Location A after Cast 1.

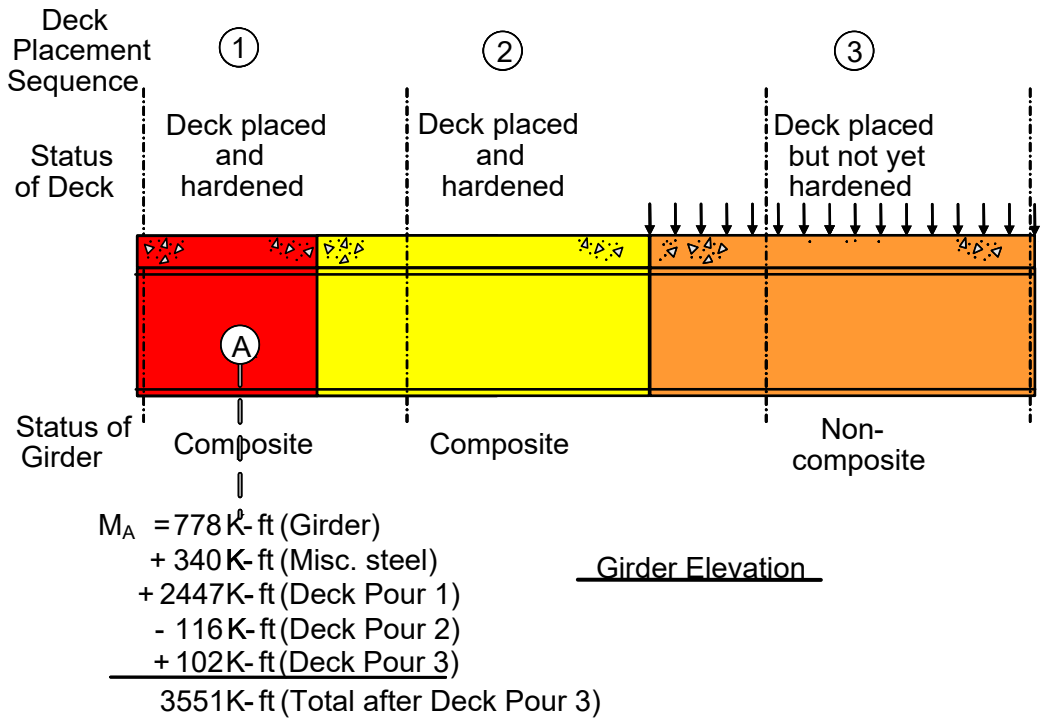

Figure 24.12-6
Deck Placement Analysis 3

Table 24.12-1 shows a more complete set of the unfactored dead-load moments in the end span (Span 1) from the abutment to the end of Cast 1 computed from the example deck placement analysis. Data are given at 19.0-foot increments along the span, measured from the abutment. The end of Cast 1 is located 102.5 feet from the abutment, based on the requirements of Standard for Slab Pouring Sequence. Location A is 76.0 feet from the abutment. In addition to the moments due to each of the individual casts, Table 24.12-1 gives the moments due to the steel weight and the additional miscellaneous steel. Also included are the sum of the moments due to the three casts and the moments due to the weight of the concrete deck and haunches assuming that the concrete is placed simultaneously on the non-composite girders instead of in sequential steps. The maximum moment occurs after Cast 1.

Length (ft)	0.0	19.0	38.0	57.0	76.0	95.0
Steel Weight	0	400	663	789	778	630
Additional Miscellaneous Steel	0	166	278	336	340	290
Cast 1	0	1190	1994	2413	2447	2096
Cast 2	0	-29	-58	-87	-116	-145
Cast 3	0	25	51	76	102	127
Sum of Casts	0	1186	1987	2402	2433	2078
Deck & Haunches (Simultaneous Cast)	0	1184	1983	2396	2424	2067

Table 24.12-1
Moments from Deck Placement Analysis (K-ft)

The slight differences in the moments on the last line of Table 24.12-1 (assuming a simultaneous placement of the entire slab) and the sum of the moments due to the three casts are due to the changes in the girder stiffness with each sequential cast. The principle of superposition does not apply directly in the deck-placement analyses, since the girder stiffness changes at each step of the analysis. Although the differences in the moments are small in this example, they can be significantly greater depending on the span configuration. The effects of the deck placement sequence must be considered during design.

In regions of positive flexure, the non-composite girder should be checked for the effect of the maximum accumulated deck-placement moment. This moment at 76 feet from Abutment 1 is computed as:

$$M = 778 + 340 + 2{,}447 = 3{,}565 \text{ kip-ft}$$

This value agrees with the moment at this location shown in Figure 24.12-4.

In addition to the dead load moments during the deck placement, unfactored dead load deflections and reactions can also be investigated similarly during the construction condition.

When investigating reactions during the construction condition, if uplift is found to be present during deck placement, the following options can be considered:

- Rearrange the concrete casts.
- Specify a temporary load over that support.
- Specify a tie-down bearing.

- Perform another staging analysis with zero bearing stiffness at the support experiencing lift-off.

24.13 Painting

The final coat of paint on all steel bridges shall be an approved color. Exceptions to this policy may be considered on an individual basis for situations such as scenic river crossings, unique or unusual settings or local community preference. The Region is to submit requests for an exception along with the Structure Survey Report. The *AMS Standard Color Numbers* available for use on steel structures are shown in Chapter 9 - Materials.

Unpainted weathering steel is used on bridges over streams and railroads. All highway grade separation structures require the use of painted steel, since unpainted steel is subject to excessive weathering from salt spray distributed by traffic. On weathering steel bridges, the end 6' of any steel adjacent to either side of an expansion joint and/or hinge is required to have two shop coats of paint. The second coat is to be brown color similar to rusted steel. Do not paint the exterior face of the exterior girders for aesthetic reasons, but paint the hanger bar on the side next to the web. Additional information on painting is presented in Chapter 9 - Materials.

For painted steel plate I-girders utilize a three-coat system defined by the Standard Specification bid item “Painting Epoxy System (Structure)”. For painted tub girders use a two-coat system defined by the STSP “Painting Polysiloxane System (Structure)”, which includes painting of the inside of the tubs.

Paint on bridges affects the slip resistance of bolted connections. Since faying surfaces that are not galvanized are typically blast-cleaned as a minimum, a Class A surface condition should only be used to compute the slip resistance when Class A coatings are applied or when unpainted mill scale is left on the faying surface. Most commercially available primers will qualify as Class B coatings.

24.14 Floor Systems

In the past, floor systems utilizing two main girders were used on long span structures. Current policy is to use multiple plate girder systems for bridges having span lengths up to 400'. Multiple girder systems are preferred since they are redundant; that is, failure of any single member will not cause failure of the structure.

In a two-girder system, the main girders are designed equally to take the dead load and live load unless the roadway cross section is unsymmetrical. The dead load and live load carried by the intermediate stringers is transferred to the floor beams, which transmit the load to the main girders. In designing the main girders, it is an acceptable practice to assume the same load distribution along the stringers as along the girder and ignore the concentrated loads at the floor beam connections.

The design criteria used for such girders is the same as the criteria used for plate girders and rolled sections. Particular attention should be paid to the sufficiency of the girder connection details and to the lateral bracing requirements and connections.

24.15 Box Girders

Box girders present a smooth, uncluttered appearance under the bridge deck due to the lack of transverse bracing and due to their closed section. Enhanced torsional rigidity can make box girders a favorable choice for horizontally curved bridges. However, due to redundancy concerns, use of single-box and two-box girder bridges should be avoided unless absolutely necessary.

In the design of box girders, the concrete slab is designed as a portion of the top flange and also as the support between the two girder webs which satisfies the requirement for being considered a closed box section.

During construction, the box girder requires additional bracing to support the web until the slab is in place. The additional bracing can either be temporary bracing that is removed after the slab is cured or permanent bracing that is left in place. In either case, it is an additional cost item. In addition, temporary bracing is required between the girders to transfer wind loads until the deck slab is poured.

Current experience shows that box girders may require more material than conventional plate girders. On longer spans, additional bracing between girders is required to transfer lateral loads.

Several requirements in *AASHTO LRFD* are specific to box girders. For box girders, sections in positive flexure shall not have a yield strength in excess of 70 ksi. The following web slenderness requirement from **LRFD [6.11.6.2.2]** must also be satisfied:

$$\frac{2D_{cp}}{t_w} \leq 3.76\sqrt{\frac{E}{F_{yc}}}$$

Where:

D_{cp} = Depth of web in compression at plastic moment (in.)

t_w = Web thickness (in.)

F_{yc} = Specified minimum yield strength of the compression flange (ksi)

Other requirements for positive flexure in box girders are presented in **LRFD [6.11.6.2.2]**. Steel sections in negative flexure must not use the provisions in Appendices A or B of the *AASHTO LRFD* specifications.

When computing effective flange widths for closed-box sections, the distance between the outside of the webs at the tops is to be used in lieu of the web thickness in the general requirements. For closed box sections, the spacing should be taken as the spacing between the centerlines of the box sections.

When computing section properties for closed-box sections with inclined webs, the moment of inertia of the webs about a horizontal axis at the mid-depth of the web should be adjusted for

the web slope by dividing by the cosine of the angle of inclination of the web plate to the vertical. Also, inspection manholes are often inserted in the bottom flanges of closed-box sections near supports. These manholes should be subtracted from the bottom-flange area when computing the elastic section properties for use in the region of the access hole. If longitudinal flange stiffeners are present on the closed-box section, they are often included when computing the elastic section properties.

When investigating web bend-buckling resistance for closed-box sections, **LRFD [6.11.3.2]** states that the maximum longitudinal flange stress due to the factored loads, calculated without consideration of longitudinal warping, must not exceed $\phi_f F_{crw}$ at sections where non-composite box flanges are subject to compression during construction. For more information about the web bend-buckling resistance of box girders, refer to 24.12.1. In *AASHTO LRFD*, a box flange is defined as a flange connected to two webs.

Torsion in structural members is generally resisted through a combination of St. Venant torsion and warping torsion. For closed cross-sections such as box girders, St. Venant torsion generally dominates. Box girders possess favorable torsional characteristics which make them an attractive choice for horizontally curved bridges. However, due to redundancy concerns, use of single-box and two-box girder bridges should be avoided unless absolutely necessary.

WisDOT policy item:

Rigorous analysis of single-box and two-box girder bridges to eliminate the need for in-depth fracture critical inspections is not allowed.

Full-depth, solid diaphragms between box girders shall be used at the one-third points (min.) in each span.

BOS approval is required for all box girders.

24.16 Design Examples

E24-1 2-Span Continuous Steel Plate Girder Bridge, LRFD

E24-2 Bolted Field Splice, LRFD

This page intentionally left blank.

Table of Contents

E24-1 2-Span Continous Steel Plate Girder Bridge LRFD . . . 2
E24-1.1 Obtain Design Criteria . . . 2
E24-1.2 Select Trial Girder Section . . . 5
E24-1.3 Compute Section Properties . . . 6
E24-1.4 Compute Dead Load Effects . . . 11
E24-1.5 Compute Live Load Effects . . . 15
E24-1.6 Combine Load Effects . . . 21
E24-1.7 Check Section Proportion Limits Positive Moment Region . . . 28
E24-1.8 Compute Plastic Moment Capacity Positive Moment Region . . . 30
E24-1.9 Determine if Section is Compact or Noncompact Positive Moment Region . . . 32
E24-1.10 Design for Flexure Strength Limit State Positive Moment Region . . . 33
E24-1.11 Design for Shear Positive Moment Region . . . 36
E24-1.12 Design Transverse Intermediate Stiffeners Positive Moment Region . . . 36
E24-1.13 Design for Flexure Fatigue and Fracture Limit State Positive Moment Region . . . 36
E24-1.14 Design for Flexure Service Limit State Positive Moment Region . . . 37
E24-1.15 Design for Flexure Constructibility Check Positive Moment Region . . . 39
E24-1.16 Check Wind Effects on Girder Flanges Positive Moment Region . . . 43
E24-1.17 Check Section Proportion Limits Negative Moment Region . . . 43
E24-1.18 Compute Plastic Moment Capacity Negative Moment Region . . . 44
E24-1.19 Determine if Section is a Compact-Web, Noncompact-Web, or Slender-Web Section Negative Moment Region . . . 47
E24-1.20 Design for Flexure Strength Limit State Negative Moment Region . . . 48
E24-1.21 Design for Shear Negative Moment Region . . . 50
E24-1.22 Design Transverse Intermediate Stiffeners Negative Moment Region . . . 54
E24-1.23 Design for Flexure Fatigue and Fracture Limit State Negative Moment Region . . . 57
E24-1.24 Design for Flexure Service Limit State Negative Moment Region . . . 58
E24-1.25 Design for Flexure Constructibility Check Negative Moment Region . . . 59
E24-1.26 Check Wind Effects on Girder Flanges Negative Moment Region . . . 60
E24-1.27 Draw Schematic of Final Steel Girder Design . . . 64
E24-1.28 Design Shear Connectors . . . 65
E24-1.29 Design Bearing Stiffeners . . . 73

E24-1 2-Span Continous Steel Plate Girder Bridge - LRFD

This example shows design calculations conforming to the *AASHTO LRFD Eight Edition -2017* as supplemented by the *WisDOT Bridge Manual* . Sample design calculations are shown for the following steel superstructure regions or components:

- Interior girder design at the controlling positive moment region
- Interior girder design at the controlling negative moment region
- Transverse stiffener design
- Shear connector design
- Bearing stiffener design

E24-1.1 Obtain Design Criteria

The first design step for a steel girder is to choose the correct design criteria. [24.6.1]

The steel girder design criteria are obtained from Figure E24-1.1-1 through Figure E24-1.1-3 (shown below), and from the referenced articles and tables in the *AASHTO LRFD Bridge Design Specifications, Eigth Edition*. An interior plate girder will be designed for an HL-93 live load for this example. The girder will be designed to be composite throughout. (Note: Figure 5.2-1 contains recommended economical span lengths for steel girders.)

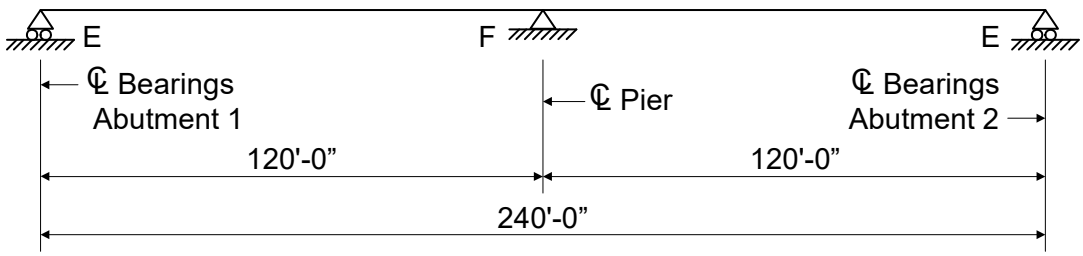

Legend:
E = Expansion Bearings
F = Fixed Bearings

Figure E24-1.1-1
Span Configuration

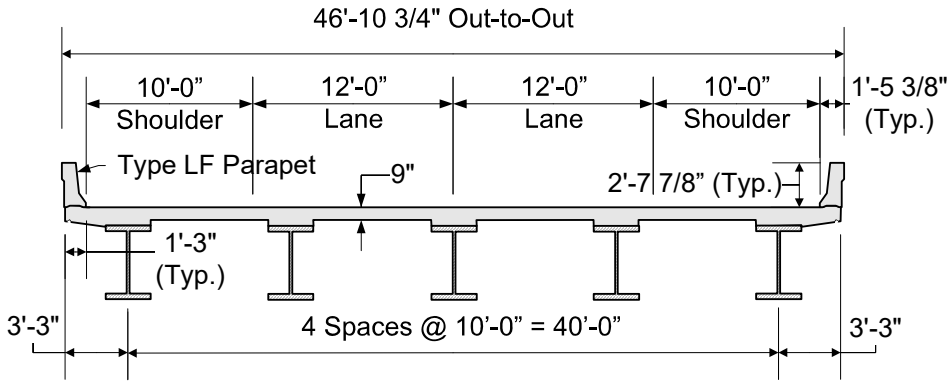

Figure E24-1.1-2
Superstructure Cross Section

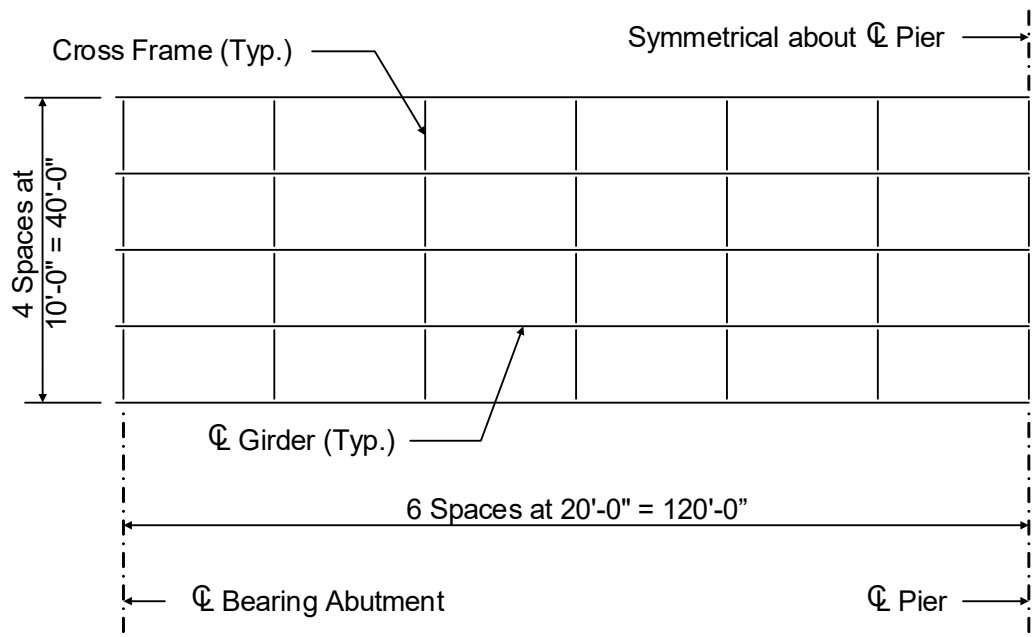

Figure E24-1.1-3
Framing Plan

Design criteria:

$N_{spans} := 2$	Number of spans	
$L := 120$	ft	span length
$Skew := 0$	deg	skew angle
$N_b := 5$	number of girders	
$S := 10.0$	ft	girder spacing
$S_{overhang} := 3.25$	ft	deck overhang (Per Chapter 17.6.2, WisDOT practice is to limit the overhang to 3'-7", however, economical overhang range is 0.28S - 0.35S based on parapet weight.)
$L_b := 240$	in	cross-frame spacing **LRFD [6.7.4]**
$F_{yw} := 50$	ksi	web yield strength **LRFD [Table 6.4.1-1]**
$F_{yf} := 50$	ksi	flange yield strength **LRFD [Table 6.4.1-1]**
$f'_c := 4.0$	ksi	concrete 28-day compressive strength **LRFD [5.4.2.1 & Table C5.4.2.1-1]**
$f_y := 60$	ksi	reinforcement strength **LRFD [5.4.3 & 6.10.1.7]**

$E_s := 29000$	ksi	modulus of elasticity **LRFD [6.4.1]**
$t_{deck} := 9.0$	in	total deck thickness
$t_s := 8.5$	in	effective deck thickness
$t_{overhang} := 9.5$	in	total overhang thickness
$t_{effoverhang} := 9.0$	in	effective overhang thickness
$W_s := 0.490$	kcf	steel density **LRFD [Table 3.5.1-1]**
$w_c := 0.150$	kcf	concrete density **LRFD [Table 3.5.1-1 & C3.5.1]**
$DL_{misc} := 0.030$	kip/ft	additional miscellaneous dead load (per girder) (Chapter 17.2.4.1)
$W_{par} := 0.464$	kip/ft	parapet weight (each) (Type 32SS)
$W_{fws} := 0.020$	ksf	future wearing surface (Chapter 17.2.4.1)
$w_{deck} := 46.50$	ft	deck width
$w_{roadway} := 44.0$	ft	roadway width
$d_{haunch} := 3.75$	in	haunch depth (from top of web for design) (for construction, the haunch is measured from the top of the top flange)
$ADTT_{SL} := 3000$	Average Daily Truck Traffic (Single-Lane)	

Design factors from AASHTO LRFD Bridge Design Specifications:

Load factors, γ, **LRFD [Table 3.4.1-1 & Table 3.4.1-2]**:

Load Combinations and Load Factors							
Limit State	Load Factors						
	DC	DW	LL	IM	WS	WL	EQ
Strength I	1.25	1.50	1.75	1.75	-	-	-
Service II	1.00	1.00	1.30	1.30	-	-	-
Fatigue I	-	-	1.75	1.75	-	-	-

Table E24-1.1-1
Load Combinations and Load Factors

The abbreviations used in Table E24-1.1-1 are as defined in **LRFD [3.3.2]**.

The extreme event limit state (including earthquake load) is generally not considered for a

steel girder design.

Resistance factors,ϕ, **LRFD [6.5.4.2]**:

Resistance Factors	
Type of Resistance	**Resistance Factor**
For flexure	1.00
For shear	1.00
For axial compression	0.90

Table E24-1.1-2
Resistance Factors

Dynamic load allowance **LRFD [Table 3.6.2.1-1]**:

Dynamic Load Allowance	
Limit State	**Dynamic Load Allowance, IM**
Fatigue and Fracture Limit State	15%
All Other Limit States	33%

Table E24-1.1-3
Dynamic Load Allowance

E24-1.2 Select Trial Girder Section

Before the dead load effects can be computed, a trial girder section must be selected. [24.6.2] This trial girder section is selected based on previous experience and based on preliminary design. For this design example, the trial girder section presented in Figure E24-1.2-1 will be used. Based on this trial girder section, section properties and dead load effects will be computed. Then specification checks will be performed to determine if the trial girder section successfully resists the applied loads. If the trial girder section does not pass all specification checks or if the girder optimization is not acceptable, then a new trial girder section must be selected and the design process must be repeated.

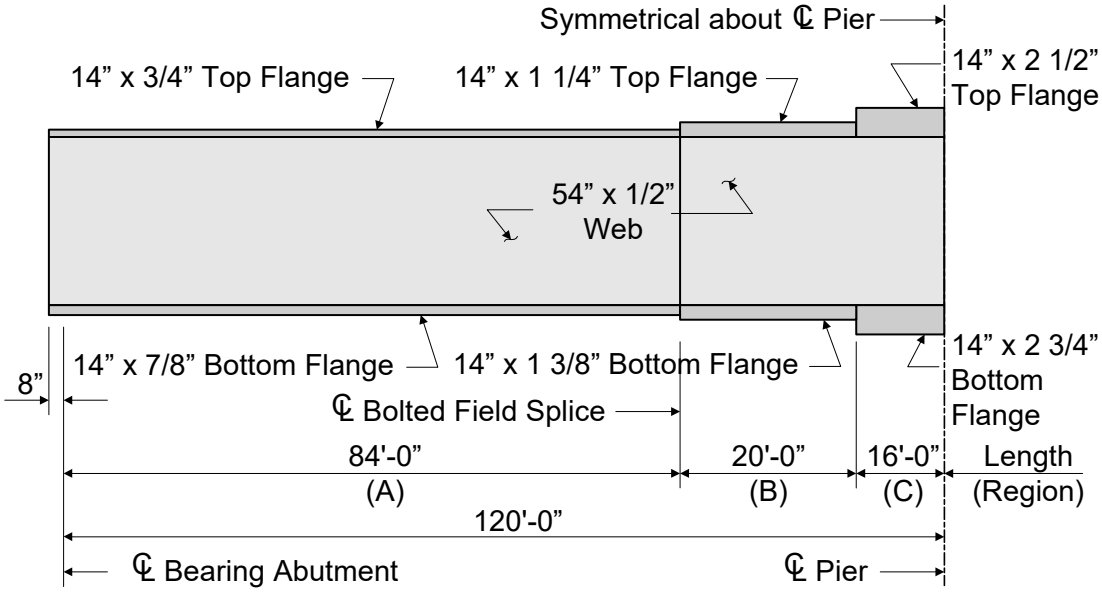

Figure E24-1.2-1
Plate Girder Elevation

The AASHTO/NSBA Steel Bridge Collaboration Document "Guidelines for Design for Constructibility" recommends a 3/4" minimum flange thickness. Wisconsin requires a 3/4" minimum flange thickness.

E24-1.3 Compute Section Properties

Since the superstructure is composite, several sets of section properties must be computed **LRFD [6.10.1.1]**. The initial dead loads (or the noncomposite dead loads) are applied to the girder-only section. For permanent loads assumed to be applied to the long-term composite section, the long-term modular ratio of 3n is used to transform the concrete deck area **LRFD [6.10.1.1.1b]**. For transient loads assumed applied to the short-term composite section, the short-term modular ratio of n is used to transform the concrete deck area.

For girders with shear connectors provided throughout their entire length and with slab reinforcement satisfying the provisions of **LRFD [6.10.1.7]**, stresses due to loads applied to the composite section for the fatigue limit state may be computed using the short-term composite section assuming the concrete slab to be fully effective for both positive and negative flexure **LRFD [6.6.1.2.1 & 6.10.5.1]**.

For girders with shear connectors provided throughout their entire length that also satisfy the provisions of **LRFD [6.10.1.7]**, flexural stresses caused by Service II loads applied to the composite section may be computed using the short-term or long-term composite section, as appropriate, assuming the concrete deck is effective for both positive and negative flexure **LRFD [6.10.4.2.1]**.

In general, both the exterior and interior girders must be considered, and the controlling design is used for all girders, both interior and exterior. However, design computations for the interior girder only are presented in this example.

The modular ratio, n, is computed as follows:

$$n := \frac{E_s}{E_c}$$

Where:

E_s = Modulus of elasticity of steel (ksi)

E_c = Modulus of elasticity of concrete (ksi)

$E_s = 29000$ ksi **LRFD [6.4.1]**

$E_c := 33000 \cdot K_1 \cdot \left(w_c^{1.5}\right) \cdot \sqrt{f'_c}$ **LRFD [5.4.2.4]**

Where:

K_1 = Correction factor for source of aggregate to be taken as 1.0 unless determined by physical test, and as approved by the authority of jurisdiction. For WisDOT, K_1 = 1.0.

w_c = Unit weight of concrete (kcf)

f'_c = Specified compressive strength of concrete (ksi)

$w_c = 0.150$ kcf **LRFD [Table 3.5.1-1 & C3.5.1]**

$f'_c = 4.0$ ksi **LRFD [Table 5.4.2.1-1 & 5.4.2.1]**

$K_1 := 1$ **LRFD [5.4.2.4]**

$E_c := 33000 \cdot K_1 \cdot \left(w_c^{1.5}\right) \cdot \sqrt{f'_c}$ $\boxed{E_c = 3834}$ ksi

$n := \frac{E_s}{E_c}$ $\boxed{n = 7.6}$ **LRFD [6.10.1.1.1b]**

Therefore, use: $n := 8$

The effective flange width is computed as follows (Chapter 17.2.11):

For interior beams, the effective flange width is taken as the average spacing of adjacent beams:

$W_{effflange} := S$ $\boxed{W_{effflange} = 10.00}$ ft

or

$\boxed{W_{effflange} \cdot 12 = 120.00}$ in

Based on Table 17.5-3 of Chapter 17 for a 9" deck and 10'-0" girder spacing, the top mat

longitudinal continuity reinforcement bar size and spacing is #6 bars at 7.5" spacing. The area of the top mat longitudinal continuity deck reinforcing steel in the negative moment region is computed below for the effective flange width. For the section properties in Table E24-1.3-3, the location of the centroid of the top mat longitudinal reinforcement is conservatively taken as one-half the structural slab thickness or 8.5" / 2 = 4.25".

$$A_{deckreinf} := 1 \times 0.44 \cdot \frac{W_{effflange} \cdot 12}{7.5} \qquad \boxed{A_{deckreinf} = 7.04} \quad in^2$$

For this design example, the slab haunch is 3.75 inches throughout the length of the bridge. That is, the bottom of the slab is located 3.75 inches above the top of the web (for construction, it is measured from the top of the top flange). For this design example, this distance is used in computing the location of the centroid of the slab. However, the area of the haunch is conservatively not considered in the section properties for this example.

Based on the trial plate sizes shown in Figure E24-1.2-1, the noncomposite and composite section properties for Region A, B, and C are computed as shown in the following tables **LRFD [6.6.1.2.1, 6.10.5.1, 6.10.4.2.1]**. The distance to the centroid is measured from the bottom of the girder.

Region A Section Properties (0 - 84 Feet)						
Section	**Area, A (inches^2)**	**Centroid, d (inches)**	**A*d (inches^3)**	**I_o (inches^4)**	**A*y^2 (inches^4)**	**I_{total} (inches^4)**
Girder only:						
Top flange	10.500	55.250	580.1	0.5	8441.1	8441.6
Web	27.000	27.875	752.6	6561.0	25.8	6586.8
Bottom flange	12.250	0.438	5.4	0.8	8576.1	8576.9
Total	49.750	26.897	1338.1	6562.3	17043.0	23605.3
Composite (3n):						
Girder	49.750	26.897	1338.1	23605.3	13668.5	37273.7
Slab	42.500	62.875	2672.2	255.9	16000.2	16256.0
Total	92.250	43.472	4010.3	23861.1	29668.6	53529.8
Composite (n):						
Girder	49.750	26.897	1338.1	23605.3	33321.4	56926.6
Slab	127.500	62.875	8016.6	767.7	13001.9	13769.5
Total	177.250	52.777	9354.7	24372.9	46323.2	70696.2
Section	**y_{botgdr} (inches)**	**y_{topgdr} (inches)**	**$y_{topslab}$ (inches)**	**S_{botgdr} (inches^3)**	**S_{topgdr} (inches^3)**	**$S_{topslab}$ (inches^3)**
Girder only	26.897	28.728	---	877.6	821.7	---
Composite (3n)	43.472	12.153	23.653	1231.4	4404.7	2263.1
Composite (n)	52.777	2.848	14.348	1339.5	24820.6	4927.1

Table E24-1.3-1
Region A Section Properties

Region B Section Properties (84 - 104 Feet)						
Section	**Area, A (inches^2)**	**Centroid, d (inches)**	**A*d (inches^3)**	**I_o (inches^4)**	**A*y^2 (inches^4)**	**I_{total} (inches^4)**
Girder only:						
Top flange	17.500	56.000	980.0	2.3	14117.0	14119.3
Web	27.000	28.375	766.1	6561.0	16.3	6577.3
Bottom flange	19.250	0.688	13.2	3.0	13940.2	13943.2
Total	63.750	27.598	1759.4	6566.3	28073.5	34639.8
Composite (3n):						
Girder	63.750	27.598	1759.4	34639.8	13056.1	47695.9
Slab	42.500	63.375	2693.4	255.9	19584.1	19840.0
Total	106.250	41.909	4452.8	34895.7	32640.2	67535.9
Composite (n):						
Girder	63.750	27.598	1759.4	34639.8	36266.9	70906.7
Slab	127.500	63.375	8080.3	767.7	18133.5	18901.1
Total	191.250	51.449	9839.7	35407.4	54400.4	89807.8
Section	**y_{botgdr} (inches)**	**y_{topgdr} (inches)**	**$y_{topslab}$ (inches)**	**S_{botgdr} (inches^3)**	**S_{topgdr} (inches^3)**	**$S_{topslab}$ (inches^3)**
Girder only	27.598	29.027	---	1255.2	1193.4	---
Composite (3n)	41.909	14.716	25.716	1611.5	4589.2	2626.2
Composite (n)	51.449	5.176	16.176	1745.6	17351.7	5552.0

Table E24-1.3-2
Region B Section Properties

For the strength limit state, since the deck concrete is in tension in the negative moment region, the deck reinforcing steel contributes to the composite section properties and the deck concrete does not.

As previously explained, for this design example, the concrete slab will be assumed to be fully effective for both positive and negative flexure for service and fatigue limit states.

Region C Section Properties (104 - 120 Feet)						
Section	**Area, A (inches^2)**	**Centroid, d (inches)**	**A*d (inches^3)**	**I_o (inches^4)**	**A*y^2 (inches^4)**	**I_{total} (inches^4)**
Girder only:						
Top flange	35.000	58.000	2030.0	18.2	30009.7	30027.9
Web	27.000	29.750	803.3	6561.0	28.7	6589.7
Bottom flange	38.500	1.375	52.9	24.3	28784.7	28809.0
Total	100.500	28.718	2886.2	6603.5	58823.1	65426.6
Composite (deck concrete using 3n):						
Girder	100.500	28.718	2886.2	65426.6	11525.0	76951.6
Slab	42.500	64.750	2751.9	255.9	27253.3	27509.2
Total	143.000	39.427	5638.1	65682.5	38778.3	104460.8
Composite (deck concrete using n):						
Girder	100.500	28.718	2886.2	65426.6	40802.5	106229.1
Slab	127.500	64.750	8255.6	767.7	32162.0	32929.6
Total	228.000	48.868	11141.8	66194.3	72964.4	139158.7
Composite (top longitudinal deck reinforcement only):						
Girder	100.500	28.718	2886.2	65426.6	559.2	65985.8
Deck reinf.	7.040	64.750	455.8	0.0	7982.4	7982.4
Total	107.540	31.077	3342.0	65426.6	8541.6	73968.2
Section	**y_{botgdr} (inches)**	**y_{topgdr} (inches)**	**y_{deck} (inches)**	**S_{botgdr} (inches^3)**	**S_{topgdr} (inches^3)**	**S_{deck} (inches^3)**
Girder only	28.718	30.532	---	2278.2	2142.9	---
Composite (3n)	39.427	19.823	29.573	2649.5	5269.7	3532.3
Composite (n)	48.868	10.382	20.132	2847.7	13403.3	6912.2
Composite (reba	31.077	28.173	33.673	2380.2	2625.5	2196.7

Table E24-1.3-3
Region C Section Properties

The section properties used to compute the unfactored dead and live load moments and shears for each girder region are given in the following table in accordance with the requirements of **LRFD [6.10.1.5]**.

Girder Region (ft)	Moment of Inertia Used (in^4)		
	Beam Self Weight, Misc Dead Loads, Concrete Deck & Haunch (Noncomposite)	Wisconsin Barrier, Future Wearing Surface (Composite)	Hl-93 Live Load (Composite)
Region A (0-84)	23605.3	53529.8	70696.2
Region B (84-104)	34639.8	67535.9	89807.8
Region C (104-120)	65426.6	104460.8	139158.7

Table E24-1.3-4
Section Properties Used to Generate Design Moments and Shears

E24-1.4 Compute Dead Load Effects

The girder must be designed to resist the dead load effects, as well as the other load effects. The dead load components consist of some dead loads that are resisted by the noncomposite section, as well as other dead loads that are resisted by the composite section. In addition, some dead loads are factored with the DC load factor and other dead loads are factored with the DW load factor. The following table summarizes the various dead load components that must be included in the design of a steel girder.

Dead Load Components		
Resisted by	**Type of Load Factor**	
	DC	**DW**
Noncomposite section	• Steel girder • Concrete deck • Concrete haunch • Stay-in-place deck forms • Miscellaneous dead load (including cross-frames, stiffeners, etc.)	
Composite section	• Concrete parapets	• Future wearing surface & utilities

Table E24-1.4-1
Dead Load Components

For the steel girder, the dead load per unit length varies due to the change in plate sizes. The moments and shears due to the weight of the steel girder can be computed using readily available analysis software. Since the actual plate sizes are entered as input, the moments and shears are computed based on the actual, varying plate sizes.

The dead load per unit length for Regions A, B, and C is calculated as follows:

$A_A = 49.75$ in^2 Region A (0 - 84 feet)(Table E24-1.3-1)

$A_B = 63.75$ in^2 Region B (84 - 104 feet)(Table E24-1.3-2)

$A_C = 100.50$ in^2 Region C (104 - 120 feet)(Table E24-1.3-3)

Weight of Girder per region:

$$DL_A := W_s \cdot \frac{A_A}{12^2} \qquad \boxed{DL_A = 0.169} \text{ klf}$$

$$DL_B := W_s \cdot \frac{A_B}{12^2} \qquad \boxed{DL_B = 0.217} \text{ klf}$$

$DL_C := W_s \cdot \frac{A_C}{12^2}$ $\boxed{DL_C = 0.342}$ klf

For the concrete deck, the dead load per unit length for an interior girder is computed as follows:

$w_c = 0.150$ kcf

$S = 10.00$ ft

$t_{deck} = 9.00$ in

$DL_{deck} := w_c \cdot S \cdot \frac{t_{deck}}{12}$ $\boxed{DL_{deck} = 1.125}$ kip/ft

For the concrete haunch, the dead load per unit length varies due to the change in top flange plate sizes. The moments and shears due to the concrete haunch are computed based on the actual, varying haunch thickness.

The haunch dead load per unit length for Region A, B, and C is calculated as follows:

$width_{flange} := 14$ in Top flange width is consistent in all three regions.

$t_{flangeA} := 0.75$ in Top flange thickness in Region A

$t_{flangeB} := 1.25$ in Top flange thickness in Region B

$t_{flangeC} := 2.5$ in Top flange thickness in Region C

$d_{haunch} = 3.75$ in Distance from top of web to bottom of deck as detailed in E24-1.1

$d_{hA} := d_{haunch} - t_{flangeA}$ $\boxed{d_{hA} = 3.00}$ in

$d_{hB} := d_{haunch} - t_{flangeB}$ $\boxed{d_{hB} = 2.50}$ in

$d_{hC} := d_{haunch} - t_{flangeC}$ $\boxed{d_{hC} = 1.25}$ in

$w_c = 0.150$ kcf

$DL_{hA} := \frac{width_{flange} \cdot d_{hA}}{12^2} \cdot w_c$ $\boxed{DL_{hA} = 0.044}$ klf

$DL_{hB} := \frac{width_{flange} \cdot d_{hB}}{12^2} \cdot w_c$ $\boxed{DL_{hB} = 0.036}$ klf

$$DL_{hC} := \frac{width_{flange} \cdot d_{hC}}{12^2} \cdot w_c$$ $\boxed{DL_{hC} = 0.018}$ klf

Total weight of deck and haunch per region:

$DL_{dhA} := DL_{deck} + DL_{hA}$ $\boxed{DL_{dhA} = 1.169}$ klf

$DL_{dhB} := DL_{deck} + DL_{hB}$ $\boxed{DL_{dhB} = 1.161}$ klf

$DL_{dhC} := DL_{deck} + DL_{hC}$ $\boxed{DL_{dhC} = 1.143}$ klf

For the miscellaneous dead load (including cross-frames, stiffeners, and other miscellaneous structural steel), the dead load per unit length is assumed to be as follows:

$DL_{misc} = 0.030$ kip/ft See E24-1.1

For the concrete parapets, the dead load per unit length is computed as follows, assuming that the superimposed dead load of the two parapets is distributed uniformly among all of the girders **LRFD [4.6.2.2.1]**:

$W_{par} = 0.464$ kip/ft (Type LF)

$N_b = 5$

$$DL_{par} := \frac{W_{par} \cdot 2}{N_b}$$ $\boxed{DL_{par} = 0.186}$ kip/ft

For the future wearing surface, the dead load per unit length is computed as follows, assuming that the superimposed dead load of the future wearing surface is distributed uniformly among all of the girders **LRFD [4.6.2.2.1]**:

$W_{fws} = 0.020$ ksf

$w_{roadway} = 44.0$ ft

$N_b = 5$

$$DL_{fws} := \frac{W_{fws} \cdot w_{roadway}}{N_b}$$ $\boxed{DL_{fws} = 0.176}$ kip/ft

Since the plate girder and its section properties are not uniform over the entire length of the bridge, an analysis software was used to compute the dead load moments and shears.

The following two tables present the unfactored dead load moments and shears, as computed by an analysis computer program. Since the bridge is symmetrical, the moments and shears in Span 2 are symmetrical to those in Span 1.

Dead Load Moments - Interior Beams (Kip-Feet)											
Dead Load Component	Location in Span 1										
	0.0L	0.1L	0.2L	0.3L	0.4L	0.5L	0.6L	0.7L	0.8L	0.9L	1.0L
Steel Girder	0.0	71.7	119.1	142.1	140.7	114.9	64.8	-9.8	-112.1	-246.9	-430.4
Concrete Deck & Haunches	0.0	487.6	808.0	961.3	947.3	766.2	417.9	-97.6	-780.3	-1630.2	-2647.3
Other Dead Loads Acting on Grider Alone	0.0	12.9	21.5	25.7	25.7	21.3	12.6	-0.4	-17.8	-39.5	-65.4
Concrete Parapets	0.0	80.0	133.1	159.5	159.1	131.9	78.0	-2.8	-110.3	-244.6	-405.7
Future Wearing Surface	0.0	75.7	126.0	150.9	150.6	124.8	73.8	-2.6	-104.4	-231.5	-383.9

Table E24-1.4-2
Dead Load Moments

Dead Load Shears - Interior Beams (Kips)											
Dead Load Component	Location in Span 1										
	0.0L	0.1L	0.2L	0.3L	0.4L	0.5L	0.6L	0.7L	0.8L	0.9L	1.0L
Steel Girder	7.0	5.0	2.9	0.9	-1.1	-3.2	-5.2	-7.2	-9.8	-13.1	-17.5
Concrete Deck & Haunches	47.6	33.7	19.7	5.8	-8.1	-22.1	-36.0	-49.9	-63.9	-77.8	-91.7
Other Dead Loads Acting on Grider Alone	1.3	0.9	0.5	0.2	-0.2	-0.5	-0.9	-1.3	-1.6	-2.0	-2.3
Concrete Parapets	7.8	5.5	3.3	1.1	-1.1	-3.4	-5.6	-7.8	-10.1	-12.3	-14.5
Future Wearing Surface	7.4	5.2	3.1	1.0	-1.1	-3.2	-5.3	-7.4	-9.5	-11.6	-13.8

Table E24-1.4-3
Dead Load Shears

E24-1.5 Compute Live Load Effects

The girder must also be designed to resist the live load effects **LRFD [3.6.1.2]**. The live load consists of an HL-93 loading. Similar to the dead load, the live load moments and shears for an HL-93 loading were obtained from an analysis computer program.

Based on Table E24-1.1-3, for all limit states other than fatigue and fracture, the dynamic load allowance, IM, is as follows **LRFD [3.6.2.1]**:

$IM := 0.33$

The live load distribution factors for moment for an interior girder are computed as follows **LRFD [4.6.2.2.2]**:

First, the longitudinal stiffness parameter, K_g, must be computed **LRFD [4.6.2.2.1]**:

$$K_g = n \cdot \left(I + A \cdot e_g^{\,2}\right)$$

Where:

I = Moment of inertia of beam (in^4)

A = Area of stringer, beam, or girder (in^2)

e_g = Distance between the centers of gravity of the basic beam and deck (in)

Longitudinal Stiffness Parameter, K_g				
	Region A (Pos. Mom.)	**Region B (Intermediate)**	**Region C (At Pier)**	**Weighted Average ***
Length (Feet)	84	20	16	
n	8	8	8	
I (Inches^4)	23,605.3	34,639.8	65,426.6	
A (Inches^2)	49.750	63.750	100.500	
e_g (Inches)	35.978	35.777	36.032	
K_g (Inches^4)	704,020	929,915	1,567,250	856,767

Table E24-1.5-1
Longitudinal Stiffness Parameter

After the longitudinal stiffness parameter is computed, **LRFD [Table 4.6.2.2.1-1]** is used to find the letter corresponding with the superstructure cross section. The letter corresponding with the superstructure cross section in this design example is "a."

If the superstructure cross section does not correspond with any of the cross sections illustrated in **LRFD [Table 4.6.2.2.1-1]**, then the bridge should be analyzed as presented in **LRFD [4.6.3]**.

Based on cross section "a", **LRFD [Table 4.6.2.2.2b-1 & Table 4.6.2.2.2.3a-1]** are used to compute the distribution factors for moment and shear, respectively.

Check the range of applicability as follows **LRFD [Table 4.6.2.2.2b-1]**:

$\boxed{3.5 \le S \le 16.0}$

Where:

S = Spacing of beams or webs (ft)

$S = 10.00$ ft OK

$\boxed{4.5 \le t_s \le 12.0}$

Where:

t_s = Depth of concrete slab (in)

$t_s = 8.5$ in OK

$\boxed{20 \le L \le 240}$

Where:

L = Span of beam (ft)

$L := 120$ ft OK

$\boxed{N_b \ge 4}$

Where:

N_b = Number of beams, stringers, or girders

$N_b = 5.00$ OK

$\boxed{10000 \le K_g \le 7000000}$

$K_g := 856767$ in^4 OK

For one design lane loaded, the distribution of live load per lane for moment in interior beams is as follows **LRFD [4.6.2.2.2b-1]**:

$$g_{int_moment_1} := 0.06 + \left(\frac{S}{14}\right)^{0.4}\left(\frac{S}{L}\right)^{0.3}\left(\frac{K_g}{12.0L \cdot t_s^{\,3}}\right)^{0.1}$$

$\boxed{g_{int_moment_1} = 0.473}$ lanes

For two or more design lanes loaded, the distribution of live load per lane for moment in interior beams is as follows **LRFD [Table 4.6.2.2.2b-1]**:

$$g_{int_moment_2} := 0.075 + \left(\frac{S}{9.5}\right)^{0.6}\left(\frac{S}{L}\right)^{0.2}\left(\frac{K_g}{12.0 \cdot L \cdot t_s^{\,3}}\right)^{0.1}$$

$\boxed{g_{int_moment_2} = 0.700}$ lanes

The live load distribution factors for shear for an interior girder are computed in a similar manner. The range of applicability is similar to that for moment **LRFD [Table 4.6.2.2.3a-1]**.

For one design lane loaded, the distribution of live load per lane for shear in interior beams is as follows:

$$g_{int_shear_1} := 0.36 + \frac{S}{25.0}$$

$\boxed{g_{int_shear_1} = 0.760}$ lanes

For two or more design lanes loaded, the distribution of live load per lane for shear in interior beams is as follows:

$$g_{int_shear_2} := 0.2 + \frac{S}{12} - \left(\frac{S}{35}\right)^{2.0}$$

$\boxed{g_{int_shear_2} = 0.952}$ lanes

Since this bridge has no skew, the skew correction factor does not need to be considered for this design example **LRFD [4.6.2.2.2e & 4.6.2.2.3c]**.

This design example is based on an interior girder. However, for illustrative purposes, the live load distribution factors for an exterior girder are computed below, as follows **LRFD [4.6.2.2.2]**:

The distance, d_e, is defined as the distance between the web centerline of the exterior girder and the interior edge of the curb. For this design example, based on Figure E24-1.1-2:

$d_e := S_{overhang} - 1.25$ ft

Check the range of applicability as follows **LRFD [Table 4.6.2.2.2d-1]**:

$-1.0 \le d_e \le 5.5$

$\boxed{d_e = 2.00}$ ft OK

For one design lane loaded, the distribution of live load per lane for moment in exterior beams is computed using the lever rule, as follows:

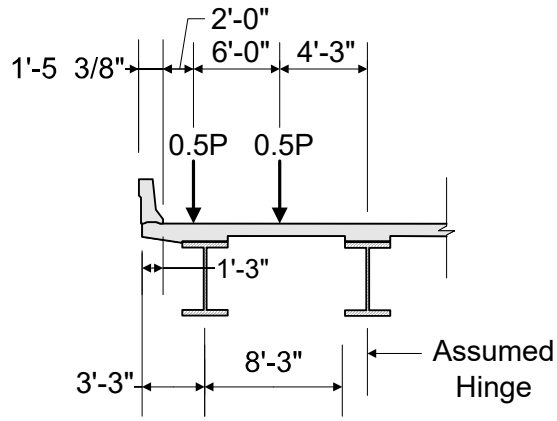

Figure E24-1.5-1
Lever Rule

$x_1 := S - 6 + (d_e - 2)$ $\qquad$ $x_2 := S + (d_e - 2)$

$$g_{ext_moment_1} := \frac{(0.5)\cdot(x_1) + (0.5)\cdot(x_2)}{S}$$

$\boxed{g_{ext_moment_1} = 0.700}$ lanes

$mpf := 1.20$

$g_{ext_moment_1} := g_{ext_moment_1}\cdot mpf$

$\boxed{g_{ext_moment_1} = 0.840}$

lanes
(for strength limit state)

For two or more design lanes loaded, the distribution of live load per lane for moment in exterior beams is as follows **LRFD [Table 4.6.2.2.2d-1]**:

The correction factor for distribution, e, is computed as follows:

$$e := 0.77 + \frac{d_e}{9.1}$$

$\boxed{e = 0.990}$

$g_{ext_moment_2} := e\cdot g_{int_moment_2}$

$\boxed{g_{ext_moment_2} = 0.693}$ lanes

The live load distribution factors for shear for an exterior girder are computed in a similar manner. The range of applicability is similar to that for moment **LRFD [Table 4.6.2.2.3.b-1]**.

For one design lane loaded, the distribution of live load per lane for shear in exterior beams is computed using the lever rule, as illustrated in Figure E24-1.5-1 and as follows:

$$g_{ext_shear_1} := \frac{(0.5)\cdot(x_1) + (0.5)\cdot(x_2)}{S}$$

$\boxed{g_{ext_shear_1} = 0.700}$ lanes

$g_{ext_shear_1} := g_{ext_shear_1}\cdot mpf$

$\boxed{g_{ext_shear_1} = 0.840}$

lanes
(for strength limit state)

For two or more design lanes loaded, the distribution of live load per lane for shear in exterior beams is as follows **LRFD [Table 4.6.2.2.3b-1]**:

$$e := 0.6 + \frac{d_e}{10} \qquad \boxed{e = 0.800}$$

$$g_{ext_shear_2} := e \cdot g_{int_shear_2} \qquad \boxed{g_{ext_shear_2} = 0.761} \quad \text{lanes}$$

In beam-slab bridge cross-sections with diaphragms or cross-frames, the distribution factor for the exterior beam can not be taken to be less than that which would be obtained by assuming that the cross-section deflects and rotates as a rigid cross-section. **LRFD [C4.6.2.2.2d]** provides one approximate approach to satisfy this requirement. The multiple presence factor provisions of **LRFD [3.6.1.1.2]** must be applied when this equation is used. This is not shown here since an interior girder is being designed.

Since this bridge has no skew, the skew correction factor does not need to be considered for this design example **LRFD [4.6.2.2.2e & 4.6.2.2.3c]**.

The controlling distribution factors for moment and shear for the interior girder are given below.

Interior Girder Distribution Factors		
	Moment DF	**Shear DF**
One Lane	0.473	0.760
Two or More Lanes	0.700	0.952

Table E24-1.5-2
Summary of Interior Girder Distribution Factors

The following table presents the unfactored maximum positive and negative live load moments and shears for HL-93 and fatigue live loading for interior beams, as computed using an analysis computer program. These values include the controlling live load distribution factor given above for two or more lanes, and they also include dynamic load allowance. Since the bridge is symmetrical, the moments and shears in Span 2 are symmetrical to those in Span 1.

Live Load Moments - Interior Beams (Kip-Feet)											
Live Load Effect	Location in Span 1										
	0.0L	0.1L	0.2L	0.3L	0.4L	0.5L	0.6L	0.7L	0.8L	0.9L	1.0L
Maximum Positive	0.0	863.8	1470.0	1871.8	2037.7	2001.3	1785.7	1384.6	826.7	258.3	0.0
Maximum Negative	0.0	-114.8	-229.6	-344.4	-459.9	-574.7	-689.5	-804.3	-919.1	-1274.7	-2065.7
Fatigue Range	0.0	401.6	668.1	836.1	888.5	862.6	787.9	618.3	406.9	457.7	508.6

Table E24-1.5-3
Live Load Moments

Live Load Shears - Interior Beams (Kips)											
Live Load Effect	Location in Span 1										
	0.0L	0.1L	0.2L	0.3L	0.4L	0.5L	0.6L	0.7L	0.8L	0.9L	1.0L
Maximum Positive	114.4	97.1	80.1	64.4	50.1	37.2	25.9	16.2	8.2	2.5	0.0
Maximum Negative	-13.0	-13.5	-21.4	-34.4	-48.3	-62.6	-77.1	-91.6	-105.9	-119.7	-132.9
Fatigue Range	59.2	51.3	43.6	40.8	43.6	44.9	46.6	48.7	52.2	55.4	58.8

Table E24-1.5-4
Live Load Shears

The design live load values for HL-93 and fatigue loading, as presented in the previous tables, are computed based on the product of the live load effect per lane and live load distribution factor. These values also include the effects of dynamic load allowance. However, it is important to note that the dynamic load allowance is applied only to the design truck or tandem. The dynamic load allowance is not applied to pedestrian loads or to the design lane load **LRFD [3.6.1, 3.6.2, 4.6.2.2]**.

E24-1.6 Combine Load Effects

After the load factors and load combinations have been established (see E24-1.1), the section properties have been computed (see E24-1.3), and all of the load effects have been computed (see E24-1.4 and E24-1.5), the force effects must be combined for each of the applicable limit states.

For this design example, η equals 1.00 **LFRD[1.3]**. (For more detailed information about η, refer to E24-1.1.)

The maximum positive moment (located at 0.4L) for the Strength I Limit State is computed as follows **LRFD [3.4.1]**:

$LF_{DC} := 1.25$

$M_{DC} := 140.7 + 947.3 + 25.7 + 159.1$ $\boxed{M_{DC} = 1272.8}$ kip-ft

$LF_{DW} := 1.50$

$M_{DW} := 150.6$ kip-ft

$LF_{LL} := 1.75$

$M_{LL} := 2037.7$ kip-ft

$M_{total} := LF_{DC} \cdot M_{DC} + LF_{DW} \cdot M_{DW} + LF_{LL} \cdot M_{LL}$ $\boxed{M_{total} = 5382.9}$ kip-ft

Similarly, the maximum stress in the top of the girder due to positive moment (located at 0.4L) for the Strength I Limit State is computed as follows:

Noncomposite dead load:

$M_{noncompDL} := 140.7 + 947.3 + 25.7$ $\boxed{M_{noncompDL} = 1113.70}$ kip-ft

$S_{topgdr} := 821.7$ in^3

$f_{noncompDL} := \dfrac{-M_{noncompDL} \cdot (12)}{S_{topgdr}}$ $\boxed{f_{noncompDL} = -16.26}$ ksi

Parapet dead load (composite):

$M_{parapet} := 159.1$ kip-ft

$S_{topgdr} := 4404.7$ in^3

$f_{parapet} := \dfrac{-M_{parapet} \cdot (12)}{S_{topgdr}}$ $\boxed{f_{parapet} = -0.43}$ ksi

Future wearing surface dead load (composite):

$M_{fws} := 150.6$ kip-ft

$S_{topgdr} := 4404.7$ in^3

$f_{fws} := \frac{-M_{fws} \cdot (12)}{S_{topgdr}}$ $\boxed{f_{fws} = -0.41}$ ksi

Live load (HL-93) and dynamic load allowance:

$M_{LL} = 2037.70$ kip-ft

$S_{topgdr} := 24820.6$ in^3

$f_{LL} := \frac{-M_{LL} \cdot (12)}{S_{topgdr}}$ $\boxed{f_{LL} = -0.99}$ ksi

Multiplying the above stresses by their respective load factors and adding the products results in the following combined stress for the Strength I Limit State **LRFD [3.4.1]**:

$$f_{Str} := (LF_{DC} \cdot f_{noncompDL}) + (LF_{DC} \cdot f_{parapet}) + (LF_{DW} \cdot f_{fws}) + (LF_{LL} \cdot f_{LL})$$

$\boxed{f_{Str} = -23.21}$ ksi

Similarly, all of the combined moments, shears, and flexural stresses can be computed at the controlling locations. A summary of those combined load effects for an interior beam is presented in the following three tables, summarizing the results obtained using the procedures demonstrated in the above computations.

Combined Effects at Location of Maximum Positive Moment				
Summary of Unfactored Values:				
Loading	**Moment (K-ft)**	**f_{botgdr} (ksi)**	**f_{topgdr} (ksi)**	**$f_{topslab}$ (ksi)**
Noncomposite DL	1113.7	15.23	-16.26	0.00
Parapet DL	159.1	1.55	-0.43	-0.05
FWS DL	150.6	1.47	-0.41	-0.05
LL - HL-93	2037.7	18.25	-0.99	-0.62
LL - Fatigue Range	888.5	7.96	-0.43	-0.27
Summary of Factored Values:				
Limit State	**Moment (K-ft)**	**f_{botgdr} (ksi)**	**f_{topgdr} (ksi)**	**$f_{topslab}$ (ksi)**
Strength I	5382.9	55.12	-23.21	-1.21
Service II	4072.4	41.98	-18.39	-0.90
Fatigue I	1554.9	13.93	-0.75	-0.47

Table E24-1.6-1
Combined Effects at Location of Maximum Positive Moment

As shown in the above table, the Strength I Limit State elastic stress in the bottom of the girder exceeds the girder yield stress. However, for this design example, this value is not used because of the local yielding that is permitted to occur at this section at the strength limit state.

Combined Effects at Location of Maximum Negative Moment				
Summary of Unfactored Values (Assuming Concrete Not Effective):				
Loading	**Moment (K-ft)**	**f_{botgdr} (ksi)**	**f_{topgdr} (ksi)**	**f_{deck} (ksi)**
Noncomposite DL	-3143.1	-16.56	17.60	0.00
Parapet DL	-405.7	-2.05	1.85	2.22
FWS DL	-383.9	-1.94	1.75	2.10
LL - HL-93	-2065.7	-10.41	9.44	11.28
Summary of Unfactored Values (Assuming Concrete Effective):				
Loading	**Moment (K-ft)**	**f_{botgdr} (ksi)**	**f_{topgdr} (ksi)**	**f_{deck} (ksi)**
Noncomposite DL	-3143.1	-16.56	17.60	0.00
Parapet DL	-405.7	-1.84	0.92	0.09
FWS DL	-383.9	-1.74	0.87	0.08
LL - HL-93	-2065.7	-8.70	1.85	0.45
LL - Fatigue Range	-506.3	-2.13	0.45	0.11
Summary of Factored Values:				
Limit State	**Moment (K-ft)**	**f_{botgdr} (ksi)**	**f_{topgdr} (ksi)**	**f_{deck} (ksi)**
Strength I *	-8626.8	-44.38	43.47	25.66
Service II **	-6618.1	-31.45	21.80	0.75
Fatigue I **	-886.0	-3.73	0.79	0.19

Legend:

* Strength I Limit State stresses are based on section properties assuming the deck concrete is not effective, and f_{deck} is the stress in the deck reinforcing steel.

** Service II and Fatigue I Limit State stresses are based on section properties assuming the deck concrete is effective, and f_{deck} is the stress in the deck concrete.

Table E24-1.6-2
Combined Effects at Location of Maximum Negative Moment

Combined Effects at Location of Maximum Shear	
Summary of Unfactored Values:	
Loading	**Shear (kips)**
Noncomposite DL	111.5
Parapet DL	14.5
FWS DL	13.8
LL - HL-93	132.9
LL - Fatigue Range	58.8
Summary of Factored Values:	
Limit State	**Shear (kips)**
Strength I	410.8
Service II	312.6
Fatigue I	102.9

Table E24-1.6-3
Combined Effects at Location of Maximum Shear

Envelopes of the factored Strength I moments and shears are presented in the following two figures. Maximum and minimum values are presented. As mentioned previously, all remaining design computations in this example are based on the interior girder. The basic approach illustrated in the subsequent design calculations applies equally to the exterior and interior girders (with some exceptions noted) once the load effects in each girder have been determined.

Factored Moments - Interior Beams (Kip-feet)											
Load Effect	Location in Span 1										
	0.0L	0.1L	0.2L	0.3L	0.4L	0.5L	0.6L	0.7L	0.8L	0.9L	1.0L
Strength I (Max)	0.0	2440.5	4113.6	5112.8	5382.9	4982.4	3952.3	2280.9	14.5	-2596.7	-5011.9
Strength I (Min)	0.0	727.9	1139.3	1234.4	1012.1	474.4	-379.3	-1549.7	-3040.7	-5279.5	-8626.8
Service II (Max)	0.0	1850.8	3118.7	3872.8	4072.4	3760.8	2968.5	1686.8	-50.2	-2056.9	-3932.7
Service II (Min)	0.0	578.7	909.2	991.8	825.5	412.0	-249.3	-1158.8	-2319.7	-4049.8	-6618.1
Fatigue I	0.0	821.8	1404.7	1762.0	1915.1	1953.9	1912.0	1704.8	1366.9	1042.3	886.1

Table E24-1.6-4
Factored Moments

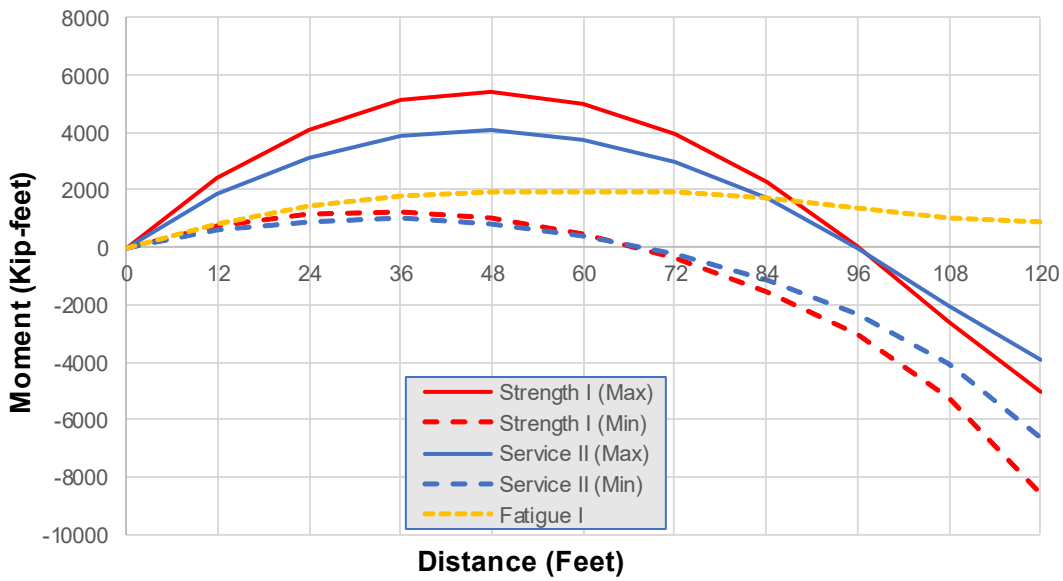

Figure E24-1.6-1
Envelope of Moments

Factored Shears - Interior Beams (Kips)											
Live Load/Fatigue	Location in Span 1										
	0.0L	0.1L	0.2L	0.3L	0.4L	0.5L	0.6L	0.7L	0.8L	0.9L	1.0L
Strength I	67.9	40.6	0.1	-48.7	-99.4	-150.9	-202.6	-254.2	-306.3	-358.4	-410.7
Service II	54.2	32.8	1.6	-35.7	-74.4	-113.8	-153.3	-192.7	-232.5	-272.4	-312.5
Fatigue I	103.6	89.7	76.3	71.4	76.3	78.6	81.5	85.3	91.3	97.0	102.8

Table E24-1.6-5
Factored Shears

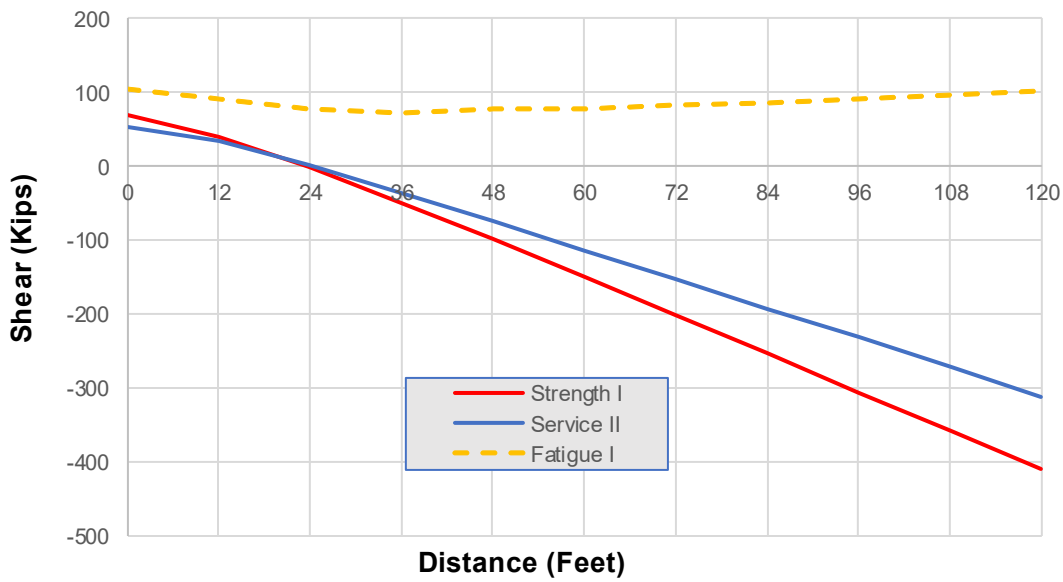

Figure E24-1.6-2
Envelope of Shears

Two design sections will be checked for illustrative purposes. First, all specification checks will be performed for the location of maximum positive moment, which is at 0.4L in Span 1. Second, all specification checks for these same design steps will be performed for the location of maximum negative moment and maximum shear, which is at the pier.

The following specification checks are for the location of maximum positive moment, which is at 0.4L in Span 1, as shown in Figure E24-1.6-3.

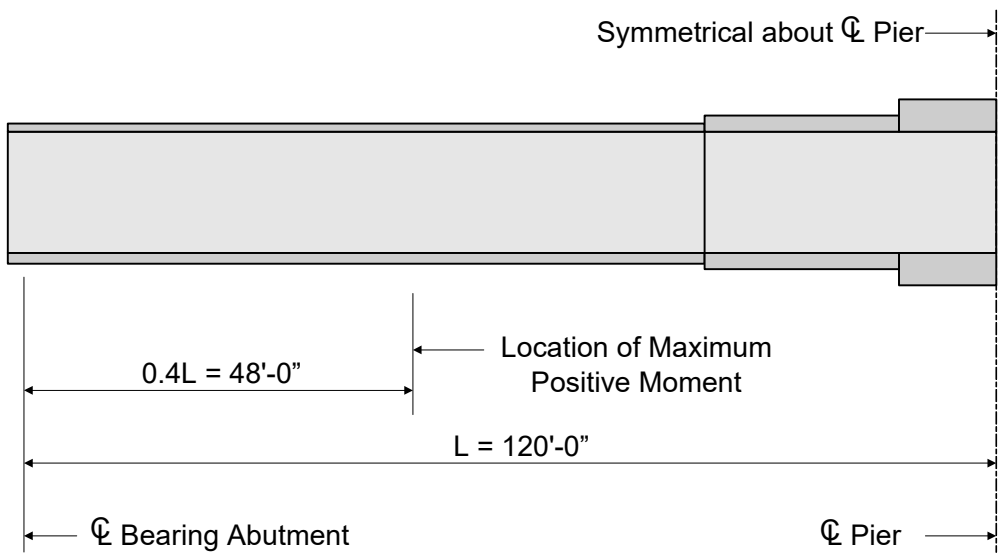

Figure E24-1.6-3
Location of Maximum Positive Moment

E24-1.7 Check Section Proportion Limits - Positive Moment Region

Several checks are required to ensure that the proportions of the trial girder section are within specified limits **LRFD [6.10.2]**.

The first section proportion check relates to the web slenderness **LRFD [6.10.2.1]**. For a section without longitudinal stiffeners, the web must be proportioned such that:

$$\frac{D}{t_w} \le 150$$

Where:

D = Clear distance between flanges (in)

t_w = Web thickness (in)

$D := 54$ in

$t_w := 0.50$ in

$$\boxed{\frac{D}{t_w} = 108.00}$$ OK

The second set of section proportion checks relate to the general proportions of the section **LRFD [6.10.2.2]**. The compression and tension flanges must be proportioned such that:

$$\frac{b_f}{2 \cdot t_f} \le 12.0$$

Where:

b_f = Full width of the flange (in)

t_f = Flange thickness (in)

$b_f := 14$ $t_f := 0.75$

$$\boxed{\frac{b_f}{2 \cdot t_f} = 9.33}$$ OK

$$b_f \ge \frac{D}{6}$$

$$\boxed{\frac{D}{6} = 9.00}$$ in OK

$$t_f \ge 1.1 \cdot t_w$$

$$\boxed{1.1 t_w = 0.55}$$ in OK

$$0.1 \le \frac{I_{yc}}{I_{yt}} \le 10$$

Where:

I_{yc} = moment of inertia of the compression flange of a steel section about the vertical axis in the plane of the web (in^4)

I_{yt} = moment of inertia of the tension flange of a steel section about the vertical axis in the plane of the web (in^4)

$$I_{yc} := \frac{0.75 \cdot 14^3}{12}$$

$$\boxed{I_{yc} = 171.50}$$ in^4

$$I_{yt} := \frac{0.875 \cdot 14^3}{12}$$

$$\boxed{I_{yt} = 200.08}$$ in^4

$$\boxed{\frac{I_{yc}}{I_{yt}} = 0.857}$$ OK

E24-1.8 Compute Plastic Moment Capacity - Positive Moment Region

For composite sections, the plastic moment, M_p, is calculated as the first moment of plastic forces about the plastic neutral axis **LRFD [Appendix D6.1]**.

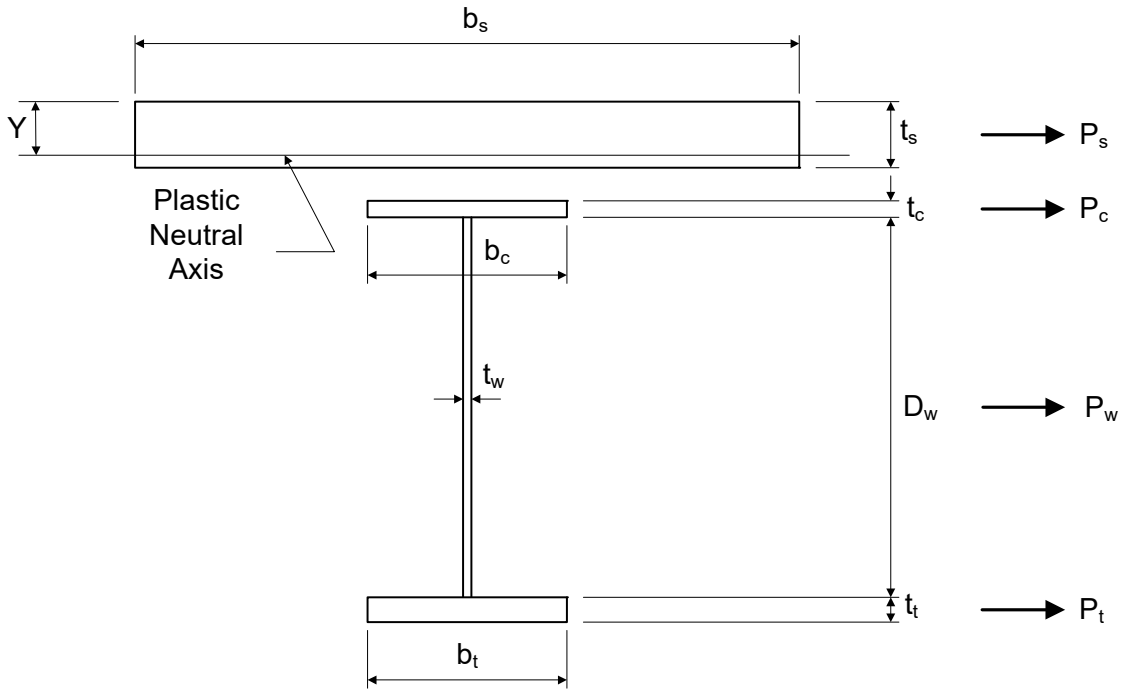

Figure E24-1.8-1
Computation of Plastic Moment Capacity for Positive Bending Sections

For the tension flange:

$$P_t = F_{yt} \cdot b_t \cdot t_t$$

Where:

F_{yt} = Specified minimum yield strength of a tension flange (ksi)

b_t = Full width of the tension flange (in)

t_t = Thickness of tension flange (in)

$F_{yt} := 50$ ksi

$b_t := 14$ in

$t_t := 0.875$ in

$P_t := F_{yt} \cdot b_t \cdot t_t$ $\boxed{P_t = 613}$ kips

For the web:

$P_w := F_{yw} \cdot D \cdot t_w$

Where:

F_{yw} = Specified minimum yield strength of a web (ksi)

$F_{yw} = 50$ ksi

$D = 54$ in

$t_w = 0.50$ in

$P_w := F_{yw} \cdot D \cdot t_w$ $\boxed{P_w = 1350}$ kips

For the compression flange:

$P_c = F_{yc} \cdot b_c \cdot t_c$

Where:

F_{yc} = Specified minimum yield strength of a compression flange (ksi)

b_c = Full width of the compression flange (in)

t_c = Thickness of compression flange (in)

$F_{yc} := 50$ ksi

$b_c := 14$ in

$t_c := 0.75$ in

$P_c := F_{yc} \cdot b_c \cdot t_c$ $\boxed{P_c = 525}$ kips

For the slab:

$P_s = 0.85 \cdot f'_c \cdot b_s \cdot t_s$

Where:

b_s = Effective width of concrete deck (in)

t_s = Thickness of concrete deck (in)

$f'_c = 4.00$ ksi

$b_s := 120$ in

$t_s = 8.5$ in

$P_s := 0.85 \cdot f'_c \cdot b_s \cdot t_s$ $\boxed{P_s = 3468}$ kips

The forces in the longitudinal reinforcement may be conservatively neglected in regions of positive flexure.

Check the location of the plastic neutral axis, as follows:

$P_t + P_w = 1963$ kips $\quad$ $P_c + P_s = 3993$ kips

$P_t + P_w + P_c = 2488$ kips $\quad$ $P_s = 3468$ kips

Since $P_t + P_w + P_c < P_s$, the plastic neutral axis is located within the slab **LRFD [Table D6.1-1]**. Since the slab reinforcement is being neglected in regions of positive flexure, Case III, V, or VII can be used. All three cases yield the same results with the reinforcement terms P_{rt} and P_{rb} set equal to zero.

$$Y := (t_s)\cdot\left(\frac{P_c + P_w + P_t}{P_s}\right) \qquad Y = 6.10 \text{ in}$$

Check that the position of the plastic neutral axis, as computed above, results in an equilibrium condition in which there is no net axial force.

$$\text{Compression} := 0.85\cdot f'_c\cdot b_s\cdot Y \qquad \text{Compression} = 2488 \text{ kips}$$

$$\text{Tension} := P_t + P_w + P_c \qquad \text{Tension} = 2488 \text{ kips} \quad \text{OK}$$

The plastic moment, M_p, is computed as follows, where d is the distance from an element force (or element neutral axis) to the plastic neutral axis **LRFD [Table D6.1-1]**:

$$d_c := \frac{-t_c}{2} + 3.75 + t_s - Y \qquad d_c = 5.78 \text{ in}$$

$$d_w := \frac{D}{2} + 3.75 + t_s - Y \qquad d_w = 33.15 \text{ in}$$

$$d_t := \frac{t_t}{2} + D + 3.75 + t_s - Y \qquad d_t = 60.59 \text{ in}$$

$$M_p := \frac{\frac{Y^2\cdot P_s}{2\cdot t_s} + \left(P_c\cdot d_c + P_w\cdot d_w + P_t\cdot d_t\right)}{12} \qquad M_p = 7707 \text{ kip-ft}$$

E24-1.9 Determine if Section is Compact or Noncompact - Positive Moment Region

Since the section is in a straight bridge, the next step in the design process is to determine if the section is compact or noncompact. This, in turn, will determine which formulae should be used to compute the flexural capacity of the girder.

If the specified minimum yield strengths of the flanges do not exceed 70.0 ksi and the girder does not have longitudinal stiffeners, then the first step is to check the compact-section web slenderness provisions, as follows **LRFD [6.10.6.2.2]**:

$$\frac{2 \cdot D_{cp}}{t_w} \le 3.76 \cdot \sqrt{\frac{E}{F_{yc}}}$$

Where:

D_{cp} = Depth of web in compression at the plastic moment (in)

Since the plastic neutral axis is located within the slab,

$D_{cp} := 0$ in

Therefore the web is deemed compact. Since this is a composite section in positive flexure and there are no holes in the tension flange at this section, the flexural resistance is computed as defined by the composite compact-section positive flexural resistance provisions of **LRFD [6.10.7.1.2]**.

E24-1.10 Design for Flexure - Strength Limit State - Positive Moment Region

Since the section was determined to be compact, and since it is a composite section in the positive moment region with no holes in the tension flange, the flexural resistance is computed in accordance with **LRFD [6.10.7.1.2]**.

$$M_n = 1.3 \cdot R_h \cdot M_y$$

Where:

R_h = Hybrid factor

M_y = Yield Moment (kip-in)

All design sections of this girder are homogenous. That is, the same structural steel is used for the top flange, the web, and the bottom flange. Therefore, the hybrid factor, R_h, is as follows **LRFD [6.10.1.10.1]**:

$R_h := 1.0$

The yield moment, M_y, is computed as follows **LRFD [Appendix D6.2.2]**:

$$F_y = \frac{M_{D1}}{S_{NC}} + \frac{M_{D2}}{S_{LT}} + \frac{M_{AD}}{S_{ST}}$$

Where:

M_{D1} = Bending moment caused by the factored permanent load applied before the concrete deck has hardened or is made composite (kip-in)

S_{NC} = Noncomposite elastic section modulus (in^3)

M_{D2} = Bending moment caused by the factored permanent load applied to the long-term composite section (kip-in)

S_{LT} = Long-term composite elastic section modulus (in^3)

M_{AD} = Additional bending moment that must be applied to the short-term composite section to cause nominal yielding in either steel flange (kip-in)

S_{ST} = Short-term composite elastic section modulus (in^3)

$M_y = M_{D1} + M_{D2} + M_{AD}$

$F_y := 50$ ksi

$M_{D1} := (1.25 \cdot 1113.7)$ $\boxed{M_{D1} = 1392}$ kip-ft

$M_{D2} := (1.25 \cdot 159.1) + (1.50 \cdot 150.6)$ $\boxed{M_{D2} = 425}$ kip-ft

For the bottom flange:

$S_{NC} := 877.6$ in^3

$S_{LT} := 1231.4$ in^3

$S_{ST} := 1339.5$ in^3

$$M_{AD} := \left[\frac{S_{ST}}{12^3} \cdot \left(F_y \cdot 144 - \frac{M_{D1}}{\frac{S_{NC}}{12^3}} - \frac{M_{D2}}{\frac{S_{LT}}{12^3}}\right)\right]$$ $\boxed{M_{AD} = 2994}$ kip-ft

$M_{ybot} := M_{D1} + M_{D2} + M_{AD}$ $\boxed{M_{ybot} = 4811}$ kip-ft

For the top flange:

$S_{NC} := 821.7$ in^3

$S_{LT} := 4404.7$ in^3

$S_{ST} := 24820.6$ in^3

$$M_{AD} := \frac{S_{ST}}{12^3} \cdot \left(F_y \cdot 144 - \frac{M_{D1}}{\frac{S_{NC}}{12^3}} - \frac{M_{D2}}{\frac{S_{LT}}{12^3}}\right)$$ $\boxed{M_{AD} = 58974}$ kip-ft

$M_{ytop} := M_{D1} + M_{D2} + M_{AD}$ $\boxed{M_{ytop} = 60791}$ kip-ft

The yield moment, M_y, is the lesser value computed for both flanges. Therefore, M_y is determined as follows **LRFD [Appendix D6.2.2]**:

$M_y := \min(M_{ybot}, M_{ytop})$ $\boxed{M_y = 4811}$ kip-ft

Therefore, for the positive moment region of this design example, the nominal flexural resistance is computed as follows **LRFD [6.10.7.1.2]**:

$D_p \le 0.1D_t$

$D_p := Y$ $\boxed{D_p = 6.10}$ in

$D_t := 0.875 + 54 + .75 + 3 + 8.5$ $\boxed{D_t = 67.13}$ in

$\boxed{0.1 \cdot D_t = 6.713}$ in OK

Therefore

$M_n := M_p$ $\boxed{M_n = 7707}$ kip-ft

Since this is neither a simple span nor a continuous span where the span and the sections in the negative-flexure region over the interior supports satisfy the special conditions outlined at the end of **LRFD [6.10.7.1.2]**, the nominal flexural resistance of the section must not exceed the following:

$M_n := 1.3 \cdot R_h \cdot M_y$ $\boxed{M_n = 6255}$ kip-ft

The ductility requirement is checked as follows **LRFD [6.10.7.3]**:

$D_p \le 0.42D_t$

Where:

D_p = Distance from top of the concrete deck to the neutral axis of the composite section at the plastic moment (in)

D_t = Total depth of the composite section (in)

$\boxed{0.42 \cdot D_t = 28.19}$ in OK

The factored flexural resistance, M_r, is computed as follows (note that since there is no curvature, skew and wind load is not considered under the Strength I load combination, the flange lateral bending stress is taken as zero in this case **LRFD [6.10.7.1.1]**:

$$M_u + \frac{1}{3}(0) \le \phi_f M_n$$

Where:

M_u = Moment due to the factored loads (kip-in)

M_n = Nominal flexural resistance of a section (kip-in)

$\phi_f := 1.00$

$M_r := \phi_f \cdot M_n$ $\boxed{M_r = 6255}$ kip-ft

The positive flexural resistance at this design section is checked as follows:

$$\Sigma\eta_i \cdot \gamma_i \cdot Q_i \le R_r$$

or in this case:

$$\Sigma\eta \cdot \gamma \cdot M_u \le M_r$$

$\eta := 1.00$

As computed in E24-1.6,

$\Sigma \cdot \gamma \cdot M_u = 5383$ kip-ft

Therefore

$\Sigma\eta \cdot \gamma \cdot M_u = 5383$ kip-ft

$M_r = 6255$ kip-ft OK

E24-1.11 Design for Shear - Positive Moment Region

Shear must be checked at each section of the girder **LRFD [6.10.9]**. However, shear is minimal at the location of maximum positive moment, and it is maximum at the pier.

Therefore, for this design example, the required shear design computations will be presented later for the girder design section at the pier.

It should be noted that in end panels, the shear is limited to either the shear yield or shear buckling in order to provide an anchor for the tension field in adjacent interior panels. Tension field is not allowed in end panels. The design procedure for shear in the end panel is presented in **LRFD [6.10.9.3.3c]**.

E24-1.12 Design Transverse Intermediate Stiffeners - Positive Moment Region

As stated above, shear is minimal at the location of maximum positive moment but is maximum at the pier. Therefore, the required design computations for transverse intermediate stiffeners will be presented later for the girder design section at the pier **LRFD [6.10.11.1]**.

E24-1.13 Design for Flexure - Fatigue and Fracture Limit State - Positive Moment Region

Load-induced fatigue must be considered in a plate girder design **LRFD [6.6.1]**.

For this design example, fatigue will be checked for the fillet-welded connection of a transverse intermediate stiffener serving as a cross-frame connection plate to the girder at the location of maximum positive moment. This detail corresponds to Description 4.1 in **LRFD [Table 6.6.1.2.3-1]**, and it is classified as Detail Category C'. The fatigue detail at the inner fiber of the tension flange, where the transverse intermediate stiffener is welded to the flange, is subject to a net tensile stress by inspection. However, for simplicity, the computations will conservatively compute the fatigue stress at the outer fiber of the tension flange.

The fatigue detail being investigated in this design example is illustrated in the following figure:

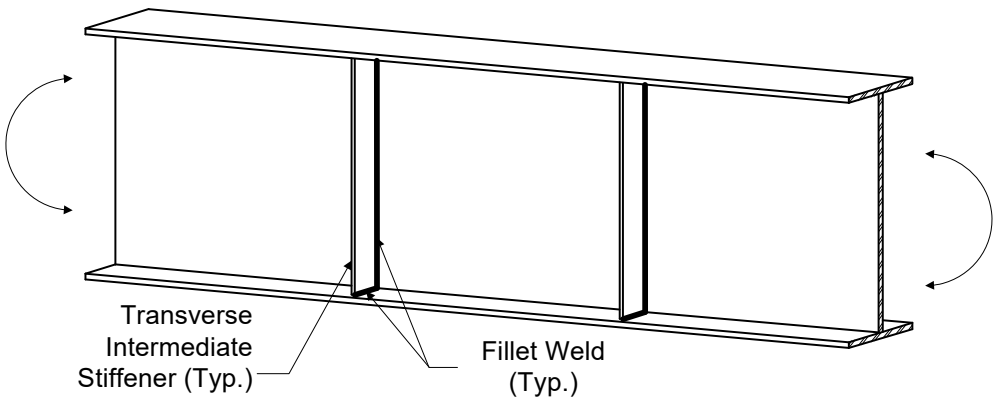

Figure E24-1.13-1
Load-Induced Fatigue Detail

The nominal fatigue resistance is computed as follows **LRFD [6.6.1.2.5]**:

NOTE: WisDOT policy is to design for infinite fatigue life (ADTT not considered) and use Fatigue I limit state.

$$\Delta F_n = \Delta F_{TH}$$

Where:

ΔF_{TH} = Constant-amplitude fatigue threshold **LRFD [Table 6.6.1.2.5-3]** (ksi)

$\Delta F_{TH} := 12.00$ ksi

$\Delta F_n = 12.00$ ksi

The factored fatigue stress range in the outer fiber base metal at the weld at the location of maximum positive moment was previously computed in Table E24-1.6-1, as follows:

$f_{botgdr} := 13.93$ ksi

$f_{botgdr} \leq \Delta F_n$ NG

NOTE: A new trial girder section is required to statisfy the above fatigue requirement.

In addition to the above fatigue detail check, a special fatigue requirement for webs must also be checked **LRFD [6.10.6]**. These calculations will be presented later for the girder design section at the pier [E24-1.23].

E24-1.14 Design for Flexure - Service Limit State - Positive Moment Region

The girder must be checked for service limit state control of permanent deflection **LRFD [6.10.4.2]**. This check is intended to prevent objectionable permanent deflections due to expected severe traffic loadings that would impair rideability. The Service II load combination is used for this check.

The stresses for steel flanges of composite sections must satisfy the following requirements **LRFD [6.10.4.2.2]**:

Top flange:

$$f_f \le 0.95 R_h \cdot F_{yf}$$

Bottom flange

$$f_f + \frac{f_l}{2} \le 0.95 R_h \cdot F_{yf}$$

Since there is no curvature and no discontinuous diaphragm lines in conjunction with skews exceeding 20 degrees, f_l is taken equal to zero at the service limit state in this case. The factored Service II flexural stress was previously computed in Table E24-1.6-1 as follows:

$f_{botgdr} := 41.98$ ksi

$f_{topgdr} := -18.39$ ksi

$\boxed{0.95 \cdot R_h \cdot F_{yf} = 47.50}$ ksi OK

As indicated in **LRFD [6.10.4.2.2]**, the web bend buckling check at the service limit state must be checked for all sections according to equation 6.10.4.2.2-4 with the execption of composite sections in positive flexure that meet the requirement of **LRFD [6.10.2.1.1]** (D/tw ≤ 150). Since $\frac{D}{t_w} = 108$ [E24-1.7] , equation 6.10.4.2.2-4 does not need to be considered for this location.

In addition to the check for service limit state control of permanent deflection, the girder can also be checked for live load deflection **LRFD [2.5.2.6.2]**. Although this check is optional for a concrete deck on steel girders, it is included in this design example.

Using an analysis computer program, the maximum live load deflection is computed to be the following:

$\Delta_{max} := 1.14$ in

This maximum live load deflection is computed based on the following:

1. All design lanes are loaded.
2. All supporting components are assumed to deflect equally.
3. For composite design, the design cross section includes the entire width of the roadway.
4. The number and position of loaded lanes is selected to provide the worst effect.
5. The live load portion of Service I Limit State is used.
6. Dynamic load allowance is included.
7. The live load is taken from **LRFD [3.6.1.3.2]**.

As recommended in LRFD [2.5.2.6.2] for "vehicular load, general", the deflection limit is as follows:

$Span := 120$ ft

$\Delta_{allowable} := \left(\frac{Span}{800}\right)\cdot(12)$ $\boxed{\Delta_{allowable} = 1.80}$ in OK

E24-1.15 Design for Flexure - Constructibility Check - Positive Moment Region

The girder must also be checked for flexure during construction **LRFD [6.10.3.2]**. The girder has already been checked in its final condition when it behaves as a composite section. The constructibility must also be checked for the girder prior to the hardening of the concrete deck when the girder behaves as a noncomposite section.

As previously stated, a deck pouring sequence will not be considered in this design example. However, it is required to consider the effects of the deck pouring sequence in an actual design because it will often control the design of the top flange and the cross-frame spacing in the positive moment regions of composite girders. The calculations illustrated below, which are based on the final noncomposite dead load moments after the sequential placement is complete would be employed to check the girder for the critical actions resulting from the deck pouring sequence. For an exterior girder, deck overhang effects must also be considered according to **LRFD [6.10.3.4]**. Since an interior girder is designed in this example, those effects are not considered here.

Based on the flowchart for constructibility checks in **LRFD [Appendix C6]**, nominal yielding of both flanges must be checked as well as the flexural resistance of the compression flange. For discretely braced flanges (note f_l is taken as zero since this is an interior girder and there are no curvature, skew, deck overhang or wind load effects considered) **LRFD [6.10.3.2.1 & 6.10.3.2.2]**:

$$f_{bu} + f_l \le \phi_f \cdot R_h \cdot F_{yf}$$

The flange stress, f_{bu}, is taken from Table E24-1.6-1 for the noncomposite dead load for the top flange since no deck placement analysis was performed. By inspection, since lateral flange bending is not considered, and no live load effects are considered, Strength IV is the controlling limit state and the compression flange is the controlling flange.

$f_{bu} := 1.5\cdot 16.26$ ksi $\boxed{f_{bu} = 24.39}$ ksi

$\boxed{\phi_f \cdot R_h \cdot F_{yf} = 50.00}$ ksi OK

The flexural resistance calculation ensures that the compression flange has sufficient strength with respect to lateral torsional and flange local buckling based limit states, including the consideration of flange lateral bending where these effects are judged to be significant. The equation is in **LRFD [6.10.3.2]**:

$$f_{bu} + \frac{1}{3}\cdot f_l \le \phi_f \cdot F_{nc}$$

Where:

F_{nc} = Nominal flexural resistance of the flange (ksi)

For straight I-girder bridges with compact or noncompact webs, the nominal resistance may be calculated from **LRFD [Appendix A6.3.3]** which includes the beneficial contribution of the

St. Venant constant, J, in the calculation of the lateral torsional buckling resistance. This example will not use **LRFD [Appendix A6.3.3]**, but a check of the noncompact slenderness limit of web using **LRFD [6.10.6.2.3]** is included for reference.

$D_c := 28.73 - 0.75$ $\boxed{D_c = 27.98}$ in

$\boxed{\frac{2 \cdot D_c}{t_w} = 111.92}$

$\lambda_{rw} := 5.7 \cdot \sqrt{\frac{E_s}{F_{yc}}}$ $\boxed{\lambda_{rw} = 137.27}$

$\frac{2 \cdot D_c}{t_w} < 5.7 \cdot \sqrt{\frac{E}{F_{yc}}}$ OK

Although the noncomposite section has a nonslender web according to equation 1 of **LRFD [6.10.6.2.3]**, for this example, these beneficial effects will conservatively not be utilized.

The nominal flexural resistance of the compression flange is therefore taken as the smaller of the local buckling resistance and the lateral torsional buckling resistance calculated according to **LRFD [6.10.8.2]**.

Local buckling resistance **LRFD [6.10.8.2.2]**:

$$\lambda_f = \frac{b_{fc}}{2 \cdot t_{fc}}$$

Where:

λ_f = Slenderness ratio for the compression flange

b_{fc} = Full width of the compression flange (in)

t_{fc} = Thickness of the compression flange (in)

$b_{fc} := 14$ in (see Figure E24-1.2-1)

$t_{fc} := 0.75$ in (see Figure E24-1.2-1)

$\lambda_f := \frac{b_{fc}}{2 \cdot t_{fc}}$ $\boxed{\lambda_f = 9.33}$

$\lambda_{pf} := 0.38 \cdot \sqrt{\frac{E_s}{F_{yc}}}$

Where:

λ_{pf} = Limiting slenderness ratio for a compact flange

$\boxed{\lambda_{pf} = 9.15}$

Since $\lambda_f > \lambda_{pf}$, F_{nc} must be calculated by the following equation:

$$F_{nc} = \left[1 - \left(1 - \frac{F_{yr}}{R_h \cdot F_{yc}}\right) \cdot \left(\frac{\lambda_f - \lambda_{pf}}{\lambda_{rf} - \lambda_{pf}}\right)\right] \cdot R_b \cdot R_h \cdot F_{yc}$$

Where:

F_{yr} = Compression-flange stress at the onset of nominal yielding within the cross-section, including residual stress effects, but not including compression-flange lateral bending, taken as the smaller of $0.7F_{yc}$ and F_{yw}, but not less than $0.5F_{yc}$

λ_{rf} = Limiting slenderness ratio for a noncompact flange

R_b = Web load-shedding factor **LRFD [6.10.1.10.2]**

$F_{yr} := \max(\min(0.7 \cdot F_{yc}, F_{yw}), 0.5 \cdot F_{yc})$ $\boxed{F_{yr} = 35.00}$ ksi

$\lambda_{rf} := 0.56 \cdot \sqrt{\frac{E_s}{F_{yr}}}$ $\boxed{\lambda_{rf} = 16.12}$

$R_b := 1.0$

$$F_{nc} := \left[1 - \left(1 - \frac{F_{yr}}{R_h \cdot F_{yc}}\right) \cdot \left(\frac{\lambda_f - \lambda_{pf}}{\lambda_{rf} - \lambda_{pf}}\right)\right] \cdot R_b \cdot R_h \cdot F_{yc}$$

$\boxed{F_{nc} = 49.61}$ ksi

Lateral torsional buckling resistance **LRFD [6.10.8.2.3]**:

For the noncomposite loads during construction:

$Depth_{comp} := 55.625 - 26.897$ (see Figure E24-1.2-1 and Table E24-1.3-1)

$\boxed{Depth_{comp} = 28.73}$ in

The effective radius of gyration, r_t, for lateral torsional buckling is calculated as follows:

$$r_t := \frac{b_{fc}}{\sqrt{12 \cdot \left(1 + \frac{1}{3} \cdot \frac{D_c \cdot t_w}{b_{fc} \cdot t_{fc}}\right)}}$$

Where:

D_c = Depth of the web in compression in the elastic range (in). For composite sections see **LRFD [Appendix D6.3.1]**

$t_{topfl} := 0.75$ in

$D_c := Depth_{comp} - t_{topfl}$ $\boxed{D_c = 27.98}$ in

$$r_t := \frac{b_{fc}}{\sqrt{12 \cdot \left(1 + \frac{1}{3} \cdot \frac{D_c \cdot t_w}{b_{fc} \cdot t_{fc}}\right)}}$$ $r_t = 3.36$ in

The limiting unbraced length, L_p, to achieve the nominal flexural resistance of $R_b R_h F_{yc}$ under uniform bending is calculated as follows:

$$L_p := 1.0 \cdot r_t \cdot \sqrt{\frac{E_s}{F_{yc}}}$$ $L_p = 80.99$ in

The limiting unbraced length, L_r, to achieve the onset of nominal yielding in either flange under uniform bending with consideration of compression-flange residual stress effects is calculated as follows:

$$L_r := \pi \cdot r_t \cdot \sqrt{\frac{E_s}{F_{yr}}}$$ $L_r = 304.13$ in

$L_b = 240.00$ in

The moment gradient correction factor, C_b, is computed as follows:

Note since f_{mid} is greater than f_2 at the location of maximum positive moment (see Figure E24-1.1-3), use C_b = 1.0 according to **LRFD [6.10.8.2.3]**.

$C_b := 1.00$

Therefore:

$$F_{nc} := C_b \cdot \left[1 - \left(1 - \frac{F_{yr}}{R_h \cdot F_{yc}}\right) \cdot \left(\frac{L_b - L_p}{L_r - L_p}\right)\right] \cdot R_b \cdot R_h \cdot F_{yc}$$

$F_{nc} = 39.3$ ksi

Use

(minimum of local buckling and lateral torsional buckling) $F_{nc} := 39.3$ ksi

$\phi_f \cdot F_{nc} = 39.30$ ksi

$f_{bu} + \frac{1}{3} \cdot (0) = 24.39$ ksi OK

Web bend-buckling during construction must also be checked according to equation 3 of **LRFD [6.10.3.2.1]**. However, since the noncomposite section has previously been shown to have a nonslender web, web bend-buckling need not be checked in this case according to **LRFD [6.10.3.2.1]**.

In addition to checking the nominal flexural resistance during construction, the nominal shear resistance must also be checked **LRFD [6.10.3.2.3]**. However, shear is minimal at the

location of maximum positive moment, and it is maximum at the pier in this case.

Therefore, for this design example, the nominal shear resistance for constructibility will be presented later for the girder design section at the pier.

E24-1.16 - Check Wind Effects on Girder Flanges - Positive Moment Region

As stated in previously, for this design example, the interior girder is being designed.

Wind effects generally do not control a steel girder design, and they are generally considered for the exterior girders only **LRFD [6.10.1.6 & C4.6.2.7.1]**. However, for this design example, wind effects will be presented later for the girder design section at the pier for illustration only.

Specification checks have been completed for the location of maximum positive moment, which is at 0.4L in Span 1.

E24-1.17 Check Section Proportion Limits - Negative Moment Region

Now the specification checks are repeated for the location of maximum negative moment, which is at the pier, as shown in Figure E24-1.17-1. This is also the location of maximum shear in this case.

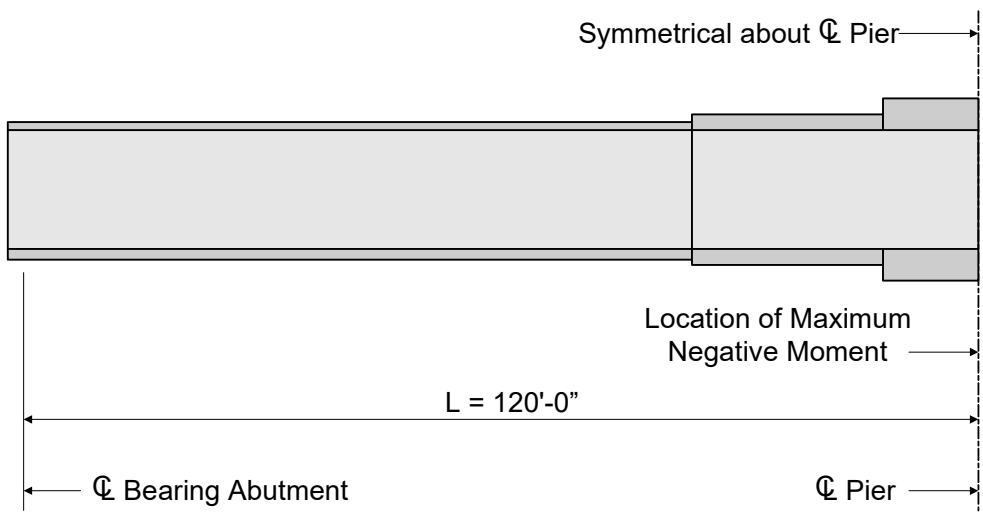

Figure E24-1.17-1
Location of Maximum Negative Moment

Several checks are required to ensure that the proportions of the girder section are within specified limits **LRFD [6.10.2]**.

The first section proportion check relates to the web slenderness **LRFD [6.10.2.1]**. For a section without longitudinal stiffeners, the web must be proportioned such that:

$$\frac{D}{t_w} \leq 150 \qquad \boxed{\frac{D}{t_w} = 108.00} \qquad \text{OK}$$

The second set of section proportion checks relate to the general proportions of the section

LRFD [6.10.2.2]. The compression and tension flanges must be proportioned such that:

$$\frac{b_f}{2 \cdot t_f} \le 12.0$$

$b_f := 14$

$t_f := 2.50$

$$\boxed{\frac{b_f}{2 \cdot t_f} = 2.80}$$ OK

$$b_f \ge \frac{D}{6}$$ $\boxed{\frac{D}{6} = 9.00}$ in OK

$$t_f \ge 1.1 \cdot t_w$$ $\boxed{1.1 t_w = 0.55}$ in OK

$$0.1 \le \frac{I_{yc}}{I_{yt}} \le 10$$

$$I_{yc} := \frac{2.75 \cdot 14^3}{12}$$ $\boxed{I_{yc} = 628.83}$ in^4

$$I_{yt} := \frac{2.50 \cdot 14^3}{12}$$ $\boxed{I_{yt} = 571.67}$ in^4

$$\boxed{\frac{I_{yc}}{I_{yt}} = 1.100}$$ OK

E24-1.18 Compute Plastic Moment Capacity - Negative Moment Region

For composite sections, the plastic moment, M_p, is calculated as the first moment of plastic forces about the plastic neutral axis **LRFD [Appendix D6.1]**. For composite sections in negative flexure, the concrete deck is ignored and the longitudinal deck reinforcement is included in the computation of M_p.

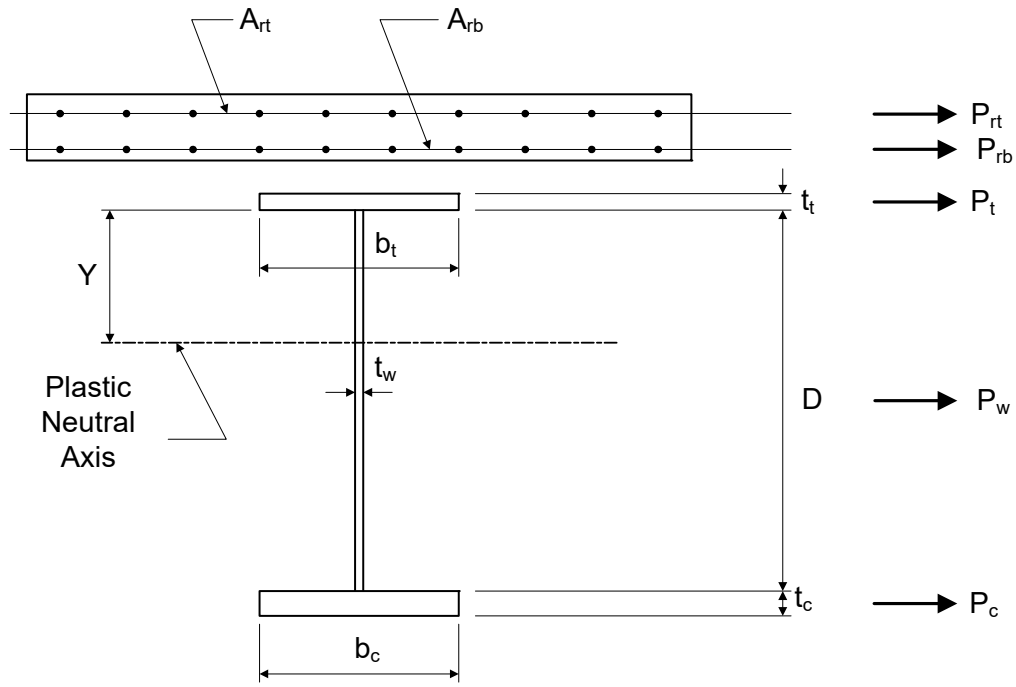

Figure E24-1.18-1
Computation of Plastic Moment Capacity for Negative Bending Sections

The plastic force in the tension flange, P_t, is calculated as follows:

$t_t := 2.50$ in

$P_t := F_{yt} \cdot b_t \cdot t_t$ $\boxed{P_t = 1750}$ kips

The plastic force in the web, P_w, is calculated as follows:

$P_w := F_{yw} \cdot D \cdot t_w$ $\boxed{P_w = 1350}$ kips

The plastic force in the compression flange, P_c, is calculated as follows:

$t_c := 2.75$ in

$P_c := F_{yc} \cdot b_c \cdot t_c$ $\boxed{P_c = 1925}$ kips

The plastic force in the top layer of longitudinal deck reinforcement, P_{rt}, used to compute the plastic moment is calculated as follows:

$P_{rt} = F_{yrt} \cdot A_{rt}$

Where:

F_{yrt} = Specified minimum yield strength of the top layer of longitudinal concrete deck reinforcement (ksi)

A_{rt} = Area of the top layer of longitudinal reinforcement within the effective concrete deck width (in^2)

$F_{yrt} := 60$ ksi

$A_{rt} := 0.44 \cdot \left(\frac{W_{effflange} \cdot 12}{7.5} \right)$ $\boxed{A_{rt} = 7.04}$ in^2

$P_{rt} := F_{yrt} \cdot A_{rt}$ $\boxed{P_{rt} = 422}$ kips

This example conservatively ignores the contribution from the bottom layer of longitudinal deck reinforcement, but the calculation is included for reference. The plastic force in the bottom layer of longitudinal deck reinforcement, P_{rb}, used to compute the plastic moment is calculated as follows:

$P_{rb} = F_{yrb} \cdot A_{rb}$

Where:

F_{yrb} = Specified minimum yield strength of the bottom layer of longitudinal concrete deck reinforcement (ksi)

A_{rb} = Area of the bottom layer of longitudinal reinforcement within the effective concrete deck width (in^2)

$F_{yrb} := 60$ ksi

$A_{rb} := 0 \cdot \left(\frac{W_{effflange} \cdot 12}{1} \right)$ $\boxed{A_{rb} = 0.00}$ in^2

$P_{rb} := F_{yrb} \cdot A_{rb}$ $\boxed{P_{rb} = 0}$ kips

Check the location of the plastic neutral axis, as follows:

$\boxed{P_c + P_w = 3275}$ kips

$\boxed{P_t + P_{rb} + P_{rt} = 2172}$ kips

$\boxed{P_c + P_w + P_t = 5025}$ kips

$\boxed{P_{rb} + P_{rt} = 422}$ kips

Therefore the plastic neutral axis is located within the web **LRFD [Appendix Table D6.1-2]**.

$Y := \left(\frac{D}{2} \right) \cdot \left(\frac{P_c - P_t - P_{rt} - P_{rb}}{P_w} + 1 \right)$ $\boxed{Y = 22.05}$ in

Although it will be shown in the next design step that this section qualifies as a nonslender

web section at the strength limit state, the optional provisions of Appendix A to **LRFD [6]** are not employed in this example. Thus, the plastic moment is not used to compute the flexural resistance and therefore does not need to be computed.

E24-1.19 Determine if Section is a Compact-Web, Noncompact-Web, or Slender-Web Section - Negative Moment Region

Since the section is in a straight bridge, the next step in the design process is to determine if the section is a compact-web, noncompact-web, or slender-web section. This, in turn, will determine which formulae should be used to compute the flexural capacity of the girder.

Where the specified minimum yield strengths of the flanges do not exceed 70.0 ksi and the girder does not have longitudinal stiffeners, then the first step is to check the noncompact-web slenderness limit, as follows **LRFD [6.10.6.2.3]**:

$$\frac{2 \cdot D_c}{t_w} \le 5.7\sqrt{\frac{E_s}{F_{yc}}} \qquad \lambda_{rw} := 5.7\sqrt{\frac{E_s}{F_{yc}}}$$

At sections in negative flexure, D_c of the composite section consisting of the steel section plus the longitudinal reinforcement is to be used at the strength limit state.

$D_c := 31.077 - 2.75$ (see Figure E24-1.2-1 and Table E24-1.3-3)

$\boxed{D_c = 28.33}$ in

$\boxed{\frac{2 \cdot D_c}{t_w} = 113.3}$

$\boxed{5.7 \cdot \sqrt{\frac{E_s}{F_{yc}}} = 137.3}$

The section is a nonslender web section (i.e. either a compact-web or noncompact-web section). Next, check:

$I_{yc} := \frac{2.75 \cdot 14^3}{12}$ $\boxed{I_{yc} = 628.83}$ in^4

$I_{yt} := \frac{2.5 \cdot 14^3}{12}$ $\boxed{I_{yt} = 571.67}$ in^4

$\boxed{\frac{I_{yc}}{I_{yt}} = 1.10}$ > 0.3 OK

Therefore, the web qualifies to use the optional provisions of **LRFD [Appendix A6]** to compute the flexural resistance. However, since the web slenderness is closer to the noncompact web slenderness limit than the compact web slenderness limit in this case, the simpler equations of **LRFD [6.10.8]**, which assume slender-web behavior and limit the resistance to Fyc or below, will conservatively be applied in this example to compute the flexural resistance at the strength limit state. The investigation proceeds by calculating the flexural resistance of the discretely braced compression flange.

E24-1.20 Design for Flexure - Strength Limit State - Negative Moment Region

The nominal flexural resistance of the compression flange shall be taken as the smaller of the local buckling resistance and the lateral torsional buckling resistance **LRFD [6.10.8.2.2 & 6.10.8.2.3]**.

Local buckling resistance **LRFD [6.10.8.2.2]**:

$b_{fc} := 14$ (see Figure E24-1.2-1)

$t_{fc} := 2.75$ (see Figure E24-1.2-1)

$\lambda_f := \frac{b_{fc}}{2 \cdot t_{fc}}$ $\boxed{\lambda_f = 2.55}$

$\lambda_{pf} := 0.38 \cdot \sqrt{\frac{E_s}{F_{yc}}}$ $\boxed{\lambda_{pf} = 9.15}$

Since $\lambda_f < \lambda_{pf}$, F_{nc} is calculated using the following equation:

$F_{nc} := R_b \cdot R_h \cdot F_{yc}$

Since $2D_c/t_w$ is less than λ_{rw} (calculated above), R_b is taken as 1.0 **LRFD [6.10.1.10.2]**.

$\boxed{F_{nc} = 50.00}$ ksi

Lateral torsional buckling resistance **LRFD [6.10.8.2.3]**:

$r_t := \frac{b_{fc}}{\sqrt{12 \cdot \left(1 + \frac{1}{3} \cdot \frac{D_c \cdot t_w}{b_{fc} \cdot t_{fc}}\right)}}$ $\boxed{r_t = 3.81}$ in

$L_p := 1.0 \cdot r_t \cdot \sqrt{\frac{E_s}{F_{yc}}}$ $\boxed{L_p = 91.86}$ in

$L_r := \pi \cdot r_t \cdot \sqrt{\frac{E_s}{F_{yr}}}$ $\boxed{L_r = 344.93}$ in

$L_b = 240.00$

The moment gradient correction factor, C_b, is computed as follows:

Where the variation in the moment along the entire length between brace points is concave in shape, which is the case here, $f_1 = f_0$. (calculated below based on the definition of f_0 given in **LRFD [6.10.8.2.3]**).

$M_{NCDC0.8L} := 112.1 + 780.3 + 17.8$ $\boxed{M_{NCDC0.8L} = 910.20}$ kip-ft

$S_{NCDC0.8L} := 2278.2$ in^3

The section properties specified for the 0.8 pt are the properties found at the pier based on **LRFD [6.10.8.2.3]**.

$M_{par0.8L} := 110.3$ kip-ft

$M_{fws0.8L} := 104.4$ kip-ft

$M_{LL0.8L} := 919.1$ kip-ft

$S_{rebar0.8L} := 2380.2$ in^3

$$f_1 := 1.25 \cdot \frac{M_{NCDC0.8L} \cdot 12}{S_{NCDC0.8L}} + 1.25 \cdot \frac{M_{par0.8L} \cdot 12}{S_{rebar0.8L}} + 1.50 \cdot \frac{M_{fws0.8L} \cdot 12}{S_{rebar0.8L}} + 1.75 \cdot \frac{M_{LL0.8L} \cdot 12}{S_{rebar0.8L}}$$

$\boxed{f_1 = 15.59}$ ksi

$f_2 := 44.38$ ksi (Table E24-1.6-2)

$$\boxed{\frac{f_1}{f_2} = 0.35}$$

$$C_b := 1.75 - 1.05 \cdot \left(\frac{f_1}{f_2}\right) + 0.3 \cdot \left(\frac{f_1}{f_2}\right)^2 < 2.3$$ $\boxed{C_b = 1.42}$

Therefore:

$F_{yr} := \max(\min(0.7 \cdot F_{yc}, F_{yw}), 0.5 \cdot F_{yc})$ $\boxed{F_{yr} = 35.00}$ ksi

$$F_{nc} := C_b \cdot \left[1 - \left(1 - \frac{F_{yr}}{R_h \cdot F_{yc}}\right) \cdot \left(\frac{L_b - L_p}{L_r - L_p}\right)\right] \cdot R_b \cdot R_h \cdot F_{yc}$$

$\boxed{F_{nc} = 58.46}$ ksi

$F_{nc} \le R_b \cdot R_h \cdot F_{yc}$ $\boxed{R_b \cdot R_h \cdot F_{yc} = 50.00}$ ksi

Use:

$F_{nc} := 50.00$ ksi

$\boxed{\phi_f \cdot F_{nc} = 50.00}$ ksi

$f_{bu} := 44.38$ ksi (Table E24-1.6-2)

Since there are no curvature or skew effects and wind is not considered under the Strength I load combination, f_l is taken equal to zero. Therefore:

$f_{bu} + \frac{1}{3}\cdot(0) = 44.38$ ksi OK

The investigation proceeds by calculating the flexural resistance of the continuously braced tension flange **LRFD [6.10.8.1.3 & 6.10.8.3]**.

$f_{bu} \le \phi_f \cdot R_h \cdot F_{yf}$ $\phi_f \cdot R_h \cdot F_{yf} = 50.00$ ksi

(Table E24-1.6-2) $f_{bu} := 43.47$ ksi OK

E24-1.21 - Design for Shear - Negative Moment Region

Shear must be checked at each section of the girder. For this design example, shear is maximum at the pier.

The first step in the design for shear is to check if the web must be stiffened. The nominal shear resistance, V_n, of unstiffened webs of hybrid and homogeneous girders is **LRFD [6.10.9.2]**:

$$V_n = C \cdot V_p$$

Where:

C = Ratio of the shear-buckling resistance to the shear yield strength in accordance with **LRFD [6.10.9.3.2]**, with the shear-buckling coefficient, k, taken equal to 5.0

V_p = Plastic shear force (kips)

$k := 5.0$

$\frac{D}{t_w} = 108.00$

$1.12 \cdot \sqrt{\frac{E_s \cdot k}{F_{yw}}} = 60.31$

$1.40 \cdot \sqrt{\frac{E_s \cdot k}{F_{yw}}} = 75.39$

Therefore,

$$\frac{D}{t_w} \ge 1.40 \cdot \sqrt{\frac{E \cdot k}{F_{yw}}}$$

$$C := \frac{1.57}{\left(\frac{D}{t_w}\right)^2} \cdot \left(\frac{E_s \cdot k}{F_{yw}}\right)$$ $C = 0.390$

The plastic shear force, V_p, is then:

$V_p := 0.58 \cdot F_{yw} \cdot D \cdot t_w$ $V_p = 783.0$ kips

$V_n := C \cdot V_p$ $\boxed{V_n = 305.6}$ kips

The factored shear resistance, V_r, is computed as follows **LRFD [6.10.9.1]**:

$\phi_v := 1.00$

$V_r := \phi_v \cdot V_n$ $\boxed{V_r = 305.6}$ kips

The shear resistance at this design section is checked as follows:

$\Sigma \eta_i \cdot \gamma_i \cdot Q_i \le R_r$

Or in this case:

$\Sigma \eta_i \cdot \gamma_i \cdot V_i \le V_r$

$\eta_i := 1.00$

As computed in E24-1.6, the factored Strength I Limit State shear at the pier is as follows:

$\Sigma \eta_i \cdot \gamma_i \cdot V_i = 410.8$ kips

$\boxed{V_r = 305.6}$ kips

Since the shear resistance of an unstiffened web is less than the actual design shear, the web must be stiffened.

The transverse intermediate stiffener spacing is 120 inches. The spacing of the transverse intermediate stiffeners does not exceed 3D, therefore the design section can be considered stiffened and the provisions of **LRFD [6.10.9.3]** apply.

The section must be checked against the web to flange proportion limits for interior web panels **LRFD [6.10.9.3.2]**.

$$\frac{2 \cdot D \cdot t_w}{b_{fc} \cdot t_{fc} + b_{ft} \cdot t_{ft}} \le 2.5$$

Where:

b_{ft} = Full width of tension flange (in)

t_{ft} = Thickness of tension flange (in)

$b_{ft} := 14.0$

$t_{ft} := 2.50$

$$\boxed{\frac{2 \cdot D \cdot t_w}{b_{fc} \cdot t_{fc} + b_{ft} \cdot t_{ft}} = 0.73}$$ OK

The nominal shear resistance , V_n, of the interior web panel at the pier is then:

$$V_n = V_p \cdot \left[C + \frac{0.87 \cdot (1 - C)}{\sqrt{1 + \left(\frac{d_o}{D}\right)^2}} \right]$$

Where:

C = Ratio of the shear-buckling resistance to the shear yield strength

d_0 = Transverse stiffener spacing (in)

$d_o := 120$

$k := 5 + \frac{5}{\left(\frac{d_o}{D}\right)^2}$ $\boxed{k = 6.01}$

$\boxed{\frac{D}{t_w} = 108.00}$

$\boxed{1.12 \cdot \sqrt{\frac{E_s \cdot k}{F_{yw}}} = 66.14}$

$\boxed{1.40 \cdot \sqrt{\frac{E_s \cdot k}{F_{yw}}} = 82.67}$

$$\frac{D}{t_w} \geq 1.40 \cdot \sqrt{\frac{E \cdot k}{F_{yw}}}$$

$C := \frac{1.57}{\left(\frac{D}{t_w}\right)^2} \cdot \left(\frac{E_s \cdot k}{F_{yw}}\right)$ $\boxed{C = 0.469}$

$V_p = 783.00$

$V_n := V_p \cdot \left[C + \frac{0.87 \cdot (1 - C)}{\sqrt{1 + \left(\frac{d_o}{D}\right)^2}} \right]$ $\boxed{V_n = 515.86}$ kips

The factored shear resistance, V_r, is computed as follows:

$\phi_v := 1.00$

$V_r := \phi_v \cdot V_n$ $\boxed{V_r = 515.86}$ kips

As previously computed, for this design example:

$\Sigma\eta_i \cdot \gamma_i \cdot V_i = 410.8$ kips

$V_r = 515.86$ kips OK

Therefore, the girder design section at the pier satisfies the shear resistance requirements for the web.

E24-1.22 Design Transverse Intermediate Stiffeners - Negative Moment Region

It is assumed that the transverse intermediate stiffeners consist of plates welded to one side of the web. The required interface between the transverse intermediate stiffeners and the top and bottom flanges is described in **LRFD [6.10.11.1.1]**.

The transverse intermediate stiffener configuration is assumed to be as presented in the following figure.

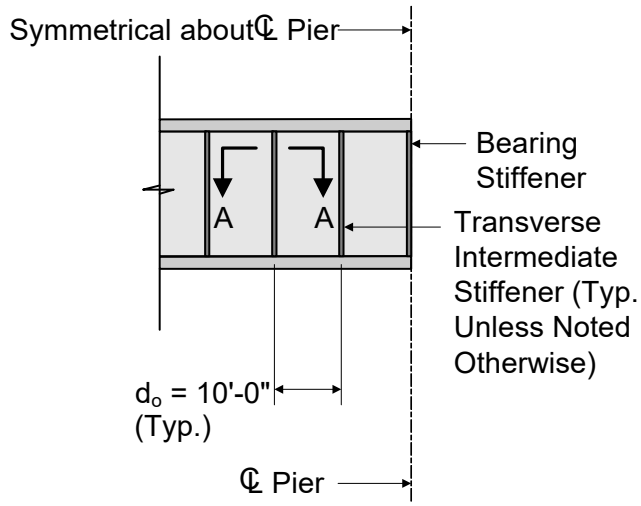

Partial Girder Elevation at Pier

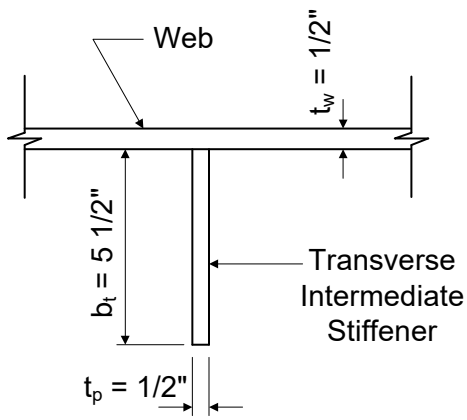

Section A-A

Figure E24-1.22-1
Transverse Intermediate Stiffener

The first specification check is for the projecting width of the transverse intermediate stiffener. The width, b_t, of each projecting stiffener element must satisfy the following **LRFD [6.10.11.1.2]**:

$b_t \geq 2.0 + \frac{D}{30.0}$ and $16.0 \cdot t_p \geq b_t \geq 0.25 b_f$

Where:

t_p = Thickness of the projecting stiffener element (in)

b_f = Full width of the widest compression flange within the field section under consideration (in)

$b_t := 5.5$ in

$D := 54$ in

$t_p := 0.50$ in

$b_f = 14.00$ in

$\boxed{2.0 + \frac{D}{30.0} = 3.80}$ in OK

$\boxed{16.0 \cdot t_p = 8.00}$ in

$\boxed{0.25 \cdot b_f = 3.50}$ in OK

The moment of inertia, I_t, of the transverse stiffener must satisfy the following since each panel adjacent to the stiffener supports a shear force larger than the shear buckling resistance ($V_{cr} = CV_p$) **LRFD [6.10.11.1.3]**:

If $I_{t2} > I_{t1}$, then :

$$I_t \geq I_{t1} + (I_{t2} - I_{t1})\left(\frac{V_u - \phi_v \cdot V_{cr}}{\phi_v \cdot V_n - \phi_v \cdot V_{cr}}\right)$$

Otherwise:

$$I_t \geq I_{t2}$$

$$I_{t1} = b \cdot t_w^3 \cdot J$$

Where:

b = The smaller of do and D (in)

J = Stiffener bending rigidity parameter

$b := \min(d_o, D)$ $b = 54.00$ in

$$J := \max\left[\frac{2.5}{\left(\frac{d_o}{D}\right)^2} - 2.0, 0.5\right] \qquad J = 0.50$$

$$I_{t1} := b \cdot t_w^3 \cdot J = 3.38 \qquad \text{in}^4$$

$$I_{t2} = \frac{D^4 \cdot \rho_t^{1.3}}{40} \cdot \left(\frac{F_{yw}}{E}\right)^{1.5}$$

Where:

ρ_t = The larger of F_{yw}/F_{crs} and 1.0

The local buckling stress for the stiffener, F_{crs}, is calculated as follows:

$$F_{crs} = \frac{0.31 \cdot E_s}{\left(\frac{b_t}{t_p}\right)^2} \le F_{ys}$$

Where:

F_{ys} = Specified minimum yield strength of the stiffener (ksi)

$$\boxed{\frac{0.31 \cdot E_s}{\left(\frac{b_t}{t_p}\right)^2} = 74.30} \qquad \text{ksi}$$

$$F_{ys} := 50.00 \qquad \text{ksi}$$

Use

$$F_{crs} := \min\left[F_{ys}, \frac{0.31 \cdot E_s}{\left(\frac{b_t}{t_p}\right)^2}\right] \qquad \boxed{F_{crs} = 50.00} \qquad \text{ksi}$$

$$\rho_t := \max\left(\frac{F_{yw}}{F_{crs}}, 1.0\right) \qquad \boxed{\rho_t = 1.00}$$

$$\boxed{I_{t2} := \frac{D^4 \cdot \rho_t^{1.3}}{40} \cdot \left(\frac{F_{yw}}{E_s}\right)^{1.5} = 15.22} \qquad \text{in}^4$$

Since $I_{t2} > I_{t1}$, the moment of inertia, I_t, of the transverse stiffener must satisfy:

$$I_t \geq I_{t1} + \left(I_{t2} - I_{t1}\right)\left(\frac{V_u - \phi_v \cdot V_{cr}}{\phi_v \cdot V_n - \phi_v \cdot V_{cr}}\right)$$

$V_u := 410.8$ kip

$V_{cr} := C \cdot V_p = 367.53$ kip

$V_n = 515.86$ kip

$$I_{t1} + \left(I_{t2} - I_{t1}\right)\left(\frac{V_u - \phi_v \cdot V_{cr}}{\phi_v \cdot V_n - \phi_v \cdot V_{cr}}\right) = 6.83 \quad \text{in}^4$$

$$I_t := \frac{t_p \cdot b_t^3}{3} \qquad \boxed{I_t = 27.73} \quad \text{in}^4$$

Therefore,

$$I_t \geq I_{t1} + \left(I_{t2} - I_{t1}\right)\left(\frac{V_u - \phi_v \cdot V_{cr}}{\phi_v \cdot V_n - \phi_v \cdot V_{cr}}\right) \qquad \text{OK}$$

E24-1.23 Design for Flexure - Fatigue and Fracture Limit State - Negative Moment Region

For this design example, sample nominal fatigue resistance computations were presented previously (E24-1.13) for the girder section at the location of maximum positive moment **LRFD [6.6.1]**. Detail categories are explained and illustrated in **LRFD [Table 6.6.1.2.3-1]**.

In addition to the nominal fatigue resistance computations, a special fatigue requirement for webs must also be checked **LRFD [6.10.5.3]**. This check is required to control out-of-plane flexing of the web due to shear under repeated live loading.

The check is made using fatigue range live load shear in combination with the shear due to the unfactored permanent load. This total shear is limited to the shear buckling resistance ($V_{cr} = CV_p$), as follows:

$$V_u \leq V_{cr}$$

Based on the unfactored shear values in Table E24-1.6-3:

$V_u = V_{noncomp} + V_{par} + V_{fws} + 1.75V_{LLfatiguerange}$

$V_u := 111.5 + 14.5 + 13.8 + (1.75 \cdot 58.8)$ $\boxed{V_u = 242.70}$ kips

$C = 0.469$ See E24-1.21

$V_p = 783.00$ kips See E24-1.21

$V_{cr} := C \cdot V_p$ $\boxed{V_{cr} = 367.53}$ kips

$V_u \le V_{cr}$ OK

Therefore, the special fatigue requirement for webs for shear is satisfied.

Other fatigue resistance calculations in the negative moment region are not shown here, but would be similar to the sample check illustrated previously for the positive moment region (E24-1.13).

E24-1.24 Design for Flexure - Service Limit State - Negative Moment Region

The girder must be checked for service limit state control of permanent deflection **LRFD [6.10.4]**. Service II Limit State is used for this check.

The flange stress checks of **LRFD [6.10.4.2.2]** will not control for composite sections in negative flexure for which the nominal flexural resistance under the strength load combinations given in **LRFD [Table 3.4.1-1]** is determined according to the slender-web provision of **LRFD [6.10.8]**, which is the case in this example.

However, for sections in negative flexure, the web must satisfy the web bend buckling check given by equation 4 of **LRFD [6.10.4.2.2]** at the service limit state, using the appropriate value of the depth of the web in compression in the elastic range, D_c.

$$f_c \le F_{crw}$$

$$F_{crw} := \frac{0.9 \cdot E_s \cdot k}{\left(\frac{D}{t_w}\right)^2} \qquad \text{(LRFD 6.10.1.9.1-1)}$$

Where:

k = Bend-buckling coefficient = $9/(D_c/D)^2$

The factored Service II flexural stress was previously computed in Table E24-1.6-2 as follows:

$f_{botgdr} := -31.45$ ksi

$f_{topgdr} := 21.80$ ksi

As previously explained, for this design example, the concrete slab is assumed to be fully effective for both positive and negative flexure for service limit states. Therefore, when this assumption is made, D_c must be computed as follows as indicated in **LRFD [Appendix D6.3.1]**:

$$D_c = \left(\frac{-f_c}{|f_c| + f_t}\right) \cdot d - t_{fc} \ge 0$$

$Depth_{gdr} := 59.25$ in (see Figure E24-1.2-1)

$$Depth_{comp} := \frac{-f_{botgdr}}{|f_{botgdr}| + f_{topgdr}} \cdot Depth_{gdr} \qquad \boxed{Depth_{comp} = 34.99} \text{ in}$$

$t_{botfl} := 2.75$ in

$D_c := Depth_{comp} - t_{botfl}$ $\boxed{D_c = 32.24}$ in

$D := 54.0$ in

$k := \dfrac{9.0}{\left(\dfrac{D_c}{D}\right)^2}$ $\boxed{k = 25.24}$

$\boxed{\dfrac{0.9 \cdot E_s \cdot k}{\left(\dfrac{D}{t_w}\right)^2} = 56.49}$ ksi

$F_{crw} := \min\left[\dfrac{0.9 \cdot E_s \cdot k}{\left(\dfrac{D}{t_w}\right)^2}, R_h \cdot F_{yc}, \dfrac{F_{yw}}{0.7}\right]$ $\boxed{F_{crw} = 50.00}$ ksi

$t_{bf} := 2.75$ in

$f_c := f_{botgdr} \cdot \left(\dfrac{D_c}{D_c + t_{bf}}\right)$ $\boxed{f_c = -28.98}$ ksi OK

E24-1.25 Design for Flexure - Constructibility Check - Negative Moment Region

The girder must also be checked for flexure during construction **LRFD [6.10.3.2]**. The girder has already been checked in its final condition when it behaves as a composite section. The constructibility must also be checked for the girder prior to the hardening of the concrete deck when the girder behaves as a noncomposite section.

For discretely braced flanges in compression with a compact or noncompact web and with f_l equal to zero (interior girder), equation 2 is used. This check is similar to the check performed in E24-1.20 and will not be checked here.

For the interior girder in this case (where $f_l = 0$), the sizes of the flanges at the pier section are controlled by the strength limit state flexural resistance checks illustrated previously. Therefore, separate constructibility checks on the flanges need not be made. However, the web bend buckling resistance of the noncomposite pier section during construction must be checked according to equation 3 of **LRFD [6.10.3.2.1]**, as follows:

$f_{bu} \le \phi_f \cdot F_{crw}$

Check first if the noncomposite section at the pier is a nonslender web section. From Table E24-1.3-3 **LRFD [6.10.6.2.3]**:

$D_c := 28.718 - 2.75$ $\boxed{D_c = 25.97}$ in

$$\boxed{\frac{2 \cdot D_c}{t_w} = 103.87}$$

$$\boxed{\lambda_{rw} = 137.27}$$

$$\frac{2 \cdot D_c}{t_w} < \lambda_{rw} \qquad \text{OK}$$

The section is therefore a nonslender web section (i.e. a noncompact web section), web bend buckling need not be checked in this case according to **LRFD [6.10.3.2.1]**.

In addition to checking the flexural resistance during construction, the shear resistance in the web must also be checked prevent shear buckling of the web during construction as follows **LRFD [6.10.3.3]**:

$V_{cr} := C \cdot V_p$ $\boxed{V_{cr} = 367.53}$ kips

$V_r := \phi_v \cdot V_{cr}$ $\boxed{V_r = 367.53}$ kips

$V_u := (1.25 \cdot 111.5)$ $\boxed{V_u = 139.38}$ kips OK

Therefore, the design section at the pier satisfies the construct bility specification checks.

E24-1.26 Check Wind Effects on Girder Flanges - Negative Moment Region

Wind effects generally do not control a steel girder design, and they are generally considered for the exterior girders only **LRFD [C6.10.1.6 & C4.6.2.7.1]**. However, for illustrative purposes, wind effects are presented below for the girder design section at the pier. A bridge height of greater than 30 feet is used in this design step to illustrate the required computations **LRFD [3.8.1.1]**.

The stresses in the bottom flange are combined as follows **LRFD [6.10.8.1.1]**:

$$\left(f_{bu} + \frac{1}{3} f_l\right) \le \phi_f \cdot F_{nc}$$

$$f_l = \frac{6 \cdot M_w}{t_{fb} \cdot b_{fb}^2} \qquad \text{(LRFD 6.10.1.6)}$$

Since the deck provides horizontal diaphragm action and since there is wind bracing in the superstructure, the maximum wind moment, M_w, on the loaded flange is determined as follows:

$$M_w = \frac{W \cdot L_b^2}{10}$$

$$\frac{L_b}{12} = 20.00 \qquad \text{ft}$$

$$W = \frac{\eta \cdot \gamma \cdot P_D \cdot d}{2}$$

$\eta := 1.0$

$\gamma := 0.40$ for Strength V Limit State

Assume that the bridge is to be constructed in a city. The design horizontal wind pressure, P_D, is computed as follows **LRFD [3.8.1.2]**:

$$P_D = P_B \cdot \left(\frac{V_{DZ}}{V_B}\right)^2$$

Where:

P_B = Base wind pressure **LRFD [Table 3.8.1.1-1]** (ksf)

V_{DZ} = Design wind velocity at design elevation Z (mph)

V_B = Base wind velocity of 100 mph for a 30.0 ft height

$P_B := 0.050$ ksf

$V_B := 100$ mph

$$V_{DZ} = 2.5 \cdot V_o \cdot \left(\frac{V_{30}}{V_B}\right) \cdot \ln\left(\frac{Z}{Z_o}\right)$$

Where:

V_{30} = Wind velocity at 30.0 feet above low ground or above design water level (mph)

V_0 = Friction velocity **LRFD [Table 3.8.1.1-1]** (mph)

Z = Height of structure at which wind loads are being calculated as measured from low ground, or from water level, > 30.0 feet

Z_0 = Friction length of upstream fetch **LRFD [Table 3.8.1.1-1]** (ft)

$V_o := 12.0$ MPH for a bridge located in a city

$V_{30} := 60$ MPH assumed wind velocity at 30 feet above low ground or above design water level at bridge site

$V_B = 100$ MPH

$Z := 35$ ft assumed height of structure at which wind loads are being calculated as measured from low ground or from

water level

$Z_o := 8.20$ ft for a bridge located in a city

$V_{DZ} := 2.5 \cdot V_o \cdot \left(\frac{V_{30}}{V_B}\right) \cdot \ln\left(\frac{Z}{Z_o}\right)$ $V_{DZ} = 26.12$ MPH

$P_D := P_B \cdot \left(\frac{V_{DZ}}{V_B}\right)^2$ $P_D = 0.0034$ ksf

$d := 8.45$ ft from bottom of girder to top of barrier

$W := P_D \cdot d$ $W = 0.0288$ kips/ft

LRFD [3.8.1.2.1] states that the total wind loading, W, must not be taken less than 0.30 klf on beam or girder spans, therefore use P_D as computed below:

$W := 0.30$ kips/ft

$P_D := \frac{W}{d}$ $P_D = 0.0355$ ksf

After the design horizontal wind pressure has been computed, the factored wind force per unit length applied to the flange is computed as follows **LRFD [C4.6.2.7.1]**:

$W := \frac{\eta \cdot \gamma \cdot P_D \cdot d}{2}$ $W = 0.060$ kips/ft

Next, the maximum lateral moment in the flange due to the factored wind loading is computed as follows:

$M_w := \frac{W \cdot \left(\frac{L_b}{12}\right)^2}{10}$ $M_w = 2.40$ kip-ft

Finally, the flexural stress at the edges of the bottom flange due to factored wind loading is computed as follows **LRFD [6.10.8.1.1]**:

$t_{fb} := 2.75$ in

$b_{fb} := 14.0$ in

$f_l := \frac{6 \cdot -M_w \cdot 12}{t_{fb} \cdot b_{fb}^2}$ $f_l = -0.321$ ksi

The load factor for live load is 1.35 for the Strength V Limit State. However, it is 1.75 for the Strength I Limit State, which we have already investigated. Therefore, it is clear that wind

effects will not control the design of this steel girder. Nevertheless, the following computations are presented simply to demonstrate that wind effects do not control this design:

$$f_{bu} := 1.25 \cdot (-16.56 + -2.05) + 1.50(-1.94) + 1.35(-10.41)$$

$$\boxed{f_{bu} = -40.23} \quad \text{ksi}$$

$$\boxed{f_{bu} + \frac{1}{3} f_l = -40.33} \quad \text{ksi}$$

$$\boxed{F_{nc} = 50.00} \quad \text{ksi}$$

$$f_{bu} + \frac{1}{3} f_l \le \phi_f \cdot F_{nc} \quad \text{OK}$$

E24-1.27 Draw Schematic of Final Steel Girder Design

Since all of the specification checks were satisfied (except as noted in Section E24-1.13), the trial girder section presented in E24-1.2 is acceptable. If any of the specification checks were not satisfied or if the design were found to be overly conservative, then the trial girder section would need to be revised appropriately, and the specification checks would need to be repeated for the new trial girder section.

The following is a schematic of the final steel girder configuration:

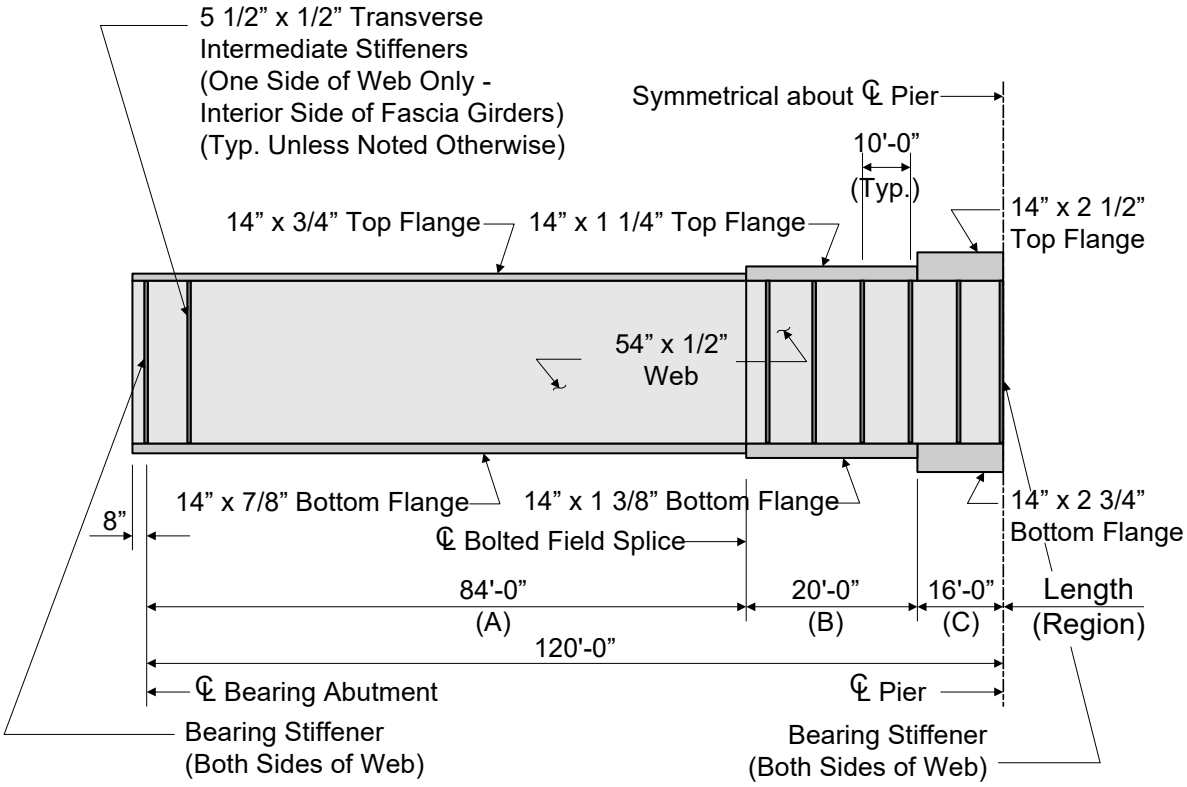

Figure E24-1.27-1
Final Plate Girder Elevation

For this design example, only the location of maximum positive moment, the location of maximum negative moment, and the location of maximum shear were investigated. However, the above schematic shows the plate sizes and stiffener spacing throughout the entire length of the girder.

Design computations for shear connectors and bearing stiffeners now follow.

E24-1.28 Design Shear Connectors

For continuous composite bridges, shear connectors are normally provided throughout the length of the bridge. In the negative flexure region, since the longitudinal reinforcement is considered to be a part of the composite section, shear connectors must be provided **LRFD [6.10.10.1]**.

Studs are used as shear connectors. The shear connectors must permit a thorough compaction of the concrete to ensure that their entire surfaces are in contact with the concrete. In addition, the shear connectors must be capable of resisting both horizontal and vertical movement between the concrete and the steel.

The following figure shows the stud shear connector proportions, as well as the location of the stud head within the concrete deck.

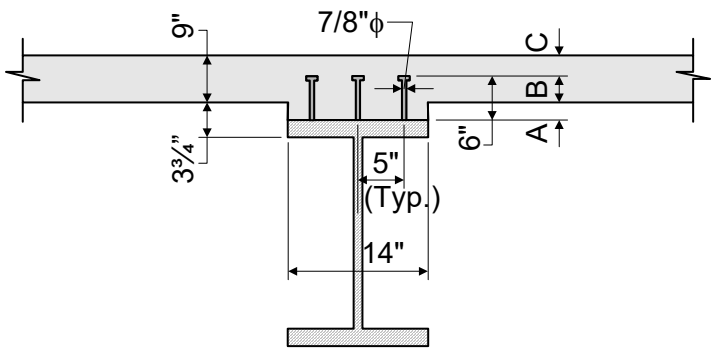

Figure E24-1.28-1
Stud Shear Connectors

Shear Connector Embedment			
Flexure Region	**A**	**B**	**C**
Positive	3.00"	3.00"	6.00"
Intermediate	2.50"	3.50"	5.50"
Negative	1.25"	4.75"	4.25"

Table E24-1.28-1
Shear Connector Embedment

The ratio of the height to the diameter of a stud shear connector must not be less than 4.0 **LRFD [6.10.10.1.1]**. For this design example, the ratio is computed based on the dimensions presented in Figure E24-1.28-1, as follows:

$Height_{stud} := 6.0$ in

$Diameter_{stud} := 0.875$ in

$$\boxed{\frac{Height_{stud}}{Diameter_{stud}} = 6.86}$$ OK

The pitch of the shear connectors must be determined to satisfy the fatigue limit state as specified in **LRFD [6.10.10.2 & 6.10.10.3]**, as applicable. The resulting number of shear connectors must not be less than the number required to satisfy the strength limit states as

specified in **LRFD [6.10.10.4]**.

The pitch, p, of the shear connectors must satisfy the following equation **LRFD [6.10.10.1.2]**:

$$p \le \frac{n \cdot Z_r}{V_{sr}}$$

Where:

n = Number of shear connectors in a cross-section

Z_r = Shear fatigue resistance of an individual shear connector **LRFD [6.10.10.2]** (kip)

V_{sr} = Horizontal fatigue shear range per unit length (kip-in)

The shear fatigue resistance of an individual shear connector, Z_r, is taken as:

$ADTT_{SL} = 3000$ > 960, Therefore, use Fatigue 1 load combinations with fatigue shear resistance for infinite life as follows:

$$Z_r := 5.5 \cdot d^2$$

Where:

d = Diameter of the stud (in)

The horizontal fatigue shear range per unit length, V_{sr}, is taken as:

$$V_{sr} = \sqrt{V_{fat}^2 + F_{fat}^2}$$

Where:

V_{fat} = Longitudinal fatigue shear range per unit length

F_{fat} = Radial fatigue shear range per unit length (kip-in)

The longitudinal fatigue shear range per unit length, V_{fat}, is taken as:

$$V_{fat} = \frac{V_f \cdot Q}{I}$$

Where:

V_f = Vertical shear force range under the fatigue load combination in **LRFD [Table 3.4.1-1]** with the fatigue live load taken as specified in **LRFD [3.6.1.4]** (kip)

Q = First moment of the transformed short-term area of the concrete deck about the neutral axis of the short-term composite section (in^3)

I = Moment of inertia of the short-term composite section (in^4)

The radial fatigue shear range per unit length, F_{fat}, is taken as the larger of:

$$F_{fat1} = \frac{A_{bot} \cdot \sigma_{flg} \cdot l}{w \cdot R}$$

$$F_{fat2} = \frac{F_{rc}}{w}$$

Where:

A_{bot} = Area of the bottom flange (in^2)

σ_{flg} = Range of longitudinal fatigue stress in the bottom flange without consideration of flange lateral bending (ksi)

l = Distance between brace points (ft)

w = Effective length of deck (in) taken as 48.0 in, except at end supports where w may be taken as 24.0 in

R = Minimum girder radius within the panel (ft)

F_{rc} = Net range of cross-frame or diaphragm force at the top flange (kip)

Since this bridge utilizes straight spans and has no skew, the radial fatigue shear range, F_{fat} is taken as zero. Therefore:

$$V_{sr} = V_{fat}$$

In the positive flexure region, the maximum fatigue live load shear range is located at the abutment. For illustration purposes, this example uses the average fatigue live load shear range in the positive moment region and assumes it acts at 0.4L. In reality, the required pitch should be calculated throughout the entire length of the girder. The actual pitch should be chosen such that it is less than or equal to the required pitch. The factored average value is computed as follows:

$V_f := 1.75 \cdot (43.60)$ $\boxed{V_f = 76.30}$ kips

The parameters I and Q are based on the short-term composite section and are determined using the deck within the effective flange width. In the positive flexure region:

$n := 3$ (see Figure E24-1.28-1)

$I := 70696.16$ in^4 (see Table E24-1.3-1)

$Q := \left[\frac{(8.5) \cdot (120)}{8}\right] \cdot (62.875 - 52.777)$ $\boxed{Q = 1287.49}$ in^3

$V_{fat} := \frac{V_f \cdot Q}{I}$ $\boxed{V_{fat} = 1.39}$ kip/in

$V_{sr} := V_{fat}$ $\boxed{V_{sr} = 1.39}$ kip/in

$d := 0.875$ in

$Z_r := 5.5 \cdot d^2$ $\boxed{Z_r = 4.21}$ kips

$p := \frac{n \cdot Z_r}{V_{sr}}$ $\boxed{p = 9.09}$ in

In the negative flexure region:

$n := 3$ (see Figure E24-1.28-1)

From **LRFD [C6.10.10.1.2]**, in the negative flexure region, the parameters I and Q may be determined using the reinforcement within the effective flange width for negative moment, unless the concrete slab is considered to be fully effective for negative moment in computing the longitudinal range of stress, as permitted in **LRFD [6.6.1.2.1]**. For this design example, I and Q are assumed to be computed considering the concrete slab to be fully effective.

$I := 139158.7$ in^4 (see Table E24-1.3-3)

$Q := \left[\frac{(8.5) \cdot (120)}{8}\right] \cdot (64.750 - 48.868)$ $\boxed{Q = 2024.95}$ in^3

$V_f := 1.75 \cdot (58.8)$ $\boxed{V_f = 102.90}$ kips

$V_{fat} := \frac{V_f \cdot Q}{I}$ $\boxed{V_{fat} = 1.50}$ kip/in

$V_{sr} := V_{fat}$ $\boxed{V_{sr} = 1.50}$ kip/in

$p := \frac{n \cdot Z_r}{V_{sr}}$ $\boxed{p = 8.44}$ in

Therefore, based on the above pitch computations to satisfy the fatigue limit state, use the following pitch throughout the entire girder length:

$p := 8$ in

As stated earlier, the shear connector pitch typically is not the same throughout the entire length of the girder. In reality, most girder designs use a variable pitch, which is beneficial economically.

However, for simplicity in this design example, a constant shear connector pitch of 8 inches will be used.

In addition, the shear connectors must satisfy the following pitch requirements **LRFD [6.10.10.1.2]**:

$p \le 24$ in OK

$p \ge 6 \cdot d$ $\boxed{6 \cdot d = 5.25}$ in OK

For transverse spacing, the shear connectors must be placed transversely across the top flange of the steel section and may be spaced at regular or variable intervals **LRFD [6.10.10.1.3]**.

Stud shear connectors must not be closer than 4.0 stud diameters center-to-center transverse to the longitudinal axis of the supporting member.

$4 \cdot d = 3.50$ in

$Spacing_{transverse} := 5.0$ in (see Figure E24-1.28-1) OK

In addition, the clear distance between the edge of the top flange and the edge of the nearest shear connector must not be less than 1.0 inch.

$D_{clear} := \frac{14}{2} - 5 - \frac{d}{2}$ $\boxed{D_{clear} = 1.56}$ in OK

The clear depth of concrete cover over the tops of the shear connectors should not be less than 2.0 inches, and shear connectors should penetrate at least 2.0 inches into the deck **LRFD [6.10.10.1.4]**. Based on the shear connector penetration information presented in Table E24-1.28-1, both of these requirements are satisfied.

For the strength limit state, the factored resistance of the shear connectors, Q_r, is computed as follows **LRFD [6.10.10.4.1]**:

$Q_r = \phi_{sc} \cdot Q_n$

$\phi_{sc} := 0.85$ (LRFD 6.5.4.2)

The nominal shear resistance of one stud shear connector embedded in a concrete slab, Q_n, is computed as follows **LRFD [6.10.10.4.3]**:

$Q_n = 0.5 \cdot A_{sc} \cdot \sqrt{f'_c \cdot E_c} \le A_{sc} \cdot F_u$

Where:

A_{sc} = Cross-sectional area of a stud shear connector (in^2)

F_u = Specified minimum tensile strength of a stud shear connector from **LRFD [6.4.4]** (ksi)

$A_{sc} := \pi \cdot \frac{d^2}{4}$ $\boxed{A_{sc} = 0.601}$ in^2

$F_u := 60.0$ ksi

$E_c := 3834$ ksi

$Q_n := \min\left(0.5 \cdot A_{sc} \cdot \sqrt{f'_c \cdot E_c}, A_{sc} \cdot F_u\right)$ $\boxed{Q_n = 36.08}$ kips

$Q_r := \phi_{sc} \cdot Q_n$ $\boxed{Q_r = 30.67}$ kips

The number of shear connectors provided over the section being investigated must not be less than the following **LRFD [6.10.10.4.1]**:

$$n = \frac{P}{Q_r}$$

For continuous spans that are composite for negative flexure in their final condition, the nominal shear force, P, must be calculated for the following regions **LRFD [6.10.10.4.2]**:

1. Between points of maximum positive design live load plus impact moments and adjacent ends of the member

2. Between points of maximum positive design live load plus impact moment and centerlines of adjacent interior supports

For Region 1:

$$P = \sqrt{P_p^{\,2} + F_p^{\,2}}$$

Where:

P_p = Total longitudinal shear force in the concrete deck at the point of maximum positive live load plus impact moment (kips)

F_p = Total radial shear force in the concrete deck at the point of maximum positive live load plus impact moment (kips)

The total longitudinal shear force in the concrete deck at the point of maximum positive live load plus impact moment, P_p, is taken as the lesser of:

$P_{1p} := 0.85 \cdot f'_c \cdot b_s \cdot t_s$

or

$P_{2p} := F_{yw} \cdot D \cdot t_w + F_{yt} \cdot b_{ft} \cdot t_{ft} + F_{yc} \cdot b_{fc} \cdot t_{fc}$

$t_{ft} := 0.875$ in (see E24-1.27)

$t_{fc} := 0.75$ in (see E24-1.27)

$P_p := \min\left(0.85 \cdot f'_c \cdot b_s \cdot t_s, F_{yw} \cdot D \cdot t_w + F_{yt} \cdot b_{ft} \cdot t_{ft} + F_{yc} \cdot b_{fc} \cdot t_{fc}\right)$

$\boxed{P_p = 2488}$ kips

For straight spans or segments, F_p may be taken equal to zero which gives **LRFD [6.10.10.4.2]**:

$P := P_p$ $\boxed{P = 2488}$ kips

Therefore, the number of shear connectors provided between the section of maximum positive moment and each adjacent end of the member must not be less than the following **LRFD [6.10.10.4.1]**:

$n := \frac{P}{Q_r}$ $\boxed{n = 81.1}$

For region 2:

$$P = \sqrt{P_T^2 + F_T^2}$$

Where:

P_T = Total longitudinal shear force in the concrete deck between the point of maximum positive live load plus impact moment and the centerline of an adjacent interior support (kips)

F_T = Total radial shear force in the concrete deck between the point of maximum positive live load plus impact moment and the centerline of an adjacent interior support (kips)

The total longitudinal shear force in the concrete deck between the point of maximum positive live load plus impact moment and the centerline of an adjacent interior support, P_T, is taken as:

$$P_T = P_p + P_n$$

Where:

P_n = Total longitudinal shear force in the concrete deck over an interior support (kips)

The total longitudinal shear force in the concrete deck over an interior support, P_n, is taken as the lesser of:

$$P_{1n} := F_{yw} \cdot D \cdot t_w + F_{yt} \cdot b_{ft} \cdot t_{ft} + F_{yc} \cdot b_{fc} \cdot t_{fc}$$

or

$$P_{2n} := 0.45 \cdot f'_c \cdot b_s \cdot t_s$$

$t_{ft} := 2.5$ in (see E24-1.27)

$t_{fc} := 2.75$ in (see E24-1.27)

$$P_n := \min\left(F_{yw} \cdot D \cdot t_w + F_{yt} \cdot b_{ft} \cdot t_{ft} + F_{yc} \cdot b_{fc} \cdot t_{fc}, 0.45 \cdot f'_c \cdot b_s \cdot t_s\right)$$

$P_n = 1836$ kips

$P_T := P_p + P_n$ $P_T = 4324$ kips

For straight spans or segments, F_T may be taken equal to zero which gives:

$P := P_T$ $P = 4324$ kips

Therefore, the number of shear connectors provided between the section of maximum positive moment and the centerline of the adjacent interior pier must not be less than the following **LRFD [6.10.10.4.1]**:

$$n := \frac{P}{Q_r} \qquad n = 141.0$$

The distance between the end of the girder and the location of maximum positive moment is approximately equal to:

$L := 48.0$ ft (see Table E24-1.4-2)

Using a pitch of 8 inches, as previously computed for the fatigue limit state, and using the above length, the number of shear connectors provided is as follows:

$$n := 3 \cdot \frac{L \cdot (12)}{p} \qquad n = 216.0$$ OK

Similarly the distance between the section of the maximum positive moment and the interior support is equal to:

$L := 120.0 - 48.0$ $L = 72.0$ ft (see Table E24-1.4-2)

Using a pitch of 8 inches, as previously computed for the fatigue limit state, and using the above length, the number of shear connectors provided is as follows:

$$n := 3 \cdot \frac{L \cdot (12)}{p} \qquad n = 324.0$$ OK

Therefore, using a pitch of 8 inches for each row, with three stud shear connectors per row, throughout the entire length of the girder satisfies both the fatigue limit state requirements of **LRFD [6.10.10.1.2 & 6.10.10.2]** and the strength limit state requirements of **LRFD [6.10.10.4]**.

Use a shear stud spacing as illustrated in the following figure.

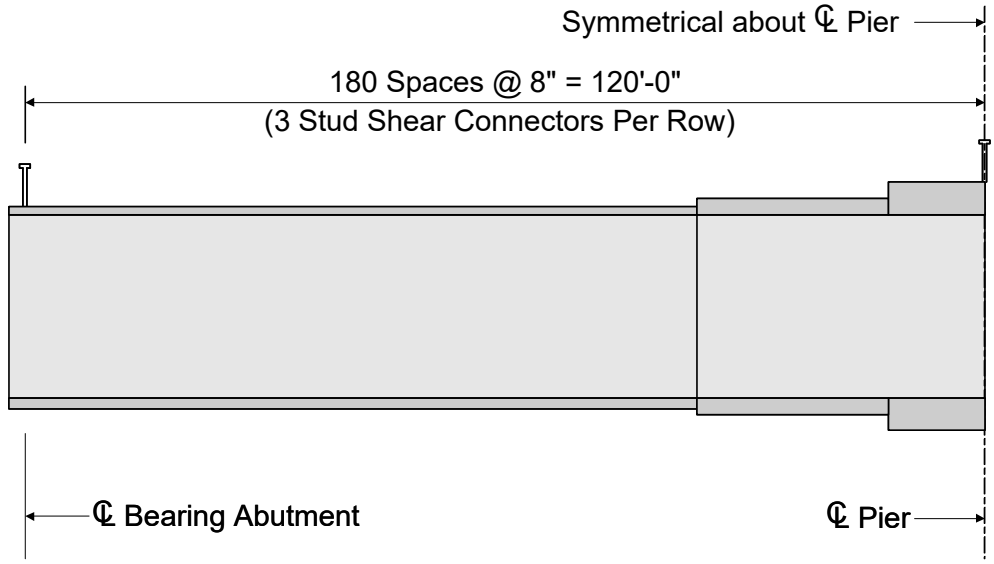

Figure E24-1.28-2
Shear Connector Spacing

E24-1.29 Design Bearing Stiffeners

Bearing stiffeners are required to resist the bearing reactions and other concentrated loads, either in the final state or during construction **LRFD [6.10.11.2.1]**.

For plate girders, bearing stiffeners are required to be placed on the webs at all bearing locations. At all locations supporting concentrated loads where the loads are not transmitted through a deck or deck system, either bearing stiffeners are to be provided or the web must satisfy the provisions of **LRFD [Appendix D6.5]**.

Therefore, for this design example, bearing stiffeners are required at both abutments and at the pier. The following design of the abutment bearing stiffeners illustrates the bearing stiffener design procedure.

The bearing stiffeners in this design example consist of one plate welded to each side of the web. The connections to the web will be designed to transmit the full bearing force due to factored loads and is presented in E24-1.30.

The stiffeners extend the full depth of the web and, as closely as practical, to the outer edges of the flanges.

The following figure illustrates the bearing stiffener layout at the abutments.

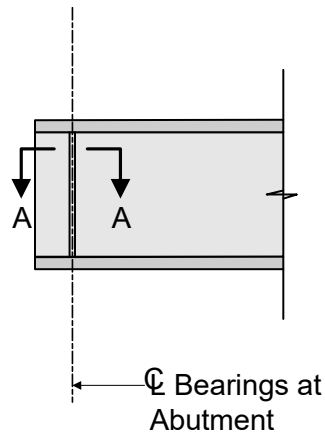

Partial Girder Elevation at Abutment

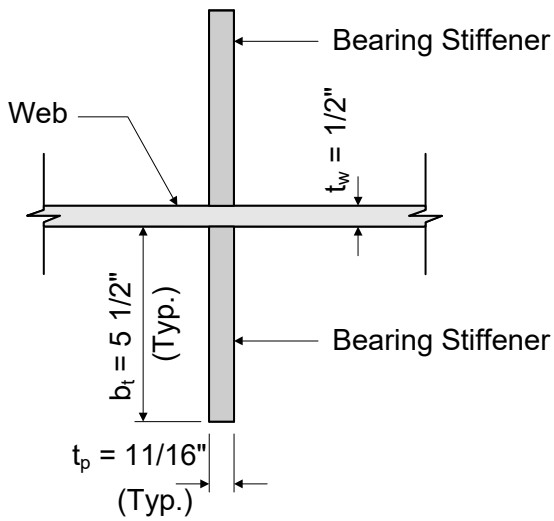

Section A-A

Figure E24-1.29-1
Bearing Stiffeners at Abutments

The projecting width, b_t, of each bearing stiffener element must satisfy the following equation **LRFD [6.10.11.2.2]**. This provision is intended to prevent local buckling of the bearing stiffener plates.

$$b_t \leq 0.48 \cdot t_p \cdot \sqrt{\frac{E}{F_{ys}}}$$

Where:

t_p = Tickness of the projecting stiffener element (in)

F_{ys} = Specified minimum yield strength of the stiffener (ksi)

$b_t := 5.5$ in (see Figure E24-1.29-1)

$t_p := \frac{11}{16}$ in (see Figure E24-1.29-1)

$F_{ys} := 50$

$$\boxed{0.48 \cdot t_p \cdot \sqrt{\frac{E_s}{F_{ys}}} = 7.95} \text{ in} \quad \text{OK}$$

The bearing resistance must be sufficient to resist the factored reaction acting on the bearing stiffeners **LRFD [6.10.11.2.3]**. The factored bearing resistance, R_{sbr}, is computed as follows:

$R_{sbr} = \phi_b \cdot R_{sbn}$

$\phi_b := 1.00$ (LRFD 6.5.4.2)

$R_{sbn} = 1.4 \cdot A_{pn} \cdot F_{ys}$

Where:

A_{pn} = Area of the projecting elements of the stiffener outside of the web-to-flange fillet welds but not beyond the edge of the flange (in^2)

Part of the stiffener must be clipped to clear the web-to-flange weld. Thus the area of direct bearing is less than the gross area of the stiffener. The bearing area, A_{pn}, is taken as the area of the projecting elements of the stiffener outside of the web-to-flange fillet welds but not beyond the edge of the flange. This is illustrated in the following figure:

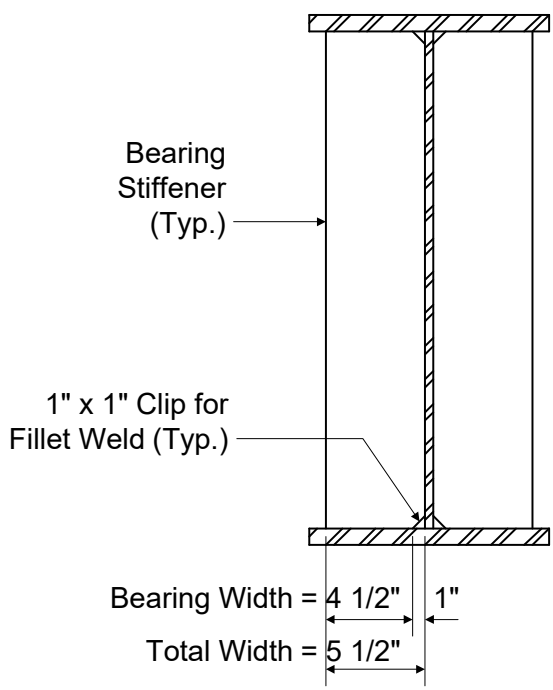

Figure E24-1.29-2
Bearing Width

$b_{brg} := b_t - 1.0$ $\boxed{b_{brg} = 4.50}$ in

$A_{pn} := 2b_{brg} \cdot t_p$ $\boxed{A_{pn} = 6.19}$ in^2

$R_{sbr} := \phi_b \cdot 1.4 \cdot A_{pn} \cdot F_{ys}$ $\boxed{R_{sbr} = 433.13}$ kips

The factored bearing reaction at the abutment is computed as follows, using load factors as presented in **LRFD [Table 3.4.1-1 & Table 3.4.1-2]** and using reactions obtained from Table E24-1.4-3 and Table E24-1.5-2:

$React_{Factored} := (1.25 \cdot 63.7) + (1.50 \cdot 7.4) + (1.75 \cdot 114.4)$

$\boxed{React_{Factored} = 290.93}$ kips

Therefore, the bearing stiffener at the abutment satisfies the bearing resistance requirements.

The final bearing stiffener check relates to the axial resistance of the bearing stiffeners **LRFD [6.10.11.2.4]**. The factored axial resistance is determined as specified in **LRFD [6.9.2.1]**. The radius of gyration is computed about the midthickness of the web, and the effective length is taken as 0.75D, where D is the web depth **LRFD [6.10.11.2.4a]**.

For stiffeners consisting of two plates welded to the web, the effective column section consists of the two stiffener elements, plus a centrally located strip of web extending not more than $9t_w$ on each side of the stiffeners **LRFD [6.10.11.2.4.b]**. This is illustrated in the following figure:

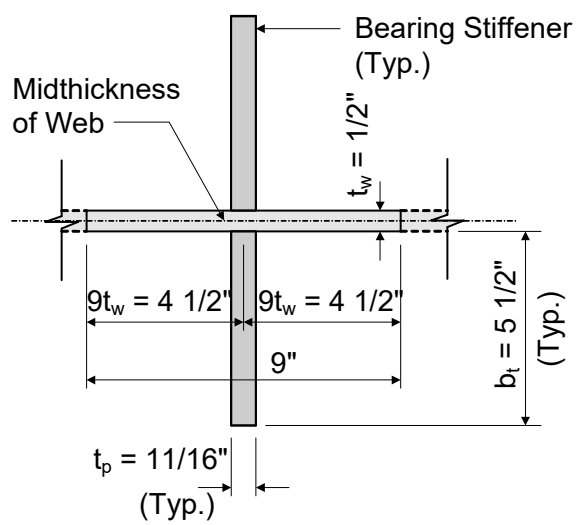

Figure E24-1.29-3
Bearing Stiffener Effective Section

$P_r = \phi_c \cdot P_n$ (LRFD 6.9.2.1)

$\phi_c := 0.90$ (LRFD 6.5.4.2)

Bearing stiffeners only need to be designed for Flexural Buckling failure (Torsional Buckling and Flexural Torsional Buckling are not applicable) **LRFD [6.9.4.1.1]**.

First, calculate the elastic critical buckling resistance, Pe, based on **LRFD [6.9.4.1.2]**.

$$P_e = \frac{A_g \cdot \left(\pi^2 \cdot E_s\right)}{\left(\frac{kl}{r_s}\right)^2}$$

Where:

kl = Taken as 0.75D, where D is the web depth (in)

r_s = Radius of gyration about the midthickness of the web (in)

A_g = Cross-sectional area of the effective section (in^2)

$kl := (0.75)\cdot(54)$ $\boxed{kl = 40.50}$ in

$I_s := \frac{\left(0.6875\cdot 11.5^3\right) + \left(8.3125\cdot 0.5^3\right)}{12}$ $\boxed{I_s = 87.22}$ in^4

$A_g := (0.6875\cdot 11.5) + (8.3125\cdot 0.5)$ $\boxed{A_g = 12.06}$ in^2

$r_s := \sqrt{\frac{I_s}{A_g}}$ $\boxed{r_s = 2.69}$ in

$P_e := \frac{A_g \cdot \left(\pi^2 \cdot E_s\right)}{\left(\frac{kl}{r_s}\right)^2}$ $P_e = 15220$ kip

Next, calculate the equivalent nominal yield resistance, P_o, given as:

$P_o := Q\cdot F_y \cdot A_g$ (LRFD 6.9.4.1.1)

Where:

Q = slender element reduction factor, taken as 1.0 for bearing stiffeners

$P_o := 1.0 F_y \cdot A_g$ $P_o = 603$ kip

$\frac{P_e}{P_o} = 25.23$ Since $P_e/P_o > 0.44$, Use equation 1 from **LRFD [6.9.4.1.1]**.

$P_n := \left[0.658^{\left(\frac{P_o}{P_e}\right)}\right] \cdot P_o$ $\boxed{P_n = 593.20}$ kips

$P_r := \phi_c \cdot P_n$ $\boxed{P_r = 533.88}$ kips

$\boxed{React_{Factored} = 290.93}$ kips OK

Therefore, the bearing stiffener at the abutment satisfies the axial bearing resistance requirements.

The bearing stiffener at the abutment satisfies all bearing stiffener requirements. Use the bearing stiffener as presented in Figure E24-1.29-2 and Figure E24-1.29-3.

Table of Contents

E24-2 Bolted Field Splice, LRFD . . . 2
E24-2.1 Introduction . . . 2
E24-2.2 Obtain Design Criteria . . . 3
E24-2.3 Select Girder Section as Basis for Field Splice Design . . . 5
E24-2.4 Flange Splice Design Loads . . . 5
E24-2.5 Loads Factors . . . 5
E24-2.5.1 Strength I Limit State . . . 6
E24-2.5.2 Service II Limit State . . . 6
E24-2.6 Flange Splice Plates Dimensions . . . 7
E24-2.7 Strength Limit State Design of Flange Splice Plates . . . 8
E24-2.7.1 Bolt Design . . . 8
E24-2.7.1.1 Bottom Flange Bolts . . . 8
E24-2.7.1.1.1 Design Yield Resistance . . . 8
E24-2.7.1.1.2 The Shear Resistance of the Bolt . . . 9
E24-2.7.1.1.3 Number of Bolts . . . 11
E24-2.7.1.1.4 Bolts Spacing . . . 12
E24-2.7.1.1.5 Bearing at Bolt Holes . . . 15
E24-2.7.1.2 Top Flange Bolts . . . 17
E24-2.7.1.2.1 Design Yield Resistance of the Top Flange . . . 17
E24-2.7.1.2.2 Shear Resistance of the Bolts . . . 17
E24-2.7.1.2.3 Number of Bolts . . . 18
E24-2.7.2 Moment Resistance . . . 19
E24-2.7.2.1 Positive Moment . . . 19
E24-2.7.2.2 Negative Moment . . . 20
E24-2.7.3 Bottom Splice Plates . . . 21
E24-2.7.3.1 - Tension . . . 21
E24-2.7.3.2 - Compression . . . 28
E24-2.7.4 - Checking Flexural Members at the Strength Limit for Constructibility . . . 28
E24-2.8 Service Limit State Design of the Flange Splice Plates . . . 29
E24-2.8.1 Flange Bolts Slip Resistance: . . . 29
E24-2.8.1.1 Service II Positive Moment . . . 30
E24-2.8.1.2 Service II Negative Moment . . . 30
E24-2.8.1.3 Deck Casting . . . 31
E24-2.8.2 Control of Permanent Deformation . . . 31
E24-2.9 Filler Plates . . . 31
E24-2.10 Web Design . . . 32
E24-2.10.1 Web Splice Design Loads . . . 32
E24-2.10.2 Web Splice Configuration . . . 32
E24-2.10.3 Strength Limit State Design of the Web Plates . . . 33
E24-2.10.3 .1 Bolt Design . . . 34
E24-2.10.3.1.1 Number of Bolts and Spacing . . . 34
E24-2.10.3.1.2 Bearing at Bolt Holes . . . 37
E24-2.10.3.2 Shear Resistance of the Connection Element . . . 38
E24-2.10.4 Service Limit State Design of the Flange Splice Plates . . . 42
E24-2.11 Draw Schematic of Final Bolted Field Splice Design . . . 43

E24-2 Bolted Field Splice, LRFD

E24-2.1 Introduction

This splice design example shows design calculations conforming to the *AASHTO LRFD Bridge Design Specifications (Eighth Edition - 2017)* as supplemented by the *WisDOT Bridge Manual (January 2019)*.

According to **LRFD [6.13.6.1.3a] & LRFD [6.13.6.1.3b]**

- Splices should be made at or near points of dead load contraflexure.
- Inside and outside splice plates are used for flange splices, and two splice plates are used at both sides for the web splice
- The combined area of the flange and web splices plates often equal or exceed the areas of the smaller flanges and web to which they are attached
- Bolted splices for flexural members shall be designed using slip-critical connections as specified in **LRFD[6.13.2.1.1.]**
- Oversize or slotted holes are not permitted to be used for bolted splices
- Web and flange splices in areas of stress reversal shall be investigated for both positive and negative flexure to determine the governing condition.
- All the moments are assumed to be resisted by the flange splices. Should the factored moments exceed the moment resistance provided by the flange splices, the web splice is assumed to resist the additional moment in addition to its design shear.

As per **LRFD [C6.13.6.1.3a],** the method specified below ignores the moment due to eccentricity of the shear

E24-2.2 Obtain Design Criteria

Note: This example uses the girder from example E24-1
Presented in Figure E24-2.2-1 is the steel girder configuration and the bolted field splice location.

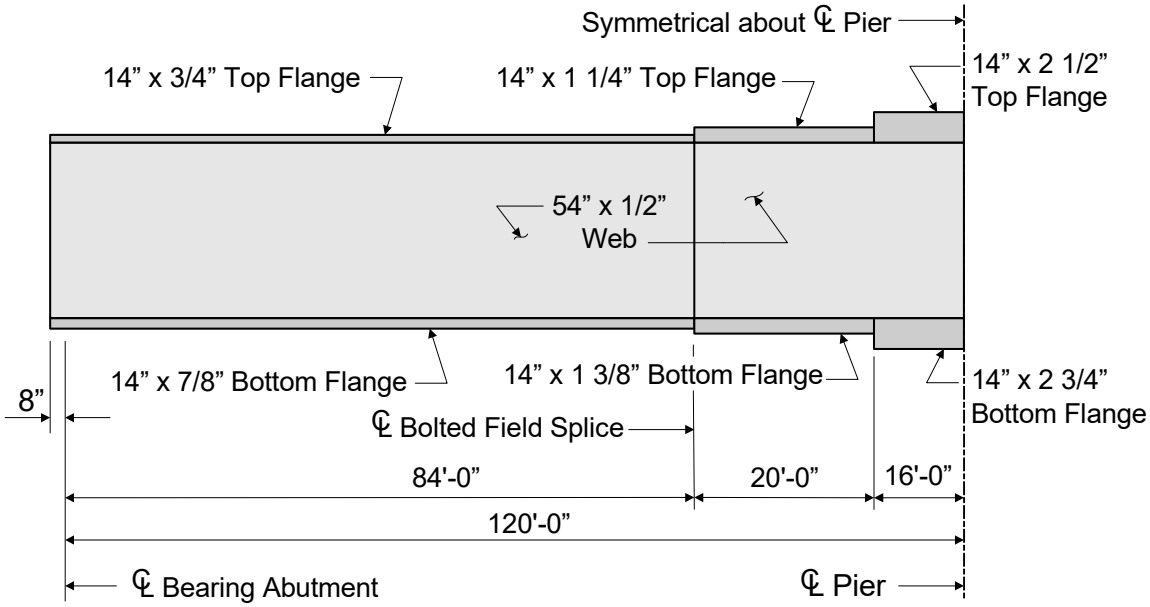

Figure E24-2.2-1
Plate Girder Elevation

Filler plate thickness: $t_{fill} := 0.50$ in

Filler plate width: $b_{fill} := 14$ in

The steel properties of the girder and splice plates are as follows:

Yield strength: $F_y := 50$ ksi

Tensile strength: $F_u := 65$ ksi

For specification checks requiring the flange yield strength:

$F_{yf} := 50$ ksi

The plate dimensions of the girder on the <u>left side</u> of the splice from Figure E24-2.2-1 are as follows:

Web thickness: $t_w := 0.50$ in

Web depth: $D := 54$ in

Top flange width: $b_{fltL} := 14$ in

Top flange thickness: $t_{fltL} := 0.75$ in

Bottom flange width: $b_{flbL} := 14$ in

Bottom flange thickness: $t_{flbL} := 0.875$ in

The plate dimensions of the girder on the <u>right side</u> of the splice from Figure E24-2.2-1 are as follows:

Web thickness: $t_w = 0.50$ in

Web depth: $D = 54.00$ in

Top flange width: $b_{fltR} := 14$ in

Top flange thickness: $t_{fltR} := 1.25$ in

Bottom flange width: $b_{flbR} := 14$ in

Bottom flange thickness: $t_{flbR} := 1.375$ in

The properties of the splice bolts are as follows:

Bolt diameter: $d_b := 0.875$ in **LRFD [6.13.2.5]**

Bolt cross area $A_b := \pi \cdot \frac{d_b^2}{4} = 0.60$ in^2

Bolt hole diameter (for design purposes add 1/16" to standard hole diameter):

$d_{hole} := \frac{15}{16}$ in **LRFD Table [6.13.2.4.2-1]**

Bolt tensile strength: $F_{ub} := 120$ ksi **LRFD table [6.4.3.1.1-1]**

The properties of the concrete deck are as follows:

Effective slab thickness: $t_{seff} := 8.5$ in

Modular ratio: $n := 8$

Haunch depth (measured from top of web):

$d_{haunch} := 3.75$ in

Effective flange width: $W_{eff} := 120$ in

The area of longitudinal deck reinforcing steel in the negative moment region is for the top and bottom mat is given as number 6 bars at 7.5 inch spacing. The area of steel in the effective flange width is then:

For the top steel:

$$A_{deckreinftop} := (0.44) \cdot \frac{W_{eff}}{7.5} = 7.04 \quad in^2$$

For the bottom steel:

$$A_{deckreinfbot} := (0.44) \cdot \frac{W_{eff}}{7.5} = 7.04 \quad in^2$$

<u>Resistance factors</u> **LRFD [6.5.4.2]**:

Flexure: $\phi_f := 1.00$

Shear: $\phi_v := 1.00$

Axial compression, composite: $\phi_c := 0.90$

Tension, fracture in net section: $\phi_u := 0.80$

Tension, yielding in gross section: $\phi_y := 0.95$

Bolts bearing on material: $\phi_{bb} := 0.80$

ASTM F3125 Grade A325 and A490 bolts in shear: $\phi_s := 0.80$

Block shear: $\phi_{bs} := 0.80$

For shear, rupture in connection element $\phi_{vu} := 0.80$

E24-2.3 Select Girder Section as Basis for Field Splice Design

Where a section changes at a splice, the smaller of the two connected sections shall be used in the design **LRFD [6.13.6.1.1]**. Therefore, the bolted field splice in this example will be designed based on the left adjacent girder section properties. This will be referred to as the Left Girder throughout the calculations. The girder located to the right of the bolted field splice will be designated the Right Girder.

E24-2.4 Flange Splice Design Loads

A summary of the unfactored moments at the splice from example 24-1 are listed below. The live loads include dynamic load allowance and distribution factors.

The moments due to fatigue are not listed below as **LRFD [C6.13.6.1.3a]** states that the combined area of the flange and web splices plates often equal or exceed the areas of the smaller flanges and web to which they are attached, and the flanges and web are usually checked separately for either equivalent or more critical fatigue category details. Therefore, fatigue of the splices will not control and not need to be checked.

Dead load moments:

Non-composite: $M_{NDL} := -107.8$ kip-ft

Composite: $M_{CDL} := -2.8$ kip-ft

Future wearing surface: $M_{FWS} := -2.6$ kip-ft

Live load moments:

HL-93 positive: $M_{PLL+IL} := 1384.6$ kip-ft

HL-93 negative: $M_{NLL+IL} := -804.3$ kip-ft

E24-2.5 Loads Factors

Bolted splices for flexural members shall be designed using slip critical connection. Slip critical connections are proportioned to prevent slip under load combination Service II and to provide bearing and shear resistance under the applicable strength limit state load combinations. The load factors for these load combinations are selected based on **LRFD Tables [3.4.1-1] & [3.4.1-2]**:

Load Factors				
State	Strength I		Service II	
Load	max	min	max	min
DC	1.25	0.90	1.00	1.00
DW	1.50	0.65	1.00	1.00
LL	1.75	1.35	1.30	1.30

Table E24-2.5-1
Load Factors

E24-2.5.1 Strength I Limit State

Both positive and negative moments are investigated in Strength I and Service II limit state. Load factors are selected from the above table to produce the largest moments.

Max. Positive Moment

$$M_{u+} := 0.9(M_{NDL} + M_{CDL}) + 0 \cdot M_{FWS} + 1.75 \cdot M_{PLL+IL} = 2323.51$$ kip-ft

Max. Negative Moment

$$M_{u-} := 1.25 \cdot (M_{NDL} + M_{CDL}) + 1.5 \cdot M_{FWS} + 1.75 \cdot M_{NLL+IL} = -1549.67$$ kip-ft

The future wearing surface is excluded to get the largest negative moment

E24-2.5.2 Service II Limit State

Max. Positive Moment

$$M_{+} := 1 \cdot (M_{NDL} + M_{CDL}) + 0 \cdot M_{FWS} + 1.3 \cdot M_{PLL+IL} = 1689.38$$ kip-ft

Max. Negative Moment

$$M_{-} := 1 \cdot (M_{NDL} + M_{CDL}) + 1 \cdot M_{FWS} + 1.3 \cdot M_{NLL+IL} = -1158.79$$ kip-ft

Type	M(+) [K.ft]	M(-) [K.ft]
Strength I	2323.51	-1549.67
Service II	1689.38	-1158.80

Table E24-2.5.2-1
Summary of Design Moments
From 24E-1

E24-2.6 Flange Splice Plates Dimensions

LRFD [C6.13.6.1.3a]: the combined area of the flange and web splices plates often equal or exceed the areas of the smaller flanges and web to which they are attached

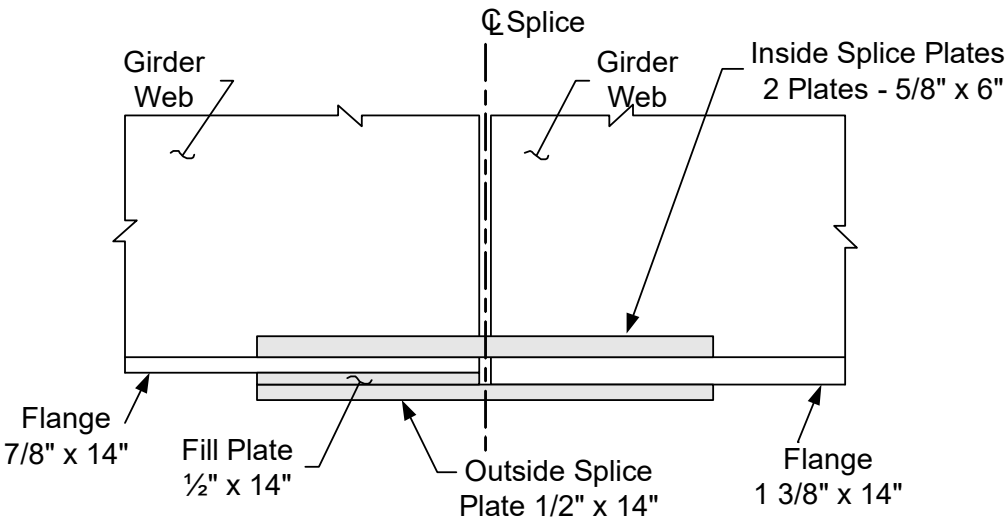

Figure E24-2.6-1
Bottom Flange Splice

The dimensions of the elements involved in the bottom flange splice from Figure E24-2.6-1 are:

Thickness of inside splice plate:	$t_{in} := 0.625$	in
Width of inside splice plate:	$b_{in} := 6$	in
Number of inside plates:	$N_{inp} := 2$	Plates
Thickness of outside splice plate:	$t_{out} := 0.5$	in
Width of outside splice plate:	$b_{out} := 14$	in
Thickness of the filler plate:	$t_{fill} = 0.50$	in
Width of the filler plate:	$b_{fill} = 14.00$	in

E24-2.7 Strength Limit State Design of Flange Splice Plates

E24-2.7.1 Bolt Design

E24-2.7.1.1 Bottom Flange Bolts

According to **LRFD [6.13.6.1.3b]** the flange splice plates and their connections shall be designed to develop the smaller design yield resistance of the flanges at the point of splice. The total number of bolts on one side of the splice are determined by dividing the smaller design yield resistance at the point of splice, P_{fy}, by the factored shear resistance of the bolts. Then the bearing resistance of the flange splice bolts holes shall be checked at the strength limit state.

E24-2.7.1.1.1 Design Yield Resistance of the Bottom Flange at the Point of the Splice

The design yield resistance of each flange, P_{fy}, at the point of splice shall be taken as:

$P_{fy} = F_{yf} \cdot A_e$ **LRFD [6.13.6.1.3b-1]**:

Where a section changes at splice, the smaller P_{fy} of the two connected sections shall be used in the design. In this example, the bottom flange on the left has a smaller area with the same F_y.

NOTE: A minimum two rows of bolts on each side of the joint to be used to ensure proper alignment and stability of the girder during construction.
Assuming 4 rows of bolts across the width of the flange

$Row_No := 4$

The effective area of flange A_e:

$$A_e = \left(\frac{\phi_u \cdot F_u}{\phi_y \cdot F_{yf}}\right) \cdot A_n \le A_g$$ **LRFD [6.13.6.1.3b-2]**:

Where:

ϕ_u = Resistance factor for fracture of tension members **LRFD [6.5.4.2]**
ϕ_y = Resistance factor for yielding of tension members **LRFD [6.5.4.2]**
A_n = Net area of the tension flange (in^2) **LRFD [6.8.3]**
A_g = Gross area of the tension flange (in^2)
F_u = Specified minimum tensile strength of the tension flange (ksi) **LRFD [Table 6.4.1-1]**
F_{yf} = Specified minimum yield strength of the flange under consideration (ksi)

The net area of bottom flange A_{n_bot}:

$A_{n_bot} := \left(b_{flbL} - Row_No \cdot d_{hole}\right) \cdot t_{flbL} = 8.97$ in^2

The gross area of bottom flange A_{g_bot}:

$A_{g_bot} := b_{flbL} \cdot t_{flbL} = 12.25$ in^2

The effective area of bottom flange A_{e_bot}:

$A_{e_bot} := \min\left(\frac{\phi_u}{\phi_y}\frac{F_u}{F_y} \cdot A_{n_bot}, A_{g_bot}\right) = 9.82$ in^2

The design yield resistance of bottom flange, P_{fy_bot}

$P_{fy_bot} := A_{e_bot} \cdot F_{yf} = 490.92$ Kips

E24-2.7.1.1.2 The Shear Resistance of the Bolt

LRFD [6.13.2.7] Factored shear resistance of bolt (ASTM F3125) at the strength limit state in joints whose length between the extreme fasteners measured parallel to the line of action of force is less than 38.0 in shall be taken as:

$R_{n1} = 0.56A_b \cdot F_{ub} \cdot N_{st}$ When threads are excluded **LRFD Eq. [6.13.2.7.1]**

$R_{n2} = 0.45A_b \cdot F_{ub} \cdot N_{st}$ When threads are included **LRFD Eq. [6.13.2.7.2]**

ϕ_s = Resistance factor for bolt in shear **LRFD [6.5.4.2]**

A_b = Area of the bolt corresponding to the nominal diameter (in^2)

F_{ub} = Specified minimum tensile strength of the bolt specified in **LRFD [6.4.3]** (Ksi)

N_{st} = Number of shear planes per bolt

LRDF[6.13.2.7]: When joint length exceeds 38.0 in., reduction factor of 0.83 is applied to $\phi_s \cdot R_n$. This reduction is applied only to lap splice tension connection.

Number of shear planes at bottom flange N_{sb}:

LRFD C6.13.6.1.3b

- If inner and outer flange splice plates do not differ by more than 10%, the connections are proportioned assuming double shear connection (N_s=2) and P_{fy} at the strength limit state is assumed divided equally to the inside and outside plates and their connections.
- When the inner and outer flange splice plates differ by more than 10%, the design force P_{fy} in each splice plates and its connection at the strength limit state should determined by multiplying P_{fy} by the ratio of the area of the splice plate under consideration to the total area of inner and outer splice plates and the connection are proportioned for the maximum calculated splice plate force acting on a single shear plane (N_s=1).

The area of inner splice plates at bottom flange A_{inn_bot}:

$A_{inn_bot} := N_{inp} \cdot (t_{in} \cdot b_{in}) = 7.50$ in^2

The area of outside splice plate at bottom flange A_{out_bot}:

$A_{out_bot} := t_{out} \cdot b_{out} = 7.00$ in^2

$$\left(1 - \frac{A_{out_bot}}{A_{inn_bot}}\right) = 0.07$$

The difference between the outer and inner flange splice plates is less than 10%, therefore, P_{fy} will be divided equally to the inner and outer splice plates and their connections and the connections are proportioned assuming a double shear connection.

$N_{sb} := 2$ Plates

Total splice area at bottom flange:

$A_{Bot_splice} := A_{inn_bot} + A_{out_bot} = 14.50$ in^2 .> $A_{BF} := t_{flbL} \cdot b_{flbL} = 12.25$ in^2

See **LRFD [C6.13.6.1.3b]** to determine if the bolt threads are included or excluded from the shear plane.

In this example, the bolt diameter = 0.875 less than 1.0 in., so the <u>threads are excluded</u> from the shear planes.

Therefore

$$\phi_s \cdot R_n = \phi_s \cdot R_{n1} = 64.65 \quad \text{kips}$$

Due to unequal thickness of the top and bottom flanges on the left and right side of the splice, filler plates need to be used. When filler plate is 0.25 in. or more in thickness there are two options **LRFD [6.13.6.1.4]**:

- Either the fillers shall be extended and secured by additional bolts and no need to reduce the factored shear resistance of the bolts
- Or the filler need not be extended and the strength limit state of the bolts in shear will be reduced by the following factor:

$$R := \left(\frac{1 + \gamma}{1 + 2\gamma}\right)$$

The reduction factor is only applied on the side of the connection with the filler.

Where:

γ $= A_f / A_p$

A_f = Sum of the area of the fillers on the top and bottom of the connected plate (in^2)

A_p = Smaller of either the connected plate area or the sum of the splice plate areas on the top and bottom of the connected plate (in^2)

The outer flange splice plate and flange width will be equal in the splice.

Sum of the area of the fillers on the top and bottom of the connected plate:

$A_f := b_{fill} t_{fill}$ $A_f = 7.00$ in^2

The smaller of either the connected plate area (i.e., girder flange) or the sum of the splice plate areas on the top and bottom of the connected plate determines A_p.

Bottom flange area A_{g_bot}:

$A_{g_bot} = 12.25$ in^2

Sum of splice plate areas is equal to the gross areas of the inside and outside splice plates:

$A_{Bot_splice} = 14.50$ in^2

The minimum of the areas is:

$A_{p_b} := \min(A_{BF}, A_{Bot_splice})$ $A_{p_b} = 12.25$ in^2

Therefore:

$\gamma := \frac{A_f}{A_{p_b}}$ $\gamma = 0.57$

The reduction factor due to the filler is determined to be:

$R_{fill_bot} := \left(\frac{1+\gamma}{1+2\gamma}\right)$ $R_{fill_bot} = 0.73$

To determine the total number of bolts required for the bottom flange splice, divide the applied Strength I flange design force by the reduced allowable bolt shear strength:

$R_{bot} = \phi_s \cdot R_{nb} \cdot R_{fill_bot}$ $R_{bot} := 47.41$ kips

E24-2.7.1.1.3 Number of Bolts

To determine the total number of bolts required for the bottom flange splice, divide the applied Strength I flange design force by the reduced allowable bolt shear strength:

The number of bolts required per side is:

$N_{bot_calculated} := \frac{P_{fy_bot}}{R_{bot}}$ $N_{bot_calculated} = 10.35$ Bolts

Use 4 rows with 3 bolts per row for bottom flange without stagger on each side of the splice to resist the maximum Strength I flange design force in shear is twelve.

$N_{bot} := 12$ Bolts

E24-2.7.1.1.4 Bolts Spacing

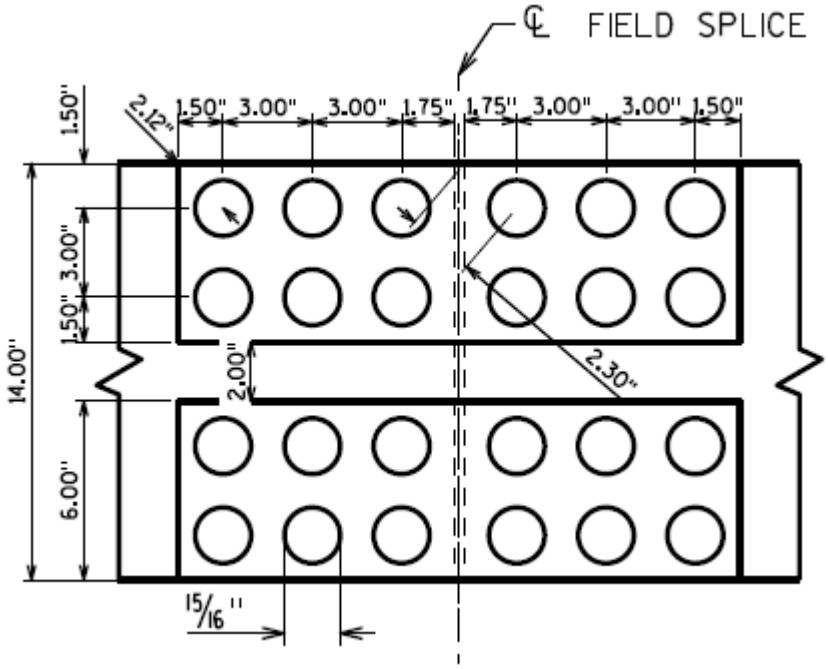

Figure E24-2.7.1.1.4-1
Bottom Flange Inside Splice

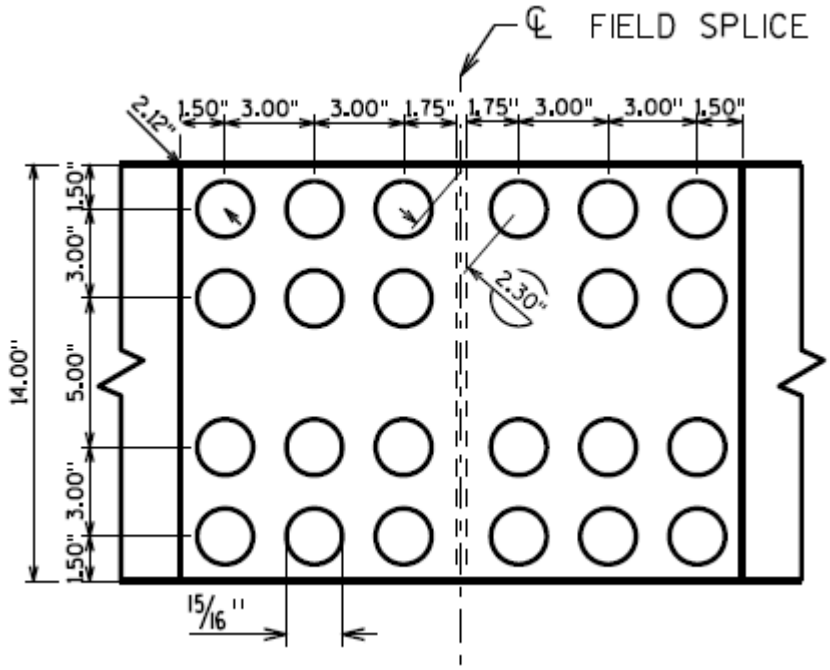

Figure E24-2.7.1.1.4-2
Bottom Flange Outside Splice

The minimum spacing LRFD[6.13.2.6.1]:
The minimum spacing between centers of bolts in standard holes shall be no less than three times the diameter of the bolt **LRFD[6.13.2.6.1]**.

$d_b = 0.875$ in

$s_{min} := 3 \cdot d_b$ $s_{min} = 2.63$ in

Use $s = 3.00$ in See figures E24-2.7.1.1.4-1 and E24-2.7.1.1.4-2

The minimum spacing requirement is satisfied.

The maximum spacing for sealing LRFD [6.13.2.6.2]:

For a single line adjacent to a free edge of an outside plate or shape when the bolts are not staggered:

$s \le (4.0 + 4.0 \cdot t) \le 7.0$ When the bolts are not staggered **LRFD [6.13.2.6.2-1]**:

Where:

t = Thickness of the thinner outside plate or shape (in)

$t_{out} = 0.5000$ in

Maximum spacing for sealing at the edge:

$4 + 4 \cdot t_{out} = 6.00$ in

$s \le 6 \le 7.00$ OK

Next, check for sealing along the free edge at the end of the splice plate. The bolts are not staggered, therefore the applicable equation is:

$s \le (4.00 + 4.00 \cdot t) \le 7.00$

Maximum spacing along the free edge at the end of the splice plate:

$s_{end} := 5.00$ in

Maximum spacing for sealing at the end of the splice plate:

$4.0 + 4.0 \cdot t_{out} = 6.00$ in

$s_{end} \le 6 \le 7.00$ OK

The maximum pitch for stitch bolts LRFD [6.13.2.6.3]:

The maximum pitch requirements are applicable only for mechanically fastened built-up members and will not be applied in this example.

The end distance LRFD [6.13.2.6.5]:

The minimum required edge distance is measured as the distance from the center of any bolt in a standard hole to an edge of the plate. For a 7/8" diameter bolt measured to a sheared edge, the minimum edge distance is 1 1/8" **LRFD Table [6.13.2.6.6-1]**. Referring to Figures E24-2.7.1.1.4-1 thru E24-2.7.1.1.4-2, it is clear that the minimum edge distance specified for this example is 1 1/2" and thus satisfies the minimum requirement.

The maximum edge distance D_{max} shall not be more than eight times the thickness of the thinnest outside plate or five inches.

Usually the maximum distance is measured prependicular to the edge of the flange plate or the splice plate. However, this example check the maximum distance from the corner of the bolt to the corner of the flange plate and the corner of the splice plate.

$D_{max} \le 8 \cdot t \le 5.00$ in

$t := t_{out}$ $\quad t_{out} = 0.5000$ in

$8 \cdot t_{out} = 4.00$ in

The maximum distance from the bolts to the corner of the girder flange is:

$D_{max} := \sqrt{1.50^2 + 1.75^2} = 2.30$ in

$2.30 \cdot in \le 4.0 \cdot in$ OK

The maximum distance from the corner bolts to the corner of the splice plate is equal to:

$\sqrt{1.5^2 + 1.5^2} = 2.12$ in

$2.12 \cdot in \le 4.0 \cdot in$ OK

E24-2.7.1.1.5 Bearing at Bolt Holes **LRFD [6.13.2.9]**:

Check bearing of the bolts on the connected material under the maximum Strength I Limit State design force. The maximum Strength I bottom flange design force, as calculated before, is the smaller of the P_{fy} of the two connected sections at the splice:

$$P_{cu} := 490.92 \quad \text{kips}$$

The design bearing strength of the connected material is calculated as the sum of the bearing strengths of the individual bolt holes parallel to the line of the applied force.

The element of the bottom flange splice that controls the bearing check in this design example is the flange plate on the left side.

For standard holes, oversize holes, short-slotted holes loaded in any direction, and long-slotted holes parallel to the applied bearing force, the nominal resistance of interior and end bolt hole at the strength limit state, R_n, shall be taken as:

- With bolts spaced at a clear distance between holes not less than 2.0d with a clear end distance not less than 2.0d:

$$R_n = 2.4dtF_u \qquad \textbf{LRFD [6.13.2.9-1]}$$

- If either the clear distance between holes is less than 2.0d, or the clear end distance less than 2.0d:

$$R_n = 1.2L_c tF_u \qquad \textbf{LRFD [6.13.2.9-2]}$$

Where:

L_c = Clear distance between holes or between the hole and the end of the member in the direction of the applied bearing force (in)

To determine the applicable equation for the calculation of the nominal resistance, the clear distance between holes and the clear end distance must be calculated and compared to the value of two times the nominal diameter of the bolt. This check yields:

$d_b = 0.875$ in $\qquad 2 \cdot d_b = 1.75$ in

$d_{hole} = 0.938$ in

For the bolts adjacent to the end of the flange plate, the edge distance is 1 1/2". Therefore, the clear end distance between the edge of the hole and the end of the splice plate:

$$L_{c_1} := 1.75 - \frac{d_{hole}}{2} \qquad L_{c_1} = 1.28 \quad \text{in}$$

The center-to-center distance between bolts in the direction of the force is three inches. Therefore, the clear distance between edges of adjacent holes is computed as:

$$L_{c_2} := 3.00 - d_{hole} \qquad L_{c_2} = 2.06 \quad \text{in}$$

For the flange plate on the left side:

$t_{flbL} = 0.875$ in

$F_u = 65.00$ ksi

The nominal resistance for the end row of bolt holes is computed as follows:

$R_{n_1} := 4 \cdot \left(1.2 \cdot L_{c_1} \cdot t_{flbL} \cdot F_u\right)$ $R_{n_1} = 349.78$ kips

The nominal resistance for the remaining bolt holes is computed as follows:

$R_{n_2} := 8 \cdot \left(2.4 \cdot d_b \cdot t_{flbL} \cdot F_u\right)$ $R_{n_2} = 955.50$ kips

The total nominal resistance of the bolt holes is:

$R_n := R_{n_1} + R_{n_2}$ $R_n = 1305.28$ kips

$\phi_{bb} = 0.80$

$R_r := \phi_{bb} \cdot R_n$ $R_r = 1044.23$ kips

Check:

$P_{cu} = 490.92$ kips $<$ $R_r = 1044.23$ kips OK

E24-2.7.1.2 Top Flange Bolts

E24-2.7.1.2.1 Design Yield Resistance of the Top Flange

The top flange on the left has a smaller area with the same F_y., so the top flange on the left will control

The net area of top flange A_{n_top}:

$$A_{n_top} := \left(b_{fltL} - Row_No \cdot d_{hole}\right) \cdot t_{fltL} = 7.69 \qquad in^2$$

The gross area of top flange A_{g_top}:

$$A_{g_top} := b_{fltL} \cdot t_{fltL} = 10.50 \qquad in^2$$

The effective area of top flange A_{e_top}:

$$A_{e_top} := \min\left(\frac{\phi_u}{\phi_y}\frac{F_u}{F_y} \cdot A_{n_top}, A_{g_top}\right) = 8.42 \qquad in^2$$

The design yield resistance of top flange, P_{fy_top}

$$P_{fy_top} := A_{e_top} \cdot F_{yf} = 420.79 \qquad Kip$$

E24-2.7.1.2.2 Shear Resistance of the Bolts

The area of inner splice plates at top flange A_{inn_top}:

$$A_{inn_top} := N_{inp} \cdot t_{in} \cdot b_{in} = 7.50 \qquad in^2$$

The area of outside splice plate at top flange A_{out_top}:

$$A_{out_top} := t_{out} \cdot b_{out} = 7.00 \qquad in^2$$

$$\left(1 - \frac{A_{out_top}}{A_{inn_top}}\right) = 0.07$$

Total splice area at top flange:

$$A_{Top_splice} := A_{inn_top} + A_{out_top} = 14.50 \quad in^2 \quad .> \quad A_{g_TF} := t_{fltL} \cdot b_{fltL} = 10.50 \quad in^2$$

The difference between the outer and inner flange splice plates is less than 10%, therefore, P_{fy} will be divided equally to the inner and outer splice plates and their connections and the connections are proportioned assuming a double shear connection (N_s=2).

$$N_{st} := 2 \qquad Planes$$

the bolt diameter = 0.875 less than 1.0 in., so the <u>threads are excluded</u> from the shear planes.

Threads_bottom is excluded

$\phi_s \cdot R_{nt} = 64.65$ Kips

The outer flange splice plate and flange width will be equal in the splice.

There is reduction factor that needs to be applied due to filler plate

Sum of the area of the fillers on the top and bottom of the connected plate:

$A_f := b_{fill} t_{fill}$ $A_f = 7.00$ in^2

The smaller of either the connected plate area (i.e., girder flange) or the sum of the splice plate areas on the top and bottom of the connected plate determines A_p.

Top flange area A_{g_TF}:

$A_{g_TF} = 10.50$ in^2

Sum of splice plate areas is equal to the gross areas of the inside and outside splice plates:

$A_{Top_splice} = 14.50$ in^2

The minimum of the areas is:

$A_{p_t} := \min(A_{Top_splice}, A_{g_TF})$ $A_{p_t} = 10.50$ in^2

Therefore:

$\gamma := \frac{A_f}{A_{p_t}}$ $\gamma = 0.67$

The reduction factor is determined to be:

$R_{fill_top} := \left(\frac{1+\gamma}{1+2\gamma}\right)$ $R_{fill_top} = 0.71$

$R_{top} := \phi_s \cdot R_n \cdot R_{fill_top}$ $R_{top} = 46.18$ kips

E24-2.7.1.2.3 Number of Bolts

$N_{top_calculated} := \frac{P_{fy_top}}{R_{top}}$ $N_{top_calculated} = 0.56$ bolts

Use 4 rows with 3 bolts per row on each side of the splice of the top flange

$N_{top} := 12$ Bolts

E24-2.7.2 Moment Resistance

E24-2.7.2.1 Positive Moment

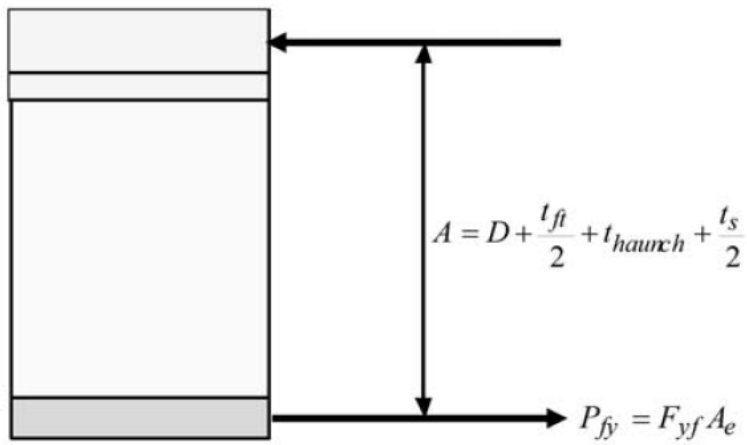

Figure E24-2.7.2.1-1
LRFD Figure [C6.13.6.1.3b-1] Calculation of the Moment Resistance Provided by the Flange Splices for Composite Sections Subject to Positive Flexure

LRFD [6.13.6.1.3b]: For composite sections subject to positive flexure, the moment resistance provided by the flange splices at the strength limit state shall be computed as **P_{fy} for the bottom flange** times the moment arm taken as the vertical distance from the mid-thickness of the bottom flange to the mid thickness of the concrete deck including the concrete haunch.

Use P_{fy} for the bottom flange = 490.92 Kip

Flange moment arm: $A_+ := D + \frac{t_{flbL}}{2} + d_{haunch} + \frac{t_{seff}}{2} = 62.44$ in

The haunch thickness d_{haunch} is measure from the top of the web to the bottom of concrete deck

$M_{f+} := P_{fy_bot} \cdot \frac{A_+}{12} = 2554.32$ Kip.ft

$M_{u+} = 2323.51$ kip-ft

$M_{f+} > M_{u+}$ OK

Hence, the flange splices are able to resist the applied positive moment, and the web splice will not contribute to resist any portion of moment

E24-2.7.2.2 Negative Moment

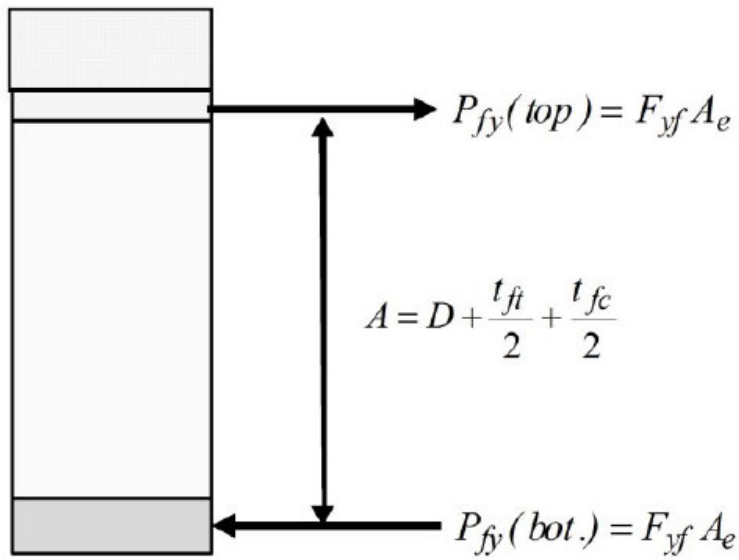

Figure E24-2.7.2.2-1
LRFD Figure [C6.13.6.1.3b-2] Calculation of the Moment Resistance Provided by the Flange Splices for Composite Sections Subject to Negative Flexure and Non-composite Sections

LRFD [6.13.6.1.3b]: For composite sections subject to negative flexure and non-composite sections subject to positive or negative flexure, the moment resistance provided by the flange splices at the strength limit state shall be computed as **P_{fy} for the top or bottom flange**, which is smaller, times the moment arm taken as the vertical distance between the mid-thickness of the top and bottom flanges.

Use the smaller value of P_{fy} for the top and bottom flange = 420.79 Kip

$P_{fy_N} := \min(P_{fy_top}, P_{fy_bot}) = 420.79$ OK

Flange negative moment arm: $A_- := D + \frac{t_{flbL}}{2} + \frac{t_{fltL}}{2} = 54.81$ in

$M_{f-} := P_{fy_N} \cdot \frac{A_-}{12} = 1922.04$ Kip.ft

$M_{u-} = -1549.67$ kip-ft

$M_{f-} > |M_{u-}|$ OK

The flange splices are able to resist the applied negative moment, and the web splice will not contribute to resist any portion of moment

E24-2.7.3 Bottom Splice Plates

E24-2.7.3.1 - Tension **LRFD [6.13.5.2]**:

LRFD [C6.13.6.1.3b] Splice plate subjected to tension is to be checked at the strength limit state for:

- Yielding on the gross section
- Fracture on the net section
- Block shear rupture

Cross section yielding

As the inner and outer splice plates do not differ by more than 10%, P_{fy} is equally divided to the inner and the outer flange splice plates

$P_{cu} := P_{fy_bot} = 490.92$ kips

The factored tensile resistance for yielding on the gross section, P_r, is taken from **LRFD [6.8.2.1]**:

$P_r = \phi_y \cdot P_{ny}$ **LRFD [6.8.2.1-1]**

Where:

P_{ny} = Nominal tensile resistance for yielding in gross section (kips)
= $F_y A_g$

F_y = Specified minimum yield strength (ksi)

A_g = Gross cross-sectional area of the member (in^2)

ϕ_y = Resistance factor for yielding of tension members

$P_r = \phi_y \cdot F_y \cdot A_g$

$F_y = 50.00$ ksi

$\phi_y = 0.95$

For yielding of the outside splice plate P_{ro}:

$A_g := A_{out_bot}$ $A_g = 7.00$ in^2

$P_r := \phi_y \cdot F_y \cdot A_g$ $P_r = 332.50$ kips

The outside splice plate takes half of the design load:

$$P_r = 332.50 > \frac{P_{cu}}{2} = 245.46 \quad \text{OK}$$

For yielding of the inside splice plates P_{ri}:

$A_g := A_{inn_bot}$ $\quad A_g = 7.50$ $\quad in^2$

$P_r := \phi_y \cdot F_y \cdot A_g$ $\quad P_r = 356.25$ $\quad$ kips

The inside splice plate takes half of the design load:

$$P_r = 356.25 \quad > \quad \frac{P_{cu}}{2} = 245.46 \quad \text{OK}$$

Fracture in net section

The factored tensile resistance for fracture on the net section, P_r, is calculated by:

$P_r = \phi_u \cdot P_{nu}$ **LRFD [6.8.2.1-2]**

Where:

P_{nu} = Nominal tensile resistance for fracture in net section (kips)
$= F_u A_n R_p U$

F_u = Tensile strength (ksi)

R_p = Reduction factor for holes taken equal to 0.90 for bolt holes punched full size and 1.0 for bolt holes drilled full size or subpunched and reamed to size.

A_n = Net area of the member (in^2) **LRFD [6.8.3]**

U = Reduction factor to account for shear lag; 1.0 for components in which force effects are transmitted to all elements, and as specified in **LRFD [6.8.2.2]** for other cases

ϕ_u = Resistance factor for fracture of tension members

$P_r = \phi_u \cdot F_u \cdot A_n \cdot R_p \cdot U$

$F_u = 65.00$

$\phi_u = 0.80$

$U := 1.0$

$R_p := 1.0$

For non-staggered holes, such as in this design example, the minimum net width is the width of the element minus the number of bolt holes in a line straight across the width **LRFD [6.8.3]**.

For fracture of the outside splice plate:

The net width is:

$d_{hole} = 0.938$ in

The nominal area of the outside splice plate is determined to be:

$A_{n(out_b)} := (b_{out} - Row_No \cdot d_{hole}) \cdot t_{out} = 5.13$ in^2

The net area of the connecting element is limited to $0.85A_g$ **LRFD [6.13.5.2]**:

$A_n \le 0.85 \cdot A_g$

$A_{g(out_b)} := t_{out} \cdot b_{out} = 7.00$ in^2

$A_{n(out_b)} = 5.13$ in^2 < $0.85 \cdot A_{g(out_b)} = 5.95$ in^2 OK

$P_r := \phi_u \cdot F_u \cdot A_{n(out_b)} \cdot U$ $P_r = 266.50$ kips

The outside splice plate takes half of the design flange force:

$P_r = 266.50$ kips > $\frac{P_{cu}}{2} = 245.46$ kips OK

For fracture of the inside splice plates:

The nominal area is determined to be:

$A_{n(in_b)} := N_{inp}(b_{in} - 2 \cdot d_{hole}) \cdot t_{in} = 5.16$ in^2

The net area of the connecting element is limited to $0.85A_g$:

$A_n \le 0.85 \cdot A_g$

$A_{g(in_b)} := N_{inp} \cdot b_{in} \cdot t_{in} = 7.50$

$A_{n(in_b)} = 5.16$ in^2 < $0.85 \cdot A_{g(in_b)} = 6.38$ in^2 OK

$P_r := \phi_u \cdot F_u \cdot A_{n(in_b)} \cdot U$ $P_r = 268.13$ kips

The inside splice plates take half of the design flange force:

$P_r = 268.13$ kips > $\frac{P_{cu}}{2} = 245.46$ kips OK

Block shear rupture LRFD [6.13.4]

A) Outside splice plate:

Failure mode 1:

A bolt pattern must be assumed prior to checking an assumed block shear failure mode. An initial bolt pattern for the bottom flange splice, along with the first assumed failure mode, is shown in Figure Figure E24-2.7.3.1-1. The outside splice plate will now be checked for block shear.

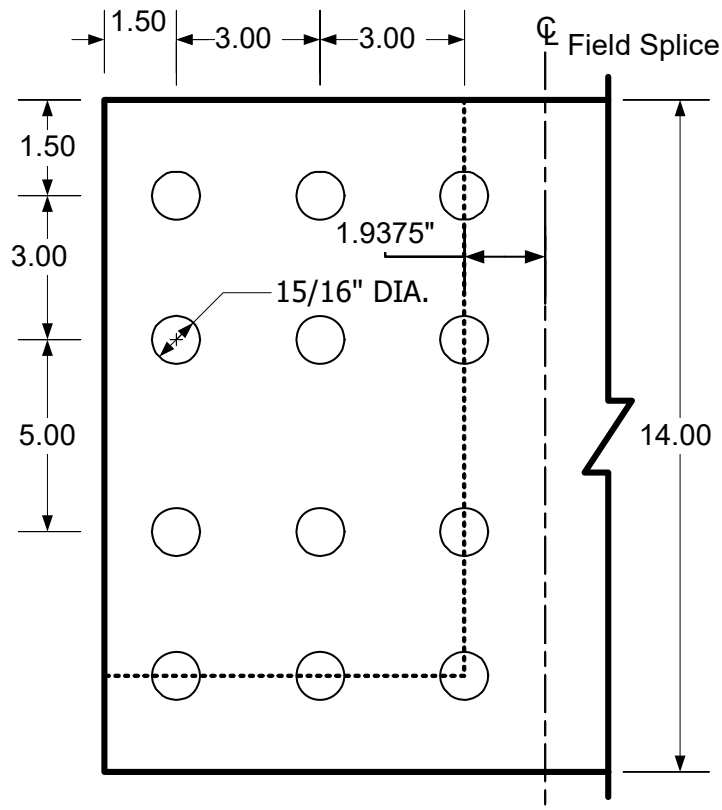

Figure E24-2.7.3.1-1
Outside Splice Plate - Failure Mode 1

Applying the factored resistance equations presented previously to the outside splice plate for failure mode 1:

Gross area along the plane resisting shear stress:

$A_{vg} := [2\cdot(3.00) + 1.50]\cdot t_{out}$ $\quad A_{vg} = 3.75$ $\quad in^2$

Net area along the plane resisting shear stress:

$A_{vn} := \left[2\cdot(3.00) + 1.50 - 2.5\cdot d_{hole}\right]\cdot t_{out}$ $\quad A_{vn} = 2.58$ $\quad in^2$

Net area along the plane resisting tension stress:

$A_{tn} := \left[[2\cdot(3.00) + 5.00 + 1.50] - 3.5\cdot d_{hole}\right]\cdot t_{out}$ $\quad A_{tn} = 4.61$ $\quad in^2$

$U_{bs} := 1.0$

$R_{r1} := \phi_{bs} \cdot R_p \cdot (0.58 \cdot F_u \cdot A_{vn} + U_{bs} \cdot F_u \cdot A_{tn}) = 317.44$

$R_{r2} := \phi_{bs} \cdot R_p \cdot (0.58 \cdot F_y \cdot A_{vg} + U_{bs} \cdot F_u \cdot A_{tn}) = 326.69$

$R_r := \min(R_{r1}, R_{r2})$

$R_r = 317.44$ kips

Check:

$R_r = 317.44$ kips $> \frac{P_{cu}}{2} = 245.46$ kips OK

Failure mode 2:

See Figure Figure E24-2.7.3.1-2 for failure mode 2:

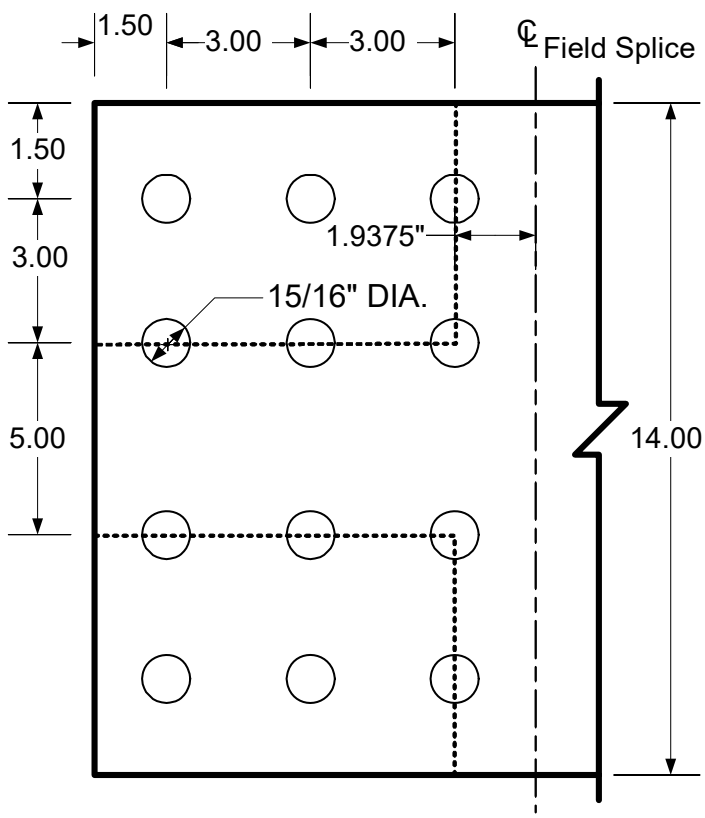

Figure E24-2.7.3.1-2
Outside Splice Plate - Failure Mode 2

$$R_r = 316.39 \quad \text{kips} > \frac{P_{cu}}{2} = 245.46 \quad \text{kips} \quad \text{OK}$$

B) Inside splice plates:

The inside splice plates will now be checked for block shear. See Figure Figure E24-2.7.3.1-3 for the assumed failure mode:

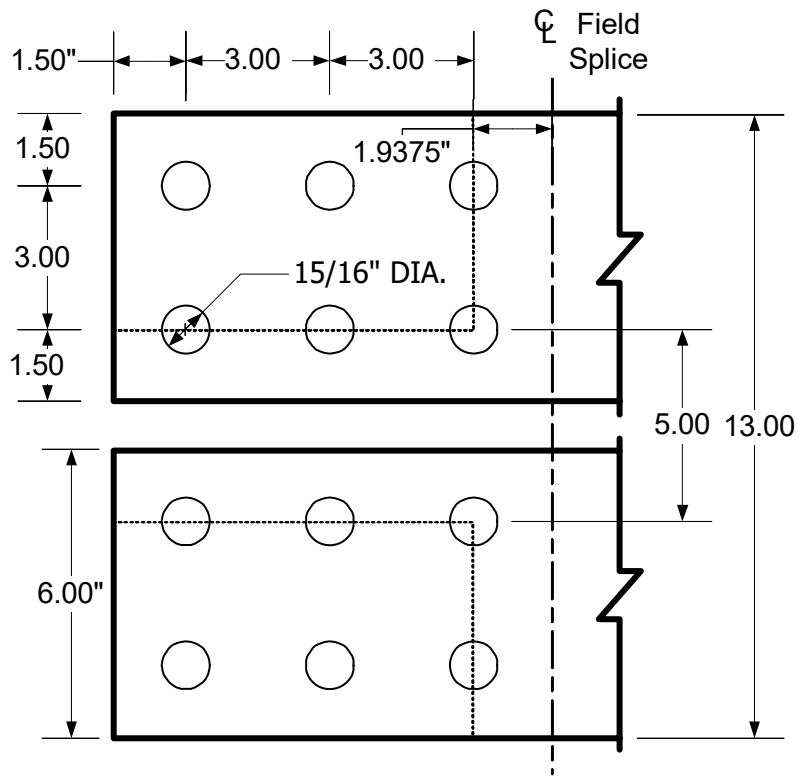

Figure E24-2.7.3.1-3
Inside Splice Plates - Block Shear Check

The calculations for the inside splice plates are not shown since they are similar to those shown previously for failure mode 1 and 2. The final check for the inside splice plates is shown below.

Check:

$$R_r = 395.48 \quad \text{kips} > \frac{P_{cu}}{2} = 245.46 \quad \text{kips} \quad \text{OK}$$

C) Girder bottom flange:

The girder bottom flange will now be checked for block shear. See Figure Figure E24-2.7.3.1-4 for the assumed failure mode:

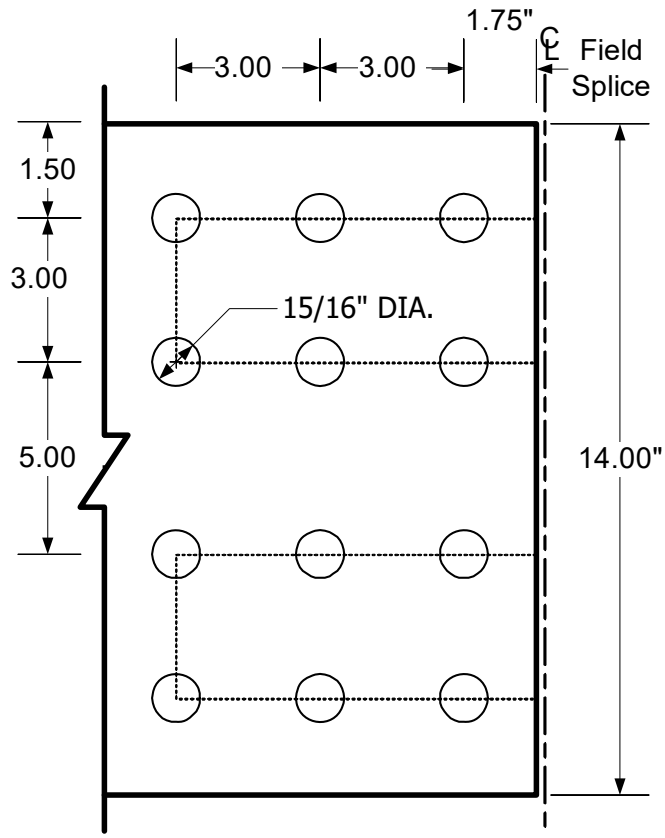

Figure E24-2.7.3.1-4
Bottom Flange - Block Shear Check

The calculations for the girder bottom flange are not shown since they are similar to those shown previously for the inside splice plates. The final check for the girder bottom flange is shown below.

Check:

$$R_r = 758.37 \quad \text{kips} > P_{cu} = 490.92 \quad \text{kips} \quad \text{OK}$$

E24-2.7.3.2 - Compression

Flange splice plate subjected to compression at the strength limit state is to be checked for yielding on the gross section of the plates. However, no need to check this requirement as it is satisfied in the tension check

Also, no need to check the plate buckling due to the compression load, as the bolt spacing is close.

LRFD [6.13.2.6.3] To prevent buckling in compression, the maximum spacing between bolts shal not exceed 12.t, and the gage, g, between adjacent lines of bolts shall not exceed 24.t

Where:

t = Thickness of the thinner outside plate or shape (in)

$t_{buckling} := \min(t_{out}, t_{fltL}) = 0.50$ in

$12 \cdot t_{buckling} = 6.00$ in

$24 \cdot t_{buckling} = 12.00$ in

Both requirements are met and buckling will not occure.

E24-2.7.4 - Checking Flexural Members at the Strength Limit for Constructibility

LRFD 6.10.1.8-1 should be satisfied at all cross-sections containing holes in the tension flange. In this example, this equation was checked in separate calculation and it is satisfied for both flanges of the girder at the splice at the stength limit state.

E24-2.8 Service Limit State Design of the Flange Splice Plates

E24-2.8.1 Flange Bolts - Slip Resistance:

Bolted connections for flange splices shall be designed as slip-critical connections for the Service II flange design force, or the flange design force during deck casting, whichever governs **LRFD [6.13.6.1.3a]**.

LRFD [C6.13.6.1.3b] When checking for slip of the bolted connection for a flange splice with inner and outer splice plates, the slip resistance should always be determined by dividing the flange design force equally to the two slip planes regardless of the ratio of the splice plate areas. Slip of the connection cannot occur unless slip occurs on both planes.

Furthermore, for slip-critical connections, the nominal slip resistance of a bolt shall not be adjusted for the effect of the fillers. The resistance to slip between filler and either connected part is comparable to that which would exist between the connection parts if fillers were not present.

The factored resistance of bolt for slip-critical connections, R_r, is calculated from **LRFD [6.13.2.2 & 6.13.2.8]**:

$$R_r = R_n \cdot 1$$

Where R_n is the nominal resistance:

$$R_n = K_h \cdot K_s \cdot N_s \cdot P_t \qquad \textbf{LRFD [6.13.2.8-1]}$$

Where:

K_h = Hole size factor **LRFD [Table 6.13.2.8-2]**

K_s = Surface condition factor **LRFD [Table 6.13.2.8-3]**

N_s = Number of slip planes per bolt

P_t = Minimum required bolt tension (kips) **LRFD [Table 6.13.2.8-1]**

Determine the factored resistance per bolt assuming a Class B surface condition for the faying surface, standard holes (which are required per **LRFD [6.13.6.1.3a]**) and two slip planes per bolt:

Class B surfaces are unpainted blast-cleaned surfaces and blast-cleaned surfaces with Class B coatings **LRFD [6.13.2.8]**.

$K_h := 1.0$

$K_s := 0.50$

$N_s := 2$

$P_t := 39.0$ kips

$R_n := K_h \cdot K_s \cdot N_s \cdot P_t$ $R_n = 39.00$ kip / Bolt

E24-2.8.1.1 Service II Positive Moment

For composite section subject to positive moment, use slip resistance of the bottom flange splice bolts.

The factored slip resistance of the bottom flange splice with 12 bolts R_r

$R_r := R_n \cdot 12 = 468.00$ kip

Flange Moment Arm (A_+) as calculated before:

$A_+ = 62.44$ in

Service II Positive Moment M_+:

$M_+ := 1 \cdot (M_{NDL} + M_{CDL}) + 0 \cdot M_{FWS} + 1.3 \cdot M_{PLL+IL} = 1689.38$ kip-ft

$M_{slip_bot} := R_r \cdot \frac{A_+}{12} = 2435.06$ kip-ft > $M_+ = 1689.38$ kip-ft OK

E24-2.8.1.2 Service II Negative Moment

For composite section subject to negative moment, use slip resistance of the bottom or top flange splice bolts, which is smaller.

The factored slip resistance of the top flange splice with 12 bolts R_r

$R_r := R_n \cdot 12 = 468.00$ kip

Flange Moment Arm (A_-) as calculated before:

$A_- = 54.81$ in

Service II Negative Moment M_+:

$M_- := 1 \cdot (M_{NDL} + M_{CDL}) + 1 \cdot M_{FWS} + 1.30 \cdot M_{NLL+IL} = -1158.79$ kip-ft

$M_{slip_top} := R_r \cdot \frac{A_-}{12} = 2137.69$ kip-ft > $M_- = -1158.79$ kip-ft OK

E24-2.8.1.3 Deck Casting

For non-composite section, use the slip resistance of the bottom or top flange splice bolts, which is smaller. The deck casting will not control in this example.

E24-2.8.2 Control of Permanent Deformation

When the combined area of the inside and outside flange splice plates is greater than the area of the smaller bottom flange at the point of splice, the permanent deflection under the Service II load combination need not be checked.

E24-2.9 Filler Plates

LRFD [6.13.6.1.4] The specified minimum yield strength of the fillers 0.25 inch or greater in thickness should not be less than the larger of 70 percent of the specified minimum yield strength of the connected plate and 36 ksi.

E24-2.10 Web Design

E24-2.10.1 Web Splice Design Loads

Girder shear forces at the splice location:

A summary of the unfactored shears at the splice location from the initial trial of the girder design are listed below. The live loads include distribution factors.

Dead load shears:

Non-composite:

$V_{NDL} := -58.4$ kips

Composite:

$V_{CDL} := -7.8$ kips

Future wearing surface:

$V_{FWS} := -7.4$ kips

Live Load shears:

HL-93 positive:

$V_{PLL} := 16.2$ kips

HL-93 negative:

$V_{NLL} := -91.6$ kips

E24-2.10.2 Web Splice Configuration

Two vertical rows of bolts with sixteen bolts per row will be used. The typical bolt spacings, both horizontally and vertically, are as shown in Figure E24-2.10.2-1. The outermost rows of bolts are located 4 1/2" from the flanges to provide clearance for assembly (see the *AISC Manual of Steel Construction* for required bolt assembly clearances). The web is spliced symmetrically by plates on each side with a thickness not less than one-half the thickness of the web. Assume 3/8" x 48" splice plates on each side of the web.

The splice plates shall be extended as near as practical for the full depth between flanges without impinging on bolt assembly clearance

For bolted web splices with thickness differences of 0.0625 inch or less, filler plates should not be provided

Web splice plate thickness: $t_{wp} := 0.375$ in

Web splice plate length: $L_{wp} := 48$ in

Number of web splice plates: $N_{wp} := 2$ Plates

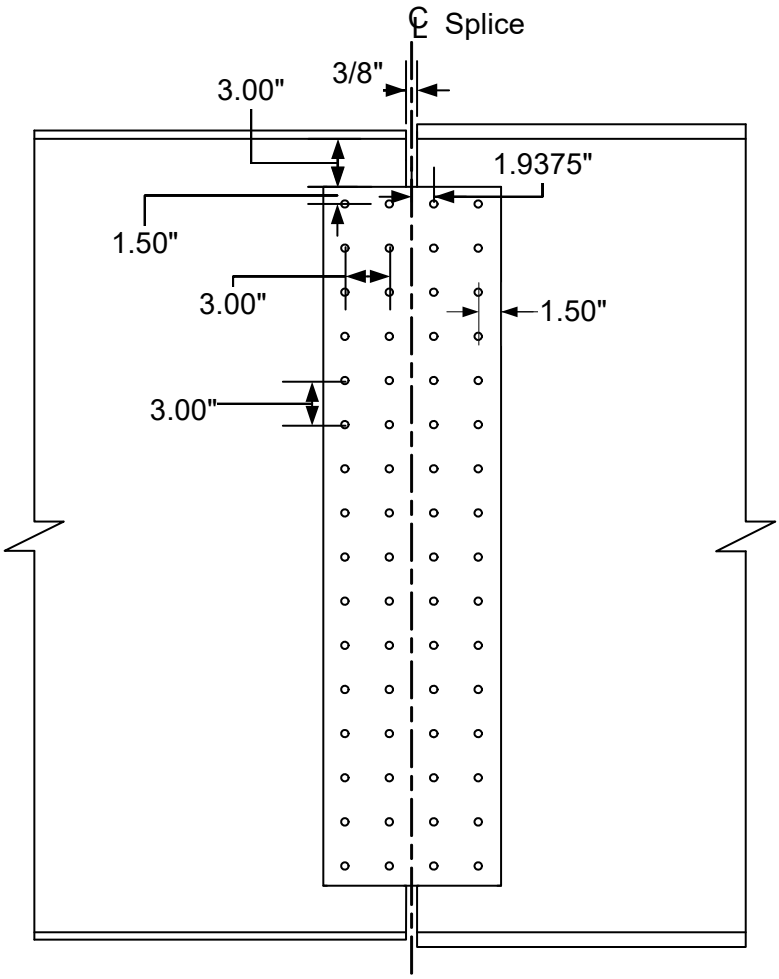

Figure E24-2.10.2-1
Web Splice

3" spacing was selected, but 4.5" may work.

E24-2.10.3 Strength Limit State Design of the Web Plates

In this example, the moment resistance of the flanges is sufficient to resist the factored moment at the strength limit state, so the web will not contribute to resist any moment.

Should the factored moments exceed the moment resistance provided by the flange splices, the web splice is assumed to resist the additional moment as addressed in **LRFD [6.13.6.1.3c]** in addition to its design shear.

E24-2.10.3 .1 Bolt Design

E24-2.10.3.1.1 Number of Bolts and Spacing

- **LRFD [6.13.6.1.3c]** As a minimum, web splice plates and their connections shall be designed at the strength limit state for a design web force taken equal to the smaller factored shear resistance of the web at the point of splice
- The factored shear resistance of the bolts should be based on threads included in the shear planes, unless the web splice-plate thickness exceeds 0.5 inch.
- The small moment induced by the eccentricity of the web may be ignored at all limit states.
- As a minimum, two vertical rows of bolts spaced at maximum spacing for sealing bolts specified in **LRFD [6.13.2.6.2]** should be provided, with a closer spacing and or additional rows provided only as needed.
- Unlike the tension splice connection, the length reduction factor of 0.83 is not applied to the web splice when the web splice connection exceeds 38.0 inch.
- The total number of bolts on one side of the splice are determined by dividing the smaller shear resistance at the point of splice, V_r, by the factored shear resistance of the bolts. Then the bearing resistance of the flange splice bolts holes shall be checked at the strength limit state.

The smaller shear resistance of web as calculated in EX24-1:

$$V_n := 305.6 \quad \text{kips}$$

$$V_r := \phi_v \cdot V_n = 305.60 \quad \text{kips}$$

Using a splice plate at each side of the web, the connection is double shear connection

$$N_{st} = 2.00 \quad \text{Planes}$$

When threads are included **LRFD Eq. [6.13.2.7.2]**

$$R_n := 0.45 A_b \cdot F_{ub} \cdot N_{st} = 64.94 \quad \text{kips}$$

$$\phi_s \cdot R_n = 51.95 \quad \text{kips}$$

Number of bolts in web:

$$N_b := \frac{V_r}{(\phi_s \cdot R_n)} = 5.88 \quad \text{Bolts}$$

The minimum spacing LRFD[6.13.2.6.1]:
The minimum spacing between centers of bolts in standard holes for sealing against the penetration shall be no less than three times the diameter of the bolt.

$d_b = 0.875$ in

$s_{min} := 3 \cdot d_b$ $s_{min} = 2.63$ in

Using 3 inch spacing will meet the minimum spacing requirement

$s := 3.00$ in

The Maximum spacing for sealing LRFD [6.13.2.6.2]:

For a single line adjacent to a free edge of an outside plate or shape when the bolts are not staggered (for example, the bolts along the edges of the plate parallel to the direction of the applied force):

$s \le (4.0 + 4.0 \cdot t) \le 7.0$ When the bolts are not staggered **LRFD [6.13.2.6.2-1]**:

Where:

t = Thickness of the splice plate (in)

$t_{wp} = 0.3750$ in

Maximum spacing for sealing at the edge parallel to the applied force:

$4 + 4 \cdot t_{wp} = 5.50$ in

$s \le 5.5 \le 7.00$ OK

Next, check for sealing along the free edge at the end of the splice plate. The bolts are not staggered, therefore the applicable equation is:

$s \le (4.00 + 4.00 \cdot t) \le 7.00$

Maximum spacing along the free edge at the end of the splice plate:

$s_{end} := 3.875$ in

Maximum spacing for sealing at the end of the splice plate:

$4.0 + 4.0 \cdot t_{wp} = 5.50$ in

$s_{end} \le 5.5 \le 7.00$ OK

The maximum pitch for stitch bolts LRFD [6.13.2.6.3]:

The maximum pitch requirements are applicable only for mechanically fastened built-up members and will not be applied in this example.

The end distance LRFD [6.13.2.6.5]:

The minimum required edge distance is measured as the distance from the center of any bolt in a standard hole to an edge of the plate. For a 7/8" diameter bolt measured to a sheared edge, the minimum edge distance is 1 1/2" **LRFD Table [6.13.2.6.6-1]**. Referring to Figure E24-2.10.2-1, it is clear that the minimum edge distance specified for this example is 1 1/2" and thus satisfies the minimum requirement.

The maximum edge distance shall not be more than eight times the thickness of the thinnest outside plate or five inches.

$D_{max} \le 8 \cdot t \le 5.00$ in

$t := t_{wp}$ $t_{wp} = 0.3750$ in

$8 \cdot t_{wp} = 3.00$ in

The maximum distance from the corner bolts to the corner of the splice plate is equal to:

$D_{max} := \sqrt{1.5^2 + 1.5^2} = 2.12$ in

$2.12 \cdot in \le 4.0 \cdot in$ OK

Therefore, the total number of web bolts on each side of the splice required to meet the maximum bolt spacing, assuming two vertical rows per side with sixteen bolts per row :

$N_b := 32$ Bolts per side

$N_{bl} := 16$ Bolts per line

E24-2.10.3.1.2 Bearing at Bolt Holes

LRFD [6.13.2.9]

Since the sum of splice plates thickness times F_u is greater than the web splice plate times F_u, the left girder web controls the bearing resistance of the connection. In addition, the flange splice plates are sufficient to resist the moment without cotribution from the web, therefore, only bearing parallel to the shear resistance is to be checked.

The flange is sufficient to resist the moment, then:

$T := V_r$

$d_b = 0.875$ in $\qquad 2 \cdot d_b = 1.75$ in

$d_{hole} = 0.938$ in

For the two bolts at the bottom of the web plate, the edge distance is 3". Therefore, the clear end distance between the edge of the hole and the end of the web in the direction of the applied force:

$L_{c_1} := 3 - \frac{d_{hole}}{2} \qquad L_{c_1} = 2.53$ in

$L_{c_1} > 2 \cdot d_b$ Then $R_n = 2.4dtF_u$ **LRFD [6.13.2.9-1]**

The nominal resistance of the bottom bolt holes (two holes) is computed as follows:

$R_{n_1} := 2 \cdot (2.4 \cdot d_b \cdot t_w \cdot F_u) \qquad R_{n_1} = 136.50$ kips

The vertical center-to-center distance between bolts in the direction of the force is three inches. Therefore, the clear distance between edges of adjacent holes is computed as:

$L_{c_2} := 3.00 - d_{hole} \qquad L_{c_2} = 2.06$ in

$L_{c_2} > 2 \cdot d_b$ Then $R_n = 2.4dtF_u$ **LRFD [6.13.2.9-1]**

The nominal resistance for the remaining bolt holes (30 holes) is computed as follows:

$R_{n_2} := 30 \cdot (2.4 \cdot d_b \cdot t_w \cdot F_u) \qquad R_{n_2} = 2047.50$ kips

The total nominal resistance of the bolt holes is:

$R_n := R_{n_1} + R_{n_2}$ $R_n = 2184.00$ kips

$\phi_{bb} = 0.80$

$R_r := \phi_{bb} \cdot R_n$ $R_r = 1747.20$ kips

Check:

$V_r = 305.60$ kips < $R_r = 1747.20$ kips OK

E24-2.10.3.2 Shear Resistance of the Connection Element

LRFD [6.13.6.1.3c]

The design web force at the strength limit state shall not exceed the lesser of the factored shear resistance of the web splice plates determined from:

Shear yielding of the connection element
Shear rupture of the connection element
Block shear resistance of the connection element (normally does not govern)

Shear yielding of the connection element LRFD [6.13.5.3]

For shear yielding, the factored shear resistance of the connection element shall be taken as:

$R_r := \phi_v \cdot 0.58 \cdot F_y \cdot A_{vg}$

ϕ_v = Resistance factor for shear **LRFD [6.5.4.2]**

A_{vg} = Gross area of the connection element subject to shear (in^2)

F_y = Specified minimum yield strength of the connection element (ksi)

$A_{vg} := t_{wp} \cdot L_{wp} = 18.00$ in^2

Using two plates total ($N_{wp} = 2$) with one plate on each side of the web

the shear yielding resistanceis

$R_r := \phi_v \cdot 0.58 \cdot F_y \cdot N_{wp} A_{vg} = 1044.00$ kips

$R_r > V_r$ kips OK

Shear rupture of the connection element LRFD [6.13.5.3]

For shear rupture, the factored shear resistance of the connection element shall be taken as:

$R_r := \phi_{vu} \cdot 0.58 \cdot R_p \cdot F_u \cdot A_{vn}$ **LRFD [6.13.5.3-2]**

ϕ_{vu} = Resistance factor for shear rupture of connection elements **LRFD [6.5.4.2]**

A_{vn} = Net area of the connection element subject to shear (in^2)

F_u = Tensile strength of the connection element (ksi)

R_p = Reduction factor for holes taken equal to 0.90 for bolt holes punched full size and 1.0 for bolt holes drilled full size or subpunched and reamed to size

$A_{vn} := t_{wp} \cdot (L_{wp} - 16 \cdot d_{hole}) = 12.38$ in^2

Using two plates with one plate on each side of the web

the shear yielding resistance

$R_r := \phi_{vu} \cdot 0.58 \cdot R_p \cdot F_u \cdot N_{wp} A_{vn} = 746.46$ kips

$R_r > V_r$ kips OK

Block shear rupture of the connection element LRFD [6.13.4]

Strength I Limit State checks for fracture on the net section of web splice plates and block shear rupture normally do not govern for plates of typical proportion. These checks are provided in this example for completeness.

From E24-2.6, the factored shear resistance was determined to be:

$V_r = 305.60$ kips

Gross area along the plane resisting shear stress:

$A_{vg} := N_{wp} \cdot (L_{wp} - 1.50) \cdot t_{wp}$ $A_{vg} = 34.88$ in^2

Net area along the plane resisting shear stress:

$A_{vn} := N_{wp} \cdot [L_{wp} - 1.50 - 15.50 \cdot (d_{hole})] \cdot t_{wp}$ $A_{vn} = 23.98$ in^2

Net area along the plane resisting tension stress:

$A_{tn} := N_{wp} \cdot \left[1.50 + 3.0 - 1.5 \cdot \left(d_{hole}\right)\right] \cdot t_{wp}$ $A_{tn} = 2.32$ in^2

$U_{bs} := 1.0$

$R_{r1} := \phi_{bs} \cdot R_p \cdot \left(0.58 \cdot F_u \cdot A_{vn} + U_{bs} \cdot F_u \cdot A_{tn}\right) = 843.79$

$R_{r2} := \phi_{bs} \cdot R_p \cdot \left(0.58 \cdot F_y \cdot A_{vg} + U_{bs} \cdot F_u \cdot A_{tn}\right) = 929.76$

$R_r := \min\left(R_{r1}, R_{r2}\right)$

$R_r = 843.79$ kips

Check:

$V_r = 305.60$ kips < $R_r = 843.79$ kips OK

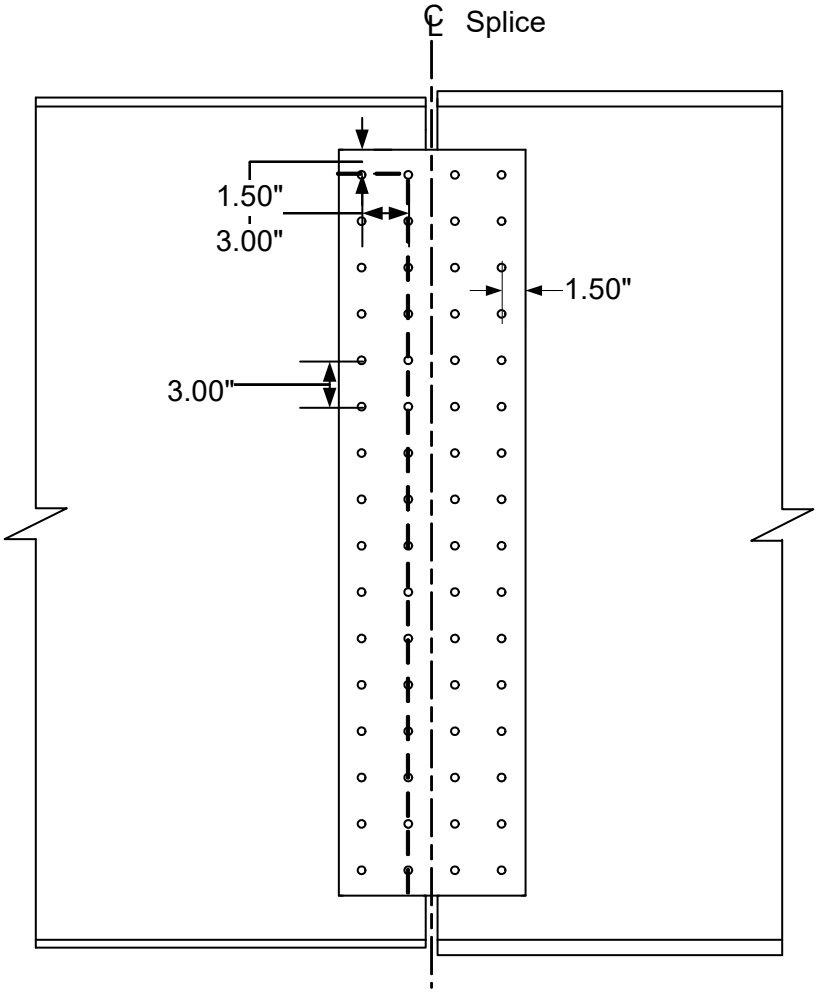

Figure E24-2.10.3.2-1
Block Shear Failure Mode - Web Splice Plate

E24-2.10.4 Service Limit State Design of the Flange Splice Plates

LRFD [6.13.6.1.3c] The factored shear for checking slip shall be taken as the shear in the web at the point of the splice under Load Combination Service II or the shear in the web due to the deck casting sequence, whichever governs.

Should the nominal slip resistance provided by the flange bolts not be sufficient to resist the flange slip force due to the factored moment at the point of splice as determined in Article **LRFD [6.13.6.1.3b]**, the web splice bolts shall be, instead, be checked for slip under a web slip force taken equal to the vector sum of the factored shear and the portion of the flange slip force that exceeds the nominal slip resistance of the flange bolts.

Furthermore, Positive and negative shear under Load Combination Service II, which is greater, should be investigated.

By inpsection, the Service II negative shear controls

$$V_{N_ServiceII} := 1\cdot\left(V_{NDL} + V_{CDL}\right) + 1\cdot\left(V_{FWS}\right) + 1.3\cdot\left(V_{NLL}\right) = -192.68$$

The nominal resistance of one bolt:

$$R_n := K_h\cdot K_s\cdot N_s\cdot P_t$$ **LRFD [6.13.2.8-1]**

$$R_n = 39.00$$ kip/Bolt

The factored slip resistance of the web splice of 32 bolts R_r

$$R_r := R_n\cdot 32 = 1248.00$$ kip

$$R_r > \left|V_{N_ServiceII}\right|$$ kip OK

E24-2.11 Draw Schematic of Final Bolted Field Splice Design

Figure E24-2.11-1 shows the final bolted field splice as determined in this design example.

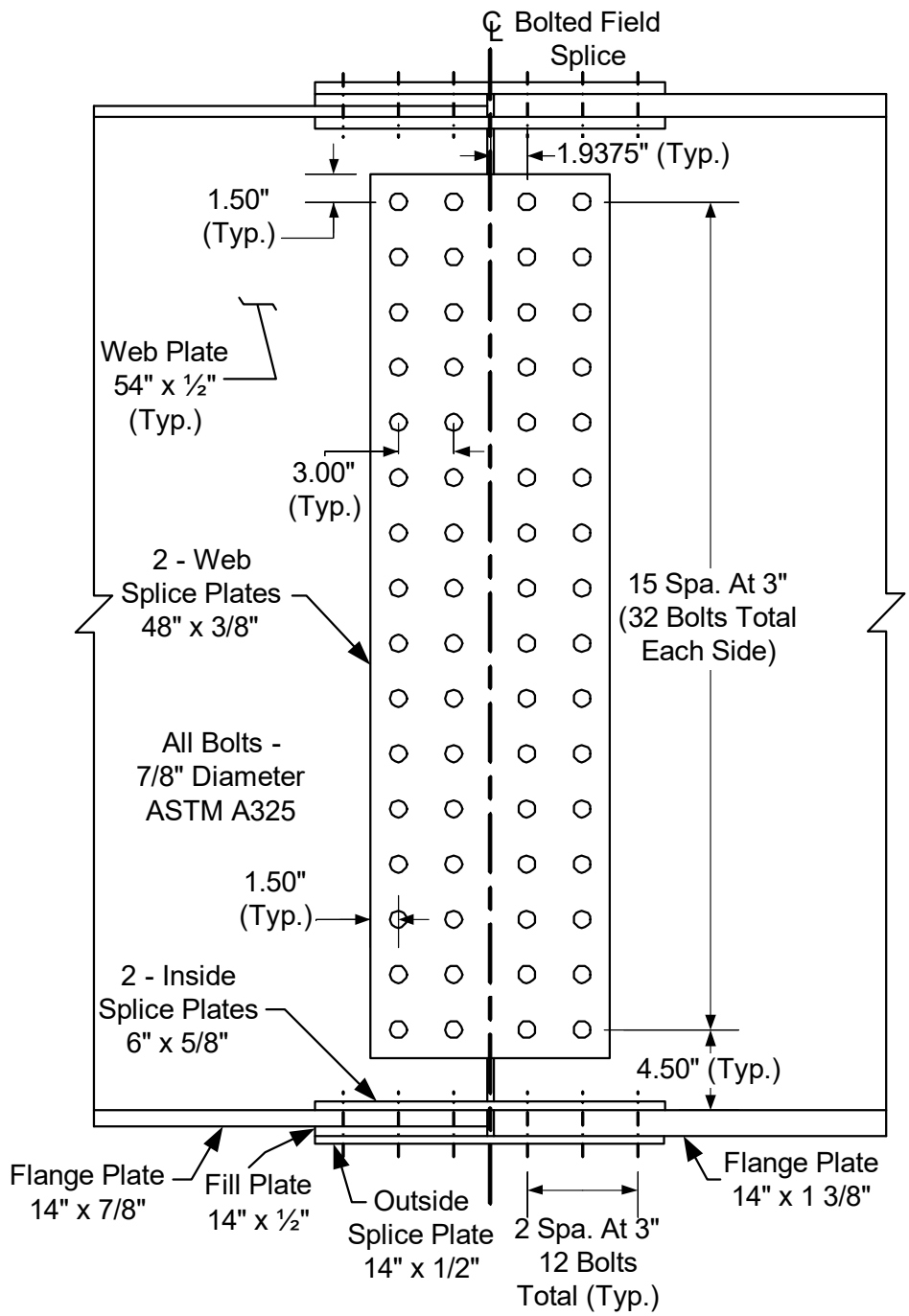

Figure E24-2.11-1
Final Bolted Field Splice Design

This page intentionally left blank.

Table of Contents

27.1 General 2
27.2 Bearing Types 3
27.2.1 Elastomeric Bearings 4
27.2.2 Steel Bearings 11
27.2.2.1 Type "A" Fixed Bearings 11
27.2.2.2 Type "A-T" Expansion Bearings 12
27.2.2.3 High-Load Multi-Rotational Bearings 12
27.3 Hold Down Devices 18
27.4 Design Example 19

27.1 General

Bridges supported in the conventional way by abutments and piers require bearings to transfer girder reactions without overstressing the supports, ensuring that the bridge functions as intended. Bridges usually require bearings that are more elaborate than those required for building columns, girders and trusses. Bridge bearings require greater consideration in minimizing forces caused by temperature change, friction and restraint against elastic deformations. A more detailed analysis in bridge bearing design considers the following:

- Bridges are usually supported by reinforced concrete substructure units, and the magnitude of the horizontal thrust determines the size of the substructure units. The coefficient of friction on bridge bearings should be as low as possible.

- Bridge bearings must be capable of withstanding and transferring dynamic forces and the resulting vibrations without causing eventual wear and destruction of the substructure units.

- Most bridges are exposed to the elements of nature. Bridge bearings are subjected to more frequent and greater total expansion and contraction movement due to changes in temperature than those required by buildings. Since bridge bearings are exposed to the weather, they are designed as maintenance-free as possible.

WisDOT policy item:

The temperature range considered for steel girder superstructures is -30°F to 120°F. A temperature setting table for steel bearings is used for steel girders; where 45°F is the neutral temperature, resulting in a range of 120° - 45° = 75° for bearing design.

The temperature range considered for prestressed concrete girder superstructures is 5°F to 85°F. Using an installation temperature of 60° for prestressed girders, the resulting range is 60° - 5° = 55° for bearing design. For prestressed girders, an additional shrinkage factor of 0.0003 ft/ft shall also be accounted for. (Do not include prestressed girder shrinkage when designing bearings for bridge rehabilitation projects). No temperature setting table is used for prestressed concrete girders.

See the Standard for Steel Expansion Bearing Details to determine bearing plate “A” sizing (steel girders) or anchor plate sizing (prestressed concrete girders). This standard also gives an example of a temperature setting table for steel bearings when used for steel girders.

WisDOT policy item:

According to **LRFD [14.4.1]**, the influence of dynamic load allowance need not be included for bearings. However, dynamic load allowance shall be included when designing bearings for bridges in Wisconsin. Apply dynamic load allowance in **LRFD [3.6.2]** to HL-93 live loads as stated in **LRFD [3.6.1.2, 3.6.1.3]** and distribute these loads, along with dead loads, to the bearings.

27.2 Bearing Types

Bridge bearings are of two general types: expansion and fixed. Bearings can be fixed in both the longitudinal and transverse directions, fixed in one direction and expansion in the other, or expansion in both directions. Expansion bearings provide for rotational movements of the girders, as well as longitudinal movement for the expansion and contraction of the bridge spans. If an expansion bearing develops a large resistance to longitudinal movement due to corrosion or other causes, this frictional force opposes the natural expansion or contraction of the span, creating a force within the span that could lead to a maintenance problem in the future. Fixed bearings act as hinges by permitting rotational movement, while at the same time preventing longitudinal movement. The function of the fixed bearing is to prevent the superstructure from moving longitudinally off of the substructure units. Both expansion and fixed bearings transfer lateral forces, as described in **LRFD [Section 3]**, from the superstructure to the substructure units. Both bearing types are set parallel to the direction of structural movement; bearings are not set parallel to flared girders.

When deciding which bearings will be fixed and which will be expansion on a bridge, several guidelines are commonly considered:

- The bearing layout for a bridge must be developed as a consistent system. Vertical movements are resisted by all bearings, longitudinal horizontal movements are resisted by fixed bearings and facilitated in expansion bearings, and rotations are generally allowed to occur as freely as possible.

- For maintenance purposes, it is generally desirable to minimize the number of deck joints on a bridge, which can in turn affect the bearing layout.

- The bearing layout must facilitate the anticipated thermal movements, primarily in the longitudinal direction, but also in the transverse direction for wide bridges.

- It is generally desirable for the superstructure to expand in the uphill direction, wherever possible.

- If more than one substructure unit is fixed within a single superstructure unit, then forces will be induced into the fixed substructure units and must be considered during design. If only one pier is fixed, unbalanced friction forces from expansion bearings will induce force into the fixed pier.

- For curved bridges, the bearing layout can induce additional stresses into the superstructure, which must be considered during design.

- Forces are distributed to the bearings based on the superstructure analysis.

A valuable tool for selecting bearing types is presented in **LRFD [Table 14.6.2-1]**, in which the suitability of various bearing types is presented in terms of movement, rotation and resistance to loads. In general, it is best to use a fixed or semi-expansion bearing utilizing an unreinforced elastomeric bearing pad whenever possible, provided adverse effects such as excessive force transfer to the substructure does not occur. Where a fixed bearing is required with greater rotational capacity, steel fixed bearings can be utilized. Laminated elastomeric bearings are

the preferred choice for expansion bearings. When such expansion bearings fail to meet project requirements, steel Type “A-T” expansion bearings should be used. For curved and/or highly skewed bridges, consideration should be given to the use of pot bearings.

27.2.1 Elastomeric Bearings

Elastomeric bearings are commonly used on small to moderate sized bridges. Elastomeric bearings are either fabricated as plain bearing pads (consisting of elastomer only) or as laminated (steel reinforced) bearings (consisting of alternate layers of steel reinforcement and elastomer bonded together during vulcanization). A sample plain elastomeric bearing pad is illustrated in Figure 27.2-1, and a sample laminated (steel reinforced) elastomeric bearing is illustrated in Figure 27.2-2.

These bearings are designed to transmit loads and accommodate movements between a bridge and its supporting structure. Plain elastomeric bearing pads can be used for small bridges, in which the vertical loads, translations and rotations are relatively small. Laminated (steel reinforced) elastomeric bearing pads are often used for larger bridges with more sizable vertical loads, translations and rotations. Performance information indicates that elastomeric bearings are functional and reliable when designed within the structural limits of the material. See **LRFD [Section 14]**, *AASHTO LRFD Bridge Construction Specifications*, *Section 18*, and *AASHTO M251* for design and construction requirements of elastomeric bearings.

WisDOT policy item:

WisDOT currently uses plain or laminated (steel reinforced) elastomeric bearings which are rectangular in shape. No other shapes or configurations are used for elastomeric bearings in Wisconsin.

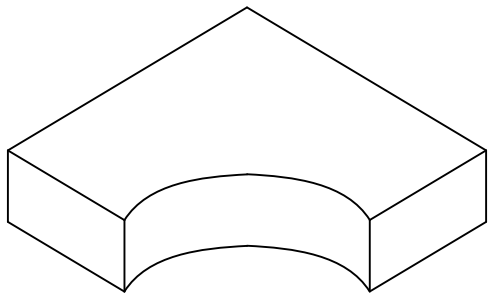

Figure 27.2-1
Plain Elastomeric Bearing

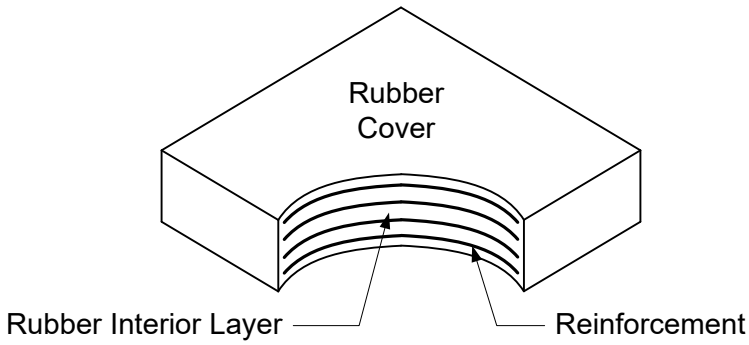

Figure 27.2-2
Laminated (Steel Reinforced) Elastomeric Bearing

AASHTO LRFD does not permit tapered elastomer layers in reinforced bearings. Laminated (steel reinforced) bearings must be placed on a level surface; otherwise gravity loads will produce shear strain in the bearing due to inclined forces. The angle between the alignment of the underside of the girder (due to the slope of the grade line, camber and dead load rotation) and a horizontal line must not exceed 0.01 radians, as per **LRFD [14.8.2]**. If the angle is greater than 0.01 radians or if the rotation multiplied by the top plate length is 1/8" or more, the 1 1/2" top steel plate must be tapered to provide a level load surface along the bottom of this plate under these conditions. The tapered plate will have a minimum thickness of 1 1/2" per *AASHTO LRFD Bridge Construction Specifications, Section 18*.

Plain and laminated (steel reinforced) elastomeric bearings can be designed by Method A as outlined in **LRFD [14.7.6]** and NCHRP-248 or by Method B as shown in **LRFD [14.7.5]** and NCHRP-298.

WisDOT policy item:

WisDOT uses Method A, as described in **LRFD [14.7.6]**, for elastomeric bearing design.

Method A results in a bearing with a lower capacity than a bearing designed using Method B. However, the increased capacity resulting from the use of Method B requires additional testing and quality control, and WisDOT currently does not have a system in place to verify these requirements.

For several years, plain elastomeric bearing pads have performed well on prestressed concrete girder structures. Refer to the Standard for Bearing Pad Details for Prestressed Concrete Girders for details. Prestressed concrete girders using this detail are fixed into the concrete diaphragms at the supports, and the girders are set on 1/2" thick plain elastomeric bearing pads. Laminated (steel reinforced) bearing details and steel plate and elastomer thicknesses are given on the Standard for Elastomeric Bearings for Prestressed Concrete Girders.

The design of an elastomeric bearing generally involves the following steps:

1. Obtain required design input **LRFD [14.4 & 14.6]**

The required design input for the design of an elastomeric bearing at the service limit state is dead load, live load plus dynamic load allowance, minimum vertical force due to permanent load, and design translation. The required design input at the strength limit state is shear force. Other required design input is expansion length, girder or beam bottom flange width, minimum grade of elastomer, and temperature zone. Two temperature zones are shown for Wisconsin in **LRFD [Figure 14.7.5.2-1]**, zones C and D. WisDOT policy is for all elastomeric bearings to meet Zone D requirements.

2. Select a feasible bearing type – plain or laminated (steel reinforced)

3. Select preliminary bearing properties **LRFD [14.7.6.2]**

   The preliminary bearing properties can be obtained from **LRFD [14.7.6.2]** or from past experience. The preliminary bearing properties include elastomer cover thickness, elastomer internal layer thickness, elastomer hardness, elastomer shear modulus, elastomer creep deflection, pad length, pad width, number of steel reinforcement layers, steel reinforcement thickness, steel reinforcement yield strength and steel reinforcement constant-amplitude fatigue threshold. WisDOT uses the following properties:

   - Elastomer cover thickness = 1/4"
   - Elastomer internal layer thickness = 1/2"
   - Elastomer hardness: Durometer 60 +/- 5
   - Elastomer shear modulus (G): 0.1125 ksi < G < 0.165 ksi
   - Elastomer creep deflection @ 25 years divided by instantaneous deflection = 0.30
   - Steel reinforcement thickness = 1/8"
   - Steel reinforcement yield strength = 36 ksi or 50 ksi
   - Steel reinforcement constant-amplitude fatigue threshold = 24 ksi

   However, not all of these properties are needed for a plain elastomeric bearing design.

4. Check shear deformation **LRFD [14.7.6.3.4]**

   Shear deformation, Δ_S, is the sum of deformation from thermal effects, Δ_{ST}, as well as creep and shrinkage effects, $\Delta_{Scr/sh}$ ($\Delta_S = \Delta_{ST} + \Delta_{Scr/sh}$).

   $$\Delta_{ST} = (\text{Expansion length})(\Delta_T)(\alpha)$$

   Where:

   Δ_T = Change in temperature (see 27.1) (degrees)

α = Coefficient of thermal expansion
= 6×10^{-6} / °F for concrete, 6.5×10^{-6} / °F for steel

Shear deformation due to creep and shrinkage effects, $\Delta_{Scr/sh}$, should be added to Δ_{ST} for prestressed concrete girder structures. The value of $\Delta_{Scr/sh}$ is computed as follows:

$$\Delta_{Scr/sh} = (\text{Expansion length})(0.0003 \text{ ft/ft})$$

LRFD [14.7.6.3.4] provides shear deformation limits to help prevent rollover at the edges and delamination. The shear deformation, Δ_S, can be checked as specified in **LRFD [14.7.6.3.4]** and by the following equation:

$$h_{rt} \geq 2\,\Delta_S$$

Where:

h_{rt} = Smaller of total elastomer or bearing thickness (inches)

Δ_S = Maximum total shear deformation of the bearing at the service limit state (inches)

5. Check compressive stress **LRFD [14.7.6.3.2]**

The compressive stress, σ_s, at the service limit state can be checked as specified in **LRFD [14.7.6.3.2]** and by the following equations:

$\sigma_s \leq 0.80\ ksi$ and $\sigma_s \leq 1.00GS$ for plain elastomeric pads

$\sigma_s \leq 1.25\ ksi$ and $\sigma_s \leq 1.25GS$ for laminated (steel reinforced) elastomeric pads

Where:

σ_s = Service average compressive stress due to total load (ksi)

G = Shear modulus of elastomer (ksi)

S = Shape factor for the thickest layer of the bearing

LRFD [14.7.6.3.2] states that the stress limits may be increased by 10 percent where shear deformation is prevented, but this is not considered applicable to WisDOT bearings.

The shape factor for individual elastomer layers is the plan area divided by the area of the perimeter free to bulge. For laminated (steel reinforced) elastomeric bearings, the following requirements must be satisfied before calculating the shape factor:

- All internal layers of elastomer must be the same thickness.
- The thickness of the cover layers cannot exceed 70 percent of the thickness of the internal layers.

The shape factor, S_i, for rectangular bearings without holes can be determined as specified in **LRFD [14.7.5.1]** and by the following equation:

$$S_i = \frac{LW}{2h_{ri}(L+W)}$$

Where:

S_i	=	Shape factor for the ith layer
h_{ri}	=	Thickness of ith elastomeric layer in elastomeric bearing (inches)
L	=	Length of a rectangular elastomeric bearing (parallel to longitudinal bridge axis) (inches)
W	=	Width of the bearing in the transverse direction (inches)

6. Check stability **LRFD [14.7.6.3.6]**

For stability, the total thickness of the rectangular pad must not exceed one-third of the pad length or one-third of the pad width as specified in **LRFD [14.7.6.3.6]**, or expressed mathematically:

$$H \le \frac{L}{3} \text{ and } H \le \frac{W}{3}$$

Where:

H	=	Total thickness of the elastomeric bearing (excluding top plate) (inches)
L	=	Length of a rectangular elastomeric bearing (parallel to longitudinal bridge axis) (inches)
W	=	Width of the bearing in the transverse direction (inches)

7. Check compressive deflection **LRFD [14.7.5.3.6, 14.7.6.3.3]**

The compressive deflection, δ, of the bearing shall be limited to ensure the serviceability of the deck joints, seals and other components of the bridge. Deflections of elastomeric bearings due to total load and to live load alone should be considered separately. Relative deflections across joints must be restricted so that a step doesn't occur at a deck joint. **LRFD [C14.7.5.3.6]** recommends that a maximum relative live load deflection across a joint be limited to 1/8".

WisDOT policy item:

WisDOT uses a live load + creep deflection limit of 1/8" for elastomeric bearing design.

Laminated (steel reinforced) elastomeric bearings have a nonlinear load deflection curve in compression. In the absence of information specific to the particular elastomer to be used, **LRFD [Figure C14.7.6.3.3-1]** may be used as a guide. Creep effects should be determined from information specific to the elastomeric compound used. Use the material properties given in this section. The compressive deflection, δ, can be determined as specified in **LRFD [14.7.5.3.6, 14.7.6.3.3]** and by the following equation:

$$\delta = \sum \varepsilon_i \, h_{ri}$$

Where:

δ	=	Instantaneous deflection (inches)
ε_i	=	Instantaneous compressive strain in the ith elastomer layer of a laminated (steel reinforced) bearing
h_{ri}	=	Thickness of ith elastomeric layer in a laminated (steel reinforced) bearing (inches)

Based on **LRFD [14.7.6.3.3]**, the initial compressive deflection of a plain elastomeric pad or in any layer of a laminated (steel reinforced) elastomeric bearing at the service limit state without dynamic load allowance shall not exceed $0.09h_{ri}$.

8. Check anchorage

WisDOT exception to AASHTO:

Design anchorage for laminated elastomeric bearings if the unfactored dead load stress is less than 200 psi. This is an exception to **LRFD [14.8.3]** based on past practice and good performance of existing bearings.

The factored force due to the deformation of an elastomeric element shall be taken as specified in **LRFD [14.6.3.1]** by the following equation:

$$H_u > GA \frac{\Delta_u}{h_{rt}}$$

Where:

H_u	=	Lateral load from applicable strength load combinations in **LRFD [Table 3.4.1-1]** (kips)
G	=	Shear modulus of the elastomer (ksi)
A	=	Plan area of elastomeric element or bearing (inches^2)
Δ_u	=	Factored shear deformation (inches)
h_{rt}	=	Total elastomer thickness (inches)

9. Check reinforcement **LRFD [14.7.5.3.5, 14.7.6.3.7]**

Reinforcing steel plates increase compressive and rotational stiffness, while maintaining flexibility in shear. The reinforcement must have adequate capacity to handle the tensile stresses produced in the plates as they counter the lateral bulging of the elastomer layers due to compression. These tensile stresses increase with compressive load. The reinforcement thickness must also satisfy the requirements of the *AASHTO LRFD Bridge Construction Specifications*. The reinforcing steel plates can be checked as specified in **LRFD [Equation 14.7.5.3.5-1,2]**:

$$h_s \geq \frac{3\, h_{max}\, \sigma_s}{F_y} \text{ for service limit state}$$

$$h_s \geq \frac{2.0\, h_{max}\, \sigma_L}{\Delta F_{TH}} \text{ for fatigue limit state}$$

Where:

h_s	=	Thickness of the steel reinforcement (inches)
h_{max}	=	Thickness of the thickest elastomeric layer in elastomeric bearing (inches)
σ_s	=	Service average compressive stress due to total load (ksi)
Fy	=	Yield strength of steel reinforcement (ksi)
σ_L	=	Service average compressive stress due to live load (ksi)
ΔF_{TH}	=	Constant amplitude fatigue threshold for Category A as specified in **LRFD [Table 6.6.1.2.5-3]** (ksi)

If holes exist in the reinforcement, the minimum thickness shall be increased by a factor equal to twice the gross width divided by the net width.

10. Rotation **LRFD [14.7.6.3.5]**

WisDOT exception to AASHTO:

Lateral rotation about the longitudinal axis of the bearing shall not be considered for straight girders.

WisDOT policy item:

Per **LRFD [14.8.2]**, a tapered plate shall be used if the inclination of the underside of the girder to the horizontal exceeds 0.01 radians. Additionally, if the rotation multiplied by the plate length is 1/8 inch or more, taper the plate.

27.2.2 Steel Bearings

For fixed bearings, a rocker plate attached to the girder is set on a masonry plate which transfers the girder reaction to the substructure unit. The masonry plate is attached to the substructure unit with anchor bolts. Pintles set into the masonry plate prevent the rocker from sliding off the masonry plate while allowing rotation to occur. This bearing is represented on the Standard for Fixed Bearing Details Type "A" - Steel Girders.

For expansion bearings, two additional plates are utilized, a stainless steel top plate and a Teflon plate allowing expansion and contraction to occur, but not in the transverse direction. This bearing is shown on the Standard for Stainless Steel - TFE Expansion Bearing Details Type "A-T".

Type "B" rocker bearings have been used for reactions greater than 400 kips and having a requirement for smaller longitudinal forces on the substructure unit. However, in the future, WisDOT plans to eliminate rocker bearings for new bridges and utilize pot bearings.

Pot and disc bearings are commonly used for moderate to large bridges. They are generally used for applications requiring a multi-directional rotational capacity and a medium to large range of load.

Hold down devices are additional details added to the Type "A-T" bearings for situations where live load can cause uplift at the abutment end of a girder. Ideally, proper span configurations would eliminate the need for hold down devices as they have proven to be a maintenance problem.

Since strength is not the governing criteria, anchor bolts are designed with Grade 36 steel for all steel bearings.

27.2.2.1 Type "A" Fixed Bearings

Type "A" Fixed Bearings prevent translation both transversely and longitudinally while allowing rotation in the longitudinal direction. This bearing is represented on the Standard for Fixed Bearing Details Type "A" - Steel Girders. An advantage of this bearing type is that it is very low maintenance. See 27.2.2.2 Type "A-T" Expansion Bearings for design information.

27.2.2.2 Type "A-T" Expansion Bearings

Type "A-T" Expansion bearings are designed to translate by sliding an unfilled polytetrafluoroethylene (PTFE or TFE) surface across a smooth, hard mating surface of stainless steel. Expansion bearings of Teflon are not used without provision for rotation. A rocker plate is provided to facilitate rotation due to live load deflection or change of camber. The Teflon sliding surface is bonded to a rigid back-up material capable of resisting horizontal shear and bending stresses to which the sliding surfaces may be subjected.

Design requirements for TFE bearing surfaces are given in **LRFD [14.7.2]**. Stainless steel-TFE expansion bearing details are given on the Standard for Stainless Steel – TFE Expansion Bearing Details Type "A-T."

Friction values are given in the **LRFD [14.7.2.5]**; they vary with loading and temperature. It is permissible to use 0.10 for a maximum friction value and 0.06 for a minimum value when determining unbalanced friction forces.

The design of type "A-T" bearings is relatively simple. The first consideration is the rocker plate length which is proportional to the contact stress based on a radius of 24" using Grade 50W steel. The rocker plate thickness is determined from a minimum of 1 1/2" to a maximum computed from the moment by assuming one-half the bearing reaction value (N/2) acting at a lever arm of one-fourth the width of the Teflon coated plate (W/4) over the length of the rocker plate. The Teflon coated plate is designed with a minimum width of 7" and the allowable stress as specified in **LRFD [14.7.2.4]** on the gross area; in many cases this controls the capacity of the expansion bearings as given in the Standard for Stainless Steel – TFE Expansion Bearing Details Type "A-T."

The design of the masonry plate is based on a maximum allowable bearing stress as specified in **LRFD [14.8.1]**. The masonry plate thickness is determined from the maximum bending moments about the x-or y-axis using a uniform pressure distribution.

In lieu of designing specific bearings, the designer may use Service I limit state loading, including dynamic load allowance, and Standards for Fixed Bearing Details Type “A” – Steel Girders, Stainless Steel – TFE Expansion Bearing Details Type “A-T” and Steel Bearings for Prestressed Concrete Girders to select the appropriate bearing.

27.2.2.3 High-Load Multi-Rotational Bearings

High-Load Multi-Rotational bearings, such as pot or disc bearings, are commonly used for moderate to large bridges. They are generally used for curved and/or highly skewed bridge applications requiring a multi-directional rotational capacity and a medium to large range of load.

Pot bearings consist of a circular non-reinforced neoprene or rubber pad, of relatively thin section, which is totally enclosed by a steel pot. The rubber is prevented from bulging by the pot containing it and acts similar to a fluid under high pressure. The result is a bearing providing suitable rotation and at the same time giving the effect of a point-contact rocker bearing since the center of pressure does not vary more than 4 percent. As specified in **LRFD [14.7.4.1]**, the

minimum vertical load on a pot bearing should not be less than 20 percent of the vertical design load.

Pot bearings resist vertical load primarily through compressive stress in the elastomeric pad. The pad can deform and it has some shear stiffness, but it has very limited compressibility. Pot bearings generally have a large reserve of strength against vertical load. Pot bearings facilitate rotation through deformation of the elastomeric pad. During rotation, one side of the pad compresses and the other side expands. Pot bearings can sustain many cycles of small rotations with little or no damage. However, they can experience significant damage when subjected to relatively few cycles of large rotations.

Pot bearings can also resist horizontal loads. They can either be fixed, guided or non-guided. Fixed pot bearings (see Figure 27.2-3) can not translate in any direction, and they resist horizontal load primarily through contact between the rim of the piston and the wall of the pot. Guided pot bearings (see Figure 27.2-4) can translate in only one direction, and they resist horizontal load in the other direction through the use of guide bars. Non-guided pot bearings (see Figure 27.2-5) can translate in any direction, and they do not resist horizontal loads in any direction.

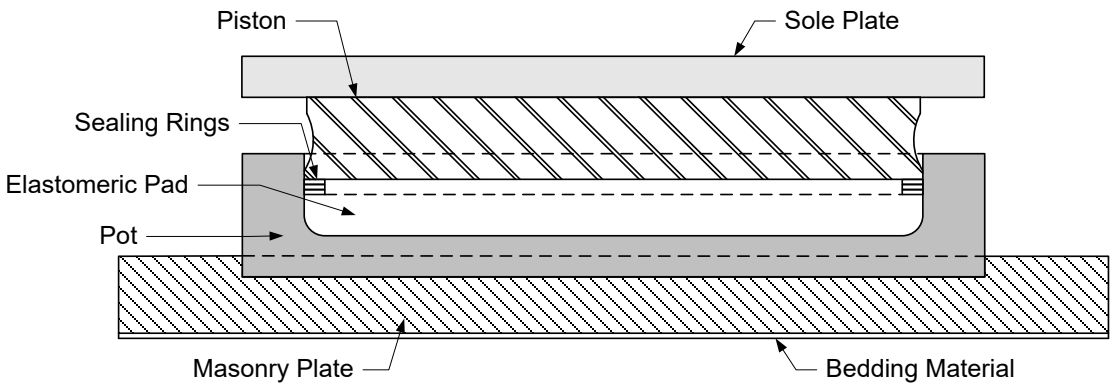

Figure 27.2-3
Fixed Pot Bearing

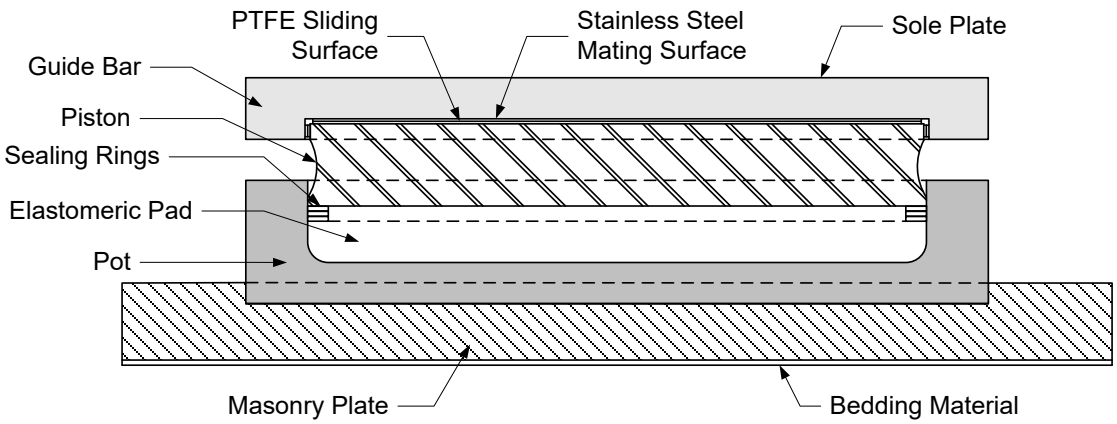

Figure 27.2-4
Guided Pot Bearing

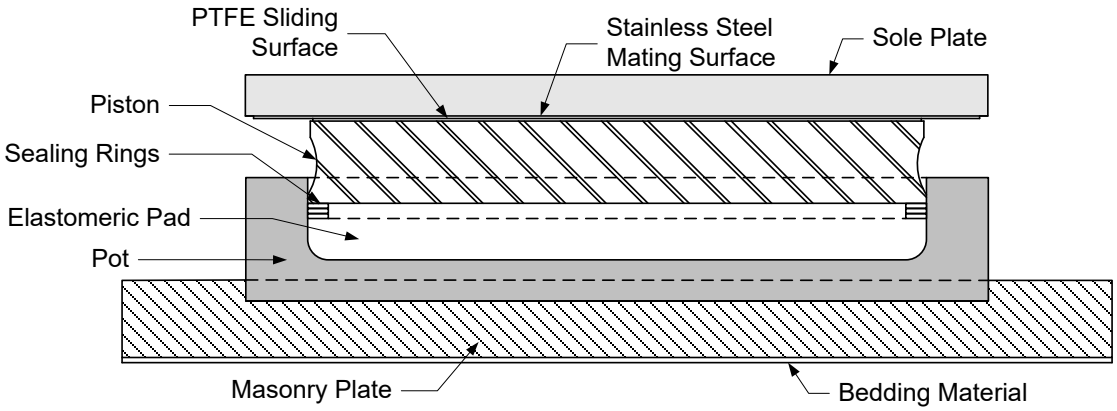

Figure 27.2-5
Non-Guided Pot Bearing

Disc bearings consist of a circular polyether urethane disc, confined by upper and lower steel plates and held in place by a positive location device. Limiting rings, either steel rings welded to the upper and lower steel plates or a circular recess in each of those plates, may also be used to partially confine the elastomer against lateral expansion. A shear-resisting mechanism shall be provided and it may be placed either inside or outside of the polyether urethane disc.

Disc bearings function by deformation of the polyether urethane disc, which should be stiff enough to resist vertical loads without excessive deformation and yet be flexible enough to accommodate the imposed rotations without liftoff or excessive stress on other components of the bearing assembly. The shear-resisting mechanism transmits horizontal forces between the upper and lower steel plates. As specified in **LRFD [14.7.8.4]**, the shear-resisting mechanism shall be capable of resisting a horizontal force in any direction equal to the larger of the design

shear force at the strength and extreme event limit states or 15 percent of the design vertical load at the service limit state.

Disc bearings can either be fixed, guided or non-guided. Fixed disc bearings (see Figure 27.2-6) cannot translate in any direction. Guided disc bearings (see Figure 27.2-7) can translate in only one direction. Non-guided disc bearings (see Figure 27.2-8) can translate in any direction.

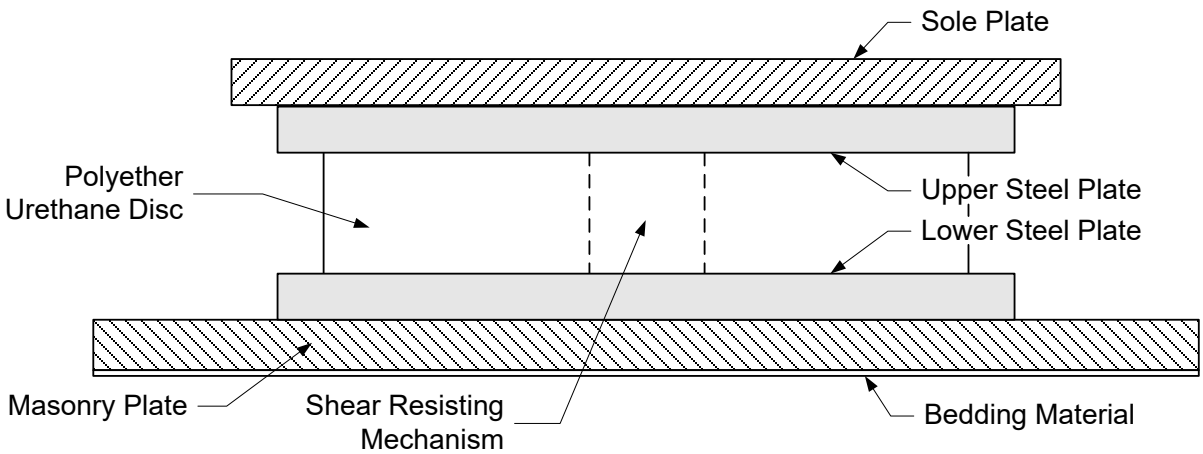

Figure 27.2-6
Fixed Disc Bearing

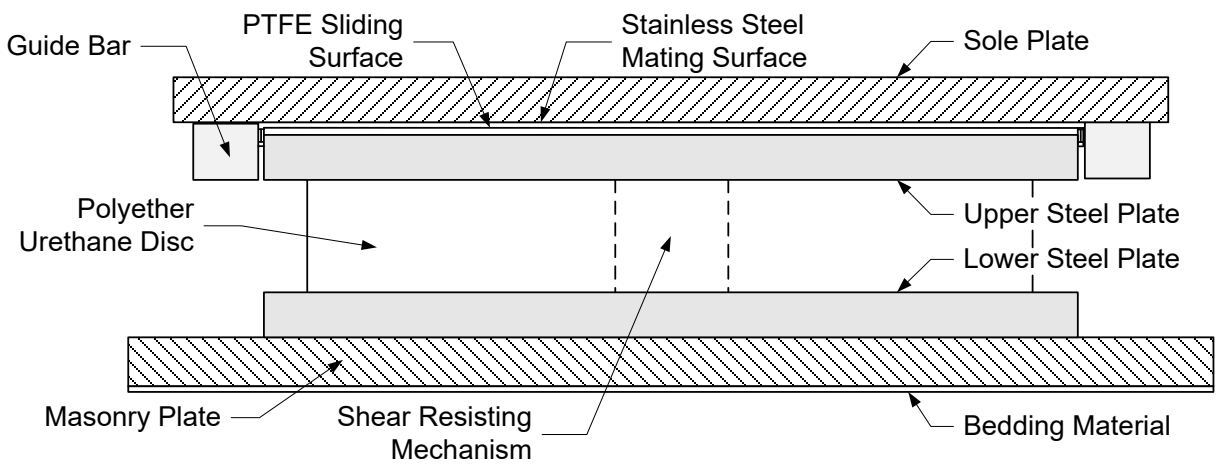

Figure 27.2-7
Guided Disc Bearing

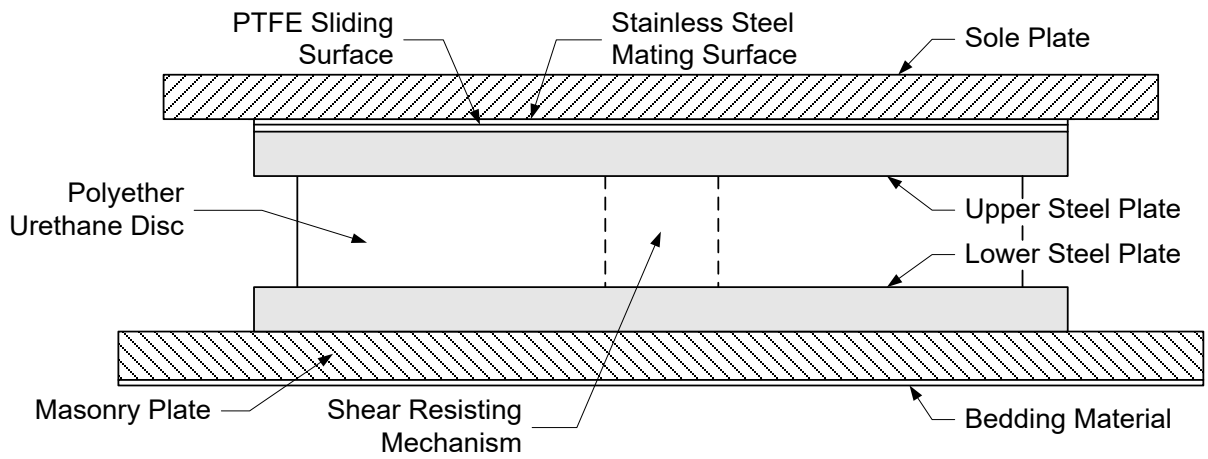

Figure 27.2-8
Non-Guided Disc Bearing

The design of a pot or disc bearing generally involves the following steps:

1. Obtain required design input **LRFD [14.4 & 14.6]**
2. Select a feasible bearing type: fixed, guided or non-guided
3. Select preliminary bearing properties
    a. Pot bearings: **LRFD [14.7.4.2]**
    b. Disc bearings: **LRFD [14.7.8.2]**
4. Design the bearing elements
    a. Pot bearings:
        i. Design the elastomeric disc **LRFD [14.7.4.3 and 14.7.4.4]**
        ii. Design the sealing rings **LRFD [14.7.4.5]**
        iii. Design the pot **LRFD [C14.7.4.3, 14.7.4.6 and 14.7.4.7]**
        iv. Design the piston **LRFD [14.7.4.7]**
    b. Disc bearings:
        i. Design the elastomeric disc **LRFD [14.7.8.3]**
        ii. Design the shear resisting mechanism **LRFD [14.7.8.4]**

5. Design the guides and restraints, if applicable **LRFD [14.7.9]**

6. Design the PTFE sliding surface, if applicable **LRFD [14.7.2]**

7. Design the sole plate, masonry plate (or bearing plate), anchorage and connections for pot bearings; design the sole plate, masonry plate (or bearing plate), upper and lower plates, anchorage and connections for disc bearings; as applicable **LRFD [Section 6, 14.8 and 14.7.8.5]**

8. Check the concrete or steel support **LRFD [5.6.5 and Section 6]**

Although the steps for pot and/or disc bearing design are given above, the actual bearing design is typically done by the manufacturer. The design of the masonry plate is done either by the design engineer or by the bearing manufacturer (this should be coordinated and noted in the contract documents).

When using pot or disc bearings, the design plans need to specify the following:

- Degree of fixity (fixed, guided in one direction or non-guided)
- Maximum vertical load
- Minimum vertical load
- Maximum horizontal load (fixed and guided, only)
- Assumed bearing height

Note: The loads specified shall be Service I limit state loads, including dynamic load allowance.

Field adjustments to the given beam seat elevations will be required if the actual bearing height differs from the assumed bearing height stated on the plan. To facilitate such an adjustment without affecting the structural integrity of the substructure unit, a concrete pedestal (plinth) is detailed at each bearing location. Detailing a pedestal height of 10” based on the assumed bearing height will give sufficient room for adjustment should the actual bearing height differ from the assumed bearing height.

27.3 Hold Down Devices

Hold down devices are additional elements added to the Type "A-T" bearings for situations where live load can cause uplift at the abutment end of a girder. Ideally, proper span configurations would eliminate the need for hold down devices as they have proven to be a maintenance problem. Details for hold down devices are given in the Standard for Hold Down Devices.

27.4 Design Example

E27-1 Steel Reinforced Elastomeric Bearing

This page intentionally left blank.

Table of Contents

E27-1 DESIGN EXAMPLE - STEEL REINFORCED ELASTOMERIC BEARING

E27-1.4 Shear 2
E27-1.5 Compressive Stress 3
E27-1.6 Stability 4
E27-1.7 Compressive Deflection 5
E27-1.8 Anchorage 7
E27-1.9 Reinforcement: 8
E27-1.10 Rotation: 8
E27-1.11 Bearing Summary: 10

E27-1 DESIGN EXAMPLE - STEEL REINFORCED ELASTOMERIC BEARING

ThIs design example is for a 3-span prestressed girder structure. The piers are fixed supports and the abutments accommodate expansion.
(Example is current through LRFD Eighth Edition - 2017)

E27-1.1 Design Data

Bearing location: Abutment (Type A3)

Girder type: 72W

$L_{exp} := 220$	Expansion length, ft
$b_f := 2.5$	Bottom flange width, ft
$DL_{serv} := 167$	Service I limit state dead load, kips
$DL_{ws} := 23$	Service I limit state future wearing surface dead load, kips
$LL_{serv} := 62$	Service I limit state live load, kips
$h_{rcover} := 0.25$	Elastomer cover thickness, in
$h_s := 0.125$	Steel reinforcement thickness, in
$F_y := 36$	Minimum yield strength of the steel reinforcement, ksi

Temperature Zone:	D (Use for Entire State)	**LRFD [Fig. 14.7.5.2-1]**
Minimum Grade of Elastomer:	4	**LRFD [Table 14.7.5.2-1]**
Elastic Hardness:	Durometer 60 +/- 5	(used 55 for design)
Shear Modulus (G):	0.1125 ksi < G <0.165 ksi	**LRFD [Table 14.7.6.2-1]**
Creep Deflection @ 25 Years		
divided by instantaneous deflection:	0.3	**LRFD [Table 14.7.6.2-1]**

E27-1.2 Design Method

Use Design Method A **LRFD [14.7.6]**
Method A results in a bearing with a lower capacity than a bearing designed using Method B. However the increased capacity resulting from the use of Method B requires additional testing and quality control.

E27-1.3 Dynamic Load Allowance

The influence of impact need not be included for bearings **LRFD [14.4.1]**; however, dynamic load allowance will be included to follow a **WisDOT policy item**.

E27-1.4 Shear

The maximum shear deformation of the pad shall be taken as the maximum horizontal superstructure displacement, reduced to account for the pier flexibility. **LRFD [14.7.6.3.4]**

$h_{rt} \geq 2\Delta_s$ **LRFD [Equation 14.7.6.3.4-1]**

Temperature range: T_{low} and T_{high} values below are from WisDOT policy item in 27.1

$T_{low} := 5$ Minimum temperature, °F

$T_{high} := 85$ Maximum temperature, °F

$\gamma_{TU} := 1.2$ Service I Load factor for deformation **LRFD [Table 3.4.1-1]**

$T_{install} := 60$ Installation temperature, °F

$\alpha_c := 0.000006$ Coefficient of thermal expansion of concrete, ft/ft/°F

$S_{crsh} := 0.0003$ Coefficient of creep and shrinkage of concrete, ft/ft

$\Delta_T := T_{install} - T_{low}$ $\Delta_T = 55$ °F

Maximum total shear deformation of the elastomer

$\Delta_s := L_{exp} \cdot \alpha_c \cdot \Delta_T \cdot 12 + L_{exp} \cdot S_{crsh} \cdot 12$ $\Delta_s = 1.663$ in

Required total elastomer thickness

$H_{rt} \geq 2 \cdot \gamma_{TU} \cdot \Delta_s$ $H_{rt} = 3.992$ in

Elastomer internal layer thickness

$h_{ri} := 0.5$ in

Required elastomer thickness **LRFD [14.7.6.1)**

$\frac{h_{rcover}}{h_{ri}} \leq 0.7$ $\frac{h_{rcover}}{h_{ri}} = 0.5$

check = "< 0.7, OK"

Determine the number of internal elastomer layers:

$n := \frac{H_{rt} - 2 \cdot h_{rcover}}{h_{ri}}$ Note: $h_{rcover} = 0.25$ in

$n = 6.983$ layers

Use: $n = 7$ layers

Total elastomer thickness:

$h_{rt} := 2 \cdot h_{rcover} + n \cdot h_{ri}$ $\boxed{h_{rt} = 4.0}$ in

Total height of reinforced elastomeric pad:

$H := h_{rt} + (n + 1) \cdot h_s$ $\boxed{H = 5.000}$ in

E27-1.5 Compressive Stress

$\sigma_{s_all} \le 1.25$ and $\sigma_{s_all} \le 1.25 \cdot G \cdot S$ **LRFD [14.7.6.3.2]**

$edge := 3$ in Transverse distance from the edge of the flange to edge of bearing

$W := 12 \cdot b_f - 2 \cdot edge$ Transverse dimension $\boxed{W = 24}$ in

$L \ge \dfrac{DL_{serv} + LL_{serv}}{W \cdot \sigma_{s_all}}$ Since $\sigma_{s_all} \le \dfrac{DL_{serv} + LL_{serv}}{L \cdot W}$

$\sigma_{s_all} := 1.25$ ksi

$L := \dfrac{DL_{serv} + LL_{serv}}{W \cdot \sigma_{s_all}}$ Longitudinal dimension $\boxed{L = 7.633}$ in

$increment := 5$ in <== Rounding increment

$\boxed{L = 10}$ in

(Use a 1 inch minimum rounding increment for design. For this example, the rounding increment is used to increase L dimension to satisfy subsequent stress checks, etc.)

Determine shape factor for internal layer **LRFD [Equation 14.7.5.1-1]**

$S_i := \dfrac{L \cdot W}{2 \cdot h_{ri} \cdot (L + W)}$ $\boxed{S_i = 7.059}$

$G := 0.1125$ ksi $0.1125\text{ksi} < G < 0.165\text{ksi}$

$\boxed{1.25 \cdot G \cdot S_i = 0.993}$ ksi (Verify that **LRFD** is satisfied for a full range of G values. The minimum G values is used here. See also E27-1.8)

$\sigma_s := \dfrac{DL_{serv} + LL_{serv}}{L \cdot W}$ $\boxed{\sigma_s = 0.954}$ ksi

$\boxed{\sigma_s = \text{"< 1.25GS, OK"}}$

E27-1.6 Stability

$H \le \frac{L}{3}$ and $H \le \frac{W}{3}$ **LRFD [14.7.6.3.6]**

$H = 5.000$ in

Bearing length check:

$L_{min} := 3 \cdot H$ $L_{min} = 15$ in

$L = 10$ in

Use the larger value: $L = 15$ in

Bearing width check:

$W_{min} := 3 \cdot H$ $W_{min} = 15$ in

$W = 24$ in

Use the larger value: $W = 24$ in

Revised shape factor and compressive stress for internal layer:

$h_{ri} = 0.5$ in

$G = 0.1125$ ksi

$S_i := \frac{L \cdot W}{2 \cdot h_{ri} \cdot (L + W)}$ $S_i = 9.231$

$1.25 \cdot G \cdot S_i = 1.298$ ksi

$\sigma_s := \frac{DL_{serv} + LL_{serv}}{L \cdot W}$ $\sigma_s = 0.636$ ksi

$\sigma_s =$ "< 1.25GSi, OK"

Check **LRFD [C14.7.6.1]**: $S_i^2 / n < 20$ (for rectangular shape with $n \ge 3$)

$S_i^2 / n = (9.231)^2 / 8 = 10.7 < 20$ "OK"

where n = (7 inter. layers + 1/2 (2 exter. layers)) = 8

Revised shape factor and compressive stress for the cover layer:

$h_{rcover} = 0.25$ in

$$S_{cover} := \frac{L \cdot W}{2 \cdot h_{rcover} \cdot (L + W)}$$

$S_{cover} = 18.462$ ksi

$1.25 \cdot G \cdot S_{cover} = 2.596$ ksi

$$\sigma_s := \frac{DL_{serv} + LL_{serv}}{L \cdot W}$$

$\sigma_s = 0.636$ ksi

$\sigma_s =$ "< 1.25GS, OK"

E27-1.7 Compressive Deflection

LRFD [14.7.6.3.3, 14.7.5.3.6]

Average vertical compressive stress:

Average compressive stress due to total load

$\sigma_s = 0.636$ ksi

Average compressive stress due to live load

$$\sigma_L := \frac{LL_{serv}}{L \cdot W}$$

$\sigma_L = 0.172$ ksi

Average compressive stress due to dead load

$$\sigma_D := \frac{DL_{serv}}{L \cdot W}$$

$\sigma_D = 0.464$ ksi

Use **LRFD [Figure C14.7.6.3.3-1]** to estimate the compressive strain in the interior and cover layers. Average the values from the 50 Durometer and 60 Durometer curves to obtain values for 55 Durometer bearings.

LAYER	LOAD	S	STRESS (ksi)	50 DUROMETER STRAIN	60 DUROMETER STRAIN	AVERAGE STRAIN
INTERNAL	DEAD LOAD	9.231	0.464	2.3%	2.1%	2.2%
	TOTAL LOAD	9.231	0.636	3.1%	2.7%	2.9%
COVER	DEAD LOAD	18.462	0.464	1.8%	1.5%	1.7%
	TOTAL LOAD	18.462	0.636	2.2%	1.9%	2.1%

Initial compressive deflection of n-internal layers and 2 cover layers under total load:

$\boxed{\varepsilon_{int} = 0.029}$ Compressive strain in the interior layer

$\boxed{\varepsilon_{cover} = 0.021}$ Compressive strain in the cover layer

$\boxed{n = 7}$ layers

$\boxed{h_{ri} = 0.5}$ in

$\boxed{h_{rcover} = 0.25}$ in

$\delta := n \cdot h_{ri} \cdot \varepsilon_{int} + 2 \cdot h_{rcover} \cdot \varepsilon_{cover}$ Modification of **LRFD [Equation 14.7.5.3.6-1]**

$\boxed{\delta = 0.112}$ in

Initial compressive deflection under dead load:

$\boxed{\varepsilon_{intDL} = 0.022}$

$\boxed{\varepsilon_{coverDL} = 0.017}$

$\delta_{DL} := n \cdot h_{ri} \cdot \varepsilon_{intDL} + 2 \cdot h_{rcover} \cdot \varepsilon_{coverDL}$ $\boxed{\delta_{DL} = 0.086}$ in

Deflection due to creep:

$C_d := 0.30$ Average value between 50 and 60 Durometer **LRFD [Table 14.7.6.2-1]**

$\delta_{CR} := C_d \cdot \delta_{DL}$ $\boxed{\delta_{CR} = 0.026}$ in

Compressive deflection due to live load:

$\delta_{LL} := \delta - \delta_{DL}$ $\boxed{\delta_{LL} = 0.027}$ in

Deflection due to creep and live load: **LRFD [C14.7.5.3.6]**

$\delta_{CRLL} := \delta_{CR} + \delta_{LL}$ $\delta_{CRLL} = 0.052$ in

δ_{CRLL} = "< 0.125 in., OK"

Initial compressive deflection of a single internal layer:

$\varepsilon_{int} \cdot h_{ri} < 0.09 \cdot h_{ri}$ **LRFD [14.7.6.3.3]** $\varepsilon_{int} = 0.029$

ε_{int} = "< 0.09, OK"

E27-1.8 Anchorage

LRFD [14.8.3]

Shear force generated in the bearing due to temperature movement:

$H_u := G \cdot A \cdot \frac{\Delta_u}{h_{rt}}$ **LRFD [Equation 14.6.3.1-2]**

$G := 0.165$ conservative assumption, maximum value of G, ksi

Factored shear deformation of the elastomer

$\Delta_u := \gamma_{TU} \cdot \Delta_s$ $\Delta_u = 1.996$ in

Plan area of elastomeric element

$L = 15$ in $W = 24$ in

$A := L \cdot W$ $A = 360$ in^2

$H_u := G \cdot A \cdot \frac{\Delta_u}{h_{rt}}$ $H_u = 29.638$ kips

(This value of H_u can be used for substructure design)

Minimum vertical force due to permanent loads:

$\gamma_{DLserv} := 1.0$

$P_{sd} := \gamma_{DLserv} \cdot (DL_{serv} - DL_{ws})$ $P_{sd} = 144$ kips

$\sigma := \frac{P_{sd}}{A}$ $\sigma = 0.400$ ksi

σ = "> 0.200 ksi, OK, anchorage is not required per WisDOT exception to AASHTO"

E27-1.9 Reinforcement:

LRFD [14.7.6.3.7, 14.7.5.3.5]

Service limit state:

$h_{max} := h_{ri}$ $\boxed{h_{max} = 0.5}$ in

$\boxed{\sigma_s = 0.636}$ ksi

$\boxed{F_y = 36}$ ksi

$h_s \geq \dfrac{3 \cdot h_{max} \cdot \sigma_s}{F_y}$ **LRFD [Eq 14.7.5.3.5-1]** $\boxed{h_s = 0.125}$ in

$\boxed{\dfrac{3 \cdot h_{max} \cdot \sigma_s}{F_y} = 0.027}$ in

$\boxed{\text{check} = \text{"< hs, OK"}}$

Fatigue limit state:

$h_s \geq \dfrac{2 \cdot h_{max} \cdot \sigma_L}{\Delta F_{TH}}$ **LRFD [Eq 14.7.5.3.5-2]** $\boxed{\sigma_L = 0.172}$ ksi

$\boxed{h_s = 0.125}$ in

$\Delta F_{TH} := 24.0$ ksi Constant amplitude fatigue threshold for Category A
LRFD [Table 6.6.1.2.5-3]

$\boxed{\dfrac{2 \cdot h_{max} \cdot \sigma_L}{\Delta F_{TH}} = 0.007}$ in

$\boxed{\text{check} = \text{"< hs, OK"}}$

E27-1.10 Rotation:

LRFD [14.7.6.3.5, C14.7.6.1]

Design for rotation in Method A is implicit in the geometric and stress limit requirements spelled out for this design method. Therefore no additional rotation calculations are required.

Check requirement for tapered plate: **LRFD [14.8.2]**

Find the angle between the alignment of the underside of the girder and a horizontal line. Consider the slope of the girder, camber of the girder, and rotation due to unfactored dead load deflection.

Inclination due to grade line:

$L_{span} := 150$ Span length, ft

@ pier:

$EL_{Pseat} := 856.63$ Beam seat elevation at the pier, in feet

$h_{Pbrg} := 0.5$ Bearing height at the pier, in

Bottom of girder elevation at the pier, in feet

$$EL_1 := EL_{Pseat} + \frac{h_{Pbrg}}{12}$$ $\boxed{EL_1 = 856.672}$

@ abutment:

$EL_{Aseat} := 853.63$ Beam seat elevation at the abutment, in feet

$t_{plate} := 1.5$ Steel top plate thickness, in

$\boxed{H = 5}$ Total elastomeric bearing height, in

Total bearing height, at the abutment, in

$h_{Abrg} := H + t_{plate}$ $\boxed{h_{Abrg} = 6.5}$ in

Bottom of girder elevation in feet

$$EL_2 := EL_{Aseat} + \frac{h_{Abrg}}{12}$$ $\boxed{EL_2 = 854.172}$

Slope of girder

$$S_{GL} := \frac{|EL_1 - EL_2|}{L_{span}}$$ $\boxed{S_{GL} = 0.017}$

Inclination due to grade line in radians

$\theta_{GL} := \operatorname{atan}(S_{GL})$ $\boxed{\theta_{GL} = 0.017}$ radians

Inclination due to residual camber:

$\Delta_{camber} := 3.83$ Maximum camber of girder, in

$\Delta_{DL} := 2.54$ Maximum dead load deflection, in

$\Delta_{LL} := 0.663$ Maximum live load deflection, in

Residual camber, in

$\Delta_{RC} := \Delta_{camber} - \Delta_{DL}$ $\boxed{\Delta_{RC} = 1.290}$ in

To determine the slope due to residual camber, use a straight line from C/L Bearing to the 1/10 point. Assume that camber at 1/10 point is 40% of maximum camber (at midspan).

$S_{RC} := \dfrac{0.4 \cdot \Delta_{RC}}{0.1 \cdot L_{span} \cdot 12}$ Slope due to residual camber $\boxed{S_{RC} = 0.003}$

Inclination due to residual camber in radians

$\theta_{RC} := \mathrm{atan}(S_{RC})$ $\boxed{\theta_{RC} = 0.003}$ radians

Total inclination due to grade line and residual camber in radians

$\theta_{SX} := \theta_{GL} + \theta_{RC}$ $\boxed{\theta_{SX} = 0.020}$ radians

$\boxed{\theta_{SX} = \text{"> 0.01 rad, NG, top plate must be tapered"}}$

(The plate should also be tapered if θ_{SX} x L_P >= 1/8")

Top plate dimensions:

$\boxed{t_{plate} = 1.5}$ Minimum thickness of top plate, in

$L_p := L + 2$ Length of top plate

$\boxed{L_p = 17}$ in

$\boxed{L_p \cdot \theta_{SX} = 0.332}$ in

Thickness of top plate on thicker edge

$t_{pmax} := t_{plate} + L_p \cdot \tan(\theta_{SX})$ $\boxed{t_{pmax} = 1.832}$ in

E27-1.11 Bearing Summary:

Laminated Elastomeric Bearing Pad:

Length = 15 inches

Width = 24 inches

Steel reinforcing plates: 8 @ 1/8"

Internal elastomer layers: 7 @ 1/2"

Cover elastomer layers: 2 @ 1/4"

Total pad height: 5"

Steel Top Plate (See standard detail):

Length = 17 inches

Width = 30 inches

Thickness = 1 1/2" to 1 7/8"

Table of Contents

28.1 Introduction 2
28.1.1 General 3
28.1.2 Concrete Spans 3
28.1.3 Steel Spans 3
28.1.4 Thermal Movement 3
28.2 Compression Seals 5
28.2.1 Description 5
28.2.2 Joint Design 5
28.2.3 Seal Size 6
28.2.4 Installation 6
28.2.5 Maintenance 6
28.3 Strip Seal Expansion Devices 8
28.3.1 Description 8
28.3.2 Curb and Parapet Sections 8
28.3.3 Median and Sidewalk Sections 8
28.3.4 Size Selection 8
28.3.4.1.1 Example 9
28.4 Steel Expansion Joints 11
28.4.1 Plate Type Expansion Joint 11
28.4.2 Finger Type Expansion Joint 11
28.5 Modular Expansion Devices 12
28.5.1 Description 12
28.5.2 Size Selection 13
28.6 Joint Performance 15

28.1 Introduction

Many structures have joints that must be properly designed and installed to insure their integrity and serviceability. Bridges as well as highway pavements, airstrips, buildings, etc. need joints to take care of expansion and contraction caused by temperature changes. However, bridges expand and contract more than pavement slabs or buildings and have their own special types of expansion devices.

Current practice is to limit the number of bridge expansion joints. This practice results in more movement at each joint. There are so many potential problems associated with joints that fewer joints are recommended practice. Expansion joints are placed on the high end of a bridge if only one joint is placed on the bridge. This is done to prevent the bridge from creeping downhill and to minimize the amount of water passing over the joint.

Open joints generally lead to future maintenance. Water and debris fall through the joint. Water running through an open joint erodes the soil under the structure, stains the bent cap and columns, and leads to corrosion of adjacent girders, diaphragms, and bearings. During freeze-thaw conditions, large icicles may form under the structure or ice may form on the roadway presenting a traffic hazard. Debris acts with water in staining the substructure units and plugs the drainage systems.

In the past, open steel finger type joints were used on long span bridges where large movements encountered. Finger joints were placed in the span near the point of contraflexure and were placed on the structure where they are required structurally. Drains were located to prevent drainage across the joint if feasible. In some areas, they were provided with a drainage trough to collect the water passing through.

Sliding steel plate joints are semi-open joints since water and light debris can pass through. A sealant placed in the joint prevents some water from passing through. It also prevents the accumulation of debris which can keep the joint from moving as it was designed. To date, considerable maintenance has occurred with sealants and neoprene troughs have been added to collect the water at some sites.

Currently finger and sliding plate details are maintained for joint maintenance and retrofitting but are not used for new structures. Watertight expansion devices such as strip seals and modular types are recommended for new structures. Although these expansion joints are not completely watertight; they have been effective in reducing damage to adjacent girders, diaphragms, bearings and substructure units.

The neoprene compression seal is a closed joint which is watertight if it is properly installed and an adequate adhesive is employed. Compression seals are only used for fixed joints. Strip-seals are watertight joints which are used in place of sliding plate joints or finger joints in an attempt to keep water and debris on the bridge deck surface.

Refer to Figure 12.7-1 for placement of expansion devices. The following criteria is used for placement of expansion devices:

28.1.1 General

Use watertight expansion joints wherever possible according to the design criteria and of all structure lengths. On skews over 45°, strip seals must be oversized to compensate for racking of the joint. For thermal movements greater than 4 inches modular expansion devices are recommended.

28.1.2 Concrete Spans

An expansion device is required if the expansion length of the structure exceeds 300 feet. At this point the geometrics of the structure determine the number of expansion joints required with a maximum expansion length of 400 feet.

As an example, consider a prestressed girder structure 700 feet long on flexible piers and 0° skew. Considering the two piers near the center of the span as fixed, the structure can expand toward each abutment with maximum expansion lengths less than 400 feet. A 400 series model strip seal expansion joint at each abutment is adequate for this structure.

28.1.3 Steel Spans

Watertight joints are required on all painted and unpainted steel structures to control staining of the substructure units due to corrosion of the steel girders, diaphragms, and bearings.

See Figure 12.7-1 to determine the appropriate abutment type and, hence, whether expansion devices are required. The geometry of the structure determines the number of expansion devices required and the amount of movement at each device. Some factors to consider are temperature expansion with high skew angles may cause "racking" of the structure; higher abutments have more uncertainty to movement due to backfill pressure; and curved girders add torsional and shear forces.

Long span structures on tall flexible piers may have much longer expansion lengths than short span structures on short rigid piers. The longer spans have much less resistance to horizontal temperature movement caused by bearing friction and pier rigidity. These types of structures are designed for joint movements of 4 inches or greater using modular expansion devices.

28.1.4 Thermal Movement

The maximum thermal movement required at expansion joints is based on the following table:

Structure Type	Temperature Range	Thermal Coefficient
Steel:	-30 to 120°F	0.0000065/F
Concrete:	+5 to 85°F	0.0000060/F
*Prestressed Girder:	+5 to 85°F	0.0000060/F

Table 28.1-1
Thermal Movement

* For Prestressed girders add shrinkage due to creep of .0003 ft/ft. This value should be used in setting the joint opening as the joint opening will continue to widen over time.

The expansion length is measured along the centerline of the bridge and the length is normal to the joint opening for structures with a zero skew. The designer should provide adequately sized joints (i.e. round up in size if between two joint sizes or use additional joints or a different type of joint).

The annual mean temperature for Wisconsin is 45 °F. For the setting of strip seal expansion devices, see Standard for Strip Seal Expansion Joint Details for the joint opening when the expansion length is less than or equal to 230 feet. When the expansion length is greater than 230 feet show a temperature table with the joint openings from 5°F to 85°F in 10°F increments.

Note that the neutral point for temperature movement is not always located at the fixed pier. See Chapter 13 – Piers for an explanation of how to calculate the neutral point.

28.2 Compression Seals

28.2.1 Description

This is a preformed, compartmented, elastomeric polychloropene (neoprene) device. In the past, compression seals were used sparingly on fixed joints provided there was little or no movement of the joint. However, compression seals shall no longer be used in this application due to the fact that the seals tend to leak over time. Compression seals shall be used only in longitudinal construction joint locations or for rehabilitation projects that do not involve full joint replacement (i.e., where the existing seal has pulled out of the joint and needs to be replaced).

28.2.2 Joint Design

Most applications have been for bridge rehabilitation where the seal is installed into the concrete deck without armor.

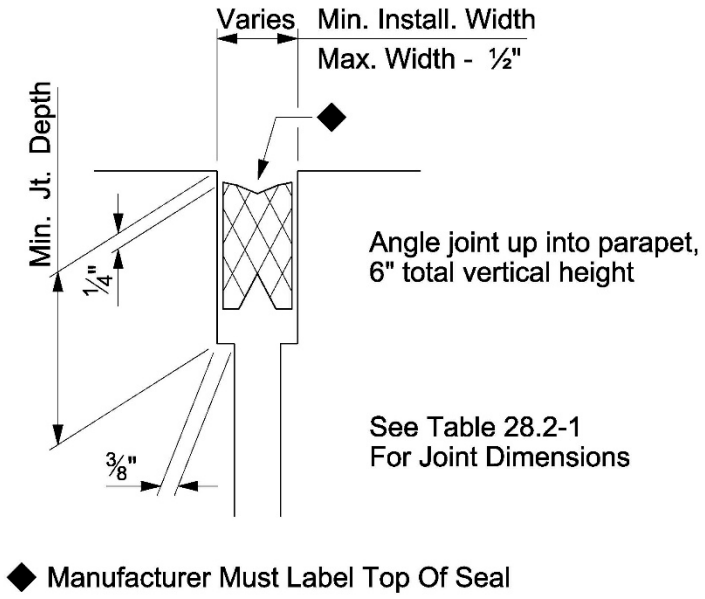

Figure 28.2-1 .
Joint Design

Manufacturer must label top of seal.

28.2.3 Seal Size

The width of the compression seal to be used in a given joint opening is computed by adding the as-constructed joint width plus a small width safety factor. For best results oversize the seal by a minimum of ½ inch. See Table 28.2-1 for approximate dimensions.

28.2.4 Installation

Ease of installation is achieved using a lubricant-adhesive which as the name implies acts initially as a lubricant then cures out to form an adhesive membrane between the contact faces of the angle and seal. This membrane, together with the compressive action of the seal, is designed to provide a waterproof joint interface.

The following information is a guide for the installation of neoprene compressive seals:

1. Thorough cleaning of joint faces is essential. Forced air or manual dusting handles most cases; use a solvent on oily areas.

2. Require application of the manufacturer's lubricant-adhesive to the sides of the neoprene seal as well as the joint faces. An adequate coating of the lubricant-adhesive is helpful in installation.

3. Proper installation tools consist of hand or machine tools that compress and eject the seal or weighted rollers that squeeze it in place. Screwdrivers, pry bars or other sharp ended tools which may puncture the seal are not allowed.

4. Stretching in excess of 5% is not permitted.

5. It is imperative that the seal be installed below the pavement surface. The minimum depth recess to top of seal is ¼ inch. Turn joint up into parapet at an angle, 6 inches total height.

6. Prior to shipping, all compression seals are to be labeled TOP SIDE by the manufacturers. Field installation reports indicate difficulty in determining TOP SIDE for some types of seals. Also, the seal cross-section is not shown on a shop drawing unless the joint is armored.

28.2.5 Maintenance

Manual removal of incompressible materials which tend to collect within the joint opening is desirable. However, in most cases this is not necessary since the tire forces the material against the elastic neoprene seal which rebounds causing the material to bounce up and out of the seal.

It is essential to the operation of the seal that no form of hot or cold joint filler be placed over the top of the seal. This includes resurfacing mats or overlays. The reasons are as follows:

1. Hot fillers may either melt the seal or seriously affect the elastomeric properties for future performance.

2. The filler acts as a constant media of transmitting undue vertical tire forces to the compression seal which may break the interface bond.

SEAL WIDTH	SEAL HEIGHT	MIN. JOINT WIDTH	MAX. JOINT WIDTH	*MIN. INSTALL. WIDTH	MIN. JOINT DEPTH
2	2 ±	1 ±	1 ¾ ±	1 ¼ ±	2 ⅞ ±
2 ¼	2 ½ ±	1 ±	2 ±	1 ⅜ ±	3 ⅛±
2 ½	2 ¾ ±	1 ¼ ±	2 ¼ ±	1 ⅝ ±	3 ⅝ ±
3	3 ⅜ ±	1 ⅜ ±	2 ½ ±	1 ¾ ±	4 ¼ ±
3 ½	3 ½ ±	1 ½ ±	3 ±	2 ⅛ ±	4 ¾ ±
4	4 ½ ±	1 ¾ ±	3 ½ ±	2 ⅝ ±	5 ½ ±

Table 28.2-1
Approximate Compression Seal Dimensions

* This is the minimum practical limit as suggested by the seal manufacturer.

28.3 Strip Seal Expansion Devices

28.3.1 Description

Strip seal expansion devices are molded neoprene glands inserted and mechanically locked between armored interfaces of extruded steel sections. The name "Strip Seal" is derived from the strip profile of the neoprene seal. During structure movements a preformed central hinge enables the strip seal profile to fold between the seal extrusions. Strip seal design details are given on the Standards for Strip Seal Expansion Joint Details and Strip Seal Cover Plate Details.

Ease of installation is attained by applying a lubricant-adhesive to the steel extrusions; which as the name implies acts initially as a lubricant; then cures to form an adhesive membrane between contact surfaces of the extrusions and neoprene gland. The neoprene glands are generally inserted in the field by using a tire-iron type tool. A minimum transverse roadway surface opening between the extrusions of 1 ½ inches or greater will facilitate the field installation of the neoprene gland. When extra size or travel capacity is available, joint openings can be increased to facilitate gland installation keeping the maximum transverse roadway joint opening at 4 inches for new construction. Greater openings may be used on maintenance projects only.

The strip seal is readily adaptable to changes in interfacial elevations as well as longitudinal skew deformations. The neoprene gland is installed as one continuous length on any given joint application. Additional considerations are given to the "racking" movement on the neoprene gland as the structure skew angle increases.

28.3.2 Curb and Parapet Sections

The strip seal is curved up into the curb or safety parapet with cover plates. The details are shown on Standard for Strip Seal Cover Plate Details. The resulting recess between the parapet and joint requires cover plates for maintenance considerations.

28.3.3 Median and Sidewalk Sections

Median cover plates are not required if the joint is placed at the median surface, otherwise they are required. All sidewalk joints must have cover plates as shown on the standard details.

28.3.4 Size Selection

The first consideration in strip seal size selection is the effective expansion length for the given joint location. Table 28.1-1 is established in accordance with AASHTO Specifications by employing a cold climate temperature range given in 28.1.4 for determining the maximum span lengths for the joint movement limits. The span length was decreased for prestressed girder structures to further accommodate movements due to concrete creep and shrinkage. The “Maximum Expansion Length” for a given joint size and structure type is shown in Table 28.3-1

On new structures and deck replacements, provide details for strip seal models having a minimum size of 4 inches. If the skew angle exceeds 30 degrees, limit the actual racking

displacement to 60 percent of the seal's rated capacity or select the next larger size neoprene gland model to reduce stresses caused by racking. For skew angles greater than 45 degrees, limit the actual racking movement to 50 percent of the seal's rated capacity. Some manufacturers provide a 5 inch gland which makes an excellent alternate on installations sized for 4 inches of movement on a high skewed structure. The maximum allowable opening perpendicular to the center line of the joint is 4 inches on all structures.

After selecting the proper strip seal model, refer to Table 28.3-1 for the joint opening at the mean shaded underside of deck temperature of 45°F. The dimensions are given normal to the joint opening in the roadway measured between the inside edges of the extrusion on the top sides. Refer to the Strip Seal design example for additional considerations regarding skew angle and joint installation. A minimum transverse roadway joint opening of 1 ½ inches or greater is recommended measured from between the top inside extrusion edges to facilitate the neoprene gland installation and/or replacement.

Performance evaluations of strip seal joints in-service indicate that the neoprene glands are not always installed properly. In some cases, both "ears" of the neoprene lug have not been inserted into the steel extrusion. In other cases, the gland has been installed upside down. As a result, manufacturers are requested to label "Topside" on the neoprene glands prior to shipping.

28.3.4.1.1 Example

Strip Seal Application, minimum size is 4 inch size. Given: Prestressed concrete girder structure having 350 feet of expansion length with a 33 degree skew angle.

From Table 28.3-1, under Prest., select the minimum size 4 inch size and check the racking displacement in accordance with 28.3.4.

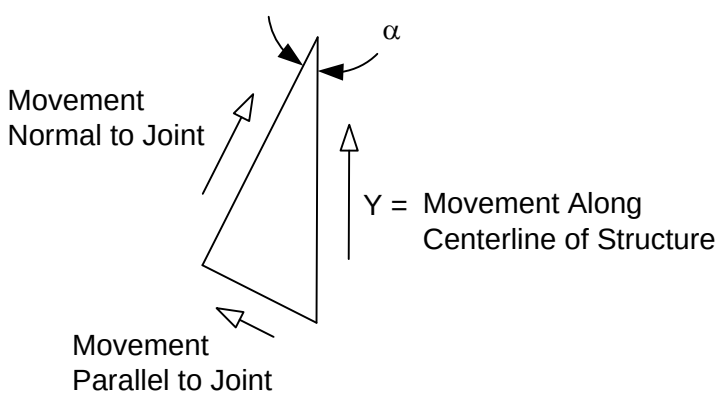

Figure 28.3-1
Racking Displacement

$$Y = (350')(12''/')*(6x10^{-6})(80) + (350')(12''/')(0.0003) = 2'' + 1.26'' = 3.26''$$

$$Y(normal) = Y(\cos \alpha) = 3.26 \cos 33^{o} = 2.73''$$

$$Y(\text{parallel}) = Y(\sin \alpha) = 3.26 \sin 33^{o} = 1.78''$$

In this case parallel racking as a percentage of joint capacity is 44.5% (< 60%) of the 4 inch model capacity.

Refer to Table 28.3-1 for joint opening at 45°F which is 2 1/4 inches. The opening size should be reduced by 1 ¼ inches to account for future creep and shrinkage, but maintain 1 ½ inch minimum opening. Show the Strip Seal Size on the plans. Approved Joint Manufacturers are shown in the STSP's.

Size	Inch Travel	Max. Expansion Lengths (feet)			Jt. Opening @ 45°F (inch)
		Conc	Prest	Steel	
4-Inch	± 2	615	380	300	2 ¼
5-Inch	Recommended for expansion movement requirements ranging from 3" to 4" on skews greater than 30 degrees. Use the same criteria as with the 4-inch models.				
The joint opening at 45°F is given at mean shaded underside deck temperature normal to the joint for zero degree skew of structure. Show joint openings from 5°F to 85°F in 10°F increments if the expansion length exceeds 230 feet. For prestressed girders the joint opening should be reduced by the amount calculated for future creep and shrinkage. A minimum opening of 1 ½ inches is required for setting.					

Table 28.3-1
Expansion Joint Openings

28.4 Steel Expansion Joints

With the availability of modular watertight joints having 3 inch increments of expansion capacity and greater, steel expansion devices are becoming less attractive. Positive protection against expansion joint leakage is required to prevent deterioration of bridge bearings and supporting substructure units. Steel expansion joints can be made watertight by using neoprene troughs. Past experience indicates that maintenance is required on a routine basis to keep the drain troughs free of debris. However, steel expansion devices with neoprene troughs are occasionally detailed on designated projects.

28.4.1 Plate Type Expansion Joint

The plate type expansion joint is limited to structures having relatively small thermal movements. The plate type expansion joint is generally limited to movements less than 2 ½ inches. When this joint is inspected before installation, examine the joint for warpage with the plates lying together loose and not bolted. When the plates are bolted, it is difficult to detect plate warpage. There are maintenance problems such as deterioration of the joint fillers and sliding plates resulting in joint leakage.

28.4.2 Finger Type Expansion Joint

The finger type expansion joint is recommended for structures requiring thermal movements greater than 4 inches. The plate girder finger joint details are shown in Chapter 40.

Expansion joint supports are detailed under the roadway portion of the deck at each girder. When the exterior girder is positioned under a curb section, a support is detailed off the end diaphragm approximately 20 inches from the face of the curb. If the girder spacing or magnitude of the skew angle creates a length of expansion joint greater than 12 feet between adjacent girders; an intermediate support is placed off each end diaphragm at its midspan.

An optional field welded transverse joint is permitted on all steel expansion joints which are detailed over 34 feet in length. The joint location or weld details are not shown on the bridge plans; actual fabrication details are approved on the shop drawings.

Prior to the deck pour, a minimum blockout of 5 feet on each side of the joint is required for finger type expansion joints. This procedure eliminates rotation of the pre-set expansion joint during the deck pour. The finger joint is set and the blocked-out section is poured after the deck pour.

28.5 Modular Expansion Devices

28.5.1 Description

Modular expansion devices consist of molded elastomeric seals which are mechanically locked between steel separation beams. The name "Modular" is used due to the configuration which incorporates a series of standard units. Each unit can accommodate 3 inches of movement; up to 30 inches of movement normal to the joint can be provided. The separation beams are supported by individual support beams; welding provides a permanent contact. The support beam is held down by its extremities at the bearings and is seated within the support box. The support boxes are to be constructed with a minimum steel plate thickness of ½ inch.

The steel separation beams are spaced uniformly via a system of springs that counter the forces exerted on the seals. The springs are arranged such that they will be compressed when the joint is open and the seals are extended. They will relax as the elastomeric seals go into compression due to a rising temperature. Separation beams shall be designed for vertical load of AASHTO HS20 Live Loading plus a minimum of 30 percent for impact and a horizontal load of 50% of vertical load. Specifications should include fatigue testing of weld details for separation beam to support beam connections.

The joint should be designed for 100,000,000 fatigue cycles. All joints should be tested and certified that they meet the loading requirements. Modular expansion devices are prefabricated as a single unit and transported to the site. Generally the anticipated joint opening is preset during fabrication and held in place with threaded rods. If the field temperature varies by more than 10°F from the preset temperature; the joint opening is reset just prior to the closure pour. Refer to Figure 28.5-1 showing the strip-seal type neoprene gland element. The elastomeric neoprene box or strip seals are installed as one continuous length on any given joint application. In all cases, the modular expansion device is carried through the curb line without any change in direction and turned up at their extremities. Cover plates are detailed to cover and transition the gap on sidewalks rand other areas as needed.

Manufacturers recommend sizing the modular expansion device for the calculated movement perpendicular to the joint opening. Also, this recommendation is made for skewed structures. However, consideration should be given to selecting the next higher 3 inch capacity joint where skews are involved. This cost is nominal in comparison to the benefits gained from reducing the racking movement and stress in the seal parallel to the joint opening.

Research indicates that continuous modular expansion devices eliminate possible points of leakage by not having surfaces that have to be sealed. The higher installation costs of modular systems are offset by their greater capacity, improve performance, and reduced future maintenance costs.

Some construction details are recommended for long term performance of modular expansion devices. Minimum thickness of the separation beams, anchor beams and plates holding the equalizers is ¾ inch. Full penetration welds should be used between the separation beams and individual support beams. All joined surfaces should be welded, this applies mainly to the support boxes. Use maximum spacing of 8 feet to support the device during deck construction.

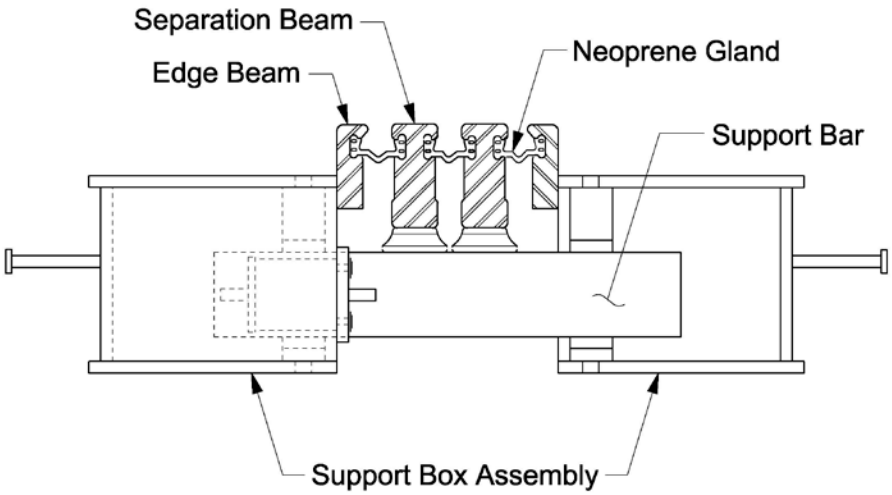

Figure 28.5-1
Modular Expansion Device

28.5.2 Size Selection

The first consideration is the effective span length for computing total thermal movement at the given joint location. Table 28.5-1 is established in accordance with AASHTO Specifications for a cold climate temperature range of -30° to 120°F. for steel girder structures. For preliminary design, maximum span lengths in Table 28.5-1 may be increased by 25 percent for multi-span prestressed girder structures. A more exact analysis shall be made for prestressed girder structures taking into account the shortening due to creep and shrinkage of the concrete. The maximum expansion length, block out depths, and width requirements for a given joint size vary by manufacturer as the transverse separation beams vary in top flange width. Final construction details are to be as shown on approved shop drawings.

As an example, the size selections for a steel girder structure having an expansion length of 720 feet and a zero degree skew are the 3 cell models. However, the next size joint should be considered as it is desirable to allow 1 inch and preferably 2 inches extra movement for construction discrepancies. The strip-seal as an alternate sealing element has the advantage of being easier to install, allows a lower height of joint, and offers excellent tear resistance when reinforced.

After selecting the proper modular expansion device size, refer to Table 28.5-1 for the required clear opening between all flange tips at the mean temperature of 45°F. (Z = 1+2+3) Manufacturers of modular expansion joints recommend setting the joint opening just prior to completing the concrete pour.

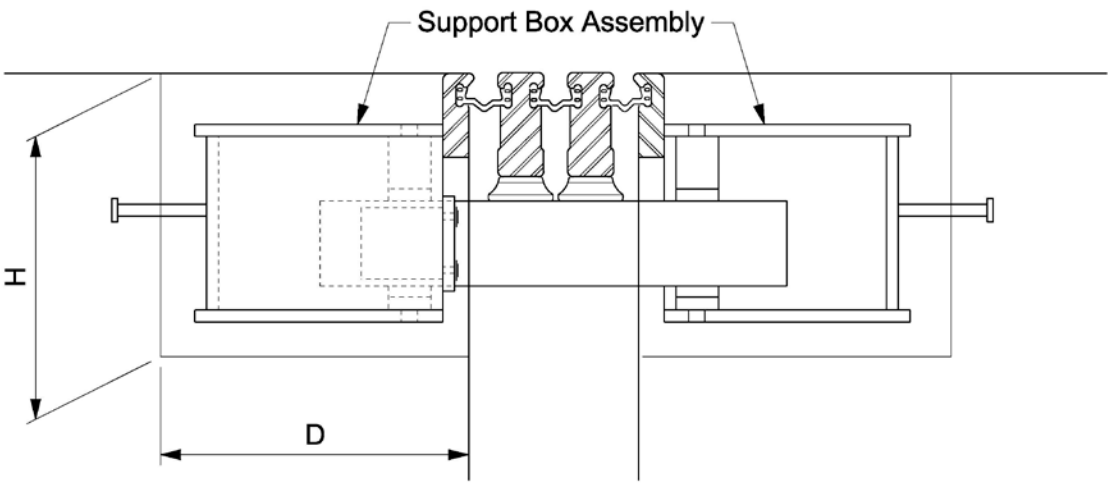

Figure 28.5-2
Modular Expansion Device Dimensions

Number of Cells	Max.Thermal Movement (inch)	Maximum Expansion Lengths (1) (feet)	Expansion Device Settings @ 45°F (2) (inch) Z	Standard Dimensions (2) (inch)	
				H	D
2	6	520	3	17 ±	18 ±
3	9	780	4 ½	17 ±	21 ±
4	12	1040	6	18 ±	25 ±

Table 28.5-1
Joint Clear Opening

1. Maximum expansion range is based on steel girder structures in cold climate temperatures; -30 to 120°F.

2. The joint opening shown as Z for 45°F is taken at mean shaded underside of deck temperature normal to the joint for zero degree skew of structure. Separation beam flange widths vary between manufacturers and these values are given for total opening, actual dimensions shall be verified from manufacturer's standard details or shop drawings. See Figure 28.5-2

Coping of wide flanged prestressed concrete girders may be necessary to facilitate placement of the support boxes.

28.6 Joint Performance

Currently the approved modular expansion devices with continuous neoprene seals and individual bearing support bars have performed well. From the maintenance standpoint, they are preferred over steel finger joints with troughs that require periodic cleaning. Galvanizing modular expansion joints is required due to the number of steel components subjected to chlorides and potential for corrosion. Strip seal joints require galvanizing too.

Joint cleaning and inspection/repair of the neoprene glands is imperative to insure long-term joint performance.

This page intentionally left blank.

Table of Contents

29.1 General 2
29.2 Design Criteria 3
29.3 Design Example 9

29.1 General

Wherever practical, bridge drainage should be carried off the structure along the curb or gutter line and collected with roadway catch basins. Floor drains are not recommended for structures less than 400' long and floor drain spacing is not to exceed 500' on any structure. However, additional floor drains are required on some structures due to flat grades, superelevations and the crest of vertical curves. The drains are spaced according to the criteria as set forth in 29.2, which includes acceptable spread of water measured from gutterline as a function of design speed, design storm frequency and duration of rainfall. Additional drains should not be provided other than what is required by design. Utilizing blockouts in parapets to facilitate drainage is not allowed.

Superelevation on structures often creates drainage problems other than at the low point especially if a reverse curve is involved. Water collects and flows down one gutter and as it starts into the superelevation transition it spreads out over the complete width of roadway at the point of zero cross-slope. From this point the water starts to flow into the opposite gutter. Certain freezing conditions can cause traffic accidents to occur in the flat area between the two transitions. To minimize the problem, locate the floor drain as close to the cross over point as practical. Floor drains are installed as near all joints as practical to prevent gutter flow from passing over and/or through the joints.

The Bureau of Structures recommends the Type “GC” floor drain for new structures. Type "GC" floor drains are gray iron castings that have been tested for hydraulic efficiency. Where hydraulic efficiency or girder flange to edge of deck geometry dictates the use of a different floor drain configuration, BOS recommends the Type “WF” floor drain. Steel fabricated floor drains Type “H” provide an additional 6” of downspout clearance and are retained for maintenance of structures where floor drain size modifications are necessary.

All of the floor drains shown on the Standards have grate inlets. When the longitudinal grade exceeds 1 percent, hydraulic flow testing indicates grates with rectangular longitudinal bars are more efficient than grates having transverse rectangular bars normal to flow. However, grates with bars parallel to the direction of traffic are hazardous to bicyclists and even motorcyclists as bar spacing is increased for hydraulic efficiency. As a result, transverse bars sloped toward the direction of flow are detailed for the cast iron floor drains.

Downspouts are to be fabricated from reinforced thermosetting resin (fiberglass) pipe having a diameter not less than 6” for all new structures. Galvanized standard pipe or reinforced fiberglass material may be used for downspouts when adjusting or rehabilitating existing floor drains. Downspouts are required on all floor drains to prevent water and/or chlorides from getting on the girders, bearings, substructure units, etc. Downspouts should be detailed to extend a minimum of 6” below low prestressed girder bottom flange or 1' below low steel to prevent flange or web corrosion. A downspout collector system is required on all structures over grade separations. Reinforced fiberglass pipe is recommended for all collector systems due to its durability and economy. In the design of collector systems, elimination of unnecessary bends and provision for an adequate number of clean outs is recommended.

29.2 Design Criteria

The flow of water in an open channel depends on its cross section, grade, and roughness. Generally, the gutter cross section on a structure is right triangular in shape with the curb, median or parapet forming the vertical leg. For design speeds 45 mph or less, floor drains are spaced at a distance such that the maximum gutter flow is restricted to a spread width of the shoulder plus one-half the adjacent through driving lane for a given design frequency storm. This defines the hypotenuse of the triangle if the shoulder and driving lane slope are equal. For design speeds greater than 45 mph, floor drains are spaced at a distance such that the maximum gutter flow is restricted to a spread width of the shoulder. An increase in longitudinal and transverse slope increases inlet capacity. In design, it is assumed that all of the water passing over the width of the inlet is taken by that inlet, the remaining water (Q bypass) continues to the next inlet.

For design a storm frequency of 10 years with a duration of 5 minutes is used. This gives an average rainfall intensity (i) of approximately 6" per hour in Wisconsin. A run-off coefficient (C) of 0.9 is used for concrete surfaces.

The Rational Method (English Units) converts rainfall intensity for a given design frequency storm to run-off by the following equation:

$$Q = C\,i\,A$$

Where:

Q = peak rate of run-off in cfs.

C = run-off coefficient for surface type.

i = rainfall intensity in inches/hour.

A = drainage area in acres = $\frac{LW}{43560}$

Where:

L = floor drain spacing in feet.

W = contributing structure width in feet.

The Manning equation modified for triangular flow is used to compute Q and Q_{bypass} for the given gutter section. The modified equation is:

$$Q = 0.56\left(\frac{Z}{n}\right)(S_o)^{\frac{1}{2}}(d)^{\frac{8}{3}}$$

Where:

Q	=	discharge in cfs.
Z	=	reciprocal of cross slope.
n	=	Manning's coefficient of roughness, use n = 0.014 for concrete.
S_o	=	longitudinal slope in feet/foot.
d	=	depth of flow at the deepest point (gutter line) in feet.

Refer to Table 29.2-1, Table 29.2-2 and Table 29.2-3 for values of (Z/n) and to Figure 29.2-1 for a nomographic solution to the Manning equation.

CROSS SLOPE, Sc			1/Sc	VALUES OF Z/n				
				n				
in/ft	in/ft	ft/ft	Z	0.012	0.013	0.014	0.015	0.016
	0.0120	0.0010	1000.00	83,333	76,923	71,429	66,667	62,500
1/64	0.0156	0.0013	768.00	64,000	59,077	54,857	51,200	48,000
	0.0240	0.0020	500.00	41,667	38,462	35,714	33,333	31,250
1/32	0.0313	0.0026	384.00	32,000	29,538	27,429	25,600	24,000
	0.0360	0.0030	333.33	27,778	25,641	23,810	22,222	20,833
	0.0480	0.0040	250.00	20,833	19,231	17,857	16,667	15,625
	0.0600	0.0050	200.00	16,667	15,385	14,286	13,333	12,500
1/16	0.0625	0.0052	192.00	16,000	14,769	13,714	12,800	12,000
	0.0720	0.0060	166.67	13,889	12,821	11,905	11,111	10,417
	0.0840	0.0070	142.86	11,905	10,989	10,204	9,524	8,929
3/32	0.0938	0.0078	128.00	10,667	9,846	9,143	8,533	8,000
	0.0960	0.0080	125.00	10,417	9,615	8,929	8,333	7,813
	0.1000	0.0083	120.00	10,000	9,231	8,571	8,000	7,500
	0.1080	0.0090	111.11	9,259	8,547	7,937	7,407	6,944
	0.1200	0.0100	100.00	8,333	7,692	7,143	6,667	6,250
1/8	0.1250	0.0104	96.00	8,000	7,385	6,857	6,400	6,000
	0.1320	0.0110	90.91	7,576	6,993	6,494	6,061	5,682
	0.1440	0.0120	83.33	6,944	6,410	5,952	5,556	5,208
5/32	0.1563	0.0130	76.80	6,400	5,908	5,486	5,120	4,800
	0.1680	0.0140	71.43	5,952	5,495	5,102	4,762	4,464
	0.1800	0.0150	66.67	5,556	5,128	4,762	4,444	4,167
3/16	0.1875	0.0156	64.00	5,333	4,923	4,571	4,267	4,000
	0.1920	0.0160	62.50	5,208	4,808	4,464	4,167	3,906
	0.2000	0.0167	60.00	5,000	4,615	4,286	4,000	3,750
	0.2040	0.0170	58.82	4,902	4,525	4,202	3,922	3,676
	0.2160	0.0180	55.56	4,630	4,274	3,968	3,704	3,472
7/32	0.2188	0.0182	54.86	4,571	4,220	3,918	3,657	3,429
	0.2280	0.0190	52.63	4,386	4,049	3,759	3,509	3,289
	0.2400	0.0200	50.00	4,167	3,846	3,571	3,333	3,125
1/4	0.2500	0.0208	48.00	4,000	3,692	3,429	3,200	3,000
9/32	0.2813	0.0234	42.67	3,556	3,282	3,048	2,844	2,667
19/64	0.2969	0.0247	40.42	3,368	3,109	2,887	2,695	2,526
	0.3000	0.0250	40.00	3,333	3,077	2,857	2,667	2,500

Table 29.2-1
Values of Z/n for Manning's Equation

CROSS SLOPE, Sc			1/Sc	VALUES OF Z/n				
				n				
in/ft	in/ft	ft/ft	Z	0.012	0.013	0.014	0.015	0.016
5/16	0.3125	0.0260	38.40	3,200	2,954	2,743	2,560	2,400
21/64	0.3281	0.0273	36.57	3,048	2,813	2,612	2,438	2,286
11/32	0.3438	0.0286	34.91	2,909	2,685	2,494	2,327	2,182
	0.3600	0.0300	33.33	2,778	2,564	2,381	2,222	2,083
3/8	0.3750	0.0313	32.00	2,667	2,462	2,286	2,133	2,000
	0.4000	0.0333	30.00	2,500	2,308	2,143	2,000	1,875
13/32	0.4063	0.0339	29.54	2,462	2,272	2,110	1,969	1,846
	0.4200	0.0350	28.57	2,381	2,198	2,041	1,905	1,786
7/16	0.4375	0.0365	27.43	2,286	2,110	1,959	1,829	1,714
15/32	0.4688	0.0391	25.60	2,133	1,969	1,829	1,707	1,600
	0.4800	0.0400	25.00	2,083	1,923	1,786	1,667	1,563
1/2	0.5000	0.0417	24.00	2,000	1,846	1,714	1,600	1,500
17/32	0.5313	0.0443	22.59	1,882	1,738	1,613	1,506	1,412
	0.5400	0.0450	22.22	1,852	1,709	1,587	1,481	1,389
9/16	0.5625	0.0469	21.33	1,778	1,641	1,524	1,422	1,333
19/32	0.5938	0.0495	20.21	1,684	1,555	1,444	1,347	1,263
	0.6000	0.0500	20.00	1,667	1,538	1,429	1,333	1,250
5/8	0.6250	0.0521	19.20	1,600	1,477	1,371	1,280	1,200
21/32	0.6563	0.0547	18.29	1,524	1,407	1,306	1,219	1,143
	0.6600	0.0550	18.18	1,515	1,399	1,299	1,212	1,136
11/16	0.6875	0.0573	17.45	1,455	1,343	1,247	1,164	1,091
	0.7000	0.0583	17.14	1,429	1,319	1,224	1,143	1,071
23/32	0.7188	0.0599	16.69	1,391	1,284	1,192	1,113	1,043
	0.7200	0.0600	16.67	1,389	1,282	1,190	1,111	1,042
3/4	0.7500	0.0625	16.00	1,333	1,231	1,143	1,067	1,000
	0.7800	0.0650	15.38	1,282	1,183	1,099	1,026	962
25/32	0.7812	0.0651	15.36	1,280	1,182	1,097	1,024	960
	0.8000	0.0667	15.00	1,250	1,154	1,071	1,000	938
13/16	0.8125	0.0677	14.77	1,231	1,136	1,055	985	923
	0.8400	0.0700	14.29	1,190	1,099	1,020	952	893
27/32	0.8438	0.0703	14.22	1,185	1,094	1,016	948	889
	0.8500	0.0708	14.12	1,176	1,086	1,008	941	882
7/8	0.8750	0.0729	13.71	1,143	1,055	980	914	857

Table 29.2-2
Values of Z/n for Manning's Equation

CROSS SLOPE, Sc			1/Sc	VALUES OF Z/n				
				n				
in/ft	in/ft	ft/ft	Z	0.012	0.013	0.014	0.015	0.016
	0.9000	0.0750	13.33	1,111	1,026	952	889	833
39/32	1.2188	0.1016	9.85	821	757	703	656	615
15/16	0.9375	0.0781	12.80	1,067	985	914	853	800
	0.9500	0.0792	12.63	1,053	972	902	842	789
	0.9600	0.0800	12.50	1,042	962	893	833	781
31/32	0.9688	0.0807	12.39	1,032	953	885	826	774
1	1.000	0.0833	12.00	1,000	923	857	800	750
	1.020	0.0850	11.76	980	905	840	784	735
	1.080	0.0900	11.11	926	855	794	741	694
	1.140	0.0950	10.53	877	810	752	702	658
	1.200	0.1000	10.00	833	769	714	667	625
2	2.000	0.1667	6.000	500	462	429	400	375
	2.400	0.2000	5.000	417	385	357	333	313
3	3.000	0.2500	4.000	333	308	286	267	250
	3.600	0.3000	3.333	278	256	238	222	208
4	4.000	0.3333	3.000	250	231	214	200	188
	4.800	0.4000	2.500	208	192	179	167	156
5	5.000	0.4167	2.400	200	185	171	160	150
6	6.000	0.5000	2.000	167	154	143	133	125
7	7.000	0.5833	1.714	143	132	122	114	107
	7.200	0.6000	1.667	139	128	119	111	104
8	8.000	0.6667	1.500	125	115	107	100	94
	8.400	0.7000	1.429	119	110	102	95	89
9	9.000	0.7500	1.333	111	103	95	89	83
	9.600	0.8000	1.250	104	96	89	83	78
10	10.00	0.8333	1.200	100	92	86	80	75
	10.80	0.9000	1.111	93	85	79	74	69
11	11.00	0.9167	1.091	91	84	78	73	68
	11.50	0.9583	1.043	87	80	75	70	65
12	12.00	1.0000	1.000	83	77	71	67	63

Table 29.2-3

Values of Z/n for Manning's Equation

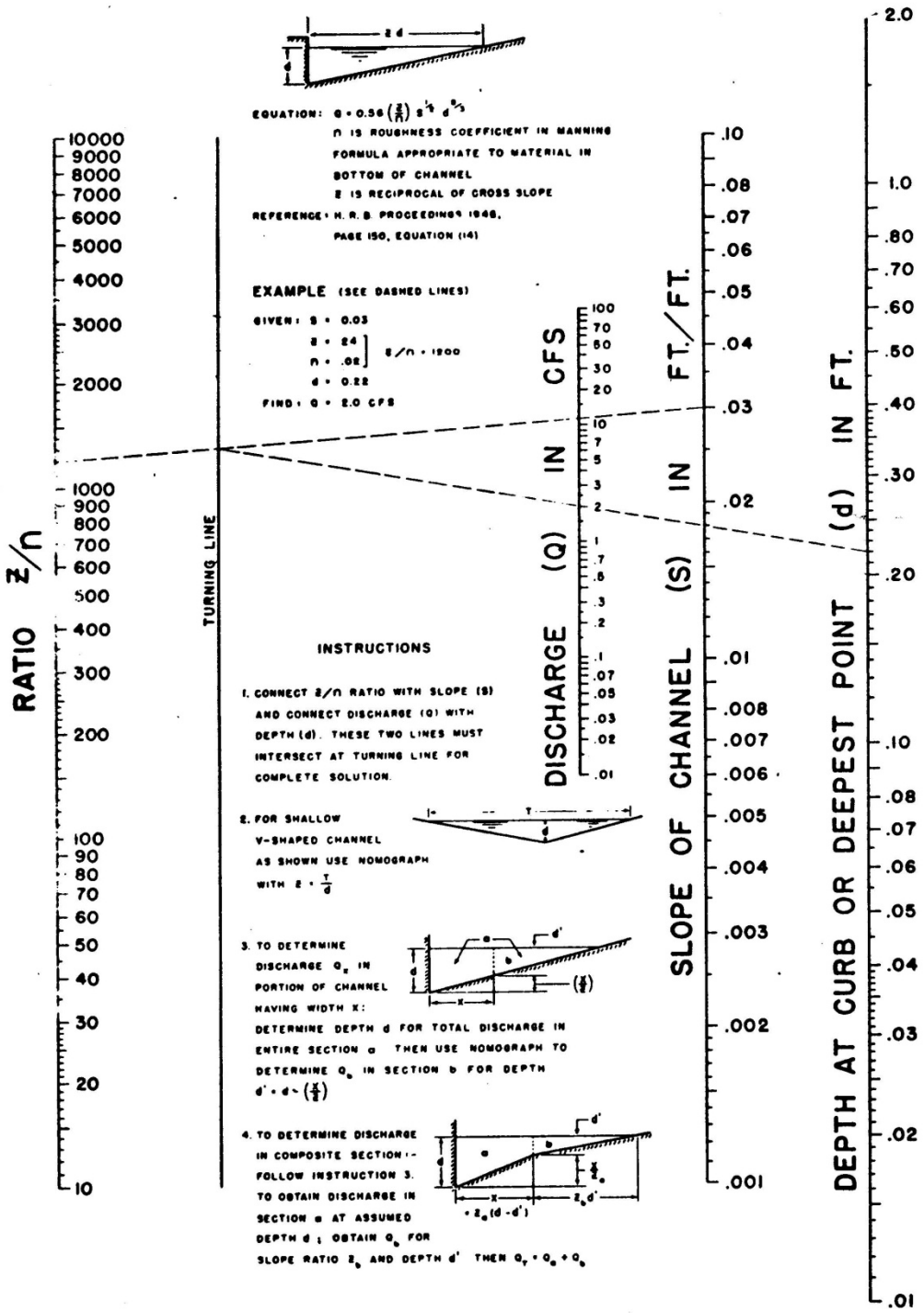

Figure 29.2-1

Nomograph for Flow in Triangular Channels
Modified Manning Solution

29.3 Design Example

The following method is used to compute floor drain spacing by equating net discharge to the Rational Method:

Given: Structure 1200 feet long on a 0.3% grade having a cross slope of 0.02 feet/foot with a contributing structure width of 23'-6". Use Type "GC" floor drain.

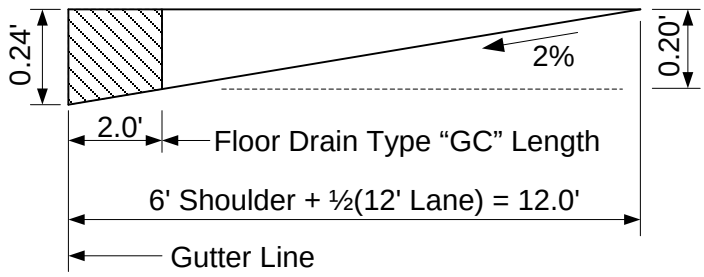

Figure 29.3-1
Cross Section of Flow

Compute: Floor drain spacing

From Table 29.2-1 with a cross slope of 0.02 feet/foot

(Z/n) = 3571.

From Figure 29.2-1, Q = 2.44 cfs and Q_{bypass} = 1.50 cfs.

$$L = \left(Q - Q_{bypass}\right)\frac{43560}{CiW}$$

$$L = \left(2.44 - 1.5\right)\frac{43560}{0.9 \cdot 6 \cdot 23.5}$$

L = 323 ft

This page intentionally left blank.

Table of Contents

30.1 Crash-Tested Bridge Railings and FHWA Policy 2
30.2 Railing Application 5
30.3 General Design Details 11
30.4 Railing Aesthetics 13
30.5 Objects Mounted On Parapets 16
30.6 Protective Screening 17
30.7 Medians 19
30.8 Railing Rehabilitation 20
30.9 Railing Guidance for Railroad Structures 24
30.10 References 25

30.1 Crash-Tested Bridge Railings and FHWA Policy

Notice: All contracts with a letting date after December 31, 2019 must use bridge rails and transitions meeting the 2016 Edition of MASH criteria for new permanent installation and full replacement.

WisDOT policy item:

For all Interstate structures, the 42SS parapet shall be used. For all STH and USH structures with a posted speed >= 45 mph, the 42SS parapet shall be used.

The timeline for implementation of the above policy is:

- All contracts with a letting date after December 31, 2019.
  (This is an absolute, regardless of when the design was started.)

- All preliminary designs starting after October 1, 2017
  (Even if the let is anticipated to be prior to December 31, 2019.)

Contact BOS should the 42" height adversely affect sight distance, a minimum 0.5% grade for drainage cannot be achieved, or for other non-typical situations.

Crash test procedures for full-scale testing of guardrails were first published in 1962 in the *Highway Research Correlation Services Circular 482*. This was a one-page document that specified vehicle mass, impact speed, and approach angle for crash testing and was aimed at creating uniformity to traffic barrier research between several national research agencies.

In 1974, the National Cooperative Highway Research Program (NCHRP) published their final report based on NCHRP Project 22-2, which was initiated to address outstanding questions that were not covered in *Circular 482*. The final report, NCHRP Report 153 – *"Recommended Procedures for Vehicle Crash Testing of Highway Appurtenances,"* was widely accepted following publication; however, it was recognized that periodic updating would be required.

NCHRP Project 22-2(4) was initiated in 1979 to address major changes to reflect current technologies of that time and NCHRP Report 230, *"Recommended Procedures for the Safety Performance Evaluation of Highway Safety Appurtenances,"* was published in 1980. This document became the primary reference for full-scale crash testing of highway safety appurtenances in the U.S. through 1993.

In 1986, the Federal Highway Administration (FHWA) issued a policy memorandum that stated highway bridges on the National Highway System (NHS) and the Interstate Highway System (IHS) must use crash-tested railings in order to receive federal funding.

The American Association of State Highway and Transportation Officials (AASHTO) recognized that the evolution of roadside safety concepts, technology, and practices necessitated an update to NCHRP Report 230 approximately 7 years after its adoption. NCHRP Report 350, *"Recommended Procedures for the Safety Performance Evaluation of Highway Features,"* represented a major update to the previously adopted report. The updates

were based on significant changes in the vehicle fleet, the emergence of many new barrier designs, increased interest in matching safety performance to levels of roadway utilization, new policies requiring the use of safety belts, and advances in computer simulation and other evaluation methods.

NCHRP Report 350 differs from NCHRP Report 230 in the following ways: it is presented in all-metric documentation, it provides a wider range of test procedures to permit safety performance evaluations for a wider range of barriers, it uses a pickup truck as the standard test vehicle in place of a passenger car, it defines other supplemental test vehicles, it includes a broader range of tests to provide a uniform basis for establishing warrants for the application of roadside safety hardware that consider the levels of use of the roadway facility, it includes guidelines for selection of the critical impact point for crash tests on redirecting-type safety hardware, it provides information related to enhanced measurement techniques related to occupant risk, and it reflects a critical review of methods and technologies for safety-performance evaluation.

In May of 1997, a memorandum from Dwight A. Horne, the FHWA Chief of the Federal-Aid and Design Division, on the subject of "Crash Testing of Bridge Railings" was published. This memorandum identified 68 crash-tested bridge rails, consolidated earlier listings, and established tentative equivalency ratings that related previous NCHRP Report 230 testing to NCHRP Report 350 test levels.

In 2009, AASHTO published the *Manual for Assessing Safety Hardware* (MASH). MASH is an update to, and supersedes, NCHRP Report 350 for the purposes of evaluating new safety hardware devices. AASHTO and FHWA jointly adopted an implementation plan for MASH that stated that all highway safety hardware accepted prior to the adoption of MASH – using criteria contained in NCHRP Report 350 – may remain in place and may continue to be manufactured and installed. In addition, highway safety hardware accepted using NCHRP Report 350 criteria is not required to be retested using MASH criteria. However, new highway safety hardware not previously evaluated must utilize MASH for testing and evaluation. MASH represents an update to crash testing requirements based primarily on changes in the vehicle fleet.

All bridge railings as detailed in the Wisconsin LRFD Bridge Standard Detail Drawings in Chapter 30 are approved for use on WisDOT projects. In order to use railings other than Bureau of Structures Standards, the railings must conform to MASH or must be crash tested rails which are available from the FHWA office. Any railing not in the Standards must be approved by the Bureau of Structures. Any railings that are not crash tested must be reviewed by FHWA when they are used on a bridge, culvert, retaining wall, etc.

WisDOT and FHWA policy states that railings that meet the criteria for Test Level 3 (TL-3) or greater shall be used on NHS roadways and all functional classes of Wisconsin structures (Interstate Highways, United States Highways, State Trunk Highways, County Trunk Highways, and Local Roadways) where the design speed exceeds 45 mph. Railings that meet Test Level 2 (TL-2) criteria may be used on non-NHS roadways where the design speed is 45 mph or less.

There may be unique situations that may require the use of a MASH crash-tested railing of a different Test Level; a railing design using an older crash test methodology; or a modified railing system based on computer modeling, component testing, and or expert opinion. These unique

situations will require an exception to be granted by the Bureau of Project Development and/or the Bureau of Structures. It is recommended that coordination of these unique situations occur early in the design process.

30.2 Railing Application

The primary purpose of bridge railings shall be to contain and redirect vehicles and/or pedestrians using the structure. In general, there are three types of bridge railings – Traffic Railings, Combination Railings, and Pedestrian Railings. The following guidelines indicate the typical application of each railing type:

1. Traffic Railings shall be used when a bridge is used exclusively for highway traffic.

   Traffic Railings can be composed of, but are not limited to: single slope concrete parapets, sloped face concrete parapets, vertical face concrete parapets, tubular steel railings, and timber railings.

2. Combination Railings can be used concurrently with a raised sidewalk on roadways with a design speed of 45 mph or less.

   Combination Railings can be composed of, but are not limited to: single slope concrete parapets with chain link fence, vertical face concrete parapets with tubular steel railings such as type 3T, and aesthetic concrete parapets with combination type C1-C6 railings.

3. Pedestrian Railings can be used at the outside edge of a bridge sidewalk when a Traffic Railing is used concurrently to separate highway and pedestrian traffic.

   Pedestrian Railings can be composed of, but are not limited to: chain link fence, tubular screening, vertical face concrete parapets with combination type C1-C6 or type 3T railings, and single slope concrete parapets.

See Figure 30.2-1 below for schematics of the three typical railing types.

Note that the railing types shown in Figure 30.2-1 shall be employed as minimums. At locations where a Traffic Railing is used at the traffic side of a sidewalk at grade, a Combination Railing may be used at the edge of deck in lieu of a Pedestrian Railing. At locations where a Combination Railing is used at the exterior edge of a raised sidewalk, a Traffic Railing may be used as an alternative as long as the requirements for Pedestrian Railings are met.

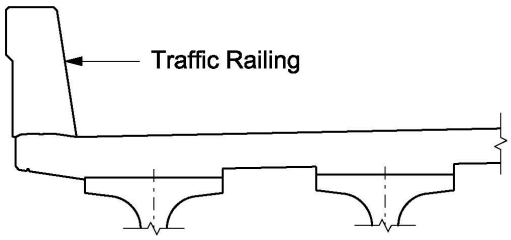

Traffic Railing
All Design Speeds

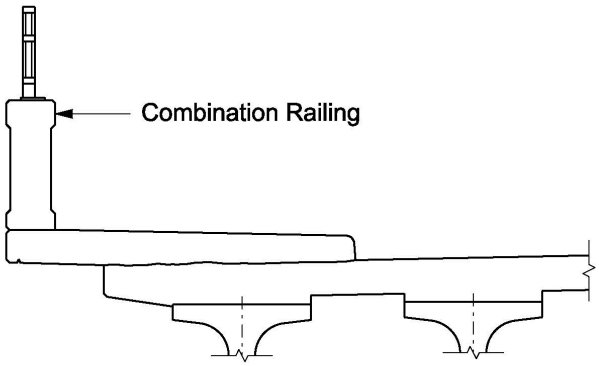

Combination Railling
Design Speeds of 45 mph or Less

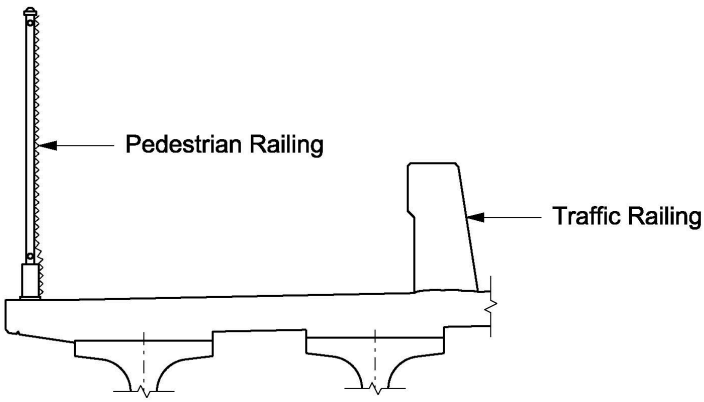

Pedestrian Railing
All Design Speeds

Figure 30.2-1
Bridge Railing Types

The application of bridge railings shall comply with the following guidance:

1. All bridge railings shall conform to **MASH 2016 requirements for lets after December 31, 2019**.

2. Traffic Railings placed on state-owned and maintained structures (Interstate Highways, United States Highways, State Trunk Highways, and roadways over such highways) with a design speed exceeding 45 mph shall be solid concrete parapets. Where the minimum 0.5% deck grade cannot be accommodated for proper drainage based on project specific constraints, the designer shall utilize open railings as described in this section. (**NOTE**: WisDOT does not currently have an open rail meeting the minimum MASH TL-3 requirements for NHS roadways or non-NHS roadways with design speeds exceeding 45 mph. An open rail meeting MASH TL-3 is being investigated.).

   Traffic Railings placed on locally-owned and maintained structures (County Trunk Highways, Local Roadways) with a design speed exceeding 45 mph are strongly encouraged to utilize solid concrete parapets.

3. Traffic Railings placed on structures with a design speed of 45 mph or less can be either solid concrete parapets or open railings with the exception as noted below in the single slope parapet application section. It should be noted that open railing bridges can incur maintenance issues with salt-water runoff over the edge of deck.

4. New bridge plans utilizing concrete parapets shall be designed with single-sloped ("SS") parapets. See item No. 1 below for usage.

5. Per **LRFD [13.8.1]** and **LRFD [13.9.2]**, the minimum height of a Pedestrian (and/or bicycle) Railing shall be 42" measured from the top of the walkway or riding surface respectively. Per the *Wisconsin Bicycle Facility Design Handbook*, on bridges that are signed or marked as bikeways and bicyclists are operating right next to the railing, the preferred height of the railing is 54". The higher railing/parapet height is especially important and should be used on long bridges, high bridges, and bridges having high bicyclist volumes. If an open railing is used, the clear opening between horizontal elements shall be 6 inches or less.

6. Aesthetics associated with bridge railings shall follow guidance provided in 30.4.

The designation for railing types are shown on the Standard Details. Bridge railings shall be employed as follows:

1. <u>The default parapet shall be the "42SS"</u>. If site distance issues arise due to the 42-inch height, please contact BOS for consideration of a shorter parapet ("32SS"and "36SS"). Single slope parapet "56SS" shall only be used if 56" CBSS adjoins the bridge. The "42SS" is TL-4 under MASH. The "32SS" is TL-3 under MASH. The "36SS" is TL-4 under MASH. *At this time, the "56SS" Test Loading is still unknown.*

   A "SS" or solid parapet shall be used on all grade separation structures and railroad crossings to minimize snow removal falling on the traffic below.

2. The sloped face parapet "LF" and “HF” parapets shall be used as Traffic Railings for rehabilitation projects (joint repair, impact damage, etc.) only to match the existing parapet type. The sloped face parapets were crash-tested per NCHRP Report 230 and meet NCHRP Report 350 crash test criteria for TL-4 based on a May 1997 FHWA memorandum.

3. The “51F” parapet shall only be used as a Traffic Railing on the median side of a structure when it provides a continuation of an approach 51 inch high median barrier.

4. Although the vertical face parapet “A” can be used for all design speeds, Bureau of Structures Development Section approval is required for design speeds exceeding 45mph. The vertical face parapet is recommended for use as a Combination Railing on raised sidewalks or as a Traffic Railing where the design speed is 45 mph or less. If the structure has a raised sidewalk on one side only, a sloped parapet should be used on the side opposite of the sidewalk. For design speeds exceeding 45 mph, at locations where the parapet is protected by a Traffic Railing between the roadway and a sidewalk at grade, the vertical face parapet can be used as a Pedestrian Railing. The vertical face parapet “A” is considered at TL-3 when on a bridge deck and TL-2 when on a raised sidewalk (The structural capacity is TL-3, however the vaulting effect of the sidewalk lowers the rating to TL-2).

5. Aesthetic railings may be used if crash tested according to 30.1 or follow the guidance provided in 30.4. See Chapter 4 – Aesthetics for CSS considerations.

   The Texas style aesthetic parapet, type “TX”, can be used as a Traffic/Pedestrian Railing on raised sidewalks on structures with a design speed of 45 mph or less. For design speeds exceeding 45 mph, at locations where the parapet is protected by a Traffic Railing between the roadway and a sidewalk at grade, the type “TX” parapet can be used. The type “TX” parapet is TL-2 under MASH.

6. The type “PF” tubular railing, as shown in the Standard Details of Chapter 40, shall <u>not</u> be used on new bridge plans with a PS&E after 2013. This railing was not allowed on the National Highway System (NHS). The type “PF” railing was used as a Traffic Railing on non-NHS roadways with a design speed of 45 mph or less.

7. Combination Railings, type “C1” through “C6”, are shown in the Standard Details and are approved as aesthetic railings attached to concrete parapets. The aesthetic additions are placed at least 5” from the crash-tested rail face per the Standard Details and have previously been determined to not present a snagging potential. Combination railing, type “3T”, without the recessed details on the parapet faces may be used when aesthetic details are not desired or when CSS funding is not available (see Chapter 4 – Aesthetics). These railings can only be used when the design speed is 45 mph or less, or the railing is protected by a Traffic Railing between the roadway and a sidewalk at grade. The crash test criteria of the combination railings are based on the concrete parapets to which they are attached.

8. Chain Link Fence and Tubular Screening, as shown in the Standard Details, may be attached to the top of concrete parapets as part of a Combination Railing or as a Pedestrian Railing attached directly to the deck if protected by a Traffic Railing between

the roadway and a sidewalk at grade. Chain Link Fence, when attached to the top of a concrete Traffic Railing, can be used for design speeds exceeding 45 mph. Due to snagging and breakaway potential of the vertical spindles, Tubular Screening should only be used when the design speed is 45 mph or less, or the screening is protected by a Traffic Railing between the roadway and a sidewalk at grade.

9. Type "H" aluminum or steel railing can be used on top of either vertical face or single slope parapets ("A" or "SS") as part of a Combination Railing when required for pedestrians and/or bicyclists. For a design speed greater than 45 mph, the single slope parapet is recommended. Per the Standard Specifications, the contractor shall furnish either aluminum railing or steel railing. In general, the bridge plans shall include both options. For a specific project, one option may be required. This may occur when rehabilitating a railing to match an existing railing or when painting of the railing is required (requires steel option). If one option is required, the designer shall place the following note on the railing detail sheet: "Type H (insert railing type) railing shall not be used". The combination railing is TL-3 under MASH.

10. Timber Railing as shown in the Standard Details is not allowed on the National Highway System (NHS). Timber Railing may be used as a Traffic Railing on non-NHS roadways with a design speed of 45 mph or less. The Timber Railing has not been rated under MASH.

11. The type "W" railing, as shown in the Standard Details, is not allowed on the National Highway System (NHS). This railing may be used as a Traffic Railing on non-NHS roadways with a design speed of 45 mph or less. The type "W" railing shall be used on concrete slab structures only. The use of this railing on girder type structures has been discontinued. Generally, type "W" railing is considered when the roadway approach requires standard beam guard and if the structure is 80 feet or less in length. Although the type "W" railing was crash-tested per NCHRP Report 230 and meets NCHRP Report 350 crash test criteria for TL-3 (based on a May 1997 FHWA memorandum), FHWA has since restricted its use as indicated above.

12. Type "M" steel railing, as shown in the Standard Details, shall generally be used as a Traffic Railing on all functional classes of Wisconsin structures with a design speed of 45 mph or less. The type "M" railing may be used on roadways with a design speed exceeding 45 mph where the minimum 0.5% deck grade cannot be accommodated for proper drainage based on project specific constraints. The type "M" railing also can be used in place of the type "W" railing when placed on girder type structures as type "W" railings are not allowed for this application. However, the type "M" railing is not allowed for use on prestressed box girder bridges. This railing shall be considered where the Region requests an open railing. The type "M" railing is TL-2 under MASH.

13. Type "NY3/NY4" steel railings, as shown in the Standard Details, shall generally be used as a Traffic Railing on all functional classes of Wisconsin structures with a design speed of 45 mph or less. The type "NY3/NY4" railings may be used on roadways with a design speed exceeding 45 mph where the minimum 0.5% deck grade cannot be accommodated for proper drainage based on project specific constraints. The type "NY3/NY4" railings also can be used in place of the type "W" railing when placed on girder type structures as type "W" railings are not allowed for this application. The type

"NY4" railing may be used on a raised sidewalk where the design speed is 45 mph or less. However, the type "NY" railings are not allowed for use on prestressed box girder bridges. These railings shall be considered where the Region requests an open railing. The type "NY" railings are TL-2 under MASH.

14. The type "F" steel railing, as shown in the Standard Details of Chapter 40, shall not be used on new bridge plans with a PS&E after 2013. It has not been allowed on the National Highway System (NHS) in the past and was used on non-NHS roadways with a design speed of 45 mph or less. Details in Chapter 40 are for informational purposes only.

15. If a box culvert has a Traffic Railing across the structure, then the railing members shall have provisions for a thrie beam connection at the ends of the structure as shown in the Facilities Development Manual (FDM) SDD 14b20. Railing is not required on box culverts if the culvert is extended to provide an adequate clear zone as defined in FDM 11-15-1. Non-traversable hazards or fixed objects should not be constructed or allowed to remain within the clear zone. When this is not feasible, the use of a Traffic Railing to shield the hazard or obstacle may be warranted. The railing shall be provided only when it is cost effective as defined in FDM 11-45-1.

16. When the structure approach thrie beam is extended across the box culvert; refer to Standard Detail, Box Culvert Details for additional information. The minimum dimension between end of box and face of guard rail provides an acceptable rail deflection to prevent a vehicle wheel from traversing over the end of the box culvert. In almost every case, the timber posts with offset blocks and standard beam guard are used. Type "W" railing may be used for maintenance and box culvert extensions to mitigate the effect of structure modifications.

See the FDM for additional railing application requirements. See FDM 11-45-1 and 11-45-2 for Traffic Barrier, Crash Cushions, and Roadside Barrier Design Guidance. See FDM 11-35-1 Table 1.2 for requirements when barrier wall separation between roadway and sidewalk is necessary.

30.3 General Design Details

1. Epoxy coated bars are required for all concrete parapets, curbs, medians, and sidewalks.

2. Adhesive anchored parapets are allowed at interior Traffic Railing locations only when the adjacent exterior parapet is a crash test approved Traffic Railing per 30.2 (i.e., cast-in-place anchors are used at exterior parapet location). See Standards for Parapet Footing and Lighting Detail for more information.

3. Sign structures, sign trusses, and monotubes shall be placed on top of railings to meet the working width and zone of intrusion dimensions noted in FDM 11-45-2.3.1.1 and 11-45-2.3.6.2.3 respectively.

4. Temporary bridge barriers shall be designed in accordance with FDM SDD 14b7. Where temporary bridge barriers are being used for staged construction, the designer should attempt to meet the required offsets so that the barrier does not require anchorage which would necessitate drilling holes in the new deck.

5. Provide for expansion movement in tubular railings where expansion devices or concrete parapet deflection joints exist on the structure plan details. The tubular railing splice should be located over the joint and spaced evenly between railing posts. The tubular railing splice should be made continuous with a movable internal sleeve. If tubular railing is employed on conventional structures where expansion joints are likely to occur at the abutments only, the posts may be placed at equal spacing provided that no post is nearer than 2 feet from deflection joints in the parapet at the piers.

6. Refer to Standard for Vertical Face Parapet "A" – for detailing concrete parapet or sidewalk deflection joints. These joints are used based on previous experience with transverse deck cracking beneath the parapet joints.

7. Horizontal cracking has occurred in the past near the top of some concrete parapets which were slip formed. Similar cracking has not occurred on parapets cast in forms. Therefore, slip forming of bridge parapets shall not be allowed.

8. For beam guard type "W" railing, locate the expansion splice at a post or on either side of the expansion joint.

9. Sidewalks - If there is a Traffic Railing between the roadway and an at grade sidewalk, and the roadway side of the Traffic Railing is more than 11'-0" from the exterior edge of deck, access must be provided to the at grade sidewalk for the snooper truck to inspect the underside of the bridge. The sidewalk width must be 10'-0" clear between barriers, including fence (i.e., use a straight fence without a bend). For protective screening, the total height of parapet and fence need not exceed 8'-0". The boom extension on most snooper trucks does not exceed 11'-0" so provision must be made to get the truck closer to the edge.

10. Where Traffic Railing is utilized between the roadway and an at grade sidewalk, early coordination with the roadway designer should occur to provide adequate clearances

off of the structure to allow for proper safety hardware placement and sidewalk width. Additional clearance may be required in order to provide a crash cushion or other device to protect vehicles from the blunt end of the interior Traffic Railing off of the structure.

11. On shared-use bridges, fencing height and geometry shall be coordinated with the Region and the DNR (or other agencies) as applicable. Consideration shall be given to bridge use (i.e., multi-use/snowmobile may require vertical and horizontal clearances to allow grooming machine passage) and location (i.e., stream crossing vs. grade separation).

12. Per **LRFD [13.7.1.1]**, the use of raised sidewalks on structures shall be restricted to roadways with a design speed of 45 mph or less. The height of curbs for sidewalks is usually 6 inches. This height is more desirable than higher heights with regards to safety because it is less likely to vault vehicles. However, a raised curb is not considered part of the safety barrier system. On structure rehabilitations, the height of sidewalk may increase up to 8 inches to match the existing sidewalk height at the bridge approaches. Contact the Bureau of Structures Development Section if sidewalk heights in excess of 8 inches are desired. See Standard for Median and Raised Sidewalk Details for typical raised sidewalk detail information.

13. Pedestrian loads, as described in the AASHTO LRFD Bridge Design Specifications, shall be used to not only design the pedestrian railings on the structure, but shall also be used to design stairway railings that are adjacent to the structure and are part of the contract.

WisDOT policy item:

Noise walls are not allowed on WisDOT bridges.

Contact BOS for discussion on project specific exceptions to this policy. For example, a possible exception would be if a new bridge replaces an existing bridge that currently has a noise wall. Offset requirements of **LRFD [15.8.4, Case 4]** would need to be followed.

30.4 Railing Aesthetics

Railing aesthetics have become a key component to the design and delivery of bridge projects in Wisconsin. WisDOT Regions, local communities and their leaders use rail aesthetics to draw pedestrians to use the walkways on structures. With the increased desire to use, and frequency of use of aesthetics on railings, it has become increasingly important to set policy for railing aesthetics on bridge structures.

Railing aesthetics policies have been around for multiple decades. In the 1989 version of the AASHTO Standard Specifications, generalities were listed for use with designing bridge rails. Statements such as "Use smooth continuous barrier faces on the traffic side" and "Rail ends, posts, and sharp changes in the geometry of the railing shall be avoided to protect traffic from direction collision with the bridge rail ends" were used as policy and engineering judgment was required by each individual designer. This edition of the Standard Specifications aligned with NCHRP Report 350.

Caltrans conducted full-scale crash testing of various textured barriers in 2002. This testing was the first of its kind and produced acceptable railing aesthetics guidelines for single slope barriers for NCHRP Report 350 TL-3 conditions. Some of the allowable aesthetics were: sandblast textures with a maximum relief of 3/8", geometric patterns inset into the face of the barrier 1" or less and featuring 45° or flatter chamfered or beveled edges, and any pattern or texture with a maximum relief of 2½" located 24" above the base of the barrier. Later in 2002, Harry W. Taylor, the Acting Director of the Office of Safety Design of FHWA, provided a letter to Caltrans stating that their recommendations were acceptable for use on all structure types.

In 2003, WisDOT published a paper titled, "Acceptable Community Sensitive Design Bridge Rails for Low Speed Streets & Highways in Wisconsin". The goal of this paper was to streamline what railing aesthetics were acceptable for use on structures in Wisconsin. WisDOT policy at that time allowed vertical faced bridge rails in low speed applications to contain aesthetic modifications. For NHS structures, WisDOT allowed various types of texturing and relief based on crash testing and analysis. Ultimately, WisDOT followed many of the same requirements that were deemed acceptable by FHWA based on the Caltrans study in 2002.

NCHRP Report 554 – Aesthetic Concrete Barrier Design – was published in 2006 to (1) assemble a collection of examples of longitudinal traffic barriers exhibiting aesthetic characteristics, (2) develop design guidelines for aesthetic concrete roadway barriers, and (3) develop specific designs for see-through bridge rails. This publication serves as the latest design guide for aesthetic bridge barrier design and all bridge railings on structures in Wisconsin shall comply with the guidance therein.

The aforementioned tests and studies done on aesthetic features will be considered still applicable under MASH barring further tests or studies.

<u>The application of aesthetics on bridge railings on structures in Wisconsin with a design speed exceeding 45 mph shall comply with the following guidance</u>:

1. All Traffic Railings shall meet the crash testing guidelines outlined in 30.1.

2. The top surface of concrete parapets shall be continuous without raised features (pilasters, pedestals, etc.) that potentially serve as snag points for vehicles or blunt ends for impacts. Any raised feature that could serve as a blunt end or snag point shall be placed as follows:

   Minimum of 2'-3" behind the front face toe of the parapet when used with single slope parapets ("32SS", "36SS", "42SS", or "56SS").

   Minimum of 2'-6" behind the front face toe of the parapet when used with sloped face parapets ("LF" or "HF").

   Minimum of 2'-0" behind the front face of the parapet when used with vertical face parapets ("A").

3. Any railing placed on top of a concrete parapet shall be continuous over the full extents of the bridge.

4. Any concrete parapet placed directly on the deck may contain patterns or textures of any shape and length inset into the front face with the exception noted in #5. The maximum pattern or texture recess into the face of the barrier shall be ½". Note that the typical aesthetic form liner patterns shown on the Standard for Formliner Details are not acceptable for use on the front face of vehicle barriers.

   WisDOT highly recommends the use of smooth front faces of Traffic Railings; especially in high speed applications where the aesthetic features will be negligible to the traveling public. In addition to the increased risk of vehicle snagging, aesthetic treatments on the front face of traffic railings are exposed to vehicle impacts, snowplow scrapes, and exposure to deicing chemicals. Due to these increased risks, future maintenance costs will increase.

5. No patterns with a repeating upward sloping edge or rim in the direction of vehicle traffic shall be permitted.

6. Staining should not be applied to the roadway side face of concrete traffic railings.

<u>The application of aesthetics on bridge railings on structures in Wisconsin with a roadway design speed of 45 mph or less shall comply with the following guidance (see Chapter 4 – Aesthetics for CSS funding implications)</u>:

1. All Traffic Railings shall meet the crash testing guidelines outlined in 30.1.

2. The top surface of concrete parapets shall be continuous without raised features (pilasters, pedestals, etc.) that potentially serve as snag points for vehicles or blunt ends for impacts. Any raised feature that could serve as a blunt end or snag point shall be placed a minimum of 1'-0" behind the front face toe of the parapet.

3. Any railing placed on top of a concrete parapet shall be continuous over the full extents of the bridge.

4. Any concrete parapet placed directly on the deck or Combination Railing on a raised sidewalk may contain geometric patterns inset into the front face. The maximum recess into the face of the barrier shall be 1" and shall be placed concurrently with a 45° or flatter chamfered or beveled edge. See Standards for Combination Railings Type 'C1-C6' and Combination Railing Details for one example of this type of aesthetic modification.

   WisDOT highly recommends the use of smooth front faces of Traffic Railings and Combination Railings.

5. Any concrete parapet placed directly on the deck or Combination Railing on a raised sidewalk may contain textures of any shape and length inset into the front face. The maximum depth of the texture shall be ½". Note that the typical aesthetic form liner patterns shown in the Standard Detail for Formliner Details are not acceptable for use on the front face of vehicle barriers.

   WisDOT highly recommends the use of smooth front faces of Traffic Railings and Combination Railings.

6. No patterns with a repeating upward sloping edge or rim in the direction of vehicle traffic shall be permitted.

7. Staining should not be applied to the roadway side face of concrete traffic railings. Staining is allowed on concrete surfaces of Combination Railings placed on a raised sidewalk.

30.5 Objects Mounted On Parapets

When light poles are mounted on top of parapets and the design speed exceeds 45 mph, the light pole must be located behind the back edge of the parapet. See Standards for Light Standard and Junction Box For Parapets and Conduit Details and Notes for typical light pole detail and conduit information. The poles should also be placed over the piers unless there is an expansion joint at that location. If an expansion joint is present, place 4 feet away.

See 6.3.3.7 for more information regarding bench mark disks.

30.6 Protective Screening

Protective screening is a special type of fence constructed on the sides of an overpass to discourage and/or prevent people from dropping or throwing objects onto vehicles passing underneath the structure. Protective screening is generally chain link type fencing attached to steel posts mounted on top of a Traffic Railing (part of a Combination Railing) or on a sidewalk surface (Pedestrian Railing). The top of the protective screening may be bent inward toward the roadway, if mounted on a Traffic Railing and on a raised sidewalk, to prevent objects from being thrown off the overpass structure. The top of the protective screening may also be bent inward toward the sidewalk, if mounted directly to the deck when it is protected by a Traffic Railing between the roadway and a sidewalk at grade. Aesthetics are enhanced by using a colored protective screening which can be coordinated with the color of the structure. See Chapter 30 and Chapter 37 Standard Details for protective screening detail information.

Examples of situations that warrant consideration of protective screening are:

1. Location with a history of, or instances of, objects being dropped or thrown from an existing overpass.

2. All new overpasses if there have been instances of objects being dropped or thrown at other existing overpasses in the area.

3. Overpasses near schools, playgrounds, residential areas or any other locations where the overpass may be used by children who are not accompanied by an adult.

In addition, all pedestrian overpasses should have protective screening on both sides.

Protective screening is not always warranted. An example of when it may not be warranted is on an overpass without sidewalks where pedestrians do not have safe or convenient access to either side because of high traffic volumes and/or the number of traffic lanes that must be crossed.

When protective screening is warranted, the minimum design should require screening on the side of the structure with sidewalk. Designers can call for protective screening on sides without sidewalks if those sides are readily accessible to pedestrians.

Designers should ensure that where protective screening is called for, it does not interfere with sight distances between the overpass and any ramps connecting it with the road below. This is especially important on cloverleaf and partial cloverleaf type interchanges.

Protective screening (or Pedestrian Railing) may be required for particular structures based on the safety requirements of the users on the structure and those below. Roadway designers, bridge designers, and project managers should coordinate this need and relay the information to communities involved when aesthetic details are being formalized.

See FDM 11-35-1.8 for additional guidance pertaining to protective screening usage requirements.

Occasionally, access to light poles behind protective screening is required or the screening may need repair. To gain access, attach fence stretchers to the fencing and remove one vertical wire by threading or cutting. To repair, attach fence stretchers and thread a vertical wire in place of the one removed by either reusing the one in place or using a new one.

Fence repair should follow this same process except the damaged fencing would be removed and replaced with new fencing.

See 30.3 for additional guidance with regards to snooper truck access, screening height, and straight vs. bent fencing.

30.7 Medians

The typical height of any required median curb is 6 inches. This will prevent normal crossovers and reduce vaulting on low speed roadways without excessive dead load being applied to the superstructure. On structure rehabilitations, the height of median may increase up to 8” to match the existing median at the bridge approaches. Contact the Bureau of Structures Development Section if median heights in excess of 8 inches are desired. See Standard for Median and Raised Sidewalk Details for typical raised median detail information.

30.8 Railing Rehabilitation

The FHWA, in its implementation plan for MASH, requires that bridge railings on the NHS shall meet the requirements of MASH or NCHRP Report 350. In addition, FHWA states that "Agencies are encouraged to upgrade existing highway safety hardware that has not been accepted under MASH or NCHRP Report 350 during reconstruction projects, during 3R (Resurfacing, Restoration, Rehabilitation), or when the railing system is damaged beyond repair".

WisDOT requirements for the treatment of existing railings for various project classifications are outlined in Table 30.8-1:

Project Classification	Railing Rehabilitation
Preventative Maintenance✳ (Resurfacing, Restoration) For letting dates after December 31, 2019: The compliance document will be MASH 2016 Edition	Replacement of bridge railing not in compliance with MASH or NCHRP Report 350 is recommended but not required. Existing railings – both in compliance and not in compliance – with MASH, NCHRP Report 350, and NCHRP Report 230 may be altered to improve the performance of the existing railings where it is not feasible to install an approved railing. Coordination with BOS and BPD is required. NHS Structures: It is strongly encouraged that existing railing that does not comply with MASH, NCHRP Report 350, or NCHRP Report 230 be upgraded to comply with MASH or NCHRP Report 350. Non-NHS Structures: It is strongly encouraged that existing railing that does not comply with MASH, NCHRP Report 350, or NCHRP Report 230 be upgraded to comply with MASH or NCHRP Report 350.

3R✳✳ (Resurfacing, Restoration, Rehabilitation) For letting dates after December 31, 2019: The compliance document will be MASH 2016 Edition	If rehabilitation work, as part of the 3R project, is scheduled or performed which does not widen the structure nor affect the existing railing.	Replacement of bridge railing not in compliance with MASH or NCHRP Report 350 is recommended but not required provided the minimum rail height requirement is met. (Minimum rail height shall be 27" for roadway design speed of 45 mph or less and 32" for roadway design speed exceeding 45 mph.) Existing railings – both in compliance and not in compliance – with MASH, NCHRP Report 350, and NCHRP Report 230 may be altered to improve the performance of the existing railings (i.e., raised to meet the minimum rail height requirement) where it is not feasible to install an approved railing. Coordination with BOS and BPD is required. NHS Structures: Existing railing that does not comply with MASH, NCHRP Report 350, or NCHRP Report 230 and does not meet the minimum rail height requirement shall be upgraded to comply with MASH or NCHRP Report 350. Non-NHS Structures: It is strongly encouraged that existing railing that does not comply with MASH, NCHRP Report 350, or NCHRP Report 230 and does not meet the minimum rail height requirement be upgraded to comply with MASH or NCHRP Report 350.
	If rehabilitation work, as part of the 3R project, is scheduled or performed which widens the structure to either side, redecks (full-depth) any complete span of the structure, or if any work affecting the rail is done to the existing structure.	All railing on the structure must comply with MASH or NCHRP Report 350. Limited project by project exceptions may be granted based on coordination and input by the Bureau of Structures and the Wisconsin Division of FHWA Structures Engineer.
4R (Resurfacing, Restoration, Rehabilitation, Reconstruction) For letting dates after December 31, 2019: The compliance document will be MASH 2016 Edition		All railing on the structure must comply with MASH or NCHRP Report 350. Limited project by project exceptions may be granted based on coordination and input by the Bureau of Structures and the Wisconsin Division of FHWA Structures Engineer.

Table 30.8-1

WisDOT Requirements for Retrofitting/Upgrading Bridge Railings to Current Standards

✳ Examples of Preventative Maintenance projects include, but are not limited to:

1. Bridge deck work: Concrete deck repair, patching, and concrete overlays; asphaltic overlays; epoxy and polymer overlays; expansion joint replacement when done in conjunction with an overlay or expansion joint elimination; chloride extraction; installation of a cathodic protection system.

2. Superstructure and substructure work: Steel structure cleaning and repainting, including complete repainting, zone painting, and spot painting with overcoat; structural repairs (except vehicle impact damage); bearing repair or replacement.

✳✳ Examples of 3R projects include, but are not limited to:

1. Bridge deck work: Bridge deck widenings and re-decks; expansion joint replacement when done in conjunction with an overlay or expansion joint elimination; approach slab replacement.

2. Superstructure and substructure work: Wing wall replacement; emergency bridge repair; structural repairs to railings based on vehicle impact damage;

The minimum railing height shall be measured from the top inside face of the railing to the top of the roadway surface at the toe of railing.

For all railing rehabilitations that require upgrades to comply with MASH or NCHRP Report 350, railings shall be employed as discussed in 30.2.

The following is a list of typical railing types that are in service on structures in Wisconsin. The underlined railings comply with MASH, NCHRP Report 350, or NCHRP Report 230 and may remain in service within rehabilitation projects. The *italicized* railings shall be removed from service within rehabilitation projects.

1. Single slope parapet “32SS”, “36SS”, “42SS”, “56SS”. See 30.2.

2. Sloped face parapet "LF". Railing may be used for rehabilitation projects. Meets TL-3 under MASH.

3. Sloped face parapet "HF". Railing may be used for rehabilitation projects. Meets TL-3 under MASH.

4. Vertical face parapet “A”. Railing may be used for rehabilitation projects. See 30.2.

5. Aesthetic parapet “TX”. Railing may be used for rehabilitation projects. Meets TL-2 under MASH.

6. Type “PF” tubular railing. Railing may be used for rehabilitation projects. Meets TL-2 under MASH. Standard Details are in Chapter 40.

7. Type “H” railing. Railing may be used for rehabilitation projects. Meets TL-3 under MASH.

8. Timber Railing. Railing may be used for rehabilitation projects if not on the NHS. Timber railings have not been tested according to MASH.

9. Type "W" railing. Railing may be used for rehabilitation projects on non-NHS structures only. Meets TL-2 under MASH.

10. Type “M” railing. Railing may be used for rehabilitation projects. Meets TL-2 under MASH.

11. Type “NY3/NY4” steel railings. Railing may be used for rehabilitation projects. Meets TL-2 under MASH.

12. *Type “F” railing.* Railing may not be used for rehabilitation projects. Standard Details in Chapter 40 are for informational purposes only.

13. Sloped face parapet “B”. Railing may be used for rehabilitation projects. Meets TL-3 under MASH.

The region shall contact the Bureau of Structures Development Section to determine the sufficiency of existing railings not listed above.

Rehabilitation or improvement projects to historically significant bridges require special attention. Typically, if the original railing is present on a historic bridge, it will likely not meet current crash testing requirements. In some cases, the original railing will not meet current minimum height and opening requirements. There are generally two different options for upgrading railings on historically significant bridges – install a crash-tested Traffic Railing to the interior side of the existing railing and leave the existing railing in place or replace the existing railing with a crash-tested Traffic Railing. Other alternatives may be available but consultation with the Bureau of Structures Development Section is required.

30.9 Railing Guidance for Railroad Structures

Per an April 2013 memorandum written by M. Myint Lwin, Director of the FHWA Office of Bridge Technology, bridge parapets, railings, and fencing shall conform to the following requirements when used in the design and construction of grade separated highway structures over railroads:

1. For NHS bridges over railroad:

   Bridge railings shall comply with AASHTO standards. For Federal-aid highway projects, the designer shall follow normal bridge railing specifications, design standards, and guidelines.

   However, railings for use on NHS bridges over railroads shall be governed by the railroad's standards, regardless of whether the bridge is owned by the railroad or WisDOT. For the case where an NHS bridge crosses over railroads operated by multiple authorities with conflicting parapet, railing, or fencing requirements, standards as agreed by the various railroad authorities and as approved by WisDOT shall be used.

2. For non-NHS bridges over railroad:

   Bridge railings shall comply with the policies outlined within this chapter. For Federal-aid highway projects, the designer shall follow normal bridge railing specifications, design standards, and guidelines.

   All federally funded non-NHS bridges including those over railroads shall be governed by WisDOT's policies outlined above, even if they differ from the railroad's standards.

30.10 References

1. American Association of State Highway and Transportation Officials. *AASHTO LRFD Bridge Design Specifications.*

2. American Association of State Highway and Transportation Officials. *Manual for Assessing Safety Hardware*.

3. National Cooperative Highway Research Program. *NCHRP Report 554 – Aesthetic Concrete Barrier Design*.

4. State of California, Department of Transportation. *Crash Testing of Various Textured Barriers*.

5. National Cooperative Highway Research Program. *NCHRP Report 350 – Recommended Procedures for the Safety Performance Evaluation of Highway Features*.

6. State of Wisconsin, Department of Transportation. *Facilities Development Manual*.

7. State of Wisconsin, Department of Transportation. *Wisconsin Bicycle Facility Design Handbook.*

8. State of Wisconsin, Department of Transportation. *Memorandum of Understanding between Wisconsin Department of Transportation, Wisconsin County Highway Association, and Transportation Builders Association.*

This page intentionally left blank.

Table of Contents

32.1 General 2
32.2 Plans 3
32.3 Department Policy 4
32.4 Pipeline Expansion Joints 5
32.5 Lighting 6
32.6 Conduit Systems 7

32.1 General

The Regional Office shall determine the utilities that will be affected by the construction of any bridge structure at the earliest possible stage. It shall be their responsibility to deal with these utilities and to provide location plans or any other required sketches for their information. When the utility has to be accommodated on the structure, the Regional Office shall secure approval from the representative of the utility and the Bureau of Structures for the location and method of support.

Due consideration shall be given to the weight of the pipes, ducts, etc. in the design of the beams and diaphragms. To insure that the function, aesthetics, painting and inspection of stringers of a structure are maintained, the following applies to the installation of utilities on structures:

1. Permanent installations, which are to be carried on and parallel to the longitudinal axis of the structure, shall be placed out of sight, between the fascia beams and above the bottom flanges, on the underside of the structure.

2. Conglomeration of utilities in the same bay shall be avoided in order to facilitate maintenance painting and future inspection of girders in a practical manner.

3. In those instances where the proposed type of superstructure is not adaptable to carrying utilities in an out-of-sight location in the underside of the structure, an early determination must be made as to whether or not utilities are to be accommodated and, if so, the type of superstructure must be selected accordingly.

32.2 Plans

Utilities may be supported by a system which requires inserts in the concrete deck slab. They also may be supported directly on structural beams. Utilities shall not be supported by a system that requires drilling into prestressed concrete beams or welding onto structural steel beams.

It shall be the responsibility of the Regional Office to obtain approval of support details from the individual utility companies prior to the final submission.

Preliminary and final general plan and elevation drawings shall show information about all existing and proposed utilities carried under the superstructure or in the vicinity of foundations. Complete information as to the name of owner, size, type, abandonment, proposed relocation, material to be furnished by utility company, etc. shall be noted.

32.3 Department Policy

The following guidance in regard to utility installations on bridges should be followed:

General Considerations

1. In most cases, attachment of utility facilities to highway structures, such as bridges, is a practical arrangement and considered to be in the public interest. However, attaching utility lines to a highway structure can materially affect the structure, the safe operation of traffic, the efficiency of maintenance as well as the appearance and therefore must be provided for during the design stage.

2. Since highway structure designs and site conditions vary, the adoption of a standard method to accommodate utility facilities is not feasible; however, the method employed should conform to logical engineering considerations for preserving the highway, its safe operation, maintenance and appearance. Generally, acceptable utility installations are those which will occupy a position beneath the structure's floor, between the outer girders of beams or within a cell, and at an elevation above low superstructure steel or masonry.

3. The general controls for providing encasement, allied mechanical protection and shut-off valves to pipeline crossings of highways and for restriction against varied use shall be followed for pipeline attachments to bridge structures, except that sleeves are required only through the abutment backwalls. Where a pipeline attachment to a bridge is encased, the casing should be effectively opened or vented at each end to prevent possible buildup of pressure and to detect leakage of gases or fluid.

   Since an encasement is not normally provided for a pipeline attachment to a bridge, additional protective measures shall be taken. Such measures shall employ higher factor of safety in the design, construction, and testing of the pipeline than would normally be required for cased construction.

4. Communication and electric power line attachments shall be suitably insulated, grounded, and carried in protective conduit or pipe from the point of exit from the ground to re-entry. The cable shall be carried to a manhole located beyond the backwall of the structure. Carrier pipe and casing pipe should be suitably insulated from electric power line attachments.

5. Guy wires in support of any utility will never be allowed to attach to a bridge structure.

6. Cell phone or other type antennas shall not be mounted from or on any bridge or sign support structure.

32.4 Pipeline Expansion Joints

Allowances must be made for changes in pipe length due to thermal expansion and alternate contraction. While couplings will take care of the normal amount of expansion and contraction in each length of pipe, expansion joints are required where no flexible joints are used in the pipeline or when the amount of concentrated movement at one point in excess of the amount that can be safely absorbed by the standard coupling.

An expansion joint should be located in the pipeline adjacent to every point where expansion means are provided in the superstructure.

Use couplings to accommodate the differential movement between the structure and the line itself, and to provide flexibility to accommodate vibrations of the structure. Each coupling can safely accommodate up to 3/8 inch longitudinal movement.

Proper alignment is important to insure free and concentric movement of the slip-type expansion joint. Alignment guides should be designed to allow free movement in only one direction along the axis of the pipe and to prevent any horizontal or vertical movement of the pipe. Suitable pipe alignment guides may be obtained from reliable pipe alignment guide manufacturers. Alignment guides should be fastened to some rigid part of the installation, such as the framework of the bridge. Alignment guides should be located as close to the expansion joint as possible, up to a maximum of 4 pipe diameters. The distance from the first pipe guide to the second should not exceed a maximum of 14 pipe diameters from the first guide. Where an anchor is located adjacent to an expansion joint, it too, should be located as close to the expansion joint as possible – to a maximum of 4 pipe diameters from the expansion-joint. Additional pipe supports are usually required. Pipe supports should not be substituted for alignment guides.

The main pipe anchors must be designed to withstand the full thrust resulting from internal line pressure; also, the force required to collapse the slip pipe, and the frictional forces due to guides and supports.

32.5 Lighting

When lighting conduits are used in a bridge use an approved expansion fitting at each semi expansion or expansion joint.

Use bolted option on all bridges with X-frame and lower laterals. Do not use bolted option when channel diaphragms are used.

There is some flexibility in placing light standards. Whenever possible, place all light standards at the piers instead of in the spans for both aesthetics and vibration problems. Place 4' from pier if there is an expansion joint at the pier. WisDOT has experienced mast arm failures due to vibration on poles placed further from the pier.

With poles set in the center of the spans on bridges the heavy luminaire tends to stand still as the bridge deflects due to traffic. The pole shaft is too stiff to deflect much so the pole arm takes all the movement.

With a constant wind velocity the poles will vibrate. If they are placed too far into the span, deflections from traffic will induce further erratic vibrations. While single arm brackets are aesthetically appealing they are more prone to fatigue failures than the double arm brackets. Some single arm brackets have been replaced this way.

The resonant frequency of most poles is quite low (5 to 10 cycles per second). Therefore low wind velocities can excite these poles if they are not damped. In most cases the arm and luminaire do some of this. One case where this didn't work was corrected by putting vermiculite in the pole.

Some pole vibrations cause the bulbs to unscrew and fall out. This is corrected by attaching a clamp over the end of the bulb.

55 foot long poles with 20 foot mast arms can have a noticeable bend in the pole due to the dead load of the luminaire and mast arm up to approximately 12 inches.

The pole manufacturers suggest that the poles be manufactured with a curve so that the dead load of the arm and luminaire cause the centerline of the pole to approximate a straight line. They did not want to increase the pole cost by using more material. A fair tolerance should be allowed on the prescribed shape of the pole.

For high mast lighting questions, please contact the BOS ancillary structures maintenance engineer.

32.6 Conduit Systems

Structures may require conduit systems when lighting, signals and other services are located on or adjacent to structures. These systems typically include conduit, conduit boxes (junction boxes and/or pull boxes), and conduit fittings. Preferably, these conduit system are embedded in concrete elements for protective and aesthetic reasons. In some cases, externally mounted systems may be warranted when concrete embedment is not practical or economical.

Rigid nonmetallic conduit, also referred to as PVC (polyvinyl chloride) conduit, is commonly used throughout structures due to its low costs and ease of installation. At joint locations with fittings, rigid metallic conduit (RMC) is recommended on both sides of the joint for a rigid and durable connection. RMC shall be galvanized per the specifications. Use of reinforced thermosetting resin conduit (RTRC), also referred to as fiberglass conduit, has been limited on projects due to its high costs and durability concerns when embedded in concrete. Use of liquid-tight flexible metal conduit (LFMC) may be considered at large expansion joints or when anticipated movements exceed standard fitting allowances. Use of PVC coated RMC is currently not being used on structures.

For long conduit runs, junction boxes are required to facilitate wire installations, to allow for future access, and for grounding purposes. The maximum run of 2-inch conduit, without a junction box, is 190 feet. Junction boxes can only be used with 2-inch diameter conduit. The maximum run of 3-inch conduit is 190 feet and junction boxes are not allowed to accommodate longer runs. Junction boxes should be used near expansion joints for grounding purposes. Additionally, all expansion fittings are to be wrapped and include a bonding jumper. Pull boxes, similar to junction boxes, are located off of structures and facilitate roadway conduit requirements and details. Typically, these items are addressed in the roadway plans.

See Standards for Light Standard and Junction Box for Parapets and Conduit Details and Notes for additional information. Refer to Chapter 39 for conduit systems servicing sign structures.

Conduit systems for structures should also consider the following items:

- Plans shall specify type, size and location for all conduit, junction boxes, and fittings necessary to accommodate services on structures. Typically, all other electrical requirements such as wiring diagrams, grounding conductors, etc. should be provided in the roadway plans. Additional details and notes may be required for some services, such as conduit systems for navigation lighting.

- Conduit type (coordinate with the Regional electrical engineer):

    - Concrete embedment: 2-inch PVC - schedule 40

    - Concrete embedment at expansion fittings: RMC (3’-0” minimum on each side of fitting)

    - Structure mounted - underdeck lighting: 1-inch RTRC. Refer to Roadway Standards for additional underdeck light details.

- Structure mounted - Other: 1-inch PVC - schedule 80 (preferred). RTRC, RMC or LFMC may also be considered.

- The maximum allowable conduits that can be placed in concrete parapets is two 3-inch diameter conduits.

- Future conduit runs should not be placed unless future services are highly probable. Conduit systems are expensive and are routinely addressed by maintenance.

- All conduit runs shall have a limited number of bends. The sum of the individual conduit bends on a single run between boxes (pull or junction) shall not exceed 360 degrees, preferably not to exceed 270 degrees. No individual bend shall be greater than 90 degrees. Use two 45 degree bends in lieu of a 90 degree bend when space allows.

- Bends shall not be less than the minimum radius as specified by the National Electrical Code. For layout purposes, all bends shall have a minimum bend radius no less than 6 times the nominal diameter.

- Provide 3'-0" minimum RMC conduit on each side of semi-expansion joint fittings. For expansion joints, provide 3'-0" minimum RMC conduit on one side and extend the other side to a junction box. All semi-expansion and expansion joints with RMC conduit and fittings should be wrapped and bonded, as shown or noted in the Standards.

- For large movements or when joints exceed standard fitting allowances consider using a LFMC system. The specified LFMC conduit length should be at least 2 times the anticipated movements.

- Extend conduit a minimum of 2 inches above concrete surfaces and extend a minimum of 6 inches for buried applications. Provide temporary end caps, unless conduit terminates in a pull box.

- Provide 2'-0" minimum conduit cover when installed below roadways, 1'-6" minimum otherwise. Conduit cover should not exceed 3'-0". Provide 2-inch PVC - schedule 40 for buried applications, unless directed otherwise. Provide 2" minimum concrete cover when embedding in concrete.

- Conduit systems and light spacing requirements should be coordinated with the roadway engineer and the Regional electrical engineer.

Table of Contents

36.1 Design Method 4
36.1.1 Design Requirements 4
36.1.2 Rating Requirements 4
36.1.3 Standard Permit Design Check 4
36.2 General 5
36.2.1 Material Properties 6
36.2.2 Bridge or Culvert 6
36.2.3 Staged Construction for Box Culverts 7
36.3 Limit States Design Method 8
36.3.1 LRFD Requirements 8
36.3.2 Limit States 8
36.3.3 Load Factors 9
36.3.4 Strength Limit State 9
36.3.4.1 Factored Resistance 9
36.3.4.2 Moment Capacity 10
36.3.4.3 Shear Capacity 10
36.3.4.3.1 Depth of Fill Greater than or Equal to 2.0 ft 10
36.3.4.3.2 Depth of Fill Less than 2.0 ft 12
36.3.5 Service Limit State 12
36.3.5.1 Factored Resistance 12
36.3.5.2 Crack Control Criteria 12
36.3.6 Minimum Reinforcement Check 13
36.3.7 Minimum Spacing of Reinforcement 14
36.3.8 Maximum Spacing of Reinforcement 14
36.3.9 Edge Beams 14
36.4 Design Loads 15
36.4.1 Self-Weight (DC) 15
36.4.2 Future Wearing Surface (DW) 15
36.4.3 Vertical and Horizontal Earth Pressure (EH and EV) 15
36.4.4 Live Load Surcharge (LS) 17
36.4.5 Water Pressure (WA) 18
36.4.6 Live Loads (LL) 18

36.4.6.1 Depth of Fill Less than 2.0 ft. ... 18
36.4.6.1.1 Case 1 – Traffic Travels Parallel to Span ... 18
36.4.6.1.2 Case 2 - Traffic Travels Perpendicular to Span ... 20
36.4.6.2 Depth of Fill Greater than or Equal to 2.0 ft. ... 21
36.4.6.2.1 Case 1 – Traffic Travels Parallel to Span ... 21
36.4.6.2.2 Case 2 – Traffic Travels Perpendicular to Span ... 23
36.4.7 Live Load Soil Pressures ... 23
36.4.8 Dynamic Load Allowance ... 23
36.4.9 Location for Maximum Moment ... 23
36.5 Design Information ... 25
36.6 Detailing of Reinforcing Steel ... 27
36.6.1 Bar Cutoffs ... 27
36.6.2 Corner Steel ... 28
36.6.3 Positive Moment Slab Steel ... 29
36.6.4 Negative Moment Slab Steel over Interior Walls ... 29
36.6.5 Exterior Wall Positive Moment Steel ... 30
36.6.6 Interior Wall Moment Steel ... 31
36.6.7 Distribution Reinforcement ... 31
36.6.8 Shrinkage and Temperature Reinforcement ... 32
36.7 Box Culvert Aprons ... 33
36.7.1 Type A ... 33
36.7.2 Type B, C, D ... 34
36.7.3 Type E ... 36
36.7.4 Wingwall Design ... 36
36.8 Box Culvert Camber ... 37
36.8.1 Computation of Settlement ... 37
36.8.2 Configuration of Camber ... 39
36.8.3 Numerical Example of Settlement Computation ... 39
36.9 Box Culvert Structural Excavation and Structure Backfill ... 40
36.10 Box Culvert Headers ... 41
36.11 Plan Detailing Issues ... 43
36.11.1 Weep Holes ... 43
36.11.2 Cutoff Walls ... 43

36.11.3 Nameplate 43
36.11.4 Plans Policy 43
36.11.5 Rubberized Membrane Waterproofing 43
36.12 Precast Four-Sided Box Culverts 44
36.13 Other Buried Structures 45
36.13.1 General 45
36.13.2 Three-Sided Concrete Structures 45
36.13.2.1 Cast-In-Place Three-Sided Structures 45
36.13.2.2 Precast Three-Sided Structures 45
36.13.2.2.1 Precast Three-Sided Structure Span Lengths 47
36.13.2.2.2 Segment Configuration and Skew 47
36.13.2.2.2.1 Minimum Fill Height 48
36.13.2.2.2.2 Rise 48
36.13.2.2.2.3 Deflections 48
36.13.2.3 Plans Policy 48
36.13.2.4 Foundation Requirements 49
36.13.2.5 Precast Versus Cast-in-Place Wingwalls and Headwalls 50
36.13.3 Metal Buried Structures 50
36.13.3.1 Metal Pipes and Pipe-Arches 51
36.13.3.2 Other Shapes 51
36.14 References 52
36.15 Design Example 53

36.1 Design Method

36.1.1 Design Requirements

All new box culverts are to be designed using *AASHTO LRFD Bridge Design Specifications*, hereafter referred to as *AASHTO LRFD*.

36.1.2 Rating Requirements

The current version of *AASHTO Manual for Bridge Evaluation (LRFR)* covers rating of concrete box culverts. Refer to 45.8 for additional guidance on load rating various types of culverts.

36.1.3 Standard Permit Design Check

New structures are also to be checked for strength for the 190 kip Wisconsin Standard Permit Vehicle (Wis-SPV), with a single lane loaded, multiple presence factor equal to 1.0, and a live load factor (γ_{LL}) as shown in Table 45.3-3. See 45.12 for the configuration of the Wis-SPV. The structure should have a minimum capacity to carry a gross vehicle load of 190 kips, while also supporting the future wearing surface (where applicable – future wearing surface loads are only applied to box culverts with no fill). When applicable, this truck will be designated as a Single Trip Permit Vehicle. It will have no escorts restricting the presence of other traffic on the culvert, no lane position restrictions imposed and no restrictions on speed to reduce the dynamic load allowance, IM. The maximum Wisconsin Standard Permit Vehicle load that the structure can resist, calculated including current wearing surface loads, is shown on the plans.

36.2 General

Box culverts are reinforced concrete closed rigid frames which must support vertical earth and truck loads and lateral earth pressure. They may be either single or multi-cell. The most common usage is to carry water under roadways, but they are frequently used for pedestrian or cattle underpasses.

Box culverts used to carry water should consider the following items:

- Hydraulic and other requirements at the site determine the required height and area of the box. Hydraulic design of box culverts is described in Chapter 8.
- Once the required height and area is determined, the selection of a single or multi-cell box is determined entirely from economics. Barrel lengths are computed to the nearest 6 inches. For multi-cell culverts the cell widths are kept equal.
- A minimum vertical opening of 5 feet is desirable for cleaning purposes.

Pedestrian underpasses should consider the following items:

- The minimum opening for pedestrian underpasses is 8 feet high by 10 feet wide. However, when considering maintenance and emergency vehicles or bicyclists the minimum opening should be 10 feet high by 12 feet wide. For additional guidance refer to the Wisconsin Bicycle Facility Design Handbook and the FDM.
- The entire top and 1 foot below the bottom of the top slab should be waterproofed.
- The top of the bottom slab should be sloped with a 1% normal crown to minimize moisture collecting on the travel path. Additionally, 0.5% to 1% longitudinal slope for drainage is recommended.
- Flared wings are recommended at openings. For long underpasses, lighting systems (recessed lights and skylights) should be considered, as well. For additional guidance on user's comfort, safety measures, and lighting refer to the Wisconsin Bicycle Facility Design Handbook.

Cattle underpasses should consider the following items:

- The minimum size for cattle underpasses is 6 feet high by 5 feet wide.
- Consider providing a minimum longitudinal slope of 1%, desirable 3%, to allow for flushing, but not so steep that the stock will slip. Slopes steeper than 5% should be avoided.
- For additional guidance refer to the FDM.

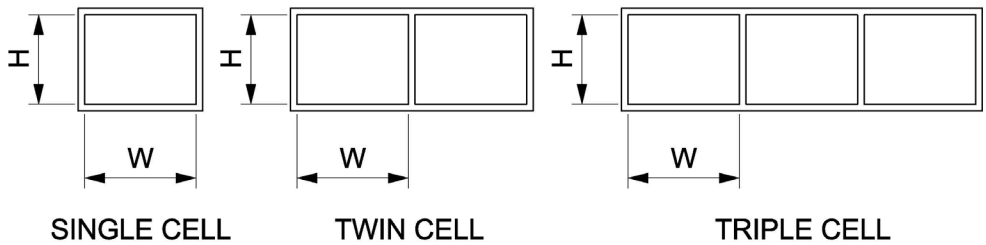

Figure 36.2-1
Typical Cross Sections

36.2.1 Material Properties

The properties of materials used for concrete box culverts are as follows:

f'_c = specified compressive strength of concrete at 28 days, based on cylinder tests

= 3.5 ksi for concrete in box culverts

f_y = 60 ksi, specified minimum yield strength of reinforcement (Grade 60)

E_s = 29,000 ksi, modulus of elasticity of steel reinforcement **LRFD [5.4.3.2]**

E_c = modulus of elasticity of concrete in box **LRFD [C5.4.2.4]**
= $(33{,}000)(K_1)(w_C)^{1.5}(f'_C)^{1/2}$ = 3586 ksi

Where:

K_1 = 1.0

W_C = 0.15 kcf, unit weight of concrete

n = Es / Ec = 8, modular ratio **LRFD [5.6.1]**

36.2.2 Bridge or Culvert

Occasionally, the waterway opening(s) for a highway-stream crossing can be provided for by either culvert(s) or bridge(s). Consider the hydraulics of the highway-stream crossing system in choosing the preferred design from the available alternatives. Estimates of life cycle costs and risks associated with each alternative help indicate which structure to select. Consider construction costs, maintenance costs, and risks of future costs to repair flood damage. Other considerations which may influence structure-type selection are listed in Table 36.2-1.

Bridges	
Advantages	Disadvantages
Less susceptible to clogging with drift, ice and debris	Require more structural maintenance than culverts
Waterway width increases with rising water surface until water begins to submerge structure	Piers and abutments susceptible to scour failure
Natural bottom for waterway	Susceptible to ice and frost forming on deck
Culverts	
Grade rises and widening projects sometimes can be accommodated by extending culvert ends	Silting in multiple barrel culverts may require periodic cleanout
Minimum structural maintenance	No increase in waterway area as stage rises above top of culvert
Usually easier and quicker to build than bridges	May clog with drift, debris or ice

Table 36.2-1
Advantages/Disadvantages of Structure Type

36.2.3 Staged Construction for Box Culverts

The inconvenience to the traveling public has often led to staged construction projects. Box culverts typically work well with staged construction. Any cell joint can be used for a staging joint. When the construction staging line cannot be determined in design to locate a cell joint, a contractor placed construction joint can be done with an extra set of dowel bars and the contractor field cutting the longitudinal bars.

36.3 Limit States Design Method

36.3.1 LRFD Requirements

For box culvert design, the component dimensions and the size and spacing of reinforcement shall be selected to satisfy the following equation for all appropriate limit states, as presented in **LRFD [1.3.2.1]:**

$$Q = \sum \eta_i \gamma_i Q_i \leq \phi R_n = R_r$$

Where:

η_i	=	Load modifier (a function of η_D, η_R, and η_i)
γ_i	=	Load factor
Q_i	=	Force effect: moment, shear, stress range or deformation caused by applied loads
Q	=	Total factored force effect
ϕ	=	Resistance factor
R_n	=	Nominal resistance: resistance of a component to force effects
R_r	=	Factored resistance = ϕR_n

See 17.2.2 for load modifier values.

36.3.2 Limit States

The Strength I Limit State is used to design reinforcement for flexure and checking shear in the slabs and walls, **LRFD [12.5.3]**. The Service I Limit State is used for checking reinforcement for crack control criteria, **LRFD [12.5.2]**, and checking settlement of the box culvert as shown in 36.8.1.

Per **LRFD [C12.5.3, 5.5.3],** buried structures have been shown not to be controlled by fatigue.

WisDOT Policy Item:

Fatigue criteria are not required on any reinforced concrete box culverts, with or without fill on the top slab of the culvert. This policy item is based on the technical paper titled "Fatigue Evaluation for Reinforced Concrete Box Culverts" by H Hany Maximos, Ece Erdogmus, and Maher Tadros, published in the ACI Structural Journal, January/February 2010.

36.3.3 Load Factors

In accordance with **LRFD [Table 3.4.1-1 and Table 3.4.1-2]**, the following Strength I load factors, γ_{st}, and Service I load factors, γ_{s1}, shall be used for box culvert design:

		Strength I Load Factor, γ_{st}		Service I Load Factor, γ_{s1}
Type of Load		Max.	Min.	
Dead Load-Components	DC	1.25	0.90	1.0
Dead Load-Wearing Surface	DW	1.50	0.65	1.0
Vertical Earth Pressure	EV	1.35	0.90	1.0
Horizontal Earth Pressure	EH	1.35	0.50[1]	1.0
Live Load Surcharge	LS	1.75	1.75	1.0
Live Load + IM	LL+IM	1.75	1.75	1.0

[1]Per **LRFD [3.11.7]**, for culverts where earth pressure may reduce effects caused by other loads, a 50% reduction may be used, but not combined with the minimum load factor specified in **LRFD [Table 3.4.1-2]**.

36.3.4 Strength Limit State

Strength I Limit State shall be applied to ensure that strength and stability are provided to resist the significant load combinations that a structure is expected to experience during its design life **LRFD [1.3.2.4]**.

36.3.4.1 Factored Resistance

The resistance factor, ϕ, is used to reduce the computed nominal resistance of a structural element. This factor accounts for the variability of material properties, structural dimensions and workmanship, and uncertainty in prediction of resistance.

The resistance factors, ϕ, for reinforced concrete box culverts for the Strength Limit State per **LRFD [Table 12.5.5-1]** are as shown below:

Structure Type	Flexure	Shear
Cast-In-Place	0.90	0.85
Precast	1.00	0.90
Three-Sided	0.95	0.90

36.3.4.2 Moment Capacity

For rectangular sections, the nominal moment resistance, M_n, per **LRFD [5.6.3.2.3]** (tension reinforcement only) equals:

$$M_n = A_s f_s \left(d_s - \frac{a}{2}\right)$$

The factored resistance, M_r, or moment capacity per **LRFD [5.6.3.2.1]**, shall be taken as:

$$M_r = \phi M_n = \phi A_s f_s \left(d_s - \frac{a}{2}\right)$$

For additional information on concrete moment capacity, including stress and strain assumptions used, refer to 18.3.3.2.1.

The location of the design moment will consider the haunch dimensions in accordance with **LRFD [12.11.5.2]**. No portion of the haunch shall be considered in adding to the effective depth of the section.

36.3.4.3 Shear Capacity

Per **LRFD [12.11.4.1]**, shear in culverts shall be investigated in conformance with **LRFD [5.12.7.3]**. The location of the critical section for shear for culverts with haunches shall be determined in conformance with **LRFD [C5.12.8.6.1]** and shall be taken at a distance d_v from the end of the haunch.

36.3.4.3.1 Depth of Fill Greater than or Equal to 2.0 ft.

The shear resistance of the concrete, V_c, for <u>slabs</u> of box culverts with 2.0 feet or more of fill, for one-way action per **LRFD [5.12.7.3]** shall be determined as:

$$V_c = \left(0.0676\lambda\sqrt{f'_c} + 4.6\frac{A_s}{bd_e}\frac{V_u d_e}{M_u}\right)bd_e \le 0.126\lambda\sqrt{f'_c}\,bd_e$$

Where:

$$\frac{V_u d_e}{M_u} \le 1$$

Where:

V_c = Shear resistance of the concrete (kip)

A_s = Area of reinforcing steel in the design width (in^2)

d_e	=	Effective depth from extreme compression fiber to the centroid of the tensile force in the tensile reinforcement (in.)
V_u	=	Factored shear (kip)
M_u	=	Factored moment, occurring simultaneously with V_u (kip-in)
b	=	Design width (in.)
λ	=	Concrete density modification factor ; for normal weight conc. = 1.0, **LRFD [5.4.2.8]**

In the absence of shear reinforcing, the nominal shear resistance is equal to the shear resistance of the concrete. The factored resistance, V_r, or shear capacity, per **LRFD [5.7.2.1]** shall be taken as:

$$V_r = \phi V_n = \phi V_c$$

Per **LRFD [5.12.7.3]**, for single-cell box culverts only, Vc for slabs monolithic with walls need not be taken less than:

$$0.0948 \cdot \lambda \sqrt{f'_c}\, b d_e$$

and V_c for slabs simply supported need not be taken less than:

$$0.0791 \cdot \lambda \sqrt{f'_c}\, b d_e$$

The shear resistance of the concrete, V_c, for <u>walls</u> of box culverts with 2.0 feet or more of fill, for one-way action per **LRFD [5.7.3.3]** shall be determined as:

$$V_c = 0.0316 \cdot \beta \lambda \sqrt{f'_c}\, b_v d_v \le 0.25 f'_c\, b_v d_v$$

Where:

V_c	=	Shear resistance of the concrete (kip)
β	=	2.0 (**LRFD [5.7.3.4.1]**)
b_v	=	Effective web width taken as the minimum web width within the depth d_v (in.)
d_v	=	Effective shear depth as determined in **LRFD [5.7.2.8]**. Perpendicular distance between tension and compression resultants. Need not be taken less than the greater of $0.9d_e$ or 0.72h (in.)
λ	=	Concrete density modification factor ; for normal weight conc. = 1.0, **LRFD [5.4.2.8]**

36.3.4.3.2 Depth of Fill Less than 2.0 ft

Per **LRFD [5.12.7.3]**, for box culverts with less than 2.0 feet of fill follow **LRFD [5.7]** and **LRFD [5.12.8.6]**.

The shear resistance of the concrete, V_c, for slabs and walls of box culverts with less than 2.0 feet of fill, for one-way action per **LRFD [5.7.3.3]** shall be determined as:

$$V_c = 0.0316 \cdot \beta\lambda\sqrt{f'_c}\, b_v d_v \leq 0.25 f'_c\, b_v d_v$$

With variables defined above in 36.3.4.3.1.

For box culverts where the top slab is an integral part of the wearing surface (depth of fill equal zero) the top slab shall be checked for two-way action, as discussed in 18.3.3.2.2.

36.3.5 Service Limit State

Service I Limit State shall be applied as restrictions on stress, deformation, and crack width under regular service conditions **LRFD [1.3.2.2]**.

36.3.5.1 Factored Resistance

The resistance factor, ϕ, for Service Limit State, is found in **LRFD [1.3.2.1]** and its value is 1.00.

36.3.5.2 Crack Control Criteria

Per **LRFD [12.11.4]**, the provisions of **LRFD [5.6.7]** shall apply to crack width control in box culverts. All reinforced concrete members are subject to cracking under any load condition, which produces tension in the gross section in excess of the cracking strength of the concrete. Provisions are provided for the distribution of tension reinforcement to control flexural cracking.

Crack control criteria does not use a factored resistance, but calculates a maximum spacing for flexure reinforcement based on service load stress in bars, concrete cover and exposure condition.

Crack control criteria shall be applied when the tension in the cross-section exceeds 80% of the modulus of rupture, f_r, specified in **LRFD [5.4.2.6]** for Service I Limit State. The spacing, s, (in inches) of mild steel reinforcement in the layer closest to the tension face shall satisfy:

$$s \leq \frac{700\gamma_e}{\beta_s f_{ss}} - 2d_c \quad \text{(in.)}$$

Bar spacing, s, need not be less than 5 in. for control of flexural cracking **LRFD [5.6.7]**

in which:

$$\beta_s = 1 + \frac{d_c}{0.7(h - d_c)}$$

Where:

γ_e	=	Exposure factor (1.0 for Class 1 exposure condition, 0.75 for Class 2 exposure condition, see **LRFD [5.6.7]** for guidance)
d_c	=	Thickness of concrete cover measured from extreme tension fiber to center of the flexural reinforcement located closest thereto (in.). For calculation purposes, d_c, need not be taken greater than 2 in. plus the bar radius
f_{ss}	=	Tensile stress in steel reinforcement at the service limit state (ksi) $\leq$ 0.6 f_y
h	=	Overall thickness or depth of the component (in.)

WisDOT Policy Item:

A class 1 exposure factor, γ_e = 1.0, shall be used for all cases for cast-in-place box culverts except for the top steel in the top slab of a box culvert with zero fill, where a class 2 exposure factor, γ_e = 0.75, shall be used.

36.3.6 Minimum Reinforcement Check

Per **LRFD [12.11.5.3]**, the area of reinforcement, A_s, in the box culvert cross-section should be checked for minimum reinforcement requirements per **LRFD [5.6.3.3]**.

The area of tensile reinforcement shall be adequate to develop a factored flexural resistance, M_r, or moment capacity at least equal to the lesser of:

M_{cr} (or) $1.33M_u$

$M_{cr} = \gamma_3 (\gamma_1 f_r) S = 1.1 f_r (I_g / c)$; $S = I_g / c$

Where:

γ_1	=	1.6 flexural cracking variability factor
γ_3	=	0.67 ratio of minimum yield strength to ultimate tensile strength; for A615 Grade 60 reinforcement
f_r	=	$0.24\lambda\sqrt{f'_c}$ Modulus of rupture (ksi) **LRFD [5.4.2.6]**
I_g	=	Gross moment of inertia (in^4)

c	=	½ *effective slab thickness (in.)
M_u	=	Total factored moment using Strength I Limit State (kip-in)
M_{cr}	=	Cracking strength moment (kip-in)
λ	=	concrete density modification factor ; for normal weight conc. = 1.0, **LRFD [5.4.2.8]**

The factored resistance, M_r or moment capacity, shall be calculated as in 36.3.4.2 and shall satisfy:

$$M_r \geq \min(M_{cr} \text{ or } 1.33\, M_u)$$

36.3.7 Minimum Spacing of Reinforcement

Per **LRFD [5.10.3.1]**, the clear distance between parallel bars in a layer shall not be less than:

- 1.5 times the nominal diameter of the bars
- 1.5 times the maximum size of the course aggregate
- 1.5 inches

36.3.8 Maximum Spacing of Reinforcement

Per **LRFD [5.10.3.2]**, the spacing of reinforcement in walls and slabs shall not exceed:

- 1.5 times the thickness of the member (3.0 times for temperature and shrinkage)
- 18 inches

36.3.9 Edge Beams

Per **LRFD [12.11.2.1]**, for cast-in-place box culverts, and for precast box culverts with top slabs having span to thickness ratios (s/t) > 18 or segment lengths < 4.0 feet, edge beams shall be provided as specified in **LRFD [4.6.2.1.4]** as follows:

- At ends of culvert runs where wheel loads travel within 24.0 inches from the end of the culvert
- At expansion joints of cast-in-place culverts where wheel loads travel over or adjacent to the expansion joint

The edge beam provisions are only applicable for culverts with less than 2.0 ft of fill, **LRFD [C12.11.2.1]**.

36.4 Design Loads

36.4.1 Self-Weight (DC)

Include the structure self-weight based on a unit weight of concrete of 0.150 kcf. When there is no fill on the top slab of the culvert, the top slab thickness includes a ½" wearing surface. The weight of the wearing surface is included in the design, but its thickness is not included in the section properties of the top slab.

36.4.2 Future Wearing Surface (DW)

If the fill depth over the culvert is greater than zero, the weight of the future wearing surface shall be taken as zero. If there is no fill depth over the culvert, the weight of the future wearing surface shall be taken as 20 psf. This load is designated as, DW, dead load of wearing surfaces and utilities, for application of load factors and limit state combinations.

36.4.3 Vertical and Horizontal Earth Pressure (EH and EV)

WisDOT Policy Item:

Box Culverts are assumed to be rigid frames. Use Vertical Earth Pressure load factors for rigid frames, in accordance with **LRFD [Table 3.4.1-2]**.

The weight of soil above the buried structure is taken as 0.120 kcf. A coefficient of lateral earth pressure of 0.5 is used for the lateral pressure from the soil. This coefficient of lateral earth pressure is based on an at-rest condition and an effective friction angle of 30º, **LRFD [3.11.5.2]**. The lateral earth pressure is calculated per **LRFD [3.11.5.1]**:

$$p = k_o \gamma_s z$$

Where:

p	=	Lateral earth pressure (ksf)
k_o	=	Coefficient of at-rest lateral earth pressure
γ_s	=	Unit weight of backfill (kcf)
z	=	Depth below the surface of earth fill or top of roadway pavement (ft)

WisDOT Policy Item:

For modification of earth loads for soil-structure interaction, embankment installations are always assumed for box culvert design, in accordance with **LRFD [12.11.2.2]**.

Soil-structure interaction for vertical earth loads is computed based on **LRFD [12.11.2.2]**. For embankment installations, the total unfactored earth load is:

$$W_E = F_e \gamma_s B_c H$$

In which:

$$F_e = 1 + 0.20 \frac{H}{B_c}$$

Where:

W_E	=	Total unfactored earth load (kip/ft width)
F_e	=	Soil-structure interaction factor for embankment installations (F_e shall not exceed 1.15 for installations with compacted fill along the sides of the box section)
γ_s	=	Unit weight of backfill (kcf)
B_c	=	Outside width of culvert, as specified in Figure 36.4-1 (ft)
H	=	Depth of fill from top of culvert to surface of earth fill or top of roadway pavement (ft)

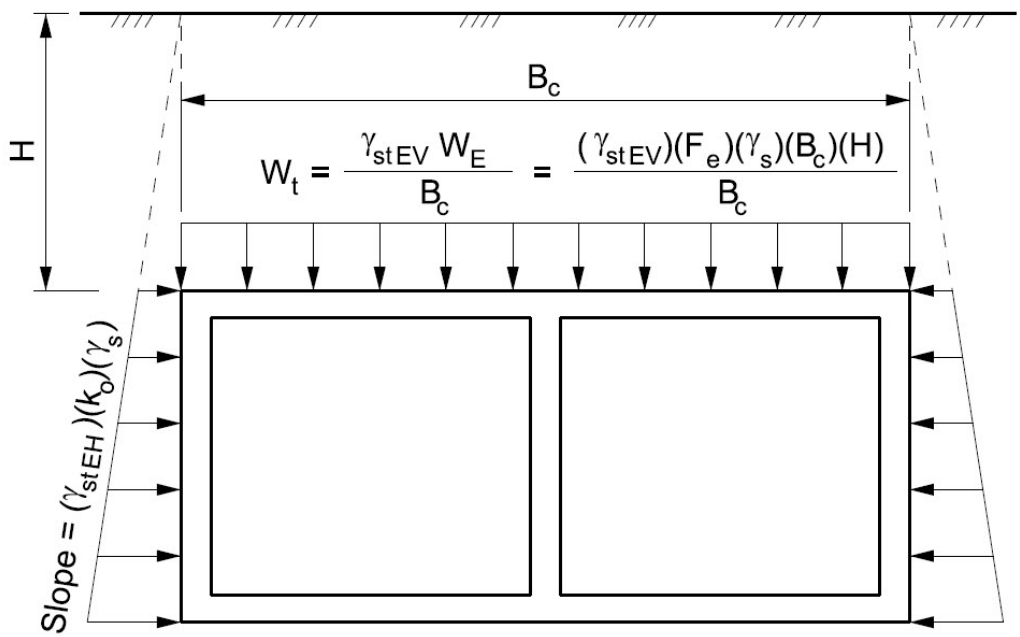

Figure 36.4-1
Factored Vertical and Horizontal Earth Pressures

Where:

W_t	=	Factored earth pressure on top of box culvert (ksf)
γ_{stEV}	=	Vertical earth pressure load factor
γ_{stEH}	=	Horizontal earth pressure load factor
k_o	=	Coefficient of at-rest lateral earth pressure
γ_s	=	Unit weight of backfill (kcf)

Figure 36.4-1 shows the factored vertical and horizontal earth load pressures acting on a box culvert. The soil pressure on the bottom of the box is not shown, but shall be determined for the design of the bottom slab. Note: vertical earth pressures, as well as other loads (e.g. DC and DW), are typically distributed equally over the bottom of the box when determining pressure distributions for the bottom slab. Pressure distributions from a refined analysis is typically not warranted for new culvert designs, but should be considered when evaluating existing culvert sections on culvert extension projects.

36.4.4 Live Load Surcharge (LS)

Per **LRFD [3.11.6.4]**, a live load surcharge shall be applied where vehicular load is expected to act on the surface of the backfill within a distance equal to one-half the distance from top of pavement to bottom of the box culvert.

Per **LRFD [Table 3.11.6.4-1]**, the following equivalent heights of soil for vehicular loading shall be used. The height to be used in the table shall be taken as the distance from the bottom of the culvert to the roadway surface. Use interpolation for heights other than those listed in the table.

Height (ft)	h_{eq} (ft)
5.0	4.0
10.0	3.0
≥ 20.0	2.0

Table 36.4-1
Equivalent Height of Soil for Vehicular Loading

Surcharge loads are computed based on a coefficient of lateral earth pressure times the unit weight of soil times the height of surcharge. A coefficient of lateral earth pressure of 0.5 is used for the lateral pressure from the soil, as discussed in 36.4.3. The uniform distributed load is applied to both exterior walls with the load directed toward the center of the box culvert. The load is designated as, LS, live load surcharge, for application of load factors and limit state combinations. Refer to **LRFD [3.11.6.4]** for additional information regarding live load surcharge.

36.4.5 Water Pressure (WA)

Static water pressure loads are computed when the water height on the outside of the box is greater than zero. The water height is measured from the bottom inside of the box culvert to the water level. The load is designated as, WA, water pressure load, for application of load factors and limit state combinations. Water pressure in culvert barrels is ignored. Refer to **LRFD [3.7.1]** for additional information regarding water pressure.

36.4.6 Live Loads (LL)

Live load consists of the standard AASHTO LRFD trucks and tandem. Per **LRFD [3.6.1.3.3]**, design loads are always axle loads (single wheel loads should not be considered) and the lane load is not used. The depth of fill is measured from top of culvert to surface of earth fill or top roadway pavement.

Where the depth of fill over the box is less than 2 feet, the wheel loads are distributed per **LRFD [4.6.2.10]**. Where the depth of fill is 2 feet or more, the wheel loads shall be uniformly distributed over a rectangular area with sides equal to the dimension of the tire contact area **LRFD [3.6.1.2.5]**, increased by the live load distribution factor (LLDF) in **LRFD [Table 3.6.1.2.6a-1]**, using the provisions of **LRFD [3.6.1.2.6b-c]**. Where areas from distributed wheel loads overlap at the top of the culvert, the total load is considered as uniformly distributed over the rectangular area (A_{LL}) defined by the outside limits described in **LRFD [3.6.1.2.6b-c]**.

Per **LRFD [3.6.1.2.6a]**, for single-span culverts, the effects of live load may be neglected where the depth of fill is more than 8.0 feet and exceeds the span length. For multiple span culverts, the effects may be neglected where the depth of fill exceeds the distance between inside faces of end walls.

Skew is not considered for design loads.

36.4.6.1 Depth of Fill Less than 2.0 ft.

Where the depth of fill is less than 2.0 ft, follow **LRFD [4.6.2.10]**.

36.4.6.1.1 Case 1 – Traffic Travels Parallel to Span

When the traffic travels primarily parallel to the span, follow **LRFD [4.6.2.10.2]**. Use a single lane and the single lane multiple presence factor of 1.2.

Distribution length perpendicular to the span:

$$E = (96 + 1.44(S))$$

Where:

E = Equivalent distribution width perpendicular to span (in.)

S = Clear span (ft)

The distribution of wheel loads perpendicular to the span for depths of fill less than 2.0 feet is illustrated in Figure 36.4-2.

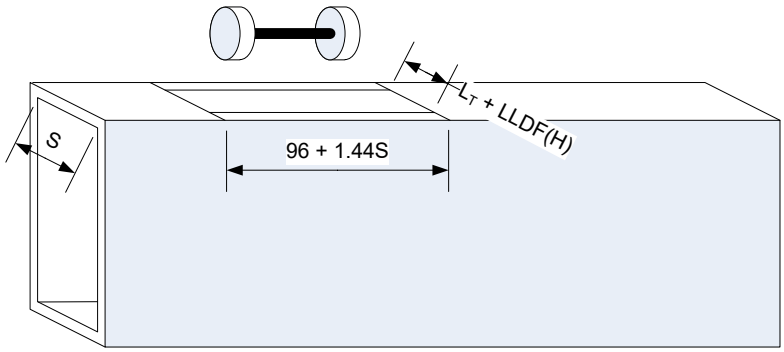

Figure 36.4-2
Distribution of Wheel Loads Perpendicular to Span, Depth of Fill Less than 2.0 feet

Distribution length parallel to the span:

$E_{span} = (L_T + LLDF\ (H))$

Where:

E_{span}	=	Equivalent distribution length parallel to span (in.)
L_T	=	Length of tire contact area parallel to span, as specified in **LRFD [3.6.1.2.5]** (in.)
LLDF	=	Factor for distribution of live load with depth of fill, 1.15, as specified in **LRFD [Table 3.6.1.2.6a-1]**.
H	=	Depth of fill from top of culvert to top of pavement (in.)

The distribution of wheel loads parallel to the span for depths of fill less than 2.0 feet is illustrated in Figure 36.4-3.

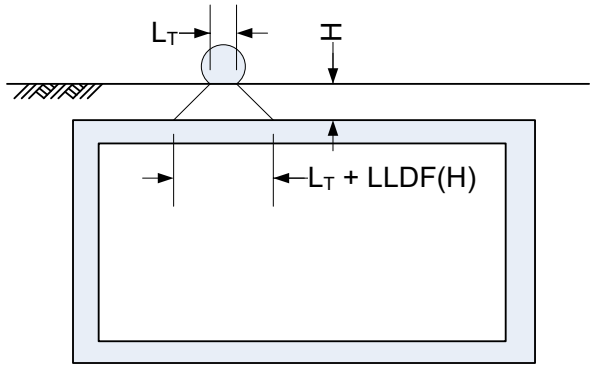

Figure 36.4-3
Distribution of Wheel Loads Parallel to Span, Depth of Fill Less than 2.0 feet

36.4.6.1.2 Case 2 - Traffic Travels Perpendicular to Span

When traffic travels perpendicular to the span, live load shall be distributed to the top slab using the equations specified in **LRFD [4.6.2.1]** for concrete decks with primary strips perpendicular to the direction of traffic per **LRFD[4.6.2.10.3]**. The effect of multiple lanes shall be considered. Use the multiple presence factor, m, as required per **LRFD [3.6.1.1.2]**.

For a cast-in-place box culvert, the width of the primary strip, in inches is:

+M: 26.0 + (6.6)(S)

-M: 48.0 + (3.0)(S)

as stated in **LRFD [Table 4.6.2.1.3-1]**

Where:

S	=	Spacing of supporting components (ft)
+M	=	Positive moment
-M	=	Negative moment

36.4.6.2 Depth of Fill Greater than or Equal to 2.0 ft.

Where the depth of fill is 2.0 ft or greater, follow **LRFD [3.6.1.2.6b-c]**. The effect of multiple lanes shall be considered. Use the multiple presence factor, m, as required per **LRFD [3.6.1.1.2]**.

36.4.6.2.1 Case 1 – Traffic Travels Parallel to Span

When the traffic travels primarily parallel to the span, follow **LRFD [3.6.1.2.6b]**.

For live load distribution <u>transverse</u> to span, the wheel/axle load interaction depth, $H_{int\text{-}t}$, shall be:

$$H_{\text{int}-t} = \frac{S_w - W_t/12 - 0.06D/12}{LLDF} \qquad \text{(ft)}$$

where $H < H_{int\text{-}t}$ (no lateral interaction); then $W_w = W_t/12 + LLDF\cdot(H) + 0.06\cdot(D/12)$

where $H \geq H_{int\text{-}t}$ (lateral interaction); then $W_w = W_t/12 + S_w + LLDF\cdot(H) + 0.06\cdot(D/12)$

For live load distribution <u>parallel</u> to span, the wheel/axle load interaction depth $H_{int\text{-}p}$ shall be:

$$H_{\text{int}-p} = \frac{S_a - \ell_t/12}{LLDF} \qquad \text{(ft)}$$

where $H < H_{int\text{-}p}$ (no longit. interaction); then $\ell_w = \ell_t/12 + LLDF\cdot(H)$

where $H \geq H_{int\text{-}p}$ (longit. interaction); then $\ell_w = \ell_t/12 + S_a + LLDF\cdot(H)$

Where:

D	=	Clear span of the culvert (in)
H	=	Depth of fill from top of culvert to top of pavement (in)
$H_{int\text{-}t}$	=	Wheel interaction depth transverse to span (ft)
$H_{int\text{-}p}$	=	Axle interaction depth parallel to span (ft)
LLDF	=	Live load distribution factor per **LRFD [Table 3.6.1.2.6a-1]**; (1.15)
W_t	=	Width of tire contact area, per **LRFD [3.6.1.2.5]**; (20 in)
ℓ_t	=	Length of tire contact area, per **LRFD [3.6.1.2.5]**; (10 in)
S_w	=	Wheel spacing; (6.0 ft)

S_a	=	Axle spacing (ft)
W_w	=	Live load patch width at depth H (ft)
ℓ_w	=	Live load patch length at depth H (ft)

$$A_{LL} = \ell_w \cdot W_w$$

Where:

A_{LL}	=	Rectangular area at depth H (ft^2)

The live load vertical crown pressure shall be:

$$P_L = \frac{P(1 + IM/100)(m)}{A_{LL}}$$

Where:

IM	=	Dynamic load allowance (%); (see 36.4.8)
m	=	Multiple presence factor per **LRFD [3.6.1.1.2]**
P	=	Live load applied at surface on all interacting wheels (kip)
P_L	=	Live load vertical crown pressure (ksf)

The longitudinal and transverse distribution widths for depths of fill greater than or equal to 2.0 feet are illustrated in Figure 36.4-4.

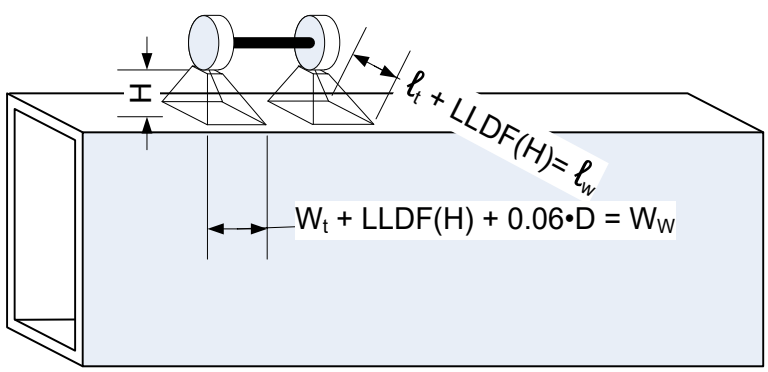

Figure 36.4-4
Distribution of Wheel Loads, Depth of Fill ≥ 2.0 feet (no lateral interaction)

36.4.6.2.2 Case 2 – Traffic Travels Perpendicular to Span

When traffic travels perpendicular to the span, live load shall be distributed to the top slab as described in **LRFD [3.6.1.2.6c]**.

36.4.7 Live Load Soil Pressures

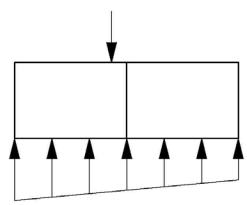

Figure 36.4-5
Vertical Soil Pressure under Culvert

The soil pressure on the bottom of the box is determined by moving the live load across the box. Find the location where the live load causes the maximum effects on the top slab of the box. At that location, determine the soil pressure diagram that will keep the system in equilibrium. Use the effects of this soil pressure in the bottom slab analysis.

36.4.8 Dynamic Load Allowance

Dynamic load allowance decreases as the depth of fill increases. **LRFD [3.6.2.2]** states that the impact on buried components shall be calculated as:

$$IM = 33(1.0 - 0.125(D_E)) \geq 0\%$$

Where:

D_E = Minimum depth of earth cover above the structure (ft)

36.4.9 Location for Maximum Moment

Create influence lines and use notional loading to determine the location for maximum moment. In this analysis, include cases for variable axle spacing and reverse axle order for unsymmetrical loading conditions.

For notional vehicles, only the portion of the loading that contributes to the effect being maximized is included. This is illustrated in Figure 36.4-6.

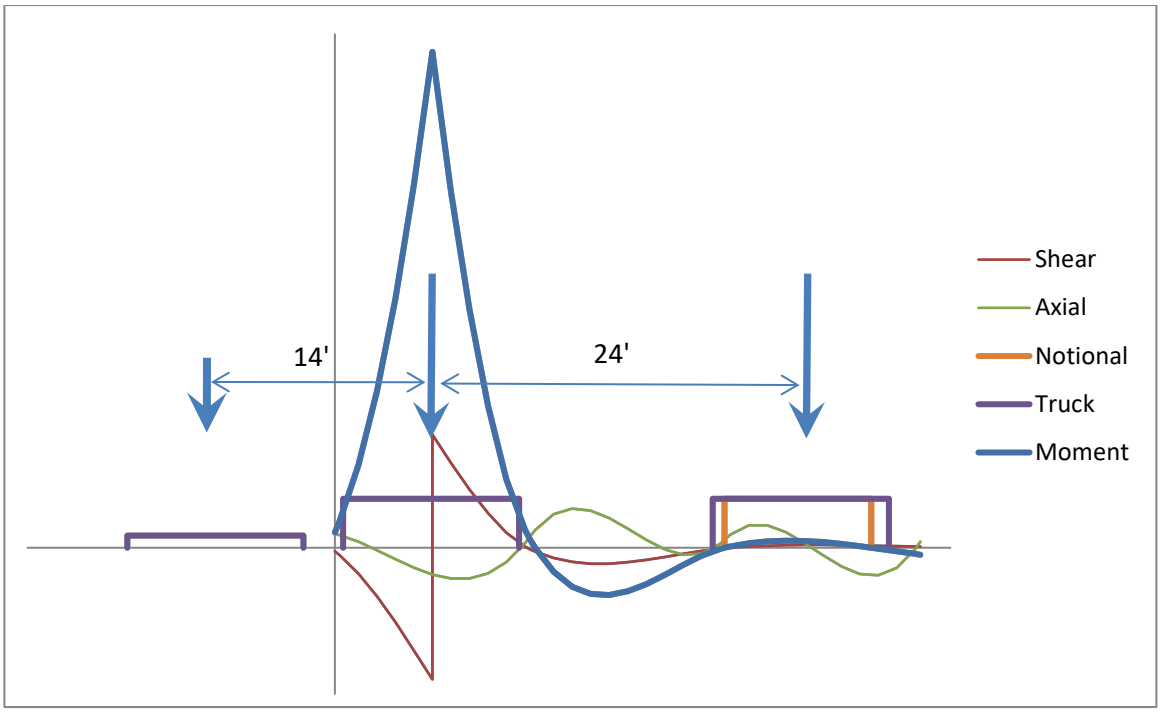

Figure 36.4-6
Application of Notional Loading using Influence Lines

The maximum positive moment results when the middle axial load is centered at the first positive peak while the variable rear axial spacing is 24 feet. Only the portion of the rear axial load in the positive region of the moment influence line is considered. The middle axial load and the portion of the rear axial in the positive region of the moment influence line are loaded on the shear and axial influence lines to compute the corresponding effects. Both positive and negative portions of the shear and axial influence lines are used when computing the corresponding effects. This process is repeated for maximizing the negative moment, shear and axial effects and computing the corresponding effects.

36.5 Design Information

Sidesway of the box is not considered because of the lateral support of the soil.

The centerline of the walls and top and bottom slabs are used for computing section properties and dimensions for analysis.

WisDOT Policy Item:

For skews 20 degrees or less, place the reinforcing steel along the skew. For skews over 20 degrees, place the reinforcing steel perpendicular to the centerline of box.

Culverts are analyzed as if the reinforcing steel is perpendicular to the centerline of box for all skew angles.

The minimum thickness of the top and bottom slab is 6½ inches. For pedestrian underpasses and slabs with fills less than 2 feet, the minimum thickness of the top slab should be 1 foot. Minimum wall thickness is based on the inside opening of the box (height) and the height of the apron wall above the floor. Use the following table to select the minimum wall thickness that meets or exceeds the three criteria in the table.

Minimum Wall Thickness (Inches)	Cell Height (Feet)	Apron Wall Height Above Floor (Feet)
8	< 6	< 6.75
9	6 to < 10	6.75 to < 10
10	10 to > 10	10 to < 11.75
11		11.75 to < 12.5
12		12.5 to 13

Table 36.5-1
Minimum Wall Thickness Criteria

All slab thicknesses are rounded to the next largest ½ inch.

Top and bottom slab thicknesses are determined by shear and moment requirements. Slab thickness shall be adequate to carry the factored shear without shear reinforcement.

All bar steel is detailed as being 2 inches clear with the following exceptions:

- The bottom steel in the bottom slab is detailed with 3 inches clear
- The top steel in the top slab of a box culvert with no fill is detailed with 2½ inches clear

A haunch is provided only when the slab depth required at the interior wall is more than 2 inches greater than that required for the remainder of the span. Only 45º haunches shall be used. Minimum haunch depth and length is 6 inches. Haunch dimensions are increased in 3 inch increments.

The slab thickness required is determined by moment or shear, whichever governs.

The shear in the top and bottom slabs is assumed to occur at a distance "d" from the face of the walls. The value for "d" equals the distance from the centroid of the reinforcing steel to the face of the concrete in compression. When a haunch is used, shear must also be checked at the end of the haunch.

For multi-cell culverts make interior and exterior walls of equal thickness.

Culverts shall be designed for live load and the range of fill between the shoulders of the roadway. The depth of fill is measured from the top of culvert to the surface of earth fill or top of roadway pavement. To accommodate future widening of the roadway, reduced sections may not be used on the ends of the culvert where there is less fill. Exceptions may be made with the approval of the Bureau of Structures where the culvert has high fills and a reduced section could be used for at least two panel pours per end of culvert. Culvert extensions shall be designed for the same range of fills as the original culvert. The extension design shall not have lower capacity than the original culvert. Maximum length of panel pour is 40 feet.

Barrel lengths are based on the roadway sections and wing lengths are based on a minimum 2 1/2:1 slope of fill from the top of box to apron. Consideration shall be given to match the typical roadway cross slope.

Dimensions on drawings are given to the nearest ¼ inch only.

36.6 Detailing of Reinforcing Steel

To calculate the required bar steel area and cutoff points a maximum positive and negative moment envelope is computed. It is assumed that the required bar lengths in the top slab are longer than those in the bottom slab. Therefore, cutoff points are computed for the top slab and are also used in the bottom slab.

36.6.1 Bar Cutoffs

Per **LRFD [5.10.8.1.2a]**, all flexural reinforcement shall be extended beyond the point at which it is no longer required to resist flexure for a distance not less than:

- The effective depth of the member
- 15 times the nominal diameter of the bar
- 1/20 of the clear span

Continuing reinforcement shall extend not less than the development length, ℓ_d (**LRFD [5.10.8.2]**) beyond the point where bent or terminated tension reinforcement is no longer required to resist flexure.

Per **LRFD [5.10.8.1.2b]**, at least one-third of the positive moment reinforcement in simple span members and one-fourth of the positive moment reinforcement in continuous span members shall extend along the same face of the member beyond the centerline of the support. In beams, such extension shall not be less than 6.0 in.

Per **LRFD [5.10.8.1.2c]**, at least one-third of the total tension reinforcement provided for negative moment at a support shall have an embedment length beyond the point of inflection not less than:

- The effective depth of the member
- 12 times the nominal diameter of the bar
- 0.0625 times the clear span

36.6.2 Corner Steel

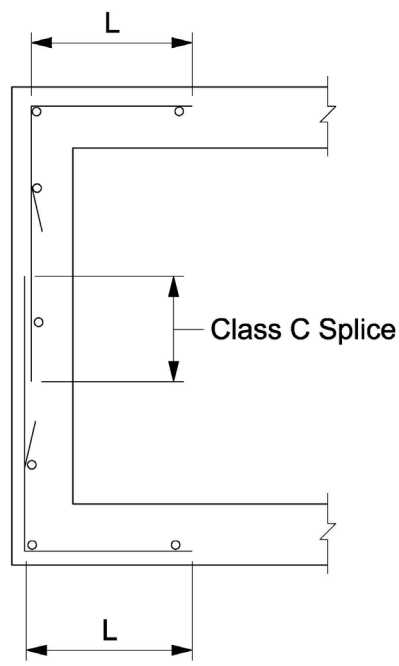

Figure 36.6-1
Layout of Corner Steel

The area of steel required is the maximum computed from using the top and bottom corner moments and the thickness of the slab or wall, whichever controls. Identical bars are used in the top and bottom corners. Identical length bars are used in the left and right corners if the bar lengths are within 2 feet of one another. Top and bottom negative steel is cut in the walls and detailed in two alternating lengths when a savings of over 2 feet in a single bar length can be obtained. Corner steel is always lapped at the center of the wall. If two bar lengths are used, only alternate bars are lapped.

Distance "L" is computed from the maximum negative moment envelope for the top slab and shall include the extension lengths discussed in 36.6.1.

36.6.3 Positive Moment Slab Steel

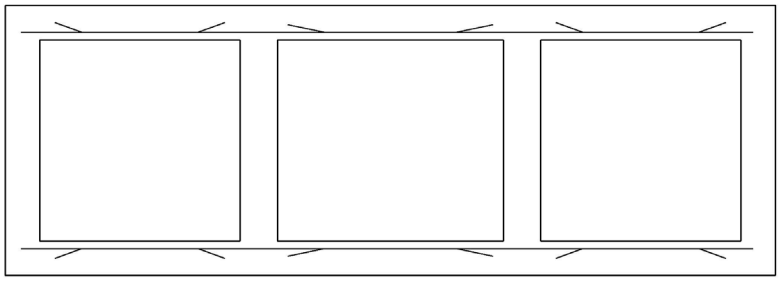

Figure 36.6-2
Layout of Positive Moment Steel

The area of steel required is determined by the maximum positive moments in each span. Top and bottom slab reinforcing steel may be of different size and spacing, but will have identical lengths. Detail two alternating bar lengths in a slab if 2 feet or more of bar steel can be saved in a single bar length.

When two alternating bar lengths are detailed in multi-cell culverts, run every other positive bar across the entire width of box. If this requires a length longer than 40 feet, lap them over an interior wall. For 2 or more cells, if the distance between positive bars of adjacent cells is 1 foot or less, make the bar continuous.

The cutoff points of alternate bars are determined from the maximum positive moment envelope for the top slab and shall include the extension lengths discussed in 36.6.1. These same points are used in the bottom slab. Identical bar lengths are used over multiple cells if bars are within 2 feet of one another.

36.6.4 Negative Moment Slab Steel over Interior Walls

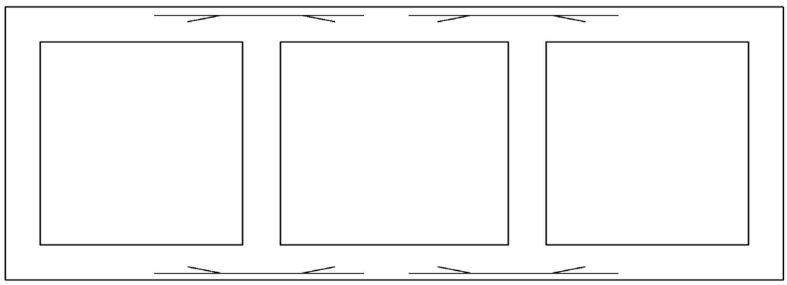

Figure 36.6-3
Layout of Negative Moment Steel

If no haunch is present, the area of steel required is determined by using the moment and effective depth at the face of the interior wall. If the slab is haunched, the negative reinforcement is determined per **LRFD [12.11.5.2],** which states that the negative moment is determined at the intersection of the haunch and uniform depth member. Top and bottom slab

reinforcing steel may be of different size and spacing, but will have identical lengths. Detail two alternating bar lengths in a slab if 2 feet or more of bar steel can be saved in a single bar length.

Cutoff points are determined from the maximum negative moment envelope of the top slab and shall include the extension lengths discussed in 36.6.1. The same bar lengths are then used in the bottom slab. Identical bar lengths are used over multiple interior walls if bars are within 2 feet of one another. The minimum length of any bar is 2 times the development length. For culverts of 3 or more cells, if the clear distance between negative bars of adjacent spans is 1 foot or less, make the bar continuous across the interior spans.

When there is no fill over the top slab, run the negative moment reinforcing steel across the entire width of the culvert. Refer to 36.6.8 for temperature and shrinkage requirements.

36.6.5 Exterior Wall Positive Moment Steel

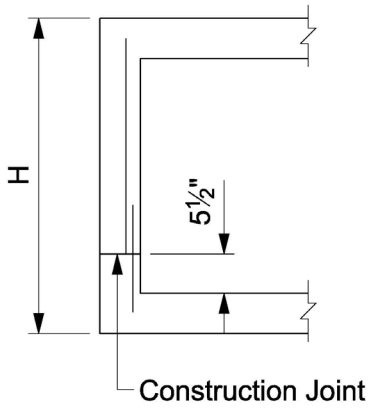

Figure 36.6-4
Layout of Exterior Wall Steel

The area of steel is determined by the maximum positive moment in the wall. A minimum of #4 bars at 18 inches is supplied. The wall bar is extended to 2 inch top clear and the dowel bar is extended to 3 inch bottom clear. A construction joint, 5 ½ inches above the bottom slab, is always used so a dowel bar must be detailed.

36.6.6 Interior Wall Moment Steel

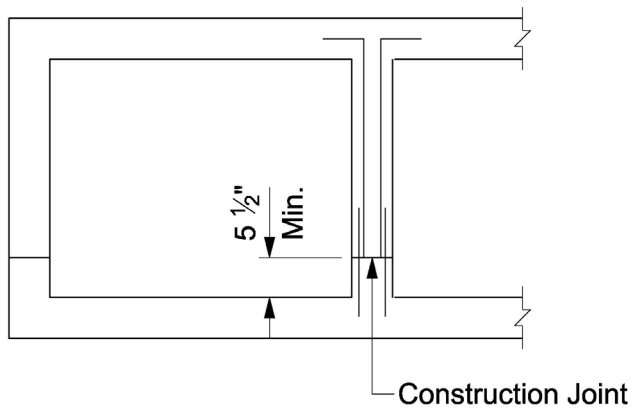

Figure 36.6-5
Layout of Interior Wall Steel

The area of steel is determined from the maximum moment at the top of the wall and the effective wall thickness. A minimum of #4 bars at 18 inches is supplied. Identical steel is provided at both faces of the wall. A 1 foot, 90 degree bend, is provided in the top slab with the horizontal portion being just below the negative moment steel. The dowel bar is extended to 3 inch bottom clear. A construction joint, 5 ½ inches above the bottom slab, is always used so a dowel bar must be detailed. When a haunch is provided, the construction joint is placed a distance above the bottom slab equal to the haunch depth plus 2 inches.

36.6.7 Distribution Reinforcement

Per **LRFD [5.12.2.1]**, transverse distribution reinforcement is not required for culverts where the depth of fill exceeds 2.0 feet.

Per **LRFD [12.11.2.1]**, provide distribution reinforcement for culverts with less than or equal to 2 feet of fill in accordance with **LRFD [9.7.3.2]**, which states that reinforcement shall be placed in the secondary direction in the bottom of slabs as a percentage of the primary reinforcement for positive moment as follows (for primary reinforcement parallel to traffic):

$$\text{Percentage} = \frac{100}{\sqrt{S}} \leq 50\%$$

Where:

S = Effective span length (ft) (for slabs monolithic with walls, this distance is taken as the face-to-face distance per **LRFD [9.7.2.3]**)

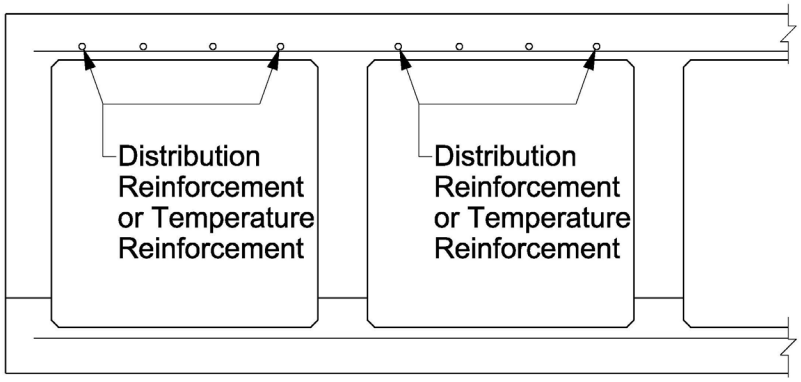

Figure 36.6-6
Layout of Distribution Steel

36.6.8 Shrinkage and Temperature Reinforcement

Shrinkage and temperature reinforcement is required on all inside culvert faces, negative moment regions in top slabs, and on both wingwall faces in each direction that does not already have strength or distribution reinforcement. Shrinkage and temperature reinforcement is not required on the outside (soil) face for culvert barrels. This includes exterior walls, the bottom of the bottom slab, and in some cases the top face of the top slab in the positive moment region. Per **LRFD [12.11.5.3.1]**, provide shrinkage and temperature reinforcement near the inside surfaces of walls and slabs in accordance with **LRFD [5.10.6]**, which states that the area of shrinkage and temperature steel per foot on each face and in each direction shall satisfy:

$$A_s \geq \frac{1.30bh}{2(b+h)f_y}$$

$$0.11 \leq A_s \leq 0.60$$

Where:

A_s	=	Area of reinforcement in each direction and each face (in^2/ft)
b	=	Least width of component section (in.)
h	=	Least thickness of component section (in.)
f_y	=	Specified yield strength of reinforcing bars ≤ 75 (ksi)

Where the least dimension varies along the length of the component, multiple sections should be examined to represent the average condition at each section.

Shrinkage and temperature reinforcement shall use a minimum of #4 bars at 18 inch centers in both directions.

36.7 Box Culvert Aprons

Five types of box culvert aprons are used. They are referred to as Type A, B, C, D and E. The angle that the wings make with the direction of stream flow is the main difference between the five types. The allowable headwater and other hydraulic requirements are what usually determine the type of apron required. Physical characteristics at the site may also dictate a certain type. For hydraulic design of different apron types see Chapter 8.

36.7.1 Type A

Type A, because of its poor hydraulic properties, is generally not used except for cattle or pedestrian underpasses.

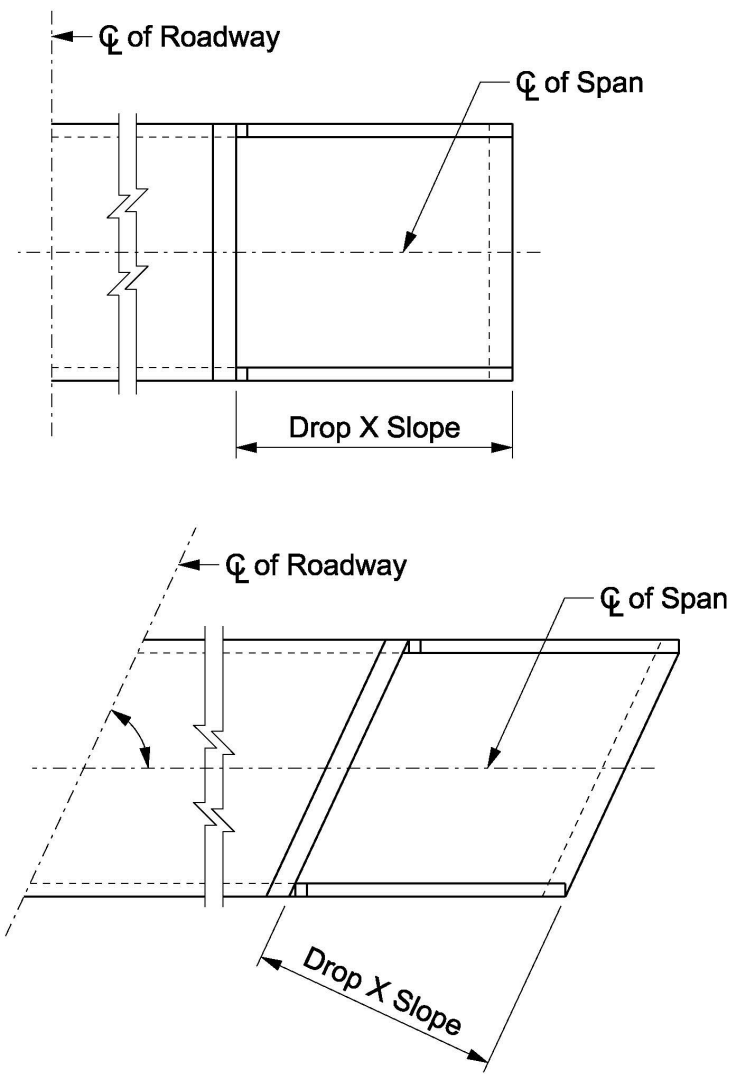

Figure 36.7-1
Plan View of Type A

36.7.2 Type B, C, D

Type B is used for outlets. Type C & D are of equal efficiency but Type C is used most frequently. Type D is used for inlets when the water is entering the culvert at a very abrupt angle. See Figure 36.7-2 for Wing Type B, C and D for guidance on wing angles for culvert skews.

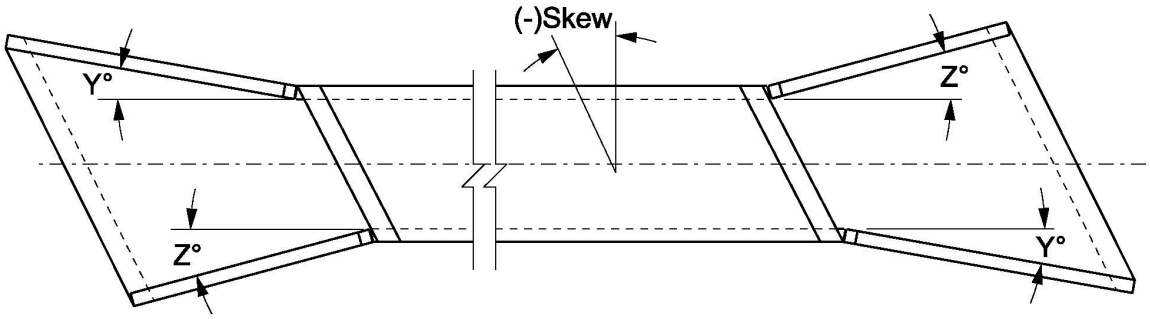

Skew		Wing Type B		Wing Type C		Wing Type D	
Greater Than	To Include	Angle Y	Angle Z	Angle Y	Angle Z	Angle Y	Angle Z
0°	7.5°	15°	15°	30°	30°	45°	45°
7.5°	15.0°	15°	15°	25°	30°	40°	45°
15.0°	22.5°	10°	15°	25°	30°	35°	45°
22.5°	37.5°	10°	15°	20°	30°	30°	45°
37.5°	45.0°	10°	15°	15°	30°	25°	45°
45.0°	52.5°	5°	15°	15°	30°	20°	45°
52.5°	67.5°	5°	15°	10°	30°	15°	45°
67.5°	75.0°	5°	15°	5°	30°	10°	45°
75.0°	82.5°	0°	15°	5°	30°	5°	45°
82.5°	90.0°	0°	15°	0°	30°	0°	45°

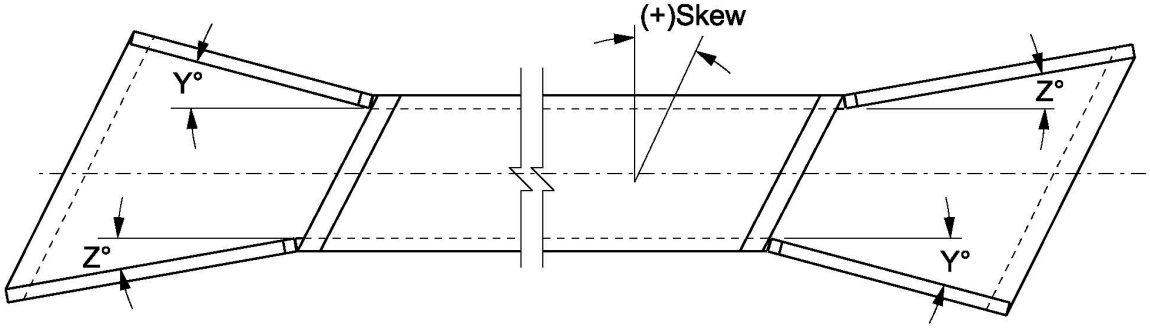

Skew		Wing Type B		Wing Type C		Wing Type D	
Greater Than	To Include	Angle Y	Angle Z	Angle Y	Angle Z	Angle Y	Angle Z
0°	7.5°	15°	15°	30°	30°	45°	45°
7.5°	15.0°	15°	15°	30°	25°	45°	40°
15.0°	22.5°	15°	10°	30°	25°	45°	35°
22.5°	37.5°	15°	10°	30°	20°	45°	30°
37.5°	45.0°	15°	10°	30°	15°	45°	25°
45.0°	52.5°	15°	5°	30°	15°	45°	20°
52.5°	67.5°	15°	5°	30°	10°	45°	15°
67.5°	75.0°	15°	5°	30°	5°	45°	10°
75.0°	82.5°	15°	0°	30°	5°	45°	5°
82.5°	90.0°	15°	0°	30°	0°	45°	0°

Figure 36.7-2
Wing Type B, C, D (Angles vs. Skew)

36.7.3 Type E

Type E is used primarily in urban areas where a sidewalk runs over the culvert and it is necessary to have a parapet and railing along the sidewalk. For Type E the wingwalls run parallel to the roadway just like the abutment wingwalls of most bridges. It is also used where Right of Way (R/W) is a problem and the aprons would extend beyond the R/W for other types. Wingwall lengths for Type E wings are based on a minimum channel side slope of 1.5 to 1.

36.7.4 Wingwall Design

Culvert wingwalls are designed using a 1 foot surcharge height, a unit weight of backfill of 0.120 kcf and a coefficient of lateral earth pressure of 0.5, as discussed in 36.4.3. When the wingwalls are parallel to the direction of traffic and where vehicular loads are within ½ the wall height from the back face of the wall, design using a surcharge height representing vehicular load per **LRFD [Table 3.11.6.4-2]**. Load and Resistance Factor Design is used, and the load factor for lateral earth pressure of γ_{EH} = 1.69 is used, based on past design experience. The lateral earth pressure was conservatively selected to keep wingwall deflection and cracking to acceptable levels. Many wingwalls that were designed for lower horizontal pressures have experienced excessive deflections and cracking at the footing. This may expose the bar steel to the water that flows through the culvert and if the water is of a corrosive nature, corrosion of the bar steel will occur. This phenomena has led to complete failure of some wingwalls throughout the State.

For wing heights of 7 feet or less determine the area of steel required by using the maximum wall height and use the same bar size and spacing along the entire wingwall length. The minimum amount of steel used is #4 bars at 12 inch spacing. Wingwall thickness is made equal to the barrel wall thickness.

For wing heights over 7 feet the wall length is divided into two or more segments to determine the area of steel required. Use the same bar size and spacing throughout each segment, as determined by using the maximum wall height in the segment.

Wingwalls must satisfy Strength I Limit State for flexure and shear, and Service I Limit State for crack control, minimum reinforcement, and reinforcement spacing. Adequate shrinkage and temperature reinforcement shall be provided.

36.8 Box Culvert Camber

Camber of culverts is a design compensation for anticipated settlement of foundation soil beneath the culvert. Responsibility for the recommendation and calculation of camber belongs to the Regional Soils Engineer. Severe settlement problems with accompanying large camber are to be checked with the Geotechnical Section.

Both total and differential settlement need to be considered to determine the amount of box camber required to avoid adverse profile sag and undesirable separation at culvert joints per **LRFD [12.6.2.2]**. If the estimated settlement is excessive, contingency measures will need to be considered, such as preloading with embankment surcharge, undercutting and subgrade stabilization. To evaluate differential settlement, it will be necessary to calculate settlement at more than one point along the length of the box culvert.

36.8.1 Computation of Settlement

Settlement should be evaluated at the Service Limit state in accordance with **LRFD [12.6.2.2]** and **LRFD [10.6.2]**, and consider instantaneous elastic consolidation and secondary components. Elastic settlement is the instantaneous deformation of the soil mass that occurs as the soil is loaded. Consolidation settlement is the gradual compression of the soil skeleton when excess pore pressure is forced out of the voids in the soil. Secondary settlement, or creep, occurs as a result of plastic deformation of the soil skeleton under constant effective stress. Secondary settlement is typically not significant for box culvert design, except where there is an increase in effective stress within organic soil, such as peat. If secondary settlement is a concern, it should be estimated in accordance with **LRFD [10.6.2.4]**.

Total settlement, including elastic, consolidation and secondary components may be taken in accordance with **LRFD [10.6.2.4.1]** as:

$$S_t = S_e + S_c + S_s$$

Where:

S_t = Total settlement (ft)

S_e = Elastic settlement (ft)

S_c = Primary consolidation settlement (ft)

S_s = Secondary settlement (ft)

To compute settlement, the subsurface soil profile should be subdivided into layers based on stratigraphy to a depth of about 3 times the box width. The maximum layer thickness should be 10 feet.

Primary consolidation settlement for normally-consolidated soil is computed using the following equation in accordance with **LRFD [10.6.2.4.3]**:

$$S_c = \left[\frac{H_c}{1+e_o}\right] c_c \log_{10}\left[\frac{\sigma'_f}{\sigma'_o}\right]$$

Where:

S_c	=	Primary consolidation settlement (ft)
H_c	=	Initial height of compressible soil layer (ft)
e_o	=	Void ratio at initial vertical effective stress
C_c	=	Compression index which is a measure of the compressibility of a soil. It is the slope of the straight-line part of the e-log p curve from a conventional consolidation (oedometer) test.
σ'_f	=	Final vertical effective stress at midpoint of soil layer under consideration (ksf)
σ'_o	=	Initial vertical effective stress at midpoint of soil layer under consideration (ksf)

If the soil is over-consolidated, reference is made to **LRFD [10.6.2.4.3]** to estimate consolidation settlement.

Further description for the above equations and consolidation test can be found in most textbooks on soil mechanics.

For preliminary investigations C_c can be determined from the following approximate formula, found in most soil mechanics textbooks:

Non organic soils: $C_c = 0.007\ (LL-10)$

Where:

LL	=	Liquid limit expressed as whole number.

If the in-place moisture content approaches the plastic limit the computed C_c is decreased by 75%. If the in-place moisture content is near the liquid limit use the computed value. If the in-place moisture content is twice the liquid limit the computed C_c is increased by 75%. For intermediate moisture contents the percent change to the computed C_c is determined from a straight line interpolation between the corrections mentioned above.

If settlements computed by using the approximate value of C_c exceed 1.5 feet, a consolidation test is performed. As in-place moisture content approaches twice the liquid limit, settlement is caused by a local shear failure and the consolidation equation is no longer applicable.

The consolidation equation is applied to only compressible silts and clays. Sands are of a lower compressibility and no culvert camber is required until the fill exceeds 25 feet. When the fill exceeds 25 feet for sand, a camber of 0.01 feet per foot of fill is used.

36.8.2 Configuration of Camber

The following guides are to be followed when detailing camber.

- It is unnecessary to provide gradual camber. "Brokenback" camber is closer to the actual settlement which occurs.
- Settlement is almost constant from shoulder point to shoulder point. It then reduces to the ends of the culvert at the edge of the fill.
- The ends of the culvert tend to come up if side slopes are steeper than 2½ to 1. With 2 to 1 side slopes camber is increased 10% to compensate for this rise.

36.8.3 Numerical Example of Settlement Computation

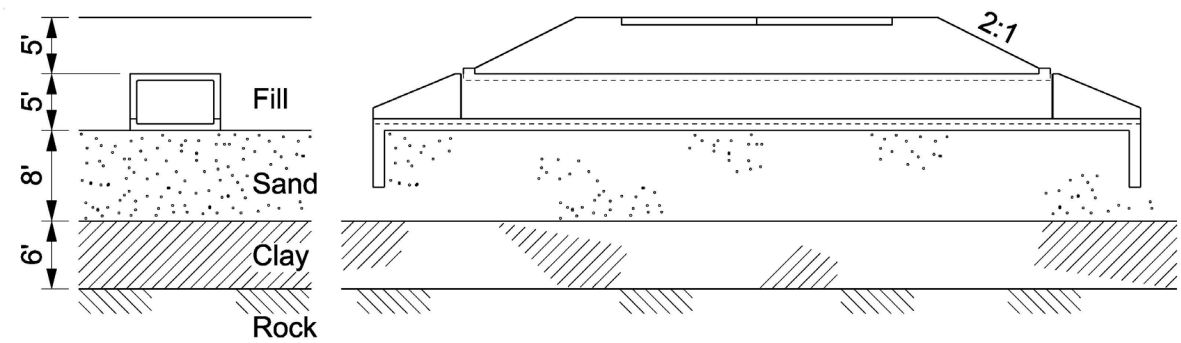

Figure 36.8-1
Soil Strata under Culvert

A box culvert rests on original ground consisting of 8 feet of sand and 6 feet of clay over bedrock. Estimate the settlement of the culvert if 10 feet of fill is placed on the original ground after the culvert is constructed. The in-place moisture content and liquid limit equal 40%. The initial void ratio equals 0.98. The unit weight of the clay is 105 pcf and that of the fill and sand is 110 pcf. There is no water table.

σ'_o = (8 ft)(110 pcf) + (3 ft)(105 pcf) = 1195 psf

$\sigma'_f = \sigma'_o$ + (10 ft)(110 pcf) = 1195 psf + 1100 psf = 2295 psf

C_c = 0.007 (40-10) = 0.21 (approximate value)

$$S_c = \left[\frac{H_c}{1+e_o}\right] c_c \log_{10}\left[\frac{\sigma'_f}{\sigma'_o}\right] = \frac{6\text{ft}}{1+0.98} 0.21 * \log_{10}\left[\frac{2295\text{psf}}{1195\text{psf}}\right] = 0.18\text{ft}$$

36.9 Box Culvert Structural Excavation and Structure Backfill

All excavations for culverts and aprons, unless on bedrock or fill, are to include a 6 inch minimum undercut and backfilled with structural backfill, as described in the specification. This undercut is for construction purposes and provides a solid base for placing reinforcement and pouring the bottom slab. For fill sections, it is assumed that placed fills provide a solid base and structural backfill is not needed. For cut sections, deeper under cuts may be warranted to mitigate differential settlement.

All volume excavated and not occupied by the new structure should be backfilled with structure backfill for the full length of the box culvert, including the apron.

See Standard Detail 9.01 – Structure Backfill Limits and Notes – for typical pay limits and plan notes.

36.10 Box Culvert Headers

For skews of 20 degrees and less the main reinforcing steel is parallel to the end of the barrel. A header is not required for structural purposes but is used to prevent the fill material from spilling into the apron. A 12 inch wide by 6 inch high (above the top of top slab) header with nominal steel is therefore used for skews of 20 degrees and less on the top slab. No header is used on the bottom slab.

For skews over 20 degrees the main reinforcing is not parallel to the end of the barrel. The positive reinforcing steel terminates in the header and thus the header must support, in addition to its own dead load, an additional load from the dead load of the slab and fill above it. A portion of the live load may also have to be supported by the header.

The calculation of the actual load that a header must support becomes a highly indeterminate problem. For this reason a rational approach is used to determine the amount of reinforcement required in the headers. The design moment capacity of the header must be equal to or greater than 1.25 times the header dead load moment (based on simple span) plus 1.75 times a live load moment from a 16 kip load assuming 0.5 fixity at ends.

To prevent a traffic hazard, culvert headers are designed not to protrude above the ground line. For this reason the height of the header above the top of the top slab is typically selected to be 6 inches. The width of the header is standardized at 18 inches.

The header in the following figure gives the design moment capacities listed using d = 8.5 inches.

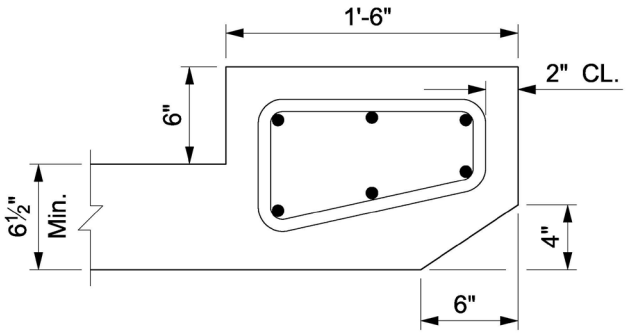

Bar Size	Moment Capacity ft.-kip
#6	46.1
#7	60.7
#8	76.5
#9	92.1
#10	109.1

Figure 36.10-1
Header Details (Skews > 20°)

The following size bars are recommended for the listed header lengths where "Header Length" equals the distance between C/L of walls in one cell measured along the skew.

Header Length	Bar Size [1]
To 11’	#7
Over 11’ to 14’	#8
Over 14’ to 17’	#9
Over 17’ to 20’	#10

Table 36.10-1
Header Reinforcement

[1] Use the bar size listed in each header and place 3 bars on the top and 3 bars on the bottom. Use a header on both the top and bottom slab. See the Standard *Box Culvert Details* in Chapter 36.

Where headers greater than 6 inches in height are used to retain roadway fill, the top slab shall be designed to handle the bending moment transmitted from the header. Additional reinforcement may be required.

Where barriers are placed on top of the culvert header, the barrier, header, and top slab shall be designed for vehicular impact forces.

36.11 Plan Detailing Issues

36.11.1 Weep Holes

Investigate the need for weep holes for culverts in cohesive soils. These holes are to relieve the hydrostatic pressure on the sides of the culverts. Where used, place the weep holes 1 foot above normal water elevation but a minimum of 1 foot above the lower sidewall construction joint. Do not place weep holes closer than 1 foot from the bottom of the top slab.

36.11.2 Cutoff Walls

Where dewatering the cutoff wall in sandy terrain is a problem, the concrete may be poured in the water. Place a note on the plans allowing concrete for the cutoff wall to be placed in the water.

36.11.3 Nameplate

Designate a location on the wingwall for placement of the nameplate. Locate nameplate on the first right wing traveling in the Cardinal direction (North/East).

36.11.4 Plans Policy

If a cast-in-place reinforced concrete box culvert is used, full plans must be provided and sealed by a professional engineer to the Bureau of Structures for approval. The plans must be in accordance with the *Bridge Manual* and Standards.

36.11.5 Rubberized Membrane Waterproofing

When required by the Standard Details, place the bid item "Rubberized Membrane Waterproofing" on the final plans. The quantity is given square yards.

36.12 Precast Four-Sided Box Culverts

In general, structural contractors prefer cast-in-place culverts while grading contractors prefer precast culverts. Precast culverts have been more expensive than cast-in-place culverts in the past, but allow for reduced construction time. Box culverts that are less than 20 square feet are considered roadway culverts. All other culverts require a B or C number along with the appropriate plans. All culverts requiring a number should be processed through the Bureau of Structures.

When a precast culvert is selected as the best structure type for a particular project during the design study phase, preliminary plans and complete detailed final plans are required to be sent to the Bureau of Structures for approval. The design and fabrication must be in accordance with ASTM Specification C1577, *AASHTO LRFD Specifications*, and the Bridge Manual.

Sometimes a complete set of plans is created for a cast-in-place culvert and a precast culvert is stated to be an acceptable alternate. If the contractor selects the precast alternate, the contractor is to submit shop drawings, sealed by a professional engineer, to the Bureau of Structures for approval. The design and fabrication must be in accordance with ASTM Specification C1577, *AASHTO LRFD Specifications*, and the Bridge Manual.

36.13 Other Buried Structures

The following section provides general guidance on cross-drain alternatives to concrete box culverts.

36.13.1 General

Typical alternatives to four-sided (box) concrete structures include three-sided (bottomless) concrete structures and metal buried structures. These structures are available in a variety of shapes, sizes, and material types. In general, three-sided structures may be cost prohibitive when deep foundations are required.

Concrete buried structures are rigid structures that can be constructed using cast-in-place or precast concrete. These structures obtain strength through reinforced concrete sections that have proven to be durable and long-lasting. Refer to 36.13.2 for additional information on three-sided concrete structures.

Metal buried structures are typically constructed with factory assembled corrugated sections or field assembled structural plates. Commonly used shapes include pipes and pipe-arches consisting of steel or aluminum alloy. These flexible structures obtain strength through soil-structure interactions that allow for the use of thin-walled sections. Some advantages of metal buried structures include; increased speed of installation, potential initial cost savings, and the variety of available shapes. Some disadvantages include their susceptibility to damage and/or degradation and performance being dependent on the quality of installation. Refer to 36.13.3 and FDM 13-1 for additional information on metal buried structures.

Buried structures assigned a structure number shall be coordinated with the Bureau of Structures and follow the policies and procedures as stated in the Bridge manual and FDM 13-1. Refer to 2.5 for information on assigning structure numbers.

Refer to AASHTO LRFD Section 12 – Buried Structures and Tunnel Liners for additional information.

36.13.2 Three-Sided Concrete Structures

Three-sided box culvert structures are divided into two categories: cast-in-place three sided structures and precast three-sided structures. These structures shall follow the criteria outlined below.

36.13.2.1 Cast-In-Place Three-Sided Structures

To be developed

36.13.2.2 Precast Three-Sided Structures

Three-sided precast concrete structures offer a cost effective, convenient solution for a variety of bridge needs. The selection of whether a structure over a waterway should be a culvert, a three-sided precast concrete structure or a bridge is heavily influenced by the hydraulic

opening. As the hydraulic opening becomes larger, the selection process for structure type progresses from culvert to three-sided precast concrete structure to bridge. Cost, future maintenance, profile grade, staging, skew, soil conditions and alignment are also important variables which should be considered. Culverts generally have low future maintenance; however, culverts should not be considered for waterways with a history or potential of debris to avoid channel cleanout maintenance. In these cases a three-sided precast concrete structure may be more appropriate. Three-sided precast concrete structures have the advantage of larger single and multiple openings, ease of construction, and low future maintenance costs.

A precast-concrete box culvert may be recommended by the Hydraulics Team. The side slope at the end or outcrop of a box culvert should be protected with guardrail or be located beyond the clear zone.

The hydraulic recommendations will include the Q_{100} elevation, the assumed flowline elevation, the required span, and the required waterway opening for all structure selections. The designer will determine the rise of the structure for all structure sections.

A cost comparison is required to justify a three-sided precast concrete structure compared to other bridge/culvert alternatives.

To facilitate the initiation of this type of project, the BOS is available to assist the Owners and Consultants in working out problems which may arise during plan development.

Some of the advantages of precast three-sided structures are listed below:

- Speed of Installation: Speed of installation is more dependent on excavation than product handling and placement. Precast concrete products arrive at the jobsite ready to install. Raw materials such as reinforcing steel and concrete do not need to be ordered, and no time is required on site to set up forms, place concrete, and wait for the concrete to cure. Precast concrete can be easily installed on-demand and immediately backfilled.

- Environmentally Friendly: Precast concrete is ready to be installed right off the delivery truck, which means less storage space needed for scaffolding and rebar. There is less noise pollution from ready-mix trucks continually pulling up on site and less waste as a result of using precast (i.e. no leftover steel, no pieces of scaffolding and no waste concrete piles). The natural bottom on a three-sided structure is advantageous to meet fish passage and DNR requirements.

- Quality Control: Because precast concrete products are produced in a quality-controlled environment with proper curing conditions, these products exhibit higher quality and uniformity over cast-in-place structures.

- Reduced Weather Dependency: Weather does not delay production of precast concrete as it can with cast-in-place concrete. Additionally, weather conditions at the jobsite do not significantly affect the schedule because the "window" of time required for installation is small compared to other construction methods, such as cast-in-place concrete.

- Maintenance: Single span precast three-sided structures are less susceptible to clogging from debris and sediment than multiple barrel culvers with equivalent hydraulic openings.

36.13.2.2.1 Precast Three-Sided Structure Span Lengths

WisDOT BOS allows and provides standard details for the following precast three-sided structure span lengths:

14'-0, 20'-0, 24'-0, 28'-0, 36'-0, 42'-0

Dimensions, rises, and additional guidance for each span length are provided in the standard details.

36.13.2.2.2 Segment Configuration and Skew

It is not necessary for the designer to determine the exact number and length of segments. The final structure length and segment configuration will be determined by the fabricator and may deviate from that implied by the plans.

A zero degree skew is preferable but skews may be accommodated in a variety of ways. Skew should be rounded to the nearer most-practical 5 deg., although the nearer 1 deg. is permissible where necessary. The range of skew is dependent on the design span and the fabrication limitations. Some systems are capable of fabricating a skewed segment up to a maximum of 45 degrees. Other systems accommodate skew by fabricating a special trapezoidal segment. If adequate right-of-way is available, skewed projects may be built with all right angle segments provided the angle of the wingwalls are adjusted accordingly. The designer shall consider the layout of the traffic lanes on staged construction projects when determining whether a particular three-sided precast concrete structure system is suitable.

Square segments are more economical if the structure is skewed. Laying out the structure with square segments will result in the greatest right-of-way requirement and thus allow ample space for potential redesign by the contractor, if necessary, to another segment configuration.

For a structure with a skew less than or equal to 15 deg., structure segments may be laid out square or skewed. Skewed segments are preferred for short structures (approximately less than 80 feet in length). Square segments are preferred for longer structures. However, skewed segments have a greater structural span. A structure with a skew of greater than 15 deg. requires additional analysis per the AASHTO LRFD Bridge Design Specifications. Skewed segments and the analysis both contribute to higher structure cost.

For a structure with a skew greater than 15 deg, structure segments should be laid out square. The preferred layout scheme for an arch-topped structure with a skew of greater than 15 deg should assume square segments with a sloping top of headwall to yield the shortest possible wingwalls. Where an arch-topped structure is laid out with skewed ends (headwalls parallel to the roadway), the skew will be developed within the end segments by varying the lengths of the legs as measured along the centerline of the structure. The maximum attainable skew is controlled by the difference between the full-segment leg length as recommended by the arch-topped-structure fabricator and a minimum leg length of 2 feet.

36.13.2.2.2.1 Minimum Fill Height

Minimum fill over a precast three-sided structure shall provide sufficient fill depth to allow adequate embedment for any required beam guard plus 6”. Refer to Standard 36.10 for further information.

Barriers mounted directly to the precast units are not allowed, as this connection has not been crash tested.

36.13.2.2.2.2 Rise

The maximum rises of individual segments are shown on the standard details. This limit is based on the fabrication forms and transportation. The maximum rise of the segment may also be limited by the combination of the skew involved because this affects transportation on the truck. Certain rise and skew combinations may still be possible but special permits may be required for transportation. The overall rise of the three-sided structure should not be a limitation when satisfying the opening requirements of the structure because the footing is permitted to extend above the ground to meet the bottom of the three-sided segment.

36.13.2.2.2.3 Deflections

Per **LRFD [2.5.2.6.2]**, the deflection limits for precast reinforced concrete three-sided structures shall be considered mandatory.

36.13.2.3 Plans Policy

If a precast or cast-in-place three-sided culvert is used, full design calculations and plans must be provided and sealed by a professional engineer to the Bureau of Structures for approval. The plans must be in accordance with the *Bridge Manual* and Standards.

The designer should use the span and rise for the structure selection shown on the plans as a reference for the information required on the title sheet. The structure type to be shown on the Title, Layout and General Plan sheets should be Precast Reinforced Concrete Three-Sided Structure.

The assumed elevations of the top of the footing and the base of the structure leg should be shown. For preliminary structure layout purposes, a 2-foot footing thickness should be assumed with the base of the structure leg seated 2 inches below the top-of-footing elevation. With the bottom of the footing placed at the minimum standard depth of 4 feet below the flow line elevation, the base of the structure leg should therefore be shown as 2’-2” below the flow line. An exception to the 4-foot depth will occur where the anticipated footing thickness is known to exceed 2 feet, where the footing must extend to rock, or where poor soil conditions and scour concerns dictate that the footing should be deeper.

The structure length and skew angle, and the skew, length and height of wingwalls should be shown. For a skewed structure, the wingwall geometrics should be determined for each wing. The sideslope used to determine the wing length should be shown on the plans.

If the height of the structure legs exceeds 10 feet, pedestals should be shown in the structure elevation view.

The following plan requirements shall be followed:

1. Preliminary plans are required for all projects utilizing a three-sided precast concrete structure.

2. Preliminary and Final plans for three-sided precast concrete structures shall identify the size (span x rise), length, and skew angle of the bridge.

3. Final plans shall include all geometric dimensions and a detailed design for the three-sided precast structure, all cast-in-place foundation units and cast-in-place or precast wingwalls and headwalls.

4. Final plans shall include the pay item Three-Sided Precast Concrete Structure and applicable pay items for the remainder of the substructure elements.

5. Final plans shall be submitted along with all pertinent special provisions to the BOS for review and approval.

In addition to foundation type, the wingwall type shall be provided on the preliminary and final plans. Similar to precast boxes, a wingwall design shall be provided which is supported independently from the three-sided structure. The restrictions on the use of cast-in-place or precast wings and headwalls shall be based on site conditions and the preferences of the Owner. These restrictions shall be noted on the preliminary and final plans.

36.13.2.4 Foundation Requirements

Precast and cast-in-place three-sided structures that are utilized in pedestrian or cattle underpasses can be supported on continuous spread or pile supported footings. Precast and cast-in-place three-sided structures that are utilized in waterway applications shall be supported on piling to prevent scour.

The footing should be kept level if possible. If the stream grade prohibits a level footing, the wingwall footings should be laid out to be constructed on the same plane as the structure footings. Continuity shall be established between the structural unit footing and the wingwall footing.

The allowable soil bearing pressure should be shown on the plans. Weak soil conditions could require pile foundations. If the footing is on piling, the nominal driving resistance should be shown. Where a pile footing is required, the type and size of pile and the required pile spacing, and which piles are to be battered, should be shown on the plans.

The geotechnical engineer should provide planning and design recommendations to determine the most cost effective and feasible foundation treatment to be used on the preliminary plans.

36.13.2.5 Precast Versus Cast-in-Place Wingwalls and Headwalls

The specifications for three-sided precast concrete structures permits the contractor to substitute cast-in-place for precast wingwalls and headwalls, and vice versa when cast-in-place is specified unless prohibited on the plans. Three-sided structures should be provided with adequate foundation support to satisfy the design assumptions permitting their relatively thin concrete section. These foundations are designed and provided in the plans. Spread footing foundations are most commonly used since they prove cost effective when rock or scour resistant soils are present with adequate bearing and sliding resistance. The use of precast spread footings shall be controlled by the planner and shall only be allowed when soil conditions permit and shall not be allowed to bear directly on rock or when rock is within 2 feet of the bottom of the proposed footing. When lower strength soils are present, or scour depths become large, a pile supported footing shall be used. The lateral loading design of the foundation is important because deflection of the pile or footing should not exceed the manufacturers' recommendations to preclude cracks developing.

36.13.3 Metal Buried Structures

The following section provides guidance on metal buried structures. This guidance should be used in addition to the guidance provided by FDM 13-1.

Use of metal buried structures shall be evaluated on a project-by-project basis to ensure hydraulic, geotechnical, and structural criteria are satisfied. This should include a comparison of alternatives considering, but not limited to; hydraulic sizing, scour potential, costs, project schedule, and structure durability. The evaluation should then be followed by a material selection investigation for structure type justifications.

Use of metal buried structures for long spans, generally defined as spans greater than 7 ft, has been limited. The Department has experienced some corrosion issues with metal structures, which includes metal pipe failures and severe section loss. These issues are likely due to the following sources: low pH environment, low resistivity environment, active anaerobic sulfate reducing bacteria, and exposure to chlorides. While research has shown corrosion and/or abrasion concerns can be addressed to better ensure structures can satisfy their intended service life [1], reinforced concrete structures are still recommended over metal structures, especially for higher volume roadways. To ensure that a metal buried structure is suitable for a given site, the following criteria shall be followed:

Site Investigation: The geotechnical investigation shall investigate corrosion potential and abrasion classification. Document site-specific pH, resistivity, sulfate, and chloride levels of the soil and water. This information shall be used when selecting an appropriate structure material type, size, and foundation support.

Design Life: The minimum service life shall be 75 years.

Usage: Limited to lower-volume roadways (ADT < 1500), unless approved otherwise by Bureau of Structures. Not allowed on Interstate Highways or Divided US Highways.

Cover: The minimum depth of cover shall be 2 ft measured from top of pavement to top of structure. For pipe and pipe arches, refer to FDM 13-1 for maximum depth of cover. For metal box culverts, the maximum depth of cover shall be 5 ft.

Backfill: Place structural backfill equally on both sides of the structure in 8-inch maximum loose lifts. Compact all backfill to 95% of maximum dry density as determined by AASHTO T-99. Backfill shall be free draining and meet the gradation and electrochemical requirements as provided in the most current special provision bid item “Wall Concrete Panel Mechanically Stabilized Earth”.

Membrane: Provide an impervious isolation membrane that extends 10-feet beyond each side of the structure with a minimum thickness of 30 mils (ASTM 5199), regardless of the service life analysis. Membrane shall be sloped to suitable drainage with watertight seams.

Wingwalls: If wingwalls are used, a design shall be provided and supported independently from the metal structure. Metal wingwalls or headers are prohibited, unless approved otherwise by Bureau of Structures.

Guidelines for selecting material type shall be based on engineering judgement and industry practices. Refer to FDM 13-1 for additional requirements on material selection.

36.13.3.1 Metal Pipes and Pipe-Arches

FDM 13-1 provides design guidance and design fill height tables for pipe and pipe-arch shapes. This includes corrugated and structural plates sections for steel and aluminum alloy structures. These fill height tables provide a list of available sizes, minimum metal thicknesses, and depth of cover requirements. Note: the provided minimum metal thicknesses do not consider corrosive and/or abrasive conditions. Structure selection shall be evaluated on a project-by-project basis.

36.13.3.2 Other Shapes

The box culvert shape has been used on locally funded projects and may be an alternative for sites with low clearance that require a wide waterway opening. These semi-rigid structures gain strength through soil-structure interactions and flexural resistance through structural steel plates and reinforcing ribs. While the metal box culvert shape does have its benefits, corrosion concerns and the inability to inspect soil-side flexural members should be considered when selecting a structure type.

36.14 References

1. Wisconsin Highway Research Program (WHRP), *Performance and Policy Related to Aluminum Culverts in Wisconsin*, WisDOT, May 2019. Report No. 0092-17-05

36.15 Design Example

E36-1 Twin Cell Box Culvert LRFD

This page intentionally left blank.

Table of Contents

E36-1 Twin Cell Box Culvert LRFD 2
E36-1.1 Design Criteria Figure E36.1 2
E36-1.2 Modulus of Elasticity of Concrete Material 4
E36-1.3 Loads 4
E36-1.3.1 Dead Loads 5
E36-1.3.2 Live Loads 6
E36-1.4 Live Load Distribution 6
E36-1.5 Equivalent Strip Widths for Box Culverts 7
E36-1.6 Limit States and Combinations 9
E36-1.6.1 Load Factors 9
E36-1.6.2 Dead Load Moments and Shears 10
E36-1.6.3 Live Load Moments and Shears 14
E36-1.6.4 Factored Moments 18
E36-1.7 Design Reinforcement Bars 19
E36-1.8 Shrinkage and Temperature Reinforcement Check 23
E36-1.9 Distribution Reinforcement 25
E36-1.10 Reinforcement Details 25
E36-1.11 Cutoff Locations 26
E36-1.12 Shear Analysis 31
E36-1.12.1 Factored Shears 31
E36-1.12.2 Concrete Shear Resistance 31

E36-1 Twin Cell Box Culvert LRFD

This example shows design calculations for a twin cell box culvert. The *AASHTO LRFD Bridge Design Specifications* are followed as stated in the text of this chapter. ***(Example is current through LRFD Seventh Edition - 2016 Interim)***

E36-1.1 Design Criteria

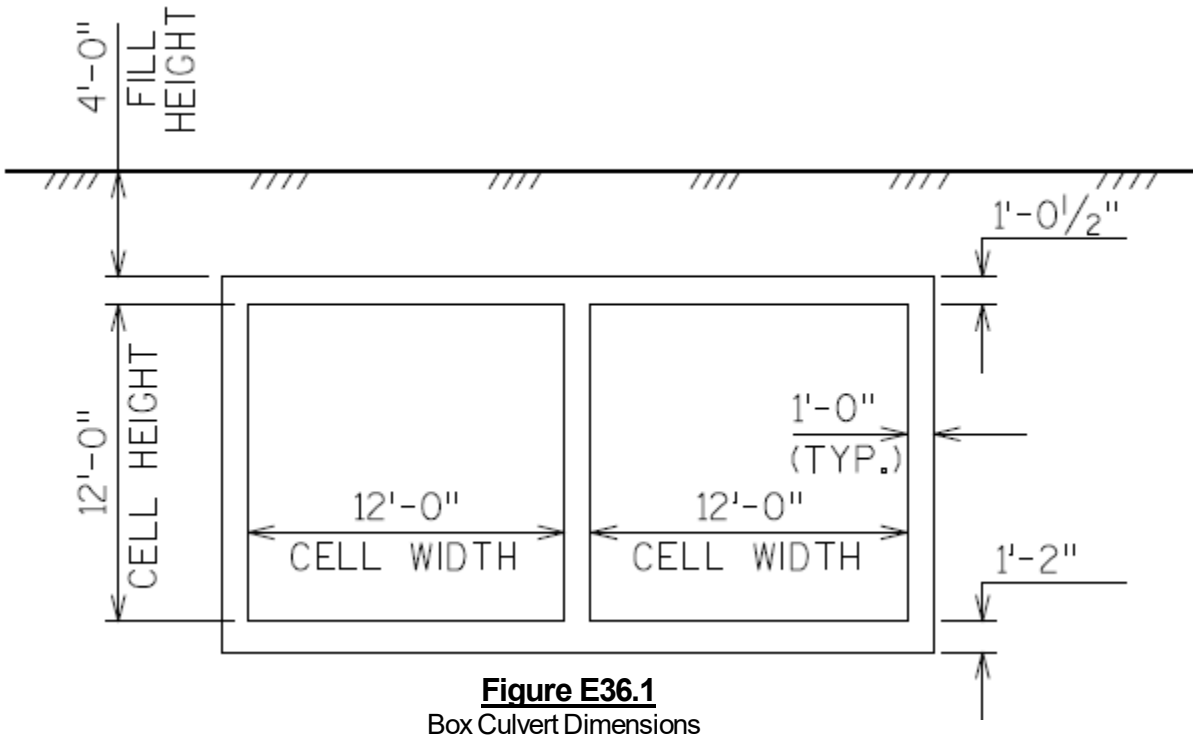

Figure E36.1
Box Culvert Dimensions

$NC = 2$	number of cells
$Ht = 12.0$	cell height, ft
$W_1 = 12.0$	cell 1 width, ft
$W_2 = 12.0$	cell 2 width, ft
$L = 134.0$	culvert length, ft
$t_{ts} = 12.5$	top slab thickness, in
$t_{bs} = 14.0$	bottom slab thickness, in
$t_{win} = 12.0$	interior wall thickness, in
$t_{wex} = 12.0$	exterior wall thickness, in
$H_{apron} := Ht + \frac{t_{ts}}{12}$	apron wall height above floor, ft

$H_{apron} = 13.04$ ft.

$f'_c := 3.5$	culvert concrete strength, ksi
$f_y := 60$	reinforcement yield strength, ksi
$E_s := 29000$	modulus of elasticity of steel, ksi
$skew = 0.0$	skew angle, degrees
$H_s = 4.00$	depth of backfill above top edge of top slab, ft
$w_c := 0.150$	weight of concrete, kcf
$cover_{bot} := 3$	concrete cover (bottom of bottom slab), in
$cover := 2$	concrete cover (all other applications), in
$LS_{ht} := 2.2$	live load surcharge height, ft (See Sect. 36.4.4)

Resistance factors, reinforced concrete cast-in-place box structures, **LRFD [Table 12.5.5-1]**

$\phi_f := 0.9$	resistance factor for flexure
$\phi_v := 0.85$	resistance factor for shear

Calculate the span lengths for each cell (measured between centerlines of walls)

$$S_1 := W_1 + \frac{1}{12}\left(\frac{t_{win}}{2} + \frac{t_{wex}}{2}\right) \qquad \boxed{S_1 = 13.00} \text{ ft}$$

$$S_2 = W_2 + \frac{1}{12}\left(\frac{t_{wex}}{2} + \frac{t_{win}}{2}\right) \qquad \boxed{S_2 = 13.00} \text{ ft}$$

Verify that the box culvert dimensions fall within WisDOT's minimum dimension criteria. Per Sect. 36.2, the minimum size for pedestrian underpasses is 8 feet high by 10 feet wide. The minimum size for cattle underpass is 6 feet high by 5 feet wide. A minimum height of 5 feet is desirable for cleanout purposes.

Does the culvert meet the minimum dimension criteria? $\boxed{check = \text{"OK"}}$

Verify that the slab and wall thicknesses fall within WisDOT's minimum dimension criteria. Per Sect. 36.5, the minimum thickness of the top and bottom slab is 6.5 inches. Per Sect. 36.5 [Table 36.5-1], the minimum wall thickness varies with respect to cell height and apron wall height.

Minimum Wall Thickness (Inches)	Cell Height (Feet)	Apron Wall Height Above Floor (Feet)
8	< 6	< 6.75
9	6 to < 10	6.75 to < 10
10	10 to > 10	10 to < 11.75
11		11.75 to < 12.5
12		12.5 to 13

Table 36.5-1
Minimum Wall Thickness Criteria

Do the slab and wall thicknesses meet the minimum dimension criteria? check = "OK"

Since this example has more than 2.0 feet of fill, edge beams are not req'd, **LRFD [C12.11.2.1]**

E36-1.2 Modulus of Elasticity of Concrete Material

Per Sect. 36.2.1, use f'_c = 3.5 ksi for culverts. Calculate value of E_C per **LRFD [C5.4.2.4]**:

$K_1 := 1$ $\quad E_{c_calc} := 33000 \cdot K_1 \cdot w_c^{1.5} \cdot \sqrt{f'_c}$ $\quad E_{c_calc} = 3586.616$ ksi

$E_c := 3600$ ksi modulus of elasticity of concrete, per Sect. 9.2

E36-1.3 Loads

$\gamma_s := 0.120$ unit weight of soil, kcf

Per Sect. 36.5, a haunch is provided only when the slab depth required at the interior wall is more than 2 inches greater than that required for the remainder of the span. Minimum haunch depth and length is 6 inches. Haunch depth is increased in 3 inch increments. For the first iteration, assume there are no haunches.

$h_{hau} := 0.0$ haunch height, in

$l_{hau} := 0.0$ haunch length, in

$wt_{hau} = 0.0$ weight of one haunch, kip

E36-1.3.1 Dead Loads

Dead Load (DC):

top slab dead load:

$$w_{dlts} := w_c \cdot \frac{t_{ts}}{12} \cdot 1$$

$\boxed{w_{dlts} = 0.156}$ klf

bottom slab dead load:

$$w_{dlbs} := w_c \cdot \frac{t_{bs}}{12} \cdot 1$$

$\boxed{w_{dlbs} = 0.175}$ klf

Wearing Surface (DW):

Per Sect. 36.4.2, the weight of the future wearing surface is zero if there is any fill depth over the culvert. If there is no fill depth over the culvert, the weight of the future wearing surface shall be taken as 0.020 ksf.

$w_{ws} = 0.000$ weight of future wearing surface, ksf

Vertical Earth Load (EV):

Calculate the modification of earth loads for soil-structure interaction per **LRFD [12.11.2.2]**. Per the policy item in Sect. 36.4.3, embankment installations are always assumed.

Installation_Type = "Embankment"

$\gamma_s = 0.120$ unit weight of soil, kcf

$B_c = 27.00$ outside width of culvert, ft
(measured between outside faces of exterior walls)

$H_s = 4.00$ depth of backfill above top edge of top slab, ft

Calculate the soil-structure interaction factor for embankment installations:

$$F_e := 1 + 0.20 \cdot \frac{H_s}{B_c}$$

$\boxed{F_e = 1.03}$

F_e shall not exceed 1.15 for installations with compacted fill along the sides of the box section:

$\boxed{F_e = 1.03}$

Calculate the total unfactored earth load:

$W_E := F_e \cdot \gamma_s \cdot B_c \cdot H_s$ $\boxed{W_E = 13.34}$ klf

Distrubute the total unfactored earth load to be evenly distributed across the top of the culvert:

$w_{sv} := \frac{W_E}{B_c}$ $\boxed{w_{sv} = 0.494}$

Horizontal Earth Load (EH):

Soil horizontal earth load (magnitude at bottom and top of wall): **LRFD [3.11.5.1]**

$k_o := 0.5$ coefficient of at rest lateral earth pressure per Sect. 36.4.3

$\gamma_s = 0.120$ unit weight of soil, kcf

$w_{sh_bot} := k_o \cdot \gamma_s \cdot \left(Ht + \frac{t_{ts}}{12} + \frac{t_{bs}}{12} + H_s\right) \cdot 1$ $\boxed{w_{sh_bot} = 1.09}$ klf

$w_{sh_top} := k_o \cdot \gamma_s \cdot (H_s) \cdot 1$ $\boxed{w_{sh_top} = 0.24}$ klf

Live Load Surcharge (LS):

Soil live load surcharge: **LRFD [3.11.6.4]**

$k_o = 0.5$ coefficient of lateral earth pressure

$\gamma_s = 0.120$ unit weight of soil, kcf

$LS_{ht} = 2.2$ live load surcharge height per Sect. 36.4.4, ft

$w_{sll} := k_o \cdot \gamma_s \cdot LS_{ht} \cdot 1$ $\boxed{w_{sll} = 0.13}$ klf

E36-1.3.2 Live Loads

For Strength 1 and Service 1:

HL-93 loading = design truck (no lane) **LRFD [3.6.1.3.3]**

design tandem (no lane)

For the Wisconsin Standard Permit Vehicle (Wis-SPV) Check:

The Wis-SPV vehicle is to be checked during the design phase to make sure it can carry a minimum vehicle load of 190 kips. See Section 36.1.3 of the Bridge Manual for requirements pertaining to the Wis-SPV vehicle check.

E36-1.4 Live Load Distribution

Live loads are distributed over an equivalent area, with distribution components both parallel and perpendicular to the span, as calculated below. Per **LRFD [3.6.1.3.3]**, the live loads to be placed on these widths are axle loads (i.e., two lines of wheels) without the lane load. The equivalent distribution width applies for both live load moment and shear.

E36-1.5 Equivalent Strip Widths for Box Culverts

The calculations for depths of fill less than 2.0 ft, per **LRFD [4.6.2.10]** are not required for this example. The calcuations are shown for illustration purposes only.

The calculations below follow **LRFD [4.6.2.10.2]** - Case 1: Traffic Travels Parallel to Span. If traffic travels perpendicular to the span, follow **LRFD [4.6.2.10.3]** - Case 2: Traffic Travels Perpendicular to Span, which states to follow **LRFD [4.6.2.1]**.

Per **LRFD [4.6.2.10.2]**, when traffic travels primarily parallel to the span, culverts shall be analyzed for a single loaded lane with a single lane multiple presence factor (mpf).

Therefore, $mpf = 1.2$

Perpendicular to the span:

It is conservative to use the largest distribution factor from each span of the structure across the entire length of the culvert. Therefore, use the smallest span to calculate the smallest strip width. That strip width will provide the largest distribution factor.

$S := \min(W_1, W_2)$ clear span, ft $\boxed{S = 12.00}$ ft

The equivalent distribution width perpendicular to the span is:

$E_{perp} := \frac{1}{12} \cdot (96 + 1.44 \cdot S)$ $\boxed{E_{perp} = 9.44}$ ft

Parallel to the span:

$H_s = 4.00$ depth of backfill above top edge of top slab, ft

$L_T := 10$ length of tire contact area, in **LRFD [3.6.1.2.5]**

$LLDF = 1.15$ live load distribution factor. From **LRFD [4.6.2.10.2]**, LLDF = 1.15 as specified in **LRFD [Table 3.6.1.2.6a-1]** for select granular backfill

The equivalent distribution width parallel to the span is:

$E_{parallel} := \frac{1}{12} \cdot (L_T + LLDF \cdot H_s \cdot 12)$ $\boxed{E_{parallel} = 5.43}$ ft

The equivalent distribution widths parallel and perpendicular to the span create an area that the axial load shall be distributed over. The equivalent area is:

$E_{area} := E_{perp} \cdot E_{parallel}$ $\boxed{E_{area} = 51.29}$ ft^2

For depths of fill 2.0 ft. or greater calculate the size of the rectangular area that the wheels are considered to be uniformly distributed over, per Sect. 36.4.6.2.

$L_T = 10.0$ length of tire contact area, in **LRFD [3.6.1.2.5]**

$W_T := 20$ width of tire contact area, in **LRFD [3.6.1.2.5]**

The length and width of the equivalent area for 1 wheel are: **LRFD [3.6.1.2.6b]**

$L_{eq_i} := L_T + LLDF \cdot H_s \cdot 12$ $\boxed{L_{eq_i} = 65.20}$ in

$W_{eq_i} := W_T + LLDF \cdot H_s \cdot 12 + 0.06 \cdot \max(W_1, W_2)\, 12$ $\boxed{W_{eq_i} = 83.84}$ in

Where such areas from several wheels overlap, the total load shall be uniformly distributed over the area, **LRFD [3.6.1.2.6a]**.

Check if the areas overlap = "Yes, the areas overlap" therefore, use the following length and width values for the equivalent area for 1 wheel:

	Front and Rear Wheels:		Center Wheel:	
Length	$L_{eq13} = 65.2$	in	$L_{eq2} = 65.2$	in
Width	$W_{eq13} = 77.9$	in	$W_{eq2} = 77.9$	in
Area	$A_{eq13} = 5080.4$	in^2	$A_{eq2} = 5080.4$	in^2

Per **LRFD [3.6.1.2.2]**, the weights of the design truck wheels are below. (Note that one axle load is equal to two wheel loads.)

$W_{wheel1i} := 4000$ front wheel weight, lbs

$W_{wheel23i} := 16000$ center and rear wheel weights, lbs

The effect of single and multiple lanes shall be considered. For this problem, a single lane with the single lane multiple presence factor (mpf) governs. Applying the single lane multiple presence factor:

$W_{wheel1} := mpf \cdot W_{wheel1i}$ $W_{wheel1} = 4800.00$ lbs $mpf = 1.20$

$W_{wheel23} := mpf \cdot W_{wheel23i}$ $W_{wheel23} = 19200.00$ lbs

For single-span culverts, the effects of the live load may be neglected where the depth of fill is more than 8.0 feet and exceeds the span length. For multiple span culverts, the effects of the live load may be neglected where the depth of fill exceeds the distance between faces of endwalls, **LRFD [3.6.1.2.6a]**.
Note: The wheel pressure values shown here are for the 14'-0" variable axle spacing of the design truck, which controls over the design tandem for this example. In general, all variable axle spacings of the design truck and the design tandem must be investigated to account for the maximum response. Dividing the wheel loads (incl. mpf) by the equivalent area gives:

$LL1 = 0.94$ live load pressure (front wheel), psi

$LL2 = 3.78$ live load pressure (center wheel), psi

$LL3 = 3.78$ live load pressure (rear wheel), psi

E36-1.6 Limit States and Combinations

The limit states, load factors and load combinations shall be applied as required and detailed in Chapter 36 of this manual and as indicated below.

E36-1.6.1 Load Factors

From **LRFD [Table 3.4.1-1]** and **LRFD [Table 3.4.1-2]**:

Per the policy item in Sect. 36.4.3: Assume box culverts are closed, rigid frames for Strength 1 (EV-factor).

	Strength 1	Service 1
DC	$\gamma st_{DCmax} := 1.25$	$\gamma s1_{DC} := 1.0$
	$\gamma st_{DCmin} := 0.9$	
DW	$\gamma st_{DWmax} := 1.5$	$\gamma s1_{DW} := 1.0$
	$\gamma st_{DWmin} := 0.65$	
EV	$\gamma st_{EVmax} := 1.35$	$\gamma s1_{EV} := 1.0$
	$\gamma st_{EVmin} := 0.9$	
EH	$\gamma st_{EHmax} := 1.35$	$\gamma s1_{EH} := 1.0$
	$\gamma st_{EHmin} := 0.5$ **LRFD [3.11.7]**	
LS	$\gamma st_{LSmax} := 1.75$	$\gamma s1_{LS} := 1.0$
	$\gamma st_{LSmin} := 0$	
LL	$\gamma st_{LL} := 1.75$	$\gamma s1_{LL} := 1.0$

Dynamic Load Allowance (IM) is applied to the truck and tandem. From **LRFD [3.6.2.2]**, IM of buried components varies with depth of cover above the structure and is calculated as:

$IM := 33 \cdot (1.0 - 0.125 \cdot H_s)$ (where H_s is in feet) $IM = 16.50$

If IM is less than 0, use IM = 0 $\boxed{IM = 16.50}$

E36-1.6.2 Dead Load Moments and Shears

The unfactored dead load moments and shears for each component are listed below (values are per 1-foot width and are in kip-ft and kip, respectively):

Exterior Wall Unfactored Dead Load Moments (kip-ft)					
Tenth Point (Along Span)	DC	EV	EH	LS	DW
0.0	-1.52	-1.44	-5.14	-1.01	0.00
0.1	-1.42	-1.54	-0.12	-0.14	0.00
0.2	-1.31	-1.63	3.53	0.55	0.00
0.3	-1.21	-1.73	5.92	1.04	0.00
0.4	-1.10	-1.82	7.14	1.34	0.00
0.5	-1.00	-1.91	7.30	1.46	0.00
0.6	-0.89	-2.01	6.51	1.38	0.00
0.7	-0.79	-2.10	4.87	1.12	0.00
0.8	-0.68	-2.19	2.49	0.66	0.00
0.9	-0.58	-2.29	-0.54	0.01	0.00
1.0	-0.48	-2.38	-4.11	-0.82	0.00

Interior Wall Unfactored Dead Load Moments (kip-ft)					
Tenth Point (Along Span)	DC	EV	EH	LS	DW
0.0	0.00	0.00	0.00	0.00	0.00
0.1	0.00	0.00	0.00	0.00	0.00
0.2	0.00	0.00	0.00	0.00	0.00
0.3	0.00	0.00	0.00	0.00	0.00
0.4	0.00	0.00	0.00	0.00	0.00
0.5	0.00	0.00	0.00	0.00	0.00
0.6	0.00	0.00	0.00	0.00	0.00
0.7	0.00	0.00	0.00	0.00	0.00
0.8	0.00	0.00	0.00	0.00	0.00
0.9	0.00	0.00	0.00	0.00	0.00
1.0	0.00	0.00	0.00	0.00	0.00

Top Slab Unfactored Dead Load Moments (kip-ft)					
Tenth Point (Along Span)	DC	EV	EH	LS	DW
0.0	-0.04	-1.14	-5.47	-1.18	0.00
0.1	0.73	1.45	-4.67	-1.00	0.00
0.2	1.27	3.32	-3.87	-0.83	0.00
0.3	1.60	4.48	-3.07	-0.66	0.00
0.4	1.69	4.93	-2.27	-0.49	0.00
0.5	1.56	4.67	-1.47	-0.32	0.00
0.6	1.21	3.69	-0.67	-0.15	0.00
0.7	0.63	2.01	0.13	0.03	0.00
0.8	-0.18	-0.39	0.93	0.20	0.00
0.9	-1.21	-3.50	1.72	0.37	0.00
1.0	-2.46	-7.32	2.52	0.54	0.00

Bottom Slab Unfactored Dead Load Moments (kip-ft)					
Tenth Point (Along Span)	DC	EV	EH	LS	DW
0.0	-0.60	-0.17	-7.63	-1.42	0.00
0.1	1.36	2.26	-6.51	-1.21	0.00
0.2	2.76	3.98	-5.39	-1.00	0.00
0.3	3.61	4.99	-4.27	-0.79	0.00
0.4	3.91	5.29	-3.15	-0.59	0.00
0.5	3.65	4.87	-2.03	-0.38	0.00
0.6	2.85	3.75	-0.90	-0.17	0.00
0.7	1.49	1.91	0.22	0.04	0.00
0.8	-0.42	-0.64	1.34	0.25	0.00
0.9	-2.88	-3.90	2.46	0.46	0.00
1.0	-5.89	-7.88	3.58	0.67	0.00

Exterior Wall Unfactored Dead Load Shears (kip)					
Tenth Point (Along Span)	DC	EV	EH	LS	DW
0.0	0.09	-0.08	4.78	0.73	0.00
0.1	0.09	-0.08	3.60	0.59	0.00
0.2	0.09	-0.08	2.50	0.45	0.00
0.3	0.09	-0.08	1.49	0.30	0.00
0.4	0.09	-0.08	0.56	0.16	0.00
0.5	0.09	-0.08	-0.27	0.01	0.00
0.6	0.09	-0.08	-1.03	-0.13	0.00
0.7	0.09	-0.08	-1.69	-0.27	0.00
0.8	0.09	-0.08	-2.27	-0.42	0.00
0.9	0.09	-0.08	-2.76	-0.56	0.00
1.0	0.09	-0.08	-3.17	-0.71	0.00

Interior Wall Unfactored Dead Load Shears (kip)					
Tenth Point (Along Span)	DC	EV	EH	LS	DW
0.0	0.00	0.00	0.00	0.00	0.00
0.1	0.00	0.00	0.00	0.00	0.00
0.2	0.00	0.00	0.00	0.00	0.00
0.3	0.00	0.00	0.00	0.00	0.00
0.4	0.00	0.00	0.00	0.00	0.00
0.5	0.00	0.00	0.00	0.00	0.00
0.6	0.00	0.00	0.00	0.00	0.00
0.7	0.00	0.00	0.00	0.00	0.00
0.8	0.00	0.00	0.00	0.00	0.00
0.9	0.00	0.00	0.00	0.00	0.00
1.0	0.00	0.00	0.00	0.00	0.00

Top Slab Unfactored Dead Load Shears (kip)					
Tenth Point (Along Span)	DC	EV	EH	LS	DW
0.0	0.74	2.45	0.67	0.13	0.00
0.1	0.55	1.86	0.67	0.13	0.00
0.2	0.36	1.26	0.67	0.13	0.00
0.3	0.17	0.67	0.67	0.13	0.00
0.4	-0.01	0.08	0.67	0.13	0.00
0.5	-0.20	-0.52	0.67	0.13	0.00
0.6	-0.39	-1.11	0.67	0.13	0.00
0.7	-0.58	-1.70	0.67	0.13	0.00
0.8	-0.76	-2.30	0.67	0.13	0.00
0.9	-0.95	-2.89	0.67	0.13	0.00
1.0	-1.14	-3.48	0.67	0.13	0.00

Bottom Slab Unfactored Dead Load Shears (kip)					
Tenth Point (Along Span)	DC	EV	EH	LS	DW
0.0	1.86	2.32	0.94	0.16	0.00
0.1	1.40	1.73	0.94	0.16	0.00
0.2	0.94	1.14	0.94	0.16	0.00
0.3	0.48	0.54	0.94	0.16	0.00
0.4	0.02	-0.05	0.94	0.16	0.00
0.5	-0.44	-0.64	0.94	0.16	0.00
0.6	-0.90	-1.24	0.94	0.16	0.00
0.7	-1.36	-1.83	0.94	0.16	0.00
0.8	-1.82	-2.42	0.94	0.16	0.00
0.9	-2.28	-3.01	0.94	0.16	0.00
1.0	-2.74	-3.61	0.94	0.16	0.00

The DC values are the component dead loads and include the self weight of the culvert and haunch (if applicable).

The DW values are the dead loads from the future wearing surface (DW values occur only if there is no fill on the culvert).

The EV values are the vertical earth loads from the fill on top of the box culvert.

The EH values are the horizontal earth loads from the fill on the sides of the box culvert.

The LS values are the live load surcharge loads (assuming $LS_{ht} = 2.2$ feet of surcharge)

E36-1.6.3 Live Load Moments and Shears

The unfactored live load load moments and shears (per lane including impact) are listed below (values are in kip-ft and kips, respectively). A separate analysis run will be required if results without impact are desired.

Exterior Wall Unfactored Live Load Moments (kip-ft)				
Tenth Point (Along Span)	Truck		Tandem	
	Max	Min	Max	Min
0.0	0.73	-1.74	0.74	-1.77
0.1	0.67	-1.70	0.69	-1.92
0.2	0.61	-1.67	0.65	-2.07
0.3	0.55	-1.65	0.62	-2.21
0.4	0.48	-1.68	0.60	-2.36
0.5	0.42	-1.82	0.58	-2.51
0.6	0.37	-1.97	0.56	-2.69
0.7	0.41	-2.12	0.56	-2.86
0.8	0.47	-2.28	0.61	-3.04
0.9	0.55	-2.44	0.68	-3.21
1.0	0.65	-2.61	0.77	-3.39

Interior Wall Unfactored Live Load Moments (kip-ft)				
Tenth Point (Along Span)	Truck		Tandem	
	Max	Min	Max	Min
0.0	0.99	-0.99	0.88	-0.88
0.1	0.93	-0.93	0.99	-0.99
0.2	0.92	-0.92	1.12	-1.12
0.3	0.90	-0.90	1.25	-1.25
0.4	0.90	-0.90	1.38	-1.38
0.5	1.08	-1.08	1.54	-1.53
0.6	1.27	-1.27	1.74	-1.74
0.7	1.47	-1.47	1.99	-1.99
0.8	1.69	-1.69	2.24	-2.24
0.9	1.92	-1.92	2.50	-2.50
1.0	2.17	-2.17	2.75	-2.75

Top Slab Unfactored Live Load Moments (kip-ft)				
Tenth Point (Along Span)	Truck		Tandem	
	Max	Min	Max	Min
0.0	0.81	-1.76	0.65	-2.16
0.1	2.24	-0.34	1.83	-0.20
0.2	3.81	-0.27	4.23	-0.32
0.3	5.06	-0.49	5.92	-0.66
0.4	5.71	-0.75	6.78	-1.04
0.5	5.76	-1.04	6.90	-1.43
0.6	5.22	-1.34	6.21	-1.82
0.7	4.13	-1.64	4.74	-2.22
0.8	2.56	-1.96	2.54	-2.62
0.9	0.86	-3.59	0.76	-3.02
1.0	0.07	-5.89	0.06	-4.81

Bottom Slab Unfactored Live Load Moments (kip-ft)				
Tenth Point (Along Span)	Truck		Tandem	
	Max	Min	Max	Min
0.0	0.46	-0.67	0.40	-0.35
0.1	1.72	-0.29	2.52	-0.32
0.2	3.30	-0.76	4.46	-0.78
0.3	4.25	-1.06	5.63	-1.09
0.4	4.60	-1.24	6.06	-1.30
0.5	4.39	-1.34	5.82	-1.45
0.6	3.68	-1.39	4.96	-1.62
0.7	2.56	-1.46	3.55	-1.86
0.8	1.18	-1.57	1.62	-2.23
0.9	0.00	-2.40	0.00	-2.79
1.0	0.00	-4.90	0.00	-3.75

Exterior Wall Unfactored Live Load Shears (kip)				
Tenth Point (Along Span)	Truck		Tandem	
	Max	Min	Max	Min
0.0	0.11	-0.19	0.09	-0.16
0.1	0.11	-0.19	0.09	-0.16
0.2	0.11	-0.19	0.09	-0.16
0.3	0.11	-0.19	0.09	-0.16
0.4	0.11	-0.19	0.09	-0.16
0.5	0.11	-0.19	0.09	-0.16
0.6	0.11	-0.19	0.09	-0.16
0.7	0.11	-0.19	0.09	-0.16
0.8	0.11	-0.19	0.09	-0.16
0.9	0.11	-0.19	0.09	-0.16
1.0	0.11	-0.19	0.09	-0.16

Interior Wall Unfactored Live Load Shears (kip)				
Tenth Point (Along Span)	Truck		Tandem	
	Max	Min	Max	Min
0.0	0.23	-0.23	0.21	-0.21
0.1	0.23	-0.23	0.21	-0.21
0.2	0.23	-0.23	0.21	-0.21
0.3	0.23	-0.23	0.21	-0.21
0.4	0.23	-0.23	0.21	-0.21
0.5	0.23	-0.23	0.21	-0.21
0.6	0.23	-0.23	0.21	-0.21
0.7	0.23	-0.23	0.21	-0.21
0.8	0.23	-0.23	0.21	-0.21
0.9	0.23	-0.23	0.21	-0.21
1.0	0.23	-0.23	0.21	-0.21

Top Slab Unfactored Live Load Shears (kip)				
Tenth Point (Along Span)	Truck		Tandem	
	Max	Min	Max	Min
0.0	2.71	-0.26	3.24	-0.33
0.1	2.33	-0.33	2.67	-0.33
0.2	1.95	-0.47	2.11	-0.33
0.3	1.56	-0.69	1.59	-0.39
0.4	1.19	-1.00	1.14	-0.67
0.5	0.85	-1.37	0.78	-1.03
0.6	0.54	-1.74	0.49	-1.46
0.7	0.30	-2.10	0.27	-1.97
0.8	0.14	-2.44	0.12	-2.54
0.9	0.04	-2.76	0.04	-3.11
1.0	0.00	-3.05	0.00	-3.66

Bottom Slab Unfactored Live Load Shears (kip)				
Tenth Point (Along Span)	Truck		Tandem	
	Max	Min	Max	Min
0.0	2.19	-0.68	2.69	-0.68
0.1	1.61	-0.48	1.97	-0.48
0.2	1.06	-0.32	1.29	-0.32
0.3	0.54	-0.19	0.66	-0.21
0.4	0.06	-0.11	0.07	-0.14
0.5	0.01	-0.45	0.00	-0.46
0.6	0.02	-0.90	0.02	-0.96
0.7	0.02	-1.33	0.02	-1.40
0.8	0.01	-1.74	0.01	-1.80
0.9	0.00	-2.12	0.00	-2.15
1.0	0.00	-2.48	0.00	-2.46

E36-1.6.4 Factored Moments

WisDOT's policy is to set all of the load modifiers, η, equal to 1.0. The factored moments for each limit state are calculated by applying the appropriate load factors to loads on a 1-foot strip width of the box culvert. The minimum or maximum load factors may be used on each component to maximize the load effects. The results are as follows:

Strength 1 Moments

$$M_{str1} = \eta \cdot \left(\gamma st_{DC} \cdot M_{DC} + \gamma st_{DW} \cdot M_{DW} + \gamma st_{EV} \cdot M_{EV} + \gamma st_{EH} \cdot M_{EH} + \gamma st_{LS} \cdot M_{LS} + \gamma st_{LL} \cdot M_{LL}\right)$$

Corner Bars	$Mstr1_{CB} = 16.73$	kip-ft	(negative moment)
Positive Moment Top Slab Bars	$Mstr1_{PTS} = 19.59$	kip-ft	(positive moment)
Positive Moment Bottom Slab Bars	$Mstr1_{PBS} = 21.05$	kip-ft	(positive moment)
Negative Moment Top Slab Bars	$Mstr1_{NTS} = 22.00$	kip-ft	(negative moment)
Negative Moment Bottom Slab Bars	$Mstr1_{NBS} = 24.77$	kip-ft	(negative moment)
Exterior Wall Bars	$Mstr1_{XW} = 10.81$	kip-ft	(positive moment)
Interior Wall Bars	$Mstr1_{IW} = 4.82$	kip-ft	(positive moment)

Service 1 Moments

$$M_{s1} = \eta \cdot \left(\gamma s1_{DC} \cdot M_{DC} + \gamma s1_{DW} \cdot M_{DW} + \gamma s1_{EV} \cdot M_{EV} + \gamma s1_{EH} \cdot M_{EH} + \gamma s1_{LS} \cdot M_{LS} + \gamma s1_{LL} \cdot M_{LL}\right)$$

Corner Bars	$Ms1_{CB} = 11.18$	kip-ft	(negative moment)
Positive Moment Top Slab Bars	$Ms1_{PTS} = 11.66$	kip-ft	(positive moment)
Positive Moment Bottom Slab Bars	$Ms1_{PBS} = 12.32$	kip-ft	(positive moment)
Negative Moment Top Slab Bars	$Ms1_{NTS} = 13.15$	kip-ft	(negative moment)
Negative Moment Bottom Slab Bars	$Ms1_{NBS} = 15.08$	kip-ft	(negative moment)
Exterior Wall Bars	$Ms1_{XW} = 6.43$	kip-ft	(positive moment)
Interior Wall Bars	$Ms1_{IW} = 2.75$	kip-ft	(positive moment)

E36-1.7 Design Reinforcement Bars

Design of the corner bars is illustrated below. Calculations for bars in other locations are similar.

Design Criteria:

For corner bars, use the controlling thickness between the slab and wall. The height of the concrete design section is:

$h := \min(t_{ts}, t_{bs}, t_{wex})$ $\boxed{h = 12.00}$ in

Use a 1'-0" design width:

$b := 12.0$ width of the concrete design section, in

$cover = 2.0$ concrete cover, in Note: The calculations here use 2" cover for the top slab and walls. Use 3" cover for the bottom of the bottom slab (not shown here).

$Mstr1_{CB} = 16.73$ design strength moment, kip-ft

$Ms1_{CB} = 11.18$ design service moment, kip-ft

$f_s := f_y$ reinforcement yield strength, ksi $f_y = 60.00$ ksi

$Bar_{No} := 5$ assume #5 bars (for d_s calculation)

$Bar_D(Bar_{No}) = 0.63$ bar diameter, in

Calculate the estimated distance from extreme compression fiber to the centroid of the nonprestressed tensile reinforcement. **LRFD [5.7.3.2.2]**

$$d_{s_i} := h - cover - \frac{Bar_D(Bar_{No})}{2}$$ $\boxed{d_{s_i} = 9.69}$ in

For reinforced concrete cast-in-place box structures, $\phi_f = 0.90$ per **LRFD [Table 12.5.5-1]**.

Calculate the coefficient of resistance:

$$R_n := \frac{Mstr1_{CB} \cdot 12}{\phi_f \cdot b \cdot d_{s_i}^2}$$ $\boxed{R_n = 0.20}$ ksi

Calculate the reinforcement ratio:

$$\rho := 0.85 \cdot \frac{f'_c}{f_y} \cdot \left(1 - \sqrt{1.0 - \frac{2 \cdot R_n}{0.85 \cdot f'_c}}\right)$$ $\boxed{\rho = 0.0034}$

Calculate the required area of steel:

$A_{s_req'd} := \rho \cdot b \cdot d_{s_i}$ $\boxed{A_{s_req'd} = 0.40}$ in^2

Given the required area of steel of $A_{s_req'd} = 0.40$, try #5 bars at 7.5" spacing:

$Bar_{No} := 5$ bar size

$spacing := 7.0$ bar spacing, in

The area of one reinforcing bar is:

$A_{s_1bar} := Bar_A(Bar_{No})$ $\boxed{A_{s_1bar} = 0.31}$ in^2

Calculate the area of steel in a 1'-0" width

$$A_s := \frac{A_{s_1bar}}{\frac{spacing}{12}}$$ $\boxed{A_s = 0.53}$ in^2

Check that the area of steel provided is larger than the required area of steel

Is $A_s = 0.53\ in^2 \geq A_{s_req'd} = 0.40\ in^2$ $\boxed{check = "OK"}$

Recalculate d_c and d_s based on the actual bar size used.

$$d_c := cover + \frac{Bar_D(Bar_{No})}{2}$$ $\boxed{d_c = 2.31}$ in

$$d_s := h - cover - \frac{Bar_D(Bar_{No})}{2}$$ $\boxed{d_s = 9.69}$ in

Per **LRFD [5.7.2.2]**, The factor β_1 shall be taken as 0.85 for concrete strengths not exceeding 4.0 ksi. For concrete strengths exceeding 4.0 ksi, β_1 shall be reduced at a rate of 0.05 for each 1.0 ksi of strength in excess of 4.0 ksi, except that β_1 shall not be taken to be less than 0.65. The factor α_1 shall be taken as 0.85 for concrete strength not exceeding 10.0 ksi.

$\boxed{\beta_1 = 0.85}$ $\boxed{\alpha_1 = 0.85}$

Per **LRFD [5.7.2.1]**, if $\frac{c}{d_s} \leq 0.6$ (for f_y = 60 ksi) then reinforcement has yielded and the assumption is correct.

"c" is defined as the distance between the neutral axis and the compression face (inches).

$$c := \frac{A_s \cdot f_s}{\alpha_1 \cdot f'_c \cdot \beta_1 \cdot b}$$ $\boxed{c = 1.05}$ in

Check that the reinforcement will yield:

Is $\frac{c}{d_s} = 0.11 \leq 0.6$? $\boxed{check = "OK"}$ therefore, the reinforcement will yield

Calculate the nominal moment capacity of the rectangular section in accordance with **LRFD [5.7.3.2.3]**:

$a := \beta_1 \cdot c$ $\boxed{a = 0.89}$ in

$M_n := \left[A_s \cdot f_s \cdot \left(d_s - \frac{a}{2}\right)\frac{1}{12}\right]$ $\boxed{M_n = 24.6}$ kip-ft

For reinforced concrete cast-in-place box structures, $\phi_f = 0.90$ **LRFD [Table 12.5.5-1]**. Therefore the usable capacity is:

$M_r := \phi_f \cdot M_n$ $\boxed{M_r = 22.1}$ kip-ft

The required capacity:

Corner Moment $\boxed{Mstr1_{CB} = 16.7}$ kip-ft

Check the section for minimum reinforcement in accordance with **LRFD [5.7.3.3.2]**:

$b = 12.0$ in width of the concrete design section, in

$h = 12.0$ in height of the concrete design section, in

$f_r = 0.24 \cdot \lambda \sqrt{f'_c}$ = modulus of rupture (ksi) **LRFD [5.4.2.6]**

$f_r := 0.24 \cdot \sqrt{f'_c}$ λ = 1.0 (normal wgt. conc.) **LRFD [5.4.2.8]** $f_r = 0.45$ ksi

$I_g := \frac{1}{12} \cdot b \cdot h^3$ gross moment of inertia, in^4 $I_g = 1728.00$ in^4

$\frac{h}{2} = 6.0$ distance from the neutral axis to the extreme element

$S_c := \frac{I_g}{\frac{h}{2}}$ section modulus, in^3 $S_c = 288.00$ in^3

The corresponding cracking moment is:

$M_{cr} = \gamma_3(\gamma_1 \cdot f_r)S_c$ therefore, $M_{cr} = 1.1(f_r)S_c$

Where:

$\gamma_1 := 1.6$ flexural cracking variability factor

$\gamma_3 := 0.67$ ratio of yield strength to ultimate tensile strength of the reinforcement <u>for A615, Grade 60 reinforcement</u>

$M_{cr} := 1.1 f_r \cdot S_c \cdot \frac{1}{12}$ $\boxed{M_{cr} = 11.9}$ kip-ft

$\boxed{1.33 \cdot Mstr1_{CB} = 22.2}$ kip-ft

Is $M_r = 22.1$ kip-ft greater than the lesser of M_{cr} and $1.33*M_{str}$? $\boxed{check = "OK"}$

Per **LRFD [5.7.3.4]**, the spacing(s) of reinforcement in the layer closest to the tension face shall satisfy:

$$s \le \frac{700 \cdot \gamma_e}{\beta_s \cdot f_{ss}} - 2 \cdot d_c \qquad \text{in which:} \qquad \beta_s = 1 + \frac{d_c}{0.7 \cdot (h - d_c)}$$

$\gamma_e := 1.0$ for Class 1 exposure condition

$h = 12.0$ height of the concrete design section, in

Calculate the ratio of flexural strain at the extreme tension face to the strain at the centroid of the reinforcement layer nearest the tension face:

$$\beta_s := 1 + \frac{d_c}{0.7 \cdot (h - d_c)} \qquad \boxed{\beta_s = 1.34}$$

Calculate the reinforcement ratio:

$$\rho := \frac{A_s}{b \cdot d_s} \qquad \boxed{\rho = 0.0046}$$

Calculate the modular ratio:

$$N := \frac{E_s}{E_c} \qquad \boxed{N = 8.06}$$

Calculate f_{ss}, the tensile stress in steel reinforcement at the Service I Limit State (ksi). The moment arm used in the equation below to calculate f_{ss} is: (j) ($h-d_c$)

$$k := \sqrt{(\rho \cdot N)^2 + (2 \cdot \rho \cdot N)} - \rho \cdot N \qquad \boxed{k = 0.2370}$$

$$j := 1 - \frac{k}{3} \qquad \boxed{j = 0.9210}$$

$Ms1_{CB} = 11.18$ service moment, kip-ft

$$f_{ss} := \frac{Ms1_{CB} \cdot 12}{A_s \cdot (j) \cdot (h - d_c)} \le 0.6 f_y \qquad \boxed{f_{ss} = 28.29} \text{ ksi} \quad \le 0.6 f_y \text{ O.K.}$$

Calculate the maximum spacing requirements per **LRFD [5.10.3.2]**:

$$s_{max1} := \frac{700 \cdot \gamma_e}{\beta_s \cdot f_{ss}} - 2 \cdot d_c \qquad s_{max1} = 13.83 \text{ in}$$

$$s_{max2} := \min(1.5 \cdot h, 18) \qquad s_{max2} = 18.00 \text{ in}$$

$$s_{max} := \min(s_{max1}, s_{max2}) \qquad \boxed{s_{max} = 13.83} \text{ in}$$

Check that the provided spacing is less than the maximum allowable spacing

Is spacing = 7.00 in $\leq$ s_{max} = 13.83 in $\boxed{\text{check} = \text{"OK"}}$

Calculate the minimum spacing requirements per **LRFD [5.10.3.1]**. The clear distance between parallel bars in a layer shall not be less than:

$$S_{min1} := 1.5 \cdot Bar_D(Bar_{No}) \qquad S_{min1} = 0.94 \text{ in}$$

$$S_{min2} := 1.5 \cdot 1.5 \quad \text{(maximum aggregate size = 1.5 inches)} \qquad S_{min2} = 2.25 \text{ in}$$

$$S_{min3} := 1.5 \text{ in}$$

Is spacing = 7.00 in $\geq$ all minimum spacing requirements? $\boxed{\text{check} = \text{"OK"}}$

E36-1.8 Shrinkage and Temperature Reinforcement Check

Check shrinkage and temperature reinforcement criteria for the reinforcement selected in preceding sections.

The area of reinforcement (A_s) per foot, for shrinkage and temperature effects, on each face and in each direction shall satisfy: **LRFD [5.10.8]**

$$A_s \geq \frac{1.30 \cdot b \cdot (h)}{2 \cdot (b + h) \cdot f_y} \quad \text{and} \quad 0.11 \leq A_s \leq 0.60$$

Where:

A_s = area of reinforcement in each direction and each face $\left(\frac{in^2}{ft}\right)$

b = least width of component section (in.)

h = least thickness of component section (in.)

f_y = specified yield strength of reinforcing bars (ksi) $\leq$ 75 ksi

Check the minimum required temperature and shrinkage reinforcement, #4 bars at 15", in the thickest section. For the given cross section, the values for the corner bar design are:

$$A_{s_4_at_15} := \frac{Bar_A(4)}{1.25} \qquad \boxed{A_{s_4_at_15} = 0.16} \ \frac{in^2}{ft}$$

$b_{TS} := \max(t_{ts}, t_{bs}, t_{wex})$ $\boxed{b_{TS} = 14.0}$ in

$h_{TS} := 12(W_1 + W_2) + 2 \cdot t_{wex} + t_{win}$ $\boxed{h_{TS} = 324.0}$ in

$f_y = 60.00$ ksi

For each face, the required area of steel is:

$$A_{s_TS} := \frac{1.30 \cdot (b_{TS}) \cdot h_{TS}}{2 \cdot (b_{TS} + h_{TS}) \cdot f_y} \qquad A_{s_TS} = 0.15 \ \frac{in^2}{ft}$$

is $A_{s_4_at_15} = 0.16$ in2 $\geq$ $A_{s_TS} = 0.15$ in^2? $\boxed{\text{check} = \text{"OK"}}$

is $0.11 < A_{s_4_at_15} < 0.60$? $\boxed{\text{check} = \text{"OK"}}$

Per **LRFD [5.10.8]**, the shrinkage and temperature reinforcement shall not be spaced farther apart than:

- 3.0 times the component thickness, or 18.0 in.
- 12.0 in for walls and footings greater than 18.0 in. thick
- 12.0 in for other components greater than 36.0 in. thick

$s_{max3} = 18.00$ in

Per **LRFD [5.10.3.2]**, the maximum center to center spacing of adjacent bars shall not exceed 1.5 times the thickness of the member or 18.0 in.

$s_{max4} = 18.00$ in

is the 15" spacing $\leq$ both maximum spacing requirements? $\boxed{\text{check} = \text{"OK"}}$

Note: The design of the bottom slab shrinkage and temperature bars is illistrated above. Shrinkage and temperature bars may be reduced or not required at other locations. See Section 36.6.8 and Standard 36.03 for additional information.

The results for the other bar locations are shown in the table below:

Results						
Location	ΦMn	$A_{S\ Req'd}$	$A_{S\ Actual}$	Bar Size	S_{max}	S_{actual}
Corner	22.1	0.48	0.53	5	13.8	7.0
Pos. Mom. Top Slab	21.8	0.49	0.50	5	13.0	7.5
Pos. Mom. Bot. Slab	28.9	0.54	0.57	5	18.0	6.5
Neg. Mom. Top Slab	23.3	0.50	0.53	5	12.1	7.0
Neg. Mom. Bot. Slab	28.4	0.54	0.62	5	13.4	6.0
Exterior Wall	16.9	0.34	0.40	4	18.0	6.0
Interior Wall	6.9	0.15	0.16	4	18.0	15.0

E36-1.9 Distribution Reinforcement

Per **LRFD [9.7.3.2]**, reinforcement shall be placed in the secondary direction in the bottom of slabs as a percentage of the primary reinforcement for positive moment as follows:

Distribution steel is not required when the depth of fill over the slab exceeds 2 feet, **LRFD [5.14.4.1]**.

E36-1.10 Reinforcement Details

The reinforcement bar size and spacing required from the strength and serviceability calcuations above are shown below:

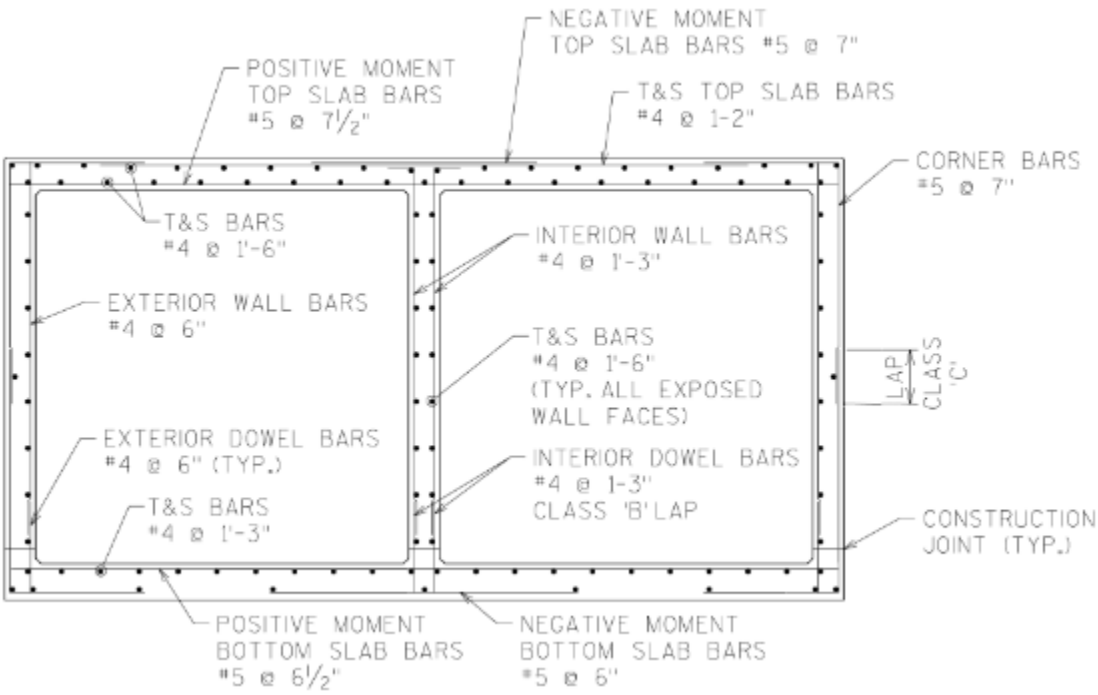

E36-1.11 Cutoff Locations

Determine the cutoff locations for the corner bars. Per Sect. 36.6.1, the distance "L" is computed from the maximum negative moment envelope for the top slab.

The cutoff lengths are in feet, measured from the inside face of the exterior wall.

Initial Cutoff Locations:

The initial cutoff locations are determined from the inflection points of the moment diagrams.

Corner Bars	$CutOff1_{CBH_i} = 2.64$	$CutOff2_{CBH_i} = 1.15$	Horizontal
		$CutOff2_{CBV_i} = 2.07$	Vertical
Positive Moment Top Slab Bars	$CutOff1_{PTS_i} = 1.26$	$CutOff2_{PTS_i} = 1.86$	
Positive Moment Bottom Slab Bars	$CutOff1_{PBS_i} = 1.27$	$CutOff2_{PBS_i} = 1.97$	
Negative Moment Top Slab Bars	$CutOff1_{NTS_i} = 8.63$	$CutOff2_{NTS_i} = 10.32$	
Negative Moment Bottom Slab Bars	$CutOff1_{NBS_i} = 8.97$	$CutOff2_{NBS_i} = 10.56$	

For the second cutoff location for each component, the following checks shall be completed:

Check the section for minimum reinforcement in accordance with **LRFD [5.7.3.3.2]**:

The required capacity at the second cutoff location (for the vertical leg of the corner bar):

$Mstr1_{CBV2} = 7.89$ strength moment at the second cutoff location, kip-ft

The usable capacity of the remaining bars is calculated as follows:

$$A_{s2} := \frac{A_s}{2} \qquad \boxed{A_{s2} = 0.27} \text{ in}^2$$

$$c2 := \frac{A_{s2} \cdot f_s}{\alpha_1 \cdot f'_c \cdot \beta_1 \cdot b} \qquad \boxed{\beta_1 = 0.85} \; \boxed{\alpha_1 = 0.85} \qquad \boxed{c2 = 0.53} \text{ in}$$

$$a2 := \beta_1 \cdot c2 \qquad \boxed{a2 = 0.45} \text{ in}$$

$$M_{n2} := \left[A_{s2} \cdot f_s \cdot \left(d_s - \frac{a2}{2}\right) \frac{1}{12}\right] \qquad \boxed{M_{n2} = 12.6} \text{ kip-ft}$$

$$M_{r2} := \phi_f \cdot M_{n2} \qquad \boxed{M_{r2} = 11.3} \text{ kip-ft}$$

Is $M_{r2} = 11.3$ kip-ft greater than the lesser of M_{cr} and $1.33*M_{str}$? $\boxed{check = "OK"}$

$\boxed{M_{cr} = 11.9}$ kip-ft

$\boxed{1.33 \cdot Mstr1_{CBV2} = 10.5}$ kip-ft

Calculate f_{ss}, the tensile stress in steel reinforcement at the Service I Limit State (ksi).

$Ms1_{CBV2} = 3.43$ service moment at the second cutoff location, kip-ft

$$f_{ss2} := \frac{Ms1_{CBV2} \cdot 12}{A_{s2} \cdot (j) \cdot (h - d_c)}$$ $\boxed{f_{ss2} = 17.35}$ ksi

Calculate the maximum spacing requirements per **LRFD [5.10.3.2]**:

$$s_{max2_1} := \frac{700 \cdot \gamma_e}{\beta_s \cdot f_{ss2}} - 2 \cdot d_c$$ $s_{max2_1} = 25.47$ in

$s_{max2_2} := s_{max2}$ $s_{max2_2} = 18.00$ in

$s_{max} := \min(s_{max2_1}, s_{max2_2})$ $\boxed{s_{max} = 18.00}$ in

Check that the provided spacing (for half of the bars) is less than the maximum allowable spacing

$spacing2 := 2 \cdot spacing$ $spacing2 = 14.00$ in

Is $spacing2 = 14.00$ in $\leq s_{max} = 18.00$ in $\boxed{check = "OK"}$

Extension Lengths:

The extension lengths for the corner bars are shown below. Calculations for other bars are similar.

Extension lengths for general reinforcement per **LRFD [5.11.1.2.1]**:

$$MaxDepth := \max\left(t_{ts} - cover, t_{wex} - cover, t_{bs} - cover_{bot}\right) \qquad MaxDepth = 11.00 \quad in$$

Effective member depth $$\frac{MaxDepth - \frac{1}{2} Bar_D\left(Bar_{No_CB}\right)}{12} = 0.89 \quad ft$$

15 x bar diameter $$\frac{15 \cdot Bar_D\left(Bar_{No_CB}\right)}{12} = 0.78 \quad ft$$

1/20 times clear span $$\frac{\max\left(W_1, W_2\right)}{20} = 0.60 \quad ft$$

The maximum of the values listed above:

$$ExtendLength_gen_{CB} = 0.89 \quad ft$$

Extension lengths for negative moment reinforcement per **LRFD [5.11.1.2.3]**:

Effective member depth $$\frac{MaxDepth - \frac{1}{2} Bar_D\left(Bar_{No_CB}\right)}{12} = 0.89 \quad ft$$

12 x bar diameter $$\frac{12 \cdot Bar_D\left(Bar_{No_CB}\right)}{12} = 0.63 \quad ft$$

0.0625 times clear span $$0.0625 \max\left(W_1, W_2\right) = 0.75 \quad ft$$

The maximum of the values listed above:

$$ExtendLength_neg_{CB} = 0.89 \quad ft$$

The development length:

$$DevLength_{CB} = 1.00 \quad ft$$

The extension lengths for general reinforcment for the other bars are:

Corner Bars	$ExtendLength_gen_{CB} = 0.89$	ft
Positive Moment Top Slab Bars	$ExtendLength_gen_{PTS} = 0.85$	ft
Positive Moment Bottom Slab Bars	$ExtendLength_gen_{PBS} = 0.97$	ft
Negative Moment Top Slab Bars	$ExtendLength_gen_{NTS} = 0.85$	ft
Negative Moment Bottom Slab Bars	$ExtendLength_gen_{NBS} = 0.97$	ft

The extension lengths for negative moment reinforcment for the other bars are:

Corner Bars	$ExtendLength_neg_{CB} = 0.89$	ft
Positive Moment Top Slab Bars	$ExtendLength_neg_{PTS} = 0.85$	ft
Positive Moment Bottom Slab Bars	$ExtendLength_neg_{PBS} = 0.97$	ft
Negative Moment Top Slab Bars	$ExtendLength_neg_{NTS} = 0.85$	ft
Negative Moment Bottom Slab Bars	$ExtendLength_neg_{NBS} = 0.97$	ft

The final cutoff locations (measured from the inside face of the exterior wall) are:

Corner Bars	$CutOff1_{CBH}$ = 3.53	$CutOff2_{CBH}$ = 2.04	Horizontal
		$CutOff2_{CBV}$ = 2.96	Vertical
Positive Moment Top Slab Bars	$CutOff1_{PTS}$ = "Run Bar Entire Width of Box"		
		$CutOff2_{PTS}$ = 1.02	
Positive Moment Bottom Slab Bars	$CutOff1_{PBS}$ = "Run Bar Entire Width of Box"		
		$CutOff2_{PBS}$ = 1.00	
Negative Moment Top Slab Bars	$CutOff1_{NTS}$ = 7.78	$CutOff2_{NTS}$ = 9.47	
Negative Moment Bottom Slab Bars	$CutOff1_{NBS}$ = 7.99	$CutOff2_{NBS}$ = 9.59	

The cutoff locations for the corner bars are shown below. Other bars are similar.

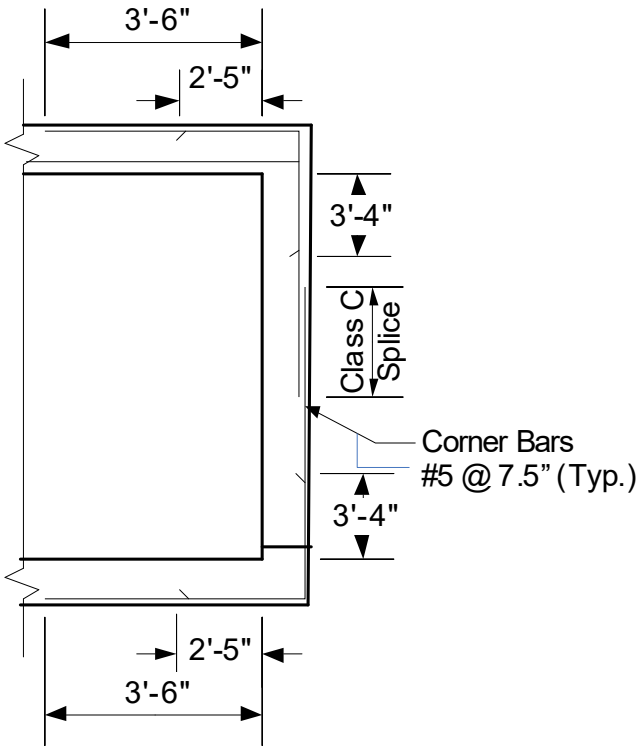

E36-1.12 Shear Analysis

Analyze walls and slabs for shear

E36-1.12.1 Factored Shears

WisDOT's policy is to set all of the load modifiers, η, equal to 1.0. The factored shears for each limit state are calculated by applying the appropriate load factors to loads on a 1-foot strip width of the box culvert. The minimum or maximum load factors may be used on each component to maximize the load effects. The results are as follows:

Strength 1 Shears

$$V_{str1} = \eta \cdot \left(\gamma st_{DC} \cdot V_{DC} + \gamma st_{DW} \cdot V_{DW} + \gamma st_{EV} \cdot V_{EV} + \gamma st_{EH} \cdot V_{EH} + \gamma st_{LS} \cdot V_{LS} + \gamma st_{LL} \cdot V_{LL}\right)$$

Exterior Wall	$Vstr1_{XW} = 7.98$	kip
Interior Wall	$Vstr1_{IW} = 0.40$	kip
Top Slab	$Vstr1_{TS} = 12.20$	kip
Bottom Slab	$Vstr1_{BS} = 12.16$	kip

Service 1 Shears

$$V_{s1} = \eta \cdot \left(\gamma s1_{DC} \cdot V_{DC} + \gamma s1_{DW} \cdot V_{DW} + \gamma s1_{EV} \cdot V_{EV} + \gamma s1_{EH} \cdot V_{EH} + \gamma s1_{LS} \cdot V_{LS} + \gamma s1_{LL} \cdot V_{LL}\right)$$

Exterior Wall	$Vs1_{XW} = 5.64$	kip
Interior Wall	$Vs1_{IW} = 0.23$	kip
Top Slab	$Vs1_{TS} = 7.62$	kip
Bottom Slab	$Vs1_{BS} = 7.96$	kip

E36-1.12.2 Concrete Shear Resistance

Check that the nominal shear resistance, V_n, of the concrete in the top slab is adequate for shear without shear reinforcement per **LRFD [5.14.5.3]**.

$$V_n = V_c = \left(0.0676 \cdot \lambda \sqrt{f'_c} + 4.6 \cdot \frac{A_s}{b \cdot d_s} \cdot \frac{V_u \cdot d_s}{M_u}\right) \cdot b \cdot d_s \le 0.126 \cdot \lambda \sqrt{f'_c} \cdot b \cdot d_s$$

$f'_c = 3.5$	culvert concrete strength, ksi	
$A_{s_TS} = 0.15$	area of reinforcing steel in the design width, in²/ft width	
$h := t_{ts}$	height of concrete design section, in	$h = 12.50$ in
$\lambda = 1.0$	normal wgt. conc. **LRFD [5.4.2.8]**	

Calculate d_s, the distance from extreme compression fiber to the centroid of the nonprestressed tensile reinforcement:

$d_s := h - cover - \frac{Bar_D(Bar_{No})}{2}$ $\boxed{d_s = 10.19}$ in

$V_u := Vstr1_{TS}$ $\boxed{V_u = 12.2}$ kips

$M_u = 264.01$ factored moment occurring simultaneously with V_u, kip-in

$b := 12$ design width, in

For reinforced concrete cast-in-place box structures, $\phi_v = 0.85$, **LRFD [Table 12.5.5-1]**. Therefore the usable capacity is:

$\frac{V_u \cdot d_s}{M_u}$ shall not be taken to be greater than 1.0 $\frac{V_u \cdot d_s}{M_u} = 0.47$ < 1.0 OK

$V_{r1s} := \phi_v \cdot \left[\left(0.0676 \cdot \lambda \sqrt{f'_c} + 4.6 \cdot \frac{A_{s_TS}}{b \cdot d_s} \cdot \frac{V_u \cdot d_s}{M_u}\right) \cdot b \cdot d_s\right]$ $\boxed{V_{r1s} = 14.1}$ kips

but $\leq$ $V_{r2s} := \phi_v \cdot \left(0.126 \cdot \lambda \sqrt{f'_c} \cdot b \cdot d_s\right)$ $\boxed{V_{r2s} = 24.5}$ kips

$V_{rs} := \min(V_{r1s}, V_{r2s})$ $\boxed{V_{rs} = 14.1}$ kips

Check that the provided shear capacity is adequate:

Is $V_u = 12.2$ kip $\leq$ $V_{rs} = 14.1$ kip ? $\boxed{check = "OK"}$

Note: For single-cell box culverts only, V_c for slabs monolithic with walls need not be taken to be less than: **LRFD[5.14.5.3]** $0.0948 \cdot \lambda \sqrt{f'_c} \quad b \cdot d_s$

V_c for slabs simply supported need not be taken to be less than: $0.0791 \cdot \lambda \sqrt{f'_c} \quad b \cdot d_s$

$\lambda = 1.0$ (normal wgt. conc.) **LRFD [5.4.2.8]**

LRFD [5.8] and **LRFD [5.13.3.6]** apply to slabs of box culverts with less than 2.0 ft of fill.

Check that the nominal shear resistance, V_n, of the concrete in the walls is adequate for shear without shear reinforcement per **LRFD [5.8.3.3]**. Calculations shown are for the exterior wall.

$V_n = V_c = 0.0316 \cdot \beta \cdot \lambda \sqrt{f'_c} \cdot b_v \cdot d_v \leq 0.25 \cdot f'_c \cdot b_v \cdot d_v$

$\beta := 2$ **LRFD [5.8.3.4.1]**

$f'_c = 3.5$ culvert concrete strength, ksi

$b_v := 12$ effective width, in

$h := t_{wex}$ height of concrete design section, in $h = 12.00$ in

$\lambda = 1.0$ normal wgt. conc. **LRFD [5.4.2.8]**

Distance from extreme compression fiber to the centroid of the nonprestressed tensile reinforcement:

$$d_s := h - cover - \frac{Bar_D(Bar_{No})}{2}$$ $d_s = 9.69$ in

The effective shear depth taken as the distance, measured perpendicular to the neutral axis, between the resultants of the tensile and compressive forces due to flexure; **LRFD [5.8.2.9]**

$$d_{v_i} = d_s - \frac{a}{2}$$

from earlier calculations:

$\beta_1 = 0.85$

$f_s = 60$ ksi

$A_{s_XW} = 0.40$ in^2

The distance between the neutral axis and the compression face:

$$c := \frac{A_{s_XW} \cdot f_s}{\alpha_1 \cdot f'_c \cdot \beta_1 \cdot b_v}$$ $\beta_1 = 0.85$ $\alpha_1 = 0.85$ $c = 0.79$ in

$$a := \beta_1 \cdot c$$ $a = 0.67$ in

The effective shear depth:

$$d_{v_i} := \left(d_s - \frac{a}{2}\right)$$ $d_{v_i} = 9.35$

d_v need not be taken to be less than the greater of 0.9 d_s or 0.72h (in.)

$$d_v := \max(d_{v_i}, \max(0.9d_s, 0.72t_{wex}))$$ $0.9 \cdot d_s = 8.72$

$d_v = 9.35$ in $0.72 \cdot t_{wex} = 8.64$

For reinforced concrete cast-in-place box structures, $\phi_v = 0.85$, **LRFD [Table 12.5.5-1]**. Therefore the usable capacity is:

λ = 1.0 (normal wgt. conc.) **LRFD [5.4.2.8]**

$$V_{r1w} := \phi_v \cdot (0.0316 \cdot \beta \cdot \lambda \sqrt{f'_c} \cdot b_v \cdot d_v)$$ $V_{r1w} = 11$ kips

but ≤ $$V_{r2w} := \phi_v \cdot (0.25 \cdot f'_c \cdot b_v \cdot d_v)$$ $V_{r2w} = 83$ kips

$$V_{rw} := \min(V_{r1w}, V_{r2w})$$ $V_{rw} = 11$ kips

$$V_u := Vstr1_{XW}$$ $V_u = 8.0$ kips

Check that the provided shear capacity is adequate:

Is $V_u = 8.0$ kip ≤ $V_{rw} = 11.3$ kip ? check = "OK"

This page intentionally left blank.

Table of Contents

37.1 Structure Selection 2
37.2 Specifications and Standards 3
37.3 Protective Screening 5

37.1 Structure Selection

Most pedestrian bridges are located in urban areas and carry pedestrian and/or bicycle traffic over divided highways, expressways and freeway systems. The structure type selected is made on the basis of aesthetics and economic considerations. A wide variety of structure types are available and each type is defined by the superstructure used. Some of the more common types are as follows:

- Concrete Slab
- Prestressed Concrete Girder
- Steel Girder
- Prefabricated Truss

Several pedestrian bridges are a combination of two structure types such as a concrete slab approach span and steel girder center spans. One of the more unique pedestrian structures in Wisconsin is a cable stayed bridge. This structure was built in 1970 over USH 41 in Menomonee Falls. It is the first known cable stayed bridge constructed in the United States. Generally, pedestrian bridges provide the designer the opportunity to employ long spans and medium depth sections to achieve a graceful structure.

Pedestrian boardwalks should not be assigned a bridge structure (B-Structure) when their clear spans are less than or equal to 20 feet (between faces of supports). Boardwalks not meeting the B-Structure criteria will not be required to follow the design requirements in the WisDOT Bridge Manual, but will need to follow the standards established in the *Wisconsin Bicycle Facility Design Handbook* (Article 4.17.6).

Refer to 2.5 for guidance on assigning structure numbers.

37.2 Specifications and Standards

The designer shall refer to the following related specifications:

- "*AASHTO LRFD Bridge Design Specifications*"
- *"AASHTO LRFD Guide Specifications for the Design of Pedestrian Bridges",* hereafter referred to as the *"Pedestrian Bridge Guide"*
- See *Standardized Special Provision (STSP-506-085)* titled "*Prefabricated Steel Truss Pedestrian Bridge LRFD*" for the requirements for this bridge type

For additional design information, refer to the appropriate Wisconsin Bridge Manual chapters relative to the structure type selected.

The pedestrian live load (PL) shall be as follows: (from "*Pedestrian Bridge Guide")*

- 90 psf **[Article 3.1]**
- Dynamic load allowance is not applied to pedestrian live loads **[Article 3.1]**

The vehicle live load shall be applied as follows: (from *"Pedestrian Bridge Guide")*

- Design for an occasional <u>single</u> maintenance vehicle live load (LL) **[Article 3.2]**

Clear Bridge Width (w)	Maintenance Vehicle
7 ft ≤ w ≤ 10 ft	H5 Truck (10,000 lbs)
w > 10 ft	H10 Truck (20,000 lbs)

- Clear bridge widths of less than 7 feet need not be designed for maintenance vehicles. **[Article 3.2]**
- The maintenance vehicle live load shall not be placed in combination with the pedestrian live load. **[Article 3.2]**
- Dynamic load allowance is not applied to the maintenance vehicle. **[Article 3.2]**
- Strength I Limit State shall be used for the maintenance vehicle loading. **[Article 3.2, 3.7]**

The FHWA Pedestrian and Accessible Design guidelines and the ADA Standards for Accessible Design both recommend a limiting gradient of 8.33 percent (1:12) on ramps for pedestrian facilities to accommodate the physically handicapped and elderly.

The minimum inside clear width of a pedestrian bridge on a pedestrian accessible route is 8 feet. (*AASHTO Guide for the Planning, Design, and Operation of Pedestrian Facilities, 2004)*, (Article 3.5.3).

The width required is based on the type, volume, and direction of pedestrian and/or bicycle traffic.

The vertical clearance on the pedestrian bridge shall be a minimum of 10 feet for bicyclists' comfort and to allow access for maintenance and emergency vehicles. The Wisconsin Department of Natural Resources recommends a vertical clearance on the bridge of at least 12 feet to accommodate maintenance and snow grooming equipment on state trails. Before beginning the design of the structure, the Department of Natural Resources and the Bureau of Structures should be contacted for the vertical clearance requirements for all vehicles that require access to the bridge.

In addition, ramps should have rest areas or landings 5 feet to 6 feet in length which are level and safe. Rest area landings are mandatory when the ramp gradient exceeds 5 percent. Recommendations are that landings be spaced at 30 foot maximum intervals, as well as wherever a ramp turns. This value is based on a maximum gradient of 8.33 percent on pedestrian ramps, and limiting ramps to a maximum rise of 30 inches per ramp run. Also, ramps are required to have handrails on both sides. See Standard Details for handrail location and details.

Minimum vertical clearance for a pedestrian overpass can be found in the *Facilities Development Manual (FDM)* Procedure 11-35-1, Attachment 1.8 and 1.9. Horizontal clearance is provided in accordance with the requirement found in *(FDM)* Procedure 11-35-1, Attachment 1.5 and 1.6.

Live load deflection limits shall be in accordance with the provisions of **LRFD [2.5.2.6.2]** for the appropriate structure type.

Pedestrian loads, as described in the *AASHTO LRFD Bridge Design Specifications*, shall be used to not only design the pedestrian railings on the structure, but shall also be used to design stairway railings that are adjacent to the structure and are part of the contract.

37.3 Protective Screening

Protective Screening is recommended on all pedestrian overpasses due to the increased number of incidents where objects were dropped or thrown onto vehicles traveling below. Several types of screening material are available such as aluminum, fiberglass and plastic sheeting, and chain link type fencing. A study of the various types of protective screening available indicates that chain link fencing is the most economical and practical for pedestrian overpasses. For recommended applications refer to the Standard Details.

The top of the protective screening may be enclosed (not required) with a circular section in order to prevent objects from being thrown over the sides and to discourage people from climbing on (over) the top. The opening at the bottom is held at a 1 inch clearance to prevent objects from being pushed under the fence.

The core wire of the fence fabric shall be a minimum of 9 gauge (0.148 inch) thickness, galvanized and woven in a 2 inch mesh. A 1 inch mesh may be used in highly vulnerable areas. A vinyl coating may also be used for aesthetic purposes. Add a special provision to the contract if these additional features are used. Special provisions for common items are available as STSP's or on the Wisconsin Bridge Manual website.

Region project staff should be consulted with regards to fencing preferences.

This page intentionally left blank.

Table of Contents

38.1 Introduction 3
38.2 Design Specifications and Design Aids 4
38.2.1 Specifications 4
38.2.2 Design Aids 4
38.2.3 Horizontally Curved Structures 4
38.2.4 Railroad Approval of Plans 5
38.3 Design Considerations 6
38.3.1 Superstructure 6
38.3.1.1 Methods of Design, Selection Type and Superstructure General 6
38.3.1.2 Ballast Floor 9
38.3.1.3 Dead Load 9
38.3.1.4 Live Load 10
38.3.1.5 Live Load Distribution 10
38.3.1.6 Stability 12
38.3.1.7 Live Load Impact 12
38.3.1.8 Centrifugal Forces on Railroad Structures 14
38.3.1.9 Lateral Forces From Equipment 14
38.3.1.10 Longitudinal Forces on Railroad Structures 15
38.3.1.11 Wind Loading on Railroad Structures 15
38.3.1.12 Loads from Continuous Welded Rails 16
38.3.1.13 Fatigue Stresses on Structures 16
38.3.1.14 Live Load Deflection 17
38.3.1.15 Loading Combinations on Railroad Structures 17
38.3.1.16 Basic Allowable Stresses for Structures 17
38.3.1.17 Length of Cover Plates and Moment Diagram 18
38.3.1.18 Charpy V-Notch Impact Requirements 18
38.3.1.19 Fracture Control Plan for Fracture Critical Members 18
38.3.1.20 Waterproofing Railroad Structures 19
38.3.2 Substructure 20
38.3.2.1 Abutments and Retaining Walls 20
38.3.2.2 Piers 22
38.3.2.3 Loads on Piers 23

38.3.2.3.1 Dead Load and Live Loading 23
38.3.2.3.2 Longitudinal Force 23
38.3.2.3.3 Stream Flow Pressure 23
38.3.2.3.4 Ice Pressure 23
38.3.2.3.5 Buoyancy 23
38.3.2.3.6 Wind Load on Structure 23
38.3.2.3.7 Wind Load on Live Load 24
38.3.2.3.8 Centrifugal Force 24
38.3.2.3.9 Rib Shortening, Shrinkage, Temperature and Settlement of Supports 24
38.3.2.3.10 Loading Combinations 24
38.3.2.4 Pier Protection for Overpass Structures 26
38.3.2.5 Pier Protection Systems at Spans Over Navigable Streams 26
38.3.2.5.1 General 26
38.3.2.5.2 Types of Construction 26
38.4 Overpass Structures 28
38.4.1 Preliminary Plan Preparation 28
38.4.2 Final Plans 29
38.4.3 Shoring 29
38.4.4 Horizontal and Vertical Clearances 29
38.4.4.1 Horizontal Clearance 29
38.4.4.2 Vertical Clearance 29
38.4.4.3 Compensation for Curvature 29
38.4.4.4 Constructability 30

38.1 Introduction

The principles of designing railroad structures are similar to those for structures carrying highways. However, structures carrying railways have much heavier loadings than those subject to highway loadings due to increased dead load, live load and impact required for railways.

The general features of design, loadings, allowable stresses, etc., for railway structures are controlled by the specifications of the American Railway Engineering and Maintenance-of-Way Association (AREMA). The different railroad companies vary somewhat in their interpretation and application of these specifications as stated in the *AREMA Manual for Railway Engineering* (hereafter referred to as *AREMA Manual).* Requirements for railroad structures vary with the railroad company whose tracks are carried by the structure, and are sometimes varied by the same company in different locations. The *AREMA Manual* provides for design of railroad structures using Allowable Stress Design (ASD) and Load Factor Design (LFD) methods. The Load and Resistance Factor Design (LRFD) method is currently not used. Designers should bear in mind that specifications were developed for more or less typical conditions. If a structure is unusual in some respects, designers should use their best engineering judgment in selection of proper design criteria. Most railroad companies permit and prefer high strength bolted or shop welded steel plate girders, reinforced concrete or prestressed concrete members in bridge construction.

Safety of the traveler on the highway under the structure and uniformity of track surface dictates that the full ballast section of the railway be carried on the structure. The relatively heavy loadings and high impact factor together with the span and clearance requirements usually found in underpass structures, practically limit the choice of materials for the superstructure to structural steel. The floor under the ballast may be steel plate or reinforced concrete and the substructures could be reinforced concrete or structural steel as conditions warrant.

The *AREMA Manual* covers all phases of railway design, construction, maintenance and operation. It is divided into sections and chapters. Chapter 8, Concrete Structures and Foundations (Volume 2), governs the design and construction of plain and reinforced concrete members, rigid concrete structures, retaining walls, pile foundations, substructures of railway structures, etc. Chapter 15 - Steel Structures (Volume 2), governs the design and construction of steel railroad structures.

In this chapter, reference will be made to specific articles of the *AREMA Manual* as required.

The AREMA specifications are revised annually and it is essential that the latest revisions be used. The *AREMA Manual* is a guideline only and should be followed as a starting point in design.

Railroad companies are essentially conservative as their primary interest is the safety of their trains and human lives. Their requirements are usually based upon their operating experience and are set up with that interest in view.

38.2 Design Specifications and Design Aids

38.2.1 Specifications

Allowable stresses are provided in different chapters and sections of the *AREMA Manual*.

Refer to the design, construction, maintenance and operation related materials as presented in the stated sections of the following specifications:

American Railway Engineering and Maintenance-of-Way Association (AREMA) Manual for Railway Engineering

- Chapter 8 - Concrete Structures and Foundations (Volume 2)
- Chapter 15 - Steel Structures – (Design, Fabrication and Construction) (Volume 2)
- Chapter 28 – Clearances - (Horizontal and Vertical) (Volume 4)

AASHTO Standard Specifications for Highway Bridges, 17th Edition

Wisconsin Standard Specifications for Highway and Structure Construction

38.2.2 Design Aids

In the design of railroad structures the only short cut available is a method of computing Live Load Moments, Shears and Reactions by the use of tables which can be found in Section 1.15 of Chapter 15, part 1 of the *AREMA Manual*. This table reflects Cooper E80 Live Loading shown in Figure 38.3-5. All the moment, shear and reaction values are for one rail (one-half track load) only and all the values can be prorated (directly proportional) for smaller or larger Cooper's E live loadings.

Floor beam spacings in through plate-girder railroad structures may be determined by a number of things, but consideration should be given to the transverse stiffener spacings of the girders. It is very convenient to have the floor beam spacing in multiples of stiffener spacings.

For ballasted structures, all lateral forces will be carried by the steel ballast plate which is extremely rigid and lateral bracing will not be required.

38.2.3 Horizontally Curved Structures

The latest AREMA specifications as well as individual railroad company's interpretation and application of the *AREMA Manual* should be followed in designing and detailing curved structures. There is considerable information available on designing curved steel girders. Most of the methods require computer programs that may be difficult to use. The Approximate Method of Design developed by USS Corporation is an accepted approach for horizontally curved girders.

38.2.4 Railroad Approval of Plans

There is a need to get the individual railroad company's unique design requirements. Smaller companies such as Wisconsin & Southern may rely on AREMA requirements and DOT experience.

Prior to starting the preliminary design, the Bureau of Structures (BOS) should receive the railroad company's current standards and design policy guidelines.

Before the preliminary plan is prepared, the Regional Project Manager, BOS and Bureau of Rails and Harbors (BRH) should review the particular railroad company's design standards for compliance with 23 CFR (Code of Federal Regulations) and DOT policy, and for compatibility and practicality with unique project features.

The preliminary structure plan should be prepared and submitted to the railroad company for approval after the above steps have been completed.

Detailed structure design should not begin until the railroad company has approved the preliminary plan.

The bridge designer should work directly with the railroad's bridge engineering office where interpretation of requirements or clarification of design details is needed.

The final structure plan and special provisions need to be sent to and approved by the railroad company before the project is authorized for letting.

38.3 Design Considerations

38.3.1 Superstructure

38.3.1.1 Methods of Design, Selection Type and Superstructure General

The preferred types of railroad structures are as follows:

- Rolled or welded girders for spans of 50 feet or less
- Bolted or welded plate girders for spans over 50 to 150 feet
- Bolted or welded trusses for spans over 150 feet

The superstructures of grade separations carrying railroad traffic are usually of beam and girder construction. The spans are generally too short for economical use of trusses and other factors, such as appearance, maintenance, etc., discourage their use.

Floor systems in beam and girder construction, for moderate spans, may be divided into two general classes:

- One-way Floor System
- Two-way Floor System

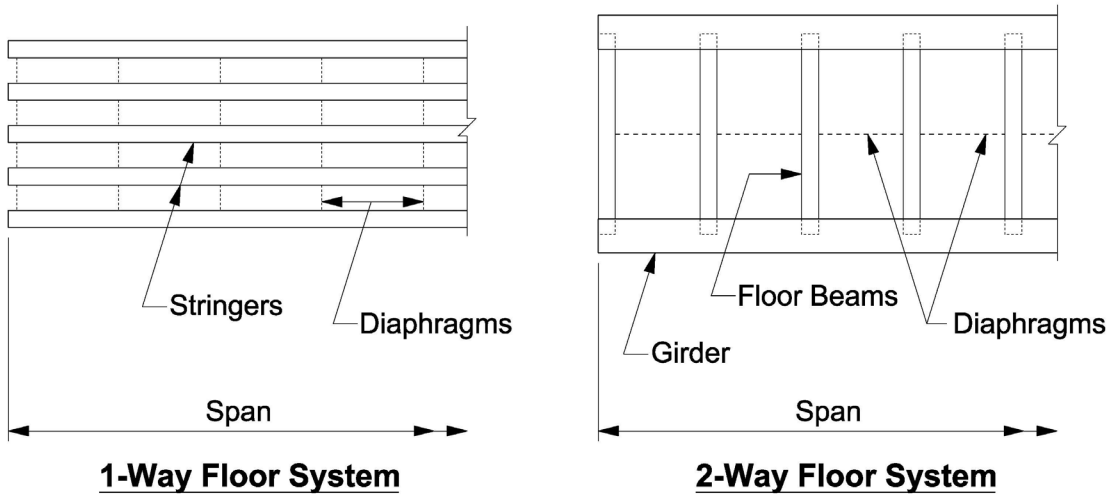

Figure 38.3-1
Types of Floor Systems

The One-way floor system is always a deck structure and is particularly adaptable for structures carrying several tracks or subject to future widening or other controls which make a

deck structure desirable. The Two-way floor system may be either a through plate-girder or deck structure depending upon whether the floor beams are placed near the bottom or the top flange of the girders. It is usually desirable to keep the depth of structure (base of rail to low steel) at a minimum. Therefore, most underpasses with two-way floor systems are through structures as shown in Figure 38.3-2.

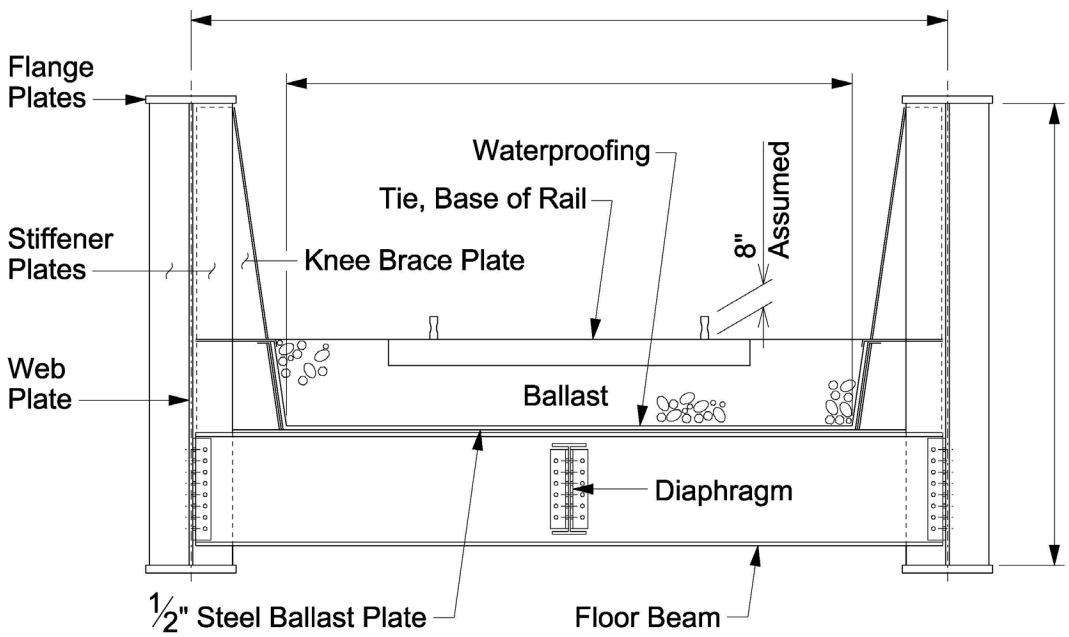

Figure 38.3-2
Typical Section of Through-Girder Bridge
(Two-Way Floor System)

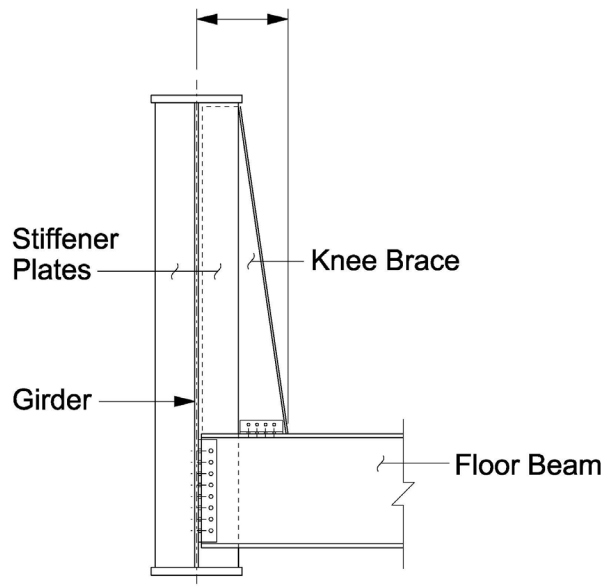

Figure 38.3-3
Knee Brace for Through-Girder Bridge

Through girders should be laterally braced with gusset plates or knee braces with solid webs connected to the stiffeners as shown in Figure 38.3-3. The *AREMA Manual* limits the spacing of knee braces to 12 feet maximum. They also dictate that the type of braces are to be web plates with flanges. Since knee braces support the top flanges against buckling, smaller values of L/b (L = unsupported distance between the nearest lines of fasteners or welds, or between the roots of rolled flanges)/ (b= flange width) produce higher allowable fiber stresses in the top flanges.

Almost all railroad structures are usually simple spans for the following reason:

Usually the maximum negative moment over the support is nearly equal to the positive moment of the simple beam. In some combinations, the continuous beam negative moments may be greater than the simple beam positive moment because of the unfavorable Live Load placement in the spans. Continuity introduces complications and it is questionable if any real saving is realized by its use.

In railroad structures, spacing of the through girders is governed by AREMA specifications for Steel Railway Structures. The spacing should be at least 1/20 of the span or should be adequate to insure that the girders and other structural components provide required clearances for trains, whichever is greater. The requirement of lateral clearance each side of track centerline for curved alignment should be as per latest AREMA specifications. A typical girder inside elevation view is shown in Figure 38.3-4.

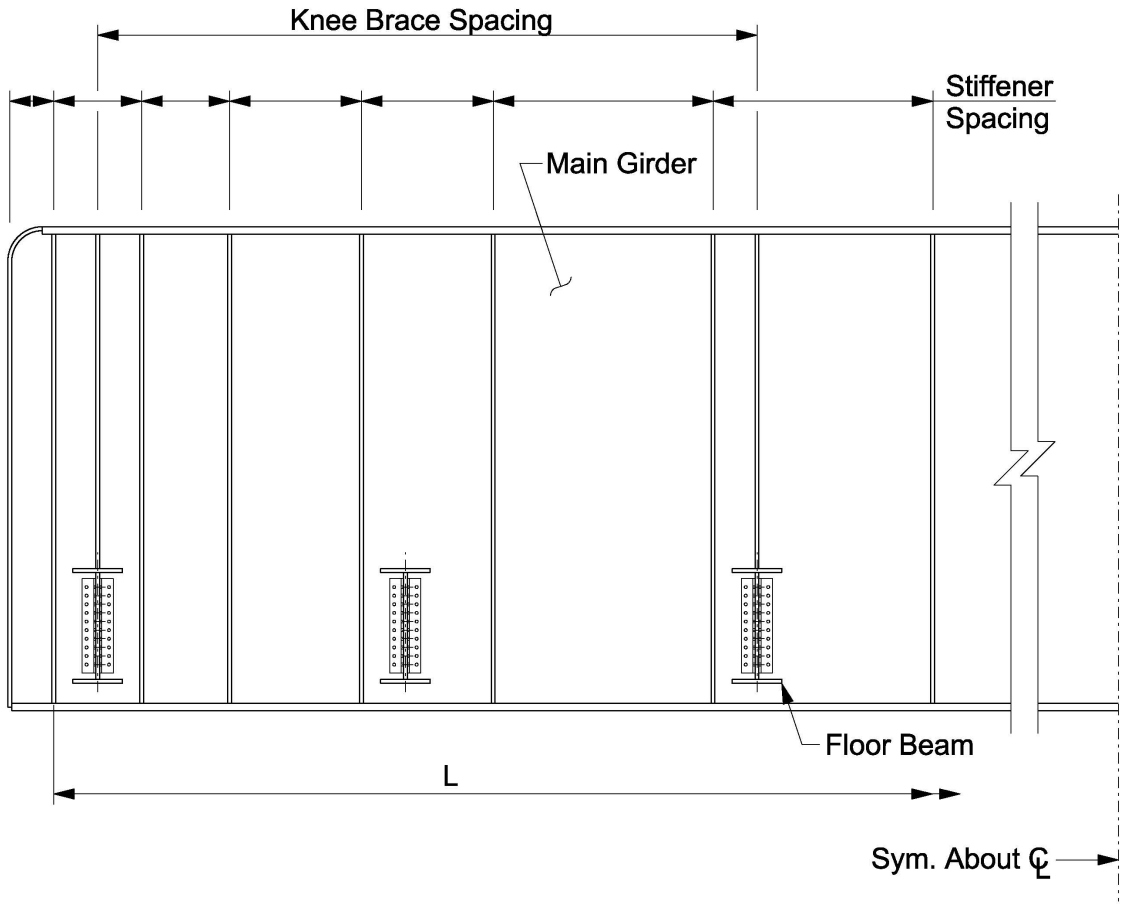

Figure 38.3-4
Typical Through-Girder Inside Elevation

38.3.1.2 Ballast Floor

The superstructure includes the ballast floor, girders and girder bearings to the top of the masonry. The thickness of the ballast floor shall not be less than ½ inches for steel plate or 6 inches for reinforced or prestressed concrete. For concrete floor, thickness is measured from top of bars or cover plate and the reinforcement is usually #4 bars at 6 inches both at top and bottom.

38.3.1.3 Dead Load

Dead Load consists of weight of track rails and fastenings, ballast and ties, weight of waterproofing, ballast plate, floor beams, etc. Most of the load carried by each girder is transmitted to it by the floor beams as concentrated loads. Computations are simpler, however, if the floor beam spacings are ignored and the girder is treated as if it received load from the ballast plate. Moments and shears computed with this assumption are sufficiently accurate for design purposes because of the relatively close spacing of the floor beams. Thus, the dead load on the girder may be considered uniformly distributed.

38.3.1.4 Live Load

The *AREMA Manual* recommends that design be based on Cooper E80 Live Loading as shown in Figure 38.3-5. Heavier Cooper E loadings will result in directly proportional increases in the concentrated and uniform live loadings shown in Figure 38.3-5.

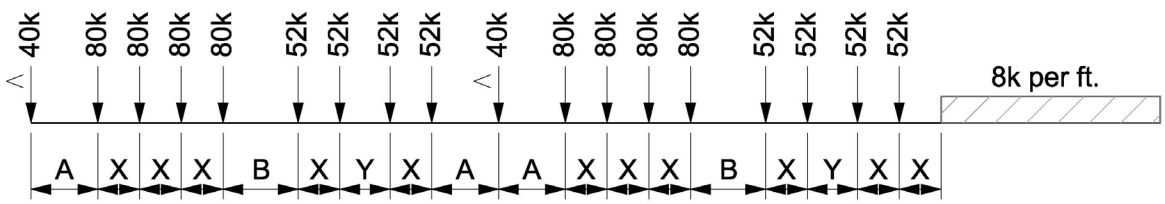

Figure 38.3-5
Cooper E80 Live Loading

X = 5 ft A = 8 ft
Y = 6 ft B = 9 ft

To account for the effect of multiple tracks on a structure, the portions of full live load on the tracks may be taken as:

Number of Tracks	Loading
Two tracks	Full live load
Three tracks	Full live load on two tracks, one-half full live load on the third track
Four tracks	Full live load on two tracks, one-half on one track, and one quarter on the remaining track
More than four tracks	As specified by the Engineer

Table 38.3-1
Live Load vs. Number of Tracks

The selection of the tracks for these loads shall be such as will produce the greatest live load stress in the member.

38.3.1.5 Live Load Distribution

On open-deck structures, ties within a length of 4 feet but not more than three ties may be assumed to support a wheel load. The live load should be considered a series of concentrated loads, however, for the design of beams and girders. No longitudinal distribution of wheel loads shall be assumed.

When two or more longitudinal beams per rail are properly diaphragmed in accordance with *AREMA Manual* Chapter 15, and symmetrically spaced under the rail, they shall be considered as equally loaded.

For ballasted-deck structures, live load distribution is based on the assumption of standard cross ties at least 8 feet long, about 8 inches wide, and spaced not more than 2 feet on centers, with at least 6 inches of ballast under the ties. For deck design, each axle load should be uniformly distributed over a length of 3 feet plus the minimum distance from bottom of tie to top of beams or girders, but not more than 5 feet or the minimum axle spacing of the loading. In the lateral direction, the axle load should be uniformly distributed over a width equal to the length of tie plus the minimum distance from bottom of tie to top of beams or girders.

Transverse steel beams without stringers

For ballasted concrete decks supported by transverse steel beams without stringers, the portion of the maximum axle load to be carried by each beam is given by:

$$P = \frac{1.15\,AD}{S}$$

Where:

P	=	Load on a beam from one track
A	=	Axle Load
S	=	Axle spacing (ft)
D	=	Effective beam spacing (ft)

For bending moment, within the limitation that D may not exceed either axle or beam spacing, the effective beam spacing may be computed from:

$$D = d\left(\frac{1}{1+\frac{d}{aH}}\right)\left(0.4+\frac{1}{d}+\frac{\sqrt{H}}{12}\right)$$

Where:

a	=	Beam span (ft)
H	=	$\frac{nI_b}{ah^3}$

n	=	Ratio of modulus of elasticity of steel to that of concrete
I_b	=	Moment of inertia of beam (in^4)
h	=	Thickness of concrete deck (in)
d	=	Beam spacing (ft)

For end shear, D = d

The load P shall be applied as two equal concentrated loads on each beam at each rail, equal to P/2. Lateral distribution of such loads shall not be assumed.

The value for "D" should be taken equal to "d" for structures without a concrete deck or for structures where the concrete slab extends over less than 75% of the floor beam.

Where "d" exceeds S, P should be the maximum reaction of the axle loads with the deck between beams acting as a simple span.

<u>For longitudinal steel beams or girders</u>

For ballasted decks supported on longitudinal girders, axle loads should be distributed equally to all girders whose centroids lie within a lateral width equal to length of tie plus twice the minimum distance from bottom of tie to top of girders. Distribution of loads for other conditions shall be determined by a recognized method of analysis.

38.3.1.6 Stability

For spans and towers, stability should be investigated with live load on only one track, the leeward one for structures with more than one track. The live load should be 1200 plf, without impact.

38.3.1.7 Live Load Impact

AREMA Manual Chapter 15 specifies the impact forces to be used and how they are to be applied. Impact forces should be applied vertically and equally at top of each rail. Impact, I, expressed as a percentage of axle loads, is given for open-deck structures by the following equations and modified by a factor determined by the number of tracks to be supported. For ballasted deck structures the percentage to be used shall be 90% of that specified for open deck structures.

<u>For rolling equipment without hammer blow</u> (diesels, electric locomotives, tenders alone, etc.)

For L less than 80 feet

$$I = RE + 40 - \frac{3L^2}{1600}$$

For L = 80 feet or more

$$I = RE + 16 + \frac{600}{L - 30}$$

<u>For steam locomotives with hammer blow</u>:

For beam spans, stringers, girders, floorbeams, posts of deck truss spans carrying load from floorbeams only, and floorbeam hangers:

For L less than 100 feet

$$I = RE + 60 - \frac{L^2}{500}$$

For L = 100 feet or more

$$I = RE + 10 + \frac{1800}{L - 40}$$

For truss spans

$$I = RE + 15 + \frac{4000}{L + 25}$$

Where:

RE	=	Either 10% of axle load or 20% of the wheel load.
L	=	Length in feet, center to center of supports for stringers, transverse floorbeams without stringers, longitudinal girders and trusses (main members), or length in feet, of the longer adjacent supported stringers, longitudinal beam, girder or truss for impact in floor beams, floor beam hangers, subdiagonals of trusses, transverse girders and viaduct columns.

For members receiving load from more than one track, the impact percentage shall be applied to the live load on the number of tracks designated below.

Load received from two tracks	
For L less than 175 ft	Full impact on two tracks
For L from 175 to 225 ft	Full impact on one track and a percentage of full impact on the other as given by the formula, 450 - 2L
For L greater than 225 ft	Full impact on one track and none on the other
Load received from more than two tracks	
For all values of L	Full impact on any two tracks

Table 38.3-2
Live Load Impact

38.3.1.8 Centrifugal Forces on Railroad Structures

On curves, a centrifugal force corresponding to each axle load should be applied horizontally through a point 6 feet above the top of rail. This distance should be measured in a vertical plane along a line that is perpendicular to and at the midpoint of a radial line joining the tops of the rails. This force should be taken as a percentage, C, of the specified axle load without impact.

$$C = 0.00117 S^2 D$$

Where:

S = Speed (mph)

D = Degree of curve = 5729.65/R

R = Radius of curve (ft)

Preferably, the section of the stringer, girder or truss on the high side of the superelevated track should be used also for the member on the low side, if the required section of the low-side member is smaller than that of the high-side member.

If the member on the low side is computed for the live load acting through the point of application defined above, impact forces need not be increased. Impact forces may, however, be applied at a value consistent with the selected speed in which case the relief from centrifugal force acting at this speed should also be taken into account.

38.3.1.9 Lateral Forces From Equipment

For bracing systems or for longitudinal members entirely without a bracing system, the lateral force to provide for the effect of the nosing of equipment, such as locomotives, (in addition to the other lateral forces specified) should be a single moving force equal to 25% of the heaviest

axle load. It should be applied at top of rail. This force may act in either lateral direction at any point of the span. On spans supporting multiple tracks, the lateral force from only one track should be used.

The resulting stresses to be considered are axial stresses in members bracing the flanges of stringer, beam and girder spans, axial stresses in the chords of truss spans and in members of cross frames of such spans, and stresses from lateral bending of flanges of longitudinal flexural members having no bracing system. The effects of lateral bending between braced points of flanges, axial forces in flanges, vertical forces and forces transmitted to bearings shall be disregarded.

38.3.1.10 Longitudinal Forces on Railroad Structures

The longitudinal force from trains should be taken as 15% of the live load without impact.

Where the rails are continuous (either welded or bolted joints) across the entire structure from embankment to embankment, the effective longitudinal load shall be taken as L/1200 (where L is the length of the structure in feet) times the load specified above (15% of live load), but the value of L/1200 used shall not exceed 0.80.

Where rails are not continuous, but are interrupted by a moveable span, sliding rail expansion joints or other devices, across the entire structure from embankment to embankment, the effective longitudinal force should be taken as 15% of live load.

The effective longitudinal force should be taken on one track only. It should be distributed to the various components of the supporting structure, taking into account their relative stiffnesses, where appropriate, and the type of bearings.

The effective longitudinal force should be assumed to be applied at base of rail.

38.3.1.11 Wind Loading on Railroad Structures

AREMA Manual Chapter 15 provides the details of wind loading on railroad structures.

The wind load shall be considered as a moving load acting in any horizontal direction. On the train it shall be taken at 300 plf on the one track, applied 8 feet above the top of rail. On the structure it shall be taken at 30 psf on the following surfaces:

- For girder spans, 1.5 times the vertical projection of the span.
- For truss spans, the vertical projection of the span plus any portion of the leeward trusses not shielded by the floor system.
- For viaduct towers and bents, the vertical projections of all columns and tower bracing.

The wind load on girder spans and truss spans, however, shall not be taken at less than 200 plf for the loaded chord or flange, and 150 plf for the unloaded chord or flange.

The wind load on the unloaded structure shall be assumed at 50 psf of surface as defined in the bulleted items above.

38.3.1.12 Loads from Continuous Welded Rails

Section 8.3 of Chapter 15 *AREMA Manual* describes the details of the effect of continuous welded rails. Forces in continuous welded rail may be computed from the following equations:

$$\text{I.F.} = 38WT$$

$$\text{R.F.} = \frac{WDT}{150}$$

Where:

I.F.	=	Internal force in two rails (lb); compression for temperature rise, tension for temperature fall.
R.F.	=	Radial force in two rails, (lb/ft of bridge); acting toward outside of curve for temperature rise, toward inside for temperature fall.
W	=	Weight of one rail (lb/yd)
T	=	Temperature change (°F)
D	=	Degree of curvature

38.3.1.13 Fatigue Stresses on Structures

The major factors governing fatigue strength are the number of stress cycles, the magnitude of the stress range, and the type and location of constructional detail. The number of stress cycles, N, to be considered shall be selected from Table 15-1-7 of Chapter 15 *AREMA Manual*, unless traffic surveys or other considerations indicate otherwise. The selection depends on the span length in the case of longitudinal members, and on the number of tracks in the case of floor beams and hangers.

Formulas for allowable fatigue stresses on structures recommended by AREMA are dependent primarily on the strength of the material, the stress range, number of stress cycles and a stress ratio R.

The stress range, S_R, is defined as the algebraic difference between the maximum and minimum calculated stress due to dead load, live load, impact load and centrifugal force. If live load, impact load and centrifugal force result in compressive stresses and the dead load stress is compression, fatigue need not be considered.

The type and location of the various constructional details are categorized in Table 15-1-9 and illustrated in Figure 15-1-5 *AREMA Manual*. The stress range for other than Fracture Critical Members shall not exceed the allowable fatigue stress range, $S_R$fat, listed in Table 15-1-10.

The stress range for Fracture Critical Members shall not exceed the allowable fatigue stress range $S_R$fat, listed in Table 15-1-10 (see Note 2) *AREMA Manual*.

38.3.1.14 Live Load Deflection

The deflection of the structure shall be computed for the live loading plus impact loading condition producing the maximum bending moment at mid-span for simple spans. In this computation, gross moment of inertia shall be used for flexural members and gross area of members for trusses. For members with perforated cover plates, the effective area shall be used.

The structure shall be so designed that the computed deflection shall not exceed 1/640 of the span length, center to center of bearings for simple spans.

38.3.1.15 Loading Combinations on Railroad Structures

Every component of superstructure and substructure should be proportioned to resist all combinations of forces applicable to the type of structure and its site. Members subject to stresses resulting from dead load, live load, impact load and centrifugal force shall be designed so that the maximum stresses do not exceed the basic allowable stresses of Section 1.4, and the stress range does not exceed the allowable fatigue stress range allowed by AREMA specifications.

The basic allowable stresses of Section 1.4 shall be used in the proportioning of members subject to stresses resulting from wind loads only, as specified in *AREMA Manual*, Article 1.3.8.

With the exception of floorbeam hangers, members subject to stresses from other lateral or longitudinal forces, as well as to the dead load, live load, impact and centrifugal forces may be proportioned for 125% of the basic allowable unit stresses, without regard for fatigue. But the section should not be smaller than required with basic unit stresses or allowable fatigue stresses when those lateral or longitudinal forces are not present.

Increase in allowable stress permitted by the previous paragraph shall not be applied to allowable stress in high strength bolts.

38.3.1.16 Basic Allowable Stresses for Structures

Design of steel railroad structures usually is based on a working stress level that is some fraction of the minimum yield strength of the material. This value commonly is 0.55, allowing a safety factor of 1.82 against yield of the steel. The basic allowable stresses for structural steel, rivets, bolts and pins to be used in proportioning the parts of a structure are furnished in Table 15-1-12 in the *AREMA Manual* Chapter 15.

38.3.1.17 Length of Cover Plates and Moment Diagram

The dead load moment diagram is a parabola with mid-ordinate showing the maximum dead load moment. Determination of the exact shape of the envelope for the live load moment involves long and tedious calculations. The procedure consists of dividing the span into parts and finding the maximum moment at each section. The smaller the divisions, the more accurate the shape of the curve and the more involved and tedious the calculations.

Fortunately, a parabola with mid-ordinate equal to the tabular value for maximum moment, Section 1.15, *AREMA Manual* Chapter 15, very nearly encloses the envelope. Therefore the shape of the moment diagram of DL + LL + I is parabolic for all practical purposes. Knowing the maximum ordinate, the designer can compute the other values and draw the moment curve.

The resisting moment diagram can be superimposed upon actual moment diagram described above. The theoretical end of cover plates can be determined from these moment envelopes.

The AREMA specifications require that flange plates shall extend far enough to develop the capacity of the plate beyond the theoretical end. This method of determining the theoretical end of cover plates, on girders proportioned for deflection is not exact, but is acceptable for design purposes.

38.3.1.18 Charpy V-Notch Impact Requirements

Recognizing the need to prevent brittle fracture failures of main load carrying structural components, AREMA specifications have provisions for Charpy V-Notch impact testing and the values for steel other than fracture critical members are tabulated in Table 15-1-2 in *AREMA Manual*.

The design requirements for materials of Fracture Critical Members shall further comply with the Fracture Control Plan specified in *AREMA Manual* Chapter 15, Section 1.14. The Engineer shall designate on the plans which members or member components fall in the category of Fracture Critical Members.

38.3.1.19 Fracture Control Plan for Fracture Critical Members

For purposes of the Fracture Control Plan, Fracture Critical Members or member components (FCM's) are defined as those tension members or tension components of members whose failure would be expected to result in collapse of the structure or inability of the structure to perform its design function.

AREMA specifications have elaborate descriptions of the Fracture Control Plan which has special requirements for the materials, fabrication, welding, inspection and testing of Fracture Critical Members and member components in steel railway structures. The provisions of this plan are to:

- Assign responsibility for designating which steel railway structure members or member components, if any, fall in the category of "Fracture Critical".

- Require that fabrication of FCM or member components be done in plants having personnel, organization, experience, procedures, knowledge and equipment capable of producing quality workmanship.

- Require that all welding inspectors demonstrate their competency to assure that welds in FCM or member components are in compliance with this plan.

- Require that all non-destructive testing personnel demonstrate their competency to assure that tested elements of FCM or member components are in compliance with this plan.

- Specify material toughness values for FCM or member components.

- Supplement recommendations for welding contained elsewhere in AREMA specifications.

Charpy V-Notch (CVN) impact test requirements for steels in FCM's shall be always followed as given in *AREMA Manual* Table 15-1-15. Impact tests shall be in accordance with the CVN tests as governed by ASTM Designation A673 for frequency of testing P (impact). Impact tests shall be required on a set of specimens taken from each end of each plate. Wisconsin currently specifies its steel to Zone 3 when impacts are required on railroad structures. Since Wisconsin Standard Specifications say Zone 2, Zone 3 must be stated on the plans.

38.3.1.20 Waterproofing Railroad Structures

AREMA specifications on waterproofing railroad structures apply to materials and construction methods for an impervious membrane and auxiliary components to protect structures from harmful effects of water. Railroad structures which require waterproofing shall be designed so that they can be waterproofed by the methods and with the materials specified in AREMA specifications. The materials for waterproofing and the methods of application should be such as to insure that the waterproofing will be retained by bond, anchorage or other adequate means, in its original position as applied to the surface to be waterproofed.

The membrane shall consist of one of the following types, as described below.

- Minimum 3/32 inch thick butyl rubber sheeting secured with an approved adhesive.

- Heavy Duty Bituthene or Protecto Wrap M400 may be used.

- Rubberized asphalt with plastic film or 4 feet x 8 feet sheets of preformed board membrane with maximum thickness of ½ inch.

The butyl rubber sheeting, rubber membrane splicing cement and the butyl gum splicing tape shall be in accordance with the requirements for membrane waterproofing as specified in part 29 of Chapter 8 of the *AREMA Manual*. Cement for splicing rubber membrane shall be a self-vulcanizing butyl rubber compound and shall be applied at a minimum rate of 2 gallons/100 square feet.

38.3.2 Substructure

38.3.2.1 Abutments and Retaining Walls

The abutments for railroad structures are essentially bearing walls subject to lateral pressure. The design procedure is similar to that required for a retaining wall. The typical section is shown in Figure 38.3-6.

AREMA Manual Chapter 8, Part 5, governs the requirements for retaining walls. They are essentially the same as AASHTO requirements providing the backfill is of sandy material.

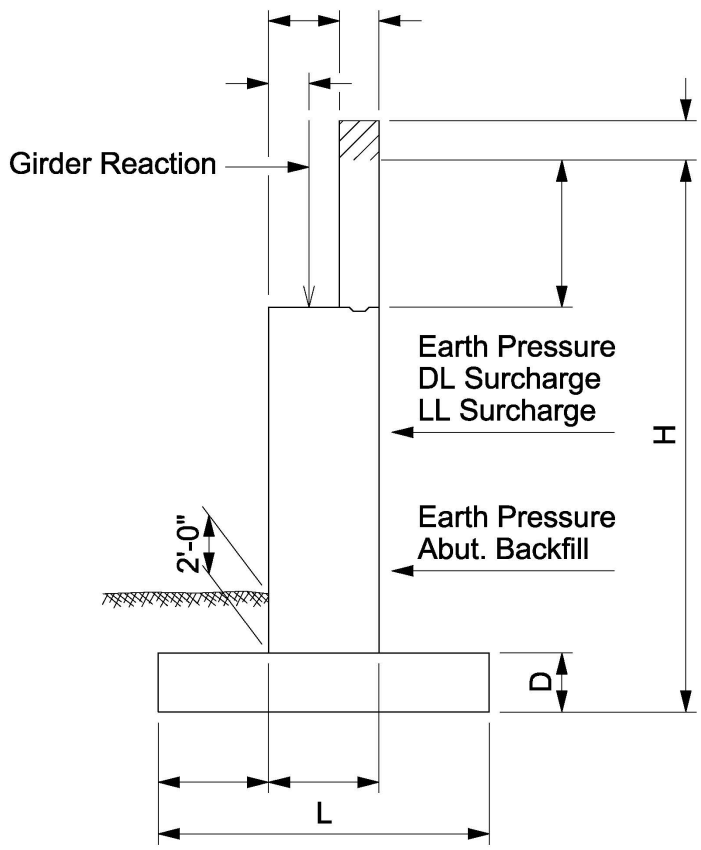

Figure 38.3-6
Typical Abutment

1. Field Survey

   Sufficient information shall be furnished, in the form of a profile and cross sections or a topographic map, to determine the structural requirements. Present grades and alignments of tracks and roads shall be indicated, together with the records of high water, low water and depth of scour, the location of underground utilities, and

information concerning any structures that may affect or be affected by the construction.

2. Subsurface exploration

   Specifications provided by *AREMA Manual* Chapter 8 and Part 22 should be followed.

3. Character of backfill

   Backfill is defined as all material behind the wall, whether undisturbed ground or fill, that contributes to the pressure against the wall.

   AREMA Manual Chapter 8, Table 8-5-1 classifies the type of backfill materials for retaining walls.

Type	Description
Type 1	Coarse-grained soil without admixtures of fine soil particles, very free draining (clean sand, gravel or broken stone)
Type 2	Coarse-grained, soil of low permeability due to admixtures of particles of silt size
Type 3	Fine silty sand; granular materials with conspicuous clay content; or residual soil with stones
Type 4	Soft or very soft clay; organic silt; or soft silty clay
Type 5	Medium or stiff clay that may be placed in such a way that a negligible amount of water will enter the spaces between the chunks during floods or heavy rains

Table 38.3-3
Classification of Backfill Material

4. Computation of Earth Pressure

   Values of the unit weight, cohesion and angle of internal friction of the backfill material shall be determined directly by means of soil tests or, if the expense of such tests is not justifiable, refer to Table 8-5-2 in *AREMA Manual* for the soil types defined above. Unless the minimum cohesive strength of backfill material can be evaluated reliably the cohesion shall be neglected and only the internal friction considered.

   When the backfill is assumed to be cohesionless; when the surface of the backfill is or can be assumed to be plane; when there is no surcharge load on the surface of the backfill; or when the surcharge can be converted into an equivalent uniform earth surcharge, Rankine's or Coulomb's formulas may be used under the conditions to which each applies. Formulas and charts given in *AREMA Manual* Chapter 8, Part 5 Commentary and the trial wedge method also presented in this Commentary are both applicable.

5. Computation of Loads Exclusive of Earth Pressure

In the analysis of retaining walls and abutments, due account shall be taken of all superimposed loads carried directly on them, such as building walls, columns, or bridge structures; and of all loads from surcharges caused by railroad tracks, highways, building foundations or other loads supported on the fill behind the walls.

In calculating the surcharge due to track loading, the entire load shall be taken as distributed uniformly over a width equal to the length of the tie. Impact shall not be considered unless the bearings are supported by a structural beam, as in a spill-through abutment.

6. Stability Computation

The resultant force on the base of a wall or abutment shall fall within the middle third if the structure is founded on soil, and within the middle half if founded on rock, masonry or piles. The resultant force on any horizontal section above the base of a solid gravity wall should intersect this section within its middle half. If these requirements are satisfied, safety against overturning need not be investigated.

The factor of safety against sliding at the base of the structure is defined as the sum of the forces at or above base level available to resist horizontal movement of the structure divided by the sum of the forces at or above the same level tending to produce horizontal movement. The numerical value of this factor of safety shall be at least 1.5. If the factor of safety is inadequate, it shall be increased by increasing the width of the base, by the use of a key, by sloping the base upward from heel to toe or by the use of battered piles.

In computing the resistance against sliding, the passive earth pressure of the soil in contact with the face of the wall shall be neglected. The frictional resistance between the wall and a non-cohesive subsoil may be taken as the normal pressure on the base times the coefficient of friction of masonry on soil. For coarse-grained soil without silt, the coefficient of friction may be taken as 0.55; for coarse-grained soil with silt, as 0.45; and for silt as 0.35. For concrete on sound rock the coefficient of friction may be taken as 0.60.

The factor of safety against sliding on other horizontal surfaces below the base shall be investigated and shall not be less than 1.5.

38.3.2.2 Piers

A pier is a structural member of steel, concrete or masonry that supports the vertical loads from the superstructure, as well as the horizontal loads not resisted by the abutments. Also, piers must be capable of resisting forces they may receive directly such as wind loads, floating ice and debris, expanding ice, hydrokinetic pressures and vehicle impact.

The connection between pier and superstructure is usually a fixed or expansion bearing which allows rotation in the longitudinal direction of the superstructure.

The types of piers most frequently used in railroad structures can be classified in one of the following categories:

- Pile Bents
- Solid Single Shaft
- Multi-Column Frames
- Individual Column in Line
- Steel Section

38.3.2.3 Loads on Piers

38.3.2.3.1 Dead Load and Live Loading

Dead load and live load comes from the superstructure on to the pier as girder reactions.

38.3.2.3.2 Longitudinal Force

The longitudinal force from trains shall be taken as 15 percent of the live load without impact. Where the rails are continuous (either welded or bolted joints) across the entire structure from embankment to embankment, the effective longitudinal force shall be taken as L/1200 (where L is the length of the structure in feet) times the force specified above (follow AREMA specifications), but the value of L/1200 shall not exceed 0.80.

The effective longitudinal force shall be assumed to be applied at the top of the supporting structure.

38.3.2.3.3 Stream Flow Pressure

All piers and other portions of structures which are subject to the force of flowing water or drift shall be designed to resist the maximum stresses induced thereby.

38.3.2.3.4 Ice Pressure

The effects of ice pressure, both static and dynamic, shall be accounted for in the design of piers and other portions of the structure where, in the judgment of the engineer, conditions so warrant. The values of effective ice pressure furnished in AASHTO specifications may be used as a guide.

38.3.2.3.5 Buoyancy

Buoyancy shall be considered as it affects the design of the substructure including piling.

38.3.2.3.6 Wind Load on Structure

The wind load acting on the structure shall be assumed as 45 psf on the vertical projection of the structure, applied at the center of gravity of the vertical projection. The wind load shall be assumed to act horizontally, in a direction perpendicular to the centerline of the track.

38.3.2.3.7 Wind Load on Live Load

A moving load of 300 plf on the train shall be applied 8 feet above the top of the rail horizontally in a direction perpendicular to the centerline of the track.

38.3.2.3.8 Centrifugal Force

On curves, a centrifugal force corresponding to each axle load shall be applied horizontally through a point 6 feet above the top of rail measured along a line perpendicular to the line joining the tops of the rails and equidistant from them. This force shall be the percentage of the live load computed from the formulas in 38.3.1.8.

38.3.2.3.9 Rib Shortening, Shrinkage, Temperature and Settlement of Supports

The structure shall be designed to resist the forces caused by rib shortening, shrinkage, temperature rise and/or drop and the anticipated settlement of supports. The following values for range of temperature and coefficient of thermal expansion apply to Wisconsin steel structures.

Temperature range	90°F
Coefficient of thermal expansion	0.0000065/°F

38.3.2.3.10 Loading Combinations

The following groups represent various combinations of loads and forces to which a structure may be subjected. Each component of the structure, or the foundation on which it rests, shall be proportioned for the group of loads that produce the most critical design condition.

Service Load Design

The group loading combinations for Service Load Design are as follows:

Load Case	Load Combinations	Allowable Percentage of Basic Unit Stress
Group I	D + L + I + CF + E + B + SF	100
Group II	D + E + B + SF + W	125
Group III	Group I + 0.5W + WL + LF + F	125
Group IV	Group I + OF	125
Group V	Group II + OF	140
Group VI	Group III + OF	140
Group VII	Group I + ICE	140
Group VIII	Group II + ICE	150
No increase in allowable unit stresses shall be permitted for members or connections carrying wind load only.		

Table 38.3-4
Service Load Design

Load Factor Design

The group loading combinations for Load Factor Design are as follows:

Group I	1.4 (D + 5/3 (L+I) + CF + E + B + SF)
Group IA	1.8 (D + L + I + CF + E + B + SF)
Group II	1.4 (D + E + B + SF + W)
Group III	1.4 (D + L + I + CF + E + B + SF + 0.5W + WL + LF + F)
Group IV	1.4 (D + L + I + CF + E + B + SF + OF)
Group V	Group II + 1.4 (OF)
Group VI	Group III + 1.4 (OF)
Group VII	1.0 (D + E + B + EQ)
Group VIII	1.4 (D + L + I + E + B + SF + ICE)
Group IX	1.2 (D + E + B + SF + W + ICE)
The load factors given are only intended for designing structural members by the load factor concept. The actual loads should not be increased by these factors when designing for foundations (soil pressure, pile loads, etc.). The load factors are not intended to be used when checking for foundation stability (safety factors against overturning, sliding, etc.) of a structure.	

Table 38.3-5
Load Factor Design

38.3.2.4 Pier Protection for Overpass Structures

Pier protection should be placed according to the railroad company involved, as they each have different requirements. For minimum requirements, refer to Standard for Highway Over Railroad Design Requirements. Check with the railroad company to determine if they want to extend crash wall beyond columns. Usually they do not.

Crash walls are not required on team tracks and spur tracks as these are for storage or loading and unloading on secondary lines.

Temporary sheet piling may be required by the railroad company during pier and footing construction. All sheet pilings have to be removed after completion of overpass structures. Refer to Standard Highway Over Railroad Design Requirements.

On rehabilitated or widened structures, past practice is to extend the existing protection. If the structure does not have any crashwall protection, past practice is to widen the pier in line with the existing as-built pier provided there is no reduction in horizontal clearance; even though it does not meet current standard clearance criteria.

38.3.2.5 Pier Protection Systems at Spans Over Navigable Streams

38.3.2.5.1 General

AREMA Manual Chapter 8, Part 23, covers the design, construction, maintenance and inspection of protective systems for railway piers located in and adjacent to channels of navigable waterways.

The purpose of the protective systems is to protect supporting piers of railway structures from damage caused by accidental collision from floating vessels. Such protection should be designed to eliminate or reduce the impact energy transmitted to the pier from the vessel, either by redirection of the force or by absorption, or dissipation of the energy, to non-destructive levels.

The size and type of vessel to be chosen as a basis for design of the pier protection should reflect the maximum vessel tonnage, type of cargo and velocity reasonably to be expected for the specific facility involved.

38.3.2.5.2 Types of Construction

The type of construction to be chosen for the protective system should be based on the physical site conditions and the amount of energy to be absorbed or deflected, as well as the size and ability of the pier itself to absorb or resist the impact.

Some of the more common types of construction are as follows:

- Integral piers - Where the pier is considered to be stable enough to absorb the impact of floating vessels, it may be necessary to attach cushioning devices to the surfaces of the pier in the areas of expected impact to reduce localized damage such as spalling

of concrete surfaces and exposure of reinforcing steel, or disintegration of masonry jointing.

- Dolphins - Where depth of water and other conditions are suitable, the driving of pile clusters may be considered. Such clusters have the piles lashed together with cable to promote integral action. The clusters should be flexible to be effective in absorbing impact through deflection.

- Cellular dolphins - May be filled with concrete, loose materials or materials suitable for grouting.

- Floating shear booms - Where the depth of water or other conditions precludes the consideration of dolphins or integral pier protection, floating sheer booms may be used. These are suitably shaped and positioned to protect the pier and are anchored to allow deflection and absorption of energy. Anchorage systems should allow for fluctuations in water level due to stream flow or tidal action.

- Hydraulic devices - Such as suspended cylinders engaging a mass of water to absorb or deflect the impact energy may be used under certain conditions of water depth or intensity of impact. Such cylinders may be suspended from independent caissons, booms projecting from the pier or other supports. Such devices are customarily most effective in locations subject to little fluctuations of water levels.

- Fender systems - Constructed using piling with horizontal wales, is a common means of protection where water depth is not excessive and severe impacts are not anticipated.

- Other types of various protective systems have been successfully used and may be considered by the Engineer. Criteria for the design of protective systems cannot be specified to be applicable to all situations. Investigation of local conditions is required in each case, the results of which may then be used to apply engineering judgment to arrive at a reasonable solution.

38.4 Overpass Structures

Highway overpass structures are placed when the incidences of train and vehicle crossings exceeds certain values specified in the *Facilities Development Manual* (*FDM*). The separation provides a safer environment for both trains and vehicles.

In preparing the preliminary plan which will be sent to the railroad company for review and approval several items of data must be determined.

- Track Profile - In order to maintain clearances under existing structures when the track was upgraded with new ballast, the railroad company did not change the track elevation under the structure causing a sag in the gradeline. The track profile would be raised with a new structure and the vertical clearance for the structure should consider this.

- Drainage - Hydraulic analysis is required if any excess drainage will occur along the rail line or into existing drainage structures. Deck drains shall not discharge onto railroad track beds.

- Horizontal Clearances - The railroad system is expanding just as the highway system. Contact the railroad company for information about adding another track or adding a switching yard under the proposed structure.

- Safety Barrier – The Commissioner of Railroads has determined that the Transportation Agency has authority to determine safety barriers according to their standards. The railroad overpass parapets should be designed the same as highway grade separation structures using solid parapets (Type “SS” or appropriate) and chain link fencing when sidewalks are present.

38.4.1 Preliminary Plan Preparation

Standard for Highway over Railroad Design Requirements shows the minimum dimensions for clearances and footing depths. These should be shown on the Preliminary Plan along with the following data.

- Milepost and Direction - Show the railroad milepost and the increasing direction.

- Structure Location - Show location of structure relative to railroad right of way. (Alternative is to submit Roadway Plan).

- Footings - Show all footing depths. Minimum footing depth requirements are shown on the Standard for Highway over Railroad Design Requirements.

- Drainage Ditches - Show ditches and direction of flow.

- Utilities - Show all utilities that are near structure footings and proposed relocation is required.

- Crash Protection – See Standard for Highway over Railroad Design Requirements for crash protection requirements. On a structure widening a crashwall shall be added if the multi-columned pier is equal to or less than 25 feet from centerline of track.

- Shoring – If shoring is required, use a General Note to indicate the location and limit.

- Limits of Railroad Right-of-Way – The locations are for reference only and need not be dimensioned.

38.4.2 Final Plans

The Final Plans must show all the approved Preliminary Plan data and be signed and/or sealed by a Registered Engineer.

38.4.3 Shoring

Railroad companies are particularly concerned about their track elevations. It is therefore very important that shoring is used where required and that it maintains track integrity.

38.4.4 Horizontal and Vertical Clearances

38.4.4.1 Horizontal Clearance

The distance from the centerline of track to the face of back slopes at the top of rail must not be greater than 20’-0” since federal funds are not eligible to participate in costs for providing greater distances unless required by site conditions. Minimum clearances to substructure units are determined based on site conditions and the character of the railroad line. Consideration must be given to the need for future tracks. Site specific track drainage requirements and possible need for an off-track roadway must also be considered.

38.4.4.2 Vertical Clearance

Section 192.31, Wisconsin Statutes requires 23’-0” vertical clearance above top of rail (ATR) for new construction or reconstruction, unless the Office of the Commissioner of Railroads approves less clearance. As a result, early coordination with the Railroads and Harbors Section is required.

Double stack containers at 20’-2” ATR are the highest equipment moving in restricted interchange on rail lines which have granted specific approval for their use. Allowing for tolerance, this equipment would not require more than 21’-0” ATR clearance. Railroad companies desire greater clearance for maintenance purposes and to provide allowance for possible future increases in equipment height.

38.4.4.3 Compensation for Curvature

Where a horizontal clearance obstruction is within 80 feet of curved track AREMA specifications call for lateral clearance increases as stated in *AREMA Manual* Chapter 28, Table 28-1-1.

38.4.4.4 Constructability

The minimum clearances discussed are to finished permanent work. Most railroad companies desire minimum temporary construction clearances to forms, falsework or track protection of 12'- 0" horizontal and 21'-0" vertical. The horizontal clearance provides room for a worker to walk along the side of a train and more than ample room for a train worker who may be required to ride on the side of a 10'-8" wide railroad car. Where piers are to be located close to tracks the type of footing to be used must be given careful consideration for constructability. The depth of falsework and forms for slab decks may also be limited by temporary vertical clearance requirements.

Table of Contents

39.1 General ... 3
39.1.1 Introduction ... 3
39.1.2 Sign Structure Types and Definitions ... 3
39.1.3 Additional Terms ... 5
39.1.4 OSS Selection Criteria ... 5
39.1.5 Cantilever OSS Selection Criteria ... 6
39.1.6 Full Span OSS Selection Criteria ... 7
39.1.7 Butterfly and Butterfly Truss OSS ... 8
39.1.8 Design Process ... 8
39.2 Materials ... 9
39.3 Specifications ... 10
39.3.1 LRFD Design ... 10
39.3.2 Other Specifications and Manuals ... 10
39.4 Design Considerations ... 11
39.4.1 Roadside Signs ... 11
39.4.2 Overhead Sign Structures (OSS) ... 11
39.4.2.1 General ... 11
39.4.2.2 Vehicular Protection ... 12
39.4.2.3 Vertical Clearance ... 12
39.4.2.4 Lighting and DMS Inspection Catwalks ... 12
39.4.2.5 Signs Mounted on the Side of Grade Separation Bridges ... 13
39.4.2.6 Sign Structures Mounted on Bridge Pedestals ... 13
39.4.3 LRFD Requirements and WisDOT Guidance for OSS Design ... 14
39.4.3.1 Loads, Load Combinations, and Limit States ... 14
39.4.3.2 Serviceability ... 16
39.4.3.3 Fatigue ... 16
39.4.3.4 Connection Design ... 16
39.4.4 OSS Standard Designs ... 17
39.4.5 OSS Non-Standard Designs ... 17
39.4.6 OSS Contractor Designed ... 18
39.5 Geotechnical Guidelines ... 19
39.5.1 General ... 19

39.5.2 Standard Foundations for OSS 19
39.5.2.1 General 19
39.5.2.2 Design Parameters Used for Standard Foundation Design 20
39.5.3 Standard Base Reactions for Non-Standard Foundation Design 21
39.5.4 Subsurface Investigation and Information 21
39.6 Appendix – OSS Limiting Parameters 22
39.7 Design Examples 25

39.1 General

39.1.1 Introduction

Signing is an integral part of the highway plan and as such is developed with the roadway and bridge design. Sign support structures are divided into two categories: Roadside signs, and Overhead Sign Structures (OSS). Roadside signs are designed and specified by the roadway engineer. OSS are designed by a Department (in-house or consultant) structural engineer or by a contractor, depending on the type of OSS.

Generally, an OSS is comprised of three components: the sign(s), the structure, and the foundation. Signage details are provided in the WisDOT Sign Plate Manual referenced below. This chapter of the WisDOT Bridge Manual (BM) governs the design of the structure and the foundation for OSS.

Regional traffic engineers determine the type of overhead sign structure that meets the signage needs for a particular project. Selection guidance and information is provided in the Facilities Development Manual (FDM) 11-55-20. That selection is communicated to the Bureau of Structures through the SSR submittal process.

The responsibility for developing contract plans depends on the type of sign structure selected and may be the role of Bureau of Structure staff, Regional staff, or engineering consultants.

39.1.2 Sign Structure Types and Definitions

Roadside Sign: Refers to roadside signs supported on ground mounted posts adjacent to roadways. Ground mounted sign support posts are not considered “structures” and as such, are not assigned a structure number. See WisDOT Sign Plate Manual for details.

https://wisconsindot.gov/Pages/doing-bus/local-gov/traffic-ops/manuals-and-standards/signplate/signplate.aspx

Overhead Sign Structure (OSS): Refers to structural supports for mounting signs over a roadway. OSS are assigned a structure number and inventoried in WisDOT’s Highway Structures Information (HSI) system. These structures are included on the section 8 structure sheets of a contract plan set.

In prior editions of the Bridge Manual there were two categories of overhead sign structures - “Sign Bridges” and “Overhead Sign Supports (OHSS)”. Sign bridges were Department designed, and OHSS were contractor designed. While the roles of design remain the same, this edition shifts away from that terminology, instead focusing on terminology that best describes the geometric characteristics of the sign structure.

Table 39.1-1 summarize OSS types used by WisDOT:

Overhead Sign Structure Type	Description	Standard Structure Design	Standard Foundation Design
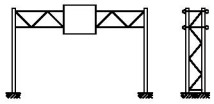 Full Span 4-Chord Truss	A 4-chord space truss with dual, trussed vertical support posts at each end. Used to support large Type I static highway sign panels and Dynamic Message Signs (DMS). Typically used over multi-lane state highways and interstate routes.	Yes	Yes
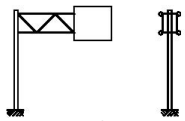 Cantilever 4-Chord Truss	A 4-Chord space truss with a single vertical support post. Used to support large Type I static highway sign panels and DMS. Commonly used to span over the outside lanes of multi-lane state highways and interstate routes to delineate exit lanes and ramps.	Yes	Yes
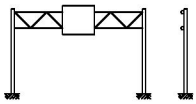 Full Span 2-Chord Truss	A 2-chord planar truss with single vertical support posts at each end. Used to support Type II and smaller Type I static signs and DMS over roadways and state highways.	No	Yes
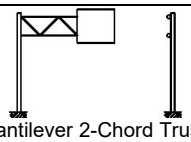 Cantilever 2-Chord Truss	A 2-chord planar truss with a single vertical support post. Used to support Type II and smaller Type I static signs and DMS over roadways and state highways.	No	Yes
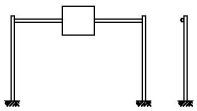 Full Span Monotube	Similar to a Full Span 2-Chord Truss but with only a single horizontal sign support member. Used to support small Type II static signs.	No	Yes
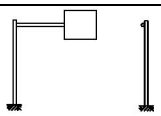 Cantilever Monotube	Similar to a Cantilever 2-Chord Truss but with only a single horizontal support member. Used to support small Type II static signs.	No	Yes
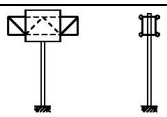 Butterfly Truss	A 4-Chord space truss with a centrally located single vertical support post used to support DMS. Typically used in the medians of multi-lane interstate routes.	No	No
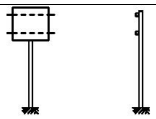 Butterfly	Similar to a Butterfly Truss but with multiple monotube horizontal sign support members.	No	No
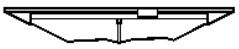 Bridge Mounted Sign Support	Sign support brackets to mount signs to the sides of grade separation highway bridges over the underpass roadway. These are typically used in special circumstances where other OSS types cannot be used.	No	NA
Note: Tri-chord and dual non-trussed monotubes are not permitted (except for Butterfly type)			

Table 39.1-1
WisDOT Overhead Sign Structure Types

39.1.3 Additional Terms

Type I Sign: Larger signs on an extruded aluminum base material, typically mounted on steel I-beams. Large guide and message signs with green backgrounds on interstate routes are Type I signs.

Type II Sign: Signs consisting of direct applied message on either plywood or sheet aluminum base material, typically mounted on wood or steel posts.

Dynamic Message Sign (DMS): An electronic traffic sign, often used in urban settings to inform drivers of unique and variable information. These signs are generally smaller in wind loaded area than Type I signs, but are heavier and load the truss eccentrically.

OSS Standard Designs: A group of pre-designed sign structures. The standard design includes both the structure and its foundation. The limitations for use is provided in section 39.1.5 and 39.1.6. See for further information on OSS Standard Designs.

OSS Non-Standard Design: Refers to sign structures that fall outside the OSS Standard Design parameters. It also applies to sign structure types not covered by standard design. These sign structures require a structural engineer provide a unique individual design of the structure and/or its foundation. See 39.4.5 for further information on OSS Non-standard Designs.

OSS Contractor Designed: Refer to sign structures that are designed and detailed by the contractor as part of the construction contract. The limitations for use is provided in section 39.1.5 and 39.1.6. The contractor does not design the foundation. For this, pre-designed foundations are available for use with these types of sign structures. See 39.4.6 for further information on OSS Contractor Designed.

OSS Standard Design Drawings: Refers to a library of WisDOT developed detail drawings for the *OSS Standard Designs* and the foundations for *OSS Contractor Designed*, otherwise indicated by a “yes” in Table 39.1-1. These standard design drawings are inserted into the contract plans with no additional design or detailing effort required.

39.1.4 OSS Selection Criteria

Chapter 11-55-20 of the Facilities Development Manual (FDM) provides selection guidance for determining sign structure type. The selection guidance was developed based on the design limitations of Table 39.1-1 and Table 39.1-2 and the information provided in the OSS Standard Design Drawings.

39.1.5 Cantilever OSS Selection Criteria

Cantilever OSS Type	Design	Cantilever Length [1]	Vertical Support Height [1]	Static Sign Total Area & Max. Dimensions [2]		DMS Total Area & Weight [1]
Monotube	Contractor Designed	40'-0" Max.	25'-0" Max. Column Base Plate to CL of Monotube Arm	Sign Area ≤ 75 SF Max. Sign Height ≤ 5'-0"		Not Used
2-Chord Truss	Contractor Designed	40'-0" Max. (static) / 20'-0" Max. (DMS)	27'-0" Max. Column Base Plate to CL of Top Chord	Sign Area ≤ 150 SF Max. Sign Height ≤ 10'-0"		13'-9"W x 8'-0"H Max. 750 Lbs. Max
4-Chord Truss	Standard Design	20'-0" Min. 30'- 0" Max.[2]	30'-0" Max. Column Base Plate to CL of Top Chord	Sign Area ≤ 264 SF Max. Sign Height ≤ 15'-0"	OR	19'-0"W x 6'-0"H 2,500 Lbs. Max.
4-Chord Truss	Standard Design	>30'-0" 38'-0" Max.[2]	30'-0" Max. Column Base Plate to CL of Top Chord	Sign Area ≤ 240 SF Max. Sign Height ≤ 15'-0"		19'-0"W x 6'-0"H 2,500 Lbs. Max.
4-Chord Truss	Non-Standard Design	>38'-0"	Column Height Exceeds Limit for Standard Design	Sign Area or Max. Sign Height Exceeds Limits For Standard Design		DMS Dimensions or Weight Exceeds Limits For Standard Design

Table 39.1-2
Cantilever OSS Selection Criteria

Note 1: The limiting parameters of length, height and sign area are depicted in 39.6 for Contractor Designed OSS and on the Standard Design Drawings for the 4-Chord OSS.

Note 2: Static Type I sign panels may extend 1'-0" beyond end of Cantilever 4-Chord Truss.

39.1.6 Full Span OSS Selection Criteria

Full Span OSS Type	Design	Span Length [1]	Vertical Support Height [1]	Static Sign Total Area & Max. Dimensions		DMS Max. Dimensions & Max. Weight [1]
Monotube	Contractor Designed	40'-0" Min. 75'-0" Max.	25'-0" Max. Column Base Plate to CL of Monotube Arm	Sign Area ≤ 150 SF Max. Sign Height ≤ 5'-0"		Not Used
2-Chord Truss	Contractor Designed	40'-0" Min. 100'-0" Max. (static) / 70'-0" Max. (DMS)	27'-0" Max. Column Base Plate to CL of Top Chord	150 SF < Sign Area ≤ 300 SF Max. Sign Height ≤ 10'-0"	OR	10'-6"W x 6'-0"H Max. 850 Lbs. Max
4-Chord Truss	Standard Design	40'-0" Min. 130'-0" Max.	30'-0" Max. Column Base Plate to CL of Top Chord	300 SF < Sign Area ≤ Note 2 Max. Sign Height ≤ 12'-0"		26'-0"W x 9'-0"H 4,500 Lbs. Max.
4-Chord Truss	Non-Standard Design	>130'-0"	Column Height Exceeds Limit for Standard Design	Sign Area or Height Exceeds Limits For Standard Design		DMS Dimensions or Weight Exceeds Limits For Standard Design

Table 39.1-3
Full Span OSS Selection Criteria

Note 1: The limiting parameters of length, height and sign area are depicted in 39.6 for Contractor Designed OSS and on the Standard Design Drawings for the 4-Chord OSS.

Note 2: Maximum sign area for full span 4-chord standard design = 12' x (90% * Span Length).

39.1.7 Butterfly and Butterfly Truss OSS

OSS Type	Design	Static Sign Total Area & Max. Dimensions[2]		DMS Total Area & Weight
Butterfly	Non-Standard Design	Sign Area ≤ 240 Sq. Ft. Sign Height ≤ 10'-0"	OR	N.A.
Butterfly Truss [1]	Non-Standard Design	Sign area > 240 sq. ft. Sign Height > 10'-0"		See 4-Chord full span requirements. Limit 2 per structure.

Table 39.1-4
Butterfly and Butterfly Truss OSS Selection Criteria

Note 1: Butterfly Trusses should use the WisDOT 4-chord cantilever truss dimensions (3'-9"W x 5'-0"H). Details similar to the 4-chord cantilever should be used in the design of these structures

Note 2: The above sign areas are for one side only. Butterfly and Butterfly Truss structures can have double the total sign area listed with back to back signs mounted on each side of the structure.

39.1.8 Design Process

The design process for sign structures generally follows the process for bridge structures as detailed in chapter 6. There are some notable exceptions. First, the design of sign structures are usually initiated later in the overall process because they are dependent on a fairly established roadway plan. Second, a certain subset of sign structure types are permitted to be designed and detailed by a contractor, with other types requiring a department structural engineer (in-house or consultant) providing the design and detailing.

As outlined in 11-55-20.3 of the FDM, the Region initiates the sign structure design process by submitting to BOS an SSR. For *Contractor Designed* or *Standard Design* OSS types, as defined in 39.1.3, the Region or their consultant prepare final contract plans and submits via the structure e-submit process at least two months prior to PS&E. BOS must be notified if there are changes to the sign structure type after the SSR is submitted.

Region or consultant staff assemble final contract plans using the lead sheet templates and the *OSS Standard Design Drawings*, available on the BOS website under the Chapter 39 Bridge Standards - *LRFD Standardized Plans.* See 39.4.4 and 39.4.6 for more information on preparing standardized plans.

Involvement of a Department structural engineer in the design and detailing of individual sign structures is generally limited to *Non-standard* design types. If a Non-standard design is warranted, for reasons detailed in 39.4.5, then the design process follows the normal flow as defined in Chapter 6, requiring either BOS design staff or an engineering consultant provide a unique design and the final contract plans. Non-standard designs should make use of the OSS Standard Design Drawings where appropriate.

39.2 Materials

WisDOT uses the following for round, hollow structural sections (HSS) for truss chord members, vertical support members and horizontal monotube members.

Member Type	Material Requirements	
HSS Chords, Vertical Supports, & Horizontal Monotubes	Wall Thickness ≤ ½”	ASTM A500, Grade C (Fy = 46 ksi)
	Wall Thickness > ½” and Pipe Diameter ≤ 20”	ASTM A1085 (round HSS) Or API 5L Grade 46 PSL-2 (round pipe)
	Pipe Diameter > 20” (Any Wall Thickness)	API 5L Grade 46 PSL-2 (round pipe)
Plates, Bars, and Structural Angles	ASTM A709, Grade 36	
Round or Multi-Sided Tapered Poles	ASTM A595, Grade 55 Or ASTM A575, Grade 55	

All plates, bars and structural angles shall be ASTM A709 Grade 36.

Round or multi-sided tapered poles shall be ASTM A595 Grade 55 or A575 Grade 55.

Galvanized ASTM F3125 A325 bolts with DTI washers are to be used in all primary structural connections, including those that are fully tensioned. A449 bolts are not allowed in fully tensioned connections and are only allowed in full span chord to column saddle or full span post to chord clamp connections. More details can be found in the OSS Standard Design Drawings and Standard Specifications Section 532.

WisDOT policy item:

Installation of flat washers in between faying surfaces of mast arm connection plates is not allowed.

When selecting members sizes for individually designed OSS, it is important to select members that are regularly produced and domestically available. Specifying members that are infrequently produced may result in higher bid prices, longer fabrication lead time, and/or member substitution requests that may delay the fabrication and production process. A general rule of thumb is to select HSS round tube members that match standard (Schedule 40) outside pipe diameters and thickness. The Steel Tube Institute provides current information on their website regarding domestic availability of HSS sections at:

https://steeltubeinstitute.org/hss/availability-tool/.

Designers can also consult the Bureau of Structures.

39.3 Specifications

39.3.1 LRFD Design

WisDOT has transitioned the design of all roadside standard Type 1 breakaway sign supports and foundations to be in accordance with the *AASHTO LRFD Specifications for Structural Supports for Highway Signs, Luminaries, and Traffic Signals, 1st Edition (2015) (LRFDLTS-1)* with current Interim revisions.

WisDOT is currently transitioning the design of OSS to be in accordance with the AASHTO LRFDLTS-1 with current Interim revisions. Use of the AASHTO LRFDLTS-1 specification for OSS is currently optional and will be required beginning with the December 2020 letting.

39.3.2 Other Specifications and Manuals

The following manuals and specifications provide further guidance and requirements for the design and construction of OSS:

- Wisconsin Department of Transportation "*Bridge Manual*" (BM)
- Wisconsin Department of Transportation "*Geotechnical Manual*"
- Wisconsin Department of Transportation *"Facilities Development Manual"* (FDM)
- State of Wisconsin *"Standard Specifications for Highway and Structure Construction"*
- State of Wisconsin "*Construction and Materials Manual*" (CMM)
- AASHTO "*LRFD Bridge Design Specifications"* (Current Edition and Interim Specifications)
- American Society for Testing and Materials Standards (ASTM)
- American National Standards Institute / American Petroleum Institute 5L Specification for Line Pipe. (ANSI / API 5L)
- AWS D1.1 Structural Welding Code (Steel)
- AWS D1.2 Structural Welding Code (Aluminum)

39.4 Design Considerations

39.4.1 Roadside Signs

Supports for roadside signs are of two types, depending upon the size and type of the sign to be supported. For small signs, the column supports are treated timber embedded in the ground. For larger Type 1 signs and DMS, the columns are galvanized steel supported on drilled shafts. Standard design and support estimates are given in the A3 Series of the "Sign Plate Manual."

Roadside sign supports are located behind existing or planned guardrail as far as practical from the roadway and out of the likely path of an errant vehicle. If roadside signs are located within the 30-foot corridor and not protected, break-away sign supports are detailed. Roadside sign supports for DMS, which includes dynamic message signs and variable message signs, are to be protected by concrete barrier or guardrail.

Currently, all steel column supports for roadside Type 1 signs, and DMS are designed to break-away upon impact.

The Wisconsin DOT Bureau of Traffic Operations has standard designs and details available for Type 1 Roadside Sign supports and foundations. The standard steel post design tables provide maximum sign mounting heights. If a sign configuration is required that does not fall within the limits of the standard designs, the sign support must be designed by a structural engineer. The design must be in compliance with the applicable specifications listed in 39.3. The Type 1 roadside sign standard foundation designs are based on the assumptions of cohesionless soils with the following properties:

- Soil Unit Weight = 115 pounds per cubic foot
- Angle of Internal Friction = 24 degrees
- Soil Modulus Parameter = 25 pounds per cubic inch

Wisconsin has standard design and details available for DMS roadside sign supports. If weaker subsurface conditions are known or suspected, a subsurface soil investigation per 39.5 would be implemented to gather necessary design information.

39.4.2 Overhead Sign Structures (OSS)

39.4.2.1 General

OSS types and names used by WisDOT are summarized in Table 39.1-1.

The connections of web members to chords are designed for bolted or shop welded connections to allow the contractor the option to either galvanize individual members or complete truss sections after fabrication. Steel base plates are used for anchor rod support attachment.

Aluminum sign structures are currently not being designed for new structures. Rehabilitation and repair type work may require use of aluminum members and shall be allowed in these

limited instances. The following guidelines apply to aluminum structures in the event of repair and rehabilitation type work.

Aluminum sign structure trusses are designed and fabricated from tubular shapes shop welded together in sections. The minimum thickness of truss chords is 1/4-inch and the minimum outside diameter is 4 inches. The recommended minimum ratios of “d/D” between the outside diameters “d” of the web members and “D” of chord members is 0.4. A cast aluminum base plate is required to connect the aluminum columns to the anchor rods. AASHTO Specifications require damping or energy absorbing devices on aluminum overhead sign support structures to prevent vibrations from causing fatigue failures. Damping devices are required before and after the sign panels are erected on all aluminum sign bridges. Stock-bridge type dampers are recommended.

39.4.2.2 Vehicular Protection

Vertical supports for OSS Standard Designs are not designed for vehicular impact loads and must meet clear zone or barrier protection requirements in the FDM. Generally, all overhead sign structure vertical supports are located at the edge of shoulder adjacent to the traveled roadway and placed behind roadside concrete barriers or barrier type guardrail. See the FDM 11-55-20.6 for information on shielding requirements. Sign supports protected by roadside barriers or guardrail with adequate barrier deflection clearance between the backside of the barrier and the sign support are not required to be designed for Extreme Limit State vehicular collision loads.

When protection is not feasible, the vertical supports shall be designed with applicable Extreme Event collision loads in accordance to 13.4.10. This typically requires the use of a special, individually designed reinforced column and foundation to resist the large vehicular impact loads. In this situation the sign structure would be a non-standard design and BOS or an engineering consultant would need to provide the design.

39.4.2.3 Vertical Clearance

As provided in the FDM 11-35-1 Attachment 1.8, a minimum vertical clearance of 18’-3” is required for most routes. For sign structures over a designated High Clearance Route, 20’-3” above the roadway is required. See FDM 11-35-1 Attachment 1.9 for clearances relating to existing sign structures.

39.4.2.4 Lighting and DMS Inspection Catwalks

Lighting is no longer required on sign structures. Catwalks are only on 4-chord cantilever and full span OSS with DMS. When catwalks are provided for OSS supporting a DMS, additional vertical height must be provided to meet the vertical clearance requirements in 39.4.2.3 to the bottom of the catwalk brackets. Catwalk grating and toe plates shall be galvanized steel.

Along with inspection catwalks, all DMS OSS require hand holes, rodent screens and electrical conduits through the foundation to one of the vertical support posts to route electric power to the DMS. Standard Details are provided on the BOS website.

39.4.2.5 Signs Mounted on the Side of Grade Separation Bridges

When no practical alternatives exist, signs may be mounted on the side of grade separation bridges. This application requires individually designed structural mounting brackets to attach the sign to the side of the grade separation bridge. Wisconsin allows sign attachments orientated up to a maximum of a 20-degree skew to the roadway below. Any grade separation bridge structure with greater skew requires the mounting brackets to attach signs so they are orientated perpendicular to the roadway below.

Where possible, the depth of bridge mounted signs should be limited so the top of the sign does not extend above the top of the bridge parapets or railing. Signs are not permitted to extend below the bottom of the bridge girders. The minimum vertical clearance is set slightly above the clearance line of the overpass structure for signs attached directly to the side of a bridge.

Signs attached to the side of bridge superstructures and retaining walls are difficult to inspect and maintain due to lack of access. Attachment accessories are susceptible to deterioration from de-icing chemicals, debris collection and moisture. Therefore, the following guidance should be considered when detailing structure mounted signs and related connections:

1. Limit the sign depth to a dimension equal to the bridge superstructure depth (including parapet) minus 3 inches.

2. Provide at least two support connections per bracket.

3. Utilize cast-in-place anchor assemblies to attach sign supports onto new bridges and retaining walls.

4. Galvanized or stainless-steel adhesive concrete masonry anchor may be used to attach new signs to the side of an existing grade separation bridge or retaining wall orientated for shear load application only. Overhead anchor installation (direct pullout loading on anchor) is not allowed. Reference 40.16 for applicable concrete masonry anchor requirements.

39.4.2.6 Sign Structures Mounted on Bridge Pedestals

This refers to sign structures mounted across the top of roadways carried by a bridge structure. Sign structures can be mounted directly to the top of pier caps. This requires the pier cap to be extended beyond the limits of the superstructure width. Sign structures mounted to pier caps are not affected by superstructure deflections. Wisconsin allows sign attachments oriented up to a maximum of a 20-degree skew to the roadway below. Any grade separation bridge structure with a greater skew requires the mounting brackets to attach signs so they are oriented perpendicular to the roadway below.

Span live load deflections of the vehicular bridge superstructure affect sign structures mounted on to bridge superstructure concrete barrier pedestals. The magnitude of sign structure deflections and duration of sign structure vibrations is dependent on the stiffness of the girder and deck superstructure, the location of the sign structure on the bridge, and

the ability of the sign structure to dampen those vibrations out; among others. These vibrations are not easily accounted for in design and are quite variable in nature. For these reasons, the practice of locating sign structures on highway bridges should be avoided whenever possible.

The following general guidance is given for those instances where locating a sign structure on a bridge structure is unavoidable. This may occur due to the length of the bridge, or a safety need to guide the traveling public to upcoming ramp exits or into specific lanes on the bridge.

1. Locate the sign structure pedestals at pier locations.

2. Build the sign structure base off the top of the pier cap.

3. Provide adequate set back of the tower support of the sign structure behind the face of the parapet to avoid snagging of vehicles making contact with the parapet. See FDM 11-45-2.3.6.2.3 for information on required set back distances.

4. Use single pole sign supports (equal balanced butterfly's) in lieu of cantilevered (with an arm on only one side of the vertical support) sign supports.

5. Consider the use of a Stockbridge type damper in the horizontal truss of these structures.

6. Do not straddle the pier leaving one support on the pier and one support off the pier in the case of skewed substructure units for full span sign bridges

39.4.3 LRFD Requirements and WisDOT Guidance for OSS Design

39.4.3.1 Loads, Load Combinations, and Limit States

All OSS are to be designed per the AASHTO LRFDLTS-1. The following LRFD specification requirements are highlighted:

Design Wind Speed Recurrence Interval:

- Full Span 4-Chord Truss Sign Structures are designed for a basic wind speed recurrence interval of 1,700 years as defined in the AASHTO LRFDLTS-1 Specifications.

- All other OSS shall be designed for a basic wind speed recurrence interval of 700 years as defined in the AASHTO LRFDLTS-1 Specifications.

Wind load and wind load combinations shall be applied and investigated per AASHTO LRFDLTS-1. In general, horizontal wind pressure is applied normal to the center of gravity of exposed horizontal members and sign panels. For the design of vertical supports, three wind load cases are investigated and applied to the entire structure to determine the controlling wind load effect on the vertical supports:

Wind Load Case	Description	Normal Wind Component	Transverse Wind Component
1	Full Wind Normal to the Plane of the Structure	100%	0%
2	Full Wind Transverse to the Plane of the Structure	0%	100%
3	75% Full Wind in Both Directions Simultaneously	75%	75%

Figure 39.4-1
AASHTO LRFDLTS-1 Vertical Support Load Cases

Design sign area assumed for standard designs accommodates 12-foot high sign panels over 90% of the span length for full span 4-chord truss OSS. In the case of a proposed non-standard OSS with a required span length of 130 feet or less, the non-standard OSS should be individually designed for the actual anticipated sign panel area or DMS and mounting locations. In the case of a proposed non-standard OSS with required span length greater than 130 feet, the Bureau of Structures should be consulted to confirm the design sign area to be used for the design of the non-standard OSS.

Applied design wind pressure is determined for individual truss members and sign panels per the AASHTO LRFDLTS-1 specification Section 3.8. WisDOT design practice is to assume members located directly behind sign or DMS panels are shielded from wind exposure and are not loaded with wind pressure. No wind shielding is assumed provided to members that directly align with each other in plan or elevation views, but are several feet apart. This means no shielding effect is assumed for members in the front and back truss planes of a 4-chord truss even if the members are perfectly aligned. For example, viewing a 4-chord truss in elevation view, members in the front truss plane, located directly behind a sign panel would assumed to be shielded from wind pressure by the sign panel, but members in the back-truss plane would assumed to be loaded with wind pressure, despite also being behind the sign panel or aligned with other members in the front truss plane.

Strength 1 load combinations in AASHTO LRFDLTS-1 include only dead load and live load. A 500-pound live load distributed over 2’-0” transversely to the member, only applies to catwalks and catwalk support brackets when catwalks are included for OSS with DMS. The Strength 1 load combination may control the design of the catwalk and catwalk support brackets, but does not control the design of the truss superstructure the catwalk brackets are attached to. For OSS carrying static Type 1 signs, the Strength I load combination includes only dead load and does not control.

Load combinations that include wind generally control the design of sign structures. A change in the AASHTO LRFDLTS-1 specification is that load combinations that include wind are considered Extreme Event load cases.

AASHTO LRFDLTS-1 specifications do not define an ice loading and leave it to the discretion of individual owners to consider and specify an ice loading if warranted in their climate. WisDOT policy is to maintain consideration of an ice load and include in the Extreme Event I load combination.

Load Combinations are as follows:

Strength I:	1.25 DL + 1.6 LL
Extreme Event I (Load Case 1):	1.1 DL + 1.0 ICE + W (Max. DL and ICE effects)
Extreme Event I (Load Case 2):	0.9 DL + W (Min. DL and no ICE effects)

Ice build-up is modeled as a 3 psf load applied to the exposed surface area (circumference) of truss members. It is not necessary to increase the wind pressure load on truss members due to increased member exposure area caused by ice build-up. Ice load is applied to only the front face of sign or DMS panels.

For vertical column support members, W in the above Extreme Event load cases is the controlling wind load case as specified in Figure 39.4-1.

39.4.3.2 Serviceability

Serviceability checks should conform to 10.4 and 10.5 of AASHTO LRFDLTS-1. However, the vertical deflection limit L/150 shall include ICE load, applied per 39.4.3.1.

39.4.3.3 Fatigue

AASHTO LRFDLTS-1 specifies three fatigue loads to check against member and connection fatigue stress range limits as follows:

Galloping – AASHTO LRFDLTS 11.7.1.1:	Applies to all cantilever OSS, except cantilever 4-chord truss
Natural Wind Gust – AASHTO LRFDLTS 11.7.1.2:	Applies to all OSS.
Truck Induced Gust – AASHTO LRFDLTS 11.7.1.3:	Applies to all OSS.

Truck induced gust pressure is applied in the upward direction and reduces with increasing height. Truck induced gust pressure applied to truss members in the top horizontal truss plane, will be less than truck induced gust pressures applied to truss members in the bottom horizontal truss plane. Since truck induced gust pressure is acting upward, Type 1 static signs receive and transmit only minimal gust pressure due to their narrow profile when viewed in plan. DMS however, have considerable width and “wind exposure area” when viewed in plan. Truck induced gust pressure can impart a significant upward pressure on DMS that also creates a torque on the truss superstructure due to the offset between the center of gravity of the DMS and the truss superstructure.

39.4.3.4 Connection Design

WisDOT policy item:

Bureau of Structures policy is to design welded and bolted connections per the applicable provisions of the current AASHTO LRFD Bridge Design Specifications. This is a deviation from the AASHTO LRFDLTS-1, which refer the design of welded connections to the AWS D1.1 Structural Welding Code.

For truss superstructures, current practice is to design and provide alternate details of the connection of web members (angles) to main chord members (HSS tubular round sections) for both welded and bolted connections, except the chord to column connection and first panel of cantilever trusses which must be bolted. This affords the fabricator the option of galvanizing individual members prior to truss fabrication (using bolted connections) or galvanizing entire truss segments after assembly (using bolted or welded connections).

39.4.4 OSS Standard Designs

Standard Design OSS types and limitations are listed in Table 39.1-2 and Table 39.1-3. Because these structures are pre-designed and pre-detailed the involvement of a Department structural engineer is usually not required. Bureau of Structures is responsible for maintaining and updating the Standard Designs as needed.

The Standard Design OSS types were developed to cover a wide range of signage requirements while placed over typical roadway and roadside configurations. Standard Designs are not intended to cover unique situations or unusual geometry, or for reasons described in 39.4.5. Contact the Bureau of Structures Design Section with questions regarding applicability of standard designs.

Standard Foundation Designs are included in the OSS Standard Detail Drawings. See 39.5 for further guidance on subsurface investigation, assumed soil parameters, and foundation design.

When Standard Design OSS are used in a project, the Region or their consultant prepare final contract plans as described in 39.1.9. This includes filling out the appropriate sign structure specific information on both the General Notes and General Layout sheets and combining those with the appropriate OSS Standard Design Drawings to make up the final plan set.

39.4.5 OSS Non-Standard Designs

Design and plan detailing must be provided by Bureau of Structures or by a structural design consultant for all non-standard designs. The following circumstances warrant a non-standard design:

1. The OSS type is Butterfly, Butterfly Truss, or Bridge Mounted

2. The OSS type falls outside the limits of span length, sign area, DMS weight, or sign height in FDM 11-55-20 Figure 20.2.3 and Figure 20.2.4.

3. Region soil engineer advises that subsurface conditions at the site are expected to negatively differ from assumed soil profile and design parameters of standard foundations (e.g. soft soil or shallow bedrock – see 39.5.2.2).

4. Excessive sign structure height (e.g. sign structure behind MSE wall) or requires the use of concrete column (designed for impact load – see 39.4.2.2)

BOS must be consulted to verify and confirm the need for individual designs before undertaking this effort.

The design detailing shall generally follow the guidance provided by the OSS Standard Design Drawings but should clearly delineate any required changes to individual member sizes, connections and foundation details necessary to satisfy the AASHTO LRFDLTS-1 Design Specifications.

In some instances, it may still be appropriate to use part or all of the Standard Designs even though the sign structure is considered a Non-standard Design. A couple of examples include:

1. A sign structure has both static and DMS sign types specified for mounting (consult with BOS before using a standard design in this situation).

2. A Standard Design structure is used in conjunction with a Non-standard foundation. See section 39.5.3.

In any case, the sign structure is still considered a Non-standard design in terms of the design process and should proceed as detailed in 39.1.9.

39.4.6 OSS Contractor Designed

Contractor Designed OSS types and limitations are listed in Table 39.1-2 and Table 39.1-3. Because these structures are designed by the contractor, involvement of a Department structural engineer is usually not required.

Standard Foundation Designs are included in the OSS Standard Detail Drawings. See 39.5 for further guidance on subsurface investigation, assumed soil parameters, and foundation design. Bureau of Structures is responsible for maintaining and updating the standard foundation designs that go along with the Contractor Designed OSS types.

These structures are designed for the required actual sign area and configuration, unless future expansion is anticipated, which should be noted and shown on the plans. The required actual sign area, span length, etc. is used to select the appropriate standard foundation from the figure provided in chapter 11-55-20 of the FDM.

When Contractor Designed OSS are used in a project, the Region or their consultant prepare final contract plans as described in 39.1.9. This includes filling out the appropriate sign structure specific information on both the General Notes and General Layout sheets and combining those with the appropriate OSS Standard Design Drawings to make up the final plan set.

39.5 Geotechnical Guidelines

39.5.1 General

For full span and cantilever 4-chord trusses, the typical preferred foundation is comprised of two cylindrical drilled shafts connected by a concrete cross-girder, as detailed in the OSS Standard Design Drawings. The top of the cross-girder is set 3 feet above the highest ground elevation at the foundation. For all other types, the typical preferred foundation is comprised of a single cylindrical drilled shaft directly supporting the column vertical support. Occasionally, some columns are mounted directly on top of modified bridge parapets, pier caps and concrete towers instead of footings.

There are several potential challenges regarding subsurface exploration for OSS foundations:

- The development and location of these structures are typically not known at the onset of the preliminary design stage, when the most subsurface exploration typically occurs. This creates the potential need for multiple drilling mobilizations for the project.

- OSS are often located in areas of proposed fill soils. The source and characteristics of fill soil is unknown at the time of design.

- OSS foundations are often located on the shoulder or median directly adjacent to high-volume roadways. Obtaining boings in these locations typically requires significant traffic control, night work, and working in a potentially hazardous work zone.

- If a consultant is involved in the project, the unknowns associated with these structures in the project scoping stage complicate the consultant contracting process. It is often difficult to determine the need for OSS specific subsurface investigation at the time the consultant contract is normally being scoped. In cases where the need for a specific subsurface investigation is known or anticipated, an assumption must be made regarding the level of subsurface investigation to include in the consultant design contract. Alternatively, a decision can be made to assume use of standard OSS and foundation designs. If the need for specific subsurface investigation is later determined to be necessary, this may require a change to add it to the consultant contract.

39.5.2 Standard Foundations for OSS

39.5.2.1 General

WisDOT has created standard full span and cantilever 4-chord truss designs that include fully designed and detailed drilled shaft foundations as part of the overall standard design. The standard foundation details are incorporated with the OSS Standard Design Drawings for these structures and are available on the BOS website.

Single drilled shaft OSS Standard Design Drawings for use with contractor designed full span and cantilever 2-chord truss and monotube OSS are also available on the BOS website.

WisDOT has no standard foundation design details for alternate foundation types and the selected alternative foundations would be required to be individually designed and reviewed by BOS.

39.5.2.2 Design Parameters Used for Standard Foundation Design

Standard dual and single drilled shaft foundation designs were developed in accordance with applicable requirements of Section 10 of the *AASHTO LRFD Bridge Design Specifications.*

The standard foundation designs are based on the following design parameters:

- Total Unit Weight = 125 pcf
- Granular Soil Profile: Internal Angle of Friction = 24 degrees, or
- Cohesive Soil Profile: Undrained Shear Strength = 750 psf
- Soil and drilled shaft downward resistance factor ϕ =1.0 [1]
- Drilled shaft uplift resistance factor ϕ =0.8 [1]
- Depth of water table assumed 10 feet below the ground surface
- Soil side resistance is considered fully effective to the top of the drilled shaft or top of ground surface, whichever is the lower elevation.

Note 1: Resistance factors per AASHTO 10.5.3.3 assuming the drilled shaft design is governed by the wind load combination which is an Extreme Event load combination.

WisDOT policy item:

Design of standard sign structure foundations assumes soil side resistance is fully effective to the top of the drilled shafts for full span 4-chord OSS foundations and to within 3 feet below the lowest ground surface for all other OSS foundations. This is a deviation from AASHTO 10.8.3.5 1b.

Use of the standard foundations requires that the in-situ soils parameters at the site meet or exceed the assumed soil design parameters noted above. Soil parameters were selected to be sufficiently conservative to cover most sites across the state. Designers should contact the Region Soils Engineer or the Geotechnical Consultant to assist in the evaluation of the subsurface conditions compared to the assumed soil parameters. An assessment can also be made by checking nearby borings and as-built drawings of nearby existing structures, and similar sources. If there is reason to suspect weaker soils or that shallow bedrock is present, OSS specific soil borings should be obtained to confirm in-situ soil properties meet or exceed the assumed parameters used for the standard designs. If these site-specific soil properties do not meet the above minimums, a special individual foundation design will be required using actual soil parameters determined from a subsurface investigation per 39.5.3.

39.5.3 Standard Base Reactions for Non-Standard Foundation Design

There may be instances when a Standard Design sign structure is used in conjunction with a non-standard foundation, for reasons detailed in 39.4.5. Contact Bureau of Structures to obtaining the Standard Design or Contractor Designed sign structure base reactions that were used in developing the standard foundations.

39.5.4 Subsurface Investigation and Information

No subsurface investigation/information is necessary for the use of WisDOT standard foundations. Appropriate subsurface information is necessary for any non-standard OSS or situation that is outside any of the standard design ranges of applicability which requires an individual foundation design to be performed.

There may be several methods to obtain the necessary subsurface soil properties for a custom, individual foundation design, as described below:

- In areas of fill soils, the borrow material is usually unknown. The designer should use their best judgment as to what the imported soils will be. Standard compaction of this material can be assumed.

- The designer may have a thorough knowledge of the general soil conditions and properties at the site and can reasonably estimate soil design parameters.

- The designer may be able to use information from nearby borings. Judgment is needed to determine if the conditions present in an adjacent boring(s) are representative of those of the site in question.

- If the designer cannot reasonably characterize the subsurface conditions by the above methods, a soil boring and Geotechnical report (Site Investigation Report) should be completed. Necessary soil design information includes soil unit weights, cohesions, phi-angles and location of water table.

Designers, both internal and consultant, should also be aware of the potential of high bedrock, rock fills and the possible conflict with utilities and utility trenches. Conservative subsurface design parameters are encouraged.

39.6 Appendix – OSS Limiting Parameters

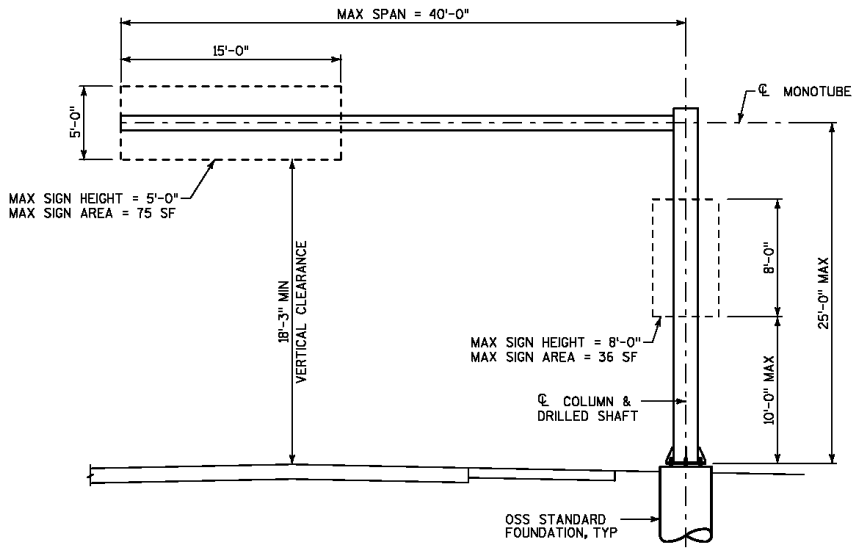

CANTILEVER MONOTUBE

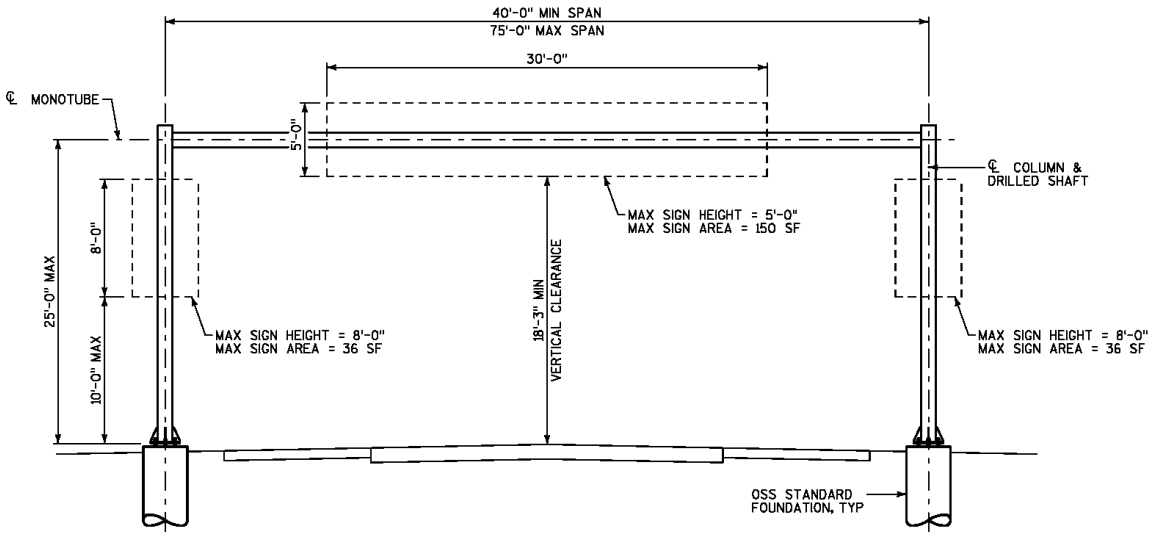

FULL SPAN MONOTUBE

DESIGNER NOTES:

1. SELECT STRUCTURE TYPE BASED ON REQUIRED SPAN LENGTH AND DESIGN SIGN AREA TO BE SUPPORTED ON THE STRUCTURE. SHOW ON THE "GENERAL LAYOUT" SHEET FOR THE STRUCTURE.
2. SELECT OSS STANDARD FOUNDATION TYPE AND SHOW ON THE "GENERAL LAYOUT" SHEET. SEE "OSS MONOTUBE & 2-CHORD TRUSS STANDARD FOUNDATIONS" SHEET AND SECTION 11-55-20 OF THE WISDOT FACILITIES DEVELOPMENT MANUAL FOR FOUNDATION SELECTION CRITERIA.
3. COLUMN SIGN AREA DOES NOT CONTRIBUTE TO THE SELECTION LIMITS OF THE FDM, BUT ARE PERMITTED UP TO THE LIMITS SHOWN IN THE FIGURES.

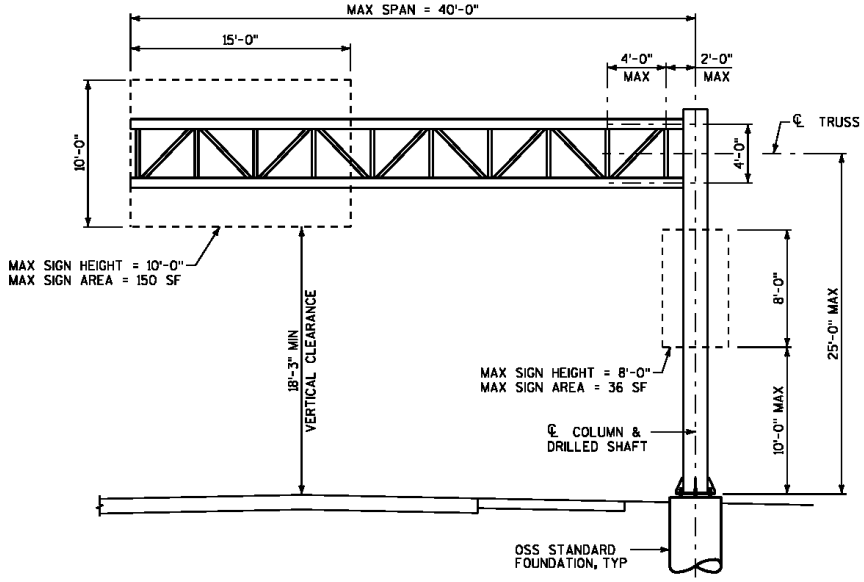

CANTILEVER 2-CHORD TRUSS

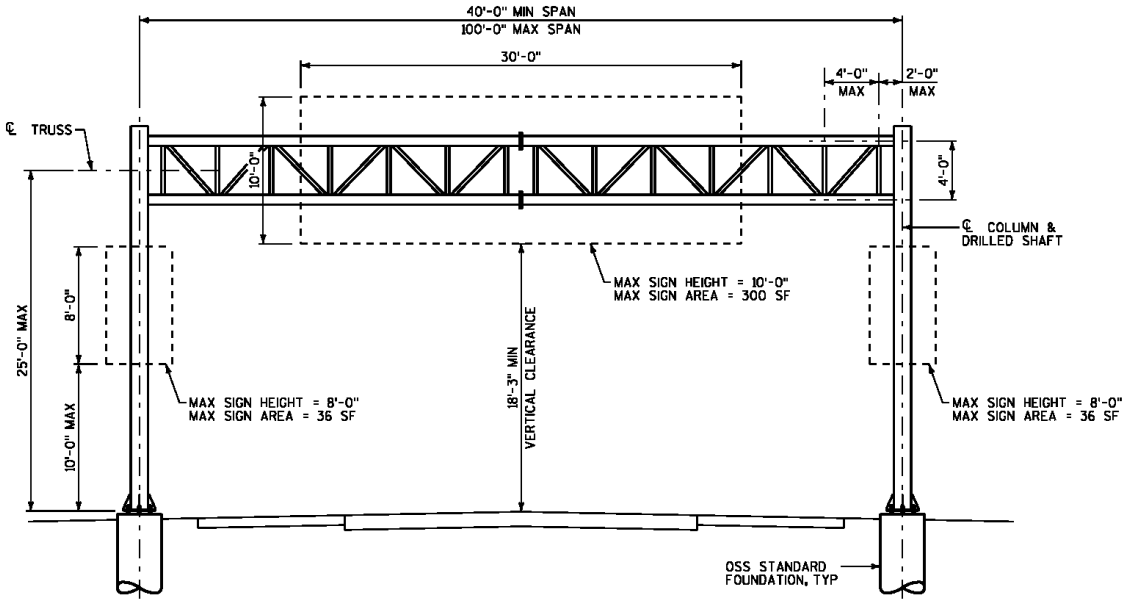

FULL SPAN 2-CHORD TRUSS

DESIGNER NOTES:

1. SELECT STRUCTURE TYPE BASED ON REQUIRED SPAN LENGTH AND DESIGN SIGN AREA TO BE SUPPORTED ON THE STRUCTURE. SHOW ON THE "GENERAL LAYOUT" SHEET FOR THE STRUCTURE.
2. SELECT OSS STANDARD FOUNDATION TYPE AND SHOW ON THE "GENERAL LAYOUT" SHEET. SEE "OSS MONOTUBE & 2-CHORD TRUSS STANDARD FOUNDATIONS" SHEET AND SECTION 11-55-20 OF THE WISDOT FACILITIES DEVELOPMENT MANUAL FOR FOUNDATION SELECTION CRITERIA.
3. COLUMN SIGN AREA DOES NOT CONTRIBUTE TO THE SELECTION LIMITS OF THE FDM, BUT ARE PERMITTED UP TO THE LIMITS SHOWN IN THE FIGURES.

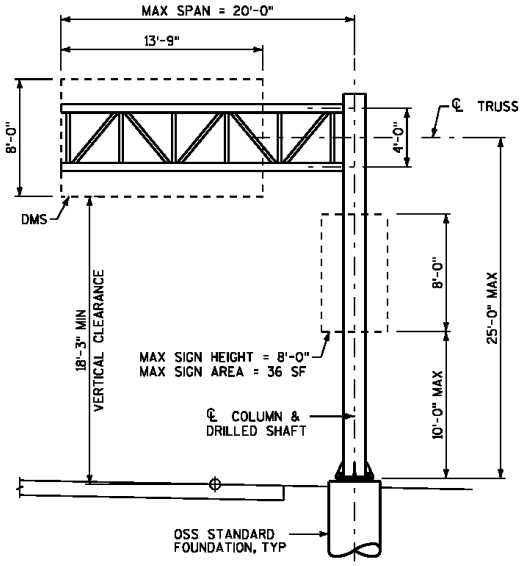

CANTILEVER 2-CHORD TRUSS DMS

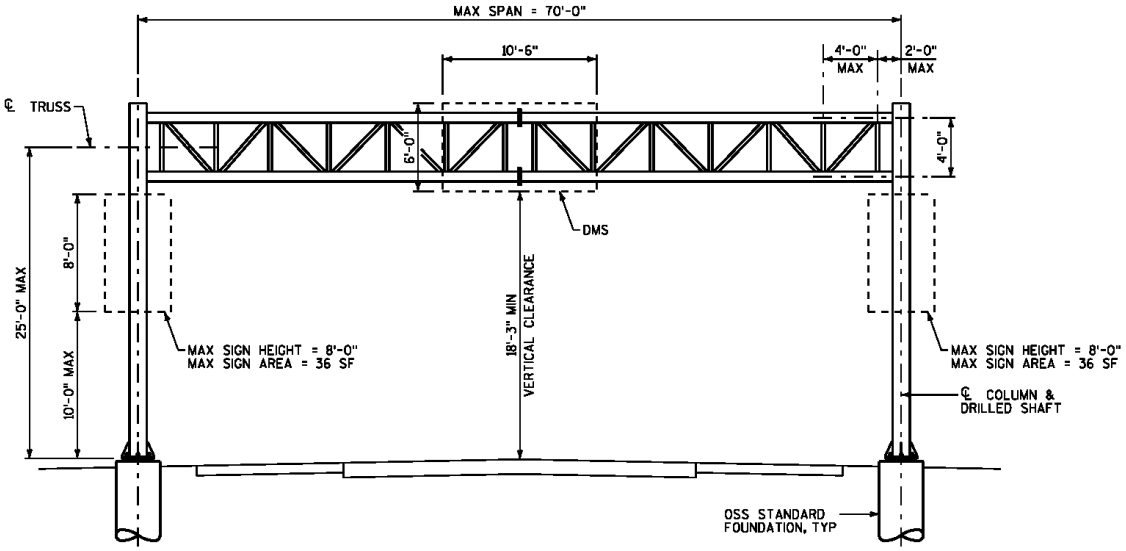

FULL SPAN 2-CHORD TRUSS DMS

DESIGNER NOTES:

1. SELECT STRUCTURE TYPE BASED ON REQUIRED SPAN LENGTH AND DESIGN SIGN AREA TO BE SUPPORTED ON THE STRUCTURE. SHOW ON THE "GENERAL LAYOUT" SHEET FOR THE STRUCTURE.
2. SELECT OSS STANDARD FOUNDATION TYPE AND SHOW ON THE "GENERAL LAYOUT" SHEET. SEE "OSS MONOTUBE & 2-CHORD TRUSS STANDARD FOUNDATIONS" SHEET AND SECTION 11-55-20 OF THE WISDOT FACILITIES DEVELOPMENT MANUAL FOR FOUNDATION SELECTION CRITERIA.
3. COLUMN SIGN AREA DOES NOT CONTRIBUTE TO THE SELECTION LIMITS OF THE FDM, BUT ARE PERMITTED UP TO THE LIMITS SHOWN IN THE FIGURES.

39.7 Design Examples

E39-1 Design of Foundation Cap Beam / Integral Barrier TL-5 Loading

E39-2 Design of Sign Bridge Concrete Column for Vehicle Impact

This page intentionally left blank.

Table of Contents

E39-1 Design of Foundation Cap Beam / Integral Barrier TL-5 Loading 2
E39-1.1 Design Criteria 3
E39-1.2 Design Forces for Traffic Railings 3
E39-1.3 Loads 4
E39-1.4 Limit States and Combinations 4
E39-1.5 Analysis Case I 4
E39-1.6 Analysis Case II 5
E39-1.7 Flexural Strength Capacity 6
E39-1.8 Shear Capacity 8
E39-1.9 Check Cap Beam/Top of Drilled Shaft Interface 11
E39-1.10 Interface Shear Transfer 14

E39-1 Design of Foundation Cap Beam / Integral Barrier - TL-5 Loading

This example shows design calculations for a four chord sign bridge foundation cap beam supported on two drilled shafts that is integral with a roadway barrier. The *AASHTO LRFD Bridge Design Specifications 8th Edition - 2017* are followed for the cap beam design using a TL-5 design force for traffic railings.

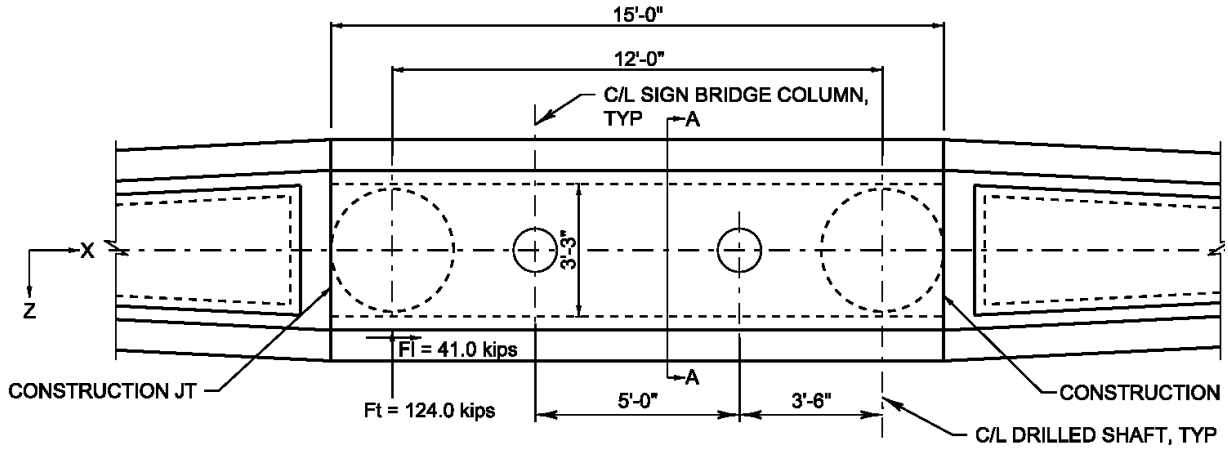

PLAN

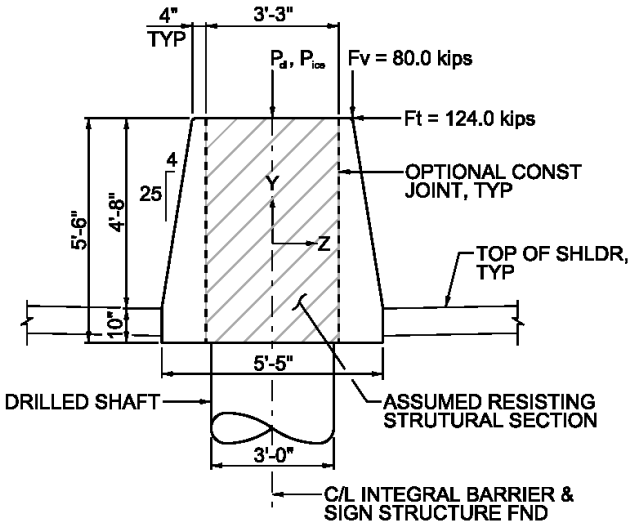

SECTION A-A

E39-1.1 Design Criteria

Cap/Intergral Barrier Material Properties

$f'_c := 3.5$ ksi	Concrete Strength
$f_y := 60$ ksi	Yield Strength of Reinforcement
$E_s := 29000$ ksi	Modulus of elasticity of steel
$w_c := 0.150$ kcf	Unit Weight of concrete

Barrier and Foundation Geometry

$H_{barrier} := 66.00$ in	Height of Barrier
$H_{barrier_vert} := 10.00$ in	Height of Barrier Vertical Section
$W_{barrier_top} := 47.00$ in	Width of Barrier at Top
$W_{barrier_bott} := 65.00$ in	Width of Barrier at Bottom
$W_{barrier_str} := 39.00$ in	Width of Barrier Structural Section
$L_{barrier} := 15.00$ ft	Length of Barrier Section
$Diam_{shaft} := 3.00$ ft	Diameter of Drilled Shaft
$Shaft_Spa := 12.00$ ft	Spacing Between Drilled Shafts

E39-1.2 Design Forces for Traffic Railings

From **LRFD Table A13.2-1**, use Test Level Five (TL-5) design forces for integral barrier/cap check.Forces are conservatively applied as point loads instead of being distributed longitudinally along the integral barrier/cap foundation length.

$F_t := 124.0$ kips	Transverse design load
$F_L := 41.0$ kips	Longitudinal design load
$F_v := 80.0$ kips	Vertical design load (down)
$H_e := 56.0$ in	Minimum height of transverse design load = 42". Apply transverse load at top of barrier.

E39-1.3 Loads

Barrier/Cap Uniform Dead Load

Note - Uniform Dead Load is for the full area of the integral barrier including portions of the barrier outside the structural section.

$H_{barrier_slope} := H_{barrier} - H_{barrier_vert}$ $\boxed{H_{barrier_slope} = 56.00}$ in

$$Area_{barrier} := \left(\begin{array}{l} H_{barrier_slope} \cdot mean\left(W_{barrier_top}, W_{barrier_bott}\right) \cdots \\ + H_{barrier_vert} \cdot W_{barrier_bott} \end{array}\right) \frac{1}{144}$$

$\boxed{Area_{barrier} = 26.292}$ ft^2

$W_{DC} := Area_{barrier} \cdot w_c$ $\boxed{W_{DC} = 3.944}$ kips/ft

Sign Structure Dead and Ice Loads - bottom of column reaction taken from SAP2000 analysis for an 82 ft span sign bridge with 30 ft column height.

$P_{dl} := 8.05$ kips $P_{ice} := 3.34$ kips

Barrier Live Load - There is no live load on the barrier since there is no live load on the sign structure.

E39-1.4 Limit States and Combinations

Limit State Extreme Event II for vehicle collision shall be applied using the following equation and load factors from **LRFD Table 3.4.1-1 & Table 3.4.1-4.**

$M_u := 1.0 \cdot DC + 0.5 \cdot LL + 1.0IC + 1.0 \cdot CT$

E39-1.5 Analysis Case I

Maximize moments in integral barrier/foundation cap by placing TL-5 loads at midspan between the drilled shafts. Assume barrier is a simply supported span between the centerlines of the drilled shafts.

Moments due to transverse forces:

$M_{y_DC} := 0.0$ $M_{y_LL} := 0.0$ $M_{y_IC} := 0.0$

$M_{y_CT} := F_t \cdot \frac{\left(L_{barrier} - Diam_{shaft}\right)}{4}$ $\boxed{M_{y_CT} = 372.0}$ ft·kips

$M_{uy} := 1.0M_{y_DC} + 0.5M_{y_LL} + 1.0 \cdot M_{y_IC} + 1.0 \cdot M_{y_CT}$ $\boxed{M_{uy} = 372.0}$ ft·kips

Moments due to vertical forces:

$M_{z_DC} := \frac{W_{DC} \cdot (Shaft_Spa)^2}{8} + P_{dl} \cdot 3.5$ $\boxed{M_{z_DC} = 99.2}$ kip·ft

$M_{z_IC} := P_{ice} \cdot 3.5$ $\boxed{M_{z_IC} = 11.7}$ kip·ft

$M_{z_LL} := 0.0$ $\boxed{M_{z_LL} = 0}$ kip·ft

$M_{z_CT} := \frac{F_v \cdot Shaft_Spa}{4}$ $\boxed{M_{z_CT} = 240.0}$ kip·ft

$M_{uz} := 1.0M_{z_DC} + 0.5M_{z_LL} + 1.0 \cdot M_{z_IC} + 1.0 \cdot M_{z_CT}$ $\boxed{M_{uz} = 350.9}$ kip·ft

E39-1.6 Analysis Case II

Maximize shears in integral barrier/foundation cap by placing TL-5 loads at centerline of drilled shaft. Assume barrier is a simply supported span between centerline of drilled shafts.

Shears due to transverse forces:

$V_{z_DC} := 0.0$ $V_{z_LL} := 0.0$ $V_{z_IC} := 0$

$V_{z_CT} := F_t$ $\boxed{V_{z_CT} = 124.0}$ kips

$V_{uz} := 1.0V_{z_DC} + 0.5V_{z_LL} + 1.0 \cdot V_{z_IC} + 1.0 \cdot V_{z_CT}$ $\boxed{V_{uz} = 124.0}$ kips

Shears due to vertical forces:

$V_{y_DC} := P_{dl}$ $\boxed{V_{y_DC} = 8.05}$ kips

$V_{y_IC} := P_{ice}$ $\boxed{V_{y_IC} = 3.34}$ kips

$V_{y_LL} := 0.0$

$V_{y_CT} := F_v$ $\boxed{V_{y_CT} = 80.00}$ kips

$V_{uy} := 1.0V_{y_DC} + 0.5V_{y_LL} + 1.0 \cdot V_{y_IC} + 1.0 \cdot V_{y_CT}$ $\boxed{V_{uy} = 91.39}$ kips

E39-1.7 Flexural Strength Capacity

For rectangular section behavior (vertical loading):

$$c := \frac{A_s \cdot f_y}{\alpha_1 \cdot f'_c \cdot \beta_1 \cdot b}$$

LRFD [5.6.2.2] $\alpha_1 := 0.85$ $\left(\text{for } f'_c < 10.0\text{ksi}\right)$

$\beta_1 := \max\left[0.85 - \left(f'_c - 4\right) \cdot 0.05, 0.65\right]$ $\boxed{\beta_1 = 0.875}$

$b := W_{barrier_str}$ $\boxed{b = 39.00}$ in

The 82 ft span sign bridge with 30 ft column height standard foundation cap provides #6 bars for bottom reinforcement and #6 bar stirrups. For the vehicular collision force, which is an extreme limit event state not included in the standard foundation cap designs, it is necessary to increase the bottom reinforcement to at least 7 - #7 bars:

$A_{st_7} := 0.60$ in^2 $Num_bars := 7$

$A_s := A_{st_7} \cdot Num_bars$ $\boxed{A_s = 4.20}$ in

$c := \frac{A_s \cdot f_y}{\alpha_1 \cdot f'_c \cdot \beta_1 \cdot b}$ $\boxed{c = 2.48}$ in

$a := \beta_1 \cdot c$ $\boxed{a = 2.17}$ in

$Clr_cov := 3.00$ in Bottom bar clear cover

$dia_6 := 0.75$ in Diameter of stirrup bars

$d_{vert} := H_{barrier} - Clr_cov - dia_6 - 0.5dia_7$ $\boxed{d_{vert} = 61.81}$ in

$M_{nz} := A_s \cdot f_y \cdot \left(d_{vert} - \frac{a}{2}\right) \cdot \frac{1}{12}$ $\boxed{M_{nz} = 1275.3}$ kip·ft

For reinforced concrete sections:

$\phi_f := 0.9$ **LRFD [5.5.4.2].** Therefore, the factored flexural resistance is:

$M_{rz} := \phi_f \cdot M_{nz}$ $\boxed{M_{rz} = 1147.7}$ kip·ft

For rectangular section behavior (transverse loading):

$b := H_{barrier}$ $\boxed{b = 66.00}$ in

Assume side reinforcement is #6 bars and stirrups are #6 bars:

$A_{st_6} := 0.44$ in^2 $Num_bars := 8$

$A_s := A_{st_6} \cdot Num_bars$ $\boxed{A_s = 3.52}$ in

$c := \dfrac{A_s \cdot f_y}{\alpha_1 \cdot f'_c \cdot \beta_1 \cdot b}$ $\boxed{c = 1.23}$ in

$a := \beta_1 \cdot c$ $\boxed{a = 1.08}$ in

$Clr_cov := 2.00$ in Side bar clear cover

$dia_6 := 0.75$ in Diameter of stirrup/side bars

$d_{horiz} := W_{barrier_str} - Clr_cov - dia_6 - 0.5dia_6$ $\boxed{d_{horiz} = 35.88}$ in

$M_{ny} := A_s \cdot f_y \cdot \left(d_{horiz} - \dfrac{a}{2}\right) \cdot \dfrac{1}{12} = 621.934$ $\boxed{M_{ny} = 621.9}$ kip·ft

For reinforced concrete sections:

$\phi_f := 0.9$ **LRFD [5.5.4.2].** Therefore, the factored flexural resistance is:

$M_{ry} := \phi_f \cdot M_{ny}$ $\boxed{M_{ry} = 559.7}$ kip·ft

If the factored axial load is less than $\phi_c f'_c A_g$: **LRFD [5.6.4.5]**

$\dfrac{M_{uy}}{M_{ry}} + \dfrac{M_{uz}}{M_{rz}} < 1.00$ $\dfrac{M_{uy}}{M_{ry}} + \dfrac{M_{uz}}{M_{rz}} = 0.97$

Is 0.97 < 1.0 ? **Yes** $\boxed{check = OK}$

E39-1.8 Shear Capacity

For rectangular section behavior (vertical loading):

The nominal shear resistance of the section is calculated as follows, **LRFD [5.7.3.3]**:

$$V_n := \min\left(V_c + V_s + V_p, 0.25 \cdot f'_c \cdot b_v \cdot d_v + V_p\right)$$

The nominal shear of the concrete is calculated as follows:

$$V_c := 0.0316 \cdot \beta \cdot \lambda \cdot \sqrt{f'_c} \cdot b_v \cdot d_v$$

$\beta := 2$ Simplified procedure **LRFD 5.7.3.4.1**

$\lambda := 1$ Concrete density modification factor **LRFD 5.4.2.8**

$b_v := b$ $\boxed{b_v = 66.00}$ in

$Clr_cov := 3.00$ in Bottom bar clear cover

Determine effective shear depth, dv:

For non-prestressed sections:

$d_e := d_{vert}$ **LRFD 5.7.2.8-2** $d_e = 61.81$ in

dv is the maximum of the following three equations: **LRFD 5.7.2.8**

$d_{v1} := d_{vert} - \frac{a_{vert}}{2}$ $\boxed{d_{v1} = 60.73}$ in

$d_{v2} := 0.9 \cdot d_e$ $\boxed{d_{v2} = 55.63}$ in

$d_{v3} := 0.72 \cdot H_{barrier}$ $\boxed{d_{v3} = 47.52}$ in

$d_v := \max\left(d_{v1}, d_{v2}, d_{v3}\right)$ $\boxed{d_v = 60.73}$ in

$V_c := 0.0316 \cdot \beta \cdot \lambda \cdot \sqrt{f'_c} \cdot b_v \cdot d_v$ $\boxed{V_c = 473.9}$ kips

The shear resistance provided by transverse reinforcement

$$V_s := \frac{A_v \cdot f_y \cdot d_v \cdot \cot(\theta)}{s}$$

$\theta := 45$ deg Simplified procedure **LRFD 5.7.3.4.1**

$A_v := 0.88$ in^2 #6 stirrups (2 legs)

$s := 6.00$ in Stirrup spacing

$$V_s := \frac{A_v \cdot f_y \cdot d_v \cdot \cot\left(\theta \cdot \frac{\pi}{180}\right)}{s}$$ $V_s = 534.4$ kips

$V_{n1} := V_c + V_s + V_p$ $V_{n1} = 1008.3$ kips

$V_{n2} := 0.25 \cdot f'_c \cdot b_v \cdot d_v + V_p$ $V_{n2} = 3507.0$ kips

$V_n := \min(V_{n1}, V_{n2})$ $V_n = 1008.3$ kips

For reinforced concrete sections:

$\phi_v := 0.9$ **LRFD [5.5.4.2].** Therefore, the factored shear resistance is:

$V_{ry} := \phi_v \cdot V_n$ $V_{ry} = 907.5$ kips

For rectangular section behavior (transverse loading):

The nominal shear resistance of the section is calculated as follows, **LRFD [5.7.3.3]**:

$V_n := \min(V_c + V_s + V_p, 0.25 \cdot f'_c \cdot b_v \cdot d_v + V_p)$

The nominal shear of the concrete is calculated as follows:

$V_c := 0.0316 \cdot \beta \cdot \lambda \cdot \sqrt{f'_c} \cdot b_v \cdot d_v$

$\beta := 2$ Simplified procedure **LRFD 5.7.3.4.1**

$\lambda := 1$ Concrete density modification factor **LRFD 5.4.2.8**

$b_v := b$ $b_v = 66.00$ in

$Clr_cov := 2.00$ in Side bar clear cover

Determine effective shear depth, dv:

For non-prestressed sections:

$d_e := d_{horiz}$ **LRFD 5.7.2.8-2** $d_e = 35.88$ in

dv is the maximum of the following three equations: **LRFD 5.7.2.8**

$d_{v1} := d_{horiz} - \frac{a_{horiz}}{2}$ $d_{v1} = 35.34$ in

$d_{v2} := 0.9 \cdot d_e$ $d_{v2} = 32.29$ in

$d_{v3} := 0.72 \cdot W_{barrier_str}$ $d_{v3} = 28.08$ in

$d_v := \max(d_{v1}, d_{v2}, d_{v3})$ $\boxed{d_v = 35.34}$ in

$V_c := 0.0316 \cdot \beta \cdot \lambda \cdot \sqrt{f'_c} \cdot b_v \cdot d_v$ $\boxed{V_c = 275.8}$ kips

The shear resistance provided by transverse reinforcement

$$V_s := \frac{A_v \cdot f_y \cdot d_v \cdot \cot(\theta)}{s}$$

$\theta := 45$ deg Simplified procedure **LRFD 5.7.3.4.1**

$A_v := 0.88$ in^2 #6 stirrups (2 legs)

$s := 6.00$ in Stirrup spacing

$$V_s := \frac{A_v \cdot f_y \cdot d_v \cdot \cot\left(\theta \cdot \frac{\pi}{180}\right)}{s}$$ $\boxed{V_s = 311.0}$ kips

$V_{n1} := V_c + V_s + V_p$ $\boxed{V_{n1} = 586.7}$ kips

$V_{n2} := 0.25 \cdot f'_c \cdot b_v \cdot d_v + V_p$ $\boxed{V_{n2} = 2040.7}$ kips

$V_n := \min(V_{n1}, V_{n2})$ $\boxed{V_n = 586.7}$ kips

For reinforced concrete sections:

$\phi_v := 0.90$ **LRFD [5.5.4.2].** Therefore, the factored shear resistance is:

$V_{rz} := \phi_v \cdot V_n$ $\boxed{V_{rz} = 528.1}$ kips

Check combined shear::

$$\frac{V_{uy}}{V_{ry}} + \frac{V_{uz}}{V_{rz}} < 1.0$$

$$\frac{V_{uz}}{V_{rz}} + \frac{V_{uz}}{V_{rz}} = 0.47$$ Is 0.47 < 1.0 ? **Yes** $\boxed{\text{check = OK}}$

E39-1.9 Check Cap Beam/Top of Drilled Shaft Interface

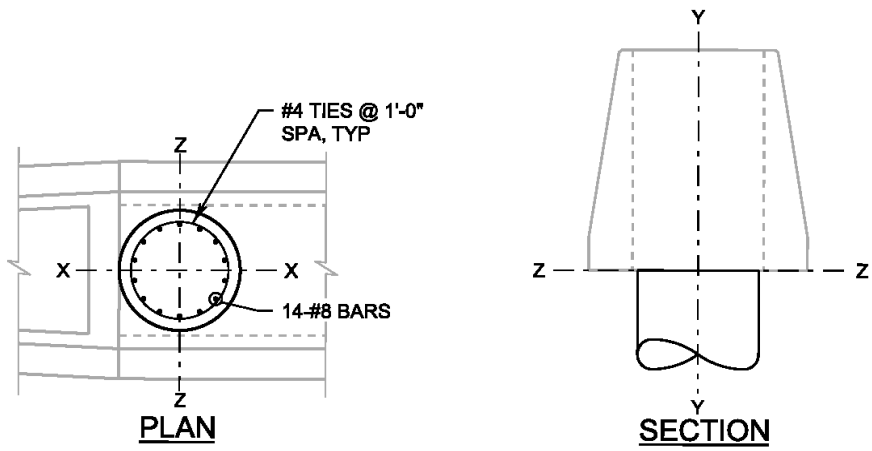

Check Case II - TL-5 Loading at C/L of drilled shaft, this develops the maximum moment and shear at the top of the drilled shaft

$F_x := F_L$ $\boxed{F_x = 41.0}$ kips

$F_y := 0.5 \cdot W_{DC} \cdot L_{barrier} + F_v$ $\boxed{F_y = 109.6}$ kips

$F_z := F_t$ $\boxed{F_z = 124.0}$ kips

$M_x := F_z \cdot H_{barrier} \cdot \frac{1}{12}$ Conservatively ignore vertical load $\boxed{M_x = 682.0}$ kip·ft

$M_y := F_z \cdot H_{barrier} \cdot \frac{1}{12}$ $\boxed{M_y = 682.0}$ kip·ft

$M_z := F_y \cdot (0.5 \cdot W_{barrier_top}) \cdot \frac{1}{12}$ $\boxed{M_z = 214.6}$ kip·ft

Check shear resistance:

Assume shaft reinforcement is #8 bars vertical with #4 ties:

$dia_4 := 0.50$ in $dia_8 := 1.00$ in $clr_cov := 3.50$ in

The nominal shear resistance of the section is calculated as follows, **LRFD [5.7.3.3]**:

$$V_n := \min\left(V_c + V_s + V_p, 0.25 \cdot f'_c \cdot b_v \cdot d_v + V_p\right)$$

The nominal shear of the concrete is calculated as follows:

$$V_c := 0.0316 \cdot \beta \cdot \lambda \cdot \sqrt{f'_c} \cdot b_v \cdot d_v$$

$\beta := 2$ Simplified procedure **LRFD 5.7.3.4.1**

$\lambda := 1$ Concrete density modification factor **LRFD 5.4.2.8**

$b_v := Diam_{shaft} \cdot 12$ $\boxed{b_v = 36.00}$ in

$$d_e := \frac{Diam_{shaft} \cdot 12}{2} + \frac{\left[Diam_{shaft} \cdot 12 - 2\left(clr_cov + dia_4\right) - dia_8\right]}{\pi}$$ $\boxed{d_e = 26.59}$ in

$d_v := 0.9 d_e$ Effective shear depth **LRFD C5.7.2.8-2** $\boxed{d_v = 23.93}$ in

$V_c := 0.0316 \cdot \beta \cdot \lambda \cdot \sqrt{f'_c} \cdot b_v \cdot d_v$ $\boxed{V_c = 101.9}$ kips

The shear resistance provided by transverse reinforcement

$$V_s := \frac{A_v \cdot f_y \cdot d_v \cdot \cot(\theta)}{s}$$

$\theta := 45$ deg Simplified procedure **LRFD 5.7.3.4.1**

$A_v := 0.40$ in^2 #4 ties (2 legs)

$s := 12.00$ in Stirrup spacing

$$V_s := \frac{A_v \cdot f_y \cdot d_v \cdot \cot\left(\theta \cdot \frac{\pi}{180}\right)}{s}$$ $\boxed{V_s = 47.9}$ kips

$V_{n1} := V_c + V_s + V_p$ $\boxed{V_{n1} = 150.7}$ kips

$V_{n2} := 0.25 \cdot f'_c \cdot b_v \cdot d_v + V_p$ $\boxed{V_{n2} = 755.0}$ kips

$V_n := \min\left(V_{n1}, V_{n2}\right)$ $\boxed{V_n = 150.7}$ kips

For reinforced concrete sections:

$\phi_v := 0.9$ **LRFD [5.5.4.2].** Therefore, the factored shear resistance is:

$V_r := \phi_v \cdot V_n$ $\boxed{V_r = 135.7}$ kips

$V_u := \sqrt{F_x^{\,2} + F_z^{\,2}}$ $\boxed{V_u = 130.6}$ k

Is V_u = 130.6 kips < V_r = 142.0 kips? **Yes** $\boxed{\text{check} = \text{OK}}$

Check the top of drilled shaft as a reinforced concrete column:

The assessment of the resistance of a compression member with biaxial flexure is dependent upon the magnitude of the factored axial load. If the factored axial load is less than ten percent of the gross concrete strength multiplied by the phi-factor for compression members, then use Equation 5.6.4.5-3. Otherwise, use Equation 5.7.4.5-1. Regardless of which equation in the above paragraph controls, commercially available software is generally used to obtain the moment and axial load resistances.

The procedure as discussed above is carried out as follows:

$\phi := 0.75$ **LRFD [5.5.4.2].** Therefore, the factored shear resistance is:

$$A_g := \frac{\pi \cdot (Diam_{shaft} \cdot 12)^2}{4} \qquad \boxed{A_g = 1017.9} \ in^2$$

$$0.10 \cdot \phi \cdot f'_c \cdot A_g = 267.2 \quad kips$$

P_z = 89.1 kips < 305.4 kips Therefore, use **LRFD [Equation 5.6.4.5-3]**

$$M_{uy} := M_y \qquad \boxed{M_{uy} = 682.0} \ kip \cdot ft$$

$$M_{uz} := M_z \qquad \boxed{M_{uz} = 214.6} \ kip \cdot ft$$

$$M_u := \sqrt{M_{uy}^2 + M_{uz}^2} \qquad \boxed{M_u = 715.0} \ kip \cdot ft$$

$M_r := 723.1$ kip·ft

$$\frac{M_u}{M_r} = 0.99$$

Is 0.99 < 1.0 ? **Yes** $\boxed{\text{check} = \text{OK}}$

The factored flexural resistances shown above, M_r, was obtained by the use of commercial software.

E39-1.10 Interface Shear Transfer

Check interface shear capacity across construction joint between transition barrier section and foundation cap per **LRFD 5.7.4**.

Calculate factored interface shear force due to TL-5 vehicular collision forces only:

$$V_{CT} := \left(V_{z_CT}^2 + V_{y_CT}^2\right)^{0.5}$$ $V_{CT} = 148$ Kips

Vehicle collision force is extreme event limit state, therefore load factor = 1.0:

$$V_{ui} := 1.0 \cdot V_{CT}$$ $V_{ui} = 148$ Kips

Calculate interface shear resistance. For purpose of determining shear transfer contact area, use gross combined area of resisting foundation cap section and integral barriers.

$$A_{cv} := Area_{barrier} \cdot 144$$ $A_{cv} = 3786$ in^2

Per SDD-14B32 the standard barrier transition section has 6 - #5 horizontal bars on each face continuing across the interface construciton joint between the barrier transition and foundation cap sections.

$A_{st_5} := 0.31$ in^2 Area of #5 bar

Area of shear reinforcement crossing the shear plane

$$A_{vf} := 2 \cdot 6 \cdot A_{st_5}$$ $A_{vf} = 3.72$ in^2

Assume clean construction joint, not intentionally roughened. Per **LRFD 5.7.4.3**:

$c_{cv} := 0.075$

$\mu := 0.6$

$K_1 := 0.2$

$K_2 := 0.8$

Permanent axial compression across shear interface = 0

The nominal shear interface (shear friction) capacity is the smallest of following three equations:

$V_{nsf1} := c_{cv} \cdot A_{cv} + \mu \cdot A_{vf} \cdot f_y$ **LRFD 5.7.4.3-3** $V_{nsf1} = 417.87$ Kips

$V_{nsf2} := K_1 \cdot f'_c \cdot A_{cv}$ **LRFD 5.7.4.3-4** $V_{nsf2} = 2650.2$ Kips

$V_{nsf3} := K_2 \cdot A_{cv}$ **LRFD 5.7.4.3-5** $V_{nsf3} = 3028.8$ Kips

Nominal shear interface (shear friction) capacity:

$V_{nsf} := \min(V_{nsf1}, V_{nsf2}, V_{nsf3})$ $\boxed{V_{nsf} = 417.87}$ Kips

Factored shear interface resistance; for extreme event loading:

$\phi_{si} := 1.0$ **LRFD 5.7.4.3**

Therefore, the factored interface shear resistance is:

$V_{ri} := \phi_{si} \cdot V_{nsf}$ $\boxed{V_{ri} = 417.87}$ Kips

Is $V_{ui} < V_{ri} = 417.87$ kips? **Yes** $\boxed{\text{check = OK}}$

Check that minimum shear interface reinforcement is provided per LRFD 5.7.4.2:

$A_{vf_min} := \dfrac{0.05 \cdot A_{cv}}{f_y}$ **LRFD 5.7.4.2-1** $\boxed{A_{vf_min} = 3.15}$ in^2

Is $A_{vf_min} < A_{vf} = 3.72\ in^2$ **Yes** $\boxed{\text{check = OK}}$

Summary: Shear interface reinforcment of 12 - #5 bars per SDD-14B32 is adequate.

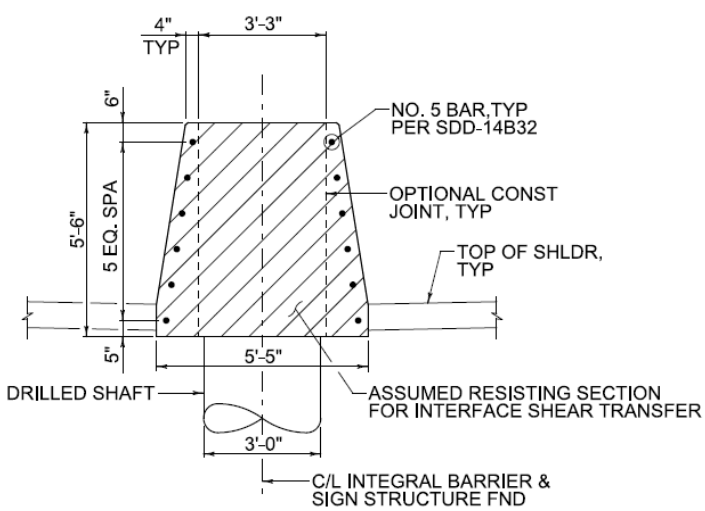

INTEGRAL BARRIER SECTION

This page intentionally left blank.

Table of Contents

E39-2 Design of Sign Bridge Concrete Column for Vehicle Impact 2
E39-2.1 Design Criteria 2
E39-2.2 Vehicular Collision Force 3
E39-2.3 Limit States and Combinations 3
E39-2.4 Analysis 3
E39-2.5 Flexural Strength Capacity 4
E39-2.6 Shear Capacity 5
E39-2.7 Analysis and Design Check for Case II Loading 8
E39-2.8 Summary Sketch E39-2.9 Column to Foundation Cap Interface Shear Check 9

E39-2 Design of Sign Bridge Concrete Column for Vehicle Impact

This example shows design calculations for a four chord sign bridge concrete column supported on a concrete foundation cap beam that is impacted by a vehicular collision force. The *AASHTO LRFD Bridge Design Specifications 8th Edition - 2017* are followed for the column design assuming the equivalent static force acts in a direction of zero to 15 degrees with the edge of pavement in a horizontal plane.

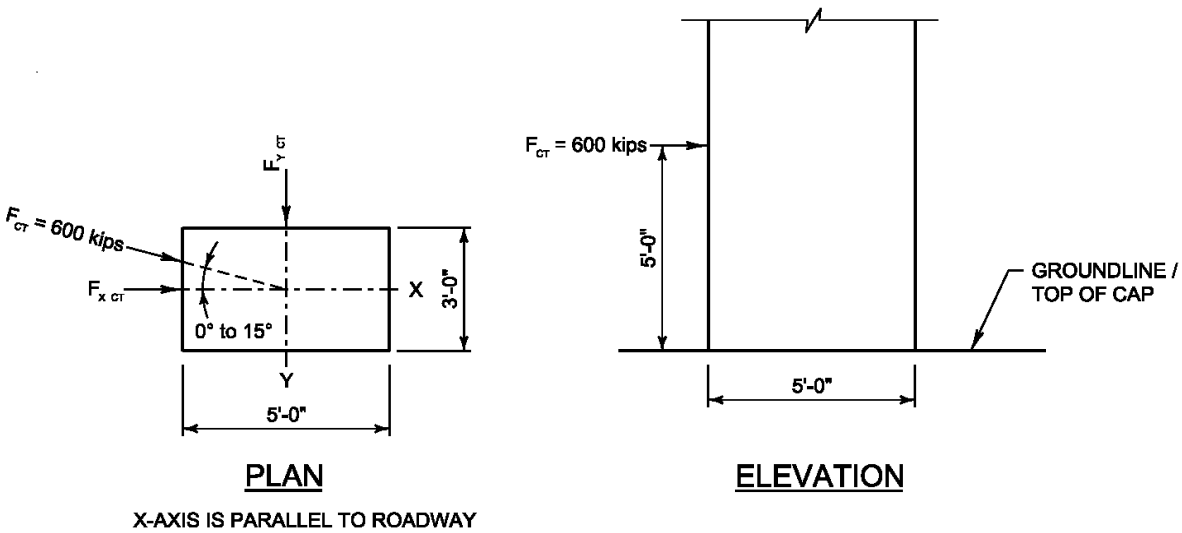

E39-2.1 Design Criteria

Column Material Properties

$f'_{c_col} := 3.5$ ksi	Concrete Strength
$f_y := 60$ ksi	Yield Strength of Reinforcement
$E_s := 29000$ ksi	modulus of elasticity of steel
$w_c := 0.150$ kcf	Unit Weight of concrete

Footing Material Properties

$f'_{c_ftg} := 3.5$ ksi	Concrete Strength

Column Geometry

$W_{col} := 3.00$ ft	Width of Column
$L_{col} := 5.00$ ft	Length of Column at Base

Footing Geometry

$W_{ftg} := 3.25$ ft	Width of Footing
$L_{ftg} := 12.00$ ft	Length of Footing

E39-2.2 Vehicular Collision Force

$F_{CT} := 600.0$ kips Vehicular impact design force **[LRFD 3.6.5.1]**

$H_{CT} := 5.00$ ft Height of vehicular impact design force above ground **[LRFD 3.6.5.1]**

Equivalent static force is assumed to act in a direction of zero to 15 degrees with the edge of the pavement. Two load cases will be analyzed:

Case I - Angle of Force = 15 deg
Case II - Angle of Force = 0 deg

E39-2.3 Limit States and Combinations

Limit State Extreme Event II for vehicle collision shall be applied using the following equation and load factors from **LRFD Table 3.4.1-1 & Table 3.4.1-4.**

$V_u := 1.0 \cdot DC + 0.5 \cdot LL + 1.0IC + 1.0 \cdot CT$

$M_u := 1.0 \cdot DC + 0.5 \cdot LL + 1.0IC + 1.0 \cdot CT$

E39-2.4 Analysis

Sign bridge column will be analyzed as a cantilever fixed at the column base.

Case I - Equivalent Static Load acting at 15 deg with edge of pavement

$V_{x_DC} := 0.0$ $V_{x_LL} := 0.0$ $V_{x_IC} := 0.0$

$V_{x_CT} := F_{CT} \cdot \cos\left(15 \cdot \frac{\pi}{180}\right)$ $\boxed{V_{x_CT} = 579.6}$ kips

$V_{ux} := 1.0V_{x_DC} + 0.5V_{x_LL} + 1.0 \cdot V_{x_IC} + 1.0 \cdot V_{x_CT}$ $\boxed{V_{ux} = 579.6}$ kips

$V_{y_DC} := 0.0$ $V_{y_LL} := 0.0$ $V_{y_IC} := 0.0$

$V_{y_CT} := F_{CT} \cdot \sin\left(15 \cdot \frac{\pi}{180}\right)$ $\boxed{V_{y_CT} = 155.3}$ kips

$V_{uy} := 1.0V_{y_DC} + 0.5V_{y_LL} + 1.0 \cdot V_{y_IC} + 1.0 \cdot V_{y_CT}$ $\boxed{V_{uy} = 155.3}$ kips

$M_{x_DC} := 0.0$ $M_{x_LL} := 0.0$ $M_{x_IC} := 0.0$

$M_{x_CT} := \left(F_{CT} \cdot \sin\left(15 \cdot \frac{\pi}{180}\right)\right) \cdot H_{CT}$ $\boxed{M_{x_CT} = 776.5}$ kip·ft

$M_{ux} := 1.0M_{x_DC} + 0.5M_{x_LL} + 1.0 \cdot M_{x_IC} + 1.0 \cdot M_{x_CT}$ $\boxed{M_{ux} = 776.5}$ kip·ft

$M_{y_DC} := 0.0$ $M_{y_LL} := 0.0$ $M_{y_IC} := 0.0$

$M_{y_CT} := F_{CT} \cdot H_{CT} \cdot \cos\left(15 \cdot \frac{\pi}{180}\right)$ $M_{y_CT} = 2897.8$ kip·ft

$M_{uy} := 1.0M_{y_DC} + 0.5M_{y_LL} + 1.0 \cdot M_{y_IC} + 1.0 \cdot M_{y_CT}$ $M_{uy} = 2897.8$ kip·ft

E39-2.5 Flexural Strength Capacity

For rectangular section behavior (longitudinal loading):

$$c := \frac{A_s \cdot f_y}{\alpha_1 \cdot f'_{c_col} \cdot \beta_1 \cdot b}$$

LRFD [5.6.2.2] $\alpha_1 := 0.85$ $\left(\text{for } f'_c < 10.0\text{ksi}\right)$

$\beta_1 := \max\left[0.85 - \left(f'_{c_col} - 4\right) \cdot 0.05, 0.65\right]$ $\beta_1 = 0.875$

$b := W_{col} \cdot 12$ $b = 36.00$ in

It is assumed that bundled #11 bars are used for the column vertical reinforcement. The bars are fully developed at the bottom of the column by utilizing standard 180 degree hooks.

Try: Bar size #11 $A_{st_11} := 1.56$ in^2 $Num_bars := 12$

$A_s := A_{st_11} \cdot Num_bars$ $A_s = 18.72$ in

$c := \frac{A_s \cdot f_y}{\alpha_1 \cdot f'_{c_col} \cdot \beta_1 \cdot b}$ $c = 11.99$ in

$a := \beta_1 \cdot c$ $a = 10.49$ in

$Clr_cov := 2.50$ in Column tie clear cover

$dia_5 := 0.625$ in Diameter of tie bars

$dia_{11} := 1.41$ in Diameter of vertical column bars

$d_{long} := L_{col} \cdot 12 - Clr_cov - dia_5 - dia_{11}$ $d_{long} = 55.47$ in

$M_{ny} := A_s \cdot f_y \cdot \left(d_{long} - \frac{a}{2}\right) \cdot \frac{1}{12}$ $M_{ny} = 4700.7$ kip·ft

For reinforced concrete sections:

$\phi_f := 0.9$ **LRFD [5.5.4.2].** Therefore, the factored flexural resistance is:

$M_{ry} := \phi_f \cdot M_{ny}$ $M_{ry} = 4230.6$ kip·ft

For rectangular section behavior (transverse loading):

$b := L_{col} \cdot 12$ $\boxed{b = 60.00}$ in

Try: Bar size #11 $A_{st_11} := 1.56$ in^2 $Num_bars := 14$

$A_s := A_{st_11} \cdot Num_bars$ $\boxed{A_s = 21.84}$ in

$c := \dfrac{A_s \cdot f_y}{\alpha_1 \cdot f'_{c_col} \cdot \beta_1 \cdot b}$ $\boxed{c = 8.39}$ in

$a := \beta_1 \cdot c$ $\boxed{a = 7.34}$ in

$d_{tran} := W_{col} \cdot 12 - Clr_cov - dia_5 - dia_{11}$ $\boxed{d_{tran} = 31.46}$ in

$M_{nx} := A_s \cdot f_y \cdot \left(d_{tran} - \dfrac{a}{2}\right) \cdot \dfrac{1}{12}$ $\boxed{M_{nx} = 3035.1}$ kip·ft

For reinforced concrete sections:

$\phi_f := 0.9$ **LRFD [5.5.4.2].** Therefore, the factored flexural resistance is:

$M_{rx} := \phi_f \cdot M_{nx}$ $\boxed{M_{rx} = 2731.6}$ kip·ft

If the factored axial load is less than $\phi_c f'_c A_g$: **LRFD [5.6.4.5]**

$\dfrac{M_{ux}}{M_{rx}} + \dfrac{M_{uy}}{M_{ry}} < 1.00$ $\dfrac{M_{ux}}{M_{rx}} + \dfrac{M_{uy}}{M_{ry}} = 0.97$

Is $0.97 \leq 1.0$? **Yes** $\boxed{check = OK}$

E39-2.6 Shear Capacity

Compute shear resistance in the longitudinal direction (V_{rx}):

The nominal shear resistance of the section is calculated as follows, **LRFD [5.7.3.3]**:

$$V_n := \min\left(V_c + V_s + V_p, 0.25 \cdot f'_{c_col} \cdot b_v \cdot d_v + V_p\right)$$

The nominal shear of the concrete is calculated as follows:

$$V_c := 0.0316 \cdot \beta \cdot \lambda \cdot \sqrt{f'_{c_col}} \cdot b_v \cdot d_v$$

$\beta := 2$ Simplified procedure **LRFD 5.7.3.4.1**

$\lambda := 1$ Concrete density modification factor **LRFD 5.4.2.8**

$b_v := b$ $\boxed{b_v = 60.00}$ in

Determine effective shear depth, dv:

For non-prestressed sections:

$d_e := d_{long}$ **LRFD 5.7.2.8-2** $d_e = 55.47$ in

dv is the maximum of the following three equations: **LRFD 5.7.2.8**

$d_{v1} := d_{long} - \frac{a_{long}}{2}$ $d_{v1} = 50.22$ in

$d_{v2} := 0.9 \cdot d_e$ $d_{v2} = 49.92$ in

$d_{v3} := 0.72 \cdot L_{col} \cdot 12$ $d_{v3} = 43.20$ in

$d_v := \max(d_{v1}, d_{v2}, d_{v3})$ $d_v = 50.22$ in

$V_c := 0.0316 \cdot \beta \cdot \lambda \cdot \sqrt{f'_{c_col}} \cdot b_v \cdot d_v$ $V_c = 356.3$ kips

The shear resistance provided by transverse reinforcement

$$V_s := \frac{A_v \cdot f_y \cdot d_v \cdot \cot(\theta)}{s}$$

deg 45 Simplified procedure **LRFD 5.7.3.4.1**

$A_v := 1.24$ in^2 #5 double stirrups (4 legs of stirrups)

$s := 6.0$ in Stirrup spacing

$$V_s := \frac{A_v \cdot f_y \cdot d_v \cdot \cot\left(\theta \cdot \frac{\pi}{180}\right)}{s}$$ $V_s = 622.7$ kips

$V_{n1} := V_c + V_s + V_p$ $V_{n1} = 979.0$ kips

$V_{n2} := 0.25 \cdot f'_{c_col} \cdot b_v \cdot d_v + V_p$ $V_{n2} = 2636.6$ kips

$V_n := \min(V_{n1}, V_{n2})$ $V_n = 979.0$ kips

For reinforced concrete sections:

$\phi_v := 0.90$ **LRFD [5.5.4.2].** Therefore, the factored shear resistance is:

$V_{rx} := \phi_v \cdot V_n$ $V_{rx} = 881.1$ kips

Compute shear resistance in the transverse direction (V_{ry}):

The nominal shear resistance of the section is calculated as follows, **LRFD [5.7.3.3]**:

$$V_n := \min\left(V_c + V_s + V_p, 0.25 \cdot f'_{c_col} \cdot b_v \cdot d_v + V_p\right)$$

The nominal shear of the concrete is calculated as follows:

$$V_c := 0.0316 \cdot \beta \cdot \lambda \cdot \sqrt{f'_{c_col}} \cdot b_v \cdot d_v$$

$\beta := 2$ Simplified procedure **LRFD 5.7.3.4.1**

$\lambda := 1$ Concrete density modification factor **LRFD 5.4.2.8**

$b_v := b$ $\boxed{b_v = 60.00}$ in

Determine effective shear depth, dv:

For non-prestressed sections:

$d_e := d_{tran}$ **LRFD 5.7.2.8-2** $d_e = 31.46$ in

dv is the maximum of the following three equations: **LRFD 5.7.2.8**

$d_{v1} := d_{tran} - \frac{a_{tran}}{2}$ $\boxed{d_{v1} = 27.79}$ in

$d_{v2} := 0.9 \cdot d_e$ $\boxed{d_{v2} = 28.32}$ in

$d_{v3} := 0.72 \cdot W_{col} \cdot 12$ $\boxed{d_{v3} = 25.92}$ in

$d_v := \max\left(d_{v1}, d_{v2}, d_{v3}\right)$ $\boxed{d_v = 28.32}$ in

$V_c := 0.0316 \cdot \beta \cdot \lambda \cdot \sqrt{f'_{c_col}} \cdot b_v \cdot d_v$ $\boxed{V_c = 200.9}$ kips

The shear resistance provided by transverse reinforcement

$$V_s := \frac{A_v \cdot f_y \cdot d_v \cdot \cot(\theta)}{s}$$

$\theta := 45$ deg Simplified procedure **LRFD 5.7.3.4.1**

$A_v := 1.24$ in^2 #5 double stirrups (4 legs of stirrups)

$s := 6.0$ in Stirrup spacing

$$V_s := \frac{A_v \cdot f_y \cdot d_v \cdot \cot\left(\theta \cdot \frac{\pi}{180}\right)}{s}$$ $V_s = 351.1$ kips

$V_{n1} := V_c + V_s + V_p$ $V_{n1} = 552.0$ kips

$V_{n2} := 0.25 \cdot f'_{c_col} \cdot b_v \cdot d_v + V_p$ $V_{n2} = 1486.7$ kips

$V_n := \min(V_{n1}, V_{n2})$ $V_n = 552.0$ kips

For reinforced concrete sections:

$\phi_v := 0.90$ **LRFD [5.5.4.2].** Therefore, the factored shear resistance is:

$V_{ry} := \phi_v \cdot V_n$ $V_{ry} = 496.8$ kips

Check combined shear::

$$\frac{V_{uy}}{V_{ry}} + \frac{V_{uz}}{V_{rz}} < 1.0 \qquad \frac{V_{ux}}{V_{rx}} + \frac{V_{uy}}{V_{ry}} = 0.97$$

Is $0.97 \le 1.0$? **Yes** check = OK

E39-2.7 Analysis and Design Check for Case II Loading

Case II - Equivalent Static Load acting at 0 deg with edge of pavement

$V_{x_DC} := 0.0$ $V_{x_LL} := 0.0$ $V_{x_IC} := 0.0$

$V_{x_CT} := F_{CT} \cdot \cos\left(0 \cdot \frac{\pi}{180}\right)$ $V_{x_CT} = 600.0$ kips

$V_{ux} := 1.0 V_{x_DC} + 0.5 V_{x_LL} + 1.0 \cdot V_{x_IC} + 1.0 \cdot V_{x_CT}$ $V_{ux} = 600.0$ kips

$M_{y_DC} := 0.0$ $M_{y_LL} := 0.0$ $M_{y_IC} := 0.0$

$M_{y_CT} := F_{CT} \cdot H_{CT} \cdot \cos\left(0 \cdot \frac{\pi}{180}\right)$ $M_{y_CT} = 3000.0$ kip·ft

$M_{uy} := 1.0 M_{y_DC} + 0.5 M_{y_LL} + 1.0 \cdot M_{y_IC} + 1.0 \cdot M_{y_CT}$ $M_{uy} = 3000.0$ kip·ft

Check Shear:

$V_{rx} = 881.1$ kips Is $940.4 > 600.0$? **Yes** check = OK

Check Moment:

$M_{ry} = 4230.6$ kip·ft Is $4285.9 > 3000.0$? **Yes** check = OK

E39-2.8 Summary Sketch

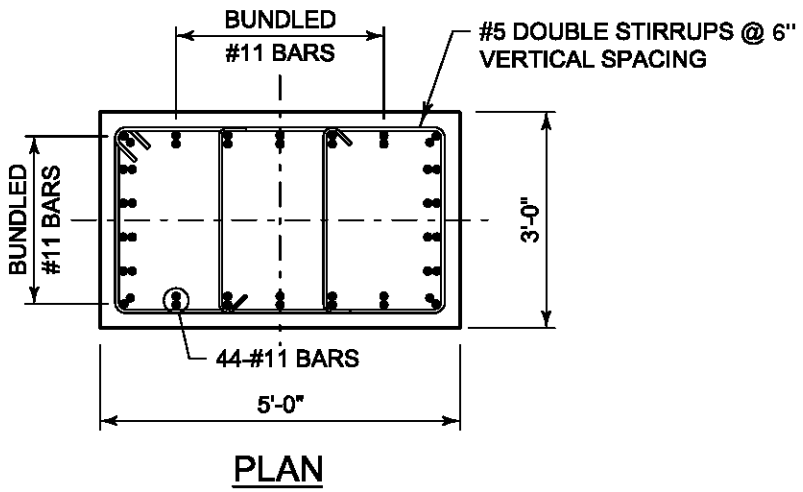

E39-2.9 Column to Foundation Cap Interface Shear Check

Confirm the shear capacity at the column to foundation cap interface per **LRFD 5.7.4**.

Refer to **E13-1.9.3** for an example of this calculation. Following this example calculation the factored interface shear resistance is determined to be 1,512 kips with ϕ = 1.0 for the extreme limit state per **LRFD 5.7.4.3**. This far exceeds the factored shear force V_u = 600 kips due to the vehicular collision force and therefore the column to foundation cap interface shear capacity is adequate.

This page intentionally left blank.

Table of Contents

40.1 General 4
40.2 History 5
40.2.1 Concrete 5
40.2.2 Steel 5
40.2.3 General 5
40.2.4 Funding Eligibility and Asset Management 6
40.3 Bridge Replacements 7
40.4 Rehabilitation Considerations 8
40.5 Deck Overlays 11
40.5.1 Overlay Methods 12
40.5.1.1 Thin Polymer Overlay 12
40.5.1.2 Low Slump Concrete Overlay 14
40.5.1.3 Polyester Polymer Concrete Overlay 14
40.5.1.4 Polymer Modified Asphaltic Overlay 15
40.5.1.5 Asphaltic Overlay 16
40.5.1.6 Asphaltic Overlay with Waterproofing Membrane 16
40.5.1.7 Other Overlays 17
40.5.2 Selection Considerations 18
40.5.3 Deck Assessment 21
40.5.4 Deck Preparations 22
40.5.5 Preservation Techniques 24
40.5.6 Other Considerations 25
40.5.7 Past Bridge Deck Protective Systems 26
40.5.8 Railings and Parapets 26
40.6 Deck Replacements 27
40.7 Rehabilitation Girder Sections 29
40.8 Widenings 32
40.9 Superstructure Replacement 33
40.10 Substructure Reuse and Replacement 34
40.10.1 Substructure Rehabilitation 34
40.10.1.1 Piers 34

40.10.1.2 Bearings 35
40.11 Other Considerations 36
40.11.1 Replacement of Impacted Girders 36
40.11.2 New Bridge Adjacent to Existing Bridge 36
40.12 Timber Abutments 37
40.13 Survey Report and Miscellaneous Items 38
40.14 Superstructure Inspection 40
40.14.1 Prestressed Girders 40
40.14.2 Steel Beams 41
40.15 Substructure Inspection 43
40.16 Concrete Anchors for Rehabilitation 44
40.16.1 Concrete Anchor Type and Usage 44
40.16.1.1 Adhesive Anchor Requirements 45
40.16.1.2 Mechanical Anchor Requirements 45
40.16.2 Concrete Anchor Reinforcement 45
40.16.3 Concrete Anchor Tensile Capacity 46
40.16.4 Concrete Anchor Shear Capacity 53
40.16.5 Interaction of Tension and Shear 58
40.16.6 Plan Preparation 58
40.17 Plan Details 60
40.18 Retrofit of Steel Bridges 62
40.18.1 Flexible Connections 62
40.18.2 Rigid Connections 62
40.19 Reinforcing Steel for Deck Slabs on Girders for Deck Replacements 63
40.20 Fiber Reinforced Polymer (FRP) 65
40.20.1 Introduction 65
40.20.2 Design Guidelines 65
40.20.3 Applicability 65
40.20.4 Materials 66
40.20.4.1 Fibers 66
40.20.4.2 Coatings 66
40.20.4.3 Anchors 67

40.20.5 Flexure 67
40.20.5.1 Pre-Design Checks 67
40.20.5.2 Composite Action 67
40.20.5.3 Pre-Existing Substrate Strain 68
40.20.5.4 Deflection and Crack Control 68
40.20.6 Shear 68
40.20.6.1 Pre-Design Checks 68
40.21 References 70

40.1 General

New bridges are designed for a minimally expected life of 75 years. Preliminary design considerations are site conditions, structure type, geometrics, and safety. Refer to Bridge Manual Chapters 9 and 17 for Materials and Superstructure considerations, respectively. Comprehensive specifications and controlled construction inspection are paramount to obtaining high quality structures. Case history studies show that adequately consolidated and properly cured concrete with low water-cement ratios and good air void systems have lower absorption rates and provide greater resistance to scaling and chloride penetration under heavy traffic and exposure to de-icing chemicals. Applying protective surface treatments to new decks improves their resistance to first year applications of de-icing chemicals.

Most interstate and freeway structures are not subject to normal conditions and traffic volumes. Under normal environmental conditions and traffic volumes, original bridge decks have an expected life of 40 years. Deck deterioration is related to the deck environment which is usually more severe than for any of the other bridge elements. Decks are subjected to the direct effects of weather, the application of chemicals and/or abrasives, and the impact of vehicular traffic. For unprotected bar steel, de-icing chemicals are the primary cause of accelerated bridge deck deterioration. Chlorides cause the steel to corrode and the corrosion expansion causes concrete to crack along the plane of the top steel. Traffic breaks up the delaminated concrete leaving potholes on the deck surfaces. In general, deck rehabilitation on Wisconsin bridges has occurred after 15 to 22 years of service due to abnormally high traffic volumes and severe environment.

Full depth transverse floor cracks and longitudinal construction joints leak salt water on the girders below causing deterioration and over time, section loss.

Leaking expansion joints allow salt water seepage which causes deterioration of girder ends and steel bearings located under them. Also, concrete bridge seats will be affected in time. Concrete bridge seats should be finished flat, and sealed with a penetrating epoxy coating.

Bridges being designed with staged construction, whether new or rehabilitation, shall satisfy the requirements of LRFD (or LFD, if applicable) for each construction stage. Utilize the same load factors, resistance factors, load combinations, etc. as required for the final configuration, unless approved by Chief Structures Development Engineer at WisDOT.

40.2 History

40.2.1 Concrete

Prior to 1975, all concrete structures were designed by the Service Load Method. The allowable design stress was 1400 psi based on an ultimate strength of 3500 psi except for deck slabs. In 1965, the allowable stress for deck slabs on stringers was reduced from 1400 to 1200 psi. The reason for the change was to obtain thicker concrete decks by using lower strength. The thicker deck was assumed to have more resistance to cracking and greater durability. During this time no changes were made in the physical properties of the concrete or the mixing quantities until 1974 when more cement was added to the mix for concrete used in bridge decks.

In 1980, the use of set retarding admixtures was required when the atmospheric temperature at the time of placing the concrete is 70°F or above; or when the atmospheric temperature is 50°F or above and it is expected that the time to place the concrete of any span or pour will require four or more hours. Retarding admixtures reduce concrete shrinkage cracking and surface spalling. Also, during the early 1980's a water reducing admixture was provided for Grades A and E concrete mixes to facilitate workability and placement.

40.2.2 Steel

Prior to 1975, Grade 40 bar steel was used in the design of reinforced concrete structures. This was used even though Grade 60 bars may have been furnished on the job. Allowable design stress was 20 ksi using the Service Load Method and 40 ksi using the Load Factor Method.

40.2.3 General

In 1978, Wisconsin Department of Transportation discovered major cracking on a two-girder, fracture critical structure, just four years after it was constructed. In 1980, on the same structure, major cracking was discovered in the tie girder flange of the tied arch span.

This is one example of the type of failures that transportation departments discovered on welded structures in the 1970's and '80's. The failures from welded details and pinned connections led to much stricter standards for present day designs.

All areas were affected: Design with identification of fatigue prone details and classifications of fatigue categories (AASHTO); Material requirements with emphasis on toughness and weldability, increased welding and fabrication standards with licensure of fabrication shops to minimum quality standards including personnel; and an increased effort on inspection of existing bridges, where critical details were overlooked or missed in the past.

Wisconsin Department of Transportation started an in-depth inspection program in 1985 and made it a full time program in 1987. This program included extensive non-destructive testing. Ultrasonic inspection has played a major role in this type of inspection. All fracture critical

structures, pin and hanger systems, and pinned connections are inspected on a 72-month cycle.

40.2.4 Funding Eligibility and Asset Management

Nationally, MAP-21 (2012) and the FAST Act (2015) have moved structures asset management to a more data-driven approach. Funding restrictions with regards to Sufficiency Rating, Structural Deficiency, and Functional Obsolescence have been removed or significantly revised. In place of these past restrictions, MAP-21 requires the development and approval of a statewide Transportation Asset Management Plan (TAMP). A key part of the WisDOT TAMP is the Wisconsin Structures Asset Management System (WiSAMS).

WiSAMS is being developed as a planning tool, which analyzes current structure inspection data, projects future deteriorated structure condition, and applies the Bridge Preservation Policy Guide (BPPG) to recommend appropriate structure work actions at the optimal time. WiSAMS is a tool for regional and statewide programming, and is not designed as an in-depth scoping tool. WiSAMS may provide an estimate of the appropriate work action, but an in-depth evaluation of the actual structure condition and appropriate scope of work (SSR) and consideration of other non-structural project factors (e.g. cost and functionality) is still required.

In Wisconsin, the Local Bridge Program, through State Statute 84.18 and Administrative Rule Trans 213, is still tied to historic FHWA classifications of Sufficiency Rating, Structural Deficiency, and Functional Obsolescence.

40.3 Bridge Replacements

Bridge preservation and rehabilitation is preferred over bridge replacement if the final structure provides adequate serviceability. Ideal bridge preservation strategy is explained in the WisDOT Bridge Preservation Policy Guide (BPPG). This guide should be followed as closely as possible, considering estimated project costs and funding constraints.

See Faculties Design Manual (FDM) 11-40-1.5 for policies regarding necessary bridge width* and structural capacity.

* If lane widening is planned as part of the 3R project, the usable bridge width should be compared to the planned width of the approaches after they are widened.

40.4 Rehabilitation Considerations

As a structure ages, rehabilitation is a necessary part of ensuring some level of acceptable serviceability; however, structure preservation as explained in the Bridge Preservation Policy Guide (BPPG) should be followed as closely as possible, considering estimated project costs and funding constraints.

The first consideration for any bridge rehabilitation decision is whether its geometry and load carrying capacity are adequate to safely carry present and projected traffic. Information which is helpful in determining structure adequacy includes structure inspection history, inventory data, traffic projections, maintenance history, capacity and route designations. The methods of rehabilitation are based on the type of structures, existing condition or rating information, the preliminary details of rehabilitation, and traffic control costs. These are important factors in considering rehabilitation options such as either a deck protection system or a deck replacement.

WisDOT policy item:

Rate the bridge using LFR provided it was designed using ASD or LFD. There are instances, however, where the LRFR rating of an existing bridge is beneficial (e.g. There is no M/M_u reduction to shear capacity using LRFR, which can affect longer-span steel bridges). Please contact the Bureau of Structures Development Section if using LRFR to rate bridges designed using ASD or LFD. Bridges designed using LRFD must be rated using LRFR.

The Regions are to evaluate bridge deficiencies when the bridge is placed in the program to ensure that rehabilitation will remove all structural deficiencies. Bureau of Structures (BOS) concurrence with all proposed bridge rehabilitation is required. See FDM 11-40-1.5 for policies regarding bridge rehabilitation.

Deck removal on prestressed girders is a concern as the contractors tend to use jackhammers to remove the deck. Contractors have damaged the top girder flanges using this process either by using too large a hammer or carelessness. With the wide-flange sections this concern is amplified. It is therefore suggested that the contractor saw cut the slab to be removed longitudinally close to the shear connectors. With the previously applied bond breaker, the slab should break free and then the contractor can clear the concrete around the shear connectors. Saw cutting needs to be closely monitored as contractors have sawn through steel girder flanges by not watching their blade depth.

In the rehabilitation or widening of bridge decks, it is often necessary to place concrete while traffic uses adjacent lanes. There has been considerable concern over the effects of traffic-induced vibrations on the quality of the concrete and its bond to existing concrete and its embedded reinforcing steel. Wisconsin bridge construction experience indicates that there are many cases where problems have occurred during deck pours with adjacent traffic. Consideration should be given to prohibiting traffic during the deck pour until concrete has taken its initial set.

The most effective way to reduce the amplitude of traffic-induced vibrations is to maintain a smooth structure approach and riding surface. Wisconsin has experienced some cracking in the concrete overlays and parapets during rehabilitation construction. The apparent cause of cracking is related to traffic impact due to rough structure approaches. Particular attention should be given to providing a smooth transition on temporary approaches and over expansion joints on all bridge decks during rehabilitation. Other causes of cracking are related to shrinkage, temperature, wind induced vibrations, concrete quality and improper curing.

Options for deck rehabilitation are as follows:

1. Asphalt Patch
2. Asphalt or Polymer Modified Asphaltic Overlay
3. Concrete or Modified Concrete Patch
4. Waterproof Membrane with an Asphalt Overlay (currently not used)
5. Concrete Overlay - Grade E Low Slump Concrete, or Micro-Silica Modified Concrete

Consider the following criteria for rehabilitation of highway bridges:

1. Interstate Bridges as Stand Alone Project
    a. Deck condition equal 4 or 5 and;
    b. Wear course or wear surface less than or equal to 3.
    c. No roadway work scheduled for at least 3 years.
2. Interstate Bridge with Roadway Work
    a. Deck Condition less than or equal 4.
    b. Wear course or wear surface less than or equal to 4.
3. Rehab not needed on Interstate Bridges if:
    a. Deck condition greater than 4.
    b. Wear surface or wear course greater than or equal 4.
4. All Bridges

WisDOT policy item:

On major rehab work, build to current standards such as safety parapets, full shoulder widths, etc. Use the current Bridge Manual standards and tables. Exceptions to this policy require approval from the Bureau of Structures Development Section.

a. Evaluate cost of repeated maintenance, traffic control as well as bridge work when determining life-cycle costs.

b. Place overlays on all concrete superstructure bridges if eligible.

c. For all deck replacement work the railing shall be built to current standards.

5. All Bridges with Roadway Work

   Coordinate with the Region the required staging of bridge related work.

A number of specific guidelines are defined in subsequent sections. As with any engineering project, the engineer is allowed to use discretion in determining the applicability of these guidelines.

40.5 Deck Overlays

As a bridge deck ages, preservation and rehabilitation techniques are necessary to maximize the life of the deck and ensure a level of acceptable serviceability. Overlays can be a useful tool to extend the service life of structures. This section discusses several overlay methods, considerations, and guidelines for deck overlays. The provided information is intended for deck-girder structures and may be applicable for slab structures. Slab structures may have different condition triggers and may warrant additional considerations.

The following criteria should be met when determining if an overlay should be used:

- The structure is capable of carrying the overlay dead load
- The deck and superstructure are structurally sound
- The desired service life can be achieved with the considered overlay and existing structure
- The selected option is cost effective based on the anticipated structure life and funding constraints

Decks deteriorate at different rates depending on many factors, including deck materials, material quality, construction quality, structure geometry, exposure to deicing agents, and traffic demands. Additionally, there is a wide variance in the amount of structure preservation techniques utilized by different regions. While the deck age can be a useful parameter, it should not be the primary consideration for determining the eligibility of overlays. Recommended preservation techniques should rely heavily on quality inspection data to determine the appropriate course of action. For more information related to preservation techniques and practices, refer to the Bridge Preservation Policy Guide.

Overlays can be an effective tool to maximize the life of the deck. Figure 40.5-1 illustrates a possible preservation scenario using deck deterioration curves showing approximate deck NBI ratings at which the overlays would occur, and the benefit of performing these overlays. This scenario assumes that the underside of deck deterioration is significantly reduced due to the preservation techniques performed on the top side of the deck.

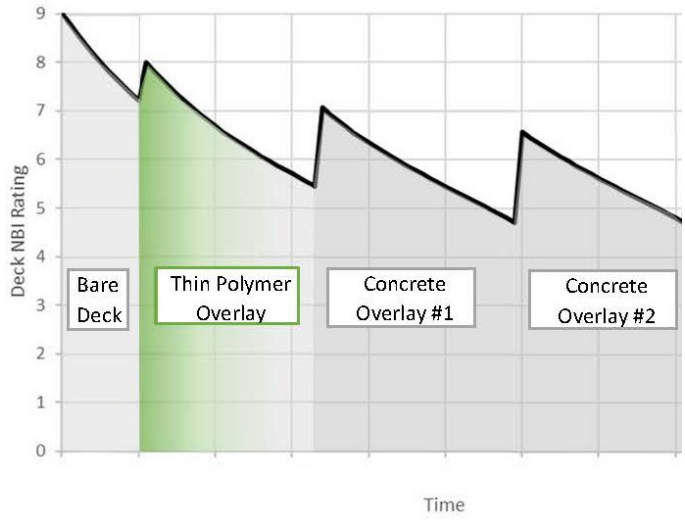

Figure 40.5-1
Deck Deterioration Curve

40.5.1 Overlay Methods

There are several commonly used overlay methods for the preservation and rehabilitation of decks. Generally, thin polymers overlays are recommended as preventative maintenance for decks with a minimal amount of deck distress. Ideally, thin polymer overlays are applied within the first couple of years to limit chloride infiltration. For decks with distress, the existing deck is typically milled and repaired with a low-slump concrete overlay as part of a more extensive bridge rehabilitation effort. For decks nearing replacement, asphaltic overlays maybe a cost effective option to improve ride quality. Refer to the following sections and Table 40.5-1 and Table 40.5-2 for a list of common overlay methods and additional information.

40.5.1.1 Thin Polymer Overlay

A thin polymer overlay (TPO) is expected to extend the service life of a bridge deck for 7 to 15 years. This overlay adds minimal dead load to the existing structure while providing an impermeable surface to prevent chlorides from infiltrating the deck. It can also be used to improve or restore friction on bridge decks.

In general, thin polymer overlays are defined as 1-inch thick or less overlays consisting of a polymer binder with aggregates and can be placed either as a multi-layer, slurry, or premixed system. Typical polymer binders are either epoxy, polyester, or methacrylate based. For WisDOT applications, TPO's consist of a two-layer, two-component epoxy polymer in conjunction with natural or synthetic aggregates for a 1/4-inch minimum total thickness. For dead load purposes, use 5 psf for thin polymer overlays. Refer to the approved products list for a list of pre-qualified polymer liquid binders.

Thin polymer overlays can be placed on new concrete once it has been fully cured and dried to an acceptable moisture content. However, cracks will develop in the concrete deck throughout the first couple of years in response to vehicular and environmental loads. As a result, the preferred time to place the overlay is after initial concrete cracking, which should occur within the first two years of a new deck. Placement after this time allows the overlay to seal existing cracks and may reduce reflective cracking in the overlay. It should be noted that this application window is not ideal for projects, since it will usually require an additional contract for the overlay application. As a result, it is recommended that decks be sealed for the first several years and then receive a thin polymer overlay.

Sufficient bond strength is critical in maximizing the overlay's service life. The bond strength can be reduced by poor surface preparations, traffic conditions, moisture, and distressed concrete. As a result, TPO's should be used based on the following restrictions:

- Recommended on decks with a NBI rating greater than 7 to help mitigate chloride infiltration. The deck should be in good condition with wearing surface distressed areas not exceeding 2% of the total deck area.

- Not recommended on decks that have been exposed to chlorides for more than 10 years old or with a NBI rating less than 7. These restrictions assume that significant chloride infiltration has already occurred. When a robust deck washing and sealing program has been used, TPO's may be placed on decks 10-15 years old with above average deck condition. Roadway traffic volume should also be a consideration for determining when to apply a TPO. As roadway volumes increase, it is assumed that chloride infiltration occurs significantly faster due to the increased application of deicing salts.

- TPO's should not be placed on concrete decks or Portland cement concrete patches less than 28 days. Patch and crack repairs shall be compatible with the overlay material.

- Use of TPO's on the concrete approaches should be avoided. Slab-on-grade conditions may cause the overlay to fail prematurely due to moisture issues.

- Not recommended on decks with widespread cracking, large cracks (>0.04 in), or active cracks (e.g. longitudinal reflective cracks between PS box girders). These cracks are likely to reflect through the overlay, even when fully repaired.

- Decks with an existing TPO may be considered for a TPO re-application provided that the previously discussed restrictions can be assumed to be satisfied. Generally, this assumes the existing overlay performed well over its expected service life and the effective deck exposure did not exceed 15 years, such that significant chloride infiltration has not occurred. If signification chloride infiltration is expected, a re-application would not be recommended.

Thin polymer overlays may be considered where friction needs to be restored or improved. In most cases, the two-layer polymer overlay system should be used as it will improve surface friction and protect the deck against future chloride infiltration. For situations requiring a high

skid resistance, calcined bauxite or other alternative aggerates may be considered in lieu of natural or synthetic aggregates.

40.5.1.2 Low Slump Concrete Overlay

A low slump concrete overlay, also referred to as a concrete overlay, is expected to extend the service life of a bridge deck for 15 to 20 years. This system is comprised of low slump Grade E concrete and has a 1-1/2 inch minimum thickness. The overlay thickness can accommodate profile and cross-slope differences, but typically does not exceed 4-1/2 inches. Thicker overlays become increasingly unpractical due to load and cost implications.

Low slump Grade E concrete requires close adherence to the specification, including equipment, consolidation, and curing requirements. A properly cured concrete overlay will help limit cracks, but inevitably the concrete overlay will crack. After the concrete overlay has been placed, it is beneficial to seal cracks in the overlay to minimize deterioration of the underlying deck. The overlay may require crack sealing the following year and periodically thereafter.

On delaminated but structurally sound decks, a rehabilitation concrete overlay is often the only alternative to deck replacement. Typically, prior to placing the concrete overlay a minimum of 1” of existing deck surface is removed along with any unsound material and asphaltic patches.

Rehabilitation concrete overlays are performed when significant distress of the wearing surface has occurred. If more than 25% of the wearing surface is distressed, an in-depth cost analysis should be performed to determine if a concrete overlay is cost effective verses a deck replacement.

The quantity of distress on the underside of deck or slab should be negligible, less than 5%, indicating that the bottom mat of reinforcement steel is not significantly deteriorated. If significant quantities of distress are present under the deck, a deck replacement may be required in the future; an overlay at this time might not achieve full service life, but may be placed to provide a good riding surface until replacement.

If the structure has an existing overlay, the overlay condition should be evaluated in addition to the other previously discussed considerations. If the concrete deck remains structurally sound, it may be practical to remove an existing overlay and place a new overlay before replacing the entire deck. Prior to placing the concrete overlay, the existing overlay should be removed to at least the original deck surface. Additional surface milling may not be practical if the previous overlay included a milling operation.

40.5.1.3 Polyester Polymer Concrete Overlay

A polyester polymer concrete (PPC) is expected to extend the service life of a bridge deck for 20 to 30 years. This system is a mixture of aggregate, polyester polymer resin, and initiator; which can be placed as a deck overlay using conventional concrete mixing and placement equipment, albeit most likely dedicated to PPC usage. The main advantages of a PPC overlay is that it is impermeable and causes minimal traffic disruptions due to its quick cure time. High costs and lack of performance data are the main disadvantages.

Prior to the placement of the PPC overlay, a high molecular weight methacrylate (HMWM) binder is placed on the prepared deck. This bonds the overlay to the deck, and it also serves to seal existing cracks in the deck. When the existing concrete is in good condition, PPC is effective at mitigating chloride penetration due to its impermeability.

The total thickness of a PPC overlay is typically 3/4" to 1". While thicker overlays are possible, they are usually cost prohibitive. PPC can be placed at 3/4" thick as opposed to a typical 1 1/2" thick concrete overlay. This may help in situations where bridge ratings and/or profile adjustments are of concern.

Since most applications recommend a 1-inch or less overlay, PPC overlays are considered a thin polymer overlay and have similar requirements and restrictions. PPC overlays should be limited to decks in good condition that require shorter traffic disruptions for sites with high traffic volumes and lane closure restrictions. PPC is a durable product and has a relatively fast curing time (2 to 4 hours), but also has a higher cost as compared to a concrete overlay. PPC overlays should be used based on the following restrictions:

- Deck wearing surface distress should not exceed 5% of the total deck area.
- Decks should have a NBI rating of 7 or greater and be less than 15 years old. Older decks may be considered when the existing deck has been protected by a thin polymer overlay or when chloride testing indicates acceptable chloride levels at the reinforcement. Chloride contents at the reinforcement should not exceed 5 lbs/CY for decks with epoxy coated reinforcement. PPC overlays are not recommended on decks with uncoated top mat reinforcement. Decks exposed to chlorides, exceeding 10 years, should consider a ¾-inch minimum scarification to remove chlorides.
- PPC overlays should not be placed on concrete decks or Portland cement concrete patches less than 28 days, unless approved otherwise. Patch and crack repairs shall be compatible with the overlay material.
- PPC shall not be used for structural repairs due to costs and performance concerns.

Note: PPC overlays are expensive and new to WisDOT. As a result, use of PPC overlays should be limited to preservation projects that meet the requirements outlined in Figure 40.5-2 **or as approved by the Bureau of Structures.**

40.5.1.4 Polymer Modified Asphaltic Overlay

A polymer modified asphaltic (PMA) overlay is expected to extend the service life of a bridge deck for 10 to 15 years. This system is a mixture of aggregate, asphalt content, and a thermoplastic polymer modifier additive, which can easily be placed as a deck overlay using conventional asphalt paving equipment. The thickness of the overlay is 2-inches minimum and can accommodate profile and cross-slope differences.

The added polymer allows for the overlay to resist water and chloride infiltration. Proper mix control and placement procedures are critical in achieving this protection. Core tests have

shown the permeability of this product is dependent on the aggregate. As a result, limestone aggregates should not be used.

PMA overlays can be used on more flexible structures (e.g. timber decks or timber slabs) and to minimize traffic disruptions.

Designers should contact the region to determine if a PMA overlay is a viable solution for the project. In some areas, product availability or maintaining an acceptable temperature may be problematic.

Note: PMA overlays are expensive, have a limited service life relative other overlay types, and product availability may be problematic. As a result, PMA overlays usage should be limited.

40.5.1.5 Asphaltic Overlay

An asphaltic overlay, without a waterproofing membrane, is expected to extend the service life of a bridge deck for 3 to 7 years. This system may be a viable treatment if the deck or bridge is programmed for replacement within 4 years on lightly traveled roadways and is able to provide a smooth riding surface. Without a waterproofing material, the overlay may trap moisture at the existing deck surface, which may accelerate deck deterioration.

These overlays must be watched closely for distress as the existing deck surface problems are concealed. This system is typically an asphaltic pavement with a mixture of aggregates and asphaltic materials, which can easily be placed as a deck overlay using conventional asphaltic mixing and placement equipment. The thickness of the overlay is 2-inches minimum and can accommodate profile and cross-slope differences.

Note: Asphaltic overlays, without a waterproofing membrane, are not eligible for federal funds.

40.5.1.6 Asphaltic Overlay with Waterproofing Membrane

An asphaltic overlay, with a waterproofing membrane, is currently being used on a very limited basis. This system is expected to extend the service life of a bridge deck for 5 to 15 years. Experience indicates that waterproofing membranes decrease the rate of deck deterioration by preventing or slowing the migration of water and chloride ions into the concrete.

In the 1990's, waterproofing membranes were actively used with asphaltic overlays for protecting existing decks, but were phased out by 2009 when they were restricted due to performance concerns and the inability to inspect the deck. As a result, low slump concrete or PMA overlays are currently recommended when deck or bridge replacements are programed beyond 4 years, unless approved otherwise.

Note: Asphaltic overlays, with a waterproofing membrane, requires prior-approval by the Bureau of Structures. This system is currently under review for possible improvements.

40.5.1.7 Other Overlays

Several other overlay systems have been used on past projects, but are generally not used currently. Use of these systems or other systems not previously mentioned require prior-approval by the Bureau of Structures.

- Micro-silica (silica-fume) modified concrete overlay – Provides good resistance to chloride penetration due to its low permeability.

- Latex modified concrete overlay – Provides a long-lasting overlay system with minimal traffic disruptions. Several other states are currently using this overlay method with hydrodemolition deck preparations.

- Reinforced concrete overlays:

    - Thin overlays (< 4 ½") – Uses a superplasticizer and fiber reinforcement (steel or synthetic) for additional crack control by reducing cracks and crack widths.

    - Thick overlays (≥ 4 ½") – Uses steel reinforcements, rebar or weld wire fabric, typically for new structural decks. This overlay is intended to provide at least one layer of steel reinforcement, in each direction, for crack control. This overlay is currently recommended for PS box girder superstructures, which allows for composite details and improved means to control longitudinal reflective cracking. For most cases, steel reinforcement is not required when rehabilitation overlays exceed 4 1/2 - inches. Use of low slump Grade E concrete may not be suitable when incorporating steel reinforcements.

40.5.2 Selection Considerations

The selection of an overlay type is made considering several factors to achieve the desired extended service life. Several of these factors are provided in Table 40.5-1 and Table 40.5-2 to aid in the selection of an overlay for the preservation and rehabilitation of decks.

Overlay Type	Thin Polymer Overlay	Low Slump Concrete Overlay	Polyester Polymer Concrete Overlay (2)	Polymer Modified Asphaltic Overlay	Asphaltic Overlay (4)	Asphaltic Overlay with Membrane (2)
Overlay Life Span (years)	7 to 15	15 to 20	20 to 30	10 to 15	3 to 7	5 to 15
Traffic Impact (6)	< 1 day	7 days +/-	< 1 day	1-2 days	1-2 days	1-2 days
Overlay Costs ($/SF) (1)	$3 to $5	$4 to $7	$8 to $18	$10 to $22	$1 to $2	$5 to $8
Project Costs ($/SF) (1)	$4 to $8	$14 to $23	$10 to $30	$20 to $42	$4 to $10	$8 to $16
Overlay Minimum Thickness (Inches)	0.375	1.50	0.75	2.00	2.00	2.00
Wearing Surface Distress (delamination, spalls, or patches)	≤ 2%	≤ 25%	≤ 5%	≤ 25%	NA	≤ 25%
Deck Patch Material	Concrete (3), rapid set (2), or overlay mix	Overlay mix	Concrete (3), rapid set, or PPC	Concrete (3) or rapid set (2)	Concrete (3) or rapid set (2)	Concrete (3) or rapid set (2)
Typical Surface Preparation	Shot blast	Milled and shot blast (5)	Shot blast (5)	Sand blast	Water or air blast	Sand blast (5)
Overlay Finish	Aggregates	Tined	Tined and sanded	None	None	None

(1) Estimated costs based on CY2017 and is for informational pursues only. Overlay costs includes minimum overlay thickness and overlay placement costs. Project costs includes all structure associated costs (joint repairs, deck repairs, surface preparations, minimum overlay thickness). Costs do not include traffic control costs or other costs not captured on structure costs.
(2) Requires approval
(3) Portland cement concrete patch material may require a 28-day cure prior to overlay placement.
(4) Not eligible for federal funds
(5) 1 to 3/4-inch milling recommended for decks exposed longer than 10 years and not previously milled
(6) Estimated durations based on the overlay placement time to the minimum time until traffic can to be placed on the overlay. Durations do not include time for deck repairs or staging considerations.

Table 40.5-1
Overlay Selection Considerations

Overlay Type	Advantages	Disadvantages	Notes
Thin Polymer Overlay	• Minimal dead load • Minimal traffic disruptions • Seals the deck • Provides traction	• Requires a concrete age of at least 21 days • Requires decks with minimal defects and low chloride concentrations • Sensitive to moisture, temperature, and humidity at placement • Reflective cracking resistance concerns	
Low Slump Concrete Overlay	• Contractor familiarity and department experience • Long life span potential • Durable • Ease to accommodate grade differences and deficiencies	• Traffic disruptions • Additional dead load • High maintenance requirements • Railing height concerns • Susceptible to cracking • Specialized finishing equipment	• May require crack sealing the following year and periodically thereafter.
Polyester Polymer Concrete Overlay	• Minimal dead load • Minimal traffic disruptions • Seals the deck • Provides traction • Long life span potential • Durable • Low maintenance requirements	• High cost • Dedicated equipment • Limited usage in Wisconsin • Sensitive to moisture, temperature, and humidity at placement	• Requires BOS Prior-Approval
Polymer Modified Asphaltic Overlay	• Minimal traffic disruptions • Ease to construct • Can be used on more flexible structures (e.g. timber decks or timber slabs)	• High cost • Susceptible to permeability • Difficult to assess top of deck condition	• Contact region for availability • Minimal research has been performed on the durability of this system in Wisconsin
Asphaltic Overlay	• Low cost • Ease to construct • Ease to accommodate grade differences and deficiencies	• Short life span • Not eligible for federal funds • Overlay permeability • Difficult to assess top of deck condition	• Deck or bridge replacement should be programmed within 4 years
Asphaltic Overlay with Membrane	• Ease to construct • Minimal traffic disruptions • Long life span potential • Can be used on more flexible structures (e.g. PS box girders)	• Susceptible to permeability • Requires a membrane • Difficult to assess top of deck condition	• Currently under review • Requires BOS Prior-Approval

Table 40.5-2
Overlay Advantages, Disadvantages, and Notes

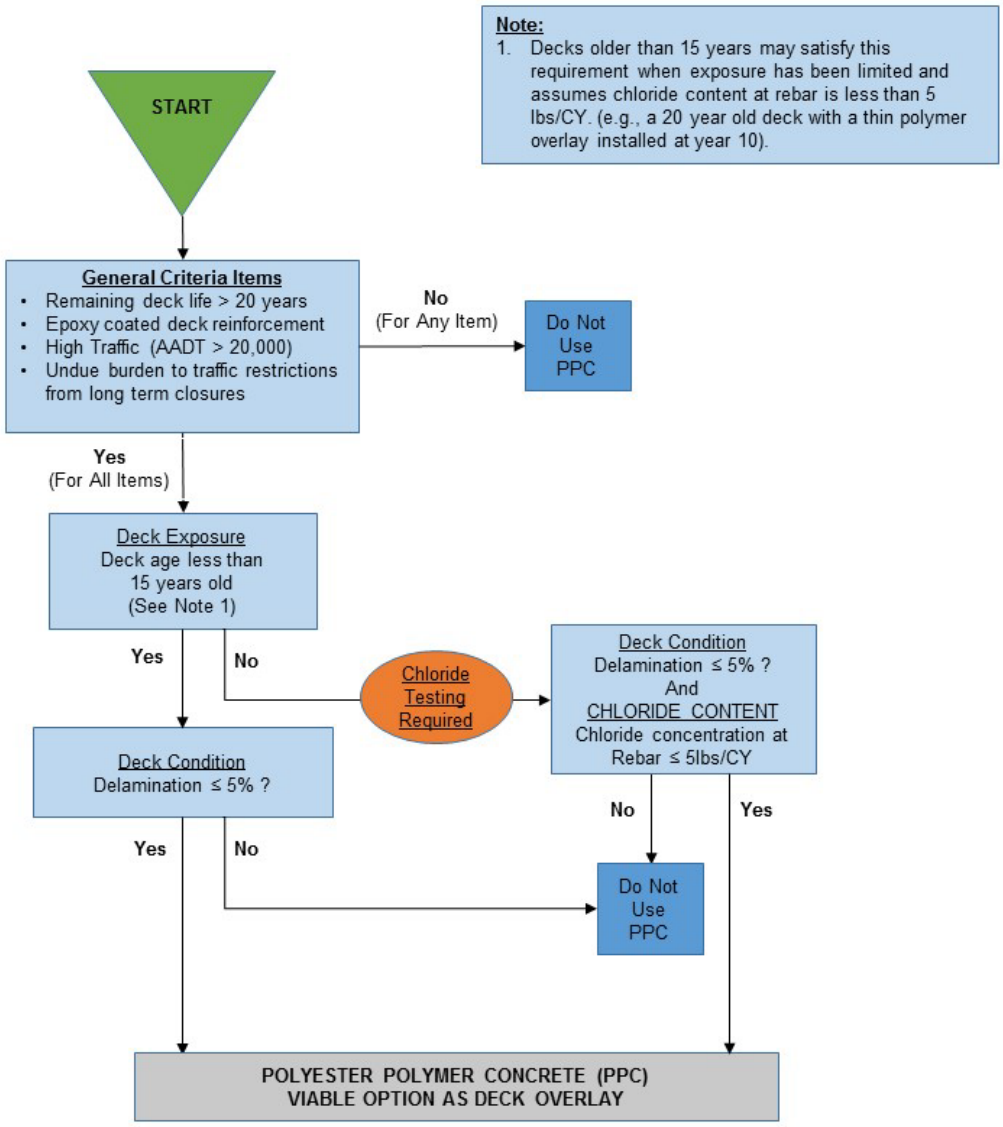

Figure 40.5-2
Polyester Polymer Concrete Overlay Usage Flowchart

40.5.3 Deck Assessment

The following are common deck assessment tools that can be used to survey existing deck conditions:

- Visual Inspections – Used to detect surface cracks, discontinuities, corrosion, and contamination.

- Audible Inspections - The two most common types of audible inspections are chain dragging and hammer sounding. Chain dragging is normally used on large concrete surface areas, such as bridge decks, while hammer sounding can be used on a number of materials in random locations. Both methods typically rely on the experience of the inspector to differentiate the relative sounds of similar materials.

- Infrared thermography - Infrared Thermography (IR) is an alternative tool for locating and mapping delaminations in bridge decks and pavements. A technique using an infrared scanner and control video camera, infrared thermography senses temperature differences between delaminated and non-delaminated areas.

- Ground penetrating radar (GPR) – GPR is a technique using electromagnetic signals, which can detect dielectric differences. This method can be used to measure concrete cover, overlay thickness, and reinforcing steel locations. This method can also be used to locate delaminations.

- Deck cores – Cores can be used to determine existing overly thicknesses, concrete cover, and concrete strength. As-built plans should only be used as a reference for existing conditions. Additionally, cores can be used to determine chloride content profiles. For asphaltic overlay, coring may be the best tool for deck assessments.

- Chloride Ion Testing - Chloride ions are the major cause of reinforcing steel corrosion in concrete. In evaluating chloride content, it is recommended that a chloride profile (chloride concentration percentage versus depth measurement below the concrete surface) be developed. This profile is important for assessing the future corrosion susceptibility of steel reinforcing and in determining the primary source of chlorides.

- Half-cell potential testing - A method used to detect whether the reinforcing steel is under active corrosion.

Visual inspections, audible inspections, and IR are the most common deck assessment tools for identifying delaminations and unsound concrete. For more information on deck assessment tools, refer to the Structure Inspection Manual – Part 5 – NDE and PDE Testing. Deck condition surveys should be placed on the structures plans. This should include the survey type and date when the survey was completed.

40.5.4 Deck Preparations

Prior to placing overlays, the existing deck surface will require deck preparations to repair the existing deck and to ensure that the overlay is properly bonded to the existing concrete. These preparations can range from sand blasting the entire deck to milling the entire deck with extensive repairs and are dependent on the existing deck conditions (distress, chloride concentration, existing overlay, proposed overlay, etc.).

The below deck preparations are typically used prior to placing overlays. Check the latest specifications for additional information.

Concrete Removal

Concrete deck removal usually includes the removal of unsound surface materials and the removal of a predetermined depth to remove concrete with high chloride concentrations. The following techniques can be used for large concrete removal areas:

Mechanical scarification or milling – The removal of existing deck to predetermined depth using a milling machine and other approved operations. This process can remove concrete with high chloride contents. However, this aggressive removal process has the potential to introduce micro-cracking into the existing deck.

Hydrodemolition – The removal of existing deck to a predetermined depth and the ability to selectively remove distressed areas using ultra high-pressure water-jetting (above 25,000 psi). A benefit to this process is that it does not introduce micro-cracking. WisDOT has very limited experience with this process and is usually cost prohibitive.

Generally, decks receiving a low slump concrete overlay will also include a 1-inch minimum deck removal. This assumes the existing top of deck has been exposed long enough to develop high chloride concentrations and would benefit from a milling operation. For early aged or protected (e.g. polymer overlay) decks, concrete milling may not be necessary prior to the overlay application and may be deferred to future overlay applications. Typically, only one aggressive milling operation is practical for a deck to leave sufficient cover for future overlays. Maintain ½” to 1” of rebar cover to ensure proper bonding and to protect the rebar and coating during the milling operation.

Deck Repairs

Care should be taken to limit damaging sound concrete and the existing reinforcement. Use of appropriate tools, hammers no more than 35 pounds and no more than 15 pounds when within one inch of the steel, is intended to limit distressed areas and avoid full-depth repairs. Additionally, saw cut depths should be carefully monitored such that the existing steel is not cut.

Cathodic protection may be warranted for decks with a high chloride content to help prevent corrosion from initiating.

The following items are associated with repairing distressed deck areas as shown in Figure 40.5-3:

Preparation Decks Type 1 – The removal of existing patches and unsound concrete only to a depth that exposes 1/2 of the peripheral area of the top or bottom bar steel in the top mat of reinforcement. Care should be taken to limit damaging sound concrete.

Preparation Decks Type 2 – The removal of existing unsound concrete below the limit of the type 1 removal described above. One inch below the bottom of the top or bottom bar steel in the top mat of reinforcement is the minimum depth of type 2 removal.

Full-Depth Deck Repair – The complete removal of existing concrete.

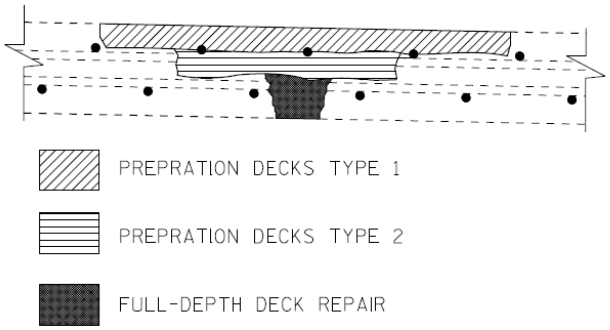

Figure 40.5-3
Deck Repairs

Deck Patches

Portland cement concrete is the preferred patch material. This material is easy to work with and very economical. When traffic impacts warrants, other materials may be considered. For concrete overlays, Type 1 and Type 2 deck patch repairs should be filled during the concrete overlay placement. Full-depth deck repairs should not be filled during the concrete overlay placement, but rather filled and curing a minimum of 24 hours before placing the concrete overlay. For other overlays, concrete repairs are usually properly cured prior to placing the overlay.

For minimal traffic impacts, a rapid-set material may be used for deck patches on asphaltic and thin polymer overlays. When repair quantities are minimal, distress areas less than 5% of the entire deck area, PPC overlays may use PPC to fill deck repairs prior overlay placement. See Table 40.5-1 for typical deck patch materials. Refer to the approved products list for a list of pre-qualified rapid setting concrete patch materials and their associated restrictions.

Surface Removal and Surface Preparation

Overlays require a properly prepared deck to achieve the desired bond strength. The following techniques are used for deck surface removal and preparations for an overlay:

Air cleaning – A preparation process to remove loose materials with compressed air. This process is intended to remove any material that may have gathered after the use of surface or concrete removal processes. This process is performed just prior to installing the overlay.

Water blasting (pressure or power washing) - A preparation process used to remove loose materials using low to high pressure water (5,000 psi to 10,000 psi). This process is beneficial as it keeps down dust and can remove loose particles.

Sand blasting – A surface removal process to remove loose material, foreign material, and loose concrete with sand material.

Shot blasting – A surface removal process to remove loose material, foreign material, and loose concrete by propelling steel shot against the concrete surface. This process also provides a roughen surface texture for improved bonding for overlays. Note: TPO's and PPC overlays provisions required a concrete surface profile meeting CSP-5 prior to overlay placement. This surface profile can be achieved using medium to medium-heavy shot blast.

40.5.5 Preservation Techniques

The following are some of the common activities being used to preserve decks and overlays:

- Deck cleaning (sweeping and power washing)
- Deck sealing/crack sealing
- Joint cleaning
- Joint repairs
- Deck patching

For additional preservation techniques and information refer to the *Bridge Preservation Policy Guide.*

40.5.6 Other Considerations

- Bridges with Inventory Ratings less than HS10 after rehabilitation shall not be considered for overlays, unless approved by the Bureau of Structures Design Section.

- Inventory and Operating Ratings shall be provided on the bridge rehabilitation plans.

- Verify the desired transverse cross slope with the Regions as they may want to use current standards.

- On continuous concrete slab bridges with extensive spalling in the negative moment area, not more than 1/3 of the top bar steel should be exposed if the bar ends are not anchored. This is to maintain the continuity of the continuous spans and should be stated on the final structure plans. If more than 1/3 of the steel is exposed and the bar ends are not anchored, either adjacent spans must be shored or a special analysis and removal plan are required. Reinforcement shall be anchored using Portland cement concrete.

- Asphaltic overlays should not be considered on a bridge deck which has a longitudinal grade in excess of four percent or an extensive amount of stopping and starting traffic.

- All full-depth repairs shall be made with Portland cement concrete.

- Joints and floor drains should be modified to accommodate the overlay

- Concrete chloride thresholds – Chloride content tests measure the chloride ion concentrations at various depths. Generally, research has shown initiation of corrosion is expected when the chloride content is between 1 to 2 lbs/CY in concrete for uncoated bars and 7 to 12 lbs /CY for epoxy coated bars at the reinforcement. These limits are referred to as the threshold for corrosion. Threshold limits do not apply to stainless steel rebar.

  When the chloride ion content is greater than 0.8 lbs/CY in concrete for uncoated bars and 5 lbs /CY for epoxy coated bars at the reinforcement depth, measures should be considered to limit additional chloride infiltration.

- See Chapter 6-Plan Preparation and Chapter 40 Standards for additional guidance.

- Refer the standard details for the most current bid items.

- Overlay transitional areas should be used and coordinated when accommodating profile differences. These transitions are intended to improve ride quality and protect against snowplow damage. Ideally, transitions are placed such that the overlay thickness remains constant, which requires a tapered removal of the existing surface over a sufficient distance. For profile adjustments 1 1/2-inch or greater, transitional areas should consider a minimum taper rate of 1:250 for low-speed applications (RSD< 50 mph) and for high-speed applications up to a 1:400 taper rate. Typically,

thicker profile adjustments are provided off the bridge deck and are coordinated by the roadway designer. For profile adjustments less than 1 1/2-inch, a minimum rate of 1:250 may be used regardless of the roadway design speed. For a 3/4-inch minimum PPC overlay, provide a 16-feet minimum transition length. For a 1/4-inch TPO overlay, a 3-feet minimum transition length is sufficient. See Chapter 40 Standards for additional guidance.

40.5.7 Past Bridge Deck Protective Systems

In the past, several bridge deck protective systems have been employed on the original bridge deck or while rehabilitating the existing deck as described in 17.8. The following systems have been used to protect bridge decks:

- Epoxy coated deck reinforcement – Prior to the 1980's, uncoated (black) bars were used throughout structures, including bridge decks. Criteria for epoxy coated reinforcement was first introduced in 1981 as a deck protective system. At first, usage was limited to the top mat of deck reinforcement. By 1987, coated bars were required in the top and bottom mats for high volume roadways (ADT > 5000). By 1991, coated bars were required for all State bridges and on some local bridges (ADT > 1000). Currently, use of epoxy coated deck reinforcement is required on all bridge decks.

- Asphaltic overlay with Membranes – Use of this overlay system was largely discontinued in the 1990's.

- High Performance Concrete (HPC) - Use of HPC has been limited to Mega Projects.

- Thin Polymer Overlays – Use of this overlay system is currently being used.

- Polyester Polymer Concrete Overlays – Use of this overlay system currently being used limitedly.

- Additional Concrete Cover – Use of additional clear cover (> 2 ½ inches) has been used on bridges with high volume and high truck traffic.

- Stainless steel deck reinforcement – Use of stainless steel has been very limited.

- Fiber reinforce polymer (FRP) deck reinforcement - Use of FRP reinforcement has only be used for experimental purposes.

As-built plans should be reviewed for past deck protective systems to assist with the appropriate rehabilitation measures.

40.5.8 Railings and Parapets

Overlays may decrease the parapet height when the existing overlay is not milled off and replaced in-kind. See Chapter 30-Railings for guidance pertaining to railings and parapets associated with rehabilitation structures projects.

40.6 Deck Replacements

Depending on the structure age or site conditions, the condition of original deck or deck overlay, a complete deck replacement may be the most cost effective solution and extend the life of the bridge by 40 years or more. Epoxy coated rebars are required on bridge deck replacements under the same criteria as for new bridges. The new deck and parapet or railing shall be designed per the most recent edition of the WisDOT Bridge Manual, including continuity bars and overhang steel. The top flange of steel girders should be painted.

The following condition or rating criteria are the minimum requirements on STN bridges (does not include local roadways over STN routes) eligible for deck replacements:

Item	Existing Condition	Condition after Construction
Deck Condition	≤ 4	≥ 8
Inventory Rating	---	≥ HS15*
Superstructure Condition	≥ 3	Remove deficiencies (≥ 8 desired)
Substructure Condition	≥ 3	Remove deficiencies (≥ 8 desired)
Horizontal and Vertical Alignment Condition	> 3	---
Shoulder Width	6 ft	6 ft

Table 40.6-1
Condition Requirements for Deck Replacements

*Rating evaluation is based on the criteria found in Chapter 45-Bridge Rating. An exception to requiring a minimum Inventory Rating of HS15 is made for continuous steel girder bridges, with the requirement for such bridges being a minimum Inventory Rating of HS10. For all steel girder bridges, assessment of fatigue issues as well as paint condition (and lead paint concerns) should be included in the decision as to whether a deck replacement or a superstructure/bridge replacement is the best option.

For any bridge not meeting the conditions for deck replacement, a superstructure, or likely a complete bridge replacement is recommended. For all Interstate Highway deck replacements, the bridges are to have a minimum Inventory Rating of HS20 after the deck is replaced.

WisDOT policy item:

Contact the Bureau of Structures Development Section Ratings Unit if a deck replacement for an Interstate Highway bridge would result in an Inventory Rating less than HS20.

For slab superstructure replacements on concrete pier columns, it is reported that the columns often get displaced and/or cracked during removal of the existing slab. Plans should be detailed showing full removal of these pier columns to the existing footing and replacement with current standard details showing a concrete cap with pier columns or shaft.

See the FDM and FDM SDD 14b7 for anchorage/offset requirements for temporary barrier used in staged construction. Where temporary bridge barriers are being used, the designer should attempt to meet the required offsets so that the barrier does not require anchorage which would necessitate drilling holes in the new deck.

In general, the substructure need not be analyzed for additional dead load provided the new deck is comparable to the existing. Exceptions include additional sidewalk or raised medians that would significantly alter the dead load of the superstructure.

For prestressed girder deck replacements, replace existing intermediate concrete diaphragms with new steel diaphragms at existing diaphragm locations (i.e. don't add intermediate lines of diaphragms). See Chapter 19 Standard Details and Steel Diaphragm Insert Sheets for additional information. Existing concrete diaphragms, in good condition, that are full-depth to the bottom of the girder (typically located at the abutments and piers) shall not be removed for a deck replacement.

For deck replacement projects that change global continuity of the structure, the existing superstructure and substructure elements shall be evaluated using LFD criteria. One example of this condition is an existing, multi-simple span structure with expansion joints located at the pier locations. From a maintenance perspective, it is advantageous to remove the joints from the bridge deck and in order to do so; the continuity of the deck must be made continuous over the piers.

40.7 Rehabilitation Girder Sections

WisDOT BOS has retired several girder shapes from standard use on new structures. The 45", 54" and 70" girder sections shall be used primarily for bridge rehabilitation projects such as girder replacements or widening.

These sections may also be used on a limited basis on new curved structures when the overhang requirements cannot be met with the wide-flange girder sections. These sections employ draped strand patterns with undraped alternates where feasible. Undraped strand patterns, when practical, should be specified on the designs. See the Standard Details for the girder sections' draped and undraped strand patterns.

The 45", 54", and 70" girders in Chapter 40-Bridge Rehabilitation standards have been updated to include the proper non-prestressed reinforcement so that these sections are LRFD compliant. Table 40.7-1 provides span lengths versus interior girder spacings for HL-93 live loading on single-span and multiple-span structures for prestressed I-girder rehabilitation sections. Girder spacing and span lengths are based on the following criteria:

- Interior girders with low relaxation strands at $0.75f_{pu}$,
- A concrete haunch of 2-1/2",
- Slab thicknesses from Chapter 17-Superstructure - General,
- A future wearing surface of 20 psf,
- A line load of 0.300 klf is applied to the girder to account for superimposed dead loads,
- 0.5" or 0.6" dia. strands (in accordance with the Standard Details),
- f'_c girder = 8,000 psi,
- f'_c slab = 4,000 psi, and
- Required f'_c girder at initial prestress < 6,800 psi

45" Girder		
Girder Spacing	Single Span	2 Equal Spans
6’-0”	102	112
6’-6”	100	110
7’-0”	98	108
7’-6”	96	102
8’-0”	94	100
8’-6”	88	98
9’-0”	88	96
9’-6”	84	90
10’-0”	84	88
10’-6”	82	86
11’-0”	78	85
11’-6”	76	84
12’-0”	70	80

54" Girder		
Girder Spacing	Single Span	2 Equal Spans
6’-0”	130	138
6’-6”	128	134
7’-0”	124	132
7’-6”	122	130
8’-0”	120	128
8’-6”	116	124
9’-0”	112	122
9’-6”	110	118
10’-0”	108	116
10’-6”	106	112
11’-0”	102	110
11’-6”	100	108
12’-0”	98	104

70” Girder		
Girder Spacing	Single Span	2 Equal Spans
6’-0”	150*	160*
6’-6”	146*	156*
7’-0”	144*	152*
7’-6”	140*	150*
8’-0”	138*	146*
8’-6”	134*	142*
9’-0”	132*	140*
9’-6”	128*	136
10’-0”	126*	134
10’-6”	122	132
11’-0”	118	128
11’-6”	116	126
12’-0”	114	122

Table 40.7-1
Maximum Span Length vs. Girder Spacing

*For lateral stability during lifting these girder lengths will require pick up point locations greater than distance d (girder depth) from the ends of the girder. The designer shall assume that the

pick-up points will be at the 1/10 points from the end of the girder and provide extra non-prestressed steel in the top flange if required.

40.8 Widenings

Deck widenings, except on the Interstate, are attached to the existing decks if they are structurally sound and the remaining width is more than 50 percent of the total new width. If the existing deck is over 20 percent surface delaminated or spalled, the existing deck shall be replaced. For all deck widenings on Interstate Highway bridges, consideration shall be given to replacing the entire deck in order that total deck life is equal and costs are likely to be less when considering future traffic control. Evaluate the cost of traffic control for deck widenings on other highway bridges. The total deck should be replaced in these cases where the life-cycle cost difference is minimal if future maintenance costs are substantially reduced.

The design details must provide a means of moment and shear transfer through the joint between the new and existing portions of the deck. Lapped reinforcing bars shall have adequate development length and are preferable to doweled bars. The reinforcing laps must be securely tied or the bars joined by mechanical methods. When practical, detail lapped rebar splices. Mechanical splice couplers or threaded rebar couples are expensive and should only be detailed when required. Generally, shear transfer is more than sufficient without a keyway. Bridge Maintenance Engineers have observed that if the existing bar steel is uncoated, newly lapped coated bars will accelerate the uncoated bar steel deterioration rate.

When widening a deck on a prestressed girder bridge, if practical, use the latest standard shape (e.g. 54W" rather than 54"). Spacing the new girder(s) to maintain comparable bridge stiffness is desirable. *The girders used for widenings may be the latest Chapter 19-Prestressed Concrete sections designed to LRFD or the sections from Chapter 40-Bridge Rehabilitation designed LFD, or LRFD with non-prestressed reinforcement as detailed in the Standard Details.*

For multi-columned piers, consider the cap connection to the existing cap as pinned and design the new portion to the latest LRFD criteria. The new column(s) are not required to meet **LRFD [3.6.5]** (600 kip loading) as a widening is considered rehabilitation. Abutments shall be widened to current LRFD criteria as well as the Standard for Abutment Widening.

For foundation support, use the most current method available.

All elements of the widening shall be designed to current LRFD criteria. Railings and parapets placed on the new widened section shall be up to current design and safety standards. For the non-widened side, substandard railings and parapets should be improved. Contact the Bureau of Structures Development Section to discuss solutions.

For prestressed girder widenings, only use intermediate steel diaphragms in-line with existing intermediate diaphragms (i.e. don't add intermediate lines of diaphragms).

40.9 Superstructure Replacement

Various types of superstructure replacements include replacing prestressed girders in-kind, replacing slabs in-kind and replacing steel girders with prestressed girders or slabs. When considering replacement of a deck on steel girders, consideration of the cost of painting the structural steel should be included in the evaluation.

Approval is required from BOS for all superstructure replacement projects. To ensure that the cost of a superstructure replacement is warranted, the substructure should be in good condition. In general, the superstructure replacement should remain the same as the original design to better ensure that substructure reuse is practical. See 40.10 for considerations regarding substructure reuse criteria.

WisDOT policy item:

Provided that the substructure meets the criteria in 40.10, the superstructure may be replaced. The superstructure shall be designed to current LRFD criteria.

Reuse of the existing substructure is contingent on the fixity of the substructure units remaining the same. If the fixity is changed, the substructure must be evaluated per the design loading of the original structure.

With the substructure needing further evaluation for increased dead load and/or change in fixity, discuss with BOS the acceptability of the evaluation results prior to continuing with final design.

40.10 Substructure Reuse and Replacement

When practical, substructure reuse may be an acceptable alternative to replacing the entire bridge. However, reuse will require early coordination with BOS, engineering judgement, and will be evaluated on a project-by-project basis. This evaluation should determine if the substructure can be reused "as-is" with or without minor surface repairs, reused with major repairs and/or strengthening, or needs to be replaced.

In general, "as-is" reuse of substructures should be reserved for in-kind superstructure replacements with little to no change in geometry, fixity, and service dead loads. Additionally, substructures should be in good condition and only require minor surface repairs. If satisfied, evaluation of the existing substructure with the load rating methodology as discussed in 45.3.2 for an existing (in-service) bridge (e.g. LFR) may be acceptable. An example of this condition would be an in-kind slab superstructure replacement with a substructure that remains in good condition. For other conditions (i.e. reuse with major repairs and/or strengthening), the substructure should be evaluated with the current load rating methodology (LRFR) as discussed in 45.3.1.1 for new bridge construction. If substructure reuse is found to be not practical due the expensive repairs and/or excessive strengthening, the substructure should be completely replaced.

Approval is required from BOS for all substructure reuse projects.

Normally it is acceptable to assume that the original bridge design was done correctly, however pier caps, either for multi-columned piers or open pile bents, have occasionally been under-designed. Further investigation is warranted for pier caps with nominal shear stirrups, rather than stirrups that appear to be designed for the girder configuration, etc.

See 40.15 for more information on substructure inspection.

Additional guidance regarding substructure reuse can be found in the FHWA publication *Foundation Reuse for Highway Bridges*.

40.10.1 Substructure Rehabilitation

Substructure rehabilitation work can vary significantly from minor concrete surface repairs to major repairs that includes strengthening members.

40.10.1.1 Piers

Pier caps and/or columns/shafts may show signs of distress due to spalled concrete. The spalling may be completely around some of the longitudinal bar steel, thus destroying the bond. The concrete usually remains sound under the bearing plates, possibly due to compressive forces preventing salt intrusion and/or deterioration from freeze thaw cycles.

If the bond of the structural reinforcement is not compromised (at least half of the bar is bonded), rehabilitation measures include:

1. Concrete surface repair for smaller areas. Fiber Reinforced Polymer (FRP), either non-structural or structural, may be required. See 40.20 for more information on FRP.

2. Column encapsulation. Even if the bars are bonded, the encapsulation provides protection to further damage from snow impact produced by plowing. For encapsulation:

    a. Place adhesive anchors

    b. Place wire mesh around column

    c. Pour 6” concrete encapsulation

If the bond of the structural reinforcement is compromised (at least half of the bar is not bonded), rehabilitation measures include:

1. Cap and/or column/shaft encapsulation. Fiber Reinforced Polymer (FRP), either non-structural or structural, may be required. See 40.20 for more information on FRP.

2. Column encapsulation. The encapsulation provides protection to further damage from snow impact produced by plowing. For encapsulation:

    a. Place adhesive anchors

    b. Place wire mesh around column

    c. Pour 6” concrete encapsulation

40.10.1.2 Bearings

Bearings being replaced should follow the Chapter 27 Standard Details, as well as the Chapter 40 Standard for Expansion Bearing Replacement Details. Replace lubricated bronze bearings with either laminated elastomeric bearings (preferred, if feasible) or Stainless Steel TFE bearings. If only outside bearings are replaced, the difference in friction/resistance values between adjacent girders can be ignored. In addition to the bid item for the new bearing, the STSP Removing Bearings is required.

For bearings requiring maintenance, consider the SPV Cleaning and Painting Bearings. Special Provisions Bearing Maintenance and Bearing Repair may also be worthy of consideration.

40.11 Other Considerations

40.11.1 Replacement of Impacted Girders

When designing a replacement project for girders that have been damaged by vehicular impact, replace the girder in-kind using the latest details. Either HS loading or HL-93 loading may be used if originally designed with non-LRFD methods. Consider using the latest deck details, especially with regard to overhang bar steel.

For the parapet or railing, the designer should match the existing.

40.11.2 New Bridge Adjacent to Existing Bridge

For a new bridge being built adjacent to an existing structure, the design of the new structure shall be to current LRFD criteria for the superstructure and abutment.

The pier design shall be to current LRFD criteria, including the 600 kip impact load for the new bridge. It is not required to strengthen or protect the existing adjacent pier for the 600 kip impact load. However, it would be prudent to discuss with the Region the best course of action. If the Region wants to provide crash protection, it may be desirable to provide TL-5 barrier/crash wall protection for both structures, thus eliminating the need to design the new pier for the 600 kip impact load. The Region may also opt to provide typical barrier protection (< TL-5) to both sets of piers, in which case the design engineer would still be required to design the new pier for the 600 kip impact load. This last option is less expensive than providing TL-5 barrier to both structures. Aesthetics are also a consideration in the above choices.

40.12 Timber Abutments

The use of timber abutments shall be limited to rehabilitation or widening of off-system structures.

Timber abutments consist of a single row of piling capped with timber or concrete, and backed with timber to retain the approach fill. The superstructure types are generally concrete slab or timber. Timber-backed abutments currently exist on Town Roads and County Highways where the abutment height does not preclude the use of timber backing.

Piles in bents are designed for combined axial load and bending moments. For analysis, the assumption is made that the piles are supported at their tops and are fixed 6 feet below the stream bed or original ground line. For cast-in-place concrete piling, the concrete core is designed to resist the axial load. The bending stress is resisted by the steel shell section. Due to the possibility of shell corrosion, steel reinforcement is placed in the concrete core equivalent to a 1/16-inch steel shell perimeter section loss. The reinforcement design is based on equal section moduli for the two conditions. Reinforcement details and bearing capacities are given on the Standard Detail for Pile Details. Pile spacing is generally limited to the practical span lengths for timber backing planks.

The requirements for tie rods and deadmen is a function of the abutment height. Tie rods with deadmen on body piling are used when the height of "freestanding" piles is greater than 12 feet for timber piling and greater than 15 feet for cast-in-place concrete and steel "HP" piling. The "freestanding" length of a pile is measured from the stream bed or berm to grade. If possible, all deadmen should be placed against undisturbed soil.

Commercial grade lumber as specified in AASHTO having a minimum flexural resistance of 1.2 ksi is utilized for the timber backing planks. The minimum recommended nominal thickness and width of timber backing planks are 3 and 10 inches, respectively. If nominal sizes are specified on the plans, analysis computations must be based on the dressed or finished sizes of the timber. Design computations can be used on the full nominal sizes if so stated on the bridge plans. For abutments constructed with cast-in-place concrete or steel "HP" piles, the timber planking is attached with 60d common nails to timber nailing strips which are bolted to the piling.

40.13 Survey Report and Miscellaneous Items

Prior to scheduling bridge plans preparation, a Rehabilitation Structure Survey Report Form is to be completed for the proposed work with field and historical information. The Rehabilitation Structure Survey Report provides the Bridge Engineer pertinent information such as location, recommended work to be performed, and field information needed to accomplish the rehabilitation plans. A brief history of bridge construction date, type of structure, repair description and dates are also useful in making decisions as to the most cost effective rehabilitation. Along with this information, it is necessary to know the extent of deck delamination and current deck, super and substructure condition ratings. A thorough report recommending structural repairs and rehabilitation with corresponding notes is very useful for the designer including information from special inspections.

Because new work is tied to existing work, it is very important that accurate elevations be used on structure rehabilitation plans involving new decks and widenings. Survey information of existing beam seats is essential. Do not rely on original plans or a plan note indicating that it is the responsibility of the contractor to verify elevations.

Experience indicates that new decks open to traffic and subjected to application of de-icing salts within the first year show signs of early deck deterioration. Therefore, a protective surface treatment is applied to all new bridge deck concrete as given in the standard specifications.

For existing sloped faced parapets on decks under rehabilitation, the metal railings may be removed. On deck replacements and widenings, all existing railings are replaced. Refer to Bridge Manual Chapter 30-Railings for recommended railings.

On rehabilitation plans requiring removal of the existing bridge name plates; provide details on the plans for new replacement name plates if the existing name plate cannot be reused. The existing bridge number shall be used on the name plates for bridge rehabilitation projects.

If floor drain removal is recommended, review these recommendations for conformance to current design standards and remove any floor drains not required. Review each structure site for length of structure, grade, and water erosion at the abutments.

Bridge rehabilitation plans for steel structures are to provide existing flange and web sizes to facilitate selecting the proper length bolts for connections. If shear connectors are on the existing top flanges, additional shear connectors are not to be added as welding to the top flange may be detrimental. Do not specify any aluminized paint that will come in contact with fresh concrete. The aluminum reacts severely with the fresh concrete producing concrete volcanoes.

Recommended paint maintenance is determined with assistance from the Wisconsin Structures Asset Management System (WiSAMS), which utilizes information provided by the routine bridge inspections.

Structure plans (using a sheet border with a #8 tab) are required for all structure rehabilitation projects. This includes work such as superstructure painting projects and all overlay projects,

including polymer overlay projects. See Chapter 6-Plan Preparation guidance for plan minimum requirements.

Existing steel expansion devices shall be modified or replaced with watertight expansion devices as shown in Bridge Manual Chapter 28-Expansion Devices. If the hinge is repaired, consideration should be given to replacing the pin plates with the pins. Replace all pins with stainless steel pins conforming to ASTM 276, Type S20161 or equal. On unpainted steel bridges, the end 6' or girder depth, whichever is greater, of the steel members adjacent to an expansion joint and/or hinge are required to have two shop coats of paint. The second coat is to be a brown color similar to rusted steel. Exterior girder faces are not painted for aesthetic reasons, but paint the hanger on the side next to the web.

A bridge on a steep vertical grade may slide downhill closing any expansion joint on this end and moving the girders off center from the bearings. One possible corrective action is to block the ends of the girder during the winter when the girders have shortened due to cold temperatures. Continued blocking over a few seasons should return the girders to the correct position. The expansion device at the upslope end may have to be increased in size.

Raised pavement markers require embedment in the travel way surface. As a general rule, they are not to be installed on bridge decks due to future leakage problems if the marker comes out. They shall not be installed thru the membranes on asphalt overlays and not at all on asphaltic decks where the waterproofing is integral with the surface.

40.14 Superstructure Inspection

40.14.1 Prestressed Girders

On occasion prestressed concrete girders are damaged during transport, placement, or as a result of vehicle impact. Damage inspection and assessment procedures are necessary to determine the need for traffic restrictions, temporary falsework for safety and/or strength. Three predominant assessment areas are damage to prestressing strands, damage to concrete, and remaining structural integrity.

Where damage to a girder results in any significant loss of concrete section, an engineering analysis should be made. This analysis should include stress calculations for the damaged girder with comparison to the original design stresses. These calculations will show the loss of strength from the damage.

Assessment of damage based on the loss of one or more prestressing strands or loss of prestress force is given as reason for restriction or replacement of girders. Some of the more common damages are as follows with the recommended maintenance action. However, an engineering assessment should be made on all cases.

1. If cracking and spalling are limited to the lower flange, patching is usually performed. This assessment should be based on calculations that may allow repair.

2. If cracking continues from flange into web, the girder is normally replaced. Findings indicate that sometimes repair-in-place may be the preferred decision.

3. Termini of cracks are marked, and if the cracks continue to grow the girder may be replaced. This is a good method to determine the effect of loads actually being carried.

4. When large areas of concrete are affected, or when concrete within stirrups is fractured, replace. At times it may be more appropriate to repair-in-place than replace.

Repair and/or replacement decisions are based on structural integrity. Load capacity is by far the most important rationale for selection of repair methods. Service load capacity needs to be calculated if repair-in-place is contemplated.

Evaluations of criteria for assessment of damage related to the two predominant areas associated with structural integrity are the following:

1. A structural analysis is made to determine the stresses in a damaged girder on the basis of the actual loads the girder will carry. This technique may result in a girder that has less capacity than the original, but can still safely carry the actual loads. This assessment results in consideration of possible repair-in-place methods which normally are cost effective.

   or

2. A structural analysis is made to determine the load capacity and rating of the girder. If the capacity and rating of the girder is less than provided by the original design, the girder shall be replaced. This assessment will provide a girder equal to the original design, but precludes possible repair-in-place methods that are normally less costly.

Location and size of all spalled and unsound concrete areas shall be recorded. Location, length, and width of all visible cracks shall be documented. All damage to prestress strands and reinforcing steel shall be reported. Location of hold-down devices in the girder shall be shown in relation to the damage. Horizontal and vertical misalignment along the length of the girder, and at points of localized damage, shall be reported. (These measurements might best be made by string-lining). Growth of cracks shall be monitored to determine that the cracked section has closed before extending to the web.

Critical damage is damage to concrete and/or the reinforcing elements of prestressed concrete girders such as:

1. Cracks extend across the bottom flange and/or in the web directly above the bottom flange. (This indicates that the prestressing strands have exceeded yield strength).

2. An abrupt lateral offset is measured along the bottom flange or lateral distortion of exposed prestressing strands. (This also indicates that the prestressing strands have exceeded yield strength).

3. Loss of prestress force to the extent that calculations show that repairs cannot be made.

4. Vertical misalignment in excess of the normal allowable.

5. Longitudinal cracks at the interface of the web and the top flange that are not substantially closed below the surface. (This indicates permanent deformation of stirrups).

40.14.2 Steel Beams

These are three alternate methods of repairing damaged steel beams. They are:

1. Replace the total beam,

2. Replace a section of the beam, or

3. Straighten the beam in-place by heating and jacking.

The first alternate would involve removing the concrete deck over the damaged beam, remove the damaged section and weld in a new piece; then reconstruct the deck slab and railing over the new girder. Falsework support is required at the locations where the beams are cut and probably in the adjacent span due to an unbalanced condition.

The second alternate involves cutting out a section of the beam after placing the necessary supporting members. The support is placed using calibrated jacks. The section is cut out as determined by the damage. A new section plus any vertical stiffeners and section of cover plates would be welded in. This involves butt welds on both the flange and web. The welding of the web is difficult due to minor misalignments to start with plus the tendency of thin plates to move from the heat of welding.

The third alternate of heating and jacking the in-place beam to straighten it is a difficult procedure but can be done by personnel familiar and knowledgeable of the process. It is important to maintain heat control under 1300°F maximum. Use an optical pyrometer to determine heat temperature. There is no specified tolerance for the straightened member. The process is deemed satisfactory when a reasonable alignment is obtained.

Based on the three alternates available, the estimated costs involved and the resultant restoration of the beam to perform its load carrying capacity, heat straightening is a viable option in many cases.

The structural engineer who will be responsible for plan preparation should field review the site with the Regional Bridge Maintenance Engineer.

40.15 Substructure Inspection

The inspection of substructure components may reveal deteriorating concrete in areas exposed to de-icing chemicals from roadway drainage or concrete disintegration where exposed in splash zones or stream flows. Footings and pilings exposed due to erosion and undermining could result in loss of bearing capacity and/or section. Utilize HSIS data to flag potential scour concerns (code 6000), with scour defects in condition state 4 being a significant concern.

Abutment and pier concrete reuse may require core tests to determine the quality and strength of the concrete. Original pile capacities are determined from plans, or if available, the pile driving records. Reuse of steel pile sections will require checking the remaining load carrying capacity if section loss is determined to be present. Steel piling should be checked:

- Immediately below the splash zone or water line for deterioration and possible loss of section. High section loss occurs in some areas due to corrosion from bacterial attack at 3 to 6 feet below the water line.

- Below abutments where the berm soil (material beneath riprap) has settled below the abutment bottom and water appears to be flowing from beneath the abutment or stream water has direct access to the piling.

If there is piling section loss or undermined spread footings, capacities of existing piling and/or footings will need to be recomputed for load rating purposes.

Timber substructure components may exhibit deterioration due to fungus decay, abrasion wear and weathering. Also, physical damage may be caused by vermin attacks, chemicals, fires, and collisions. Prior to reuse, timber backed abutments and pier bents shall be checked, by boring, for material and mechanical condition, section loss and structural adequacy. Generally, timber substructures are not good candidates for substructure reuse due to their limited service life.

Bearing condition needs to be evaluated. When possible, replacement expansion bearings should be laminated elastomeric bearings. Replacing expansion devices to reduce chloride infiltration is often warranted.

40.16 Concrete Anchors for Rehabilitation

Concrete anchors are used to connect concrete elements with other structural or non-structural elements and can either be cast into concrete (cast-in-place anchors) or installed after concrete has hardened (post-installed anchors). This section discusses post installed anchors used on bridge rehabilitation projects. Note: this section is also applicable for several cases where post installed anchors may be allowed in new construction.

This section includes guidance based on the ACI 318-14 manual, hereafter referred to as ACI. (AASHTO currently does not have guidance for anchors.)

40.16.1 Concrete Anchor Type and Usage

Concrete anchors installed in hardened concrete, post-installed anchors, typically fall into two main groups – adhesive anchors and mechanical anchors. For mechanical anchors, subgroups include undercut anchors, expansion (torque-controlled or displacement controlled) anchors, and screw anchors.

Mechanical anchors are seldom used for bridge rehabilitations and current usage has been restricted due to the following concerns: anchor installation (hitting rebar, abandoning holes, and testing), the number of different anchor types, design requirements that are more restrictive than adhesive anchors, the ability to remove and reuse railings/fences, and the collection of salt water within the hole. Note: mechanical anchors may be considered when it has been determined cast-in-place anchors or through bolts are cost prohibitive, adhesive anchors are not recommended, and the above concerns for mechanical anchors have been addressed. See post-installed anchor usage restrictions for additional information.

An Approved Products List addresses some of the concerns for creep, shrinkage, and deterioration under load and freeze-thaw cycles for adhesives anchors. Bridge rehabilitations projects typically use adhesive anchors for abutment and pier widenings. Other bridge rehabilitation applications may also warrant the use of adhesive anchors when required to anchor into existing concrete. Refer to the Standards for several examples of anchoring into existing concrete.

In limited cases, post installed concrete anchors may be allowed for new construction. One application is the allowance for the contractor to use adhesive anchors in lieu of cast-in-place concrete anchors for attaching pedestrian railings/fencing. Refer to Chapter 30 Standards for pedestrian railings/fencing connections.

The following is a list of current usage restrictions for post installed anchors:

<u>Usage Restrictions</u>:

- Pier cap extensions for multi-columned piers require additional column(s) to be utilized. See Chapter 13 – Piers for structural modeling concepts regarding multi-columned piers.

- **Contact the Bureau of Structures if considering any extension of a hammerhead pier (without additional vertical support from an added column).**
- Adhesive anchors installed in the overhead or upwardly inclined position and/or under sustained tension loads shall not be used.
- The department has placed a moratorium on mechanical anchors. Usage is subject to prior-approval by the Bureau of Structures.

40.16.1.1 Adhesive Anchor Requirements

For adhesive anchors, there are two processes used to install the adhesive. One option uses a two-part adhesive that is mixed and poured into the drilled hole. The second option pumps a two-part adhesive into the hole by a dispenser which combines the two components at the nozzle just prior to entering the hole or within the hole. With either process, the hole must be properly cleaned and a sufficient amount of adhesive must be used so that the hole is completely filled with adhesive when the rebar or bolt is inserted. The adhesive bond stresses, as noted in Table 40.16 1, are determined by the 5 percent fractile of results of tests performed and evaluated according to ICC-ES AC308 or ACI 355.4.

The required minimum anchor spacing is 6 times the anchor diameter. The minimum edge distance is 6 times the anchor diameter. The maximum embedment depth for is 20 times the anchor diameter.

The manufacturer and product name of adhesive anchors used by the contractor must be on the Department's approved product list for "Concrete Adhesive Anchors".

Refer to the *Standard Specifications* for additional requirements.

40.16.1.2 Mechanical Anchor Requirements

The required minimum anchor spacing is 6 times the anchor diameter. The minimum edge distance is 10 times the anchor diameter. The minimum member is the great of the embedment depth plus 4 inches and 3/2 of the embedment depth. ***Mechanical anchors are currently not allowed.***

40.16.2 Concrete Anchor Reinforcement

Reinforcement used to transfer the full design load from the anchors into the structural member is considered anchor reinforcement. **ACI [17.4.2.9]** and **ACI [17.5.2.9]** provide guidance for designing anchor reinforcement. When anchor reinforcement is used, the design strength of the anchor reinforcement can be used in place of concrete breakout strength per 40.16.3 and 40.16.4. Reinforcement that acts to restrain the potential concrete breakout but is not designed to transfer the full design load is considered to be supplementary reinforcement.

Per **ACI [2.3],** concrete anchor steel is considered ductile if the tensile test elongation is at least 14 percent and reduction in area is at least 30 percent. Additionally, steel meeting the

requirements of ASTM A307 is considered ductile. Steel that does not meet these requirements is considered brittle. Rebar used as anchor steel is considered ductile.

40.16.3 Concrete Anchor Tensile Capacity

Concrete anchors in tension fail in one of four ways: steel tensile rupture, concrete breakout, pullout strength of anchors in tension, or adhesive bond. The pullout strength of anchors in tension only applies to mechanical anchors and the adhesive bond only applies to adhesive anchors. Figure 40.16-1 shows the concrete breakout failure mechanism for anchors in tension.

The minimum pullout capacity (Nominal Tensile Resistance) of a single concrete anchor is determined according to this section; however, this value is only specified on the plan for mechanical anchors. The minimum pullout capacity is not specified on the plan for adhesive anchors because the anchors must be designed to meet the minimum bond stresses as noted in Table 40.16-1. If additional capacity is required, a more refined analysis (i.e., anchor group analysis) per the current version of ACI 318-14 Chapter 17 is allowable, which may yield higher capacities.

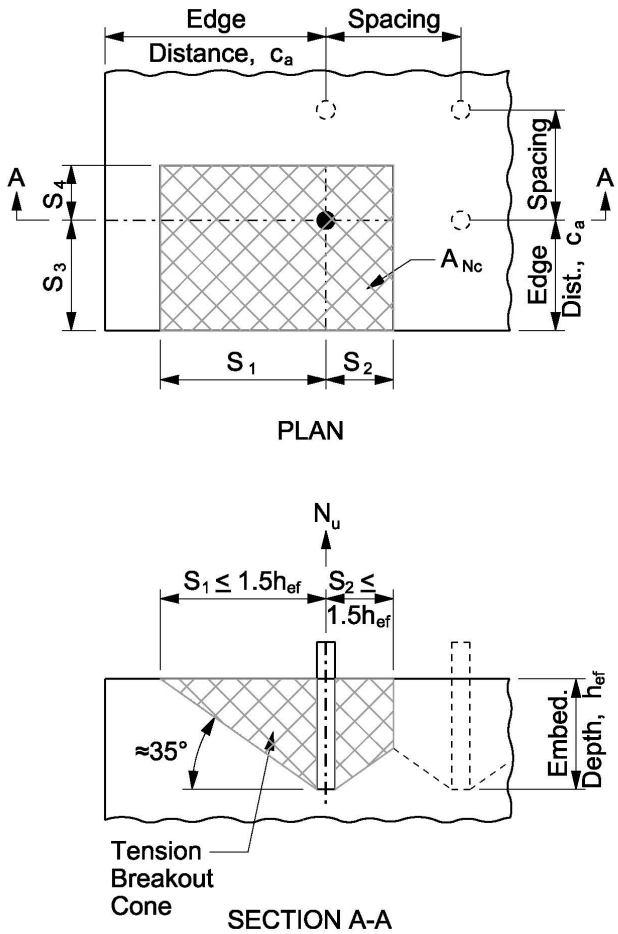

Figure 40.16-1
Concrete Breakout of Concrete Anchors in Tension

The projected concrete breakout area, A_{Nc}, shown in Figure 40.16-1 is limited in each direction by S_i:

S_i = Minimum of:

1. 1.5 times the embedment depth (h_{ef}),
2. Half of the spacing to the next anchor in tension, or
3. The edge distance (c_a) (in).

Figure 40.16-2 shows the bond failure mechanism for concrete adhesive anchors in tension.

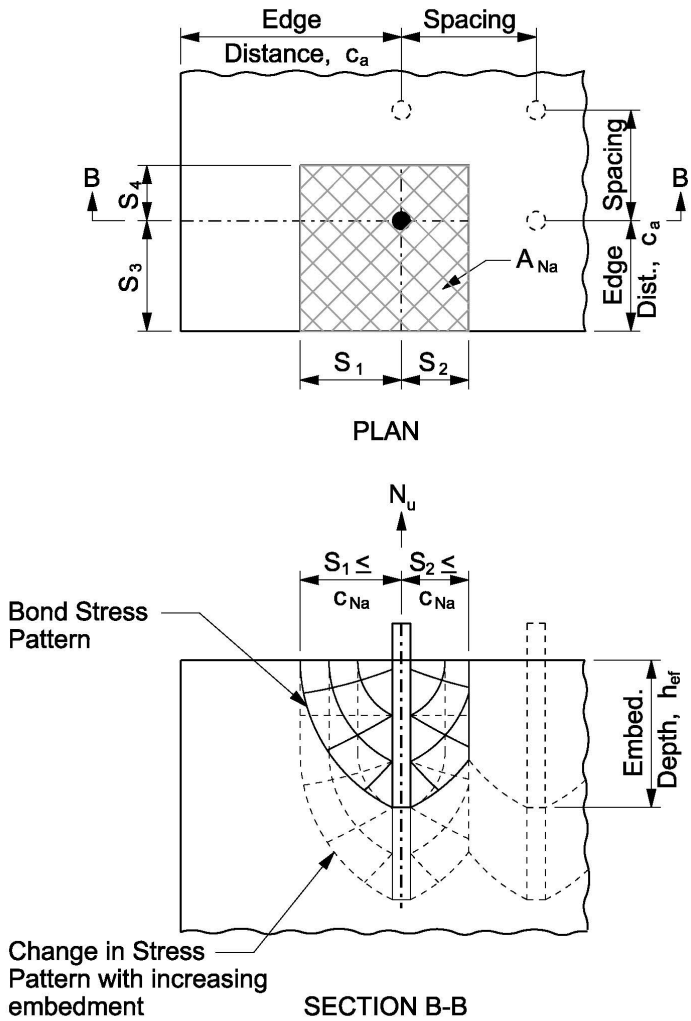

Figure 40.16-2
Bond Failure of Concrete Adhesive Anchors in Tension

The projected influence area of a single adhesive anchor, A_{Na}, is shown in Figure 40.16-2. Unlike the concrete breakout area, it is not affected by the embedment depth of the anchor. A_{Na} is limited in each direction by S_i:

S_i = Minimum of:

1. $c_{Na} = 10 d_a \sqrt{\frac{\tau_{uncr}}{1100}}$,

2. Half of the spacing to the next anchor in tension, or

3. The edge distance (c_a) (in).

Anchor Size, d_a	Adhesive Anchors			
	Dry Concrete		Water-Saturated Concrete	
	Min. Bond Stress, τ_{uncr} (psi)	Min. Bond Stress, τ_{cr} (psi)	Min. Bond Stress, τ_{uncr} (psi)	Min. Bond Stress, τ_{cr} (psi)
#4 or 1/2"	990	460	370	280
#5 or 5/8"	970	460	510	390
#6 or 3/4"	950	490	500	410
#7 or 7/8"	930	490	490	340
#8 or 1"	770	490	600	340

Table 40.16-1
Tension Design Table for Concrete Anchors

The minimum bond stress values for adhesive anchors in Table 40.16-1 are based on the Approved Products List for "Concrete Adhesive Anchors". The designer shall determine whether the concrete adhesive anchors are to be utilized in dry concrete (i.e., rehabilitation locations where concrete is fully cured, etc.) or water-saturated concrete (i.e., new bridge decks, box culverts, etc.) and shall design the anchors accordingly.

The factored tension force on each anchor, N_u, must be less than or equal to the factored tensile resistance, N_r. For mechanical anchors:

$$N_r = \phi_{ts} N_{sa} \leq \phi_{tc} N_{cb} \leq \phi_{tc} N_{pn}$$

In which:

ϕ_{ts} = Strength reduction factor for anchors in concrete, **ACI [17.3.3]**
= 0.65 for brittle steel as defined in 40.16.1.1
= 0.75 for ductile steel as defined in 40.16.1.1

N_{sa} = Nominal steel strength of anchor in tension, **ACI [17.4.1.2]**
= $A_{se,N} f_{uta}$

$A_{se,N}$ = Effective cross-sectional area of anchor in tension (in^2)

f_{uta} = Specified tensile strength of anchor steel (psi)

$\leq$ $1.9f_{ya}$

$\leq$ 125 ksi

f_{ya} = Specified yield strength of anchor steel (psi)

ϕ_{tc} = Strength reduction factor for anchors in concrete
= 0.65 for anchors without supplementary reinforcement per 40.16.2
= 0.75 for anchors with supplementary reinforcement per 40.16.2

N_{cb} = Nominal concrete breakout strength in tension, **ACI [17.4.2.1]**

$$= \frac{A_{Nc}}{9(h_{ef})^2}\psi_{ed,N}\psi_{c,N}\psi_{cp,N}N_b$$

A_{Nc} = Projected concrete failure area of a single anchor, see Figure 40.16-1

$= (S_1 + S_2)(S_3 + S_4)$

h_{ef} = Effective embedment depth of anchor per Table 40.16-1. May be reduced per **ACI [17.4.2.3]** when anchor is located near three or more edges.

$\psi_{ed,N}$ = Modification factor for tensile strength based on proximity to edges of concrete member, **ACI [17.4.2.5]**

= 1.0 if $c_{a,min} \geq 1.5h_{ef}$

$$= 0.7 + 0.3\frac{c_{a,min}}{1.5h_{ef}} \text{ if } c_{a,min} < 1.5h_{ef}$$

$c_{a,min}$ = Minimum edge distance from center of anchor shaft to the edge of concrete, see Figure 40.16-1 (in)

$\psi_{c,N}$ = Modification factor for tensile strength of anchors based on the presence or absence of cracks in concrete, **ACI [17.4.2.6]**
= 1.0 when post-installed anchors are located in a region of a concrete member where analysis indicates cracking at service load levels
= 1.4 when post-installed anchors are located in a region of a concrete member where analysis indicates no cracking at service load levels

$\psi_{cp,N}$ = Modification factor for post-installed anchors intended for use in uncracked concrete without supplementary reinforcement to account for the splitting tensile stresses due to installation, **ACI [17.4.2.7]**

$= 1.0$ if $c_{a,min} \geq c_{ac}$

$= \frac{c_{a,min}}{c_{ac}} \geq \frac{1.5h_{ef}}{c_{ac}}$ if $c_{a,min} < c_{ac}$

c_{ac} = Critical edge distance (in)

$= 4.0h_{ef}$

N_b = Concrete breakout strength of a single anchor in tension in uncracked concrete, **ACI [17.4.2.2]**

$= 0.538\sqrt{f'_c}(h_{ef})^{1.5}$ (kips)

N_{pn} = Nominal pullout strength of a single anchor in tension, **ACI [17.4.3.1]**

$= \psi_{c,P}N_p$

$\psi_{c,P}$ = Modification factor for pullout strength of anchors based on the presence or absence of cracks in concrete, **ACI [17.4.3.6]**

= 1.4 where analysis indicates no cracking at service load levels

= 1.0 where analysis indicates cracking at service load levels

N_p = Nominal pullout strength of a single anchor in tension based on the 5 percent fractile of results of tests performed and evaluated according to ICC-ES AC193 / ACI 355.2

<u>For adhesive anchors:</u>

$$N_r = \phi_{ts}N_{sa} \leq \phi_{tc}N_{cb} \leq \phi_{tc}N_a$$

In which:

N_{cb} = Nominal concrete breakout strength in tension, **ACI [17.4.2.1]**

$= \frac{A_{Nc}}{9(h_{ef})^2}\psi_{ed,N}\psi_{c,N}\psi_{cp,N}N_b$

h_{ef} = Effective embedment depth of anchor. May be reduced per **ACI [17.4.2.3]** when anchor is located near three or more edges.

$\leq 20d_a$ (in)

d_a = Outside diameter of anchor (in)

$\psi_{cp,N}$ = Modification factor for post-installed anchors intended for use in

uncracked concrete without supplementary reinforcement to account for the splitting tensile stresses due to installation, **ACI [17.4.2.7]**

$= 1.0$ if $c_{a,min} \geq c_{ac}$

$= \frac{c_{a,min}}{c_{ac}} \geq \frac{1.5h_{ef}}{c_{ac}}$ if $c_{a,min} < c_{ac}$

$c_{a,min}$ = Minimum edge distance from center of anchor shaft to the edge of concrete, see Figure 40.16-1 or Figure 40.16-2 (in)

c_{ac} = Critical edge distance (in)

$= 2.0h_{ef}$

N_a = Nominal bond strength of a single anchor in tension, **ACI [17.4.5.1]**

$= \frac{A_{Na}}{4c_{Na}^2}\psi_{ed,Na}\psi_{cp,Na}N_{ba}$

A_{Na} = Projected influence area of a single adhesive anchor, see Figure 40.16-2

$= (S_1 + S_2)(S_3 + S_4)$

$\psi_{ed,Na}$ = Modification factor for tensile strength of adhesive anchors based on the proximity to edges of concrete member, **ACI [17.4.5.4]**

$= 1.0$ if $c_{a,min} \geq c_{Na}$

$= 0.7 + 0.3\frac{c_{a,min}}{c_{Na}}$ if $c_{a,min} < c_{Na}$

c_{Na} = Projected distance from center of anchor shaft on one side of the anchor required to develop the full bond strength of a single adhesive anchor

$= 10d_a\sqrt{\frac{\tau_{uncr}}{1100}}$ (in)

τ_{uncr} = Characteristic bond stress of adhesive anchor in uncracked concrete, see Table 40.16-1

$\psi_{cp,Na}$ = Modification factor for pullout strength of adhesive anchors intended for use in uncracked concrete without supplementary reinforcement to account for the splitting tensile stresses due to installation, **ACI [17.4.5.5]**

$= 1.0$ if $c_{a,min} \geq c_{ac}$

$$= \frac{c_{a,min}}{c_{ac}} \geq \frac{c_{Na}}{c_{ac}} \text{ if } c_{a,min} < c_{ac}$$

N_{ba} = Bond strength in tension of a single adhesive anchor, **ACI [17.4.5.2]**

$= \tau_{cr} \pi d_a h_{ef}$

τ_{cr} = Characteristic bond stress of adhesive anchor in cracked concrete, see Table 40.16-1

Note: Where analysis indicates cracking at service load levels, adhesive anchors shall be qualified for use in cracked concrete in accordance with ICC-ES AC308 / ACI 355.4. For adhesive anchors located in a region of a concrete member where analysis indicates no cracking at service load levels, τ_{uncr} shall be permitted to be used in place of τ_{cr}.

In addition to the checks listed above for all adhesive anchors, the factored sustained tensile force must be less than or equal to the factored sustained tensile resistance per **ACI [17.3.1.2]**:

$$0.50\ \phi_{tc} N_{ba} \geq N_{ua,s}$$

40.16.4 Concrete Anchor Shear Capacity

Concrete anchors in shear fail in one of three ways: steel shear rupture, concrete breakout, or concrete pryout. Figure 40.16-3 shows the concrete breakout failure mechanism for anchors in shear.

The projected concrete breakout area, A_{Vc}, shown in Figure 40.16-3 is limited vertically by H, and in both horizontal directions by S_i:

H = Minimum of:

1. The member depth (h_a) or
2. 1.5 times the edge distance (c_{a1}) (in).

S_i = Minimum of:

1. Half the anchor spacing (S),
2. The perpendicular edge distance (c_{a2}), or
3. 1.5 times the edge distance (c_{a1}) (in).

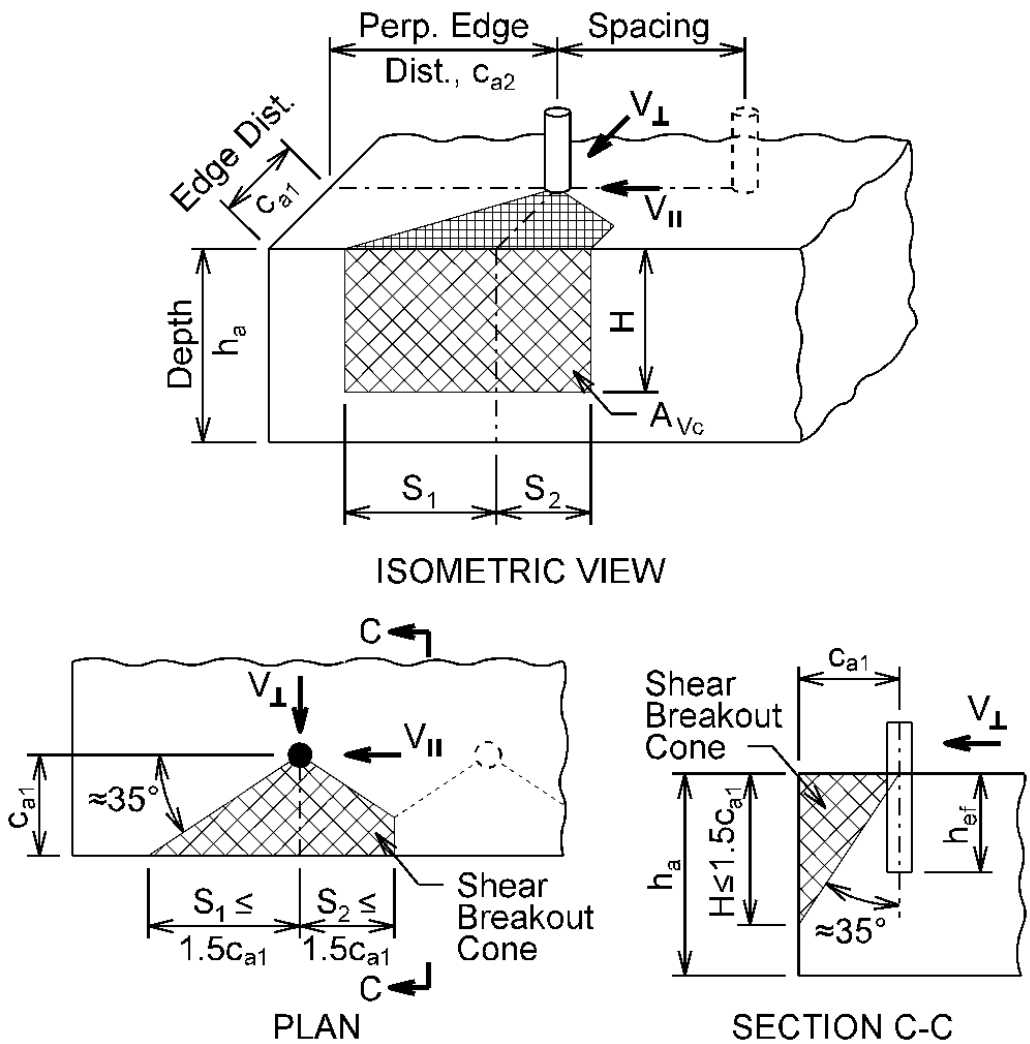

Figure 40.16-3
Concrete Breakout of Concrete Anchors in Shear

If the shear is applied to more than one row of anchors as shown in Figure 40.16-4, the shear capacity must be checked for the worst of the three cases. If the row spacing, SP, is at least equal to the distance from the concrete edge to the front anchor, E1, check both Case 1 and Case 2. In Case 1, the front anchor is checked with the shear load evenly distributed between the rows of anchors. In Case 2, the back anchor is checked for the full shear load. If the row spacing, SP, is less than the distance from the concrete edge to the front anchor, E1, then check Case 3. In case 3, the front anchor is checked for the full shear load. If the anchors are welded to an attachment to evenly distribute the force to all anchors, only Case 2 needs to be checked.

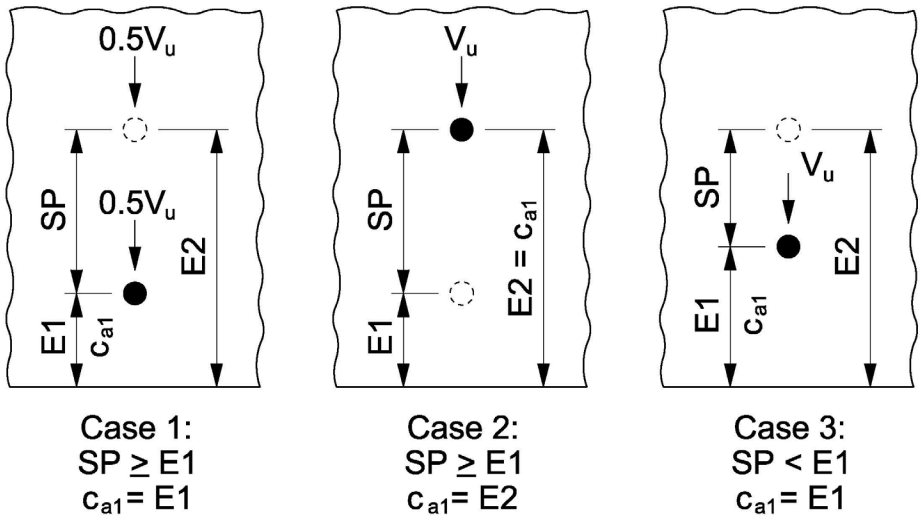

Figure 40.16-4
Concrete Anchor Shear Force Cases

The factored shear force on each anchor, V_u, must be less than or equal to the factored shear resistance, V_r. For mechanical and adhesive anchors:

$$V_r = \phi_{vs} V_{sa} \leq \phi_{vc} V_{cb} \leq \phi_{vp} V_{cp}$$

In which:

ϕ_{vs} = Strength reduction factor for anchors in concrete, **ACI [17.3.3]**
= 0.60 for brittle steel as defined in 40.16.1.1
= 0.65 for ductile steel as defined in 40.16.1.1

V_{sa} = Nominal steel strength of anchor in shear, **ACI [17.5.1.2]**
= $0.6 A_{se,V} f_{uta}$

$A_{se,V}$ = Effective cross-sectional area of anchor in shear (in^2)

ϕ_{vc} = Strength reduction factor for anchors in concrete, **ACI [17.3.3]**
= 0.70 for anchors without supplementary reinforcement per 40.16.2
= 0.75 for anchors with supplementary reinforcement per 40.16.2

V_{cb} = Nominal concrete breakout strength in shear, **ACI [17.5.2.1]**

$$= \frac{A_{Vc}}{4.5(c_{a1})^2} \psi_{ed,V} \psi_{c,V} \psi_{h,V} \psi_{p,V} V_b$$

A_{Vc} = Projected area of the concrete failure surface on the side of the concrete member at its edge for a single anchor, see Figure 40.16-3

= $H(S_1 + S_2)$

c_{a1} = Distance from the center of anchor shaft to the edge of concrete in the direction of the applied shear, see Figure 40.16-3 and Figure 40.16-4 (in)

$\psi_{ed,V}$ = Modification factor for shear strength of anchors based on proximity to edges of concrete member, **ACI [17.5.2.6]**

= 1.0 if $c_{a2} \geq 1.5c_{a1}$ (perpendicular shear)

= $0.7 + 0.3\dfrac{c_{a2}}{1.5c_{a1}}$ if $c_{a2} < 1.5c_{a1}$ (perpendicular shear)

= 1.0 (parallel shear)

c_{a2} = Distance from the center of anchor shaft to the edge of concrete in the direction perpendicular to c_{a1}, see Figure 40.16-3 (in)

$\psi_{c,V}$ = Modification factor for shear strength of anchors based on the presence or absence of cracks in concrete and the presence or absence of supplementary reinforcement, **ACI [17.5.2.7]**

= 1.4 for anchors located in a region of a concrete member where analysis indicates no cracking at service load levels

= 1.0 for anchors located in a region of a concrete member where analysis indicates cracking at service load levels without supplementary reinforcement per 40.16.2 or with edge reinforcement smaller than a No. 4 bar

= 1.2 for anchors located in a region of a concrete member where analysis indicates cracking at service load levels with reinforcement of a No. 4 bar or greater between the anchor and the edge

= 1.4 for anchors located in a region of a concrete member where analysis indicates cracking at service load levels with reinforcement of a No. 4 bar or greater between the anchor and the edge, and with the reinforcement enclosed within stirrups spaced at no more than 4 inches

$\psi_{h,V}$ = Modification factor for shear strength of anchors located in concrete members with $h_a < 1.5_{ca1}$, **ACI [17.5.2.8]**

= $\sqrt{\dfrac{1.5c_{a1}}{h_a}} \geq 1.0$

h_a = Concrete member thickness in which anchor is located measured parallel to anchor axis, see Figure 40.16-3 (in)

$\Psi_{p,V}$ = Modification factor for shear strength of anchors based on loading direction, **ACI [17.5]**
= 1.0 for shear perpendicular to the concrete edge, see Figure 40.16-3
= 2.0 for shear parallel to the concrete edge, see Figure 40.16-3

V_b = Concrete breakout strength of a single anchor in shear in cracked concrete, per **ACI [17.5.2.2]** , shall be the smaller of:

$$[7(\frac{l_e}{d_a})^{0.2}\sqrt{d_a}]\sqrt{f'_c}(c_{a1})^{1.5} \text{ (lb)}$$

Where:
$l_e = h_{ef} \leq 8d_a$
d_a = Outside diameter of anchor (in)
f'_c = Specified compressive strength of concrete (psi)

and

$$9\sqrt{f'_c}(c_{a1})^{1.5}$$

ϕ_{vp} = Strength reduction factor for anchors in concrete
= 0.65 for anchors without supplementary reinforcement per 40.16.2
= 0.75 for anchors with supplementary reinforcement per 40.16.2

V_{cp} = Nominal concrete pryout strength of a single anchor, **ACI [17.5.3.1]**
= $2.0N_{cp}$

Note: The equation above is based on $h_{ef} \geq 2.5$ in. All concrete anchors must meet this requirement.

N_{cp} = Nominal concrete pryout strength of an anchor taken as the lesser of:

mechanical anchors: $\frac{A_{Nc}}{9(h_{ef})^2}\Psi_{ed,N}\Psi_{c,N}\Psi_{cp,N}N_b$

adhesive anchors: $\frac{A_{Na}}{4(c_{Na})^2}\Psi_{ed,Na}\Psi_{cp,Na}N_{ba}$

and

$$\frac{A_{Nc}}{9(h_{ef})^2}\Psi_{ed,N}\Psi_{c,N}\Psi_{cp,N}N_b$$

For shear in two directions, check both the parallel and the perpendicular shear capacity. For shear on an anchor near a corner, check the shear capacity for both edges and use the minimum.

40.16.5 Interaction of Tension and Shear

For anchors that are subjected to tension and shear, interaction equations must be checked per **ACI [17.6]**.

If $\frac{V_{ua}}{\phi V_n} \le 0.2$ for the governing strength in shear, then the full strength in tension is permitted: $\phi N_n \ge N_{ua}$. If $\frac{N_{ua}}{\phi N_n} \le 0.2$ for the governing strength in tension, then the full strength in shear is permitted: $\phi V_n \ge V_{ua}$. If $\frac{V_{ua}}{\phi V_n} > 0.2$ for the governing strength in shear and $\frac{N_{ua}}{\phi N_n} > 0.2$ for the governing strength in tension, then:

$$\frac{N_{ua}}{\phi N_n} + \frac{V_{ua}}{\phi V_n} \le 1.2$$

40.16.6 Plan Preparation

The required minimum pullout capacity (as stated on the plans) is equal to the Nominal Tensile Resistance as determined in 40.16.3.

<u>Typical notes for bridge plans (shown in all capital letters):</u>

Adhesive anchors located in uncracked concrete:

> ADHESIVE ANCHORS X/X-INCH (or No. X BAR). EMBED XX" IN CONCRETE. *(Illustrative only, values must be calculated depending on the specific situation).*

Adhesive anchors located in cracked concrete:

> ADHESIVE ANCHORS X/X-INCH (or No. X BAR). EMBED XX" IN CONCRETE. ANCHORS SHALL BE APPROVED FOR USE IN CRACKED CONCRETE. *(Illustrative only, values must be calculated depending on the specific situation).*

When using anchors to anchor bolts or studs, the bolt, nut, and washer or the stud as detailed on the plans is included in the bid item “Adhesive Anchors _-Inch”.

For anchors using rebar, the rebar should be listed in the “Bill of Bars” and paid for under the bid item “Bar Steel Reinforcement HS Coated Structures”.

When adhesive anchors are used as an alternative anchorage the following note should be included in the plans:

> ADHESIVE ANCHORS SHALL CONFORM TO SECTION 502.2.12 OF THE STANDARD SPECIFICATION. *(Note only applicable when the bid item Adhesive Anchor is not used).*

It should be noted that AASHTO is considering adding specifications pertaining to concrete anchors. This chapter will be updated once that information is available.

40.17 Plan Details

1. Excavation for Structures on Overlays

   There is considerable confusion on when to use or not use the bid item "Excavation for Structures" on overlay projects. In order to remove the confusion, the following note is to be added to all overlay projects that only involve removal of the paving block (or less).

   > Any excavation required to complete the overlay or paving block at the abutments is to be considered incidental to the bid item "(insert applicable bid item)".

   If the overlay project has any excavation other than the need to replace a paving block or prepare the end of the deck for the overlay, the "Excavation for Structures" bid item should be used and the above note left off the plan.

2. For steel girder bridge deck replacements, show the existing exterior girder size including the lower flange size on the plans to assist the contractor in ordering falsework brackets.

3. On structure deck overlay projects:

   Verify desired transverse or roadway cross slopes with Regions considering the changes in bridge rating and approach pavement grade. Although relatively flat by current standard of a 0.02 ft/ft cross slope, a cross slope of 0.01 ft/ft or 0.015 ft/ft may be the most desirable.

   The designer should evaluate 3 types of repairs. "Preparation Decks Type 1" is concrete removal to the top of the bar steel. "Preparation Decks Type 2" is concrete removal below the bar steel. "Full Depth Deck Repair" is full depth concrete removal and repair. The designer should compute the quantity and cost for each type and a total cost. Compare the total cost to the estimated cost of a deck replacement and proceed accordingly. Show the location of "Full Depth Deck Repair" on the plan sheet.

   Contractors have gotten projects where full depth concrete removal was excessive and no locations designated. It would have been a better decision to replace the deck.

4. When detailing two stage concrete deck construction, consider providing pier cap construction joints to coincide with the longitudinal deck construction joint. Also, transverse deck bar steel lap splicing is preferred over the use of bar couplers. This is applicable where there is extra bridge width and the falsework can be left for both deck pours.

5. Total Estimated Quantities

   The Region should provide the designer with a Rehabilitation Structure Survey Report that provides a complete description of the rehabilitation and estimated quantities. Contact the Region for clarifications on the scope of work.

   Additional items:

- Provide deck survey outlining areas of distress (if available). These plans will serve as documentation for future rehabilitations.
- Distressed areas should be representative of the surveyed areas of distress. Actual repairs will likely be larger than the reported values while removing all unsound materials.
- Provide Preparation Deck Type 1 & 2 and Full-Depth Repair estimates for areas of distress.
- Coordinate asphaltic materials with the Region and roadway designers.

See Chapter 6-Plan Preparation and Chapter 40 Standards for additional guidance.

40.18 Retrofit of Steel Bridges

Out of plane bending stresses may occur in steel bridges that introduce early fatigue cracks or worse yet brittle fractures. Most, if not all, problems are caused at connections that are either too flexible or too rigid. It is important to recognize the correct condition as retrofitting for the wrong condition will probably make it worse.

40.18.1 Flexible Connections

A connection is too flexible when minor movement can occur in a connection that is designed to be rigid. Examples are transverse or bearing stiffeners fitted to a tension flange, floorbeams attached to the web only and not both flanges.

The solution for stiffeners and transverse connection plates is to shop weld the stiffener to the web and flanges. This becomes a Category C weld but is no different than the terminated web to stiffener weld. If the condition exists in the field, welding is not recommended. Retrofit is to attach a T-section with four bolts to the stiffener and four bolts to the flange. Similar details should be used in attaching floorbeams to the girder.

40.18.2 Rigid Connections

A connection is too rigid when it is fitted into place and allowed to move but the movement can only occur in a refined area which introduces high stresses in the affected area. Examples are welded gusset connection plates for lower lateral bracing that are fitted around transverse or bearing stiffeners.

Other partial constraint details are:

1. Intersecting welds
2. Gap size-allowing local yielding
3. Weld size
4. Partial penetration welds versus fillet welds
5. Touching and intersecting welds

The solution is to create spaces large enough (approximately 1/4” or more) for more material to flex thus reducing the concentration of stress. For gusset connection plates provide a larger gap than 1/4” and no intersecting welds. For existing conditions it may be necessary to drill holes at high stress concentrations. For new conditions it would be better to design a rigid connection and attach to the flange rather than the web. For certain situations a fillet weld should be used over a partial penetration weld to allow slight movement.

40.19 Reinforcing Steel for Deck Slabs on Girders for Deck Replacements

Effective Span Ft-In	T=Slab Thickness Inches	Transverse Bars & Spacing	Longitudinal Bars & Spacing	Longitudinal* Continuity Bars & Spacing
4-0	6.5	#5 @ 8"	#4 @ 8.5"	#5 @ 7.5"
4-3	6.5	#5 @ 7.5"	#4 @ 7.5"	#5 @ 7.5"
4-6	6.5	#5 @ 7.5"	#4 @ 7.5"	#5 @ 7.5"
4-9	6.5	#5 @ 7"	#4 @ 7.5"	#5 @ 7.5"
5-0	6.5	#5 @ 6.5"	#4 @ 7"	#5 @ 7"
5-3	6.5	#5 @ 6.5"	#4 @ 7"	#5 @ 7"
5-6	6.5	#5 @ 6"	#4 @ 6.5"	#5 @ 6.5"
5-9	6.5	#5 @ 6"	#4 @ 6.5"	#5 @ 6.5"
2-3	7	#4 @ 9"	#4 @ 11"	#5 @ 6.5"
2-6	7	#4 @ 8.5"	#4 @ 11"	#5 @ 6.5"
2-9	7	#4 @ 8"	#4 @ 11"	#5 @ 6.5"
3-0	7	#4 @ 7.5"	#4 @ 11"	#5 @ 6.5"
3-3	7	#4 @ 7"	#4 @ 11"	#5 @ 6.5"
3-6	7	#4 @ 6.5"	#4 @ 11"	#5 @ 6.5"
3-9	7	#4 @ 6.5"	#4 @ 10.5"	#5 @ 6.5"
4-0	7	#4 @ 6"	#4 @ 10"	#5 @ 6.5"
4-3	7	#5 @ 9"	#4 @ 9.5"	#5 @ 7"
4-6	7	#5 @ 8.5"	#4 @ 9"	#5 @ 7"
4-9	7	#5 @ 8"	#4 @ 8.5"	#5 @ 7"
5-0	7	#5 @ 8"	#4 @ 8.5"	#5 @ 7"
4-3	7	#5 @ 7.5"	#4 @ 8"	#5 @ 7"
5-6	7	#5 @ 7'	#4 @ 7"	#5 @ 7"
5-9	7	#5 @ 7"	#4 @ 7"	#5 @ 7"
6-0	7	#5 @ 6.5"	#4 @ 7"	#5 @ 7"
6-3	7	#5 @ 6.5"	#4 @ 7"	#5 @ 7"
6-6	7	#5 @ 6"	#4 @ 6.5"	#5 @ 6.5"
6-9	7	#5 @ 6"	#4 @ 6.5"	#5 @ 6.5"
7-0	7	#5 @ 6"	#4 @ 6"	#5 @ 6"
4-0	7.5	#4 @ 7"	#4 @ 10.5"	#5 @ 6"
4-3	7.5	#4 @ 6.5"	#4 @ 10.5"	#5 @ 6"
4-6	7.5	#4 @ 6.5"	#4 @ 10"	#5 @ 6"
4-9	7.5	#4 @ 6"	#4 @ 10"	#5 @ 6"
5-0	7.5	#5 @ 9"	#4 @ 9.5"	#5 @ 6"
5-3	7.5	#5 @ 8.5"	#4 @ 9"	#5 @ 6.5"

5-6	7.5	#5 @ 8"	#4 @ 8.5"	#5 @ 6.5"
5-9	7.5	#5 @ 8"	#4 @ 8.5"	#5 @ 6.5"
6-0	7.5	#5 @ 7.5"	#4 @ 8"	#5 @ 6.5"
6-3	7.5	#5 @ 7.5"	#4 @ 7.5"	#5 @ 6.5"
6-6	7.5	#5 @ 7"	#4 @ 7.5"	#5 @ 6.5"
6-9	7.5	#5 @ 7"	#4 @ 6.5"	#5 @ 6.5"
7-0	7.5	#5 @ 7"	#4 @ 6.5"	#5 @ 6.5"
7-3	7.5	#5 @ 6.5"	#4 @ 6.5"	#5 @ 6.5"
7-6	7.5	#5 @ 6.5"	#5 @ 10"	#5 @ 6.5"
7-9	7.5	#5 @ 6"	#5 @ 10"	#5 @ 6.5"
8-0	7.5	#5 @ 6"	#5 @ 10"	#5 @ 6.5"
8-3	7.5	#5 @ 6"	#5 @ 9.5"	#5 @ 6.5"

Table 40.19-1

Reinforcing Steel for Deck Slabs on Girders for Deck Replacements – HS20 Loading

Max. Allowable Design Stresses: f_c' = 4000 psi, f_y = 60 ksi, Top Steel 2-1/2" Clear, Bottom Steel 1-1/2" Clear, Future Wearing Surface = 20 lbs/ft. Transverse and longitudinal bars shown in table are for one layer only. Place identical steel in both top and bottom layer, except in negative moment region. Use in top layer for slab on steel girders in negative moment region when not designed for negative moment composite action.

40.20 Fiber Reinforced Polymer (FRP)

40.20.1 Introduction

Fiber reinforced polymer (FRP) material is a composite composed of fibers encased in a polymer matrix. The fibers provide tensile strength while the resin protects the fibers and transfers load between them. FRP can be used to repair or to retrofit bridges. Repair is often defined as returning a member to its original condition after damage or deterioration while retrofitting refers to increasing the capacity of a member beyond its original capacity.

For plan preparations, FRP repairs and retrofits are categorized as either structural strengthening or non-structural protection. Contact the Bureau of Structures Design Section for current Special Provisions and for other FRP considerations.

40.20.2 Design Guidelines

While there is no code document for the design of FRP repairs and retrofits, there are two nationally recognized design guidelines: the *Guide Specification for Design of Bonded FRP Systems for Repair and Strengthening of Concrete Bridge Elements* (14.) hereinafter referred to as the AASHTO FRP Guide, and the *Guide for the Design and Construction of Externally Bonded FRP Systems for Strengthening Concrete Structures ACI 440.2R-08 (15.)* hereinafter referred to as the ACI FRP Guide.

Note: BOS has been evaluating the design methodologies found in the AASHTO FRP Guide and ACI RFP Guide. Noticeable differences between the guides warrants further investigation, with input from industry representation. FRP repairs and retrofits shall be in accordance with the applicable Special Provisions.

40.20.3 Applicability

Not all concrete structures can be retrofitted or repaired using FRP. Most FRP research has been conducted on normal sized members, therefore many of the design equations cannot be used with exceptionally large or deep members. Additionally, members with disturbed regions (D-regions) such as deep beams and corbels are outside of the scope of many design equations.

The structure must have some amount of load carrying capacity prior to the installation of the FRP. Due to the potential for premature debonding, FRP cannot be counted on to carry service loads; it may only be used increase the ultimate capacity of the structure for strength and extreme event load cases. The unrepaired or unretrofitted structure be able to carry the service dead and live loads:

$$R_r \geq \eta_i[(DC + DW) + (LL + IM)]$$

Where:

R_r = factored resistance computed in accordance with AASHTO LRFD Section 5

η_i = load modifier = 1.0

DC = force effects due to components and attachments

DW = force effects due to wear surfaces and utilities

LL = force effects due to live load

IM = force effects due to dynamic load allowance

If capacity is added in flexure to accommodate increased loads, the shear capacity of the member must be checked to ensure that it is still sufficient for the new loading. For non-structural FRP applications, applicability checks may not be required.

40.20.4 Materials

A typical FRP system consists of a primer, fibers, resin, bonding material (either additional resin or an adhesive), and a protective coating. FRP is specified in terms of the types of fiber and resin, the number of layers, the fiber orientation and the geometry. FRP is sold as a system and all materials used should be from the same system.

40.20.4.1 Fibers

The most common types of fiber used for bridge repairs are glass and carbon. Glass fibers are not as stiff or as strong as carbon, but they are much less expensive. Unless there is reason to do otherwise, it is recommended that glass fibers be used for corrosion protection and spall control. Carbon fibers should be used for strengthening and crack control.

Carbon fibers cannot be used where the FRP comes into contact with steel out of concerns for galvanic corrosion due to the highly conductive nature of carbon fibers. For applications where galvanic corrosion is a concern, glass fibers may be used, even in structural applications.

Often, FRP is requested by the region to provide column confinement. The engineer must determine if the requested confinement is true confinement where the FRP puts the column into triaxial compression to increase the capacity and ductility, or if the FRP is confining a patch from spalling off. In the case of true confinement (which is very rare in Wisconsin), carbon fibers should be used and the repair requires structural design. For spall control, glass fibers are acceptable and the repair is considered non-structural.

40.20.4.2 Coatings

After the FRP has been installed and fully cured, a protective coating is applied to the entire system. A protective coating is needed to protect against ultraviolet degradation and can also provide resistance to abrasion, wear, and chemicals. In situations where the FRP is submerged in water, inert protective coatings can help prevent compounds in the FRP from leaching into the water, mitigating environmental impacts.

Protective coatings can be made from different materials depending on the desired coating characteristics. Common coating types include vinyl ester, urethane, epoxy, cementitious, and acrylic. Acrylic coatings are generally the least expensive and easiest to apply, though they may also be less durable. If no coating type is specified, it is likely that the manufacturer will provide an acrylic coating.

For shorter term repairs, acrylic coatings are sufficient, but longer repairs should consider other coating types such as epoxy. Any coating used must be compatible with the FRP system selected by the contractor.

40.20.4.3 Anchors

The bond between the FRP and the concrete is the most critical component of an FRP installation and debonding is the most common FRP failure mode. Certain FRP configurations use anchors to increase the attachment of the FRP and attempt to delay or prevent debonding. These anchors can consist of near surface mounted bars, fiber anchors, additional FRP strips, or mechanical anchors such as bolts. It is permitted to use additional U-wrap strips to anchor flexural FRP, but the use of additional longitudinal strips to anchor shear FRP is prohibited. The use of additional U-wrap strips for flexural anchorage is required in some instances.

Because neither design guide requires anchorage or provides information as to what constitutes anchorage, it is left to the discretion of the designer to determine if anchorage should be used and in what quantities. The use of anchors is highly encouraged, particularly for shear applications and in situations where there is increased potential for debonding such as reentrant corners.

Specifying anchors will add cost to the repair, but these costs may be offset by increased capacity accorded to anchored systems in shear. The additional costs can also be justified if debonding is a concern. If the designer chooses to use anchors, anchors should be shown on plans, but the design of the anchors is left to the manufacturer.

40.20.5 Flexure

Flexural FRP is applied along the tension face of the member, where it acts as additional tension reinforcement. The fibers should be oriented along the length of the member.

40.20.5.1 Pre-Design Checks

If the design of the FRP will be provided by the contractor or their consultant, the engineer must still perform certain checks before specifying FRP in the plans. For flexure, the engineer must check that the structure has sufficient capacity to carry service loads without additional capacity from the FRP, as discussed in 40.20.3.

40.20.5.2 Composite Action

Composite action of the deck slab can be considered when designing flexural FRP repairs for girders, provided that the deck was designed to be composite. If composite action is

considered, composite section properties must be computed. These properties should be substituted into the design equations presented in this section. Accounting for composite action will increase the capacity provided by the FRP.

40.20.5.3 Pre-Existing Substrate Strain

Unless all loads are removed from the member receiving FRP (including self-weight), there will be strain present in the concrete when the FRP is applied. This initial or pre-existing substrate strain ε_{bi} is computed through elastic analysis. All loads supported by the member during FRP installation should be considered and cracked section properties should be considered if necessary.

40.20.5.4 Deflection and Crack Control

Conduct standard LRFD serviceability checks for deflection and crack control while accounting for the contribution of the FRP. Because both the FRP and the concrete will be in the elastic zone at service levels, standard elastic analysis can be used to determine stresses and strains. Transformed section analysis can be used to transform the FRP into an equivalent area of concrete for the purposes of analysis. The condition of the member determines if the cracked or uncracked section properties should be used in computations.

40.20.6 Shear

In shear repair/retrofitting applications, the FRP acts essentially as external stirrups. The FRP wrap is applied with the fibers running transverse to the member.

40.20.6.1 Pre-Design Checks

If the design of the FRP will be provided by the contractor or their consultant, the engineer must still perform certain checks before specifying FRP in the plans. For shear, the engineer must check that the structure has sufficient capacity to carry service loads without additional capacity from the FRP, as discussed in 40.20.3.

Additionally, the engineer must ensure that the amount of FRP capacity required does not exceed the maximum allowable shear reinforcement. It is important to note that the FRP capacity listed on the plans will be a factored capacity, while the maximum allowable shear reinforcement check is for an unfactored capacity. Strength reduction factors must be incorporated to make a proper comparison.

If the FRP capacity is close to the maximum allowed, the designer must take care to ensure that a design is feasible. The capacity provided by FRP depends on the number of FRP layers, with each additional layer providing a discrete increase in capacity. There may be a situation where n layers does not provide enough capacity, but n+1 layers provides too much capacity and violates the maximum allowable shear reinforcement criteria. Changes in spacing of the wraps may help decrease the capacity provided by the FRP.

Example problems in shear can be found in the appendices of NCHRP Report 655 (16) and potential shear wrapping configurations can be found in NCHRP Report 678 (17).

40.21 References

1. *A Study of Policies for the Protection, Repair, Rehabilitation, and Replacement of Concrete Bridge Decks* by P.D. Cady, Penn. DOT.

2. *Concrete Sealers for Protection of Bridge Structures, NCHRP Report 244*, December, 1981.

3. *Durable Bridge Decks* by D. G. Manning and J. Ryell, Ontario Ministry Transportation and Communications, April, 1976.

4. *Durability of Concrete Bridge Decks, NCHRP Report 57*, May, 1979.

5. *Rehabilitation and Replacement of Bridges on Secondary Highways and Local Roads, NCHRP Report 243*, December, 1981.

6. *Strength of Concrete Bridge Decks* by D. B. Beal, Research Report 89 NY DOT, July, 1981.

7. *Latex Modified Concrete Bridge Deck Overlays - Field Performance Analysis* by A. G. Bisharu, Report No. FHWA/OH/79/004, October, 1979.

8. *Standard Practice for Concrete Highway Bridge Deck Construction by ACI Committee 345, Concrete International*, September, 1981.

9. *The Effect of Moving Traffic on Fresh Concrete During Bridge Deck Widening* by H. L. Furr and F. H. Fouad, Paper Presented 61 Annual TRB Meeting, January, 1982.

10. *Control of Cracking in Concrete Structures by ACI Committee 224*, Concrete International, October, 1980.

11. *Discussion of Control of Cracking in Concrete Structures* by D. G. Manning, Concrete International, May, 1981.

12. *Effects of Traffic-Induced Vibrations on Bridge Deck Repairs, NCHRP Report 76*, December, 1981.

13. *Building Code Requirements for Structural Concrete (ACI 318-11) and Commentary,* 2011.

14. AASHTO. 2012. *Guide Specifications for the Design of Bonded FRP Systems for Repair and Strenghening of Concrete Bridge Elements.* Washington D.C.: American Assocation of State Highway and Transportation Officials, 2012

15. ACI. 2008. *Guide for the Design and Construction of Externally Bonded FRP Systems for Strengthening Concrete Structures.* Farmington Hills MI: American Concrete Institute, 2008. ACI 440.2R-08.

16. Zureick, A.-H., et al. 2010. *Recommended Guide Specification for the Design of Externally Bonded FRP Systems for Repair and Strengthening of Concrete Bridge Elements.* Washington D.C.: Transportation Research Board, 2010. NCHRP Report 655

17. Belarbi, A., et al. 2011. *Design of FRP Systems for Strengthening Concrete Girders in Shear.* Washington D.C.: Transportation Research Board, 2011. NCHRP Report 678.

18. Agrawal, A.K., Jalinoos, F., Davis, N., Hoomaan, E., Sanayei, M. (2018). *Foundation Reuse for Highway Bridges,* FHWA-HIF-18-055, Federal Highway Administration, Washington, D.C.

This page intentionally left blank.

Table of Contents

41.1 Introduction 3
41.1.1 Definitions 4
41.1.2 WisDOT Asset Management Themes 5
41.2 Identifying Theme-Compliant Structure Work 6
41.2.1 Wisconsin Structures Asset Management System (WiSAMS) 6
41.2.2 Eligibility 7
41.3 Structures Programming Process (State-System) 8
41.3.1 Long-Range Planning 10
41.3.2 Development of Projects with Structures Work (PY8-PY7, Life Cycle 00-10) 10
41.3.2.1 Work Concept Review 10
41.3.2.2 Priority Review 11
41.3.2.3 Creating Improvement Projects with Structures Work Concepts 11
41.3.3 Structures Project Certification Phase (PY6-PY5, Life Cycle 10/11) 11
41.3.3.1 BOS Structures Certification Liaison 12
41.3.3.2 Review of Primary Structures Work Concepts 12
41.3.3.3 Development of Secondary Structures Work Concepts 12
41.3.3.4 Development of the Structures Cost Estimate 12
41.3.3.5 Determination of Design Resourcing 13
41.3.3.6 Bridge or Structure Certification Document (BOSCD) 13
41.3.4 Project Delivery and Execution Phase (PY4-Construction, Life Cycle 12+) 13
41.3.4.1 Structures Re-Certification 13
41.4 Structures Programming Process (Local System) 14
41.5 Structures Asset Management Roles and Responsibilities 15
41.5.1 Bureau of Structures (BOS) 15
41.5.2 WisDOT Regions 15
41.5.3 Division of Transportation Investment Management (DTIM) 16
41.6 Programming Policy for Structures Improvement Projects 17
41.6.1 Bridge Age 17
41.6.2 Bridge Ratings 17
41.6.3 Vertical Clearance 17
41.6.4 Hydraulics 18

41.6.5 Freight Considerations 18
41.6.6 Cost Benefit Analysis 18
41.6.6.1 Treatment Schedule 18
41.6.6.2 Discount Rate 20
41.6.7 User Delay 20
41.7 References 21

41.1 Introduction

The Federal Highway Administration (FHWA) Moving Ahead for Progress in the 21st Century (MAP-21) legislation contains the following definition for asset management:

> *Asset management is a strategic and systematic process of operating, maintaining, and improving physical assets, with a focus on both engineering and economic analysis based upon quality information, to identify a structured sequence of maintenance, preservation, repair, rehabilitation, and replacement actions that will achieve and sustain a desired state of good repair over the life-cycle of the assets at minimum practicable cost.*

The Wisconsin Department of Transportation (WisDOT) has developed and is implementing a structures asset management program that meets FHWA's definition. At a basic level, WisDOT structures asset management is practiced as shown in Figure 41.1-1.

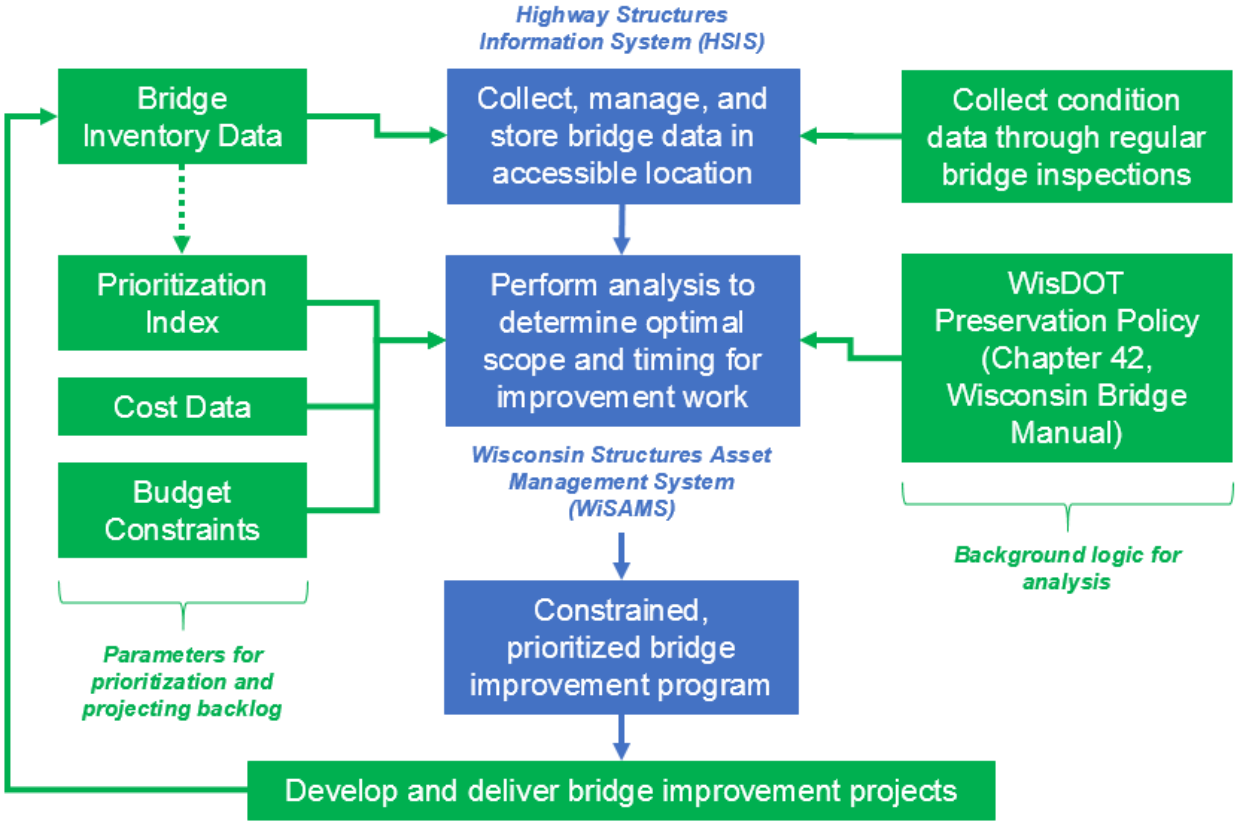

Figure 41.1-1
WisDOT Structures Asset Management

This chapter provides an outline of the WisDOT structures asset management process, including roles and responsibilities and policy items to be considered during the selection of structures improvement projects.

41.1.1 Definitions

Primary structure work concept: The primary work being performed on a given structure.*** Primary structure work concepts are currently defined as any of the following:

- New structure (new alignment, etc.)
- Structure replacement
- Superstructure replacement
- Deck replacement
- Structure widening
- Overlay (any type)
- Painting (full)

*****Note that a given bridge may not have a primary structure work concept, but only a secondary structure work concept. One example of this would be a bridge requiring a joint replacement and concrete surface repairs to the substructure elements, with no "major rehabilitation" (deck replacement, overlay, etc.) required.*

Secondary structure work concept: Work performed on a given structure that is not designated as primary. Examples include, but are not limited to:

- Joint replacement or rehabilitation
- Bearing replacement or rehabilitation
- Parapet or railing repairs

Structures improvement project: An improvement project funded through WisDOT's let program that includes primary or secondary work to one or more structures. Other work, such as pavement or safety, may or may not be included.

41.1.2 WisDOT Asset Management Themes

The WisDOT Bureau of Structures (BOS) work in asset management is enveloped by the broader asset management philosophies of the Department. Current emphasis areas include:

- Ensuring that all in-service structures are safe for the travelling public. This is the top priority.
- Making decisions that are supported by data and policy and applied consistently across the state.
- Seeking to extend the usable life of a structure (versus replacement) when feasible, practical, and cost-effective by using identified preservation techniques.
- Considering the whole-life-cycle costs when selecting treatments.
- When structure replacement is unavoidable, replacing the existing structure following the current Department replace-in-kind policy and design standards.

41.2 Identifying Theme-Compliant Structure Work

Themes for structures asset management are noted in 41.1.2 and represented in the policy documented in Chapter 42 – Bridge Preservation. This section details how BOS arrives at recommended bridge improvement work actions that comply with Department asset management principles.

41.2.1 Wisconsin Structures Asset Management System (WiSAMS)

To accurately and consistently apply structures asset management strategies, BOS developed a software application; the Wisconsin Structures Asset Management System, or WiSAMS. WiSAMS was developed and is maintained within BOS. Its core function is to produce recommendations for structures improvement work using a consistent, objective, data-driven, logic-based process.

The success of WiSAMS is heavily dependent on the quality of the data it uses. The primary data consists of the following:

- Inventory data: Information that defines the bridge type, location, use, and history. This includes items such as number of spans, superstructure type, construction history, Average Daily Traffic (ADT).
- Condition data: Collected and recorded during bridge inspections, condition data reflects the current state of deterioration of the bridge. WiSAMS currently uses both NBI and AASHTO element condition data.

The background logic for WiSAMS consists of a series of “if-then” statements and a corresponding structure improvement work action. These if-then statements are referred to as “rules”. The WiSAMS rules are based on the asset management and bridge preservation policy documented in Chapter 42 – Bridge Preservation. WiSAMS evaluates each rule in sequence. When a rule evaluates as “true”, the corresponding work action for that rule is logged as the recommended structure improvement work. If no rules evaluate as “true”, then the WiSAMS recommendation is “no action.” For illustration purposes, a very simple WiSAMS rule is shown below.

- If all the following criteria are met…
    - The current NBI rating for substructure is less than or equal to 3, and
    - The structure is scour critical;
- …then the recommended work action is “REPLACE STRUCTURE.”

WiSAMS performs the analysis described above for the current year based on the most recent condition data (inspection report). To project future needs, WiSAMS uses deterioration curves to model the future condition of the structure. For each future year, WiSAMS again performs the rule analysis using the projected future condition data and provides recommendations for structure work concepts in these future years.

41.2.2 Eligibility

WiSAMS is the primary asset management tool for BOS. It is a tool that aims to meet WisDOT's need for data-driven, consistent, cost-effective structures work recommendations. The general accuracy of WiSAMS recommendations is heavily dependent on the available condition data and the ability to accurately project future deterioration. Final recommendations on structures improvement actions are subject to a manual review by BOS asset management engineers, as necessary. This combination of WiSAMS output and BOS review results in a recommendation for improvement work scope and timing.

A proposed structures work concept that matches this BOS recommended scope and is within an acceptable range for timing is considered an eligible structures work concept. Effort should be made to program structures improvement work to match the BOS-recommended work concept and optimal year to the extent possible.

WisDOT policy item:

BOS currently considers +/- 3 years as acceptable deviation from the BOS-recommended year for programming structures work concepts.

41.3 Structures Programming Process (State-System)

The process for developing projects with structures improvement work is shown in Figure 41.3-1 below. The process is primarily a collaboration between BOS and Regional personnel. The Division of Transportation Investment Management (DTIM) has a role in funding, which varies based on the funding source. Roles and responsibilities are discussed further in 41.5.

It is important to note that structures work concepts can be included in a let improvement project via several different methods. They include:

- Stand-alone structures improvement project: A let improvement project developed based on structure needs and including only structures improvement work.

- Combined improvement project: A let improvement project developed based in part on structure needs, but also including other improvement needs, such as pavement, safety, etc.

- Improvement project with only secondary structures improvement work: A let improvement project developed based on “other” needs (pavement, safety, etc.), but includes structures within the project limits. Structures within the project limits should always be evaluated for secondary work concepts.

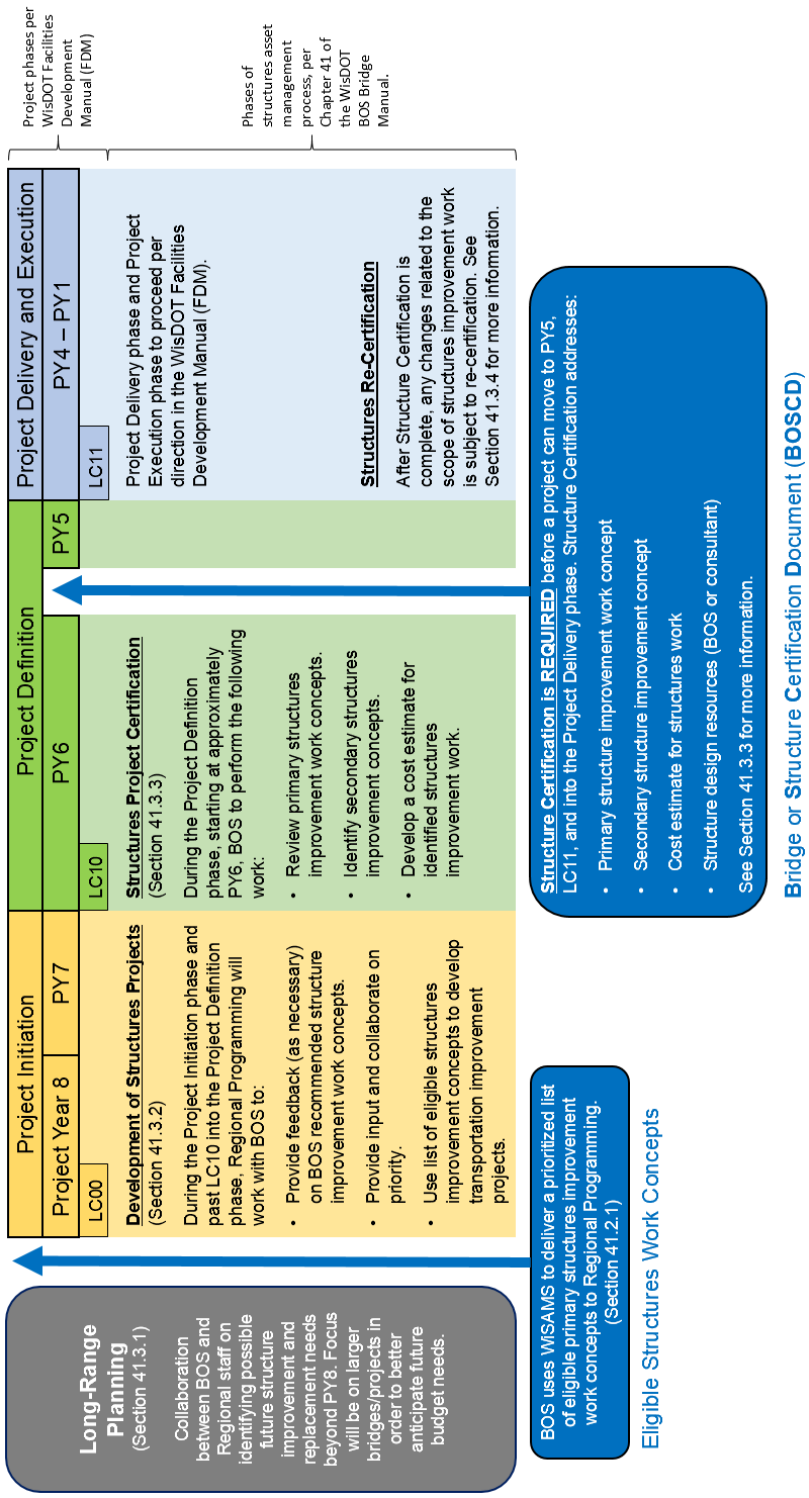

Figure 41.3-1
WisDOT Structures Asset Management – Structures Project Development

41.3.1 Long-Range Planning

Long-range planning refers to planning work done for projects with a target year beyond Program Year 8. Long-range planning serves several purposes, including examples such as:

- Coordinates improvement projects that are close in proximity to each other to minimize inconvenience for the travelling public.
- Project future improvement needs to large and/or complex bridges. Work of this nature may have a large impact in terms of budget and required design time.
- Provide information on future structure needs to coordinate with the long-term Division and Department vision for targeted corridors or areas.
- Provide a network-wide projection of future needs to be used when considering future transportation funding levels.

Projection of long-range structure improvement needs are based on WiSAMS output. BOS and Region collaboration on long-range planning occurs on an as-needed basis.

41.3.2 Development of Projects with Structures Work (PY8-PY7, Life Cycle 00-10)

The process of developing structure projects initiates with the BOS. Using WiSAMS (described above in 41.2.1) and review by BOS asset management engineers, BOS develops a list of eligible structures work concepts for the target year – Program Year 8 (PY8). The work is based on established BOS and Department policies for structures asset management, as described in this chapter and Chapter 42 – Bridge Preservation. The list of eligible structures work concepts is also prioritized. BOS will deliver these concepts to the Regions twice annually; in February and August.

41.3.2.1 Work Concept Review

At this stage in the process, Regional personnel has the opportunity to review the draft structures improvement program. The focus of this review is the primary work concepts, though some secondary work concepts may also be identified at this stage. BOS recommendations for structures work concepts are based on WiSAMS, supplemented as necessary by BOS asset management engineers.

Regional review should be focused on identifying perceived gross mismatches in scope and/or timing, and highlighting structure work concepts not identified by WiSAMS or BOS. Final decisions on scope and timing must be based on data and/or documentation. A majority of the time, this will be WiSAMS, but it can also be supplemented by other information, such as construction history, supplemental inspection data, IR data, or any other information pertinent to the programming decision. BOS will collaborate with Regional personnel to review and discuss any additional information that is brought forth. Final scope and timing decisions for structures work will be made by BOS, with strong consideration of Regional input.

41.3.2.2 Priority Review

BOS provides a prioritized list of eligible structures work. Priority is determined using a priority index (PI); an algorithm developed by BOS. The algorithm considers data such as ADT, functional class, etc. This is intended to assist the regions as they program projects.

The Region may see fit to adjust the prioritized list based on regional system and operational factors.

41.3.2.3 Creating Improvement Projects with Structures Work Concepts

The next step in the programming process is for Regional Programming to develop structures improvement projects based on the list of individual structures work concepts. Projects may combine structures work as appropriate, but also consider pavement needs, safety needs, operational needs, etc.

There may be non-structural rationale for deviations from BOS-recommended scope and/or timing. Common reasons include, but are not limited to:

- Coordination with other improvement work (pavements, safety, operations, etc.)
- Traffic control costs
- User delay

If reasons such as those noted above are used to justify deviations from BOS-recommended scope and/or timing, a cost-benefit analysis should be performed to support the decision. More information on cost-benefit analysis and structures programming policy can be found in 41.6.6.

During this phase as projects are developed and up until the Structures Project Certification Phase (See 41.3.3), BOS asset management engineers will evaluate proposed projects on a regular basis to ensure that programmed structures work is eligible in terms of both scope and timing. Projects that contain only eligible structures work concepts or have appropriate justification for any deviations are considered *pre-certified*.

<u>Only eligible projects or projects with appropriate justification will be considered for funding.</u>

41.3.3 Structures Project Certification Phase (PY6-PY5, Life Cycle 10/11)

Structures project certification refers to the work required to produce the Bridge or Structure Certification Document (BOSCD). The components of the BOSCD are outlined in 41.3.3.6 below.

<u>WisDOT policy item:</u>

Any improvement project with structures work (primary or secondary work concepts) requires certification.

41.3.3.1 BOS Structures Certification Liaison

BOS will designate a certification liaison for every structures improvement project, regardless of whether the project is designed by BOS or a consultant. The certification liaison will perform all of the work necessary for structures certification. A certification liaison will remain with each structures project (BOS-designed or consultant-designed) through the letting of that project, though the actual person assigned to a project may change over the lifecycle of that project.

41.3.3.2 Review of Primary Structures Work Concepts

Structures certification serves as the final review and approval for the scope and timing of the primary structures work concept. Regional planning engineers should only be selecting eligible structures work (scope and timing) for inclusion in transportation improvement projects. Additionally, BOS asset management engineers will evaluate projects on a regular basis (see 41.3.2) to ensure eligibility. With this process in place, the certification liaison will collaborate with BOS asset management engineers and Regional programming engineers (as necessary) to confirm scope and timing for primary structures work concepts.

41.3.3.3 Development of Secondary Structures Work Concepts

A key portion of the BOSCD is the early identification of secondary structures improvement work. Some examples of secondary work include, but are not limited to:

- Bearing rehabilitation or replacement
- Parapet or railing repairs
- Backwall or wingwall repairs
- Identification of specific substructure repairs
- Scour mitigation

Some items such as those above may have already been identified during the scoping of the primary structures work concepts. The certification liaison will review the existing inspection reports on file and consult the appropriate Regional structures maintenance engineer(s) to identify any and all eligible secondary structures work concepts.

41.3.3.4 Development of the Structures Cost Estimate

A high-level cost estimate will have been developed as a part of the primary structures work concept. This estimate is for structures work only; costs for traffic control and mobilization are not included. The certification liaison will refine that estimate, taking into account the identified secondary structures improvement work. This estimate is not intended to be a final structures construction cost estimate, but is a refinement of the unit cost estimate previously developed.

41.3.3.5 Determination of Design Resourcing

BOS will determine design resourcing as a part of the structures certification process. If BOS chooses to decline structures design for a given project, the certification liaison will provide an estimated level of effort (in man-hours) for the structures work. The certification liaison and the BOS Consultant Review Supervisor will coordinate with Regional PDS staff to ensure selection of an appropriate consultant engineer for the project.

41.3.3.6 Bridge or Structure Certification Document (BOSCD)

The BOSCD is under development at the time of publishing this chapter. The certification document will include information on all the items noted above, in addition to other key information identified by Region personnel.

41.3.4 Project Delivery and Execution Phase (PY4-Construction, Life Cycle 12+)

41.3.4.1 Structures Re-Certification

Any and all changes related to structures improvement work affecting items approved as part of the structures project certification shall be reviewed and approved by the certification liaison. This includes, but is not limited to, any of the following items:

- Scope (primary or secondary)
- Structures construction cost estimate
- PS&E or let date
- Advanceable date
- Structures design resourcing

The certification liaison for the project should be notified of any changes as soon as reasonably possible to approve/re-certify the project in a timely manner and not delay project schedule.

41.4 Structures Programming Process (Local System)

Local structure improvement work is funded through a different mechanism than state structure improvement work. Based on Wisconsin State Statutes, local structure eligibility is largely based on the sufficiency rating, a measure detailed in the Recording and Coding Guide for the Structure Inventory and Appraisal of the Nation's Bridges, published by FHWA. BOS provides a prioritized eligibility list of both primary and secondary work concepts for the Division of Transportation Investment Management (DTIM), which is then posted publicly for the local owners. Local owners use this eligibility list to select projects for submission to the local program, and DTIM programs structure work on a biannual basis. At this point, BOS has not pursued additional involvement in structures asset management for the local inventory.

More information about the Local Bridge Program can be found at the following link:

https://wisconsindot.gov/Pages/doing-bus/local-gov/astnce-pgms/highway/localbridge.aspx

41.5 Structures Asset Management Roles and Responsibilities

41.5.1 Bureau of Structures (BOS)

BOS has three sections, each of which contribute to the structures asset management process, either directly or indirectly.

BOS Design Section

- Resource the design (including hydraulic considerations) of structures improvement projects or providing oversight for consultant-designed projects.
- Provide resources (certification liaison) for the structures project certification (See 41.3.3).

BOS Maintenance Section

- Provide oversight for the WisDOT structures inspection program, working to ensure and improve the quality and accuracy of condition data.

BOS Development Section

- Manage and maintain the Highway Structures Information System (HSIS), an on-line database for collecting structures inventory and condition data.
- Develop, maintain, and refine Chapter 42 – Bridge Preservation. Policy documented in this chapter is the basis for WisDOT structures asset management.
- Develop and maintain WiSAMS, the software application that uses inspection and inventory data to produce recommendations for future structure improvement projects.
- Using WiSAMS (including priority and budget features), develop draft recommendations for the program-level scope of recommended structures work for the 8-year structures improvement program.
- Collaborate with Regional personnel to develop structures projects for the 8-year structures improvement program.
- Review and pre-certify structures projects that are introduced to the 8-year structures improvement program. See 41.3.2.3.
- Develop and maintain a program effectiveness measure to assess progress toward achieving program goals.

41.5.2 WisDOT Regions

WisDOT divides the state into five regions; Northwest, North Central, Northeast, Southeast, and Southwest. See Figure 2.1-3. Each Region has the responsibilities outlined below for the structures in their designated territory.

Regional Planning and Scoping Units

- Review structures work concepts provided by BOS and coordinate with other stakeholders (pavements, operations, safety, etc.) to recommend adjustments as deemed necessary.
- Collaborate with BOS to develop structures improvement projects that incorporate identified structure needs, coordinating as appropriate to address other need areas (pavement, safety, etc.).

- Collaborate with BOS in the structures certification process (See 41.3.3).

Regional Project Development Sections (PDS)

- Participate in the structures certification process, as necessary (See 41.3.3).
- Coordinate with BOS on structures project re-certification, as necessary. (See 41.3.4.1.)
- Guide structures improvement projects from project certification through construction, working to ensure that the project is constructed per plans and specifications.

Regional Structures Maintenance Units

- Provide detailed structures condition data (via inspection reports) that fully and accurately depict the current state of each individual structure.
- Collaborate with BOS certification liaison in the structures certification process, specifically in the scoping of primary and secondary structures work concepts (See 41.3.3.3).
- Perform or coordinate some preventative maintenance work; deck washing, deck sealing, crack sealing, etc. See Chapter 42 – Bridge Preservation for more information.

41.5.3 Division of Transportation Investment Management (DTIM)

DTIM is responsible for the financial component of structures asset management, determining the allocation of funds for structures improvement projects.

Bureau of State Highway Programs (BSHP)

- Collaborate with BOS to assess structures needs as they relate to the allocation of available funds to the various WisDOT funding programs.
- Determine the specific allocation of available funding for each of the WisDOT funding programs.
- Provide direct oversight and prioritization for the state-wide Backbone funding program.
- Provide financial analysis expertise and tools, such as Life Cycle Cost Analysis (LCCA) guidance.

Bureau of Transit, Local Roads, Railroads & Harbors (BTLRRH)

- Provide direct oversight and programming for the Local Bridge program, utilizing the list of eligible structure work concepts provided by BOS.

41.6 Programming Policy for Structures Improvement Projects

Structures improvement needs are identified by BOS as detailed 41.2 above. As Regional personnel work to develop projects to address these structures needs, other factors may contribute to the final project scope and timing. The policy items noted below provide direction on how some of these project factors shall be considered as they relate to the scope of structures improvement work.

41.6.1 Bridge Age

WisDOT policy item:

Bridge age shall not be a primary driver for the initiation of structures improvement work.

For a given bridge, there is correlation between the condition of the bridge and its age. However, condition (not age) shall be the primary driver for structures improvement work. The focus of evaluation should be on how the structure is currently performing, regardless of structure age.

41.6.2 Bridge Ratings

WisDOT policy item:

Unless specifically approved by BOS, inventory rating, operating rating, or the presence of a load posting shall not be the primary driver for the initiation of structures improvement work.

If a structures improvement project has been reviewed and approved by BOS (see 41.3.3), it may be appropriate to include work to improve load ratings or remove a load posting. Consult with the BOS Rating Unit before expanding structures scope to include strengthening.

41.6.3 Vertical Clearance

WisDOT policy item:

Vertical clearance shall not be the primary driver for the initiation of structures improvement work.

Various impact mitigation techniques shall be evaluated for bridges with a history of impacts before scoping an improvement project to include addressing substandard vertical clearance.

If deck replacement, superstructure replacement, or structure replacement are identified as the appropriate treatment and vertical clearance is substandard, the project team should investigate the additional cost of creating more vertical clearance.

Region and BOS concurrence is required to up-scope a project for vertical clearance issues.

41.6.4 Hydraulics

WisDOT policy item:

In the case of structures with flooding history or concerns, improvement work shall not be initiated unless mitigation (detours) are not possible. If mitigation is not possible, consult BOS Hydraulics Unit for direction.

In most cases, traffic can be adequately detoured around flooded structures until such time as waters recede.

41.6.5 Freight Considerations

WisDOT policy item:

Freight needs shall not drive the initiation of a structures improvement project.

As related to structures, freight needs are primarily capacity (load ratings and/or load postings) and clearance (vertical and horizontal).

41.6.6 Cost Benefit Analysis

When considering different options for structures improvement work, a cost-benefit analysis should be performed. The analysis should be performed by Regional programming staff using analysis tools approved by the DTSD Administrator's Office. Direction on select input data to be used for cost-benefit analysis is detailed below.

41.6.6.1 Treatment Schedule

When performing cost-benefit analysis, the following shall be used as the idealized treatment schedule for a new bridge. **The treatment schedules below are only for use in cost-benefit analysis and <u>are not intended to be used for programming purposes</u>.**

Prestressed Girder Superstructure

Primary Work Concept	Secondary Work Concept	Structure Year
New Construction	---	Year 0
Thin Polymer Overlay	---	Year 0
Thin Polymer Overlay	---	Year 10
Concrete Overlay and New Joints	• Substructure repair • Superstructure repair	Year 35
Deck Replacement	• Substructure repair • Superstructure repair	Year 55
Thin Polymer Overlay	---	Year 55
Thin Polymer Overlay	• Substructure repair • Superstructure repair	Year 65
Concrete Overlay and New Joints	---	Year 90
Bridge Replacement	---	Year 100

Steel Girder Superstructure

Primary Work Concept	Secondary Work Concept	Structure Year
New Construction	---	Year 0
Thin Polymer Overlay	---	Year 0
Thin Polymer Overlay	---	Year 10
Concrete Overlay and New Joints	• Spot/zone painting • Substructure repair • Superstructure repair	Year 35
Deck Replacement	• Complete painting • Substructure repair • Superstructure repair	Year 55
Thin Polymer Overlay	---	Year 55
Thin Polymer Overlay	• Spot/zone painting • Substructure repair • Superstructure repair	Year 65
Concrete Overlay and New Joints	---	Year 90
Bridge Replacement	---	Year 100

Concrete Slab Superstructure

Primary Work Concept	Secondary Work Concept	Structure Year
New Construction	---	Year 0
Thin Polymer Overlay	---	Year 0
Thin Polymer Overlay	---	Year 10
Concrete Overlay and New Joints	• Substructure repair • Superstructure repair	Year 35
Concrete Overlay and New Joints	• Substructure repair • Superstructure repair	Year 55
Bridge Replacement	---	Year 75

For all other superstructure types or in-service structures, consult BOS Bridge Management Unit for direction.

41.6.6.2 Discount Rate

WisDOT policy item:

A discount rate of 5% shall be used for cost-benefit analysis.

This value was determined based on analysis conducted by DTIM and is Department policy.

41.6.7 User Delay

WisDOT policy item:

For the purposes of cost-benefit analysis, user delay shall be addressed per direction in the WisDOT Facilities Development Manual (FDM).

User delay can have a dramatic impact on the results of a cost-benefit analysis and must be considered based on Department policy.

41.7 References

1. *Specification for the National Bridge Inventory Bridge Elements Bridges* by Federal Highway Association, 2014

2. *Manual for Bridge Element Inspection, 2nd Edition* by American Association of State Highway Transportation Officials, 2019

3. *Structure Inspection Manual* by Wisconsin Department of Transportation, 2003.

4. *Recording and Coding Guide for the Structure Inventory and Appraisal of the Nation's Bridges* by Federal Highway Association, 1995

5. *Facilities Development Manual (FDM)* by Wisconsin Department of Transportation, 2018

6. *Program Management Manual (PMM)* by Wisconsin Department of Transportation, Division of Transportation Investment Management, 2018

This page intentionally left blank.

Table of Contents

42.1 Overview 2
42.2 WisDOT Goals and Strategies for Bridge Preservation 3
42.2.1 Goals for WisDOT Bridge Preservation Program 3
42.2.2 Strategies to Achieve WisDOT Bridge Preservation Goals 3
42.3 Bridge Preservation Actions 5
42.4 Bridge Preservation Goals, Strategies and Performance Measures 6
42.4.1 Condition Based Strategies 6
42.4.2 Cyclical Based Strategies 6
42.4.3 Performance Measures and Objectives 6
42.4.4 Preservation Program Benefits 8
42.5 Bridge Preservation Activities, Eligibility and Need Assessment Criteria 9
42.5.1 Eligibility Criteria 11
42.5.2 Identification of Preservation Needs 14
42.6 Funding Resources and Budgeting 15
42.7 Definitions 17
42.8 References 21

42.1 Overview

This chapter provides goals, objectives, measures, and strategies for the preservation of bridges. This chapter contains criteria that is used to identify condition based and cyclical preservation, maintenance, and improvement work actions for bridges. Bridge preservation is defined as actions or strategies that prevent, delay, or reduce deterioration of bridges or bridge elements; restore the function of existing bridges; keep bridges in good or fair condition; and extend their service life. Preservation actions may be cyclic or condition-driven. [1]

A successful bridge program will seek a balanced approach to preservation, rehabilitation, and replacement. One measure of success is to maximize the life of structures while minimizing the life cycle cost. Preservation of structures is one of the strategies in maximizing the effectiveness of the overall bridge program by retarding the rate of overall deterioration of the bridges.

Bridges are key components of our highway infrastructure. Wisconsin has over 14,000 bridges, of which about 37% are owned by WisDOT. The average age of these bridges in 2019 is 38 years. The aging infrastructure is expected to deteriorate faster in the coming decades with increased operational demand unless concerted efforts are taken to preserve and extend their life. In addition, the state bridge infrastructure is also likely to see an increased funding competition among various highway assets. As a result, WisDOT must emphasize a concerted effort to preserve and extend the life of bridge infrastructure while minimizing long-term maintenance costs.

This chapter provides WisDOT personnel and partners with a framework for developing preservation programs and projects using a systematic and consistent process that reflects the environment and conditions of bridges and reflects the priorities and strategies of the Department.

A well-defined bridge preservation program will also help WisDOT use federal funding [2] for Preventative Maintenance (PM) activities by using a systematic process of identifying bridge preservation needs and its qualifying parameters as identified in FHWA's Bridge Preservation Guide [1]. This chapter will promote timely preservation actions to extend and optimize the life of bridges in the state.

42.2 WisDOT Goals and Strategies for Bridge Preservation

The main goal of a bridge preservation program is to maximize the useful life of bridges in a cost-effective way. To meet this goal, many of the strategies are aimed at applying the appropriate bridge preservation treatments and activities at the proper time resulting in longer service life at an optimal life cycle cost. Federal transportation legislation (MAP-21) promotes the goal of maintaining or preserving infrastructure assets "in a state of good repair". Preservation of assets is one of the tools that will be used to achieve an overall transportation investment strategy.

42.2.1 Goals for WisDOT Bridge Preservation Program

The bridge preservation goals address the priorities of the department and our stakeholders and include:

- Maintain bridges in a "state of good repair" using low-cost effective strategies.
- Implement timely preservation treatments on structurally sound bridges to promote optimal life cycle cost and extend service life. This will reduce the need for major rehabilitation and replacement – "right treatment at the right time".
- Promote and support budgeting of preventive maintenance activities.
- Establish performance goals and monitor progress related to preservation of bridges.
- Optimize the benefits and effectiveness of long-term maintenance investment in achieving bridges in good condition.

42.2.2 Strategies to Achieve WisDOT Bridge Preservation Goals

To achieve the goals of the bridge preservation program, WisDOT will use data-driven strategies. This approach is aimed at applying the appropriate bridge preservation treatments and activities at the proper time. These strategies are also aimed at maximizing efficiency and effectiveness of the program. The strategies of the WisDOT Bridge Preservation Program include:

- Regular analysis of the bridge inventory data to establish conditions and trends related to performance.
- Develop and maintain criteria for eligible preservation activities.
- Define preservation program and project needs (using HSIS and WISAMS).
- Develop estimates of needed financial resources at the project/program level.
- Prioritize, plan, and perform preservation treatments.

- As appropriate, group preservation maintenance projects to promote economy of scale.
- Identify preservation needs that complement maintenance, repair, and rehabilitation actions and timelines.
- Securing approval and support from key stakeholders in the use of Federal and State funding for systematic preventive maintenance and preservation activities.
- Utilize multiple programs to implement preservation work activities Improvement (Let) program, DMA, PBM & RMA maintenance programs.
- Develop and maintain records of preservation applications to analyze for cost and effectiveness of treatments.
- Consider preservation at the bridge design stage.

42.3 Bridge Preservation Actions

This chapter focuses on bridge preservation actions that relate to preventive maintenance and element rehabilitation. Cyclical and condition-based activities are subsets of preventative maintenance as shown below in Figure 42.3-1. Descriptions of these preservation actions can be found in 42.7.

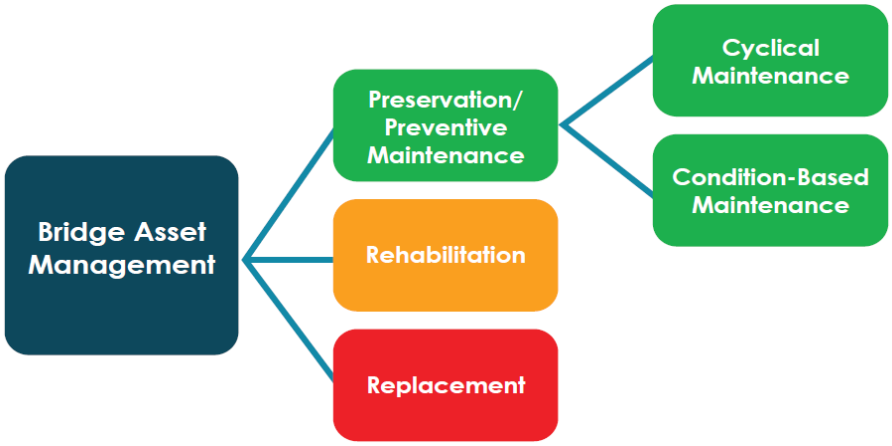

Figure 42.3-1
Asset Management and Preservation Actions

Major rehabilitation, bridge replacement, improvement, and new bridge construction projects are addressed by other WisDOT Bridge Programs.

42.4 Bridge Preservation Goals, Strategies and Performance Measures

This chapter outlines preservation goals, strategies and performance measures to track progress. Maintaining safe and dependable operations is a high priority for the department. **The Department has the goal to maintain 95% of the state-owned bridges in fair or better condition** (NBI ratings 5 or higher). To achieve this goal, the department employs strategies that include condition and cyclical treatments.

42.4.1 Condition Based Strategies

Condition based preventive maintenance activities are performed on bridge elements as needed and identified through the bridge inspection process. To achieve the goal of maintaining 95% of the state system bridge inventory in fair or better condition, maintaining key bridge elements or components that will promote this goal. These include:

- Bridge decks in good or fair condition (per NBI condition rating).
- Strip seal joints effective in stopping leakage. (effective joint)).
- Coated steel surfaces for superstructures in condition state 2 or better.
- Bearing elements in condition state 2 or better.

42.4.2 Cyclical Based Strategies

Cyclical based activities are performed on a pre-determined interval and aimed to preserve existing bridge element or component conditions. These types of activities may not improve the condition of the bridge element or component directly, but will delay their deterioration. Examples of cyclical activities include:

- Deck sweeping
- Deck and Superstructure washing
- Deck sealing.

42.4.3 Performance Measures and Objectives

Performance measures in this chapter are consistent with the objectives of the program and reflect the experience and input of the WisDOT Regional Bridge Maintenance Staff as well as consideration of other DOT's insight and experience.

Table 42.4-1 lists the measures and objectives for preservation program performance:

Objective	Target/Goals	Performance Measure
Maintain bridges in good or fair condition	95% of bridges	Percentage of bridge in good or fair condition (NBI rating 5 or higher)
Maintain bridge decks in good or fair condition	95% of bridge decks	Percentage of bridge decks in good or fair condition (NBI Rating 5 or higher)
Maintain effective expansion joints that do not leak	85% of bridges with strip seal joints that are effective in stopping leakage	Percent of a bridges with 90% of their strip seal expansion joints in condition state 2 or better (effective joint)
Maintain coated steel surfaces in condition state 2 or better	90% of coated steel surfaces	Percentage of coated steel surfaces in condition state 2 or better (effective)
Maintain bearings in condition state 2 or better	95 % of bearings in condition state 2 or better	Percentage of bearings in condition state 2 or better
Seal eligible concrete decks (NBI rating 6 or higher) with sealant every 4 years	Seal 25% eligible concrete decks	Number of decks sealed (sq. ft of deck area) each year during a 4-year period

Table 42.4-1
Objectives and Performance Measures

42.4.4 Preservation Program Benefits

Each objective and measure proposed in Table 42.4-1 is aimed at extending the life of the main bridge components by performing timely cyclical or condition-based (corrective) preservation actions. The cost of performing preservation actions is minor when compared to premature replacement or rehabilitation of bridge components. The benefits of each objective are discussed below:

- Maintaining 95% of bridge decks in good or fair condition is an asset management approach that should extend the service life of bridges and promote the MAP21 objectives. Experience has shown that bridges designed for a 100-year life expectancy should have decks that last 55 with progressive preservation activities though the life of the bridge deck. Appropriate corrective actions taken as part of deck preservation extends the bridge deck life significantly. The costs of such corrective actions are substantially less than the costs of prematurely replacing the decks.

- The objective of maintaining 85% of strip seals in good or fair condition will focus on a program that will help in minimizing the damage on bridge superstructure and substructure components. Leaking joints cause significant deterioration and damage to bridge components that include girders, bearings, and substructures. There is significant cost each year in repairing structural elements that have deteriorated prematurely as a result of leaking joints. Maintaining effective (non-leaking) strip seals can delay superstructure and substructure deterioration.

- Maintaining protective paint systems is important. The structural components of the steel bridges will corrode and lose load carrying capacity if left unprotected or partially-protected. Protective paint coatings systems should have a service life of 25-40 years for the protection of structural steel. The objective of maintaining 90% of coated steel surfaces in good or fair condition will aim at creating a paint program for extending the life of steel components up to 100 years.

- Bridge bearings are a key component. Bearings support bridge super structures and allow for expansion of the superstructure. Experience has shown that loss of lubrication, tipping, or corrosion of bearings can cause harm to the deck and superstructure. The proposed measure of keeping 95% of bearings in good or fair condition will help WisDOT maintain bridges in a state of good repair.

- Objective of sealing 25% of all eligible concrete decks at 4 year intervals will help delay deck deterioration and prolong deck life. Sealing decks every 4 years at a minor cost can delay deck deterioration by 10-12 years that will promote increased deck life.

42.5 Bridge Preservation Activities, Eligibility and Need Assessment Criteria

The bridge preservation activities shown below relate to deck, superstructure and substructure elements. Table 42.5-1 shows the most common bridge preservation activities that are considered cost effective when applied to the appropriate bridge at the appropriate time, as well as considered eligible for bridge preservation funding. Additionally, these activities together with the eligibility and prioritization criteria discussed in this section will form a basis to generate an eligibility list of bridges that are candidates for cyclical and condition based PM actions.

Bridge Component	Bridge Preservation Type	Activity Description	Preventive Maintenance Type	Action Frequency (years)
All	Preventive Maintenance	Sweeping, power washing, cleaning	Cyclical	1-2
Deck	Preventive Maintenance	Deck washing	Cyclical	1
		Deck sweeping		1
		Deck sealing/crack sealing		4-5
		Thin polymer (epoxy) overlays		7-15
		Drainage cleaning/repair	Condition Based	As needed
		Joint cleaning		
		Deck patching		1- 2
		Chloride extraction		1 -2
		Asphalt overlay with membrane		5-15
		Polymer modified asphalt overlay		10-15
		Joint seal replacement		10
		Drainage cleaning/repair		1
	Repair or Rehab Element	Rigid concrete overlays	Condition Based	As needed
		Structural reinforced concrete overlay		
		Deck joint replacement		
		Eliminate joints		
Super	Preventive Maintenance	Bridge approach restoration	Cyclical	2
		Seat and beam ends washing		2
	Repair or Rehab Element	Bridge rail restoration	Condition Based	As needed
		Retrofit rail		
		Painting		
		Bearing restoration (replacement, cleaning, resetting)		
		Superstructure restoration		
		Pin and hanger replacement		
		Retrofit fracture critical members		
Sub	Preventive Maintenance	Substructure restoration	Condition Based	As needed
		Scour counter measure		
		Channel restoration		

Table 42.5-1
Bridge Preservation Activities

42.5.1 Eligibility Criteria

This chapter includes two distinct matrices outlining eligibility criteria for preservation activities shown in Table 42.5-2 and Table 42.5-3. The first matrix relates to concrete deck/slab activities and the second matrix covers other bridge component activities. Bridge inspection information and data that is managed in HSIS and the WISAMS (Chapter 41.2.1) will be used to develop reports that quantify needs at the program and project level. This method will also serve to develop reports to monitor progress related to performance goals.

The deck/slab matrix shown in Table 42.5-2 is based on the NBI Item 58 - Condition Rating for decks and total deck/slab distress area. The distress area on a deck is quantified using inspection defects including delaminations, spalls, cracking, and scaling. Other deck inspection methods such as chain drag sounding, ground penetrating radar (GPR) surveys, infrared (IR) surveys, and chloride potentials may also be used in quantifying deck defects.

The matrix shown in Table 42.5-3 is based on listed NBI condition ratings and specific inspection element condition states. As with decks, information and data from HSIS will be used with this matrix as well.

Table 42.5-3 also makes reference to “defects”. For a better understanding of this concept, the reader is referred to Appendix D of the *AASHTO Manual for Bridge Element Inspection*. This appendix describes the element materials defined for this guide and the defects that may be observed for each condition state. Included are individual materials, such as reinforced and prestressed concrete, steel, timber, masonry, and other materials.

These matrices guide the user to select a preservation activity and also show the potential enhancement to the NBI values and anticipated service life increase as a result of that activity. Note that even though some preservation activities list no change to the potential result to the condition rating of NBI items, there is an inherent benefit both in the short and long term of these preservation activities to extend the current condition and ultimately extend the life of the bridge.

Sound engineering judgment is needed to decide if the recommended action is best suited for extending the life of the bridge.

	NBI Item 58	Top Deck Element Distress Area (%)	Bottom Deck Element Distress Area (%)	Preservation Activity	Benefit to Deck from Action	Application Frequency (in years)
Concrete Deck/Slab	≥7	-	-	Deck Sweeping/Washing	Extend Service Life	1 to 2
		5% < 3220 < 25%	-	Crack Sealing	Extend Service Life	3 to 5
		3220 CS3 + CS4 > 0%	-	Deck Sealing	Service life extended	3 to 5
		-	1080 < 5%	Full Depth Deck Patching	Service life maintained	As needed
		3210 CS3 + CS4 < 5%	1080 < 5%	Wearing Surface Patching	Service life maintained	As needed
		>20% (3220 OR 8911 CS3 + CS4) OR >15% 3210 (applied to bare deck)	(1140 OR 1150) < 20% for timber deck	Polymer Modified Asphalt Overlay	Service life extended	10 to 15
		>20% (3210 OR 8911 CS3 + CS4) OR >50% 3220 (reapplication)	1080 < 5% for concrete deck			
		>20% (3220 OR 8911 CS3 + CS4) OR >15% 3210 (applied to bare deck)	(1140 OR 1150) < 20% for timber deck	HMA w/ membrane	Service life extended	5 to 15
		>20% (3210 OR 8911 CS3 + CS4) OR >50% 3220 (reapplication)	1080 < 5% for concrete deck			
		3210 < 5%	1080 < 1%	Polyester Polymer Concrete	Service life extended	20 to 30
		3210 < 2% (applied to bare deck) 8513 CS3 + CS4 > 15% (reapplication)	1080 < 1%	Thin Polymer Overlay	Service life extended	7 to 15
	6	-	-	Deck Sweeping/Washing	Extend Service Life	1 to 2
		5% < 3220 < 25%	-	Crack Sealing	Extend Service Life	3 to 5
		3220 CS3 + CS4 > 0%	-	Deck Sealing	Service life extended	3 to 5
		-	1080 < 5%	Full Depth Deck Patching	Service life maintained	As needed
		3210 CS3 + CS4 < 5%	1080 < 5%	Wearing Surface Patching	Service life maintained	As needed
		>20% (3220 OR 8911 CS3 + CS4) OR >15% 3210 (applied to bare deck)	(1140 OR 1150) < 20% for timber deck	Polymer Modified Asphalt Overlay	Improve NBI (58) ≥ 7	10 to 15
		>20% (3210 OR 8911 CS3 + CS4) OR >50% 3220 (reapplication)	1080 < 5% for concrete deck			
		>20% (3220 OR 8911 CS3 + CS4) OR >15% 3210 (applied to bare deck)	(1140 OR 1150) < 20% for timber deck	HMA w/ membrane	Improve NBI (58) ≥ 7	5 to 15
		>20% (3210 OR 8911 CS3 + CS4) OR >50% 3220 (reapplication)	1080 < 5% for concrete deck			
		8513 CS3 + CS4 > 15% (reapplication)	1080 < 1%	Thin Polymer Overlay	Service life extended	7 to 15
		>20% (3220 OR 8911 CS3 + CS4) OR >15% 3210 (applied to bare deck) >20% (3210 OR 8911 CS3 + CS4) OR >50% 3220 (reapplication)	1080 < 5% OR 1130 CS3 + CS4 < 25%	Concrete Overlay	Improve NBI (58) ≥ 7	12 to 20
	5	5% < 3220 < 25%	-	Crack Sealing	Extend Service Life	3 to 5
		3220 CS3 + CS4 > 0%	-	Deck Sealing	Service life extended	3 to 5
		-	1080 < 5%	Full Depth Deck Patching	Service life maintained	As needed
		3210 CS3 + CS4 < 5%	1080 < 5%	Wearing Surface Patching	Service life maintained	As needed
		>20% (3220 OR 8911 CS3 + CS4) OR >15% 3210 (applied to bare deck) >20% (3210 OR 8911 CS3 + CS4) OR >50% 3220 (reapplication)	1080 < 5% OR 1130 CS3 + CS4 < 25%	Concrete Overlay	Improve NBI (58) ≥ 7	12 to 20
	4	>20% (3220 OR 8911 CS3 + CS4) OR >15% 3210 (applied to bare deck) >20% (3210 OR 8911 CS3 + CS4) OR >50% 3220 (reapplication)	1080 < 5% OR 1130 CS3 + CS4 < 25%	Concrete Overlay	Improve NBI (58) ≥ 7	12 to 20
	≤ 4	-	1080 > 15% OR 1130 CS3 + CS4 > 50%	Deck Replacement	Improve NBI (58) = 9	25 to 45

Table 42.5-2
Concrete Deck/Slab Eligibility Matrix

NBI Item	Element	NBI Criteria	Defect	Element Defect Condition State Criteria	Repair Action	Potential Benefits to NBI or CS	Anticipated Service Life Years
Deck	Joints	Item 58 ≥ 5	2350	CS2, CS3, or CS4	Joint Cleaning	CS1or CS2	
			2310	CS3 + CS4 ≥ 10%	Joint Seal Replacement/Restoration	CS1	5 to 8
			2360	CS3 + CS4 ≥ 25%	Joint Replacement ④ ⑦	CS1	10 to 20
				All Condition State	Joint Elimination ④	Elimination	15 to 25
	Railing	Item 58 ≥ 5		CS3 or CS4	Railing Restoration	CS1 or CS2	3 to 10
				CS3 or CS4	Railing Replacement/Retrofit ⑧	CS1	10 to 20
Super	Steel Elements	Item 59 ≥ 5		N/A	Superstructure Washing/Cleaning	NA	1 to 2
			3440	CS2 + CS3 Area> 5% ⑥	Painting - Spot	CS1	1 to 5
				CS3 Area ≤ 25% ⑥	Painting - Zone	CS1 ①	5 to 7
				CS3 Area ≥ 25% ⑥	Painting - Complete	CS1 ②	15 to 20
		Item 59 ≥ 4		CS2, CS3, or CS4	Superstructure Restoration ③	NBI ≥ 7	5 to 20
	Bearings	Item 59 ≥ 5		CS3 or CS4	Bearing Reset/Repair	CS1 or CS2	1 to 5
				CS2 or CS3	Bearing Cleaning/Painting	CS1 or CS2	5 to 7
				CS3 + CS4 ≥ 25% or CS4 > 5%	Bearing Replacement	CS1	10 to 15
Sub	Miscellaneous	Item 60 ≥ 5		N/A	Substructure Washing/Cleaning	NA	1 to 2
			3440	CS2+CS3+CS4 Area > 5% ⑥	Painting - Spot	CS1	1 to 5
			3440	CS3 Area > 25% ⑥	Painting - Complete	CS1 ②	10 to 20
				CS2 or CS3 or CS4	Substructure Restoration ⑤	NBI ≥ 7	5 to 20
			9290	CS1 or CS2	Pier Protection ⑨	NBI ≥ 7	5 to 20
				CS3 or CS4	Scour Counter Measure ⑩	NBI ≥ 7	5 to 20

Table 42.5-3

Other Bridge Elements Eligibility Matrix

① Increase NBI only if combine with structural steel repairs.

② Complete painting only if combined with structural steel repairs to improve the component NBI ≥ 7.

③ Superstructure restoration includes all work related to the superstructure including but not limited to strengthening, pin and hanger replacement, retrofit FC member, etc.

④ Combined with deck overlay or replacement project.

⑤ Substructure restoration includes all work related to the substructure including but not limited to fiber wrapping, strengthening, crack injection, encapsulation, etc.—regardless of material type.

⑥ Element condition state for steel protective coating.

⑦ Includes but is not limited to end block/paving block replacement.

⑧ Must bring railing to current standards or have an approved exception to standards.

⑨ Examples are pier protection dolphins and fender systems.

⑩ Provide scour countermeasures after repairing any other substructure defects.

42.5.2 Identification of Preservation Needs

The identification of preservation needs will start with inventory and inspection information collected as part of the ongoing inspection program. The inspection information is analyzed by BOS asset management engineers with the Wisconsin Structures Asset Management System (WISAMS - 41.2.1). The analysis will include inspection reports, past work actions, and preservation policy logic as shown in Table 42.5-2 and Table 42.5-3. BOS will develop bridge work eligibility reports.

The programming of projects will start with the development of eligibility reports as defined in Chapter 41 – Structures Asset Management. Eligible work could be standalone projects or combined into roadway projects, or combined into a group that may include cyclical preventive maintenance activities. Programming of work will be through the Improvement (Let) program and various Maintenance programs (DMA, RMA, and PBM)

42.6 Funding Resources and Budgeting

The experiences of several states have shown that having commitments for funding preservation programs extends the life of bridges and defers untimely replacement. Having a commitment for funding of bridge preservation will help WisDOT optimize the overall bridge program. We promote the idea of recognizing and prioritizing preservation opportunities as part of the planning and programming functions of the department at the Division and Regional level. Through this organizational approach to implementation, preservation will yield the greatest system wide benefits. We recognize the ability to implement policy-driven bridge preservation work actions through a number of our department bridge improvement and maintenance programs. Some work actions are more appropriate for various programs depending on the scale, complexity, or resourcing of the work.

Implementing bridge improvements, rehabilitation, maintenance, and preservation activities occurs through a number of programs. These programs include:

- **Let Improvement Projects (Let).** The let improvement program is identified and programmed in Regional Planning and developed in Regional PDS. The projects are let to competitive bid on a regular schedule.

- **Discretionary Maintenance Agreement (DMA).** This is a contracting mechanism initiated by the Department with a county highway department for specific projects and locations. DMAs are typically used in response to highway or services maintenance research opportunities, or awarded as part of a targeted maintenance initiative.

- **Performance-based Maintenance (PbM).** Performance-based highway maintenance is based on the authority to contract with counties to perform specific highway maintenance tasks. Unlike Discretionary Maintenance Agreements which are paid based on actual cost reimbursement basis, PbM contracts are paid based on a negotiated contract price

- **Routine Maintenance Agreement (RMA).** Maintenance of state highways is performed by county highway departments under annual calendar year contracts called the Routine Maintenance Agreement (RMA) document. The RMA document provides each county with a state highway maintenance budget and the approval for expenditure within that budget.

Given our ability to use the structure inventory data and preservation policy to identify work actions from minor preservation activities through major reconstruction activities, we direct a range of work activates to various maintenance and improvement programs to promote appropriate actions throughout the complete lifecycle of the structures. This is shown in Figure 42.6-1 as the Overall Structures Program.

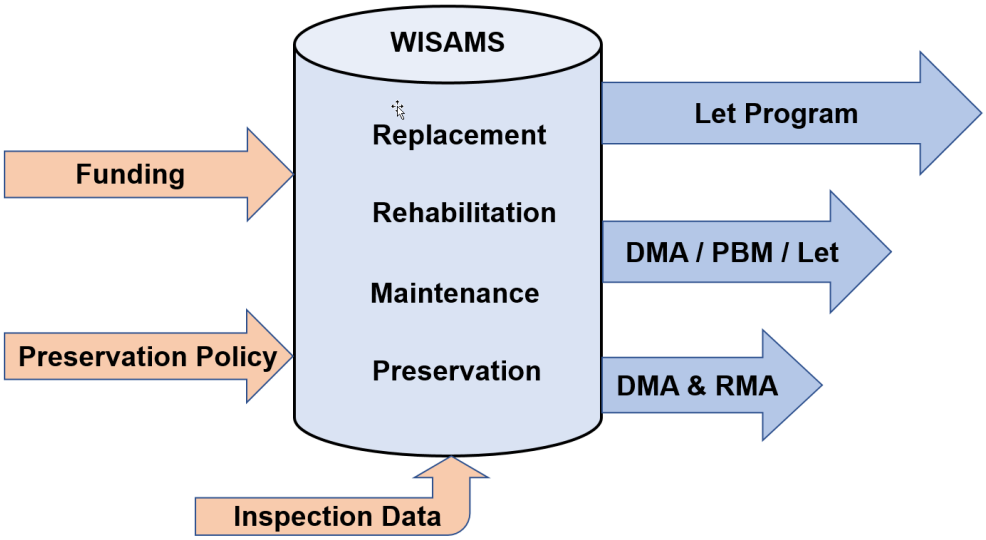

Figure 42.6-1
Overall Structures Program Diagram

Federal Funding and Preventive Maintenance

The May 2016 Agreement for the Use of Federal Funds for Preventive Maintenance of Structures [(2)], Section 5 (Special Limitations) outlines areas where certain work would not be eligible for federal funding in our improvement program, but could be included in our maintenance program with state funding. The following actions are usually considered ***routine maintenance*** and are not eligible for federal funding in the Let program under the WisDOT/FHWA agreement:

- Vehicle damage repair
- Asphalt deck patching
- Asphalt Overlay *without* Membrane
- Graffiti Removal
- Flood damage & minor channel debris removal

42.7 Definitions

Bridge Program: The WisDOT Bridge Program includes preservation, rehabilitation, improvement or major rehabilitation, replacement and new bridge construction actions.

Bridge Preservation: Bridge Preservation is defined as actions or strategies that prevent, delay, or reduce deterioration of bridges or bridge elements, restore the function of existing bridges, keep bridges in good or fair condition and extend their service life. Preservation actions may be cyclic or condition-driven.

Highway Structures Information System: Highway Structures Information System (HSIS) is the system developed by WisDOT for managing the inventory and inspection data of all highway structures. The inspection data is collected in accordance with the NBIS and *2019 AASHTO Manual for Bridge Element Inspection.*

Wisconsin Structures Asset Management System (WiSAMS): Automated application to determine optimal work candidates for improving the condition of structures. This application serves as a programming and planning tool for structures improvements, rehabilitations, maintenance, and preservation. This application coupled with the Highways Structures Information System (HSIS) serves as a comprehensive Structures (Bridge) Management system.

State of Good Repair (SGR): State of Good Repair (SGR) is a condition in which the existing physical assets, both individually and as a system (a) are functioning as designed within their useful service life, and (b) are sustained through regular maintenance and replacement programs. SGR represents just one element of a comprehensive capital investment program that also addresses system capacity and performance.[3]

Systematic Preventive Maintenance Program (SPM): Systematic Preventive Maintenance (SPM) is a planned strategy of cost-effective treatments to highway bridges that are intended to maintain or preserve the structural integrity and functionality of bridge elements and/or components, and retard future deterioration, thus maintaining or extending the useful life of bridges. An SPM program is based on a planned strategy that is equivalent to having a systematic process that defines the strategy, how it is planned, and how activities are determined to be cost effective. An SPM program may be applied to bridges at the network, highway system, or region-wide basis and have acceptable qualifying program parameters. The details on an SPM program and qualifying parameters are found in FHWA's *Bridge Preservation Guide.*

Preventive Maintenance(PM): Preventive maintenance is a cost-effective means to extend the service life of bridges. PM treatments retard future deterioration and avoid large expensive bridge rehabilitation or replacements. PM includes cyclic and condition based treatments.

Cyclical PM Activities: Cyclical PM activities are those activities performed on a pre-determined interval and aimed to preserve existing bridge element or component conditions. Bridge element or component conditions are not always directly improved as a result of these activities, however deterioration is expected to be delayed.

Condition Based PM Activities: Condition Based PM Activities are those activities that are performed on bridge elements in response to known defects as identified through the bridge inspection process.

Rehabilitation: Rehabilitation involves major work required to restore the structural integrity of a bridge as well as work necessary to correct major safety defects as defined in the Code of Federal Regulation (CFR) 23 clause 650.403.

Improvement or Major Rehab: Bridge improvement is a set of activities that fixes the deterioration found in a structure and improves the geometrics and load-carrying capacity beyond the original design standards, but may not provide improvement that meets new construction standards.

Replacement: Replacement of an existing bridge with a new facility constructed in the same general traffic corridor is considered total replacement. The replacement structure must meet the current geometric, construction, and structural standards as defined in the Code of Federal Regulation (CFR) 23 clause 650.403.

New Bridge Construction: The construction of a new bridge is defined as bridge construction that does not replace or relocate an existing bridge as described in FHWA's MAP-21 STP.

NBI Condition Rating: The FHWA coding guide describes the condition ratings used in evaluating four main components of a bridge as decks, superstructure, substructure, and culverts. The condition ratings are used to measure the deterioration level of bridges in a consistent and uniform manner to allow for comparison of the condition state of bridges on a national level. The condition ratings are also known as NBI ratings and are measured on a scale of 0 (worst) to 9 (excellent). For WisDOT bridges and culverts, an NBI rating of 4 is classified as poor, an NBI rating of 5 is classified as fair, and an NBI rating of 6 or higher is classified as 'good' (See Table 42.7-1).

Code	Description	Common Actions
9	**EXCELLENT CONDITION**	Preservation/Cyclic Maintenance
8	**VERY GOOD CONDITION**—No problems noted.	
7	**GOOD CONDITION**—Some minor problems.	
6	**SATISFACTORY CONDITION**—Structural elements show some minor deterioration.	Preservation/ Condition-Based Maintenance
5	**FAIR CONDITION**—All primary structural elements are sound but may have some minor section loss, cracking, spalling, or scour.	
4	**POOR CONDITION**—Advanced section loss, deterioration, spalling, or scour.	Rehabilitation or Replacement
3	**SERIOUS CONDITION**—Loss of section, deterioration, spalling or scour have seriously affected primary structural components. Local failures are possible. Fatigue cracks in steel or shear cracks in concrete may be present.	
2	**CRITICAL CONDITION**—Advanced deterioration of primary structural elements. Fatigue cracks in steel or shear cracks in concrete may be present, or scour may have removed substructure support. Unless closely monitored, the bridge may have to be closed until corrective action is taken.	
1	**IMMINENT FAILURE CONDITION**—Major deterioration or section loss present in critical structural components, or obvious vertical or horizontal movement affecting structure stability. Bridge is closed to traffic, but corrective action may put it back in light service.	
0	**FAILED CONDITION**—Out of service. Bridge is beyond corrective action.	

Table 42.7-1
NBI General Condition Ratings & Common Actions

Element Condition State: A condition state categorizes the nature and extent of damage or deterioration of a bridge element. The 2019 *AASHTO Manual for Bridge Element Inspection* describes a comprehensive set of bridge elements mainly categorized as National Bridge Elements (NBE), Bridge Management Elements (BME) and Agency Develop Elements (ADE) and their corresponding four condition states. The element condition states1 to 4 are described as good (CS1), fair (CS2), poor (CS3), and severe (CS4).

Condition State	Description	Common Actions[10]
1	Varies depending on element—Good	Preservation/Cyclic Maintenance
2	Varies depending on element—Fair	Cyclic Maintenance or Condition-Based Maintenance when cost effective.
3	Varies depending on element—Poor	Condition-Based Maintenance, or Rehabilitation—when quantity of poor exceeds a limit that condition-based maintenance is not cost effective, or Replacement—when rehabilitation is not cost effective.
4	Varies depending on element—Severe	Rehabilitation or Replacement

Table 42.7-2
Element Condition States & Common Actions

42.8 References

1. *Bridge Preservation Guide*, *Maintaining a Resilient Infrastructure to Preserve Mobility* (FHWA) – Spring 2018, (https://www.fhwa.dot.gov/bridge/preservation/guide/guide.pdf)

2. FDM 3-1 Exhibit 5.2 Agreement for the Use of Federal Funds for Preventive Maintenance of Structures. (May 2016). (https://wisconsindot.gov/rdwy/fdm/fd-03-05-e0502.pdf#fd3-5e5.2)

3. Source: U.S. DOT Secretary Mary Peters July 25, 2008 letter to Congress

This page intentionally left blank.

Table of Contents

43.1 Overview 2
43.1.1 Highway and Bridge Maintenance Work Plan 3
43.1.2 WisDOT Roles and Responsibilities for Bridge Maintenance 3
43.2 Bridge Maintenance Actions for Asset Management 5
43.2.1 Operational Bridge Maintenance Actions 5
43.2.2 Preservation Bridge Maintenance Actions 5
43.2.2.1 Cyclical Work Actions 6
43.2.2.2 Condition-Based Work Actions 6
43.2.3 Delivery Mechanisms for Bridge Maintenance Work 6
43.3 Bridge Maintenance Work Plan Development 9
43.3.1 Unconstrained Needs Identification 9
43.3.2 Draft Bridge Maintenance Work Plan 9
43.3.3 Bridge Maintenance Work Plan Prioritization 9
43.3.4 Evaluation for Appropriate Funding Source 10
43.3.5 Delivering the Bridge Maintenance Work Plan 11
43.4 Documentation of Completed Bridge Maintenance Work 12
43.5 Bridge Maintenance Work Reporting 14
43.6 Definitions 15
43.7 References 16

43.1 Overview

This chapter is one part of a larger structures asset management program.

Chapter 42 – Bridge Preservation: Establishes program-level goals, objectives, measures, and strategies for the preservation and maintenance of bridges in Wisconsin and serves as the policy foundation for this chapter. Work actions and strategies detailed in Chapter 42 are incorporated in both Chapter 41 and 43.

Chapter 41 – Structures Asset Management: Focuses on implementing the philosophy outlined in Chapter 42. More specifically, Chapter 41 details the process to deliver preservation, rehabilitation, and replacement projects through the improvement program.

Chapter 43 – Structures Asset Management; Maintenance Work: Similar to Chapter 41, as this chapter also focuses on implementing the philosophy outlined in Chapter 42. However, the chapter provides the policy, procedure, and workflow for those bridge preservation and bridge maintenance actions most often performed through the annual Highway Maintenance Work Plan (HMWP). These actions complement work performed through the improvement program.

Work identified in this chapter is critical to a fully-functioning bridge asset management program. A given bridge will not achieve its maximum potential lifespan without the type of work detailed in this chapter. This is illustrated in Figure 43.1-1.

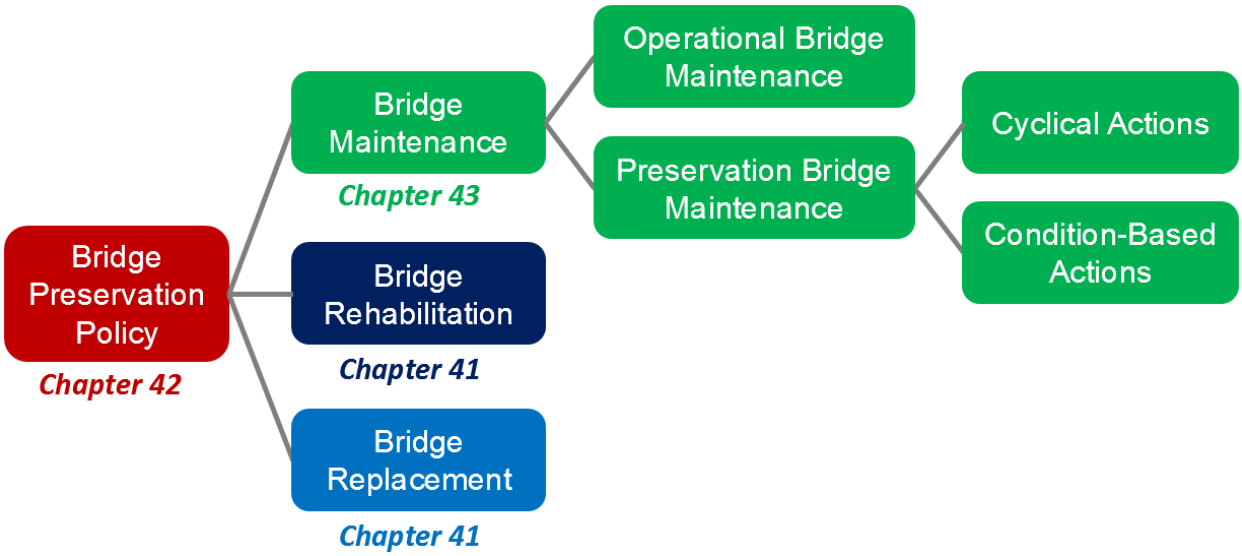

Figure 43.1-1
Bridge Asset Management Work Activities

43.1.1 Highway and Bridge Maintenance Work Plan

The Highway Maintenance Work Plan is coordinated by the Bureau of Highway Maintenance (BHM) and incorporates many different activities and subject areas. The Bridge Maintenance Work Plan is one piece of the overall Highway Maintenance Work Plan, as shown in Figure 43.1-2. The Bureau of Structures is responsible for the technical direction associated with the Bridge Maintenance Work Plan.

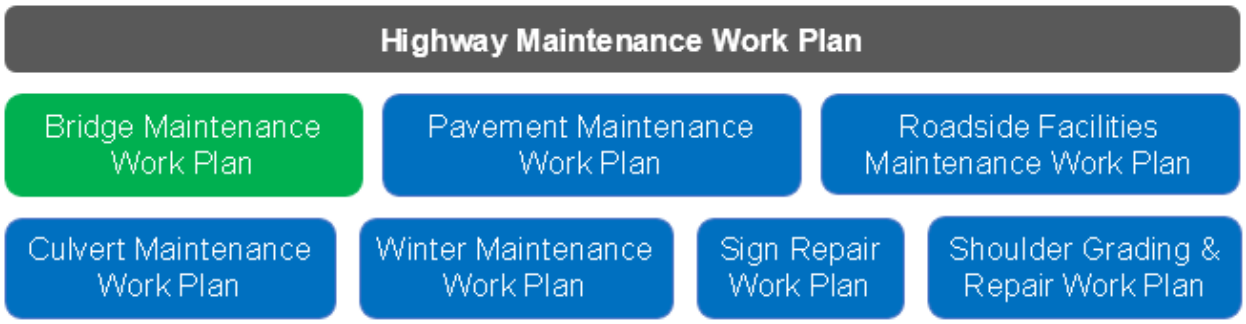

Figure 43.1-2
Components of the Highway Maintenance Work Plan

43.1.2 WisDOT Roles and Responsibilities for Bridge Maintenance

A well-defined bridge asset management program helps the Department to direct its available types of funding in the most optimal ways to achieve maximum bridge life. Bridge maintenance actions (including bridge preservation actions) are critical to maximizing the effectiveness of the Department's bridge asset management program, and thus it is critical that roles and responsibilities in bridge maintenance are clearly defined and optimally applied.

Bureau of Structures

The Bureau of Structures (BOS) maintains and updates the comprehensive preservation policy for structures (Chapter 42 – Bridge Preservation). BOS develops and maintains the Highway Structures Information System (HSIS), a database of structures information, including condition information (inspection reports). BOS also develops and maintains the Wisconsin Structures Asset Management System (WiSAMS -see 41.2.1), a software tool used to forecast needed structures work. Together, these tools facilitate identification of structure work for both the improvement program and the highway maintenance work plan.

For bridge preservation, cyclical actions along with some limited condition-based actions are the work types that have traditionally fallen within the funding authority and workforce ability of the WisDOT highway maintenance work plan.

Bureau of Highway Maintenance

The Bureau of Highway Maintenance (BHM) is the lead for allocating available funding across program and asset types, including bridge maintenance work. After Region allocations are

determined, BHM is responsible for ensuring that each region is setting up a workplan that is in alignment with those allocations and Department priorities.

Regional Bridge Maintenance

Regional Bridge Maintenance engineers are the primary contact between WisDOT and the country service providers that perform the actions detailed in the Highway Maintenance Work Plan. Regional Bridge Maintenance works with BOS to develop and prioritize the work plan (see 43.3.2 and 43.3.3). Regional Bridge Maintenance engineers are also the primary contact for documentation of work performed by the county service providers.

Regional Programing

Regional Programing engineers work with BOS and Regional Bridge Maintenance engineers to pull bridge maintenance work into the let improvement program as appropriate.

Local Service Providers

Local service providers (primarily country work crews) are the labor force that performs the work detailed in the Highway Maintenance Work Plan. They are responsible for completing work and providing proper documentation to WisDOT after it is complete.

43.2 Bridge Maintenance Actions for Asset Management

Through strategic use of structure inventory data (stored in HSIS), well-documented preservation policies (see Chapter 42), and WISAMS asset management algorithms, WisDOT has the ability to optimally align bridge work activities with the appropriate maintenance and improvement programs to coordinate appropriate treatment actions throughout the lifecycle of a structure.

43.2.1 Operational Bridge Maintenance Actions

Operational bridge maintenance actions are those actions necessary for the regular operation of a bridge. These actions are expected and are necessary to maintain a bridge in serviceable condition. Bridge preservation activities such as those described in Chapter 42 may lessen the amount or frequency of operational maintenance, but it will not be eliminated. Examples include:

- Cutting brush
- Patching/filling spalls
- Hot-rubbering end joints
- Joint gland replacements
- Channel debris removal
- Washout/erosion repair
- Retrofitting fatigue cracks

These actions are performed on an “as-needed” basis; some may require immediate or near-immediate action to maintain a safe and serviceable structure. That being the case, operational bridge maintenance items may take priority over all other maintenance in terms of timing and funding. These items are most often captured in the “maintenance items” recorded by the bridge inspector in the inspection report. These items are collected and stored in HSIS.

It should also be noted that time-critical repairs (deck patching, bridge hit response) are also considered operational bridge maintenance actions. Because of their nature, they are not identified in advance, but rather addressed immediately as the need arises.

Operational bridge maintenance actions are identified by the bridge inspector, except for time-critical repairs.

Operational bridge maintenance actions are most typically funded via Routine Maintenance Agreements (RMA).

43.2.2 Preservation Bridge Maintenance Actions

Preservation bridge maintenance actions are those aimed at extending the usable life of the given bridge. This work generally falls into two categories; cyclical and condition-based work actions.

43.2.2.1 Cyclical Work Actions

Cyclical maintenance occurs on a regular schedule and thus are a regular component of the annual Bridge Maintenance Work Plan. Cyclical work actions are performed as a preventative measure to attempt to slow deterioration and extend structure life. One example of a cyclical work action is deck washing; the intent is to remove chlorides (salts) from the deck, which accelerate deck deterioration. See Chapter 42 for more information.

Cyclical work actions are identified by BOS and verified/modified by Regional Bridge Maintenance.

Cyclical work actions are most typically funded via RMA.

43.2.2.2 Condition-Based Work Actions

Condition-based maintenance occurs irregularly based on the specific condition of an individual structure. The work action is only performed when a specific need is identified, and the work is performed to address the deficiency. One example of a condition-based work action is crack sealing.

Condition-based work actions are most commonly identified based on specific condition data (inspection reports). The work is typically identified by BOS and included in the unconstrained needs list (see 43.3.1), See Chapter 42 for more information.

Though not as common, condition-based work actions can be identified by the bridge inspector. In general, BOS and Region Bridge Maintenance engineers collaborate to determine the appropriate condition-based actions.

Condition-based work actions are funded by either Routine Maintenance Agreements (RMA), Discretionary Maintenance Agreements (DMA), and Performance-Based Maintenance (PBM); RMA is most typical.

43.2.3 Delivery Mechanisms for Bridge Maintenance Work

The general delivery mechanism for the overall structures program is shown in Figure 43.2-1.

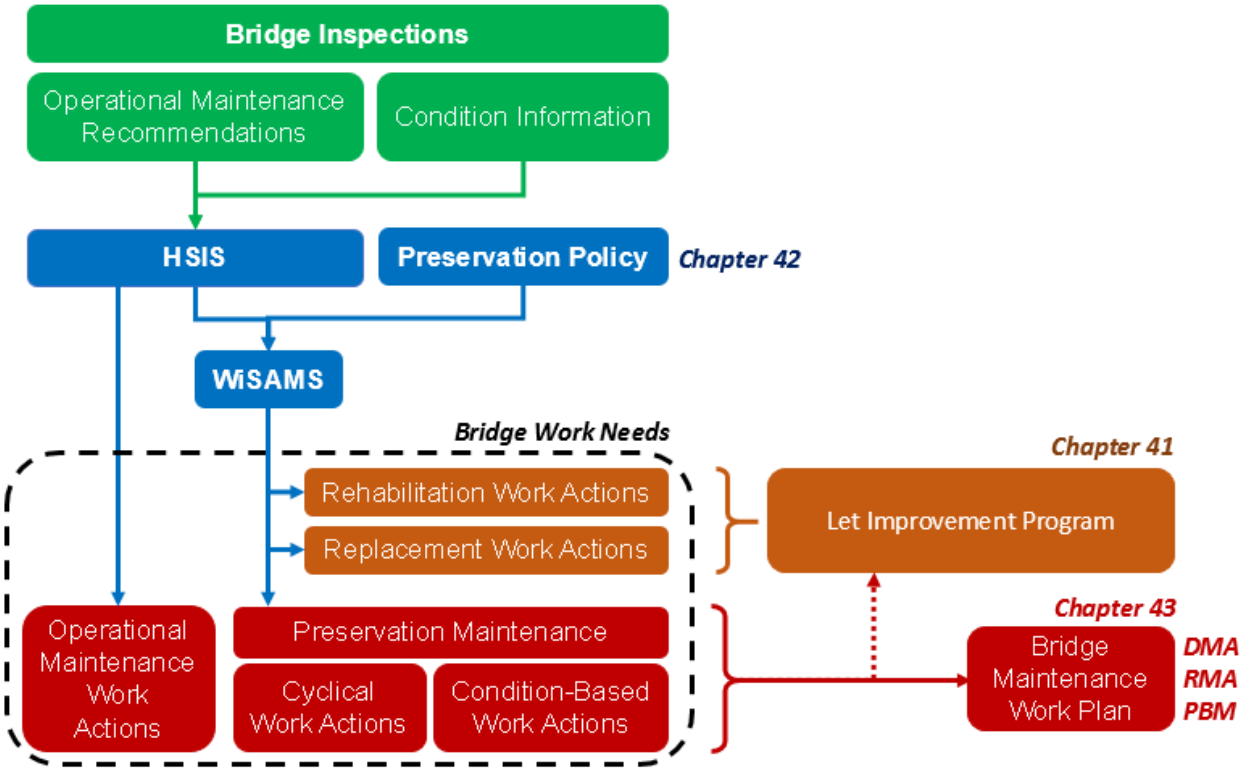

Figure 43.2-1
Overall Structures Program Delivery

Highway maintenance program funding and work force resources represent the bottom (red) portion of this diagram. The focus is on bridge maintenance, including both preservation and operational maintenance actions. Funding for bridge maintenance work comes from three primary sources; Routine Maintenance Agreements (RMA), Discretionary Maintenance Agreements (DMA), and Performance-Based Maintenance (PBM). This is illustrated in Figure 43.2-2.

Federal and state rules prohibit use of federal funding on certain preservation and maintenance activities and use of state maintenance funding on certain activities. The direction for eligibility of federal funds is outlined in FDM 3-1 Exhibit 5.2 - *Agreement for the Use of Federal Funds for Preventive Maintenance of Structures.*

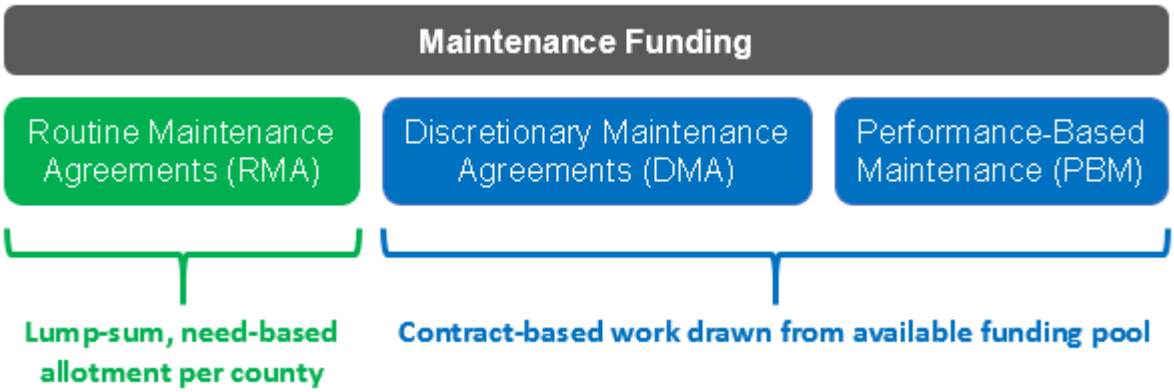

Figure 43.2-2
Maintenance Funding Mechanisms

43.3 Bridge Maintenance Work Plan Development

This section details how the Bridge Maintenance Work Plan is developed, including the parties involved and interim milestone deadlines. It's important to note that the process described here is based on the calendar year (CY), not fiscal year (FY).

43.3.1 Unconstrained Needs Identification

Using data in HSIS, WiSAMS, and maintenance items identified in inspection reports, BOS will generate a list of unconstrained maintenance needs; both operational and preservation maintenance work actions, without consideration of any fiscal constraints. This will be referred to as the Unconstrained Bridge Maintenance Needs List.

- Timeline: The Unconstrained Bridge Maintenance Needs list for the upcoming calendar year is distributed to Regional Bridge Maintenance no later than January 15.

The format of the Unconstrained Bridge Maintenance Needs List will remain intact through the entire annual cycle of the Bridge Maintenance Work Plan. This list will be used to track the changing status of the work identified and provide the data to update HSIS and produce annual maintenance program reports.

43.3.2 Draft Bridge Maintenance Work Plan

Regions use the Unconstrained Bridge Maintenance Needs List as the starting point to develop the Draft Bridge Maintenance Work Plan. Region Bridge Maintenance Engineers review the list and use on-site knowledge to edit the list, adding or deleting as needed. The Draft Bridge Maintenance Work Plan is subject to approval from BOS to ensure compliance with asset management philosophies. Prioritization and evaluation for funding that follow are primarily the responsibility of Region personnel, with input from BOS as appropriate.

- Timeline: The Draft Bridge Maintenance Work Plan is completed by February 1 of the calendar year (CY) for the work plan.

43.3.3 Bridge Maintenance Work Plan Prioritization

BHM is responsible for managing funding for the overall Highway Maintenance Work Plan. This includes funding for the Bridge Maintenance Work Plan, but also includes pavement work, winter maintenance, etc. BHM assembles all proposed work for the Highway Maintenance Work Plan and works with Region Bridge Maintenance to determine the appropriate funding level for the Bridge Maintenance Work Plan.

With the funding level determined, Region Bridge Maintenance will take the Draft Bridge Maintenance Work Plan and prioritize the list. Prioritization is done taking into account items such as (but not exclusively):

- Safety of the travelling public
- Planned future improvement work

- Required traffic control / impacts on traffic
- Criticality of the individual bridge (type, size, condition, ADT, etc.)
- Capabilities of the local service provider in question

Regional Bridge Maintenance should provide a brief explanation for work actions that did not prioritize. This information will be used in needs identification and prioritization (see 43.5).

- Timeline: The Prioritized Bridge Maintenance Work Plan is completed by February 15 of the CY for the work plan.

43.3.4 Evaluation for Appropriate Funding Source

Region Bridge Maintenance engineers and Region Program engineers review the Prioritized Bridge Maintenance Work Plan to determine the most appropriate funding type to address each identified work action. This splits the Prioritized Bridge Maintenance Work Plan into either the Improvement Program or Highway Maintenance Work Plan (RMA, PBM, DMA). The work remaining after items are pulled into the improvement program represents the Final Bridge Maintenance Work Plan.

- Timeline: Evaluation for funding source and development of the Final Bridge Maintenance Work Plan is completed no later than March 1 of CY for the work plan.

Figure 42.3-1 shows the Bridge Maintenance Work Plan development timeline.

Deliverable	Responsible Party	Timeline
Unconstrained Bridge Maintenance Needs List	• Bureau of Structures	January 15
Draft Bridge Maintenance Work Plan	• Region Maintenance • Bureau of Structures	February 1
Prioritized Bridge Maintenance Work Plan	• Bureau of Highway Maintenance • Region Maintenance	February 15
Final Bridge Maintenance Work Plan	• Region Maintenance • Region Planning	March 1

Figure 42.3-1
Bridge Maintenance Work Plan Development Timeline

43.3.5 Delivering the Bridge Maintenance Work Plan

Following prioritization, additional fields are added to the Prioritized Bridge Maintenance Work Plan for the local service providers to document work completed. This document represents the Final Maintenance Work Plan. The contracts developed with the county service providers for bridge preservation work should include the Final Bridge Maintenance Work Plan as an attachment to the "Scope of Work". This will help ensure:

- Accuracy in specific work requests to the county.
- A mechanism to track the progress and completions of work.
- A method to support invoicing by the county for work completed.
- A method to document specific bridge maintenance work performed in HSIS.

The Bureau of Highway Maintenance is the responsible party for program management for invoicing and payment. Region Bridge Maintenance is the lead for contracting with the local service providers and approving the actual work performed. Region Bridge Maintenance also acts as the technical lead, providing direction and feedback as required. Region Maintenance is also the point-of-contact for collecting and verifying documentation (as needed); see 43.4 below for more information.

- Timeline: The Bridge Maintenance Work Plan is delivered to the county service providers no later than March 15 of the CY for the work plan.

43.4 Documentation of Completed Bridge Maintenance Work

Local service providers shall submit a copy of the Final Bridge Maintenance Work Plan to Region Bridge Maintenance. The work plan includes areas to document information related to completed work items. It should be noted that the Final Bridge Maintenance Work Plan includes columns to capture cost data. This information is critical. As WisDOT refines the structures asset management program, this cost data will be a parameter in cost-benefit analysis and resource allocation decisions.

Region Bridge Maintenance is the lead for working with the local service providers to collect the completed Final Bridge Maintenance Work Plan. Region Maintenance will review and verify (as necessary) and then submit to BOS for inclusion in HSIS.

Timeline: Documentation is complete and back to Region Bridge Maintenance by November 15. Regions review, verify (as needed) and deliver documentation to BOS by December 15.

An overview of the entire process is shown below in Figure 43.4-1.

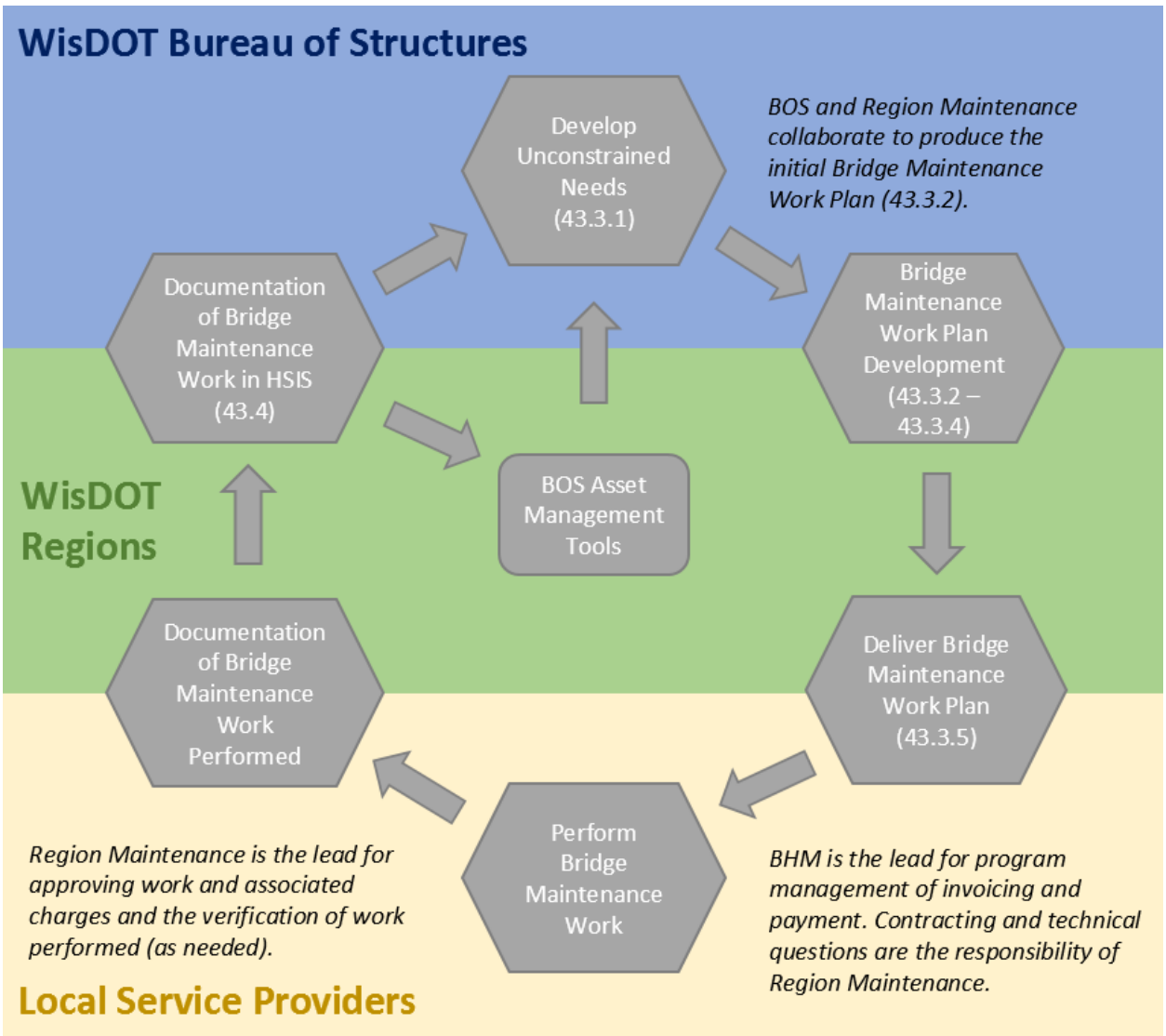

Figure 43.4-1
Bridge Maintenance Workflow and Responsibilities

43.5 Bridge Maintenance Work Reporting

Analyzing data collected from the Final Bridge Maintenance Work Plan is critical to understanding the cost-benefit of performing bridge maintenance activities. BOS will determine the appropriate program reports and share with affected stakeholders, including Region Bridge Maintenance.

It must be noted that there are no goals or target levels associated with these reports at this time. This is currently an information-gathering and analysis exercise to determine the impacts of past work to help shape the direction of future work. BOS will analyze and present the data in a manner to best inform WisDOT and DTSD management on the optimal level of funding for bridge maintenance work and how those funds might best be spent.

- Timeline: BOS will produce bridge maintenance work reports by February 1 for the previous calendar year.

43.6 Definitions

Highway Maintenance Program: The funding mechanism or collection of funding mechanisms by which WisDOT contracts with local service providers to perform maintenance work. The Highway Maintenance Program is inclusive of all transportation infrastructure maintenance including bridge maintenance, but also pavement maintenance and more.

Highway Maintenance Work Plan (HMWP): The list of specific work actions to be performed through the Highway Maintenance Program as described above. It includes work actions on bridges, but also pavements and more. See 43.1.1 and Figure 43.1-2.

Bridge Maintenance Work Plan: This plan addresses bridge maintenance work and is appropriate work for local service providers. The Bridge Maintenance Work Plan is a subset of the larger Highway Maintenance Work Plan.

Bridge Maintenance Actions: This term encompasses both Operational and Preservation bridge maintenance actions.

Operational Bridge Maintenance Actions: Actions necessary for the regular operation of a bridge; actions necessary to maintain the bridge in a serviceable condition.

Preservation Bridge Maintenance Actions: Bridge Preservation is defined as actions or strategies that prevent, delay, or reduce deterioration of bridges or bridge elements, restore the function of existing bridges, keep bridges in good or fair condition and extend their service life. Preservation actions may be cyclic or condition-driven.

Highway Structures Information System: Highway Structures Information System (HSIS) is the system developed by WisDOT for managing the inventory and inspection data of all highway structures. The inspection data is collected in accordance with the NBIS and *2019 AASHTO Manual for Bridge Element Inspection.*

Wisconsin Structures Asset Management System (WiSAMS): Automated application to determine optimal work candidates for improving the condition of structures. This application serves as a programming and planning tool for structures improvements, rehabilitations, maintenance, and preservation. This application coupled with the Highways Structures Information System (HSIS) serves as a comprehensive Structures (Bridge) Management system.

43.7 References

1. FDM 3-1 Exhibit 5.2 Agreement for the Use of Federal Funds for Preventive Maintenance of Structures. (May 2016). (https://wisconsindot.gov/rdwy/fdm/fd-03-05-e0502.pdf#fd3-5e5.2)

2. Highway Maintenance Manual (https://wisconsindot.gov/Pages/doing-bus/local-gov/hwy-mnt/mntc-manual/default.aspx)

Table of Contents

45.1 Introduction 5
45.1.1 Purpose of the Load Rating Chapter 5
45.1.2 Scope of Use 5
45.1.3 Governing Standards for Load Rating 5
45.1.4 Purpose of Load Rating 6
45.2 History of Load Rating 7
45.2.1 What is a Load Rating? 7
45.2.2 Evolution of Design Vehicles 7
45.2.3 Evolution of Inspection Requirements 8
45.2.4 Coupling Design with In-Service Loading 9
45.2.5 Federal Bridge Formula 9
45.3 Load Rating Process 10
45.3.1 Load Rating a New Bridge (New Bridge Construction) 10
45.3.1.1 When a Load Rating is Required (New Bridge Construction) 10
45.3.2 Load Rating an Existing (In-Service) Bridge 10
45.3.2.1 When a Load Rating is Required (Existing In-Service Bridge) 11
45.3.3 What Should be Rated 11
45.3.3.1 Superstructure 12
45.3.3.2 Substructure 14
45.3.3.3 Deck 15
45.3.4 Data Collection 15
45.3.4.1 Existing Plans 15
45.3.4.2 Shop Drawings and Fabrication Plans 15
45.3.4.3 Inspection Reports 16
45.3.4.4 Other Records 16
45.3.5 Highway Structure Information System (HSIS) 17
45.3.6 Load Rating Methodologies – Overview 17
45.3.7 Load and Resistance Factor Rating (LRFR) 17
45.3.7.1 Limit States 19
45.3.7.2 Load Factors 22
45.3.7.3 Resistance Factors 23
45.3.7.4 Condition Factor: ϕ_C 23

45.3.7.5 System Factor: ϕ_S 24
45.3.7.6 Design Load Rating 24
45.3.7.6.1 Design Load Rating Live Load 25
45.3.7.7 Legal Load Rating 25
45.3.7.7.1 Legal Load Rating Live Load 25
45.3.7.8 Permit Load Rating 25
45.3.7.8.1 Permit Load Rating Live Load 25
45.3.7.9 Load Distribution for Load and Resistance Factor Rating 26
45.3.8 Load Factor Rating (LFR) 26
45.3.8.1 Load Factors for Load Factor Rating 27
45.3.8.2 Live Loads for Load Factor Rating 29
45.3.8.3 Load Distribution for Load Factor Rating 29
45.3.9 Allowable Stress Rating (ASR) 29
45.3.9.1 Stress Limits for Allowable Stress Rating 30
45.3.9.2 Live Loads for Allowable Stress Rating 30
45.3.9.3 Load Distribution for Allowable Stress Rating 30
45.3.10 Engineering Judgment, Condition-Based Ratings, and Load Testing 31
45.3.11 Refined Analysis 32
45.4 Load Rating Computer Software 34
45.4.1 Rating Software Utilized by WisDOT 34
45.4.2 Computer Software File Submittal Requirements 34
45.5 General Requirements 35
45.5.1 Loads 35
45.5.1.1 Material Unit Weights 35
45.5.1.2 Live Loads 35
45.5.1.3 Dead Loads 36
45.5.2 Material Structural Properties 36
45.5.2.1 Reinforcing Steel 36
45.5.2.2 Concrete 37
45.5.2.3 Prestressing Steel Strands 38
45.5.2.4 Structural Steel 39
45.5.2.5 Timber 39
45.5.2.5.1 Timber Adjustment Factors 40

45.6 WisDOT Load Rating Policy and Procedure – Superstructure 42
45.6.1 Prestressed Concrete 42
45.6.1.1 I-Girder 42
45.6.1.1.1 Variable Girder Spacing (Flare) 43
45.6.1.2 Box and Channel Girders 43
45.6.2 Cast-in-Place Concrete 43
45.6.2.1 Slab (Flat or Haunched) 43
45.6.3 Steel 43
45.6.3.1 Fatigue 44
45.6.3.2 Rolled I-Girder, Plate Girder, and Box Girder 44
45.6.3.2.1 Curvature and/or Kinked Girders 45
45.6.3.2.2 Skew 45
45.6.3.2.3 Variable Girder Spacing (Flare) 46
45.6.3.3 Truss 46
45.6.3.3.1 Gusset Plates 46
45.6.3.4 Bascule-Type Movable Bridges 46
45.6.4 Timber 46
45.6.4.1 Timber Slab 46
45.7 WisDOT Load Rating Policy and Procedure – Substructure 48
45.7.1 Timber Pile Abutments and Bents 48
45.8 WisDOT Load Rating Policy and Procedure – Culverts 49
45.8.1 Rating New Culverts 49
45.8.1.1 New Concrete Box Culverts 49
45.8.1.2 New Concrete Pipe Culverts 49
45.8.1.3 New Steel Pipe Culverts 49
45.8.2 Rating Existing (In-Service) Culverts 50
45.8.2.1 In-Service Concrete Box Culverts 50
45.8.2.2 In-Service Concrete Pipe Culverts 50
45.8.2.3 In-Service Steel Pipe Culverts 51
45.9 Load Rating Documentation and Submittals 52
45.9.1 Load Rating Calculations 52
45.9.2 Load Rating Summary Forms 52
45.9.3 Load Rating on Plans 53

45.9.4 Computer Software File Submittals 54
45.9.5 Submittals for Bridges Rated Using Refined Analysis 54
45.9.6 Other Documentation Topics 54
45.10 Load Postings 57
45.10.1 Overview 57
45.10.2 Load Posting Live Loads 57
45.10.3 Load Posting Analysis 63
45.10.3.1 Limit States for Load Posting Analysis 64
45.10.3.2 Legal Load Rating Load Posting Equation (LRFR) 65
45.10.3.3 Distribution Factors for Load Posting Analysis 65
45.10.4 Load Posting Signage 65
45.11 Over-Weight Truck Permitting 67
45.11.1 Overview 67
45.11.2 Multi-Trip (Annual) Permits 67
45.11.3 Single Trip Permits 67
45.12 Wisconsin Standard Permit Vehicle (Wis-SPV) 69
45.12.1 Background 69
45.12.2 Analysis 69
45.13 References 71
45.14 Rating Examples 73

45.1 Introduction

Constructed in 1928, the Silver Bridge was an eyebar-chain suspension bridge spanning over the Ohio River between Point Pleasant, West Virginia and Gallipolis, Ohio. On December 15th, 1967 the bridge collapsed, killing 46 people. The resulting investigation revealed that the cause of the collapse was the failure of a single eyebar in a suspension chain. In addition, post-failure analysis showed that the Silver Bridge had been carrying much heavier loads than what it had been originally designed for. At the time of its original design, a typical automobile weighed around 1,500 lbs and the maximum permitted gross weight for a truck was 20,000 lbs. In 1967, those figures had increased to 4,000 lbs and 60,000 lbs respectively.

The Silver Bridge tragedy prompted the bridge engineering community to re-evaluate accepted practice. Clearly, what had been accepted practice was no longer sufficient to guarantee the safety of the travelling public. The Silver Bridge investigation resulted in the development of the National Bridge Inspection Standards (NBIS). These standards require each State Highway Department of Transportation to inspect, prepare reports, and determine load ratings for bridge structures on all public roads. Soon after the development of the NBIS, supporting documents, including the FHWA Bridge *Inspector's Reference Manual* and the AASHTO *Manual for Condition Evaluation of Bridge*s were developed to help in implementing these standards.

45.1.1 Purpose of the Load Rating Chapter

The purpose of this chapter is to document Wisconsin Department of Transportation (WisDOT) policy and procedures as they relate to the load rating and load posting of structures in the state of Wisconsin. The development of a load rating may require some degree of engineering judgment. This chapter aims to provide direction on best practice as it relates to these load rating decisions. Guidance is also provided for recommended procedures and required documentation.

45.1.2 Scope of Use

All requirements presented in this chapter are to be followed by WisDOT Bureau of Structures (BOS) staff, as well as any consultants performing load rating or load posting work for WisDOT. Local municipalities and consultants working on their behalf shall also follow the requirements of this chapter.

45.1.3 Governing Standards for Load Rating

The two primary sources for load rating and load posting guidance in Wisconsin are the AASHTO *Manual for Bridge Evaluation (MBE)* and this chapter of the *Wisconsin Bridge Manual*.

AASHTO Manual for Bridge Evaluation (MBE)

In 2011, AASHTO released *The Manual for Bridge Evaluation (MBE)*. The manual replaced the earlier manuals: *The Manual for Condition Evaluation and Load and Resistance Factor Rating (LRFR) of Highway Bridges (AASHTO LRFR) and Manual for Condition Evaluation of*

Bridges. Although the manual emphasizes the LRFR method, it also provides rating procedures for the Load Factor Rating (LFR) and Allowable Stress Rating (ASR) methodologies. For this reason, it will be the governing manual utilized by WisDOT for load rating structures.

Wisconsin Bridge Manual (WBM), Chapter 45

The Wisconsin Bridge Manual is not an exhaustive resource for load rating and load posting requirements. Unless noted otherwise, this chapter is intended to serve as a supplement to the AASHTO MBE, offering commentary, interpretations, clarification, or additional information as deemed necessary.

Two other commonly utilized references are:

- AASHTO Standard Specification for Highway Bridges, 17th Edition – 2002
- AASHTO LRFD Bridge Design Specifications

See 45.13 for a more complete list of recommended references.

45.1.4 Purpose of Load Rating

Above all else, the primary purpose of a load rating is to ensure that every bridge in the Wisconsin inventory is safe for public use; that it can safely carry legal-weight traffic. The definition of "legal-weight" is discussed in more detail in 45.2.4 and 45.2.5. When the load rating for a bridge decreases beyond a certain threshold – when it can no longer safely carry legal-weight traffic - it may be necessary to restrict heavier loads in order to maintain safety. This is what is referred to as a load posting and is presented in more detail in 45.10.

There are secondary purposes for maintaining load ratings for every structure in the state. Some of these include:

- The Federal Highway Administration (FHWA) requires a current load rating for each bridge as a part of the state National Bridge Inventory (NBI) report.
- Load ratings and load rating analysis files are used for the evaluation of over-weight permit vehicles.
- Decisions on repair and rehabilitation activities are affected by load ratings.
- Decisions on planning for bridge rehabilitation and replacements are affected by load ratings.

45.2 History of Load Rating

This section provides a historical perspective on the load rating process. The intent is to provide a historical context for current load rating and load posting practices in order for load rating engineers to better understand both AASHTO, FHWA, and WisDOT policies.

45.2.1 What is a Load Rating?

A load rating is the relative measure of a structure's capacity to carry live load. As standard practice, FHWA currently requires that two capacity ratings be submitted with the NBI file; the inventory rating and operating rating. The inventory rating is the load level that a structure can safely sustain for an indefinite period. The operating rating is the absolute maximum permissible load level to which a structure may be subjected. As stated above, a load rating is the relative measure of a structure's capacity to carry live load. The logical next question is, "relative to what?" It would be convenient if a simple parameter such as gross vehicle weight could be used to determine a bridge's capacity. However, the actual capacity depends on many factors, such as the gross vehicle weight, the axle configuration, the distribution of loads between the axles, the tire gauge on each axle, etc. It is a generally accepted principle that a bridge that can carry a given load on two axles is capable of carrying the same load (or potentially a larger load) spread over several axles.

In general, FHWA requires that the standard AASHTO HS truck or lane loading be used as the live load when load rating with the Load Factor Rating method (LFR) and the Allowable Stress Rating (ASR) and that the AASHTO HL-93 loading be utilized as the live load when load rating with the Load and Resistance Factor method (LRFR). These standard rating vehicles and rating methodologies are discussed in greater detail in 45.3.6.

45.2.2 Evolution of Design Vehicles

As it is not practical to rate a bridge for the nearly infinite number of axle configurations of trucks on our highways, bridges are rated for standard vehicles that are representative of the actual vehicles in use. As was noted during the investigation of the Silver Bridge collapse (see 45.1), the weight of vehicles travelling over the nation's inventory of bridges has changed dramatically over time. As the size and configuration of vehicles operating on the road has changed, so have the standard design vehicles.

Early bridge design in the United States lacked standardization regarding design live loads. Prior to the widespread presence of automobiles, design live loads were taken as surface loads, intended to represent pedestrian and horse traffic. Documentation in various publications from the early 1900s suggests that 80 psf may have been commonly used. An article in *Engineering News* in 1914 illustrates the opinion that better live load models were necessary, stating, "…these older types of loading are inadequate for purposes of design to take care of modern conditions; they should be replaced by some types of typical motor trucks." A number of live load models were proposed by various entities in the following years, but the first live load that resembled modern day loads was introduced in 1931 in the 1st Edition of the AASHTO Standard Specification for Highway Design. The basic design vehicle in this code was a single unit truck weighing 40,000 lbs. – the H20 design vehicle (See Figure 3.7.6A of the AASHTO Standard Specifications for Highway Bridges, 17th Edition).

As the network of roads and bridges in the United States grew, so did the size and weight of the vehicles operating on them. Recognizing this, the engineering community moved to reflect the changing transportation landscape in the 1944 AASHTO Standard Specification by introducing the HS-20 design vehicle; a tractor-semi trailer combination with three axles, weighing a total of 72,000 lbs. (See Figure 3.7.7A of the AASHTO Standard Specifications for Highway Bridges, 17th Edition) This remains the primary rating vehicle for Load Factor Rating (LFR) and Allowable Stress Rating (ASR). Rating methodologies are discussed further in 45.3.6.

The growth in size and weight of in-service vehicles has continued, and current AASHTO design vehicles are not guaranteed to reflect the actual in-service loading. In the late 1970s and early 1980s, some states moved to using an HS-25 design vehicle in order to more closely approximate an observed increase in the size and weight of truck traffic. Wisconsin adopted an HS-25 design vehicle for a short period of time around 2005 as a precursor to adopting Load and Resistance Factor Design and Rating (LRFD/LRFR).

Discussed in more detail in 45.3.7, LRFD was the next dramatic change in the standard design vehicle. Designated as HL-93, the LRFD design loads include a design vehicle identical to the HS-20, but also include a number of other live load models, including a lane load, a tandem, a double-truck, and a fatigue truck. The HL-93 loading represents the most current design live loads, per AASHTO code. See 17.2.4.2 for a more detailed treatment of the HL-93 loading.

45.2.3 Evolution of Inspection Requirements

In the years following World War II, the United States saw a boom in the construction of roads and bridges. As we're aware today, maintaining accurate, up-to-date documentation on the condition of a bridge is critical to assessing its load carrying capacity; its load rating. However, during this period of expansion, little emphasis was placed on safety inspections or maintenance of in-service bridges. This changed with the Silver Bridge collapse, referenced above. In 1971, the National Bridge Inspection Standards (NBIS) were published, creating national policy regarding inspection procedures, frequency of inspections, qualifications of inspection personnel, inspection reports, and maintenance of state bridge inventories.

While the NBIS represented a dramatic step forward in terms of maintaining safe bridges for the travelling public, the history of bridge design, rating, and inspection is largely reactionary. In the late 1970s, several significant culvert failures prompted an increased emphasis on culverts, eventually resulting in the *Culvert Inspection Manual*, published in 1986. The failure of the Mianus River Bridge in Connecticut in 1983 was a catalyst in the creation of the *Inspection of Fracture Critical Bridge Members*, published in 1986. FHWA published a technical advisory in 1988, *Scour at Bridges*, in response to the collapse of the Schoharie Creek Bridge in New York in 1987 due to scour. Closer to home, the 2000 failure of one of the spans of the Hoan Bridge in Milwaukee, WI brought to national attention to potential danger of highly-constrained connection details. And most recently, the collapse of the I-35W bridge in Minneapolis, MN highlighted the need to more closely inspect and load rate gusset plates. The National Bridge Inspection Standards are under continual review to ensure that the best information is available to engineers who design, load rate, repair, and rehabilitate bridge structures. Discussed in more detail in 45.3.4.3, it is critical that the load rating engineer review

the most recent inspection reports and consider the current state of deterioration when load rating a bridge.

45.2.4 Coupling Design with In-Service Loading

As discussed above, design live load vehicles have evolved through the years in an attempt to accurately represent actual in-service traffic. However, until the mid-1950s, there was no legislative connection between the size and weight of in-service traffic and the design capacity of the nation's bridges. Put more simply, with some local or regional exceptions, it was generally legal to drive any size truck, anywhere. In 1956, this began to change. Congress legislated limits on maximum axle weight (18,000 lbs. on a single axle, 32,000 lbs. for a tandem axle), and gross weight (73,280 lbs.), though there were "grandfather" provisions included. However, even with these limitations, it was still very possible to have a vehicle configuration deemed legal according to the above provisions, but that would induce force effects in excess of the bridge design capacity. Arguably the most significant change in truck size and weight legislation came in 1974 when Congress established the Federal Bridge Formula. The Federal Bridge Formula remains the foundation of truck size and weight legislation today.

45.2.5 Federal Bridge Formula

In the late 1950s, AASHTO conducted an extensive series of field tests to study the effects of truck traffic on pavements and bridges. Based on these tests and an extensive structural analysis effort, the Federal Bridge Formula was developed. The formula is intended to limit the weights of shorter trucks to levels which will limit the overstress in well-maintained bridges designed with HS-20 loading to about 3% and in well-maintained HS-15 bridges to about 30%. While often displayed in table format, the actual formula is as follows.

$$W = 500\{\left[\frac{LN}{N-1}\right] + 12N + 36\}$$

Where: W = the maximum weight in pounds that can be carried on a group of two or more axles to the nearest 500 lbs.

L = the spacing in feet between the outer axles of any two or more axles

N = the number of axles being considered

There are numerous resources readily available to more extensively explain the use of the formula, but it's important to note that the allowable weight is dependent on the number of axles and the axle spacing. In general, the Federal Bridge Formula is the basis of defining a legal-weight vehicle configuration in Wisconsin. Unless specifically covered via state statute, vehicles that do not conform to the formula must apply for a permit in order to travel over bridges in the Wisconsin. Over-weight truck permitting is discussed further in 45.11. When it is determined that a bridge is not able to safely carry the legal-weight loads, the structure must be load posted. Load postings are discussed in more detail in 45.10.

45.3 Load Rating Process

The following section provides direction on general policies and procedures related to the process for developing a bridge load rating for WisDOT.

45.3.1 Load Rating a New Bridge (New Bridge Construction)

New bridges shall be rated using Load and Resistance Factor Rating (LRFR) methodology. See 45.3.6 for a discussion on rating methodologies.

45.3.1.1 When a Load Rating is Required (New Bridge Construction)

It is mandatory for all new bridges to be load rated. Bridges being analyzed for staged construction shall satisfy the requirements of LRFR for each construction stage. For staged construction, utilize the same load factors, resistance factors, load combinations, etc. as required for the final configuration, unless approved by the WisDOT Bureau of Structures Rating Unit.

45.3.2 Load Rating an Existing (In-Service) Bridge

If an existing bridge was designed using LRFD methodology, it shall be rated using LRFR.

If an existing bridge was designed using Load Factor Design (LFD) methodology, it shall be rated using Load Factor Rating (LFR). It is also acceptable to rate using LRFR, but this shall be approved in advance by the WisDOT Bureau of Structures Rating Unit.

If an existing bridge was designed using Allowable Stress Design (ASD) methodology, it shall be rated using LFR. It is also acceptable to rate using LRFR, but this shall be approved in advance by the WisDOT Bureau of Structures Rating Unit. There is an exception for bridges with timber or concrete masonry superstructures. For these types only, it is acceptable to utilize Allowable Stress Rating (ASR). See 45.3.6 for a discussion on rating methodologies.

Bridges being analyzed for staged construction during a rehabilitation project shall satisfy the requirements of the appropriate rating methodology (LRFR, LFR, or ASR) for each construction stage. Utilize the same load factors, resistance factors, load combinations, etc. as required for the final configuration, unless approved by the WisDOT Bureau of Structures Rating Unit.

Consultants are required to investigate the level of effort required for a given load rating prior to negotiating a contract with WisDOT. This is critical in order to accurately estimate the number of hours required for the load rating. It is also strongly recommended that the rating analysis be performed as early as possible for a rehabilitation project, in the case the ratings are unexpectedly low and the scope of the project requires adjustment in order to improve the ratings.

45.3.2.1 When a Load Rating is Required (Existing In-Service Bridge)

WisDOT policy items:

The load rating effort for rehabilitation projects is intended to be independent of previous ratings. Previous analysis files should be used for information and verification purposes only.

Bridges shall be load rated for any project that results in a change in the loads applied to a structure or to an individual structural element that would typically require a load rating (See 45.3.3 for requirements on what elements should be rated). This requirement includes any of (but is not limited to) the following activities:

- Superstructure replacement
- Deck replacement
- Deck overlays
  - New overlays – concrete, asphalt, or polymer
  - Removal of existing overlays and placement of a new overlay
- Bridge widenings
- Superstructure alterations (re-aligning girders, adding girders, etc.)

(Note: WisDOT recognizes that some of the activities noted above may not result in an appreciable change to the load rating. However, it is WisDOT policy to use these instances as an opportunity for quality control of the load rating for that structure and to verify that the load rating takes into account any current deterioration.)

Bridges shall be load rated if there is noted (inspection reports or otherwise) a significant change in the ability of a member to carry load, i.e. deterioration or distortion.

Bridges require a load rating assessment due to impact damage. This assessment may not necessarily include a re-calculation of the load rating if the damage is deemed to be minimal by a qualified engineer.

45.3.3 What Should be Rated

In general, primary load-carrying members are required to be load rated. Secondary elements may be load rated if there is significant deterioration or if there is question regarding the original design capacity. The load rating engineer is responsible for the decision on load rating secondary elements.

If the load rating engineer, utilizing engineering judgment, determines that certain members or components will not control the rating, then a full analysis of the non-controlling element is not required. Justification for member selection should be clearly stated in the load rating

calculations submitted to WisDOT Bureau of Structures. See 45.9 for more information on submittal requirements.

45.3.3.1 Superstructure

- Steel Girder Structures

Primary elements for rating include girders (interior and exterior), floorbeams (if present), and stringers (if present). The concrete deck as it relates to any composite action with the girder (and potentially reinforcing steel in the deck for negative moment applications), is also part of the primary system. While cross frames are considered primary members in a curved girder structure or steel tub girder, these members are not considered to be controlling members, and do not need to be analyzed for load rating purposes. If the inspection report indicates signs of distortion or buckling, the cross frame shall be evaluated and the effects on the adjacent girders considered.

Shiplap joints (if present), and pin-and-hanger joints (if present) also may be considered primary elements. Contact the Bureau of Structures Rating Unit to discuss load ratings for these elements.

Secondary elements include bolted web or flange splices, cross frames and/or diaphragms, stringer-to-floorbeam connections (if present), and floorbeam-to-girder connections (if present).

- Prestressed Concrete Girder Structures

Primary elements for rating include prestressed girders (interior and exterior). The concrete deck (and potentially reinforcing steel in the deck for negative moment applications), as it relates to any composite action with the girder, is also part of the primary system.

Secondary elements include diaphragms.

- Concrete Slab Structures

Primary elements for rating include the structural concrete slab.

Another primary element for rating could include an integral concrete pier cap, if there is no pier cap present. This would take the form of increased transverse reinforcement at the pier, likely combined with a haunched slab design.

- Steel Truss Structures

Primary elements for rating include truss chord members, truss diagonal members, gusset plates connecting truss chord or truss diagonal members, floor beams (if present), and stringers (if present). If any panel points of the truss were designed as braced, bracing members and connections may be considered primary elements.

Secondary elements include splices, stringer-to-floorbeam connections (if present), floorbeam-to-truss connections (if present), lateral bracing, and any gusset plates used to connect secondary elements.

- Timber Girder or Slab Structures

Primary elements for rating include timber girders or timber slab members.

Secondary elements include diaphragms (solid sawn or cross-bracing), stiffener beams, or any tie rods that are present.

- Concrete Box or Channel Structures

Primary elements for rating include concrete box girders.

Secondary elements include diaphragms and shiplap joint connections (if present).

- Additional Elements and Other Structures Types

Transfer girders, straddle bents and/or integral pier caps are considered primary elements. If these elements are present supporting the superstructure to be rated, they are to be included in the load rating.

Other superstructure types should be load rated based on the judgment of the load rating Engineer of Record. The structure types noted below most likely require refined analysis methods to accurately determine the controlling load rating. See 45.3.11 for WisDOT guidance on refined analysis.

- Steel arch
- Curved or kinked steel girder
- Steel tub girder
- Rigid frame structure (steel or concrete)
- Steel bascule or vertical lift
- Cable-stayed or suspension
- Other more complex structure types that may require efforts beyond typical line girder analysis

As with more typical superstructure types, the load rating engineer should thoroughly review inspection reports when making the decision on what superstructure elements may require a load rating.

45.3.3.2 Substructure

Substructures generally do not control the load rating. Scenarios where substructure element conditions may prompt a load rating include, but are not limited to:

- Collision or impact damage
- Substructure components with significant deterioration, particularly those with a lack of redundancy
- Scour, undermining, or settlement which may affect a footing's bearing capacity or a column's unbraced length

WisDOT policy items:

Reinforced concrete piers are not typically rated. However, if the pier – and particularly the pier cap - has large cracks, significant spalling, or exposed reinforcement that shows deterioration, a more thorough evaluation may be appropriate. Reinforced concrete pier caps exhibiting signs of shear cracks may also warrant further evaluation.

In general, reinforced concrete abutments do not require a load rating. However, if the abutment has large cracks, tipping, displacement, or other movement, a more thorough evaluation may be appropriate.

In either of the cases above, contact the Bureau of Structures Rating Unit to discuss the level of effort required for evaluation.

- Extensive section loss from corrosion or rot. WisDOT recommends reviewing inspection reports and paying particular attention for the following scenarios:
    - Exposed steel pile bents
    - Exposed steel pile abutments
    - Exposed timber pile bents
    - Exposed timber pile abutments
    - Exposed timber pile caps

Based on experience, WisDOT has found the above elements to be particularly susceptible to deterioration, particularly if wet conditions are present. If deterioration is significant, these substructure members may control the rating. In the case of timber piles, calculated ratings may be low, even with little or no deterioration. See 45.7.1 for further discussion on timber piles.

The load rating engineer should thoroughly review inspection reports when making the decision on what substructure elements may require a load rating.

45.3.3.3 Deck

Reinforced concrete decks on redundant, multi-girder bridges are not typically load rated. A load rating would only be required in cases of significant deterioration, damage, or to investigate particularly heavy wheel or axle loads. A deck designed using an antiquated design load (H-10, H-15, etc.) may also warrant a load rating.

Other deck types (timber, filled corrugated steel) generally have lower capacity than reinforced concrete decks. This should be taken under consideration when load rating a structure with one of these deck types. Other deck types may also be more susceptible to damage or deterioration.

It is the responsibility of the load rating engineer to determine if a load rating for the deck is required.

45.3.4 Data Collection

Proper and complete data collection is essential for the accurate load rating of a bridge. It is the responsibility of the load rating engineer to gather all essential data and to assess its reliability. When assumptions are used, they should be noted and justified.

45.3.4.1 Existing Plans

Existing design plans are used to determine original design loads, bridge geometry, member section properties, and member material properties. It is important to review all existing plans; original plans as well as plans for any rehabilitation projects (deck replacements, overlays, etc.). If possible, as-built plans should be consulted as well. These plans reflect any changes made to the design plans during construction. Repair plans that document past repairs to the structure may also be available and should be reviewed, if they exist.

If no plans exist or if existing plans are illegible, field measurements may be required to determine bridge geometries and member section properties. Assumptions may have to be made on material properties. Direction on material assumptions is addressed in 45.5.2.

45.3.4.2 Shop Drawings and Fabrication Plans

Shop drawings and fabrication plans can be an extremely valuable source of information when performing a load rating. Shop drawings and fabrication plans are probably the most accurate documentation of what members and materials were actually used during construction, and may contain information not found in the design plans.

WisDOT has an inventory of shop drawings and fabrication plans, but they do not exist for every existing bridge. If the load rating engineer feels shop drawings and/or fabrication plans are required in order to accurately perform the load rating, contact the Bureau of Structures Rating Unit for assistance.

45.3.4.3 Inspection Reports

When rating an existing bridge, it is critical to review inspection reports, particularly the most recent report. Any notes regarding deterioration, particularly deterioration in primary load-carrying members, should be paid particular attention. It is the responsibility of the load rating engineer to evaluate any recorded deterioration and determine how to properly model that deterioration in a load rating analysis. Reviewing historical inspection reports can offer insight as to the rate of growth of any reported deterioration. Inspection reports can also be used to verify existing overburden.

Inspections of bridges on the State Trunk Highway Network are performed by trained personnel from the Regional maintenance sections utilizing guidelines established in the latest edition of the *WisDOT Structure Inspection Manual*. Engineers from the Bureau of Structures may assist in the inspection of bridges with unique structural problems or when it is suspected that a reduction in load capacity is warranted. To comply with the National Bridge Inspection Standards (NBIS), it is required that all bridges be routinely inspected at intervals not to exceed two years. More frequent inspections are performed for bridges which are posted for load capacity or when it is warranted based on their condition. In addition, special inspections such as underwater diving or fracture critical are performed when applicable. Inspectors enter inspection information into the Highway Structures Information System (HSIS), an on-line bridge management system developed by internally by WisDOT. For more information on HSIS, see 45.3.5. For questions on inspection-related issues, please contact the Bureau of Structures Maintenance Section.

45.3.4.4 Other Records

Other records may exist that can offer additional information or insight into bridge design, construction, or rehabilitation. In some cases, these records may override information found in design plans. It is the responsibility of the load rating engineer to gather all pertinent information and decide how to use that information. Examples of records that may exist include:

- Standard plans – generic design plans that were sometimes used for concrete t-girder structures, concrete slab structures, steel truss structures, and steel through-girder structures.
- Correspondences
- Material test reports
- Mill reports
- Non-destructive test reports
- Photographs
- Repair records
- Historic rating analysis

Once a bridge has been removed, records are removed from HSIS. However, if the bridge was removed after 2003, information may still be available by contacting the Bureau of Structures Bridge Management Unit.

45.3.5 Highway Structure Information System (HSIS)

The Highway Structure Information System (HSIS) is an on-line database used to store a wide variety of bridge information. Data stored in HSIS is used to create the National Bridge Inventory (NBI) file that is submitted annually to FHWA. Much of this data can be useful for the load rating engineer when performing a rating. HSIS is also the central source for documents such as plans and maintenance records. Other information, such as design calculations, rating calculations, fabrication drawings, and items mentioned in 45.3.4.4 may also be found in HSIS. For more information on HSIS, see the WisDOT Bureau of Structures web page or contact the Bureau of Structures Bridge Management Unit.

45.3.6 Load Rating Methodologies – Overview

There are two primary methods of load rating bridge structures that are currently utilized by WisDOT. Both methods are detailed in the AASHTO MBE. They are as follows:

- Load and Resistance Factor Rating (LRFR)
- Load Factor Rating (LFR)

Load and Resistance Factor Rating is the most current rating methodology and has been the standard for new bridges in Wisconsin since approximately 2007. LRFR employs the same basic principles as LFR for the load factors, but also utilizes multipliers on the capacity side of the rating equation, called resistance factors, to account for uncertainties in member condition, material properties, etc. This method is covered in 45.3.7, and a detailed description of this method can also be found in **MBE [6A]**.

Load Factor Rating (LFR) has been used since the early 1990s to load rate bridges in Wisconsin. The factor of safety for LFR-based rating comes from assigning multipliers, called load factors, to both dead and live loads. A detailed description of this method can be found in 45.3.8 and also in **MBE [6B]**.

Allowable Stress Rating (ASR) is a third method of load rating structures. ASR was the predominant load rating methodology prior to the implementation of LFR. It is not commonly used for modern load rating, though it is still permitted to be used for select superstructure types (See 45.3.2). The basic philosophy behind this method assigns an appropriate factor of safety to the limiting stress of the material being analyzed. The maximum stress in the member produced by actual loadings is then checked for sufficiency. A more detailed description of this method can be found in 45.3.9 below and also in **MBE [6B]**.

45.3.7 Load and Resistance Factor Rating (LRFR)

The basic rating equation for LRFR, per **MBE [Equation 6A.4.2.1-1]**, is:

$$RF = \frac{C - (\gamma_{DC})(DC) - (\gamma_{DW})(DW) \pm (\gamma_P)(P)}{(\gamma_{LL})(LL + IM)}$$

For the Strength Limit States (primary limit state when load rating using LRFR):

$$C = \phi_C \phi_S \phi R_n$$

Where the following lower limit shall apply:

$$\phi_C \phi_S \geq 0.85$$

Where:

RF	=	Rating factor
C	=	Capacity
R_n	=	Nominal member resistance
DC	=	Dead-load effect due to structural components and attachments
DW	=	Dead-load effect due to the wearing surface and utilities
P	=	Permanent loads other than dead loads
LL	=	Live load effects
IM	=	Dynamic load allowance
γ_{DC}	=	LRFR load factor for structural components and attachments
γ_{DW}	=	LRFR load factor for wearing surfaces and utilities
γ_P	=	LRFR load factor for permanent loads other than dead loads = 1.0
γ_{LL}	=	LRFR evaluation live load factor
ϕ_c	=	Condition factor
ϕ_s	=	System factor
ϕ	=	LRFR resistance factor

The LRFR methodology is comprised of three distinct procedures:

- Design Load Rating (first level evaluation) – Used for verification during the design phase, a design load rating is performed on both new and existing structures alike. See 45.3.7.6 for more information.
- Legal Load Rating (second level evaluation) – If required, the legal load rating is used to determine whether or not the bridge in question can safely carry legal-weight traffic; whether or not a load posting is required. See 45.3.7.7 for more information.

- Emergency Vehicle Load Rating – the Legal Load Rating also includes a separate analysis of FAST Act emergency vehicles (EVs), which may exceed weight limits in place for other vehicles but are considered "legal" because they do not require a permit. The emergency vehicle load rating is used to determine whether or not the bridge in question can safely carry emergency vehicles; whether or not an emergency vehicle-specific weight restriction is required.

- Permit Load Rating (third level evaluation) – The permit load rating is used to determine whether or not over-legal weight vehicles may travel across a bridge. See 45.3.7.8 for more information.

The results of each procedure serve specific uses (as noted above) and also guide the need for further evaluations to verify bridge safety or serviceability. A flow chart outlining this approach is shown in Figure 45.3-1. The procedures are structured to be performed in a sequential manner, as needed, starting with the design load rating. Load rating for emergency vehicles is only required when a bridge fails the design load rating (RF < 0.9) at the inventory level. Load rating for AASHTO legal loads is only required when a bridge fails the design load rating (RF < 1.0) at the operating level.

Note that when designing a new structure, it is required that the rating factor be greater than one for the HL-93 vehicle at the inventory level (note also that new designs shall include a dead load allotment for a future wearing surface); therefore, a legal load rating will never be required on a newly designed structure.

Similarly, only bridges that pass the legal load rating at the operating level (RF ≥ 1.0) can be evaluated utilizing the permit load rating procedures. See 45.11 for more information on over-weight permitting.

45.3.7.1 Limit States

The concept of limit states is discussed in detail in the AASHTO LRFD design code (**LRFD [3.4.1]**). The application of limit states to the design of Wisconsin bridges is discussed in 17.2.3.

Service limit states are utilized to limit stresses, deformations, and crack widths under regular service conditions. Satisfying service limits during the design-phase is critical in order for the structure in question to realize its full intended design-life. WisDOT policy regarding load rating using service limit states is as follows:

<u>Steel Superstructures</u>

- The Service II limit state shall be satisfied (inventory rating > 1.0) during design.

- For design or legal load ratings for in-service bridges, the Service II rating shall be checked at the inventory and operating level.

- The Service II limit state should be considered for permit load rating at the discretion of the load rating engineer.

Reinforced Concrete Superstructures

- WisDOT does not consider the Service I limit state during design.
- For design or legal load ratings of new or in-service bridges, the Service I rating is not required.
- The Service I limit state should be considered for permit load rating at the discretion of the load rating engineer.

Prestressed Concrete Superstructures

- The Service III limit state shall be satisfied (inventory rating > 1.0) during the design phase for a new bridge.
- For rehabilitation design load ratings of an in-service bridge, the Service III limit state should be considered for legal load rating at the discretion of the load rating engineer, but in general, it is not required for prestressed girders that do not show signs of distress. The Service III limit state is not required for a permit load rating.
- For design or legal load ratings of new or in-service bridges, the Service I limit state is not required. The Service I limit state should be considered for permit load rating at the discretion of the load rating engineer.

See Table 45.3-1 for live load factors to use for each limit state. Service limit states checks that are considered optional are shaded.

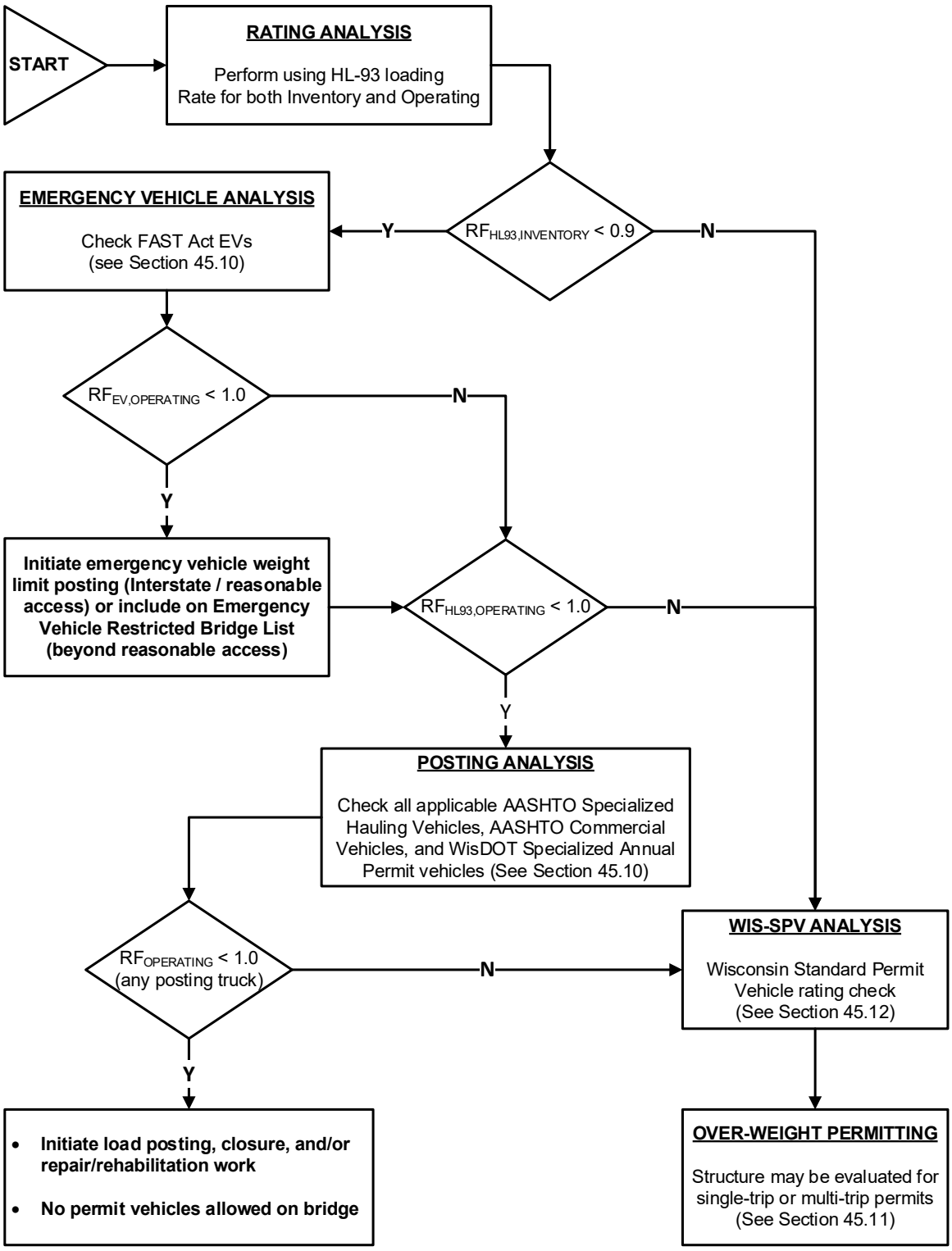

Figure 45.3-1
Load and Resistance Factor Rating Flow Chart

45.3.7.2 Load Factors

The load factors for the Design Load Rating shall be taken as shown in Table 45.3-1. The load factors for the Legal Load Rating shall be taken as shown in Table 45.3-1 and Table 45.3-2.

For emergency vehicles, alternate live load factors determined in accordance with NCHRP Project 20-07 / Task 410 may be used. If alternate live load factors are used, this shall be noted in the Load Rating Summary Form, along with assumptions of one-way ADTT and emergency vehicle crossings per day.

The load factors for the Permit Load Rating shall be taken as shown in Table 45.3-1 and Table 45.3-3 . Again, note that the shaded values in Table 45.3-1 indicate optional checks that are currently not required by WisDOT.

Bridge Type	Limit State	Dead Load DC	Dead Load DW	Design Load		Legal Load	Permit Load
				Inventory	Operating		
				LL	LL	LL	LL
Steel	Strength I, II	1.25	1.50	1.75	1.35	Table 45.3-2	Table 45.3-3
	Service II	1.00	1.00	1.30	1.00	1.30	1.00
Reinforced Concrete	Strength I, II	1.25	1.50	1.75	1.35	Table 45.3-2	Table 45.3-3
	Service I	1.00	1.00	--	--	--	1.00
Prestressed Concrete	Strength I, II	1.25	1.50	1.75	1.35	Table 45.3-2	Table 45.3-3
	Service III	1.00	1.00	0.80	--	1.00	--
	Service I	1.00	1.00	--	--	--	1.00
Timber	Strength I, II	1.25	1.50	1.75	1.35	Table 45.3-2	Table 45.3-3

Table 45.3-1
Limit States and Live Load Factors (γ_{LL}) for LRFR

Loading Type	Live Load Factor
AASHTO Legal Vehicles, State Specific Vehicles, and Lane Type Legal Load Models	1.45
Specialized Haul Vehicles (SU4, SU5, SU6, SU7)	1.45
FAST Act Emergency Vehicles (EV2, EV3) **Alternate load factors per NCHRP Project 20-07/Task 410 are allowed.*	1.30*

Table 45.3-2
Live Load Factors (γ_{LL}) for Legal Loads in LRFR

Permit Type	Loading Condition	Distribution Factor	Live Load Factor
Annual	Mixed with Normal Traffic	Two or more lanes	1.30
Single Trip	Mixed with Normal Traffic	One Lane	1.20
Single Trip	Escorted with no other vehicles on the bridge	One Lane	1.10

Table 45.3-3
Live Load Factors (γ_{LL}) for Permit Loads in LRFR

45.3.7.3 Resistance Factors

The resistance factor, ϕ, is used to reduce the computed nominal resistance of a structural element. This factor accounts for variability of material properties, structural dimensions and workmanship, and uncertainty in prediction of resistance. Resistance factors for concrete and steel structures are presented in Section 17.2.6, and resistance factors for timber structures are presented in **MBE [6A.7.3]**.

45.3.7.4 Condition Factor: ϕ_C

The condition factor provides a reduction to account for the increased uncertainty in the resistance of deteriorated members and the likely increased future deterioration of these members during the period between inspection cycles.

WisDOT policy items:

Current WisDOT policy is to set the condition factor equal to 1.0.

45.3.7.5 System Factor: ϕ_S

System factors are multipliers applied to the nominal resistance to reflect the level of redundancy of the complete superstructure system. Bridges that are less redundant will have their factor member capacities reduced, and, accordingly, will have lower ratings. The aim of the system factor is to provide reserve capacity for safety of the traveling public. See Table 45.3-4 for WisDOT system factors.

Superstructure Type	ϕ_S
Welded Members in Two-Girder/Truss/Arch Bridges	0.85
Riveted Members in Two-Girder/Truss/Arch Bridges	0.90
Multiple Eyebar Members in Truss Bridges	0.90
Three-Girder Bridges with Girder Spacing ≤ 6.0 ft	0.85
Four-Girder Bridges with Girder Spacing ≤ 4.0 ft	0.95
All Other Girder and Slab Bridges	1.00
Floorbeam Spacings > 12.0 ft and Non-Continuous Stringers	0.85
Redundant Stringer Subsystems Between Floorbeams	1.00

Table 45.3-4
System Factors for WisDOT

45.3.7.6 Design Load Rating

The design load rating assesses the performance of bridges utilizing the LRFD design loading, producing an inventory and operating rating. Note that when designing a new structure, it is required that the RF > 1.0 at the inventory level. In addition to providing a relative measure of bridge capacity, the design load rating also serves as a screening process to identify bridges that should be load rated for legal loads. If a structure has an inventory RF < 0.9, it may not be able to safely carry emergency vehicles, and if it has an operating RF < 1.0, it may not be able to safely carry other legal-weight traffic and therefore a legal load rating must be performed. If a structure has rating factors above these thesholds, , proceeding to the legal load rating is not required. However, the load rating engineer is still required to rate the Wisconsin Standard Permit Vehicle (Wis-SPV) as shown in 45.12.

45.3.7.6.1 Design Load Rating Live Load

The LRFD design live load, HL-93, shall be utilized as the rating vehicle(s). The components of the HL-93 loading are described in 17.2.4.2.

45.3.7.7 Legal Load Rating

Bridges that do not satisfy the HL-93 design load rating check (RF < 1.0 at operating level) shall be evaluated for legal loads to determine if legal-weight traffic should be restricted; whether a load posting is required. Additionally, bridges that do not satisfy the HL-93 design load rating check (RF < 0.9 at inventory level) shall be evaluated for FAST Act emergency vehicle loads to determine if emergency vehicle-specific weight limits are required. If the load rating engineer determines that a load posting is required, please notify the Bureau of Structures Rating Unit. For more information on the load posting of bridges, see 45.10.

45.3.7.7.1 Legal Load Rating Live Load

The live loads used for legal load rating calculations are a combination of AASHTO-prescribed vehicles, Wisconsin-specific vehicles, and FAST Act emergency vehicles. The vehicles to be used for the legal load rating are described in 45.10.

45.3.7.8 Permit Load Rating

Permit load rating is the level of load rating analysis required for all structures when performing the Wisconsin Standard Permit Vehicle (Wis-SPV) design check as illustrated in 45.12. The results of the Wis-SPV analysis are used in the regulation of multi-trip permits. The actual permitting process for State-owned bridges is internal to the WisDOT Bureau of Structures.

Permit load rating is also used for issuance of single trip permits. For each single trip permit, the actual truck configuration is analyzed for every structure it will cross. The single trip permitting process for State-owned bridges is internal to WisDOT Bureau of Structures.

For more information on over-weight truck permitting, see 45.11.

45.3.7.8.1 Permit Load Rating Live Load

For any bridge design (new or rehabilitation) or bridge re-rate, the Wisconsin Standard Permit Vehicle (Wis-SPV) shall be analyzed (Figure 45.3-1). Specifics on this analysis can be found in 45.12.

For specific single trip permit applications, the actual truck configuration described in the permit shall be the live load used to analyze all pertinent structures. Permit analysis for State-owned bridges is internal to the WisDOT Bureau of Structures.

WisDOT policy items:

WisDOT interpretation of **MBE [6A.4.5.4.1]** is for spans up to 200'-0", only the permit vehicle shall be considered present in a given lane. For spans 200'-0" in length or greater an additional lane

load shall be applied to simulate closely following vehicles. The lane load shall be taken as 0.2 klf in each lane and shall only be applied to those portions of the span(s) where the loading effects add to the permit load effects.

Also note, as stated in the footnote of **MBE [Table 6A.4.5.4.2a-1]**, when using a single-lane LRFD distribution factor, the 1.2 multiple presence factor should be divided out from the distribution factor equations.

45.3.7.9 Load Distribution for Load and Resistance Factor Rating

In general, live load distribution factors should be calculated based on the guidance of the current AASHTO LRFR Standard Design specifications. For WisDOT-specific guidance on the placement and distribution of live loads, see 17.2.7 or 18.4.5.1 for concrete slab superstructures and 17.2.8 for concrete deck on girder superstructures.

See also 45.5.1.2 for specific direction on the placement of live loads for rating and posting.

Dead loads shall be distributed as described in 17.2.7 for concrete slab superstructures and 17.2.8 for concrete deck on girder superstructures.

45.3.8 Load Factor Rating (LFR)

The basic rating equation for Load Factor Rating can be found in **MBE [Equation 6B.4.1-1]** and is:

$$RF = \frac{C - A_1 D}{A_2 L(1 + I)}$$

Where:

RF	=	Rating factor for the live load carrying capacity
C	=	Capacity of the member
D	=	Dead load effect on the member
L	=	Live load effect on the member
I	=	Impact factor to be used with the live load effect
A_1	=	Factor for dead load
A_2	=	Factor for live load

Unlike LRFR, load factor rating does not have three prescribed levels of rating analysis. However, in practice, the process is similar for both LRFR and LFR.

The first step is to perform a rating analysis to determine inventory and operating ratings. Based on the results of the rating analysis, a posting analysis should be performed when:

- The inventory rating factor is less than or equal to 1.0 (HS-20) – Emergency Vehicles (EVs) only, see Figure 45.10-5; or
- The operating rating factor is less than or equal to 1.2 (HS-24) – Specialized Hauling Vehicles (SHVs) only, see Figure 45.10-2; or
- The operating rating factor is less than or equal to 1.0 (HS-20) for all other posting vehicles.

An emergency vehicle analysis is performed to determine whether a bridge can safely carry emergency vehicles, which may exceed legal weight limits in place for other vehicles. A posting analysis is performed to determine whether a bridge can safely carry other legal-weight traffic. Both analyses are performed at the operating level. See 45.10 for more information.

Permit analysis is used to determine whether or not over legal-weight vehicles may travel across a bridge. See 45.11 for more information on over-weight vehicle permitting.

A flow chart outlining this approach is shown in Figure 45.3-2. The procedures are structured to be performed in a sequential manner, as needed.

45.3.8.1 Load Factors for Load Factor Rating

See Table 45.3-5 for load factors to be used when rating with the LFR method. The nominal capacity, C, is the same regardless of the rating level desired.

For emergency vehicles, alternate live load factors determined in accordance with NCHRP Project 20-07 / Task 410 may be used. If alternate live load factors are used, this shall be noted in the Load Rating Summary Form, along with assumptions of one-way ADTT and emergency vehicle crossings per day.

LFR Live Load Factors		
Rating Level	A_1	A_2
Inventory	1.3	2.17
Operating	1.3	1.3

Table 45.3-5
LFR Live Load Factors

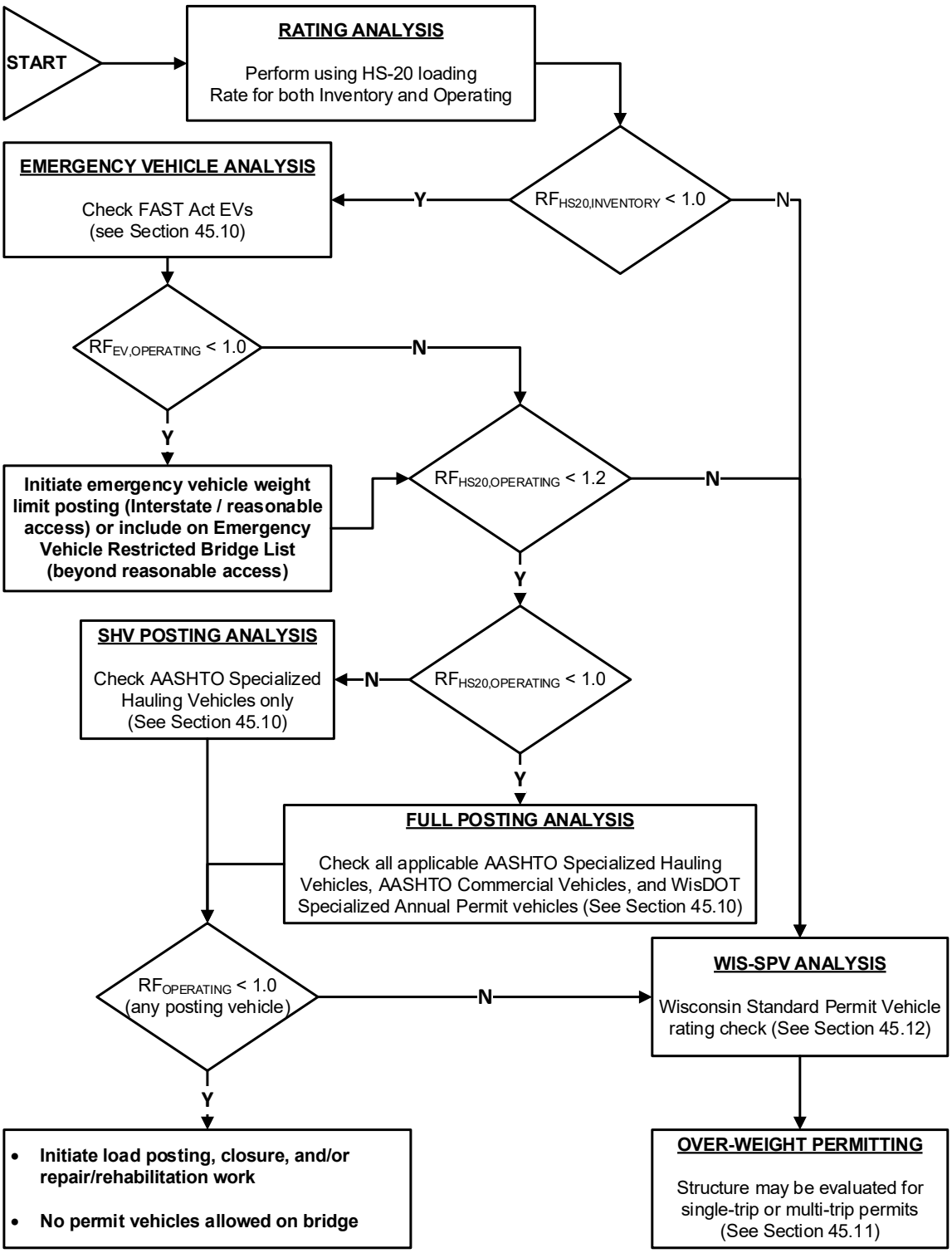

Figure 45.3-2
Load Factor Rating and Allowable Stress Rating Flow Chart

45.3.8.2 Live Loads for Load Factor Rating

Similar to LRFR, there are three potential checks to be made in LFR that are detailed in the flow chart shown in Figure 45.3-2.

- For purposes of calculating the inventory and operating rating of the structure, the live load to be used should be the HS20 truck or lane loading as shown in Figures 17.2-1 and 17.2-3.
- The live load(s) to be used for analysis are a combination of AASHTO-prescribed vehicles, Wisconsin-specific vehicles, and FAST Act emergency vehicles. For more information on load posting analysis, refer to 45.10.2.
- For conducting the Wisconsin Standard Permit Vehicle analysis, use the loading shown in Figure 45.12-1.

45.3.8.3 Load Distribution for Load Factor Rating

In general, distribution factors should be calculated based on the guidance of the *AASHTO Standard Design Specifications, 17th Edition*.

See 45.5.1.2 for specific direction on the placement of live loads for rating and posting.

Dead loads shall be distributed as described in 17.2.7 for concrete slab superstructures and 17.2.8 for concrete deck on girder superstructures.

45.3.9 Allowable Stress Rating (ASR)

The basic rating equation can be found in **MBE [Equation 6B.4.1-1]** and is:

$$RF = \frac{C - D}{L(1 + I)}$$

Where:

RF	=	Rating factor for the live load carrying capacity
C	=	Capacity of the member
D	=	Dead load effect on the member
L	=	Live load effect on the member
I	=	Impact factor to be used with the live load effect

Unlike LRFR, allowable stress rating does not have three prescribed levels of rating analysis. However, in practice, the process is similar for both LRFR and ASR.

The first step is to perform a rating analysis to determine inventory and operating ratings. Based on the results of the rating analysis, a posting analysis should be performed when:

- The inventory rating factor is less than or equal to 1.0 (HS-20) – Emergency Vehicles (EVs) only, see Figure 45.10-5; or
- The operating rating factor is less than or equal to 1.2 (HS-24) – Specialized Hauling Vehicles (SHVs) only, see Figure 45.10-2; or
- The operating rating factor is less than or equal to 1.0 (HS-20) for all other posting vehicles.

An emergency vehicle analysis is performed to determine whether a bridge can safely carry emergency vehicles, which may exceed legal weight limits in place for other vehicles. A posting analysis is performed to determine whether a bridge can safely carry other legal-weight traffic. Both analyses are performed at the operating level. See 45.10 for more information.

Permit analysis is used to determine whether or not over legal-weight vehicles may travel across a bridge. See 45.11 for more information on over-weight vehicle permitting.

A flow chart outlining this approach is shown in Figure 45.3-2. The procedures are structured to be performed in a sequential manner, as needed.

45.3.9.1 Stress Limits for Allowable Stress Rating

The inventory and operating stress limits used in ASR vary by material. See **MBE [6B]** for more information.

45.3.9.2 Live Loads for Allowable Stress Rating

Similar to LRFR and LFR, there are three potential checks to be made in ASR.

- For purposes of calculating the inventory and operating rating of the structure, the live load to be used should be the HS-20 truck or lane loading as shown in Figures 17.2-1 and 17.2-3.
- The live load(s) to be used for analysis are a combination of AASHTO-prescribed vehicles, Wisconsin-specific vehicles, and FAST Act emergency vehicles. For more information on load posting analysis, refer to 45.10.2.
- For conducting the Wisconsin Standard Permit Vehicle analysis, use the loading shown in Figure 45.12-1.

45.3.9.3 Load Distribution for Allowable Stress Rating

In general, distribution factors should be calculated based on the guidance of the *AASHTO Standard Design Specifications, 17th Edition*.

See 45.5.1.2 for specific direction on the placement of live loads for rating and posting.

Dead loads shall be distributed as described in 17.2.7 for concrete slab superstructures and 17.2.8 for concrete deck on girder superstructures.

45.3.10 Engineering Judgment, Condition-Based Ratings, and Load Testing

Engineering judgment or condition-based ratings alone shall not be used to determine the capacity of a bridge when sufficient structural information is available to perform a calculation-based method of analysis.

Ratings determined by the method of field evaluation and documented engineering judgment may be considered when the capacity cannot be calculated due to one or more of the following reasons:

- No bridge plans available
- Concrete bridges with unknown reinforcement

The engineer shall consider all available information, including:

- Condition of load carrying elements (inspection reports – current and historic)
- Year of construction
- Material properties of members (known or assumed per 45.5.2)
- Type of construction
- Redundancy of load path
- Field measurements
- Comparable structures with known construction details
- Changes since original construction
- Loading (past, present, and future)
- Other information that may contribute to making a more-informed decision

If the engineer of record is considering using a judgment- or inspection-based load rating, a thorough visual observation of the bridge should be conducted, including observing actual traffic patterns for the in-service bridge.

The criteria applied to determine a rating by field evaluation and documented engineering judgment shall be documented via the Load Rating Summary Form (see 45.9) accompanied by any and all related inspection reports, any calculation performed to assist in the rating and

assumptions used for those calculations, a written description of the observed traffic patterns for the bridge, relevant correspondences, and any available, relevant photographs of the bridge or bridge condition.

Bridge owners may also consider nondestructive proof load tests in order to establish a safe capacity for bridges in which a load rating cannot be calculated.

WisDOT policy items:

Consult the Bureau of Structures Rating Unit before moving forward with an engineering judgment-based, inspection-based load rating, or with a load testing procedure on either the State or Local system.

45.3.11 Refined Analysis

Methods of refined analysis are discussed in **LRFD [4.6.3]**. These include the use of 2D and 3D finite element modeling of bridge structures, which preclude the use of live load distribution factor equations and instead rely on the relative stiffness of elements in the analytical model for distribution of applied loads. As such, a 2D or 3D model requires the inclusion of elements contributing to the transverse distribution of loads, such as deck and cross frame elements that are otherwise not directly considered in a line girder or strip width analysis. Additional guidance on refined analysis can be found in the AASHTO/NSBA publication "G13.1 Guidelines for Steel Girder Bridge Analysis, 2nd Edition" and the FHWA "Manual of Refined Analysis" (anticipated 2017).

WisDOT policy items:

Prior to using refined analysis, consult the Bureau of Structures Rating Unit. Additional documentation is required when performing a refined analysis; see 45.9 for these requirements.

The Bureau of Structures does not require a specific piece of software be used by consultant engineers when performing a refined load rating analysis. See 45.4 for information on load rating computer software.

Refined analysis for load rating purposes is required for certain structure types, and/or structures with certain geometric characteristics. In other instances a refined analysis may be utilized to improve the structure rating for the purpose of avoiding load posting or to improve the capacity for permitting.

A refined analysis is required for the following structure types:

- Steel rigid frames
- Bascule-type movable bridges
- Tied arches
- Cable stayed or suspension bridges

- Steel box (tub) girder bridges

A refined analysis is require if any of the following geometric characteristics are present within the structural system to be load rated:

- Steel girder structure curved in plan, not meeting the criteria discussed in 45.6.3.2.1.
- Steel girder structure skewed 40 degrees or more, with cross framing type discussed in 45.6.3.2.2.
- Skew varies between adjacent supports by more than 20 degrees.

A refined analysis *may* be required if any of the following geometric characteristics are present within the structural system to be load rated. Contact the Bureau of Structures Rating Unit prior to determine the level of effort to rate the structure.

- Steel girder structures with flared girder spacing, such that the change in girder spacing over the span length is greater or equal to 0.015 ($\Delta S/L \geq 0.015$).
- Structures with complex framing plans; those having discontinuous girders utilizing transfer girders in-span.
- Superstructure supported by flexible supports (e.g. straddle bent with integral pier cap). *Note: These "flexible" supports are considered primary members and are to be included in a load rating.*

45.4 Load Rating Computer Software

Though not required, computer software is a common tool used for load rating. WisDOT BOS encourages the use of software for its benefits in increased efficiency and accuracy. However, the load rating engineer must be aware that software is a tool; the engineer maintains responsibility for understanding and verifying any load rating obtained from computer software and should have a full understanding of all underlying assumptions. The load rating engineer is responsible for ensuring that any software used to develop a rating performs that rating in accordance with relevant AASHTO specifications and taking into account specific WisDOT policy noted in this chapter.

45.4.1 Rating Software Utilized by WisDOT

The Bureau of Structures currently uses a mix of software developed in-house and software available commercially. For a list of software currently used by WisDOT for each primary structure type, see the Bureau of Structures website:

https://wisconsindot.gov/Pages/doing-bus/eng-consultants/cnslt-rsrces/strct/default.aspx

WisDOT does not currently mandate the use of any particular software for load ratings.

45.4.2 Computer Software File Submittal Requirements

When load rating software is used as a tool to derive the load rating for a bridge project (new or rehabilitation), the electronic input file shall be included with the project submittal.

Some superstructure types may require advanced modeling techniques in order to fully and accurately capture the structural response. See 45.3.11 for more information on refined analysis.

See 45.9 (Documentation and Submittals) for more information.

45.5 General Requirements

45.5.1 Loads

45.5.1.1 Material Unit Weights

The following assumptions for material unit weights shall be used when performing a load rating, unless there is project-specific information.

Asphalt	145 pcf
Reinforced Concrete	150 pcf
Soil or Gravel	120 pcf
Steel	490 pcf
Water	62.4 pcf
Timber	50 pcf
½" Thin Epoxy Overlay	5 psf

45.5.1.2 Live Loads

Live loads shall be per 45.3.7 (LRFR), 45.3.8 (LFR), and 45.3.9 (ASR).

WisDOT policy items:

Inventory and operating ratings shall consider the possibility of truck loads on sidewalks. However, posting and permitting analysis need not be calculated with wheel placement on sidewalks.

Lane placement in accordance with AASHTO design specifications may not be consistent with actual usage of a bridge as defined by its striped lanes, and could result in conservative load ratings for bridge types such as trusses, two-girder bridges, ramp structures, arches and bridges with exterior girders governing the ratings via lever rule live load distribution assumptions.

WisDOT policy items:

Upon the approval of the Bureau of Structures Rating Unit, a load rating may be performed by placing truck loads only within the striped lanes. When this alternative is utilized, placement of striped lanes on the bridge shall be field verified and documented in the inspection report, per **MBE [6A.2.3.2]** and **[6B.6.2.2]**.

45.5.1.3 Dead Loads

Dead loads are determined based on the weight and dimensions of the elements in question and shall be distributed as noted in sections above. The following is further guidance offered by WisDOT related to various dead loads.

- The top ½" (or greater if a concrete overlay was placed integral with the deck at the time of pour) of a monolithic concrete deck should be considered a wearing surface. It shall not be considered structural, and thus not used to compute section properties or for composite action.

- For an overlay placed integral with the deck at the time of original construction, the overlay thickness shall be considered a wearing surface. It should not be considered structural, and thus not used to compute section properties or for composite action.

- For a bridge with an existing overlay, only the full remaining thickness of the original deck (original thickness – thickness milled off during overlay process) may be considered structural.

- If the design of a new bridge includes an allowance for a future wearing surface, parapets, sidewalks, or other dead loads, that load shall be excluded during the load rating. A load rating is considered a snapshot of current capacity and should only include loads actually in-place at the time of the rating.

- The weight of the concrete haunch for girder superstructures should be included in the non-composite dead load. The actual average haunch height may be used for load calculations. It is also acceptable to calculate the haunch dead load effect assuming the haunch thickness to vary along the length of the beam, if actual, precise haunch thicknesses are known.

45.5.2 Material Structural Properties

Material properties shall be as stated in AASHTO *MBE* or as stated in this chapter. Often when rating a structure without a complete set of plans, material properties are unknown. The following section can be used as a guideline for the rating engineer when dealing with structures with unknown material properties. If necessary, material testing may be needed to analyze a structure.

45.5.2.1 Reinforcing Steel

The allowable unit stresses and yield strengths for reinforcing steel can be found in Table 45.5-1. When the condition of the steel is unknown, they may be used without reduction. Note that Wisconsin started to use Grade 40 bar steel about 1955-1958; this should be noted on the plans.

Reinforcing Steel Grade	Inventory Allowable (psi)	Operating Allowable (psi)	Minimum Yield Point (psi)
Unknown	18,000	25,000	33,000
Structural Grade	19,800	27,000	36,000
Grade 40 (Intermediate)	20,000	28,000	40,000
Grade 60	24,000	36,000	60,000

Table 45.5-1
Yield Strength of Reinforcing Steel

45.5.2.2 Concrete

The following are the maximum allowable unit stresses in concrete in pounds per square inch (see Table 45.5-2). Note that the "Year Built" column may be used if concrete strength is not available from the structure plans.

Year Built	Inventory Allowable (psi)	Operating Allowable (psi)	Compressive Strength (F'c) (psi)	Modular Ratio
Before 1959	1000	1500	2500	12
1959 and later	1400	1900	3500	10
For all non-prestressed slabs 1975 and later	1600	2400	4000	8
Prestressed girders before 1964 and all prestressed slabs	2000	3000	5000	6
1964 and later for prestressed girders	2400	3000	6000	5

Table 45.5-2
Minimum Compressive Strengths of Concrete

45.5.2.3 Prestressing Steel Strands

Table 45.5-3 contains values for uncoated Seven-Wire Stressed-Relieved and Low Relaxation Strands:

Year Built	Grade	Nominal Diameter of Strand (In)	Nominal Steel Area of Strand (In^2)	Yield Strength (psi)	Breaking Strength (psi)
Prior To 1963	250	$^{7}/_{16}$ (0.438)	0.108	213,000	250,000
Prior To 1963	250	½ (0.500)	0.144	212,500	250,000
1963 To Present	270	½ (0.500)	0.153	229,000	270,000
1973 To Present	270 Low Relaxation	½ (0.500)	0.153	242,500	270,000
1995 to Present	270 Low Relaxation	$^{9}/_{16}$ (0.600)	0.217	242,500	270,000

Table 45.5-3
Tensile Strength of Prestressing Strands

The "Year Built" column is for informational purposes only. The actual diameter of strand and grade should be obtained from the structure plans.

45.5.2.4 Structural Steel

The **MBE [Table 6B.5.2.1-1]** gives allowable stresses for steel based on year of construction or known type of steel. For newer bridges, refer to AASHTO design specifications.

Steel Type		AASHTO Designation	ASTM Designation	Minimum Tensile Strength, Fu (psi)	Minimum Yield Strength, Fy (psi)
Unknown Steel	Built prior to 1905			52,000	26,000
	1905 to 1936			60,000	30,000
	1936 to 1963				33,000
	After 1963				36,000
Carbon Steel		M 94 (1961)	A 7 (1967)	60,000	33,000
Nickel Steel		M 96 (1961)	A 8 (1961)	90,000	55,000
Silicon Steel	up to 1-1/8" thick	M 95 (1961)	A 94	75,000	50,000
	1-1/8" to 2" thick		A 94	72,000	47,000
	2" to 4" thick		A 94 (1966)	70,000	45,000
Low Alloy Steel			A441	75,000	50,000

Table 45.5-4
Minimum Yield Strength Values for Common Steel Types

45.5.2.5 Timber

If plans are available, values and adjustment factors will be taken from the most recent edition of the *National Design Specifications for Wood Construction* (NDS) based on the species and grade of the timber as given on the plans. On older plans that may give the stresses, the stress used for the ratings will be the values from the NDS that correspond with the applicable capacity provisions. If plans are not available, Table 45.5-5 shall be used to estimate the allowable stresses.

For operating ratings, all stresses, in determining capacity, will be multiplied by 1.33.

Bridge Type	Component	Species and Grade	Bending Stress (F_b), psi	Shear Stress (F_v), psi
Longitudinal Nail Laminated Slab Bridges	Slab	Douglas Fir-Larch No. 1 & Btr NDS 2012 Table 4A	1200	180
Longitudinal Glued Laminated Slab Bridges	Slab	20F-V7 NDS 2012 Table 5A	2000	265
Girder-Deck Bridges	Girder, Glu-lam	20F-V7 NDS 2012 Table 5A	2000	265
	Girder, Solid-Sawn	Douglas Fir-Larch Select Structural NDS 2012 Table 4D	1600	170
	Transverse Deck, Glulam	20F-V7 NDS 2012 Table 5A	1600	265
	Transverse Deck, Solid-Sawn	Douglas Fir-Larch No. 1 & Btr NDS 2012 Table 4A	1200	180
Longitudinal Stress-laminated Bridges	Slab, Glu-lam	20F-V7 NDS 2012 Table 5A	2000	265
	Slab, Solid Sawn	Douglas Fir-Larch No. 1 & Btr NDS 2012 Table 4A	1200	180
Substructure Components		**Species and Grade**	**Compression Stress (F_C) psi**	**E_{min} psi**
Timber Piles		Pacific Coast Douglas Fir NDS 2012 Table 6A	1300	690,000

Table 45.5-5
Maximum Allowable Stress for Timber Components

45.5.2.5.1 Timber Adjustment Factors

The following is guidance offered by WisDOT related to timber adjustment factors.

- Load Duration (C_D): Bending, shear, and compression stresses shall be multiplied by 1.15 (traffic load duration).
- Wet Service (C_M): Bending and shear stresses shall be multiplied by the appropriate factor per the footnotes in NDS by assuming that the timber is wet in service. An exception to this is if the rating engineer considers the deck's surface to be impervious,

then C_M shall be 1.0. For large glulam girders covered with deck and wearing surface in good condition such that the girders remain dry, C_M = 1.0.

- Beam Stability (C_L): All girders with decks fastened in the normal manner shall be assumed to have continuous lateral stability and C_L shall be 1.0. If the girders are not prevented from rotating at the points of bearing, or rating engineer determines that there is not continuous lateral support on the compression edge, C_L shall be determined by **NDS [3.3.3]**.

- Size (C_F): Bending stresses for sawn lumber shall be multiplied by the appropriate factor per the footnotes in NDS.

- Volume (C_v): Bending stresses for glued laminated timber shall be multiplied by the appropriate factor per the footnotes in NDS.

- Flat Use (C_{fu}): Bending stresses shall be multiplied by the appropriate factor per NDS, for plank decking loaded on the wide face.

- Repetitive Member (C_r): Bending stresses shall be multiplied by 1.15 on longitudinal nail laminated bridges and on nail laminated decks. For deck planks, 1.15 may be used if they are covered by bituminous surface or perpendicular planks for load distribution and are spaced not more than 24” on center.

- Condition Treatment Factor (C_{pt}): Piling, Bending, Shear, and Compression stresses shall be multiplied by: 1.0 for all douglas fir pile installed prior to 1985, and by 0.9 for all other piles.

- Load Sharing Factor (C_{ls}): This shall be typically be 1.0 for all bents. A higher value may be used per **NDS [6.3.11]** when multiple piles are connected by concrete caps or equivalent force distributing elements so that the pile group deforms together.

- Column Stability (C_P): Compression stresses in bents shall by multiplied by C_p per **NDS [3.7]**. “d” in the formula shall be the minimum measured remaining pile dimension. Unless determined otherwise by the rating engineer, it shall be assumed that all the piles shall have the area and C_p of the worst pile.

The adjusted allowable stress used in ratings shall be the given stress multiplied by all the applicable adjustment factors.

45.6 WisDOT Load Rating Policy and Procedure – Superstructure

This section contains WisDOT policy items or guidance related to the load rating of various types of bridge superstructures.

45.6.1 Prestressed Concrete

For bridges designed to be continuous over interior supports, the negative capacity shall come from the reinforcing steel in the concrete deck. Conservatively, only the top mat of steel deck reinforcing steel should be considered when rating for negative moment. If this assumption results in abnormally low ratings for negative moment, contact the Bureau of Structures Rating Unit for consultation.

Elastic gains in prestressed concrete elements shall be neglected for a conservative approach.

Shear design equations for prestressed concrete bridges have evolved through various revisions of the AASHTO design code. Because of this, prestressed concrete bridges designed during the 1960s and 1970s may not meet current shear capacity requirements. Shear capacity should be calculated based on the most current AASHTO code, either LFR or LRFR. Shear should be considered when determining the controlling ratings for a structure. If shear capacities are determined to be insufficient, the load rating engineer of record should contact the Bureau of Structures Rating Unit for consultation. If an existing bridge was designed using the Simplified Procedure for shear, the Simplified Procedure **LRFD [5.8.3.4.3]** (7th Edition - 2014) may be considered for shear ratings.

If an option is given on the structure plans to use either stress relieved or low relaxation strand, or $^{7}/_{16}$" or $^{1}/_{2}$" diameter strand, consult the shop drawings for the structure to see which option was exercised. If the shop drawings are not available, all possible options should be analyzed and the option which gives the lowest operating rating should be reported.

45.6.1.1 I-Girder

Bridges may have varying girder spacing between spans. A historically common configuration in Wisconsin for prestressed I-girder superstructures is a four-span bridge with continuous girders in spans 2 & 3 and different (wider) girder spacing in spans 1 & 4 (Note: this configuration is not recommended for new structures). Since the girders don't align, the bridge would need to be rated as three separate units – single span, two-span and single span.

When the shear failure plane crosses multiple stirrup zones, guidance given in the **MBE [6A.5.8]** should be followed to determine an average shear reinforcement area per unit length existing within the shear failure plane. The shear failure plane is assumed to cross through mid-depth of the section with a 45-degree angle of inclination.

It is common practice to use the average haunch height in order to locate the concrete deck in relation to the top of the girder. It is also acceptable to use the actual, precise haunch thicknesses, if they are known. Absent information on the depth of the haunch, 1 ¼" may be assumed. The area of the haunch may be used in calculating section properties, but it is common practice to conservatively ignore for purpose of section properties (haunch dead load

must be taken into account). Appropriate consideration of the haunch is the responsibility of the load rating engineer.

45.6.1.1.1 Variable Girder Spacing (Flare)

Girder spacings may vary over the length of a given girder (flared girder configuration). Some analysis software may allow for a varying distribution factor along the length of the girder. This is the most accurate and thus preferred method for dealing with a flared girder layout.

Alternatively, conservative assumptions may be made regarding the live load distribution and the assigned dead load to the girder being analyzed. The rating engineer is responsible for determining the appropriate assumptions and for ensuring that they produce conservative results. The methods described in **LRFD [C4.6.2.2.1]** are acceptable. All assumptions made shall be clearly noted in the calculations and in the load rating summary sheet (See 45.9.1).

45.6.1.2 Box and Channel Girders

For adjacent prestressed box and channel girders, the concrete topping may be considered structural when rebar extends from the girders up into the concrete topping.

45.6.2 Cast-in-Place Concrete

45.6.2.1 Slab (Flat or Haunched)

When using Load Factor Rating (LFR) or Allowable Stress Rating (ASR) and calculating the single lane load distribution factor for concrete slab bridges, the distribution width, E, shall be taken as 12'-0".

Some concrete slab bridges may have been designed with an integral concrete pier cap. This would take the form of increased transverse reinforcement at the pier, most likely combined with a haunched slab design. It is WisDOT experience that the integral pier cap will very rarely control the load ratings and a specific evaluation is not required. However, if the pier cap shows signs of distress, a more detailed load rating evaluation may be required. Consult the Bureau of Structures Load Rating Unit in these cases.

45.6.3 Steel

Consistent with the WisDOT policy item in 24.6.10, moment redistribution should not be considered as a part of the typical rating procedure for a steel superstructure. Moment redistribution may be considered for special cases (to avoid a load posting, etc.). Contact the Bureau of Structures Rating Unit with any questions on the use of moment redistribution.

Plastic analysis shall be used for steel members as permitted by AASHTO specifications, including (but not limited to) Article 6.12.2 (LRFR) and Articles 10.48.1, 10.53.1.1, and 10.54.2.1 (LFR). Plastic analysis shall not be used for members with significant deterioration. Per code, sections must be properly braced in order to consider plastic capacity. For questions on the use of plastic analysis, contact the Bureau of Structures Rating Unit.

If there are no plans for a bridge with a steel superstructure carrying a concrete deck, it shall be assumed to be non-composite for purposes of load rating unless there is sufficient documentation to prove that it was designed for composite action and that shear studs or angles were used in the construction.

When performing a rating on a bridge with a steel superstructure element (deck girder, floorbeam, or stringer) carrying a concrete deck, the element should be assumed to have full composite action if it was designed for composite action and it has shear studs or angles that are spaced at no more than 2'-0" centers.

Steel girder bridges in Wisconsin have not typically been designed to use the concrete deck as part of a composite system for negative moment. A typical design will show a lack of composite action in the negative moment regions (i.e., no shear studs). However, if design drawings indicate that the concrete deck is composite with the steel girder in negative moment regions, the negative moment steel in the concrete deck shall conservatively consist of only the top mat of steel over the piers.

For steel superstructures, an additional dead load allowance should be made to account for miscellaneous items such as welds, bolts, connection plates, etc., unless these items are all specifically accounted for in the analysis. See 24.4.1.1 for guidance on this additional dead load allowance. Alternatively, the actual weight of all the miscellaneous items can be tabulated and added to the applied dead load.

WisDOT policy items:

When load rating in-service bridges, WisDOT does not consider the overload limitations of Section 10.57 of the AASHTO Standard Specification.

45.6.3.1 Fatigue

For structures originally designed using LRFD, fatigue shall not be part of the rating evaluation.

For structures originally designed using ASD or LFD, fatigue ratings shall not be reported as the controlling rating. However, a fatigue evaluation may be considered for load ratings accompanying a major rehabilitation effort, if fatigue-prone details (category C or lower) are present. Fatigue detail categories are provided in **LRFD Table [6.6.1.2.3-1]**. Contact WisDOT Bureau of Structures Rating Unit on appropriate level of effort for any fatigue evaluation.

45.6.3.2 Rolled I-Girder, Plate Girder, and Box Girder

Application of the lever rule in calculating distribution factors for exterior girders may be overly conservative in some short-span steel bridges with closely spaced girders and slab overhangs. In this case, the live load bending moment for the exterior girder may be determined by applying the fraction of a wheel line determined by multiplying the value of the interior stringers or beams by:

W_e/S, where:

W_e = Top slab width as measured from the outside face of the slab to the midpoint between the exterior and interior stringer or beam. The cantilever dimension of any slab extending beyond the exterior girder shall not exceed S/2, measured from the centerline of the exterior beam.

S = Average stringer spacing in feet.

Alternately, live load distribution for this case may be determined by refined methods of analysis or with consideration of lane stripe placement as described in 45.5.1.2.

It is common practice to use the average haunch height in order to locate the concrete deck in relation to the top of the girder. It is also acceptable to use the actual, precise haunch thicknesses, if they are known. Absent information on the depth of the haunch, 1 ¼" may be assumed. The area of the haunch may be used in calculating section properties, but it is common practice to conservatively ignore for purpose of section properties (haunch dead load must be taken into account). Appropriate consideration of the haunch is the responsibility of the load rating engineer.

45.6.3.2.1 Curvature and/or Kinked Girders

The effects of curvature shall be considered for all curved steel girder structures. For structures meeting the criteria specified in **LRFD [4.6.1.2.4]** or the **Curved Steel Girder Guide Specification [4.2]**, the structure may be analyzed as if it were straight. However, regardless of the degree of curvature, the effects of curvature on flange lateral bending must always be considered in the analysis, either directly through a refined analysis or through an approximate method as detailed in **LRFD [C4.6.1.2.4b]** or the **Curved Steel Girder Guide Specification [4.2.1]**. This is applicable to discretely braced flanges. If a flange is continuously braced (e.g. encased in concrete or anchored to deck by shear connectors) then it need not be considered. In determining the load rating, flange lateral bending stress shall be added to the major axis bending flange stress, utilizing the appropriate equations specified in LRFD. When using the Curved Steel Girder Guide Specification, flange lateral bending stress reduces the allowable flange stress.

45.6.3.2.2 Skew

Load rating of steel structures with discontinuous cross-frames, in conjunction with skews exceeding 20 degrees shall consider flange lateral bending stress, either directly through a refined analysis or using approximate values provided in **LRFD [C6.10.1]**. This requirement only applies to structures with multi-member cross frames (X or K-brace), and full depth diaphragms between girders. Flange lateral bending stress is most critical when the bottom flange is stiffened transversely (discretely braced). For structures with shorter single member diaphragms (e.g. C or MC-shapes) between girders, where the bottom flange is less restrained, the load rating need not consider flange lateral bending stress due to skew.

Flange lateral bending stress, whether due to skew or curvature, is handled the same in a load rating equation. Refer to the flange lateral bending discussion in 45.6.3.2.1 for more information.

45.6.3.2.3 Variable Girder Spacing (Flare)

Girder spacings may vary over the length of a given girder (flared girder configuration). Some analysis software may allow for a varying distribution factor along the length of the girder. This is the most accurate and thus preferred method for dealing with a flared girder layout.

Alternatively, conservative assumptions may be made regarding the live load distribution and the assigned dead load to the girder being analyzed. The rating engineer is responsible for determining the appropriate assumptions and for ensuring that they produce conservative results. The methods described in **LRFD [C4.6.2.2.1]** are acceptable. All assumptions made should be clearly noted in the calculations and in the load rating summary sheet (See 45.9.1).

If the girders are flared such that the ratio of change in girder spacing to span length is greater than or equal to 0.015, then a refined analysis may be required. Consult the Bureau of Structures Rating Unit for structures that meet this criteria.

45.6.3.3 Truss

45.6.3.3.1 Gusset Plates

WisDOT requires gusset plates to be load rated anytime the loads applied to a structure are altered (see 45.3). Gusset plates should also be evaluated with reports of any significant deterioration. Rating procedures shall follow those specified in the AASHTO MBE.

45.6.3.4 Bascule-Type Movable Bridges

Apply twice the normal dynamic impact factor to live loading of the end floorbeam per **AASHTO LRFD Movable Spec [2.4.1.2.4]**. The end floorbeam will likely control the load rating of bascule bridges built before 1980.

45.6.4 Timber

As a material, timber is unique in that material strengths are tied to the load rating methodology used for analysis (typically ASD or LRFR for timber). Because of this and because of the fact that design/rating specifications have changed through the years, the load rating engineer must carefully consider the appropriate material strengths to use for a given member. When referencing historic plans, WisDOT recommends using the plans to determine the type of material (species and grade), but then using contemporary sources (including tables in 0) to determine material strengths and for rating methodology.

Based on experience, WisDOT recommends evaluating timber superstructures for posting vehicles when the rating factor falls below 1.25 instead of the typical 1.0. See 45.10 for more information on load posting.

45.6.4.1 Timber Slab

For longitudinal nail laminated slab bridges, the wheel load shall be distributed to a strip width equal to:

(wheel width) + 2x(deck thickness).

On bridges that are showing lamination slippage, breakage on the underside, or loose stiffener beam connections, the strip width shall be reduced to:

(wheel width) + 1x(deck thickness).

45.7 WisDOT Load Rating Policy and Procedure – Substructure

45.7.1 Timber Pile Abutments and Bents

Any decay or damage will result in the reduction of the load-carrying capacity based on a loss of cross-sectional area (for shear and compression) or in a reduction of the section modulus (for moment). The capacity of damaged timber bents will be based on the remaining cross-sectional area of the pile and the column stability factor (C_p) using “d”, the least remaining dimension of the column. Such reductions will be determined by the rating engineer based on field measurements, when available.

Timber piles with significant deterioration and/or tipping shall be load rated with consideration of lateral earth pressure and redundancy. Piles shall be assumed to be fixed 6 feet below the stream bed or ground line and pinned at their tops.

45.8 WisDOT Load Rating Policy and Procedure – Culverts

45.8.1 Rating New Culverts

Ratings for new bridge-length (assigned a B number) culverts should be determined based on culvert type. See below for more guidance and see 45.9 for documentation and submittal requirements.

The Bureau of Structures does not currently require rating calculations to be submitted for new culverts that are not of bridge-length. However, these may be required in the future. When they are designed with software that readily produces load ratings, those ratings should be included on plan and calculation submittals. As a minimum, the design vehicle and design overburden depth shall be shown on plans. When load ratings are not calculated, ratings shall be reported as:

- Inventory rating factor: 1.05
- Operating rating factor: 1.35
- Wisconsin Standard Permit Vehicle (Wis-SPV): 255 kips

45.8.1.1 New Concrete Box Culverts

Concrete box culverts shall be load rated per AASHTO specifications.

The fill depth in relation to the structure dimensions will determine the live load effect on the structure. For structures that experience little or no live load based on analysis, the ratings reported on plans and in the load rating summary form shall not exceed the ratings noted below:

- Inventory rating factor: 2.0
- Operating rating factor: 3.0
- Wisconsin Standard Permit Vehicle (Wis-SPV): 250 kips

45.8.1.2 New Concrete Pipe Culverts

A concrete pipe culvert system (culvert and fill) shall be designed to carry HL-93 loading and the Wis-SPV as described in 36.1.3. Ratings shall be reported as:

- Inventory rating factor: 1.0
- Operating rating factor: 1.67
- Wisconsin Standard Permit Vehicle (Wis-SPV): 190 kips

45.8.1.3 New Steel Pipe Culverts

A steel pipe culvert system (culvert and fill) shall be designed to carry HL-93 loading and the Wis-SPV as described in 36.1.3. Ratings shall be reported as:

- Inventory rating factor: 1.0
- Operating rating factor: 1.67
- Wisconsin Standard Permit Vehicle (Wis-SPV): 190 kips

45.8.2 Rating Existing (In-Service) Culverts

Ratings for existing (in-service) bridge-length culverts shall be determined based on culvert type and the depth of fill over the culvert. See below for more guidance and see 45.9 for documentation and submittal requirements.

The Bureau of Structures currently does not require rating calculations to be submitted for in-service culverts that are not of bridge-length. If deterioration or other significant changes warrant consideration of a load posting for an in-service culvert that is not of bridge-length, contact the Bureau of Structures on what is required for a load posting evaluation.

45.8.2.1 In-Service Concrete Box Culverts

In-service concrete box culverts with 6’-0” or less of fill may require a load rating. In-service concrete box culverts with more than 6’-0” of fill over the top slab and in fair or better condition based on the most recent inspection report do not require a calculated load rating. Ratings shall be reported as:

- Inventory rating factor: 1.0
- Operating rating factor: 1.67
- Wisconsin Standard Permit Vehicle (Wis-SPV): 190 kips

WisDOT policy items:

For in-service concrete boxes with less than 6’-0” of fill or with more than 6’-0” of fill, but in poor condition, contact the Bureau of Structures Rating Unit for direction on what is required for a load rating.

45.8.2.2 In-Service Concrete Pipe Culverts

An in-service concrete pipe culvert in fair or better condition does not require a calculated load rating. Ratings shall be reported as:

- Inventory rating factor: 1.0
- Operating rating factor: 1.67
- Wisconsin Standard Permit Vehicle (Wis-SPV): 190 kips

WisDOT policy items:

For in-service concrete pipe culverts in poor condition, contact the Bureau of Structures Rating Unit for direction on what is required for a load rating.

45.8.2.3 In-Service Steel Pipe Culverts

An in-service steel pipe culvert in fair or better condition does not require a calculated load rating. Ratings shall be reported as:

- Inventory rating factor: 1.0
- Operating rating factor: 1.67
- Wisconsin Standard Permit Vehicle (Wis-SPV): 190 kips

WisDOT policy items:

For in-service steel pipe culverts in poor condition, contact the Bureau of Structures Rating Unit for direction on what is required for a load rating.

45.9 Load Rating Documentation and Submittals

The Bridge Rating and Management Unit is responsible for maintaining information for every structure in the Wisconsin inventory, including load ratings. This information is used throughout the life of the structure to help inform decisions on potential load postings, repairs, rehabilitation, and eventual structure replacement. That being the case, it is critical that WisDOT collect and store complete and accurate documentation regarding load ratings.

45.9.1 Load Rating Calculations

The rating engineer is required to submit load rating calculations. Calculations should be comprehensive and presented in a logical, organized manner. The submitted calculations should include a summary of all assumptions used (if any) to derive the load rating.

45.9.2 Load Rating Summary Forms

After the structure has been load rated, the WisDOT Bridge Load Rating Summary Form shall be completed and utilized as a cover sheet for the load rating calculations (see Figure 45.9-1). This form may be obtained from the Bureau of Structures or is available on the following website:

https://wisconsindot.gov/Pages/doing-bus/eng-consultants/cnslt-rsrces/strct/plan-submittal.aspx

If required, the Refined Analysis Rating Form (see 45.9.5 and Figure 45.9-2) is available at the same location.

Instructions for completing the forms are as follows:

Load Rating Summary Form

1. Fill out applicable Bridge Data, Structure Type, and Construction History information using HSIS as reference.

2. Check what rating method and rating vehicle was used to rate the bridge in the spaces provided.

3. Enter the inventory/operating ratings, controlling element, controlling force effect, and live load distribution factor for the rating vehicle.

    a. If the load distribution was determined through refined methods (i.e., finite element analysis), it is not necessary to record the live load distribution factor. Instead, enter “REFINED” in the space provided and use the “Remarks/Recommendations” section to describe the methods used to determine live load distribution.

4. The rating for the Wisconsin Special Permit vehicle (Wis-SPV) is always required and shall be given on the rating sheet for both a multi-lane distribution and a single-lane distribution. Make sure not to include the future wearing surface in these calculations.

All reported ratings are based on current conditions and do not reflect future wearing surfaces. Enter the Maximum Vehicle Weight (MVW) for the Wis-SPV analysis, controlling element, controlling force effect, and live load distribution factor.

5. When necessary, AASHTO legal and WisDOT Specialized annual Permit vehicles shall be analyzed and load postings determined per the requirements of 45.10.

    a. Enter the lowest operating rating in kips for each appropriate vehicle type, along with corresponding controlling element and force effect, as well as live load distribution factor.

    b. If a posting vehicle analysis was performed, check the box indicating if a load posting is required or not required. The weight limit in tons is automatically calculated when posting vehicle rating factors are below 1.0. If analysis shows that a load posting is required, specify the level of posting and contact the Bureau of Structures Rating Unit immediately.

6. When necessary, emergency vehicles shall be analyzed and weight limit restrictions determined per the requirements of 45.10.

    a. Enter the lowest operating rating factor for each emergency vehicle, along with corresponding controlling element and force effect, as well as live load distribution factor.

    b. Check the box indicating if an emergency vehicle weight limit is required or not required. The single axle, tandem axle, and gross vehicle weight limits are automatically calculated when emergency vehicle rating factors are below 1.0. If analysis shows that an emergency vehicle weight limit is required, specify the level of the limit and contact the Bureau of Structures Rating Unit immediately.

7. Enter all additional remarks as required to clarify the load capacity calculations.

8. It is necessary for the responsible engineer to sign and seal the form in the space provided. This is true even for rehabilitation projects with no change to the ratings.

45.9.3 Load Rating on Plans

The plans shall contain the following rating information:

- Inventory Load Rating – The plans shall have either the HS value of the inventory rating if using LFR or the rating factor for the HL-93 if using LRFR. For LFR ratings, the rating should be rounded down to the nearest whole number. <u>This rating shall be based on the current conditions of the bridge at the point when the construction is complete and shall not use the future wearing surface.</u> See 6.2.2.3.4 for more information on reporting ratings on plans.

- Operating Load Rating – The plans shall have either the HS value of the operating rating if using LFR or the rating factor for the HL-93 if using LRFR. For LFR ratings, the rating should be rounded down to the nearest whole number. <u>This rating shall be based</u>

on the current conditions of the bridge at the point when the construction is complete and shall not use the future wearing surface. See 6.2.2.3.4 for more information.

- Wisconsin Special Permit Vehicle – The plans shall also contain the results of the Wis-SPV analysis utilizing single-lane distribution and assuming that the vehicle is mixing with normal traffic and that the full dynamic load allowance is utilized. This rating shall be based on the current conditions of the bridge at the point when the construction is complete and shall not use the future wearing surface. The recorded rating for this is the total allowable vehicle weight rounded down to the nearest 10 kips. If the value exceeds 250 kips, limit the plan value to 250 kips. See 6.2.2.3.4 for more information.

45.9.4 Computer Software File Submittals

If analysis software is used to determine the load rating, the software input file shall be provided as a part of the submittal. The name of the analysis software and version should be noted on the Load Rating Summary form in the location provided.

45.9.5 Submittals for Bridges Rated Using Refined Analysis

Additional pages of documentation are required when performing a refined analysis. In addition to the Load Rating Summary Form, also submit the Refined Analysis Rating Form as shown in Figure 45.9-2.

45.9.6 Other Documentation Topics

Structures with Two Different Rating Methods

There may be situations where a given superstructure contains elements that were constructed at different times. In these situations, two different rating methods are used during the design/rating process. For example, a girder replacement or widening. In this case, the new girder(s) would be designed/rated using LRFR, while the existing girders would be rated using LFR. A Load Rating Summary Form shall be submitted for both new & existing structure analysis methods; controlling LRFR rating of the new superstructure components, and controlling LFR rating of the existing superstructure. Both sets of controlling rating values (new & existing) shall be noted on the plan set, as noted in 6.2.2.3.4.

Wisconsin Department of Transportation

Bridge Load Rating Summary

v. 07-2020

Bridge Data

Bridge Number:	
Owner:	
Municipality:	
Feature On:	
Feature Under:	
Design Loading:	

Traffic Count:		Truck Traffic %:	
Overburden Depth (in):			
Inspection Date:			
NBI Condition Ratings:			
Deck	Superstructure	Substructure	Culvert

Structure Type

Span #	Material	Configuration	Length (ft)
1			

Construction History

Year	Work Performed

Load Rating Summary

Rating Method:		Ratings	Controlling Element	Controlling Force Effect	LL Distribution Factor
		Inventory			
Rating Vehicle:		Operating			
Wisconsin SPV		MVW (k)	Controlling Element	Controlling Force Effect	LL Distribution Factor
Single Lane (w/o FWS)					
Multi Lane (w/o FWS)					

Load Posting Analysis (when required per Wisconsin Bridge Manual, Chapter 45)

Posting Vehicle		Vehicle GVW (k)	Rating Factor	Weight Limit (T)	Controlling Element	Controlling Force Effect	LL Distribution Factor
AASHTO Legal Vehicles	Type 3	50		N/A			
	Type 3S2	72		N/A			
	Type 3-3	80		N/A			
	SU4	54		N/A			
	SU5	62		N/A			
	SU6	69.5		N/A			
	SU7	77.5		N/A			
WisDOT Spec.	PUP	98		N/A			
	Semi	98		N/A			
FAST Act EVs	EV2	57.5		N/A			
	EV3	86		N/A			

Posting for Legal/Specialized Permit Vehicles:

X Not Required

Required T

Weight Limits for Emergency Vehicles:

X Not Required

Required T Single Axle// T Tandem // T Gross

Computer Software and Version Used:	

Additional Remarks:

Load Rating Engineer

Name:

Date:

Figure 45.9-1

Bridge Load Rating Summary Form

In Addition to this form, submit electronic analysis files (eg. .MDX, .bdb)

ANALYSIS FILE SUMMARY (FILL OUT FOR EACH ANALYSIS FILE SUBMITTED)

Analysis Type:	☐ Grid/Grillage ☐ Plate & Ecc. Beam ☐ 3D FEM ☐ Other *(describe below)*
Analysis Program:	☐ MDX ☐ AASHTOWare ☐ CSI Bridge ☐ LARSA ☐ Other
Program Version:	
File Name:	
File Description:	Describe the purpose of the file. Example: This file is used for the Wis-SPV rating using single lane distribution.
Analysis Assumptions:	Highlight key assumptions in modeling. (This section may be omitted if submitting MDX or AASHTOWare analysis files. This section may also be omitted if submitting separate document containing analysis assumptions and results). Example of things to include: a description of the finite element model, simplifications made to model, exceptions to original design plans, loads applied, how loads are applied (e.g. equally distributed to all girders), support conditions, composite/non-composite sections.
Summary of Results:	Summarize results. (This section may be omitted if submitting MDX or AASHTOWare analysis files. This section may also be omitted if submitting separate document containing analysis assumptions and results). Provide table of results for service load reactions, moment, shear, and/or stress output for members at 10th points (minimum) for the appropriate load cases. Provide a table of capacities at each 10th point, such that load ratings can be directly computed with appropriate load and/or resistance and impact factors. Provide example or typical calculations.

Figure 45.9-2
Refined Analysis Rating Form

45.10 Load Postings

45.10.1 Overview

Legal-weight for vehicles travelling over bridges is determined by state-specific statutes, which are based in part on the Federal Bridge Formula. The Federal Bridge Formula is discussed in 45.2.5. When a bridge does not have the capacity to carry legal-weight traffic, more stringent load limits are placed on the bridge – a load posting. Currently in Wisconsin, load postings are based on gross vehicle weight; there is no additional consideration for number of axles or axle spacing. Load posting signage is discussed further in 45.10.4.

A separate analysis is conducted for emergency vehicles (EVs). As a result of the 2015 Fixing America's Surface Transportation Act (FAST Act), FHWA requires bridges to be load rated for emergency vehicles where they are exempt from regular weight limits, and restricted if necessary. When a bridge does not have the capacity to carry the FAST Act EVs, emergency vehicle-specific load postings are required for bridges on the Interstate and within reasonable access to the Interstate. Because Wisconsin statutes also exempt emergency vehicles from state laws governing weight provisions, bridges located beyond reasonable access with insufficient capacity will be placed on the Emergency Vehicles Restricted Bridge List (under development). Weight limit restrictions for emergency vehicles are based on a combination of the single axle, tandem axle, and gross vehicle weight limits, discussed further in 45.10.3. Additional information on FAST Act EV load rating requirements may be found in FHWA's memorandum, "Action: Load Rating for the FAST Act's Emergency Vehicles" (November 2016) and the technical guidance, "Questions and Answers: Load Rating for the FAST Act's Emergency Vehicles, Revision R01" (March 2018).

In order to remain open to traffic, a bridge should be capable of carrying a minimum gross live load weight of three tons at the Operating level. Bridges not capable of carrying a minimum gross live load weight of three tons at the Operating level must be closed. As stated in the **MBE [6A.8.1]** and **[6B.7.1]**, when deciding whether to close or post a bridge, the Owner should consider the character of traffic, the volume of traffic, the likelihood of overweight vehicles, and the enforceability of weight posting.

The owner of a bridge has the responsibility and authority to load post a bridge as required. The State Bridge Maintenance Engineer has the authority to post a bridge and must issue the approval to post any State bridge.

WisDOT policy items:

Consult the Bureau of Structures Rating Unit as soon as possible with any analysis that results in a load posting or emergency vehicle weight limit for any structure on the State or Local system.

45.10.2 Load Posting Live Loads

The live loads to be used in the rating formula for posting considerations are any of the three typical AASHTO Commercial Vehicles (Type 3, Type 3S2, Type 3-3) shown in Figure 45.10-1, any of the four AASHTO Specialized Hauling Vehicles (SHVs - SU4, SU5, SU6, SU7) shown

in Figure 45.10-2, the WisDOT Specialized Annual Permit Vehicles shown in Figure 45.10-3, and the Wisconsin Standard Permit Vehicle shown in Figure 45.12-1.

The AASHTO Commercial Vehicles and Specialized Hauling Vehicles are modeled on actual in-service vehicle configurations. These vehicles comply with the provisions of the Federal Bridge Formula and can thus operate freely without permit; they are legal weight/configuration.

The WisDOT Specialized Annual Permit Vehicles are Wisconsin-specific vehicles. They represent vehicle configurations made legal in Wisconsin through the legislative process and current Wisconsin state statutes.

The Wisconsin Standard Permit Vehicle (Wis-SPV) is a configuration used internally by WisDOT to assist in the regulation of multi-trip (annual) permits. Multi-trip permits and the Wis-SPV are discussed in more detail in 45.11.2 and 45.12.

As stated in **MBE [6A.4.4.2.1a]**, for spans up to 200', only the vehicle shall be considered present in the lane for positive moments. It is unnecessary to place more than one vehicle in a lane for spans up to 200' because the load factors provided have been modeled for this possibility. For spans 200' in length or greater, the AASHTO Type 3-3 truck multiplied by 0.75 shall be analyzed combined with a lane load as shown in Figure 45.10-4. The lane load shall be taken as 0.2 klf in each lane and shall only be applied to those portions of the span(s) where the loading effects add to the vehicle load effects.

Also, for negative moments and reactions at interior supports, a lane load of 0.2 klf combined with two AASHTO Type 3-3 trucks multiplied by 0.75 shall be used. The trucks should be heading in the same direction and should be separated by 30 feet as shown in Figure 45.10-4. There are no span length limitations for this negative moment requirement.

When the lane-type load model (see Figure 45.10-4) governs the load rating, the equivalent truck weight for use in calculating a safe load capacity for the bridge shall be taken as 80 kips as is specified in **MBE [6A.4.4.4]**.

For emergency vehicle weight limits, FHWA has determined that, for the purpose of load rating, two emergency vehicle configurations (EV2 and EV3) produce effects in typical bridges that envelop the effects resulting from the family of typical emergency vehicles covered by the FAST Act. The EV2 and EV3 are shown in Figure 45.10-5.

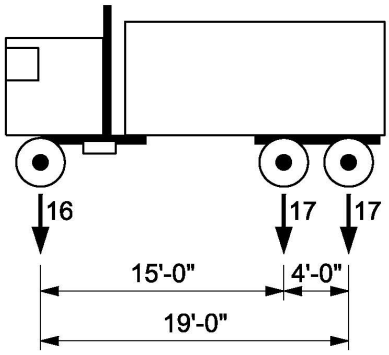

Indicated concentrations are axle loads in kips.

Type 3 Unit Weight = 50 Kips (25 tons)

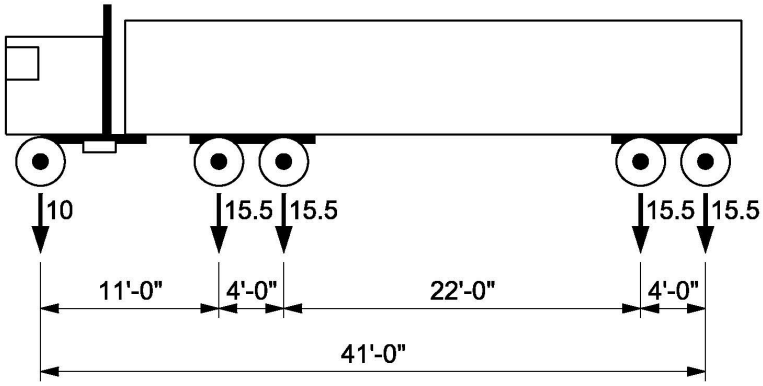

Type 3S2 Unit Weight = 72 Kips (36 tons)

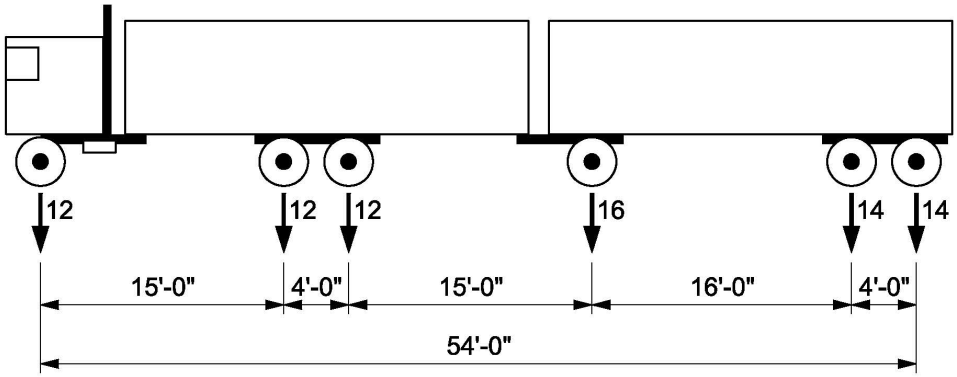

Type 3-3 Unit Weight = 80 Kips (40 tons)

Figure 45.10-1
AASHTO Commercial Vehicles

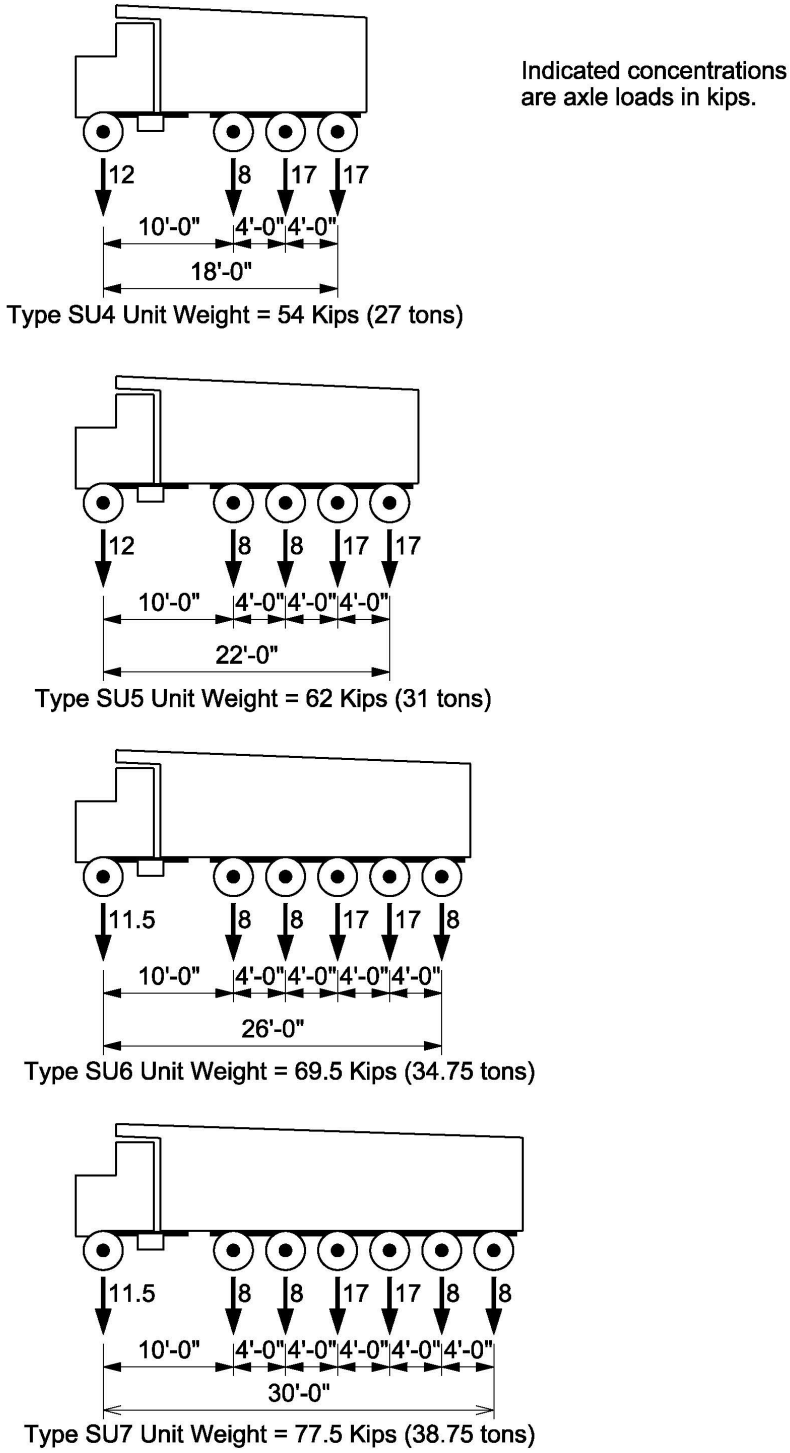

Figure 45.10-2
AASHTO Specialized Hauling Vehicles (SHVs)

Indicated concentrations
are axle loads in kips.

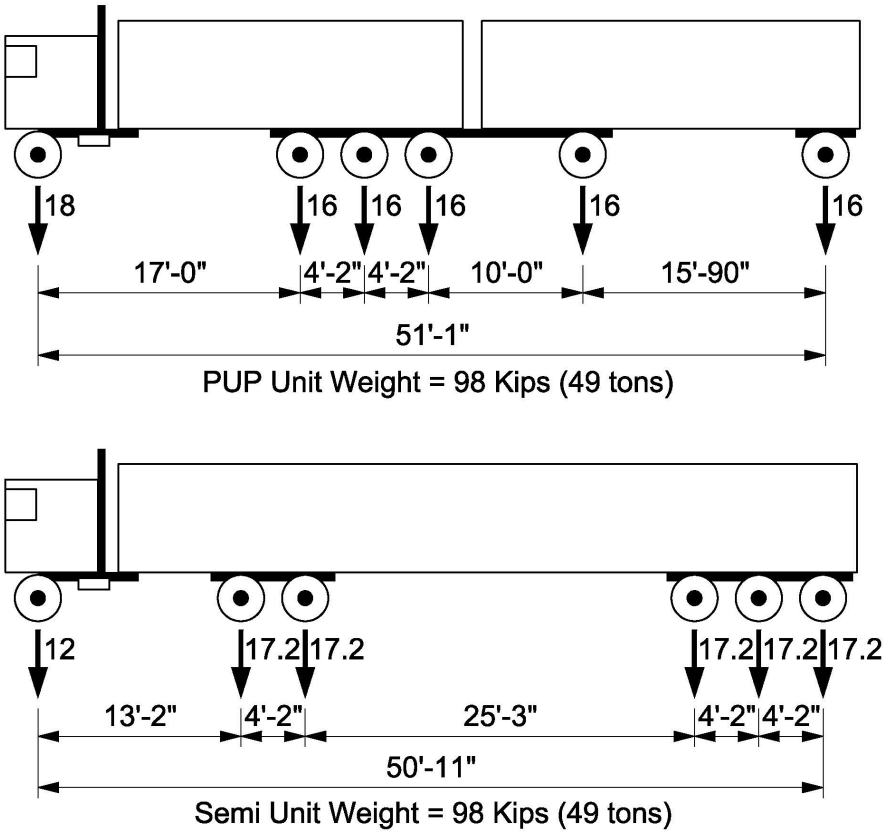

Figure 45.10-3
WisDOT Specialized Annual Permit Vehicles

Indicated concentrations are axle loads in kips (75% of type 3-3).

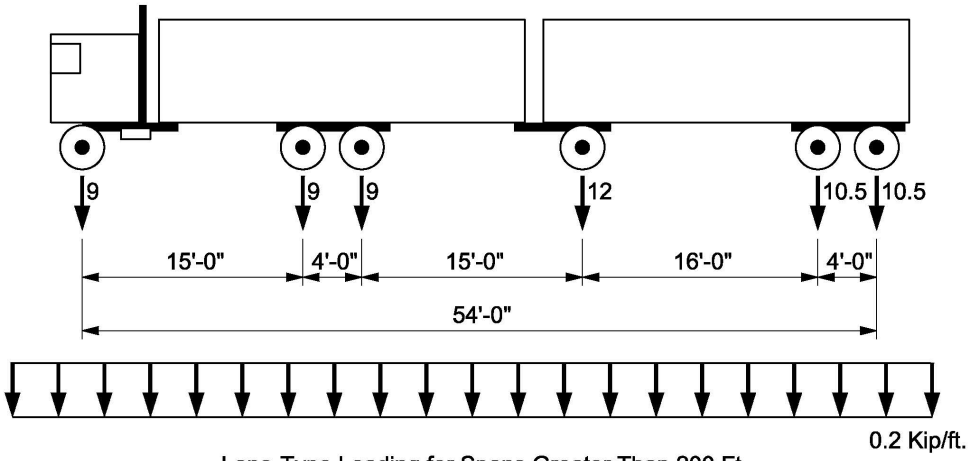

Lane-Type Loading for Spans Greater Than 200 Ft.

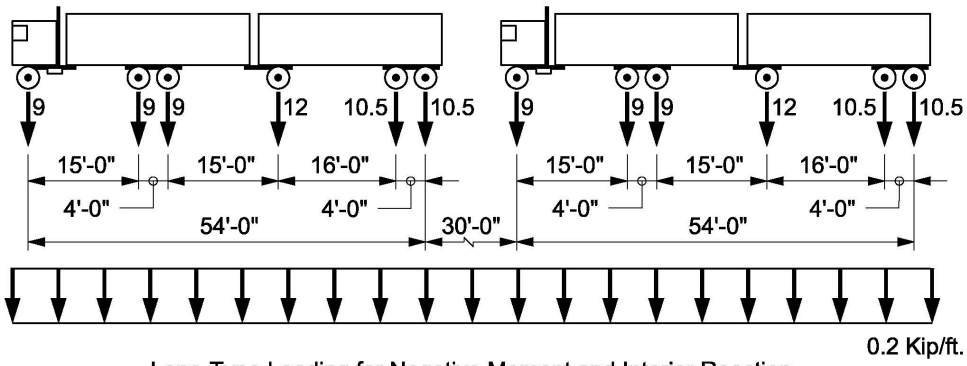

Lane-Type Loading for Negative Moment and Interior Reaction.

Figure 45.10-4
Lane Type Legal Load Models

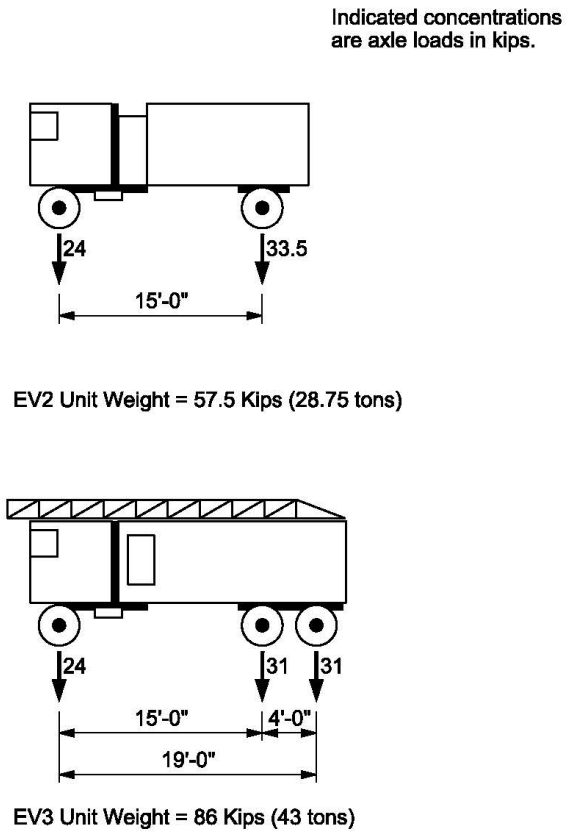

Figure 45.10-5
Emergency Vehicle Load Models

45.10.3 Load Posting Analysis

All posting vehicles shall be analyzed at the operating level. A load posting analysis is required when the calculated rating factor at operating level for a bridge is:

- Less than 1.0 for HL-93 loading using LRFR methodology.
- Less than 1.0 for HS-20 loading using LFR/ASR methodology; or
- Less than or equal to 1.2 for LFR/ASR methodology (SHV analysis only)

A load posting analysis is very similar to a load rating analysis, except the posting live loads noted in 45.10.2 are used instead of typical LFR or LRFR live loading.

If the calculated rating factor at operating is less than 1.0 for a given load posting vehicle, then the bridge shall be posted, with the exception of the Wis-SPV. For State Trunk Highway Bridges, current WisDOT policy is to post structures with a Wisconsin Standard Permit Vehicle (Wis-SPV) rating of 120 kips or less. If the RF ≥ 1.0 for a given vehicle at the operating level, then a posting is not required for that particular vehicle.

A bridge is posted for the lowest restricted weight limit of any of the standard posting vehicles. To calculate the capacity, in tons, on a bridge for a given posting vehicle utilizing LFR, multiply the rating factor by the gross vehicle weight in tons. To calculate the posting load for a bridge analyzed with LRFR, refer to 45.10.3.2.

Posting or weight limit analysis for emergency vehicles occurs separately; it is required when the calculated rating factor at inventory level for a bridge is:

- Less than 0.9 for HL-93 loading using LRFR methodology; or
- Less than 1.0 for HS-20 loading using LFR/ASR methodology.

If the calculated rating factor at operating rating is less than 1.0 for a given emergency vehicle, then the bridge shall have an emergency vehicle-specific weight limit restriction, as follows:

- If $RF_{EV2} < 1.0$ and $RF_{EV3} < 1.0$
  - Single Axle = Minimum (RF_{EV2} x 16.75 tons, RF_{EV3} x 31 tons)
  - Tandem = Minimum (RF_{EV2} x 28.75 tons, RF_{EV3} x 31 tons)
  - Gross = Minimum (RF_{EV2} x 28.75 tons, RF_{EV3} x 43 tons)
- If only $RF_{EV2} < 1.0$
  - Single Axle = RF_{EV2} x 16.75 tons
  - Tandem = RF_{EV2} x 28.75 tons
  - Gross = RF_{EV2} x 28.75 tons
- If $RF_{EV2} < 1.0$ and $RF_{EV3} < 1.0$
  - Single Axle = Minimum (16 tons, RF_{EV3} x 31 tons)
  - Tandem = RF_{EV3} x 31 tons
  - Gross = RF_{EV3} x 43 tons

Sign postings may or may not be required for emergency vehicles, depending on their location. Refer to 45.10.4.

45.10.3.1 Limit States for Load Posting Analysis

For LFR methodology, load posting analysis should consider strength-based limit states only.

For LRFR methodology, load posting analysis should consider strength-based limit states, but also some service-based limit states, per Table 45.3-1.

45.10.3.2 Legal Load Rating Load Posting Equation (LRFR)

When using the LRFR method and the operating rating factor (RF) calculated for each legal truck described above is greater than 1.0, the bridge does not need to be posted. When for any legal truck the RF is between 0.3 and 1.0, then the following equation should be used to establish the safe posting load for that vehicle (see **MBE [Equation 6A8.3-1]**):

$$\text{Posting} = \frac{W}{0.7}\left[(RF) - 0.3\right]$$

Where:

RF	=	Legal load rating factor
W	=	Weight of the rating vehicle

When the rating factor for any vehicle type falls below 0.3, then that vehicle type should not be allowed on the bridge. If necessary, the structure may need to be closed until it can be repaired, strengthened, or replaced. This formula is only valid for LRFR load posting calculations.

45.10.3.3 Distribution Factors for Load Posting Analysis

WisDOT policy items:

The AASHTO Commercial Vehicles and Specialized Hauling Vehicles shall be analyzed using a multi-lane distribution factor for bridge widths 18’-0” or larger. Single lane distribution factors are used for bridge widths less than 18’-0”.

The WisDOT Specialized Annual Permit Vehicles shown in Figure 45.10-3 shall be analyzed using a single-lane distribution factor, regardless of bridge width.

The Wisconsin Standard Permit Vehicle (Wis-SPV) shall be analyzed for load postings using a multi-lane distribution factor for bridge widths 18’-0” or larger. Single lane distribution factors are used for bridge widths less than 18’-0”.

45.10.4 Load Posting Signage

Current WisDOT policy is to post State bridges for a single gross weight, in tons. Bridges that cannot carry the maximum weight for the vehicles described in 45.10.2 at the operating level are posted with the standard sign shown in Figure 45.10-6. This sign shows the bridge capacity for the governing load posting vehicle, in tons. The sign should conform to the requirements of the *Wisconsin Manual for Uniform Traffic Control Devices (WMUTCD)*.

In the past, local bridges were occasionally posted with the signs shown in Figure 45.10-7 using the H20, Type 3 and Type 3S2 vehicles. The H20 represented the two-axle vehicle, the Type 3 represented the three-axle vehicle and the Type 3S2 represented the combination vehicle. This practice is not encouraged by WisDOT and is generally not allowed for State-owned structures, except with permission from the State Bridge Maintenance Engineer.

Emergency vehicle posting signs, however, are based on a combination of the single axle, tandem axle, and gross vehicle weight limits, as shown in Figure 45.10-8. Emergency vehicle posting signs are only required for bridges on the Interstate and within reasonable access (one road mile) to or from an Interstate interchange.

WEIGHT LIMIT 10 TONS	BRIDGE CLOSED

Figure 45.10-6
Standard Signs Used for Posting Bridges

WEIGHT LIMIT 2 AXLE VEHICLES 15 TONS 3 AXLE VEHICLES 20 TONS COMBINATION VEHICLES 30 TONS	WEIGHT LIMIT 2 AXLE VEHICLES 14 TONS 3 AXLE VEHICLES 18 TONS COMBINATION VEHICLES 28 TONS	WEIGHT LIMIT 2 AXLE VEHICLES 14 TONS 3 AXLE VEHICLES 18 TONS COMBINATION VEHICLES 28 TONS

Figure 45.10-7
Historic Load Posting Signs

EMERGENCY VEHICLE WEIGHT LIMIT	
SINGLE AXLE	15 TONS
TANDEM	25 TONS
GROSS	35 TONS

Figure 45.10-8
Emergency Vehicle Load Posting Signs

45.11 Over-Weight Truck Permitting

45.11.1 Overview

Size and weight provisions for vehicles using the Wisconsin network of roads and bridges are specified in the Wisconsin Statutes, Chapter 348: Vehicles – Size, Weight and Load. Weight limits for legal-weight traffic and over-weight permit requirements are defined in detail in this chapter. The webpage for Chapter 348 is shown below.

https://docs.legis.wisconsin.gov/statutes/statutes/348

Over-weight permit requests are processed by the WisDOT Oversize Overweight (OSOW) Permit Unit in the Bureau of Highway Maintenance. The permit unit collaborates with the WisDOT Bureau of Structures Rating Unit to ensure that permit vehicles are safely routed on the Wisconsin inventory of bridges.

While the Wisconsin Statutes contain several industry-specific size and weight annual permits, in general, there are two permit types in Wisconsin: multi-trip (annual) permits and single-trip permits.

45.11.2 Multi-Trip (Annual) Permits

Multi-trip permits are granted for non-divisible loads such as machines, self-propelled vehicles, mobile homes, etc. They typically allow unlimited trips and are available for a range of three months to one year. The permit vehicle may mix with typical traffic and move at normal speeds. Multi-trip permits are required to adhere to road and bridge load postings and are subject to additional restrictions based on restricted bridge lists supplied by the WisDOT Bureau of Structures Rating Unit and published by the WisDOT OSOW Permit Unit. The restricted bridge lists are developed based on the analysis of the Wisconsin Standard Permit Vehicle (Wis-SPV). For more information on the Wis-SPV and required analysis, see 45.12. The carrier is responsible for their own routing, and are required to avoid these restrictions and load postings.

Vehicles applying for a multi-trip permit are limited to 170,000 pounds gross vehicle weight, plus additional restrictions on maximum length, width, height, and axle weights. Please refer to the WisDOT Oversize Overweight (OSOW) Permits website or the Wisconsin Statues (link above) for more information.

https://www.dot.wisconsinwisconsindot.gov/business/carriers/osowgeneral.htm

45.11.3 Single Trip Permits

Non-divisible loads which exceed the annual permit restrictions may be moved by the issuance of a single trip permit. When a single trip permit is issued, the applicant is required to indicate on the permit the origin and destination of the trip and the specific route that is to be used. A separate permit is required for access to local roads. Each single trip permit vehicle is individually analyzed by WisDOT for all state-owned structures that it encounters on the designated permit route.

Live load distribution for single trip permit vehicles is based on single lane distribution. This is used because these permit loads are infrequent and are likely the only heavy loads on the structure during the crossing. The analysis is performed at the operating level.

At the discretion of the engineer evaluating the single trip permit, the dynamic load allowance (or impact for LFR) may be neglected provided that the maximum vehicle speed can be reduced to 5 MPH prior to crossing the bridge and for the duration of the crossing.

In some cases, the truck may be escorted across the bridge with no other vehicles allowed on the bridge during the crossing. If this is the case, then the live load factor (LRFR analysis) can be reduced from 1.20 to 1.10 as shown in Table 45.3-3. It is recommended that the truck be centered on the bridge if it is being escorted with no other vehicles allowed on the bridge during the crossing.

Vehicles with non-standard axle gauges may also receive special consideration. This may be achieved by performing a more-rigorous analysis of a given bridge that takes into account the specific load configuration of the permit vehicle in question instead of using standard distribution factors that are based on standard-gauge axles. Alternatively, modifications may be made to the standard distribution factor in order to more accurately reflect how the load of the permit vehicle is transferred to the bridge superstructure. How non-standard gauge axles are evaluated is at the discretion of the engineer evaluating the permit.

45.12 Wisconsin Standard Permit Vehicle (Wis-SPV)

45.12.1 Background

The Wis-SPV configuration is shown in Figure 45.12-1. It is an 8-axle, 190,000lbs vehicle. It was developed through a Wisconsin research project that investigated the history of multi-trip permit configurations operating in Wisconsin. The Wis-SPV was designed to completely envelope the force effects of all multi-trip permit vehicles operating in Wisconsin and is used internally to help regulate multi-trip permits.

45.12.2 Analysis

- New Bridge Construction

For any new bridge design, the Wis-SPV shall be analyzed. The Wis-SPV shall be evaluated at the operating level. When performing this design check for the Wis-SPV, the vehicle shall be evaluated for single-lane distribution assuming that the vehicle is mixing with normal traffic and that the full dynamic load allowance is utilized. For this design rating, a future wearing surface shall be considered. Load distribution for this check is based on the interior strip or interior girder and the distribution factors given in Section 17.2.7, 17.2.8, or 18.4.5.1 where applicable. See also the WisDOT policy item in 45.3.7.8.1.

For LRFR, the Wis-SPV design check shall be a permit load rating and shall be evaluated for the limit states noted in Table 45.3-1 and Table 45.3-3.

The design engineer shall check to ensure the design has a RF > 1.0 (gross vehicle load of 190 kips) for the Wis-SPV. If the design is unable to meet this minimum capacity, the engineer is required to adjust the design until the bridge can safely handle a minimum gross vehicle load of 190 kips.

Results of the Wis-SPV analysis shall be reported per 45.9.

- Bridge Rehabilitation Projects

For rehabilitation design, analysis of the Wis-SPV shall be performed as described above for new bridge construction. All efforts should be made to obtain a RF > 1.0 (gross vehicle load of 190 kips) within the confines of the scope of the project. However, it is recognized that it may not be possible to increase the Wis-SPV rating without a significant change in scope of the project. In these cases, consult the Bureau of Structures Rating Unit for further direction.

Results of the Wis-SPV analysis shall be reported per 45.9.

- Existing (In-Service) Bridges

When performing a rating for an existing (in-service) bridge, analysis of the Wis-SPV shall be performed as described above for new bridge construction. In this case – where the bridge in question is being load rated but not altered in any way – the results of the Wis-SPV analysis need simply be reported as calculated per 45.9. If the results of this analysis produce a rating

factor less than 1.0 (gross vehicle load less than 190 kips), notify the Bureau of Structures Rating Unit.

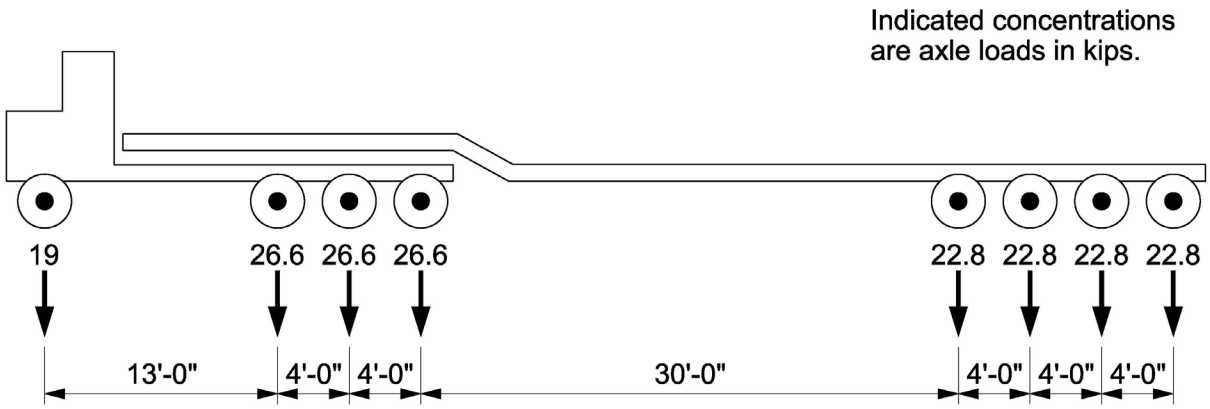

Figure 45.12-1
Wisconsin Standard Permit Vehicle (Wis-SPV)

45.13 References

1. *Final Report on Full-Scale Bridge Testing* by E. G. Burdette and D. W. Goodpasture, Department of Civil Engineer, University of Tennessee, 1971.

2. *The AASHTO Road Test*, Report 4 Bridge Research by the Highway Research Board, Washington, D.C. 1962.

3. *Standard Specifications for Highway Bridges* by American Association of State Highway and Transportation Officials.

4. *AASHTO LRFD Bridge Design Specifications* by American Association of State Highway and Transportation Officials

5. *The Manual for Bridge Evaluation, 2015 Interim Revisions* by American Association of State Highway and Transportation Officials, 2015.

6. *Structure Inspection Manual* by Wisconsin Department of Transportation, 2003.

7. *Reinforced Concrete Design* by C. K. Wang and C. G. Salmon.

8. *Plastic Design of Steel Frames* by Lynn S. Beedle.

9. National Cooperative Highway Research Program Report 312.

10. National Cooperative Highway Research Program Project 12-63.

11. *Post-Tensioning Manual* by Post-Tensioning Institute.

12. Wisconsin Statutes, Vol. 4, Chapter 348.

13. *Summary of Motor Vehicle Size and Weight Regulations in Wisconsin* by Dept. of Transportation, Division of Motor Vehicles.

14. *Evolution of Vehicular Live Load Models During the Interstate Design Era and Beyond*, John M. Kulicki and Dennis R. Mertz, Transportation Research Circular; 50 Years of Interstate Structures.

15. *Bridge Inspector's Reference Manual;* Federal Highway Administration.

16. *The Collapse of the Silver Bridge*, Chris LeRose; www.wvculture.org/history/wvhs1504.html

17. Engineering News, September 1914; L.R. Manville and R.W. Gastmeyer

18. *AASHTO Guide Specifications for Horizontally Curved Steel Girder Highway Bridges*, by American Association of State Highway and Transportation Officials, 2003.

19. *G13.1 Guidelines for Steel Girder Bridge Analysis* by American Association of State Highway and Transportation Officials and by National Steel Bridge Alliance (NSBA), 2nd Ed., 2014.

20. *Questions and Answers: Load Rating for the FAST Act's Emergency Vehicles, Revisions R01* by Federal Highway Administration Office of Bridges and Structures, 2018.

21. *Load Rating for the FAST Act Emergency Vehicles EV-2 and EV-3*, National Cooperative Highway Research Program Project 20-07 / Task 410, 2019.

45.14 Rating Examples

E45-1	Reinforced Concrete Slab Rating Example LRFR
E45-2	Single Span PSG Bridge, LRFD Design, Rating Example LRFR
E45-3	Two Span 54W" Prestressed Girder Bridge Continuity
E45-4	Steel Girder Rating Example LRFR
E45-5	Reinforced Concrete Slab Rating Example LFR
E45-6	Single Span PSG Bridge Rating Example LFR
E45-7	Two Span 54W" Prestressed Girder Bridge Continuity Reinforcement, Rating Example LFR
E45-8	Steel Girder Rating Example LFR

This page intentionally left blank.

Table of Contents

E45-1 Reinforced Concrete Slab Rating Example - LRFR 2
E45-1.1 Design Criteria 3
E45-1.2 Analysis of an Interior Strip one foot width 4
E45-1.2.1 Dead Loads (DC, DW) 4
E45-1.2.2 Live Load Distribution (Interior Strip) 4
E45-1.2.3 Nominal Flexural Resistance: (Mn) 5
E45-1.2.4 General Load Rating Equation (for flexure) 6
E45-1.2.5 Design Load (HL-93) Rating 7
E45-1.2.6 Permit Vehicle Load Ratings 9
E45-1.2.6.1 Wis-SPV Permit Rating with Single Lane Distribution w/ FWS 9
E45-1.2.6.2 Wis-SPV Permit Rating with Single Lane Distribution w/o FWS 11
E45-1.2.6.3 Wis-SPV Permit Rating with Multi Lane Distribution w/o FWS 13
E45-1.3 Summary of Rating 14

E45-1 Reinforced Concrete Slab Rating Example - LRFR

The 3-span continuous haunched slab structure shown in the Design Example from Chapter 18 is rated below. This same basic procedure is applicable for flat slab structures. For LRFR, the Bureau of Structures rates concrete slab structures for the Design Load (HL-93) and for Permit Vehicle Loads on an Interior Strip. The Permit Vehicle may be the Wisconsin Standard Permit Vehicle (Wis-SPV) or an actual Single-Trip Permit Vehicle. This bridge was analyzed using a slab width equal to one foot.

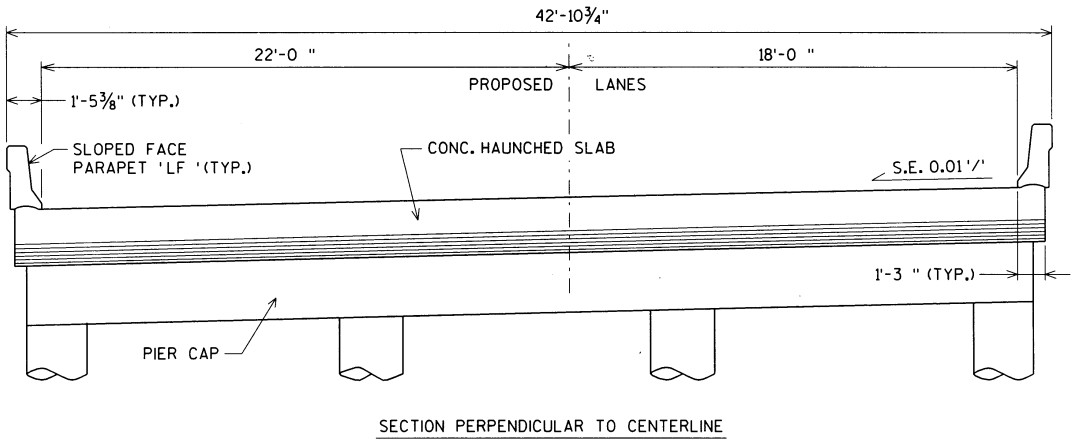

Figure E45-1.1

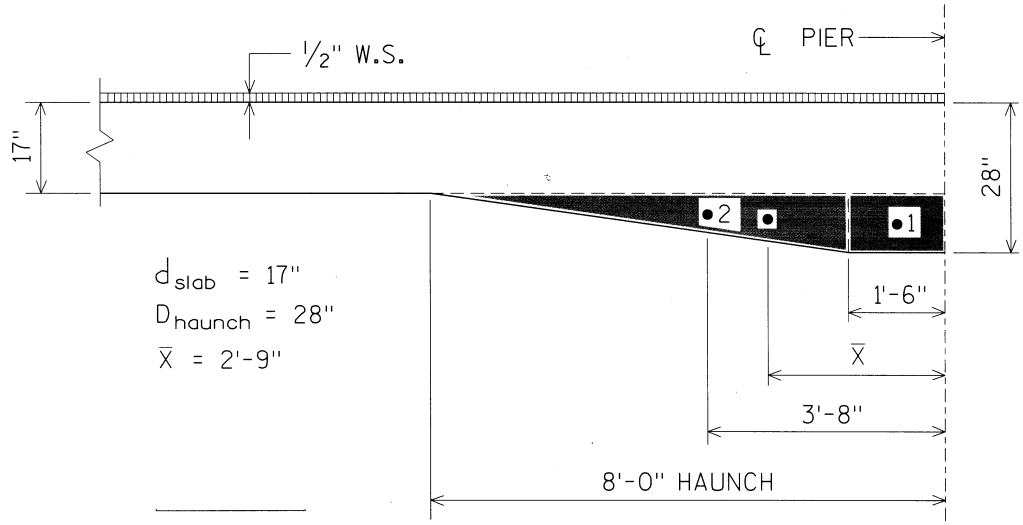

Figure E45-1.2

E45-1.1 Design Criteria

Geometry:

$L_1 := 38.0$	ft	Span 1 Length
$L_2 := 51.0$	ft	Span 2 Length
$L_3 := 38.0$	ft	Span 3 Length
$slab_{width} := 42.5$	ft	out to out width of slab
$skew := 6$	deg	skew angle (RHF)
$w_{roadway} := 40.0$	ft	clear roadway width
$cover_{top} := 2.5$	in	concrete cover on top bars (includes 1/2in wearing surface)
$cover_{bot} := 1.5$	in	concrete cover on bottom bars
$d_{slab} := 17$	in	slab depth (not including 1/2in wearing surface)
$D_{haunch} := 28$	in	haunch depth (not including 1/2in wearing surface)
$A_{st_0.4L} := 1.71$	$\frac{in^2}{ft}$	Area of longitudinal bottom steel at 0.4L (# 9's at 7in centers)
$A_{st_pier} := 1.88$	$\frac{in^2}{ft}$	Area of longitudinal top steel at Pier (# 8's at 5in centers)

Material Properties:

$f'_c := 4$	ksi	concrete compressive strength
$f_y := 60$	ksi	yield strength of reinforcement
$E_c := 3800$	ksi	modulus of elasticity of concrete
$E_s := 29000$	ksi	modulus of elasticity of reinforcement
$n := 8$		E_s / E_c (modular ratio)

Weights:

$w_c := 150$	pcf	concrete unit weight
$w_{LF} := 387$	plf	weight of Type LF parapet (each)

E45-1.2 Analysis of an Interior Strip - one foot width

Use Strength Limit States to rate the concrete slab bridge. **MBE [6A.4.2.2]**

The influence of ADTT and skew on force effects are ignored for slab bridges (See 18.3.2.2).

E45-1.2.1 Dead Loads (DC, DW)

The slab dead load, DC_{slab}, and the section properties of the slab, do not include the 1/2 inch wearing surface. But the 1/2 inch wearing surface load, DC_{WS}, of 6 psf must be included in the analysis of the slab. For a one foot slab width:

$DC_{ws} := 6$ 1/2 inch wearing surface load, plf

The parapet dead load is uniformly distributed over the full width of the slab when analyzing an Interior Strip. For a one foot slab width:

$$DC_{para} := 2 \cdot \frac{w_{LF}}{slab_{width}} \qquad \boxed{DC_{para} = 18} \quad \text{plf}$$

The unfactored dead load moments, M_{DC}, due to slab dead load (DC_{slab}), parapet dead load (DC_{para}), and the 1/2 inch wearing surface (DC_{ws}) are shown in Chapter 18 Example (Table E18.4).

The structure was designed for a possible future wearing surface, DW_{FWS}, of 20 psf.

$DW_{FWS} := 20$ Possible wearing surface, plf

E45-1.2.2 Live Load Distribution (Interior Strip)

Live loads are distributed over an equivalent width, E, as calculated below.
The live loads to be placed on these widths are axle loads (i.e., two lines of wheels) and the full lane load. The equivalent distribution width applies for both live load moment and shear.

Single - Lane Loading: $E = 10.0 + 5.0 \cdot (L_1 \cdot W_1)^{0.5}$ in

Multi - Lane Loading: $E = 84.0 + 1.44 \cdot (L_1 \cdot W_1)^{0.5} \leq 12.0 \cdot \frac{W}{N_L}$ in

Where:

L_1 = modified span length taken equal to the lesser of the actual span or 60ft (L_1 in ft)

W_1 = modified edge to edge width of bridge taken to be equal to the lesser of the actual width or 60ft for multi-lane loading, or 30ft for single-lane loading (W_1 in ft)

W = physical edge to edge width of bridge (W in ft)

N_L = number of design lanes as specified in **LRFD [3.6.1.1.1]**

For single-lane loading:

(Span 1, 3) $E := 10.0 + 5.0 \cdot (38 \cdot 30)^{0.5}$ $\boxed{E = 178.819}$ in

(Span 2) $E := 10.0 + 5.0 \cdot (51 \cdot 30)^{0.5}$ $\boxed{E = 205.576}$ in

For multi-lane loading:

$$12.0 \cdot \frac{W}{N_L} = 12.0 \cdot \frac{42.5}{3} = 170 \quad \text{in}$$

(Span 1, 3) $E := 84.0 + 1.44 \cdot (38 \cdot 42.5)^{0.5}$ $\boxed{E = 141.869}$ in <170" O.K.

(Span 2) $E := 84.0 + 1.44 \cdot (51 \cdot 42.5)^{0.5}$ $\boxed{E = 151.041}$ in <170" O.K.

E45-1.2.3 Nominal Flexural Resistance: (M_n)

The depth of the compressive stress block, (a) is (See 18.3.3.2.1):

$$a = \frac{A_s \cdot f_s}{\alpha_1 \cdot f'_c \cdot b}$$

where:

A_s = area of developed reinforcement at section (in^2)

f_s = stress in reinforcement (ksi)

$f'_c = 4$ ksi

$b := 12$ in

$\alpha_1 := 0.85$ (for $f'_C \leq 10.0$ ksi) **LRFD [5.6.2.2]**

As shown throughout the Chapter 18 Example, when f_s is assumed to be equal to f_y, and is used to calculate (a), the value of c/d_s will be < 0.6 (for f_y = 60 ksi) per **LRFD [5.6.2.1]** Therefore the assumption that the reinforcement will yield ($f_s = f_y$) is correct. The value for (c) and (d_s) are calculated as:

$$c = \frac{a}{\beta_1}$$

$\beta_1 := 0.85$

d_s = slab depth(excl. 1/2" wearing surface) - bar clearance - 1/2 bar diameter

For rectangular sections, the nominal moment resistance, M_n, (tension reinforcement only) equals:

$$M_n = A_s \cdot f_y \cdot \left(d_s - \frac{a}{2}\right)$$

Minimum Reinforcement Check

All sections throughout the bridge meet minimum reinforcement requirements, because this was checked in the chapter 18 Design example. Therefore, no adjustment to nominal resistance (M_n) or moment capacity is required. **MBE [6A.5.6]**

E45-1.2.4 General Load - Rating Equation (for flexure)

$$RF = \frac{C - (\gamma_{DC}) \cdot (M_{DC}) - (\gamma_{DW}) \cdot (M_{DW})}{\gamma_L \cdot (M_{LL_IM})}$$ **MBE [6A.4.2.1]**

For the Strength Limit State:

$$C = (\phi_c)(\phi_s)(\phi) \cdot R_n$$

where:

$R_n = M_n$ (for flexure)

$(\phi_c)(\phi_s) \geq 0.85$

Factors affecting Capacity (C):

Resistance Factor (ϕ), for Strength Limit State **MBE [6.5.3]**

$\phi := 0.9$ for flexure (all reinforced concrete section in the Chapter 18 Example were found to be tension-controlled sections as defined in **LRFD [5.6.2.1]**).

Condition Factor (ϕ_c) per Chapter 45.3.2.4

$\phi_c := 1.0$

System Factor (ϕ_s) Per Chapter 45.3.2.5

$\phi_s := 1.0$ for a slab bridge

E45-1.2.5 Design Load (HL-93) Rating

Use Strength I Limit State to find the Inventory and Operating Ratings **MBE [6A.4.2.2, 6A.5.4.1]**

Equivalent Strip Width (E) and Distribution Factor (DF):

Use the smaller equivalent width (single or multi-lane), when (HL-93) live load is to be distributed, for Strength I Limit State. Multi-lane loading values will control for this bridge.

The distribution factor, DF, is computed for a slab width equal to one foot.

$$DF = \frac{1}{E}$$ (where E is in feet)

The multiple presence factor, m, has been included in the equations for distribution width, E, and therefore is not used to adjust the distribution factor, DF, **LRFD [3.6.1.1.2]**.

Spans 1 & 3:

DF = 1/(141"/12) = 0.0851 lanes / ft-slab

Span 2:

DF = 1/(151"/12) = 0.0795 lanes / ft-slab

Look at the distribution factor calculated for each span and select the largest value. This single value is to be applied along the entire length of the bridge.
Therefore use: $DF := 0.0851$ s / ft-slab for all spans.

Dynamic Load Allowance (IM)

$IM := 33 \quad \%$ **MBE [6A.4.4.3]**

Live Loads (LL)

The live load combinations used for Strength I Limit State are shown in the Chapter 18 Example in Table E18.2 and E18.3. The unfactored moments due to Design Lane, Design Tandem, Design Truck and 90%{Double Design Truck + Design Lanes] are shown in Chapter 18 Example (Table E18.4).

Rating for Flexure

$$RF = \frac{(\phi_c)(\phi_s)(\phi)\cdot M_n - (\gamma_{DC})\cdot(M_{DC}) - (\gamma_{DW})\cdot(M_{DW})}{\gamma_L\cdot(M_{LL_IM})}$$

Load Factors

$\gamma_{DC} := 1.25$	Chapter 45 Table 45.3-1
$\gamma_{DW} := 1.50$	WisDOT policy is to always use 1.50; Chapter 45 Table 45.3-1
$\gamma_{Li} := 1.75$	(Inventory Rating) Chapter 45 Table 45.3-1
$\gamma_{Lo} := 1.35$	(Operating Rating) Chapter 45 Table 45.3-1

The Design Load Rating was checked at 0.1 pts. along the structure and at the slab/haunch intercepts. The governing location, for this example, is in span 1 at the 0.4 pt.

Span 1 (0.4 pt.)

Inventory:

$$RF_i = \frac{(\phi_c)(\phi_s)(\phi)\cdot M_n - (\gamma_{DC})\cdot(M_{DC}) - (\gamma_{DW})\cdot(M_{DW})}{\gamma_{Li}\cdot(M_{LL_IM})}$$

$A_{st_0.4L} = 1.71 \ \frac{in^2}{ft}$ and $\alpha_1 := 0.85$ (for $f'_c \leq 10.0$ ksi) **LRFD [5.6.2.2]**

$d_s := 17.0 - cover_{bot} - \frac{1.128}{2}$ $\boxed{d_s = 14.94}$ in

$a := \frac{A_{st_0.4L}\cdot f_y}{\alpha_1\cdot f'_c\cdot b}$ $\boxed{a = 2.51}$ in

$M_n := A_{st_0.4L}\cdot f_y\cdot\left(d_s - \frac{a}{2}\right)$ $\boxed{M_n = 1403.4}$ kip – in

$\boxed{M_n = 117.0}$ kip – ft

$M_{DC} := 18.1$ kip – ft (from Chapter 18 Example, Table E18.4)

$M_{DW} := 0.0$ kip – ft (additional wearing surface not for HL-93 rating runs)

The positive live load moment shall be the largest caused by the following (from Chapter 18 Example, Table E18.4):

Design Tandem (+IM) + Design Lane: (37.5 kip-ft + 7.9 kip-ft) = 45.4 kip-ft
Design Truck (+IM) + Design Lane: (35.4 kip-ft + 7.9 kip-ft) = 43.3 kip-ft

Therefore:

$M_{LL_IM} := 45.4$ kip – ft

Inventory:

$$RF_i := \frac{(\phi_c)(\phi_s)(\phi)\cdot M_n - (\gamma_{DC})\cdot(M_{DC}) - (\gamma_{DW})\cdot(M_{DW})}{\gamma_{Li}\cdot(M_{LL_IM})}$$

$\boxed{RF_i = 1.04}$

Operating:

$$RF_o := \frac{(\phi_c)(\phi_s)(\phi)\cdot M_n - (\gamma_{DC})\cdot(M_{DC}) - (\gamma_{DW})\cdot(M_{DW})}{\gamma_{Lo}\cdot(M_{LL_IM})}$$

$\boxed{RF_o = 1.35}$

Rating for Shear:

Slab bridge designed for dead load and (HL-93) live load moments in conformance with **LRFD [4.6.2.3]** may be considered satisfactory in shear **LRFD [5.12.2.1]**. This bridge was designed using this procedure, therefore a shear rating is not required.

The Rating Factors, RF, for Inventory and Operating Rating are shown on the plans and also on the load rating summary sheet.

E45-1.2.6 Permit Vehicle Load Ratings

For any bridge design (new or rehabilitation) or bridge re-rate, the Wisconsin Standard Permit Vehicle (Wis-SPV) shall be analyzed (per 45.6).

The bridge shall be analyzed for this vehicle considering both single-lane and multi-lane distribution. Also, the vehicle will be analyzed assuming it is mixing with other traffic on the bridge and that full dynamic load allowance is utilized. Future wearing surface will not be considered.

Since this example is rating a newly designed bridge, an additional check is required. The designer shall ensure that the results of a single-lane analysis utilizing the future wearing surface are greater than 190 kips MVW.

Use Strength II Limit State to find the Permit Vehicle Load Rating **MBE[6A.4.2.2, 6A.5.4.2.1]**.

E45-1.2.6.1 Wis-SPV Permit Rating with Single Lane Distribution w/ FWS

Equivalent Strip Width (E) and Distribution Factor (DF)

The equivalent width from single-lane loading is used, when Permit Vehicle live load is to be distributed, for Strength II Limit State **MBE [6A.4.5.4.2]**.

Calculate the distribution factor, DF, and divide it by (1.20) to remove the effects of the multiple presence factor (m), which are present in the equation for equivalent width (E) **MBE [6A.3.2, C6A.4.5.4.2b]**.

The distribution factor, DF, is computed for a slab width equal to one foot.

$$DF = \frac{1}{E \cdot (1.20)} \qquad \text{(where E is in feet)}$$

Spans 1 &3:

DF = 1/(178"/12)(1.20) = 0.0562 lanes / ft-slab

Span 2:

DF = 1/(205"/12)(1.20) = 0.0488 lanes / ft-slab

Look at the distribution factor calculated for each span and select the largest value.
This single value is to be applied along the entire length of the bridge.

Therefore use: $DF := 0.0562$ s / ft-slab for all spans.

Dynamic Load Allowance (IM)

$IM = 33 \quad \%$ **MBE [6A.4.5.5]**

Rating for Flexure

$$RF = \frac{(\phi_c)(\phi_s)(\phi)\cdot M_n - (\gamma_{DC})\cdot(M_{DC}) - (\gamma_{DW})\cdot(M_{DW})}{\gamma_L\cdot(M_{LL_IM})}$$

Load Factors

$\gamma_{DC} := 1.25$ Chapter 45 Table 45.3-1

$\gamma_{DW} := 1.50$ WisDOT policy is to always use 1.50; Chapter 45 Table 45.3-1

$\gamma_L := 1.20$ WisDOT Policy is to designate the (Wis_SPV) as a "Single-Trip" vehicle with no escorts. Current policy is to select the value for γ_L from Chapter 45 Table 45.3-3

The Maximum Permit Vehicle Load was checked at 0.1 pts. along the structure and at the slab/haunch intercepts. The governing location is the C/L of Pier.

At C/L of Pier

Permit Vehicle:

$$RF = \frac{(\phi_c)(\phi_s)(\phi)\cdot M_n - (\gamma_{DC})\cdot(M_{DC}) - (\gamma_{DW})\cdot(M_{DW})}{\gamma_L\cdot(M_{LL_IM})}$$

$A_{st_pier} := 1.88 \ \frac{in^2}{ft}$ and $\alpha_1 := 0.85$ (for $f'_C \leq 10.0$ ksi) **LRFD [5.6.2.2]**

$d_s := 28.0 - (cover_{top} - 0.5) - \frac{1.00}{2}$ $\boxed{d_s = 25.5}$ in

$a := \frac{A_{st_pier}\cdot f_y}{\alpha_1\cdot f'_c\cdot b}$ $\boxed{a = 2.76}$ in

$M_n := A_{st_pier}\cdot f_y\cdot\left(d_s - \frac{a}{2}\right)$ $\boxed{M_n = 2720.5}$ kip – in

$\boxed{M_n = 226.7}$ kip – ft

$M_{DC} := 59.2$ kip – ft (from Chapter 18 Example, Table E18.4)

$M_{DW} := 1.5$ kip – ft

The live load moment at the C/L of Pier due to the Wisconsin Standard Permit Vehicle (Wis-SPV) having a gross vehicle load of 190 kips and utilizing single lane distribution is:

$$M_{LL_IM} := 65.2 \quad kip - ft$$

Permit:

$$RF_{permit} := \frac{(\phi_c)(\phi_s)(\phi)\cdot M_n - (\gamma_{DC})\cdot(M_{DC}) - (\gamma_{DW})\cdot(M_{DW})}{\gamma_L\cdot(M_{LL_IM})}$$

$$\boxed{RF_{permit} = 1.63}$$

The maximum Wisconsin Standard Permit Vehicle (Wis_SPV) load is:

$RF_{permit}\cdot(190) = 310$ kips which is > 190k, Check OK

This same procedure used for the (Wis-SPV) can also be used when evaluating the bridge for an actual "Single-Trip Permit" vehicle.

Rating for Shear:

WisDOT does not rate Permit Vehicles on slab bridges based on shear.

E45-1.2.6.2 Wis-SPV Permit Rating with Single Lane Distribution w/o FWS

Equivalent Strip Width (E) and Distribution Factor (DF)

The equivalent width from single-lane loading is used, when Permit Vehicle live load is to be distributed, for Strength II Limit State **MBE [6A.4.5.4.2]**.

Calculate the distribution factor, DF, and divide it by (1.20) to remove the effects of the multiple presence factor (m), which are present in the equation for equivalent width (E) **MBE [6A.3.2, C6A.4.5.4.2b]**.

The distribution factor, DF, is computed for a slab width equal to one foot.

$$DF = \frac{1}{E\cdot(1.20)} \qquad \text{(where E is in feet)}$$

Spans 1 &3:

DF = 1/(178"/12)(1.20) = 0.0562 lanes / ft-slab

Span 2:

DF = 1/(205"/12)(1.20) = 0.0488 lanes / ft-slab

Look at the distribution factor calculated for each span and select the largest value.
This single value is to be applied along the entire length of the bridge.

Therefore use: $DF := 0.0562$ / ft-slab for all spans.

Dynamic Load Allowance (IM)

$IM = 33$ % **MBE [6A.4.5.5]**

Rating for Flexure

$$RF = \frac{(\phi_c)(\phi_s)(\phi)\cdot M_n - (\gamma_{DC})\cdot(M_{DC}) - (\gamma_{DW})\cdot(M_{DW})}{\gamma_L\cdot(M_{LL_IM})}$$

Load Factors

$\gamma_{DC} := 1.25$ Chapter 45 Table 45.3-1

$\gamma_L := 1.20$ WisDOT Policy is to designate the (Wis_SPV) as a "Single-Trip" vehicle with no escorts. Current policy is to select the value for γ_L from Chapter 45 Table 45.3-3

The Maximum Permit Vehicle Load was checked at 0.1 pts. along the structure and at the slab/haunch intercepts. The governing location is the C/L of Pier.

At C/L of Pier

Permit Vehicle:

$$RF = \frac{(\phi_c)(\phi_s)(\phi)\cdot M_n - (\gamma_{DC})\cdot(M_{DC}) - (\gamma_{DW})\cdot(M_{DW})}{\gamma_L\cdot(M_{LL_IM})}$$

$A_{st_pier} := 1.88 \frac{in^2}{ft}$ and $\alpha_1 := 0.85$ (for $f'_c \leq 10.0$ ksi) **LRFD [5.6.2.2]**

$d_s := 28.0 - (cover_{top} - 0.5) - \frac{1.00}{2}$ $\boxed{d_s = 25.5}$ in

$a := \frac{A_{st_pier}\cdot f_y}{\alpha_1\cdot f'_c\cdot b}$ $\boxed{a = 2.76}$ in

$M_n := A_{st_pier}\cdot f_y\cdot\left(d_s - \frac{a}{2}\right)$ $\boxed{M_n = 2720.5}$ kip – in

$\boxed{M_n = 226.7}$ kip – ft

$M_{DC} := 59.2$ kip – ft (from Chapter 18 Example, Table E18.4)

The live load moment at the C/L of Pier due to the Wisconsin Standard Permit Vehicle (Wis-SPV) having a gross vehicle load of 190 kips and utilizing single lane distribution is:

$$M_{LL_IM} := 65.2 \quad kip - ft$$

Permit:

$$RF_{permit} := \frac{(\phi_c)(\phi_s)(\phi)\cdot M_n - (\gamma_{DC})\cdot(M_{DC})}{\gamma_L\cdot(M_{LL_IM})}$$

$$\boxed{RF_{permit} = 1.66}$$

The maximum Wisconsin Standard Permit Vehicle (Wis_SPV) load is:

$$RF_{permit}\cdot(190) = 316 \quad kips$$

This same procedure used for the (Wis-SPV) can also be used when evaluating the bridge for an actual "Single-Trip Permit" vehicle.

E45-1.2.6.3 Wis-SPV Permit Rating with Multi Lane Distribution w/o FWS

Rating for Flexure

$$RF = \frac{(\phi_c)(\phi_s)(\phi)\cdot M_n - (\gamma_{DC})\cdot(M_{DC})}{\gamma_L\cdot(M_{LL_IM})}$$

The capacity of the bridge to carry the Permit Vehicle Load was checked at 0.1 pts. along the structure and at the slab/haunch intercepts. The governing location is at the C/L of Pier.

Load Factors

$\gamma_{DC} := 1.25$	Chapter 45 Table 45.3-1
$\gamma_{DW} := 1.50$	WisDOT policy is to always use 1.50; Chapter 45 Table 45.3-1
$\gamma_L := 1.30$	WisDOT Policy when analyzing the Wis-SPV as an "Annual Permit" vehicle with no escorts

At C/L of Pier

Permit Vehicle:

$$RF_{permit} = \frac{(\phi_c)(\phi_s)(\phi)\cdot M_n - (\gamma_{DC})\cdot(M_{DC})}{\gamma_L\cdot(M_{LL_IM})}$$

$M_n = 226.7$ kip – ft (as shown previously)

$M_{DC} = 59.2$ kip – ft (as shown previously)

The live load moment at the C/L of Pier due to the Wisconsin Permit Vehicle (Wis_SPV) having a gross vehicle load of 190 kips and a DF of 0.0851 lanes/ft-slab:

$M_{LL_IM} := 98.7$ kip – ft

$$RF_{permit} := \frac{(\phi_c)(\phi_s)(\phi)\cdot M_n - (\gamma_{DC})\cdot(M_{DC})}{\gamma_L\cdot(M_{LL_IM})}$$

$$\boxed{RF_{permit} = 1.01}$$

The Wisconsin Standard Permit Vehicle (Wis_SPV) load that can be carried by the bridge is:

$RF_{permit}\cdot(190) = 193$ kips

E45-1.3 Summary of Rating

Slab - Interior Strip							
Limit State		Design Load Rating		Legal Load Rating	Permit Load Rating (kips)		
		Inventory	Operating		Single DF w/ FWS	Single DF w/o FWS	Multi DF w/o FWS
Strength I	Flexure	1.04	1.34	N/A	310	316	193
Service I		N/A	N/A	N/A	Optional	Optional	Optional

Table of Contents

E45-2 Single Span PSG Bridge, LRFD Design, Rating Example - LRFR 2
E45-2.1 Preliminary Data. 2
E45-2.2 Girder Section Properties 3
E45-2.3 Composite Girder Section Properties 5
E45-2.4 Dead Load Analysis Interior Girder. 6
E45-2.5 Live Load Analysis Interior Girder Live Load Distribution Factors (g) 7
E45-2.5.1 Moment Distribution Factors for Interior Beams:. 8
E45-2.5.2 Shear Distribution Factors for Interior Beams:. 8
E45-2.5.3 Live Load Moments 9
E45-2.6 Compute Nominal Flexural Resistance at Midspan 9
E45-2.7 Compute Nominal Shear Resistance at First Critical Section. 14
E45-2.8 Longitudinal Tension Flange Capacity:. 19
E45-2.9 Design Load Rating 21
E45-2.10 Legal Load Rating 23
E45-2.11 Permit Load Rating 24
E45-2.12 Summary of Rating Factors 27

E45-2 Single Span PSG Bridge, LRFD Design, Rating Example - LRFR

The bridge was built in 2007 and has no deterioration. There is no overlay on the structure.

This example will perform the LRFR rating calculations for the bridge that was designed in Chapter 19 of this manual (E19-1). Though it is necessary to rate both interior and exterior girders to determine the minimum capacity, the below rating will analyze the interior girder only.

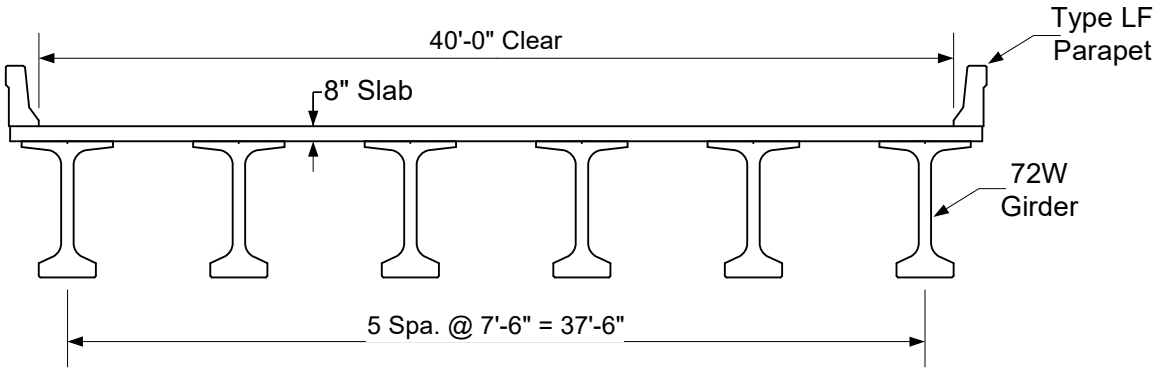

Figure E45-2.1

E45-2.1 Preliminary Data

$L := 146$	center to center of bearing, ft
$f'_c := 8$	girder concrete strength, ksi
$f'_{cd} := 4$	deck concrete strength, ksi
$f_{pu} := 270$	strength of low relaxation strand, ksi
$d_b := 0.6$	strand diameter, inches
$A_s := 0.217$	area of strand, in2
$t_s := 8$	slab thickness, in
$t_{se} := 7.5$	effective slab thickness (slab thickness - 1/2 in wearing surface), in
$w_p := 0.387$	weight of Wisconsin Type LF parapet, klf
$w_c := 0.150$	weight of concrete, kcf
$H_{avg} := 2$	average thickness of haunch, in
$w := 40$	clear width of deck, 2 lane road, 3 design lanes, ft
$S := 7.5$	spacing of the girders, ft
$ng := 6$	number of girders

E45-2.2 Girder Section Properties

72W Girder Properties (46 strands, 8 draped):

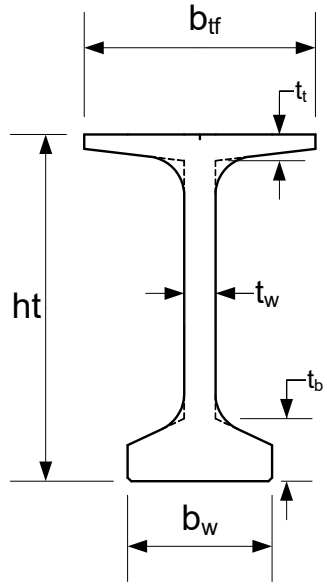

$b_{tf} := 48$	width of top flange, in
$t_t := 5.5$	avg. thickness of top flange, in
$t_w := 6.5$	thickness of web, in
$t_b := 13$	avg. thickness of bottom flange, in
$ht := 72$	height of girder, in
$b_w := 30$	width of bottom flange, in
$A_g := 915$	area of girder, in^2
$I_g := 656426$	moment of inertia of girder, in^4
$y_t := 37.13$	centriod to top fiber, in
$y_b := -34.87$	centroid to bottom fiber, in
$S_t := 17680$	section modulus for top, in^3
$S_b := -18825$	section modulus for bottom, in^3
$w_g := 0.953$	weight of girder, klf
$ns := 46$	number of strands
$e_s := -30.52$	centriod to cg strand pattern

$$e_g := y_t + 2 + \frac{t_{se}}{2}$$ $\boxed{e_g = 42.88}$ in

Web Depth: $d_w := ht - t_t - t_b$ $\boxed{d_w = 53.50}$ in

$$E_{beam8} := 5500 \cdot \frac{\sqrt{f'_c \cdot 1000}}{\sqrt{6000}}$$ $\boxed{E_{beam8} = 6351}$ $E_B := E_{beam8}$

Modulus of elasticity at time of release (used to for loss calculations):

$$E_{beam6.8} := 33000 \cdot K_1 \cdot w_c^{1.5} \cdot \sqrt{f'_{ci}}$$ $\boxed{E_{beam6.8} = 4999}$ $E_{ct} := E_{beam6.8}$

$E_D := E_{deck4}$

$$n := \frac{E_B}{E_D}$$ $\boxed{n = 1.540}$

$$K_g := n \cdot \left(I_g + A_g \cdot e_g^2\right)$$ **LRFD [Eq 4.6.2.2.1-1]** $\boxed{K_g = 3600866}$ in^4

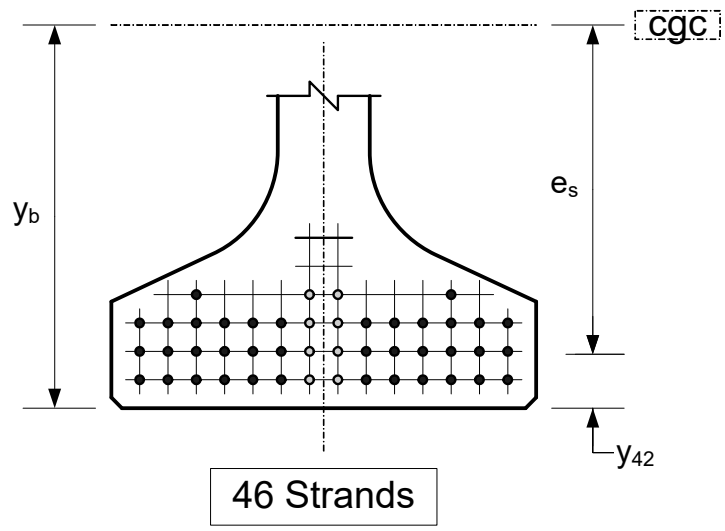

Figure E45-2.2

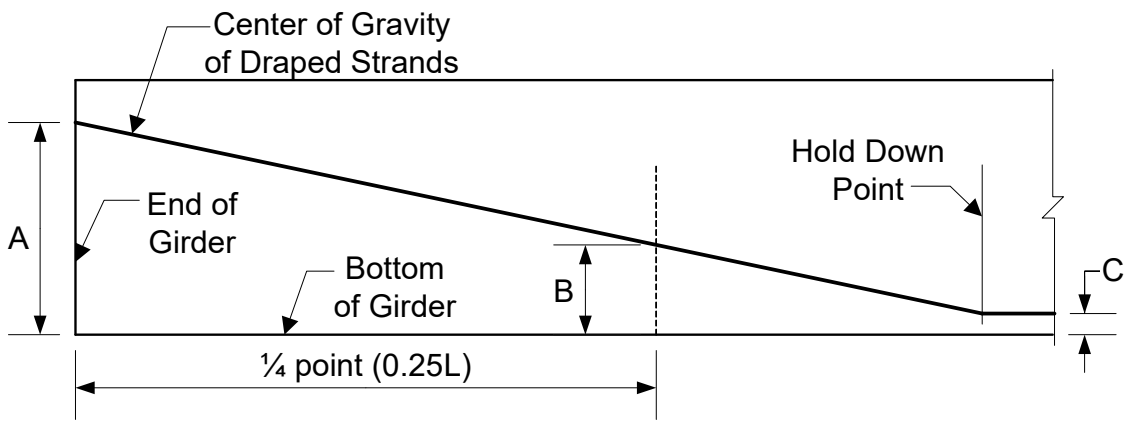

Figure E45-2.3

$A := 67$ in

$C := 5$ in

$B_{min} := 20.5$ in

$B_{max} := 23.5$ in

$$B_{avg} := \frac{B_{min} + B_{max}}{2}$$

$B_{avg} = 22.0$ in

$$slope := \left[\frac{A - B_{avg}}{(0.25)\cdot L\cdot 12}\right]\cdot 100$$

$slope = 10.274$ %

E45-2.3 Composite Girder Section Properties

Calculate the effective flange width in accordance with 17.2.11 and **LRFD [4.6.2.6]**:

$b_{eff} := S \cdot 12$ $\boxed{b_{eff} = 90.00}$ in

The effective width, b_{eff}, must be adjusted by the modular ratio, n, to convert to the same concrete material (modulus) as the girder.

$b_{eadj} := \frac{b_{eff}}{n}$ $\boxed{b_{eadj} = 58.46}$ in

Calculate the composite girder section properties:

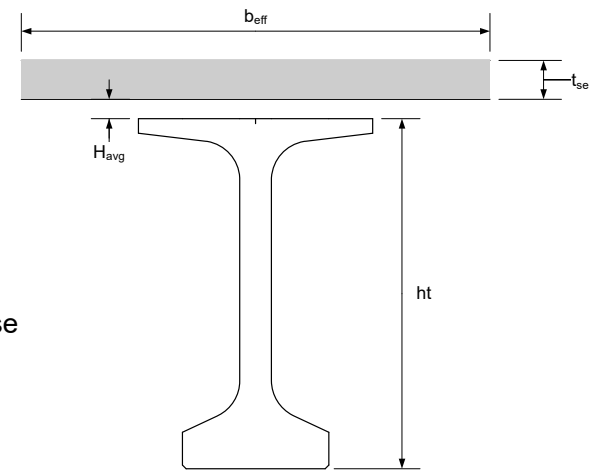

effective slab thickness; $\boxed{t_{se} = 7.50}$ in

effective slab width; $\boxed{b_{eadj} = 58.46}$ in

haunch thickness; $\boxed{H_{avg} = 2.00}$ in

total height; $h_c := ht + H_{avg} + t_{se}$

$\boxed{h_c = 81.50}$ in

$\boxed{n = 1.540}$

Note: The area of the concrete haunch is not included in the calculation of the composite section properties.

Component	Ycg	A	AY	AY^2	I	$I+AY^2$
Deck	77.75	438	34089	2650458	2055	2652513
Girder	34.87	915	31906	1112564	656426	1768990
Haunch	73	0	0	0	0	0
Summation		1353	65996			4421503

$\Sigma A := 1353$ in^2

$\Sigma AY := 65996$ in^3

$\Sigma IplusAYsq := 4421503$ in^4

$y_{cgb} := \frac{-\Sigma AY}{\Sigma A}$ $\boxed{y_{cgb} = -48.8}$ in

$y_{cgt} := ht + y_{cgb}$ $\boxed{y_{cgt} = 23.2}$ in

$A_{cg} := \Sigma A$ $\boxed{A_{cg} = 1353}$ in^2

$I_{cg} := \Sigma IplusAYsq - A_{cg} \cdot y_{cgb}^2$ $\boxed{I_{cg} = 1202381}$ in^4

$S_{cgt} := \frac{I_{cg}}{y_{cgt}}$ $\boxed{S_{cgt} = 51777}$ in^3

$S_{cgb} := \frac{I_{cg}}{y_{cgb}}$ $\boxed{S_{cgb} = -24650}$ in^3

E45-2.4 Dead Load Analysis - Interior Girder

Dead load on non-composite (DC_1):

weight of 72W girders $\boxed{w_g = 0.953}$ klf

weight of 2-in haunch

$w_h := \left(\frac{H_{avg}}{12}\right) \cdot \left(\frac{b_{tf}}{12}\right) \cdot (w_c)$ $\boxed{w_h = 0.100}$ klf

weight of diaphragms $\boxed{w_D := 0.006}$ klf

weight of slab

$w_d := \left(\frac{t_s}{12}\right) \cdot (S) \cdot (w_c)$ $\boxed{w_d = 0.750}$ ksf

$DC_1 := w_g + w_h + w_D + w_d$ $\boxed{DC_1 = 1.809}$ klf

$V_{DC1} := \frac{DC_1 \cdot L}{2}$ $\boxed{V_{DC1} = 132}$ kips

$M_{DC1} := \frac{DC_1 \cdot L^2}{8}$ $\boxed{M_{DC1} = 4820}$ kip-ft

* Dead load on composite (DC_2):

weight of single parapet, klf $w_p = 0.387$ klf

weight of 2 parapets, divided equally to all girders, klf

$$DC_2 := \frac{w_p \cdot 2}{ng}$$ $DC_2 = 0.129$ klf

$$V_{DC2} := \frac{DC_2 \cdot L}{2}$$ $V_{DC2} = 9$ kips

$$M_{DC2} := \frac{DC_2 \cdot L^2}{8}$$ $M_{DC2} = 344$ kip-ft

* Wearing Surface (DW): There is no current wearing surface on this bridge. However, it is designed for a 20 psf future wearing surface. Thus, it will be used in the calculations for the Wisconsin Standard Permit Vehicle Design Check, Section 45.12.

$$DW := \frac{w \cdot 0.020}{ng}$$ $DW = 0.133$ klf

$$V_{DW} := \frac{DW \cdot L}{2}$$ $V_{DW} = 10$ kips

$$M_{DW} := \frac{DW \cdot L^2}{8}$$ $M_{DW} = 355$ kip-ft

* **LRFD [4.6.2.2.1]** states that permanent loads on the deck may be distributed uniformly among the beams. This method is used for the parapet and future wearing surface loads.

E45-2.5 Live Load Analysis - Interior Girder

Live Load Distribution Factors (g)

In accordance with **LRFD [Table 4.6.2.2.1-1]**, this structure is a Type "K" bridge.

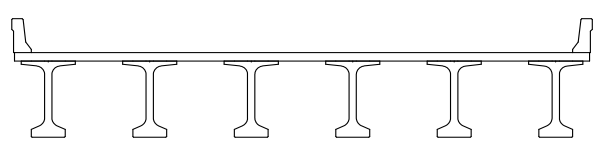

Distribution factors are in accordance with **LRFD [Table 4.6.2.2.2b-1]**. For an interior beam, the distribution factors are shown below:

For one Design Lane Loaded:

$$0.06 + \left(\frac{S}{14}\right)^{0.4} \cdot \left(\frac{S}{L}\right)^{0.3} \cdot \left(\frac{K_g}{12.0 \cdot L \cdot t_{se}^{\ 3}}\right)^{0.1}$$

For Two or More Design Lanes Loaded:

$$0.075 + \left(\frac{S}{9.5}\right)^{0.6} \cdot \left(\frac{S}{L}\right)^{0.2} \cdot \left(\frac{K_g}{12.0 \cdot L \cdot t_{se}^{\ 3}}\right)^{0.1}$$

E45-2.5.1 Moment Distribution Factors for Interior Beams:

One Lane Loaded:

$$g_{i1} := 0.06 + \left(\frac{S}{14}\right)^{0.4} \cdot \left(\frac{S}{L}\right)^{0.3} \cdot \left(\frac{K_g}{12.0 \cdot L \cdot t_{se}^{\ 3}}\right)^{0.1} \qquad \boxed{g_{i1} = 0.435}$$

Two or More Lanes Loaded:

$$g_{i2} := 0.075 + \left(\frac{S}{9.5}\right)^{0.6} \cdot \left(\frac{S}{L}\right)^{0.2} \cdot \left(\frac{K_g}{12.0 \cdot L \cdot t_{se}^{\ 3}}\right)^{0.1} \qquad \boxed{g_{i2} = 0.636}$$

$$g_i := \max(g_{i1}, g_{i2}) \qquad \boxed{g_i = 0.636}$$

Note: The distribution factors above already have a multiple presence factor included that is used for service and strength limit states. For permit load analysis utilizing single lane distribution, the 1.2 multiple presence factor should be divided out.

E45-2.5.2 Shear Distribution Factors for Interior Beams:

One Lane Loaded:

$$g_{v1} := 0.36 + \frac{S}{25} \qquad \boxed{g_{v1} = 0.660}$$

Two or More Lanes Loaded:

$$g_{v2} := 0.2 + \frac{S}{12} - \left(\frac{S}{35}\right)^2 \qquad \boxed{g_{v2} = 0.779}$$

$$g_v := \max(g_{v1}, g_{v2}) \qquad \boxed{g_v = 0.779}$$

E45-2.5.3 Live Load Moments

The unfactored live load load moments (per lane including impact) are listed below (values are in kip-ft). Note that the dynamic load allowance is applied only to the truck portion of the HL-93 loads.

Unfactored Live Load + Impact Moments per Lane (kip-ft)		
Tenth Point	Truck	Tandem
0	0	0
0.1	1783	1474
0.2	2710	2618
0.3	4100	3431
0.4	4665	3914
0.5	4828	4066

The unfactored live load moments per lane are calculated by applying the appropriate distribution factor to the controlling moment. For the interior girder:

$g_i = 0.636$

$M_{LLIM} := g_i \cdot 4828$ $\boxed{M_{LLIM} = 3073}$ kip-ft

E45-2.6 Compute Nominal Flexural Resistance at Midspan

At failure, we can assume that the tendon stress is:

$$f_{ps} = f_{pu}\left(1 - k \cdot \frac{c}{d_p}\right)$$

where:

$$k = 2\left(1.04 - \frac{f_{py}}{f_{pu}}\right)$$

From **LRFD Table [C5.6.3.1.1-1]**, for low relaxation strands, $k := 0.28$.

"c" is defined as the distance between the neutral axis and the compression face (inches).

Assumed dimensions:

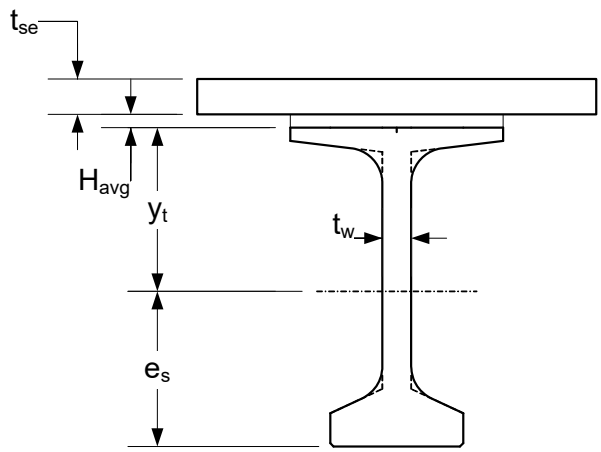

Figure E45-2.4

Assume that the compression block is in the deck. Calculate the capacity as if it is a rectangular section (with the compression block in the flange). The neutral axis location,calculated in accordance with **LRFD 5.6.3.1.1** for a rectangular section, is:

$$c = \frac{A_{ps} \cdot f_{pu}}{\alpha_1 \cdot f'_{cd} \cdot \beta_1 \cdot b + k \cdot A_{ps} \cdot \frac{f_{pu}}{d_p}}$$

where:

$A_{ps} := ns \cdot A_s$ $\quad$ $A_{ps} = 9.98$ in^2

$b := b_{eff}$ $\quad$ $b = 90.00$ in

LRFD [5.6.2.2] $\quad \alpha_1 := 0.85 \quad$ (for $f'_{cd} \le 10.0$ ksi)

$\beta_1 := \max\left[0.85 - \left(f'_{cd} - 4\right) \cdot 0.05, 0.65\right]$ $\quad$ $\beta_1 = 0.850$

$d_p := y_t + H_{avg} + t_{se} - e_s$ $\quad$ $d_p = 77.15$ in

$$c := \frac{A_{ps} \cdot f_{pu}}{\alpha_1 \cdot f'_{cd} \cdot \beta_1 \cdot b + k \cdot A_{ps} \cdot \frac{f_{pu}}{d_p}}$$ $\quad$ $c = 9.99$ in

$a := \beta_1 \cdot c$ $\quad$ $a = 8.49$ in

The calculated value of "a" is greater than the deck thickness. Therefore, the rectangular assumption is incorrect and the compression block extends into the haunch. Calculate the neutral axis location and capacity for a flanged section:

$h_f := t_{se}$ $\quad$ depth of compression flange $\quad$ $t_{se} = 7.500$ in

$b_{tf} = 48.00$ $\quad$ width of top flange, inches

$$c := \frac{A_{ps} \cdot f_{pu} - \alpha_1 \cdot f'_{cd} \cdot (b - b_{tf}) \cdot h_f}{\alpha_1 \cdot f'_{cd} \cdot \beta_1 \cdot b_{tf} + k \cdot A_{ps} \cdot \frac{f_{pu}}{d_p}}$$ $\boxed{c = 10.937}$ in

$a := \beta_1 \cdot c$ $\boxed{a = 9.30}$ in

This is above the base of the haunch (9.5 inches) and nearly to the web of the girder. Assume OK.
Now calculate the effective tendon stress at ultimate:

$f_{ps} := f_{pu} \cdot \left(1 - k \cdot \frac{c}{d_p}\right)$ $\boxed{f_{ps} = 259.283}$ ksi

$T_u := f_{ps} \cdot A_{ps}$ $\boxed{T_u = 2588}$ kips

Calculate the nominal moment capacity of the composite section in accordance with **LRFD [5.6.3.2], [5.6.3.2.2]**:

$$M_n := \left[A_{ps} \cdot f_{ps} \cdot \left(d_p - \frac{a}{2}\right) + \alpha_1 \cdot f'_{cd} \cdot (b - b_{tf}) \cdot h_f \cdot \left(\frac{a}{2} - \frac{h_f}{2}\right)\right] \cdot \frac{1}{12}$$

$\boxed{M_n = 15717}$ kip-ft

For prestressed concrete, $\phi_f := 1.00$, **LRFD [5.5.4.2]**. Therefore the usable capacity is:

$M_r := \phi_f \cdot M_n$ $\boxed{M_r = 15717}$ kip-ft

Check Minimum Reinforcement
The amount of reinforcement must be sufficient to develop M_r equal to the lesser of M_{cr} or 1.33 M_u per **LRFD [5.6.3.3]**

$\gamma_{LL} := 1.75$ $\gamma_{DC} = 1.250$ $\eta := 1.0$

$Mu := \eta \cdot \left[\gamma_{DC} \cdot (M_{DC1} + M_{DC2}) + \gamma_{LL} \cdot M_{LLIM}\right]$ $\boxed{Mu = 11832}$ kip-ft

$\boxed{1.33 \cdot Mu = 15737}$ kip-ft

Calculate M_{cr} next and compare its value with 1.33 Mu

M_{cr} is calculated as follows:

$f_r = 0.24 \cdot \lambda \sqrt{f'_c}$ = modulus of rupture (ksi) **LRFD [5.4.2.6]**

$f_r := 0.24 \cdot \sqrt{f'_c}$ $\lambda = 1.0$ (normal wgt. conc.) **LRFD [5.4.2.8]** $f_r = 0.679$ ksi

$f_{cpe} := \frac{T}{A_g} + \frac{T \cdot e_s}{S_b}$ $f_{cpe} = 4.341$ ksi

$M_{dnc} := M_{DC1}$ $M_{dnc} = 4820$ kip-ft

$S_c := -S_{cgb}$ $S_c = 24650$ ksi

$S_{nc} := -S_b$ $S_{nc} = 18825$ ksi

$\gamma_1 := 1.6$ flexural cracking variability factor

$\gamma_2 := 1.1$ prestress variability factor

$\gamma_3 := 1.0$ for prestressed concrete members

$$M_{cr} := \gamma_3 \cdot \left[S_c \cdot \left(\gamma_1 \cdot f_r + \gamma_2 \cdot f_{cpe} \right) \cdot \frac{1}{12} - M_{dnc} \cdot \left(\frac{S_c}{S_{nc}} - 1 \right) \right]$$ $M_{cr} = 10547$ kip-ft

$M_{cr} = 10547$ kip-ft $<$ $1.33Mu = 15737$, therefore M_{cr} controls

This satisfies the minimum reinforcement check since $M_{cr} < M_r$

Elastic Shortening Loss

at transfer (before ES loss) **LRFD [5.9.3.2]**

$T_{oi} := ns \cdot f_{tr} \cdot A_s$ $= 46 \cdot 202.5 \cdot 0.217 = 2021$ kips

The ES loss estimated above was: $\Delta f_{pES_est} := 17$ ksi, or $ES_{loss} = 7.900$ %. The resulting force in the strands after ES loss:

$T_o := \left(1 - \frac{ES_{loss}}{100}\right) \cdot T_{oi}$ $T_o = 1862$ kips

If we assume all strands are straight we can calculate the initial elastic shortening loss;

$$f_{cgp} := \frac{T_o}{A_g} + (T_o \cdot e_s) \cdot \frac{e_s}{I_g} + M_g \cdot 12 \cdot \frac{e_s}{I_g}$$ $f_{cgp} = 3.240$ ksi

$E_{ct} = 4999$ ksi

$$E_p := E_s$$ $E_p = 28500$ ksi

$$\Delta f_{pES} := \frac{E_p}{E_{ct}} \cdot f_{cgp}$$ $\Delta f_{pES} = 18.471$ ksi

$$f_i := f_{tr} - \Delta f_{pES}$$ $f_i = 184.029$ ksi

Approximate Estimate of Time Dependant Losses

Calculate the components of the time dependant losses; shrinkage, creep and relaxation, using the approximate method in accordance with **LRFD [5.9.3.3]**.

$$\Delta f_{pLT} = 10.0 \cdot \frac{f_{pi} \cdot A_s}{A_g} \cdot \gamma_h \cdot \gamma_{st} + 12.0 \cdot \gamma_h \cdot \gamma_{st} + \Delta f_{pR}$$

From **LRFD [Figure 5.4.2.3.3-1]**, the average annual ambient relative humidity, $H := 72$ %.

$$\gamma_h := 1.7 - 0.01 \cdot H$$ $\gamma_h = 0.980$

$$\gamma_{st} := \frac{5}{1 + f'_{ci}}$$ $\gamma_{st} = 0.641$

$\Delta f_{pR} := 2.4$ ksi for low relaxation strands

$$\Delta f_{pCR} := 10.0 \cdot \frac{f_{tr} \cdot A_s \cdot ns}{A_g} \cdot \gamma_h \cdot \gamma_{st}$$ $\Delta f_{pCR} = 13.878$ ksi

$$\Delta f_{pSR} := 12.0 \cdot \gamma_h \cdot \gamma_{st}$$ $\Delta f_{pSR} = 7.538$ ksi

$$\Delta f_{pRE} := \Delta f_{pR}$$ $\Delta f_{pRE} = 2.400$ ksi

$$\Delta f_{pLT} := \Delta f_{pCR} + \Delta f_{pSR} + \Delta f_{pRE}$$ $\Delta f_{pLT} = 23.816$ ksi

The total estimated prestress loss (Approximate Method):

$$\Delta f_p := \Delta f_{pES} + \Delta f_{pLT}$$

$\boxed{\Delta f_p = 42.288}$ ksi

$\boxed{\frac{\Delta f_p}{f_{tr}} \cdot 100 = 20.883}$ % total prestress loss

The remaining stress in the strands and total force in the beam after all losses is:

$$f_{pe} := f_{tr} - \Delta f_p$$

$\boxed{f_{pe} = 160.21}$ ksi

E45-2.7 Compute Nominal Shear Resistance at First Critical Section

Note: **MBE [6A.5.8]** does not require a shear evaluation for the Design Load Rating or the Legal Load Rating provided the bridge shows no visible sign of shear distress. However, for this example, we will show one iteration for the Design Load Rating.

The shear analysis is always required for Permit Load Rating.

The following will illustrate the calculation at the first critical section only. Due to the variation of resistances for shear along the length of the prestressed concrete I-beam, it is not certain what location will govern. Therefore, a systematic evaluation of the shear and the longitudinal yield criteria based on shear-moment interation should be performed along the length of the beam.

Simplified Procedure for Prestressed and Nonprestressed Sections, **LRFD [5.8.3.4.3]**

$$b_v := t_w$$

$\boxed{b_v = 6.50}$ in

The critical section for shear is taken at a distance of d_v from the face of the support, **LRFD [5.7.3.2]**.

d_v = effective shear depth taken as the distance between the resultants of the tensile and compressive forces due to flexure. It need not be taken less than the greater of $0.9*d_e$ or 0.72h (inches). **LRFD [5.7.2.8]**

The first estimate of d_v is calculated as follows:

$$d_v := -e_s + y_t + H_{avg} + t_{se} - \frac{a}{2}$$

$\boxed{d_v = 72.50}$ in

However, since there are draped strands for a distance of $HD := 49$ from the end of the girder, a revised value of e_s should be calculated based on the estimated location of the critical section. Since the draped strands will raise the center of gravity of the strand group near the girder end, try a smaller value of "d_v" and recalculate "e_s" and "a".

Try $d_v := 65$ inches.

For the standard bearing pad of width, $w_{brg} := 8$ inches, the distance from the end of the girder to the critical section:

$$L_{crit} := \left(\frac{w_{brg}}{2} + d_v\right)\cdot\frac{1}{12} + 0.5 \qquad \boxed{L_{crit} = 6.25} \text{ ft}$$

Calculate the eccentricity of the strand group at the critical section.

$$slope = 10.274$$

$$y_{8t} := A + y_b$$

$$y_{8t} = 32.130$$

$ns_{sb} := 38$ number of undraped strands

$ns_d := 8$ number of draped strands

Find the center of gravity for the 38 straight strands from the bottom of the girder:

$$Y_S := \frac{12\cdot 2 + 12\cdot 4 + 12\cdot 6 + 2\cdot 8}{ns_{sb}} \qquad \boxed{Y_S = 4.211} \text{ in}$$

$$y_s := y_b + Y_S \qquad y_s = -30.659 \text{ in}$$

$$y_{8t_crit} := y_{8t} - \frac{slope}{100}\cdot L_{crit}\cdot 12 \qquad \boxed{y_{8t_crit} = 24.42} \text{ in}$$

$$e_{s_crit} := \frac{ns_{sb}\cdot y_s + ns_d\cdot y_{8t_crit}}{ns_{sb} + ns_d} \qquad \boxed{e_{s_crit} = -21.08} \text{ in}$$

Calculation of compression stress block based on revised eccentricity:

$$d_{p_crit} := y_t + H_{avg} + t_{se} - e_{s_crit} \qquad \boxed{d_{p_crit} = 67.71} \text{ in}$$

Note that the area of steel is based on the number of bonded strands.

$$A_{ps_crit} := (ns)\cdot A_s \qquad \boxed{A_{ps_crit} = 9.98} \text{ in}^2$$

Also, the value of f_{pu}, should be revised if the critical section is located less than the development length from the end of the beam. The development length for a prestressing strand is calculated in accordance with **LRFD [5.9.4.3.2]**:

$K := 1.6$ for prestressed members with a depth greater than 24 inches

$d_b = 0.600$ in

$l_d := K \cdot \left(f_{ps} - \frac{2}{3} \cdot f_{pe}\right) \cdot d_b$ $\quad l_d = 146.4$ in

The transfer length may be taken as: $l_{tr} := 60 \cdot d_b$ $\quad l_{tr} = 36.00$ in

Since $L_{crit} = 6.250$ feet is between the transfer length and the development length, the design stress in the prestressing strand is calculated as follows:

$$f_{pu_crit} := f_{pe} + \frac{L_{crit} \cdot 12 - l_{tr}}{l_d - l_{tr}} \cdot \left(f_{ps} - f_{pe}\right)$$

$f_{pu_crit} = 195$ ksi

For rectangular section behavior:

$$c := \frac{A_{ps_crit} \cdot f_{pu_crit}}{\alpha_1 \cdot f'_{cd} \cdot \beta_1 \cdot b + k \cdot A_{ps_crit} \cdot \frac{f_{pu_crit}}{d_{p_crit}}}$$

$c = 7.267$ in

$a_{crit} := \beta_1 \cdot c$ $\quad a_{crit} = 6.177$ in

Calculation of shear depth based on refined calculations of e_s and a:

$$d_{v_crit} := -e_{s_crit} + y_t + H_{avg} + t_{se} - \frac{a_{crit}}{2}$$

$d_{v_crit} = 64.62$ in

This value matches the assumed value of d_v above. OK!

The nominal shear resistance of the section is calculated as follows, **LRFD [5.7.3.3]**:

$$V_n = \min\left(V_c + V_s + V_p, 0.25 \cdot f'_c \cdot b_v \cdot d_v + V_p\right)$$

where $V_p := 0$ in the calculation of V_n, if the simplified procedure is used (**LRFD [5.8.3.4.3]**).

V_d = shear force at section due to unfactored dead load and includes both DC and DW (kips)

V_i = factored shear force at section due to externally applied loads occurring simultaneously with M_{max} (kips). (Not necessarily equal to V_u.)

M_{cre} = moment causing flexural cracking at section due to externally applied loads (kip-in)

M_{max} = maximum factored moment at section due to externally applied loads (kip-in)

M_{dnc} = total unfactored dead load moment acting on the noncomposite section (kip-ft)

Values for the following moments and shears are at the critical section, $L_{crit} = 6.25$ feet from the end of the girder at the abutment.

$V_{DCnc} = 121.7$ kips

$V_{DCc} = 8.7$ kips

$V_{DWc} = 9.0$ kips

$Vi_{LL} := Vi_{LL_lane} \cdot g_{vi}$ $\quad Vi_{LL} = 100.5$ kips

$V_i := 1.75 \cdot Vi_{LL}$ $\quad V_i = 175.9$ kips

$V_d := V_{DCc} + V_{DCnc} + V_{DWc}$ $\quad V_d = 139.3$ kips

$V_u := 1.25 \cdot (V_{DCnc} + V_{DCc}) + 1.5 \cdot V_{DWc} + 1.75 \cdot Vi_{LL}$ $\quad V_u = 352.2$ kips

$M_{dnc} := 730$ kip-ft

$M_{max} := 837$ kip-ft

However, the equations below require the value of M_{max} to be in kip-in:

$M_{max} = 10044$ kip-in

$f_r = -0.20 \cdot \lambda \sqrt{f'_c}$ = modulus of rupture (ksi) **LRFD [5.4.2.6]**

$f_r := -0.20 \cdot \sqrt{f'_c}$ $\quad \lambda = 1.0$ (normal wgt. conc.) **LRFD [5.4.2.8]** $\quad f_r = -0.566$ ksi

$T_{crit} := A_{ps_crit} \cdot f_{pe}$ $\boxed{T_{crit} = 1599}$ kips

$f_{cpe} := \frac{T_{crit}}{A_g} + \frac{T_{crit} \cdot e_{s_crit}}{S_b}$ $\boxed{f_{cpe} = 3.539}$ ksi

$\boxed{M_{dnc} = 730}$ kip-ft

$\boxed{M_{max} = 10044}$ kip-in

$S_c := S_{cgb}$ $\boxed{S_c = -24650}$ in^3

$S_{nc} := S_b$ $\boxed{S_{nc} = -18825}$ in^3

$M_{cre} := S_c \cdot \left(f_r - f_{cpe} - \frac{12 M_{dnc}}{S_{nc}} \right)$ $\boxed{M_{cre} = 89699}$ kip-in

Calculate V_{ci}, **LRFD [5.8.3.4.3]** λ = 1.0 (normal wgt. conc.) **LRFD [5.4.2.8]**

$V_{ci1} := 0.06 \cdot \lambda \sqrt{f'_c} \cdot b_v \cdot d_v$ $\boxed{V_{ci1} = 71.7}$ kips

$V_{ci2} := 0.02 \cdot \lambda \sqrt{f'_c} \cdot b_v \cdot d_v + V_d + \frac{V_i \cdot M_{cre}}{M_{max}}$ $\boxed{V_{ci2} = 1733.9}$ kips

$V_{ci} := \max(V_{ci1}, V_{ci2})$ $\boxed{V_{ci} = 1733.9}$ kips

$f_t := \frac{T_{crit}}{A_g} + \frac{T_{crit} \cdot e_{s_crit}}{S_t} + \frac{M_{dnc} \cdot 12}{S_t}$ $\boxed{f_t = 0.337}$ ksi

$f_b := \frac{T_{crit}}{A_g} + \frac{T_{crit} \cdot e_{s_crit}}{S_b} + \frac{M_{dnc} \cdot 12}{S_b}$ $\boxed{f_b = 3.073}$ ksi

$\boxed{y_{cgb} = -48.78}$ in

$\boxed{ht = 72.00}$ in

$f_{pc} := f_b - y_{cgb} \cdot \frac{f_t - f_b}{ht}$ $\boxed{f_{pc} = 1.219}$ ksi

$V_{p_cw} := ns_d \cdot A_s \cdot f_{pe} \cdot \frac{slope}{100}$ $\boxed{V_{p_cw} = 28.6}$ kips

Calculate V_{cw}, **LRFD [5.8.3.4.3]** λ = 1.0 (normal wgt. conc.) **LRFD [5.4.2.8]**

$V_{cw} := \left(0.06 \cdot \lambda \sqrt{f'_c} + 0.30 \cdot f_{pc}\right) \cdot b_v \cdot d_v + V_{p_cw}$ $\boxed{V_{cw} = 254.8}$ kips

$V_c := \min(V_{ci}, V_{cw})$ $\boxed{V_c = 254.8}$ kips

Calculate the shear resistance at L_{crit}:

$\phi_v := 0.9$ **LRFD [5.5.4.2]**

$s := 20$ in

$A_v := 0.40$ in^2 for #4 rebar

$f_y := 60$ ksi

$d_v = 65.00$ in

$$\cot\theta := \begin{cases} 1 & \text{if } V_{ci} < V_{cw} \\ \min\left(1.0 + 3\cdot\frac{f_{pc}}{\sqrt{f'_c}}, 1.8\right) & \text{otherwise} \end{cases}$$

$\cot\theta = 1.800$

$$V_s := A_v\cdot f_y\cdot d_v\cdot\frac{\cot\theta}{s}$$

LRFD Eq 5.7.3.3-4 reduced per **C5.7.3.3-1** when α = 90 degrees.

$V_s = 140$ kips

$Vn_1 := V_c + V_s + V_p$ $Vn_1 = 395$ kips

$Vn_2 := 0.25\cdot f'_c\cdot b_v\cdot d_v + V_p$ $Vn_2 = 845$ kips

$V_n := \min(Vn_1, Vn_2)$ $V_n = 395$ kips

$V_r := \phi_v\cdot V_n$ $V_r = 355.69$ kips

E45-2.8 Longitudinal Tension Flange Capacity:

The total capacity of the tension reinforcing must meet the requirements of **LRFD [5.7.3.5].** The capacity is checked at the critical section for shear:

$$V_u := 1.25\cdot(V_{DC1} + V_{DC2}) + 1.50\cdot(V_{DW}) + 1.75\cdot(Vu_{LL})$$

$V_u = 367.320$ kips

$$T_{ps} := \frac{M_{max}}{d_v\cdot\phi_f} + \left(\frac{V_u}{\phi_v} - 0.5\cdot V_s - V_{p_cw}\right)\cdot\cot\theta$$

$T_{ps} = 711$ kips

actual capacity of the straight bonded strands:

$ns_{sb} \cdot A_s \cdot f_{pu_crit} = 1610$ kips

Is the capacity of the straight bonded strands greater than T_{ps}? check = "OK"

Check the tension Capacity at the edge of the bearing:

The strand is anchored $l_{px} := 10$ inches. The transfer and development lengths for a prestressing strand are calculated in accordance with **LRFD [5.9.4.3.2]**:

$l_{tr} = 36.00$ in

$l_d = 146.4$ in

Since l_{px} is less than the transfer length, the design stress in the prestressing strand is calculated as follows:

The assumed crack plane crosses the centroid of the straight strands at

$l_{px'} := l_{px} + Y_S \cdot \cot\theta$ $Y_S = 4.211$ in $l_{px'} = 17.58$ in

$f_{pb} := \dfrac{f_{pe} \cdot l_{px'}}{60 \cdot d_b}$ $f_{pb} = 78.23$ kips

Tendon capacity of the straight bonded strands: $ns_{sb} \cdot A_s \cdot f_{pb} = 645$ kips

The values of V_u, V_s, V_p and θ may be taken at the location of the critical section.

Over the length d_v, the average spacing of the stirrups is:

$s_{ave} := \dfrac{6 \cdot 4.5 + 3 \cdot s}{9}$ $s_{ave} = 9.67$ in

$V_s := A_v \cdot f_y \cdot d_v \cdot \dfrac{\cot\theta}{s_{ave}}$ $V_s = 290$ kips

The vertical component of the draped strands is: $V_{p_cw} = 29$ kips

The factored shear force at the critical section is: $V_{u_crit} = 352$ kips

E45-2.9 Design Load Rating

At the Strength I Limit State:

$$RF = \frac{(\phi_c)(\phi_s)(\phi)R_n - \gamma_{DC}(DC_1) - \gamma_{DW}(DW_1)}{\gamma_L(LL + IM)}$$

Live Load Factors taken from Table 45.3-1

$\gamma_{L_inv} := 1.75$ $\gamma_{DC} := 1.25$ $\gamma_{servLL} := 0.8$

$\gamma_{L_op} := 1.35$ $\phi_c := 1.0$ $\phi_s := 1.0$

$\phi := 1.0$ for flexure

$\phi := 0.9$ for shear

For Flexure

Inventory Level

$$RF_{Mom_Inv} := \frac{(1)(1)(1)(M_n) - \gamma_{DC}\cdot(M_{DC1} + M_{DC2})}{\gamma_{L_inv}\cdot(M_{LLIM})}$$

$$\boxed{RF_{Mom_Inv} = 1.723}$$

Operating Level

$$RF_{Mom_Op} := \frac{(1)(1)(1)(M_n) - \gamma_{DC}\cdot(M_{DC1} + M_{DC2})}{\gamma_{L_op}\cdot(M_{LLIM})}$$

$$\boxed{RF_{Mom_Op} = 2.233}$$

For Shear at first critical section

Inventory Level

$$RF_{shear_Inv} := \frac{(1)(1)(0.9)(V_n) - \gamma_{DC}\cdot(V_{DCnc} + V_{DCc})}{\gamma_{L_inv}\cdot(V_{iLL})}$$

$$\boxed{RF_{shear_Inv} = 1.096}$$

Operating Level

$$RF_{shear_Op} := \frac{(1)(1)(0.9)(V_n) - \gamma_{DC}\cdot(V_{DCnc} + V_{DCc})}{\gamma_{L_op}\cdot(V_{iLL})}$$

$RF_{shear_Op} = 1.421$

At the Service III Limit State (Inventory Level):

$$RF = \frac{f_R - \gamma_D\cdot(f_D)}{\gamma_{servLL}(f_{LLIM})}$$

$T := ns\cdot A_s\cdot f_{pe}$ $T = 1599$ kips

$f_{pb} := \frac{T}{A_g} + \frac{T\cdot(e_s)}{S_b}$ $f_{pb} = 4.341$ ksi

Allowable Tensile Stress **LRFD [5.9.2.3.2b]**

$t_{all} = -0.19\cdot\lambda\sqrt{f'_c}$ $\lambda = 1.0$ (normal wgt. conc.) **LRFD [5.4.2.8]**

$t_{all} := -0.19\cdot\sqrt{f'_c}$; $|t_{all}| \le 0.6$ ksi $t_{all} = -0.537$ ksi

$f_R := f_{pb} - t_{all}$ $f_R = 4.878$ ksi

Live Load Stresses:

$f_{LLIM} := \frac{M_{LLIM}\cdot 12}{S_{cgb}}$ $f_{LLIM} = 1.496$ ksi

Dead Load Stresses:

$f_{DL} := \frac{M_{DC1}\cdot 12}{S_b} + \frac{M_{DC2}\cdot 12}{S_{cgb}}$ $f_{DL} = 3.240$ ksi

$RF_{serviceIII} := \frac{f_R - 1.0\cdot(f_{DL})}{\gamma_{servLL}\cdot(f_{LLIM})}$ $RF_{serviceIII} = 1.369$

E45-2.10 Legal Load Rating

Since the Operating Design Load Rating RF>1.0, the Legal Load Rating is not required. The Legal Load computations that follow have been done for illustrative purposes only. Shear ratings have not been illustrated.

Live Loads used will be the AASHTO Legal Loads per Figure 45.10-1 and AASHTO Specialized Hauling Vehicles per Figure 45.10-2.

$g_i = 0.636$

$IM := 33$ %

* WisDOT does not allow for a dynamic load allowance reduction based on the smoothness of the roadway surface. Thus, IM=33%

At the Strength I Limit State:

$$RF = \frac{(\phi_c)(\phi_s)(\phi)R_n - \gamma_{DC}(DC_1) - \gamma_{DW}(DW_1)}{\gamma_L(LL + IM)}$$

Live Load Factors taken from Tables 45.3-1 and 45.3-2

$\phi_c := 1.0$ $\phi_s := 1.0$

$\phi := 1.0$

$\gamma_{L_Legal} := 1.45$ $\gamma_{DC} := 1.25$

$\gamma_{L_SU} := 1.45$

For Flexure

$$RF_{Legal} := \frac{(1)(1)(1)(M_n) - \gamma_{DC}\cdot(M_{DC1} + M_{DC2})}{\gamma_{L_Legal}\cdot(M_{LLIM})}$$

$$RF_{SU} := \frac{(1)(1)(1)(M_n) - \gamma_{DC}\cdot(M_{DC1} + M_{DC2})}{\gamma_{L_SU}\cdot(M_{LLIM})}$$

AASHTO Type	Truck Type	Truck Weight (Tons)	M_{LL} (Per Lane) (ft-kips)	M_{LLIM} ($M_{LL} * IM * g_i$) ft-kips	RF Strength I Flexure	Safe Load Capacity (Tons)	Posting?
Commercial Trucks	Type 3	25	1671.0	1413.4	4.520	113	No
	Type 3S2	36	2150.0	1818.6	3.513	126	No
	Type 3-3	40	2260.0	1911.7	3.342	134	No
Specialized Hauling Vehicles	SU4	27	1831.0	1548.8	4.124	111	No
	SU5	31	2062.8	1744.9	3.661	113	No
	SU6	34.75	2294.6	1940.9	3.291	114	No
	SU7	38.75	2540.8	2149.2	2.972	115	No

As expected, all rating factors are well above 1.0. However, if any of the rating factors would have fallen below 1.0, the posting capacity would have been calculated per 45.10.3.2:

$$\text{Posting} := \left(\frac{W}{0.7}\right)[(RF) - 0.3]$$

E45-2.11 Permit Load Rating

For any bridge design (new or rehabilitation) or bridge re-rate, the Wisconsin Standard Permit Vehicle (Wis-SPV) shall be analyzed per 45.12.

The bridge shall be analyzed for this vehicle considering both single-lane and multi-lane distribution. Also, the vehicle will be analyzed assuming it is mixing with other traffic on the bridge and that full dynamic allowance is utilized. Future wearing surface shall be included.

Since this example is rating a newly designed bridge, an additional check is required. The designer shall ensure that the results of the single-lane analysis are greater than 190 kips MVW.

Also, divide out the 1.2 multiple presence factor per **MBE [6A.4.5.4.2]** for the single lane distribution factor run.

For 146' span:

$M190_{LL} := 4930.88$ kip-ft per lane

$V190_{LL} := 145.08$ kips at $\boxed{d_v = 65}$ in

for Strength Limit State

Single Lane Distribution w/ Future Wearing surface (Design check per 45.12)

$g_{m1} := 0.435 \frac{1}{1.2}$ $\boxed{g_{m1} = 0.363}$

$g_{v1} := .660 \cdot \frac{1}{1.2}$ $\boxed{g_{v1} = 0.550}$

For flexure:

$M_{190LLIM} := M190_{LL} \cdot g_{m1} \cdot 1.33$ $\boxed{M_{190LLIM} = 2377}$ kip-ft

$$RF_{190_moment} := \frac{\left[(1)(1)(1)M_n\right] - 1.25 \cdot \left(M_{DC1} + M_{DC2}\right) - 1.5 \cdot \left(M_{DW}\right)}{1.2\left(M_{190LLIM}\right)}$$

$\boxed{RF_{190_moment} = 3.060}$

$Wt := RF_{190_moment} \cdot 190$ $\boxed{Wt = 581}$ kips >> 190 kips, OK

For shear:

$V_{190LLIM} := V190_{LL} \cdot g_{v1} \cdot 1.33$ $\boxed{V_{190LLIM} = 106}$ kips

$$RF_{190_shear} := \frac{\left[(1)(1)(0.9)V_n\right] - 1.25 \cdot \left(V_{DCnc} + V_{DCc}\right) - 1.5\left(V_{DW}\right)}{1.2\left(V_{190LLIM}\right)}$$

$\boxed{RF_{190_shear} = 1.399}$

$Wt := RF_{190_shear} \cdot 190$ $\boxed{Wt = 266}$ kips > 190 kips, OK

Single Lane Distribution w/o Future Wearing surface (For plans and rating sheet only)

$g_{m1} := 0.435 \frac{1}{1.2}$ $\boxed{g_{m1} = 0.363}$

$g_{v1} := .660 \cdot \frac{1}{1.2}$ $\boxed{g_{v1} = 0.550}$

For flexure:

$M_{190LLIM} := M190_{LL} \cdot g_{m1} \cdot 1.33$ $\boxed{M_{190LLIM} = 2377}$ kip-ft

$$RF_{190_moment} := \frac{\left[(1)(1)(1)M_n\right] - 1.25\cdot\left(M_{DC1} + M_{DC2}\right)}{1.2\left(M_{190LLIM}\right)}$$

$RF_{190_moment} = 3.247$

$Wt := RF_{190_moment}\cdot 190$ $\quad Wt = 617$

For shear:

$V_{190LLIM} := V190_{LL}\cdot g_{v1}\cdot 1.33$ $\quad V_{190LLIM} = 106$ kips

$$RF_{190_shear} := \frac{\left[(1)(1)(0.9)V_n\right] - 1.25\cdot\left(V_{DCnc} + V_{DCc}\right)}{1.2\left(V_{190LLIM}\right)}$$

$RF_{190_shear} = 1.514$

$Wt := RF_{190_shear}\cdot 190$ $\quad Wt = 288$

Multi-Lane Distribution w/o Future Wearing Surface (For plans and rating sheet only)

$g_{m2} := 0.636$ $\quad g_{m2} = 0.636$

$g_{v2} := .779$ $\quad g_{v2} = 0.779$

For flexure:

$M_{190LLIM} := M190_{LL}\cdot g_{m2}\cdot 1.33$ $\quad M_{190LLIM} = 4171$ kip-ft

$$RF_{190_moment} := \frac{\left[(1)(1)(1)M_n\right] - 1.25\cdot\left(M_{DC1} + M_{DC2}\right)}{1.3\left(M_{190LLIM}\right)}$$

$RF_{190_moment} = 1.708$

$Wt := RF_{190_moment}\cdot 190$ $\quad Wt = 325$

For shear:

$V_{190LLIM} := V190_{LL} \cdot g_{v2} \cdot 1.33$ $\boxed{V_{190LLIM} = 150}$ kips

$$RF_{190_shear} := \frac{(1)(1)(0.9)V_n - 1.25 \cdot (V_{DCnc} + V_{DCc})}{1.3(V_{190LLIM})}$$

$\boxed{RF_{190_shear} = 0.987}$

$Wt := RF_{190_shear} \cdot 190$ $\boxed{Wt = 187}$

E45-2.12 Summary of Rating Factors

Interior Girder							
Limit State		Design Load Rating		Legal Load Rating	Permit Load Rating (kips)		
		Inventory	Operating		Single Lane w/ FWS	Single Lane w/o FWS	Multi Lane w/o FWS
Strength I	Flexure	1.723	2.233	N/A	581	617	325
	Shear	1.096	1.421	N/A	266	288	187
Service III		1.369	N/A	N/A	N/A	N/A	N/A
Service I		N/A	N/A	N/A	Optional	Optional	Optional

This page intentionally left blank.

Table of Contents

E45-3 Two Span 54W" Prestressed Girder Bridge - Continuity Reinforcement, LRFD Design, Rating Example - LRFR . . . 2
E45-3.1 Design Criteria . . . 3
E45-3.2 Modulus of Elasticity of Beam and Deck Material . . . 3
E45-3.3 Section Properties . . . 3
E45-3.4 Girder Layout . . . 4
E45-3.5 Loads . . . 4
E45-3.5.1 Dead Loads . . . 4
E45-3.5.2 Live Loads . . . 5
E45-3.6 Load Distribution to Girders . . . 5
E45-3.6.1 Distribution Factors for Interior Beams: . . . 6
E45-3.8 Dead Load Moments . . . 7
E45-3.9 Live Load Moments . . . 8
E45-3.10 Composite Girder Section Properties . . . 8
E45-3.11 Flexural Strength Capacity at Pier . . . 10
E45-3.12 Design Load Rating . . . 11
E45-3.13 Permit Load Rating . . . 11
E45-3.14 Summary of Rating Factors . . . 12

E45-3 Two Span 54W" Prestressed Girder Bridge - Continuity Reinforcement, LRFD Design, Rating Example - LRFR

This example will perform the LRFR rating calcualtions for the bridge that was designed in Chapter 19 of this manual (E19-2). Though it is necessary to rate both the interior and exterior girders to determine the minimum capacity, this example will analyze the interior girder only in the negative moment region (continuity reinforcement).

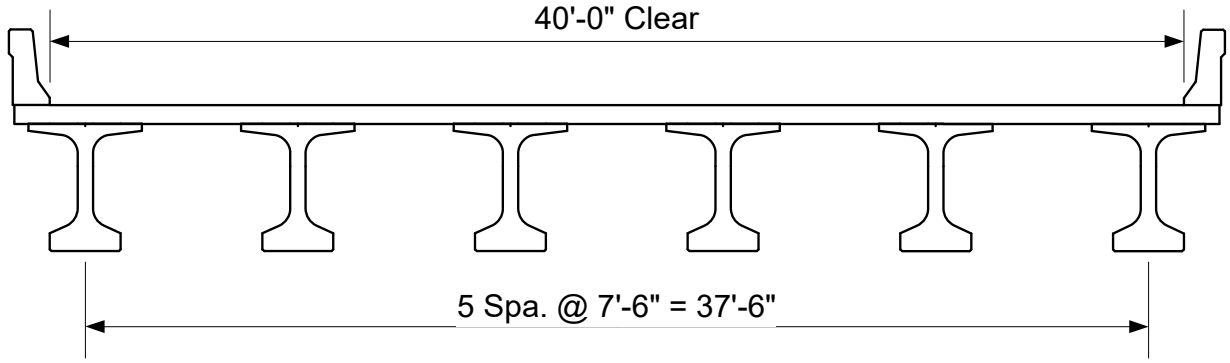

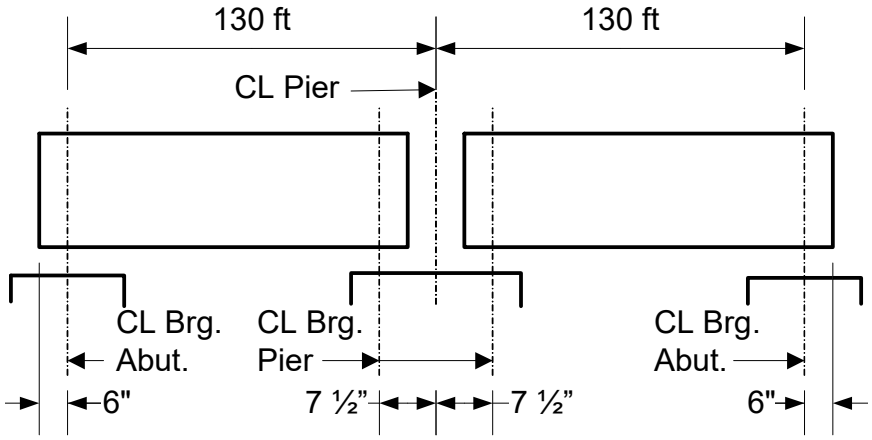

E45-3.1 Design Criteria

$L := 130$	center of bearing at abutment to CL pier for each span, ft
$L_g := 130.375$	total length of the girder (the girder extends 6 inches past the center of bearing at the abutment and 1.5" short of the center line of the pier).
$w_b := 42.5$	out to out width of deck, ft
$w := 40$	clear width of deck, 2 lane road, 3 design lanes, ft
$f'_c := 8$	girder concrete strength, ksi
$f'_{cd} := 4$	deck concrete strength, ksi
$f_y := 60$	yield strenght of mild reinforcement, ksi

$E_s := 29000$	ksi, Modulus of Elasticity of the reinforcing steel
$w_p := 0.387$	weight of Wisconsin Type LF parapet, klf
$t_s := 8$	slab thickness, in
$t_{se} := 7.5$	effective slab thickness, in
$skew := 0$	skew angle, degrees
$w_c := 0.150$	kcf
$h := 2$	height of haunch, inches

E45-3.2 Modulus of Elasticity of Beam and Deck Material

Based on past experience, the modulus of elasticity for the precast and deck concrete are given in Chapter 19 as $E_{beam6} := 5500$ ksi and $E_{deck4} := 4125$ ksi for concrete strengths of 6 and 4 ksi respectively. The values of E for different concrete strengths are calculated as follows (ksi):

$$E_{beam8} := 5500 \cdot \frac{\sqrt{f'_c \cdot 1000}}{\sqrt{6000}} \qquad \boxed{E_{beam8} = 6351} \qquad E_B := E_{beam8}$$

$$E_D := E_{deck4}$$

$$n := \frac{E_B}{E_D} \qquad \boxed{n = 1.540}$$

E45-3.3 Section Properties

54W Girder Properties:

$w_{tf} := 48$	in
$t_w := 6.5$	in
$ht := 54$	in
$b_w := 30$	width of bottom flange, in
$A_g := 798$	in^2
$I_g := 321049$	in^4
$y_t := 27.70$	in
$y_b := -26.30$	in

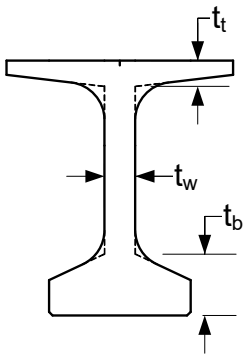

E45-3.4 Girder Layout

$S := 7.5$	Girder Spacing, feet
$s_{oh} := 2.50$	Deck overhang, feet
$ng := 6$	Number of girders

E45-3.5 Loads

$w_g := 0.831$	weight of 54W girders, klf
$w_d := 0.100$	weight of 8-inch deck slab (interior), ksf
$w_h := 0.100$	weight of 2-in haunch, klf
$w_{di} := 0.410$	weight of each diaphragm on interior girder (assume 2), kips
$w_{ws} := 0.020$	future wearing surface, ksf
$w_p = 0.387$	weight of parapet, klf

E45-3.5.1 Dead Loads

Dead load on non-composite (DC):

interior:

$$w_{dlii} := w_g + w_d \cdot S + w_h + 2 \cdot \frac{w_{di}}{L}$$

$\boxed{w_{dlii} = 1.687}$ klf

* Dead load on composite (DC):

$$w_p := \frac{2 \cdot w_p}{ng}$$

$\boxed{w_p = 0.129}$ klf

* Wearing Surface (DW):

$$w_{ws} := \frac{w \cdot w_{ws}}{ng}$$

$\boxed{w_{ws} = 0.133}$ klf

* **LRFD [4.6.2.2.1]** states that permanent loads on the deck may be distributed uniformly among the beams. This method is used for the parapet and future wearing surface loads.

E45-3.5.2 Live Loads

For Stength 1 and Service 1:

HL-93 loading = truck + lane **LRFD [3.6.1.3.1]**

truck pair + lane

DLA of 33% applied to truck or tandem, but not to lane per **LRFD [3.6.2.1].**

For Fatigue:

HL-93 truck (no lane) with 15% DLA and 30 ft rear axle spacing per **LRFD [3.6.1.4.1].**

E45-3.6 Load Distribution to Girders

In accordance with **LRFD [Table 4.6.2.2.1-1]**,
this structure is a Type "K" bridge.

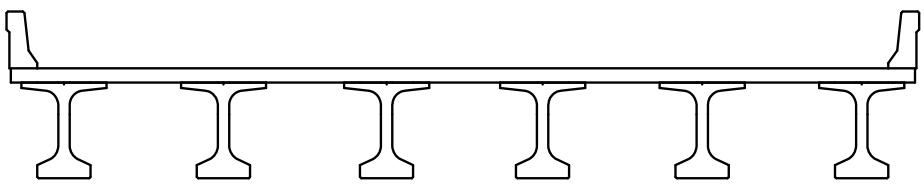

Distribution factors are in accordance with **LRFD [Table 4.6.2.2.2b-1]**. For an interior beam, the distribution factors are shown below:

For one Design Lane Loaded:

$$0.06 + \left(\frac{S}{14}\right)^{0.4} \cdot \left(\frac{S}{L}\right)^{0.3} \cdot \left(\frac{K_g}{12.0 \cdot L \cdot t_{se}^{\,3}}\right)^{0.1}$$

For Two or More Design Lanes Loaded:

$$0.075 + \left(\frac{S}{9.5}\right)^{0.6} \cdot \left(\frac{S}{L}\right)^{0.2} \cdot \left(\frac{K_g}{12.0 \cdot L \cdot t_{se}^{\,3}}\right)^{0.1}$$

$e_g := y_t + h + \frac{t_{se}}{2}$ $\boxed{e_g = 33.45}$ in

LRFD [Eq 4.6.2.2.1-1]

$K_g := n \cdot \left(I_g + A_g \cdot e_g^{\,2}\right)$ $\boxed{K_g = 1868972}$ in^4

Criteria for using distribtion factors - Range of Applicability per **LRFD [Table 4.6.2.2.2b-1]**.

$$DeckSpan := \begin{cases} \text{"OK"} & \text{if } 3.5 \le S \le 16 \\ \text{"NG"} & \text{otherwise} \end{cases}$$

$$DeckThickness := \begin{cases} \text{"OK"} & \text{if } 4.5 \le t_s \le 12 \\ \text{"NG"} & \text{otherwise} \end{cases}$$

$$BridgeSpan := \begin{cases} \text{"OK"} & \text{if } 20 \le L \le 240 \\ \text{"NG"} & \text{otherwise} \end{cases}$$

$$NoBeams := \begin{cases} \text{"OK"} & \text{if } ng \ge 4 \\ \text{"NG"} & \text{otherwise} \end{cases}$$

$$LongitStiffness := \begin{cases} \text{"OK"} & \text{if } 10000 \le K_g \le 7000000 \\ \text{"NG"} & \text{otherwise} \end{cases}$$

$$x := \begin{pmatrix} S & DeckSpan \\ t_s & DeckThickness \\ L & BridgeSpan \\ ng & NoBeams \\ K_g & LongitStiffness \end{pmatrix} \qquad x = \begin{pmatrix} 7.5 & \text{"OK"} \\ 8.0 & \text{"OK"} \\ 130.0 & \text{"OK"} \\ 6.0 & \text{"OK"} \\ 1868972.4 & \text{"OK"} \end{pmatrix}$$

E45-3.6.1 Distribution Factors for Interior Beams:

One Lane Loaded:

$$g_{i1} := 0.06 + \left(\frac{S}{14}\right)^{0.4} \cdot \left(\frac{S}{L}\right)^{0.3} \cdot \left(\frac{K_g}{12.0 \cdot L \cdot t_{se}^{\,3}}\right)^{0.1} \qquad g_{i1} = 0.427$$

Two or More Lanes Loaded:

$$g_{i2} := 0.075 + \left(\frac{S}{9.5}\right)^{0.6} \cdot \left(\frac{S}{L}\right)^{0.2} \cdot \left(\frac{K_g}{12.0 \cdot L \cdot t_{se}^{\,3}}\right)^{0.1} \qquad g_{i2} = 0.619$$

$$g_i := \max(g_{i1}, g_{i2}) \qquad g_i = 0.619$$

Note: The distribution factors above already have a multiple lane factor included. For the Wis-SPV Design Check, the distribution factor for One Lane Loaded should be used and the 1.2 multiple presence factor should be divided out.

E45-3.8 Dead Load Moments

The unfactored dead load moments are listed below (values are in kip-ft):

Unfactored Dead Load Interior Girder Moments, (ft-kips)			
Tenth Point	DC non-composite	DC composite	DW composite
0.5	3548	137	141
0.6	3402	99	102
0.7	2970	39	40
0.8	2254	-43	-45
0.9	1253	-147	-151
1.0	0	-272	-281

The DC_{nc} values are the component non-composite dead loads and include the weight of the girder, haunch, diaphragms and the deck.

The DC_c values are the component composite dead loads and include the weight of the parapets.

The DW_c values are the composite dead loads from the future wearing surface.

Note that the girder dead load moments (a portion of DC_{nc}) are calculated based on the CL bearing to CL bearing length. The other DC_{nc} moments are calculated based on the span length (center of bearing at the abutment to centerline of the pier).

E45-3.9 Live Load Moments

The unfactored live load load moments (per lane including impact) are listed below (values are in kip-ft). Note that the impact factor is applied only to the truck portion of the HL-93 loads. A separate analysis run will be required if results without impact are desired.

Unfactored Live Load + Impact Moments per Lane (kip-ft)		
Tenth Point	Truck Pair	Truck + Lane
0.5	--	-921
0.6	--	-1106
0.7	--	-1290
0.8	-1524	-1474
0.9	-2046	-1845
1	-3318	-2517

The unfactored live load moments per lane are calculated by applying the appropriate distribution factor to the controlling moment. For the interior girder:

$g_i = 0.619$

$M_{LL} = g_i \cdot -3317.97$ $\boxed{M_{LL} = -2055}$ kip-ft

E45-3.10 Composite Girder Section Properties

Calculate the effective flange width in accordance with Chapter 17.2.11.

The effective flange width is calculated as the minimum of the following two values:

$w_e := S \cdot 12$ $\boxed{w_e = 90.00}$ in

The effective width, w_e, must be adjusted by the modular ratio, $n = 1.54$, to convert to the same concrete material (modulus) as the girder.

$w_{eadj} := \frac{w_e}{n}$ $\boxed{w_{eadj} = 58.46}$ in

Calculate the composite girder section properties:

effective slab thickness; $t_{se} = 7.50$ in

effective slab width; $w_{eadj} = 58.46$ in

haunch thickness; $h = 2.0$ in

total height; $h_c := ht + h + t_{se}$

$h_c = 63.50$ in

$n = 1.540$

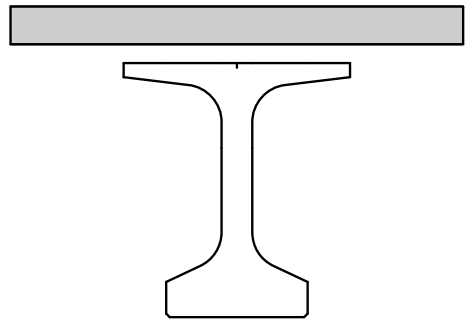

Note: The area of the concrete haunch is not included in the calculation of the composite section properties.

Component	Ycg	A	AY	AY^2	I	$I+AY^2$
Deck	59.75	438	26197	1565294	2055	1567349
Girder	26.3	798	20987	551969	321049	873018
Haunch	55	0	0	0	0	0
Summation		1236	47185			2440367

$\Sigma A := 1236$ in^2

$\Sigma AY := 47185$ in^4

$\Sigma IplusAYsq := 2440367$ in^4

$y_{cgb} := \frac{-\Sigma AY}{\Sigma A}$ $y_{cgb} = -38.2$ in

$y_{cgt} := ht + y_{cgb}$ $y_{cgt} = 15.8$ in

$A_{cg} := \Sigma A$ in^2

$I_{cg} := \Sigma IplusAYsq - A_{cg} \cdot y_{cgb}^2$ $I_{cg} = 639053$ in^4

Deck:

$S_c := n \cdot \frac{I_{cg}}{y_{cgt} + h + t_{se}}$ $S_c = 38851$ in^4

E45-3.11 Flexural Strength Capacity at Pier

All of the continuity reinforcement is placed in the top mat. Therefore the effective depth of the section at the pier is:

$cover := 2.5$ in

$bar_{trans} := 5$ (transverse bar size)

$Bar_D(bar_{trans}) = 0.625$ in (transverse bar diameter)

$Bar_{No} = 10$

$Bar_D(Bar_{No}) = 1.27$ in (Assumed bar size)

$$d_e := ht + h + t_s - cover - Bar_D(bar_{trans}) - \frac{Bar_D(Bar_{No})}{2}$$ $\boxed{d_e = 60.24}$ in

For flexure in non-prestressed concrete, $\phi_f := 0.9$.

The width of the bottom flange of the girder, $b_w = 30.00$ inches.

The continuity reinforcement is distributed over the effective flange width calculated earlier, $w_e = 90.00$ inches.

From E19-2, use a longitudinal bar spacing of #4 bars at $s_{longit} := 8.5$ inches. The continuity reinforcement is placed at 1/2 of this bar spacing, .

#10 bars at 4.25 inch spacing provides an $\boxed{As_{prov} = 3.57}$ in^2/ft, or the total area of steel provided:

$$As := As_{prov} \cdot \frac{w_e}{12}$$ $\boxed{As = 26.80}$ in^2

Calculate the capacity of the section in flexure at the pier:

Check the depth of the compression block:

$\alpha_1 := 0.85$ (for $f'_c \leq 10.0$ ksi) **LRFD [5.6.2.2]**

$$a := \frac{As \cdot f_y}{\alpha_1 \cdot b_w \cdot f'_c}$$ $\boxed{a = 7.883}$ in

This is approximately equal to the thickness of the bottom flange height of 7.5 inches.

$$M_n := As \cdot f_y \cdot \left(d_e - \frac{a}{2}\right) \cdot \frac{1}{12}$$ $\boxed{M_n = 7544}$ kip-ft

$$M_r := \phi_f \cdot M_n$$ $\boxed{M_r = 6790}$ kip-ft

E45-3.12 Design Load Rating

This design example illustrates the rating checks required at the location of maximum negative moment. These checks are also required at the locations of continuity bar cut offs but are not shown here.

At the Strength I Limit State:

$$RF = \frac{(\phi_c)(\phi_s)(\phi)R_n - \gamma_{DC}(DC_1) - \gamma_{DW}(DW_1)}{\gamma_L(LL + IM)}$$

Load Factors taken from Table 45.3-1

$\gamma_{L_inv} := 1.75$ $\gamma_{DC} := 1.25$ $\gamma_{servLL} := 0.8$ $\phi_c := 1.0$ $\phi_s := 1.0$

$\gamma_{L_op} := 1.35$ $\gamma_{DW} := 1.50$ $\phi := 0.9$ for flexure

For Flexure

$M_n = 7544$ kip-ft $M_{DCc} = 272$ kip-ft $M_{LL} = 2055$ kip-ft

Inventory Level

$$RF_{Mom_Inv} := \frac{(\phi_c)(\phi_s)(\phi)(M_n) - \gamma_{DC}\cdot(M_{DCc})}{\gamma_{L_inv}\cdot(M_{LL})} \qquad RF_{Mom_Inv} = 1.793$$

Operating Level

$$RF_{Mom_Op} := \frac{(\phi_c)(\phi_s)(\phi)(M_n) - \gamma_{DC}\cdot(M_{DCc})}{\gamma_{L_op}\cdot(M_{LL})} \qquad RF_{Mom_Op} = 2.325$$

E45-3.13 Permit Load Rating

Check the Wisconsin Standard Permit Vehicle per 45.12

For a symetric 130' two span structure:

$MSPV_{LL} := 2738$ kip-ft per lane (includes Dynamic Load Allowance of 33%)

Per 45.12, for the Wisconsin Standard Permit Vehicle (Wis-SPV) Design Check use single lane distribution factor assuming a single trip permit vehicle with no escort vehicles and assuming full dynamic load allowance. Also, divide out the 1.2 multiple presence factor per **MBE [6A.4.5.4.2]** for the single lane distribution factor only.

Single Lane Distribution

$g_1 := g_{i1} \frac{1}{1.2}$ $\boxed{g_1 = 0.356}$

$M_{SPVLLIM} := (MSPV_{LL} + M_{Lane}) \cdot g_1$ $\boxed{M_{SPVLLIM} = 975}$ kip-ft

$$RF_{SPV_m1} := \frac{[(\phi_c)(\phi_s)(\phi)(M_n)] - 1.25 \cdot (M_{DCc}) - 1.5(M_{DWc})}{1.2(M_{SPVLLIM})}$$ $\boxed{RF_{SPV_m1} = 5.151}$

$Wt_1 := RF_{SPV_m1} \cdot 190$ $\boxed{Wt_1 = 979}$ kips >> 190 kips, OK

The rating for the Wis-SPV vehicle is now checked without the Future Wearing Surface. This value is reported on the plans.

$$RF_{SPV_m_pln} := \frac{[(\phi_c)(\phi_s)(\phi)(M_n)] - 1.25 \cdot (M_{DCc})}{1.2(M_{SPVLLIM})}$$ $\boxed{RF_{SPV_m_pln} = 5.511}$

$Wt_{pln} := RF_{SPV_m_pln} \cdot 190$ $\boxed{Wt_{pln} = 1047}$ kips

Since this value is greater than 250 kips, 250 kips is reported on the plans and on the Bridge Load Rating Summary form for the single-lane Permit Load Rating.

Multi-Lane Distribution

$g_2 := g_{i2}$ $\boxed{g_2 = 0.619}$

$M_{SPVLLIM} := MSPV_{LL} \cdot g_2$ $\boxed{M_{SPVLLIM} = 1696}$ kip-ft

$$RF_{SPV_m2} := \frac{[(\phi_c)(\phi_s)(\phi)(M_n)] - 1.25 \cdot (M_{DCc})}{1.3(M_{SPVLLIM})}$$ $\boxed{RF_{SPV_m2} = 2.925}$

$Wt_2 := RF_{SPV_m2} \cdot 190$ $\boxed{Wt_2 = 556}$ kips

Since this value is greater than 250 kips, 250 kips is reported on the Bridge Load Rating Summary form for the multi-lane Permit Load Rating.

E45-3.14 Summary of Rating Factors

Interior Girder						
Limit State		Design Load Rating		Legal Load	Permit Load Rating (kips)	
		Inventory	Operating	Rating	Single Lane	Multi-Lane
Strength 1	Flexure	1.79	2.32	N/A	250	250

Table of Contents

E45-4 Steel Girder Rating Example - LRFR . . . 2
E45-4.1 Preliminary Data . . . 2
E45-4.2 Compute Section Properties . . . 6
E45-4.3 Dead Load Analysis Interior Girder . . . 10
E45-4.4 Compute Live Load Distribution Factors for Interior Girder . . . 14
E45-4.5 Compute Plastic Moment Capacity Positive Moment Region . . . 18
E45-4.6 Determine if Section is Compact or Noncompact Positive Moment Region . . . 20
E45-4.7 Flexural Resistance of Composite Section Positive Moment Region . . . 21
E45-4.8 Design Load Rating @ 0.4L . . . 24
E45-4.9 Check Section Proportion Limits Negative Moment Region . . . 26
E45-4.10 Compute Plastic Moment Capacity Negative Moment Region . . . 27
E45-4.11 Determine if Section is a Compact-Web, Noncompact-Web, or Slender-Web Section Negative Moment Region . . . 29
E45-4.12 Rating for Flexure Strength Limit State Negative Moment Region . . . 30
E45-4.13 Design Load Rating @ Pier . . . 32
E45-4.14 Rate for Shear Negative Moment Region . . . 34
E45-4.15 Design Load Rating @ Pier for Shear . . . 35
E45-4.16 Permit Load Ratings . . . 36
E45-4.16.1 Wis-SPV Permit Rating with Single Lane Distribution w/ FWS . . . 36
E45-4.16.2 Wis-SPV Permit Rating with Single Lane Distribution w/o FWS . . . 37
E45-4.16.3 Permit Rating with Multi-Lane Distribution w/o FWS . . . 39
E45-4.17 Summary of Rating . . . 40

E45-4 Steel Girder Rating Example - LRFR

This example shows rating calculations conforming to the *AASHTO Manual for Condition Evaluation and Load and Resistance Factor Rating (LRFR) of Highway Bridges* as supplemented by the *WisDOT Bridge Manual (July 2008)*. This example will rate the design example E24-1 contained in the WisDOT Bridge Manual. **(Note: Example has not been updated for example E24-1 January 2016 updates)**

E45-4.1 Preliminary Data

An interior plate girder will be rated for this example. The girder was designed to be composite throughout. There is no overburden on the structure. In addition, inspection reports reveal no loss of section to any of the main load carrying members.

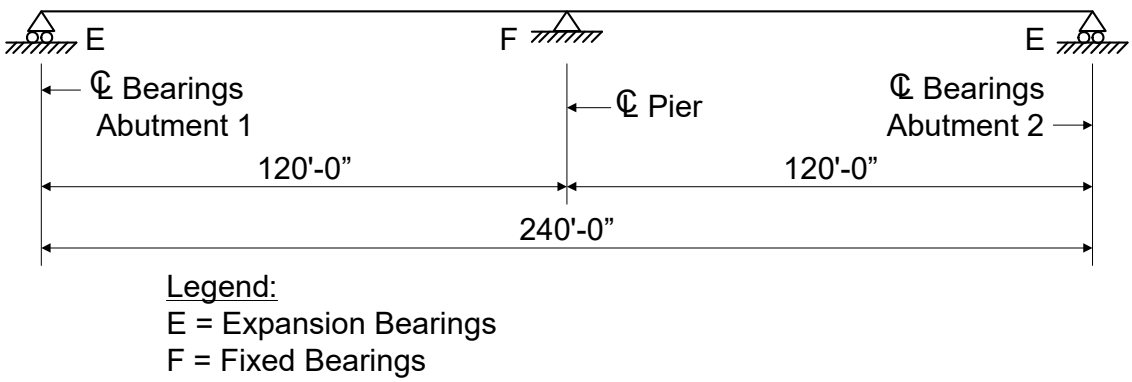

Figure E45-4.1-1
Span Configuration

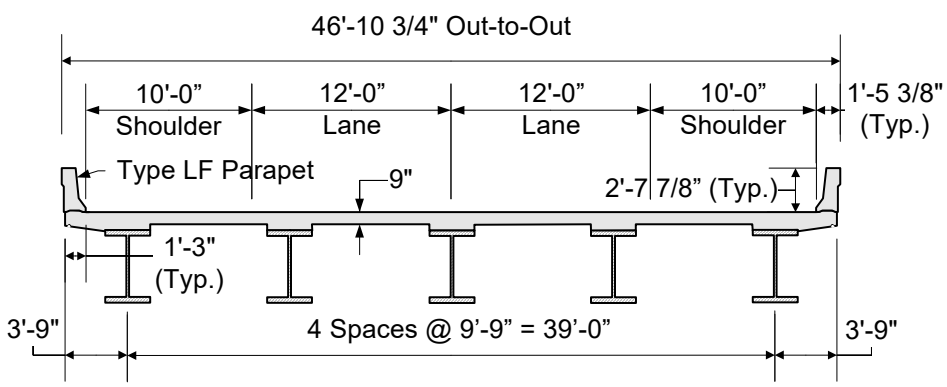

Figure E45-4.1-2
Superstructure Cross Section

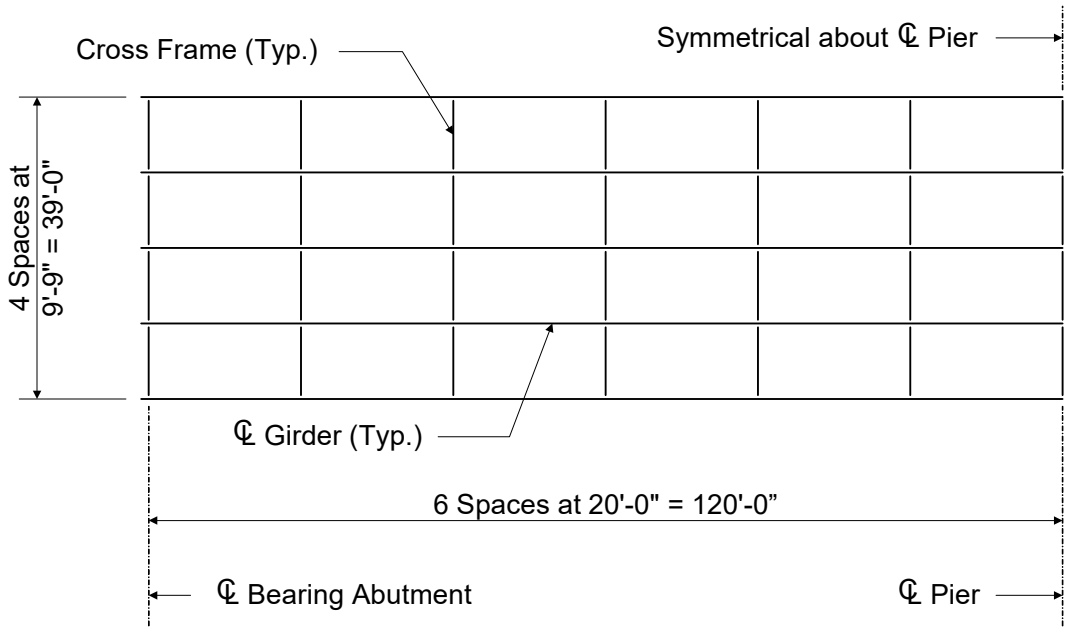

Figure E45-4.1-3
Framing Plan

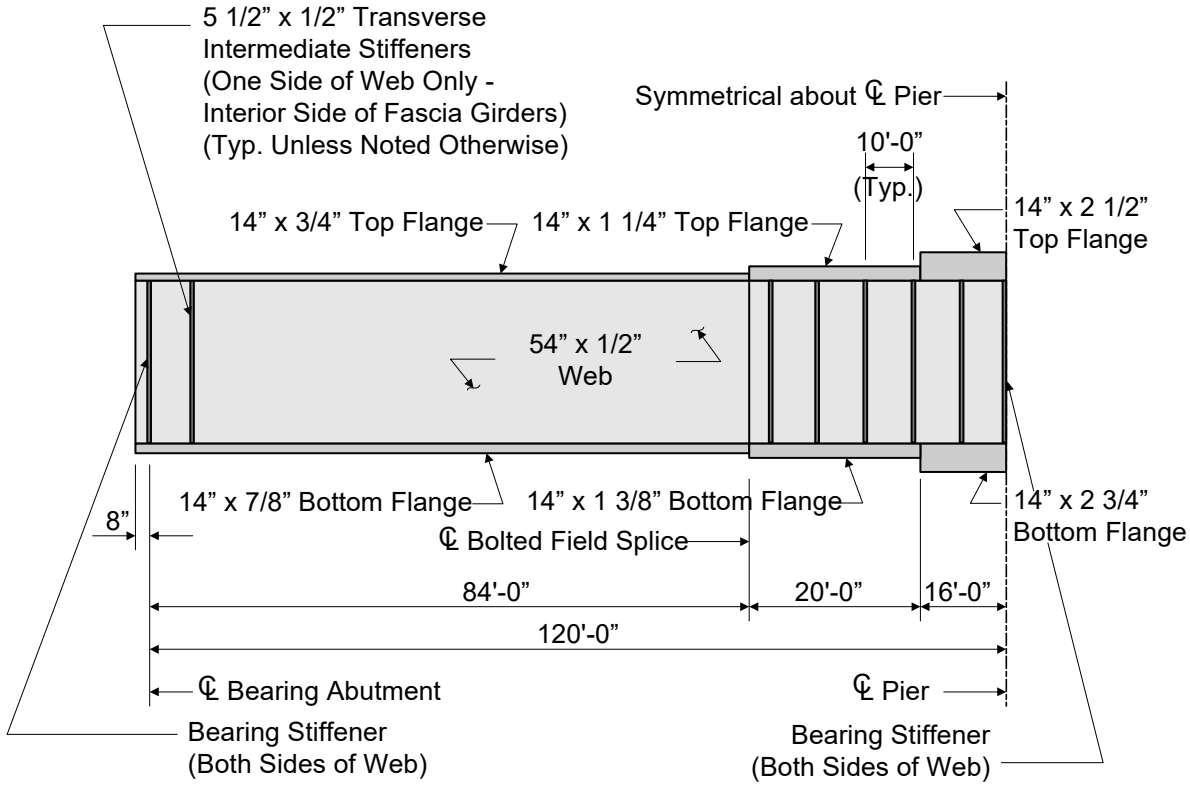

Figure E45-4.1-4
Interior Plate Girder Elevation

$N_{spans} := 2$	Number of spans	
$L := 120$	ft	span length
$Skew := 0$	deg	skew angle
$N_b := 5$	number of girders	
$S := 9.75$	ft	girder spacing
$S_{overhang} := 3.75$	ft	deck overhang
$L_b := 240$	in	cross-frame spacing
$F_{yw} := 50$	ksi	web yield strength
$F_{yf} := 50$	ksi	flange yield strength
$f'_c := 4.0$	ksi	concrete 28-day compressive strength
$f_y := 60$	ksi	reinforcement strength
$E_s := 29000$	ksi	modulus of elasticity
$t_{deck} := 9.0$	in	total deck thickness
$t_s := 8.5$	in	effective deck thickness when 1/2" future wearing surface is removed from total deck thickness
$w_s := 0.490$	kcf	steel density **LRFD[Table 3.5.1-1]**
$w_c := 0.150$	kcf	concrete density **LRFD[Table 3.5.1-1 & C3.5.1]**
$w_{misc} := 0.030$	kip/ft	additional miscellaneous dead load (per girder) per 17.2.4.1
$w_{par} := 0.387$	kip/ft	parapet weight (each)
$w_{fws} := 0.00$	kcf	future wearing surface is not used in rating analysis
$w_{deck} := 46.5$	ft	deck width
$w_{roadway} := 44.0$	ft	roadway width
$d_{haunch} := 3.75$	in	haunch depth (from top of web for design) (for construction, the haunch is measured from the top of the top flange)

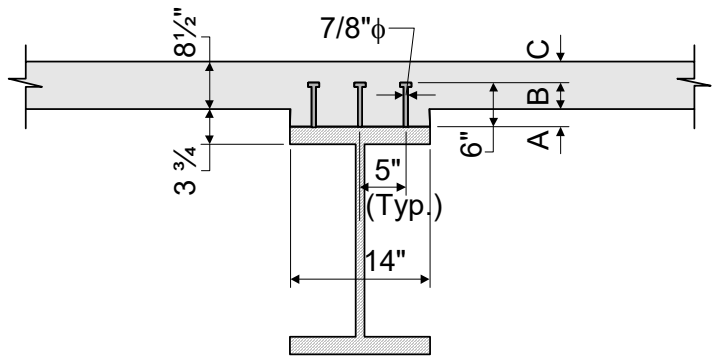

Figure E45-4.1-5
Composite Cross Section at Location of Maximum Positive Moment (0.4L)
(Note: 1/2" Intergral Wearing Surface has been removed for structural calcs.)

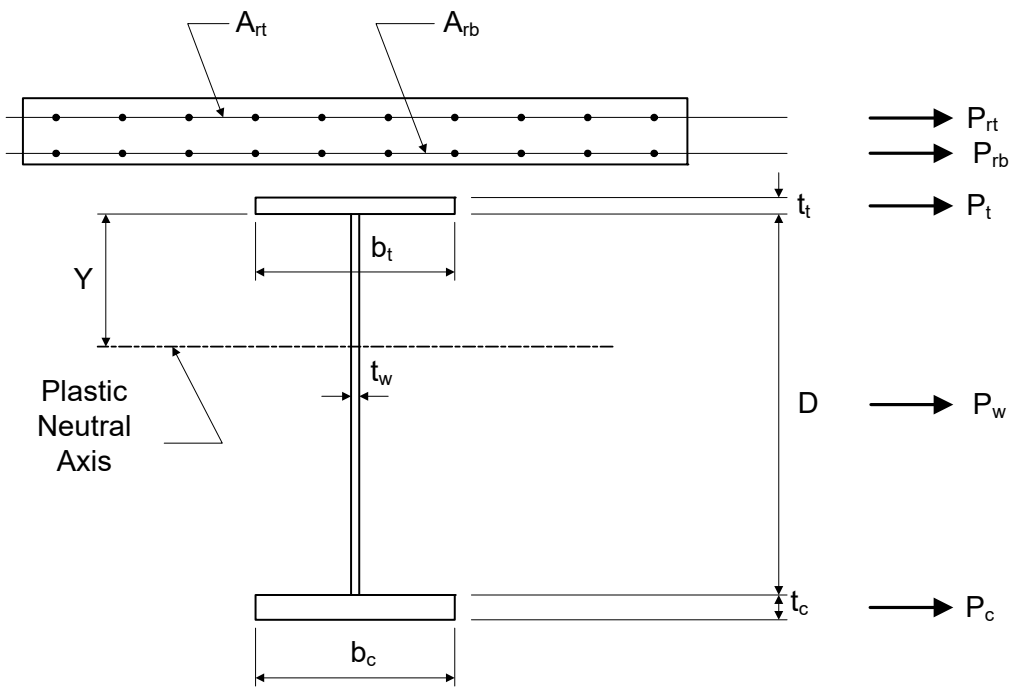

Figure E45-4.1-6
Composite Cross Section at Location of Maximum Negative Moment over Pier

$D := 54$ in

$t_w := 0.5$ in

E45-4.2 Compute Section Properties

Since the superstructure is composite, several sets of section properties must be computed **LRFD [6.10.1.1]**. The initial dead loads (or the noncomposite dead loads) are applied to the girder-only section. For permanent loads assumed to be applied to the long-term composite section, the long-term modular ratio of 3n is used to transform the concrete deck area **LRFD [6.10.1.1.1b]**. For transient loads assumed applied to the short-term composite section, the short-term modular ratio of n is used to transform the concrete deck area.

The modular ratio, n, is computed as follows:

$$n = \frac{E_s}{E_c}$$

Where:

E_s = Modulus of elasticity of steel (ksi)

E_c = Modulus of elasticity of concrete (ksi)

$E_s = 29000$ ksi **LRFD [6.4.1]**

$$E_c = 33000 \cdot K_1 \cdot \left(w_c^{1.5}\right) \cdot \sqrt{f'_c}$$ **LRFD [C5.4.2.4]**

Where:

K_1 = Correction factor for source of aggregate to be taken as 1.0 unless determined by physical test, and as approved by the authority of jurisdiction

w_c = Unit weight of concrete (kcf)

f'_c = Specified compressive strength of concrete (ksi)

$w_c = 0.15$ kcf **LRFD [Table 3.5.1-1 & C3.5.1]**

$f'_c = 4.00$ ksi

$K_1 := 1.0$ **LRFD [5.4.2.4]**

$$E_c := 33000 \cdot K_1 \cdot \left(w_c^{1.5}\right) \cdot \sqrt{f'_c}$$ $E_c = 3834$ ksi

$$n := \frac{E_s}{E_c}$$ $n = 7.6$ **LRFD [6.10.1.1.1b]**

Therefore, use: $n := 8$

The effective flange width is computed as follows .

For interior beams, the effective flange width is calculated as per **LRFD [4.6.2.6]**:

1. 12.0 times the average thickness of the slab, plus the greater of web thickness or one-half the width of the top flange of the girder:

$$b_{eff2} := \frac{12 \cdot t_s + \frac{14}{2}}{12}$$

This is no longer a valid criteria, however it has been left in place to avoid changing the entire example at this time.

$b_{eff2} = 9.08$ ft

2. The average spacing of adjacent beams:

$b_{eff3} := S$

$b_{eff3} = 9.75$ ft

Therefore, the effective flange width is:

$b_{effflange} := \min(b_{eff2}, b_{eff3})$

$b_{effflange} = 9.08$ ft

or

$b_{effflange} \cdot 12 = 109.00$ in

For this design example, the slab haunch is 3.75 inches throughout the length of the bridge. That is, the bottom of the slab is located 3.75 inches above the top of the web The area of the haunch is conservatively not considered in the section properties for this example.

Based on the plate sizes shown in Figure E45-4.1-4, the noncomposite and composite section properties for the positive moment region are computed as shown in the following table. The distance to the centroid is measured from the bottom of the girder.

Positive Moment Region Section Properties						
Section	**Area, A (Inches^2)**	**Centroid, d (Inches)**	**A*d (Inches^3)**	**I_o (Inches^4)**	**A*y^2 (Inches^4)**	**I_{total} (Inches^4)**
Girder only:						
Top flange	10.50	55.25	580.1	0.5	8441.1	8441.6
Web	27.00	27.88	752.6	6561.0	25.8	6586.8
Bottom flange	12.25	0.44	5.4	0.8	8576.1	8576.9
Total	49.75	26.90	1338.1	6562.3	17043.0	23605.3
Composite (3n):						
Girder	49.75	26.90	1338.1	23605.3	12293.9	35899.2
Slab	38.60	62.88	2427.2	232.4	15843.4	16075.8
Total	88.35	42.62	3765.3	23837.7	28137.3	51975.0
Composite (n):						
Girder	49.75	26.90	1338.1	23605.3	31511.0	55116.2
Slab	115.81	62.88	7281.7	697.3	13536.3	14233.6
Total	165.56	52.06	8619.8	24302.5	45047.3	69349.8
Section	**y_{botgdr} (Inches)**	**y_{topgdr} (Inches)**	**$y_{topslab}$ (Inches)**	**S_{botgdr} (Inches^3)**	**S_{topgdr} (Inches^3)**	**$S_{topslab}$ (Inches^3)**
Girder only	26.90	28.73	---	877.6	821.7	---
Composite (3n)	42.62	13.01	24.51	1219.6	3995.5	2120.7
Composite (n)	52.06	3.56	15.06	1332.0	19474.0	4604.5

Table E45-4.2-1
Positive Moment Region Section Properties

Similarly, the noncomposite and composite section properties for the negative moment region are computed as shown in the following table. The distance to the centroid is measured from the bottom of the girder **LRFD [6.6.1.2.1, 6.10.5.1, 6.10.4.2.1]**.

For the strength limit state, since the deck concrete is in tension in the negative moment region, the deck reinforcing steel contributes to the composite section properties and the deck concrete does not. However, per 45.6.3, only the top longitudinal mat of steel is used for rating purposes. Per the design example, the amount of longitudinal steel within the effective slab area is 6.39 in^2. This number will be used for the calculations below.

Negative Moment Region Section Properties						
Section	**Area, A (Inches^2)**	**Centroid, d (Inches)**	**A*d (Inches^3)**	**I_o (Inches^4)**	**A*y^2 (Inches^4)**	**I_{total} (Inches^4)**
Girder only:						
Top flange	35.00	58.00	2030.0	18.2	30009.7	30027.9
Web	27.00	29.75	803.3	6561.0	28.7	6589.7
Bottom flange	38.50	1.38	52.9	24.3	28784.7	28809.0
Total	100.50	28.72	2886.2	6603.5	58823.1	65426.6
Composite (deck concrete using 3n):						
Girder	100.50	28.72	2886.2	65426.6	10049.0	75475.6
Slab	38.60	64.75	2499.6	232.4	26161.1	26393.5
Total	139.10	38.72	5385.8	65659.0	36210.1	101869.2
Composite (deck concrete using n):						
Girder	100.50	28.72	2886.2	65426.6	37401.0	102827.7
Slab	115.81	64.75	7498.9	697.3	32455.9	33153.2
Total	216.31	48.01	10385.0	66123.9	69857.0	135980.9
Composite (deck reinforcement only):						
Girder	100.50	28.72	2886.2	65426.6	466.3	65892.9
Deck reinf.	6.39	64.75	413.8	0.0	7333.8	7333.8
Total	106.89	30.87	3299.9	65426.6	7800.1	73226.7
Section	**y_{botgdr} (Inches)**	**y_{topgdr} (Inches)**	**y_{deck} (Inches)**	**S_{botgdr} (Inches^3)**	**S_{topgdr} (Inches^3)**	**S_{deck} (Inches^3)**
Girder only	28.72	30.53	---	2278.2	2142.9	---
Composite (3n)	38.72	20.53	30.282	2631.1	4961.4	3364.0
Composite (n)	48.01	11.24	20.991	2832.4	12097.4	6478.2
Composite (rebar)	30.87	28.38	33.88	2371.9	2580.4	2161.5

Table E45-4.2-2
Negative Moment Region Section Properties

E45-4.3 Dead Load Analysis - Interior Girder

Dead Load Components		
Resisted by	**Type of Load Factor**	
	DC	**DW**
Noncomposite section	• Steel girder • Concrete deck • Concrete haunch • Stay-in-place deck forms • Misc. (including cross-frames, stiffeners, etc.)	
Composite section	• Concrete parapets	• Future wearing surface & utilities

Table E45-4.3-1
Dead Load Components

COMPONENTS AND ATTACHMENTS: DC1 (NON-COMPOSITE)

GIRDER:

For the steel girder, the dead load per unit length varies due to the change in plate sizes. The moments and shears due to the weight of the steel girder can be computed using readily available analysis software. Since the actual plate sizes are entered as input, the moments and shears are computed based on the actual, varying plate sizes.

DECK:

For the concrete deck, the dead load per unit length for an interior girder is computed as follows:

$w_c = 0.150$ kcf

$S = 9.75$ ft

$t_{deck} = 9.00$ in

$DL_{deck} := w_c \cdot S \cdot \frac{t_{deck}}{12}$ $\boxed{DL_{deck} = 1.097}$ kip/ft

HAUNCH:

For the concrete haunch, the dead load per unit length varies due to the change in top flange plate sizes. The moments and shears due to the weight of the concrete haunch can be computed using readily available analysis software. Since the top flange plate sizes are entered as input, the moments and shears due to the concrete haunch are computed based on the actual, varying haunch thickness.

MISC:

For the miscellaneous dead load (including cross-frames, stiffeners, and other miscellaneous structural steel), the dead load per unit length is assumed to be as follows (17.2.4.1):

$DL_{misc} := 0.030$ kip/ft

COMPONENTS AND ATTACHMENTS: DC2 (COMPOSITE)

PARAPET:

For the concrete parapets, the dead load per unit length is computed as follows, assuming that the superimposed dead load of the two parapets is distributed uniformly among all of the girders **LRFD [4.6.2.2.1]**:

$w_{par} = 0.39$ kip/ft

$N_b = 5$

$DL_{par} := \frac{w_{par} \cdot 2}{N_b}$ $\boxed{DL_{par} = 0.155}$ kip/ft

WEARING SURFACE: DW (COMPOSITE)

FUTURE WEARING SURFACE:

For this example, future wearing surface is only applied for permit vehicle rating checks.

Since the plate girder and its section properties are not uniform over the entire length of the bridge, an analysis software was used to compute the dead load moments and shears.

The following two tables present the unfactored dead load moments and shears, as computed by an analysis computer program. Since the bridge is symmetrical, the moments and shears in Span 2 are symmetrical to those in Span 1.

Dead Load Moments (Kip-feet)											
Dead Load Component	Location in Span 1										
	0.0L	0.1L	0.2L	0.3L	0.4L	0.5L	0.6L	0.7L	0.8L	0.9L	1.0L
Steel girder	0.0	71.8	119.3	142.5	141.3	115.8	66.0	-8.2	-110.2	-244.4	-423.9
Concrete deck & haunches	0.0	480.5	796.7	948.6	936.1	759.4	418.4	-86.9	-756.0	-1588.1	-2581.3
Miscellaneous Steel Weight	0.0	12.6	21.0	25.0	24.6	20.0	11.0	-2.3	-19.9	-41.8	-68.0
Concrete parapets	0.0	67.7	113.1	136.1	136.9	115.3	71.4	5.1	-83.4	-194.3	-327.5
Future wearing surface	0.0	76.9	128.4	154.6	155.4	130.9	81.0	5.8	-94.7	-220.6	-371.9

Table 45E-4.3-2
Dead Load Moments

Dead Load Shears (Kips)											
Dead Load Component	Location in Span 1										
	0.0L	0.1L	0.2L	0.3L	0.4L	0.5L	0.6L	0.7L	0.8L	0.9L	1.0L
Steel girder	7.0	5.0	2.9	0.9	-1.1	-3.1	-5.2	-7.2	-9.8	-12.9	-17.0
Concrete deck & haunches	46.9	33.2	19.5	5.8	-7.9	-21.6	-35.3	-49.0	-62.6	-76.1	-89.5
Miscellaneous Steel Weight	1.2	0.9	0.5	0.2	-0.2	-0.6	-0.9	-1.3	-1.7	-2.0	-2.4
Concrete parapets	6.6	4.7	2.9	1.0	-0.9	-2.7	-4.6	-6.5	-8.3	-10.2	-12.0
Future wearing surface	7.5	5.4	3.2	1.1	-1.0	-3.1	-5.2	-7.3	-9.4	-11.6	-13.7

Table 45E-4.3-3
Dead Load Shears

E45-4.4 Compute Live Load Distribution Factors for Interior Girder

The live load distribution factors for an interior girder are computed as follows **LRFD [4.6.2.2.2]**:

First, the longitudinal stiffness parameter, K_g, must be computed **LRFD [4.6.2.2.1]**:

$$K_g := n \cdot \left(I + A \cdot e_g^{\,2}\right)$$

Where:

I = Moment of inertia of beam (in^4)
A = Area of stringer, beam, or girder (in^2)
e_g = Distance between the centers of gravity of the basic beam and deck (in)

Longitudinal Stiffness Parameter, K_g				
	Region A (Pos. Mom.)	**Region B (Intermediate)**	**Region C (At Pier)**	**Weighted Average ***
Length (Feet)	84	20	16	
n	8	8	8	
I (Inches^4)	23,605.3	34,639.8	65,426.6	
A (Inches^2)	49.750	63.750	100.500	
e_g (Inches)	35.978	35.777	36.032	
K_g (Inches^4)	704,020	929,915	1,567,250	856,767

Table E45-4.4-1
Longitudinal Stiffness Parameter

After the longitudinal stiffness parameter is computed, **LRFD [Table 4.6.2.2.1-1]** is used to find the letter corresponding with the superstructure cross section. The letter corresponding with the superstructure cross section in this design example is "a."

If the superstructure cross section does not correspond with any of the cross sections illustrated in **LRFD [Table 4.6.2.2.1-1]**, then the bridge should be analyzed as presented in **LRFD [4.6.3]**.

Based on cross section "a", **LRFD [Table 4.6.2.2.2b-1 & Table 4.6.2.2.2.3a-1]** are used to compute the distribution factors for moment and shear, respectively.

For the 0.4L point:

$K_g = 856766.65$ in^4

$L := 120$ ft

For one design lane loaded, the distribution of live load per lane for moment in interior beams is as follows **LRFD [4.6.2.2.2b-1]**:

$$g_{m1} := 0.06 + \left(\frac{S}{14}\right)^{0.4}\left(\frac{S}{L}\right)^{0.3}\left(\frac{K_g}{12.0L \cdot t_s^{\,3}}\right)^{0.1}$$

$$\boxed{g_{m1} = 0.466}$$ lanes

For two or more design lanes loaded, the distribution of live load per lane for moment in interior beams is as follows **LRFD [Table 4.6.2.2.2b-1]**:

$$g_{m2} := 0.075 + \left(\frac{S}{9.5}\right)^{0.6}\left(\frac{S}{L}\right)^{0.2}\left(\frac{K_g}{12.0 \cdot L \cdot t_s^{\,3}}\right)^{0.1}$$

$$\boxed{g_{m2} = 0.688}$$ lanes

The live load distribution factors for shear for an interior girder are computed in a similar manner. The range of applicability is similar to that for moment **LRFD [Table 4.6.2.2.3a-1]**.

For one design lane loaded, the distribution of live load per lane for shear in interior beams is as follows:

$$g_{v1} := 0.36 + \frac{S}{25.0}$$ $$\boxed{g_{v1} = 0.750}$$ lanes

For two or more design lanes loaded, the distribution of live load per lane for shear in interior beams is as follows:

$$g_{v2} := 0.2 + \frac{S}{12} - \left(\frac{S}{35}\right)^{2.0}$$ $$\boxed{g_{v2} = 0.935}$$ lanes

Since this bridge has no skew, the skew correction factor does not need to be considered for this design example **LRFD [4.6.2.2.2e & 4.6.2.2.3c]**.

HL-93 Live Load Effects (for Interior Beams)											
Live Load Effect	**Location in Span 1**										
	0.0L	**0.1L**	**0.2L**	**0.3L**	**0.4L**	**0.5L**	**0.6L**	**0.7L**	**0.8L**	**0.9L**	**1.0L**
Maximum positive moment (K-ft)	0.0	848.1	1435.4	1780.1	1916.6	1859.0	1626.9	1225.6	699.7	263.6	0.0
Maximum negative moment (K-ft)	0.0	-134.3	-268.7	-403.0	-537.4	-671.7	-806.0	-940.4	-1087.0	-1591.6	-2414.2
Maximum positive shear (kips)	111.1	92.9	76.0	60.4	46.4	34.0	23.3	14.5	7.6	3.0	0.0
Maximum negative shear (kips)	-15.2	-15.7	-21.9	-35.0	-49.2	-63.6	-78.1	-92.3	-106.1	-119.3	-132.0

Table 45E-4.4-2
Live Load Effects

The live load values for HL-93 loading, as presented in the previous table, are computed based on the product of the live load effect per lane and live load distribution factor. These values also include the effects of dynamic load allowance. However, it is important to note that the dynamic load allowance is applied only to the design truck or tandem. The dynamic load allowance is not applied to pedestrian loads or to the design lane load **LRFD [3.6.1, 3.6.2, 4.6.2.2]**.

Two sections will be checked for illustrative purposes. First, the ratings will be performed for the location of maximum positive moment, which is at 0.4L in Span 1. Second, the ratings will be performed for the location of maximum negative moment and maximum shear, which is at the pier.

The following are for the location of maximum positive moment, which is at 0.4L in Span 1, as shown in Figure E45-4.4-1.

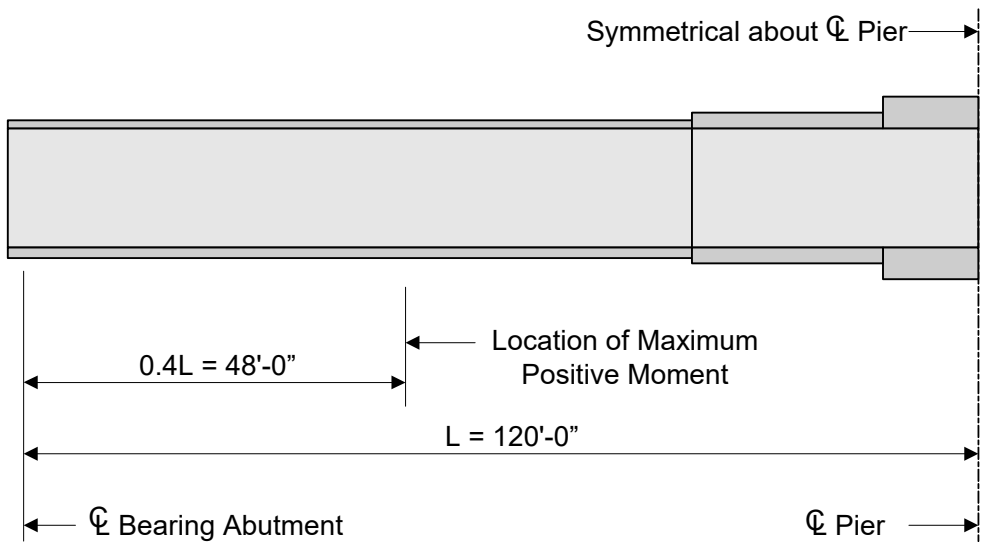

Figure E45-4.4-1
Location of Maximum Positive Moment

E45-4.5 Compute Plastic Moment Capacity - Positive Moment Region

For composite sections, the plastic moment, M_p, is calculated as the first moment of plastic forces about the plastic neutral axis **LRFD [Appendix D6.1]**.

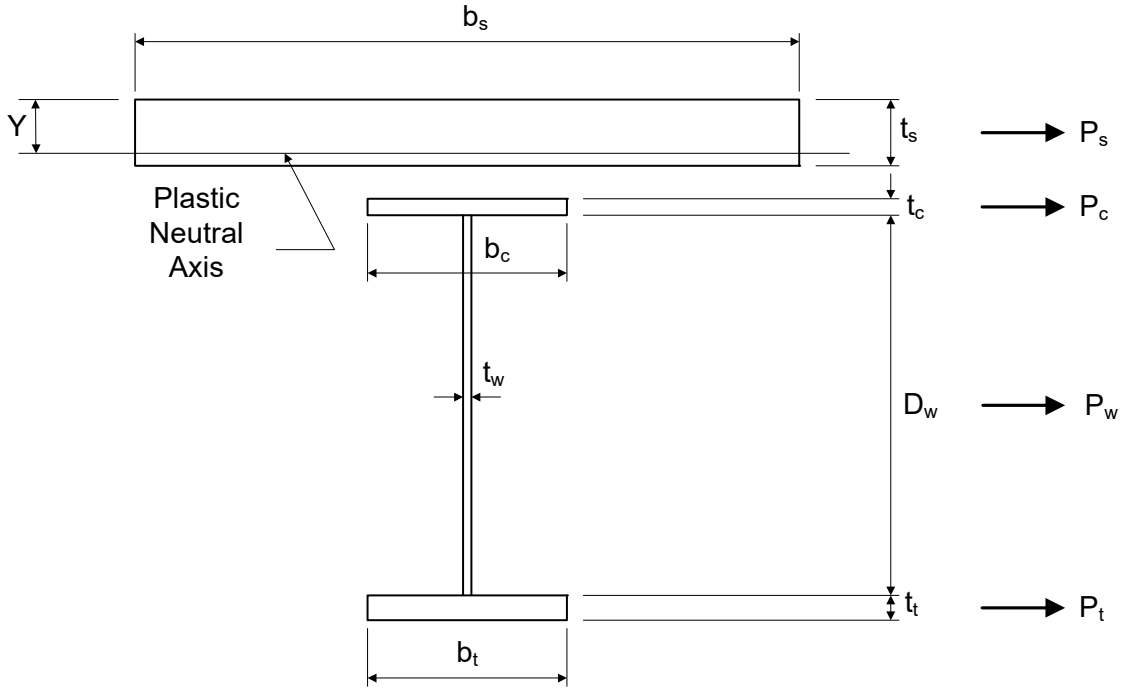

Figure E45-4.5-1
Computation of Plastic Moment Capacity for Positive Bending Sections

For the tension flange:

$$P_t = F_{yt} \cdot b_t \cdot t_t$$

Where:

F_{yt} = Specified minimum yield strength of a tension flange (ksi)

b_t = Full width of the tension flange (in)

t_t = Thickness of tension flange (in)

$F_{yt} := 50$ ksi

$b_t := 14$ in

$t_t := 0.875$ in

$P_t := F_{yt} \cdot b_t \cdot t_t$ $\boxed{P_t = 613}$ kips

For the web:

$P_w := F_{yw} \cdot D \cdot t_w$

Where:

F_{yw} = Specified minimum yield strength of a web (ksi)

$F_{yw} := 50$ ksi

$D = 54.00$ in

$t_w = 0.50$ in

$P_w := F_{yw} \cdot D \cdot t_w$ $\boxed{P_w = 1350}$ kips

For the compression flange:

$P_c = F_{yc} \cdot b_c \cdot t_c$

Where:

F_{yc} = Specified minimum yield strength of a compression flange (ksi)

b_c = Full width of the compression flange (in)

t_c = Thickness of compression flange (in)

$F_{yc} := 50$ ksi

$b_c := 14$ in

$t_c := 0.75$ in

$P_c := F_{yc} \cdot b_c \cdot t_c$ $\boxed{P_c = 525}$ kips

For the slab:

$P_s = 0.85 \cdot f'_c \cdot b_s \cdot t_s$

Where:

b_s = Effective width of concrete deck (in)

t_s = Thickness of concrete deck (in)

$f'_c = 4.00$ ksi

$b_s := 109$ in

$t_s = 8.50$ in

$P_s := 0.85 \cdot f'_c \cdot b_s \cdot t_s$ $\boxed{P_s = 3150}$ kips

The forces in the longitudinal reinforcement may be conservatively neglected in regions of positive flexure.

Check the location of the plastic neutral axis, as follows:

$P_t + P_w = 1963$ kips $\boxed{P_c + P_s = 3675}$ kips

$P_t + P_w + P_c = 2488$ kips $\boxed{P_s = 3150}$ kips

Therefore, the plastic neutral axis is located within the slab **LRFD [Table D6.1-1]**.

$$Y := (t_s)\cdot\left(\frac{P_c + P_w + P_t}{P_s}\right) \qquad \boxed{Y = 6.71} \text{ in}$$

Check that the position of the plastic neutral axis, as computed above, results in an equilibrium condition in which there is no net axial force.

$$\text{Compression} := 0.85\cdot f'_c\cdot b_s\cdot Y \qquad \boxed{\text{Compression} = 2487} \text{ kips}$$

$$\text{Tension} := P_t + P_w + P_c \qquad \boxed{\text{Tension} = 2488} \text{ kips} \quad \text{OK}$$

The plastic moment, M_p, is computed as follows, where d is the distance from an element force (or element neutral axis) to the plastic neutral axis **LRFD [Table D6.1-1]**:

$$d_c := \frac{-t_c}{2} + 3.75 + t_s - Y \qquad \boxed{d_c = 5.16} \text{ in}$$

$$d_w := \frac{D}{2} + 3.75 + t_s - Y \qquad \boxed{d_w = 32.54} \text{ in}$$

$$d_t := \frac{t_t}{2} + D + 3.75 + t_s - Y \qquad \boxed{d_t = 59.98} \text{ in}$$

$$M_p := \frac{\frac{Y^2\cdot P_s}{2\cdot t_s} + \left(P_c\cdot d_c + P_w\cdot d_w + P_t\cdot d_t\right)}{12} \qquad \boxed{M_p = 7643} \text{ kip-ft}$$

E45-4.6 Determine if Section is Compact or Noncompact - Positive Moment Region

Since the section is in a straight bridge, the next step in the design process is to determine if the section is compact or noncompact. This, in turn, will determine which formulae should be used to compute the flexural capacity of the girder.

If the specified minimum yield strengths of the flanges do not exceed 70.0 ksi and the girder does not have longitudinal stiffeners, then the first step is to check the compact-section web slenderness provisions, as follows **LRFD [6.10.6.2.2]**:

$$\frac{2\cdot D_{cp}}{t_w} \le 3.76\cdot\sqrt{\frac{E}{F_{yc}}}$$

Where:

D_{cp} = Depth of web in compression at the plastic moment (in)

Since the plastic neutral axis is located within the slab,

$D_{cp} := 0$ in

Therefore the web is deemed compact. Since this is a composite section in positive flexure and there are no holes in the tension flange at this section, the flexural resistance is computed as defined by the composite compact-section positive flexural resistance provisions of **LRFD [6.10.7.1.2]**.

E45-4.7 Flexural Resistance of Composite Section - Positive Moment Region

Since the section was determined to be compact, and since it is a composite section in the positive moment region with no holes in the tension flange, the flexural resistance is computed in accordance with **LRFD [6.10.7.1.2]**.

$$M_{n_0.4L} = 1.3 \cdot R_h \cdot M_y$$

Where:

R_h = Hybrid factor

M_y = Yield Moment (kip-in)

All design sections of this girder are homogenous. That is, the same structural steel is used for the top flange, the web, and the bottom flange. Therefore, the hybrid factor, R_h, is as follows **LRFD [6.10.1.10.1]**:

$R_h := 1.0$

The yield moment, M_y, is computed as follows **LRFD [Appendix D6.2.2]**:

$$F_y = \frac{M_{D1}}{S_{NC}} + \frac{M_{D2}}{S_{LT}} + \frac{M_{AD}}{S_{ST}}$$

Where:

M_{D1} = Bending moment caused by the factored permanent load applied before the concrete deck has hardened or is made composite (kip-in)

S_{NC} = Noncomposite elastic section modulus (in^3)

M_{D2} = Bending moment caused by the factored permanent load applied to the long-term composite section (kip-in)

S_{LT} = Long-term composite elastic section modulus (in^3)

M_{AD} = Additional bending moment that must be applied to the short-term composite section to cause nominal yielding in either steel flange (kip-in)

S_{ST} = Short-term composite elastic section modulus (in^3)

$M_y = M_{D1} + M_{D2} + M_{AD}$

$F_y := 50$ ksi

$M_{D1} := \left[1.25 \cdot \left(M_{girder} + M_{deck} + M_{misc}\right)\right]$ $\boxed{M_{D1} = 1378}$ kip-ft

$M_{D2} := \left(1.25 \cdot M_{DC2}\right)$ $\boxed{M_{D2} = 171}$ kip-ft

For the bottom flange:

$S_{NC_pos} = 877.63$ in^3

$S_{LT_pos} = 1219.60$ in^3

$S_{ST_pos} = 1332.01$ in^3

$$M_{AD} := \left[\frac{S_{ST_pos}}{12^3} \cdot \left(F_y \cdot 144 - \frac{M_{D1}}{\frac{S_{NC_pos}}{12^3}} - \frac{M_{D2}}{\frac{S_{LT_pos}}{12^3}}\right)\right]$$ $\boxed{M_{AD} = 3272}$ kip-ft

$M_{ybot} := M_{D1} + M_{D2} + M_{AD}$ $\boxed{M_{ybot} = 4821}$ kip-ft

For the top flange:

$S_{NC_pos_top} = 821.67$ in^3

$S_{LT_pos_top} = 3995.47$ in^3

$S_{ST_pos_top} = 19473.97$ in^3

$$M_{AD} := \frac{S_{ST_pos_top}}{12^3} \cdot \left(F_y \cdot 144 - \frac{M_{D1}}{\frac{S_{NC_pos_top}}{12^3}} - \frac{M_{D2}}{\frac{S_{LT_pos_top}}{12^3}}\right)$$

$\boxed{M_{AD} = 47658}$ kip-ft

$M_{ytop} := M_{D1} + M_{D2} + M_{AD}$ $\boxed{M_{ytop} = 49207}$ kip-ft

The yield moment, M_y, is the lesser value computed for both flanges. Therefore, M_y is determined as follows **LRFD [Appendix D6.2.2]**:

$M_y := \min\left(M_{ybot}, M_{ytop}\right)$ $\boxed{M_y = 4821}$ kip-ft

Therefore, for the positive moment region of this design example, the nominal flexural resistance is computed as follows **LRFD [6.10.7.1.2]**:

$D_p \le 0.1 D_t$

$D_p := Y$ $\boxed{D_p = 6.71}$ in

$D_t := 0.875 + 54 + .75 + 8$ $\boxed{D_t = 63.63}$ in

$\boxed{0.1 \cdot D_t = 6.36}$ $< D_p$

Therefore

$M_{n_0.4L} := M_p \cdot \left(1.07 - 0.7 \cdot \frac{D_p}{D_t}\right)$ $\boxed{M_{n_0.4L} = 7614}$ kip-ft

Since this is neither a simple span nor a continuous span where the span and the sections in the negative-flexure region over the interior supports satisfy the special conditions outlined at the end of **LRFD[6.10.7.1.2]**, the nominal flexural resistance of the section must not exceed the following:

$M_{n_0.4L} := 1.3 \cdot R_h \cdot M_y$ $\boxed{M_{n_0.4L} = 6267}$ kip-ft

The ductility requirement is checked as follows **LRFD [6.10.7.3]**:

$D_p \le 0.42 D_t$

Where:

D_p = Distance from top of the concrete deck to the neutral axis of the composite section at the plastic moment (in)

D_t = Total depth of the composite section (in)

$\boxed{0.42 \cdot D_t = 26.72}$ in OK

The factored flexural resistance, M_r, is computed as follows (note that since there is no curvature, skew and wind load is not considered under the Strength I load combination, the flange lateral bending stress is taken as zero in this case **LRFD [6.10.7.1.1]**:

$$M_u + \frac{1}{3}(0) \le \phi_f M_n$$

Where:

M_u = Moment due to the factored loads (kip-in)

M_n = Nominal flexural resistance of a section (kip-in)

$\phi_f := 1.00$

$M_r := \phi_f \cdot M_{n_0.4L}$ $\boxed{M_r = 6267}$ kip-ft

E45-4.8 Design Load Rating @ 0.4L

$$RF = \frac{\phi \cdot \phi_c \cdot \phi_s \cdot M_{n_0.4L} - \gamma_{DC}(DC)}{\gamma_L(LLIM)}$$

Where:

Load Factors per Table 45.3-1

$\gamma_{Linv} := 1.75$

$\gamma_{Lop} := 1.35$

$\gamma_{DC} := 1.25$

Resistance Factors

$\phi := 1.0$ **MBE [6A.7.3]**

$\phi_c := 1.0$ per 45.3.7.4

$\phi_s := 1.0$ per 45.3.7.5

$M_{DC1} := M_{girder} + M_{deck} + M_{misc}$ $M_{DC1} = 1102.07$ ft – kips

$M_{LLIM} := M_{LL}$ $M_{LLIM} = 1916.55$ ft – kips

A. Strength Limit State

Inventory

$$RF_{inv_0.4L} := \frac{\phi \cdot \phi_c \cdot \phi_s \cdot M_{n_0.4L} - \gamma_{DC} \cdot M_{DC1} - \gamma_{DC} \cdot M_{DC2}}{\gamma_{Linv} \cdot (M_{LLIM})}$$

$RF_{inv_0.4L} = 1.41$

Operating

$$RF_{op_0.4L} := \frac{\phi \cdot \phi_c \cdot \phi_s \cdot M_{n_0.4L} - \gamma_{DC} \cdot M_{DC1} - \gamma_{DC} \cdot M_{DC2}}{\gamma_{Lop} \cdot (M_{LLIM})}$$

$RF_{op_0.4L} = 1.82$

B. Service II Limit State

$$RF = \frac{f_R - \gamma_D \cdot (f_D)}{\gamma_L \cdot (f_{LLIM})}$$

Allowable Flange Stress per **LRFD 6.10.4.2.2**

$$f_R = 0.95 R_b \cdot R_h \cdot F_y$$

Checking only the tension flange as compression flanges typically do not control for composite sections.

$R_b := 1.0$ For tension flanges

$R_h := 1.0$ For non-hybrid sections

$f_R := 0.95 \cdot R_b \cdot R_h \cdot F_y$

$f_R = 47.50$ ksi

$f_D = f_{DC1} + f_{DC2}$

$$f_D := \left(\frac{M_{DC1} \cdot 12}{S_{NC_pos}}\right) + \left(\frac{M_{DC2} \cdot 12}{S_{LT_pos}}\right)$$

$f_D = 16.42$ ksi

$$f_{LLIM} := \frac{M_{LLIM} \cdot 12}{S_{ST_pos}}$$

$f_{LLIM} = 17.27$ ksi

Load Factors Per Table 45.3-1

$\gamma_D := 1.0$

$\gamma_{Lin} := 1.3$ Inventory

$\gamma_{Lop} := 1.0$ Operating

Inventory

$$RF_{inv_0.4L_service} := \frac{f_R - \gamma_D \cdot f_D}{\gamma_{Lin} \cdot f_{LLIM}}$$

$RF_{inv_0.4L_service} = 1.38$

Operating

$$RF_{op_0.4L_service} := \frac{f_R - \gamma_D \cdot f_D}{\gamma_{Lop} \cdot f_{LLIM}}$$

$RF_{op_0.4L_service} = 1.80$

E45-4.9 Check Section Proportion Limits - Negative Moment Region

Now the specification checks are repeated for the location of maximum negative moment, which is at the pier, as shown in Figure 24E1.17-1. This is also the location of maximum shear in this case.

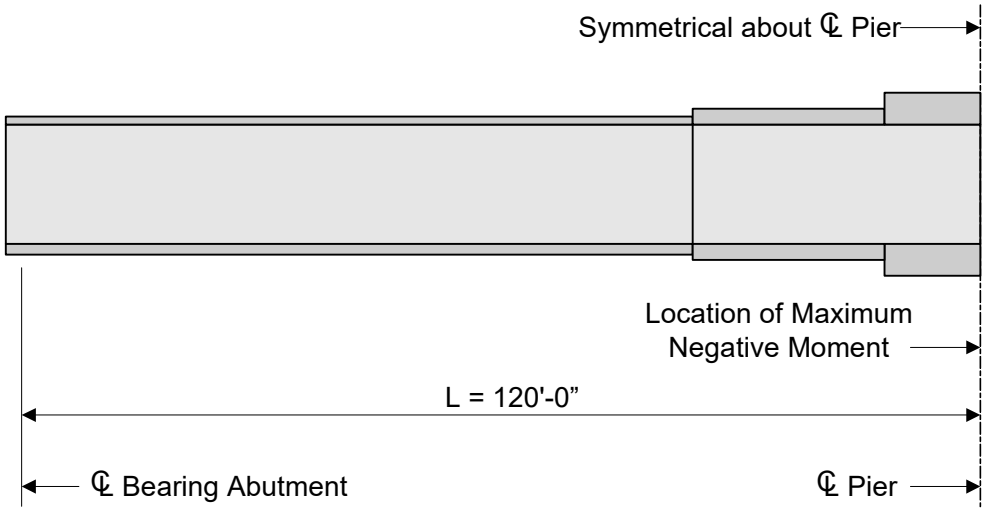

Figure E45-4.9-1
Location of Maximum Negative Moment

Several checks are required to ensure that the proportions of the girder section are within specified limits **LRFD [6.10.2]**.

The first section proportion check relates to the web slenderness **LRFD [6.10.2.1]**. For a section without longitudinal stiffeners, the web must be proportioned such that:

$$\frac{D}{t_w} \le 150 \qquad \boxed{\frac{D}{t_w} = 108.00} \qquad \text{OK}$$

The second set of section proportion checks relate to the general proportions of the section **LRFD [6.10.2.2]**. The compression and tension flanges must be proportioned such that:

$$\frac{b_f}{2 \cdot t_f} \le 12.0$$

$b_f := 14$

$t_f := 2.50$

$$\boxed{\frac{b_f}{2 \cdot t_f} = 2.80} \qquad \text{OK}$$

$$b_f \ge \frac{D}{6} \qquad \boxed{\frac{D}{6} = 9.00} \qquad \text{in} \qquad \text{OK}$$

$$t_f \ge 1.1 \cdot t_w \qquad \boxed{1.1 t_w = 0.55} \qquad \text{in} \qquad \text{OK}$$

$$0.1 \le \frac{I_{yc}}{I_{yt}} \le 10$$

$$I_{yc} := \frac{2.75 \cdot 14^3}{12}$$ $I_{yc} = 628.83$ in^4

$$I_{yt} := \frac{2.50 \cdot 14^3}{12}$$ $I_{yt} = 571.67$ in^4

$\frac{I_{yc}}{I_{yt}} = 1.100$ OK

E45-4.10 Compute Plastic Moment Capacity - Negative Moment Region

For composite sections, the plastic moment, M_p, is calculated as the first moment of plastic forces about the plastic neutral axis **LRFD [Appendix D6.1]**. For composite sections in negative flexure, the concrete deck is ignored and the longitudinal deck reinforcement is included in the computation of M_p.

The plastic force in the tension flange, P_t, is calculated as follows:

$t_t := 2.50$ in

$P_t := F_{yt} \cdot b_t \cdot t_t$ $P_t = 1750$ kips

The plastic force in the web, P_w, is calculated as follows:

$P_w := F_{yw} \cdot D \cdot t_w$ $P_w = 1350$ kips

The plastic force in the compression flange, P_c, is calculated as follows:

$t_c := 2.75$ in

$P_c := F_{yc} \cdot b_c \cdot t_c$ $P_c = 1925$ kips

The plastic force in the top layer of longitudinal deck reinforcement, P_{rt}, used to compute the plastic moment is calculated as follows:

$P_{rt} = F_{yrt} \cdot A_{rt}$

Where:

F_{yrt} = Specified minimum yield strength of the top layer of longitudinal concrete deck reinforcement (ksi)

A_{rt} = Area of the top layer of longitudinal reinforcement within the effective concrete deck width (in^2)

$F_{yrt} := 60$ ksi

$A_{rt} := 0.44 \cdot \left(\frac{b_{effflange} \cdot 12}{7.5} \right)$ $\boxed{A_{rt} = 6.39}$ in^2

$P_{rt} := F_{yrt} \cdot A_{rt}$ $\boxed{P_{rt} = 384}$ kips

The plastic force in the bottom layer of longitudinal deck reinforcement, P_{rb}, used to compute the plastic moment is calculated as follows (WisDOT Policy is to ignore bottom mat steel)

$P_{rb} = F_{yrb} \cdot A_{rb}$

Where:

F_{yrb} = Specified minimum yield strength of the bottom layer of longitudinal concrete deck reinforcement (ksi)

A_{rb} = Area of the bottom layer of longitudinal reinforcement within the effective concrete deck width (in^2)

$F_{yrb} := 60$ ksi

$A_{rb} := 0 \cdot \left(\frac{b_{effflange} \cdot 12}{1} \right)$ $\boxed{A_{rb} = 0.00}$ in^2

$P_{rb} := A_{rb} \cdot F_{yrb}$ $\boxed{P_{rb} = 0}$ kips

NOTE: For continuous girder type bridges, the negative moment steel shall conservatively consist of only the top mat of steel over the piers per **45.6.3**

Check the location of the plastic neutral axis, as follows:

$\boxed{P_c + P_w = 3275}$ kips

$\boxed{P_t + P_{rb} + P_{rt} = 2134}$ kips

$\boxed{P_c + P_w + P_t = 5025}$ kips

$\boxed{P_{rb} + P_{rt} = 384}$ kips

Therefore the plastic neutral axis is located within the web **LRFD [Appendix Table D6.1-2]**.

$Y := \left(\frac{D}{2} \right) \cdot \left(\frac{P_c - P_t - P_{rt} - P_{rb}}{P_w} + 1 \right)$ $\boxed{Y = 22.83}$ in

Although it will be shown in the next design step that this section qualifies as a nonslender web section at the strength limit state, the optional provisions of Appendix A to **LRFD [6]** are not employed in this example. Thus, the plastic moment is not used to compute the flexural resistance and therefore does not need to be computed.

E45-4.11 Determine if Section is a Compact-Web, Noncompact-Web, or Slender-Web Section - Negative Moment Region

Since the section is in a straight bridge, the next step is to determine if the section is a compact-web, noncompact-web, or slender-web section. This, in turn, will determine which formulae should be used to compute the flexural capacity of the girder.

Where the specified minimum yield strengths of the flanges do not exceed 70.0 ksi and the girder does not have longitudinal stiffeners, then the first step is to check the noncompact-web slenderness limit, as follows **LRFD [6.10.6.2.3]**:

$$\frac{2 \cdot D_c}{t_w} \le 5.7 \cdot \sqrt{\frac{E}{F_{yc}}}$$

At sections in negative flexure, D_c of the composite section consisting of the steel section plus the longitudinal reinforcement is to be used at the strength limit state.

$D_c := 30.872 - 2.75$ (see Figure 24E1.2-1 and Table 24E1.3-2)

$\boxed{D_c = 28.12}$ in

$\boxed{\frac{2 \cdot D_c}{t_w} = 112.5}$

$\boxed{5.7 \cdot \sqrt{\frac{E_s}{F_{yc}}} = 137.3}$

The section is a nonslender web section (i.e. either a compact-web or noncompact-web section). Next, check:

$I_{yc} := \frac{2.75 \cdot 14^3}{12}$ $\boxed{I_{yc} = 628.83}$ in^4

$I_{yt} := \frac{2.5 \cdot 14^3}{12}$ $\boxed{I_{yt} = 571.67}$ in^4

$\boxed{\frac{I_{yc}}{I_{yt}} = 1.10}$ > 0.3 OK

Therefore, the web qualifies to use the optional provisions of **LRFD [Appendix A6]** to compute the flexural resistance. However, since the web slenderness is closer to the noncompact web slenderness limit than the compact web slenderness limit in this case, the simpler equations of **LRFD [6.10.8]**, which assume slender-web behavior and limit the resistance to Fyc or below, will conservatively be applied in this example to compute the flexural resistance at the strength limit state. The investigation proceeds by calculating the flexural resistance of the discretely braced compression flange.

E45-4.12 Rating for Flexure - Strength Limit State - Negative Moment Region

The nominal flexural resistance of the compression flange shall be taken as the smaller of the local buckling resistance and the lateral torsional buckling resistance **LRFD [6.10.8.2.2 & 6.10.8.2.3]**.

Local buckling resistance **LRFD [6.10.8.2.2]**:

$b_{fc} := 14$ (see Figure 24E1.2-1)

$t_{fc} := 2.75$ (see Figure 24E1.2-1)

$\lambda_f := \frac{b_{fc}}{2 \cdot t_{fc}}$ $\boxed{\lambda_f = 2.55}$

$\lambda_{pf} := 0.38 \cdot \sqrt{\frac{E}{F_{yc}}}$ $\boxed{\lambda_{pf} = 9.15}$

Since $\lambda_f < \lambda_{pf}$, F_{nc} is calculated using the following equation:

$F_{nc} := R_b \cdot R_h \cdot F_{yc}$

Since $2D_c/t_w$ is less than λ_{rw} (calculated above), R_b is taken as 1.0 **LRFD [6.10.1.10.2]**.

$\boxed{F_{nc} = 50.00}$ ksi

Lateral torsional buckling resistance **LRFD [6.10.8.2.3]**:

$r_t := \frac{b_{fc}}{\sqrt{12 \cdot \left(1 + \frac{1}{3} \cdot \frac{D_c \cdot t_w}{b_{fc} \cdot t_{fc}}\right)}}$ $\boxed{r_t = 3.82}$ in

$L_p := 1.0 \cdot r_t \cdot \sqrt{\frac{E}{F_{yc}}}$ $\boxed{L_p = 91.90}$ in

$F_{yr} := \max(\min(0.7 \cdot F_{yc}, F_{yw}), 0.5 \cdot F_{yc})$ $\boxed{F_{yr} = 35.00}$ ksi

$L_r := \pi \cdot r_t \cdot \sqrt{\frac{E}{F_{yr}}}$ $\boxed{L_r = 345.07}$ in

$L_b = 240.00$

The moment gradient correction factor, C_b, is computed as follows:

Where the variation in the moment along the entire length between brace points is concave in shape, which is the case here, $f_1 = f_0$. (calculated below based on the definition of f_0 given in **LRFD [6.10.8.2.3]**).

$M_{NCDC0.8L} := 110.2 + 756.0 + 19.9$ $\quad M_{NCDC0.8L} = 886.10$ kip-ft

$S_{NCDC0.8L} := 2278.2$ in^3

$M_{par0.8L} := 83.4$ kip-ft

$M_{LL0.8L} := 1087.0$ kip-ft

$S_{rebar0.8L} := 2371.9$ in^3

$$f_1 := 1.25 \cdot \frac{M_{NCDC0.8L} \cdot 12}{S_{NCDC0.8L}} + 1.25 \cdot \frac{M_{par0.8L} \cdot 12}{S_{rebar0.8L}} + 1.75 \cdot \frac{M_{LL0.8L} \cdot 12}{S_{rebar0.8L}}$$

$f_1 = 15.99$ ksi

$f_2 := 46.50$ ksi (Table E24-1.6-2)

$\frac{f_1}{f_2} = 0.34$

$$C_b := 1.75 - 1.05 \cdot \left(\frac{f_1}{f_2}\right) + 0.3 \cdot \left(\frac{f_1}{f_2}\right)^2 < 2.3$$

$C_b = 1.42$

Therefore:

$$F_{nc} := C_b \cdot \left[1 - \left(1 - \frac{F_{yr}}{R_h \cdot F_{yc}}\right) \cdot \left(\frac{L_b - L_p}{L_r - L_p}\right)\right] \cdot R_b \cdot R_h \cdot F_{yc}$$

$F_{nc} = 58.72$ ksi

$F_{nc} \le R_b \cdot R_h \cdot F_{yc}$ $\quad R_b \cdot R_h \cdot F_{yc} = 50.00$ ksi

Use:

$F_{nc} := 50$ ksi

$\phi_f \cdot F_{nc} = 50.00$ ksi

$M_{n_1.0L} := F_{nc} \cdot S_{rebar} \cdot \left(\frac{1}{12}\right)$ $\quad M_{n_1.0L} = 9883.01$ ft – kips

E45-4.13 Design Load Rating @ Pier

$$RF = \frac{\phi \cdot \phi_c \cdot \phi_s \cdot M_{n_1.0L} - \gamma_{DC}(M_{DC_neg})}{\gamma_L(M_{LLIM_neg})}$$

Where:

Load Factors per Table 45.3-1

$\gamma_{Linv} := 1.75$

$\gamma_{Lop} := 1.35$

$\gamma_{DC} := 1.25$

Resistance Factors

$\phi := 1.0$ **MBE [6A.7.3]**

$\phi_c := 1.0$ per 45.3.7.4

$\phi_s := 1.0$ per 45.3.7.5

$M_{DC1_neg} := M_{girder_neg} + M_{deck_neg} + M_{misc_neg}$ $M_{DC1_neg} = -3073.22$ ft – kips

$M_{LLIM_neg} := M_{LL_neg}$ $M_{LLIM_neg} = -2414.17$ ft – kips

A. Strength Limit State

$$RF_{inv_1.0L} := \frac{\phi \cdot \phi_c \cdot \phi_s \cdot (-F_{nc}) - \gamma_{DC} \cdot \frac{M_{DC1_neg} \cdot 12}{S_{NC_neg}} - \gamma_{DC} \cdot \frac{M_{DC2_neg} \cdot 12}{S_{rebar}}}{\gamma_{Linv} \cdot \left(\frac{M_{LLIM_neg} \cdot 12}{S_{rebar}}\right)}$$

$RF_{inv_1.0L} = 1.30$

$$RF_{op_1.0L} := \frac{\phi \cdot \phi_c \cdot \phi_s \cdot (-F_{nc}) - \gamma_{DC} \cdot \frac{M_{DC1_neg} \cdot 12}{S_{NC_neg}} - \gamma_{DC} \cdot \frac{M_{DC2_neg} \cdot 12}{S_{rebar}}}{\gamma_{Lop} \cdot \left(\frac{M_{LLIM_neg} \cdot 12}{S_{rebar}}\right)}$$

$RF_{op_1.0L} = 1.68$

B. Service II Limit State

$$RF = \frac{f_R - \gamma_D \cdot (f_D)}{\gamma_L \cdot (f_{LLIM})}$$

Allowable Flange Stress per **LRFD [6.10.4.2.2]**

$$f_R := 0.95 \cdot R_h \cdot F_y$$

$R_h := 1.0$ For non-hybrid sections

$$f_R := 0.95 \cdot R_b \cdot R_h \cdot F_y$$

$f_R = 47.50$ ksi

$$f_D = f_{DC1} + f_{DC2}$$

$$f_D := -\left[\left(\frac{M_{DC1_neg} \cdot 12}{S_{NC_neg}}\right) + \left(\frac{M_{DC2_neg} \cdot 12}{S_{LT_neg}}\right)\right]$$

$f_D = 17.68$ ksi

$$f_{LLIM} := \frac{-M_{LL_neg} \cdot 12}{S_{rebar}}$$

$f_{LLIM} = 12.21$ ksi

Load Factors Per Table 45.3-1

$\gamma_D := 1.0$

$\gamma_{Lin} := 1.3$ Inventory

$\gamma_{Lop} := 1.0$ Operating

Inventory

$$RF_{inv_1.0L_service} := \frac{f_R - \gamma_D \cdot f_D}{\gamma_{Lin} \cdot f_{LLIM}}$$

$RF_{inv_1.0L_service} = 1.88$

Operating

$$RF_{op_1.0L_service} := \frac{f_R - \gamma_D \cdot f_D}{\gamma_{Lop} \cdot f_{LLIM}}$$

$RF_{op_1.0L_service} = 2.44$

E45-4.14 Rate for Shear - Negative Moment Region

Shear must be checked at each section of the girder. For this Rating example, shear is maximum at the pier, and will only be checked there for illustrative purposes.

The transverse intermediate stiffener spacing is 120". The spacing of the transverse intermediate stiffeners does not exceed 3D, therefore the section can be considered stiffened and the provisions of **LRFD [6.10.9.3]** apply.

$d_o := 120$ in

$D = 54.00$ in

$k := 5 + \frac{5}{\left(\frac{d_o}{D}\right)^2}$ $k = 6.01$

$\frac{D}{t_w} = 108.00$ $\frac{D}{t_w} \geq 1.40 \cdot \sqrt{\frac{E_s \cdot k}{F_{yw}}}$ $1.40 \cdot \sqrt{\frac{E_s \cdot k}{F_{yw}}} = 82.67$

$C := \frac{1.57}{\left(\frac{D}{t_w}\right)^2} \cdot \left(\frac{E_s \cdot k}{F_{yw}}\right)$ $\boxed{C = 0.469}$

The plastic shear force, V_p, is then:

$V_p := 0.58 \cdot F_{yw} \cdot D \cdot t_w$ $\boxed{V_p = 783.00}$ kips

$V_n := V_p \cdot \left[C + \frac{0.87 \cdot (1 - C)}{\sqrt{1 + \left(\frac{d_o}{D}\right)^2}}\right]$ $\boxed{V_n = 515.86}$ kips

The factored shear resistance, V_r, is computed as follows **LRFD [6.10.9.1]**:

$\phi_v := 1.00$

$V_r := \phi_v \cdot V_n$ $\boxed{V_r = 515.86}$ kips

HL-93 Maximum Shear @ Pier:

$V_{DC1} := V_{girder} + V_{deck} + V_{misc}$ $V_{DC1} = -108.84$ kips

$V_{DC2} = -12.03$ kips

$V_{LL} = -131.95$ kips

$M_{LLIM_neg} = -2414.17$ ft – kips

E45-4.15 Design Load Rating @ Pier for Shear

$$RF = \frac{\phi \cdot \phi_c \cdot \phi_s \cdot V_n - \gamma_{DC}(V_{DC})}{\gamma_L(V_{LLIM})}$$

Where:

Load Factors per Table 45.3-1

$\gamma_{Linv} := 1.75$

$\gamma_{Lop} := 1.35$

$\gamma_{DC} := 1.25$

Resistance Factors

$\phi := 1.0$ **MBE [6A.7.3]**

$\phi_c := 1.0$ per 45.3.7.4

$\phi_s := 1.0$ per 45.3.7.5

A. Strength Limit State

Inventory

$$RF_{inv_shear} := \frac{\phi \cdot \phi_c \cdot \phi_s \cdot (-V_n) - \gamma_{DC} \cdot (V_{DC1} + V_{DC2})}{\gamma_{Linv} \cdot (V_{LL})}$$

$$\boxed{RF_{inv_shear} = 1.58}$$

Operating

$$RF_{op_shear} := \frac{\phi \cdot \phi_c \cdot \phi_s \cdot (-V_n) - \gamma_{DC} \cdot (V_{DC1} + V_{DC2})}{\gamma_{Lop} \cdot (V_{LL})}$$

$$\boxed{RF_{op_shear} = 2.05}$$

Since RF>1.0 @ operating for all checks, Legal Load Ratings are not required for this example.

E45-4.16 - Permit Load Ratings

For any bridge design (new or rehabilitation) or bridge re-rate, the Wisconsin Standard Permit Vehicle (Wis-SPV) shall be analyzed (per 45.12). Since the span lengths are less than 200', the lane loading requirements will not be considered for positive moments.

The bridge shall be analyzed for this vehicle considering both single-lane and multi-lane distribution. Also, the vehicle will be analyzed assuming it is mixing with other traffic on the bridge and that full dynamic load allowance is utilized. Future wearing surface shall not be included.

Since this example is rating a newly designed bridge, an additional check is required. The designer shall ensure that the results of the single-lane analysis are greater than 190 kips MVW. Future wearing surface shall be included in the check.

E45-4.16.1 - Wis-SPV Permit Rating with Single Lane Distribution w/ FWS

The values from this analysis are used for performing the Wis-SPV design check per 45.12

Load Distribution Factors

Single Lane Interior DF - Moment $g_{m1} = 0.47$

Single Lane Interior DF - Shear $g_{v1} = 0.75$

Load Factors per Tables 45.3-1 and 45.3-3

$\gamma_L := 1.2$

$\gamma_{DC} := 1.25$ $\gamma_{DW} := 1.50$

Wis-SPV Moments and Shears (w/o Dynamic Load allowance or Distribution Factors included)

$M_{pos} := 2842.10$ kip-ft

$M_{neg} := 2185.68$ kip-ft

$V_{max} := 154.32$ kips

$$M_{0.4L} := \frac{g_{m1}}{1.2} \cdot 1.33 \cdot M_{pos}$$ $\boxed{M_{0.4L} = 1468.47}$ kip-ft

$$M_{1.0L} := \left(\frac{g_{m1}}{1.2}\right) \cdot \left(\left(1.33 \cdot M_{neg}\right)\right)$$ $\boxed{M_{1.0L} = 1129.31}$ kip-ft

$$V_{1.0L} := \left(\frac{g_{v1}}{1.2}\right)\cdot\left(\left(1.33\cdot V_{max}\right)\right) \qquad \boxed{V_{1.0L} = 128.28} \quad \text{kips}$$

$$RF_{pos} := \frac{\phi\cdot\phi_c\cdot\phi_s\cdot M_{n_0.4L} - \gamma_{DC}\cdot\left(M_{DC1} + M_{DC2}\right) - \gamma_{DW}\cdot M_{DW}}{\gamma_L\cdot\left(M_{0.4L}\right)}$$

$\boxed{RF_{pos} = 2.55}$ $\boxed{RF_{pos}\cdot 190 = 483.65}$ kips

$$RF_{neg} := \frac{\phi\cdot\phi_c\cdot\phi_s\cdot M_{n_1.0L} - \gamma_{DC}\cdot\left(-M_{DC1_neg} - M_{DC2_neg}\right) - \gamma_{DW}\cdot\left(-M_{DW_neg}\right)}{\gamma_L\cdot\left(M_{1.0L}\right)}$$

$\boxed{RF_{neg} = 3.74}$ $\boxed{RF_{neg}\cdot 190 = 711.43}$ kips

$$RF_{shear} := \frac{\phi\cdot\phi_c\cdot\phi_s\cdot V_n - \gamma_{DC}\cdot\left[-\left(V_{DC1} + V_{DC2}\right)\right] - \gamma_{DW}\cdot\left(-V_{DW}\right)}{\gamma_L\cdot\left(V_{1.0L}\right)}$$

$\boxed{RF_{shear} = 2.24}$ $\boxed{RF_{shear}\cdot 190 = 424.87}$ kips

424.87k > 190k minimum : CHECK OK

E45-4.16.2 - Wis-SPV Permit Rating with Single Lane Distribution w/o FWS

For use with plans and rating sheet only.

Load Distribution Factors

Single Lane Interior DF - Moment $g_{m1} = 0.47$

Single Lane Interior DF - Shear $g_{v1} = 0.75$

Load Factors per Tables 45.3-1 and 45.3-3

$\gamma_L := 1.2$

$\gamma_{DC} := 1.25$ $\gamma_{DW} := 1.50$

Wis-SPV Moments and Shears (w/o Dynamic Load allowance or Distribution Factors included)

$M_{pos} := 2842.10$ kip-ft

$M_{neg} := 2185.68$ kip-ft

$V_{max} := 154.32$ kips

$M_{0.4L} := \frac{g_{m1}}{1.2} \cdot 1.33 \cdot M_{pos}$ $\boxed{M_{0.4L} = 1468.47}$ kip-ft

$M_{1.0L} := \left(\frac{g_{m1}}{1.2}\right) \cdot \left(\left(1.33 \cdot M_{neg}\right)\right)$ $\boxed{M_{1.0L} = 1129.31}$ kip-ft

$V_{1.0L} := \left(\frac{g_{v1}}{1.2}\right) \cdot \left(\left(1.33 \cdot V_{max}\right)\right)$ $V_{1.0L} = 128.28$ kips

$$RF_{pos1} := \frac{\phi \cdot \phi_c \cdot \phi_s \cdot M_{n_0.4L} - \gamma_{DC} \cdot \left(M_{DC1} + M_{DC2}\right)}{\gamma_L \cdot \left(M_{0.4L}\right)}$$

$\boxed{RF_{pos1} = 2.68}$ $\boxed{RF_{pos1} \cdot 190 = 508.78}$ kips

$$RF_{neg1} := \frac{\phi \cdot \phi_c \cdot \phi_s \cdot M_{n_1.0L} - \gamma_{DC} \cdot \left(-M_{DC1_neg} - M_{DC2_neg}\right)}{\gamma_L \cdot \left(M_{1.0L}\right)}$$

$\boxed{RF_{neg1} = 4.16}$ $\boxed{RF_{neg1} \cdot 190 = 789.64}$ kips

$$RF_{shear1} := \frac{\phi \cdot \phi_c \cdot \phi_s \cdot V_n - \gamma_{DC} \cdot \left[-\left(V_{DC1} + V_{DC2}\right)\right]}{\gamma_L \cdot \left(V_{1.0L}\right)}$$

$\boxed{RF_{shear1} = 2.37}$ $\boxed{RF_{shear1} \cdot 190 = 450.24}$ kips

E45-4.16.3 - Permit Rating with Multi-Lane Distribution w/o FWS

For use with plans and rating sheet only.

Load Distribution Factors

Multi Lane Interior DF - Moment $g_{m2} = 0.69$

Multi Lane Interior DF - Shear $g_{v2} = 0.93$

Load Factors per Tables 45.3-1 and 45.3-3

$\gamma_L := 1.3$

$\gamma_{DC} := 1.25$

Wis-SPV Moments and Shears (w/o Dynamic Load allowance or Distribution Factors included)

$M_{pos} := 2842.10$ kip-ft

$M_{neg} := 2185.68$ kip-ft

$V_{max} := 154.32$ kips

Multi Lane Ratings

$M_{0.4L} := g_{m2} \cdot 1.33 \cdot M_{pos}$ $\boxed{M_{0.4L} = 2600.09}$ kip-ft

$M_{1.0L} := g_{m2} \cdot (1.33 \cdot M_{neg})$ $\boxed{M_{1.0L} = 1999.56}$ kip-ft

$V_{1.0L} := g_{v2} \cdot (1.33 \cdot V_{max})$ $\boxed{V_{1.0L} = 191.88}$ kips

$$RF_{pos_ml} := \frac{\phi \cdot \phi_c \cdot \phi_s \cdot M_{n_0.4L} - \gamma_{DC} \cdot (M_{DC1} + M_{DC2})}{\gamma_L \cdot (M_{0.4L})}$$

$\boxed{RF_{pos_ml} = 1.40}$ $\boxed{RF_{pos_ml} \cdot 190 = 265.24}$ kips

$$RF_{neg_ml} := \frac{\phi \cdot \phi_c \cdot \phi_s \cdot M_{n_1.0L} - \gamma_{DC} \cdot \left(-M_{DC1_neg} - M_{DC2_neg}\right)}{\gamma_L \cdot \left(M_{1.0L}\right)}$$

$RF_{neg_ml} = 2.17$ $RF_{neg_ml} \cdot 190 = 411.67$ kips

$$RF_{shear_ml} := \frac{\phi \cdot \phi_c \cdot \phi_s \cdot V_n - \gamma_{DC} \cdot \left[-\left(V_{DC1} + V_{DC2}\right)\right]}{\gamma_L \cdot \left(V_{1.0L}\right)}$$

$RF_{shear_ml} = 1.46$ $RF_{shear_ml} \cdot 190 = 277.84$ kips

E45-4.17 Summary of Rating

Steel Interior Girder							
Limit State		Design Load Rating		Legal Load Rating	Wis-SPV Ratings (kips)		
		Inventory	Operating		Single Lane w/ FWS	Single Lane w/o FWS	Multi Lane w/o FWS
Strength I @ 0.4L	Flexure	1.41	1.82	N/A	484	509	265
	Shear	N/A	N/A	N/A	N/A	N/A	N/A
Strength I @ 1.0L	Flexure	1.30	1.68	N/A	711	790	412
	Shear	1.58	2.05	N/A	425	450	278
Service II	0.4L	1.38	1.80	N/A	Optional		Optional
	1.0L	1.88	2.44	N/A	Optional		Optional

Table of Contents

E45-5 Reinforced Concrete Slab Rating Example LFR 2
E45-5.1 Design Criteria 2
E45-5.2 Analysis of an Interior Strip one foot width 3
E45-5.2.1 Dead Loads 3
E45-5.2.2 Live Load Distribution 3
E45-5.2.3 Nominal Flexural Resistance: (Mn) 4
E45-5.2.4 General Load Rating Equation (for flexure) 5
E45-5.2.5 Design Load (HS20) Rating 5
E45-5.2.6 Permit Vehicle Load Ratings 7
E45-5.2.6.1 Wis-SPV Permit Rating with Multi Lane Distribution 7
E45-5.2.6.2 Wis-SPV Permit Rating with Single Lane Distribution w/o FWS 9
E45-5.2.6.3 Wis-SPV Permit Rating with Single Lane Distribution w/ FWS 9
E45-5.3 Summary of Rating 9

E45-5 Reinforced Concrete Slab Rating Example - LFR

Reference E45-1 for bridge data. For LFR, the Bureau of Structures rates concrete slab structures for the Design Load (HS20) and for Permit Vehicle Loads on an interior strip equal to one foot width.

This example calculates ratings of the controlling locations at the 0.4 tenths point of span 1 for positive moment and at the pier for negative moment.

E45-5.1 Design Criteria

Geometry:

$L_1 := 38.0$	ft	Span 1 Length
$L_2 := 51.0$	ft	Span 2 Length
$L_3 := 38.0$	ft	Span 3 Length
$slab_{width} := 42.5$	ft	out to out width of slab
$cover_{top} := 2.5$	in	concrete cover on top bars (includes 1/2in wearing surface)
$cover_{bot} := 1.5$	in	concrete cover on bottom bars
$d_{slab} := 17$	in	slab depth (not including 1/2in wearing surface)
$b := 12$	in	Interior strip width for analysis
$D_{haunch} := 28$	in	haunch depth (not including 1/2in wearing surface)
$A_{st_0.4L} := 1.71$	$\frac{in^2}{ft}$	Area of longitudinal bottom steel at 0.4L (# 9's at 7in centers)
$A_{st_pier} := 1.88$	$\frac{in^2}{ft}$	Area of longitudinal top steel at Pier (# 8's at 5in centers)

Material Properties:

$f'_c := 4$	ksi	concrete compressive strength
$f_y := 60$	ksi	yield strength of reinforcement

Weights:

$w_c := 150$	pcf	concrete unit weight
$w_{LF} := 387$	plf	weight of Type LF parapet (each)

E45-5.2 Analysis of an Interior Strip - one foot width

Use Strength Limit States to rate the concrete slab bridge. **MBE [6B.5.3.2]**

E45-5.2.1 Dead Loads

The slab dead load, D_{slab}, and the section properties of the slab, do not include the 1/2 inch wearing surface. But the 1/2 inch wearing surface load, D_{WS}, of 6 psf must be including in the analysis of the slab. For a one foot slab width:

$D_{ws} := 6$ 1/2 inch wearing surface load, plf

The parapet dead load is uniformly distributed over the full width of the slab when analyzing an Interior Strip. For a one foot slab width:

$$D_{para} := 2 \cdot \frac{w_{LF}}{slab_{width}} \qquad \boxed{D_{para} = 18} \quad \text{plf}$$

The unfactored dead load moments, M_D, due to slab dead load (D_{slab}), parapet dead load (D_{para}), and the 1/2 inch wearing surface (D_{ws}) are shown in Chapter 18 Example E18-1 (Table E18.4). For LFR, the total deal load moment (M_D) is the sum of the values M_{DC} and M_{DW} tabulated separately for LRFD calculations.

The structure was designed for a possible future wearing surface, D_{FWS}, of 20 psf.

$D_{FWS} := 20$ Possible wearing surface, plf

E45-5.2.2 Live Load Distribution

Live loads are distributed over an equivalent width, E, as calculated below.
The live loads to be placed on these widths are wheel loads (i.e., one line of wheels) or half of the lane load. The equivalent distribution width applies for both live load moment and shear.

Multi - Lane Loading:	$E = 48.0 + 0.06 \cdot S$	$\leq$ 84 in	**Std [3.24.3.2]**
Single - Lane Loading:	$E = 144$	in	**[45.6.2.1]**

where:

S = effective span length, in inches

For multi-lane loading:

(Span 1, 3) $E_{m13} := \min[84, 48.0 + 0.06\cdot(38\cdot 12)]$

$\boxed{E_{m13} = 75.36}$ in

(Span 2) $E_{m2} := \min[84, 48.0 + 0.06\cdot(51\cdot 12)]$

$\boxed{E_{m2} = 84.00}$ in

For single-lane loading:

(Span 1, 3) $\boxed{E_{s13} := 144.0}$ in

(Span 2) $\boxed{E_{s2} := 144.0}$ in

E45-5.2.3 Nominal Flexural Resistance: (M_n)

The depth of the compressive stress block, (a) is:

$$a = \frac{A_s\cdot f_y}{0.85\cdot f'_c\cdot b}$$ **Std (8-17)**

For rectangular sections, the nominal moment resistance, M_n, (tension reinforcement only) equals:

$$M_n = A_s\cdot f_y\cdot\left(d_s - \frac{a}{2}\right)$$ **Std (8-16)**

where:

d_s = slab depth (excl. 1/2" wearing surface) - bar clearance - 1/2 bar diameter

Maximum Reinforcement Check

The area of reinforcement to be used in calculating nominal resistance (M_n) shall not exceed 75 percent of the reinforcement required for the balanced conditions **MBE [6B.5.3.2]**.

$$\rho_b := 0.85^2\cdot\left(\frac{f'_c}{f_y}\right)\cdot\frac{87}{87 + f_y} = 0.029$$

$$A_{smax} := \rho_b\cdot b\cdot d_s$$

E45-5.2.4 General Load - Rating Equation (for flexure)

$$RF = \frac{C - A_1 \cdot M_D}{A_2 \cdot M_L \cdot (1 + I)}$$ **MBE [6B.4.1]**

where:

$C := \phi \cdot M_n$

$\phi := 0.9$ **Std [8.16.1.2.2]**

A_1 = 1.3 for Dead Loads

A_2 = Live Load factor: 2.17 for Inventory, 1.3 for Operating

M_D = Unfactored Dead Load moments

M_L = Unfactored Live Load moments

I = Live Load Impact Factor (maximum 30%)

E45-5.2.5 Design Load (HS20) Rating

Equivalent Strip Width (E) and Distribution Factor (DF):

Use the multi-lane wheel distribution width for (HS20) live load.

The distribution factor, DF, is computed for a slab width equal to one foot.

$$DF = \frac{1}{E}$$ (where E is in feet)

Spans 1 & 3:

$$DF_{13} := \frac{12}{E_{m13}} = 0.159$$ wheels / ft-slab

Span 2:

$$DF_2 := \frac{12}{E_{m2}} = 0.143$$ wheels / ft-slab

Live Load Impact Factor (I)

$$I := \frac{50}{L + 125}$$ (maximum 0.3) **Std [3.8.2.1]**

Spans 1 & 3:

$$I_{13} := \min\left(0.3, \frac{50}{L_1 + 125}\right)$$ $\boxed{I_{13} = 0.3}$

Span 2:

$$I_2 := \min\left(0.3, \frac{50}{L_2 + 125}\right) \qquad \boxed{I_2 = 0.284}$$

Live Loads (LL)

The live loads shall be determined from live load analysis software using the higher of the HS2(Truck or Lane loads.

Rating for Flexure

$$RF = \frac{\phi \cdot M_n - 1.3 \cdot M_D}{A_2 \cdot M_L \cdot (1 + I)}$$

The Design Load Rating was checked at 0.1 pts. along the structure and at the slab/haunch intercepts. The governing limit state and location for the HS20 load is positive moment is in span 1 at the 0.4 pt.

Span 1 (0.4 pt.)

Flexural capacity:

$$A_{st_0.4L} = 1.71 \quad \frac{in^2}{ft}$$

$$d_s := 17.0 - cover_{bot} - \frac{1.128}{2} \qquad \boxed{d_s = 14.94} \quad in$$

$$a := \frac{A_{st_0.4L} \cdot f_y}{0.85 \cdot f'_c \cdot b} \qquad \boxed{a = 2.51} \quad in$$

$$A_{smax} := \rho_b \cdot b \cdot d_s = 5.109 \qquad A_{smax} > A_{st_0.4L} \quad OK$$

$$M_n := A_{st_0.4L} \cdot f_y \cdot \left(d_s - \frac{a}{2}\right) \qquad \boxed{M_n = 1403.4} \quad kip\text{-}in$$

$$\boxed{M_n = 117.0} \quad kip\text{-}ft$$

The dead load consists of the slab self-weight and parapet weight divided evenly along the slab width:

$M_D := 18.1 \quad kip - ft$ (from Chapter 18 Example, Table E18.4)

The positive live load moment shall be the largest caused by the following (from live load analysis software):

Design Lane:	17.48 kip-ft
Design Truck:	24.01 kip-ft

Therefore:

$M_L := 24.01 \quad kip - ft$

Inventory:

$$RF_i := \frac{\phi \cdot M_n - 1.3 \cdot M_D}{2.17 \cdot M_L \cdot (1 + I_{13})} = 1.21$$

Inventory Rating = HS21

Operating:

$$RF_o := \frac{\phi \cdot M_n - 1.3 \cdot M_D}{1.3 \cdot M_L \cdot (1 + I_{13})} = 2.01$$

Operating Rating = HS36

Rating for Shear:

Shear rating for concrete slab bridges may be ignored. Bending moment is assumed to control per **Std [3.24.4]**.

The Rating Factors, RF, for Inventory and Operating Rating are shown on the plans and also on the load rating summary sheet.

E45-5.2.6 Permit Vehicle Load Ratings

For any bridge design (new or rehabilitation) or bridge re-rate, the Wisconsin Standard Permit Vehicle (Wis-SPV) shall be analyzed per **[45.12]**.

The bridge shall be analyzed for this vehicle considering both single-lane and multi-lane distribution, and full dynamic load allowance is utilized. Future wearing surface will not be considered.

For a newly designed bridge, an additional check is required. The designer shall ensure that the results of a single-lane analysis utilizing the future searing surface are greater than 190 kips MVW.

E45-5.2.6.1 Wis-SPV Permit Rating with Multi Lane Distribution

The Maximum Permit Vehicle Load was checked at 0.1 pts. along the structure and at the slab/haunch intercepts. The governing location is the C/L of the Pier.

The distribution width and impact factors are the same as calculated for the HS20 load.

At C/L of Pier

Flexural capacity:

$A_{st_pier} = 1.88 \quad \frac{in^2}{ft}$

$d_{s_pier} := 28.0 - cover_{top} - \frac{8}{16}$ $\quad \boxed{d_{s_pier} = 25}$ in

$a_pier := \frac{A_{st_pier} \cdot f_y}{0.85 \cdot f'_c \cdot b}$ $\quad \boxed{a_pier = 2.76}$ in

$A_{smax_pier} := \rho_b \cdot b \cdot d_{s_pier} = 8.552$ in^2 $\quad A_{smax} > A_{st_pier}$ OK

$M_{n_pier} := A_{st_pier} \cdot f_y \cdot \left(d_{s_pier} - \frac{a_pier}{2}\right)$ $\quad \boxed{M_{n_pier} = 2664.1}$ kip-in

$\boxed{M_{n_pier} = 222}$ kip-ft

The dead load consists of the slab self-weight and parapet weight divided evenly along the slab width:

$M_{D_pier} := 59.2$ kip-ft (from Chapter 18 Example, Table E18.4)

From live load analysis software, the live load moment at the C/L of Pier due to the Wisconsin Standard Permit Vehicle (Wis-SPV) having a gross vehicle load of 190 kips and utilizing the maximum multi-lane distribution (at Spans 1 and 3) is:

$M_{LSPVm_pier} := 66.06$ kip-ft

Annual Permit:

$$RF_{mpermit} := \frac{\phi \cdot M_{n_pier} - 1.3 M_{D_pier}}{1.3 \cdot M_{LSPVm_pier} \cdot (1 + I_{13})} = 1.10$$

The maximum Wisconsin Standard Permit Vehicle (Wis_SPV) load is:

$RF_{mpermit} \cdot (190) = 209$ kips

E45-5.2.6.2 Wis-SPV Permit Rating with Single Lane Distribution w/o FWS

The live load moment at the C/L of Pier due to the Wis-SPV with single-lane loading may be determined by scaling the live load moment from multi-lane loading:

$$M_{LSPVs_pier} := M_{LSPVm_pier} \cdot \frac{E_{m13}}{E_{s13}} = 34.57 \quad \text{kip-ft}$$

Single-Trip Permit w/o FWS:

$$RF_{spermit} := \frac{\phi \cdot M_{n_pier} - 1.3 M_{D_pier}}{1.3 \cdot M_{LSPVs_pier} \cdot (1 + I_{13})} = 2.10$$

The Wisconsin Standard Permit Vehicle (Wis-SPV) load that can be carried by the bridge is:

$$RF_{spermit} \cdot (190) = 399 \quad \text{kips}$$

The Single-Lane MVW for the Wis-SPV is shown on the plans, up to a maximum of 250 kips. This same procedure used for the (Wis-SPV) can also be used when evaluating the bridge for an actual "Single-Trip Permit" vehicle.

E45-5.2.6.3 Wis-SPV Permit Rating with Single Lane Distribution w/ FWS

From Chapter 18 Example, Table E18.4, the applied moment at the pier from the future wearing surface is:

$$M_{DW_pier} := 4.9 \quad \text{kip-ft}$$

Single-Trip Permit w/ FWS:

$$RF_{spermit_fws} := \frac{\phi \cdot M_{n_pier} - 1.3 \cdot (M_{D_pier} + M_{DW_pier})}{1.3 \cdot M_{LSPVs_pier} \cdot (1 + I_{13})} = 1.99$$

The Wisconsin Standard Permit Vehicle (Wis-SPV) load that can be carried by the bridge is:

$$RF_{spermit_fws} \cdot (190) = 379 \quad \text{kips} \qquad > 190k \qquad \text{OK}$$

E45-5.3 Summary of Rating

Slab - Interior Strip					
Limit State	Design Load Rating		Permit Load Rating (kips)		
	Inventory	Operating	Multi DF w/o FWS	Single DF w/o FWS	Single DF w/ FWS
Flexure	HS21	HS36	209	399	379

This page intentionally left blank.

Table of Contents

E45-6 Single Span PSG Bridge Rating Example LFR 2
E45-6.1 Preliminary Data 2
E45-6.2 Girder Section Properties 3
E45-6.3 Composite Girder Section Properties 5
E45-6.4 Dead Load Analysis Interior Girder 6
E45-6.5 Live Load Analysis Interior Factors for Interior Beams: 8
E45-6.5.1 Moment and Shear Distribution Factors for Interior Beams: 8
E45-6.5.2 Live Load Moments 8
E45-6.6 Determination of Pretress Losses 9
E45-6.7 Compute Nominal Flexural Resistance at Midspan 11
E45-6.8 Compute Nominal Shear Resistance at First Critical Section 13
E45-6.9 Design Load Rating 16
E45-6.10 Permit Load Rating 19
E45-6.11 Summary of Rating Factors 21

E45-6 Single Span PSG Bridge Rating Example - LFR

Reference E45-2 for bridge data. For LFR, the Bureau of Structures rates structures for the Design Load (HS20) and for Permit Vehicle loads. The rating below analyzes an interior girder only, which typically governs.

E45-6.1 Preliminary Data

$L := 146$	center to center of bearing, ft
$f'_c := 8$	girder concrete strength, ksi
$f'_{ci} := 6.8$	girder initial concrete strength, ksi
$f'_{cd} := 4$	deck concrete strength, ksi
$f'_s := 270$	strength of low relaxation strand, ksi
$d_b := 0.6$	strand diameter, inches
$A_s := 0.217$	area of strand, in2
$t_s := 8$	slab thickness, in
$t_{se} := 7.5$	effective slab thickness (slab thickness - 1/2 in wearing surface), in
$w := 40$	clear width of deck, 2 lane road, 3 design lanes, ft
$w_p := 0.387$	weight of Wisconsin Type LF parapet, klf
$w_c := 0.150$	weight of concrete, kcf
$H_{avg} := 2$	average thickness of haunch, in
$S := 7.5$	spacing of the girders, ft
$ng := 6$	number of girders

E45-6.2 Girder Section Properties

72W Girder Properties (46 strands, 8 draped):

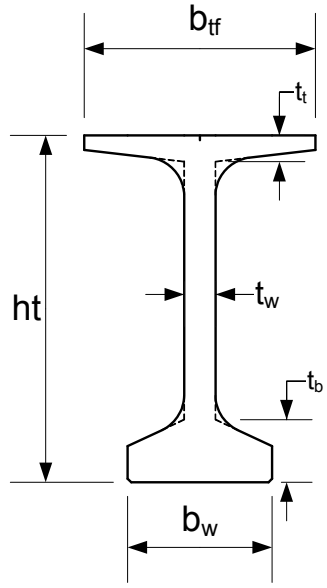

$b_{tf} := 48$ width of top flange, in

$t_t := 5.5$ avg. thickness of top flange, in

$t_w := 6.5$ thickness of web, in

$t_b := 13$ avg. thickness of bottom flange, in

$ht := 72$ height of girder, in

$b_w := 30$ width of bottom flange, in

$A_g := 915$ area of girder, in^2

$I_g := 656426$ moment of inertia of girder, in^4

$y_t := 37.13$ centroid to top fiber, in

$y_b := 34.87$ centroid to bottom fiber, in

$S_t := 17680$ section modulus for top, in^3

$S_b := 18825$ section modulus for bottom, in^3

$w_g := 0.953$ weight of girder, klf

$ns := 46$ number of strands

$e_s := 30.52$ centroid to cg strand pattern

$e_g := y_t + 2 + \frac{t_{se}}{2}$ $\boxed{e_g = 42.88}$ in

Web Depth: $d_w := ht - t_t - t_b$ $\boxed{d_w = 53.50}$ in

$E_s := 28500$ Modulus of Elasticity of the Prestressing Strands, ksi

Concrete modulus of elasticity per WisDOT policy in **[19.3.3.8]**:

$E_{deck4} := 4125$ $E_D := E_{deck4}$

$E_{beam8} := 5500 \cdot \frac{\sqrt{f'_c \cdot 1000}}{\sqrt{6000}}$ $\boxed{E_{beam8} = 6351}$ $E_B := E_{beam8}$

$E_{beam6.8} := 33000\,(.150)^{1.5} \cdot \sqrt{f'_{ci}}$ $\boxed{E_{beam6.8} = 4999}$ $E_{ct} := E_{beam6.8}$

$n := \frac{E_B}{E_D}$ $\boxed{n = 1.540}$

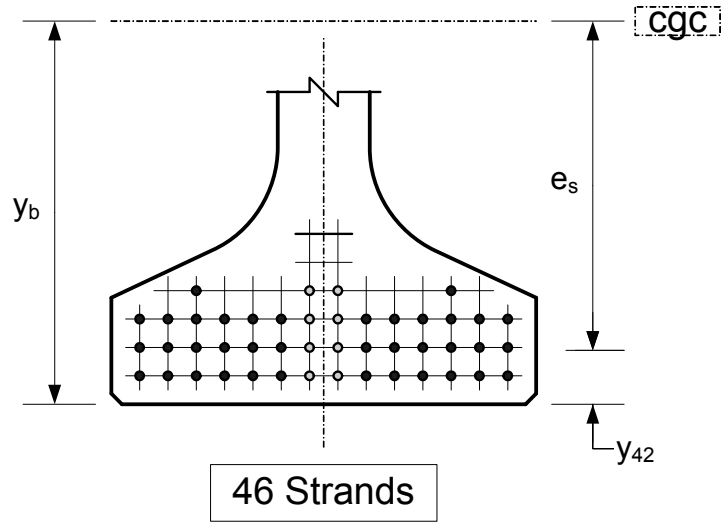

Figure E45-6.1

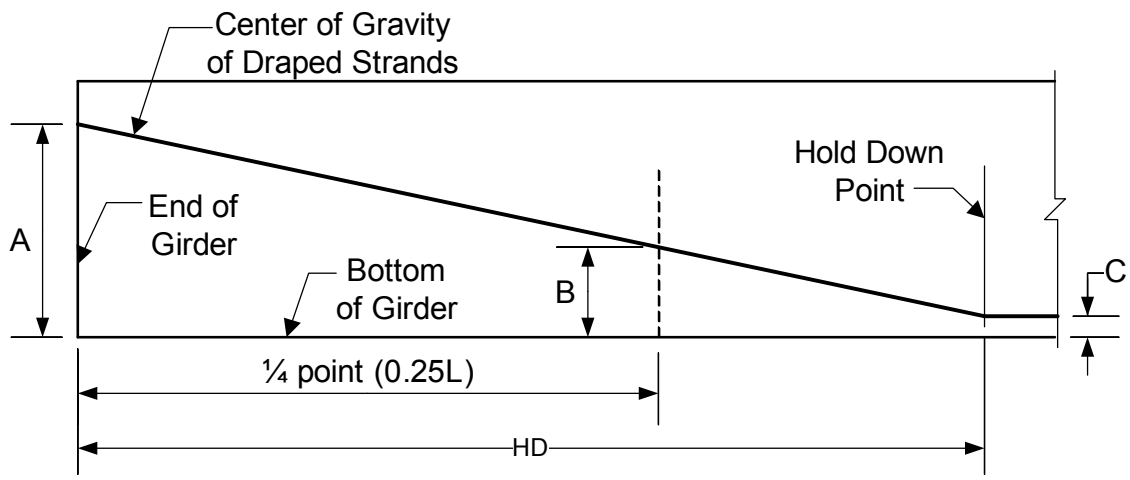

Figure E45-6.2

$A := 67$ in $\quad C := 5$ in $\quad B_{min} := 20.5$ in $\quad B_{max} := 23.5$ in

$$B_{avg} := \frac{B_{min} + B_{max}}{2} \qquad \boxed{B_{avg} = 22.0} \text{ in}$$

$$slope := \left[\frac{A - B_{avg}}{(0.25)\cdot L\cdot 12}\right]\cdot 100 \qquad \boxed{slope = 10.274} \ \%$$

$$HD := \frac{A - C}{\left(\frac{slope}{100}\right)\cdot 12} \qquad \boxed{HD = 50.29} \text{ ft}$$

E45-6.3 Composite Girder Section Properties

Calculate the effective flange width in accordance with **Std [9.8.3.1]**:

$$b_{eff} := \min\left[S \cdot 12, 12 \cdot t_{se} + t_w, \frac{(L \cdot 12)}{4}\right] \qquad \boxed{b_{eff} = 90} \quad \text{in}$$

The effective width, b_{eff}, must be adjusted by the modular ratio, n, to convert to the same concrete material (modulus) as the girder.

$$b_{eadj} := \frac{b_{eff}}{n} \qquad \boxed{b_{eadj} = 58.46} \quad \text{in}$$

Calculate the composite girder section properties:

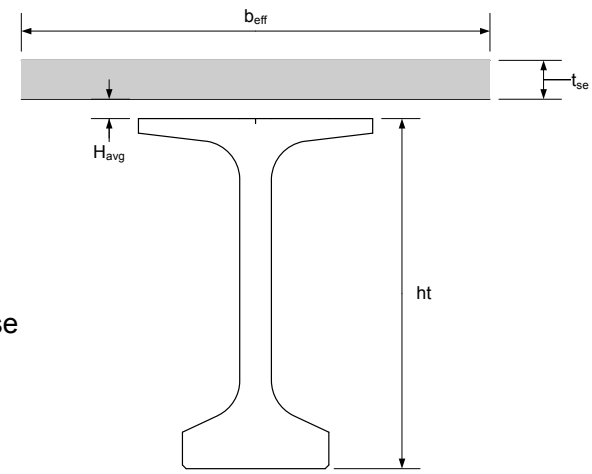

effective slab thickness; $\boxed{t_{se} = 7.50}$ in

effective slab width; $\boxed{b_{eadj} = 58.46}$ in

haunch thickness; $\boxed{H_{avg} = 2.00}$ in

total height; $h_c := ht + H_{avg} + t_{se}$

$\boxed{h_c = 81.50}$ in

$\boxed{n = 1.540}$

Note: The area of the concrete haunch is not included in the calculation of the composite section properties.

Component	Ycg	A	AY	AY^2	I	$I+AY^2$
Deck	77.75	438	34089	2650458	2055	2652513
Girder	34.87	915	31906	1112564	656426	1768990
Haunch	73	0	0	0	0	0
Summation		1353	65996			4421503

$\Sigma A := 1353$ in^2

$\Sigma AY := 65996$ in^3

$\Sigma IplusAYsq := 4421503$ in^4

$y_{cgb} := \frac{\Sigma AY}{\Sigma A}$ $\boxed{y_{cgb} = 48.8}$ in

$y_{cgt} := ht - y_{cgb}$ $\boxed{y_{cgt} = 23.2}$ in

$A_{cg} := \Sigma A$ $\boxed{A_{cg} = 1353}$ in^2

$I_{cg} := \Sigma IplusAYsq - A_{cg} \cdot y_{cgb}^2$ $\boxed{I_{cg} = 1202381}$ in^4

$S_{cgt} := \frac{I_{cg}}{y_{cgt}}$ $\boxed{S_{cgt} = 51777}$ in^3

$S_{cgb} := \frac{I_{cg}}{y_{cgb}}$ $\boxed{S_{cgb} = 24650}$ in^3

E45-6.4 Dead Load Analysis - Interior Girder

Dead load on non-composite (D_1):

weight of 72W girders $\boxed{w_g = 0.953}$ klf

weight of 2-in haunch

$w_h := \left(\frac{H_{avg}}{12}\right) \cdot \left(\frac{b_{tf}}{12}\right) \cdot (w_c)$ $\boxed{w_h = 0.100}$ klf

weight of diaphragms $\boxed{w_D := 0.006}$ klf

weight of slab

$w_d := \left(\frac{t_s}{12}\right) \cdot (S) \cdot (w_c)$ $\boxed{w_d = 0.750}$ klf

$D_1 := w_g + w_h + w_D + w_d$ $\boxed{D_1 = 1.809}$ klf

$V_{D1} := \frac{D_1 \cdot L}{2}$ $\boxed{V_{D1} = 132.1}$ kips

$M_{D1} := \frac{D_1 \cdot L^2}{8}$ $\boxed{M_{D1} = 4820}$ kip-ft

* Dead load on composite (D_2):

weight of single parapet, klf $w_p = 0.387$ klf

weight of 2 parapets, divided equally to all girders, klf

$$D_2 := \frac{w_p \cdot 2}{ng}$$ $D_2 = 0.129$ klf

$$V_{D2} := \frac{D_2 \cdot L}{2}$$ $V_{D2} = 9.4$ kips

$$M_{D2} := \frac{D_2 \cdot L^2}{8}$$ $M_{D2} = 344$ kip-ft

* Wearing Surface (DW): There is no current wearing surface on this bridge. However, it is designed for a 20 psf future wearing surface. Thus, it will be used in the calculations for the Wisconsin Standard Permit Vehicle Design Check, Section 45.12.

$$DW := \frac{w \cdot 0.020}{ng}$$ $DW = 0.133$ klf

$$V_{DW} := \frac{DW \cdot L}{2}$$ $V_{DW} = 9.7$ kips

$$M_{DW} := \frac{DW \cdot L^2}{8}$$ $M_{DW} = 355$ kip-ft

* **Std [3.23.2.3.1.1]** states that permanent loads on the deck may be distributed uniformly among the beams. This method is used for the parapet and future wearing surface loads.

Total Unfactored Dead Load

$$V_D := V_{D1} + V_{D2}$$ $V_D = 141.5$ kips

$$M_D := M_{D1} + M_{D2}$$ $M_D = 5164$ kip-ft

E45-6.5 Live Load Analysis - Interior Girder

E45-6.5.1 Moment and Shear Distribution Factors for Interior Beams:

Moment and Shear Distribution Factors for interior girders are in accordance with **Std [3.23.1.2, 3.23.2.2]**:

For one Design Lane Loaded:

$$DF_s := \frac{S}{7} \qquad \boxed{DF_s = 1.071}$$

For Two or More Design Lanes Loaded:

$$DF_m := \frac{S}{5.5} \qquad \boxed{DF_m = 1.364}$$

E45-6.5.2 Live Load Moments

The live load load moments from analysis software (per wheel including impact with multi-lane distribution factor applied) are listed below:

Unfactored Live Load + Impact Moments per Wheel (kip-ft)		
Tenth Point	Truck	Lane
0	0	0
0.1	710	687
0.2	1250	1221
0.3	1620	1603
0.4	1839	1832
0.5	1896	1908

The HS20 lane load controls at midspan.

$M_{LLIM} := 1908$ kip-ft

E45-6.6 Determination of Pretress Losses

Calculate the components of the prestress losses; shrinkage, elastic shortening, creep and relaxation, using the approximate method in accordance with **Std [9.16.2]**.

Shrinkage

Relative Humidity $RH := 72$

$$SH := \frac{(17000 - 150 \cdot RH)}{1000}$$ $\boxed{SH = 6.200}$ ksi

Elastic Shortening

$E_{ci} := E_{beam6.8} = 4999$ $\boxed{E_{ci} = 4999}$ ksi

$A_{ps} := ns \cdot A_s = 9.982$ $\boxed{A_{ps} = 9.982}$ in^2

Estimated initial tendon stress:

$P_{si} := 0.69 \cdot A_{ps} \cdot f'_s = 1860$ $\boxed{P_{si} = 1860}$ kips

Dead load moment of girder:

$$M_g := 12 \cdot w_g \cdot \frac{L^2}{8} = 30471$$ $\boxed{M_g = 30471}$ k-in

According to **PCI Bridge Design Manual [18.5.4.3]**:

$$f_{cir} := \frac{P_{si}}{A_g} + \frac{\left(P_{si} \cdot e_s^2\right)}{I_g} - \frac{M_g \cdot e_s}{I_g}$$ $\boxed{f_{cir} = 3.255}$ ksi

$$ES := \frac{E_s}{E_{ci}} \cdot f_{cir}$$ $\boxed{ES = 18.553}$ ksi

Creep of Concrete

Moment due to concrete deck weight:

$$M_{slab} := 12 \cdot \frac{\left(w_d \cdot L^2\right)}{8}$$ $M_{slab} = 23981$ k-in

Moment due to haunch weight:

$$M_{haunch} := 12 \cdot \frac{\left(w_h \cdot L^2\right)}{8}$$ $M_{haunch} = 3197$ k-in

Moment due to diaphragms:

$$M_{nc} := 12 \cdot \frac{\left(w_D \cdot L^2\right)}{8}$$ $M_{nc} = 191.8$ k-in

Moment due to composite DL:

$$M_c := M_{D2} \cdot 12$$ $M_c = 4125$ k-in

Centroid of composite section to C.G. of strand pattern:

$$e_c := e_s + \left(y_{cgb} - y_b\right)$$ $e_c = 44.428$ in

Concrete stress at C.G. of strands due to all DL except girder:

$$f_{cds} := \left(M_{slab} + M_{haunch} + M_{nc}\right) \cdot \frac{e_s}{I_g} + M_c \cdot \frac{e_c}{I_{cg}}$$ $f_{cds} = 1.425$ ksi

$$CR_c := 12 \cdot f_{cir} - 7 \cdot f_{cds}$$ $CR_c = 29.080$ ksi

Relaxation of Prestressing Steel

$$CR_s := 5 - 0.10 \cdot ES - 0.05 \cdot \left(SH + CR_c\right)$$ $CR_s = 1.381$ ksi

Total Prestress Losses

$$f_s := SH + ES + CR_c + CR_s$$ $f_s = 55.214$ ksi

E45-6.7 Compute Nominal Flexural Resistance at Midspan

At failure, we can assume that the tendon stress is:

$$f_{su} := f'_s \cdot \left[1 - \left(\frac{\gamma}{\beta_1}\right) \cdot \left(\rho \cdot \frac{f'_s}{f'_{cd}}\right)\right]$$ **Std [9.17.4.1]**

where:

$\gamma := 0.28$ for low relaxation strands **Std [9.1.2]**

$\beta_1 := 0.85$ for concrete deck in compression block, up to 4,000 psi **Std [8.16.2.7]**

Calculation of ρ:

$A_{ps} = 9.982$ in^2

$b := b_{eff} = 90.000$ in

$d := y_t + H_{avg} + t_{se} + e_s$ $\boxed{d = 77.150}$ in

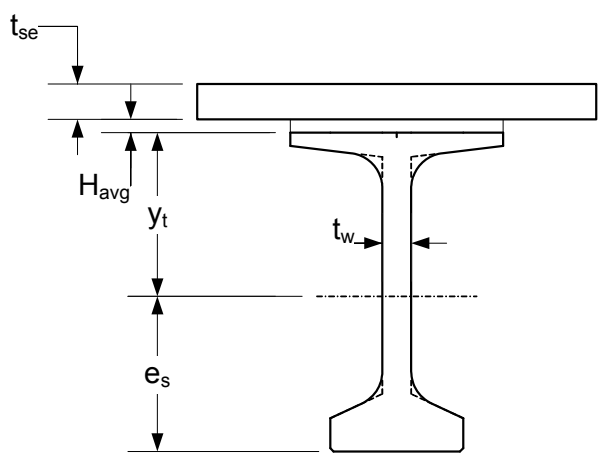

Figure E45-6.3

$$\rho := \frac{A_{ps}}{b \cdot d} = 0.00144$$

$\boxed{f_{su} = 261.4}$ ksi

Check the depth of the equivalent rectangular stress block, c, per **Std [9.17.2]**:

$$c := \frac{A_{ps} \cdot f_{su}}{0.85 f'_{cd} \cdot b}$$ $\boxed{c = 8.526}$ in

The calculated value of "c" is greater than the deck thickness, 7.5 in. Therefore, the rectangular assumption is incorrect and the compression block extends into the haunch. Calculate the capacity based upon a flanged section per **Std [9.17.3]**:

$$A_{sf} := 0.85 \cdot f'_{cd} \cdot \frac{(b - b_{tf}) \cdot t_{se}}{f_{su}}$$ $\boxed{A_{sf} = 4.098}$ in^2

$$A_{sr} := A_{ps} - A_{sf}$$ $\boxed{A_{sr} = 5.884}$ in^2

$$M_n := A_{sr} \cdot f_{su} \cdot d \cdot \left[1 - 0.6 \cdot \left(\frac{A_{sr} \cdot f_{su}}{b_{tf} \cdot d \cdot f'_{cd}}\right)\right] + 0.85 \cdot f'_{cd} \cdot (b - b_{tf}) \cdot t_{se} \cdot (d - 0.5 \cdot t_{se})$$

$M_n = 189875$ k-in

$\boxed{M_n = 15823}$ k-ft

For prestressed concrete members, $\phi := 1.0$

$\boxed{\phi \cdot M_n = 15823}$ k-ft

Check Minimum Reinforcement

The amount of reinforcement must be sufficient to develop ϕM_n equal to 1.2 times the cracking moment M_{cr} per **Std [9.18.2.1]**. If $\phi M_n < 1.2 M_{cr}$, the nominal moment capacity shall be reduced according to **MBE [6B.5.3.3]**:

M_{cr} is calculated as follows:

$$M_{cr} := S_c \cdot (f_r + f_{pe}) - M_{dnc} \cdot \left[\left(\frac{S_c}{S_b}\right) - 1\right]$$

$$f_r := 7.5 \cdot \frac{\sqrt{f'_c \cdot 1000}}{1000}$$ **Std [9.15.2.3]** $\boxed{f_r = 0.671}$ ksi

$$M_{dnc} := 12 \cdot M_{D1}$$ $\boxed{M_{dnc} = 57841}$ kip-in

Effective prestress force after losses

$$P_{se} := A_{ps} \cdot (0.75 f'_s - f_s)$$ $\boxed{P_{se} = 1470}$ kips

$S_{nc} := S_b$ $\boxed{S_{nc} = 18825}$ in^3

$r := \sqrt{\frac{I_g}{A_g}}$ $\boxed{r = 26.784}$ in

$f_{pe} := \frac{P_{se}}{A_g} \cdot \left(1 + \frac{e_s \cdot y_b}{r^2}\right)$ $\boxed{f_{pe} = 3.990}$ ksi

$S_c := S_{cgb}$ $\boxed{S_c = 24650}$ in^3

$\boxed{1.2 \cdot M_{cr} = 9700}$ kip-ft $< \phi \cdot M_n = 15823$ kip-ft

Therefore the requirement is satisfed.

E45-6.8 Compute Nominal Shear Resistance at First Critical Section

The following will illustrate the shear resistance calculation at the first critical section only. Due to the variation of resistances for shear along the length of the prestressed concrete I-beam, it is not certain what location will govern. Therefore, a systematic evaluation of the shear should be performed along the length of the beam.

The shear strength is the sum of contributions from nominal shear strength provided by concrete, V_c, and nominal shear strength provided by web reinforcement, V_s.

The critical section for shear is taken at a distance of H/2 from the face of the support per **Std [9.20.1.4]**.

$H := \frac{ht}{12} = 6.00$ ft $\boxed{\frac{H}{2} = 3.00}$ ft

The shear strength provided by concrete, V_c, is taken as the lesser of V_{ci} and V_{cw}:

$V_{ci} := 0.6 \cdot \sqrt{f'_c} \cdot b' \cdot d + V_d + \frac{V_i \cdot M_{cre}}{M_{max}} \geq 1.7\sqrt{f'_c} \cdot b' \cdot d$ **Std [9.20.2.2]**

$f'_c = 8.000$ ksi

$b' := t_w = 6.500$ in

$V_d := (D_1 + D_2) \cdot \left(\frac{L}{2} - \frac{H}{2}\right) = 135.7$ k Shear due to unfactored dead load

$$M_{cre} := \frac{I_{cg}}{Y_t} \cdot \left(6 \cdot \sqrt{f'_c} + f_{pe} - f_d\right)$$

Moment causing flexural cracking at section due to externally applied loads

$$M_{dnc} := \frac{\left(w_d + w_h + w_D + w_g\right) \cdot \left(\frac{H}{2}\right)}{2} \cdot \left(L - \frac{H}{2}\right) = 388.0 \quad \text{k-ft}$$

Moment due to noncomposite dead load

$$M_d := \frac{\left(D_1 + D_2\right) \cdot \left(\frac{H}{2}\right)}{2} \cdot \left(L - \frac{H}{2}\right) = 415.7 \quad \text{k-ft}$$

Moment due to total unfactored dead load

$$M_{dc} := \frac{\left(D_2\right) \cdot \left(\frac{H}{2}\right)}{2} \cdot \left(L - \frac{H}{2}\right) = 27.7 \quad \text{k-ft}$$

Moment due to composite dead load

$$f_d := \frac{M_{dnc} \cdot 12}{S_b} + \frac{M_{dc} \cdot 12}{S_{cgb}} = 0.261 \quad \text{ksi}$$

Stress at extreme tension fiber due to unfactored dead load

Since there are draped strands for a distance of $HD = 50.289$ ft from the end of the girder, a revised value of e_s should be calculated based on the estimated location of the critical section.

$ns_{sb} := 38$ number of undraped strands

$ns_d := 8$ number of draped strands

Find the center of gravity for the 38 straight strands from the bottom of the girder:

$$Y_{38S} := \frac{12 \cdot 2 + 12 \cdot 4 + 12 \cdot 6 + 2 \cdot 8}{ns_{sb}}$$

$\boxed{Y_{38S} = 4.211}$ in

Find the center of gravity for the 8 draped strands from the bottom of the girder:

$slope = 10.274$ %

$$Y_{8D} := A - \frac{H}{2} \cdot 12 \cdot \left(\frac{slope}{100}\right)$$

$\boxed{Y_{8D} = 63.301}$ in

Find the combined center of gravity for all strands from the bottom of the girder:

$$Y_{COMB} := \frac{ns_{sb} \cdot Y_{38S} + ns_d \cdot Y_{8D}}{ns_{sb} + ns_d}$$

$\boxed{Y_{COMB} = 14.487}$ in

Find the distance from the girder's centroid to the center of gravity of strands:

$$e_{s_crit} := y_b - Y_{COMB}$$

$\boxed{e_{s_crit} = 20.38}$ in

The shear depth from top of composite section to center of gravity of strands:

$d_v := \max(0.8 \cdot H, y_t + H_{avg} + t_{se} + e_{s_crit})$ $\boxed{d_v = 67.0}$ in

Find the revised value of fpe at the critical shear location:

$f_{pe} := \frac{P_{se}}{A_g} \cdot \left(1 + \frac{e_{s_crit} \cdot y_b}{r^2}\right)$ $\boxed{f_{pe} = 3.199}$ ksi

Therefore:

$Y_t := y_{cgb} = 48.778$ in

$M_{cre} := \frac{I_{cg}}{Y_t} \cdot \left(6 \cdot \frac{\sqrt{f'_c \cdot 1000}}{1000} + f_{pe} - f_d\right) \cdot \left(\frac{1}{12}\right)$ $\boxed{M_{cre} = 7137}$ k-ft

From live load analysis software:

$M_l := 159.71$ k-ft — from HS20 lane load at crit. section

$M_u := 1.3M_d + 2.17 \cdot M_l = 887.0$ k-ft — Maximum factored moment at section

$M_{max} := M_u - M_d = 471.3$ k-ft — Maximum factored moment due to externally applied loads

$V_{u_sim} := 291.6$ k — Maximum factored shear occurring simultaneously with M_{max}

$V_i := V_{u_sim} - V_d$ $\boxed{V_i = 155.9}$ kips

Therefore:

$V_{ci} := \max\left(0.6 \cdot \frac{\sqrt{f'_c \cdot 1000}}{1000} \cdot b' \cdot d_v + V_d + \frac{V_i \cdot M_{cre}}{M_{max}}, 1.7\sqrt{f'_c} \cdot b' \cdot d_v\right)$

$\boxed{V_{ci} = 2520.7}$ kips

$V_{cw} := \left(3.5\sqrt{f'_c} + 0.3 \cdot f_{pc}\right) \cdot b' \cdot d_v + V_p$

$f_{pc} := \frac{P_{se}}{A_g} - \frac{P_{se} \cdot e_{s_crit} \cdot (y_{cgb} - y_b)}{I_g} + \frac{12M_{dnc} \cdot (y_{cgb} - y_b)}{I_g}$

$\boxed{f_{pc} = 1.071}$ ksi

$V_p := \frac{ns_d}{ns} \cdot P_{se} \cdot \frac{slope}{100} = 26.269$ $\boxed{V_p = 26.3}$ kips

$\boxed{V_{cw} = 302.5}$ kips

$V_c := \min(V_{ci}, V_{cw})$ $\boxed{V_c = 302.5}$ kips

Shear strength provided by web reinforcement:

Calculate the shear resistance at H/2:

$s := 18$ in

$A_v := 0.40$ in^2 for #4 rebar stirrups

A more refined analysis using average spacing across multiple stirrup zones may be used (refer to **MBE [6A.5.8, 2015 Interim Revisions]**, however this example conservatively considers the maximum spacing between the current and adjacent analysis points.

$f_y := 60$ ksi

$d_v = 67.01$ in

$$V_s := \min\left(A_v \cdot f_y \cdot \frac{d_v}{s}, 8 \cdot \frac{\sqrt{f'_c \cdot 1000}}{1000} \cdot b' \cdot d_v\right) \qquad \boxed{V_s = 89.4} \text{ kips}$$

The nominal shear capacity is:

$\phi_v := 0.9$

$V_n := V_c + V_s = 391.9$ kips

$\boxed{\phi_v \cdot V_n = 352.7}$ kips

E45-6.9 Design Load Rating

The inventory rating checks include Concrete Tension, Concrete Compression, Prestressing Steel Tension, and Flexural and Shear Strength. The operating rating checks include Prestressing Steel Tension and Flexural and Shear Strength. Refer to per **MBE [6B.5.3.3].**

Unfactored stress due to prestress force after losses:

$$F_{p_bot} := \frac{-P_{se}}{A_g} \cdot \left(1 + \frac{e_s \cdot y_b}{r^2}\right) \qquad \boxed{F_{p_bot} = -3.990} \text{ ksi}$$

$$F_{p_top} := \frac{-P_{se}}{A_g} \cdot \left(1 - \frac{e_s \cdot y_t}{r^2}\right) \qquad \boxed{F_{p_top} = 0.931} \text{ ksi}$$

Unfactored dead load stress:

$$F_{d_bot} := \frac{12 \cdot M_{D1}}{S_b} + \frac{12 \cdot M_{D2}}{S_{cgb}}$$ $F_{d_bot} = 3.240$ ksi

$$F_{d_top} := \frac{-12 \cdot M_{D1}}{S_t} - \frac{12 M_{D2}}{S_{cgt}}$$ $F_{d_top} = -3.351$ ksi

Secondary prestress forces (assumed):

$F_s := 0$

Unfactored live load stress including impact:

$$F_{L_bot} := \frac{12 M_{LLIM}}{S_{cgb}}$$ $F_{L_bot} = 0.929$ ksi

$$F_{L_top} := \frac{-12 M_{LLIM}}{S_{cgt}}$$ $F_{L_top} = -0.442$ ksi

Concrete Tension Rating:

$$RF_{inv_t} := \frac{6 \frac{\sqrt{f'_c \cdot 1000}}{1000} - \left(F_{d_bot} + F_{p_bot} + F_s\right)}{F_{L_bot}}$$ $RF_{inv_t} = 1.386$

Concrete Compression Rating:

$$RF_{inv_c1} := \frac{-0.6 \cdot f'_c - \left(F_{d_top} + F_{p_top} + F_s\right)}{F_{L_top}}$$ $RF_{inv_c1} = 5.382$

$$RF_{inv_c2} := \frac{-0.4 \cdot f'_c - 0.5 \cdot \left(F_{d_top} + F_{p_top} + F_s\right)}{F_{L_top}}$$ $RF_{inv_c2} = 4.500$

Prestressing Steel Tension Rating:

$f'_y := 0.9 \cdot f'_s$ $f'_y = 243.0$ ksi

$$N := \text{round}\left(\frac{E_s}{E_{beam8}}\right)$$ $N = 4$

$$F_{d_ps} := N\cdot\left(M_g + M_{slab} + M_{haunch} + M_{nc}\right)\frac{e_s}{I_g} + N\cdot M_c\cdot\frac{e_c}{I_{cg}}$$

$F_{d_ps} = 11.367$ ksi

$$F_{p_ps} := \frac{P_{se}}{A_{ps}}$$

$F_{p_ps} = 147.286$ ksi

$$F_{L_ps} := N\cdot 12\cdot M_{LLIM}\cdot\frac{e_c}{I_{cg}}$$

$F_{L_ps} = 3.384$ ksi

$$RF_{inv_ps_tens} := \frac{0.8\cdot f'_y - \left(F_{d_ps} + F_{p_ps} + F_s\right)}{F_{L_ps}}$$

$RF_{inv_ps_tens} = 10.564$

$$RF_{op_ps_tens} := \frac{0.9\cdot f'_y - \left(F_{d_ps} + F_{p_ps} + F_s\right)}{F_{L_ps}}$$

$RF_{op_ps_tens} = 17.744$

Flexural Strength Rating:

$$RF_{inv_m} := \frac{\phi\cdot M_n - 1.3\cdot M_D}{2.17\cdot M_{LLIM}}$$

$RF_{inv_m} = 2.200$

$$RF_{op_m} := \frac{\phi\cdot M_n - 1.3\cdot M_D}{1.3\cdot M_{LLIM}}$$

$RF_{op_m} = 3.673$

Shear Strength Rating:

$V_L := 56.86$ kips from LL analysis software

$$RF_{inv_v} := \frac{\phi_v\cdot V_n - 1.3\cdot V_d}{2.17\cdot V_L}$$

$RF_{inv_v} = 1.429$

$$RF_{op_v} := \frac{\phi_v\cdot V_n - 1.3\cdot V_d}{1.3\cdot V_L}$$

$RF_{op_v} = 2.385$

E45-6.10 Permit Load Rating

For any bridge design (new or rehabilitation) or bridge re-rate, the Wisconsin Standard Permit Vehicle (Wis-SPV) shall be analyzed per 45.12.

The bridge shall be analyzed for this vehicle considering both single-lane and multi-lane distribution. Also, the vehicle will be analyzed assuming that full dynamic allowance is utilized. Future wearing surface shall be included.

Since this example is rating a newly designed bridge, an additional check is required. The designer shall ensure that the results of the single-lane analysis are greater than 190 kips MVW.

From live load analysis software, the force effects with distribution factor and impact included are:

$M190_{LLm} := 3985.01$ $M190_{LLs} := 3131.08$ kip-ft per girder at midspan

$V190_{LLm} := 120.55$ $V190_{LLs} := 94.72$ kips at $\frac{H}{2} = 3$ ft

$F_{L_ps_190m} := N \cdot 12 \cdot M190_{LLm} \cdot \frac{e_c}{I_{cg}}$ $\boxed{F_{L_ps_190m} = 7.068}$

$F_{L_ps_190s} := N \cdot 12 \cdot M190_{LLs} \cdot \frac{e_c}{I_{cg}}$ $\boxed{F_{L_ps_190s} = 5.553}$

Additional dead load from wearing surface at midspan:

$\boxed{M_{DW} = 355.3}$ kip-ft

Additional dead load from wearing surface at critical shear section:

$V_{DW} := DW \cdot \left(\frac{L}{2} - \frac{H}{2}\right)$ $\boxed{V_{DW} = 9.33}$ kips

$F_{dw_ps} := N \cdot (12 M_{DW}) \cdot \frac{e_c}{I_{cg}}$ $\boxed{F_{dw_ps} = 0.630}$ ksi

Multi-Lane w/o Future Wearing Surface:

$$RF_{190m_ps_t} := \frac{0.9 \cdot f'_y - \left(F_{d_ps} + F_{p_ps} + F_s\right)}{F_{L_ps_190m}}$$

$$\boxed{RF_{190m_ps_t} = 8.496}$$

$$RF_{op_190m_m} := \frac{\phi \cdot M_n - 1.3 \cdot M_D}{1.3 \cdot M190_{LLm}}$$

$$\boxed{RF_{op_190m_m} = 1.759}$$

$$RF_{op_190m_v} := \frac{\phi_v \cdot V_n - 1.3 \cdot V_d}{1.3 \cdot V190_{LLm}}$$

$$\boxed{RF_{op_190m_v} = 1.125}$$

Single-Lane w/o Future Wearing Surface:

$$RF_{190s_ps_t} := \frac{0.9 \cdot f'_y - \left(F_{d_ps} + F_{p_ps} + F_s\right)}{F_{L_ps_190s}}$$

$$\boxed{RF_{190s_ps_t} = 10.813}$$

$$RF_{op_190s_m} := \frac{\phi \cdot M_n - 1.3 \cdot M_D}{1.3 \cdot M190_{LLs}}$$

$$\boxed{RF_{op_190s_m} = 2.238}$$

$$RF_{op_190s_v} := \frac{\phi_v \cdot V_n - 1.3 \cdot V_d}{1.3 \cdot V190_{LLs}}$$

$$\boxed{RF_{op_190s_v} = 1.432}$$

Single-Lane w/ Future Wearing Surface:

$$RF_{190sws_ps_t} := \frac{0.9 \cdot f'_y - \left(F_{d_ps} + F_{dw_ps} + F_{p_ps} + F_s\right)}{F_{L_ps_190s}}$$

$$\boxed{RF_{190sws_ps_t} = 10.700}$$

$$RF_{op_190sws_m} := \frac{\phi \cdot M_n - 1.3 \cdot \left(M_D + M_{DW}\right)}{1.3 \cdot M190_{LLs}}$$

$$\boxed{RF_{op_190sws_m} = 2.125}$$

$$RF_{op_190sws_v} := \frac{\phi_v \cdot V_n - 1.3 \cdot \left(V_d + V_{DW}\right)}{1.3 \cdot V190_{LLs}}$$

$$\boxed{RF_{op_190sws_v} = 1.333}$$

E45-6.11 Summary of Rating Factors

Interior Girder						
Limit State		Design Load Rating		Permit Load Rating (kips)		
		Inventory	Operating	Single Lane w/ FWS	Single Lane w/o FWS	Multi Lane w/o FWS
Strength	Flexure	HS 44	HS 73	403	425	334
	Shear	HS 28	HS 47	253	272	213
Service	Concrete Tension	HS 27	N/A	N/A	N/A	N/A
	Concrete Compression 1	HS 107	N/A	N/A	N/A	N/A
	Concrete Compression 2	HS 90	N/A	N/A	N/A	N/A
	Steel Tension	HS 211	HS 354	2033	2068	1614

This page intentionally left blank.

Table of Contents

E45-7 Two Span 54W" Prestressed Girder Bridge Continuity Reinforcement, Rating Example LFR.....2
E45-7.1 Design Criteria.....2
E45-7.2 Modulus of Elasticity of Beam and Deck Material.....2
E45-7.3 Section Properties.....3
E45-7.4 Girder Layout.....3
E45-7.5 Loads.....3
E45-7.5.1 Dead Loads.....4
E45-7.5.2 Live Load Analysis Load Distribution to Interior Girders.....4
E45-7.6 Dead Load Moments.....5
E45-7.7 Live Load Moments.....6
E45-7.8 Composite Girder Section Properties.....6
E45-7.9 Flexural Strength Capacity at Pier.....8
E45-7.10 Design Load Rating.....9
E45-7.11 Permit Load Rating.....9
E45-7.12 Summary of Rating Factors.....10

E45-7 Two Span 54W" Prestressed Girder Bridge - Continuity Reinforcement, Rating Example - LFR

Reference E45-3 for bridge data. For LFR, the Bureau of Structures rates structures for the Design Load (HS20) and for Permit Vehicle loads. The rating below analyzes an interior girder only, which typically governs. The rating below analyzes an interior girder only in the negative moment region (continuity reinforcement).

E45-7.1 Design Criteria

$L := 130$	center of bearing at abutment to CL pier for each span, ft
$L_g := 130.375$	total length of the girder (the girder extends 6 inches past the center of bearing at the abutment and 1.5" short of the center line of the pier).
$w := 40$	clear width of deck, 2 lane road, 3 design lanes, ft
$f'_c := 8$	girder concrete strength, ksi
$f'_{cd} := 4$	deck concrete strength, ksi
$f_y := 60$	yield strenght of mild reinforcement, ksi
$E_s := 29000$	ksi, Modulus of Elasticity of the reinforcing steel
$w_p := 0.387$	weight of Wisconsin Type LF parapet, klf
$t_s := 8$	slab thickness, in
$t_{se} := 7.5$	effective slab thickness, in
$w_c := 0.150$	kcf
$h := 2$	height of haunch, inches

E45-7.2 Modulus of Elasticity of Beam and Deck Material

The modulus of elasticity for the precast and deck concrete are given in Chapter 19 as $E_{beam6} := 5500$ ksi and $E_{deck4} := 4125$ ksi for concrete strengths of 6 and 4 ksi respectively. The values of E for different concrete strengths are calculated as follows (ksi):

$$E_{beam8} := 5500 \cdot \frac{\sqrt{f'_c \cdot 1000}}{\sqrt{6000}} \qquad E_B := E_{beam8} \qquad \boxed{E_B = 6351}$$

$$E_D := E_{deck4} \qquad \boxed{E_D = 4125}$$

$$n := \frac{E_B}{E_D} \qquad \boxed{n = 1.540}$$

E45-7.3 Section Properties

54W Girder Properties:

$w_{tf} := 48$ in

$t_w := 6.5$ in

$ht := 54$ in

$b_w := 30$ width of bottom flange, in

$A_g := 798$ in^2

$I_g := 321049$ in^4

$y_t := 27.70$ in

$y_b := -26.30$ in

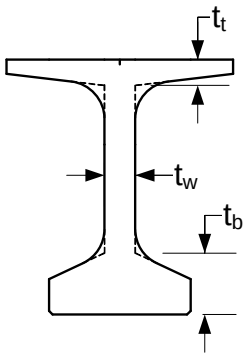

E45-7.4 Girder Layout

$S := 7.5$ Girder Spacing, feet

$ng := 6$ Number of girders

E45-7.5 Loads

$w_g := 0.831$ weight of 54W girders, klf

$w_d := 0.100$ weight of 8-inch deck slab (interior), ksf

$w_h := 0.100$ weight of 2-in haunch, klf

$w_{di} := 0.410$ weight of each diaphragm on interior girder (assume 2), kips

$w_{ws} := 0.020$ future wearing surface, ksf

$w_p = 0.387$ weight of parapet, klf

E45-7.5.1 Dead Loads

Dead load on non-composite (D_1):

interior:

$$w_{D1} := w_g + w_d \cdot S + w_h + 2 \cdot \frac{w_{di}}{L}$$

$w_{D1} = 1.687$ klf

* Dead load on composite (D_2):

$$w_{D2} := \frac{2 \cdot w_p}{ng}$$

$w_{D2} = 0.129$ klf

* Wearing Surface (DW):

$$w_{DW} := \frac{w \cdot w_{ws}}{ng}$$

$w_{DW} = 0.133$ klf

* **Std [3.23.2.3.1.1]** states that permanent loads on the deck may be distributed uniformly among the beams. This method is used for the parapet and future wearing surface loads.

E45-7.5.2 Live Load Analysis

Load Distribution to Interior Girders

Moment and Shear Distribution Factors for interior girders are in accordance with **Std [3.23.1.2, 3.23.2.2]**:

For one Design Lane Loaded:

$$DF_s := \frac{S}{7}$$

$DF_s = 1.071$

For Two or More Design Lanes Loaded:

$$DF_m := \frac{S}{5.5}$$

$DF_m = 1.364$

E45-7.6 Dead Load Moments

The unfactored dead load moments are listed below (values are in kip-ft):

Unfactored Dead Load Interior Girder Moments, (ft-kips)			
Tenth Point	D1 non-composite	D2 composite	DW composite
0.5	3548	137	141
0.6	3402	99	102
0.7	2970	39	40
0.8	2254	-43	-45
0.9	1253	-147	-151
1.0	0	-272	-281

The D_1 values are the component non-composite dead loads and include the weight of the girder, haunch, diaphragms and the deck.

The D_2 values are the component composite dead loads and include the weight of the parapets.

The DW values are the composite dead loads from the future wearing surface.

Note that the girder dead load moments (a portion of D_1) are calculated based on the CL bearing to CL bearing length. The other D_1 moments are calculated based on the span length (center of bearing at the abutment to centerline of the pier).

The total combined dead load is equal to:

$M_{DL} := -(M_{D1} + M_{D2})$ $\boxed{M_{DL} = 272.0}$ kips without wearing surface

$M_{DL_WS} := -(M_{D1} + M_{D2} + M_{DW})$ $\boxed{M_{DL_WS} = 553.0}$ kips with wearing surface

E45-7.7 Live Load Moments

The unfactored live load load moments (including distribution factor and impact) are listed below (values are in kip-ft) for the HS20 truck and lane loads.

Unfactored Live Load + Impact Moments per Lane (kip-ft)		
Tenth Point	HS20 Truck	HS20 Lane
0.5	-358	-365
0.6	-430	-438
0.7	-501	-511
0.8	-573	-584
0.9	-644	-875
1	-716	-1459

The unfactored live load moments per lane are calculated by applying the appropriate distribution factor to the controlling moment. For the interior girder:

$M_{LL} := 1459$ kip-ft

E45-7.8 Composite Girder Section Properties

Calculate the effective flange width in accordance with Chapter 17.2.11.

The effective flange width in accordance with **Std [9.8.3.1]**:

$$w_e := \min\left[S \cdot 12, 12 \cdot t_{se} + t_w, \frac{(L \cdot 12)}{4}\right] \qquad \boxed{w_e = 90.00} \text{ in}$$

The effective width, w_e, must be adjusted by the modular ratio, $n = 1.54$, to convert to the same concrete material (modulus) as the girder.

$$w_{eadj} := \frac{w_e}{n} \qquad \boxed{w_{eadj} = 58.46} \text{ in}$$

Calculate the composite girder section properties:

effective slab thickness; $t_{se} = 7.50$ in

effective slab width; $w_{eadj} = 58.46$ in

haunch thickness; $h = 2.0$ in

total height; $h_c := ht + h + t_{se}$

$h_c = 63.50$ in

$n = 1.540$

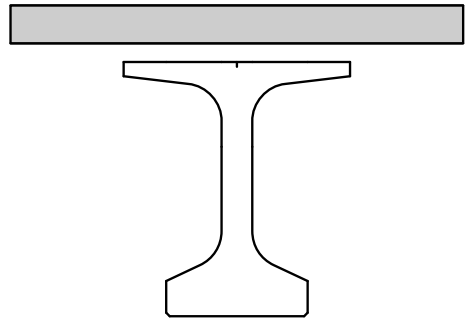

Note: The area of the concrete haunch is not included in the calculation of the composite section properties.

Component	Ycg	A	AY	AY^2	I	$I+AY^2$
Deck	59.75	438	26197	1565294	2055	1567349
Girder	26.3	798	20987	551969	321049	873018
Haunch	55	0	0	0	0	0
Summation		1236	47185			2440367

$\Sigma A := 1236$ in^2

$\Sigma AY := 47185$ in^4

$\Sigma IplusAYsq := 2440367$ in^4

$y_{cgb} := \frac{-\Sigma AY}{\Sigma A}$ $\quad y_{cgb} = -38.2$ in

$y_{cgt} := ht + y_{cgb}$ $\quad y_{cgt} = 15.8$ in

$A_{cg} := \Sigma A$ in^2

$I_{cg} := \Sigma IplusAYsq - A_{cg} \cdot y_{cgb}^2$ $\quad I_{cg} = 639053$ in^4

Deck:

$S_c := n \cdot \frac{I_{cg}}{y_{cgt} + h + t_{se}}$ $\quad S_c = 38851$ in^4

E45-7.9 Flexural Strength Capacity at Pier

All of the continuity reinforcement is placed in the top mat. Therefore the effective depth of the section at the pier is:

$cover := 2.5$ in

$bar_{trans} := 5$ (transverse bar size)

$Bar_D(bar_{trans}) = 0.625$ in (transverse bar diameter)

$Bar_{No} = 10$

$Bar_D(Bar_{No}) = 1.27$ in (Assumed bar size)

$$d_e := ht + h + t_s - cover - Bar_D(bar_{trans}) - \frac{Bar_D(Bar_{No})}{2}$$

$d_e = 60.24$ in

For flexure in non-prestressed concrete, $\phi_f := 0.9$.

The width of the bottom flange of the girder, $b_w = 30.00$ inches.

The continuity reinforcement is distributed over the effective flange width calculated earlier, $w_e = 90.00$ inches.

From E19-2, use a longitudinal bar spacing of #4 bars at $s_{longit} := 8.5$ inches. The continuity reinforcement is placed at 1/2 of this bar spacing, .

#10 bars at 4.25 inch spacing provides an $As_{prov} = 3.57$ in^2/ft, or the total area of steel provided:

$$As := As_{prov} \cdot \frac{w_e}{12}$$

$As = 26.80$ in^2

Calculate the capacity of the section in flexure at the pier:

Check the depth of the compression block:

$$a := \frac{As \cdot f_y}{0.85 \cdot b_w \cdot f'_c}$$

$a = 7.883$ in

This is approximately equal to the thickness of the bottom flange height of 7.5 inches. Therefore rectangular section strength calculation may be used.

$$M_n := As \cdot f_y \cdot \left(d_e - \frac{a}{2}\right) \cdot \frac{1}{12}$$

$M_n = 7544$ kip-ft

$\phi_f \cdot M_n = 6790$ kip-ft

E45-7.10 Design Load Rating

This design example illustrates the rating checks required at the location of maximum negative moment. These checks are also required at the locations of continuity bar cut offs but are not shown here.

$$RF_{inv} := \frac{\phi_f \cdot M_n - 1.3 \cdot M_{DL}}{2.17 \cdot M_{LL}}$$ $\boxed{RF_{inv} = 2.033}$

$$RF_{op} := \frac{\phi_f \cdot M_n - 1.3 \cdot M_{DL}}{1.3 \cdot M_{LL}}$$ $\boxed{RF_{op} = 3.393}$

E45-7.11 Permit Load Rating

Check the Wisconsin Standard Permit Vehicle per 45.12

For a symmetric 130' two span structure:

$MSPV_{LL} := 1029.8$ kip-ft per wheel line without impact

Per **Std [3.8.2.1]**:

$$IMPACT := \min\left(0.3, \frac{50}{L + 125}\right)$$ $\boxed{IMPACT = 0.196}$

Single Lane Distribution per Girder with Impact:

$$MSPV_{LLIMs} := MSPV_{LL} \cdot DF_s \cdot (1 + IMPACT)$$ $\boxed{MSPV_{LLIMs} = 1319.7}$ kip-ft

Multi Lane Distribution per Girder with Impact:

$$MSPV_{LLIMm} := MSPV_{LL} \cdot DF_m \cdot (1 + IMPACT)$$ $\boxed{MSPV_{LLIMm} = 1679.6}$ kip-ft

For any bridge design (new or rehabilitation) or bridge re-rate, the Wisconsin Standard Permit Vehicle (Wis-SPV) shall be analyzed per 45.12.

The bridge shall be analyzed for this vehicle considering both single-lane and multi-lane distribution. Also, the vehicle will be analyzed assuming that full dynamic allowance is utilized. Future wearing surface shall be included.

Since this example is rating a newly designed bridge, an additional check is required. The designer shall ensure that the results of the single-lane analysis are greater than 190 kips MVW.

Single Lane Distribution w/ FWS

$$RF_{SPVsws} := \frac{\phi_f \cdot M_n - 1.3 \cdot M_{DL_WS}}{1.3 \cdot MSPV_{LLIMs}}$$ $RF_{SPVsws} = 3.539$

$Wt_{SPVsws} := RF_{SPVsws} \cdot 190$ $Wt_{SPVsws} = 672.4$ kips >> 190 kips, OK

Single Lane Distribution w/o FWS

The rating for the Wis-SPV vehicle is now checked without the Future Wearing Surface. This value is reported on the plans.

$$RF_{SPVs} := \frac{\phi_f \cdot M_n - 1.3 \cdot M_{DL}}{1.3 \cdot MSPV_{LLIMs}}$$ $RF_{SPVs} = 3.752$

$Wt_{SPVs} := RF_{SPVs} \cdot 190$ $Wt_{SPVs} = 712.8$ kips

Since this value is greater than 250 kips, 250 kips is reported on the plans and on the Bridge Load Rating Summary form for the single-lane Permit Load Rating.

Multi-Lane Distribution w/o FWS

$$RF_{SPVm} := \frac{\phi_f \cdot M_n - 1.3 \cdot M_{DL}}{1.3 \cdot MSPV_{LLIMm}}$$ $RF_{SPVm} = 2.948$

$Wt_{SPVm} := RF_{SPVm} \cdot 190$ $Wt_{SPVm} = 560.1$ kips

Since this value is greater than 250 kips, 250 kips is reported on the Bridge Load Rating Summary form for the multi-lane Permit Load Rating.

E45-7.12 Summary of Rating Factors

Interior Girder						
Limit State		Design Load Rating		Legal Load	Permit Load Rating (kips)	
		Inventory	Operating	Rating	Single Lane	Multi-Lane
Strength 1	Flexure	HS 40	HS 67	N/A	250	250

Table of Contents

E45-8 Steel Girder Rating Example LFR 2
E45-8.1 Preliminary Data 2
E45-8.2 Compute Section Properties 4
E45-8.3 Dead Load Analysis Interior Girder 6
E45-8.4 Compute Live Load Distribution Factors for Interior Girder 11
E45-8.5 Compute Plastic Moment Capacity Positive Moment Region 14
E45-8.6 Design Load Rating @ 0.4L 18
E45-8.7 Check Section Proportion Limits Negative Moment Region 19
E45-8.8 Compute Plastic Moment Capacity Negative Moment Region 20
E45-8.9 Design Load Rating @ Pier 21
E45-8.10 Rate for Shear Negative Moment Region 22
E45-8.11 Design Load Rating @ Pier for Shear 23
E45-8.12 Permit Load Ratings 25
E45-8.12.1 Wis-SPV Permit Rating with Single Lane Distribution w/ FWS 26
E45-8.12.2 Wis-SPV Permit Rating with Single Lane Distribution w/o FWS 31
E45-8.12.3 Wis-SPV Permit Rating with Multi-Lane Distribution 32
E45-8.13 Summary of Rating 32

E45-8 Steel Girder Rating Example - LFR

Reference E45-4 for bridge data. For LFR, the Bureau of Structures rates structures for the Design Load (HS20) and for Permit Vehicle loads. The rating below analyzes an interior girder only, which typically governs.

E45-8.1 Preliminary Data

$N_{spans} := 2$	Number of spans	
$L := 120$	ft	span length
$N_b := 5$	number of girders	
$S := 9.75$	ft	girder spacing
$L_b := 240$	in	cross-frame spacing
$F_{yw} := 50$	ksi	web yield strength
$F_{yf} := 50$	ksi	flange yield strength
$f'_c := 4.0$	ksi	concrete 28-day compressive strength
$f_y := 60$	ksi	reinforcement strength
$E_s := 29000$	ksi	modulus of elasticity
$t_{deck} := 9.0$	in	total deck thickness
$t_s := 8.5$	in	effective deck thickness when 1/2" wearing surface is removed from total deck thickness
$w_s := 0.490$	kcf	steel density **Std [3.3.6]**
$w_c := 0.150$	kcf	concrete density **Std [3.3.6]**
$w_{misc} := 0.030$	kip/ft	additional miscellaneous dead load (per girder) per 17.2.4.1
$w_{par} := 0.387$	kip/ft	parapet weight (each)
$w_{deck} := 46.5$	ft	deck width
$d_{haunch} := 3.5$	in	haunch depth (from top of web for design) (for construction, the haunch is measured from the top of the top flange)

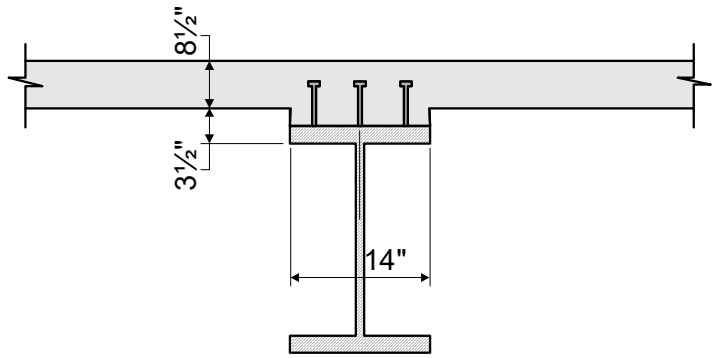

Figure E45-8.1-1
Composite Cross Section at Location of Maximum Positive Moment (0.4L)
(Note: 1/2" Intergral Wearing Surface has been removed for structural calcs.)

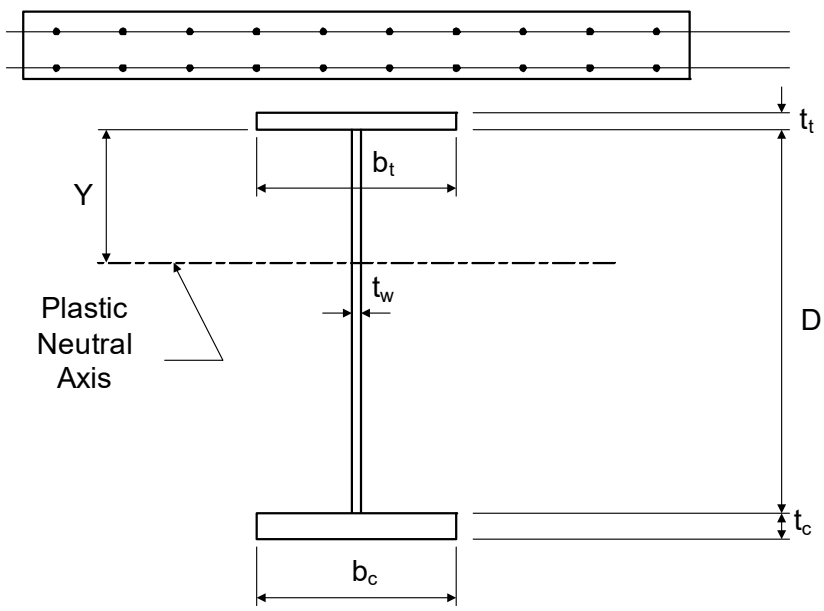

Figure E45-8.1-2
Composite Cross Section at Location of Maximum Negative Moment over Pier

$D := 54$ in

$t_w := 0.5$ in

E45-8.2 Compute Section Properties

Since the superstructure is composite, several sets of section properties must be computed. The initial dead loads (or the noncomposite dead loads) are applied to the girder-only section. For permanent loads assumed to be applied to the long-term composite section, the long-term modular ratio of 3n is used to transform the concrete deck area per **Std [10.35.1.4]**. For transient loads assumed applied to the short-term composite section, the short-term modular ratio of n is used to transform the concrete deck area.

The modular ratio, n, is for normal weight concrete is based upon f'_c per **Std [10.38.1.3]**. For f'_c= 4,000 psi,

$$n := 8$$

For interior beams, the effective flange width is calculated the lesser of the following widths per **Std [10.38.3.1]**.

1. One-fourth the span length of the girder:

$$b_{eff1} := \frac{L}{4} \qquad \boxed{b_{eff1} = 30.00} \quad \text{ft}$$

2. The distance center to center of the girders:

$$b_{eff2} := S \qquad \boxed{b_{eff2} = 9.75} \quad \text{ft}$$

3. Twelve times the least thickness of the slab:

$$b_{eff3} := \frac{(12 \cdot t_s)}{12} \qquad \boxed{b_{eff3} = 8.50} \quad \text{ft}$$

Therefore, the effective flange width is:

$$b_{effflange} := \min(b_{eff1}, b_{eff2}, b_{eff3}) \qquad \boxed{b_{effflange} = 8.50} \quad \text{ft}$$

or

$$\boxed{b_{effflange} \cdot 12 = 102.00} \quad \text{in}$$

For this design example, the slab haunch is 3.5 inches throughout the length of the bridge. That is, the bottom of the slab is located 3.5 inches above the top of the web. The area of the haunch is conservatively not considered in the section properties for this example.

Based on the plate sizes shown in Figure E45-4.1-4, the noncomposite and composite section properties for the positive moment region are computed as shown in the following table. The distance to the centroid is measured from the bottom of the girder.

The effect of creep from dead loads acting on the composite section shall be considered by checking stresses.

Positive Moment Region Section Properties						
Section	**Area, A (Inches^2)**	**Centroid, d (Inches)**	**A*d (Inches^3)**	**I_o (Inches^4)**	**A*y^2 (Inches^4)**	**I_{total} (Inches^4)**
Girder only:						
Top flange	10.500	55.250	580.1	0.5	8441.1	8441.6
Web	27.000	27.875	752.6	6561.0	25.8	6586.8
Bottom flange	12.250	0.438	5.4	0.8	8576.1	8576.9
Total	49.750	26.897	1338.1	6562.3	17043.0	23605.3
Composite (3n):						
Girder	49.750	26.897	1338.1	23605.3	11238.3	34843.6
Slab	36.125	62.625	2262.3	217.5	15477.0	15694.5
Total	85.875	41.926	3600.4	23822.8	26715.3	50538.0
Composite (n):						
Girder	49.750	26.897	1338.1	23605.3	29831.5	53436.8
Slab	108.375	62.625	6787.0	652.5	13694.3	14346.8
Total	158.125	51.384	8125.1	24257.8	43525.8	67783.6
Section	**y_{botgdr} (Inches)**	**y_{topgdr} (Inches)**	**$y_{topslab}$ (Inches)**	**S_{botgdr} (Inches^3)**	**S_{topgdr} (Inches^3)**	**$S_{topslab}$ (Inches^3)**
Girder only	26.897	28.728	---	877.6	821.7	---
Composite (3n)	41.926	13.699	24.949	1205.4	3689.3	2025.7
Composite (n)	51.384	4.241	15.491	1319.2	15982.9	4375.7

Table E45-8.2-1
Positive Moment Region Section Properties

Similarly, the noncomposite and composite section properties for the negative moment region are computed as shown in the following table. The distance to the centroid is measured from the bottom of the girder.

For the strength limit state, since the deck concrete is in tension in the negative moment region, the deck reinforcing steel contributes to the composite section properties and the deck concrete does not. However, per 45.6.3, only the top longitudinal mat of steel is used for rating purposes. With #6 bars at 7.5" o.c., the amount of longitudinal steel within the effective slab area is 5.98 in^2. Assume it is located 3 inches from the top of the slab. These values will be used for the calculations below.

Negative Moment Region Section Properties						
Section	**Area, A (Inches^2)**	**Centroid, d (Inches)**	**A*d (Inches^3)**	**I_o (Inches^4)**	**A*y^2 (Inches^4)**	**I_{total} (Inches^4)**
Girder only:						
Top flange	35.000	58.000	2030.0	18.2	30009.7	30027.9
Web	27.000	29.750	803.3	6561.0	28.7	6589.7
Bottom flange	38.500	1.375	52.9	24.3	28784.7	28809.0
Total	100.500	28.718	2886.2	6603.5	58823.1	65426.6
Composite (deck concrete using 3n):						
Girder	100.500	28.718	2886.2	65426.6	8995.9	74422.5
Slab	36.125	64.500	2330.1	217.5	25026.6	25244.1
Total	136.625	38.179	5216.3	65644.1	34022.5	99666.6
Composite (deck concrete using n):						
Girder	100.500	28.718	2886.2	65426.6	34639.7	100066.3
Slab	108.375	64.500	6990.2	652.5	32122.6	32775.1
Total	208.875	47.284	9876.4	66079.1	66762.3	132841.4
Composite (deck reinforcement only):						
Girder	100.500	28.718	2886.2	65426.6	435.2	65861.9
Deck reinf.	5.984	65.750	393.4	0.0	7309.8	7309.8
Total	106.484	30.799	3279.6	65426.6	7745.0	73171.6
Section	**y_{botgdr} (Inches)**	**y_{topgdr} (Inches)**	**y_{deck} (Inches)**	**S_{botgdr} (Inches^3)**	**S_{topgdr} (Inches^3)**	**S_{deck} (Inches^3)**
Girder only	28.718	30.532	---	2278.2	2142.9	---
Composite (3n)	38.179	21.071	30.571	2610.5	4730.1	3260.2
Composite (n)	47.284	11.966	21.466	2809.5	11101.3	6188.4
Composite (rebar)	30.799	28.451	34.951	2375.8	2571.9	2093.6

Table E45-8.2-2
Negative Moment Region Section Properties

E45-8.3 Dead Load Analysis - Interior Girder

Dead Load Components		
Resisted by	**Type of Load Factor**	
	DC	**DW**
Noncomposite section	• Steel girder • Concrete deck • Concrete haunch • Stay-in-place deck forms • Misc. (including cross-frames, stiffeners, etc.)	
Composite section	• Concrete parapets	• Future wearing surface & utilities

Table E45-8.3-1
Dead Load Components

COMPONENTS AND ATTACHMENTS: DC1 (NON-COMPOSITE)

GIRDER:

For the steel girder, the dead load per unit length varies due to the change in plate sizes. The moments and shears due to the weight of the steel girder can be computed using readily available analysis software. Since the actual plate sizes are entered as input, the moments and shears are computed based on the actual, varying plate sizes.

DECK:

For the concrete deck, the dead load per unit length for an interior girder is computed as follows:

$w_c = 0.150$ kcf

$S = 9.75$ ft

$t_{deck} = 9.00$ in

$DL_{deck} := w_c \cdot S \cdot \frac{t_{deck}}{12}$ $\boxed{DL_{deck} = 1.097}$ kip/ft

HAUNCH:

For the concrete haunch, the dead load per unit length varies due to the change in top flange plate sizes. The moments and shears due to the weight of the concrete haunch can be computed using readily available analysis software. Since the top flange plate sizes are entered as input, the moments and shears due to the concrete haunch are computed based on the actual, varying haunch thickness.

MISC:

For the miscellaneous dead load (including cross-frames, stiffeners, and other miscellaneous structural steel), the dead load per unit length is assumed to be as follows (17.2.4.1):

$DL_{misc} := 0.030$ kip/ft

COMPONENTS AND ATTACHMENTS: DC2 (COMPOSITE)

PARAPET:

For the concrete parapets, the dead load per unit length is computed as follows, assuming that the superimposed dead load of the two parapets is distributed uniformly among all of the girders per **Std (3.23.2.3.1.1]**:

$w_{par} = 0.387$ kip/ft

$N_b = 5$

$DL_{par} := \frac{w_{par} \cdot 2}{N_b}$ $\boxed{DL_{par} = 0.155}$ kip/ft

WEARING SURFACE: DW (COMPOSITE)

FUTURE WEARING SURFACE:

A future wearing surface of 20 psf will be used for the permit vehicle checks.

$DW := \frac{0.020 \cdot w_{deck}}{N_b}$ $\boxed{DW = 0.186}$ kip/ft

Since the plate girder and its section properties are not uniform over the entire length of the bridge, analysis software was used to compute the dead load moments and shears.

The following two tables present the unfactored dead load moments and shears, as computed by an analysis computer program. Since the bridge is symmetrical, the moments and shears in Span 2 are symmetrical to those in Span 1.

Dead Load Moments (Kip-feet)											
Dead Load Component	Location in Span 1										
	0.0L	0.1L	0.2L	0.3L	0.4L	0.5L	0.6L	0.7L	0.8L	0.9L	1.0L
Steel girder	0.0	71.7	119.0	141.9	140.5	114.7	64.7	-10.1	-112.5	-247.1	-427.0
Concrete deck & haunches	0.0	475.4	787.6	936.9	923.0	746.1	406.2	-96.8	-765.9	-1592.1	-2584.3
Miscellaneous Steel Weight	0.0	12.6	18.6	24.8	24.5	19.8	10.8	-2.6	-20.2	-42.2	-68.5
Concrete parapets	0.0	66.7	111.2	133.3	135.7	110.7	66.0	-1.0	-90.3	-201.9	-335.8
Future wearing surface	0.0	75.9	126.4	151.6	151.4	125.9	75.0	-1.2	-102.7	-229.6	-381.8

Table 45E-8.3-2
Dead Load Moments

Dead Load Shears (Kips)											
Dead Load Component	Location in Span 1										
	0.0L	0.1L	0.2L	0.3L	0.4L	0.5L	0.6L	0.7L	0.8L	0.9L	1.0L
Steel girder	7.0	5.0	2.9	0.9	-1.1	-3.2	-5.2	-7.2	-9.8	-12.9	-17.0
Concrete deck & haunches	46.4	32.8	19.2	5.6	-8.0	-21.5	-35.1	-48.7	-62.3	-78.9	-89.5
Miscellaneous Steel Weight	1.2	0.9	0.5	0.2	-0.2	-0.6	-0.9	-1.3	-1.7	-2.0	-2.4
Concrete parapets	6.5	4.6	2.8	0.9	-0.9	-2.8	-4.7	-6.5	-8.4	-10.2	-12.1
Future wearing surface	7.4	5.3	3.2	1.0	-1.1	-3.2	-5.3	-7.4	-9.5	-11.6	-13.7

Table 45E-8.3-3
Dead Load Shears

E45-8.4 Compute Live Load Distribution Factors for Interior Girder

The live load distribution factors for an interior girder are computed as follows from **Std [3.23.2.2]**:

For one Design Lane Loaded:

$$DF_s := \frac{S}{7} \qquad \boxed{DF_s = 1.39} \text{ wheels}$$

For Two or More Design Lanes Loaded:

$$DF_m := \frac{S}{5.5} \qquad \boxed{DF_m = 1.77} \text{ wheels}$$

The live load impact percentage increase is calcuated per Std [3.8.2.1]:

$$IMPACT := 100 \cdot \min\left(0.3, \frac{50}{L + 125}\right) \qquad \boxed{IMPACT = 20.41} \%$$

From live load analysis software, the live load effects (per wheel including impact) are listed in the following table:

HS20 Live Load Effects (for Interior Beams)											
Live Load Effect	**Location in Span 1**										
	0.0L	**0.1L**	**0.2L**	**0.3L**	**0.4L**	**0.5L**	**0.6L**	**0.7L**	**0.8L**	**0.9L**	**1.0L**
Maximum positive moment (K-ft)	0.0	710.6	1190.6	1462.0	1564.4	1513.7	1335.0	1032.5	643.3	206.2	0.0
Maximum negative moment (K-ft)	0.0	-102.5	-205.0	-307.5	-410.0	-512.5	-615.1	-717.6	-823.1	-1264.2	-1967.9
Maximum positive shear (kips)	77.0	59.7	50.5	41.6	33.1	25.2	17.6	11.0	5.6	1.8	0.0
Maximum negative shear (kips)	-10.2	-10.3	-15.6	-22.6	-32.7	-42.6	-50.7	-57.8	-64.0	-71.9	-80.8

Table 45E-8.4-2
Live Load Effects

Two sections will be checked for illustrative purposes. First, the ratings will be performed for the location of maximum positive moment, which is at 0.4L in Span 1. Second, the ratings will be performed for the location of maximum negative moment and maximum shear, which is at the pier.

The following are for the location of maximum positive moment, which is at 0.4L in Span 1, as shown in Figure E45-8.4-1.

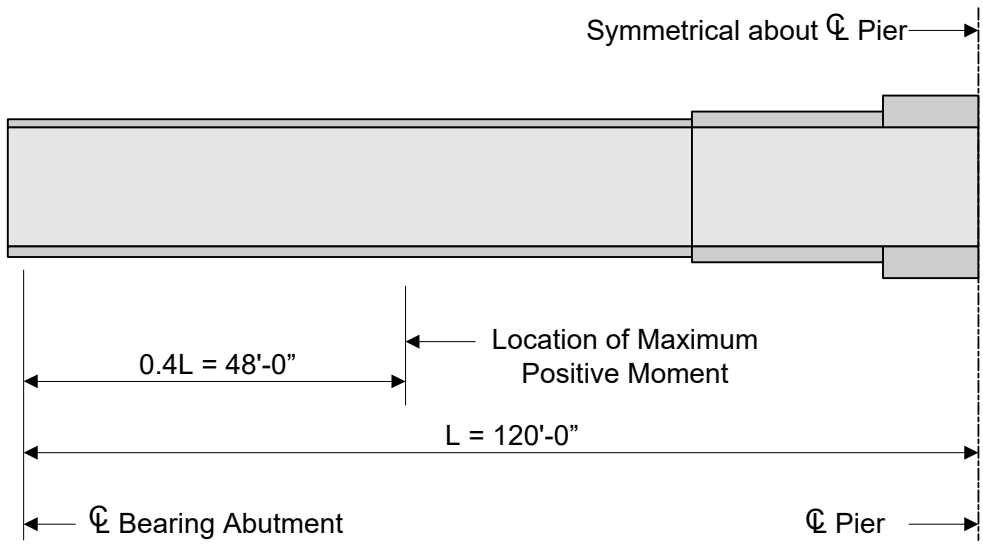

Figure E45-8.4-1
Location of Maximum Positive Moment

E45-8.5 Compute Plastic Moment Capacity - Positive Moment Region

For composite sections, the plastic moment, M_p, is calculated as the first moment of plastic forces about the plastic neutral axis per **Std [10.50.1.1]**.

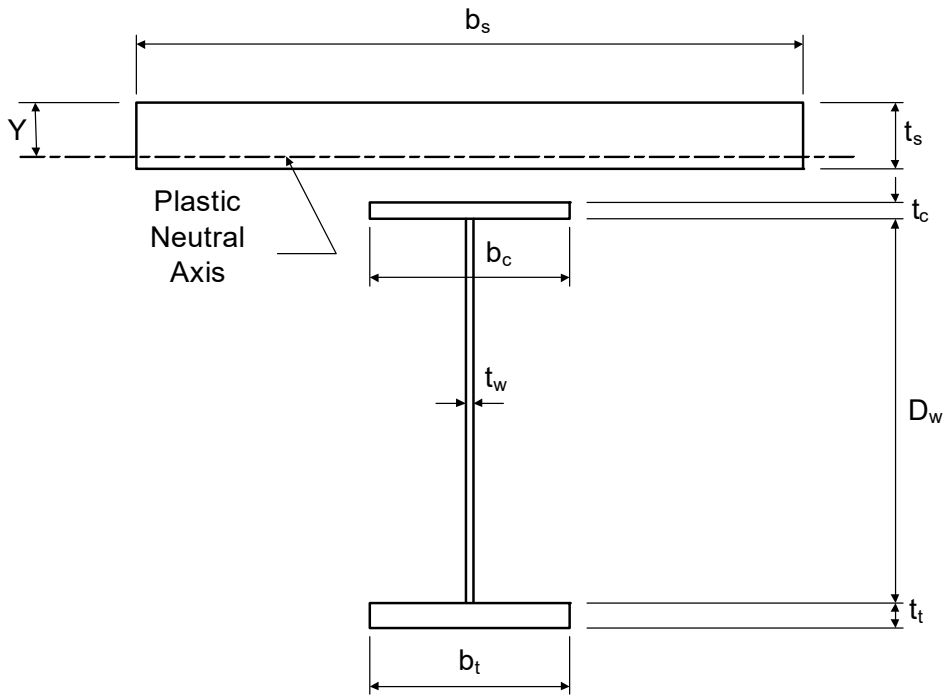

Figure E45-8.5-1
Computation of Plastic Moment Capacity for Positive Bending Sections

For the slab, the compressive force is equal to the smallest value given by the following equations:

$C_1 = 0.85 \cdot f'_c \cdot b_s \cdot t_s + (AF_y)_c$ **Std [Eq. 10-123]**

Where:

b_s = Effective width of concrete deck (in)

t_s = Thickness of concrete deck (in)

$f'_c = 4.00$ ksi

$b_s = 102.00$ in

$t_s = 8.50$ in

$(AF_y)_c$ is the product of the area and yield point of that part of reinforcement which lies in the compression zone of the slab. Neglecting this reinforcement contribution, the equation reduces to:

$C_1 := 0.85 \cdot f'_c \cdot b_s \cdot t_s$ $\boxed{C_1 = 2948}$ kips

$C_2 = (AF_y)_{bf} + (AF_y)_{tf} + (AF_y)_w$ **Std [Eq. 10-124]**

This equation reduces to equal the product of the girder steel area and its yield point:

$C_2 := (49.75) \cdot (50)$ $\boxed{C_2 = 2488}$ kips

The compressive force in the slab, C, is equal to:

$C := \min(C_1, C_2)$ $\boxed{C = 2488}$ kips

The depth of the stress block is computed from the compressive force in the slab:

$a := \dfrac{C}{0.85 \cdot f'_c \cdot b_s}$ **Std [Eq. 10-125]**

$\boxed{a = 7.17}$ in

Because C1 exceeds C2, the top portion of the steel section is not in compression. Therefore the plastic neutral axis (PNA) is located at the bottom of the concrete stress block, and no steel elements need to be checked for compactness. The plastic moment, M_p, is calculated using the force equilibrium method. The moment arm between the slab's compressive force and the PNA is equal to a/2, and the moment arm between the steel girder and the PNA is equal to 32.805 in.

$M_{p_slab} := C \cdot \dfrac{a}{2} = 8921$ $\boxed{M_{p_slab} = 8921}$ k-in

$M_{p_girder} := C_2 \cdot 32.805$ $\boxed{M_{p_girder} = 81602}$ k-in

$M_p := \dfrac{(M_{p_slab} + M_{p_girder})}{12}$ $\boxed{M_p = 7544}$ k-ft

In continuous spans with noncompact noncomposite or composite negative-moment pier sections, the maximum bending strength, M_n, of the composite positive-moment sections shall be taken as either the moment capacity at first yield or as:

$$M_n := M_y + A \cdot (M_{u_pier} - M_{s_pier})$$ **Std [Eq. 10-129d]**

Where:

M_y = the moment capacity at first yield of the compact positive moment section

$(M_{u_pier} - M_{s_pier})$ = moment capacity of the noncompact section at the pier from **Std [10.48.2]** or **[10.48.4]** minus the elastic moment at the pier for the loading producing maximum positive bending in the span.

A = distance from end support to the location of maximum positive moment divided by the span length for end spans.

The moment capacity and first yield, M_y, is computed as follows, considering the application of the factored dead and live loads to the steel and composite sections:

$$F_y = \frac{M_{D1}}{S_{NC}} + \frac{M_{D2}}{S_{LT}} + \frac{M_{AD}}{S_{ST}}$$

Where:

M_{D1} = Bending moment caused by the factored permanent load applied before the concrete deck has hardened or is made composite (kip-in)

S_{NC} = Noncomposite elastic section modulus (in^3)

M_{D2} = Bending moment caused by the factored permanent load applied to the long-term composite section (kip-in)

S_{LT} = Long-term composite elastic section modulus (in^3)

M_{AD} = Additional bending moment that must be applied to the short-term composite section to cause nominal yielding in either steel flange (kip-in)

S_{ST} = Short-term composite elastic section modulus (in^3)

$$M_y = M_{D1} + M_{D2} + M_{AD}$$

$F_y := 50$ ksi

$M_{D1} := [1.3 \cdot (M_{girder} + M_{deck} + M_{misc})]$ $\boxed{M_{D1} = 1414}$ kip-ft

$M_{D2} := (1.3 \cdot M_{DC2})$ $\boxed{M_{D2} = 176}$ kip-ft

For the bottom flange:

$S_{NC_pos} = 877.63$ in^3

$S_{LT_pos} = 1205.40$ in^3

$S_{ST_pos} = 1319.16$ in^3

$$M_{AD} := \left[\frac{S_{ST_pos}}{12^3}\cdot\left(F_y\cdot 12^2 - \frac{M_{D1}}{\frac{S_{NC_pos}}{12^3}} - \frac{M_{D2}}{\frac{S_{LT_pos}}{12^3}}\right)\right]$$

$\boxed{M_{AD} = 3177}$ kip-ft

$M_{ybot} := M_{D1} + M_{D2} + M_{AD}$ $\boxed{M_{ybot} = 4768}$ kip-ft

For the top flange:

$S_{NC_pos_top} = 821.67$ in^3

$S_{LT_pos_top} = 3689.31$ in^3

$S_{ST_pos_top} = 15982.90$ in^3

$$M_{AD} := \frac{S_{ST_pos_top}}{12^3}\cdot\left(F_y\cdot 144 - \frac{M_{D1}}{\frac{S_{NC_pos_top}}{12^3}} - \frac{M_{D2}}{\frac{S_{LT_pos_top}}{12^3}}\right)$$

$\boxed{M_{AD} = 38319}$ kip-ft

$M_{ytop} := M_{D1} + M_{D2} + M_{AD}$ $\boxed{M_{ytop} = 39910}$ kip-ft

The yield moment, M_y, is the lesser value computed for both flanges. Therefore, M_y is determined as follows:

$M_y := \min(M_{ybot}, M_{ytop})$ $\boxed{M_y = 4768}$ kip-ft

From calculations to follow for negative moment, moment capacity of the noncompact section at the pier is:

$M_{u_pier} := 9899$ k-ft

From live load analysis software, the elastic moment at the pier for the loading producing maximum positive bending in the span is:

$M_{s_pier} := 4431.52$ k-ft

The distance from end support to the location of maximum positive moment divided by the span length is:

$A := 0.4$

Therefore:

$M_n := M_y + A \cdot (M_{u_pier} - M_{s_pier})$ $\boxed{M_n = 6955}$ kip-ft

E45-8.6 Design Load Rating @ 0.4L

$$RF = \frac{M_n - A_1 \cdot M_{DL}}{A_2 (M_{LLIM})}$$

Where:

$M_{DL} := M_{girder} + M_{deck} + M_{misc} + M_{DC2}$ $\boxed{M_{DL} = 1224}$ kip-ft

$M_{LLIM} := M_{LL}$ $\boxed{M_{LLIM} = 1564}$ kip-ft

Inventory

$$RF_{inv_0.4L} := \frac{M_n - 1.3 \cdot M_{DL}}{2.17 \cdot (M_{LLIM})}$$ $\boxed{RF_{inv_0.4L} = 1.58}$

Operating

$$RF_{op_0.4L} := \frac{M_n - 1.3 \cdot M_{DL}}{1.3 \cdot (M_{LLIM})}$$ $\boxed{RF_{op_0.4L} = 2.64}$

E45-8.7 Check Section Proportion Limits - Negative Moment Region

Now the specification checks are repeated for the location of maximum negative moment, which is at the pier, as shown in Figure E45-8.7-1. This is also the location of maximum shear in this case.

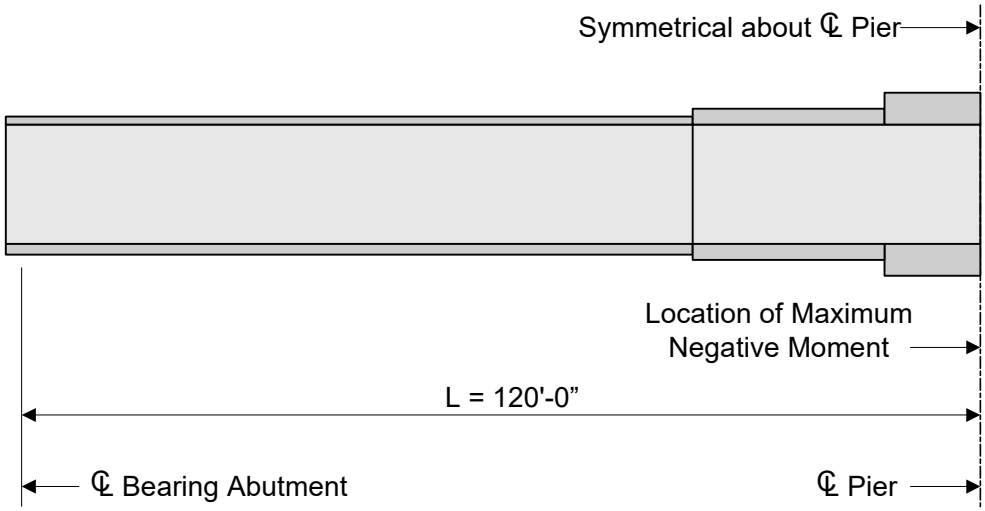

Figure E45-8.7-1
Location of Maximum Negative Moment

For a section to be compact, it must meet the proportion limits with **Std [10.48.1.1]**. For 50 ksi steel, these are as follows:

Compression Flange

$$\frac{b_f}{2 \cdot t_f} \le 18.4$$ **Std [Eq. 10-93]**

$b_f := 14$

$t_f := 2.75$

$$\boxed{\frac{b_f}{2 \cdot t_f} = 2.55}$$ OK

Web Thickness

$$\frac{D}{t_w} \le 86$$ **Std [Eq. 10-94]**

$D = 54.00$

$t_w = 0.50$

$$\boxed{\frac{D}{t_w} = 108.00}$$ FAILS

Therefore the section is noncompact at the pier. The requirements of Braced Noncompact Sections per **Std [10.48.2]** will be checked:

Compression Flange $\frac{b_f}{2 \cdot t_f} \le 24$ **Std [Eq. 10-100]**

$\boxed{\frac{b_f}{2 \cdot t_f} = 2.55}$ OK

Web Thickness $\frac{D}{t_w} \le 163$ **Std [Eq. 10-104]**

$\boxed{\frac{D}{t_w} = 108.00}$ OK

Lateral Bracing $L_b \le \frac{20000 \cdot A_f}{F_y \cdot d}$ **Std [Eq. 10-101]**

$A_f := (14)(2.75)$

$d := 54 + 2.75 + 2.5$

$L_b = 240.00$ $\boxed{\frac{20000 \cdot A_f}{F_y \cdot d} = 259.92}$ OK

E45-8.8 Compute Plastic Moment Capacity - Negative Moment Region

The negative moment capacity will be determined from **Std [10.50.2.2]** for noncompact negative moment sections.

Tension Flange $F_{ut} := F_y$

Compression Flange $F_{uc} := F_{cr} \cdot R_b$

$$F_{cr} := \frac{\left(4400 \cdot \frac{2t_f}{b_f}\right)^2}{1000} \le F_y$$

$$\frac{\left(4400 \cdot \frac{2t_f}{b_f}\right)^2}{1000} = 2987.96$$

Therefore $F_{cr} := F_y$ $\boxed{F_{cr} = 50.00}$ ksi

$R_b := 1.0$ due to adequate lateral bracing per **Std [Eq. 10-101]**

$F_{uc} := F_{cr} \cdot R_b = 50.00$ $\boxed{F_{uc} = 50.00}$ ksi

The moment capacity is taken as the lesser of the maximum strengths at the tension or compression flanges:

$S_{xt} := S_{rebar_top}$ $\boxed{S_{xt} = 2572}$ in^3

$M_{u1} := F_y \cdot \frac{S_{xt}}{12}$ $\boxed{M_{u1} = 10716}$ kip-ft

$S_{xc} := S_{rebar}$ $\boxed{S_{xc} = 2376}$ in^3

$M_{u2} := F_{cr} \cdot R_b \cdot \frac{S_{xc}}{12}$ $\boxed{M_{u2} = 9899}$ kip-ft

$M_{n_neg} := \min(M_{u1}, M_{u2})$ $\boxed{M_{n_neg} = 9899}$ kip-ft

E45-8.9 Design Load Rating @ Pier

$$RF = \frac{M_{n_neg} - A_1 \cdot M_{DL_neg}}{A_2 (M_{LLIM_neg})}$$

Where:

$M_{DL_neg} := M_{girder_neg} + M_{deck_neg} + M_{misc_neg} + M_{DC2_neg}$

$\boxed{M_{DL_neg} = -3415}$ kip-ft

$M_{LLIM_neg} := M_{LL_neg}$ $\boxed{M_{LLIM_neg} = -1968}$ kip-ft

A. Steel Flexure Moment Strength **MBE [6B.4.1]**

$$RF_{inv_1.0L} := \frac{-M_{n_neg} - 1.3 \cdot M_{DL_neg}}{2.17 \cdot (M_{LLIM_neg})}$$ $\boxed{RF_{inv_1.0L} = 1.28}$

$$RF_{op_1.0L} := \frac{-M_{n_neg} - 1.3 \cdot M_{DL_neg}}{1.3 \cdot (M_{LLIM_neg})}$$ $\boxed{RF_{op_1.0L} = 2.13}$

E45-8.10 Rate for Shear - Negative Moment Region

Shear must be checked at each section of the girder. For this Rating example, shear is maximum at the pier, and will only be checked there for illustrative purposes.

The transverse intermediate stiffener spacing is 120". The spacing of the transverse intermediate stiffeners does not exceed 3D, therefore the section can be considered stiffened and the provisions of **Std [10.48.8]** apply.

$d_o := 120$ in

$D = 54.00$ in

$$k := 5 + \frac{5}{\left(\frac{d_o}{D}\right)^2} \qquad \boxed{k = 6.01}$$

$$\frac{D}{t_w} = 108.00 \qquad \frac{D}{t_w} \geq 7500 \cdot \sqrt{\frac{k}{1000F_{yw}}} \qquad 7500 \cdot \sqrt{\frac{k}{1000F_{yw}}} = 82.24$$

$$C := \frac{4.5 \cdot 10^7 \cdot k}{\left(\frac{D}{t_w}\right)^2 \cdot (F_{yw} \cdot 1000)} = 0.46 \qquad \boxed{C = 0.464}$$

The plastic shear force, V_p, is then:

$$V_p := 0.58 \cdot F_{yw} \cdot D \cdot t_w \qquad \boxed{V_p = 783.0} \text{ kips}$$

Std [Eq. 10-115]

$$V_n := V_p \cdot \left[C + \frac{0.87 \cdot (1 - C)}{\sqrt{1 + \left(\frac{d_o}{D}\right)^2}}\right] \qquad \boxed{V_n = 513.1} \text{ kips}$$

Std [Eq. 10-114]

HS-20 Maximum Shear @ Pier:

$$V_{DL} := V_{girder} + V_{deck} + V_{misc} + V_{DC2} \qquad \boxed{V_{DL} = -121.0} \text{ kips}$$

$V_{LL} = -80.75$ kips

E45-8.11 Design Load Rating @ Pier for Shear

$$RF = \frac{V_n - A_1 \cdot V_{DL}}{A_2 \cdot V_{LL}}$$

Strength Limit State

Inventory

$$RF_{inv_shear} := \frac{-V_n - 1.3V_{DL}}{2.17 \cdot V_{LL}}$$ $\boxed{RF_{inv_shear} = 2.03}$

Operating

$$RF_{op_shear} := \frac{-V_n - 1.3V_{DL}}{1.3 \cdot V_{LL}}$$ $\boxed{RF_{op_shear} = 3.39}$

Combined Moment and Shear **MBE [L6B2.3]**

$V_D := -V_{DL} = 120.97$

$V_L := -V_{LL} = 80.75$ kips

$V_n = 513.1$ kips

$V_p = 783.00$ $C = 0.46$

For a composite noncompact section, the initial moment rating factor shall be taken as the smaller of the rating factors determined separately for the compression and tension flange. Stresses (f_D, f_L) are substituted for moments (M_D, M_L).

$M_D := -M_{DL_neg} = 3415$ kip-ft

$M_L := 1442.06$ Concurrent live load from analysis software

$$f_D := \max\left(\frac{12 \cdot M_D}{S_{xt}}, \frac{12 \cdot M_D}{S_{xc}}\right)$$ $\boxed{f_D = 17.25}$ ksi

$$f_L := \max\left(\frac{12 \cdot M_L}{S_{xt}}, \frac{12 \cdot M_L}{S_{xc}}\right)$$ $\boxed{f_L = 7.28}$ ksi

$F_n := F_y$

Step 1 - Determine initial rating factors ignoring interaction:

$RF_{v1_inv} := RF_{inv_shear}$ $\boxed{RF_{v1_inv} = 2.03}$

$RF_{m1_inv} := \dfrac{F_n - 1.3 \cdot f_D}{2.17 \cdot f_L}$ $\boxed{RF_{m1_inv} = 1.74}$

$RF_{v1_op} := RF_{op_shear}$ $\boxed{RF_{v1_op} = 3.39}$

$RF_{m1_op} := \dfrac{F_n - 1.3 \cdot f_D}{1.3 \cdot f_L}$ $\boxed{RF_{m1_op} = 2.91}$

Step 2 - Determine initial controlling rating factor ignoring interaction:

$RF_{mv1_inv} := \min(RF_{v1_inv}, RF_{m1_inv})$ $\boxed{RF_{mv1_inv} = 1.74}$

$RF_{mv1_op} := \min(RF_{v1_op}, RF_{m1_op})$ $\boxed{RF_{mv1_op} = 2.91}$

Step 3 - Determine the factored moment and shear using the initial controlling rating factor from Step 2 as follows:

$V_1 := 1.3 \cdot V_D + RF_{mv1_inv} \cdot 2.17 \cdot V_L$ $\boxed{V_1 = 462.9}$ kips

$f_1 := 1.3 \cdot f_D + RF_{mv1_inv} \cdot 2.17 \cdot f_L$ $\boxed{f_1 = 50.00}$ ksi

Step 4 - Determine the final controlling rating factor as follows:

$0.6V_n = 308$ $V_1 > 0.6V_n$

$0.75F_n = 37.5$ $f_1 > 0.75F_n$

CASE D applies:

$$RF_{mvf1_inv} := \frac{2.2V_n \cdot F_n - 1.3 \cdot V_D \cdot F_n - 1.6 \cdot 1.3 \cdot f_D \cdot V_n}{2.17 \cdot V_L \cdot F_n + 1.6 \cdot 2.17 \cdot f_L \cdot V_n} = 1.39$$

$$> \quad \frac{C \cdot V_p - 1.3V_D}{2.17 \cdot V_L} = 1.18$$

$$RF_{mvf1_op} := \frac{2.2V_n \cdot F_n - 1.3 \cdot V_D \cdot F_n - 1.6 \cdot 1.3 \cdot f_D \cdot V_n}{1.3 \cdot V_L \cdot F_n + 1.6 \cdot 1.3 \cdot f_L \cdot V_n} = 2.32$$

$$> \quad \frac{C \cdot V_p - 1.3V_D}{1.3 \cdot V_L} = 1.96$$

Therefore

$RF_{vf1_inv} := RF_{mvf1_inv}$ $\boxed{RF_{vf1_inv} = 1.39}$

$RF_{mf1_inv} := RF_{mvf1_inv}$ $\boxed{RF_{mf1_inv} = 1.39}$

$RF_{vf1_op} := RF_{mvf1_op}$ $\boxed{RF_{vf1_op} = 2.32}$

$RF_{mf1_op} := RF_{mvf1_op}$ $\boxed{RF_{mf1_op} = 2.32}$

Step 5 - If the controlling RF is different than the initial controlling RF, repeat Steps 2-4 (using the final controlling RF as the initial controlling RF):

$RF_{mv2_inv} := \min(RF_{vf1_inv}, RF_{mf1_inv})$ $RF_{mv2_inv} = 1.39$

$V_2 := 1.3 \cdot V_D + RF_{mv2_inv} \cdot 2.17 \cdot V_L$ $\boxed{V_2 = 400.4}$ kips

$V_2 > 0.6V_n$

$f_2 := 1.3 \cdot f_D + RF_{mv2_inv} \cdot 2.17 \cdot f_L$ $\boxed{f_2 = 44.36}$ ksi

$M_2 > 0.75M_{n_neg}$

CASE D applies again, so the calculation does not need to be repeated.

$RF_{mvf_inv} := RF_{mf1_inv}$ $\boxed{RF_{mvf_inv} = 1.39}$

$RF_{mvf_op} := RF_{mf1_op}$ $\boxed{RF_{mvf_op} = 2.32}$

Since RF>1.20 @ operating for all checks, posting vehicle checks are not required for this example.

E45-8.12 - Permit Load Ratings

For any bridge design (new or rehabilitation) or bridge re-rate, the Wisconsin Standard Permit Vehicle (Wis-SPV) shall be analyzed (per 45.12).

The bridge shall be analyzed for this vehicle considering both single-lane and multi-lane distribution. Also, the vehicle will be analyzed assuming full dynamic load allowance is utilized. Future wearing surface shall not be included.

Since this example is rating a newly designed bridge, an additional check is required. The designer shall ensure that the results of the single-lane analysis are greater than 190 kips MVW. Future wearing surface shall be included in the check.

E45-8.12.1 - Wis-SPV Permit Rating with Single Lane Distribution w/ FWS

The values from this analysis are used for performing the Wis-SPV design check per 45.12

Load Distribution Factors

Single Lane Interior DF $\boxed{DF_s = 1.39}$

Wis-SPV Moments and Shears from LL analysis software, with impact and distribution factors included:

$M_{LL_0.4L} := 2393.45$ kip-ft

$M_{LL_1.0L} := 1836.47$ kip-ft

$V_{LL_1.0L} := 132.47$ kips

The DL moments and shears with wearing surface included are:

$M_{DL_0.4L} := M_{girder} + M_{deck} + M_{misc} + M_{DC2} + M_{DW}$

$\boxed{M_{DL_0.4L} = 1379}$ kip-ft

$M_{DL_1.0L} := -(M_{girder_neg} + M_{deck_neg} + M_{misc_neg} + M_{DC2_neg} + M_{DW_neg})$

$\boxed{M_{DL_1.0L} = 3787}$ kip-ft

$V_{DL_1.0L} := -(V_{girder} + V_{deck} + V_{misc} + V_{DC2} + V_{DW})$

$\boxed{V_{DL_1.0L} = 134.7}$ kips

In continuous spans with noncompact noncomposite or composite negative-moment pier sections, the maximum bending strength, M_n, of the composite positive-moment sections shall be taken as either the moment capacity at first yield or as:

$M_n := M_y + A \cdot (M_{u_pier} - M_{s_pier})$ **Std [Eq. 10-129d]**

Where:

M_y	=	the moment capacity at first yield of the compact positive moment section
$(M_{u_pier} - M_{s_pier})$ =		moment capacity of the noncompact section at the pier from [10.48.2] or [10.48.4] minus the elastic moment at the pier for the loading producing maximum positive bending in the span.
A	=	distance from end support to the location of maximum positive moment divided by the span length for end spans.

The moment capacity and first yield, M_y, is computed as follows, considering the application of the factored dead and live loads to the steel and composite sections:

$$F_y = \frac{M_{D1}}{S_{NC}} + \frac{M_{D2}}{S_{LT}} + \frac{M_{AD}}{S_{ST}}$$

Where:

M_{D1} = Bending moment caused by the factored permanent load applied before the concrete deck has hardened or is made composite (kip-in)

S_{NC} = Noncomposite elastic section modulus (in^3)

M_{D2} = Bending moment caused by the factored permanent load applied to the long-term composite section (kip-in)

S_{LT} = Long-term composite elastic section modulus (in^3)

M_{AD} = Additional bending moment that must be applied to the short-term composite section to cause nominal yielding in either steel flange (kip-in)

S_{ST} = Short-term composite elastic section modulus (in^3)

$$M_y = M_{D1} + M_{D2} + M_{AD}$$

$F_y := 50$ ksi

$M_{D1} := 1.3 \cdot (M_{girder} + M_{deck} + M_{misc})$ $\boxed{M_{D1} = 1414}$ kip-ft

$M_{D2} := 1.3 \cdot (M_{DC2} + M_{DW})$ $\boxed{M_{D2} = 378}$ kip-ft

For the bottom flange:

$S_{NC_pos} = 877.63$ in^3

$S_{LT_pos} = 1205.40$ in^3

$S_{ST_pos} = 1319.16$ in^3

$$M_{AD} := \left[\frac{S_{ST_pos}}{12^3} \cdot \left(F_y \cdot 144 - \frac{M_{D1}}{\frac{S_{NC_pos}}{12^3}} - \frac{M_{D2}}{\frac{S_{LT_pos}}{12^3}}\right)\right]$$ $\boxed{M_{AD} = 2956}$ kip-ft

$M_{ybot} := M_{D1} + M_{D2} + M_{AD}$ $\boxed{M_{ybot} = 4749}$ kip-ft

For the top flange:

$S_{NC_pos_top} = 821.67$ in^3

$S_{LT_pos_top} = 3689.31$ in^3

$S_{ST_pos_top} = 15982.90$ in^3

$$M_{AD} := \frac{S_{ST_pos_top}}{12^3} \cdot \left(F_y \cdot 144 - \frac{M_{D1}}{\frac{S_{NC_pos_top}}{12^3}} - \frac{M_{D2}}{\frac{S_{LT_pos_top}}{12^3}} \right)$$ $\boxed{M_{AD} = 37444}$ kip-ft

$M_{ytop} := M_{D1} + M_{D2} + M_{AD}$ $\boxed{M_{ytop} = 39237}$ kip-ft

The yield moment, M_y, is the lesser value computed for both flanges. Therefore, M_y is determined as follows:

$M_y := \min(M_{ybot}, M_{ytop})$ $\boxed{M_y = 4749}$ kip-ft

The moment capacity of the noncompact section at the pier is:

$M_{u_pier} := M_{n_neg}$ $\boxed{M_{u_pier} = 9899}$ kip-ft

From live load analysis software, the elastic moment at the pier for the loading producing maximum positive bending in the span is:

$M_{s_pier} := 4918.05$ kip-ft

The distance from end support to the location of maximum positive moment divided by the span length is:

$A := 0.4$

Therefore:

$M_{n_spv} := M_y + A \cdot (M_{u_pier} - M_{s_pier})$ $\boxed{M_{n_spv} = 6742}$ kip-ft

At the pier, the flexural and shear capacity are equal to the values calculated for the HS20 load:

$M_{n_neg} = 9899$ kip-ft

$V_n = 513.1$ kips

The operating-level rating factors may then be calculated as:

$$RF_{pos} := \frac{M_{n_spv} - 1.3 \cdot M_{DL_0.4L}}{1.3 \cdot M_{LL_0.4L}}$$ $\boxed{RF_{pos} = 1.59}$

$\boxed{RF_{pos} \cdot 190 = 302.2}$ kips

$$RF_{neg} := \frac{M_{n_neg} - 1.3 \cdot M_{DL_1.0L}}{1.3 \cdot M_{LL_1.0L}}$$ $\boxed{RF_{neg} = 2.08}$

$\boxed{RF_{neg} \cdot 190 = 396.0}$ kips

$$RF_{shear} := \frac{V_n - 1.3 \cdot V_{DL_1.0L}}{1.3 \cdot V_{LL_1.0L}}$$ $\boxed{RF_{shear} = 1.96}$

$\boxed{RF_{shear} \cdot 190 = 373.0}$ kips

Combined Moment and Shear at Pier **MBE [L6B2.3]**

$V_D := V_{DL_1.0L} = 134.7$ kips

$V_L := V_{LL_1.0L} = 132.5$ kips

$V_n = 513.1$ kips

$V_p = 783.0$ kips $C = 0.46$

For a composite noncompact section, the initial moment rating factor shall be taken as the smaller of the rating factors determined separately for the compression and tension flange. Stresses (f_D, f_L) are substituted for moments (M_D, M_L).

$M_D := M_{DL_1.0L} = 3787$ kip-ft

$M_L := 1318.04$ kip-ft Concurrent single-lane Wis-SPV live load from analysis software

$$f_D := \max\left(\frac{12 \cdot M_D}{S_{xt}}, \frac{12 \cdot M_D}{S_{xc}}\right)$$ $\boxed{f_D = 19.13}$ ksi

$$f_L := \max\left(\frac{12 \cdot M_L}{S_{xt}}, \frac{12 \cdot M_L}{S_{xc}}\right)$$ $\boxed{f_L = 6.66}$ ksi

$F_n := F_y$

Step 1 - Determine initial rating factors ignoring interaction:

$RF_{v1_op} := RF_{shear}$ $\boxed{RF_{v1_op} = 1.96}$

$RF_{neg} := \dfrac{F_n - 1.3 \cdot f_D}{1.3 \cdot f_L}$ $\boxed{RF_{neg} = 2.90}$

Step 2 - Determine initial controlling rating factor ignoring interaction:

$RF_{mv1_op} := \min(RF_{v1_op}, RF_{m1_op})$ $\boxed{RF_{mv1_op} = 1.96}$

Step 3 - Determine the factored moment and shear using the initial controlling rating factor from Step 2 as follows:

$V_1 := 1.3 \cdot V_D + RF_{shear} \cdot 1.3 \cdot V_L = 513.11$ $\boxed{V_1 = 513.1}$ kips

$f_1 := 1.3 \cdot f_D + RF_{neg} \cdot 1.3 \cdot f_L = 50.00$ $\boxed{f_1 = 50.00}$ ksi

Step 4 - Determine the final controlling rating factor as follows:

$0.6V_n = 308$ kips $V_1 > 0.6V_n$

$0.75F_n = 37.5$ kips $f_1 > 0.75F_n$

CASE D applies:

$$RF_{mvf1_op} := \frac{2.2V_n \cdot F_n - 1.3 \cdot V_D \cdot F_n - 1.6 \cdot 1.3 \cdot f_D \cdot V_n}{1.3 \cdot V_L \cdot F_n + 1.6 \cdot 1.3 \cdot f_L \cdot V_n} = 1.74$$

$$> \quad \frac{C \cdot V_p - 1.3V_D}{1.3 \cdot V_L} = 1.09$$

Therefore

$RF_{vf1_op} := RF_{mvf1_op}$ $\boxed{RF_{vf1_op} = 1.74}$

$RF_{mf1_op} := RF_{mvf1_op}$ $\boxed{RF_{mf1_op} = 1.74}$

Step 5 - If the controlling RF is different than the initial controlling RF, repeat Steps 2-4 (using the final controlling RF as the initial controlling RF):

$RF_{mv2_op} := \min(RF_{vf1_op}, RF_{mf1_op}) = 1.74$ $\boxed{RF_{mv2_op} = 1.74}$

$V_2 := 1.3 \cdot V_D + RF_{mv2_op} \cdot 1.3 \cdot V_L = 473.91$ $\boxed{V_2 = 473.9}$ kips

$V_2 > 0.6V_n$

$f_2 := 1.3 \cdot f_D + RF_{mv2_op} \cdot 1.3 \cdot f_L = 39.89$ $\boxed{f_2 = 39.89}$ ksi

$M_2 > 0.75M_{n_neg}$

CASE D applies again, so the calculation does not need to be repeated.

$RF_{mvf_op} := RF_{mf1_op}$ $\boxed{RF_{mvf_op} = 1.74}$

$\boxed{RF_{mvf_op} \cdot 190 = 329.7}$ kips

Flexure at Positive Moment Controls

> 190k minimum : CHECK OK

E45-8.12.2 - Wis-SPV Permit Rating with Single Lane Distribution w/o FWS

For use with plans and rating sheet only.

By inspection, since the governing limit state and location for the single-lane Wis-SPV w/ FWS was positive moment at 0.4L, it will be the same for the single-lane Wis-SPV w/o FWS.

The positive moment capacity which is based upon M_y and M_s needs to be recalculated.

$M_y := 4768$ kip-ft from HS20 calculation w/o FWS

From live load analysis software, the elastic moment at the pier for the loading producing maximum positive bending in the span is:

$M_{s_pier} := 4431.52$ kip-ft

Therefore:

$M_{n_spv} := M_y + A \cdot (M_{u_pier} - M_{s_pier})$ $\boxed{M_{n_spv} = 6955}$ kip-ft

$M_{DL_0.4L} := M_{DL_0.4L} - M_{DW}$ $\boxed{M_{DL_0.4L} = 1224}$ kip-ft

$$RF_{pos} := \frac{M_{n_spv} - 1.3 \cdot M_{DL_0.4L}}{1.3 \cdot M_{LL_0.4L}}$$

$\boxed{RF_{pos} = 1.72}$

$\boxed{RF_{pos} \cdot 190 = 327.6}$ kips

E45-8.12.3 - Wis-SPV Permit Rating with Multi-Lane Distribution

The multi-lane SPV check is calculated w/o future wearing surface. The governing location and the flexural capacity are equal to the results from the single-lane analysis. From live load analysis software, the maximum moment at 0.4L is:

$M_{LL_0.4L} := 3046.21$ kip-ft

$$RF_{pos} := \frac{M_{n_spv} - 1.3 \cdot M_{DL_0.4L}}{1.3 \cdot M_{LL_0.4L}}$$

$\boxed{RF_{pos} = 1.35}$

$\boxed{RF_{pos} \cdot 190 = 257.4}$ kips

E45-8.13 Summary of Rating

Steel Interior Girder					
Limit State	Design Load Rating		Wis-SPV Ratings (kips)		
	Inventory	Operating	Single Lane w/ FWS	Single Lane w/o FWS	Multi Lane w/o FWS
Flexure @ 0.4L	HS 31	HS 52	302	327	257
Flexure @ 1.0L	HS 25	HS 42	396	N/A	N/A
Shear @ 1.0L	HS 40	HS 67	373	N/A	N/A
Combined Shear & Flexure @ 1.0L	HS 27	HS 46	329	N/A	N/A