Table of Contents

13.1 General 3
13.1.1 Pier Type and Configuration 3
13.1.2 Bottom of Footing Elevation 3
13.1.3 Pier Construction 4
13.2 Pier Types 5
13.2.1 Multi-Column Piers 5
13.2.2 Pile Bents 6
13.2.3 Pile Encased Piers 7
13.2.4 Solid Single Shaft / Hammerheads 8
13.2.5 Aesthetics 9
13.3 Location 10
13.4 Loads on Piers 11
13.4.1 Dead Loads 11
13.4.2 Live Loads 11
13.4.3 Vehicular Braking Force 12
13.4.4 Wind Loads 12
13.4.4.1 Wind Load from the Superstructure 14
13.4.4.2 Wind Load Applied Directly to Substructure 15
13.4.4.3 Wind Load on Vehicles 16
13.4.4.4 Vertical Wind Load 17
13.4.5 Uniform Temperature Forces 17
13.4.6 Force of Stream Current 20
13.4.6.1 Longitudinal Force 20
13.4.6.2 Lateral Force 20
13.4.7 Buoyancy 21
13.4.8 Ice 22
13.4.8.1 Force of Floating Ice and Drift 22
13.4.8.2 Force Exerted by Expanding Ice Sheet 23
13.4.9 Centrifugal Force 24
13.4.10 Extreme Event Collision Loads 24
13.5 Load Application 26

13.5.1 Loading Combinations 26
13.5.2 Expansion Piers 26
13.5.3 Fixed Piers 27
13.6 Multi-Column Pier and Cap Design 28
13.7 Hammerhead Pier Cap Design 30
13.7.1 Draw the Idealized Truss Model 31
13.7.2 Solve for the Member Forces 33
13.7.3 Check the Size of the Bearings 33
13.7.4 Design Tension Tie Reinforcement 34
13.7.5 Check the Compression Strut Capacity 35
13.7.6 Check the Tension Tie Anchorage 38
13.7.7 Provide Crack Control Reinforcement 38
13.8 General Pier Cap Information 40
13.9 Column / Shaft Design 42
13.10 Pile Bent and Pile Encased Pier Analysis 44
13.11 Footing Design 45
13.11.1 General Footing Considerations 45
13.11.2 Isolated Spread Footings 46
13.11.3 Isolated Pile Footings 48
13.11.4 Continuous Footings 50
13.11.5 Cofferdams and Seals 51
13.12 Quantities 54
13.13 Design Examples 55

13.1 General

Piers are an integral part of the load path between the superstructure and the foundation. Piers are designed to resist the vertical loads from the superstructure, as well as the horizontal superstructure loads not resisted by the abutments. The magnitude of the superstructure loads applied to each pier shall consider the configuration of the fixed and expansion bearings, the bearing types and the relative stiffness of all of the piers. The analysis to determine the horizontal loads applied at each pier must consider the entire system of piers and abutments and not just the individual pier. The piers shall also resist loads applied directly to them, such as wind loads, ice loads, water pressures and vehicle impact.

Bridges being designed with staged construction, whether new or rehabilitation, shall satisfy the requirements of LRFD (or LFD, if applicable) for each construction stage. Utilize the same load factors, resistance factors, load combinations, etc. as required for the final configuration, unless approved by Chief Structures Development Engineer at WisDOT.

WisDOT policy item:

Pier configurations shall be determined by providing the most efficient cast-in-place concrete pier design, unless approved otherwise. See 7.1.4.1.2 for policy guidance. Contact the Bureau of Structures Development Section for further guidance.

13.1.1 Pier Type and Configuration

Many factors are considered when selecting a pier type and configuration. The engineer should consider the superstructure type, the characteristics of the feature crossed, span lengths, bridge width, bearing type and width, skew, required vertical and horizontal clearance, required pier height, aesthetics and economy. For bridges over waterways, the pier location relative to the floodplain and scour sensitive regions shall also be considered.

The connection between the pier and superstructure is usually a fixed or expansion bearing which allows rotation in the longitudinal direction of the superstructure. This has the effect of eliminating longitudinal moment transfer between the superstructure and the pier. In rare cases when the pier is integral with the superstructure, this longitudinal rotation is restrained and moment transfer between the superstructure and the pier occurs. Pier types illustrated in the Standard Details shall be considered to be a pinned connection to the superstructure.

On grades greater than 2 percent, the superstructure tends to move downhill towards the abutment. The low end abutment should be designed as fixed and the expansion joint or joints placed on the uphill side or high end abutment. Consideration should also be given to fixing more piers than a typical bridge on a flat grade.

13.1.2 Bottom of Footing Elevation

The bottom of footing elevation for piers outside of the floodplain is to be a minimum of 4’ below finished ground line unless the footings are founded on solid rock. This requirement is intended to place the bottom of the footing below the frost line.

A minimum thickness of 2'-0" shall be used for spread footings and 2'-6" for pile-supported footings. Spread footings are permitted in streams only if they are founded on rock. Pile cap footings are allowed above the ultimate scour depth elevation if the piling is designed assuming the full scour depth condition.

The bottom of footing elevation for pile cap footings in the floodplain is to be a minimum of 6' below stable streambed elevation. Stable streambed elevation is the normal low streambed elevation at a given pier location when not under scour conditions. When a pile cap footing in the floodplain is placed on a concrete seal, the bottom of footing is to be a minimum of 4' below stable streambed elevation. The bottom of concrete seal elevation is to be a minimum of 8' below stable streambed elevation, except when used for pile encased piers. These requirements are intended to guard against the effects of scour.

13.1.3 Pier Construction

Except as allowed for pile encased piers (see 13.2.3) and seal concrete for footings, all footing and pier concrete shall be placed in the dry. Successful underwater concreting requires special concrete mixes, additives and placement procedures, and the risk of error is high. A major concern in underwater concreting is that the water in which the concrete is placed will wash away cement and sand, or mix with the concrete, and increase the water-to-cement ratio. It was previously believed that if the lower end of the tremie is kept immersed in concrete during a placement, then the new concrete flows under and is protected by previously placed concrete. However, tests performed at the University of California at Berkeley show that concrete exiting a tremie pipe may exhibit many different flow patterns exposing more concrete to water than expected. A layer of soft, weak and water-laden mortar called laitance may also form within the pour. Slump tests do not measure shear resistance, which is the best predictor of how concrete will flow after exiting a tremie pipe.

Footing excavation adjacent to railroad tracks which falls within the critical zone shown on Standard for Highway Over Railroad Design Requirements requires an approved shoring system. Excavation, shoring and cofferdam costs shall be considered when evaluating estimated costs for pier construction, where applicable. Erosion protection is required for all excavations.

13.2 Pier Types

The pier types most frequently used in Wisconsin are:

- Multi-column piers (Standards for Multi-Columned Pier and for Multi-Columned Pier – Type 2)
- Pile bents (Standard for Pile Bent)
- Pile encased piers (Standard for Pile Encased Pier)
- Solid single shaft / hammerheads (Standards for Hammerhead Pier and for Hammerhead Pier – Type 2)

Design loads shall be calculated and applied to the pier in accordance with 13.4 and 13.5. The following sections discuss requirements specific to each of the four common pier types.

13.2.1 Multi-Column Piers

Multi-column piers, as shown in Standard for Multi-Columned Pier, are the most commonly used pier type for grade separation structures. Refer to 13.6 for analysis guidelines.

A minimum of three columns shall be provided to ensure redundancy should a vehicular collision occur. If the pier cap cantilevers over the outside columns, a square end treatment is preferred over a rounded end treatment for constructability. WisDOT has traditionally used round columns. Column spacing for this pier type is limited to a maximum of 25'.

Multi-column piers are also used for stream crossings. They are especially suitable where a long pier is required to provide support for a wide bridge or for a bridge with a severe skew angle.

Continuous or isolated footings may be specified for multi-column piers. The engineer should determine estimated costs for both footing configurations and choose the more economical configuration. Where the clear distance between isolated footings would be less than 4'-6", a continuous footing shall be specified.

A variation of the multi-column pier in Standard for Multi-Columned Pier is produced by omitting the cap and placing a column under each girder. This detail has been used for steel girders with girder spacing greater than 12'. This configuration is treated as a series of single column piers. The engineer shall consider any additional forces that may be induced in the superstructure cross frames at the pier if the pier cap is eliminated. The pier cap may not be eliminated for piers in the floodplain, or for continuous slab structures which need the cap to facilitate replacement of the slab during future rehabilitation.

See Standard for Highway Over Railroad Design Requirements for further details on piers supporting bridges over railways.

13.2.2 Pile Bents

Pile bents are most commonly used for small to intermediate stream crossings and are shown on the Standard for Pile Bent.

Pile bents shall not be used to support structures over roadways or railroads due to their susceptibility to severe damage should a vehicular collision occur.

For pile bents, pile sections shall be limited to 12¾" or 14" diameter cast-in-place reinforced concrete piles with steel shells spaced at a minimum center-to-center spacing of 3'. A minimum of five piles per pier shall be used on pile bents. When a satisfactory design cannot be developed with one of these pile sections at the minimum spacing, another pier type should be selected. The outside piles shall be battered 2" per foot, and the inside piles shall be driven vertically. WisDOT does not rely on the shell of CIP piles for capacity; therefore these piles are less of a concern for long term reduced capacity due to corrosion than steel H-piles. For that reason the BOS Development Chief must give approval for the use of steel H-piles in open pile bents.

Because of the minimum pile spacing, the superstructure type used with pile bents is generally limited to cast-in-place concrete slabs, prestressed girders and steel girders with spans under approx. 70' and precast, prestressed box girders less than 21" in height.

To ensure that pile bents are capable of resisting the lateral forces resulting from floating ice and debris or expanding ice, the maximum distance from the top of the pier cap to the stable streambed elevation, including scour, is limited to:

- 15' for 12¾" diameter piles (or 12" H-piles if exception is granted).
- 20' for 14" diameter piles (or 14" H-piles if exception is granted).

Use of the pile values in Table 11.3-5 or Standard for Pile Details is valid for open pile bents due to the exposed portion of the pile being inspectable.

The minimum longitudinal reinforcing steel in cast-in-place piles with steel shells is 6-#7 bars in 12" piles and 8-#7 bars in 14" piles. The piles are designed as columns fixed from rotation in the plane of the pier at the top and at some point below streambed.

All bearings supporting a superstructure utilizing pile bents shall be fixed bearings or semi-expansion.

Pile bents shall meet the following criteria:

- If the water velocity, Q_{100}, is greater than 7 ft/sec, the quantity of the 100-year flood shall be less than 12,000 ft^3/sec.
- If the streambed consists of unstable material, the velocity of the 100-year flood shall not exceed 9 ft/sec.

Pile bents may only be specified where the structure is located within Area 3, as shown in the *Facilities Development Manual 13-1-15*, *Attachment 15.1* and where the piles are not exposed to water with characteristics that are likely to cause accelerated corrosion.

The minimum cap size shall be 3' wide by 3'-6" deep and the piles shall be embedded into the cap a minimum of 2'-0.

13.2.3 Pile Encased Piers

Pile encased piers are similar to pile bents except that a concrete encasement wall surrounds the piles. They are most commonly used for small to intermediate stream crossings where a pile bent pier is not feasible. Pile encased piers are detailed on Standard for Pile Encased Pier.

An advantage of this pier type is that the concrete encasement wall provides greater resistance to lateral forces than a pile bent. Also the hydraulic characteristics of this pier type are superior to pile bents, resulting in a smoother flow and reducing the susceptibility of the pier to scour at high water velocities. Another advantage is that floating debris and ice are less likely to accumulate against a pile encased pier than between the piles of a pile bent. Debris and ice accumulation are detrimental because of the increased stream force they induce. In addition, debris and ice accumulation cause turbulence at the pile, which can have the effect of increasing the local scour potential.

Pile sections shall be limited to 10", 12" or 14" steel HP piles, or 10¾", 12¾" or 14" diameter cast-in-place concrete piles with steel shells. Minimum center-to-center spacing is 3'. Where difficult driving conditions are expected, oil field pipe may be specified in the design. A minimum of five piles per pier shall be used. When a satisfactory design cannot be developed with one of these pile sections at the minimum spacing, another pier type should be selected. The inside and outside piles shall be driven vertically.

In most cases, pile encasement concrete may be poured underwater. While there are known risks with underwater concreting, this allowance has provided a cost-effective solution for small to intermediate stream crossings and past experience indicates concrete can be properly placed for encasement purposes. To help ensure minimum construction practices are being specified on a project, three pile encased pier types should be considered during the design process. These types are based on water depth and provide bid items, as necessary, to better ensure concrete can be properly placed. For the below discussions, water depth "H" is defined as the normal (or observed) water elevation minus the bottom of pier concrete elevation. Other factors such as velocity and the 2-year water elevation should also be considered when selecting pier types. The pile encased pier types are as follows:

- Type 1 (H ≤ 5.0'): For low water depths, the contractor may elect to furnish a cofferdam or other means to construct the pier per the plans and specifications. This may include underwater concreting or placing concrete in the dry. Additional bid items are not needed, and all work associated with properly constructing the pier shall be considered incidental to pier construction. Note: A cofferdam may be required due to environmental concerns. See 13.11.5 for additional guidance.

- Type 2 (5.0’ < H ≤ 10.0’): For moderate water depths, a cofferdam should be used to ensure that the concrete placed underwater is sound and to the limits shown on the plans. At a minimum, the cofferdam will remove the running water condition, stabilize excavations for the placement of forms, improve inspection conditions, and may allow dewatering, if needed. Bid item “Cofferdams (Structure)” is required and bid item “Underwater Substructure Inspection (Structure)” is required to inspect the concrete quality prior to removing the cofferdam.

- Type 3 (H > 10.0’): For high water depths, underwater concreting becomes increasingly difficult and is likely beyond the maximum practical depth for setting formwork and placing the reinforcing steel. As such, underwater concreting should be avoided and pier concrete should be placed in the dry. While this pier construction type may increase the initial pier construction cost, it will provide better quality concrete and avoid costly repairs. Alternative pier types (Hammerhead or Solid Wall) should also be considered during the design process to determine the most effective pier type. Bid item “Cofferdams (Structure)” is required and bid item “Concrete Masonry Seal” will most likely be required. The bid item “Underwater Substructure Inspection (Structure)” is not required when pier concrete will be poured in the dry.

Pile encased pier Types are detailed on Standard for Pile Encased Pier (Type). See 13.11.5 for additional guidance regarding cofferdams and seals. Total pier height shall be less than 25 feet.

All bearings supporting a superstructure utilizing pile encased piers shall be fixed bearings or semi-expansion.

The connection between the superstructure and the pier shall be designed to transmit the portion of the superstructure design loads assumed to be taken by the pier.

The concrete wall shall be a minimum of 2’-6” thick. The top 3’ of the wall is made wider if a larger bearing area is required. See Standard for Pile Encased Pier for details. The bottom of the wall shall be placed 2’ to 4’ below stable streambed elevation, depending upon stream velocities and frost depth.

13.2.4 Solid Single Shaft / Hammerheads

Solid single shaft piers are used for all types of crossings and are detailed on Standards for Hammerhead Pier and for Hammerhead Pier – Type 2. The choice between using a multi-column pier and a solid single shaft pier is based on economics and aesthetics. For high level bridges, a solid single shaft pier is generally the most economical and attractive pier type available.

The massiveness of this pier type provides a large lateral load capacity to resist the somewhat unpredictable forces from floating ice, debris and expanding ice. They are suitable for use on major rivers adjacent to shipping channels without additional pier protection. When used adjacent to railroad tracks, crash walls are not required.

If a cofferdam is required and the upper portion of a single shaft pier extends over the cofferdam, an optional construction joint is provided 2' above the normal water elevation. Since the cofferdam sheet piling is removed by extracting vertically, any overhead obstruction prevents removal and this optional construction joint allows the contractor to remove sheet piling before proceeding with construction of the overhanging portions of the pier.

A hammerhead pier shall not be used when the junction between the cap and the shaft would be less than the cap depth above normal water. Hammerhead piers are not considered aesthetically pleasing when the shaft exposure above water is not significant. A feasible alternative in this situation would be a wall type solid single shaft pier or a multi-column pier. On a wall type pier, both the sides and ends may be sloped if desired, and either a round, square or angled end treatment is acceptable. If placed in a waterway, a square end type is less desirable than a round or angled end.

13.2.5 Aesthetics

Refer to Chapter 4 for additional information about aesthetics.

13.3 Location

Piers shall be located to provide a minimum interference to flood flow. In general, place the piers parallel with the direction of flood flow. Make adequate provision for drift and ice by increasing span lengths and vertical clearances, and by selecting proper pier types. Special precautions against scour are required in unstable streambeds. Navigational clearance shall be considered when placing piers for bridges over navigable waterways. Coordination with the engineer performing the hydraulic analysis is required to ensure the design freeboard is met, the potential for scour is considered, the hydraulic opening is maintained and the flood elevations are not adversely affected upstream or downstream. Refer to Chapter 8 for further details.

In the case of railroad and highway separation structures, the spacing and location of piers and abutments is usually controlled by the minimum horizontal and vertical clearances required for the roadway or the railroad. Other factors such as utilities or environmental concerns may influence the location of the piers. Sight distance can impact the horizontal clearance required for bridges crossing roadways on horizontally curved alignments. Requirements for vertical and horizontal clearances are specified in Chapter 3 – Design Criteria. Crash wall requirements are provided on Standard for Highway Over Railroad Design Requirements.

Cost may also influence the number of piers, and therefore the number of spans, used in final design. During the planning stages, an analysis should be performed to determine the most economical configuration of span lengths versus number of piers that meet all of the bridge site criteria.

13.4 Loads on Piers

The following loads shall be considered in the design of piers. Also see 13.5 for additional guidance regarding load application.

13.4.1 Dead Loads

The dead load forces, DC and DW, acting on the piers shall include reactions from the superstructure. DC dead loads include structural components and nonstructural attachments, and DW dead loads include wearing surfaces and utilities. The pier diaphragm weight may be applied through the girders. Different load factors are applied to each of these dead load types.

For a detailed discussion of the application of dead load, refer to 17.2.4.1.

13.4.2 Live Loads

The HL-93 live load shall be used for all new bridge designs and is placed in 12'-wide design lanes. If fewer lane loads are used than what the roadway width can accommodate, the loads shall be kept within their design lanes. The design lanes shall be positioned between the curbs, ignoring shoulders and medians, to maximize the effect being considered. Refer to 17.2.4.2 for a detailed description of the HL-93 live load. For pier design, particular attention should be given to the double truck load described in 17.2.4.2.4. This condition places two trucks, spaced a minimum of 50' apart, within one design lane and will often govern the maximum vertical reaction at the pier.

WisDOT policy items:

A 10 foot design lane width may be used for the distribution of live loads to a pier cap.

The dynamic load allowance shall be applied to the live load for all pier elements located above the ground line per **LRFD [3.6.2]**.

For girder type superstructures, the loads are transmitted to the pier through the girders. For pier design, simple beam distribution is used to distribute the live loads to the girders. The wheel and lane loads are therefore transversely distributed to the girders by the lever rule as opposed to the Distribution Factor Method specified in **LRFD [4.6.2.2.2]**. The lever rule linearly distributes a portion of the wheel load to a particular girder based upon the girder spacing and the distance from the girder to the wheel load. The skew of the structure is not considered when calculating these girder reactions. Refer to 17.2.10 for additional information about live load distribution to the substructure and to Figure 17.2-17 for application of the lever rule.

For slab type superstructures, the loads are assumed to be transmitted directly to the pier without any transverse distribution. This assumption is used even if the pier cap is not integral with the superstructure. The HL-93 live load is applied as concentrated wheel loads combined with a uniform lane load. The skew of the structure is considered when applying these loads to the cap. The lane width is then divided by the cosine of the skew angle, and the load is distributed over the new lane width along the pier centerline.

As a reminder, the live load force to the pier for a continuous bridge is based on the *reaction*, not the sum of the adjacent span shear values. A pier beneath non-continuous spans (at an expansion joint) uses the sum of the reactions from the adjacent spans.

13.4.3 Vehicular Braking Force

Vehicular braking force, BR, is specified in **LRFD [3.6.4]** and is taken as the greater of:

- 25% of the axle loads of the design truck
- 25% of the axle loads of the design tandem
- 5% of the design truck plus lane load
- 5% of the design tandem plus lane load

The loads applied are based on loading one-half the adjacent spans. Do not use a percentage of the live load reaction. All piers receive this load. It is assumed that the braking force will be less than the dead load times the bearing friction value and all force will be transmitted to the given pier. The tandem load, even though weighing less than the design truck, must be considered for shorter spans since not all of the axles of the design truck may be able to fit on the tributary bridge length.

This force represents the forces induced by vehicles braking and may act in all design lanes. The braking force shall assume that traffic is traveling in the same direction for all design lanes as the existing lanes may become unidirectional in the future. This force acts 6' above the bridge deck, but the longitudinal component shall be applied at the bearings. It is not possible to transfer the bending moment of the longitudinal component acting above the bearings on typical bridge structures. The multiple presence factors given by **LRFD [3.6.1.1.2]** shall be considered. Per **LRFD [3.6.2.1]**, the dynamic load allowance shall not be considered when calculating the vehicular braking force.

13.4.4 Wind Loads

The design (3-second gust) wind speed (V) used in the determination of horizontal wind loads on superstructure and substructure units shall be taken from **LRFD [Table 3.8.1.1.2-1]**. The load combinations associated with the design of piers for wind load are Strength III, Strength V, and Service I. Their design wind speeds are:

- V =115 mph (Strength III)
- V = 80 mph (Strength V)
- V = 70 mph (Service I)

The wind pressure (P_Z) shall be determined as:

$P_Z = 2.56 \times 10^{-6} (V)^2 \cdot K_Z \cdot G \cdot C_D$ **LRFD [3.8.1.2.1]**

Where:

P_Z = design wind pressure (ksf)

V = design wind speed (mph) – (as stated above)

K_Z = pressure exposure and elevation coefficient

K_Z for Strength III is a function of ground surface roughness category as described in **LRFD [3.8.1.1.4]** and wind exposure category as described in **LRFD [3.8.1.1.5, 3.8.1.1.3]**, and is determined using **LRFD [Eq'ns 3.8.1.2.1-2**, **3.8.1.2.1-3**, **or 3.8.1.2.1-4]**.

- K_Z (Strength III) = see **LRFD [Table C3.8.1.2.1-1]**

K_Z for Strength V and Service I is not a function of bridge height, type, and wind exposure category **LRFD [3.8.1.2]**, and their values are:

- K_Z (Strength V) = 1.0
- K_Z (Service I) = 1.0

G = gust effect factor

- G (Strength III) = 1.0 **LRFD [Table 3.8.1.2.1-1]**
- G (Strength V) = 1.0 **LRFD [3.8.1.2.1]**
- G (Service I) = 1.0 **LRFD [3.8.1.2.1]**

C_D = drag coefficient for Strength III, Strength V, Service I **LRFD [Table 3.8.1.2.1-2]**

- C_D (girder/slab -superstructure) = 1.3
- C_D (substructure) = 1.6

Substituting these values into the equation for wind pressure (P_Z) gives:

- Strength III – P_Z (girder/slab -superstructure) = $0.044 \cdot (K_Z)$ ksf
  P_Z (substructure) = $0.054 \cdot (K_Z)$ ksf
- Strength V – P_Z (girder/slab -superstructure) = 0.021 ksf
  P_Z (substructure) = 0.026 ksf
- Service I – P_Z (girder/slab -superstructure) = 0.016 ksf
  P_Z (substructure) = 0.020 ksf

Wind pressure shall be assumed to be uniformly distributed on the area exposed to the wind. The exposed area shall be the sum of the area of all components as seen in elevation taken perpendicular to the wind direction. See 13.4.4.1 and 13.4.4.2 for additional information regarding application of these wind pressures.

Wind loads are divided into the following four types.

13.4.4.1 Wind Load from the Superstructure

The transverse and longitudinal wind load (WS_{SUPER}) components transmitted by the superstructure to the substructure for various angles of wind direction may be taken as the product of the skew coefficients specified in **LRFD [Table 3.8.1.2.3a-1]**, the wind pressure (P_Z) calculated as shown in 13.4.4, and the depth of the superstructure, as specified in **LRFD [3.8.1.2.3a]**. The depth shall be as seen in elevation perpendicular to the longitudinal axis of the bridge.

Both components of the wind loads shall be applied as line loads. The longitudinal component shall be applied at the bearing elevation, and the transverse component shall be applied at the mid-depth of the superstructure. In plan, the longitudinal components of wind loads shall be applied as line loads along the longitudinal axis of the superstructure. The purpose of applying the line load along the longitudinal axis of the bridge in plan is to avoid introducing a moment in the horizontal plane of the superstructure. The skew angle shall be taken as measured from the perpendicular to the longitudinal axis of the bridge in plan. Wind direction for design shall be that which produces the maximum force effect in the substructure. The transverse and longitudinal wind load components on the superstructure shall be applied simultaneously.

For girder bridges, the wind loads may be taken as the product of the wind pressure, skew coefficients, and the depth of the superstructure including the depth of the girder, deck, floor system, parapet, and sound barrier. Do not apply wind pressure to open rails or fences. Do apply wind pressure to all parapets, including parapets located between the roadway and the sidewalk if there is an open rail or fence on the edge of the sidewalk.

For usual girder and slab bridges having an individual span length of not more than 150 ft. (160 ft. for prestressed girders) and a maximum height of 33 ft. above low ground or water level, the following simplified method for wind load components (WS_{SUPER}) may be used:

- Transverse: 100% of the wind load calculated based on wind direction perpendicular to the longitudinal axis of the bridge.

- Longitudinal: 25% of the transverse load.

The wind load components are to be multiplied by the tributary length that the wind load is applied to, as described in 13.5, to produce the wind forces in the transverse and longitudinal directions.

Both forces shall be applied simultaneously.

WisDOT policy item:

For usual girder and slab bridges having an individual span length of not more than 150 ft. (160 ft. for prestressed girders) and a maximum height of 33 ft. above low ground or water level, the following simplified method for wind load components (WS_{SUPER}) may be used:

Strength III:

- 0.044 ksf, transverse
- 0.011 ksf, longitudinal

Strength V:

- 0.021 ksf, transverse
- 0.006 ksf, longitudinal

Service I:

- 0.016 ksf, transverse
- 0.004 ksf, longitudinal

Both forces shall be applied simultaneously. Do not apply to open rails or fences. Do apply this force to all parapets, including parapets located between the roadway and sidewalk if there is an open rail or fence on the edge of the sidewalk.

13.4.4.2 Wind Load Applied Directly to Substructure

The transverse and longitudinal wind loads (WS_{SUB}) to be applied directly to the substructure shall be calculated using the wind pressure (P_Z) determined as shown in 13.4.4, and as specified in **LRFD [3.8.1.2.3b]**. For wind directions taken skewed to the substructure, the wind pressure shall be resolved into components perpendicular to the end and front elevations of the substructure. The component perpendicular to the end elevation shall act on the exposed substructure area as seen in end elevation, and the component perpendicular to the front elevation shall act on the exposed substructure area as seen in the front elevation. The resulting wind forces shall be taken as the product of the value of resolved (P_Z) components acting on the end and front elevations, times its corresponding exposed area. These forces are applied at the centroid of the exposed area. The two substructure wind force components shall be applied simultaneously with the wind forces from the superstructure.

When combining the wind forces applied directly to the substructure with the wind forces transmitted to the substructure from the superstructure, all wind forces should correspond to wind blowing from the same direction.

WisDOT policy item:

The following conservative values for wind applied directly to the substructure, (WS_{SUB}), may be used for all bridges:

Strength III:

- 0.054 ksf, transverse
- 0.054 ksf, longitudinal

Strength V:

- 0.026 ksf, transverse
- 0.026 ksf, longitudinal

Service I:

- 0.020 ksf, transverse
- 0.020 ksf, longitudinal

Both forces shall be applied simultaneously.

13.4.4.3 Wind Load on Vehicles

Wind load on live load (WL) shall be represented by an interruptible, moving force of 0.10 klf acting transverse to, and 6.0 ft. above, the roadway and shall be transmitted to the structure as specified in **LRFD [3.8.1.3]**. The load combinations that are associated with this load are Strength V and Service I.

For various angles of wind direction, the transverse and longitudinal components of the wind load on live load may be taken as specified in **LRFD [Table 3.8.1.3-1]** with the skew angle measured from the perpendicular to the longitudinal axis of the bridge in plan.

The wind direction for design shall be that which produces the extreme force effect on the component under investigation. The transverse and longitudinal wind load components on the live load shall be applied simultaneously. The longitudinal component shall be applied at the bearing elevation, and the transverse component shall be applied at 6.0 ft. above the roadway surface.

For usual girder and slab bridges having an individual span length of not more than 150 ft. (160 ft. for prestressed girders) and a maximum height of 33 ft. above low ground or water level, the following simplified method for wind load components on live load (WL) may be used:

- 0.10 klf , transverse (Strength V, Service I)
- 0.04 klf , longitudinal (Strength V, Service I)

The wind load components are to be multiplied by the tributary length that the wind load is applied to, as described in 13.5, to produce the wind forces in the transverse and longitudinal directions.

Both forces shall be applied simultaneously.

This horizontal wind load (WL) should be applied only to the tributary lengths producing a force effect of the same kind, similar to the design lane load. These loads are applied in conjunction with the horizontal wind loads described in 13.4.4.1 and 13.4.4.2.

13.4.4.4 Vertical Wind Load

The effect of wind forces tending to overturn structures, unless otherwise determined according to **LRFD [3.8.3]**, shall be calculated as a vertical upward wind load (WS_{VERT}) as specified in **LRFD [3.8.2]**, and shall be equal to:

- 0.020 ksf (Strength III)

times the width of the deck, including parapets and sidewalks, and shall be applied as a longitudinal line load. This load shall be applied only when the direction of horizontal wind is taken to be perpendicular to the longitudinal axis of the bridge. This line load shall be applied at the windward ¼ point of the deck width, which causes the largest upward force at the windward fascia girder. This load is applied in conjunction with the horizontal wind loads described in 13.4.4.1 and 13.4.4.2.

WisDOT policy item:

If WisDOT policy items are being applied in 13.4.4.1 and 13.4.4.2, assume the wind direction is perpendicular to the longitudinal axis of the bridge and apply the vertical wind load as described above.

The vertical wind load (WS_{VERT}) is applied with load combinations that do not involve wind on live load, because the high wind velocity associated with this load would limit vehicles on the bridge, such as for load combination Strength III. The wind load shall be multiplied by the tributary length that the wind load is applied to, as described in 13.5, to produce the vertical wind force.

13.4.5 Uniform Temperature Forces

Temperature changes in the superstructure cause it to expand and contract along its longitudinal axis. These length changes induce forces in the substructure units based upon the fixity of the bearings, as well as the location and number of substructure units. The skew angle of the pier shall be considered when determining the temperature force components.

In determining the temperature forces, TU, applied to each substructure unit, the entire bridge superstructure length between expansion joints is considered. In all cases, there is a neutral point on the superstructure which does not move due to temperature changes. All temperature movements will then emanate outwards or inwards from this neutral point. This point is determined by assuming a neutral point. The sum of the expansion forces and fixed pier forces on one side of the assumed neutral point is then equated to the sum of the expansion forces and fixed pier forces on the other side of the assumed neutral point. Maximum friction coefficients are assumed for expansion bearings on one side of the assumed neutral point and minimum coefficients are assumed on the other side to produce the greatest unbalanced force for the fixed pier(s) on one side of the assumed neutral point. The maximum and minimum coefficients are then reversed to produce the greatest unbalanced force for the pier(s) on the other side of the assumed neutral point. For semi-expansion abutments, the assumed minimum friction coefficient is 0.06 and the maximum is 0.10. For laminated elastomeric bearings, the force transmitted to the pier is the shear force generated in the bearing due to temperature movement. Example E27-1.8 illustrates the calculation of this force. Other expansion bearing values can be found in Chapter 27 – Bearings. When writing the equation to balance forces, one can set the distance from the fixed pier immediately to one side of the assumed neutral point as 'X' and the fixed pier immediately to the other side as (Span Length – 'X'). This is illustrated in Figure 13.4-1.

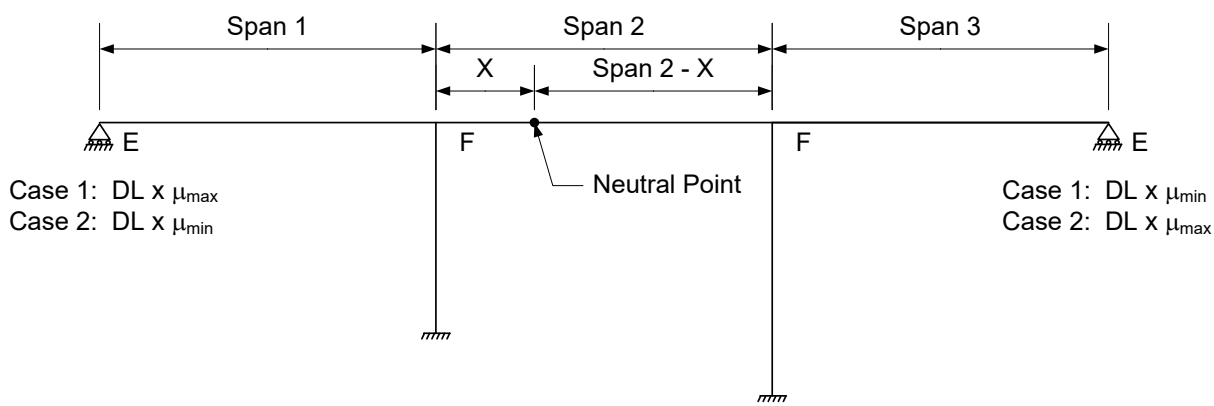

$$\text{Case1: } \sum DL \times \mu_{max} + \sum \frac{3EI\alpha TX}{144h^3} = \sum \frac{3EI\alpha T(\text{Span } 2 - X)}{144h^3} + \sum DL \times \mu_{min}$$

(Lt. Abutment) (Pier 1) (Pier 2) (Rt. Abutment)

Figure 13.4-1
Neutral Point Location with Multiple Fixed Piers

As used in Figure 13.4-1:

E = Column or shaft modulus of elasticity (ksi)

I	=	Column or shaft gross moment of inertia about longitudinal axis of the pier (in^4)
α	=	Superstructure coefficient of thermal expansion (ft/ft/°F)
T	=	Temperature change of superstructure (°F)
μ	=	Coefficient of friction of the expansion bearing (dimensionless)
h	=	Column height; top of footing to top of cap (ft)
DL	=	Total girder dead load reaction at the bearing (kips)
X	=	Distance between the fixed pier and the neutral point (ft)

The temperature force on a single fixed pier in a bridge is the resultant of the unbalanced forces acting on the substructure units. Maximum friction coefficients are assumed for expansion bearings on one side of the pier and minimum coefficients are assumed on the other side to produce the greatest unbalanced force on the fixed pier. For bridges with only one pier (fixed), do not include temperature force, TU, in the design of the pier when the abutments are either fixed or semi-expansion.

The temperature changes in superstructure length are assumed to be along the longitudinal axis of the superstructure regardless of the substructure skew angle. This assumption is more valid for steel structures than for concrete structures.

The force on a column with a fixed bearing due to a temperature change in length of the superstructure is:

$$F = \frac{3EI\alpha TL}{144h^3}$$

Where:

L	=	Superstructure expansion length between neutral point and location being considered (ft)
F	=	Force per column applied at the bearing elevation (kips)

This force shall be resolved into components along both the longitudinal and transverse axes of the pier.

The values for computing temperature forces in Table 13.4-1 shall be used on Wisconsin bridges. Do not confuse this temperature change with the temperature range used for expansion joint design.

	Reinforced Concrete	Steel
Temperature Change	45 °F	90 °F
Coefficient of Thermal Expansion	0.0000060/°F	0.0000065/°F

Table 13.4-1
Temperature Expansion Values

Temperature forces on bridges with two or more fixed piers are based on the movement of the superstructure along its centerline. These forces are assumed to act normal and parallel to the longitudinal axis of the pier as resolved through the skew angle. The lateral restraint offered by the superstructure is usually ignored. Except in unusual cases, the larger stiffness generated by considering the transverse stiffness of skewed piers is ignored.

13.4.6 Force of Stream Current

The force of flowing water, WA, acting on piers is specified in **LRFD [3.7.3]**. This force acts in both the longitudinal and transverse directions.

13.4.6.1 Longitudinal Force

The longitudinal force is computed as follows:

$$p = \frac{C_D V^2}{1{,}000}$$

Where:

p	=	Pressure of flowing water (ksf)
V	=	Water design velocity for the design flood in strength and service limit states and for the check flood in the extreme event limit state (ft/sec)
C_D	=	Drag coefficient for piers (dimensionless), equal to 0.7 for semicircular-nosed piers, 1.4 for square-ended piers, 1.4 for debris lodged against the pier and 0.8 for wedged-nosed piers with nose angle of 90° or less

The longitudinal drag force shall be computed as the product of the longitudinal stream pressure and the projected exposed pier area.

13.4.6.2 Lateral Force

The lateral force is computed as follows:

$$p = \frac{C_D V^2}{1{,}000}$$

Where:

p = Lateral pressure of flowing water (ksf)

C_D = Lateral drag coefficient (dimensionless), as presented in Table 13.4-2

Angle Between the Flow Direction and the Pier's Longitudinal Axis	C_D
0°	0.0
5°	0.5
10°	0.7
20°	0.9
≥ 30°	1.0

Table 13.4-2
Lateral Drag Coefficient Values

The lateral drag force shall be computed as the product of lateral stream pressure and the projected exposed pier area. Use the water depth and velocity at flood stage with the force acting at one-half the water depth.

Normally the force of flowing water on piers does not govern the pier design.

13.4.7 Buoyancy

Buoyancy, a component of water load WA, is specified in **LRFD [3.7.2]** and is taken as the sum of the vertical components of buoyancy acting on all submerged components. The footings of piers in the floodplain are to be designed for uplift due to buoyancy.

Full hydrostatic pressure based on the water depth measured from the bottom of the footing is assumed to act on the bottom of the footing. The upward buoyant force equals the volume of concrete below the water surface times the unit weight of water. The effect of buoyancy on column design is usually ignored. Use high water elevation when analyzing the pier for over-turning. Use low water elevation to determine the maximum vertical load on the footing.

The submerged weight of the soil above the footing is used for calculating the vertical load on the footing. Typical values are presented in Table 13.4-3.

	Submerged Unit Weight, γ (pcf)				
	Sand	Sand & Gravel	Silty Clay	Clay	Silt
Minimum (Loose)	50	60	40	30	25
Maximum (Dense)	85	95	85	70	70

Table 13.4-3
Submerged Unit Weights of Various Soils

13.4.8 Ice

Forces from floating ice and expanding ice, IC, do not act on a pier at the same time. Consider each force separately when applying these design loads.

For all ice loads, investigate each site for existing conditions. If no data is available, use the following data as the minimum design criteria:

- Ice pressure = 32 ksf
- Minimum ice thickness = 12”
- Height on pier where force acts is at the 2-year high water elevation. If this value is not available, use the elevation located midway between the high and measured water elevations.
- Pier width is the projection of the pier perpendicular to stream flow.

Slender and flexible piers shall not be used in regions where ice forces are significant, unless approval is obtained from the WisDOT Bureau of Structures.

13.4.8.1 Force of Floating Ice and Drift

Ice forces on piers are caused by moving sheets or flows of ice striking the pier.

There is not an exact method for determining the floating ice force on a pier. The ice crushing strength primarily depends on the temperature and grain size of the ice. **LRFD [3.9.2.1]** sets the effective ice crushing strength at between 8 and 32 ksf.

The horizontal force caused by moving ice shall be taken as specified in **LRFD [3.9.2.2]**, as follows:

$$F = F_c = C_a \cdot p \cdot t \cdot w$$

$$C_a = \left(\frac{5t}{w} + 1\right)^{0.5}$$

Where:

p	=	Effective ice crushing strength (ksf)
t	=	Ice thickness (ft)
w	=	Pier width at level of ice action (ft)

WisDOT policy item:

Since the angle of inclination of the pier nose with respect to the vertical is always less than or equal to 15° on standard piers in Wisconsin, the flexural ice failure mode does not need to be considered for these standard piers ($f_b = 0$).

WisDOT policy item:

If the pier is approximately aligned with the direction of the ice flow, only the first design case as specified in **LRFD [3.9.2.4]** shall be investigated due to the unknowns associated with the friction angle defined in the second design case.

A longitudinal force equal to F shall be combined with a transverse force of 0.15F

Both the longitudinal and transverse forces act simultaneously at the pier nose.

If the pier is located such that its longitudinal axis is skewed to the direction of the ice flow, the ice force on the pier shall be applied to the projected pier width and resolved into components. In this condition, the transverse force to the longitudinal axis of the pier shall be a minimum of 20% of the total force.

WisDOT exception to AASHTO:

Based upon the pier geometry in the Standards, the ice loadings of **LRFD [3.9.4]** and **LRFD [3.9.5]** shall be ignored.

13.4.8.2 Force Exerted by Expanding Ice Sheet

Expansion of an ice sheet, resulting from a temperature rise after a cold wave, can develop considerable force against abutting structures. This force can result if the sheet is restrained between two adjacent bridge piers or between a bluff type shore and bridge pier. The force direction is therefore transverse to the direction of stream flow.

Force from ice sheets depends upon ice thickness, maximum rate of air-temperature rise, extent of restraint of ice and extent of exposure to solar radiation. In the absence of more precise information, estimate an ice thickness and use a force of 8.0 ksf.

It is not necessary to design all bridge piers for expanding ice. If one side of a pier is exposed to sunlight and the other side is in the shade along with the shore in the pier vicinity, consider the development of pressure from expanding ice. If the central part of the ice is exposed to the sun's radiation, consider the effect of solar energy, which causes the ice to expand.

13.4.9 Centrifugal Force

Centrifugal force, CE, is specified in **LRFD [3.6.3]** and is included in the pier design for structures on horizontal curves. The lane load portion of the HL-93 loading is neglected in the computation of the centrifugal force.

The centrifugal force is taken as the product of the axle weights of the design truck or tandem and the factor, C, given by the following equation:

$$C = \frac{4}{3}\frac{v^2}{gR}$$

Where:

V	=	Highway design speed (ft/sec)
g	=	Gravitational acceleration = 32.2 (ft/sec^2)
R	=	Radius of curvature of travel lane (ft)

The multiple presence factors specified in **LRFD [3.6.1.1.2]** shall apply to centrifugal force.

Centrifugal force is assumed to act radially and horizontally 6' above the roadway surface. The point 6' above the roadway surface is measured from the centerline of roadway. The design speed may be determined from the Wisconsin *Facilities Development Manual*, Chapter 11. It is not necessary to consider the effect of superelevation when centrifugal force is used, because the centrifugal force application point considers superelevation.

13.4.10 Extreme Event Collision Loads

WisDOT policy item:

With regards to **LRFD [3.6.5]** and vehicular collision force, CT, protecting the pier and designing the pier for the 600 kip static force are each equally acceptable. The bridge design engineer should work with the roadway engineer to determine which alternative is preferred.

WisDOT policy item:

Designs for bridge piers adjacent to roadways with a design speed ≤ 40 mph need not consider the provisions of **LRFD [3.6.5]**.

If the design speed of a roadway adjacent to a pier is > 40 mph and the pier is not protected by a TL-5 barrier, embankment or adequate offset, the pier columns/shaft, *only*, shall be strengthened to comply with **LRFD [3.6.5]**. For a multi-column pier the minimum size column shall be 3x4 ft rectangular or 4 ft diameter (consider clearance issues and/or the wide cap required when using 4 ft diameter columns). Solid shaft and hammerhead pier shafts are considered adequately sized.

All multi-columned piers require a minimum of three columns. If a pier cap consists of two or more segments each segment may be supported by two columns. If a pier is constructed in stages, two columns may be used for the temporary condition.

The vertical reinforcement for the columns/shaft shall be the greater of what is required by design (not including the Extreme Event II loading) or a minimum of 1.0% of the gross concrete section (total cross section without deduction for rustications less than or equal to 1-1/2" deep) to address the collision force for the 3x4 ft rectangular and 4 ft diameter columns.

For the 3x4 ft rectangular columns, use double #5 stirrups spaced at 6" vertically as a minimum. For the 4 ft diameter columns, use #4 spiral reinforcement (smooth bars) spaced vertically at 6" as a minimum. Hammerhead pier shafts shall have, as a minimum, the horizontal reinforcement as shown on the Standards.

See Standard for Multi-Columned Pier with Rectangular Columns for an acceptable design to meet **LRFD [3.6.5]**.

WisDOT exception to AASHTO:

The vessel collision load, CV, in **LRFD [3.14]** will not be applied to every navigable waterway of depths greater than 2'. For piers located in navigable waterways, the engineer shall contact the WisDOT project manager to determine if a vessel collision load is applicable.

13.5 Load Application

When determining pier design forces, a thorough understanding of the load paths for each load is critical to arriving at loads that are reasonable per *AASHTO LRFD*. The assumptions associated with different pier, bearing and superstructure configurations are also important to understand. This section provides general guidelines for the application of forces to typical highway bridge piers.

13.5.1 Loading Combinations

Piers are designed for the Strength I, Strength III, Strength V and Extreme Event II load combinations as specified in **LRFD [3.4.1]**. Reinforced concrete pier components are also checked for the Service I load combination. Load factors for these load combinations are presented in Table 13.5-1. See 13.10 for loads applicable to pile bents and pile encased piers.

Load Combination	Load Factor										
	DC		DW		LL+IM BR CE	WA	WS	WL	FR	TU CR SH	IC CT CV
Limit State	Max.	Min.	Max.	Min.							
Strength I	1.25	0.90	1.50	0.65	1.75	1.00	0.00	0.00	1.00	0.5*	0.00
Strength III	1.25	0.90	1.50	0.65	0.00	1.00	1.00	0.00	1.00	0.5*	0.00
Strength V	1.25	0.90	1.50	0.65	1.35	1.00	1.00	1.00	1.00	0.5*	0.00
Service I	1.00	1.00	1.00	1.00	1.00	1.00	1.00	1.00	1.00	1.00	0.00
Extreme Event II	1.25	0.90	1.50	0.65	0.50	1.00	0.00	0.00	1.00	0.00	1.00

Table 13.5-1
Load Factors

* Values based on using gross moment of inertia for analysis **LRFD [3.4.1]**

13.5.2 Expansion Piers

See 13.4 for additional guidance regarding the application of specific loads.

Transverse forces applied to expansion piers from the superstructure include loads from one-half of the adjacent span lengths, and are applied at the location of the transverse load.

For expansion bearings other than elastomeric, longitudinal forces are transmitted to expansion piers through friction in the bearings. These forces, other than temperature, are based on loading one-half of the adjacent span lengths, with the maximum being no greater than the maximum friction force (dead load times the maximum friction coefficient of a sliding bearing). See 27.2.2 to determine the bearing friction coefficient. The longitudinal forces are applied at the bearing elevation.

Expansion piers with elastomeric bearings are designed based on the force that the bearings resist, with longitudinal force being applied at the bearing elevation. This force is applied as some combination of temperature force, braking force, and/or wind load depending on what load case generates the largest deflection at the bearing. The magnitude of the force shall be computed as follows:

$$F = \frac{GA\Delta n}{t}$$

Where:

F	=	Elastomeric bearing force used for pier design (kips)
G	=	Shear modulus of the elastomer (ksi)
A	=	Bearing pad area (in^2)
Δ	=	Deflection at bearing from thermal or braking force (in)
n	=	Number of bearings per girder line; typically one for continuous steel girders and two for prestressed concrete beams (dimensionless)
t	=	Total elastomer thickness (without steel laminates) (in)

Example E27-1.8 illustrates the calculation of this force.

See 13.4.5 for a discussion and example of temperature force application for all piers.

13.5.3 Fixed Piers

Transverse forces applied to fixed piers from the superstructure include loads from one-half of the adjacent span lengths, and are applied at the location of the transverse load.

For fixed bearings, longitudinal forces, other than temperature, are based on loading one-half of the adjacent span lengths. If longitudinal forces, other than temperature, at expansion substructure units exceed the maximum friction value of the bearings, the fixed piers need to assume the additional force beyond the maximum friction. The longitudinal forces are applied at the bearing elevation.

See 13.4.5 for a discussion and example of temperature force application for all piers.

13.6 Multi-Column Pier and Cap Design

WisDOT policy item:

Multi-column pier caps shall be designed using conventional beam theory.

The first step in the analysis of a pier frame is to determine the trial geometry of the frame components. The individual components of the frame must meet the minimum dimensions specified in 13.2.1 and as shown on the Standards. Each of the components should be sized for function, economy and aesthetics. Once a trial configuration is determined, analyze the frame and adjust the cap, columns and footings if necessary to accommodate the design loads.

When the length between the outer columns of a continuous pier cap exceeds 65', temperature and shrinkage should be considered in the design of the columns. These effects induce moments in the columns due to the expansion and contraction of the cap combined with the rigid connection between the cap and columns. A 0.5 factor is specified in the strength limit state for the temperature and shrinkage forces to account for the long-term column cracking that occurs. A full section modulus is then used for this multi-column pier analysis. Use an increase in temperature of +35 degrees F and a decrease of -45 degrees F. Shrinkage (0.0003 ft/ft) will offset the increased temperature force. For shrinkage, the keyed vertical construction joint as required on the Standard for Multi-Columned Pier, is to be considered effective in reducing the cap length. For all temperature forces, the entire length from exterior column to exterior column shall be used.

WisDOT policy item:

To reduce excessive thermal and/or shrinkage forces, pier caps greater than 65' long may be made non-continuous. Each segment may utilize as few as two columns. Spacing between ends of adjacent cap segments shall be 1'-0" minimum.

The maximum column spacing on pier frames is 25'. Column height is determined by the bearing elevations, the bottom of footing elevation and the required footing depth. The pier cap/column and column/footing interfaces are assumed to be rigid.

The pier is analyzed as a frame bent by any of the available analysis procedures considering sidesway of the frame due to the applied loading. The gross concrete areas of the components are used to compute their moments of inertia for analysis purposes. The effect of the reinforcing steel on the moment of inertia is neglected.

Vertical loads are applied to the pier through the superstructure. The vertical loads are varied to produce the maximum moments and shears at various positions throughout the structure in combination with the horizontal forces. The effect of length changes in the cap due to temperature is also considered in computing maximum moments and shears. All these forces produce several loading conditions on the structure which must be separated to get the maximum effect at each point in the structure. The maximum moments, shears and axial forces from the analysis routines are used to design the individual pier components. Moments at the face of column are used for pier cap design.

Skin reinforcement on the side of the cap, shall be determined as per **LRFD [5.7.3.4]**. This reinforcement shall not be included in any strength calculations.

See 13.1 and 13.2.1 for further requirements specific to this pier type.

13.7 Hammerhead Pier Cap Design

WisDOT policy item:

Hammerhead pier caps shall be designed using the strut-and-tie method **LRFD [5.8.2]**.

The strut-and-tie method (STM) is simply the creation of an internal truss system used to transfer the loads from the bearings through the pier cap to the column(s). This is accomplished through a series of concrete "struts" that resist compressive forces and steel "ties" that resist tensile forces. These struts and ties meet at nodes **LRFD [5.8.2.1]**. See Figure 13.7-1 for a basic strut-and-tie model that depicts two bearing reactions transferred to two columns. STM is used to determine internal force effects at the strength and extreme event limit states.

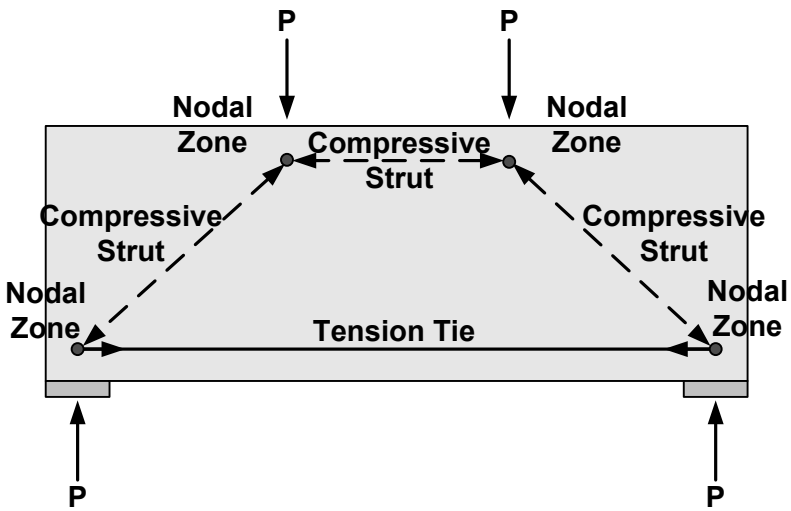

Figure 13.7-1
Basic Strut-and-Tie Elements

Strut-and-tie models are based on the following assumptions:

- The tension ties yield before the compressive struts crush.
- External forces are applied at nodes.
- Forces in the struts and ties are uniaxial.
- Equilibrium is maintained.
- Prestressing of the pier is treated as a load.

The generation of the model requires informed engineering judgment and is an iterative, graphical procedure. The following steps are recommended for a strut-and-tie pier cap design.

13.7.1 Draw the Idealized Truss Model

This model will be based on the structure geometry and loading configuration **LRFD [5.8.2.2]**. At a minimum, nodes shall be placed at each load and support point. Maintain angles of approximately 30° (minimum of 25°) to 60° (maximum of 65°) between strut and tie members that meet at a common node. An angle close to 45° should be used when possible. Figure 13.7-2 depicts an example hammerhead pier cap strut-and-tie model supporting (5) girders.

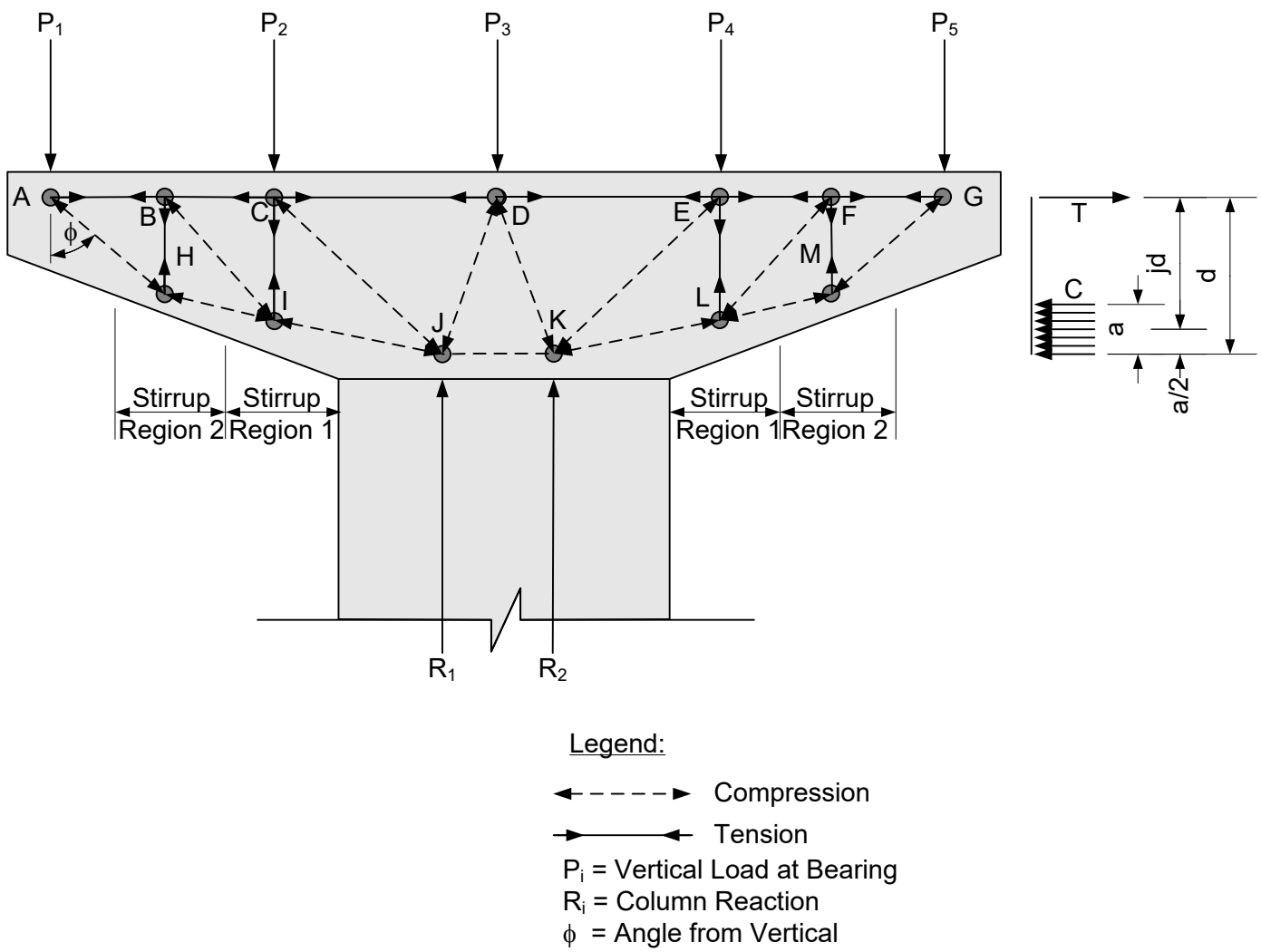

Figure 13.7-2
Example Hammerhead Pier Cap Strut-and-Tie Model

To begin, place nodes at the bearing locations and at the two column 1/3-points. In Figure 13.7-2, the minimum of nodes A, C, D, E and G are all placed at a bearing location, and nodes J and K are placed at the column 1/3-points. When drawing the truss model, the order of priority for forming compressive struts shall be the following:

1. Transfer the load directly to the column if the angle from vertical is less than 60°.

2. Transfer the load to a point directly beneath a bearing if the angle from vertical is between 30° and 60°.

3. Transfer the load at an approximately 45° angle from vertical and form a new node.

In Figure 13.7-2, the bearing load at node C is transferred directly to the column at node J since the angle formed by the compression strut C-J is less than 60°. The same occurs at strut E-K. However, the angle that would be formed by compression strut A-J to the column is not less than 60°, nor is the angle that would be formed by a strut A-I to beneath a bearing. Therefore, the load at node A is transferred at a 45° angle to node H by strut A-H. To maintain equilibrium at node H, the vertical tension tie B-H and the compression strut H-I are added.

Then, since the angle that would be formed by potential column strut B-J is not less than 60°, a check is made of the angle that would be formed by strut B-I. Since this angle is within the 30° to 60° range, compression strut B-I is added. To maintain equilibrium at node I, the vertical tension tie C-I and the compression strut I-J are added. This completes the basic strut-and-tie model for the left side of the cap. The geometric setup on the right side of the cap will be performed in the same manner as the left side.

The bearing load at node D, located above the column, is then distributed directly to the column as the angle from vertical of struts D-J and D-K are both less than 60°. Compression strut J-K must then be added to satisfy equilibrium at nodes J and K.

Vertically, the top chord nodes A, B, C, D, E, F and G shall be placed at the centroid of the tension steel. The bottom chord nodes H, I, J, K, L and M shall follow the taper of the pier cap and be placed at mid-height of the compression block, a/2, as shown in Figure 13.7-2.

The engineer should then make minor adjustments to the model using engineering judgment. In this particular model, this should be done with node H in order to make struts A-H and B-I parallel. The original 45° angle used to form strut A-H likely did not place node H halfway between nodes A and C. The angle of strut A-H should be adjusted so that node H is placed halfway between nodes A and C.

Another adjustment the engineer may want to consider would be placing four nodes above the column at 1/5-points as opposed to the conservative approach of the two column nodes shown in Figure 13.7-2 at 1/3-points. The four nodes would result in a decrease in the magnitude of the force in tension tie C-I. If the structure geometry were such that girder P_2 were placed above the column or the angle from vertical for potential strut B-J were less than 60°, then the tension tie C-I would not be present.

Proportions of nodal regions should be based on the bearing dimensions, reinforcement location, and depth of the compression zone. Nodes may be characterized as:

- CCC: Nodes where only struts intersect

- CCT: Nodes where a tie intersects the node in only one direction

- CTT: Nodes where ties intersect in two different directions

13.7.2 Solve for the Member Forces

Determine the magnitude of the unknown forces in the internal tension ties and compression struts by transferring the known external forces, such as the bearing reactions, through the strut-and-tie model. To satisfy equilibrium, the sum of all vertical and horizontal forces acting at each node must equal zero.

13.7.3 Check the Size of the Bearings

Per **LRFD [5.8.2.5]**, the concrete area supporting the bearing devices shall satisfy the following:

$P_u \leq \phi \cdot P_n$ **LRFD [5.8.2.3]**

Where:

ϕ = Resistance factor for bearing on concrete, equal to 0.70, as specified in **LRFD [5.5.4.2]**

P_u = Bearing reaction from strength limit state (kips)

P_n = Nominal bearing resistance (kips)

The nominal bearing resistance of the node face shall be:

$P_n = f_{cu} \cdot A_{cn}$ **LRFD [5.8.2.5]**

Where:

f_{cu} = Limiting compressive stress at the face of a node **LRFD [5.8.2.5.3]** (ksi)

A_{cn} = Effective cross-sectional area of the node face **LRFD [5.8.2.5.2]** (in^2)

Limiting compressive stress at the node face, f_{cu}, shall be:

$f_{cu} = m \cdot \nu \cdot f'_c$

Where:

f'_c = Compressive strength of concrete (ksi)

m = Confinement modification factor **LRFD [5.6.5]**

ν = Concrete efficiency factor (0.45, when no crack control reinforcement is present ; see **LRFD [Table 5.8.2.5.3a-1]** for values when crack control reinforcement is present per **LRFD [5.8.2.6]**)

For node regions with bearings:

$A_{cn} = A_{brg}$ = Area under bearing device (in^2)

$P_n = (m \cdot \nu \cdot f'_c) \cdot A_{brg}$; therefore $A_{brg} \geq P_u / \phi \cdot (m \cdot \nu \cdot f'_c)$

- Node regions with no crack control reinforcement:

  $A_{brg} \geq P_u / \phi \cdot (m \cdot 0.45 \cdot f'_c)$

- Node regions with crack control reinforcement per **LRFD [5.8.2.6]**:

  $A_{brg} \geq P_u / \phi \cdot (m \cdot 0.85 \cdot f'_c)$ --- (CCC) Node

  $A_{brg} \geq P_u / \phi \cdot (m \cdot 0.70 \cdot f'_c)$ --- (CCT) Node

  $A_{brg} \geq P_u / \phi \cdot (m \cdot 0.65 \cdot f'_c)$ --- (CTT) Node

Evaluate the nodes located at the bearings to find the minimum bearing area required.

13.7.4 Design Tension Tie Reinforcement

Tension ties shall be designed to resist the strength limit state force per **LRFD [5.8.2.4.1]**. For non-prestressed caps, the tension tie steel shall satisfy:

$P_u \leq \phi \cdot P_n$ **LRFD [5.8.2.3]**

$P_n = f_y \cdot A_{st}$; therefore,

$A_{st} \geq P_u / (\phi \cdot f_y)$

Where:

A_{st} = Total area of longitudinal mild steel reinforcement in the tie (in^2)

ϕ = Resistance factor for tension on reinforced concrete, equal to 0.90, as specified in **LRFD [5.5.4.2]**

f_y = Yield strength of reinforcement (ksi)

P_n = Nominal resistance of tension tie (kips)

P_u = Tension tie force from strength limit state (kips)

Horizontal tension ties, such as ties A-B and E-F in Figure 13.7-2, are used to determine the longitudinal reinforcement required in the top of the pier cap. The maximum tension tie force should be used to calculate the top longitudinal reinforcement.

Vertical tension ties, such as ties B-H and C-I, are used to determine the vertical stirrup requirements in the cap. Similar to traditional shear design, two stirrup legs shall be accounted for when computing A_{st}. In Figure 13.7-2, the number of stirrups, n, necessary to provide the A_{st} required for tie B-H shall be spread out across Stirrup Region 2. The length limit (L_2) of Stirrup Region 2 is from the midpoint between nodes A and B to the midpoint between nodes B and C. When vertical ties are located adjacent to columns, such as with tie C-I, the stirrup region extends to the column face. Therefore, the length limit (L_1) of Stirrup Region 1 is from the column face to the midpoint between nodes B and C. Using the equations above, the minimum area of reinforcement (A_{st}) can be found for the vertical tension tie **LRFD [5.8.2.4.1]**. The number of vertical stirrup legs at a cross-section can be selected, and their total area can be calculated as ($A_{stirrup}$). The number of stirrups required will then be:

$$n = A_{st} / A_{stirrup}$$

The stirrup spacing shall then be determined by the following equation:

$$s_{max} = L_i / n$$

Where:

s_{max}	=	Maximum allowable stirrup spacing (in)
L_i	=	Length of stirrup region (in)
n	=	Number of stirrups to satisfy the area (A_{st}) required to resist the vertical tension tie force

Skin reinforcement on the side of the cap, shall be determined as per **LRFD [5.6.7]**. This reinforcement shall not be included in any strength calculations.

13.7.5 Check the Compression Strut Capacity

Compression struts shall be designed to resist the strength limit state force per **LRFD [5.8.2.5]**.

$$P_u \leq \phi \cdot P_n \qquad \textbf{LRFD [5.8.2.3]}$$

The nominal resistance of the node face for a compression strut shall be taken as:

$$P_n = f_{cu} \cdot A_{cn} \qquad \textbf{LRFD [5.8.2.5]} \quad \text{--- (unreinforced)}$$

Where:

P_n = Nominal resistance of compression strut (kips)

P_u = Compression strut force from strength limit state (kips)

ϕ = Resistance factor for compression in strut-and-tie models, equal to 0.70, as specified in **LRFD [5.5.4.2]**

f_{cu} = Limiting compressive stress at the face of a node **LRFD [5.8.2.5.3]** (ksi)

A_{cn} = Effective cross-sectional area of the node face at the strut **LRFD [5.8.2.5.2]** (in^2)

The limiting compressive stress at the node face, f_{cu}, shall be given by:

$$f_{cu} = m \cdot \nu \cdot f'_c$$

Where:

f'_c = Compressive strength of concrete (ksi)

m = Confinement modification factor (use m = 1.0 at strut node face)

ν = Concrete efficiency factor (<u>0.45</u>, when no crack control reinforcement is present ; see **LRFD [Table 5.8.2.5.3a-1]** for values when crack control reinforcement is present per **LRFD [5.8.2.6]**)

For node regions with struts:

$P_n = (\nu \cdot f'_c) \cdot A_{cn}$; therefore $P_u \leq \phi \cdot (\nu \cdot f'_c) \cdot A_{cn}$

- Node regions with <u>no</u> crack control reinforcement:

  $P_u \leq \phi \cdot (0.45 \cdot f'_c) \cdot A_{cn}$

- Node regions <u>with</u> crack control reinforcement per **LRFD [5.8.2.6]**:

  $P_u \leq \phi \cdot (0.65 \cdot f'_c) \cdot A_{cn}$ --- (strut to node interface) --- <u>(CCC, CCT, CTT) Nodes</u>

  $P_u \leq \phi \cdot (0.85 \cdot f'_c) \cdot A_{cn}$ --- (back face) --- <u>(CCC) Node</u>

  $P_u \leq \phi \cdot (0.70 \cdot f'_c) \cdot A_{cn}$ --- (back face) --- <u>(CCT) Node</u>

  $P_u \leq \phi \cdot (0.65 \cdot f'_c) \cdot A_{cn}$ --- (back face) --- <u>(CTT) Node</u>

The cross-sectional area of the strut at the node face, A_{cn}, is determined by considering both the available concrete area and the anchorage conditions at the ends of the strut. Figure 13.7-3, Figure 13.7-4 and Figure 13.7-5 illustrate the computation of A_{cn}.

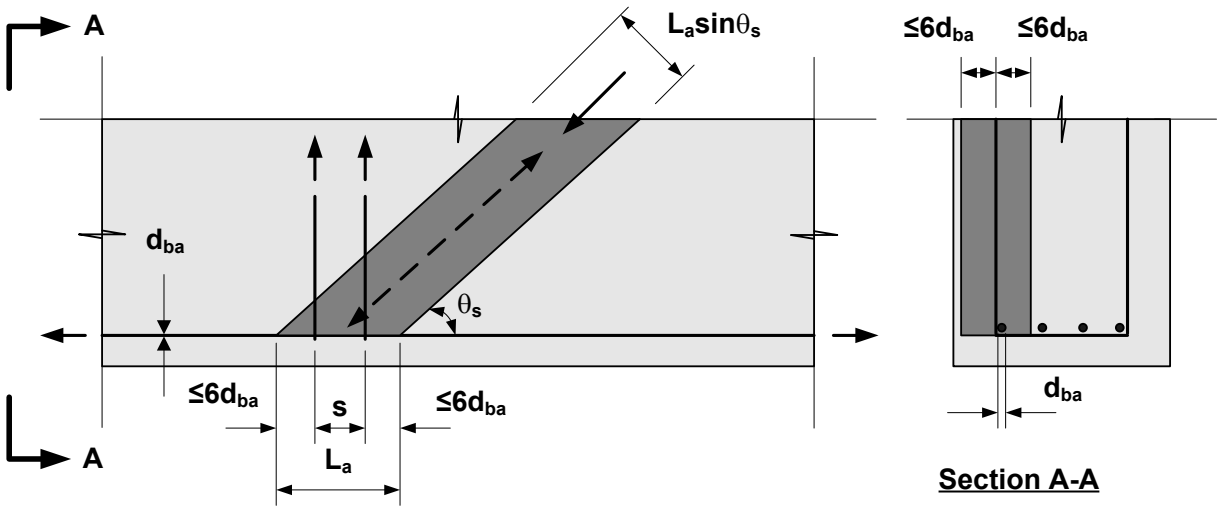

Figure 13.7-3
Strut Anchored by Tension Reinforcement Only (CTT)

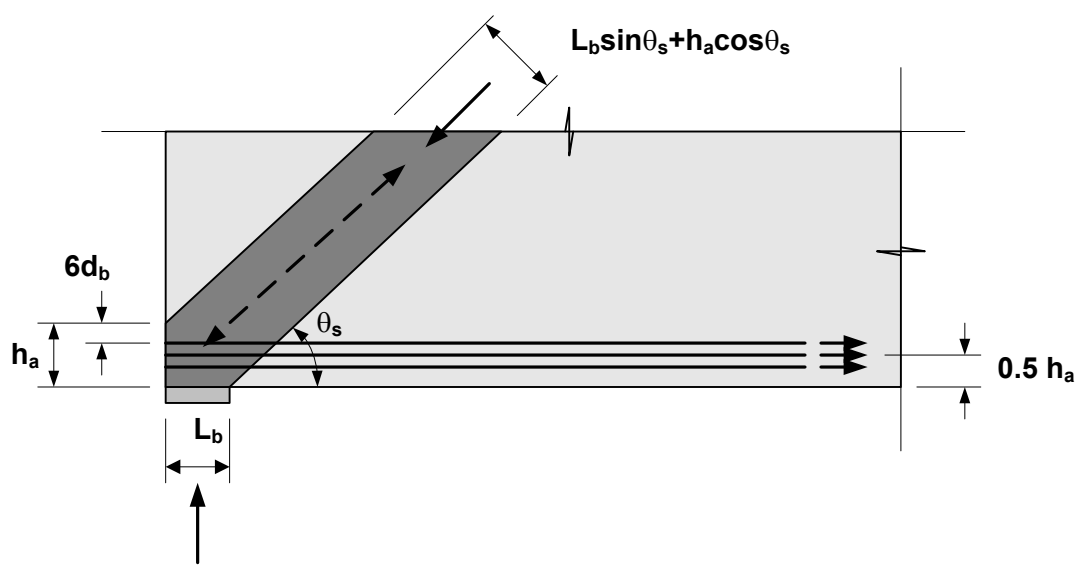

Figure 13.7-4
Strut Anchored by Bearing and Tension Reinforcement (CCT)

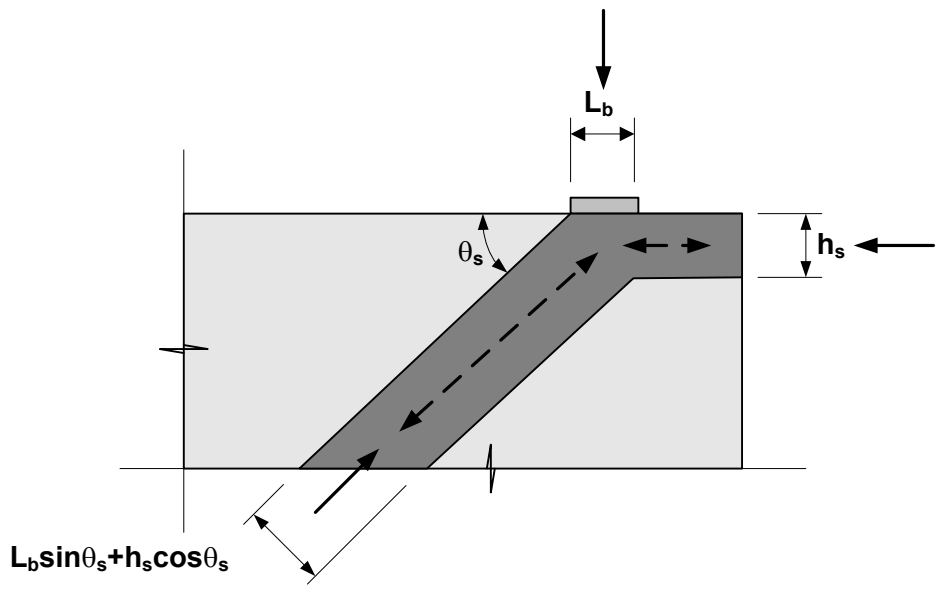

Figure 13.7-5
Strut Anchored by Bearing and Strut (CCC)

In Figure 13.7-3, the strut area is influenced by the stirrup spacing, s, as well as the diameter of the longitudinal tension steel, d_{ba}. In Figure 13.7-4, the strut area is influenced by the bearing dimensions, L_b, in both directions, as well as the location of the center of gravity of the longitudinal tension steel, $0.5h_a$. In Figure 13.7-5, the strut area is influenced by the bearing dimensions, L_b, in both directions, as well as the height of the compression strut, h_s. The value of h_s shall be taken as equal to "a" as shown in Figure 13.7-2. The strut area in each of the three previous figures depends upon the angle of the strut with respect to the horizontal, θ_s.

If the initial strut width is inadequate to develop the required resistance, the engineer should increase the bearing block size.

13.7.6 Check the Tension Tie Anchorage

Tension ties shall be anchored to the nodal zones by either specified embedment length or hooks so that the tension force may be transferred to the nodal zone. As specified in **LRFD [5.8.2.4.2]**, the tie reinforcement shall be fully developed at the inner face of the nodal zone. In Figure 13.7-4, this location is given by the edge of the bearing where θ_s is shown. Develop tension reinforcement per requirements specified in **LRFD [5.10.8]**.

13.7.7 Provide Crack Control Reinforcement

Pier caps designed using the strut-and-tie method and the efficiency factors of **LRFD [Table 5.8.2.5.3a-1]**, shall contain an orthogonal grid of reinforcing bars near each face in accordance with **LRFD [5.8.2.6]**. This reinforcement is intended to control the width of cracks and to ensure a minimum ductility for the member so that, if required, significant redistribution of internal

stresses can take place. Crack control reinforcement shall consist of two grids distributed evenly near each side face of the strut. Additional internal layers may be used when necessary for thicker members, in order to provide a practical layout. Maximum bar spacing shall not exceed the smaller of d/4 and 12”. This reinforcement is not to be included as part of the tie.

The reinforcement in the vertical direction shall satisfy:

$A_v / b_w \cdot s_v \geq 0.003$; therefore $A_v \geq (0.003)\, b_w \cdot s_v$

The reinforcement in the horizontal direction shall satisfy:

$A_h / b_w \cdot s_h \geq 0.003$; therefore $A_h \geq (0.003)\, b_w \cdot s_h$

Where:

A_v = Total area of vertical crack control reinforcement within spacing s_v (in.)

A_h = Total area of horizontal crack control reinforcement within spacing s_h (in.)

b_w = Width of member (in.)

s_v, s_h = Spacing of vertical and horizontal crack control reinforcement (in.)

13.8 General Pier Cap Information

The minimum cap dimension to be used is 3' deep by 2'-6" wide, with the exception that a 2'-6" deep section may be used for caps under slab structures. If a larger cap is needed, use 6" increments to increase the size. The multi-column cap width shall be a minimum of 1 1/2" wider than the column on each side to facilitate construction forming. The pier cap length shall extend a minimum of 2' transversely beyond the centerline of bearing and centerline of girder intersection.

On continuous slab structures, the moment and shear forces are proportional between the transverse slab section and the cap by the ratio of their moments of inertia. The effective slab width assumed for the transverse beam is the minimum of 1/2 the center-to-center column spacing or 8.0'.

$$M_{cap} = M_{total} \frac{I_{cap}}{I_{cap} + I_{slab}}$$

Where:

M_{cap}	=	Cap moment (kip-ft)
M_{total}	=	Total moment (kip-ft)
I_{cap}	=	Moment of inertia of pier cap (in^4)
I_{slab}	=	Moment of inertia of slab (in^4)

The concrete slab is to extend beyond the edge of pier cap as shown on Standards for Continuous Haunched Slab and for Continuous Flat Slab. If the cap is rounded, measure from a line tangent to the pier cap end and parallel to the edge of the deck.

Reinforcement bars are placed straight in the pier cap. Determine bar cutoff points on wide caps. If the pier cap is cantilevered over exterior columns, the top negative bar steel may be bent down at the ends to ensure development of this primary reinforcement.

Do not place shear stirrups closer than 4" on centers. Generally only double stirrups are used, but triple stirrups may be used to increase the spacing. If these methods do not work, increase the cap size. Stirrups are generally not placed over the columns. The first stirrup is placed one-half of the stirrup spacing from the edge of the column into the span.

The cap-to-column connection is made by extending the column reinforcement straight into the cap the necessary development length. Stirrup details and bar details at the end of the cap are shown on Standard for Multi-Columned Pier.

Crack control, as defined in **LRFD [5.6.7]** shall be considered for pier caps. Class 2 exposure condition exposure factors shall only be used when concern regarding corrosion (i.e., pier caps

located below expansion joints, pier caps subject to intermittent moisture above waterways, etc.) or significant aesthetic appearance of the pier cap is present.

13.9 Column / Shaft Design

See 13.4.10 for minimum shaft design requirements regarding the Extreme Event II collision load of **LRFD [3.6.5]**.

Use an accepted analysis procedure to determine the axial load as well as the longitudinal and transverse moments acting on the column. These forces are generally largest at the top and bottom of the column. Apply the load factors for each applicable limit state. The load factors should correspond to the gross moment of inertia. Load factors vary for the gross moment of inertia versus the cracked moment as defined in **LRFD [3.4.1]** for γ_{TU}, γ_{CR}, γ_{SH}. Choose the controlling load combinations for the column design.

Columns that are part of a pier frame have transverse moments induced by frame action from vertical loads, wind loads on the superstructure and substructure, wind loads on live load, thermal forces and centrifugal forces. If applicable, the load combination for Extreme Event II must be considered. Longitudinal moments are produced by the above forces, as well as the braking force. These forces are resolved through the skew angle of the pier to act transversely and longitudinally to the pier frame. Longitudinal forces are divided equally among the columns.

Wisconsin uses tied columns following the procedures of **LRFD [5.6.4]**. The minimum allowable column size is 2'-6" in diameter. The minimum steel bar area is as specified in **LRFD [5.6.4.2]**. For piers not requiring a certain percentage of reinforcement as per 13.4.10 to satisfy **LRFD [3.6.5]** for vehicular collision load, a reduced effective area of reinforcement may be used when the cross-section is larger than that required to resist the applied loading.

The computed column moments are to consider moment magnification factors for slenderness effects as specified in **LRFD [5.6.4.3]**. Values for the effective length factor, K, are as follows:

- 1.2 for longitudinal moments with a fixed seat supporting prestressed concrete girders
- 2.1 for longitudinal moments with a fixed seat supporting steel girders and all expansion bearings
- 1.0 for all transverse moments

The computed moments are multiplied by the moment magnification factors, if applicable, and the column is designed for the combined effects of axial load and bending. According to **LRFD [5.6.4.1]** all force effects, including magnified moments, shall be transferred to adjacent components. The design resistance under combined axial load and bending is based on stress-strain compatibility. A computer program is recommended for determining the column's resistance to the limit state loads.

As a minimum, the column shall provide the steel shown on the Pier Standards.

On large river crossings, it may be necessary to protect the piers from damage. Dolphins may be provided.

The column-to-cap connection is designed as a rigid joint considering axial and bending stresses. Column steel is run through the joint into the cap to develop the compressive stresses or the tensile steel stresses at the joint.

In general, the column-to-footing connection is also designed as a rigid joint. The bar steel from the column is generally terminated at the top of the footing. Dowel bars placed in the footing are used to transfer the steel stress between the footing and the column.

Crack control, as defined in **LRFD [5.6.7]** shall be considered for pier columns. All pier columns shall be designed using a Class 2 exposure condition exposure factor.

13.10 Pile Bent and Pile Encased Pier Analysis

WisDOT policy item:

Only the Strength I limit state need be utilized for determining the pile configuration required for open pile bents and pile encased piers. Longitudinal forces are not considered due to fixed or semi-expansion abutments being required for these pier types.

The distribution of dead load to the pile bents and pile encased piers is in accordance with 17.2.9. Live load is distributed according to 17.2.10.

WisDOT policy item:

Dynamic load allowance, IM, is included for determining the pile loads in pile bents, but not for piling in pile encased piers.

The pile force in the outermost, controlling pile is equal to:

$$P_n = \frac{F}{n} + \frac{M}{S}$$

Where:

F = Total factored vertical load (kips)

n = Number of piles

M = Total factored moment about pile group centroid (kip-ft)

S = Section modulus of pile group (ft^3), equal to:

$$\left(\frac{\sum d^2}{c}\right)$$

In which:

d = Distance of pile from pile group centroid

c = Distance from outermost pile to pile group centroid

See Standard for Pile Bent for details. See Standard for Pile Encased Pier for details.

13.11 Footing Design

13.11.1 General Footing Considerations

There are typical concepts to consider when designing and detailing both spread footings and pile footings.

For multi-columned piers:

- Each footing for a given pier should be the same dimension along the length of the bridge.
- Each footing for a given pier should be the same thickness.
- Footings within a given pier need not be the same width.
- Footings within a given pier may have variable reinforcement.
- Footings within a given pier may have a different number of piles. Exterior footings should only have fewer piles than an interior footing if the bridge is unlikely to be widened in the future. An appropriate cap span layout will usually lend itself to similar footing/pile configurations.
- Heavier piles, especially if primarily end bearing piles, can be more economical.

For hammerhead piers:

- Make as many seals the same size as reasonable to facilitate cofferdam re-use.
- Seal thickness can vary from pier to pier.
- Footing dimensions, reinforcement and pile configuration can vary from pier to pier.
- Heavier piles, especially if primarily end bearing piles, can be more economical.

WisDOT exception to AASHTO:

Crack control, as defined in **LRFD [5.6.7]** shall not be considered for pier isolated spread footings, isolated pile footings and continuous footings.

Shrinkage and temperature reinforcement, as defined in **LRFD [5.10.6]** shall not be considered for side faces of any buried footings.

13.11.2 Isolated Spread Footings

Spread footings are designed using LRFD strength limit state loads and resistance for moment and shear as specified in **LRFD [5.12.8]**. The foundation bearing capacity, used to dimension the footing's length and width, shall be determined using **LRFD [10.6]** of the AASHTO *LRFD Bridge Design Specifications*.

The spread footing is proportioned so that the foundation bearing capacity is not exceeded. The following steps are used to design spread footings:

1. Minimum depth of spread footings is 2'. Depth is generally determined from shear strength requirements. Shear reinforcement is not used.

2. A maximum of 25% of the footing area is allowed to act in uplift (or nonbearing). When part of a footing is in uplift, its section properties for analysis are based only on the portion of the footing that is in compression (or bearing). When determining the percent of a footing in uplift, use the Service Load Design method.

3. Soil weight on footings is based only on the soil directly above the footing.

4. The minimum depth for frost protection from top of ground to bottom of footing is 4'.

5. Spread footings on seals are designed by either of the following methods:

    a. The footing is proportioned so the pressure between the bottom of the footing and the top of the seal does not exceed the foundation bearing capacity and not more than 25% of the footing area is in uplift.

    b. The seal is proportioned so that pressure at the bottom of the seal does not exceed the foundation bearing capacity and the area in uplift between the footing and the seal does not exceed 25%.

6. The spread footing's reinforcing steel is determined from the flexural requirements of **LRFD [5.6.3]**. The design moment is determined from the volume of the pressure diagram under the footing which acts outside of the section being considered. The weight of the footing and the soil above the footing is used to reduce the bending moment.

7. The negative moment which results if a portion of the footing area is in uplift is ignored. No negative reinforcing steel is used in spread footings.

8. Shear resistance is determined by the following two methods:

    a. Two-way action

    The volume of the pressure diagram on the footing area outside the critical perimeter lines (placed at a distance d/2 from the face of the column, where d equals the effective footing depth) determines the shear force. The shear

resistance is influenced by the concrete strength, the footing depth and the critical perimeter length. The critical perimeter length is 2 (L + d + W + d) for rectangular columns and π (2R + d) for round columns, where R is the column radius and d is the effective footing depth. The critical perimeter location for spread footings with rectangular columns is illustrated in Figure 13.11-1.

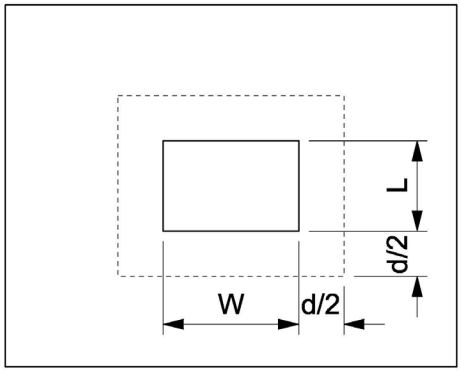

Figure 13.11-1
Critical Perimeter Location for Spread Footings

b. One-way action

The volume of the pressure diagram on the area enclosed by the footing edges and a line placed at a distance "d" from the face of the column determines the shear force. The shear resistance is influenced by the concrete strength, the footing depth and the entire footing width or length. The shear location for one-way action is illustrated in Figure 13.11-2.

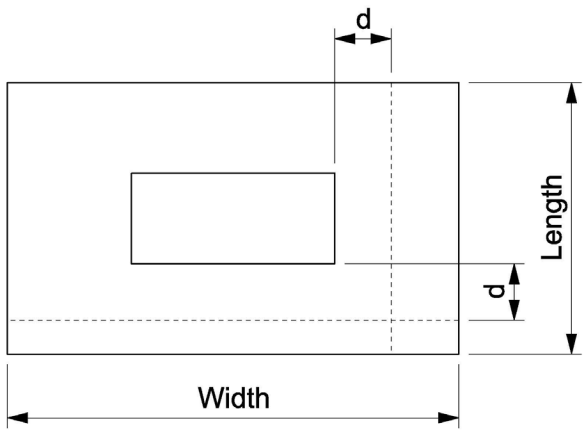

Figure 13.11-2
Shear Location for One-Way Action

The footing weight and the soil above the areas are used to reduce the shear force.

9. The bottom layer of reinforcing steel is placed 3” clear from the bottom of the footing.

10. If adjacent edges of isolated footings are closer than 4’-6”, a continuous footing shall be used.

13.11.3 Isolated Pile Footings

WisDOT policy item:

Pile footings are designed using LRFD strength limit state loads and resistance for moment and shear as specified in **LRFD [5.12.8]**. The pile design shall use LRFD strength limit state loads to compare to the factored axial compression resistance specified in Table 11.3-5.

The nominal geotechnical pile resistance shall be provided in the Site Investigation Report. The engineer shall then apply the appropriate resistance factor from Table 11.3.1 to the nominal resistance to determine the factored pile resistance. The footing is proportioned so that when it is loaded with the strength limit state loads, the factored pile resistance is not exceeded.

The following steps are used to design pile-supported footings:

1. The minimum depth of pile footing is 2’-6”. The minimum pile embedment is 6”. See 13.2.2 for additional information about pile footings used for pile bents.

2. Pile footings in uplift are usually designed by method (a) stated below. However, method (b) may be used if there is a substantial cost reduction.

a. Over one-half of the piles in the footings must be in compression for the Strength limit states. The section properties used in analysis are based only on the piles in compression. Pile and footing (pile cap) design is based on the Strength limit states. Service limit states require check for overall stability; however a check of crack control is not required per 13.11. The 600 kip collision load need not be checked per 13.4.10.

b. Piles may be designed for upward forces provided an anchorage device, sufficient to transfer the load, is provided at the top of the pile. Provide reinforcing steel to resist the tension stresses at the top of the footing.

3. Same as spread footing.

4. Same as spread footing.

5. The minimum number of piles per footing is four.

6. Pile footings on seals are analyzed above the seal. The only effect of the seal is to reduce the pile resistance above the seal by the portion of the seal weight carried by each pile.

7. If no seal is required but a cofferdam is required, design the piles to use the minimum required batter. This reduces the cofferdam size necessary to clear the battered piles since all piles extend above water to the pile driver during driving.

8. The pile footing reinforcing steel is determined from the flexural requirements of **LRFD [5.6.3]**. The design moment and shear are determined from the force of the piles which act outside of the section being considered. The weight of the footing and the soil above the footing are used to reduce the magnitude of the bending moment and shear force.

9. Shear resistance is determined by the following two methods:

   a. Two-way action

      The summation of the pile forces outside the critical perimeter lines placed at a distance d/2 from the face of the column (where d equals the effective footing depth) determines the shear force. The shear resistance is influenced by the concrete strength, the footing depth and the critical perimeter length. The critical perimeter length is 2 (L + d + W + d) for rectangular columns and π(2R + d) for round columns. The critical perimeter location for pile footings with rectangular columns is illustrated in Figure 13.11-3.

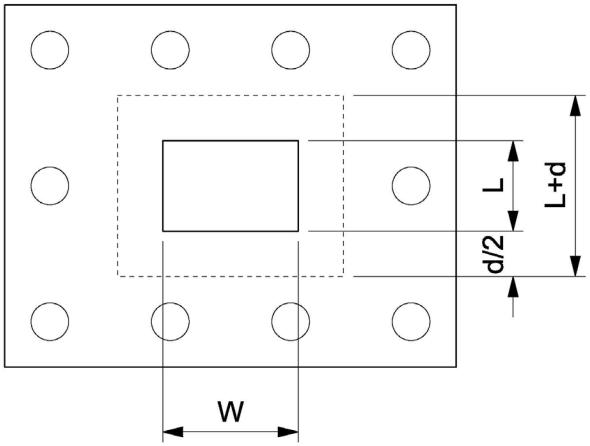

Figure 13.11-3
Critical Perimeter Location for Pile Footings

If the center of a pile falls on a line, then one-half of the pile force is assumed to act on each side of the line.

b. One-way action

The summation of the pile forces located within the area enclosed by the footing edges and a line at distance "d" from the face of the column determines the shear force, as illustrated in Figure 13.11-2. The shear resistance is influenced by the concrete strength, the footing depth and the entire footing width or length. If the center of a pile falls on a line, then one-half of the pile force is assumed to act on each side of the line.

10. The weight of the footing and soil above the areas is used to reduce the shear force.

11. The bottom layer of reinforcing steel is placed directly on top of the piles.

13.11.4 Continuous Footings

Continuous footings are used in pier frames of two or more columns when the use of isolated footings would result in a distance of less than 4’-6” between edges of adjacent footings. They are designed for the moments and shears produced by the frame action of the pier and the soil pressure under the footing.

The soil pressure or pile load under the footing is assumed to be uniform. The soil pressures or pile loads are generally computed only from the vertical column loads along with the soil and footing dead load. The moments at the base of the column are ignored for soil or pile loads.

To prevent unequal settlement, proportion the continuous footing so that soil pressures or pile loads are constant for Service I load combination. The footing should be kept relatively stiff between columns to prevent upward footing deflections which cause excessive soil or pile loads under the columns.

13.11.5 Cofferdams and Seals

A cofferdam is a temporary structure used to construct concrete substructures in or near water. The cofferdam protects the substructure during construction, controls sediments, and can be dewatered to construct the substructure in a dry environment. Dewatering the cofferdam allows for the cutting of piles, placement of reinforcing steel and ensuring proper consolidation of concrete. A cofferdam typically consists of driven steel sheet piling and allows for the structure to be safely dewatered when properly designed. Alternative cofferdam systems may be used to control shallow water conditions.

A cofferdam bid item may be warranted when water is expected at a concrete substructure unit during construction. The cofferdam shall be practically watertight to allow for dewatering such that the substructure is constructed in a dry environment. An exception is for pile encased piers. These substructures can be poured underwater, but in certain cases may still require a cofferdam for protection and/or to address environmental concerns. The designer should consult with geotechnical and regional personnel and the pile encased pier guidance provided in 13.2.3 to determine if a cofferdam is required. If a cofferdam is warranted, then include the bid item “Cofferdams (Structure)”.

Environmental concerns (specifically sediment control) may require the use of cofferdams at some sites. When excavation takes place in the water, some form of sediment control is usually required. The use of simple turbidity barrier may not be adequate based on several considerations (water depth, velocity, soil conditions, channel width, etc.). All sediment control devices, such as turbidity barrier, shall not be included in structure plans. Refer to Facilities Development Manual (FDM) Chapter 10 for erosion control and storm water quality information.

A seal is a mat of unreinforced concrete poured under water inside a cofferdam. The seal is designed to withstand the hydrostatic pressure on its bottom when the water above it is removed. For shallow water depths and certain soil conditions a concrete seal may not be necessary in order to dewater a cofferdam. Coordinate with geotechnical personnel to determine if a concrete seal is required. The designer shall determine if a concrete seal is required for a cofferdam. For pile encased piers, see guidance provided in 13.2.3 to determine if a seal is required. If a concrete seal is required, then include the bid item “Concrete Masonry Seal” and required seal dimensions. The cofferdam design shall be the responsibility of the contractor.

The hydrostatic pressure under the seal is resisted by the seal weight, the friction between the seal perimeter and the cofferdam walls, and friction between seal and piles for pile footings. The friction values used for the seal design are considered using the service limit state. To compute the capacity of piles in uplift, refer to Chapter 11. Values for bond on piles and sheet piling are presented in Table 13.11-1.

Application	Value of Bond
Bond on Piles	10 psi
Bond on Sheet Piling	2 psi applied to [(Seal Depth - 2') x Seal Perimeter]

Table 13.11-1
Bond on Piles and Sheet Piling

Lateral forces from stream flow pressure are resisted by the penetration of the sheet piling below the streambed elevation and by the bracing inside the cofferdam. When seals for spread footings are founded on rock, the weight of the seal is used to counterbalance the lateral stream flow pressure.

The downstream side of the cofferdam should be keyed into rock deep enough or other measures should be used to resist the lateral stream flow pressure. To provide a factor of safety, the cofferdam weight (sheet piling and bracing) is ignored in the analysis. The design stream flow velocity is based on the flow at the site at the time of construction but need not exceed 75% of the 100-year velocity. The force is calculated as per 13.4.6.

A rule of thumb for seal thickness is 0.40H for spread footings and 0.25H for pile footings, where H is the water depth from bottom of seal to top of water. The 2-year high water elevation, if available, should be used as the estimated water elevation during construction. The assumed water elevation used to determine the seal thickness should be noted on the plans. The minimum seal size is 3'-0" larger than the footing size on all sides. See Standard for Hammerhead Pier for additional guidance regarding the sizing of the seal.

Example: Determine the seal thickness for a 9’ x 12’ footing with 12-12” diameter piles. Uplift capacity of one pile equals 15 kips (per the Geotechnical Engineer). The water depth to the top of seal is 16’.

Assume 15’ x 18’ x 3.25’ seal.

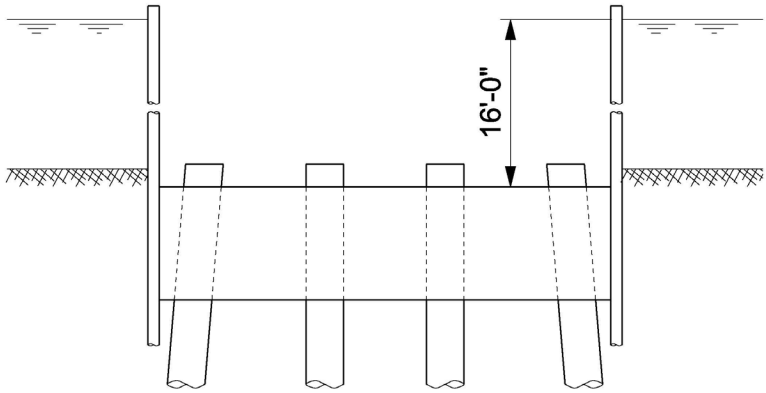

Figure 13.11-4
Seal Inside a Cofferdam

Uplift force of water	15 x 18 x 19.25 x 0.0624	=	324.3 kips (up)
Weight of seal course	15 x 18 x 3.25 x 0.15	=	131.6 kips (down)
Friction of sheet piling	2 x (15+18) x (3.25 - 2.0) x 144 x 0.002	=	23.8 kips (down)
Pile frictional resistance	π x 12 x (3.25 x 12) x 0.010	=	14.7 kips
Pile uplift resistance	(Per Geotechnical Engineer)	=	15.0 kips
Total pile resistance	12 piles x min(14.7,15.0)	=	176.4 kips (down)
Sum of downward forces	131.6+23.8+176.4	=	332 kips
Sum of upward forces	324.3	=	324 kips

332 > 324 OK

USE 3’- 3” THICK SEAL

Note: Pile uplift resistance shall be determine by the Geotechnical Engineer. For this example, when the pile uplift resistance equals 10 kips a 4’-6” thick seal is required.

13.12 Quantities

Consider the "Upper Limits for Excavation" for piers at such a time when the quantity is a minimum. This is either at the existing ground line or the finished graded section. Indicate in the general notes which value is used.

Structure backfill is not used at piers except under special conditions.

Compute the concrete quantities for the footings, columns and cap, and show values for each of them on the final plans.

13.13 Design Examples

E13-1 Hammerhead Pier Design Example

E13-2 Multi-Column Pier Design Example

This page intentionally left blank.

Table of Contents

E13-1 Hammerhead Pier Design Example 2
E13-1.1 Obtain Design Criteria 2
E13-1.1.1 Material Properties: 3
E13-1.1.2 Reinforcing Steel Cover Requirements: 3
E13-1.2 Relevant Superstructure Data 3
E13-1.2.1 Girder Dead Load Reactions 4
E13-1.2.2 Live Load Reactions per Design Lane 4
E13-1.3 Select Preliminary Pier Dimensions 4
E13-1.4 Compute Dead Load Effects 6
E13-1.5 Compute Live Load Effects 7
E13-1.6 Compute Other Load Effects 10
E13-1.6.1 Braking Force 10
E13-1.6.2 Wind Load from Superstructure 11
E13-1.6.2.1 Vertical Wind Load 17
E13-1.6.2.2 Wind Load on Vehicles 18
E13-1.6.3 Wind Load on Substructure 19
E13-1.6.4 Temperature Loading (Superimposed Deformations) 22
E13-1.7 Analyze and Combine Force Effects 22
E13-1.7.1 Pier Cap Force Effects 29
E13-1.7.2 Pier Column Force Effects 30
E13-1.7.3 Pier Pile Force Effects 32
E13-1.7.4 Pier Footing Force Effects 35
E13-1.8 Design Pier Cap Strut and Tie Method (STM) 37
E13-1.8.1 Determine Geometry and Member Forces 37
E13-1.8.2 Check the Size of the Bearings 41
E13-1.8.3 Calculate the Tension Tie Reinforcement 42
E13-1.8.4 Calculate the Stirrup Reinforcement 44
E13-1.8.5 Compression Strut Capacity Bottom Strut 45
E13-1.8.6 Compression Strut Capacity Diagonal Strut 47
E13-1.8.7 Check the Anchorage of the Tension Ties 49
E13-1.8.8 Provide Crack Control Reinforcement 51
E13-1.8.9 Summary of Cap Reinforcement 53
E13-1.9 Design Pier Column 53
E13-1.9.1 Design for Axial Load and Biaxial Bending (Strength V): 54
E13-1.9.2 Design for Shear (Strength III and Strength V) 59
E13-1.9.3 Transfer of Force at Base of Column 60
E13-1.10 Design Pier Piles 62
E13-1.11 Design Pier Footing 66
E13-1.11.1 Design for Moment 68
E13-1.11.2 Punching Shear Check 72
E13-1.11.3 One Way Shear Check 76
E13-1.12 Final Pier Schematic 79

E13-1 Hammerhead Pier Design Example

This example shows design calculations conforming to the ***AASHTO LRFD Bridge Design Specifications (Seventh Edition - 2016 Interim)*** as supplemented by the *WisDOT Bridge Manual* The design methods presented throughout the example are meant to be the most widely used in general bridge engineering practice.

The first design step is to identify the appropriate design criteria. This includes, but is not limited to, defining material properties, identifying relevant superstructure information, and determining the required pier geometry.

E13-1.1 Obtain Design Criteria

This pier is designed for the superstructure as detailed in example **E24-1**. This is a two-span steel girder stream crossing structure. Expansion bearings are located at the abutments, and fixed bearings are used at the pier.

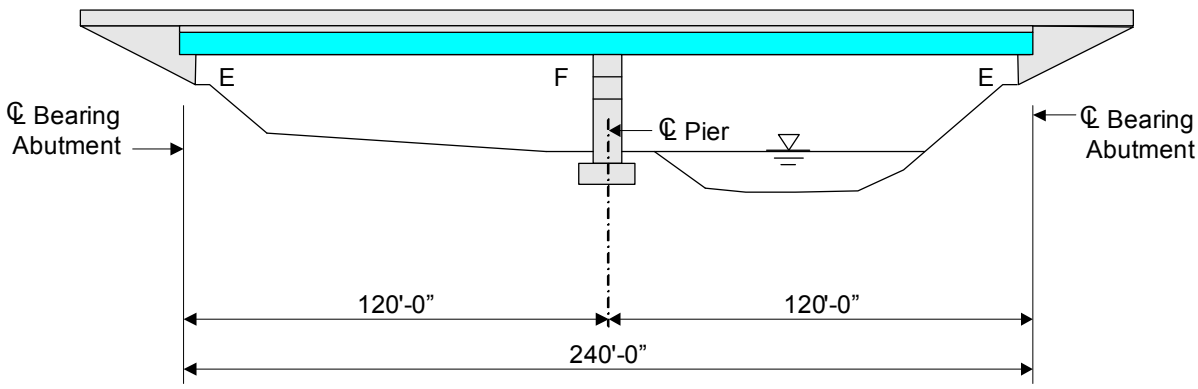

Figure E13-1.1-1
Bridge Elevation

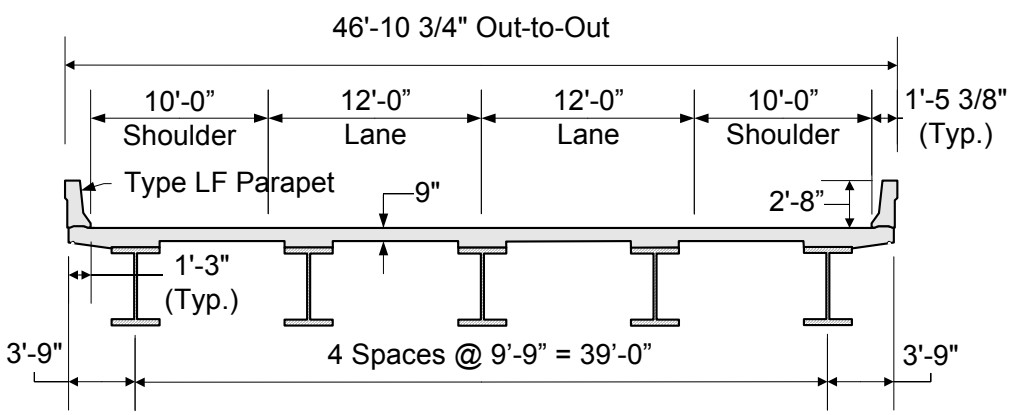

Figure E13-1.1-2
Bridge Cross Section

E13-1.1.1 Material Properties:

$w_c := 0.150$	unit weight of concrete, kcf
$f'_c := 3.5$	concrete 28-day compressive strength, ksi
$f_y := 60$	reinforcement yield strength, ksi

E13-1.1.2 Reinforcing Steel Cover Requirements:

All cover dimensions listed below are in accordance with **LRFD [Table 5.12.3-1]** and are shown in inches.

$Cover_{cp} := 2.5$	Pier cap
$Cover_{co} := 2.5$	Pier column
$Cover_{ft} := 2.0$	Footing top cover
$Cover_{fb} := 6.0$	Footing bottom cover, based on standard pile projection

E13-1.2 Relevant Superstructure Data

$w_{deck} := 46.50$	Deck Width, ft
$w_{roadway} := 44.0$	Roadway Width, ft
$ng := 5$	Number of Girders
$S := 9.75$	Girder Spacing, ft
$DOH := 3.75$	Deck Overhang, ft (Note that this overhang exceeds the limits stated in Chapter 17.6.2. WisDOT practice is to limit the overhang to 3'-7".)
$N_{spans} := 2$	Number of Spans
$L := 120.0$	Span Length, ft
$skew := 0$	Skew Angle, degrees
$H_{super} = 8.46$	Superstructure Depth, ft
$H_{brng} := 6.375$	Bearing Height, in (Fixed, Type A)
$W_{brng} := 18$	Bearing Width, in
$L_{brng} := 26$	Bearing Length, in
$\mu_{max} := 0.10$	Max. Coefficient of Friction of Abutment Expansion Bearings
$\mu_{min} := 0.06$	Min. Coefficient of Friction of Abutment Expansion Bearings

E13-1.2.1 Girder Dead Load Reactions

Unfactored Dead Load Reactions, kips

$$DLR_{int} := \begin{pmatrix} \text{"LoadType"} & \text{"Abut"} & \text{"Pier"} \\ \text{"Beam"} & 7.00 & 34.02 \\ \text{"Misc"} & 1.23 & 4.73 \\ \text{"Deck"} & 46.89 & 178.91 \\ \text{"Parapet"} & 6.57 & 24.06 \\ \text{"FWS"} & 7.46 & 27.32 \end{pmatrix} \qquad DLR_{ext} := \begin{pmatrix} \text{"LoadType"} & \text{"Abut"} & \text{"Pier"} \\ \text{"Beam"} & 7.00 & 34.02 \\ \text{"Misc"} & 0.83 & 3.15 \\ \text{"Deck"} & 48.57 & 185.42 \\ \text{"Parapet"} & 6.57 & 24.06 \\ \text{"FWS"} & 7.46 & 27.32 \end{pmatrix}$$

Abutment Reactions:

$\boxed{AbutRint_{DC} = 61.69}$ kips $\qquad$ $\boxed{AbutRext_{DC} = 62.97}$ kips

$\boxed{AbutRint_{DW} = 7.46}$ kips $\qquad$ $\boxed{AbutRext_{DW} = 7.46}$ kips

Pier Reactions:

$\boxed{Rint_{DC} = 241.72}$ kips $\qquad$ $\boxed{Rext_{DC} = 246.65}$ kips

$\boxed{Rint_{DW} = 27.32}$ kips $\qquad$ $\boxed{Rext_{DW} = 27.32}$ kips

E13-1.2.2 Live Load Reactions per Design Lane

Unfactored Live Load Reactions, kips

$$LLR := \begin{pmatrix} \text{"LoadType"} & \text{"Abut"} & \text{"Pier"} \\ \text{"Vehicle"} & 64.72 & 114.17 \\ \text{"Lane"} & 32.76 & 89.41 \end{pmatrix}$$

These loads are per design lane and do not include dynamic load allowance. The pier reactions are controlled by the 90% (Truck Pair + Lane) loading condition. The reactions shown include the 90% factor.

E13-1.3 Select Preliminary Pier Dimensions

Selecting the most optimal pier type depends on site conditions, cost considerations, superstructure geometry, and aesthetics. For this design example, a single column (hammerhead) pier was chosen.

Since the LRFD Specifications do not have standards regarding maximum or minimum dimensions for a pier cap, column, or footing, the designer should base the preliminary pier dimensions on WisDOT specific standards, previous designs, and past experience. The pier cap, however, must be wide enough to accommodate the bearings.

Figures E13-1.3-1 and E13-1.3-2 show the preliminary dimensions selected for this pier design example.

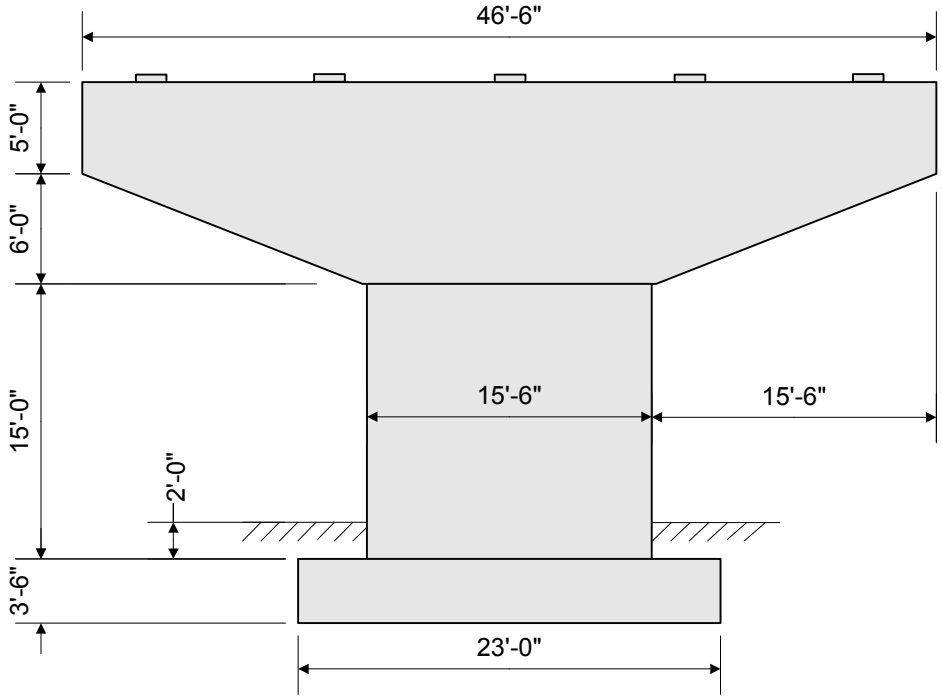

Figure E13-1.3-1
Preliminary Pier Dimensions - Front Elevation

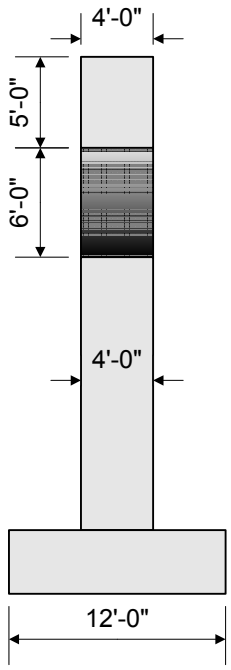

Figure E13-1.3-2
Preliminary Pier Dimensions - End Elevation

Pier Geometry Definitions (feet):

$L_{cap} := 46.5$ $L_{col} := 15.5$ $L_{ftg} := 23$

$W_{cap} := 4$ $W_{col} := 4$ $W_{ftg} := 12$

$H_{cap} := 11$ $H_{col} := 15$ $H_{ftg} := 3.5$

$H_{cap_end} := 5$ $D_{soil} := 2$ Soil depth above footing, feet

$L_{oh} := 15.5$ $\gamma_{soil} := 0.120$ Unit weight of soil, kcf

E13-1.4 Compute Dead Load Effects

Once the preliminary pier dimensions are selected, the corresponding dead loads can be computed in accordance with **LRFD [3.5.1]**. The pier dead loads must then be combined with the superstructure dead loads.

Exterior girder dead load reactions (DC and DW): $Rext_{DC} = 246.65$ kips

$Rext_{DW} = 27.32$ kips

Interior girder dead load reactions (DC and DW): $\boxed{Rint_{DC} = 241.72}$ kips

$\boxed{Rint_{DW} = 27.32}$ kips

Pier cap dead load:

$$DL_{Cap} := w_c \cdot W_{cap} \cdot \left[2 \cdot \left(\frac{H_{cap_end} + H_{cap}}{2}\right) \cdot L_{oh} + H_{cap} \cdot L_{col}\right]$$

$$= 0.150 \cdot 4 \cdot \left(2 \cdot \frac{5 + 11}{2} \cdot 15.5 + 11 \cdot 15.5\right)$$ $\boxed{DL_{Cap} = 251.1}$ kips

Pier column dead load:

$$DL_{col} := w_c \cdot W_{col} \cdot H_{col} \cdot L_{col}$$

$$= 0.150 \cdot 4 \cdot 15 \cdot 15.5$$ $\boxed{DL_{col} = 139.5}$ kips

Pier footing dead load:

$$DL_{ftg} := w_c \cdot W_{ftg} \cdot H_{ftg} \cdot L_{ftg}$$

$$= 0.150 \cdot 12 \cdot 3.5 \cdot 23$$ $\boxed{DL_{ftg} = 144.9}$ kips

In addition to the above dead loads, the weight of the soil on top of the footing must be computed. The two-foot height of soil above the footing was previously defined. Assuming a unit weight of soil at 0.120 kcf in accordance with **LRFD [Table 3.5.1-1]** :

$$EV_{ftg} := \gamma_{soil} \cdot D_{soil} \cdot \left(W_{ftg} \cdot L_{ftg} - W_{col} \cdot L_{col}\right)$$

$$= 0.120 \cdot 2 \cdot (12 \cdot 23 - 4 \cdot 15.5)$$ $\boxed{EV_{ftg} = 51.36}$ kips

E13-1.5 Compute Live Load Effects

For the pier in this design example, the maximum live load effects in the pier cap, column and footing are based on either one, two or three lanes loaded (whichever results in the worst force effect). Figure E13-1.5-1 illustrates the lane positions when three lanes are loaded.

The positioning shown in Figure E13-1.5-1 is determined in accordance with **LRFD [3.6.1].** The first step is to calculate the number of design lanes, which is the integer part of the ratio of the clear roadway width divided by 12 feet per lane. Then the lane loading, which occupies ten feet of the lane, and the HL-93 truck loading, which has a six-foot wheel spacing and a two-foot clearance to the edge of the lane, are positioned within each lane to maximize the force effects in each of the respective pier components.

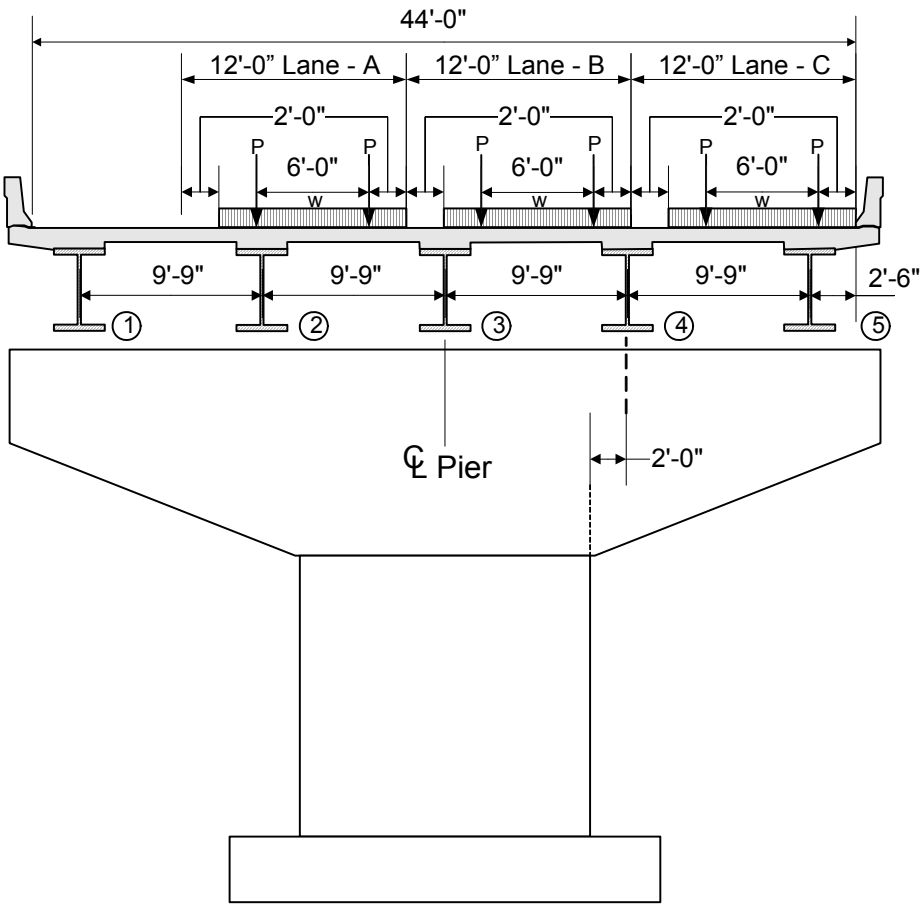

Figure E13-1.5-1
Pier Live Loading

N = maximum number of design lanes that the bridge can accommodate
$w_{roadway}$ = roadway width between curbs, ignoring any median strip
W = design lane width

$W := 12$ feet

$\boxed{w_{roadway} = 44}$ feet

$$N := \frac{w_{roadway}}{W}$$

$\boxed{N = 3.67}$

$\boxed{N = 3}$ design lanes

The unfactored girder reactions for lane load and truck load are obtained from the superstructure analysis and are as shown in E13-1.1.3.2. These reactions do not include dynamic load allowance and are given on a per lane basis (i.e., distribution factor = 1.0). Also, the reactions include the ten percent reduction permitted by the Specifications for interior pier reactions that result from longitudinally loading the superstructure with a truck pair in conjunction with lane loading **LRFD [3.6.1.3.1]**.

Live load reactions at Pier (w/o distribution):

$R_{truck} = 114.17$ kips

$R_{lane} = 89.41$ kips

$IM := 0.33$ Dynamic load allowance, IM from **LRFD [Table 3.6.2.1-1]**

The values of the unfactored concentrated loads which represent the girder truck pair load reaction per wheel line in Figure E13-1.5-1 are:

$$P_{wheel} := \frac{R_{truck}}{2} \cdot (1 + IM) \qquad P_{wheel} = 75.92 \text{ kips}$$

The value of the unfactored uniformly distributed load which represents the girder lane load reaction in Figure E13-1.5-1 is computed next. This load is transversely distributed over ten feet and is not subject to dynamic load allowance, **LRFD [3.6.2.1]**.

$$W_{lane} := \frac{R_{lane}}{10} \qquad W_{lane} = 8.94 \ \frac{\text{kips}}{\text{ft}}$$

The next step is to compute the reactions due to the above loads at each of the five bearing locations. This is generally carried out by assuming the deck is pinned (i.e., discontinuous) at the interior girder locations but continuous over the exterior girders. Solving for the reactions is then elementary. The computations for the reactions with only Lane C loaded are illustrated below as an example. The subscripts indicate the bearing location and the lane loaded to obtain the respective reaction:

$$R_{5_c} := \frac{P_{wheel} \cdot (4.25 + 10.25) + W_{lane} \cdot 10 \times 7.25}{9.75} \qquad R_{5_c} = 179.4 \text{ kips}$$

$$R_{4_c} := P_{wheel} \cdot 2 + W_{lane} \cdot 10 - R_{5_c} \qquad R_{4_c} = 61.86 \text{ kips}$$

The reactions at bearings 1, 2 and 3 with only Lane C loaded are zero. Calculations similar to those above yield the following live load reactions with the remaining lanes loaded. All reactions shown are in kips.

Lane A Loaded	Lane B Loaded	Lane C Loaded
$R_{5_a} := 0.0$	$R_{5_b} := 0.0$	$R_{5_c} = 179.4$
$R_{4_a} := 0.0$	$R_{4_b} = 123.66$	$R_{4_c} = 61.86$
$R_{3_a} = 72.31$	$R_{3_b} = 117.56$	$R_{3_c} := 0.0$
$R_{2_a} = 164.67$	$R_{2_b} := 0.0$	$R_{2_c} := 0.0$
$R_{1_a} = 4.27$	$R_{1_b} := 0.0$	$R_{1_c} := 0.0$

E13-1.6 Compute Other Load Effects

Other load effects that will be considered for this pier design include braking force, wind loads, and temperature loads.

For simplicity, buoyancy, stream pressure, ice loads and earthquake loads are not included in this design example.

E13-1.6.1 Braking Force

Since expansion bearings exist at the abutments, the entire longitudinal braking force is resisted by the pier.

In accordance with **LRFD [3.6.4]**, the braking force per lane is the greater of:

25 percent of the axle weights of the design truck or tandem

5 percent of the axle weights of the design truck plus lane load

5 percent of the axle weights of the design tandem plus lane load

The total braking force is computed based on the number of design lanes in the same direction. It is assumed in this example that this bridge is likely to become one-directional in the future. Therefore, any and all design lanes may be used to compute the governing braking force. Also, braking forces are not increased for dynamic load allowance in accordance with **LRFD [3.6.2.1]**. The calculation of the braking force for a single traffic lane follows:

25 percent of the design truck:

$BRK_{trk} := 0.25 \cdot (32 + 32 + 8)$ $\boxed{BRK_{trk} = 18}$ kips

25 percent of the design tandem:

$BRK_{tan} := 0.25 \cdot (25 + 25)$ $\boxed{BRK_{tan} = 12.5}$ kips

5 percent of the axle weights of the design truck plus lane load:

$BRK_{trk_lan} := 0.05 \cdot [(32 + 32 + 8) + (0.64 \times 2 \cdot L)]$ $\boxed{BRK_{trk_lan} = 11.28}$ kips

5 percent of the axle weights of the design tandem plus lane load:

$BRK_{tan_lan} := 0.05 \cdot [(25 + 25) + (0.64 \times 2 \cdot L)]$ $\boxed{BRK_{tan_lan} = 10.18}$ kips

Use:

$BRK := \max(BRK_{trk}, BRK_{tan}, BRK_{trk_lan}, BRK_{tan_lan})$ $\boxed{BRK = 18}$ kips per lane

LRFD [3.6.4] states that the braking force is applied along the longitudinal axis of the bridge at a distance of six feet above the roadway surface. However, since the skew angle is zero for this design example and the bearings are assumed incapable of transmitting longitudinal moment, the braking force will be applied at the top of bearing elevation. For bridges with skews, the component of the braking force in the transverse direction would be applied six feet above the roadway surface.

This force may be applied in either horizontal direction (back or ahead station) to cause the maximum force effects. Additionally, the total braking force is typically assumed equally distributed among the bearings:

$$BRK_{brg} := \frac{BRK}{5}$$ $\boxed{BRK_{brg} = 3.6}$ kips per bearing per lane

The moment arm about the base of the column is:

$$H_{BRK} := H_{col} + H_{cap} + \frac{H_{brng}}{12}$$ $\boxed{H_{BRK} = 26.53}$ feet

E13-1.6.2 Wind Load from Superstructure

Prior to calculating the wind load on the superstructure, the structure must be checked for aeroelastic instability, **LRFD [3.8.3]**. If the span length to width or depth ratio is greater than 30, the structure is considered wind-sensitive and design wind loads should be based on wind tunnel studies. This wind load applies to Strength III, Strength V, and Service I.

$\boxed{H_{par} = 2.67}$ Parapet height, feet

Span Length (L): $\boxed{L = 120}$ feet

$Width := w_{deck}$ $\boxed{Width = 46.5}$ feet

$Depth := H_{super} - H_{par}$ $\boxed{Depth = 5.79}$ feet

$\boxed{\frac{L}{Width} = 2.58}$ < 30 OK $\boxed{\frac{L}{Depth} = 20.72}$ < 30 OK

Since the span length to width and depth ratios are both less than 30, the structure does not need to be investigated for aeroelastic instability.

To compute the wind load on the superstructure, the area of the superstructure exposed to the wind must be defined. For this example, the exposed area is the total superstructure depth, (H_{super}), multiplied by length tributary to the pier. Due to expansion bearings at the abutment, the transverse length tributary to the pier is not the same as the longitudinal length.

The superstructure depth includes the total depth from the top of the barrier to the bottom of

the girder. Included in this depth is any haunch and/or depth due to the deck cross-slope. Once the total depth is known, (H_{super}), the exposed wind area can be calculated and the design wind pressure applied.

The total depth was previously computed in Section E13-1.1 and is as follows:

$H_{super} = 8.46$ feet

For this two-span bridge example, the tributary length for wind load on the fixed pier in the transverse direction is one-half of each adjacent span:

$$L_{windT} := \frac{L + L}{2} \qquad L_{windT} = 120 \qquad \text{feet}$$

In the longitudinal direction, the tributary length is the entire bridge length due to the expansion bearings at the abutments:

$$L_{windL} := L \cdot 2 \qquad L_{windL} = 240 \qquad \text{feet}$$

The transverse wind area is:

$$A_{wsuperT} := H_{super} \cdot L_{windT} \qquad A_{wsuperT} = 1015 \qquad ft^2$$

The longitudinal wind area is:

$$A_{wsuperL} := H_{super} \cdot L_{windL} \qquad A_{wsuperL} = 2031 \qquad ft^2$$

The design wind pressures applied to the superstructure are shown in Section 13.4.4. To calculate the wind pressure to be used for Strength III, the value of (Z) must be calculated to select the value of (K_Z) in **LRFD [Table C3.8.1.2.1-1]**.

The value of (Z) at the pier is:

$$Z_{pier} := H_{col} - D_{soil} + H_{cap} + H_{super} + \frac{H_{brng}}{12} \qquad Z_{pier} = 32.99 \qquad \text{feet}$$

Therefore, the average value of (Z) will be less than 33 feet, and because the Wind Exposure Category C applies to this structure, use:

$K_Z := 1.0$; therefore $Psup_{III} = 0.044$ ksf

Because the maximum height above low ground or water level to top of structure is (Z_{pier}), which is 33 feet, and individual span lengths are less than 150 feet, the values for transverse and longitudinal wind forces may be calculated using the simplified method in Section 13.4.4.1.

<u>Strength III</u>:

$Psup_{transIII} := 0.044$ ksf (transverse)

$Psup_{longitIII} := 0.011$ ksf (longitudinal)

Strength V:

$Psup_{transV} := 0.021$ ksf (transverse)

$Psup_{longitV} := 0.006$ ksf (longitudinal)

Service I:

$Psup_{transI} := 0.016$ ksf (transverse)

$Psup_{longitI} := 0.004$ ksf (longitudinal)

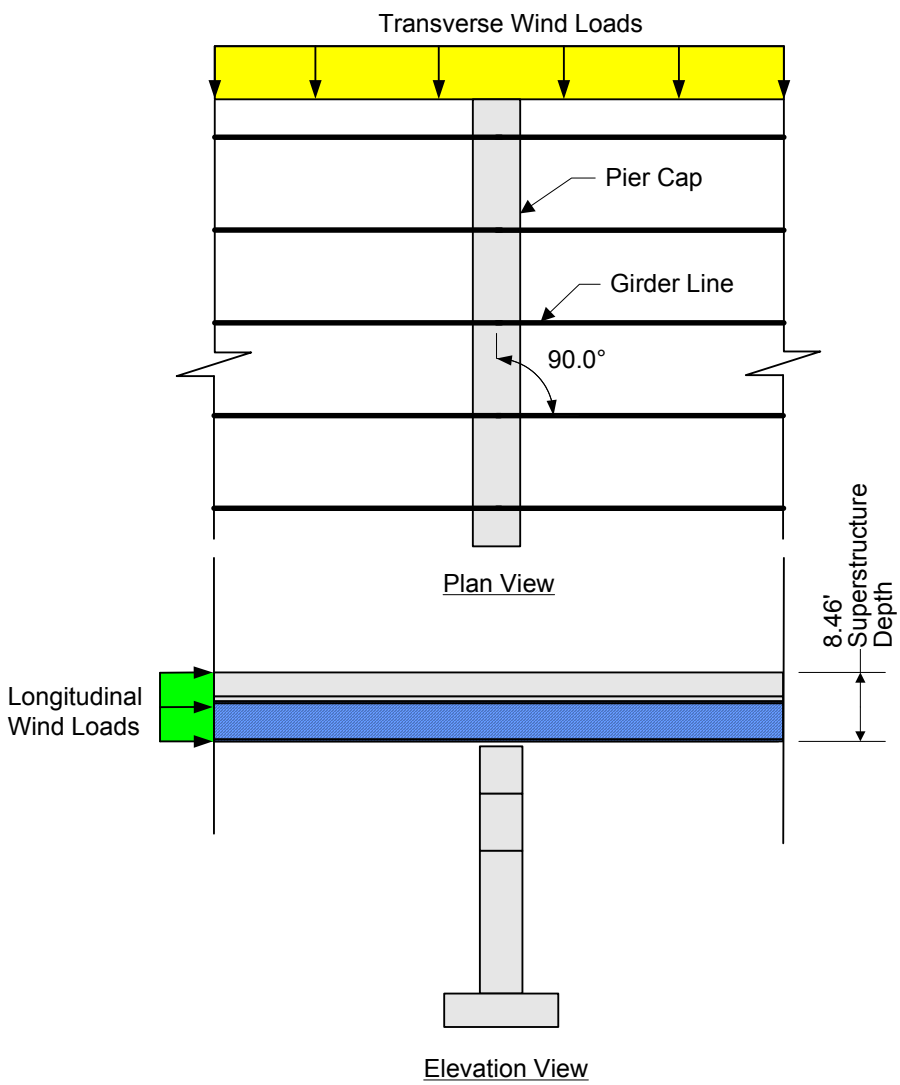

Figure E13-1.6-1
Application of Wind Load

The transvers and longitudinal superstructure wind loads acting on the pier (girders) are:

Strength III:

$WS_{suptrnsIII} := A_{wsuperT} \cdot Psup_{transIII}$ $\boxed{WS_{suptrnsIII} = 44.68}$ kips

$WS_{suplngIII} := A_{wsuperL} \cdot Psup_{longitIII}$ $\boxed{WS_{suplngIII} = 22.34}$ kips

Strength V:

$WS_{suptrnsV} := A_{wsuperT} \cdot Psup_{transV}$ $\boxed{WS_{suptrnsV} = 21.32}$ kips

$WS_{suplngV} := A_{wsuperL} \cdot Psup_{longitV}$ $\boxed{WS_{suplngV} = 12.18}$ kips

Service I:

$WS_{suptrnsI} := A_{wsuperT} \cdot Psup_{transI}$ $\boxed{WS_{suptrnsI} = 16.25}$ kips

$WS_{suplngI} := A_{wsuperL} \cdot Psup_{longitI}$ $\boxed{WS_{suplngI} = 8.12}$ kips

The total longitudinal wind loads (WS_{suplng}) shown above is assumed to be divided equally among the bearings. In addition, the load at each bearing is assumed to be applied at the top of the bearing. These assumptions are consistent with those used in determining the bearing forces due to the longitudinal braking force.

The horizontal force (WS_L) at each bearing due to the longitudinal wind loads on the superstructure are:

$WS_{L_III} := \frac{WS_{suplngIII}}{5}$ $\boxed{WS_{L_III} = 4.47}$ kips

$WS_{L_V} := \frac{WS_{suplngV}}{5}$ $\boxed{WS_{L_V} = 2.44}$ kips

$WS_{L_I} := \frac{WS_{suplngI}}{5}$ $\boxed{WS_{L_I} = 1.62}$ kips

The transverse wind loads ($WS_{suptrns}$) shown above are also assumed to be equally divided among the bearings but are applied at the mid-depth of the superstructure.

The horizontal force (WS_T) at each bearing due to the transverse wind loads on the superstructure are:

$$WS_{T_III} := \frac{WS_{suptrnsIII}}{5}$$ $WS_{T_III} = 8.94$ kips

$$WS_{T_V} := \frac{WS_{suptrnsV}}{5}$$ $WS_{T_V} = 4.26$ kips

$$WS_{T_I} := \frac{WS_{suptrnsI}}{5}$$ $WS_{T_I} = 3.25$ kips

These horizontal forces (WS_T) are shown in Figure E13-1.6-2

For calculating the resulting moment effect on the column, the moment arm about the base of the column for transverse and longitudinal wind forces are:

$$H_{WSlong} := H_{col} + H_{cap} + \frac{H_{brng}}{12}$$ $H_{WSlong} = 26.53$ feet

$$H_{WStrns} := H_{col} + H_{cap} + \frac{H_{brng}}{12} + \frac{H_{super}}{2}$$ $H_{WStrns} = 30.76$ feet

However, the transverse load also applies a moment to the pier cap. This moment, which acts about the centerline of the pier cap, induces vertical loads at the bearings as illustrated in Figure E13-1.6-2. The computations for these vertical forces are presented below.

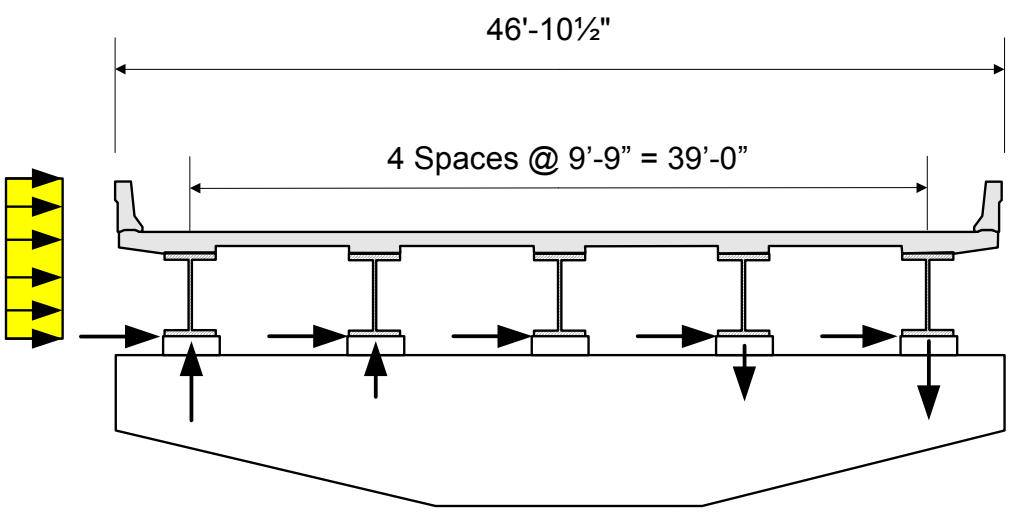

Figure E13-1.6-2
Transverse Wind Loads at Pier Bearings from Wind on Superstructure

Transverse Moments on the Pier Cap:

$M_{trnsIII} := WS_{suptrnsIII} \cdot \left(\frac{H_{super}}{2}\right)$ $\boxed{M_{trnsIII} = 189.02}$ kip-ft

$M_{trnsV} := WS_{suptrnsV} \cdot \left(\frac{H_{super}}{2}\right)$ $\boxed{M_{trnsV} = 90.22}$ kip-ft

$M_{trnsI} := WS_{suptrnsI} \cdot \left(\frac{H_{super}}{2}\right)$ $\boxed{M_{trnsI} = 68.74}$ kip-ft

Moment of Inertia for the Girder Group:

$I = \Sigma A \cdot y^2$

$A = 1 \quad I_1 = I_5 \quad I_2 = I_4 \quad I_3 = 0$ $\boxed{S = 9.75}$ feet (girder spacing)

$I_{girders} := 2 \cdot (S + S)^2 + 2 \cdot S^2$

$= 2 \cdot (9.75 + 9.75)^2 + 2 \cdot 9.75^2$ $\boxed{I_{girders} = 950.63}$ ft^2

$\text{Reaction} = \frac{\text{Moment} \cdot y}{I}$

Vertical Forces at the Bearings:

$RWS1_5_{trnsIII} := \frac{M_{trnsIII} \cdot (S + S)}{I_{girders}}$ $\boxed{RWS1_5_{trnsIII} = 3.88}$ kips

$RWS1_5_{trnsV} := \frac{M_{trnsV} \cdot (S + S)}{I_{girders}}$ $\boxed{RWS1_5_{trnsV} = 1.85}$ kips

$RWS1_5_{trnsI} := \frac{M_{trnsI} \cdot (S + S)}{I_{girders}}$ $\boxed{RWS1_5_{trnsI} = 1.41}$ kips

The loads at bearings 1 and 5 are equal but opposite in direction. Similarly for bearings 2 and 4:

$RWS2_4_{trnsIII} := \frac{M_{trnsIII} \cdot S}{I_{girders}}$ $\boxed{RWS2_4_{trnsIII} = 1.94}$ kips

$$RWS2_4_{trnsV} := \frac{M_{trnsV} \cdot S}{I_{girders}}$$ $RWS2_4_{trnsV} = 0.93$ kips

$$RWS2_4_{trnsl} := \frac{M_{trnsl} \cdot S}{I_{girders}}$$ $RWS2_4_{trnsl} = 0.70$ kips

Finally, by inspection: $RWS3_{trns} = 0$ kips

These vertical forces (RWS) are shown in Figure E13-1.6-2

E13-1.6.2.1 Vertical Wind Load

The vertical (upward) wind load is calculated by multiplying a 0.020 ksf vertical wind pressure by the out-to-out bridge deck width as described in Section 13.4.4.4. It is applied at the windward quarter-point of the deck only for limit states that do not include wind on live load (Strength III). The wind load is then multiplied by the tributary length, which is one-half of each adjacent span.

From previous definitions:

$w_{deck} = 46.5$ ft $L_{windT} = 120$ ft

The total vertical wind load is then:

$$WS_{vert} := 0.02(w_{deck}) \cdot (L_{windT})$$ $WS_{vert} = 111.6$ kips

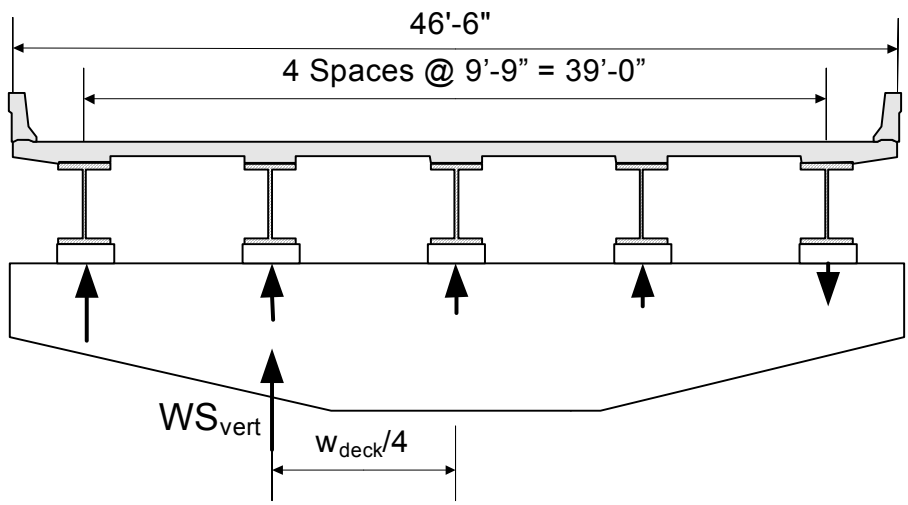

Figure E13-1.6-3
Vertical Wind Loads at Pier Bearings from Wind on Superstructure

This load causes a moment about the pier centerline. The value of this moment is:

$M_{WS_vert} := WS_{vert} \cdot \frac{w_{deck}}{4}$ $\boxed{M_{WS_vert} = 1297.35}$ kip-ft

The vertical loads at the bearings are computed as: $\boxed{S = 9.75}$ feet (girder spacing)

$RWS_{vert1} := \frac{-WS_{vert}}{5} + \frac{M_{WS_vert} \cdot (2 \cdot S)}{l_{girders}}$ $\boxed{RWS_{vert1} = 4.29}$ kips

$RWS_{vert2} := \frac{-WS_{vert}}{5} + \frac{M_{WS_vert} \cdot S}{l_{girders}}$ $\boxed{RWS_{vert2} = -9.01}$ kips

$RWS_{vert3} := \frac{-WS_{vert}}{5}$ $\boxed{RWS_{vert3} = -22.32}$ kips

$RWS_{vert4} := \frac{-WS_{vert}}{5} - \frac{M_{WS_vert} \cdot S}{l_{girders}}$ $\boxed{RWS_{vert4} = -35.63}$ kips

$RWS_{vert5} := \frac{-WS_{vert}}{5} - \frac{M_{WS_vert} \cdot 2 \cdot S}{l_{girders}}$ $\boxed{RWS_{vert5} = -48.93}$ kips

Where a negative value indicates a vertical upward load. These loads only apply to Strength III.

E13-1.6.2.2 Wind Load on Vehicles

The representation of wind pressure acting on vehicular traffic is given by **LRFD [3.8.1.3]** as a uniformly distributed line load. This load is applied both transversely and longitudinally. For the transverse and longitudinal loadings, the total force in each respective direction is calculated by multiplying the appropriate component by the length of structure tributary to the pier. Similar to the superstructure wind loading, the longitudinal length tributary to the pier differs from the transverse length. As shown in E13-1.6.2, the criteria for using the simplified method in Section 13.4.4.3 has been met, and the transverse and longitudinal loads are calculated as shown below and are to be applied simultaneously. This wind load applies to Strength V and Service I.

$\boxed{L_{windT} = 120}$ feet $\boxed{L_{windL} = 240}$ feet

$P_{LLtrans} := 0.100$ klf

$P_{LLlongit} := 0.040$ klf

$WL_{trans} := L_{windT} \cdot P_{LLtrans}$ $\boxed{WL_{trans} = 12}$ kips

$WL_{long} := L_{windL} \cdot P_{LLlongit}$ $\boxed{WL_{long} = 9.6}$ kips

The wind on vehicular live loads shown above are applied to the bearings in the same manner as the wind load from the superstructure. That is, the total transverse and longitudinal load is equally distributed to each bearing and applied at the top of the bearing.

The horizontal forces (WL_T , WL_L) at each bearing due to wind load on vehicles are:

$$WL_{T_V} := \frac{WL_{trans}}{5}$$ $\boxed{WL_{T_V} = 2.4}$ kips

$$WL_{T_I} := \frac{WL_{trans}}{5}$$ $\boxed{WL_{T_I} = 2.4}$ kips

$$WL_{L_V} := \frac{WL_{long}}{5}$$ $\boxed{WL_{L_V} = 1.92}$ kips

$$WL_{L_I} := \frac{WL_{long}}{5}$$ $\boxed{WL_{L_I} = 1.92}$ kips

In addition, the transverse load acting six feet above the roadway applies a moment to the pier cap. This moment induces vertical reactions at the bearings. The values of these vertical reactions are given below. The computations for these reactions are not shown but are carried out as shown in E13-1.6.2. The only difference is that the moment arm used for calculating the moment is equal to (H_{super} - H_{par} + 6.0 feet).

$$Mom_{arm} := H_{super} - H_{par} + 6$$ $\boxed{Mom_{arm} = 11.79}$ feet

<u>Vertical Forces at the Bearings</u>:

$\boxed{RWL1_5_{trns} = 2.9}$ kips

$\boxed{RWL2_4_{trns} = 1.45}$ kips

$\boxed{RWL3_{trns} = 0}$ kips

For calculating the resulting moment effect on the column, the moment arm about the base of the column is:

$$H_{WLlong} := H_{col} + H_{cap} + \frac{H_{brng}}{12}$$ $\boxed{H_{WLlong} = 26.53}$ feet

$$H_{WLtrns} := H_{col} + H_{cap} + \frac{H_{brng}}{12} + \left(H_{super} - H_{par} + 6\right)$$ $\boxed{H_{WLtrns} = 38.32}$ feet

E13-1.6.3 Wind Load on Substructure

The design wind pressure applied directly to the substructure units are shown in Section 13.4.4. As stated in E13-1.6.2, for Strength III the value of K_Z =1.0. For simplicity, apply the same pressure in the transverse and longitudinal directions for Strength III, V and Service I.

Strength III:

$P_{subIII} := 0.054$ ksf (transverse/longitudinal)

Strength V:

$P_{subV} := 0.026$ ksf (transverse/longitudinal)

Service I:

$P_{subI} := 0.020$ ksf (transverse/longitudinal)

In accordance with Section 13.4.4.2, the transverse and longitudinal wind forces calculated from these wind pressures acting on the corresponding exposed areas are to be applied simultaneously. These loads shall also act simultaneously with the superstructure wind loads.

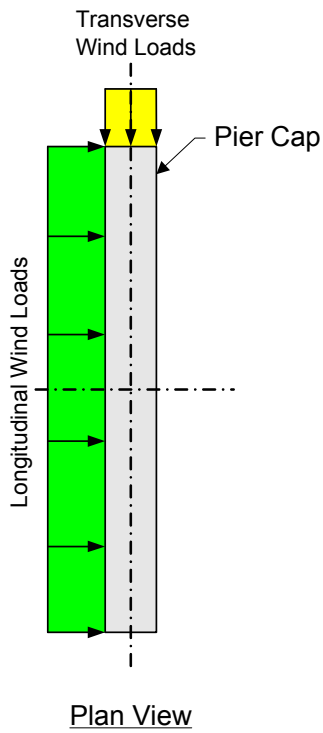

Figure E13-1.6-4
Wind Pressure on Pier

What follows is an example of the calculation of the wind loads acting directly on the pier. For simplicity, the tapers of the pier cap overhangs will be considered solid. The column height exposed to wind is the distance from the ground line (which is two feet above the footing) to

the bottom of the pier cap.

Component areas of the pier cap:

$A_{capLong} := (L_{cap})\cdot(H_{cap})$ $\boxed{A_{capLong} = 511.5}$ ft^2

$A_{capTrans} := (W_{cap})\cdot(H_{cap})$ $\boxed{A_{capTrans} = 44}$ ft^2

Component areas of the pier column:

$A_{colLong} := (L_{col})\cdot(H_{col} - D_{soil})$ $\boxed{A_{colLong} = 201.5}$ ft^2

$A_{colTrans} := (W_{col})\cdot(H_{col} - D_{soil})$ $\boxed{A_{colTrans} = 52}$ ft^2

The transverse and longitudinal substructure wind loads acting on the pier are:

Strength III:

$WS_{subLIII} := P_{subIII}\cdot(A_{capLong} + A_{colLong})$ $\boxed{WS_{subLIII} = 38.5}$ kips

$WS_{subTIII} := P_{subIII}\cdot(A_{capTrans} + A_{colTrans})$ $\boxed{WS_{subTIII} = 5.18}$ kips

Strength V:

$WS_{subLV} := P_{subV}\cdot(A_{capLong} + A_{colLong})$ $\boxed{WS_{subLV} = 18.54}$ kips

$WS_{subTV} := P_{subV}\cdot(A_{capTrans} + A_{colTrans})$ $\boxed{WS_{subTV} = 2.50}$ kips

Service I:

$WS_{subLI} := P_{subI}\cdot(A_{capLong} + A_{colLong})$ $\boxed{WS_{subLI} = 14.26}$ kips

$WS_{subTI} := P_{subI}\cdot(A_{capTrans} + A_{colTrans})$ $\boxed{WS_{subTI} = 1.92}$ kips

The point of application of these loads will be the centroid of the loaded area of each face, respectively.

$$H_{WSsubL} := \frac{A_{capLong}\cdot\left(H_{col} + \frac{H_{cap}}{2}\right) + A_{colLong}\cdot\left(\frac{H_{col} - 2}{2} + 2\right)}{A_{capLong} + A_{colLong}}$$

$\boxed{H_{WSsubL} = 17.11}$ feet

$$H_{WSsubT} := \frac{A_{capTrans} \cdot \left(H_{col} + \frac{H_{cap}}{2}\right) + A_{colTrans} \cdot \left(\frac{H_{col} - 2}{2} + 2\right)}{A_{capTrans} + A_{colTrans}}$$

$H_{WSsubT} = 14$ feet

E13-1.6.4 Temperature Loading (Superimposed Deformations)

In this particular structure, with a single pier centered between two abutments that have identical bearing types, the temperature force is based on assuming a minimum coefficient of expansion at one abutment and the maximum at the other using only dead load reactions. This force acts in the longitudinal direction of the bridge (either back or ahead station) and is equally divided among the bearings. Also, the forces at each bearing from this load will be applied at the top of the bearing.

The abutment girder Dead Load reactions from E13-1.2.1 are as follows:

$AbutRint_{DC} = 61.69$ $AbutRext_{DC} = 62.97$

$AbutRint_{DW} = 7.46$ $AbutRext_{DW} = 7.46$

$\mu_{min} = 0.06$

$\mu_{max} = 0.1$

$\Delta\mu := \mu_{max} - \mu_{min}$ $\Delta\mu = 0.04$

$$F_{TU} := \Delta\mu \cdot \left[3 \cdot \left(AbutRint_{DC} + AbutRint_{DW}\right) + 2 \cdot \left(AbutRext_{DC} + AbutRext_{DW}\right)\right]$$

$F_{TU} = 13.93$ kips

The resulting temperature force acting on each bearing is:

$$TU_{BRG} := \frac{F_{TU}}{5}$$

$TU_{BRG} = 2.79$ kips

The moment arm about the base of the column is:

$$H_{TU} := H_{col} + H_{cap} + \frac{H_{brng}}{12}$$

$H_{TU} = 26.53$ feet

E13-1.7 Analyze and Combine Force Effects

The first step within this design step will be to summarize the loads acting on the pier at the bearing locations. This is done in Tables E13-1.7-1 through E13-1.7-8 shown below. Tables E13-1.7-1 through E13-1.7-5 summarize the vertical loads, Tables E13-1.7-6 through E13-1.7-7 summarize the horizontal longitudinal loads, and Table E13-1.7-8 summarizes the horizontal transverse loads. These loads along with the pier self-weight loads, which are

shown after the tables, need to be factored and combined to obtain total design forces to be resisted in the pier cap, column and footing.

It will be noted here that loads applied due to braking and temperature can act either ahead or back station. Also, wind loads can act on either side of the structure and with positive or negative skew angles. This must be kept in mind when considering the signs of the forces in the tables below. The tables assume a particular direction for illustration only.

	Superstructure Dead Load		Wearing Surface Dead Load	
Bearing	Variable Name	Reaction (Kips)	Variable Name	Reaction (Kips)
1	$Rext_{DC}$	246.65	$Rext_{DW}$	27.32
2	$Rint_{DC}$	241.72	$Rint_{DW}$	27.32
3	$Rint_{DC}$	241.72	$Rint_{DW}$	27.32
4	$Rint_{DC}$	241.72	$Rint_{DW}$	27.32
5	$Rext_{DC}$	246.65	$Rext_{DW}$	27.32

Table E13-1.7-1
Unfactored Vertical Bearing Reactions from Superstructure Dead Load

	Vehicular Live Load **					
	Lane A		Lane B		Lane C	
Bearing	Variable Name	Reaction (Kips)	Variable Name	Reaction (Kips)	Variable Name	Reaction (Kips)
1	R_1_a	4.27	R_1_b	0.00	R_1_c	0.00
2	R_2_a	164.67	R_2_b	0.00	R_2_c	0.00
3	R_3_a	72.31	R_3_b	117.56	R_3_c	0.00
4	R_4_a	0.00	R_4_b	123.66	R_4_c	61.86
5	R_5_a	0.00	R_5_b	0.00	R_5_c	179.40

**Note: Live load reactions include impact on truck loading.

Table E13-1.7-2
Unfactored Vertical Bearing Reactions from Live Load

Strength III

Bearing No.	Reactions from Transverse Wind Load on Superstructure (kips)
1	3.88
2	1.94
3	0.00
4	-1.94
5	-3.88

Strength V

Bearing No.	Reactions from Transverse Wind Load on Superstructure (kips)
1	1.85
2	0.93
3	0.00
4	-0.93
5	-1.85

Service I

Bearing No.	Reactions from Transverse Wind Load on Superstructure (kips)
1	1.41
2	0.70
3	0.00
4	-0.70
5	-1.41

Table E13-1.7-3
Unfactored Vertical Bearing Reactions from Wind on Superstructure

Strength V , Service I

Bearing No.	Reactions from Transverse Wind Load on Vehicular Live Load (kips)
1	2.90
2	1.45
3	0.00
4	-1.45
5	-2.90

Table E13-1.7-4
Unfactored Vertical Bearing Reactions from Wind on Live Load

Strength III

	Vertical Wind Load on Superstructure	
Bearing No.	Variable Name	Reaction (Kips)
1	RWS_{vert1}	4.29
2	RWS_{vert2}	-9.01
3	RWS_{vert3}	-22.32
4	RWS_{vert4}	-35.63
5	RWS_{vert5}	-48.93

Table E13-1.7-5
Unfactored Vertical Bearing Reactions from Vertical Wind on Superstructure

	Braking Load **		Temperature Loading	
	Variable Name	Reaction (Kips)	Variable Name	Reaction (Kips)
Each Bearing	BRK_{brg}	3.60	TU_{BRG}	2.79

**Note: Values shown are for a single lane loaded

Table E13-1.7-6
Unfactored Horizontal Longitudinal Bearing Reactions from Braking and Temperature

Strength III

Load Type	Unfactored Horizontal Longitudinal Forces (kips)
Wind Loads from Superstructure	22.34
Wind on Live Load	0.00
Wind on Pier	38.50

Strength V

Load Type	Unfactored Horizontal Longitudinal Forces (kips)
Wind Loads from Superstructure	12.18
Wind on Live Load	9.60
Wind on Pier	18.54

Service I

Load Type	Unfactored Horizontal Longitudinal Forces (kips)
Wind Loads from Superstructure	8.12
Wind on Live Load	9.60
Wind on Pier	14.26

Table E13-1.7-7
Unfactored Horizontal Longitudinal Forces

Strength III

Load Type	Unfactored Horizontal Transverse Forces (kips)
Wind Loads from Superstructure	44.68
Wind on Live Load	0.00
Wind on Pier	5.18

Strength V

Load Type	Unfactored Horizontal Transverse Forces (kips)
Wind Loads from Superstructure	21.32
Wind on Live Load	12.00
Wind on Pier	2.50

Service I

Load Type	Unfactored Horizontal Transverse Forces (kips)
Wind Loads from Superstructure	16.25
Wind on Live Load	12.00
Wind on Pier	1.92

Table E13-1.7-8
Unfactored Horizontal Transverse Forces

In addition to all the loads tabulated above, the pier self-weight must be considered when determining the final design forces. Additionally for the footing and pile designs, the weight of the earth on top of the footing must be considered. These loads were previously calculated and are shown below:

$DL_{Cap} = 251.1$ kips

$DL_{ftg} = 144.9$ kips

$DL_{col} = 139.5$ kips

$EV_{ftg} = 51.36$ kips

In the AASHTO LRFD design philosophy, the applied loads are factored by statistically calibrated load factors. In addition to these factors, one must be aware of two additional sets of factors which may further modify the applied loads.

The first set of additional factors applies to all force effects and are represented by the Greek letter η (eta) in the Specifications, **LRFD [1.3.2.1]**. These factors are related to the ductility, redundancy, and operational importance of the structure. A single, combined eta is required for every structure. In accordance with WisDOT policy, all eta factors are taken equal to one.

The other set of factors mentioned in the first paragraph above applies only to the live load force effects and are dependent upon the number of loaded lanes. These factors are termed multiple presence factors by the Specifications, **LRFD [Table 3.6.1.1.2-1]**. These factors for this bridge are shown as follows:

Multiple presence factor, m (1 lane) $m_1 := 1.20$

Multiple presence factor, m (2 lanes) $m_2 := 1.00$

Multiple presence factor, m (3 lanes) $m_3 := 0.85$

Table E13-1.7-9 contains the applicable limit states and corresponding load factors that will be used for this pier design. Limit states not shown either do not control the design or are not applicable. The load factors shown in Table E13-1.7-9 are the standard load factors assigned by the Specifications and are exclusive of multiple presence and eta factors.

It is important to note here that the maximum load factors shown in Table E13-1.7-9 for uniform temperature loading (TU) apply only for deformations, and the minimum load factors apply for all other effects. Since the force effects from the uniform temperature loading are considered in this pier design, the minimum load factors will be used.

	Load Factors							
	Strength I		Strength III		Strength V		Service I	
Load	γ_{max}	γ_{min}	γ_{max}	γ_{min}	γ_{max}	γ_{min}	γ_{max}	γ_{min}
DC	1.25	0.90	1.25	0.90	1.25	0.90	1.00	1.00
DW	1.50	0.65	1.50	0.65	1.50	0.65	1.00	1.00
LL	1.75	1.75	---	---	1.35	1.35	1.00	1.00
BR	1.75	1.75	---	---	1.35	1.35	1.00	1.00
TU	1.20	0.50	1.20	0.50	1.20	0.50	1.20	1.00
WS	---	---	1.00	1.00	1.00	1.00	1.00	1.00
WL	---	---	---	---	1.00	1.00	1.00	1.00
EV	1.35	1.00	1.35	1.00	1.35	1.00	1.00	1.00

Table E13-1.7-9
Load Factors and Applicable Pier Limit States

The loads discussed and tabulated previously can now be factored by the appropriate load factors and combined to determine the governing limit states in the pier cap, column, footing and piles. Design calculations will be carried out for the governing limit states only.

E13-1.7.1 Pier Cap Force Effects

The pier cap will be designed using a strut and tie model. See E13-1.8 for additional information. For this type of model, the member's self weight is included in the bearing reactions. The calculation of the Strength I Factored girder reactions follows.

For the dead load of the cap, the tributary weight of the cap will be added to each girder reaction.

$$Cap_{DC_1} := 8.625 \cdot \frac{5 + 8.34}{2} \cdot W_{cap} \cdot w_c \qquad \boxed{Cap_{DC_1} = 34.52} \quad \text{kips}$$

$$Cap_{DC_2} := \left(6.875 \cdot \frac{8.34 + 11}{2} + 2.875 \cdot 11\right) \cdot W_{cap} \cdot w_c \qquad \boxed{Cap_{DC_2} = 58.86} \quad \text{kips}$$

$$Cap_{DC_3} := 9.75 \cdot 11 \cdot W_{cap} \cdot w_c \qquad \boxed{Cap_{DC_3} = 64.35} \quad \text{kips}$$

$$Cap_{DC_4} := Cap_{DC_2} \qquad \boxed{Cap_{DC_4} = 58.86} \quad \text{kips}$$

$$Cap_{DC_5} := Cap_{DC_1} \qquad \boxed{Cap_{DC_5} = 34.52} \quad \text{kips}$$

Look at the combined live load girder reactions with 1 (Lane C), 2 (Lanes C and B) and 3 lanes (Lanes C, B and A) loaded. The multiple presence factor from E13-1.7 shall be applied. The design lane locations were located to maximize the forces over the right side of the cap.

	Unfactored Vehicular Live Load					
	1 Lane, m=1.2		2 Lanes, m=1.0		3 Lanes, m=0.85	
Bearing	Variable Name	Reaction (Kips)	Variable Name	Reaction (Kips)	Variable Name	Reaction (Kips)
1	R_1_1	0.00	R_1_2	0.00	R_1_3	3.63
2	R_2_1	0.00	R_2_2	0.00	R_2_3	139.97
3	R_3_1	0.00	R_3_2	117.56	R_3_3	161.40
4	R_4_1	74.23	R_4_2	185.52	R_4_3	157.70
5	R_5_1	215.27	R_5_2	179.40	R_5_3	152.49

Table E13-1.7-10
Unfactored Vehicular Live Load Reactions

Calculate the Strength I Combined Girder Reactions for 1, 2 and 3 lanes loaded. An example calculation is shown for the girder 5 reaction with one lane loaded. Similar calculations are performed for the remaining girders and number of lanes loaded.

$$Ru_{5_1} := \gamma_{DCmax} \cdot \left(Rext_{DC} + Cap_{DC_5}\right) + \gamma_{DWmax} \cdot Rext_{DW} + \gamma_{LL} \cdot R_{5_1}$$

$$\boxed{Ru_{5_1} = 769.17} \quad \text{kips}$$

	Total Factored Girder Reactions**					
	1 Lane, m=1.2		2 Lanes, m=1.0		3 Lanes, m=0.85	
Bearing	Variable Name	Reaction (Kips)	Variable Name	Reaction (Kips)	Variable Name	Reaction (Kips)
1	Ru_1_1	392.44	Ru_1_2	392.44	Ru_1_3	398.79
2	Ru_2_1	416.71	Ru_2_2	416.71	Ru_2_3	661.66
3	Ru_3_1	423.57	Ru_3_2	629.30	Ru_3_3	706.01
4	Ru_4_1	546.62	Ru_4_2	741.38	Ru_4_3	692.68
5	Ru_5_1	769.17	Ru_5_2	706.38	Ru_5_3	659.29

** Includes dead load of pier cap

Table E13-1.7-11
Factored Girder Reactions for STM Cap Design

E13-1.7.2 Pier Column Force Effects

The controlling limit states for the design of the pier column are Strength V (for biaxial bending with axial load). The critical design location is where the column meets the footing, or at the column base. The governing force effects for Strength V are achieved by minimizing the axial effects while maximizing the transverse and longitudinal moments. This is accomplished by excluding the future wearing surface, applying minimum load factors on the structure dead load, and loading only Lane B and Lane C with live load.

For Strength V, the factored vertical forces and corresponding moments at the critical section are shown below.

Strength V Axial Force:

$Rext_{DC} = 246.65$ kips

$Rint_{DC} = 241.72$ kips

$DL_{Cap} = 251.1$ kips

$DL_{col} = 139.5$ kips

$R_{3_2} = 117.56$ kips

$R_{4_2} = 185.52$ kips

$R_{5_2} = 179.4$ kips

$$Ax_{colStrV} := \gamma_{DCminStrV} \cdot \left(2 \cdot Rext_{DC} + 3 \cdot Rint_{DC} + DL_{Cap} + DL_{col}\right) \ldots + \gamma_{LLStrV}\left(R_{3_2} + R_{4_2} + R_{5_2}\right)$$

$Ax_{colStrV} = 2099.51$ kips

Strength V Transverse Moment:

$S = 9.75$ feet (girder spacing)

$ArmV3_{col} := 0$ $ArmV3_{col} = 0$ feet

$ArmV4_{col} := S$ $ArmV4_{col} = 9.75$ feet

$ArmV5_{col} := 2 \cdot S$ $ArmV5_{col} = 19.5$ feet

$WS_{suptrnsV} = 21.32$ kips $H_{WStrns} = 30.76$ feet

$WL_{trans} = 12$ kips $H_{WLtrns} = 38.32$ feet

$WS_{subTV} = 2.5$ kips $H_{WSsubT} = 14$ feet

$$MuT_{colStrV} := \gamma_{LLStrV}\left(R_{3_2} \cdot ArmV3_{col} + R_{4_2} \cdot ArmV4_{col} + R_{5_2} \cdot ArmV5_{col}\right) \ldots$$
$$+ \gamma_{WLStrV} \cdot \left(WL_{trans} \cdot H_{WLtrns}\right) \ldots$$
$$+ \gamma_{WSStrV} \cdot \left(WS_{suptrnsV} \cdot H_{WStrns} + WS_{subTV} \cdot H_{WSsubT}\right)$$

$MuT_{colStrV} = 8315.32$ kip-ft

Strength V Longitudinal Moment:

$BRK_{brg} = 3.6$ kips/bearing per lane $H_{BRK} = 26.53$ feet

$TU_{BRG} = 2.79$ kips/ bearing $H_{TU} = 26.53$ feet

$WS_{suplngV} = 12.18$ kips $H_{WSlong} = 26.53$ feet

$WL_{long} = 9.6$ kips $H_{WLlong} = 26.53$ feet

$WS_{subLV} = 18.54$ kips $H_{WSsubL} = 17.11$ feet

$m_2 = 1.00$ multi presence factor for two lanes loaded

$$MuL_{colStrV} := \gamma_{BRStrV} \cdot \left(5 \cdot BRK_{brg} \cdot H_{BRK} \cdot 2 \cdot m_2\right) \ldots$$
$$+ \gamma_{TUminStrV}\left(5TU_{BRG} \cdot H_{TU}\right) \ldots$$
$$+ \gamma_{WLStrV} \cdot \left(WL_{long} \cdot H_{WLlong}\right) \ldots$$
$$+ \gamma_{WSStrV} \cdot \left(WS_{suplngV} \cdot H_{WSlong} + WS_{subLV} \cdot H_{WSsubL}\right)$$

$MuL_{colStrV} = 2369.38$ kip-ft

For Strength III, the factored transverse shear in the column is:

$WS_{subTIII} = 5.18$ kips $\qquad WS_{suptrnsIII} = 44.68$ kips

$VuT_{col} := \gamma_{WSStrIII}(WS_{suptrnsIII} + WS_{subTIII})$ $\qquad VuT_{col} = 49.86$ kips

For Strength V, the factored longitudinal shear in the column is (reference Table E13-1.7-7):

$WL_{long} = 9.6$ kips $\qquad WS_{subLV} = 18.54$ kips $\qquad WS_{suplngV} = 12.18$ kips

$$VuL_{col} := \gamma_{WSStrV}(WS_{suplngV} + WS_{subLV}) + \gamma_{WLStrV} \cdot WL_{long} \ldots$$
$$+ \gamma_{TUmin} \cdot (TU_{BRG} \cdot 5) + \gamma_{BRStrV} \cdot (5 \cdot BRK_{brg}) \cdot 3 \cdot m_3$$

$VuL_{col} = 109.25$ kips

E13-1.7.3 Pier Pile Force Effects

The foundation system for the pier is a reinforced concrete footing on steel H-piles. The force effects in the piles cannot be determined without a pile layout. The pile layout depends upon the pile capacity and affects the footing design. The pile layout used for this pier foundation is shown in Figure E13-1.10-1.

Based on the pile layout shown in Figure E13-1.10-1, the controlling limit states for the pile design are Strength I (for maximum pile load), Strength V (for minimum pile load), and Strength III and Strength V (for maximum horizontal loading of the pile group).

Structure Dead Load Effects:

Girder DC Reactions:

$Rext_{DC} = 246.65$ kips

$Rint_{DC} = 241.72$ kips

Girder DW Reactions:

$Rext_{DW} = 27.32$ kips

$Rint_{DW} = 27.32$ kips

$DC_{Super} := 2 \cdot Rext_{DC} + 3 \cdot Rint_{DC}$ $\qquad DC_{Super} = 1218.46$ kips

$DL_{Cap} = 251.1$ kips

$DL_{col} = 139.5$ kips

$DL_{ftg} = 144.9$ kips

$DC_{pile} := DC_{Super} + DL_{Cap} + DL_{col} + DL_{ftg}$ $\qquad DC_{pile} = 1753.96$ kips

$DW_{pile} := 2 \cdot Rext_{DW} + 3 \cdot Rint_{DW}$ $\qquad DW_{pile} = 136.6$ kips

Vertical Earth Load Effects:

$EV_{pile} := EV_{ftg}$ $\boxed{EV_{pile} = 51.36}$ kips

Live Load Effects (without Dynamic Load Allowance)

Live Load Girder Reactions for 2 lanes, Lanes B and C, loaded:

$\boxed{R_{1_2p} = 0}$ kips

$\boxed{R_{2_2p} = 0}$ kips

$\boxed{R_{3_2p} = 99.21}$ kips

$\boxed{R_{4_2p} = 156.54}$ kips

$\boxed{R_{5_2p} = 151.38}$ kips $\boxed{R_{T_2p} = 407.13}$ kips

From Section E13-1.7, the Transverse moment arm for girders 3, 4 and 5 are:

$\boxed{ArmV3_{col} = 0}$ feet

$\boxed{ArmV4_{col} = 9.75}$ feet

$\boxed{ArmV5_{col} = 19.5}$ feet

The resulting Transverse moment applied to the piles is:

$M_{LL2T_p} := R_{3_2p} \cdot ArmV3_{col} + R_{4_2p} \cdot ArmV4_{col} + R_{5_2p} \cdot ArmV5_{col}$

$\boxed{M_{LL2T_p} = 4478.2}$ kip-ft

The Longitudinal Strength I Moment includes the braking and temperature forces.

$MuL2_{colStr1} := \gamma_{BR} \cdot (5 \cdot BRK_{brg} \cdot H_{BRK} \cdot 2 \cdot m_2) + \gamma_{TUmin}(5TU_{BRG} \cdot H_{TU})$

$\boxed{MuL2_{colStr1} = 1856.29}$ kip-ft

Strength I Load for Maximum Pile Reaction

The maximum pile load results from the Strength I load combination with two lanes loaded.

$Pu2_{pile_Str1} := \gamma_{DCmax} \cdot DC_{pile} + \gamma_{DWmax} \cdot DW_{pile} + \gamma_{EVmax} \cdot EV_{pile} + \gamma_{LL} \cdot R_{T_2p}$

$Pu2_{pile_Str1} = 3179.17$ kips

$MuT2_{pile_Str1} := \gamma_{LL} \cdot M_{LL2T_p}$ $MuT2_{pile_Str1} = 7836.85$ kip-ft

$MuL2_{pile_Str1} := MuL2_{colStr1}$ $MuL2_{pile_Str1} = 1856.29$ kip-ft

Minimum Load on Piles Strength V

The calculation for the minimum axial load on piles is similar to the Strength V axial column load calculated previously. The weight of the footing and soil surcharge are included. The girder reactions used for pile design do not include impact. The DW loads are not included.

$$Pu_{pile_StrV} := \gamma_{DCminStrV} \cdot (2 \cdot Rext_{DC} + 3 \cdot Rint_{DC} + DL_{Cap} + DL_{col} + DL_{ftg}) \ldots + \gamma_{EVminStrV} \cdot EV_{pile} \ldots + \gamma_{LLStrV}(R_{3_2p} + R_{4_2p} + R_{5_2p})$$

$Pu_{pile_StrV} = 2179.55$ kips

The calculation for the Strength V longitudinal moment is the same as the longitudinal moment on the column calculated previously. These loads include the braking force, temperature, wind on live load and wind on the structure.

$$MuL_{pile_StrV} := \gamma_{BRStrV} \cdot (5 \cdot BRK_{brg} \cdot H_{BRK} \cdot 2 \cdot m_2) \ldots + \gamma_{TUminStrV}(5TU_{BRG} \cdot H_{TU}) \ldots + \gamma_{WLStrV} \cdot (WL_{long} \cdot H_{WLlong}) \ldots + \gamma_{WSStrV} \cdot (WS_{suplngV} \cdot H_{WSlong} + WS_{subLV} \cdot H_{WSsubL})$$

$MuL_{pile_StrV} = 2369.38$ kip-ft

The calculation for the Strength V transverse moment is the similar as the transverse moment on the column calculated previously. These loads include the live load, wind on live load and wind on the structure. Impact is not included in these live load reactions.

$$MuT_{pile_StrV} := \gamma_{LLStrV}(R_{3_2p} \cdot ArmV3_{col} + R_{4_2p} \cdot ArmV4_{col} + R_{5_2p} \cdot ArmV5_{col}) \ldots + \gamma_{WLStrV} \cdot (WL_{trans} \cdot H_{WLtrns}) \ldots + \gamma_{WSStrV} \cdot (WS_{suptrnsV} \cdot H_{WStrns} + WS_{subTV} \cdot H_{WSsubT})$$

$MuT_{pile_StrV} = 7196.34$ kip-ft

For Strength III, the factored transverse shear in the footing is equal to the transverse force at the base of the column.

$HuT_{pileStrIII} := VuT_{col}$

$= \gamma_{WSStrIII} \cdot (WS_{suptrnsIII} + WS_{subTIII})$ $\boxed{HuT_{pileStrIII} = 49.86}$ kips

For Strength V, the factored longitudinal shear in the column is equal to the longitudinal force at the base of the column.

$HuL_{pileStrV} := VuL_{col}$ $\boxed{HuL_{pileStrV} = 109.25}$ kips

The following is a summary of the controlling forces on the piles:

Strength I

$\boxed{Pu2_{pile_Str1} = 3179.17}$ kips

$\boxed{MuT2_{pile_Str1} = 7836.85}$ kip-ft

$\boxed{MuL2_{pile_Str1} = 1856.29}$ kip-ft

Strength III

$\boxed{HuT_{pileStrIII} = 49.86}$ kips

Strength V

$\boxed{Pu_{pile_StrV} = 2179.55}$ kips

$\boxed{MuT_{pile_StrV} = 7196.34}$ kip-ft

$\boxed{MuL_{pile_StrV} = 2369.38}$ kip-ft

$\boxed{HuL_{pileStrV} = 109.25}$ kips

E13-1.7.4 Pier Footing Force Effects

The controlling limit states for the design of the pier footing are Strength I (for flexure, punching shear at the column, and punching shear at the maximum loaded pile, and for one-way shear). In accordance with Section 13.11, the footings do not require the crack control by distribution check in **LRFD [5.7.3.4]**. As a result, the Service I Limit State is not required. There is not a single critical design location in the footing where all of the force effects just mentioned are checked. Rather, the force effects act at different locations in the footing and must be checked at their respective locations. For example, the punching shear checks are carried out using critical perimeters around the column and maximum loaded pile,

while the flexure and one-way shear checks are carried out on a vertical face of the footing either parallel or perpendicular to the bridge longitudinal axis. Also note that impact is not included for members that are below ground. The weight of the footing concrete and the soil above the footing are not included in these loads as they counteract the pile reactions.

$DC_{ftg} := DC_{Super} + DL_{Cap} + DL_{col}$ $\boxed{DC_{ftg} = 1609.06}$ kips

$DW_{ftg} := 2 \cdot Rext_{DW} + 3 \cdot Rint_{DW}$ $\boxed{DW_{ftg} = 136.6}$ kips

Unfactored Live Load reactions for one, two and three lanes loaded:

$\boxed{R_{T_1p} = 244.3}$ kips

$\boxed{R_{T_2p} = 407.13}$ kips

$\boxed{R_{T_3p} = 519.1}$ kips

The resulting Transverse moment applied to the piles is:

$M_{LL1T} := R_{4_1p} \cdot ArmV4_{col} + R_{5_1p} \cdot ArmV5_{col}$ $\boxed{M_{LL1T} = 4153.03}$ kip-ft

$M_{LL2T} := R_{4_2p} \cdot ArmV4_{col} + R_{5_2p} \cdot ArmV5_{col}$ $\boxed{M_{LL2T} = 4478.2}$ kip-ft

$M_{LL3T} := \left(-R_{2_3p} + R_{4_3p}\right) \cdot ArmV4_{col} + \left(-R_{1_3p} + R_{5_3p}\right) \cdot ArmV5_{col}$

$\boxed{M_{LL3T} = 2595.17}$ kip-ft

The maximum pile load results from the Strength I load combination with two lanes loaded.

$Pu2_{ftgStr1} := \gamma_{DCmax} \cdot DC_{ftg} + \gamma_{DWmax} \cdot DW_{ftg} + \gamma_{LL} \cdot R_{T_2p}$

$\boxed{Pu2_{ftgStr1} = 2928.7}$ kips

$MuT2_{ftgStr1} := \gamma_{LL} \cdot M_{LL2T}$ $\boxed{MuT2_{ftgStr1} = 7836.85}$ kip-ft

$MuL2_{ftgStr1} := \gamma_{BR} \cdot \left(5 \cdot BRK_{brg} \cdot H_{BRK} \cdot 2 \cdot m_2\right) \ldots + \gamma_{TUmin}\left(5TU_{BRG} \cdot H_{TU}\right)$ $\boxed{MuL2_{ftgStr1} = 1856.29}$ kip-ft

The Strength I limit state controls for the punching shear check at the column. In this case the future wearing surface is included, maximum factors are applied to all the dead load components, and all three lanes are loaded with live load. This results in the following bottom of column forces:

$Pu3_{ftgStr1} := \gamma_{DCmax} \cdot DC_{ftg} + \gamma_{DWmax} \cdot DW_{ftg} + \gamma_{LL} \cdot R_{T_3p}$

$\boxed{Pu3_{ftgStr1} = 3124.66}$ kips

$MuT3_{ftgStr1} := \gamma_{LL} \cdot M_{LL3T}$ $\boxed{MuT3_{ftgStr1} = 4541.55}$ kip-ft

$MuL3_{ftgStr1} := \gamma_{BR} \cdot (5 \cdot BRK_{brg} \cdot H_{BRK} \cdot 3 \cdot m_3) \ldots + \gamma_{TUmin}(5TU_{BRG} \cdot H_{TU})$ $\boxed{MuL3_{ftgStr1} = 2315.94}$ kip-ft

E13-1.8 Design Pier Cap - Strut and Tie Method (STM)

Prior to carrying out the actual design of the pier cap, a brief discussion is in order regarding the design philosophy that will be used for the design of the structural components of this pier.

When a structural member meets the definition of a deep component **LRFD [5.6.3.1]**, the LRFD Specifications recommend, although it does not mandate, that the strut-and-tie method be used to determine force effects and required reinforcing. **LRFD [C5.6.3.1]** indicates that a strut-and-tie model properly accounts for nonlinear strain distribution, nonuniform shear distribution, and the mechanical interaction of V_u, T_u and M_u. Use of strut-and-tie models for the design of reinforced concrete members is new to the LRFD Specification. WisDOT policy is to design hammerhead pier caps using STM.

E13-1.8.1 Determine Geometry and Member Forces

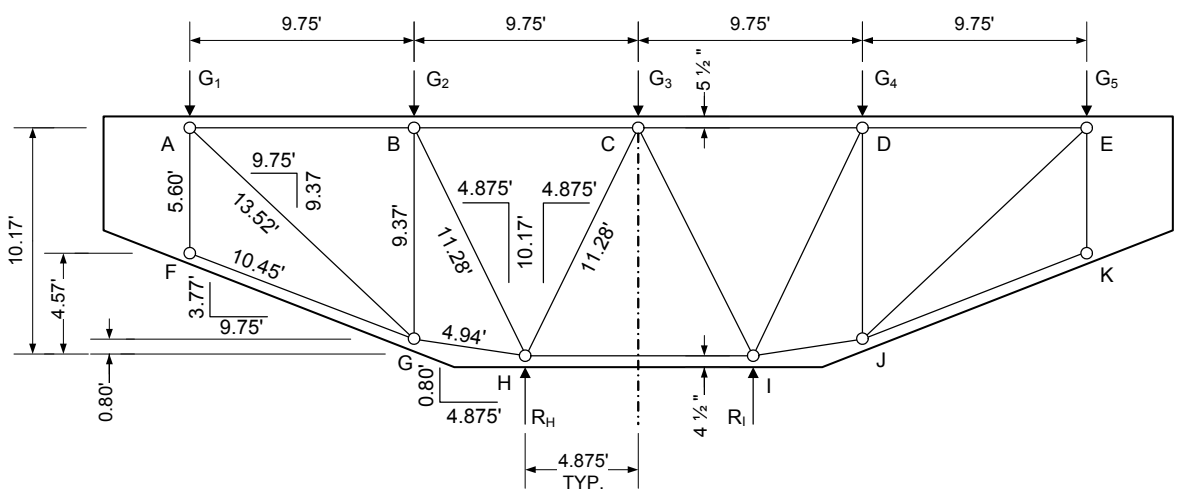

Figure E13-1.8-1
Strut and Tie Model Dimensions

In order to maintain a minimum 25° angle between struts and ties, the support Nodes (H and I) are located midway between the girder reactions **LRFD [5.6.3.2]**. For this example a compressive strut depth of 8 inches will be used, making the centroids of the bottom truss chords 4.5 inches from the concrete surface. It is also assumed that two layers of rebar will be required along the top tension ties, and the centroid is located 5.5 inches below the top of the cap.

$centroid_{bot} := 4.5$ inches $centroid_{top} := 5.5$ inches

Strength I Loads:

	Total Factored Girder Reactions**					
	1 Lane, m=1.2		2 Lanes, m=1.0		3 Lanes, m=0.85	
Bearing	Variable Name	Reaction (Kips)	Variable Name	Reaction (Kips)	Variable Name	Reaction (Kips)
1	Ru_1_1	392.44	Ru_1_2	392.44	Ru_1_3	398.79
2	Ru_2_1	416.71	Ru_2_2	416.71	Ru_2_3	661.66
3	Ru_3_1	423.57	Ru_3_2	629.30	Ru_3_3	706.01
4	Ru_4_1	546.62	Ru_4_2	741.38	Ru_4_3	692.68
5	Ru_5_1	769.17	Ru_5_2	706.38	Ru_5_3	659.29

** Includes dead load of pier cap

Table E13-1.8-1
Total Factored Girder Reactions

Calculate the forces in the members for the Strength I Load Case with 2 lanes loaded.

To find the column reaction at Node I, sum moments about Node H:

$$R_{I_2} := \frac{Ru_{3_2} \cdot 4.875 + Ru_{4_2} \cdot 14.625 + Ru_{5_2} \cdot 24.375 - Ru_{2_2} \cdot 4.875 - Ru_{1_2} \cdot 14.625}{9.75}$$

$$\boxed{R_{I_2} = 2395.66} \quad \text{kips}$$

$$R_{H_2} := Ru_{1_2} + Ru_{2_2} + Ru_{3_2} + Ru_{4_2} + Ru_{5_2} - R_{I_2}$$

$$\boxed{R_{H_2} = 490.55} \quad \text{kips}$$

The method of joints is used to calculate the member forces. Start at Node K.

By inspection, the following are zero force members and can be ignored in the model:

$F_{JK} := 0$ $F_{EK} := 0$ $F_{AF} := 0$ $F_{FG} := 0$ kips

Note: All forces shown are in kips. "C" indicates compression and "T" indicates tension.

At Node E:

$F_{EJ_vert} := Ru_{5_2}$ $\boxed{F_{EJ_vert} = 706.38}$

$F_{EJ_horiz} = Ru_{5_2} \cdot \frac{EJ_h}{EJ_v}$ $F_{EJ_horiz} = 735.42$

$F_{EJ} := \sqrt{F_{EJ_vert}^2 + F_{EJ_horiz}^2}$ $F_{EJ} = 1019.71$ C

$F_{DE} := F_{EJ_horiz}$ $F_{DE} = 735.42$ T

At Node J:

$F_{IJ_horiz} := F_{EJ_horiz}$ $F_{IJ_horiz} = 735.42$

$F_{IJ_vert} = F_{IJ_horiz} \cdot \frac{0.802}{4.875}$ $F_{IJ_vert} = 120.99$

$F_{IJ} := \sqrt{F_{IJ_horiz}^2 + F_{IJ_vert}^2}$ $F_{IJ} = 745.31$ C

$F_{DJ} := F_{EJ_vert} - F_{IJ_vert}$ $F_{DJ} = 585.4$ T

At Node D:

$F_{DI_vert} := F_{DJ} + Ru_{4_2}$ $F_{DI_vert} = 1326.77$

$F_{DI_horiz} = F_{DI_vert} \cdot \frac{4.875}{10.167}$ $F_{DI_horiz} = 636.18$

$F_{DI} := \sqrt{F_{DI_vert}^2 + F_{DI_horiz}^2}$ $F_{DI} = 1471.41$ C

$F_{CD} := F_{DE} + F_{DI_horiz}$ $F_{CD} = 1371.6$ T

At Node I:

$R_{I_2} = 2395.66$

$F_{CI_vert} := R_{I_2} - F_{DI_vert} - F_{IJ_vert}$ $F_{CI_vert} = 947.9$

$F_{CI_horiz} = F_{CI_vert} \cdot \frac{4.875}{10.167}$ $F_{CI_horiz} = 454.51$

$F_{CI} := \sqrt{F_{CI_vert}^2 + F_{CI_horiz}^2}$ $F_{CI} = 1051.23$ C

$F_{HI} := F_{DI_horiz} + F_{IJ_horiz} - F_{CI_horiz}$ $F_{HI} = 917.09$ C

Similar calculations are performed to determine the member forces for the remainder of the model and for the load cases with one and three lanes loaded. The results are summarized in the following figures:

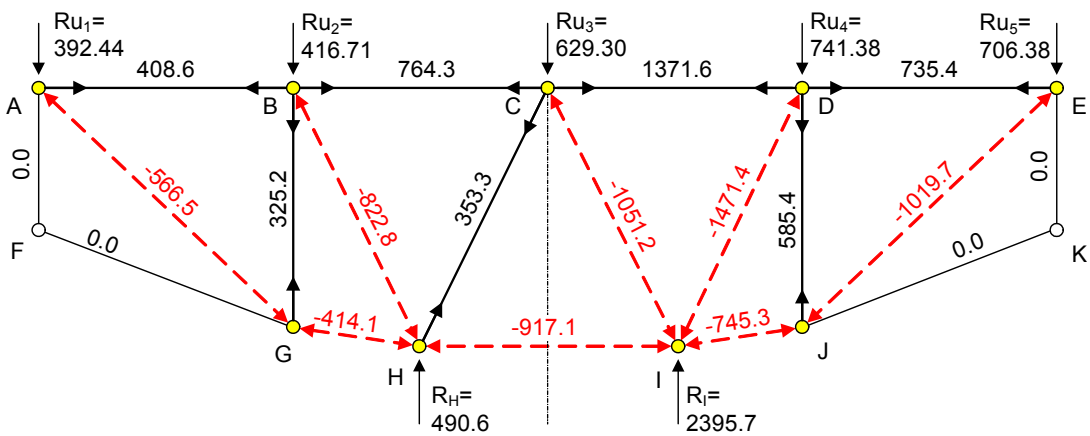

Figure E13-1.8-2
STM Member Forces (Two Lanes Loaded)

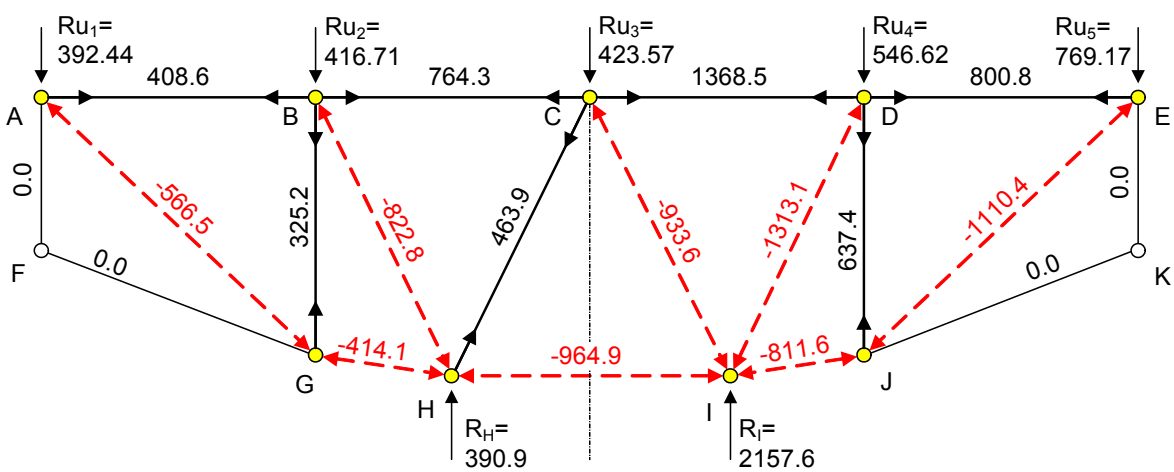

Figure E13-1.8-3
STM Member Forces (One Lane Loaded)

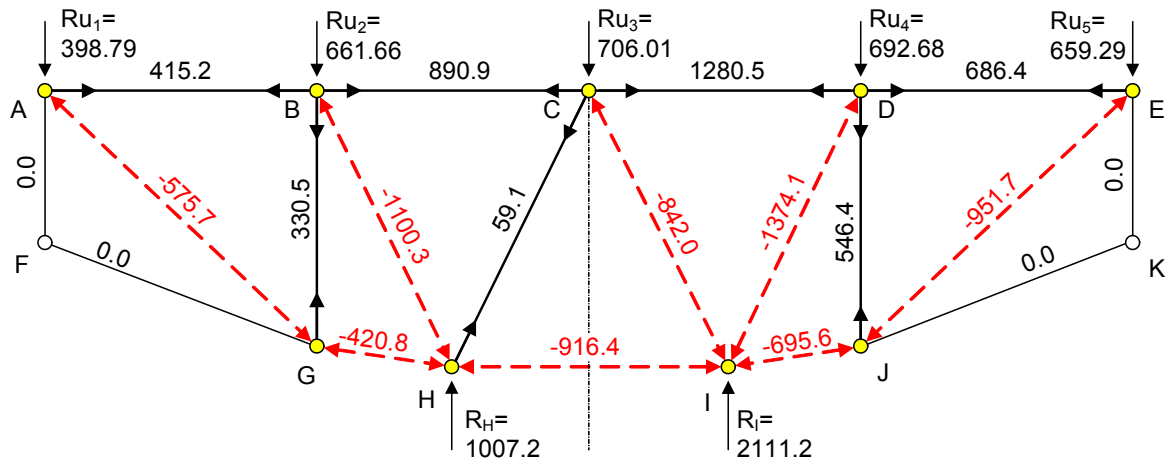

Figure E13-1.8-4
STM Member Forces (Three Lanes Loaded)

E13-1.8.2 Check the Size of the Bearings

The node types are defined by the combinations of struts and ties meeting at the node.

Nodes may be characterized as:

- CCC: Nodes where only struts intersect
- CCT: Nodes where a tie intersects the node in only one direction
- CTT: Nodes where ties intersect in two different directions

The nominal resistance (P_n) at the bearing node face is computed based on the limiting compressive stress (f_{cu}), and the effective area beneath the bearing device ($A_{bearing}$) **LRFD [5.6.3.5]**.

$$P_n = f_{cu} A_{bearing} = (m \nu f'_c) A_{bearing}$$

where:

m = Confinement modification factor **LRFD [5.7.5]**

ν = Concrete efficiency factor **LRFD [5.6.3.5.3a]**

therefore, $A_{bearing} \geq P_u / \phi_{brg} (m \nu f'_c)$

Bearing Nodes: Nodes A & E: (CCT) Node C: (CTT) Nodes B & D: (CTT)

The nodes located at the bearings are either (CTT) or (CCT) nodes, and the largest loads for these types are present at Nodes D and E respectively. Conservatively use m=1.0, and analyze for crack control reinforcement being present.

At Node D the bearing area required is: (CTT)

$A_{bearing} \geq P_u / \phi_{brg} \left(m \cdot 0.65 \cdot f'_c\right)$ --- (from Sect. 13.7.3)

At Node E the bearing area required is: (CCT)

$A_{bearing} \geq P_u / \phi_{brg} \left(m \cdot 0.70 \cdot f'_c\right)$ --- (from Sect. 13.7.3)

$m := 1.0$ $\phi_{brg} := 0.70$ **LRFD [5.5.4.2]** $f'_c = 3.5$ ksi

Calculate bearing area required for Node D:

$Ru_{4_2} = 741.38$ kips 2-lanes loaded controls (Fig. E13-1.8-2)

$\gamma_{DCmax} \cdot Cap_{DC_4} = 73.58$ kips pier cap tributary weight below Node D

$$BrgD_2 := \frac{Ru_{4_2} - \gamma_{DCmax} \cdot Cap_{DC_4}}{\phi_{brg} \cdot \left(m \cdot 0.65 \cdot f'_c\right)}$$ $BrgD_2 = 419.34$ in^2

Calculate bearing area required for Node E:

$Ru_{5_1} = 769.17$ kips 1-lane loaded controls (Fig. E13-1.8-3)

$\gamma_{DCmax} \cdot Cap_{DC_5} = 43.15$ kips pier cap tributary weight below Node E

$$BrgE_1 := \frac{Ru_{5_1} - \gamma_{DCmax} \cdot Cap_{DC_5}}{\phi_{brg} \cdot \left(m \cdot 0.70 \cdot f'_c\right)}$$ $BrgE_1 = 423.34$ in^2

$BrgArea := \max\left(BrgD_2, BrgE_1\right)$

The area provided by the (26" x 18") bearing plate is:

$A_{bearing} := L_{brng} \cdot W_{brng}$ $A_{bearing} = 468$ in^2

Is $A_{bearing} \geq BrgArea$? check = "OK"

E13-1.8.3 Calculate the Tension Tie Reinforcement

For the top reinforcement in the pier cap, the maximum area of tension tie reinforcement, (A_{st}), is controlled by Tie CD for two lanes loaded (Fig. E13-1.8-2) and is calculated as follows:

LRFD [5.6.3.4.1]

$Pu_{CD_2} = 1371.6$ kips

$\phi := 0.9$ **LRFD [5.5.4.2]** $f_y = 60$ ksi

$Ast_{CD} := \frac{Pu_{CD_2}}{\phi \cdot f_y}$ $Ast_{CD} = 25.4$ in^2

Therefore, use one row of 9 No.11 bars and one row of 9 No. 10 bars spaced at 5 inches for the top reinforcement.

$As_{No11} := 1.5625$ in^2

$As_{No10} := 1.2656$ in^2

Total area of top reinforcement is:

$As_{CD} := 9 \cdot As_{No11} + 9 \cdot As_{No10}$ $As_{CD} = 25.45$ in^2

Is $As_{CD} \geq Ast_{CD}$? check = "OK"

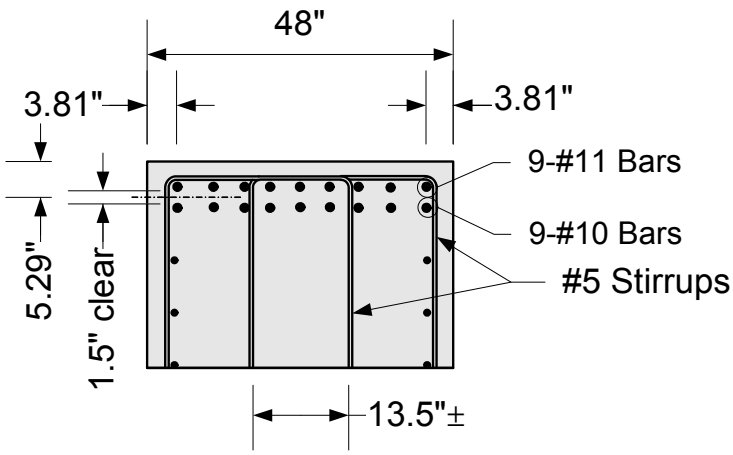

Figure E13-1.8-5
Cap Reinforcement at Tension Tie CD

Note: See **LRFD [5.10.3.1.3]** for spacing requirements between layers of rebar.

For the top reinforcement just inside the exterior girder (Node E), the required area of tension tie reinforcement, (A_{st}), is controlled by Tie DE for one lane loaded (Fig. E13-1.8-3), and is calculated as follows:

$Pu_{DE_1} = 800.79$ kips

$\phi = 0.9$ **LRFD [5.5.4.2]** $f_y = 60$ ksi

$Ast_{DE} := \frac{Pu_{DE_1}}{\phi \cdot f_y}$ $Ast_{DE} = 14.83$ in^2

Therefore, use one row of 9 No.11 bars spaced at 5 inches, and one row of 5 No.10 bars for the top reinforcement.

Total area of top reinforcement is:

$As_{DE} := 9 \cdot As_{No11} + 5 \cdot As_{No10}$ $As_{DE} = 20.39$ in^2

Is $As_{DE} \geq Ast_{DE}$? check = "OK"

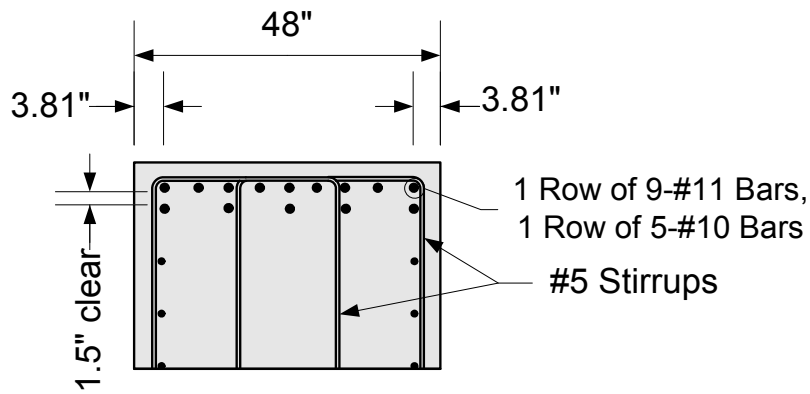

Figure E13-1.8-6
Cap Reinforcement at Tension Tie DE

E13-1.8.4 Calculate the Stirrup Reinforcement

The vertical tension Tie DJ must resist a factored tension force as shown below **LRFD [5.6.3.4.1]**. The controlling force occurs with one lane loaded (Fig. E13-1.8-3). This tension force will be resisted by stirrups within the specified stirrup region length, with the total area of stirrups being (Ast_{DJ}.) Note that any tension ties located directly over the column do not require stirrup design.

$Pu_{DJ_1} = 637.43$ kips

$\phi = 0.9$ **LRFD [5.5.4.2]** $f_y = 60$ ksi

$Ast_{DJ} := \frac{Pu_{DJ_1}}{\phi \cdot f_y}$ $Ast_{DJ} = 11.8$ in^2

Try No. 5 bars, with four legs (double-stirrups):

$As_{No5} := 0.3068$ in^2

$Ast := 4 \cdot As_{No5}$ $\boxed{Ast = 1.23}$ in^2

Calculate number of stirrups required:

$n_{DJ} := \frac{Ast_{DJ}}{Ast}$ $n_{DJ} = 9.62$ $\boxed{n_{DJ} = 10}$ bars

The length (L_{DJ}) of the region over which the stirrups shall be distributed for Tie DJ, is from the face of the column to half way between girders 4 and 5 (Nodes D and E).

$\boxed{S = 9.75}$ feet (girder spacing) $\boxed{L_{col} = 15.5}$ feet (column width)

$L_{DJ} := 1.5 \cdot S - \frac{L_{col}}{2}$ $\boxed{L_{DJ} = 6.88}$ feet

Therefore, the required stirrup spacing, s, within this region is:

$s_{stirrup} := \frac{L_{DJ} \cdot 12}{n_{DJ}}$ $\boxed{s_{stirrup} = 8.25}$ in

$\boxed{s_{stirrup} = 8}$ in

Examine stirrups as vertical crack control reinforcement, and their req'd. spacing (s_{cc}) **LRFD [5.6.3.6]**:

$\frac{Ast}{b_v \cdot s_{cc}} \geq 0.003$

$b_v := W_{cap} \cdot 12$ $\boxed{b_v = 48}$ in

$s_{cc} := \frac{Ast}{0.003 \cdot b_v}$ $\boxed{s_{cc} = 8.52}$ in

$\boxed{s_{cc} = 8}$ in

$s_{stir} := \min(s_{stirrup}, s_{cc})$ $\boxed{s_{stir} = 8}$ in

Therefore, use pairs of (No. 5 bar) double-legged stirrups at 8 inch spacing in the pier cap.

E13-1.8.5 Compression Strut Capacity - Bottom Strut

After the tension tie reinforcement has been designed, the next step is to check the capacity of the compressive struts in the pier cap. Strut IJ carries the highest bottom compressive force when one lane is loaded (Fig. E13-1.8-3). Strut IJ is anchored by Node J, which also anchors Tie DJ and Strut EJ. From the geometry of the idealized internal truss, the smallest angle (α_s) between Tie DJ and Strut IJ is:

$\alpha_s := \text{atan}\left(\frac{IJ_h}{IJ_v}\right)$ $\boxed{\alpha_s = 80.66 \cdot deg}$

$\theta := 90deg - \alpha_s$ $\boxed{\theta = 9.34 \cdot deg}$

$\boxed{Pu_{IJ_1} = -811.55}$ kips

The nominal resistance (Pn_{IJ}) of Strut IJ is computed based on the limiting compressive stress, (f_{cu}), and the effective cross-sectional area of the strut (Acn_{IJ}) at the node face **LRFD [5.6.3.5]**.

$Pn_{IJ} = f_{cu}\ Acn_{IJ} = (\nu\ f'_c)\ Acn_{IJ}$

where:

ν = Concrete efficiency factor **LRFD [5.6.3.5.3a]**

therefore, $Pu_{IJ_1} \le \phi c_{STM} (\nu\ f'_c)\ Acn_{IJ}$

The centroid of the strut was assumed to be at $\boxed{centroid_{bot} = 4.5}$ inches vertically from the bottom face. Therefore at Node J, the thickness of the strut perpendicular to the sloping bottom face (t_{IJ}), and the width (w_{IJ}) of the strut are:

$t_{IJ} := 2 \cdot centroid_{bot} \cdot \cos(\theta)$ $\boxed{t_{IJ} = 8.88}$ inches

$w_{IJ} := W_{cap} \cdot 12$ $\boxed{w_{IJ} = 48}$ inches

$Acn_{IJ} := t_{IJ} \cdot w_{IJ}$ $\boxed{Acn_{IJ} = 426.27}$ in^2

At Node J the node type is (CCT), and the surface where Strut IJ meets the node is a back face. Analyze for crack control reinforcement being present.

At Node J, the capacity of Strut IJ shall satisfy:

$Pu_{IJ_1} \le \phi c_{STM} \cdot (0.70 \cdot f'_c) \cdot Acn_{IJ}$ --- (from Sect. 13.7.5)

$\phi c_{STM} := 0.7$ **LRFD [5.5.4.2]** $f'_c = 3.5$ ksi

The factored resistance is:

$Pr_{IJ} := \phi c_{STM} \cdot (0.70 \cdot f'_c) \cdot Acn_{IJ}$ $\boxed{Pr_{IJ} = 731.05}$ kips

$\boxed{|Pu_{IJ_1}| = 811.55}$ kips

Is $Pr_{IJ} \geq Pu_{IJ_1}$? $\boxed{check = \text{"No Good"}}$

Because Node J is an interior node not bounded by a bearing plate, it is a smeared node, and a check of concrete strength as shown above is not necessary **LRFD [5.6.3.2]**.

E13-1.8.6 Compression Strut Capacity - Diagonal Strut

Strut DI carries the highest diagonal compressive force when two lanes are loaded (Fig. E13-1.8-2). Strut DI is anchored by Node D, which also anchors Ties CD, DE and DJ. From the geometry of the idealized internal truss, the smallest angle between Ties CD and DE and Strut DI is:

$\alpha_s := \text{atan}\left(\frac{DI_v}{DI_h}\right)$ $\boxed{\alpha_s = 64.38 \cdot deg}$

$\theta := 90deg - \alpha_s$ $\boxed{\theta = 25.62 \cdot deg}$

$\boxed{Pu_{DI_2} = -1471.41}$ kips

The cross sectional dimension of Strut DI in the plane of the pier at Node D is calculated as follows. Note that for skewed bearings, the length of the bearing is the projected length along the centerline of the pier cap.

$\boxed{L_{brng} = 26}$ inches $\boxed{W_{brng} = 18}$ inches

$\boxed{centroid_{top} = 5.5}$ inches

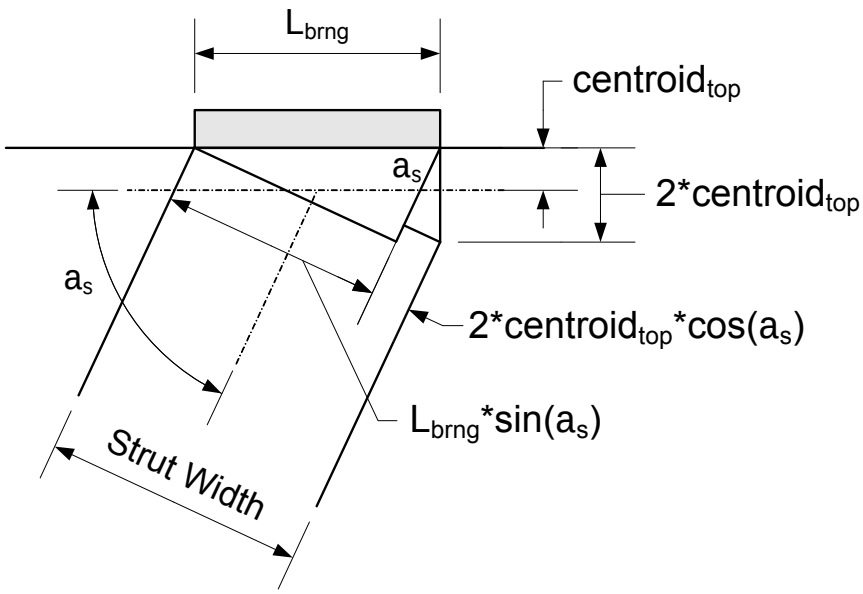

Figure E13-1.8-7
Compression Strut Width

Therefore at Node D, the thickness of the strut (t_{DI}) is:

$t_{DI} := L_{brng} \cdot \sin(\alpha_s) + 2 \cdot centroid_{top} \cdot \cos(\alpha_s)$ $\boxed{t_{DI} = 28.2}$ in

The effective compression strut width around each stirrup is:

$d_{bar11} := 1.410$ inches

$w_{ef} := 2 \cdot 6 \cdot d_{bar11}$ $\boxed{w_{ef} = 16.92}$ in

The effective spacing between the 4 legs of the stirrups is 13.5 inches, which is less than the value calculated above. Therefore, the entire cap width can be used for the effective strut width.

$w_{DI} := W_{cap} \cdot 12$ $\boxed{w_{DI} = 48}$ in

The nominal resistance (Pn_{DI}) of Strut DI is computed based on the limiting compressive stress, (f_{cu}), and the effective cross-section of the strut (Acn_{DI}) at the node face **LRFD [5.6.3.5]**.

$Acn_{DI} := t_{DI} \cdot w_{DI}$ $\boxed{Acn_{DI} = 1353.61}$ in^2

At Node D the node type is (CTT), and the surface where Strut DI meets the node is a strut to node interface. Analyze for crack control reinforcement being present.

At Node D, the capacity of Strut DI shall satisfy:

$Pu_{DI_2} \le \phi c_{STM} \cdot (0.65 \cdot f'_c) \cdot Acn_{DI}$ --- (from Sect. 13.7.5)

$\phi c_{STM} := 0.7$ **LRFD [5.5.4.2]** $f'_c = 3.5$ ksi

The factored resistance is:

$Pr_{DI} := \phi c_{STM} \cdot (0.65 \cdot f'_c) \cdot Acn_{DI}$ $Pr_{DI} = 2155.62$ kips

$|Pu_{DI_2}| = 1471.41$ kips

Is $Pr_{DI} \ge |Pu_{DI_2}|$? check = "OK"

E13-1.8.7 Check the Anchorage of the Tension Ties

Tension ties shall be anchored in the nodal regions per **LRFD [5.6.3.4.2]**. The 9 No. 11 and 5 No. 10 longitudinal bars along the top of the pier cap must be developed at the inner edge of the bearing at Node E (the edge furthest from the end of the member). Based on (Figure E13-1.8-8), the embedment length that is available to develop the bar beyond the edge of the bearing is:

L_{devel} = (distance from cap end to Node E) + (bearing block width/2) - (cover)

$L_{cap} = 46.5$ feet (pier cap length)

$S = 9.75$ feet (girder spacing) $ng = 5$ (# girders)

$L_{brng} = 26$ inches (bearing block width)

$Cover_{cp} = 2.5$ inches (conc. cover)

$$L_{devel} := \frac{L_{cap} - S \cdot (ng - 1)}{2} \cdot 12 + \frac{L_{brng}}{2} - Cover_{cp}$$ $L_{devel} = 55.5$ in

The basic development length for straight No. 11 and No. 10 bars with spacing less than 6", As(provided)/As(required) < 2, uncoated top bar, per (Wis Bridge Manual Table 9.9-1) is:

$L_{d11} := 9.5$ ft $L_{d11} \cdot 12 = 114$ in

$L_{d10} := 7.75$ ft $L_{d10} \cdot 12 = 93$ in

Therefore, there is not sufficient development length for straight bars. Check the hook development length. The base hook development length for 90° hooked No.11 and #10 bars per **LRFD [5.11.2.4]** is:

$$L_{hb11} := \frac{38.0 \cdot d_{bar11}}{\sqrt{f'_c}}$$ $L_{hb11} = 28.64$ in

$L_{hb10} := \frac{38.0 \cdot d_{bar10}}{\sqrt{f'_c}}$ $\boxed{L_{hb10} = 25.8}$ in

The length available is greater than the base hook development length, therefore the reduction factors do not need to be considered. Hook both the top 9 bars and the bottom layer 5 bars. The remaining 4 bottom layer bars can be terminated 7.75 feet from the inside edge of the bearings at girders 2 and 4, which will allow all bars to be fully developed at this inside edge.

In addition, the tension ties must be spread out sufficiently in the effective anchorage area so that the compressive force on the back face of a CCT Node produced by the development of the ties through bond stress, does not exceed the factored resistance **LRFD [5.6.3.5]**.

Following the steps in E13-1.8.5, we can calculate the nominal resistance based on the limiting compressive stress, (f_{cu}), and the effective cross-section of the back face (Acn_E) at Node E. Analyze for crack control reinforcement being present.

The centroid of the tension ties is $\boxed{centroid_{top} = 5.5}$ inches below the top of the pier cap.

Therefore, the thickness (t_{DE}), and the width (w_{DE}) at the back face are:

$t_{DE} := 2 \cdot centroid_{top}$ $\boxed{t_{DE} = 11.0}$ in

$w_{DE} := W_{cap} \cdot 12$ $\boxed{w_{DE} = 48}$ in

$Acn_E := t_{DE} \cdot w_{DE}$ $\boxed{Acn_E = 528}$ in^2

$\boxed{Pu_{DE_1} = 800.79}$ kips 1-lane loaded controls (Fig. E13-1.8-3)

The capacity at the back face of Node E shall satisfy:

$Pu_{DE_1} \le \phi \cdot (0.70 \cdot f'_c) \cdot Acn_E$ --- (from Sect. 13.7.5)

$\phi = 0.9$ **LRFD [5.5.4.2]** $f'_c = 3.5$ ksi

The factored resistance is:

$Pr_{DE} := \phi \cdot (0.70 \cdot f'_c) \cdot Acn_E$ $\boxed{Pr_{DE} = 1164.24}$ kips

Is $Pr_{DE} \ge Pu_{DE_1}$? $\boxed{check = \text{"OK"}}$

Because the compressive force on the backface is produced by development of reinforcement, the check as shown above is not necessary **LRFD [5.6.3.5.3b]**.

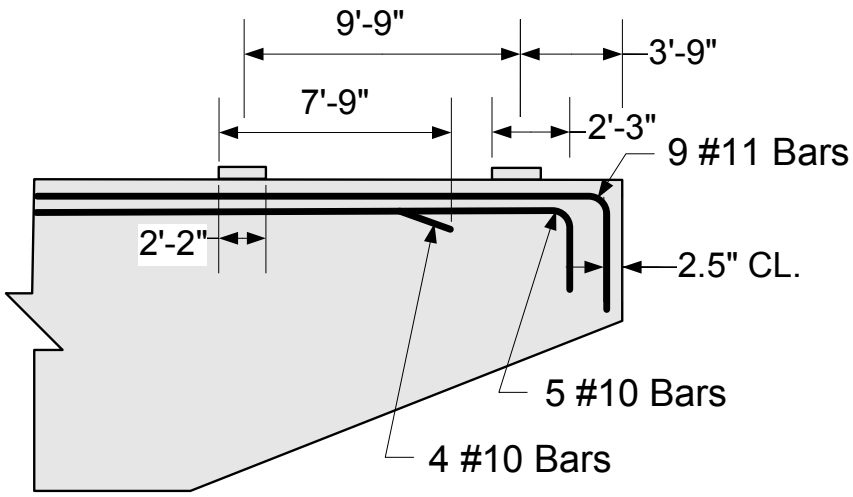

Figure E13-1.8-8
Anchorage of Tension Tie

E13-1.8.8 Provide Crack Control Reinforcement

In the pier cap, the minimum area of crack control reinforcement (As_{crack}) is equal to 0.003 times the width of the member (W_{cap}), and the spacing of the reinforcement (s_v, s_h) in each direction. The spacing of the bars in these grids must not exceed the smaller of d/4 or 12 inches, **LRFD [5.6.3.6]**.

$W_{cap} = 4.0$ ft

d/4 > 12" , therefore s_v and s_h = 12"

$As_{crack} := 0.003 \cdot (12) \cdot W_{cap} \cdot 12$ $\boxed{As_{crack} = 1.73}$ in^2

For horizontal reinforcement:

Use 4 - No. 7 horizontal bars at 12 inch spacing in the vertical direction - (Option 1)

$As_{No7} := 0.6013$ $\boxed{4 \cdot As_{No7} = 2.41}$ in^2

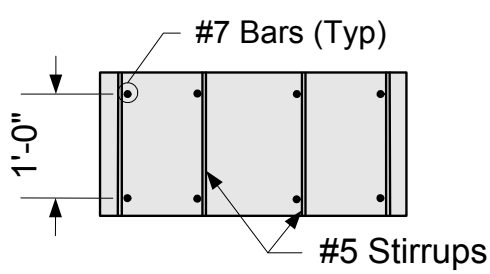

Figure E13-1.8-9
Crack Control Reinforcement - Option 1

OR: If we assume 6-inch vertical spacing - (Option 2)

$As_{crack} := 0.003 \cdot (6) \cdot W_{cap} \cdot 12$ $\boxed{As_{crack} = 0.86}$ in^2

Using 2 - No. 7 horiz. bars at 6 inch spacing $\boxed{2 \cdot As_{No7} = 1.2}$ in^2

Is $2 \cdot As_{No7} \geq As_{crack}$? $\boxed{check = \text{"OK"}}$

Therefore, No. 7 bars at 6" vertical spacing, placed horizontally on each side of the cap will satisfy this criteria.

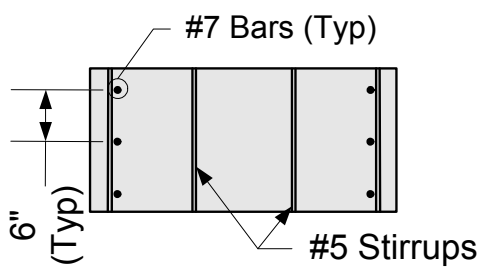

Figure E13-1.8-10
Crack Control Reinforcement - Option 2

This 6-inch spacing for the (No. 7 bars), is also used along the bottom of the cap for temperature and shrinkage reinforcement.

For vertical reinforcement:

The stirrups are spaced at, $\boxed{s_{stir} = 8}$ inches. Therefore the required crack control reinforcement within this spacing is:

$As_{crack2} := 0.003 \cdot (s_{stir}) \cdot W_{cap} \cdot 12$ $\boxed{As_{crack2} = 1.15}$ in^2

4 legs of No.5 stirrups at $\boxed{s_{stir} = 8}$ inch spacing in the horizontal direction

$\boxed{4 \cdot As_{No5} = 1.23}$ in^2

Is $4 \cdot As_{No5} \geq As_{crack2}$? $\boxed{check = \text{"OK"}}$

Therefore, pairs of (No. 5 bar) double-legged stirrups at 8" horizontal spacing will satisfy this criteria.

E13-1.8.9 Summary of Cap Reinforcement

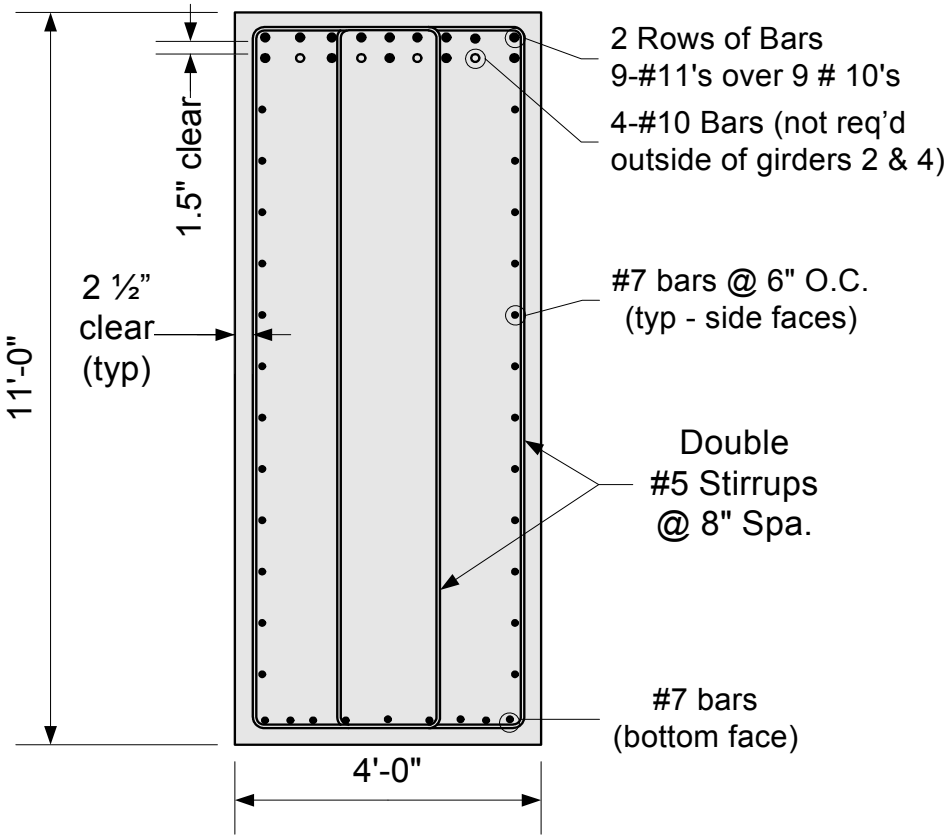

Figure E13-1.8-11
Pier Cap Design Summary

E13-1.9 Design Pier Column

As stated in E13-1.7, the critical section in the pier column is where the column meets the footing, or at the column base. The governing force effects and their corresponding limit states were determined to be:

Strength V

$Ax_{colStrV}$ = 2099.51 kips

$MuT_{colStrV}$ = 8315.32 kip-ft

$MuL_{colStrV}$ = 2369.38 kip-ft

Strength III

$VuT_{col} = 49.86$ kips

Strength V

$VuL_{col} = 109.25$ kips

A preliminary estimate of the required section size and reinforcement is shown in Figure E13-1.9-1.

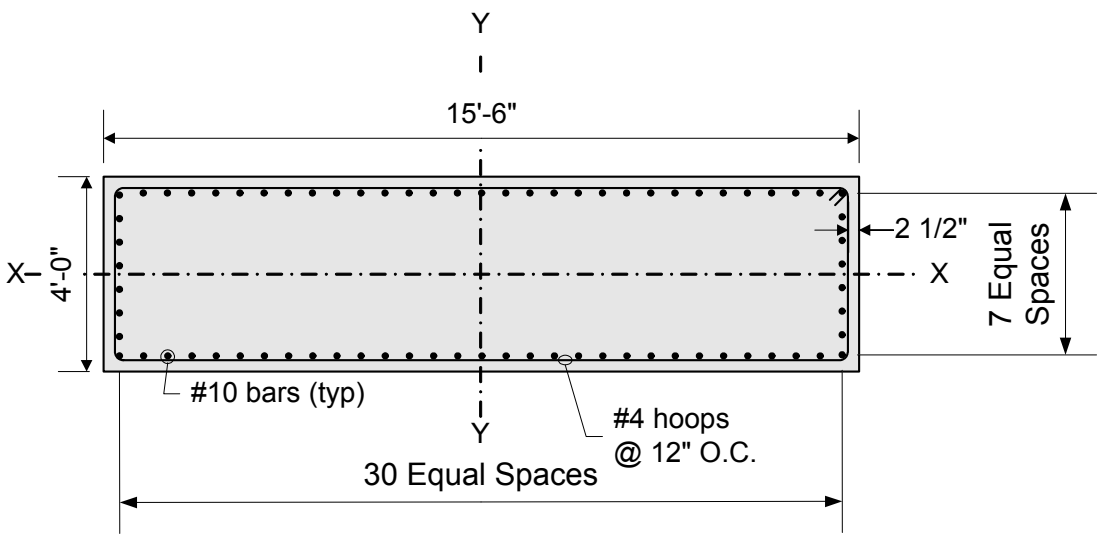

Figure E13-1.9-1
Preliminary Pier Column Design

E13-1.9.1 Design for Axial Load and Biaxial Bending (Strength V):

The preliminary column reinforcing is show in Figure E13-1.9-1 and corresponds to #10 bars equally spaced around the column perimeter. **LRFD [5.7.4.2]** prescribes limits (both maximum and minimum) on the amount of reinforcing steel in a column. These checks are performed on the preliminary column as follows:

$Num_bars := 74$ $bar_area10 := 1.27$ in^2 $bar_dia10 := 1.27$ in

$A_{s_col} := (Num_bars)\cdot(bar_area10)$ $A_{s_col} = 93.98$ in^2

$A_{g_col} := (W_{col})\cdot(L_{col})\cdot 12^2$ $A_{g_col} = 8928$ in^2

$\frac{A_{s_col}}{A_{g_col}} = 0.0105$ $0.0105 \le 0.08$ (max. reinf. check) OK

$\frac{0.135 \cdot f'_c}{f_y} = 0.008$ (but need not be greater than 0.015) $0.0105 \geq 0.008$ (min. reinf. check) OK

The column slenderness ratio (Kl_u/r) about each axis of the column is computed below in order to assess slenderness effects. Note that the Specifications only permit the following approximate evaluation of slenderness effects when the slenderness ratio is below 100.

For this pier, the unbraced lengths (l_{ux}, l_{uy}) used in computing the slenderness ratio about each axis is the full pier height. This is the height from the top of the footing to the top of the pier cap (26 feet). The effective length factor in the longitudinal direction, K_x, is taken equal to 2.1. This assumes that the superstructure has no effect on restraining the pier from buckling. In essence, the pier is considered a free-standing cantilever in the longitudinal direction. The effective length factor in the transverse direction, K_y, is taken to equal 1.0.

The radius of gyration (r) about each axis can then be computed as follows:

$I_{xx} := \frac{(L_{col} \cdot 12) \cdot (W_{col} \cdot 12)^3}{12}$ $\boxed{I_{xx} = 1714176}$ in^4

$I_{yy} := \frac{(W_{col} \cdot 12) \cdot (L_{col} \cdot 12)^3}{12}$ $\boxed{I_{yy} = 25739424}$ in^4

$r_{xx} := \sqrt{\frac{I_{xx}}{A_{g_col}}}$ $\boxed{r_{xx} = 13.86}$ in

$r_{yy} := \sqrt{\frac{I_{yy}}{A_{g_col}}}$ $\boxed{r_{yy} = 53.69}$ in

The slenderness ratio for each axis now follows:

$K_x := 2.1$

$K_y := 1.0$

$L_u := (H_{col} + H_{cap}) \cdot 12$ $\boxed{L_u = 312}$ in

$\boxed{\frac{K_x \cdot L_u}{r_{xx}} = 47.28}$ $47.28 < 100$ OK

$\boxed{\frac{K_y \cdot L_u}{r_{yy}} = 5.81}$ $5.81 < 100$ OK

LRFD [5.7.4.3] permits the slenderness effects to be ignored when the slenderness ratio is less than 22 for members not braced against side sway. It is assumed in this example that the pier is not braced against side sway in either its longitudinal or transverse directions. Therefore, slenderness will be considered for the pier longitudinal direction only (i.e., about the

"X-X" axis).

In computing the amplification factor that is applied to the longitudinal moment, which is the end result of the slenderness effect, the column stiffness (EI) about the "X-X" axis must be defined. In doing so, the ratio of the maximum factored moment due to permanent load to the maximum factored moment due to total load must be identified (β_d).

From Design Step E13-1.7, it can be seen that the force effects contributing to the longitudinal moment are the live load braking force, the temperature force and wind on the structure and live load. None of these are permanent or long-term loads. Therefore, β_d is taken equal to zero for this design.

$\beta_d := 0$

$E_c := 33000 \cdot w_c^{1.5} \cdot \sqrt{f'_c}$ **LRFD [C5.4.2.7]** $E_c = 3587$ ksi

$E_s = 29000.00$ ksi

$I_{xx} = 1714176$ in^4

I_s = Moment of Inertia of longitudinal steel about the centroidal axis (in^4)

$$I_s := \frac{\pi \cdot bar_dia10^4}{64} \cdot (Num_bars) + 2 \cdot 31 \cdot (bar_area10) \cdot 20.37^2 \ldots$$
$$+ 4 \cdot (bar_area10) \cdot 14.55^2 + 4 \cdot (bar_area10) \cdot 8.73^2 + 4 \cdot (bar_area10) \cdot 2.91^2$$

$I_s = 34187$ in^4

The column stiffness is taken as the greater of the following two calculations:

$$EI_1 := \frac{\frac{E_c \cdot I_{xx}}{5} + E_s \cdot I_s}{1 + \beta_d}$$ $EI_1 = 2.22 \times 10^9$ k-in^2

$$EI_2 := \frac{\frac{E_c \cdot I_{xx}}{2.5}}{1 + \beta_d}$$ $EI_2 = 2.46 \times 10^9$ k-in^2

$EI := \max(EI_1, EI_2)$ $EI = 2.46 \times 10^9$ k-in^2

The final parameter necessary for the calculation of the amplification factor is the phi-factor for compression. This value is defined as follows:

$\phi_{axial} := 0.75$

It is worth noting at this point that when axial load is present in addition to flexure, **LRFD [5.5.4.2.1]** permits the value of phi to be increased linearly to the value for flexure (0.90) as the section changes from compression controlled to tension controlled as defined in **LRFD [5.7.2.1]**. However, certain equations in the Specification still require the use of the phi factor for axial compression (0.75) even when the increase just described is permitted. Therefore, for

the sake of clarity in this example, if phi may be increased it will be labeled separately from ϕ_{axial} identified above.

$As_{col} := 2.53$ in^2 per foot, based on #10 bars at 6-inch spacing

$b := 12$ inches $\alpha_1 := 0.85$ (for $f'_c < 10.0$ ksi) **LRFD [5.7.2.2]**

$a := \frac{As_{col} \cdot f_y}{\alpha_1 \cdot f'_c \cdot b}$ $a = 4.25$ inches

$\beta_1 := 0.85$

$c := \frac{a}{\beta_1}$ $c = 5.00$ inches

$d_t := W_{col} \cdot 12 - Cover_{co} - 0.5 - \frac{bar_dia10}{2}$ $d_t = 44.37$ inches

$\varepsilon_c := 0.002$ Upper strain limit for compression controlled sections, f_y = 60 ksi **LRFD [Table C5.7.2-1]**

$\varepsilon_t := 0.005$ Lower strain limit for tension controlled sections, for f_y = 60 ksi

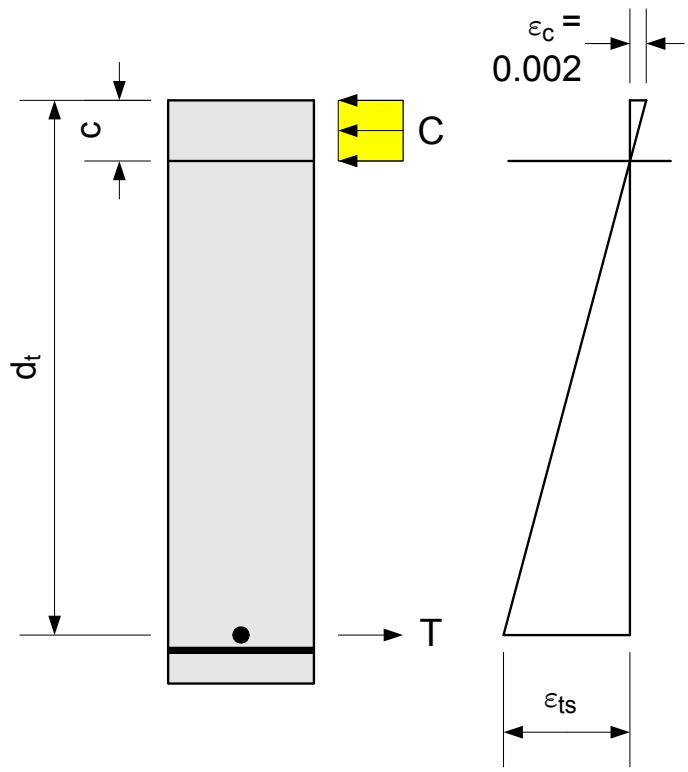

Figure E13-1.9-2
Strain Limit Tension Control Check

$\varepsilon_{ts} := \frac{\varepsilon_c}{c} \cdot (d_t - c)$ $\varepsilon_{ts} = 0.016$ $> \varepsilon_t = 0.005$

Therefore, the section is tension controlled and phi shall be equal to 0.9.

$\phi_t := 0.9$

The longitudinal moment magnification factor will now be calculated as follows:

$$P_e := \frac{\pi^2 \cdot EI}{(K_x \cdot L_u)^2}$$ $P_e = 56539.53$ kips

$$\delta_s := \frac{1}{1 - \left(\frac{Ax_{colStrV}}{\phi_t \cdot P_e}\right)}$$ $\delta_s = 1.04$

The final design forces at the base of the column for the Strength V limit state will be redefined as follows:

$P_{u_col} := Ax_{colStrV}$ $P_{u_col} = 2099.51$ kips

$M_{ux} := MuL_{colStrV} \cdot \delta_s$ $M_{ux} = 2471.35$ kip-ft

$M_{uy} := MuT_{colStrV}$ $M_{uy} = 8315.32$ kip-ft

The assessment of the resistance of a compression member with biaxial flexure for strength limit states is dependent upon the magnitude of the factored axial load. This value determines which of two equations provided by the Specification are used.

If the factored axial load is less than ten percent of the gross concrete strength multiplied by the phi-factor for compression members (ϕ_{axial}), then the Specifications require that a linear interaction equation for only the moments is satisfied (**LRFD [Equation 5.7.4.5-3]**). Otherwise, an axial load resistance (P_{rxy}) is computed based on the reciprocal load method (**LRFD [Equation 5.7.4.5-1]**). In this method, axial resistances of the column are computed (using f_{Low_axial} if applicable) with each moment acting separately (i.e., P_{rx} with M_{ux}, P_{ry} with M_{uy}). These are used along with the theoretical maximum possible axial resistance (P_o multiplied by ϕ_{axial}) to obtain the factored axial resistance of the biaxially loaded column.

Regardless of which of the two equations mentioned in the above paragraph controls, commercially available software is generally used to obtain the moment and axial load resistances.

For this pier design, the procedure as discussed above is carried out as follows:

$0.10 \cdot \phi_{axial} \cdot f'_c \cdot A_{g_col} = 2343.6$ kips

$P_{u_col} = 2099.51$ kips $P_{u_col} < 2343.6K$

Therefore, **LRFD [Equation 5.7.4.5-3]** will be used.

$M_{ux} = 2471.35$ kip-ft $M_{uy} = 8315.32$ kip-ft

The resultant moment equals:

$Mu := \sqrt{M_{ux}^2 + M_{uy}^2}$ $Mu = 8674.8$ kip-ft

$M_r := 24052.3$ kip-ft

$\frac{Mu}{M_r} = 0.36$ $0.36 \leq 1.0$ OK

The factored flexural resistances shown above, M_r, was obtained by the use of commercial software. This value is the resultant flexural capacity assuming that no axial load is present. Consistent with this, the phi-factor for flexure (0.90) was used in obtaining the factored resistance from the factored nominal strength.

Although the column has a fairly large excess flexural capacity, a more optimal design will not be pursued per the discussion following the column shear check.

E13-1.9.2 Design for Shear (Strength III and Strength V)

The maximum factored transverse and longitudinal shear forces were derived in E13-1.7 and are as follows:

$VuT_{col} = 49.86$ kips (Strength III)

$VuL_{col} = 109.25$ kips (Strength V)

These maximum shear forces do not act concurrently. Although a factored longitudinal shear force is present in Strength III and a factored transverse shear force is present in Strength V, they both are small relative to their concurrent factored shear. Therefore, separate shear designs can be carried out for the longitudinal and transverse directions using only the maximum shear force in that direction.

For the pier column of this example, the maximum factored shear in either direction is less than one-half of the factored resistance of the concrete. Therefore, shear reinforcement is not required. This is demonstrated for the longitudinal direction as follows:

$b_v := L_{col} \cdot 12$ $b_v = 186$ in

$h := W_{col} \cdot 12$ $h = 48$ in

Conservatively, d_v may be calculated as shown below, **LRFD [5.8.2.9]**.

$d_v := (0.72) \cdot (h)$ $d_v = 34.56$ in

The above calculation for d_v is simple to use for columns and generally results in a conservative estimate of the shear capacity.

$\beta := 2.0$ $\theta := 45deg$ $\lambda := 1.0$ (normal wgt. conc.) **LRFD [5.4.2.8]**

The nominal concrete shear strength is:

$V_c := 0.0316 \cdot \beta \cdot \lambda \sqrt{f'_c} \cdot b_v \cdot d_v$ **LRFD [5.8.3.3]** $\boxed{V_c = 760.04}$ kips

The nominal shear strength of the column is the lesser of the following two values:

$V_{n1} := V_c$ $\boxed{V_{n1} = 760.04}$ kips

$V_{n2} := 0.25 \cdot f'_c \cdot b_v \cdot d_v$ $\boxed{V_{n2} = 5624.64}$ kips

$V_n := \min(V_{n1}, V_{n2})$ $\boxed{V_n = 760.04}$ kips

The factored shear resistance is:

$\phi_v := 0.90$

$V_r := \phi_v \cdot V_n$ $\boxed{V_r = 684.04}$ kips

$\boxed{\frac{V_r}{2} = 342.02}$ kips

$\boxed{VuL_{col} = 109.25}$ kips $\frac{V_r}{2} > VuL_{col}$

$\boxed{check = "OK"}$

It has just been demonstrated that transverse steel is not required to resist the applied factored shear forces. However, transverse confinement steel in the form of hoops, ties or spirals is required for compression members. In general, the transverse steel requirements for shear and confinement must both be satisfied per the Specifications.

It is worth noting that although the preceding design checks for shear and flexure show the column to be over designed, a more optimal column size will not be pursued. The reason for this is twofold: First, in this design example, the requirements of the pier cap dictate the column dimensions (a reduction in the column width will increase the moment in the pier cap). Secondly, a short, squat column such as the column in this design example generally has a relatively large excess capacity even when only minimally reinforced.

E13-1.9.3 Transfer of Force at Base of Column

The provisions for the transfer of forces and moments from the column to the footing are new to the AASHTO LRFD Specifications. In general, standard engineering practice for bridge piers automatically satisfies most, if not all, of these requirements.

In this design example, and consistent with standard engineering practice, all steel reinforcing bars in the column extend into, and are developed, in the footing (see Figure E13-1.12-1). This automatically satisfies the following requirements for reinforcement across the interface of the column and footing: A minimum reinforcement area of 0.5 percent of the gross area of the supported member, a minimum of four bars, and any tensile force must be resisted by the reinforcement. Additionally, with all of the column reinforcement extended into the footing, along with the fact that the column and footing have the same compressive strength, a bearing check at the base of the column and the top of the footing is not applicable.

In addition to the above, the Specifications require that the transfer of lateral forces from the pier to the footing be in accordance with the shear-transfer provisions of **LRFD [5.8.4]**. With the standard detailing practices for bridge piers previously mentioned (i.e., all column reinforcement extended and developed in the footing), along with identical design compressive strengths for the column and footing, this requirement is generally satisfied. However, for the sake of completeness, this check will be carried out as follows:

$A_{cv} := A_{g_col}$ Area of concrete engaged in shear transfer. $\boxed{A_{cv} = 8928}$ in^2

$A_{vf} := A_{s_col}$ Area of shear reinforcement crossing the shear plane. $\boxed{A_{vf} = 93.98}$ in^2

For concrete placed against a clean concrete surface, not intentionally roughened, the following values are obtained from **LRFD [5.8.4.3]**.

$c_{cv} := 0.075$ Cohesion factor, ksi

$\mu := 0.60$ Friction factor

$K_1 := 0.2$

$K_2 := 0.8$

The nominal shear-friction capacity is the smallest of the following three equations (conservatively ignore permanent axial compression):

$V_{nsf1} := c_{cv} \cdot A_{cv} + \mu \cdot A_{vf} \cdot f_y$ $\boxed{V_{nsf1} = 4052.88}$ kips

$V_{nsf2} := K_1 \cdot f'_c \cdot A_{cv}$ $\boxed{V_{nsf2} = 6249.6}$ kips

$V_{nsf3} := K_2 \cdot A_{cv}$ $\boxed{V_{nsf3} = 7142.4}$ kips

Define the nominal shear-friction capacity as follows:

$V_{nsf} := \min(V_{nsf1}, V_{nsf2}, V_{nsf3})$ $\boxed{V_{nsf} = 4052.88}$ kips

The maximum applied shear was previously identified from the Strength V limit state:

$\boxed{VuL_{col} = 109.25}$ kips

It then follows:

$$\boxed{\phi_v = 0.9}$$

$$\boxed{\phi_v \cdot (V_{nsf}) = 3647.59} \text{ kips}$$

$$\phi_v \cdot (V_{nsf}) \geq VuL_{col}$$

$$\boxed{\text{check} = \text{"OK"}}$$

As can be seen, a large excess capacity exists for this check. This is partially due to the fact that the column itself is over designed in general (this was discussed previously). However, the horizontal forces generally encountered with common bridges are typically small relative to the shear-friction capacity of the column (assuming all reinforcing bars are extended into the footing). In addition, the presence of a shear-key, along with the permanent axial compression from the bridge dead load, further increase the shear-friction capacity at the column/footing interface beyond that shown above.

E13-1.10 Design Pier Piles

The foundation system for the pier is a reinforced concrete footing on steel H-piles. The HP12x53 pile layout used for this pier foundation is shown in Figure E13-1.10-1.

Based on the given pile layout, the controlling limit states for the pile design were given in E13-1.7.3.

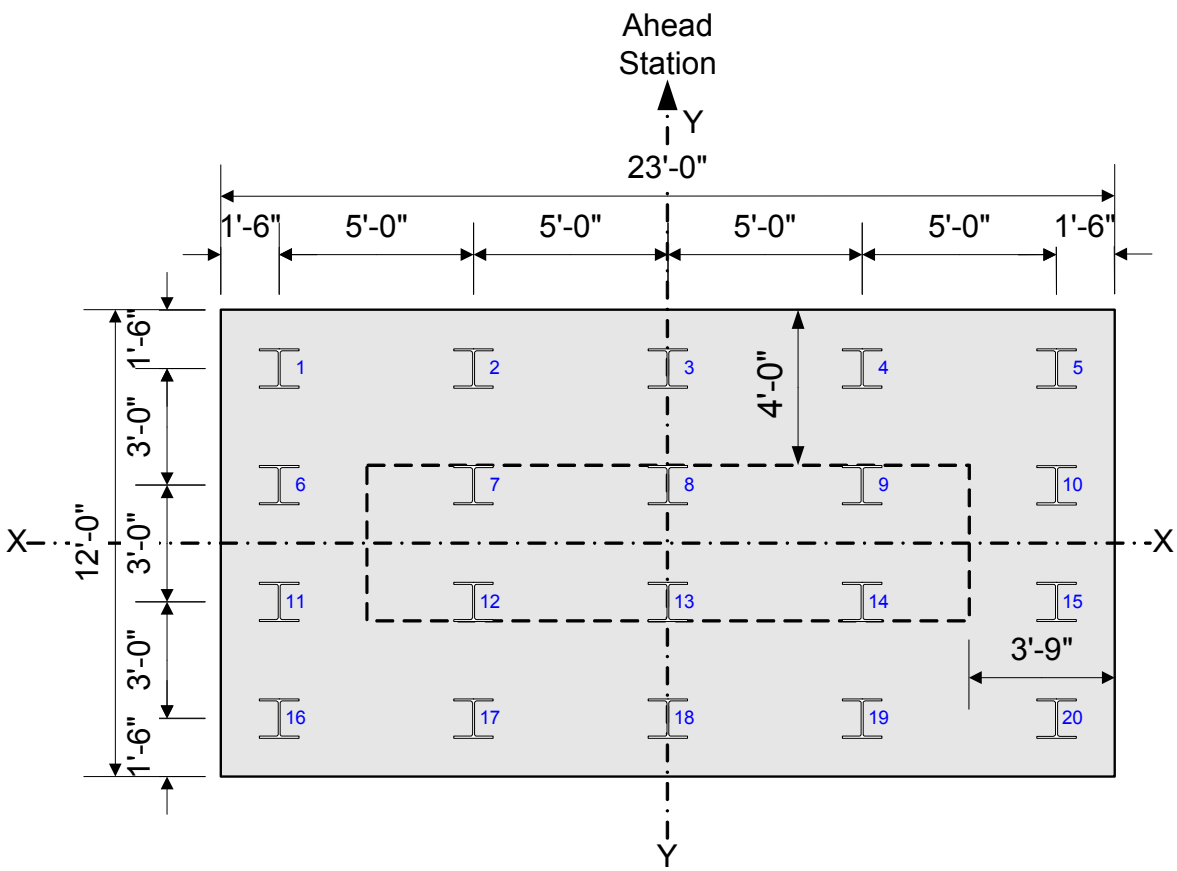

Figure E13-1.10-1
Pier Pile Layout

$N_p := 20$ Number of piles

$$S_{xx} := \frac{10 \cdot 4.5^2 + 10 \cdot 1.5^2}{4.5}$$ $\boxed{S_{xx} = 50}$ ft^3

$$S_{yy} := \frac{8 \cdot 10^2 + 8 \cdot 5^2}{10}$$ $\boxed{S_{yy} = 100}$ ft^3

Maximum pile reaction (Strength I):

$\boxed{\phi_t = 0.9}$

$\boxed{P_e = 56539.53}$ kips (from column design)

$\boxed{Pu2_{pile_Str1} = 3179.17}$ kips

$MuT2_{pile_Str1} = 7836.85$ kip-ft

$MuL2_{pile_Str1} = 1856.29$ kip-ft

$$\delta_{pile_StrI} := \frac{1}{1 - \left(\frac{Pu2_{pile_Str1}}{\phi_t \cdot P_e}\right)}$$

$\delta_{pile_StrI} = 1.07$

$$Pu_p := \frac{Pu2_{pile_Str1}}{N_p} + \frac{MuT2_{pile_Str1}}{S_{yy}} + \frac{MuL2_{pile_Str1} \cdot \delta_{pile_StrI}}{S_{xx}}$$

$Pu_p = 276.93$ kips

$$Pu_{p_tons} := \frac{Pu_p}{2}$$

$Pu_{p_tons} = 138.46$ tons

From Wis Bridge Manual, Section 11.3.1.17.6, the vertical pile resistance of HP12x53 pile is :

$Pr_{12x53} = 110$ tons check = "No Good"

$Pr_{12x53_PDA} = 143$ tons check = "OK"

Note: PDA with CAPWAP is typically used when it is more economical than modified Gates. This example uses PDA with CAPWAP only to illustrate that vertical pile reactions are satisfied and to minimize example changes due to revised pile values. The original example problem was based on higher pile values than the current values shown in Chapter 11,Table 11.3-5.

Minimum pile reaction (Strength V):

$Pu_{pile_StrV} = 2179.55$ kips

$MuT_{pile_StrV} = 7196.34$ kip-ft

$MuL_{pile_StrV} = 2369.38$ kip-ft

$$\delta_{pile_StrV} := \frac{1}{1 - \left(\frac{Pu_{pile_StrV}}{\phi_t \cdot P_e}\right)}$$

$\delta_{pile_StrV} = 1.04$

$$Pu_{min_p} := \frac{Pu_{pile_StrV}}{N_p} - \frac{MuT_{pile_StrV}}{S_{yy}} - \frac{MuL_{pile_StrV} \cdot \delta_{pile_StrV}}{S_{xx}}$$

$Pu_{min_p} = -12.49$ kips

Capacity for pile uplift is site dependant. Consult with the geotechnical engineer for allowable values.

The horizontal pile resistance of HP12x53 pile from the soils report is :

$Hr_{12x53} := 14$ kips/pile

Pile dimensions in the transverse (xx) and longitudinal (yy) directions:

$B_{xx} := 12.05$ inches

$B_{yy} := 11.78$ inches

Pile spacing in the transverse and longitudinal directions:

$Spa_{xx} := 5.0$ feet $\quad \dfrac{Spa_{xx}}{\frac{B_{xx}}{12}} = 4.98$ Say: 5B

$Spa_{yy} := 3.0$ feet $\quad \dfrac{Spa_{yy}}{\frac{B_{yy}}{12}} = 3.06$ Say: 3B

Use the pile multipliers from **LRFD [Table 10.7.2.4-1]** to calculate the group resistance of the piles in each direction.

$Hr_{xx} := Hr_{12x53} \cdot 4 \cdot (1.0 + 0.85 + 0.70 \cdot 3)$

$Hr_{xx} = 221.2$ kips

$HuT_{pileStrIII} = 49.86$ kips

$Hr_{xx} \geq HuT_{pileStrIII}$

check = "OK"

$Hr_{yy} := Hr_{12x53} \cdot 5 \cdot (0.7 + 0.5 + 0.35 \cdot 2)$

$Hr_{yy} = 133$ kips

$HuL_{pileStrV} = 109.25$ kips

$Hr_{yy} \geq HuL_{pileStrV}$

check = "OK"

E13-1.11 - Design Pier Footing

In E13-1.7, the Strength I limit states was identified as the governing limit state for the design of the pier footing.

Listed below are the Strength I footing loads for one, two and three lanes loaded:

$Pu1_{ftgStr1} = 2643.74$ kips

$Pu2_{ftgStr1} = 2928.7$ kips

$MuT1_{ftgStr1} = 7267.81$ kip-ft

$MuT2_{ftgStr1} = 7836.85$ kip-ft

$MuL1_{ftgStr1} = 1187.7$ kip-ft

$MuL2_{ftgStr1} = 1856.29$ kip-ft

$Pu3_{ftgStr1} = 3124.66$ kips

$MuT3_{ftgStr1} = 4541.55$ kip-ft

$MuL3_{ftgStr1} = 2315.94$ kip-ft

The longitudinal moment given above must be magnified to account for slenderness of the column (see E13-1.9). The computed magnification factor and final factored forces are:

$$\delta_{s1_ftgStr1} := \frac{1}{1 - \left(\frac{Pu1_{ftgStr1}}{\phi_t \cdot P_e}\right)} \qquad \delta_{s1_ftgStr1} = 1.05$$

$$\delta_{s2_ftgStr1} := \frac{1}{1 - \left(\frac{Pu2_{ftgStr1}}{\phi_t \cdot P_e}\right)} \qquad \delta_{s2_ftgStr1} = 1.06$$

$$\delta_{s3_ftgStr1} := \frac{1}{1 - \left(\frac{Pu3_{ftgStr1}}{\phi_t \cdot P_e}\right)} \qquad \delta_{s3_ftgStr1} = 1.07$$

$MuL1_{ftgStr1\delta} := \delta_{s1_ftgStr1} \cdot MuL1_{ftgStr1}$ $\quad MuL1_{ftgStr1\delta} = 1252.79$ kip-ft

$MuL2_{ftgStr1\delta} := \delta_{s2_ftgStr1} \cdot MuL2_{ftgStr1}$ $\quad MuL2_{ftgStr1\delta} = 1969.65$ kip-ft

$MuL3_{ftgStr1\delta} := \delta_{s3_ftgStr1} \cdot MuL3_{ftgStr1}$ $\quad MuL3_{ftgStr1\delta} = 2467.46$ kip-ft

The calculations for the Strength I pile loads on the footing are calculated below for one, two and three lanes loaded.

$N_p = 20$ Number of piles

$S_{xx} = 50$ ft^3

$S_{yy} = 100$ ft^3

The following illustrates the corner pile loads for 2 lanes loaded:

$$Pu2_1 := \frac{Pu2_{ftgStr1}}{N_p} + \frac{MuT2_{ftgStr1}}{S_{yy}} + \frac{MuL2_{ftgStr1\delta}}{S_{xx}} \qquad Pu2_1 = 264.2 \text{ kips}$$

$$Pu2_5 := \frac{Pu2_{ftgStr1}}{N_p} - \frac{MuT2_{ftgStr1}}{S_{yy}} + \frac{MuL2_{ftgStr1\delta}}{S_{xx}} \qquad Pu2_5 = 107.46 \text{ kips}$$

$$Pu2_{16} := \frac{Pu2_{ftgStr1}}{N_p} + \frac{MuT2_{ftgStr1}}{S_{yy}} - \frac{MuL2_{ftgStr1\delta}}{S_{xx}} \qquad Pu2_{16} = 185.41 \text{ kips}$$

$$Pu2_{20} := \frac{Pu2_{ftgStr1}}{N_p} - \frac{MuT2_{ftgStr1}}{S_{yy}} - \frac{MuL2_{ftgStr1\delta}}{S_{xx}} \qquad Pu2_{20} = 28.67 \text{ kips}$$

Pile loads between the corners can be interpolated. Similar calculations for the piles for the cases of one, two and three lanes loaded produce the following results:

$$Pu1 = \begin{pmatrix} 229.92 & 193.58 & 157.24 & 120.9 & 84.56 \\ 213.22 & 176.88 & 140.54 & 104.2 & 67.86 \\ 196.51 & 160.17 & 123.84 & 87.5 & 51.16 \\ 179.81 & 143.47 & 107.13 & 70.79 & 34.45 \end{pmatrix}$$

$$Pu2 = \begin{pmatrix} 264.2 & 225.01 & 185.83 & 146.64 & 107.46 \\ 237.93 & 198.75 & 159.57 & 120.38 & 81.2 \\ 211.67 & 172.49 & 133.3 & 94.12 & 54.94 \\ 185.41 & 146.23 & 107.04 & 67.86 & 28.67 \end{pmatrix}$$

$$Pu3 = \begin{pmatrix} 251 & 228.29 & 205.58 & 182.87 & 160.17 \\ 218.1 & 195.39 & 172.68 & 149.97 & 127.27 \\ 185.2 & 162.49 & 139.78 & 117.08 & 94.37 \\ 152.3 & 129.59 & 106.88 & 84.18 & 61.47 \end{pmatrix}$$

$Pu1_{pile} = 229.92$ kips $Pu2_{pile} = 264.2$ kips $Pu3_{pile} = 251$ kips

A conservative simplification is to use the maximum pile reaction for all piles when calculating the total moment and one way shear forces on the footing.

$Pu := \max(Pu1_{pile}, Pu2_{pile}, Pu3_{pile})$ $Pu = 264.2$ kips

E13-1.11.1 Design for Moment

The footing is designed for moment using the pile forces computed above on a per-foot basis acting on each footing face. The design section for moment is at the face of the column. The following calculations are based on the outer row of piles in each direction, respectively.

$L_{ftg_xx} := L_{ftg}$ $L_{ftg_xx} = 23$ feet

$L_{ftg_yy} := W_{ftg}$ $L_{ftg_yy} = 12$ feet

Applied factored load per foot in the "X" direction:

$Pu_{Mom_xx} := Pu \cdot 5$ $Pu_{Mom_xx} = 1320.98$ kips

$R_{xx} := \frac{Pu_{Mom_xx}}{L_{ftg_xx}}$ $\boxed{R_{xx} = 57.43}$ kips per foot

Estimation of applied factored load per foot in the "Y" direction:

$Pu_{Mom_yy} := Pu \cdot 4$ $\boxed{Pu_{Mom_yy} = 1056.79}$ kips

$R_{yy} := \frac{Pu_{Mom_yy}}{L_{ftg_yy}}$ $\boxed{R_{yy} = 88.07}$ kips per foot

$arm_{xx} := 2.5$ feet

$arm_{yy} := 2.25$ feet

The moment on a per foot basis is then:

$Mu_{xx} := R_{xx} \cdot arm_{xx}$ $\boxed{Mu_{xx} = 143.59}$ kip-ft per foot

$Mu_{yy} := R_{yy} \cdot arm_{yy}$ $\boxed{Mu_{yy} = 198.15}$ kip-ft per foot

Once the maximum moment at the critical section is known, flexure reinforcement must be determined. The footing flexure reinforcement is located in the bottom of the footing and rests on top of the piles.

Assume #8 bars:

$bar_diam8 := 1.0$ inches

$bar_area8 := 0.79$ in^2

$\boxed{f_y = 60}$ ksi

The footing minimum tensile reinforcement requirements will be calculated. The tensile reinforcement provided must be enough to develop a factored flexural resistance at least equal to the lesser of the cracking strength or 1.33 times the factored moment from the applicable strength load combinations, **LRFD [5.7.3.3.2]**.

The cracking strength is calculated as follows, **LRFD[5.7.3.3.2]**:

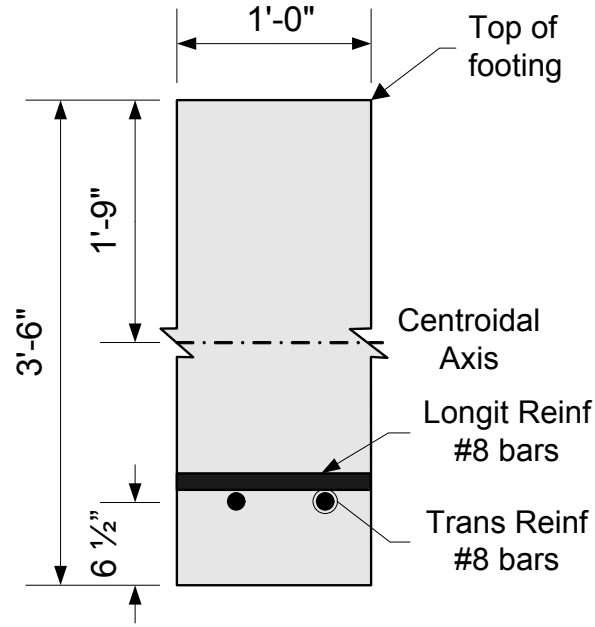

Figure E13-1.11-1
Footing Cracking Moment Dimensions

$f_r = 0.24 \cdot \lambda \sqrt{f'_c}$ = modulus of rupture (ksi) **LRFD [5.4.2.6]**

$f_r := 0.24 \cdot \sqrt{f'_c}$ $\lambda = 1.0$ (normal wgt. conc.) **LRFD [5.4.2.8]** $\boxed{f_r = 0.45}$ ksi

$S_g := \dfrac{b\left(H_{ftg} \cdot 12\right)^2}{6}$ $\boxed{S_g = 3528}$ in^4

$y_t := \dfrac{H_{ftg} \cdot 12}{2}$ $\boxed{y_t = 21}$ in

$M_{cr} = \gamma_3\left(\gamma_1 \cdot f_r\right)S_g$ therefore, $M_{cr} = 1.1\left(f_r\right)S_g$

Where:

$\gamma_1 := 1.6$ flexural cracking variability factor

$\gamma_3 := 0.67$ ratio of yield strength to ultimate tensile strength of the reinforcement <u>for A615, Grade 60 reinforcement</u>

$M_{cr} := 1.1 f_r \cdot S_g \cdot \dfrac{1}{12}$ $\boxed{M_{cr} = 145.21}$ kip-ft

1.33 times the factored controlling footing moment is:

$Mu_{ftg} := \max(Mu_{xx}, Mu_{yy})$ $\boxed{Mu_{ftg} = 198.15}$ kip-ft

$\boxed{1.33 \cdot Mu_{ftg} = 263.54}$ kip-ft

$M_{Design} := \min(M_{cr}, 1.33 \cdot Mu_{ftg})$ $\boxed{M_{Design} = 145.21}$ kip-ft

Mu_{ftg} exceeds M_{Design}, therefore set $M_{Design} = Mu_{ftg}$

Since the transverse moment controlled, M_{yy}, detail the transverse reinforcing to be located directly on top of the piles.

Effective depth, d_e = total footing thickness - cover - 1/2 bar diameter

$d_e := H_{ftg} \cdot 12 - Cover_{fb} - \frac{bar_diam8}{2}$ $\boxed{d_e = 35.5}$ in

Solve for the required amount of reinforcing steel, as follows:

$\phi_f := 0.90$

$\boxed{b = 12}$ in

$\boxed{f'_c = 3.5}$ ksi

$Rn := \frac{M_{Design} \cdot 12}{\phi_f \cdot b \cdot d_e^2}$ $\boxed{Rn = 0.175}$

$\rho := 0.85\left(\frac{f'_c}{f_y}\right) \cdot \left(1.0 - \sqrt{1.0 - \frac{2 \cdot Rn}{0.85 \cdot f'_c}}\right)$ $\boxed{\rho = 0.00300}$

$As_{ftg} := \rho \cdot b \cdot d_e$ $\boxed{As_{ftg} = 1.28}$ in^2 per foot

Required bar spacing = $\boxed{\frac{bar_area8}{As_{ftg}} \cdot 12 = 7.41}$ in

Use #8 bars @ $bar_space := 7$

$A_{sftg} := bar_area8 \cdot \left(\frac{12}{bar_space}\right)$ $\boxed{A_{sftg} = 1.35}$ in^2 per foot

Is $A_{sftg} \geq As_{ftg}$? $\boxed{check = \text{"OK"}}$

Similar calculations can be performed for the reinforcing in the longitudinal direction. The effective depth for this reinforcing is calculated based on the longitudinal bars resting directly on top of the transverse bars.

E13-1.11.2 Punching Shear Check

The factored force effects from E13-1.7 for the punching shear check at the column are:

$Pu3_{ftgStr1} = 3124.66$ kips

$MuT3_{ftgStr1} = 4541.55$ kip-ft

$MuL3_{ftgStr1\delta} = 2467.46$ kip-ft

$$Pu3 = \begin{pmatrix} 251 & 228.29 & 205.58 & 182.87 & 160.17 \\ 218.1 & 195.39 & 172.68 & 149.97 & 127.27 \\ 185.2 & 162.49 & 139.78 & 117.08 & 94.37 \\ 152.3 & 129.59 & 106.88 & 84.18 & 61.47 \end{pmatrix}$$

$Pu3_{pile} = 251$ kips

With the applied factored loads determined, the next step in the column punching shear check is to define the critical perimeter, b_o. The Specifications require that this perimeter be minimized, but need not be closer than $d_v/2$ to the perimeter of the concentrated load area. In this case, the concentrated load area is the area of the column on the footing as seen in plan.

The effective shear depth, d_v, must be defined in order to determine b_o and the punching (or two-way) shear resistance. An average effective shear depth should be used since the two-way shear area includes both the "X-X" and "Y-Y" sides of the footing. In other words, d_{ex} is not equal to d_{ey}, therefore d_{vx} will not be equal to d_{vy}. This is illustrated as follows assuming a 3'-6" footing with #8 reinforcing bars at 6" on center in both directions in the bottom of the footing:

$b = 12$ in

$h_{ftg} := H_{ftg} \cdot 12$ $\quad h_{ftg} = 42$ in

$A_{s_ftg} := 2 \cdot (bar_area8)$ $\quad A_{s_ftg} = 1.58$ in^2 per foot width

Effective depth for each axis:

$Cover_{fb} = 6$ in

$d_{ey} := h_{ftg} - Cover_{fb} - \frac{bar_diam8}{2}$ $\quad d_{ey} = 35.5$ in

$d_{ex} := h_{ftg} - Cover_{fb} - bar_diam8 - \frac{bar_diam8}{2}$ $\quad d_{ex} = 34.5$ in

Effective shear depth for each axis:

$T_{ftg} := A_{s_ftg} \cdot f_y$ $\boxed{T_{ftg} = 94.8}$ kips

$a_{ftg} := \dfrac{T_{ftg}}{\alpha_1 \cdot f'_c \cdot b}$ $\boxed{a_{ftg} = 2.66}$ in

$d_{vx} := \max\left(d_{ex} - \dfrac{a_{ftg}}{2}, 0.9 \cdot d_{ex}, 0.72 \cdot h_{ftg}\right)$ $\boxed{d_{vx} = 33.17}$ in

$d_{vy} := \max\left(d_{ey} - \dfrac{a_{ftg}}{2}, 0.9 \cdot d_{ey}, 0.72 \cdot h_{ftg}\right)$ $\boxed{d_{vy} = 34.17}$ in

Average effective shear depth:

$d_{v_avg} := \dfrac{d_{vx} + d_{vy}}{2}$ $\boxed{d_{v_avg} = 33.67}$ in

With the average effective shear depth determined, the critical perimeter can be calculated as follows:

$b_{col} := L_{col} \cdot 12$ $\boxed{b_{col} = 186}$ in

$t_{col} := W_{col} \cdot 12$ $\boxed{t_{col} = 48}$ in

$b_o := 2\left[b_{col} + 2 \cdot \left(\dfrac{d_{v_avg}}{2}\right)\right] + 2 \cdot \left[t_{col} + 2 \cdot \left(\dfrac{d_{v_avg}}{2}\right)\right]$ $\boxed{b_o = 602.69}$ in

The factored shear resistance to punching shear is the smaller of the following two computed values: **LRFD [5.13.3.6.3]**

$\beta_c := \dfrac{b_{col}}{t_{col}}$ $\boxed{\beta_c = 3.88}$

λ = 1.0 (normal wgt. conc.) **LRFD [5.4.2.8]**

$V_{n_punch1} := \left(0.063 + \dfrac{0.126}{\beta_c}\right) \cdot \lambda \sqrt{f'_c} \cdot (b_o) \cdot (d_{v_avg})$ $\boxed{V_{n_punch1} = 3626.41}$ kips

$V_{n_punch2} := 0.126 \cdot \left(\lambda \sqrt{f'_c}\right) \cdot (b_o) \cdot (d_{v_avg})$ $\boxed{V_{n_punch2} = 4783.77}$ kips

$V_{n_punch} := \min(V_{n_punch1}, V_{n_punch2})$ $\boxed{V_{n_punch} = 3626.41}$ kips

$\phi_v = 0.9$

$V_{r_punch} := \phi_v \cdot (V_{n_punch})$ $\boxed{V_{r_punch} = 3263.77}$ kips

With the factored shear resistance determined, the applied factored punching shear load will be computed. This value is obtained by summing the loads in the piles that are outside of the critical perimeter. As can be seen in Figure E13-1.11-2, this includes Piles 1 through 5, 6, 10,11, 15, and 16 through 20. These piles are entirely outside of the critical perimeter. If part

of a pile is inside the critical perimeter, then only the portion of the pile load outside the critical perimeter is used for the punching shear check, **LRFD [5.13.3.6.1]**.

$$\left(\frac{t_{col}}{2} + \frac{d_{v_avg}}{2}\right) \cdot \frac{1}{12} = 3.4 \qquad \text{feet}$$

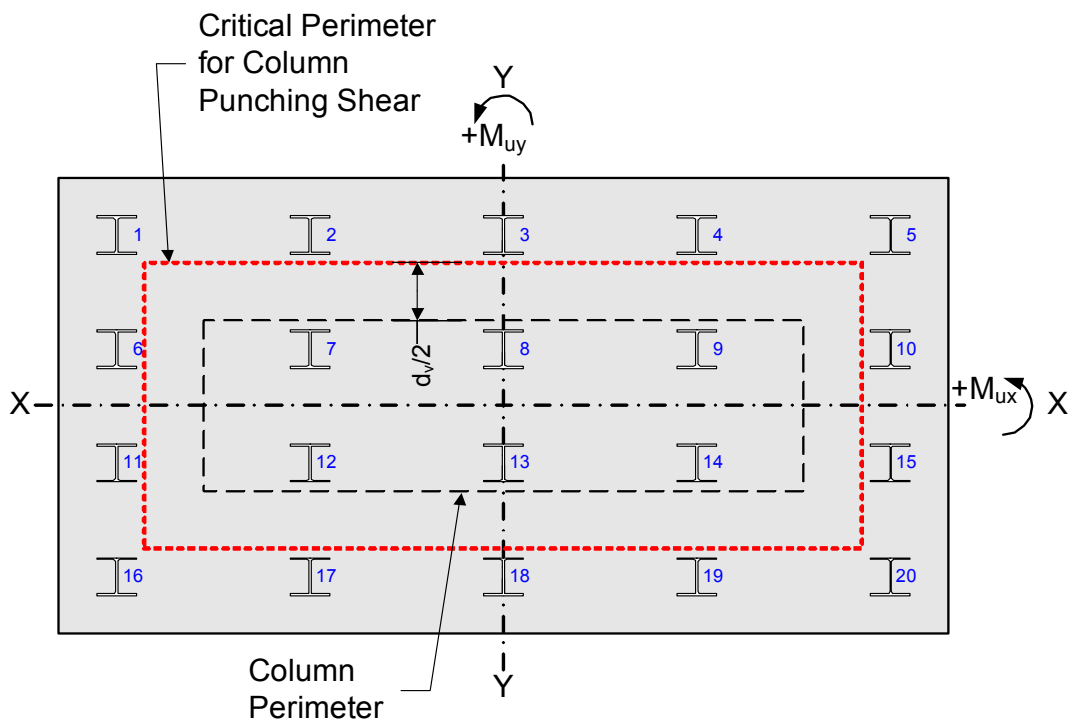

Figure E13-1.11-2
Critical Perimeter for Column Punching Shear

The total applied factored shear used for the punching shear check is the sum of the piles outside of the shear perimeter (1 through 5, 6, 10, 11, 15 and 16 through 20):

$$V_{u_punch} := \max(Pu1_{punch_col}, Pu2_{punch_col}, Pu3_{punch_col})$$

$$\boxed{V_{u_punch} = 2187.26} \quad \text{kips}$$

$$\boxed{V_{r_punch} = 3263.77} \quad \text{kips}$$

$$V_{u_punch} \le V_{r_punch}$$

$$\boxed{check = \text{"OK"}}$$

For <u>two-way action</u> around the <u>maximum loaded pile</u>, the pile critical perimeter, b_o, is located a minimum of $0.5d_v$ from the perimeter of the pile. If portions of the critical perimeter are located off the footing, that portion of the critical perimeter is limited by the footing edge.

Two-way action should be checked for the maximum loaded pile, The effective shear depth, d_v is the same as that used for the punching shear check for the column.

$V_{u2way} := Pu2_{pile}$ $\boxed{V_{u2way} = 264.2}$ kips

$\boxed{d_{v_avg} = 33.67}$ in

$\boxed{0.5 \cdot d_{v_avg} = 16.84}$ in

Two-way action or punching shear resistance for sections without transverse reinforcement can then be calculated as follows: **LRFD [5.13.3.6.3]**

λ = 1.0 (normal wgt. conc.) **LRFD [5.4.2.8]**

$$V_n = \left(0.063 + \frac{0.126}{\beta_c}\right) \cdot \lambda \sqrt{f'_c} \cdot b_o \cdot d_v \le 0.126 \cdot \lambda \sqrt{f'_c} \cdot b_o \cdot d_v$$

$\boxed{B_{xx} = 12.05}$ in

$\boxed{B_{yy} = 11.78}$ in

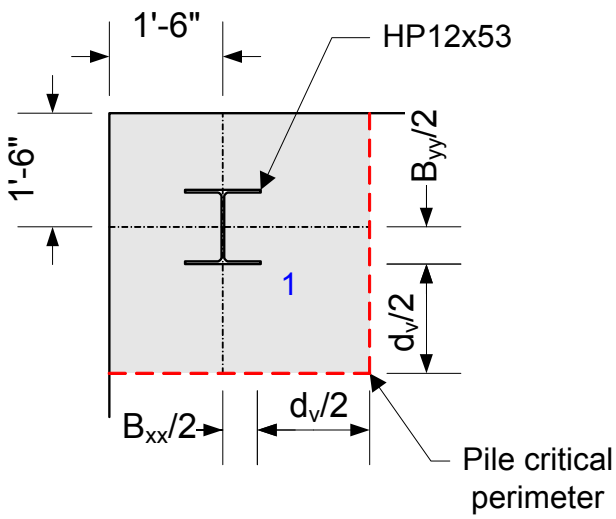

Figure E13-1.11-3
Pile Two-way Action Critical Perimeter

Since the critical section is outside of the footing, only include the portion of the shear perimeter that is located within the footing:

$b_{o_xx} := 1.5 \cdot 12 + \frac{B_{xx}}{2} + \frac{d_{v_avg}}{2}$ $\boxed{b_{o_xx} = 40.86}$ in

$b_{o_yy} := 1.5 \cdot 12 + \frac{B_{yy}}{2} + \frac{d_{v_avg}}{2}$ $\boxed{b_{o_yy} = 40.73}$ in

Ratio of long to short side of critical perimeter:

$\beta_{c_pile} := \frac{b_{o_xx}}{b_{o_yy}}$ $\boxed{\beta_{c_pile} = 1.003}$

$b_{o_pile} := b_{o_xx} + b_{o_yy}$ $\boxed{b_{o_pile} = 81.59}$ in

$V_{n_pile1} := \left(0.063 + \frac{0.126}{\beta_{c_pile}}\right) \cdot \lambda \sqrt{f'_c} \cdot (b_{o_pile}) \cdot (d_{v_avg})$ $\boxed{V_{n_pile1} = 969.24}$ kips

$V_{n_pile2} := 0.126 \cdot \left(\lambda \sqrt{f'_c}\right) \cdot (b_{o_pile}) \cdot (d_{v_avg})$ $\boxed{V_{n_pile2} = 647.59}$ kips

$V_{n_pile} := \min(V_{n_pile1}, V_{n_pile2})$ $\boxed{V_{n_pile} = 647.59}$ kips

$\phi_v = 0.9$

$V_{r_pile} := \phi_v \cdot (V_{n_pile})$ $\boxed{V_{r_pile} = 582.83}$ kips

$\boxed{V_{u2way} = 264.2}$ kips

$V_{r_pile} \geq V_{u2way}$

$\boxed{check = \text{"OK"}}$

E13-1.11.3 One Way Shear Check

Design for <u>one way shear</u> in both the <u>transverse</u> and <u>longitudinal directions</u>.

For one way action in the pier footing, in accordance with **LRFD[5.13.3.6.1]** & **[5.8.3.2]** the critical section is taken as the larger of:

$0.5 \cdot d_v \cdot \cot\theta$ or d_v

$\theta := 45deg$

The term d_v is calculated the same as it is for the punching shear above:

$\boxed{d_{vx} = 33.17}$ in

$\boxed{d_{vy} = 34.17}$ in

Now the critical section can be calculated:

$dv_{xx} := \max(0.5 \cdot d_{vx} \cdot \cot(\theta), d_{vx})$ $\boxed{dv_{xx} = 33.17}$ in

$dv_{yy} := \max(0.5 \cdot d_{vy} \cdot \cot(\theta), d_{vy})$ $\boxed{dv_{yy} = 34.17}$ in

Distance from face of column to CL of pile in longitudinal and transverse directions:

$\boxed{arm_{xx} = 2.5}$ feet

$\boxed{arm_{yy} = 2.25}$ feet

Distance from face of column to outside edge of pile in longitudinal and transverse directions:

$\boxed{arm_{xx} \cdot 12 + \frac{B_{yy}}{2} = 35.89}$ in > d_{vx}, design check required

$\boxed{arm_{yy} \cdot 12 + \frac{B_{xx}}{2} = 33.02}$ in < d_{vy}, no design check required

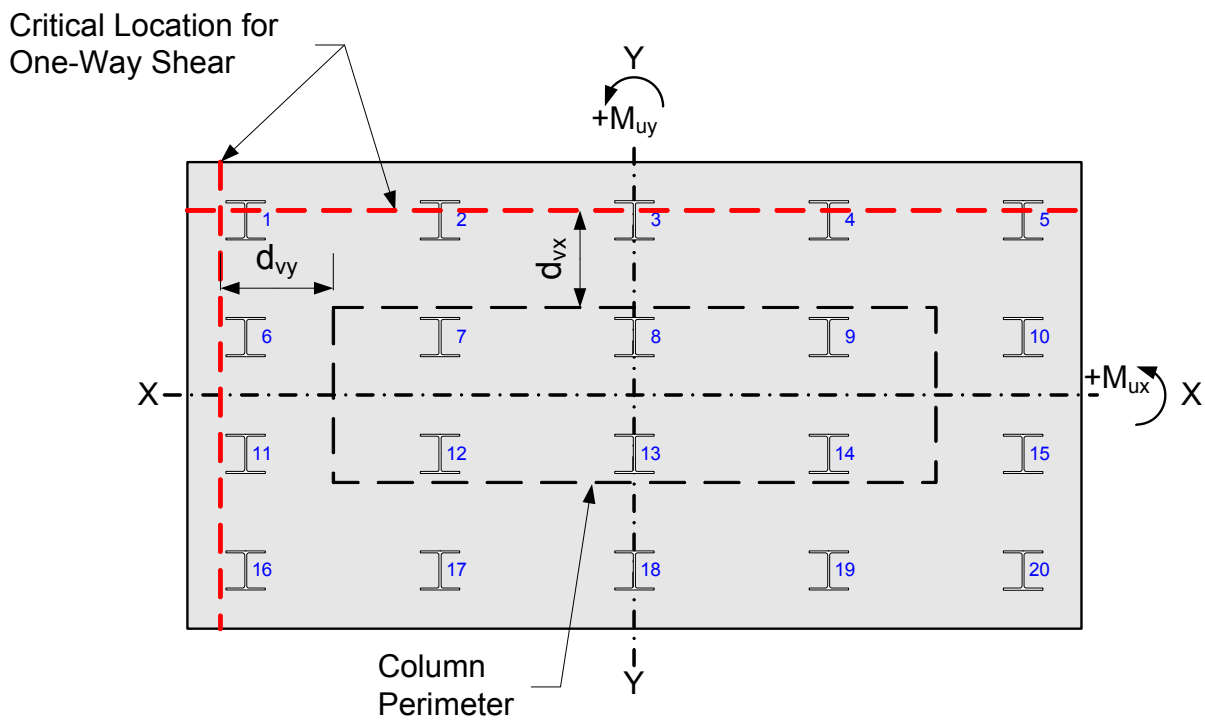

Figure E13-1.11-4
Critical Section for One-Way Shear

Portion of pile outside of the critical section for one way shear in the longitudinal direction:

$$b_{xx} := arm_{xx} \cdot 12 + \frac{B_{yy}}{2} - d_{vx} \qquad \boxed{b_{xx} = 2.72} \quad \text{inches}$$

The load applied to the critical section will be based on the proportion of the pile located outside of the critical section. As a conservative estimate, the maximum pile reaction will be assumed for all piles.

$Pu = 264.2$ kips

$Pu_{1wayx} := Pu \cdot 5$ $\quad Pu_{1wayx} = 1320.98$ kips

$Vu_{1wayx} := Pu_{1wayx} \cdot \frac{b_{xx}}{B_{yy}}$ $\quad Vu_{1wayx} = 304.76$ kips

The nominal shear resistance shall be calculated in accordance with **LRFD [5.8.3.3]** and is the lesser of the following:

$\beta_{1way} := 2.0$ $\quad \lambda = 1.0$ (normal wgt. conc.) **LRFD [5.4.2.8]**

$b_v := L_{ftg} \cdot 12$ $\quad b_v = 276$ inches

$V_{n_1way1} := 0.0316 \cdot \beta_{1way} \cdot \lambda \sqrt{f'_c} \cdot (b_v) \cdot (d_{vx})$ $\quad V_{n_1way1} = 1082.52$ kips

$V_{n_1ay2} := 0.25 \cdot (f'_c) \cdot (b_v) \cdot (d_{vx})$ $\quad V_{n_1ay2} = 8011.1$ kips

$V_{n_1way} := \min(V_{n_1way1}, V_{n_1ay2})$ $\quad V_{n_1way} = 1082.52$ kips

$\phi_v = 0.9$

$V_{r_1way} := \phi_v \cdot (V_{n_1way})$ $\quad V_{r_1way} = 974.27$ kips

$Vu_{1wayx} = 304.76$ kips

$V_{r_1way} \geq Vu_{1wayx}$

check = "OK"

E13-1.12 Final Pier Schematic

Figure E13-1.12-1 shows the final pier dimensions along with the required reinforcement in the pier cap and column.

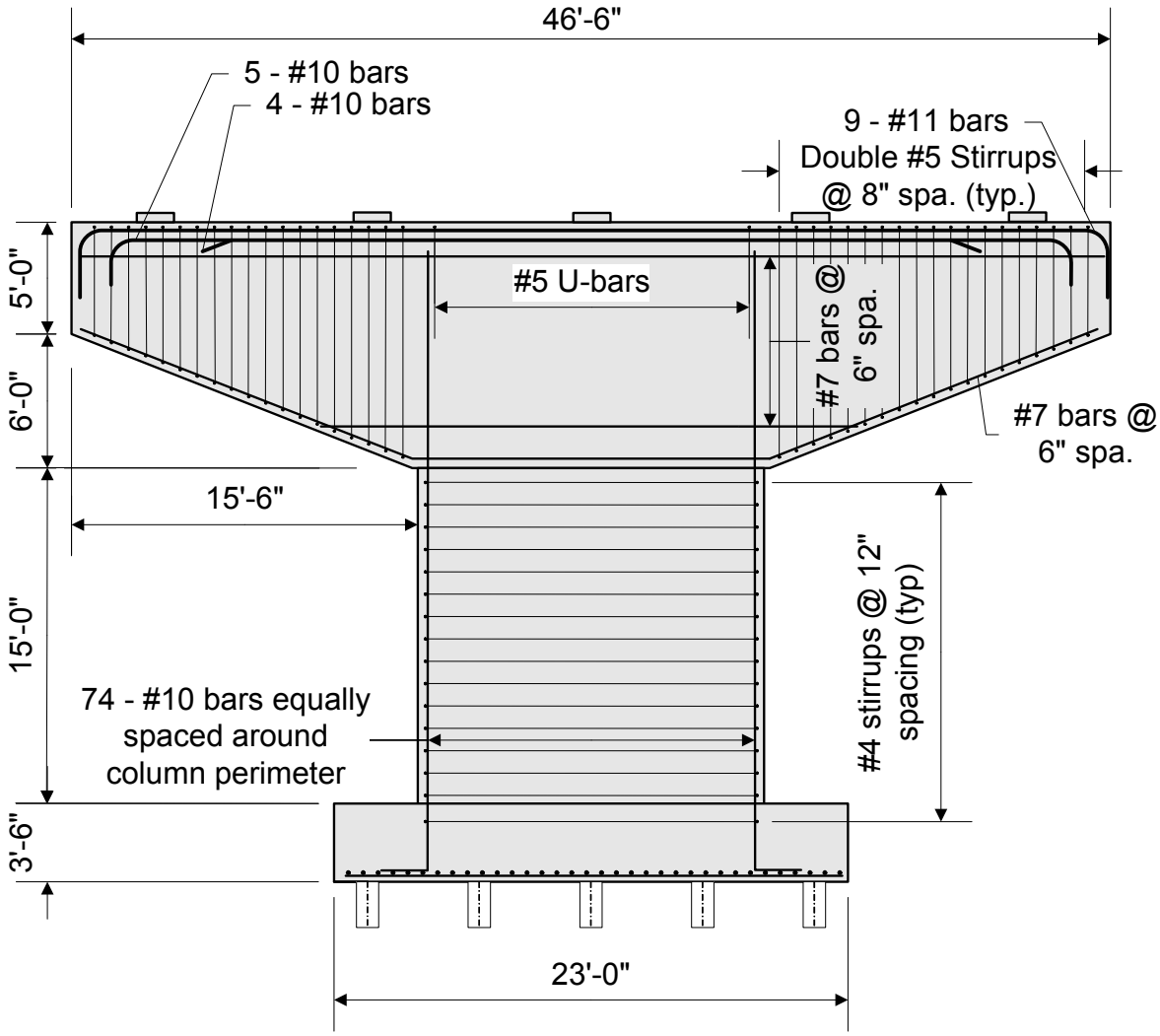

Figure E13-1.12-1
Final Pier Design

This page intentionally left blank.

Table of Contents

E13-2 Multi-Column Pier Design Example LRFD 2
E13-2.1 Obtain Design Criteria 2
E13-2.1.1 Material Properties: 2
E13-2.1.2 Reinforcing steel cover requirements (assume epoxy coated bars) 3
E13-2.1.3 Relevant Superstructure Data 3
E13-2.1.4 Select Optimum Pier Type 4
E13-2.1.5 Select Preliminary Pier Dimensions 4
E13-2.2 Loads 7
E13-2.2.1 Superstructure Dead Loads 7
E13-2.2.2 Live Load Reactions per Design Lane 9
E13-2.2.3 Superstructure Live Load Reactions 9
E13-2.3 Unfactored Force Effects 12
E13-2.4 Load Factors 12
E13-2.5 Combined Force Effects 12
E13-2.6 Pier Cap Design 15
E13-2.6.1 Positive Moment Capacity Between Columns 15
E13-2.6.2 Positive Moment Reinforcement Cut Off Location 17
E13-2.6.3 Negative Moment Capacity at Face of Column 20
E13-2.6.4 Negative Moment Reinforcement Cut Off Location 22
E13-2.6.5 Shear Capacity at Face of Center Column 25
E13-2.6.6 Temperature and Shrinkage Steel 28
E13-2.6.7 Skin Reinforcement 28
E13-2.7 Reinforcement Summary 29

E13-2 Multi-Column Pier Design Example - LRFD

2 Span Bridge, 54W, LRFD Design

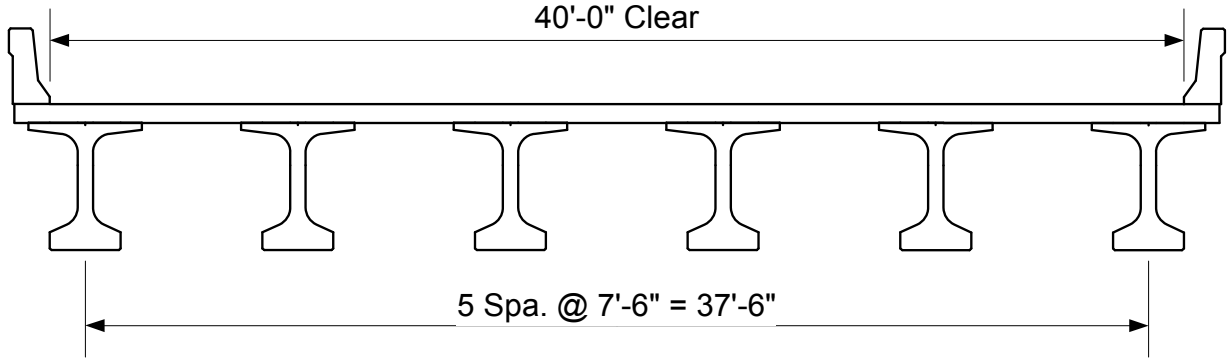

This pier is designed for the superstructure as detailed in example **E19-2**. This is a two-span prestressed girder grade separation structure. Semi-expansion bearings are located at the abutments, and fixed bearings are used at the pier.

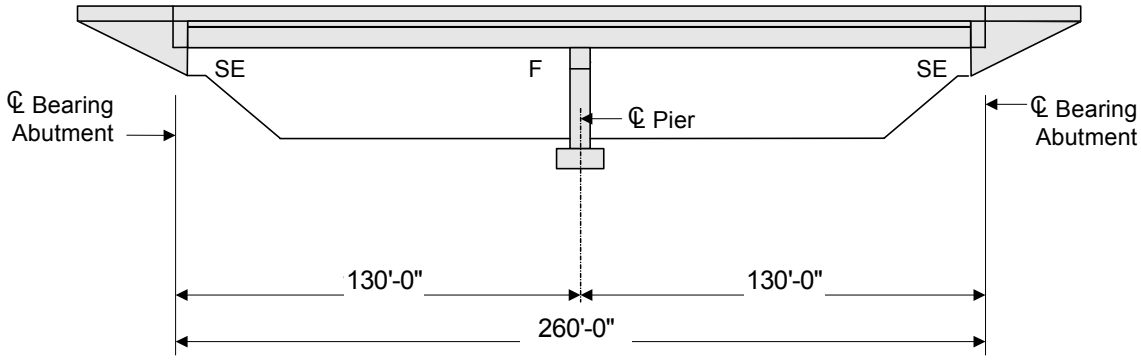

E13-2.1 Obtain Design Criteria

This multi-column pier design example is based on ***AASHTO LRFD Bridge Design Specifications, (Seventh Edition - 2016 Interim).*** The design methods presented throughout the example are meant to be the most widely used in general bridge engineering practice. Calculations are only shown for the pier cap. For example column and footing calculations, see example E13-1.

The first design step is to identify the appropriate design criteria. This includes, but is not limited to, defining material properties, identifying relevant superstructure information, and determining the required pier geometry.

E13-2.1.1 Material Properties:

$w_c := 0.150$ Concrete density, kcf

$f'_c := 3.5$ Concrete 28-day compressive strength, ksi **LRFD [5.4.2.1 & Table C5.4.2.1-1]**

$f_y := 60$ Reinforcement strength, ksi **LRFD [5.4.3 & 6.10.1.7]**

$E_s := 29000$ Modulus of Elasticity of the reinforcing steel, ksi

$E_c := 33000 \cdot w_c^{1.5} \cdot \sqrt{f'_c}$ **LRFD [C5.4.2.4]**

$\boxed{E_c = 3587}$ Modulus of Elasticity of the Concrete, ksi

E13-2.1.2 Reinforcing steel cover requirements (assume epoxy coated bars)

Cover dimension listed below is in accordance with **LRFD [Table 5.12.3-1].**

$Cover_{cap} := 2.5$ Concrete cover in pier cap, inches

E13-2.1.3 Relevant Superstructure Data

$L := 130$ design span length, feet

$w_b := 42.5$ out to out width of deck, feet

$w_{deck} := 40$ clear width of deck, feet

$w_p := 0.387$ weight of Wisconsin Type LF parapet, klf

$t_s := 8$ slab thickness, inches

$t_{haunch} := 4$ haunch thickness, inches

$skew := 0$ skew angle, degrees

$S := 7.5$ girder spacing, ft

$ng := 6$ number of girders

$DOH := \frac{w_b - (ng - 1) \cdot S}{2}$ deck overhang length $\boxed{DOH = 2.5}$ feet

$w_{tf} := 48$ width of 54W girder top flange, inches

$t_{tf} := 3$ thickness of 54W girder top flange, inches

$tf_{slope} := \frac{2.5}{20.75}$ slope of bottom surface of top flange $\boxed{tf_{slope} = 0.12}$ feet per foot

$girder_H := 54$ height of 54W girder, inches

E13-2.1.4 Select Optimum Pier Type

Selecting the most optimal pier type depends on site conditions, cost considerations, superstructure geometry, and aesthetics. The most common pier types are single column (i.e., "hammerhead"), solid wall type, and bent type (multi-column or pile bent). For this design example, a multi-column pier was chosen.

E13-2.1.5 Select Preliminary Pier Dimensions

Since the Specifications do not have standards regarding maximum or minimum dimensions for a pier cap, column, or footing, the designer should base the preliminary pier dimensions on state specific standards, previous designs, and past experience. The pier cap, however, must be wide enough to accommodate the bearing.

$cap_L := 41.5$ overall cap length, ft

$cap_H := 4.0$ pier cap height, ft

$cap_W := 3.5$ pier cap width, ft

$col_{spa} := 18.25$ column spacing, ft

$col_d := 3$ column depth (perpendicular to pier CL), ft

$col_w := 4$ column width (parallel to pier CL), ft

$col_h := 18$ column height, ft

$cap_{OH} := 2.5$ pier cap overhang dimension, ft

Figures E13-2.1-1 and E13-2.1-2 show the preliminary dimensions selected for this pier design example.

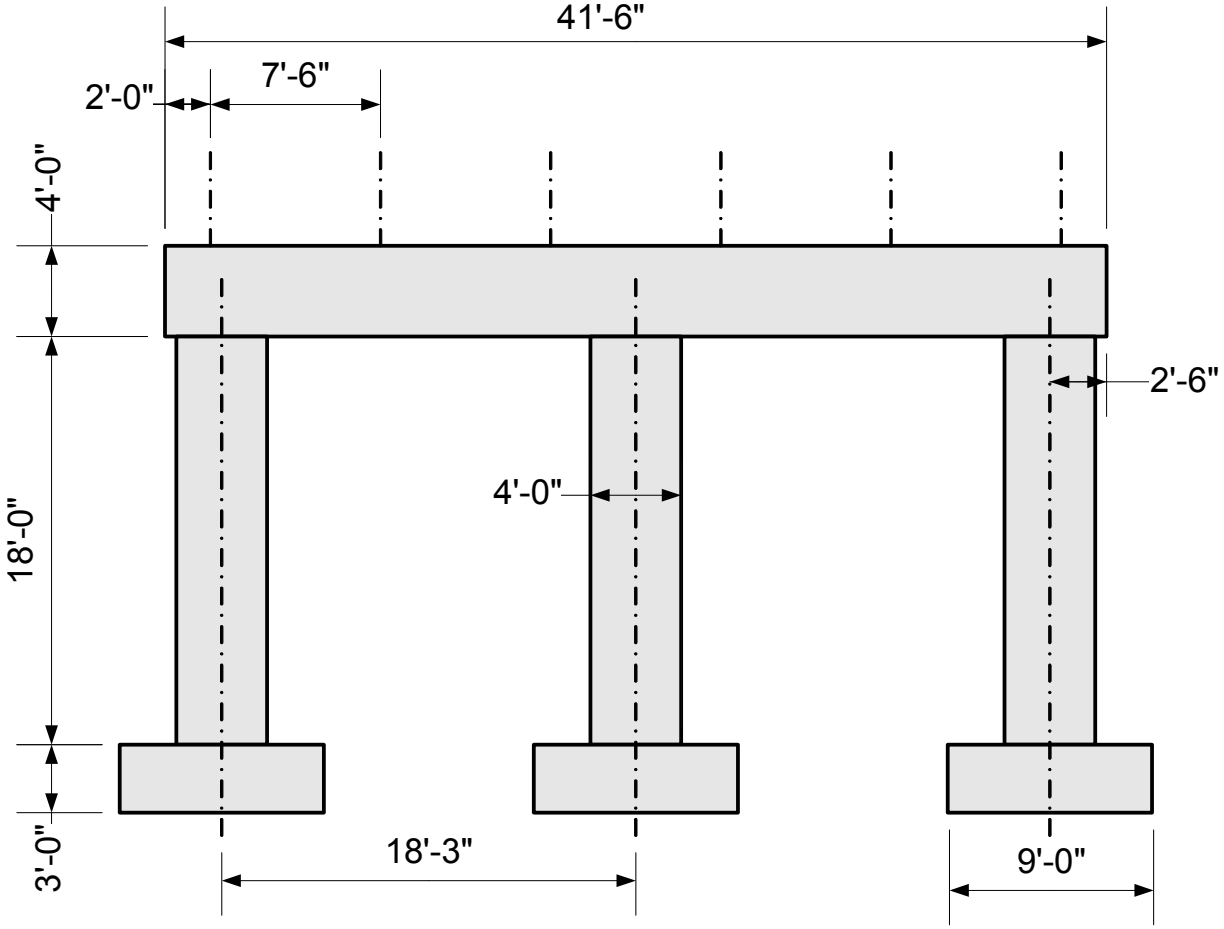

Figure E13-2.1-1
Preliminary Pier Dimensions - Front Elevation

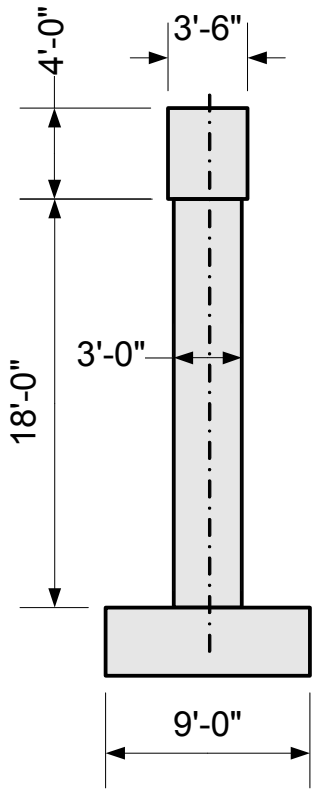

Figure E13-2.1-2
Preliminary Pier Dimensions - End Elevation

E13-2.2 Loads

$w_g := 0.831$ weight of 54W girder, klf

$w_{deck_int} := w_c \cdot \frac{t_s \cdot S}{12}$ weight of deck slab (int), klf $\boxed{w_{deck_int} = 0.75}$ klf

$OH := DOH - \frac{w_{tf}}{2 \cdot 12}$ deck overhang projection, ft $\boxed{OH = 0.5}$ ft

weight of deck slab (ext), klf

$$w_{deck_ext} := w_c \cdot \left[\frac{t_s}{12} \cdot \left(\frac{S}{2} + DOH \right) + \frac{1}{2} \cdot (OH) \cdot \left(\frac{t_{haunch} + t_{tf}}{12^2} - OH \cdot tf_{slope} \cdot \frac{1}{2} \right) \right]$$

$\boxed{w_{deck_ext} = 0.63}$ klf

weight of haunch, klf

$w_h := w_c \cdot \frac{t_{haunch} \cdot w_{tf}}{12^2}$ $\boxed{w_h = 0.2}$ klf

$w_{diaph_int} := 0.410$ weight of diaphragms on interior girder (assume 2), kips

$w_{diaph_ext} := 0.205$ weight of diaphragms on exterior girder, kips

$w_{ws} := 0.020$ future wearing surface, ksf

$w_p := 0.387$ weight of each parapet, klf

weight of concrete diaphragm between exterior girders

$w_{diaph} := w_c \cdot \frac{girder_H}{12} \cdot 2$ $\boxed{w_{diaph} = 1.35}$ klf

weight of cap

$w_{cap} := w_c \cdot cap_W \cdot cap_H$ $\boxed{w_{cap} = 2.1}$ klf

E13-2.2.1 Superstructure Dead Loads

DC Loads and Reactions

Interior DC1,DC2 and DW Loads

$w_{DC1_int} := w_g + w_{deck_int} + w_h + w_{diaph_int}$ $\boxed{w_{DC1_int} = 2.19}$ klf

$w_{DC2} := \frac{2 \cdot w_p}{ng}$ $\boxed{w_{DC2} = 0.13}$ klf

$w_{DW} := \frac{w_{ws} \cdot w_{deck}}{ng}$ $\boxed{w_{DW} = 0.13}$ klf

Interior DC and DW Reactions

$R_{DCi} := \left(\frac{1}{2} \cdot L \cdot w_{DC1_int} + \frac{5}{8} \cdot L \cdot w_{DC2}\right) \cdot 2$ $\boxed{R_{DCi} = 305.79}$ kips

$R_{DWi} := \left(\frac{5}{8} \cdot L \cdot w_{DW}\right) \cdot 2$ $\boxed{R_{DWi} = 21.67}$ kips

Exterior DC1 Loads

$w_{DC1_ext} := w_g + w_{deck_ext} + w_h + w_{diaph_ext}$ $\boxed{w_{DC1_ext} = 1.86}$ klf

Note: DC2 and DW loads are the same for interior and exterior girders.

Exterior DC and DW Reactions

$R_{DCe} := \left(\frac{1}{2} \cdot L \cdot w_{DC1_ext} + \frac{5}{8} \cdot L \cdot w_{DC2}\right) \cdot 2$ $\boxed{R_{DCe} = 262.98}$ kips

$R_{DWe} := \left(\frac{5}{8} \cdot L \cdot w_{DW}\right) \cdot 2$ $\boxed{R_{DWe} = 21.67}$ kips

The unfactored dead load reactions are listed below:

Unfactored Girder Reactions (kips)		
Girder #	DC	DW
1	263.0	21.7
2	305.8	21.7
3	305.8	21.7
4	305.8	21.7
5	305.8	21.7
6	263.0	21.7

Table E13-2.2-1
Unfactored Girder Dead Load Reactions

E13-2.2.2 Live Load Reactions per Design Lane

From girder line analysis, the following pier unfactored live load reactions are obtained:

$TruckPair := 125.64$ kips per design lane

$Lane := 103.94$ kips per design lane

$DLA := 1.33$ dynamic load allowance

These loads are per design lane and do not include dynamic load allowance. The pier reactions are controlled by the 90% (Truck Pair + Lane) loading condition. The resulting combined live load reactions per design lane (including dynamic load allowance) are:

$R_LL_{DesLane} := 0.90 \cdot (TruckPair \cdot DLA + Lane)$ $\boxed{R_LL_{DesLane} = 243.94}$ kips

The resulting wheel loads are:

$R_{LLw} := \dfrac{0.90 \cdot TruckPair \cdot DLA}{2}$ $\boxed{R_{LLw} = 75.2}$ kips per wheel

$R_{LLlane} := \dfrac{0.90 \cdot Lane}{10}$ $\boxed{R_{LLlane} = 9.35}$ kips per foot

E13-2.2.3 Superstructure Live Load Reactions

For the pier in this design example, the maximum live load effects in the pier cap, column and footing are based on either one, two or three lanes loaded (whichever results in the worst force effect). The lanes are moved across the deck to create the envelope of force effects. The following figures illustrate the lane locations loaded to determine the maximum positive and negative moments as well as the maximum shear force effects in the pier cap.

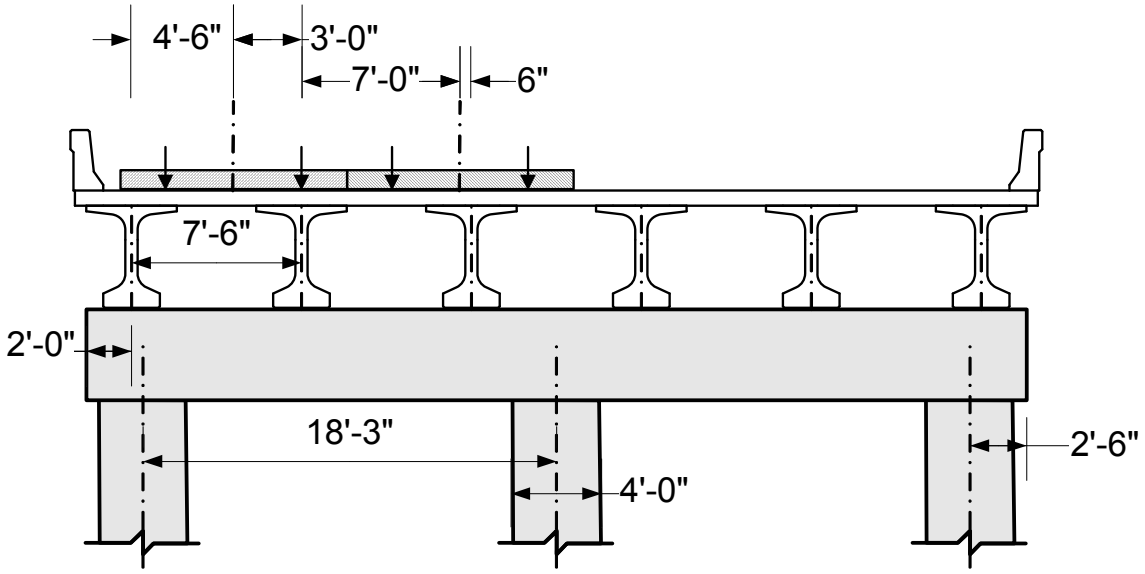

Figure E13-2.2-1
Lane Locations for Maximum Positive Moment

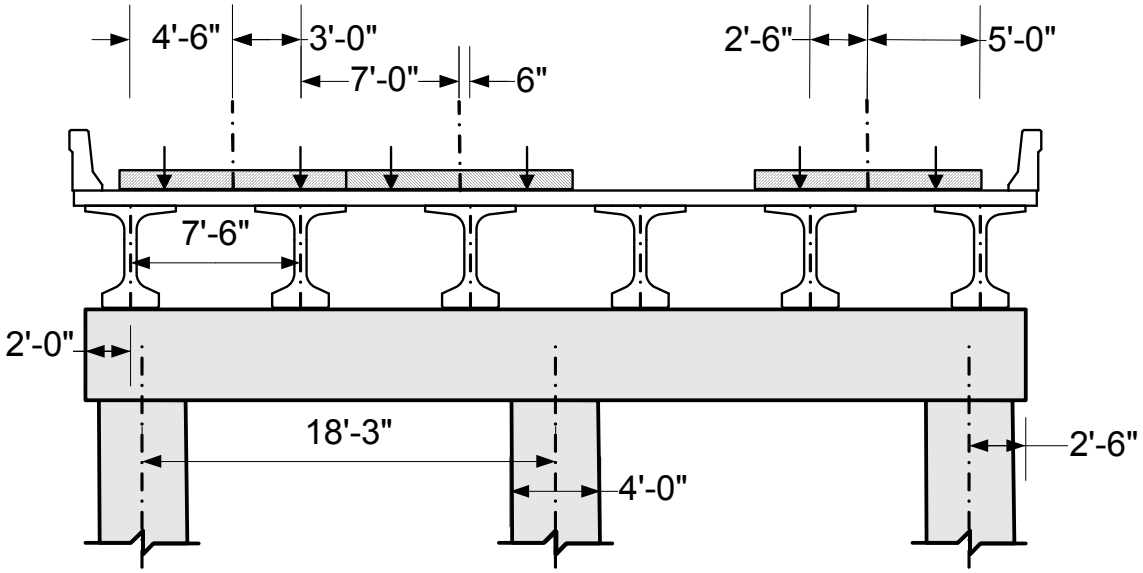

Figure E13-2.2-2
Lane Locations for Maximum Negative Moment

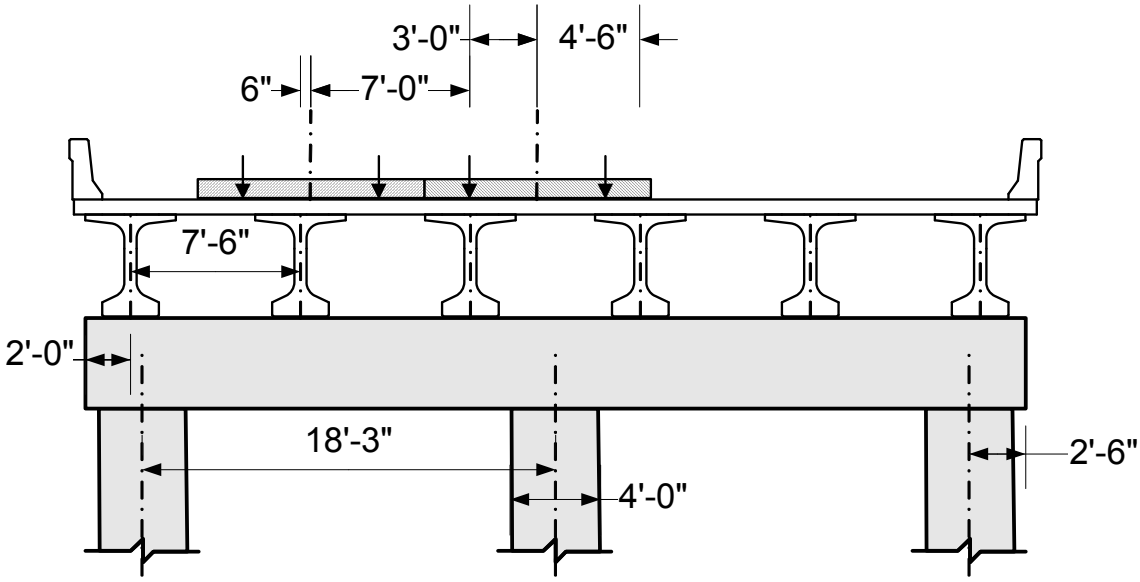

Figure E13-2.2-3
Lane Locations for Maximum Shear

The next step is to compute the reactions due to the above loads at each of the six bearing locations. This is generally carried out by assuming the deck is pinned (i.e., discontinuous) at the interior girder locations but continuous over the exterior girders. Solving for the reactions is then elementary. The computations for the reactions for maximum moment with only 2 lanes loaded are illustrated below as an example. All reactions shown are in kips.

$m_2 := 1.0$ Multi-presence factor for two lanes loaded

$$R1_{LL} := m_2 \cdot \left[R_{LLw} \cdot \left(\frac{6.0}{7.5} \right) + R_{LLlane} \cdot \left(0.5 + \frac{7.5}{2} \right) \right] \qquad \boxed{R1_{LL} = 99.91}$$

$$R2_{LL} := m_2 \cdot \left[R_{LLw} \cdot \left(\frac{1.5}{7.5} + 1 + \frac{3.5}{7.5} \right) + R_{LLlane} \cdot (7.5) \right] \qquad \boxed{R2_{LL} = 195.49}$$

$$R3_{LL} := m_2 \cdot \left[R_{LLw} \cdot \left(\frac{4.0 + 5.0}{7.5} \right) + R_{LLlane} \cdot \left(\frac{7.5}{2} + 4.5 \cdot \frac{5.25}{7.5} \right) \right] \qquad \boxed{R3_{LL} = 154.78}$$

$$R4_{LL} := m_2 \cdot \left[R_{LLw} \cdot \left(\frac{2.5}{7.5} \right) + R_{LLlane} \cdot 4.5 \cdot \frac{2.25}{7.5} \right] \qquad \boxed{R4_{LL} = 37.69}$$

$$R5_{LL} := 0 \qquad \boxed{R5_{LL} = 0}$$

$$R6_{LL} := 0 \qquad \boxed{R6_{LL} = 0}$$

E13-2.3 Unfactored Force Effects

The resulting unfactored force effects for the load cases shown above are shown in the table below. Note that the maximum shear and negative moment values are taken at the face of the column.

Unfactored Force Effects			
Effect	DC	DW	LL
Maximum Positive Moment	943.1	62.17	628.4
Maximum Negative Moment	-585.6	-39.03	-218.9
Maximum Shear	429.2	28.53	228.3
(Corresponding Moment)	-585.6	-39.03	-119.3

Table E13-2.3-1
Unfactored Force Effects

E13-2.4 Load Factors

From **LRFD [Table 3.4.1-1]**:

DC	DW	LL
$\gamma st_{DC} := 1.25$	$\gamma st_{DW} := 1.50$	$\gamma st_{LL} := 1.75$
$\gamma s1_{DC} := 1.0$	$\gamma s1_{DW} := 1.0$	$\gamma s1_{LL} := 1.0$

E13-2.5 Combined Force Effects

The resulting factored Service and Strength force effects for the load cases previously illustrated are shown in the tables below. The full Service and Strength factored moment and shear envelopes are shown in the following graphs.

Factored Service Force Effects				
Effect	DC	DW	LL	Total
Maximum Positive Moment	943.1	62.2	628.4	1633.7
Maximum Negative Moment	-585.6	-39.0	-218.9	-843.5
Maximum Shear	429.2	28.5	228.3	686.0
(Corresponding Moment)	-585.6	-39.0	-119.3	-743.9

Table E13-2.5-1
Factored Service Force Effects

Factored Strength Force Effects				
Effect	DC	DW	LL	Total
Maximum Positive Moment	1178.9	93.3	1099.7	2371.8
Maximum Negative Moment	-732.0	-58.5	-383.1	-1173.6
Maximum Shear	536.5	42.8	399.5	978.8
(Corresponding Moment)	-732.0	-58.5	-208.8	-999.3

Table E13-2.5-2
Factored Strength I Force Effects

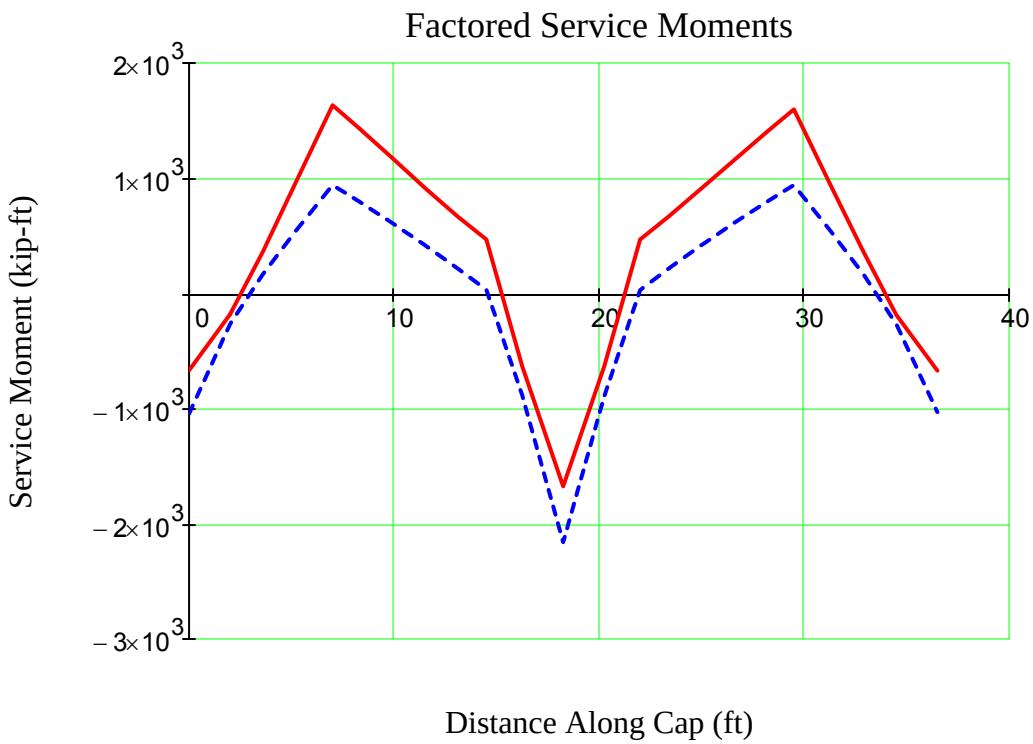
Factored Service Moments
Service Moment (kip-ft)
2×10^3
1×10^3
– 1×10^3
– 2×10^3
– 3×10^3
0
10
20
30
40
Distance Along Cap (ft)

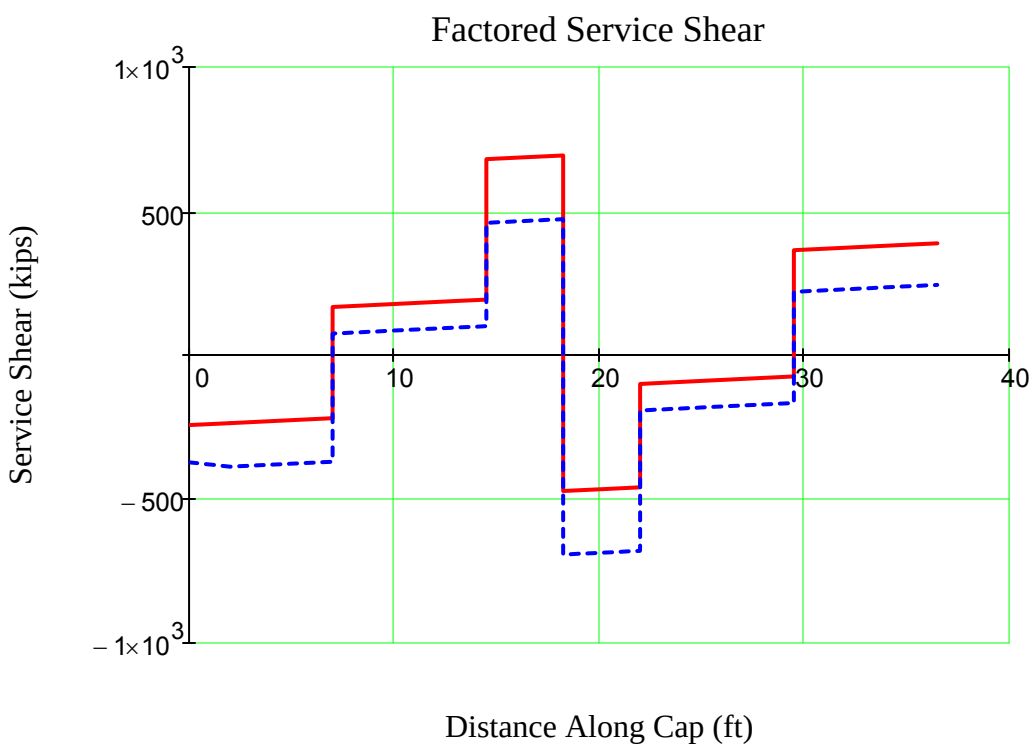
Factored Service Shear
Service Shear (kips)
1×10^3
500
– 500
– 1×10^3
0
10
20
30
40
Distance Along Cap (ft)

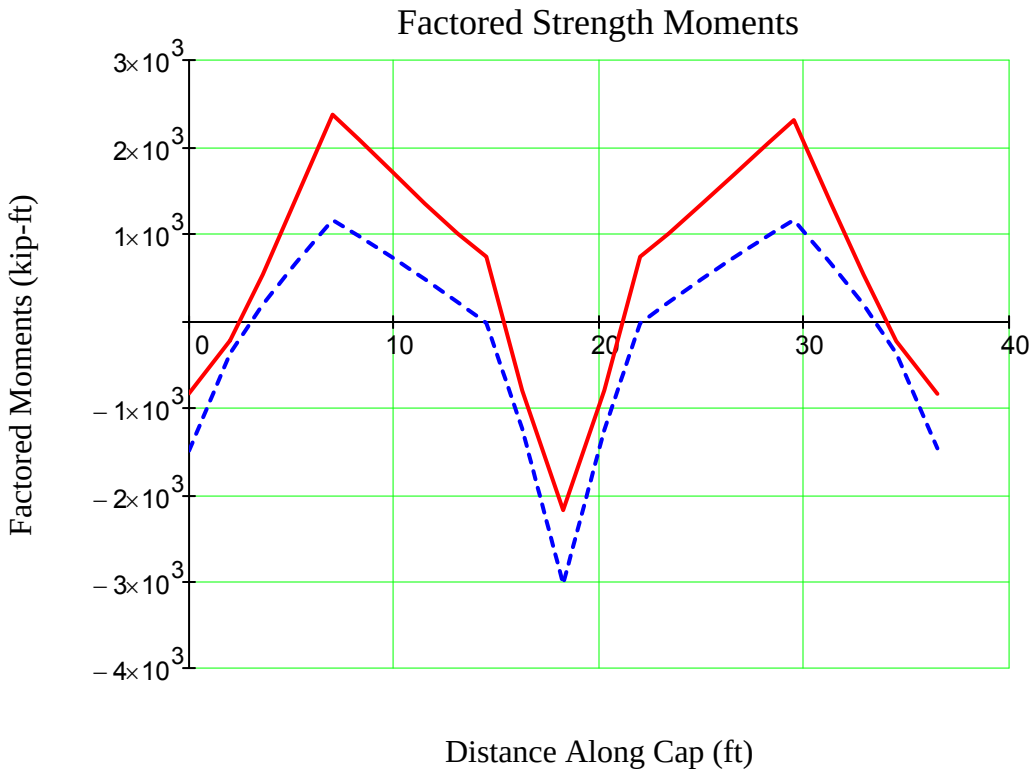
Factored Strength Moments
Factored Moments (kip-ft)
3×10^3
2×10^3
1×10^3
– 1×10^3
– 2×10^3
– 3×10^3
– 4×10^3
0
10
20
30
40
Distance Along Cap (ft)

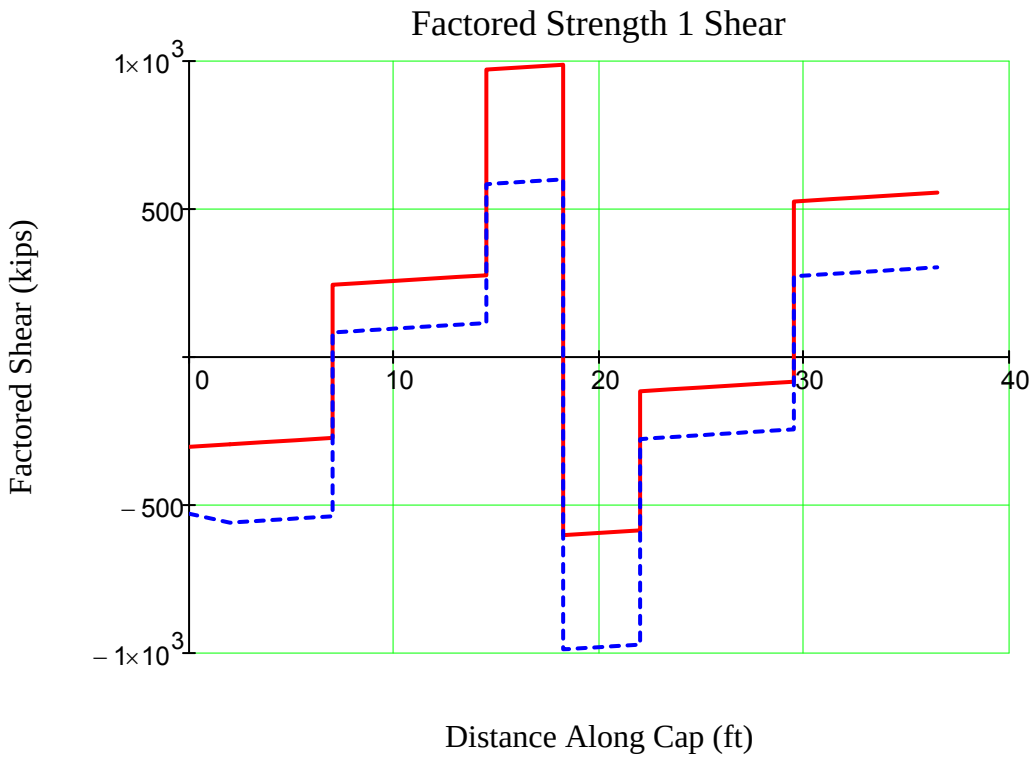
Factored Strength 1 Shear
Factored Shear (kips)
1×10^3
500
– 500
– 1×10^3
0
10
20
30
40
Distance Along Cap (ft)

E13-2.6 Pier Cap Design

Calculate positive and negative moment requirements.

E13-2.6.1 Positive Moment Capacity Between Columns

It is assumed that there will be two layers of positive moment reinforcement. Therefore the effective depth of the section at the pier is:

$cover := 2.5$ in

In accordance with **LRFD [5.10.3.1.3]** the minimum clear space between the bars in layers is one inch or the nominal diameter of the bars.

$spa_{clear} := 1.75$ in

$bar_{stirrup} := 5$ (transverse bar size)

$Bar_D(bar_{stirrup}) = 0.63$ in (transverse bar diameter)

$Bar_{No_pos} := 9$

$Bar_D(Bar_{No_pos}) = 1.13$ in (Assumed bar size)

$$d_e := cap_H \cdot 12 - cover - Bar_D(bar_{stirrup}) - Bar_D(Bar_{No_pos}) - \frac{spa_{clear}}{2}$$

$d_e = 42.87$ in

For flexure in non-prestressed concrete, $\phi_f := 0.9$.

The width of the cap:

$b_w := cap_W \cdot 12$ $b_w = 42$ in

$Mu_{pos} = 2372$ kip-ft

$$R_u := \frac{Mu_{pos} \cdot 12}{\phi_f \cdot b_w \cdot d_e^2}$$ $R_u = 0.4097$ ksi

$$\rho := 0.85 \frac{f'_c}{f_y} \cdot \left(1 - \sqrt{1 - \frac{2 \cdot R_u}{0.85 \cdot f'_c}}\right)$$ $\rho = 0.00738$

$A_s := \rho \cdot b_w \cdot d_e$ $A_s = 13.28$ in^2

This requires $n_{bars_pos} := 14$ bars. Use $n_{bars_pos1} := 9$ bars in the bottom layer and $n_{bars_pos2} := 5$ bars in the top layer. Check spacing requirements.

$$spa_{pos} := \frac{b_w - 2 \cdot (cover + Bar_D(bar_{stirrup})) - Bar_D(Bar_{No_pos})}{n_{bars_pos1} - 1}$$

$spa_{pos} = 4.33$ in

$clear_{spa} := spa_{pos} - Bar_D(Bar_{No_pos})$ $\boxed{clear_{spa} = 3.2}$ in

The minimum clear spacing is equal to 1.5 times the maximum aggregate size of 1.5 inches.

$spa_{min} := 1.5 \cdot 1.5$ $\boxed{spa_{min} = 2.25}$ in

Is $spa_{min} \le clear_{spa}$? $\boxed{check = "OK"}$

$As_{prov_pos} := Bar_A(Bar_{No_pos}) \cdot n_{bars_pos}$ $\boxed{As_{prov_pos} = 14}$ in^2

LRFD [5.7.2.2] $\alpha_1 := 0.85$ (for $f'_c \le 10.0$ ksi)

$a := \dfrac{As_{prov_pos} \cdot f_y}{\alpha_1 \cdot b_w \cdot f'_c}$ $\boxed{a = 6.72}$ in

$Mn_{pos} := As_{prov_pos} \cdot f_y \cdot \left(d_e - \dfrac{a}{2}\right) \cdot \dfrac{1}{12}$ $\boxed{Mn_{pos} = 2766}$ kip-ft

$Mr_{pos} := \phi_f \cdot Mn_{pos}$ $\boxed{Mr_{pos} = 2489}$ kip-ft

$\boxed{Mu_{pos} = 2372}$ kip-ft

Is $Mu_{pos} \le Mr_{pos}$? $\boxed{check = "OK"}$

Check the minimum reinforcement limits in accordance with **LRFD [5.7.3.3.2]**:

$S_{cap} := \dfrac{(cap_W \cdot 12) \cdot (cap_H \cdot 12)^2}{6}$ $\boxed{S_{cap} = 16128}$ in^3

$f_r = 0.24 \cdot \lambda \sqrt{f'_c}$ = modulus of rupture (ksi) **LRFD [5.4.2.6]**

$f_r := 0.24 \cdot \sqrt{f'_c}$ $\lambda = 1.0$ (normal wgt. conc.) **LRFD [5.4.2.8]** $\boxed{f_r = 0.45}$ ksi

$M_{cr} = \gamma_3(\gamma_1 \cdot f_r)S_{cap}$ therefore, $M_{cr} = 1.1(f_r)S_{cap}$

Where:

$\gamma_1 := 1.6$ flexural cracking variability factor

$\gamma_3 := 0.67$ ratio of yield strength to ultimate tensile strength of the reinforcement <u>for A615, Grade 60 reinforcement</u>

$M_{cr} := 1.1 \cdot f_r \cdot S_{cap} \cdot \dfrac{1}{12}$ $\boxed{M_{cr} = 664}$ kip-ft

$\boxed{1.33 \cdot Mu_{pos} = 3155}$ kip-ft

Is Mr_{pos} greater than the lesser value of M_{cr} and $1.33 \cdot Mu_{pos}$? $\boxed{check = "OK"}$

Check the Service I crack control requirements in accordance with **LRFD [5.7.3.4]**:

$\rho := \frac{As_{prov_pos}}{b_w \cdot d_e}$ $\rho = 0.00778$

$n := \text{floor}\left(\frac{E_s}{E_c}\right)$ $n = 8$

$k := \sqrt{(\rho \cdot n)^2 + 2 \cdot \rho \cdot n} - \rho \cdot n$ $k = 0.3$

$j := 1 - \frac{k}{3}$ $j = 0.9$

$d_c := cover + Bar_D(bar_{stirrup}) + \frac{Bar_D(Bar_{No_pos})}{2}$ $d_c = 3.69$ in

$Ms_{pos} = 1634$ kip-ft

$f_s := \frac{Ms_{pos}}{As_{prov_pos} \cdot j \cdot d_e} \cdot 12 \quad \leq 0.6\, f_y$ $f_s = 36.24$ ksi approx. = 0.6 f_y O.K.

The height of the section, h, is:

$h := cap_H \cdot 12$ $h = 48$ in

$\beta := 1 + \frac{d_c}{0.7 \cdot (h - d_c)}$ $\beta = 1.12$

$\gamma_e := 1.0$ for Class 1 exposure condition

$S_{max} := \frac{700 \gamma_e}{\beta \cdot f_s} - 2 \cdot d_c$ $S_{max} = 9.89$ in

$spa_{pos} = 4.33$ in

Is $spa_{pos} \leq S_{max}$? check = "OK"

E13-2.6.2 Positive Moment Reinforcement Cut Off Location

Terminate the top row of bars where bottom row of reinforcement satisfies the moment diagram.

$spa' := spa_{pos}$ $spa' = 4.33$ in

$As' := Bar_A(Bar_{No_pos}) \cdot n_{bars_pos1}$ $As' = 9$ in^2

LRFD [5.7.2.2] $\alpha_1 = 0.85$ (for $f'_c \leq 10.0$ ksi)

$a' := \frac{As' \cdot f_y}{\alpha_1 \cdot b_w \cdot f'_c}$ $a' = 4.32$ in

$d_{e'} := cap_H \cdot 12 - cover - Bar_D(bar_{stirrup}) - \frac{Bar_D(Bar_{No_pos})}{2}$

$d_{e'} = 44.31$ in

$M_{n'} := As' \cdot f_y \cdot \left(d_{e'} - \frac{a'}{2}\right) \cdot \frac{1}{12}$ $M_{n'} = 1897$ kip-ft

$M_{r'} := \phi_f \cdot M_{n'}$ $M_{r'} = 1707$ kip-ft

Based on the moment diagram, try locating the first cut off at $cut_{pos} := 10.7$ feet from the CL of the left column. Note that the Service I crack control requirements control the location of the cut off.

$M_{r'} = 1707$ kip-ft

$Mu_{cut1} = 1538$ kip-ft

$Ms_{cut1} = 1051$ kip-ft

Is $Mu_{cut1} \leq M_{r'}$? check = "OK"

Check the minimum reinforcement limits in accordance with **LRFD [5.7.3.3.2]**:

$M_{cr} = 664$ kip-ft

$1.33 \cdot Mu_{cut1} = 2045$ kip-ft

Is $M_{r'}$ greater than the lesser value of M_{cr} and $1.33 \cdot Mu_{cut1}$? check = "OK"

Check the Service I crack control requirements in accordance with **LRFD [5.7.3.4]**:

$\rho' := \frac{As'}{b_w \cdot d_{e'}}$ $\rho' = 0.00484$

$k' := \sqrt{(\rho' \cdot n)^2 + 2 \cdot \rho' \cdot n} - \rho' \cdot n$ $k' = 0.24$

$j' := 1 - \frac{k'}{3}$ $\boxed{j' = 0.92}$

$\boxed{Ms_{cut1} = 1051}$ kip-ft

$f_{s'} := \frac{Ms_{cut1}}{As' \cdot j' \cdot d_{e'}} \cdot 12 \quad \le 0.6\, f_y$ $\boxed{f_{s'} = 34.39}$ ksi $\le 0.6\, f_y$ O.K.

$\boxed{\beta = 1.12}$

$\boxed{\gamma_e = 1}$

$S_{max'} := \frac{700\gamma_e}{\beta \cdot f_{s'}} - 2 \cdot d_c$ $\boxed{S_{max'} = 10.81}$ in

$\boxed{spa' = 4.33}$ in

Is $spa' \le S_{max'}$? $\boxed{check = \text{"OK"}}$

The bars shall be extended past this cut off point for a distance not less than the following, **LRFD [5.11.1.2.1]**:

$\boxed{d_{e'} = 44.31}$ in

$\boxed{15 \cdot Bar_D(Bar_{No_pos}) = 16.92}$ in

$\boxed{\frac{col_{spa} \cdot 12}{20} = 10.95}$ in

$\boxed{BarExtend_{pos} = 44.31}$ in

The bars also must be extended past the point required for flexure the development length of the bar. From Chapter 9, **Table 9.9-1**, the development length for an epoxy coated number $\boxed{\rightarrow 9}$ bar with spacing less than 6-inches, is:

$l_{d_9} := 5.083$ ft

$\boxed{cut_{pos} + \frac{BarExtend_{pos}}{12} = 14.39}$

$\boxed{0.4 \cdot col_{spa} + l_{d_9} = 12.38}$

Similar calculations show that the second layer bottom mat bars can also be terminated at a distance of 2.0 feet from the CL of the left column. At least one quarter of the bars shall be

extended past the centerline of the support for continuous spans. Therefore, run the bottom layer bars to the end of the cap.

E13-2.6.3 Negative Moment Capacity at Face of Column

It is assumed that there will be one layer of negative moment reinforcement. Therefore the effective depth of the section at the pier is:

$\boxed{cover = 2.5}$ in

$\boxed{bar_{stirrup} = 5}$ (transverse bar size)

$\boxed{Bar_D(bar_{stirrup}) = 0.63}$ in (transverse bar diameter)

$Bar_{No_neg} := 8$

$\boxed{Bar_D(Bar_{No_neg}) = 1.00}$ in (Assumed bar size)

$$d_{e_neg} := cap_H \cdot 12 - cover - Bar_D(bar_{stirrup}) - \frac{Bar_D(Bar_{No_neg})}{2}$$

$\boxed{d_{e_neg} = 44.38}$ in

For flexure in non-prestressed concrete, $\boxed{\phi_f = 0.9}$.
The width of the cap:

$\boxed{b_w = 42}$ in

$\boxed{Mu_{neg} = -1174}$ kip-ft

$$R_{u_neg} := \frac{|Mu_{neg}| \cdot 12}{\phi_f \cdot b_w \cdot d_{e_neg}^2}$$

$\boxed{R_{u_neg} = 0.1892}$ ksi

$$\rho_{neg} := 0.85 \frac{f'_c}{f_y} \cdot \left(1 - \sqrt{1 - \frac{2 \cdot R_{u_neg}}{0.85 \cdot f'_c}}\right)$$

$\boxed{\rho_{neg} = 0.00326}$

$$A_{s_neg} := \rho_{neg} \cdot b_w \cdot d_{e_neg}$$

$\boxed{A_{s_neg} = 6.08}$ in^2

This requires $n_{bars_neg} := 9$ bars. Check spacing requirements.

$$spa_{neg} := \frac{b_w - 2 \cdot (cover + Bar_D(bar_{stirrup})) - Bar_D(Bar_{No_neg})}{n_{bars_neg} - 1}$$

$\boxed{spa_{neg} = 4.34}$ in

$clear_{spa_neg} := spa_{neg} - Bar_D(Bar_{No_neg})$ $\boxed{clear_{spa_neg} = 3.34}$ in

Is $spa_{min} \le clear_{spa_neg}$? $\boxed{check = \text{"OK"}}$

$As_{prov_neg} := Bar_A(Bar_{No_neg}) \cdot n_{bars_neg}$ $\boxed{As_{prov_neg} = 7.07}$ in^2

LRFD [5.7.2.2] $\alpha_1 := 0.85$ (for $f'_c \le 10.0$ ksi)

$a_{neg} := \dfrac{As_{prov_neg} \cdot f_y}{\alpha_1 \cdot b_w \cdot f'_c}$ $\boxed{a_{neg} = 3.39}$ in

$Mn_{neg} := As_{prov_neg} \cdot f_y \cdot \left(d_{e_neg} - \dfrac{a_{neg}}{2}\right) \cdot \dfrac{1}{12}$ $\boxed{Mn_{neg} = 1508}$ kip-ft

$Mr_{neg} := \phi_f \cdot Mn_{neg}$ $\boxed{Mr_{neg} = 1358}$ kip-ft

$\boxed{Mu_{neg} = 1174}$ kip-ft

Is $Mu_{neg} \le Mr_{neg}$? $\boxed{check = \text{"OK"}}$

Check the minimum reinforcement limits in accordance with **LRFD [5.7.3.3.2]**:

$\boxed{M_{cr} = 664}$ kip-ft

$\boxed{1.33 \cdot Mu_{neg} = 1561}$ kip-ft

Is Mr_{neg} greater than the lesser value of M_{cr} and $1.33 \cdot Mu_{neg}$? $\boxed{check = \text{"OK"}}$

Check the Service I crack control requirements in accordance with **LRFD [5.7.3.4]**:

$\rho_{neg} := \dfrac{As_{prov_neg}}{b_w \cdot d_{e_neg}}$ $\boxed{\rho_{neg} = 0.00379}$

$\boxed{n = 8}$

$k_{neg} := \sqrt{(\rho_{neg} \cdot n)^2 + 2 \cdot \rho_{neg} \cdot n} - \rho_{neg} \cdot n$ $\boxed{k_{neg} = 0.22}$

$j_{neg} := 1 - \dfrac{k_{neg}}{3}$ $\boxed{j_{neg} = 0.93}$

$d_{c_neg} := cover + Bar_D(bar_{stirrup}) + \dfrac{Bar_D(Bar_{No_neg})}{2}$ $\boxed{d_{c_neg} = 3.63}$ in

$\boxed{Ms_{neg} = 844}$ kip-ft

$f_{s_neg} := \frac{Ms_{neg}}{As_{prov_neg} \cdot j_{neg} \cdot d_{e_neg}} \cdot 12 \quad \le 0.6\, f_y$ $\qquad f_{s_neg} = 34.8$ ksi $\le 0.6\, f_y$ O.K.

The height of the section, h, is: $\boxed{h = 48}$ in

$\beta_{neg} := 1 + \frac{d_{c_neg}}{0.7 \cdot (h - d_{c_neg})}$ $\qquad \boxed{\beta_{neg} = 1.12}$

$\gamma_e := 1.0$ for Class 1 exposure condition

$S_{max_neg} := \frac{700 \gamma_e}{\beta_{neg} \cdot f_{s_neg}} - 2 \cdot d_{c_neg}$ $\qquad \boxed{S_{max_neg} = 10.76}$ in

$\boxed{spa_{neg} = 4.34}$ in

Is $spa_{neg} \le S_{max_neg}$? $\qquad \boxed{check = \text{"OK"}}$

E13-2.6.4 Negative Moment Reinforcement Cut Off Location

Cut 4 bars where the remaining 5 bars satisfy the moment diagram.

$n_{bars_neg'} := 5$

$spa'_{neg} := spa_{neg} \cdot 2$ $\qquad \boxed{spa'_{neg} = 8.69}$ in

$As'_{neg} := Bar_A(Bar_{No_neg}) \cdot n_{bars_neg'}$ $\qquad \boxed{As'_{neg} = 3.93}$ in^2

LRFD [5.7.2.2] $\qquad \alpha_1 := 0.85 \quad$ (for $f'_c \le 10.0$ ksi)

$a'_{neg} := \frac{As'_{neg} \cdot f_y}{\alpha_1 \cdot b_w \cdot f'_c}$ $\qquad \boxed{a'_{neg} = 1.89}$ in

$\boxed{d_{e_neg} = 44.38}$ in

$M_{n'_neg} := As'_{neg} \cdot f_y \cdot \left(d_{e_neg} - \frac{a'_{neg}}{2}\right) \cdot \frac{1}{12}$ $\qquad \boxed{M_{n'_neg} = 853}$ kip-ft

$M_{r'_neg} := \phi_f \cdot M_{n'_neg}$ $\qquad \boxed{M_{r'_neg} = 768}$ kip-ft

Based on the moment diagram, try locating the cut off at $cut_{neg} := 15.3$ feet from the CL of the left column. Note that the Service I crack control requirements control the location of the cut off.

$M_{r'_neg} = 768$ kip-ft

$Mu_{neg_cut} = 577$ kip-ft

$Ms_{neg_cut} = 381$ kip-ft

Is $Mu_{neg_cut} \le M_{r'_neg}$? check = "OK"

Check the minimum reinforcement limits in accordance with **LRFD [5.7.3.3.2]**:

$M_{cr} = 664$ kip-ft

$1.33 \cdot Mu_{neg_cut} = 767$ kip-ft

Is $M_{r'_neg}$ greater than the lesser value of M_{cr} and $1.33 \cdot Mu_{neg_cut}$? check = "OK"

Check the Service I crack control requirements in accordance with **LRFD [5.7.3.4]**:

$$\rho'_{neg} := \frac{As'_{neg}}{b_w \cdot d_{e_neg}}$$ $\rho'_{neg} = 0.00211$

$$k'_{neg} := \sqrt{(\rho'_{neg} \cdot n)^2 + 2 \cdot \rho'_{neg} \cdot n} - \rho'_{neg} \cdot n$$ $k'_{neg} = 0.17$

$$j'_{neg} := 1 - \frac{k'_{neg}}{3}$$ $j'_{neg} = 0.94$

$Ms_{neg_cut} = 381$ kip-ft

$$f_{s'_neg} := \frac{Ms_{neg_cut}}{As'_{neg} \cdot j'_{neg} \cdot d_{e_neg}} \cdot 12 \le 0.6\, f_y$$ $f_{s'_neg} = 27.79$ ksi $\le 0.6\, f_y$ O.K.

$\beta_{neg} = 1.12$

$\gamma_e = 1$

$$S_{max'_neg} := \frac{700 \gamma_e}{\beta_{neg} \cdot f_{s'_neg}} - 2 \cdot d_{c_neg}$$ $S_{max'_neg} = 15.30$ in

$spa'_{neg} = 8.69$ in

Is $spa'_{neg} \le S_{max'_neg}$? check = "OK"

The bars shall be extended past this cut off point for a distance not less than the following, **LRFD [5.11.1.2.3]**:

$d_{e_neg} = 44.38$ in

$12 \cdot Bar_D(Bar_{No_neg}) = 12$ in

$\frac{(col_{spa} - col_w) \cdot 12}{16} = 10.69$ in

$BarExtend_{neg} = 44.38$ in

These bars also must be extended past the point required for flexure the development length of the bar. From Chapter 9, **Table 9.9-1**, the development length for an epoxy coated number $\rightarrow 8$ "top" bar with spacing greater than 6-inches, is:

$l_{d_8} := 3.25$ ft

The cut off location is determined by the following:

$cut_{neg} - \frac{BarExtend_{neg}}{12} = 11.6$ ft

$col_{spa} - \frac{col_w}{2} - l_{d_8} = 13$ ft

Therefore, the cut off location is located at the following distance from the CL of the left column:

$cutoff_{location} = 11.6$ ft

By inspection, the remaining top mat reinforcement is adequate over the exterior columns. The inside face of the exterior column is located at:

$col_{face} := \frac{col_w}{2} \cdot \frac{1}{col_{spa}}$

$col_{face} = 0.11$ % along cap

$Mu_{negative}(col_{face}) = -378.37$ kip-ft

$Ms_{negative}(col_{face}) = -229.74$ kip-ft

E13-2.6.5 Shear Capacity at Face of Center Column

$Vu = 978.82$ kips

The Factored Shear Resistance, V_r

$$V_r = \phi_v(V_n)$$

$\phi_v := 0.9$

V_n is determined as the lesser of the following equations, **LRFD [5.8.3.3]**:

$$V_{n1} = V_c + V_s + V_p$$

$$V_{n2} = 0.25 \cdot f'_c \cdot b_v \cdot d_v + V_p$$

V_c , the shear resistance due to concrete (kip), is calculated as follows:

$$V_c = 0.0316 \cdot \beta \cdot \lambda \sqrt{f'_c} \cdot b_v \cdot d_v$$

Where:

b_v = effective web width (in) taken as the minimum section width within the depth d_v

d_v = effective shear depth (in), the distance, measured perpendicular to the neutral axis between the resultants of the tensile and compressive force due to flexure. It need not be taken less than the greater of $0.9d_e$ or $0.72h$

$b_v := cap_W \cdot 12$ $\quad b_v = 42$ in

$d_{e_neg} = 44.38$ in

$a_{neg} = 3.39$ in

$d_{v_neg} := d_{e_neg} - \frac{a_{neg}}{2}$ $\quad d_{v_neg} = 42.68$ in

$0.9 \cdot d_{e_neg} = 39.94$ in

$h = 48$ in $\quad 0.72 \cdot h = 34.56$ in

Therefore, use $d_v = 42.68$ in for V_c calculation.

$\beta := 2.0$ Factor indicating ability of diagonally cracked concrete to transmit tension. For nonprestressed sections, β = 2.0, **LRFD [5.8.3.4.1]**.

$\lambda := 1.0$ (normal wgt. conc.) **LRFD [5.4.2.8]**

$V_c := 0.0316 \cdot \beta \cdot \lambda \sqrt{f'_c} \cdot b_v \cdot d_v$ $\quad V_c = 211.94$ kips

V_s , the shear resistance due to steel (kips), is calculated as follows:

$$V_s = \frac{A_v \cdot f_y \cdot d_v \cdot (\cot(\theta) + \cot(\alpha)) \cdot \sin(\alpha)}{s}$$

Where:

s = spacing of stirrups (in)
θ = angle of inclination of diagonal compressive stresses (deg)
α = angle of inclination of transverse reinforcement to longitudinal axis (deg)

$s := 5$ in

$\theta := 45deg$ for non prestress members

$\alpha := 90deg$ for vertical stirrups

A_v = (# of stirrup legs)(area of stirrup)

$bar_{stirrup} = 5$

StirrupConfig := "Triple"

$stirrup_{legs} = 6$

$A_v := stirrup_{legs} \cdot (Bar_A(bar_{stirrup}))$ $A_v = 1.84$ in^2

$$V_s := \frac{A_v \cdot f_y \cdot d_v \cdot (\cot(\theta) + \cot(\alpha)) \cdot \sin(\alpha)}{s}$$ $V_s = 942.74$ kips

V_p , the component of the effective prestressing force in the direction of the applied shear:

$V_p := 0$ for non prestressed members

V_n is the lesser of:

$V_{n1} := V_c + V_s + V_p$ $V_{n1} = 1154.67$ kips

$V_{n2} := 0.25 \cdot f'_c \cdot b_v \cdot d_v + V_p$ $V_{n2} = 1568.41$ kips

Therefore, use: $V_n = 1154.67$ kips

$V_r := \phi_v \cdot V_n$ $V_r = 1039.2$ kips

$Vu = 978.82$ kips

Is $Vu \le V_r$? check = "OK"

Check the Minimum Transverse Reinforcement, **LRFD [5.8.2.5]**

Required area of transverse steel:

$\lambda := 1.0$ (normal wgt. conc.) **LRFD [5.4.2.8]**

$$Av_{min} := 0.0316 \cdot \frac{\lambda \sqrt{f'_c} \cdot b_v \cdot s}{f_y}$$

$Av_{min} = 0.21$ in^2

$A_v = 1.84$ in^2

Is $Av_{min} \le A_v$ (provided area of steel)? check = "OK"

Check the Maximum Spacing of the Transverse Reinforcement, **LRFD [5.8.2.7]**

If $v_u < 0.125f'_c$, then: $s_{max} := 0.8 \cdot d_v \le 24$ in

If $v_u >$ or $= 0.125f'_c$, then: $s_{max} := 0.4 \cdot d_v \le 12$ in

The shear stress on the concrete, v_u, is taken to be:

$$v_u := \frac{Vu}{\phi_v \cdot b_v \cdot d_v}$$

$v_u = 0.61$ ksi

$0.125 \cdot f'_c = 0.44$ ksi

$s_{max} = 12$ in

$s = 5$ in

Is the spacing provided $s \le s_{max}$? check = "OK"

Similar calculations are used to determine the required stirrup spacing for the remainder of the cap.

$s_2 = 12$	in	$s_3 = 6$	in
$StirrupConfig_2$ = "Double"		$StirrupConfig_3$ = "Double"	
$Vu2 = 276$	kips	$Vu3 = 560$	kips
$V_{r_2} = 408.94$	kips	$V_{r_3} = 627.13$	kips

It should be noted that the required stirrup spacing is typically provided for a distance equal to the cap depth past the CL of the girder. Consideration should also be given to minimize the number of stirrup spacing changes where practical. These procedures result in additional capacity in the pier cap that is often beneficial for potential future rehabilitation work on the structure.

E13-2.6.6 Temperature and Shrinkage Steel

Temperature and shrinkage steel shall be provided on each face and in each direction as calculated below. **LRFD [5.10.8]**

$cap_W = 3.5$ ft

$cap_H = 4$ ft

$b := cap_W \cdot 12$ $\quad b = 42$ in

$h = 48$ in

$As_{ts} := \dfrac{1.30 \cdot b \cdot h}{2 \cdot (b + h) \cdot f_y}$ $\quad As_{ts} = 0.24$ in²/ft in each face

Is the area required As_{ts} between 0.11 and 0.60 in² per foot? $\quad$ check = "OK"

Use number 5 bars at one foot spacing: $\quad Bar_A(5) = 0.31$ in²/ft in each face

E13-2.6.7 Skin Reinforcement

If the effective depth, d_e, of the reinforced concrete member exceeds 3 ft., longitudinal skin reinforcement is uniformly distributed along both side faces of the component for a distance of $d_e/2$ nearest the flexural tension reinforcement, **LRFD [5.7.3.4]**. The area of skin reinforcement (in²/ft of height) on each side of the face is required to satisfy:

$A_{sk} \geq 0.012(d_e - 30)$ and $A_{sk} \cdot \left(\dfrac{d_e}{2 \cdot 12}\right)$ need not exceed $(A_s / 4)$

Where: (For positive moment region)

A_{sk} = area of skin reinforcement (in²/ft)

A_s = area of tensile reinforcement (in²) $\quad A_s = 13.28$ in²

d_e = flexural depth taken as the distance from the compression face to the centroid of the steel, positive moment region (in) $\quad d_e = 42.87$ in

$A_{sk1} := 0.012 \cdot (d_e - 30)$ $\quad A_{sk1} = 0.15$ in²/ft

$A_{sk1} := A_{sk1} \cdot \left(\dfrac{d_e}{2 \cdot 12}\right)$ $\quad A_{sk1} = 0.28$ in²

$A_{sk2} := \dfrac{A_s}{4}$ $\quad A_{sk2} = 3.32$ in²

$A_{face} := \min(A_{sk1}, A_{sk2})$ (area req'd. per face within $d_e/2$ from tension reinf.) $\quad A_{face} = 0.28$ in²

$spa_max_{sk} := \min\left(\dfrac{d_e}{6}, 12\right)$ $\quad spa_max_{sk} = 7.15$ in

Use number 5 bars at 6" spacing: $\quad Bar_A(5) \cdot 2 = 0.61$ in² $> A_{face}$
(provides 2 bars within $d_e/2$ from tension reinf.)

Preceding calculations looked at skin reinforcement requirements in the positive moment region. For the negative moment region, #5 bars at 6" will also meet its requirements.

E13-2.7 Reinforcement Summary

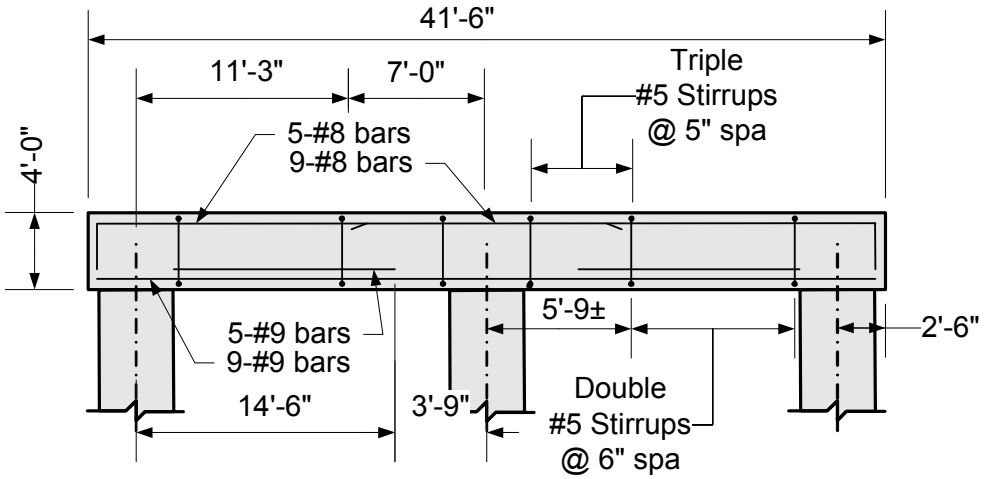

Figure E13-2.7-1
Cap Reinforcement - Elevation View

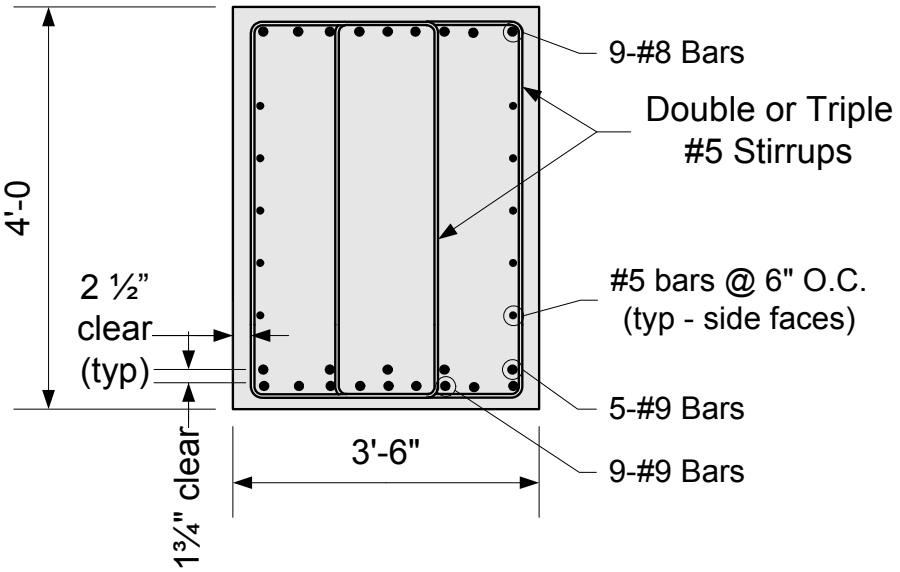

Figure E13-2.7-2
Cap Reinforcement - Section View

This page intentionally left blank.