Table of Contents

17.1 Design Method 3
17.1.1 Design Requirements 3
17.1.2 Rating Requirements 3
17.1.2.1 Standard Permit Design Check 3
17.2 LRFD Requirements 4
17.2.1 General 4
17.2.2 WisDOT Policy Items 4
17.2.3 Limit States 4
17.2.3.1 Strength Limit State 4
17.2.3.2 Service Limit State 5
17.2.3.3 Fatigue Limit State 5
17.2.3.4 Extreme Event Limit State 6
17.2.4 Design Loads 6
17.2.4.1 Dead Loads 6
17.2.4.2 Traffic Live Loads 8
17.2.4.2.1 Design Truck 8
17.2.4.2.2 Design Tandem 9
17.2.4.2.3 Design Lane 9
17.2.4.2.4 Double Truck 9
17.2.4.2.5 Fatigue Truck 10
17.2.4.2.6 Live Load Combinations 10
17.2.4.3 Multiple Presence Factor 11
17.2.4.4 Dynamic Load Allowance 12
17.2.4.5 Pedestrian Loads 12
17.2.5 Load Factors 13
17.2.6 Resistance Factors 13
17.2.7 Distribution of Loads for Slab Structures 14
17.2.8 Distribution of Loads for Girder Structures 24
17.2.9 Distribution of Dead Load to Substructure Units 37
17.2.10 Distribution of Live Loads to Substructure Units 37
17.2.11 Composite Section Properties 39
17.2.12 Allowable Live Load Deflection 40

17.2.13 Actual Live Load Deflection 40
17.3 Selection of Structure Type 42
17.3.1 Alternate Structure Types 42
17.4 Superstructure Types 44
17.5 Design of Slab on Girders 47
17.5.1 General 47
17.5.2 Two-Course Deck Construction 47
17.5.3 Reinforcing Steel for Deck Slabs on Girders 48
17.5.3.1 Transverse Reinforcement 48
17.5.3.2 Longitudinal Reinforcement 54
17.5.3.3 Empirical Design of Slab on Girders 58
17.6 Cantilever Slab Design 60
17.6.1 Rail Loading for Slab Structures 67
17.6.2 WisDOT Overhang Design Practices 67
17.7 Construction Joints 72
17.8 Bridge Deck Protective Systems 73
17.8.1 General 73
17.8.2 Design Guidance 73
17.9 Bridge Approaches 75
17.10 Design of Precast Prestressed Concrete Deck Panels 76
17.10.1 General 76
17.10.2 Deck Panel Design 76
17.10.3 Transverse Reinforcement for Cast-in-Place Concrete on Deck Panels 78
17.10.3.1 Longitudinal Reinforcement 79
17.10.4 Details 79

17.1 Design Method

17.1.1 Design Requirements

All new structures and deck replacements are to be designed using *AASHTO LRFD Bridge Design Specifications*, hereafter referred to as *AASHTO LRFD*. Bridge rehabilitations and widenings are to be designed using either LFD or LRFD, at the designer's option.

LRFD utilizes load combinations called limit states which represent the various loading conditions which structural materials must be able to withstand. Limit states have been established in four major categories – strength, service, fatigue and extreme event. Different load combinations are used to analyze a structure for certain responses such as deflections, permanent deformations, ultimate strength and inelastic responses without failure. When all applicable limit states and combinations are satisfied, a structure is deemed acceptable under the LRFD design philosophy.

Bridges being designed with staged construction, whether new or rehabilitation, shall satisfy the requirements of LRFD (or LFD, if applicable) for each construction stage. Utilize the same load factors, resistance factors, load combinations, etc. as required for the final configuration, unless approved by Chief Structures Development Engineer at WisDOT.

17.1.2 Rating Requirements

Rating factors, RF, for inventory and operating rating are shown on the plans. Ratings will be based on *The Manual for Bridge Evaluation*, hereafter referred to as *AASHTO MBE*. See Chapter 45 – Bridge Rating for rating requirements. Existing ratings for rehabilitation projects where the final ratings will not change should be taken from HSI and placed on the final plans. See Section 6.2.2.3.4 for more information.

17.1.2.1 Standard Permit Design Check

New structures are also to be checked for the Wisconsin Standard Permit Vehicle (Wis-SPV). The structure should have a minimum capacity to carry a gross vehicle load of 190 kips, while also supporting the future wearing surface. This truck will be designated as a Single Trip Permit Vehicle. It will have no escorts restricting the presence of other traffic on the bridge, no lane position restrictions imposed and no restrictions on speed to reduce the dynamic load allowance, IM.

The maximum Wisconsin Standard Permit Vehicle load that the structure can resist, calculated including current wearing surface loads, is shown on the plans.

See Chapter 45 – Bridge Rating for details about the Wisconsin Standard Permit Vehicle and calculating the maximum load for this permit vehicle.

17.2 LRFD Requirements

17.2.1 General

For superstructure member design, the component dimensions and the size and spacing of reinforcement shall be selected to satisfy the following equation for all appropriate limit states, as presented in **LRFD [1.3.2.1]**:

$$Q = \sum \eta_i \gamma_i Q_i \leq \phi R_n = R_r$$

Where:

η_i	=	Load modifier (a function of η_D, η_R, and η_i)
γ_i	=	Load factor
Q_i	=	Force effect: moment, shear, stress range or deformation caused by applied loads
Q	=	Total factored force effect
ϕ	=	Resistance factor
R_n	=	Nominal resistance: resistance of a component to force effects
R_r	=	Factored resistance = ϕR_n

17.2.2 WisDOT Policy Items

WisDOT policy items:

Set the value of the load modifier, η_i (see **LRFD [1.3.2.1]**), and its factors, η_D, η_R and η_I, all equal to 1.00.

Ignore any influence of ADTT on multiple presence factor, m, in **LRFD [Table 3.6.1.1.2-1]** that would reduce force effects.

17.2.3 Limit States

The following limit states (as defined in **LRFD [3.4.1]**) are utilized by WisDOT in the design of bridge superstructures.

17.2.3.1 Strength Limit State

The strength limit state shall be applied to ensure that strength and stability are provided to resist the significant load combinations that a bridge is expected to experience during its design life. The total factored force effect must not exceed the factored resistance.

Strength I is used for the ultimate capacity of structural members and relates to the normal vehicular use of the bridge without wind.

Strength II is not typically used by WisDOT. However, Wisconsin Standard Permit Vehicle (Wis-SPV) must be checked in accordance with Chapter 45 – Bridge Rating.

Strength III is not typically used as a final-condition design check by WisDOT.

WisDOT policy item:

Strength III is used as a construction check for steel girder bridges with wind load but no live load. When checking this limit state during a deck pour, use a multiplier of 0.3 on the wind speed to account for the unlikelihood that a deck would be poured under extremely windy conditions.

Strength IV is not typically used by WisDOT. Spans > 300 ft. should include this limit state.

Strength V relates to the normal vehicular use of the bridge with wind speed (3-second gust) as specified in **LRFD [3.8]**. This limit state is used in the design of steel structures to check lateral bending stresses in the flanges.

17.2.3.2 Service Limit State

The service limit state shall be applied to restrict stress, deformation and crack width under regular service conditions. The total factored force effect must not exceed the factored resistance.

Service I relates to the normal vehicular use of the bridge. This limit state is used to check general serviceability requirements such as deflections and crack control. This load combination is also used to check compressive stresses in prestressed concrete components.

Service II is intended to control yielding of steel structures and slip of slip-critical connections due to vehicular live loads.

Service III is used to check the tensile stresses in prestressed concrete superstructures with the objective of crack control.

17.2.3.3 Fatigue Limit State

The fatigue limit state shall be applied as a restriction on stress range as a result of a single design truck occurring at the number of expected stress range cycles. The fatigue limit state is intended to limit crack growth under repetitive loads to prevent fracture during the design life of the bridge. The total factored force effect must not exceed the factored resistance.

Fatigue I is related to infinite load-induced fatigue life. This load combination should be checked for longitudinal slab bridge reinforcement and longitudinal continuity reinforcement on prestressed concrete girder and steel girder bridges. Fatigue I is used for steel girder structures to determine whether or not a tensile stress could exist at a particular location. This

load combination is also used for any fracture-critical members as well as components and details not meeting the requirements for Fatigue II.

Fatigue II is related to finite load-induced fatigue life. If the projected 75-year single lane Average Daily Truck Traffic is less than or equal to a prescribed value for a given component or detail, that component or detail should be designed for finite life using the Fatigue II load combination.

17.2.3.4 Extreme Event Limit State

The extreme event limit state shall be applied for deck overhang design as specified in Table 17.6-1. For the extreme limit state, the applied loads for deck overhang design are horizontal and vertical vehicular collision forces. These forces are checked at the inside face of the barrier, the design section for the overhang and the design section for the first bay, as described in 17.6.

Extreme Event II is used to design deck reinforcement due to vehicular collision forces.

17.2.4 Design Loads

In LRFD design, structural materials must be able to resist their applied design loads. Two general types of design loads are permanent and transient. Permanent loads include dead load and earth load. Transient loads include live loads, wind, temperature, braking force and centrifugal force.

17.2.4.1 Dead Loads

Superstructures must be designed to resist dead load effects. In LRFD, dead load components consist of DC and DW dead loads. DC dead loads include structural components and nonstructural attachments, and DW dead loads include wearing surfaces and utilities. Different load factors are used for DC and DW dead loads, as described in 17.2.5, to account for the differences in the predictability of the loading. In addition, some dead loads are resisted by the non-composite section and other dead loads are resisted by the composite section.

Table 17.2-1 summarizes the various dead load components that are commonly included in beam-on-slab superstructure design. For slab structures, all loads presented in this table are resisted by the slab.

Dead Load Resisted By	Type of Load Factor	
	DC	DW
Non-composite section	• Girder • Concrete deck • Concrete haunch • Miscellaneous dead load (including diaphragms, cross-frames, stiffeners, etc.)	
Composite section	• Concrete parapets • Sidewalks • Medians	• Future wearing surface • Utilities

Table 17.2-1
Dead Load Components

In the absence of more precise information, **LRFD [Table 3.5.1-1]** provides some guidance for typical unit weights.

Dead loads should be computed based on the following:

The uniform dead load of the deck or slab is determined using the concrete unit weight and simple beam distribution. A concrete unit weight of 0.150 kcf should be used.

The weight of the concrete haunch is determined by estimating the minimum haunch depth at 2" at the edge of girder and the width equal to the largest top flange of the supporting member. The cross slope, girder camber and profile grade line must be considered.

The weights of steel beams and girders are determined from the AISC Manual of Steel Construction. Haunched webs of plate girders are converted to an equivalent uniform partial dead load.

The weight of secondary steel members such as bracing, shear studs and stiffeners can be estimated at 30 plf for interior girders and 20 plf for exterior girders.

The weight of prestressed concrete girders is presented in the Standard Details.

A dead load of 20 psf is added to account for a future wearing surface. Future wearing surface is applied from face to face of curb and shall not be applied to sidewalks.

The weight of the parapets, sidewalks, barriers and medians shall be based on a unit weight of 0.150 kcf. The weight per foot for the standard parapets are presented in the Standard Details.

17.2.4.2 Traffic Live Loads

The design vehicular load currently used by AASHTO is designated as HL-93, in which "HL" is an abbreviation for highway loading and "93" represents the year of 1993 in which the loading was accepted by AASHTO. The HL-93 live load consists of the following load types:

- Design truck
- Design tandem
- Design lane
- Double truck
- Fatigue truck

Using these basic load types, *AASHTO LRFD* combines and scales them to create live load combinations that apply to different limit states, as described in **LRFD [3.6.1]** and as shown below.

17.2.4.2.1 Design Truck

The design truck has three axles, with axle loads and spacings as presented in Figure 17.2-1.

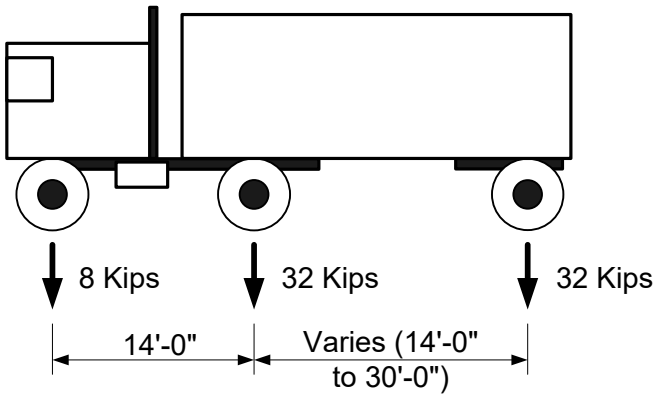

Figure 17.2-1
Design Truck

The axle spacing between the second and third axles is selected such that the maximum effect is achieved. The minimum axle spacing of 14 feet usually controls. However, a situation in which an axle spacing greater than 14 feet may control is for a continuous short-span bridge in which the maximum negative moment at the pier is being computed and the second and third axles are positioned in different spans. The design truck is described in **LRFD [3.6.1.2.2]**.

17.2.4.2.2 Design Tandem

The design tandem has two axles, each with a loading of 25 kips and an axle spacing of 4 feet, as presented in Figure 17.2-2. The design tandem is described in **LRFD [3.6.1.2.3]**.

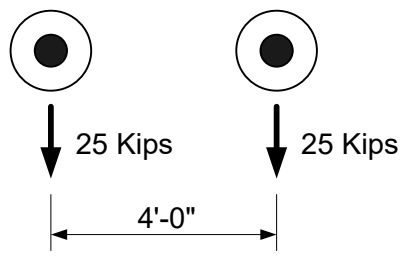

Figure 17.2-2
Design Tandem

WisDOT policy item:

WisDOT does not consider the use of dual tandems for negative moments and reactions, as suggested in **LRFD [C3.6.1.3.1]**. The design engineer shall receive direction from the owner and the BOS if this load is to be applied.

17.2.4.2.3 Design Lane

The design lane has a uniform load of 0.64 kips per linear foot, distributed in the longitudinal direction, as presented in Figure 17.2-3. The design lane is described in **LRFD [3.6.1.2.4]**.

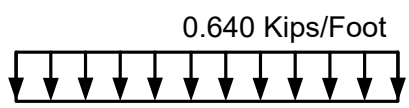

Figure 17.2-3
Design Lane

17.2.4.2.4 Double Truck

For negative moments and reactions at piers, a third condition is also considered. Two design trucks are applied, with a minimum headway between the front and rear axles of the two trucks equal to 50 feet. The rear axle spacing of the two trucks is set at a constant 14 feet. 90% of the effect of the two design trucks is combined with 90% of the design lane load, as presented in Figure 17.2-4. This loading is described in **LRFD [3.6.1.3.1]**.

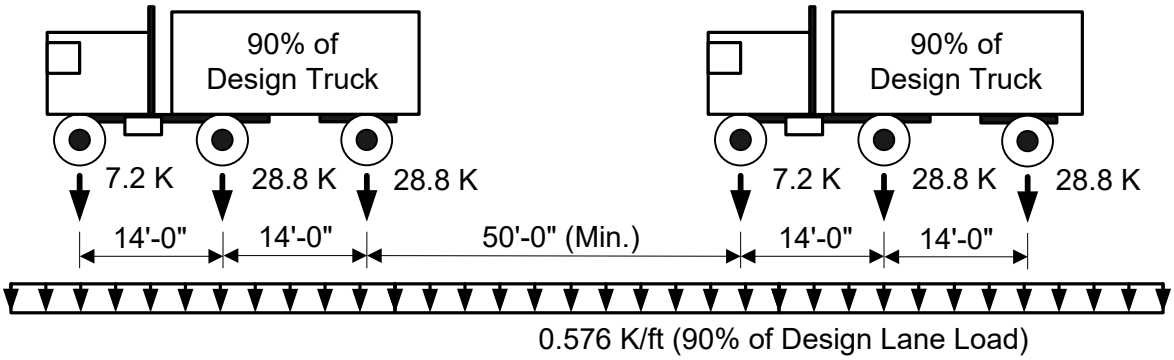

Figure 17.2-4
Double Truck

17.2.4.2.5 Fatigue Truck

The fatigue truck consists of one design truck similar to that described in 17.2.4.2.1 but with a constant spacing of 30 feet between the 32-kip axles, as presented in Figure 17.2-5. The fatigue truck is described in **LRFD [3.6.1.4.1]**.

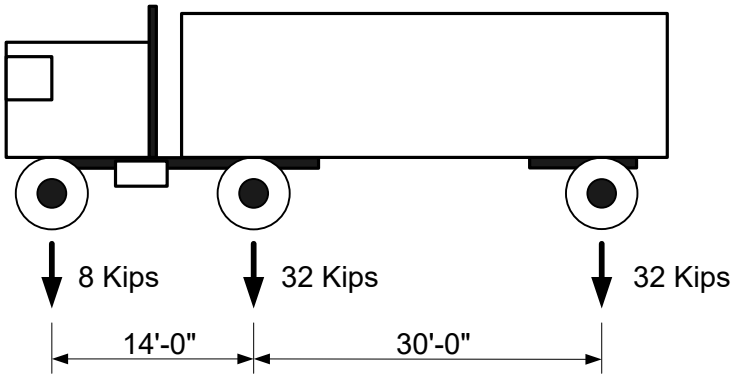

Figure 17.2-5
Fatigue Truck

17.2.4.2.6 Live Load Combinations

The live load combinations used for design are presented in Table 17.2-2.

Live Load Combination	Description	Reference
LL#1	Design tandem (+ IM) + design lane load	**LRFD [3.6.1.3.1]**
LL#2	Design truck (+ IM) + design lane load	**LRFD [3.6.1.3.1]**

LL#3	Double truck [90% of two design trucks (+ IM) + 90% of design lane load] *	**LRFD [3.6.1.3.1]**
LL#4	Fatigue truck (+ IM)	**LRFD [3.6.1.4.1]**
LL#5	Design truck (+ IM)	**LRFD [3.6.1.3.2]**
LL#6	25% [design truck (+ IM)] + design lane load	**LRFD [3.6.1.3.2]**

* LL#3 is used to calculate negative live load moments between points of contraflexure, as well as reactions at interior supports.

Table 17.2-2
Live Load Combinations

The live load combinations are applied to the limit states as follows:

Strength I – The live load force effect, Qi, shall be taken as the larger of LL#1, LL#2 and LL#3.

Strength V – The live load force effect, Qi, shall be taken as the larger of LL#1, LL#2 and LL#3.

Service I – The live load force effect, Qi, shall be taken as the larger of LL#1, LL#2 and LL#3. However, for live load deflection criteria, the force effects shall be taken as the larger of LL#5 and LL#6.

Service II – The live load force effect, Qi, shall be taken as the larger of LL#1, LL#2 and LL#3.

Service III – The live load force effect, Qi, shall be taken as the larger of LL#1, LL#2 and LL#3.

Fatigue (I or II) – The live load force effect, Qi, shall be from a single fatigue truck, LL#4.

Extreme Event II – The live load force effect, Qi, shall be taken as the larger of LL#1 and LL#2.

17.2.4.3 Multiple Presence Factor

The extreme force effect shall be determined by considering each possible combination of the number of loaded lanes multiplied by a corresponding multiple presence factor. This factor accounts for the probability of simultaneous lane occupation by the full HL93 design live load. Note that the multiple presence factor has been included in the approximate equations for distribution factors in **LRFD [4.6.2.2]** and **[4.6.2.3]**, and in 17.2.8 of this manual.

As described in **LRFD [3.6.1.1.2]**, the multiple presence factors, m, have the values as presented in Table 17.2-3

Number of Loaded Lanes	Multiple Presence Factors "m"
1	1.20
2	1.00
3	0.85
>3	0.65

Table 17.2-3
Multiple Presence Factors

17.2.4.4 Dynamic Load Allowance

The HL-93 loading is based on a static live load applied to the bridge. However, in reality, the live load is not static but is moving across the bridge. Since the roadway surface on a bridge is usually not perfectly smooth and the suspension systems of most trucks react to roadway roughness with oscillations, a dynamic load is applied to the bridge and must also be considered with the live load. This is referred to as dynamic load allowance.

As described in **LRFD [3.6.2]**, the dynamic load allowance has values as presented in Table 17.2-4.

Component	Limit State	Dynamic Load Allowance, IM
Deck joints	All limit states	75%
All other components	Fatigue and fracture limit states	15%
	All other limit states	33%

Table 17.2-4
Dynamic Load Allowance

Applying these specifications to the live load combinations listed in Table 17.2-2:

IM = 15% for fatigue truck (LL#4)

IM = 33% for all other live load combinations (LL#1, LL#2, LL#3, LL#5 and LL#6)

Where IM is required, multiply the loads by (1 + IM/100) to include the dynamic effects of the load.

It is important to note that the dynamic load allowance is applied only to the design truck and design tandem. The dynamic load allowance is not applied to the design lane load or to pedestrian loads.

17.2.4.5 Pedestrian Loads

For bridges designed for both vehicular and pedestrian load, a pedestrian load of 75 psf is used, as specified in **LRFD [3.6.1.6]**. However, for bridges designed exclusively for pedestrian

and/or bicycle traffic, a live load of 90 psf is used. Consideration should also be given to maintenance vehicle loads as specified in Chapter 37 – Pedestrian Bridges.

17.2.5 Load Factors

The load factor, γ_i, is used to adjust force effects on a structural element. This factor accounts for variability of loads, lack of accuracy in analysis and the probability of simultaneous occurrence of different loads.

For the design limit states, the values of γ_i for different types of loads are found in **LRFD [Tables 3.4.1-1 and 3.4.1-2]**. Load factors most commonly used for superstructure design are also presented in Table 17.2-5.

Load Combination	Load Factor, γi				
	DC		DW		LL+IM
	Maximum	Minimum	Maximum	Minimum	
Strength I	1.25	0.90	1.50	0.65	1.75
Strength III	1.25	0.90	1.50	0.65	0.00
Strength V	1.25	0.90	1.50	0.65	1.35
Service I	1.00	1.00	1.00	1.00	1.00
Service II	1.00	1.00	1.00	1.00	1.30
Service III	1.00	1.00	1.00	1.00	0.80
Fatigue I	0.00	0.00	0.00	0.00	1.75
Extreme Event II	1.25	0.90	1.50	0.65	0.50

Table 17.2-5
Load Factors

The maximum and minimum values should be used to maximize the intended effect of the load. An example of the use of minimum load factors is the load factor for dead load when uplift is being checked.

17.2.6 Resistance Factors

The resistance factor, ϕ, is used to reduce the computed nominal resistance of a structural element. This factor accounts for variability of material properties, structural dimensions and workmanship, and uncertainty in prediction of resistance.

Resistance factors are presented in **LRFD [1.3.2.1]**, **LRFD [5.5.4.2]**, **LRFD [6.5.4.2]**, **LRFD [6.5.5]** and **LRFD [6.10.1.7]**. The most commonly used resistance factors for superstructure design are also presented in Table 17.2-6.

Limit State	Material	Application	Resistance Factor, ϕ
Strength	Concrete	Flexure (reinforced concrete)	0.90
		Flexure (prestressed concrete)	1.00
		Shear (normal weight)	0.90
		Shear (lightweight)	0.90
	Steel	Flexure	1.00
		Shear	1.00
		Axial compression, steel only	0.90
		Axial compression, composite	0.90
		Tension, fracture in net section	0.80
		Tension, yielding in gross section	0.95
		Bolts bearing on material	0.80
		Shear connectors	0.85
		A325 and A490 bolts in tension	0.80
		A325 and A490 bolts in shear	0.80
		A307 bolts in tension	0.80
		A307 bolts in shear	0.65
		Block shear	0.80
		Web crippling	0.80
		Welds	See **LRFD [6.5.4.2]**
Service	All	All	1.0
Fatigue	All	All	1.0
Extreme Event	All	All	1.0

Table 17.2-6
Resistance Factors

17.2.7 Distribution of Loads for Slab Structures

For slab structures, the distribution of loads is based on strip widths, as illustrated in Figure 17.2-6 through Figure 17.2-11. Figure 17.2-6 and Figure 17.2-7 illustrate the distribution of loads for slab structures with no sidewalks. Figure 17.2-8 and Figure 17.2-9 illustrate the distribution of loads for slab structures with sidewalks. Figure 17.2-10 and Figure 17.2-11 illustrate the distribution of loads for slab structures with raised sidewalks. It should be noted that, although medians are not shown in these figures, medians are treated similar to other superimposed dead loads.

The first step in determining the distribution of loads for slab structures is to compute the strip width, as specified in **LRFD [4.6.2.3]** and **LRFD [4.6.2.1.4]**. Equations for strip widths are also presented in Chapter 18 – Concrete Slab Structure.

For each of the following figures, the distribution of loads for that slab configuration and strip location is described and a general equation is presented immediately below the corresponding figure. In the general equations, it is assumed that dynamic load allowance is applied to the appropriate live load components.

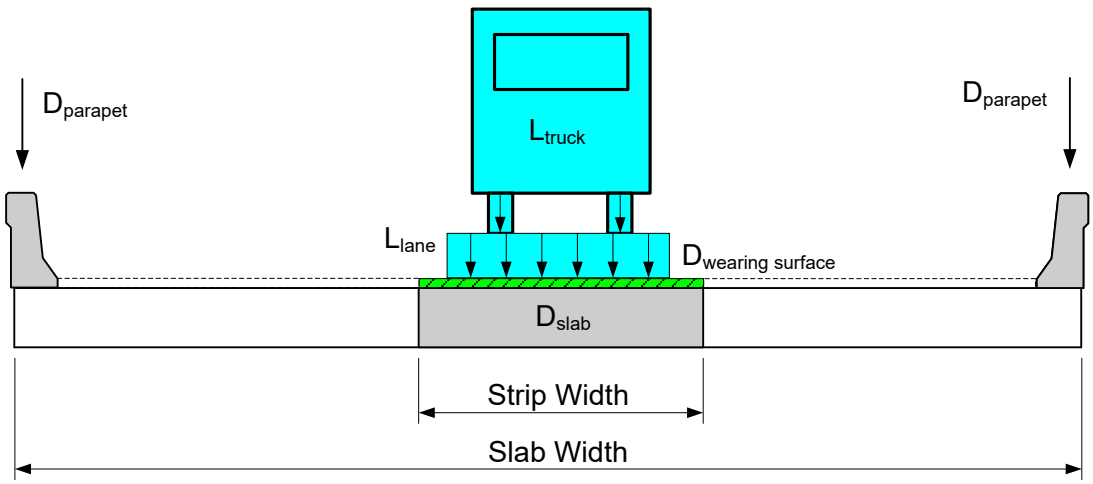

Figure 17.2-6
Distribution of Loads to Interior Strip Width for Slab Structure

The distribution of loads to the interior strip is calculated as follows:

For dead loads, the strip width must resist its self-weight, the future wearing surface and all superimposed dead loads. The superimposed dead loads (including parapets and medians) are distributed uniformly across the entire slab width. The distribution of superimposed dead load to the interior strip width is then computed based on the ratio of the interior strip width to the slab width.

For live loads, one lane of live loading is applied to the interior strip width.

The general equation for loads applied to the interior strip width is as follows:

$$\text{Total Load} = D_{slab} + D_{wearing\ surface} + \left[\left(2\, D_{parapet} \right) \left(\frac{\text{Strip Width}}{\text{Slab Width}} \right) \right] + \left(L_{truck} + L_{lane} \right)$$

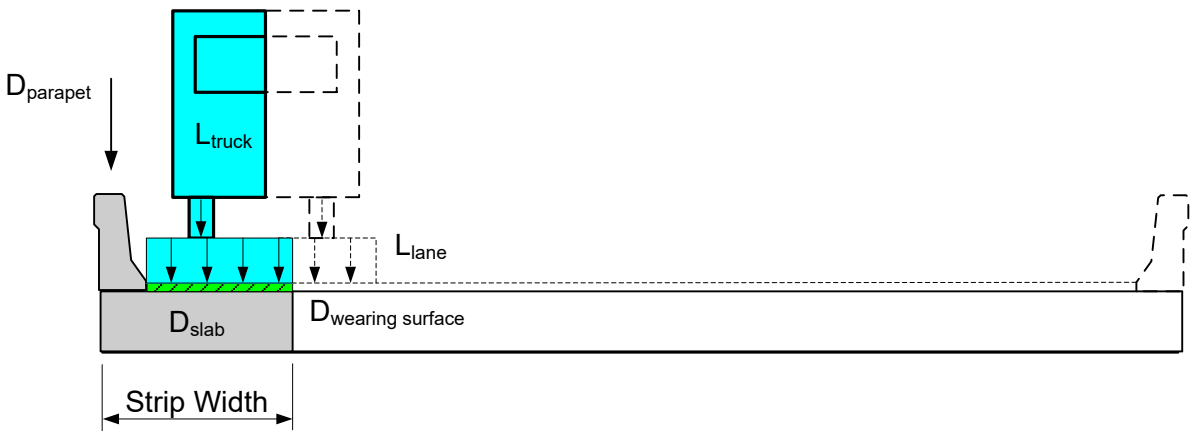

Figure 17.2-7

Distribution of Loads to Exterior Strip Width for Slab Structure

The distribution of loads to the exterior strip is calculated as follows:

For dead loads, the strip width must resist its self-weight and all superimposed dead loads located directly over the strip.

For the design lane load, only the portion of the lane load located directly over the exterior strip width is applied to the exterior strip. For the design vehicle, only half of the axle weights (one line of wheels) are applied to the exterior strip.

The general equation for loads applied to the exterior strip width is as follows:

$$\text{Total Load} = D_{slab} + \left(D_{wearing\ surface} + D_{parapet}\right)_{directly\ over\ strip} + \left(L_{truck} + L_{lane}\right)_{directly\ over\ strip}$$

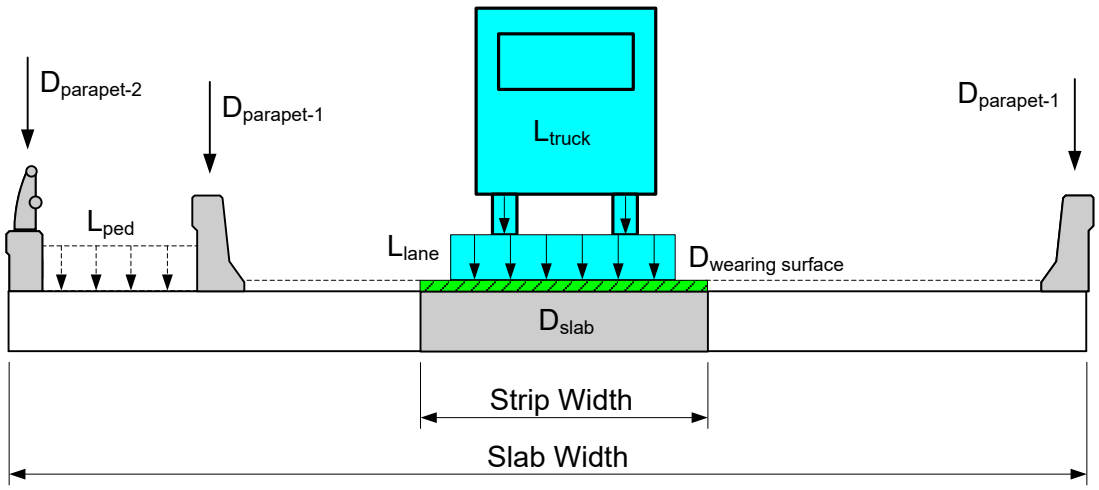

Figure 17.2-8
Distribution of Loads to Interior Strip Width for Slab Structure with Sidewalk

The distribution of loads to the interior strip is calculated as follows:

For dead loads, the strip width must resist its self-weight, future wearing surface, and all superimposed dead loads. The superimposed dead loads (including parapets and medians) are distributed uniformly across the entire slab width. The distribution of superimposed dead load to the interior strip width is then computed based on the ratio of the interior strip width to the slab width. Wearing surface is not applied to sidewalks.

For live loads, one lane of live loading is applied to the interior strip width.

Pedestrian loads are not applied to the interior strip width.

The general equation for loads applied to the interior strip width is as follows:

$$\text{Total Load} = D_{slab} + D_{\text{wearing surface}} + \left[\left(2\,D_{\text{parapet}-1} + D_{\text{parapet}-2} \right) \left(\frac{\text{Strip Width}}{\text{Slab Width}} \right) \right] + \left(L_{truck} + L_{lane} \right)$$

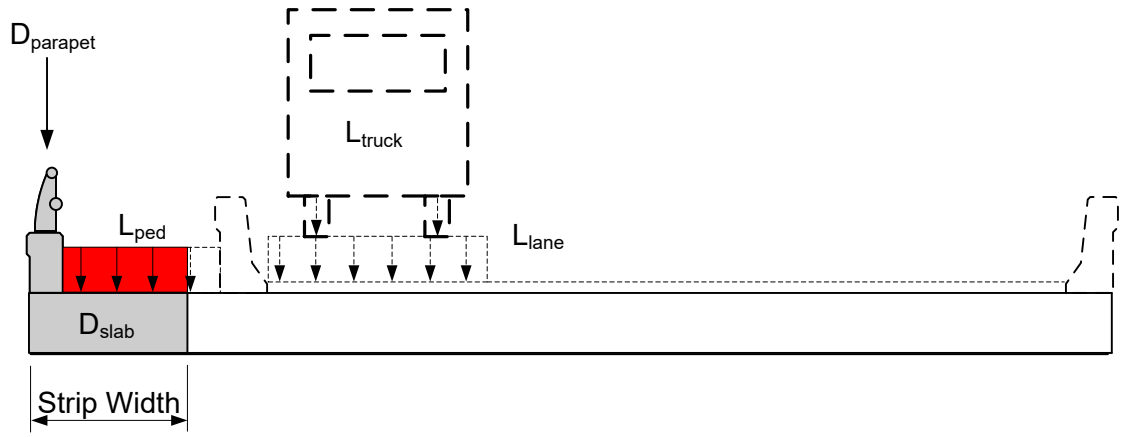

Actual Configuration

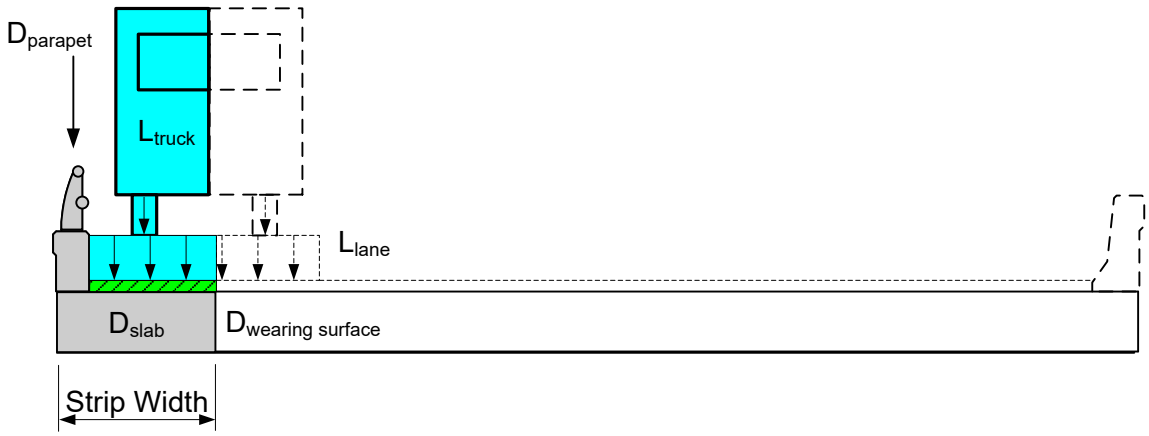

Design Configuration

Figure 17.2-9
Distribution of Loads to Exterior Strip Width for Slab Structure with Sidewalk

The distribution of loads to the exterior strip is calculated as follows:

For dead loads, the strip width must resist its self-weight and all superimposed dead loads located directly over the strip. However, it is assumed that the interior parapet is not present.

For live loads, it is assumed that the interior parapet is not present. Therefore, the vehicle and lane are positioned as shown in the Design Configuration portion of the previous figure. For the design lane load, only the portion of the lane load located directly over the exterior strip width is applied to the exterior strip. For the design vehicle, only half of the axle weights (one line of wheels) are applied to the exterior strip.

For pedestrian loads, it is assumed that none are present due to the assumed absence of the interior parapet and the assumed presence of vehicular live load immediately adjacent to the exterior parapet.

The general equation for loads applied to the exterior strip width is as follows:

$$\text{Total Load} = D_{slab} + \left(D_{wearing\ surface} + D_{parapet}\right)_{directly\ over\ strip} + \left(L_{truck} + L_{lane}\right)_{directly\ over\ strip}$$

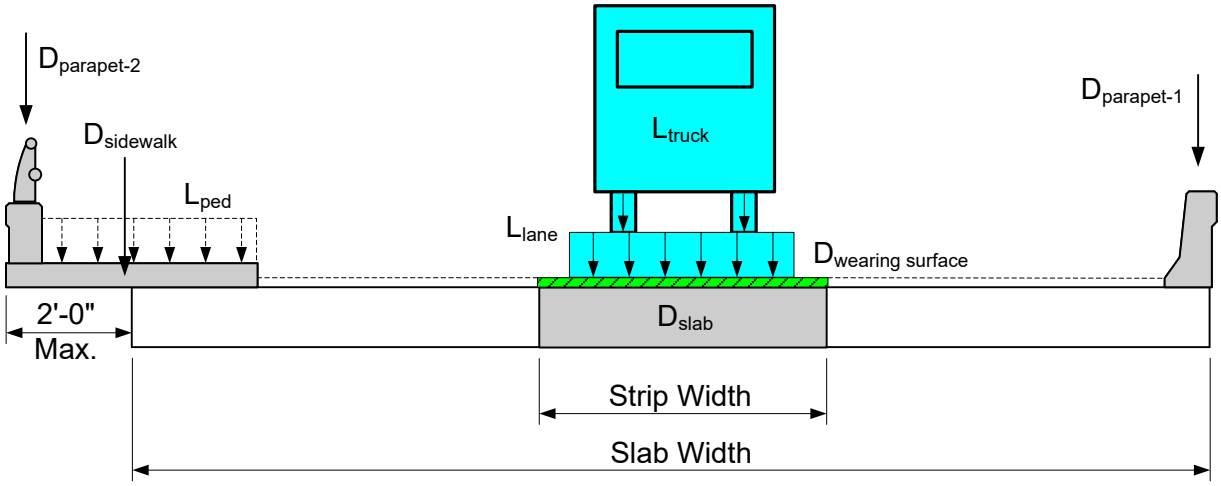

Figure 17.2-10

Distribution of Loads to Interior Strip Width for Slab Structure with Raised Sidewalk

The distribution of loads to the interior strip is calculated as follows:

For dead loads, the strip width must resist its self-weight, future wearing surface and all superimposed dead loads. The superimposed dead loads (including parapets, medians, and sidewalk) are distributed uniformly across the entire slab width. The distribution of superimposed dead load to the interior strip width is then computed based on the ratio of the interior strip width to the slab width. Wearing surface is not applied to sidewalks.

For live loads, one lane of live loading is applied to the interior strip width.

Pedestrian loads are not applied to the interior strip width.

The general equation for loads applied to the interior strip width is as follows:

$$\text{Total Load} = D_{slab} + D_{\text{wearing surface}} + \left[\left(D_{\text{parapet}-1} + D_{\text{parapet}-2} + D_{\text{sidewalk}} \right) \left(\frac{\text{Strip Width}}{\text{Slab Width}} \right) \right] + \left(L_{truck} + L_{lane} \right)$$

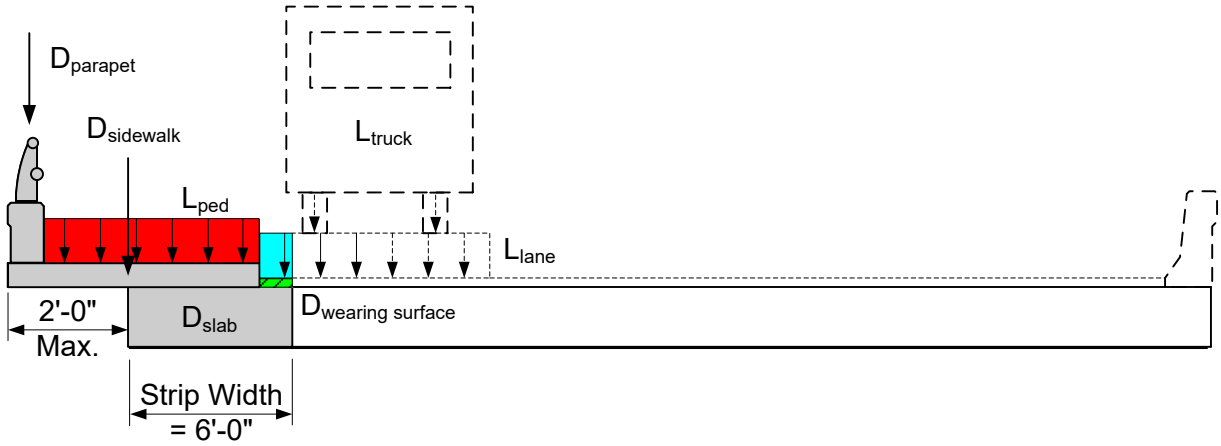

Live Load Case 1

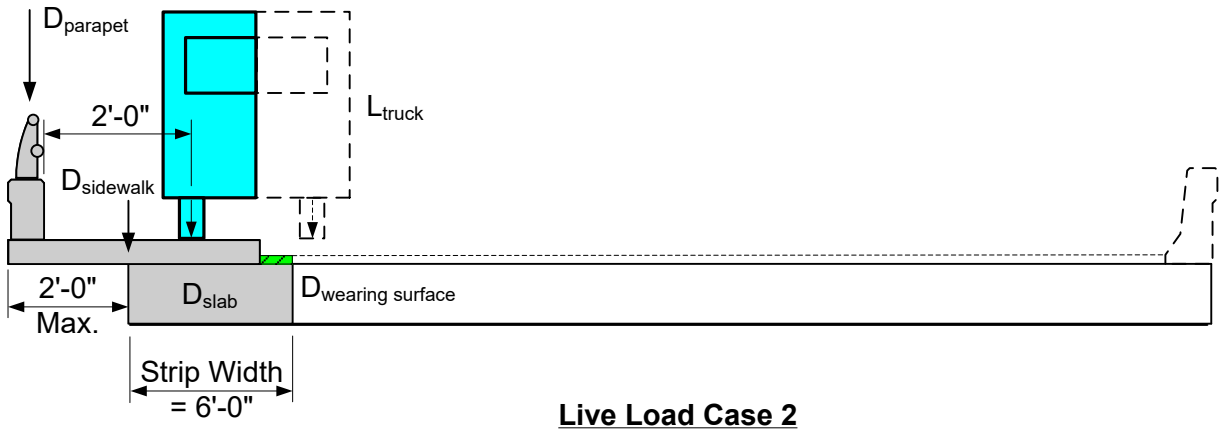

Live Load Case 2

Figure 17.2-11

Distribution of Loads to Exterior Strip Width for Slab Structure with Raised Sidewalk

The distribution of loads to the exterior strip is calculated as follows:

For dead loads, the strip width must resist its self-weight and all superimposed dead loads located directly over the strip and on the cantilevered portion of the sidewalk on that side of the bridge. If the overlap of the sidewalk with the slab is > 6'-0", only apply the sidewalk dead load located directly over the exterior strip width and from the cantilevered portion of the sidewalk, to the exterior strip.

Two live load cases shall be considered. For Live Load Case 1, only the portion of the design lane load located directly over the exterior strip width is applied to the exterior strip. The design truck is not applied for Live Load Case 1 due to typical geometry constraints. For Live Load Case 2, the design lane load is not applied. The design truck (see Figure 17.2-1) is placed on the sidewalk with one wheel located 2 feet from the face of the railing. Due to typical geometry constraints, only one wheel is located directly over the exterior strip; therefore, only half of the axle weights (one line of wheels) are applied to the exterior strip.

For pedestrian loads, two load cases shall be considered as described above. For Live Load Case 1, the pedestrian load located directly over the exterior strip and on the cantilevered portion of the sidewalk shall be applied to the exterior strip. For Live Load Case 2, the pedestrian load shall not be applied.

The general equations for loads applied to the exterior strip width are as follows:

For Live Load Case 1:

$$\text{Total Load} = D_{slab} + \left(D_{wearing\ surface} + D_{parapet} + D_{sidewalk}\right)_{directly\ over\ strip} + \left(L_{ped}\right) + \left(L_{lane}\right)_{directly\ over\ strip}$$

For Live Load Case 2:

$$\text{Total Load} = D_{slab} + \left(D_{wearing\ surface} + D_{parapet} + D_{sidewalk}\right)_{directly\ over\ strip} + \left(L_{truck}\right)_{directly\ over\ strip}$$

17.2.8 Distribution of Loads for Girder Structures

For girder structures, the distribution of dead loads is illustrated in Figure 17.2-12 through Figure 17.2-19. Figure 17.2-12 and Figure 17.2-13 illustrate the distribution of loads for girder structures with no sidewalks. Figure 17.2-14 and Figure 17.2-15 illustrate the distribution of loads for girder structures with sidewalks. Figure 17.2-16 through Figure 17.2-19 illustrate the distribution of loads for girder structures with raised sidewalks. It should be noted that, although medians are not shown in these figures, medians are treated similar to other superimposed dead loads.

For girder structures, distribution of live loads is based on the use of live load distribution factors which are computed as specified in **LRFD [4.6.2.2]** and as summarized in Table 17.2-7. Distribution factors are computed for moment and shear using equations that include girder spacing, span length, deck thickness, the number of girders and the longitudinal stiffness parameter. Separate distribution factors are computed for moment and shear and for interior and exterior girders.

In addition to computing the live load distribution factors, their ranges of applicability should also be checked, as presented in the applicable table in **LRFD [4.6.2.2]**. If the ranges of applicability are not satisfied, then conservative assumptions must be made based on sound engineering judgment.

For girder structures, the most commonly used live load distribution factors are presented in Table 17.2-7.

Application	One Design Lane Loaded	Two or More Design Lanes Loaded
Moment in Interior Girder – **LRFD [Table 4.6.2.2.2b-1]**		
	$0.06+\left(\frac{S}{14}\right)^{0.4}\left(\frac{S}{L}\right)^{0.3}\left(\frac{K_g}{12.0Lt_s^{\ 3}}\right)^{0.1}$	$0.075+\left(\frac{S}{9.5}\right)^{0.6}\left(\frac{S}{L}\right)^{0.2}\left(\frac{K_g}{12.0Lt_s^{\ 3}}\right)^{0.1}$
	For N_b = 3, use the lesser of the values obtained from the equations above with N_b = 3 or the lever rule.	
Shear in Interior Girder – **LRFD [Table 4.6.2.2.3a-1]**		
	$0.36+\frac{S}{25.0}$	$0.2+\frac{S}{12}-\left(\frac{S}{35}\right)^{2.0}$
	For N_b = 3, use the lever rule.	
Moment in Exterior Girder – **LRFD [C4.6.2.2.2d]** and **LRFD [Table 4.6.2.2.2d-1]**		
	Use lever rule	$g=e\cdot g_{interior}$ $e=0.77+\frac{d_e}{9.1}$
		For N_b = 3, use the lesser of the value obtained from the equation above with N_b = 3 or the lever rule.
Shear in Exterior Girder – **LRFD [C4.6.2.2.2d]** and **LRFD [Table 4.6.2.2.3b-1]**		
	Use lever rule	$g=e\cdot g_{interior}$ $e=0.6+\frac{d_e}{10}$
		For N_b = 3, use the lever rule.
Moment Reduction for Skew – **LRFD [Table 4.6.2.2.2e-1]** (not applicable for WisDOT)		
Shear Correction for Skew – **LRFD [Table 4.6.2.2.3c-1]**		

Table 17.2-7
Commonly Used Live Load Distribution Factors for Girder Structures

WisDOT exception to AASHTO:

The rigid cross-section requirement specified in **LRFD [4.6.2.2.2d]** shall not be applied when calculating the distribution factors for exterior girders.

WisDOT exception to AASHTO:

For skewed bridges, WisDOT does not apply skew correction factors for moment reduction, as specified in **LRFD [Table 4.6.2.2.2e-1]**.

WisDOT policy item:

For skewed bridges, WisDOT applies the skew correction factor for shear, as specified in **LRFD [Table 4.6.2.2.3c-1]**, to the *entire span* for *all girders* in a multi-girder bridge.

The following variables are used in Table 17.2-7:

S	=	Spacing of beams (feet)
L	=	Span length (feet)
t_s	=	Depth of concrete slab (inches)
K_g	=	Longitudinal stiffness parameter (inches^4)
N_b	=	Number of beams or girders
g	=	Distribution factor
e	=	Correction factor for distribution
d_e	=	Distance from the exterior web of exterior beam to the interior edge of curb or traffic barrier (feet)

For shear due to live load, in addition to the equations presented in Table 17.2-7, a skew correction factor must be applied in accordance with **LRFD [Table 4.6.2.2.3c-1]**. The skew correction factor equation for shear in girder bridges is as follows:

$$1.0 + 0.20\left(\frac{12.0\,L\,t_s^{\,3}}{K_g}\right)^{0.3} \tan\theta$$

Where:

L	=	Span length (feet)
t_s	=	Depth of concrete slab (inches)
K_g	=	Longitudinal stiffness parameter (inches^4)
θ	=	Skew angle (degrees)

As a general rule of thumb, whenever the live load distribution factors are computed based on the equations presented in *AASHTO LRFD*, the multiple presence factor has already been considered and should not be applied by the engineer. However, when a sketch must be drawn to compute the live load distribution factor, the multiple presence factor must be applied to the computed distribution factor. An example of this principle is in the application of the lever rule.

The multiple presence factor should not be applied to the fatigue limit state for which one design truck is used, regardless of the number of design lanes. However, where the single-lane distribution factor equations are used, as presented in **LRFD [4.6.2.2]** and **LRFD [4.6.2.3]**, the force effects should be divided by 1.20.

For each of the following figures, the distribution of loads for that configuration and girder location is described and a general equation is presented immediately below the corresponding figure. In the general equations, it is assumed that dynamic load allowance is applied to the appropriate live load components.

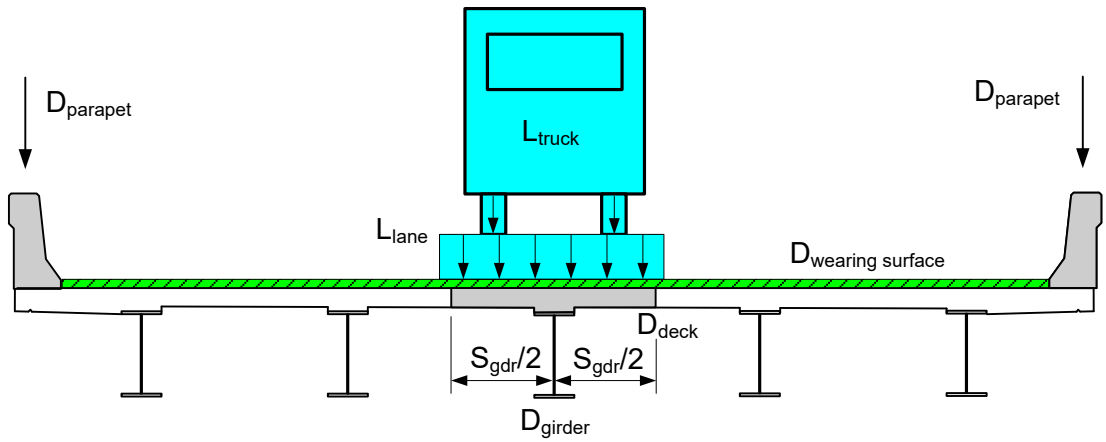

Figure 17.2-12
Distribution of Loads to Interior Girder for Girder Structure

The distribution of loads to the interior girder is calculated as follows:

For dead loads, the interior girder must resist the girder weight (girder self-weight and any other miscellaneous weight applied to the girder), deck weight (including the concrete haunch) and all superimposed dead loads. The distribution of the deck weight is based on the girder spacing. The distribution of all superimposed dead loads is based on equal distribution to all girders.

For live loads, the distribution is based on the live load distribution factors (DF) for interior girders presented in Table 17.2-7.

The general equation for loads applied to the interior girder is as follows:

$$\text{Total Load} = D_{girder} + D_{deck} + \left(\frac{D_{wearing\ surface} + 2D_{parapet}}{\text{No. of Girders}}\right) + \left[(DF_{int})(L_{truck} + L_{lane})\right]$$

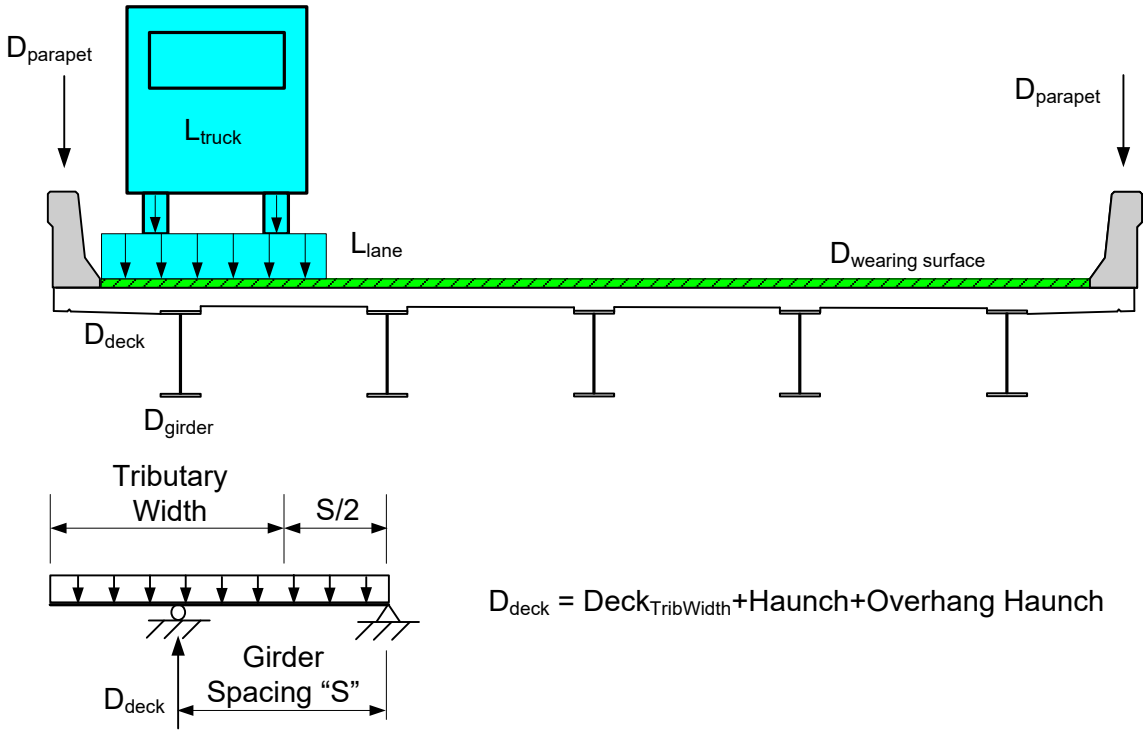

Use Tributary Width for Deck Load

Figure 17.2-13
Distribution of Loads to Exterior Girder for Girder Structure

The distribution of loads to the exterior girder is calculated as follows:

For dead loads, the exterior girder must resist the girder weight (girder self-weight and any other miscellaneous weight applied to the girder), deck weight (including the concrete haunch and overhang haunch) and all superimposed dead loads. The distribution of the deck weight to the exterior girder is based on the tributary width, as shown in the above figure. The distribution of all superimposed dead loads is based on equal distribution to all girders.

For live loads, the distribution is based on the live load distribution factors for exterior girders presented in Table 17.2-7.

The general equation for loads applied to the exterior girder is as follows:

$$\text{Total Load} = D_{girder} + D_{deck} + \left(\frac{D_{wearing\ surface} + 2D_{parapet}}{\text{No. of Girders}}\right) + \left[(DF_{ext})(L_{truck} + L_{lane})\right]$$

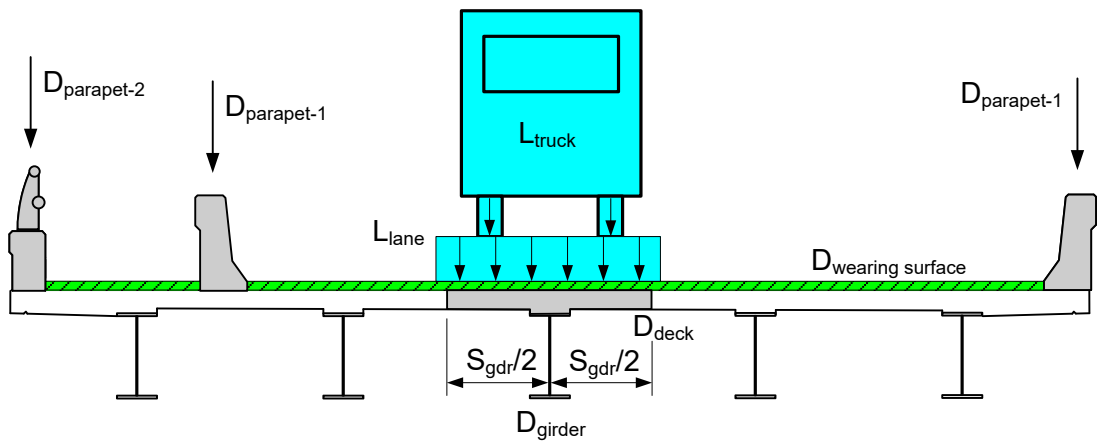

Figure 17.2-14
Distribution of Loads to Interior Girder for Girder Structure with Sidewalk

The distribution of loads to the interior girder is calculated as follows:

For dead loads, the interior girder must resist the girder weight (girder self-weight and any other miscellaneous weight applied to the girder), deck weight (including the concrete haunch) and all superimposed dead loads. The distribution of the deck weight is based on the girder spacing. The distribution of all superimposed dead loads is based on equal distribution to all girders.

For live loads, the distribution is based on the live load distribution factors for interior girders presented in Table 17.2-7.

Pedestrian loads are not applied to the interior girder.

The general equation for loads applied to the interior girder is as follows:

$$\text{Total Load} = D_{\text{girderl}} + D_{\text{deck}} + \left(\frac{D_{\text{wearing surface}} + 2D_{\text{parapet-1}} + D_{\text{parapet-2}}}{\text{No. of Girders}} \right) + \left[(DF_{\text{int}})(L_{\text{truck}} + L_{\text{lane}}) \right]$$

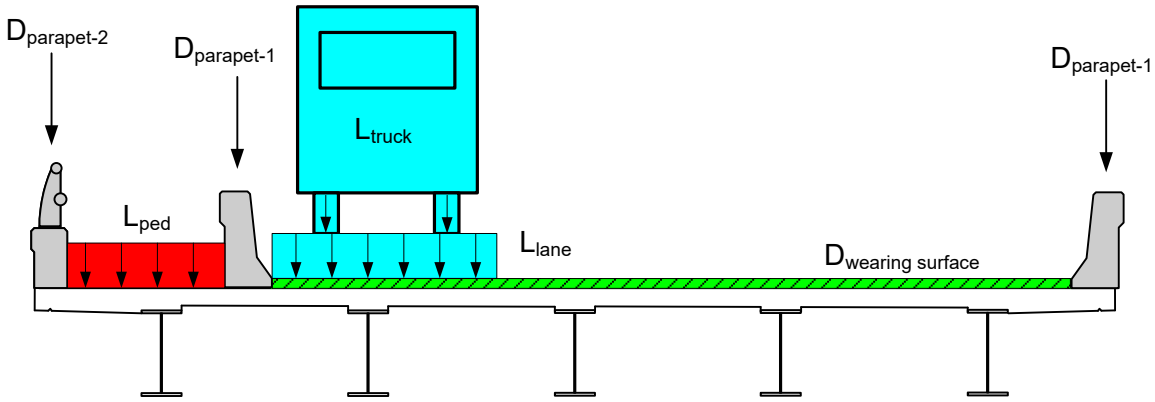

Actual Configuration

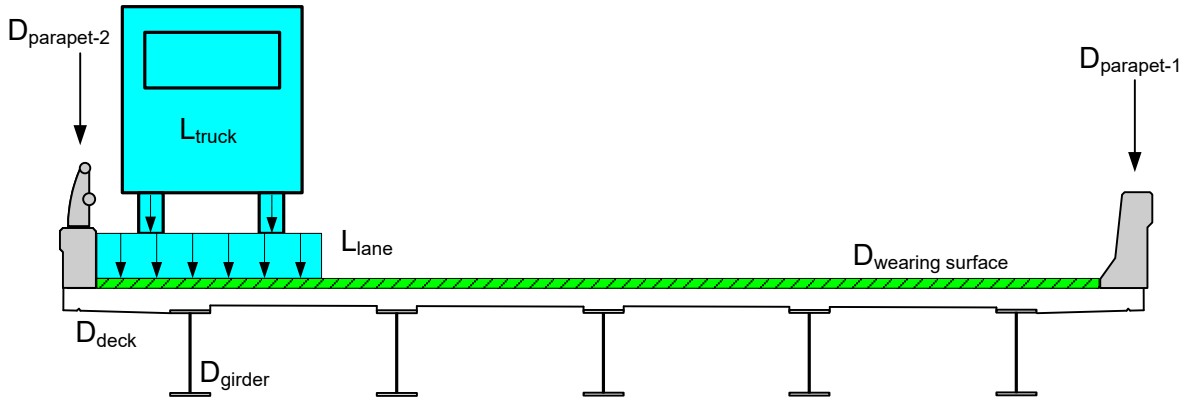

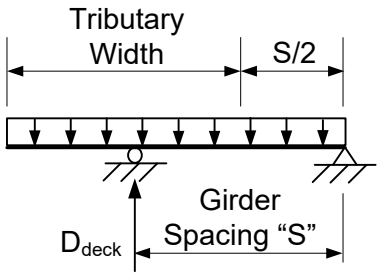

D_{deck} = $Deck_{TribWidth}$+Haunch+Overhang Haunch

Use Tributary Width for Deck Load

Design Configuration

Figure 17.2-15
Distribution of Loads to Exterior Girder for Girder Structure with Sidewalk

The distribution of loads to the exterior girder is calculated as follows:

For dead loads, the exterior girder must resist the girder weight (girder self-weight and any other miscellaneous weight applied to the girder), deck weight (including the concrete haunch and overhang haunch) and all superimposed dead loads. The distribution of the deck weight

to the exterior girder is based on the tributary width, as shown in the previous figure. The distribution of all superimposed dead loads is based on equal distribution to all girders.

For live loads, it is assumed that the interior parapet is not present. Therefore, the truck and lane are positioned as shown in the Design Configuration portion of the previous figure. The distribution is based on the live load distribution factors for exterior girders presented in Table 17.2-7, assuming the truck and lane as positioned in the Design Configuration portion of the figure.

For pedestrian loads, it is assumed that none are present due to the assumed absence of the interior parapet and the assumed presence of vehicular live load immediately adjacent to the exterior parapet.

The general equation for loads applied to the exterior girder is as follows:

$$\text{Total Load} = D_{girder} + D_{deck} + \left(\frac{D_{wearing\ surface} + D_{parapet-1} + D_{parapet-2}}{\text{No. of Girders}} \right) + \left[(DF_{ext})(L_{truck} + L_{lane}) \right]$$

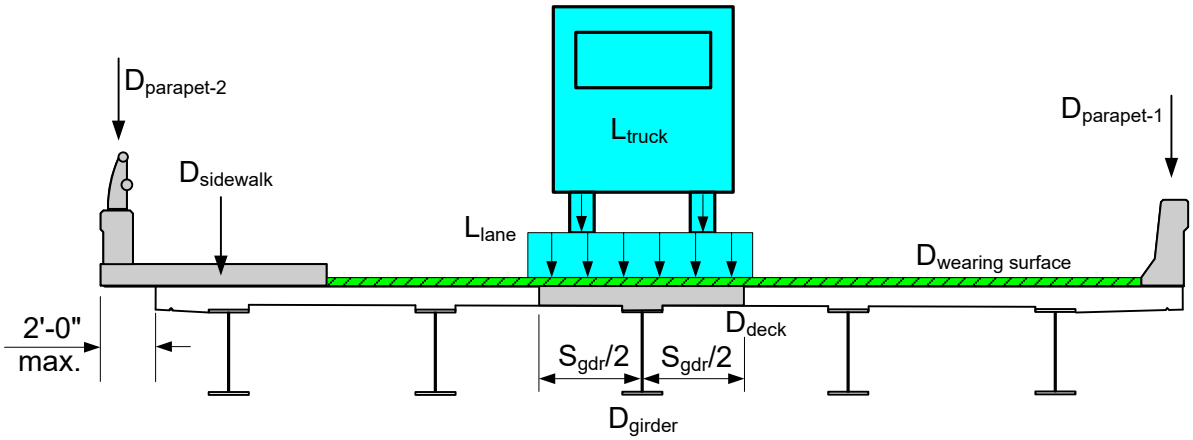

Figure 17.2-16
Distribution of Loads to Interior Girder for Girder Structure with Raised Sidewalk

The distribution of loads to the interior girder is calculated as follows:

For dead loads, the interior girder must resist the girder weight (girder self-weight and any other miscellaneous weight applied to the girder), deck weight (including the concrete haunch) and all superimposed dead loads. The distribution of the deck weight is based on the girder spacing. The distribution of all superimposed dead loads is based on equal distribution to all girders.

For live loads, the distribution is based on the live load distribution factors for interior girders presented in Table 17.2-7.

Pedestrian loads are not applied to the interior girder.

The general equation for loads applied to the interior girder is as follows:

$$\text{Total Load} = D_{girder} + D_{deck} + \left(\frac{D_{wearing\ surface} + D_{sidewalk} + D_{parapet-1} + D_{parapet-2}}{\text{No. of Girders}} \right) + \left[(DF_{int})(L_{truck} + L_{lane}) \right]$$

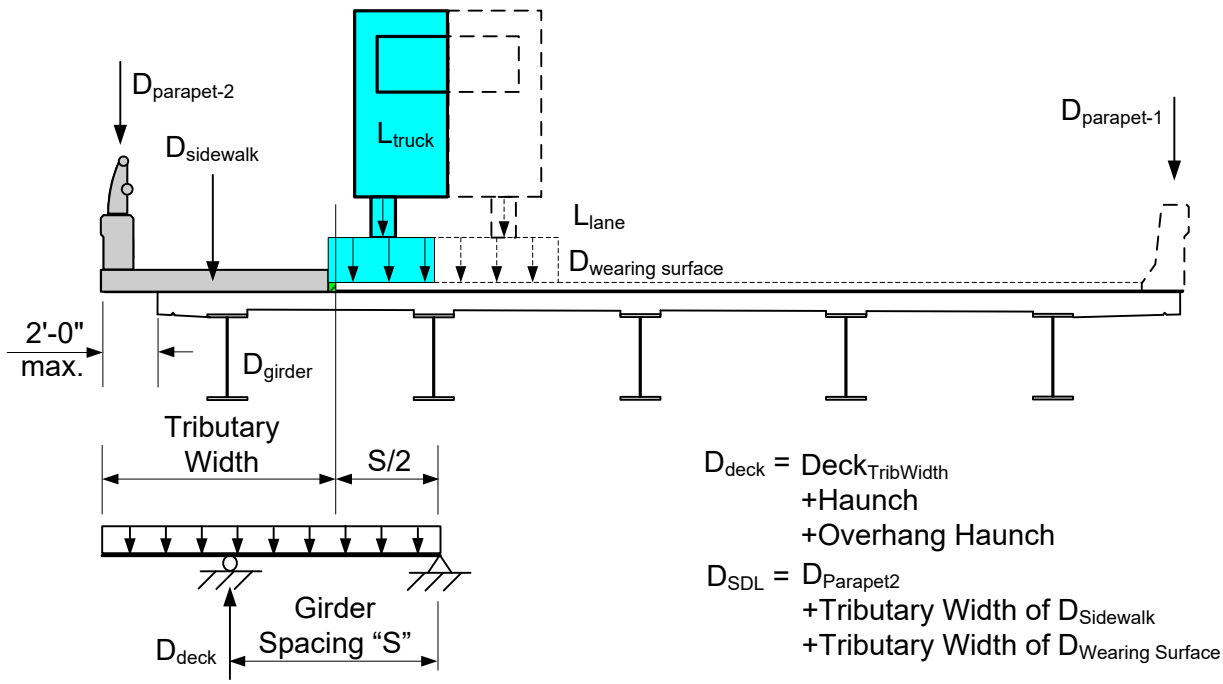

Use Tributary Width for Deck and Superimposed Dead Loads

Figure 17.2-17
Distribution of Loads to Exterior Girder for Girder Structure with Raised Sidewalk
Design Case 1

The distribution of loads to the exterior girder for Design Case 1 is calculated as follows:

For dead loads, the exterior girder must resist the girder weight (girder self-weight and any other miscellaneous weight applied to the girder), deck weight (including the concrete haunch and overhang haunch) and all superimposed dead loads. The distribution of the deck weight and all superimposed dead loads to the exterior girder are based on the tributary width, as shown in the previous figure.

For the live load, the live load distribution factor for Design Case 1 is based only on the application of the lever rule. It is recommended for Design Case 1 lane load to use the same distribution factor as for the truck load. The appropriate multiple presence factor of 1.2 must be applied.

The general equation for loads applied to the exterior girder is as follows:

$$\text{Total Load} = D_{girder} + D_{deck} + D_{superimposed\ DL} + \left[(DF_{ext})(L_{truck} + L_{lane})\right]$$

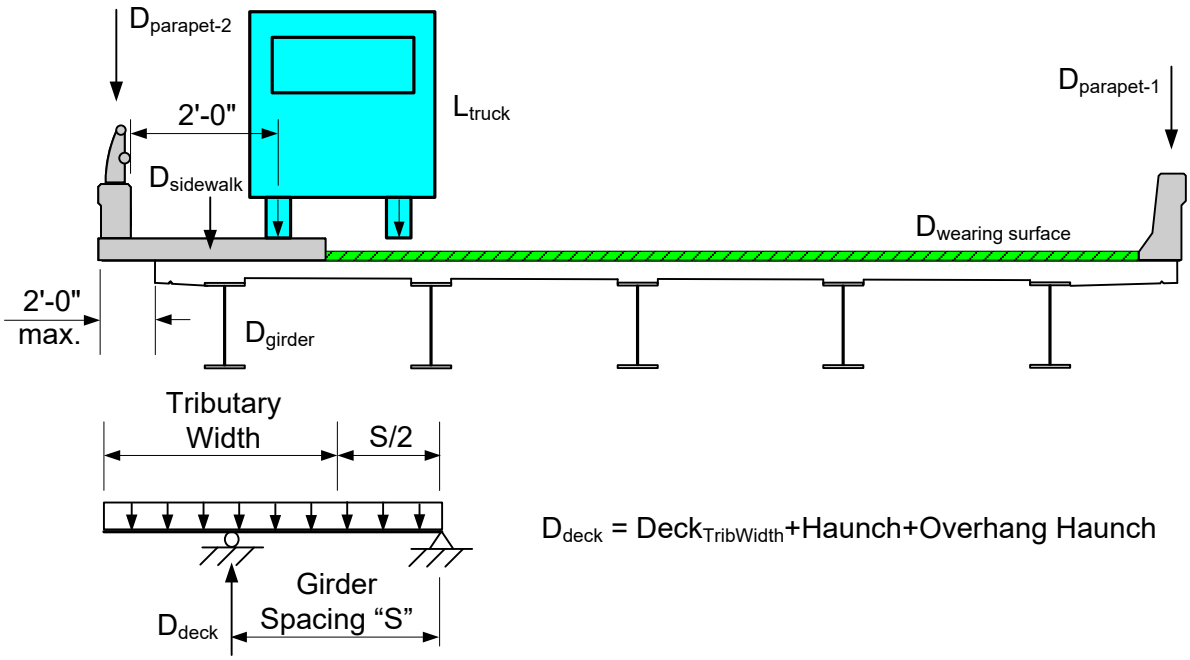

Use Tributary Width for Deck Load

Figure 17.2-18
Distribution of Loads to Exterior Girder for Girder Structure with Raised Sidewalk
Design Case 2

The distribution of loads to the exterior girder for Design Case 2 is calculated as follows:

For dead loads, the exterior girder must resist the girder weight (girder self-weight and any other miscellaneous weight applied to the girder), deck weight (including the concrete haunch and overhang haunch) and all superimposed dead loads. The distribution of the deck weight to the exterior girder is based on the tributary width, as shown in the previous figure. The distribution of all superimposed dead loads is based on equal distribution to all girders.

For the live load, the live load distribution factor for Design Case 2 is based only on the application of the lever rule. The appropriate multiple presence factor of 1.2 must be applied.

The general equation for loads applied to the exterior girder is as follows:

$$\text{Total Load} = D_{girder} + D_{deck} + \left(\frac{D_{wearing\ surface} + D_{sidewalk} + D_{parapet-1} + D_{parapet-2}}{\text{No. of Girders}} \right) + \left[(DF_{ext})(L_{truck}) \right]$$

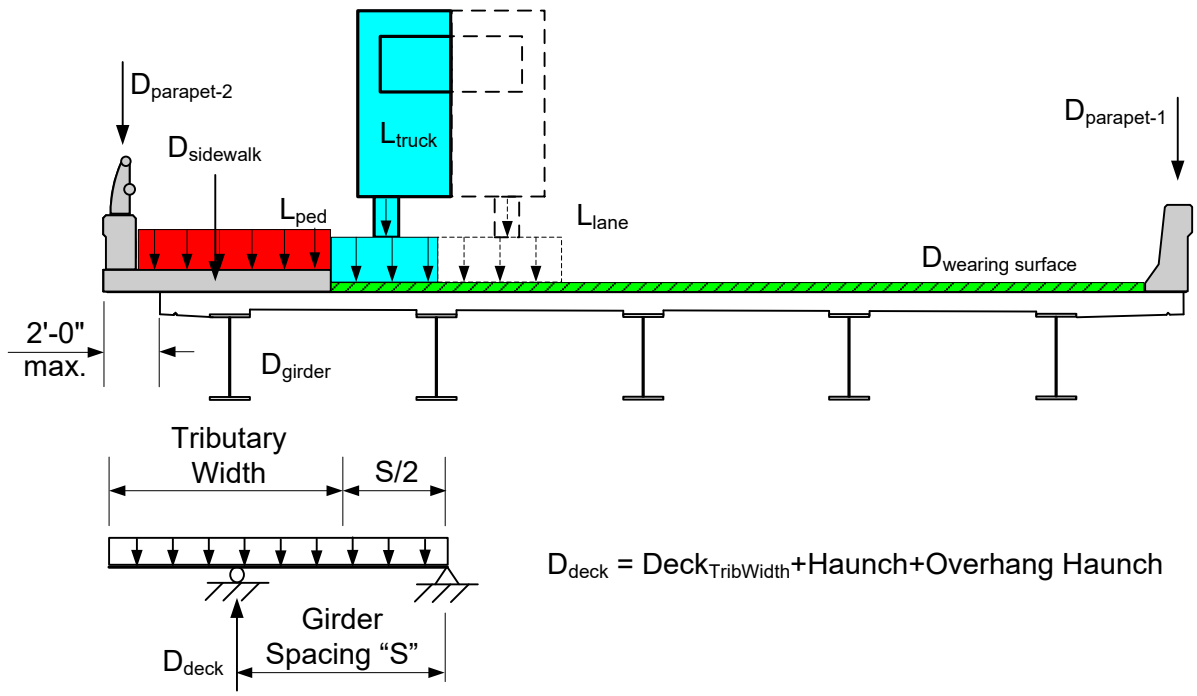

Use Tributary Width for Deck Load

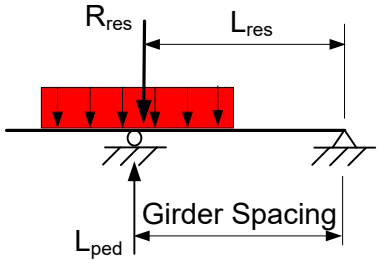

$$L_{ped} = \frac{(R_{res})(L_{res})}{\text{Girder Spacing}}$$

Apply Lever Rule for Pedestrian Load

Figure 17.2-19
Distribution of Loads to Exterior Girder for Girder Structure with Raised Sidewalk
Design Case 3

The distribution of loads to the exterior girder for Design Case 3 is calculated as follows:

For dead loads, the exterior girder must resist the girder weight (girder self-weight and any other miscellaneous weight applied to the girder), deck weight (including the concrete haunch and overhang haunch) and all superimposed dead loads. The distribution of the deck weight to the exterior girder is based on the tributary width, as shown in the previous figure. The distribution of all superimposed dead loads is based on equal distribution to all girders.

For the live load, the live load distribution factor for Design Case 3 is based only on the application of the lever rule. It is recommended for Design Case 3 lane load to use the same distribution factor as for the truck load. The appropriate multiple presence factor of 1.0 must be applied.

For pedestrian loads, the distribution to the exterior girder is based on the lever rule, as shown in the previous figure.

The general equation for loads applied to the exterior girder is as follows:

$$\text{Total Load} = D_{girder} + D_{deck} + \left(\frac{D_{wearing\ surface} + D_{sidewalk} + D_{parapet-1} + D_{parapet-2}}{\text{No. of Girders}} \right) + L_{ped} + \left[(DF_{ext})(L_{truck} + L_{lane}) \right]$$

17.2.9 Distribution of Dead Load to Substructure Units

For abutment design, the composite dead loads may be distributed equally between all of the girders, or uniformly across the slab.

For pier design, the composite dead loads should be distributed equally between all of the girders, or uniformly across the slab, except for bridges with raised sidewalks. For girder bridges with raised sidewalks, follow the aforementioned Design Case 1 & 3 used for exterior girder design. For slab bridges with raised sidewalks, use the loading specified in Live Load Case 1 for exterior strips.

It is acceptable to consider the concrete diaphragm loads to be divided equally between all of the girders and added as point loads to the girder reactions.

17.2.10 Distribution of Live Loads to Substructure Units

See 17.2.9 for additional live load guidance regarding bridges with raised sidewalks. In the transverse direction, the design truck and design tandem should be located in such a way that the effect being considered is maximized. However, the center of any wheel load must not be closer than 2 feet from the edge of the design lane. The transverse live load configuration for a design truck or design tandem is illustrated in Figure 17.2-20. Pedestrian live load may be omitted if trying to maximize positive moment in a multi-columned pier cap.

As a reminder, always be aware to apply loads correctly. For example, for continuous spans the loading to the pier originates from the live load reaction rather than the sum of the live load shears of adjacent spans.

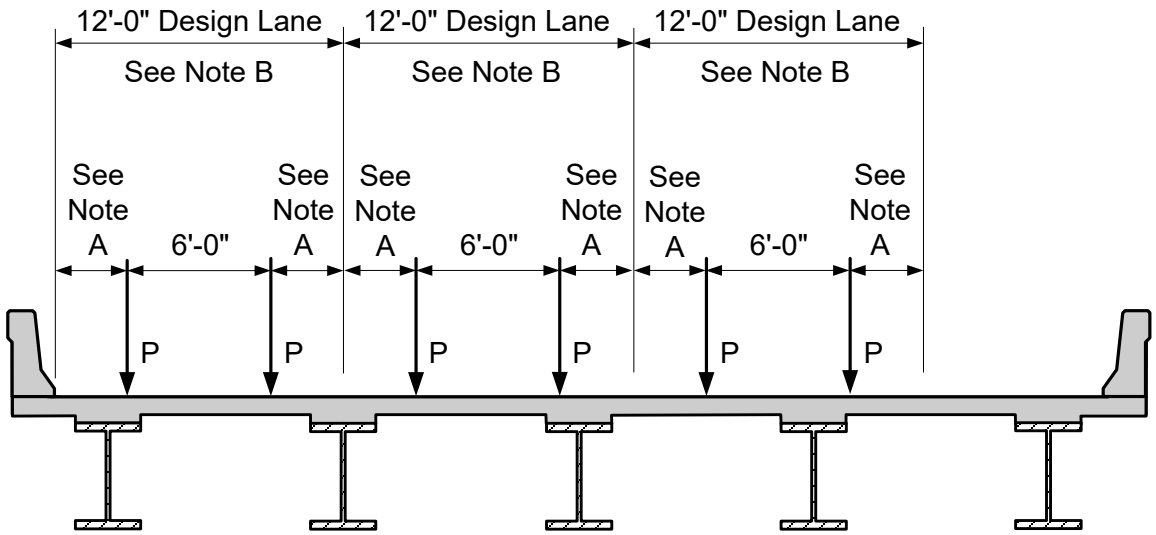

P = Wheel Load

Note A: Position wheel loads within the design lane such that the effect being considered is maximized; minimum = 2'-0".

Note B: Position design lanes across the roadway such that the effect being considered is maximized.

Figure 17.2-20
Transverse Configuration for a Design Truck or Design Tandem

Similarly, the design lane is distributed uniformly over the 10-foot loaded width. Since the design lane is 0.64 kips per linear foot in the longitudinal direction and it acts over a 10-foot width, the design lane load is equivalent to 64 psf. Similar to a design truck or design tandem, the 10-foot loaded width is positioned within the 12-foot design lane such that the effect being considered is maximized, as illustrated in Figure 17.2-21. The 10-foot loaded width may be placed at the edge of the 12-foot design lane.

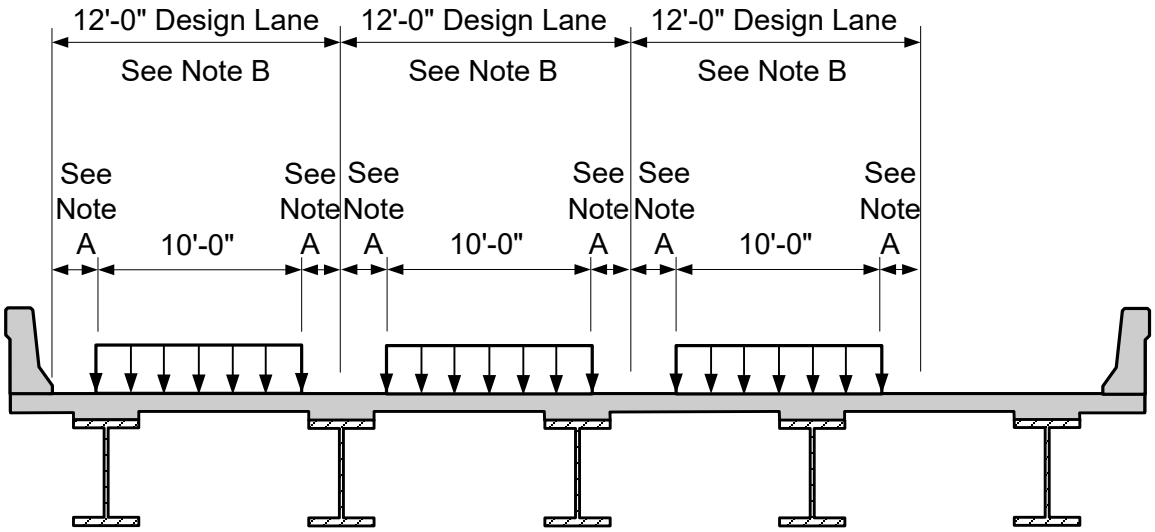

Note A: Position 10'-0" lane loads within the 12'-0" design lane such that the effect being considered is maximized; minimum = 0'.

Note B: Position 12'-0" design lanes across the roadway such that the effect being considered is maximized.

Figure 17.2-21
Transverse Configuration for a Design Lane

When live load reactions are calculated at substructure units different methods of distributing the loads are used for the axles on the substructure and for the axles in the spans. The load to a girder for an axle directly over the substructure unit is based on simple beam distribution between the girders. The reactions for the axles located within the span are based on the shear distribution factors.

WisDOT policy item:

A 10 foot design lane width may be used for the distribution of live loads to a pier cap.

For use in design of the foundations, the live load reactions should be tracked for both the Strength and Service load cases, as well as with and without the dynamic load allowance (IM). Note that the IM is not applied to the lane load portion of the live load reaction, so the reaction without the IM cannot be factored out of the reaction with IM.

17.2.11 Composite Section Properties

The effective flange width is the width of the deck slab that is to be taken as effective in composite action for determining resistance for all limit states. In accordance with **LRFD [4.6.2.6]**, the composite section width is taken as the tributary width perpendicular to the axis of the girder.

For exterior beams, the effective flange width is taken as one-half the effective width of the adjacent interior beam, plus the width of the overhang.

17.2.12 Allowable Live Load Deflection

WisDOT policy item:

LRFD [2.5.2.6.2] specifies optional live load deflection criteria for simple or continuous spans. However, the deflection criteria presented in Table 17.2-8 is required by WisDOT

Structure Type	Allowable Live Load Deflection
Conventional girder structure without pedestrians	L/800
Conventional girder structure with pedestrians	L/1000
Concrete slab structure	L/1200

Table 17.2-8
Allowable Live Load Deflection

17.2.13 Actual Live Load Deflection

The distribution factor for computing live load deflection is not the same as the moment distribution factor, because it is assumed that for straight bridges all beams or girders act together and have an equal deflection. However, for curved bridges, each girder must be checked individually.

For steel girder structures, composite section properties for deflection computations should be based on n rather than 3n. For concrete slab structures, the deflections should be based on the entire slab width acting as a unit, using the gross moment of inertia, I_g.

Using an analysis computer program, the maximum live load deflection can be computed as follows:

All design lanes are loaded and the appropriate multiple presence factor is used.

For composite design, the design cross section includes the entire width of the deck. As specified in AASHTO LRFD, the barriers and sidewalks may be included in the stiffness computations. However, due to the complexity of such computations, this should not be standard practice for WisDOT structures.

The number and position of loaded lanes is selected to provide the worst effect.

The live load portion of Service I limit state is used.

Dynamic load allowance is included.

The live load is taken as live load combinations LL#5: Design Truck + IM or LL#6: 25%(Design Truck + IM)+ Lane from 17.2.4.2.6.

17.3 Selection of Structure Type

The selection of the proposed structure type is determined from evaluation of the Structure Survey Report with accompanying supplemental data, current construction costs and preference based on past experience. In selecting the most economical structure, ease of fabrication and erection, general features of terrain, roadway geometrics, subsurface exploration and geographic location in the State of Wisconsin are considered. The proposed structure must blend into existing site conditions in a manner that does not detract from its surrounding environment. Every attempt should be made to select an aesthetically attractive structure consistent with structural requirements, economy and geographic surroundings. For information about bridge aesthetics, see Chapter 4 – Aesthetics.

The economical span ranges of various types of structures are given in Chapter 5 – Economics and Costs. Superstructure span lengths are related to the cost of the substructure units. If the substructure units are relatively expensive, it is generally more economical to use longer span lengths available for a given structure type. Practicality dictates using the average structure length for twin structures if the preliminary structure lengths are within approximately 3 feet. In addition, a multiple-span structure should be made symmetrical if its end spans are within approximately 3 feet in length of each other.

All structure span lengths are rounded off to the nearest 1 foot, except for stream crossings and multi-span prestressed girder structures where the span lengths are adjusted to maintain equal girder lengths. For example, a typical multiple-span prestressed girder structure has interior spans longer than its exterior spans. Refer to the Standard Details for Pretensioned Girders, Slab and Superstructure Details for details of girder lengths at abutment and piers.

At stream crossings, structure span lengths should be designed to the nearest foot (center-to-center bearing) and skew angles should be designed in multiples of 5°. This results in standardized span lengths and skew angles.

For geometric considerations in structure selection, reference is made to Chapter 3 – Design Criteria. The requirements for structure expansion and fixed pier locations are presented in Chapter 12 – Abutments, and bearing types are described in Chapter 27 – Bearings. Expansion joint types and requirements are specified in Chapter 28 – Expansion Devices. Since the skew angle for most snow plow blades is 35°, it is desirable to avoid this skew angle for bridge joints. This reduces the chances of joint damage resulting from the plow blades dropping into the expansion joints.

Use of non-redundant structures, including single-box and two-box steel box girder bridges, should be avoided unless absolutely necessary. Certain situations, including extreme span length over a navigational channel or tight curvature, may necessitate such bridges.

17.3.1 Alternate Structure Types

When developing bridge plans, consider the following procedures:

- Base preliminary plan development on an engineering and economic evaluation of alternate designs.

- Evaluate alternative designs on the basis of competitive materials appropriate to a specific structure type.

- Do not propose specific construction methods or erection procedures in the plans unless constraints are necessary to meet specific project requirements.

- Make an economic evaluation of preliminary estimates based on state-of-the-art methods of construction for structure types.

- Consider future structure maintenance needs in the structure's design in order to provide life-cycle costing data.

- Consider alternate plans where experience, expertise and knowledge of conditions clearly indicate that they are justified. Alternate plans are not compatible with stage construction and should not be used in these situations.

- Value engineering concepts are recognized as being cost effective. Apply these concepts to the selection of structure type, size and location throughout the plan development process.

17.4 Superstructure Types

Superstructures are classified as deck or through types.

For deck type structures, the roadway is above or on top of the supporting structures. Examples of deck type structures are girder bridges and steel deck-trusses.

For through type structures, the roadway passes between two elements of the superstructure. Examples of through type structures are steel through-trusses and tied-arch bridges.

Through type structures are generally used where long span lengths are required. Deck type structures are more common, because they lend themselves to future widening if increased traffic requires it.

Some of the various types of superstructures used in Wisconsin are as follows:

1. Concrete slab (flat and haunched)

   Concrete slab structures are adaptable to roadways with a high degree of horizontal curvature. This superstructure type is functional for short to medium span lengths and is relatively economical to construct and maintain. The practical range of span lengths for concrete slab structures can be increased by using haunched slab structures.

WisDOT policy item:

Concrete slab structures are limited to sites requiring a skew angle of 30 degrees or less.

   Voided slab structures are not currently being used due to excessive longitudinal cracking over the voids in the negative moment region. For more information about concrete slab structures, refer to Chapter 18 – Concrete Slab Structures.

2. Prestressed concrete girder

   Prestressed concrete girder structures are very competitive from a first cost standpoint and require very little maintenance. Prestressed concrete girders are produced by a fabrication plant certified by WisDOT. Future widening can be accomplished with relative ease. For more information about prestressed concrete girder bridges, refer to Chapter 19 – Prestressed Concrete.

3. Concrete T-beam

WisDOT policy item:

The concrete T-beam has had limited use in Wisconsin during recent years and is no longer used.

4. Prestressed box girder

   Prestressed box girder structures have the advantage of rapid construction where traffic must be diverted. Elimination of the need for falsework is a particular advantage when vertical clearances are critical during the construction phase. Experience indicates that, from a first-cost standpoint, these structures are more expensive to construct than concrete slab structures. For more information, refer to Chapter 19 – Prestressed Concrete.

5. Concrete box girder

   The concrete box girder structure is aesthetically adaptable for urban sites having roadways with a high degree of horizontal curvature or large skew angles. This structure is frequently employed in multi-level interchanges where horizontal clearances are limited, since the pier cap is an integral part of the superstructure. However, problems can be encountered in maintenance with deck replacements requiring shoring.

6. Concrete rigid frame

   The concrete rigid frame is more costly than other superstructure types. However, the concrete rigid frame is known for its aesthetic value and is used primarily in public parks and urban areas where the span lengths are similar to concrete slab structures and where approach embankments are relatively high.

7. Steel rolled section and welded plate girder

   Welded plate girders are less expensive than rolled sections with cover plates because of their reduced allowable design stress resulting from the fatigue criteria. Welded plate girders have greater versatility in allowing variable web thickness and depth, as well as variable flange thicknesses. Future widening can be accomplished with relative ease. For more information, refer to Chapter 24 – Steel Girder Structures and Chapter 38 – Railroad Structures.

8. Steel box girder

   Steel box girder structures have span length capabilities similar to plate girders. Aesthetically, they present a smooth, uncluttered appearance due to their closed box sections. Current experience reveals that steel box girders require more material than conventional steel plate girders. However, due to redundancy concerns, use of single-box and two-box girder bridges should be avoided unless absolutely necessary.

9. Steel tied arch and steel truss

   Unusual bridge sites, such as major river and harbor crossings, may require the use of longer span lengths than conventional deck type superstructures can accommodate. For such conditions, a steel tied arch or a steel truss can be used effectively.

10. Timber longitudinally laminated decks

Timber structures blend well in natural settings and are relatively easy to construct with light construction equipment. Timber longitudinally laminated deck structures have low profiles that generally provide large clearances for high water. Their application is limited by the range of span lengths and economics in comparison to concrete slabs. For more information, refer to Chapter 23 – Timber Structures.

17.5 Design of Slab on Girders

17.5.1 General

The design of concrete decks on prestressed concrete or steel girders is based on **LRFD [4.6.2.1]**. Moments from truck wheel loads (one or two trucks side by side) are distributed over a width of deck which spans perpendicular to the girder. The width of deck or width of equivalent strip is presented in **LRFD [Table 4.6.2.1.3-1]**. Positive moments are distributed over a different deck width than negative moments. The distribution width in inches is equal to 26.0 + 6.6 S for positive moments and 48.0 + 3.0 S for negative moments, where S equals girder spacing in feet.

To minimize transverse deck cracking, a minimum slab thickness of 8 inches is used for all decks on new bridges. For deck replacements, a thinner deck may be used if a reduced dead load is required to increase live load capacity. Research on transverse deck cracking (*NCHRP Report 297*) recommends smaller diameter reinforcement to reduce transverse deck cracking. The maximum size of transverse bars used is #5, with a minimum spacing of 6 inches. Identical bar size and spacing is used for the top and bottom transverse bars with each layer offset half the bar spacing from the other. If top and bottom transverse bars align, they form a weakened section within the concrete that is more susceptible to cracking.

For bridges with deck slabs on girders, the most economical structure can often be achieved by using as few lines of girders as possible. However, for prestressed concrete girders, it is often more economical to add an extra girder line than to use debonded strands with the minimum number of girder lines. After the number of girders has been determined, adjustments in girder spacing should be investigated to see if slab thickness can be minimized.

17.5.2 Two-Course Deck Construction

WisDOT policy item:

The use of two-course deck construction should be avoided and its use requires BOS approval.

For skews of 20 degrees or greater, the machine used to strike off and finish the concrete must have its longitudinal axis within 20 degrees of the centerline of bearing of the substructure units. This produces more equal girder loads in a span during the concrete pour, which results in dead load deflections being closer to the theoretical computed deflections.

However, for steel girders with wide decks and large skews or for continuous long-span steel girders, final dead load deflections may not be within a reasonable allowable variance from the theoretical. By using two-course construction, any discrepancies in deflections in the first pour can be corrected by varying the thickness of the second pour since most of the deflection will occur during the first pour.

When using two-course construction, the first pour is 1 inch less in thickness (1.5” bar cover) than the standard deck thickness and the second pour is a 2” minimum thickness Class E concrete overlay. For two-course deck construction, an additional 20 psf should be added for

a future wearing surface. The top surface of the first pour is given a dragged or broom finish to obtain a roughened surface.

A report by the Kansas DOT entitled "Cracking and Chloride Content in Reinforced Concrete Bridge Decks" (Report No. K-Tran: KU-01-9) has determined that two-course deck construction results in decks that have more severe cracking than monolithic decks. The report also states that the average chloride concentration at crack locations exceeds the corrosion threshold by the end of the first winter season after construction. Some agencies specify a high density second course concrete overlay to provide a more durable riding surface.

17.5.3 Reinforcing Steel for Deck Slabs on Girders

The following sections describe the design requirements for reinforcing steel for deck slabs on girders. Design tables are included that can be used for common superstructure configurations.

17.5.3.1 Transverse Reinforcement

The live load moments used to determine the size and spacing of the transverse bars are presented in **LRFD [Table A4-1]**. This table presents positive and negative live load moments per unit width, in units of kip-feet per foot. Moments are given for girder spacings ranging from 4'-0" to 15'-0" in increments of 3". Negative moments are presented for varying distances from the centerline of girder to the design section.

The negative dead load moment over the support is determined from the following equation:

$$M_{DL} = \frac{W S^2}{10}$$

Where:

W = Uniform dead load of slab and wearing surface

S = Girder spacing

The positive dead load moment is determined using the following equation:

$$M_{DL} = \frac{W S^2}{12.5}$$

WisDOT's current practice is to ignore the moments in the deck (not including in the deck overhang) resulting from superimposed dead loads (such as parapets and medians).

Negative moments at supports are adjusted to equal the moment at the location of the design section being considered.

The distance from the centerline of the girder to the design section is computed in accordance with **LRFD [4.6.2.1.6]**. For steel beams, this distance is equal to one-quarter of the flange width

from the centerline of support. For prestressed concrete girders, this distance is equal to the values presented in Figure 17.5-1, along with bar locations and clearances.

Note: Transverse reinforcing steel requirements (bar size and spacing) are determined for both positive moment requirements and negative moment requirements, and the same reinforcing steel is used in both the top and bottom of slab as shown in Table 17.5-1 and Table 17.5-2. Longitudinal reinforcement in Table 17.5-3 and Table 17.5-4 is based on a percentage of the bottom transverse reinforcement required *by actual design calculations* (not a percentage of what is in the tables). **The tables should be used for deck reinforcement, with continuity bars in prestressed girder bridges being the only deck reinforcement requiring calculation.**

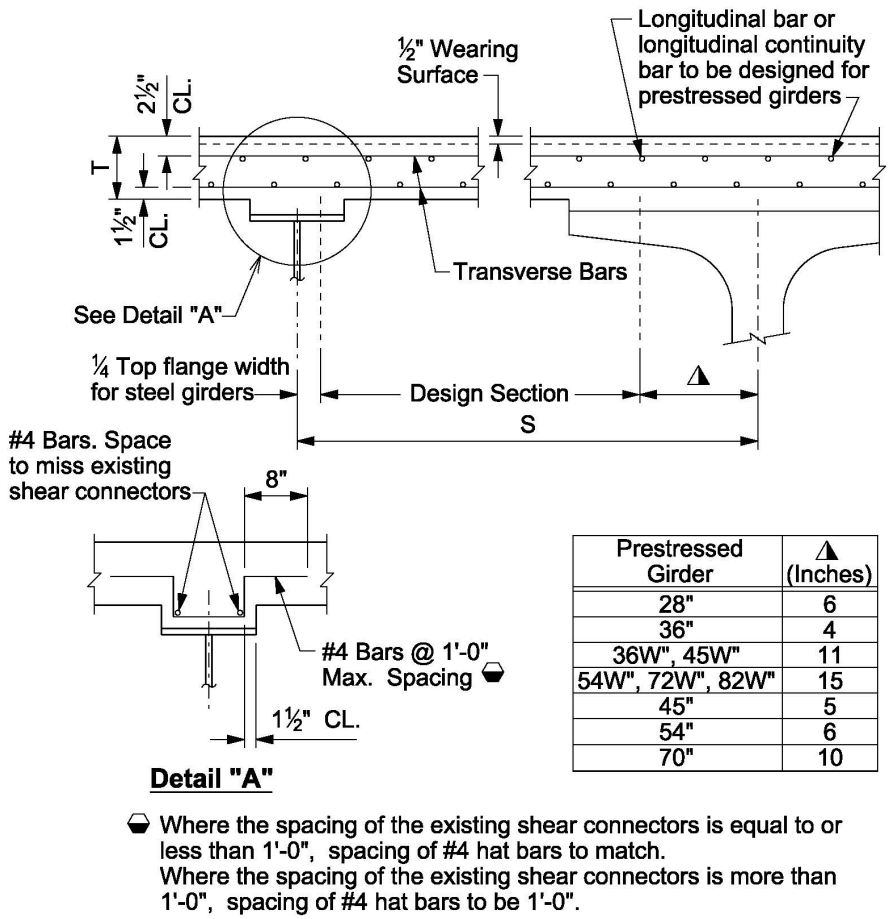

Prestressed Girder	Δ (Inches)
28"	6
36"	4
36W", 45W"	11
54W", 72W", 82W"	15
45"	5
54"	6
70"	10

Where the spacing of the existing shear connectors is equal to or less than 1'-0", spacing of #4 hat bars to match.
Where the spacing of the existing shear connectors is more than 1'-0", spacing of #4 hat bars to be 1'-0".

Figure 17.5-1
Transverse Section thru Slab on Girders

For skews of 20° and under, place transverse bars along the skew. For skews greater than 20°, place transverse bars perpendicular to the girders.

Detail ”A", as presented in Figure 17.5-1, should be used for decks when shear connectors extend less than 2 inches into the slab on steel girder bridges or 3 inches on prestressed concrete girder bridges.

Several transverse reinforcing steel tables are provided in this chapter. The reinforcing steel in Table 17.5-1 and Table 17.5-2 does not account for deck overhangs. However, the minimum amount of reinforcing steel required in the deck overhangs is presented in various design tables in 17.6.

The reinforcement shown in Table 17.5-1 and Table 17.5-2 is based on both the Strength I requirement and crack control requirement.

Crack control was checked in accordance with **LRFD [5.6.7]**. The bar spacing cannot exceed the value from the following formula:

$$s \le \frac{700(\gamma)}{\beta_s f_s} - 2d_c$$

Where:

$$\beta_s = 1 + \frac{d_c}{0.7(h - d_c)}$$

γ	=	0.75 for decks
β_s	=	Ratio of flexural strain at the extreme tension face to the strain at the centroid of the reinforcement layer nearest the tension face
f_s	=	Tensile stress in reinforcement at the service limit state (ksi) ≤ 0.6 f_y
d_c	=	Top concrete cover less ½ inch wearing surface plus ½ bar diameter or bottom concrete cover plus ½ bar diameter (inches)
h	=	Slab depth minus ½ inch wearing surface (inches)

WisDOT policy item:

The thickness of the sacrificial ½-inch wearing surface shall not be included in the calculation of d_c.

Table 17.5-1 and Table 17.5-2 were developed for specified values of the distance from the centerline of girder to the design section for negative moment. Those specified values – 0, 3, 6, 9, 12 and 18 inches – were selected to match values used in **AASHTO [Table A4-1]**. For a girder in which the distance from the centerline of girder to the design section for negative moment is not included in Table 17.5-1 and Table 17.5-2, the engineer may interpolate between the closest two values in the tables or can use the more conservative of the two values.

Transverse Reinforcing Steel for Deck Slabs on Girders for New Bridges and Deck Replacements, HL-93 Loading, Slab Thickness "T" ≥ 8"							
Slab Thickness "T" (Inches)	Girder Spacing "S"	Distance from Centerline of Girder to Design Section					
		0"	3"	6"	9"	12"	18"
8	4'-6"	#4 @ 7	#4 @ 7	#4 @ 7	#4 @ 7	#4 @ 7	#4 @ 7
8	4'-9"	#4 @ 6.5	#4 @ 7	#4 @ 7	#4 @ 7	#4 @ 7	#4 @ 7
8	5'-0"	#4 @ 6.5	#4 @ 7	#4 @ 7	#4 @ 7	#4 @ 7	#4 @ 7
8	5'-3"	#4 @ 6.5	#4 @ 6.5	#4 @ 7	#4 @ 7	#4 @ 7	#4 @ 7
8	5'-6"	#4 @ 6.5	#4 @ 6.5	#4 @ 7	#4 @ 7	#4 @ 7	#4 @ 7
8	5'-9"	#5 @ 8	#4 @ 6.5	#4 @ 6.5	#4 @ 7	#4 @ 7	#4 @ 7
8	6'-0"	#5 @ 7.5	#4 @ 6.5	#4 @ 6.5	#4 @ 6.5	#4 @ 6.5	#4 @ 6.5
8	6'-3"	#5 @ 7	#4 @ 6.5	#4 @ 6.5	#4 @ 6.5	#4 @ 6.5	#4 @ 6.5
8	6'-6"	#5 @ 7	#5 @ 8	#4 @ 6.5	#4 @ 6.5	#4 @ 6.5	#4 @ 6.5
8	6'-9"	#5 @ 7	#5 @ 7.5	#4 @ 6.5	#4 @ 6.5	#4 @ 6.5	#4 @ 6.5
8	7'-0"	#5 @ 6.5	#5 @ 7	#5 @ 8.5	#5 @ 8.5	#5 @ 8.5	#5 @ 8.5
8	7'-3"	#5 @ 6.5	#5 @ 7	#5 @ 8.5	#5 @ 8.5	#5 @ 8.5	#5 @ 8.5
8	7'-6"	#5 @ 6.5	#5 @ 7	#5 @ 8	#5 @ 8.5	#5 @ 8.5	#5 @ 8.5
8	7'-9"	#5 @ 6	#5 @ 7	#5 @ 7.5	#5 @ 8	#5 @ 8	#5 @ 8
8	8'-0"	#6 @ 7.5	#5 @ 6.5	#5 @ 7.5	#5 @ 8	#5 @ 8	#5 @ 8
8.5	8'-3"	#5 @ 6.5	#5 @ 7	#5 @ 8.5	#5 @ 8.5	#5 @ 8.5	#5 @ 8.5
8.5	8'-6"	#5 @ 6.5	#5 @ 7	#5 @ 8.5	#5 @ 8.5	#5 @ 8.5	#5 @ 8.5
8.5	8'-9"	#5 @ 6.5	#5 @ 7	#5 @ 7.5	#5 @ 8	#5 @ 8	#5 @ 8
8.5	9'-0"	#5 @ 6.5	#5 @ 7	#5 @ 7.5	#5 @ 8	#5 @ 8	#5 @ 8
8.5	9'-3"	#5 @ 6.5	#5 @ 7	#5 @ 7.5	#5 @ 8	#5 @ 8	#5 @ 8
9	9'-6"	#5 @ 6.5	#5 @ 7	#5 @ 8	#5 @ 8	#5 @ 8	#5 @ 8
9	9'-9"	#5 @ 6.5	#5 @ 7	#5 @ 7.5	#5 @ 8	#5 @ 8	#5 @ 8
9	10'-0"	#5 @ 6	#5 @ 6.5	#5 @ 7.5	#5 @ 8	#5 @ 8	#5 @ 8
9	10'-3"	#6 @ 7	#5 @ 6.5	#5 @ 7	#5 @ 7.5	#5 @ 8	#5 @ 8
9	10'-6"	#6 @ 7	#5 @ 6.5	#5 @ 7	#5 @ 7.5	#5 @ 7.5	#5 @ 7.5
9.5	10'-9"	#6 @ 7.5	#5 @ 6.5	#5 @ 7	#5 @ 7.5	#5 @ 8	#5 @ 8
9.5	11'-0"	#6 @ 7	#5 @ 6.5	#5 @ 7	#5 @ 7.5	#5 @ 8	#5 @ 8
9.5	11'-3"	#6 @ 7	#5 @ 6	#5 @ 6.5	#5 @ 7.5	#5 @ 7.5	#5 @ 7.5
9.5	11'-6"	#6 @ 7	#6 @ 7.5	#5 @ 6.5	#5 @ 7	#5 @ 7.5	#5 @ 7.5
10	11'-9"	#6 @ 7	#5 @ 6.5	#5 @ 7	#5 @ 7.5	#5 @ 8	#5 @ 8

10	12’-0”	#6 @ 7	#6 @ 7.5	#5 @ 6.5	#5 @ 7	#5 @ 8	#5 @ 8
10	12’-3”	#6 @ 7	#6 @ 7.5	#5 @ 6.5	#5 @ 7	#5 @ 7.5	#5 @ 7.5
10	12’-6”	#6 @ 7	#6 @ 7	#5 @ 6.5	#5 @ 7	#5 @ 7.5	#5 @ 7.5
10.5	12’-9”	#6 @ 7	#6 @ 7.5	#5 @ 6.5	#5 @ 7	#5 @ 7.5	#5 @ 8
10.5	13’-0”	#6 @ 7	#6 @ 7.5	#5 @ 6.5	#5 @ 7	#5 @ 7.5	#5 @ 7.5
10.5	13’-3”	#6 @ 7	#6 @ 7	#5 @ 6.5	#5 @ 6.5	#5 @ 7.5	#5 @ 7.5
10.5	13’-6”	#6 @ 6.5	#6 @ 7	#6 @ 7.5	#5 @ 6.5	#5 @ 7	#5 @ 7.5
11	13’-9”	#6 @ 7	#6 @ 7.5	#5 @ 6.5	#5 @ 7	#5 @ 7.5	#5 @ 7.5
11	14’-0”	#6 @ 7	#6 @ 7	#6 @ 7.5	#5 @ 6.5	#5 @ 7	#5 @ 7.5

Table 17.5-1

Transverse Reinforcing Steel for Deck Slabs on Girders
for New Bridges and Deck Replacements, HL-93 Loading, Slab Thickness “T” ≥ 8”

Transverse Reinforcing Steel for Deck Slabs on Girders for Deck Replacements, HL-93 Loading, Slab Thickness “T” < 8”							
Slab Thickness ”T” (Inches)	Girder Spacing “S”	Distance from Centerline of Girder to Design Section					
		0”	3”	6”	9”	12”	18”
6.5	4’-0”	#5 @ 7.5	#5 @ 7.5	#5 @ 7.5	#5 @ 7.5	#5 @ 7.5	#5 @ 7.5
6.5	4’-3”	#5 @ 7.5	#5 @ 7.5	#5 @ 7.5	#5 @ 7.5	#5 @ 7.5	#5 @ 7.5
6.5	4’-6”	#5 @ 7.5	#5 @ 7.5	#5 @ 7.5	#5 @ 7.5	#5 @ 7.5	#5 @ 7.5
6.5	4’-9”	#5 @ 7	#5 @ 7.5	#5 @ 7.5	#5 @ 7.5	#5 @ 7.5	#5 @ 7.5
6.5	5’-0”	#5 @ 6.5	#5 @ 7.5	#5 @ 7.5	#5 @ 7.5	#5 @ 7.5	#5 @ 7.5
6.5	5’-3”	#5 @ 6	#5 @ 7	#5 @ 7	#5 @ 7	#5 @ 7	#5 @ 7
6.5	5’-6”	#6 @ 7.5	#5 @ 6.5	#5 @ 7	#5 @ 7	#5 @ 7	#5 @ 7
6.5	5’-9”	#6 @ 7	#5 @ 6	#5 @ 7	#5 @ 7	#5 @ 7	#5 @ 7
6.5	6’-0”	#6 @ 6.5	#6 @ 7.5	#5 @ 7	#5 @ 7	#5 @ 7	#5 @ 7
6.5	6’-3”	#6 @ 6.5	#6 @ 7.5	#5 @ 6.5	#5 @ 7	#5 @ 7	#5 @ 7
6.5	6’-6”	#6 @ 6	#6 @ 7	#5 @ 6.5	#5 @ 7	#5 @ 7	#5 @ 7
6.5	6’-9”	(1)	#6 @ 7	#5 @ 6	#5 @ 7	#5 @ 7	#5 @ 7
6.5	7’-0”	(1)	#6 @ 6.5	#6 @ 7.5	#5 @ 6.5	#5 @ 6.5	#5 @ 6.5
7	4’-0”	#5 @ 8	#5 @ 8	#5 @ 8	#5 @ 8	#5 @ 8	#5 @ 8
7	4’-3”	#5 @ 8	#5 @ 8	#5 @ 8	#5 @ 8	#5 @ 8	#5 @ 8
7	4’-6”	#5 @ 8	#5 @ 8	#5 @ 8	#5 @ 8	#5 @ 8	#5 @ 8
7	4’-9”	#5 @ 8	#5 @ 8	#5 @ 8	#5 @ 8	#5 @ 8	#5 @ 8

7	5’-0”	#5 @ 7.5	#5 @ 8	#5 @ 8	#5 @ 8	#5 @ 8	#5 @ 8
7	5’-3”	#5 @ 7	#5 @ 8	#5 @ 8	#5 @ 8	#5 @ 8	#5 @ 8
7	5’-6”	#5 @ 6.5	#5 @ 7.5	#5 @ 8	#5 @ 8	#5 @ 8	#5 @ 8
7	5’-9”	#5 @ 6.5	#5 @ 7	#5 @ 8	#5 @ 8	#5 @ 8	#5 @ 8
7	6’-0”	#6 @ 7.5	#5 @ 7	#5 @ 7.5	#5 @ 7.5	#5 @ 7.5	#5 @ 7.5
7	6’-3”	#6 @ 7.5	#5 @ 6.5	#5 @ 7.5	#5 @ 7.5	#5 @ 7.5	#5 @ 7.5
7	6’-6”	#6 @ 7.5	#5 @ 6.5	#5 @ 7	#5 @ 7.5	#5 @ 7.5	#5 @ 7.5
7	6’-9”	#6 @ 7	#5 @ 6	#5 @ 7	#5 @ 7.5	#5 @ 7.5	#5 @ 7.5
7	7’-0”	#6 @ 6.5	#6 @ 7.5	#5 @ 6.5	#5 @ 7.5	#5 @ 7.5	#5 @ 7.5
7	7’-3”	#6 @ 6.5	#6 @ 7.5	#5 @ 6.5	#5 @ 7	#5 @ 7	#5 @ 7
7	7’-6”	#6 @ 6	#6 @ 7	#5 @ 6.5	#5 @ 7	#5 @ 7	#5 @ 7
7	7’-9”	(1)	#6 @ 6.5	#5 @ 6	#5 @ 7	#5 @ 7	#5 @ 7
7	8’-0”	(1)	#6 @ 6.5	#5 @ 6	#5 @ 7	#5 @ 7	#5 @ 7
7.5	4’-0”	#4 @ 6.5	#4 @ 6.5	#4 @ 6.5	#4 @ 6.5	#4 @ 6.5	#4 @ 6.5
7.5	4’-3”	#4 @ 6.5	#4 @ 6.5	#4 @ 6.5	#4 @ 6.5	#4 @ 6.5	#4 @ 6.5
7.5	4’-6”	#4 @ 6.5	#4 @ 6.5	#4 @ 6.5	#4 @ 6.5	#4 @ 6.5	#4 @ 6.5
7.5	4’-9”	#4 @ 6.5	#4 @ 6.5	#4 @ 6.5	#4 @ 6.5	#4 @ 6.5	#4 @ 6.5
7.5	5’-0”	#4 @ 6.5	#4 @ 6.5	#4 @ 6.5	#4 @ 6.5	#4 @ 6.5	#4 @ 6.5
7.5	5’-3”	#5 @ 8	#4 @ 6.5	#4 @ 6.5	#4 @ 6.5	#4 @ 6.5	#4 @ 6.5
7.5	5’-6”	#5 @ 7.5	#4 @ 6.5	#4 @ 6.5	#4 @ 6.5	#4 @ 6.5	#4 @ 6.5
7.5	5’-9”	#5 @ 7	#5 @ 8.5	#5 @ 8.5	#5 @ 8.5	#5 @ 8.5	#5 @ 8.5
7.5	6’-0”	#5 @ 7	#5 @ 8	#5 @ 8.5	#5 @ 8.5	#5 @ 8.5	#5 @ 8.5
7.5	6’-3”	#5 @ 6.5	#5 @ 7.5	#5 @ 8.5	#5 @ 8.5	#5 @ 8.5	#5 @ 8.5
7.5	6’-6”	#5 @ 6.5	#5 @ 7	#5 @ 8	#5 @ 8	#5 @ 8	#5 @ 8
7.5	6’-9”	#5 @ 6.5	#5 @ 7	#5 @ 8	#5 @ 8	#5 @ 8	#5 @ 8
7.5	7’-0”	#6 @ 7.5	#5 @ 6.5	#5 @ 7.5	#5 @ 8	#5 @ 8	#5 @ 8
7.5	7’-3”	#6 @ 7.5	#5 @ 6.5	#5 @ 7	#5 @ 8	#5 @ 8	#5 @ 8
7.5	7’-6”	#6 @ 7	#5 @ 6.5	#5 @ 7	#5 @ 7.5	#5 @ 7.5	#5 @ 7.5
7.5	7’-9”	#6 @ 7	#5 @ 6	#5 @ 7	#5 @ 7.5	#5 @ 7.5	#5 @ 7.5
7.5	8’-0”	#6 @ 6.5	#6 @ 7.5	#5 @ 7	#5 @ 7.5	#5 @ 7.5	#5 @ 7.5
7.5	8’-3”	#6 @ 6.5	#6 @ 7.5	#5 @ 6.5	#5 @ 7.5	#5 @ 7.5	#5 @ 7.5
7.5	8’-6”	#6 @ 6.5	#6 @ 7.5	#5 @ 6.5	#5 @ 7	#5 @ 7	#5 @ 7
7.5	8’-9”	#6 @ 6.5	#6 @ 7.5	#5 @ 6.5	#5 @ 7	#5 @ 7	#5 @ 7
7.5	9’-0”	#6 @ 6.5	#6 @ 7.5	#5 @ 6.5	#5 @ 7	#5 @ 7	#5 @ 7
7.5	9’-3”	#6 @ 6.5	#6 @ 7	#5 @ 6.5	#5 @ 6.5	#5 @ 6.5	#5 @ 6.5

7.5	9'-6"	#6 @ 6	#6 @ 6.5	#5 @ 6	#5 @ 6.5	#5 @ 6.5	#5 @ 6.5

(1) When these regions are encountered, the next thicker deck section shall be used.

Table 17.5-2
Transverse Reinforcing Steel for Deck Slabs on
Girders for Deck Replacements, HL-93 Loading, Slab Thickness "T" < 8"
(Only use Table 17.5-2 if Bridge Rating is unacceptable with "T" ≥ 8")

The transverse reinforcing steel presented in Table 17.5-1 and Table 17.5-2 is designed in accordance with *AASHTO LRFD*. The tables are developed based on deck concrete with a 28-day compressive strength of f'_c = 4 ksi and reinforcing steel with a yield strength of f_y = 60 ksi. However, the same tables should be used for concrete strength of 5 ksi.

The clearance for the top steel is 2 1/2", and the clearance for the bottom steel is 1 1/2". The dead load includes 20 psf for future wearing surface.

The reinforcing bars shown in the tables are for one layer only. Identical steel should be placed in both the top and bottom layers.

17.5.3.2 Longitudinal Reinforcement

The amount of bottom longitudinal reinforcement required is as specified in **LRFD [9.7.3.2]** and shown in Table 17.5-3 and Table 17.5-4. It is based on a percentage of the transverse reinforcing steel for positive moment. For the main reinforcement perpendicular to traffic, the percentage equals:

$$\frac{220}{\sqrt{S}} \leq 67\%$$

Where:

S = Girder spacing, as calculated based on Figure 17.5-1 (feet)

WisDOT exception to AASHTO:

The girder spacing shall be used in the equation above for calculating the percentage of transverse steel to be used as longitudinal reinforcement. This definition replaces the one stated in **LRFD [9.7.3.2]** to use the effective girder spacing.

The minimum amount of longitudinal reinforcement required for temperature and shrinkage in each of the top and bottom layers is given by **LRFD [5.10.6]** as follows:

$$A_s \geq \frac{1.30bh}{2(b+h)f_y}$$

and

$0.11 \leq A_s \leq 0.60$

Where:

A_s = Area of reinforcement in each direction and each face (in.^{2}/ft.)

f_y = Reinforcing steel yield strength = 60 ksi

b = Width of deck (inches)

h = Thickness of deck (inches)

In addition, the minimum amount of longitudinal steel in both layers used by WisDOT is #4 bars at 9" spacing to reduce transverse deck cracking. Identical amounts of steel are placed in both the top and bottom layer, and the reinforcing bars are uniformly spaced from edge to edge of slab. Table 17.5-3 and Table 17.5-4 use the same longitudinal bar spacings throughout a given bridge deck.

See Chapter 19 – Prestressed Concrete for design guidance regarding continuity reinforcement for prestressed girder bridges.

When continuous steel girders are not designed for negative composite action, **LRFD [6.10.1.7]** requires an area of longitudinal steel in both the top and bottom layer equal to 1% of the cross-sectional area of the slab in the span negative moment regions. The "d" value used for this computation is the total slab thickness excluding the wearing surface. This reinforcing steel is uniformly spaced from edge to edge of slab in the top and bottom layer. It is required that two-thirds of this reinforcement be placed in the top layer. The values shown in Table 17.5-3 and Table 17.5-4 provide adequate reinforcement to cover the requirements of **LRFD [6.10.1.7]**. It is WisDOT practice to abide by **LRFD [6.10.1.7]** for new bridges utilizing negative composite action, as well. See 24.7.6 for determining continuity bar cutoff locations for new bridges and rehabilitation bridges.

Longitudinal Reinforcing Steel for Deck Slabs on Girders for New Bridges and Deck Replacements, HL-93 Loading, Slab Thickness "T" ≥ 8"			
		Bar Size and Spacing (Inches)	
		Prestressed Girder Bridges	Steel Girder Bridges
Slab Thickness "T" (Inches)	Girder Spacing "S"	#4's Top and Bottom, Continuity Reinforcement To Be Designed (Top)	#4's Top and Bottom, Continuity Reinforcement** #6's (Top)
8	4'-6"	9.0	8.5
8	4'-9"	9.0	8.5
8	5'-0"	9.0	8.5
8	5'-3"	9.0	8.5
8	5'-6"	9.0	8.5
8	5'-9"	9.0	8.5
8	6'-0"	9.0	8.5

8	6’-3”	9.0	8.5
8	6’-6”	9.0	8.5
8	6’-9”	9.0	8.5
8	7’-0”	9.0	8.5
8	7’-3”	9.0	8.5
8	7’-6”	8.5	8.5
8	7’-9”	8.5	8.5
8	8’-0”	8.0	8.5
8.5	8’-3”	9.0	8.0
8.5	8’-6”	8.5	8.0
8.5	8’-9”	8.5	8.0
8.5	9’-0”	8.5	8.0
8.5	9’-3”	8.0	8.0
9	9’-6”	9.0	7.5
9	9’-9”	8.5	7.5
9	10’-0”	8.5	7.5
9	10’-3”	8.0	7.5
9	10’-6”	8.0	7.5
9.5	10’-9”	8.0	7.0
9.5	11’-0”	8.0	7.0
9.5	11’-3”	8.0	7.0
9.5	11’-6”	8.0	7.0
10	11’-9”	8.0	6.5
10	12’-0”	8.0	6.5
10	12’-3”	8.0	6.5
10	12’-6”	8.0	6.5
10.5	12’-9”	8.5	6.0
10.5	13’-0”	8.0	6.0
10.5	13’-3”	8.0	6.0
10.5	13’-6”	8.0	6.0
11	13’-9”	8.0	6.0
11	14’-0”	8.0	6.0

Legend:

** Use for deck slabs on steel girders in negative moment regions. New bridge shall be designed for composite action in the negative moment region.

Table 17.5-3

Longitudinal Reinforcing Steel For Deck Slabs on Girders
for New Bridges and Deck Replacements, HL-93 Loading, Slab Thickness “T” ≥ 8”

Longitudinal Reinforcing Steel for Deck Slabs on Girders for Deck Replacements, HL-93 Loading, Slab Thickness "T" < 8"			
Slab Thickness "T" (Inches)	Girder Spacing "S"	Bar Size and Spacing (Inches)	
		Prestressed Girder Bridges	Steel Girder Bridges
		#4's Top and Bottom, Continuity Reinforcement To Be Designed (Top)	#4's Top and Bottom, Continuity Reinforcement** #6's (Top)
6.5	4'-0"	7.0	7.0
6.5	4'-3"	7.0	7.0
6.5	4'-6"	7.0	7.0
6.5	4'-9"	7.0	7.0
6.5	5'-0"	7.0	7.0
6.5	5'-3"	7.0	7.0
6.5	5'-6"	7.0	7.0
6.5	5'-9"	6.5	6.5
6.5	6'-0"	6.5	6.5
6.5	6'-3"	6.5	6.5
6.5	6'-6"	6.5	6.5
6.5	6'-9"	6.0	6.0
6.5	7'-0"	6.0	6.0
7	4'-0"	8.0	8.0
7	4'-3"	8.0	8.0
7	4'-6"	8.0	8.0
7	4'-9"	8.0	8.0
7	5'-0"	8.0	8.0
7	5'-3"	8.0	8.0
7	5'-6"	8.0	8.0
7	5'-9"	7.5	7.5
7	6'-0"	7.5	7.5
7	6'-3"	7.5	7.5
7	6'-6"	7.0	7.0
7	6'-9"	7.0	7.0
7	7'-0"	7.0	7.0
7	7'-3"	6.5	6.5
7	7'-6"	6.5	6.5
7	7'-9"	6.5	6.5
7	8'-0"	6.0	6.0
7.5	4'-0"	9.0	9.0
7.5	4'-3"	9.0	9.0
7.5	4'-6"	9.0	9.0
7.5	4'-9"	9.0	9.0

7.5	5’-0”	9.0	9.0
7.5	5’-3”	9.0	9.0
7.5	5’-6”	9.0	9.0
7.5	5’-9”	8.5	8.5
7.5	6’-0”	8.5	8.5
7.5	6’-3”	8.5	8.5
7.5	6’-6”	8.0	8.0
7.5	6’-9”	8.0	8.0
7.5	7’-0”	7.5	7.5
7.5	7’-3”	7.5	7.5
7.5	7’-6”	7.5	7.5
7.5	7’-9”	7.0	7.0
7.5	8’-0”	7.0	7.0
7.5	8’-3”	6.5	6.5
7.5	8’-6”	6.5	6.5
7.5	8’-9”	6.5	6.5
7.5	9’-0”	6.0	6.0
7.5	9’-3”	6.0	6.0
7.5	9’-6”	5.5	5.5

Legend:

** Use for deck slabs on steel girders in negative moment regions when not designed for negative moment composite action.

Table 17.5-4

Longitudinal Reinforcing Steel for Deck Slabs
on Girders for Deck Replacements, HL-93 Loading, Slab Thickness “T” < 8”
(Only use Table 17.5-4 if Bridge Rating is unacceptable with “T” ≥ 8”)

The longitudinal reinforcing steel presented in Table 17.5-3 and Table 17.5-4 is designed in accordance with *AASHTO LRFD*. The tables are developed based on deck concrete with a 28-day compressive strength of f'_c = 4 ksi and reinforcing steel with a yield strength of f_y = 60 ksi. The dead load includes 20 psf for future wearing surface.

The reinforcing bars presented in the “Bar Size and Spacing” column (the third column) in Table 17.5-3 and Table 17.5-4 are for one layer only. Identical steel should be placed in both the top and bottom layers, except for continuity steel.

17.5.3.3 Empirical Design of Slab on Girders

WisDOT policy item:

Approval from the Bureau of Structures Chief Structural Design Engineer is required for use of the empirical design method.

In addition to the traditional design method for decks, as described above, AASHTO also provides specifications for an empirical design method. This method, which is new to *AASHTO LRFD*, does not require the computation of design moments and is simpler to apply than the traditional design method. However, it is applicable only under specified design conditions. The empirical design method should not be used on bridge decks with heavy truck traffic. The empirical design method is described in **LRFD [9.7.2]**.

17.6 Cantilever Slab Design

For deck slabs on girders, the deck overhang must also be designed. Design of the deck overhang involves the following two steps:

1. Design for flexure in deck overhang based on strength and extreme event limit states.
2. Check for cracking in overhang based on service limit state.

The locations of the design sections are illustrated in Figure 17.6-1.

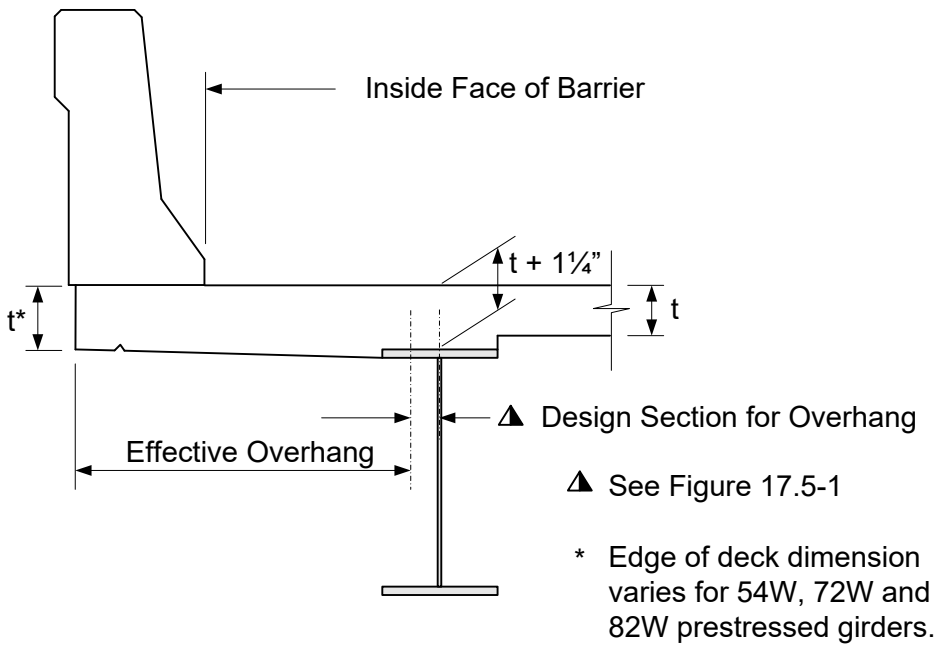

Figure 17.6-1
Deck Overhang Design Section

As described in **LRFD [A13.4]**, deck overhangs must be designed to satisfy three different design cases. These three design cases are summarized in Table 17.6-1.

Design Case	Applied Loads	Limit State	Design Locations
Design Case 1	Horizontal vehicular collision force and dead loads	Extreme Event II	At inside face of barrier At design section for overhang
Design Case 2 (usually does not control)	Vertical vehicular collision force and dead loads	Extreme Event II	At inside face of barrier At design section for overhang
Design Case 3	Dead and vehicle live loads	Strength I	At design section for overhang

Table 17.6-1
Deck Overhang Design Cases

The design load for Design Case 1 is a horizontal vehicular collision force, as illustrated in Figure 17.6-2. The transverse vehicle impact force, F_t, is specified in **LRFD [Table A13.2-1]** for various railing test levels. The force values specified in **LRFD [Table A13.2-1]** represent the total force, and neither dynamic load allowance nor multiple presence factors should be applied to these values.

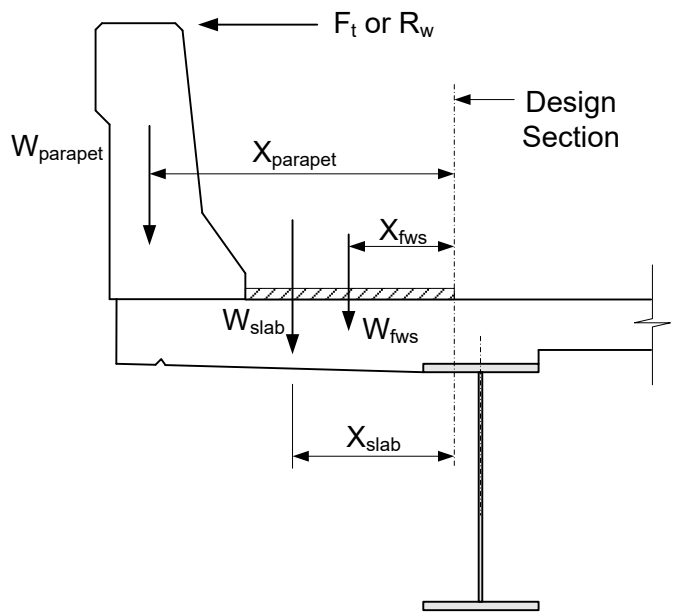

Figure 17.6-2
Design Case 1

The concrete barrier resistance, R_w, and the critical length of wall failure, L_c, are calculated in accordance with **LRFD [A13.3.1]**.

The longitudinal distribution length of the collision force for a continuous concrete barrier is calculated as illustrated in Figure 17.6-3. An angle of 30° is conservatively assumed for the load distribution from the front face of the barrier to the overhang design section.

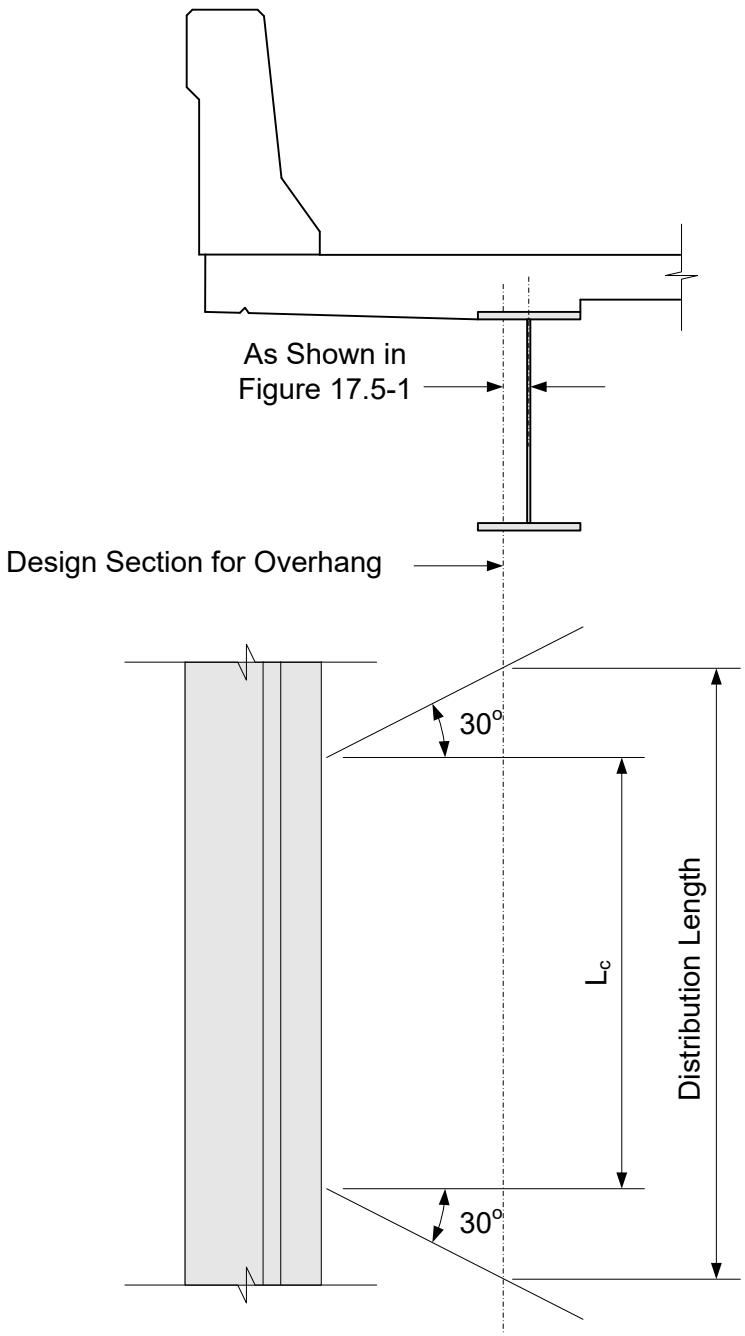

Figure 17.6-3
Assumed Distribution of Collision Moment Load in the Overhang

The design load for Design Case 2 is a vertical vehicular collision force, as illustrated in Figure 17.6-4. The vertical design force, F_v, is specified in **LRFD [Table A13.2-1]** for various railing test levels. The values for F_v specified in **LRFD [Table A13.2-1]** represent the total force, and neither dynamic load allowance nor multiple presence factors should be applied to these values.

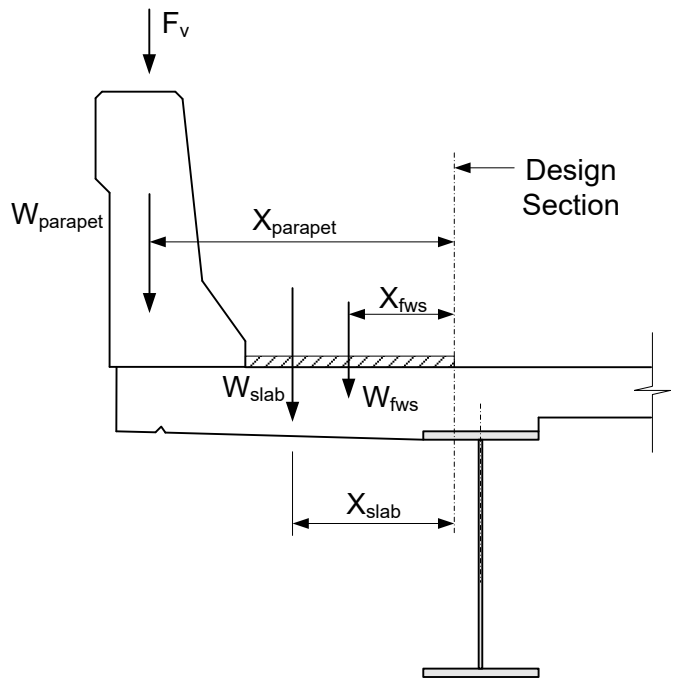

Figure 17.6-4
Design Case 2

For continuous concrete barriers, Design Case 2 generally does not control.

For steel post and beam railing, the overhang design is as specified in **LRFD [A13.4.3.1]**, and the assumed effective length of the cantilever for carrying concentrated post loads (either transverse or vertical) is as shown in Figure 17.6-5.

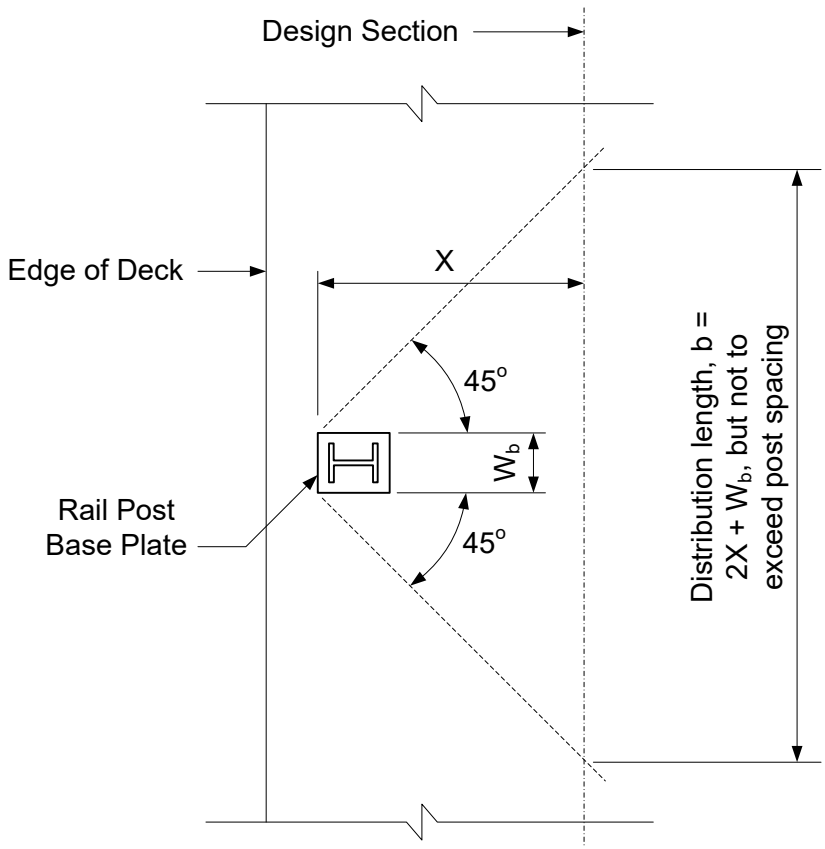

Figure 17.6-5
Effective Length of Cantilever for Carrying Concentrated Post Loads

As used in Figure 17.6-5:

b	=	Effective length of cantilever for carrying concentrated post loads (inches)
W_b	=	Width of base plate (inches)
X	=	Distance from edge of base plate nearest to edge of deck to design section (inches)

For steel post and beam railing, the punching shear force is computed as specified in **LRFD [A13.4.3.2]**, and the assumed distribution of forces for punching shear is as shown in Figure 17.6-6.

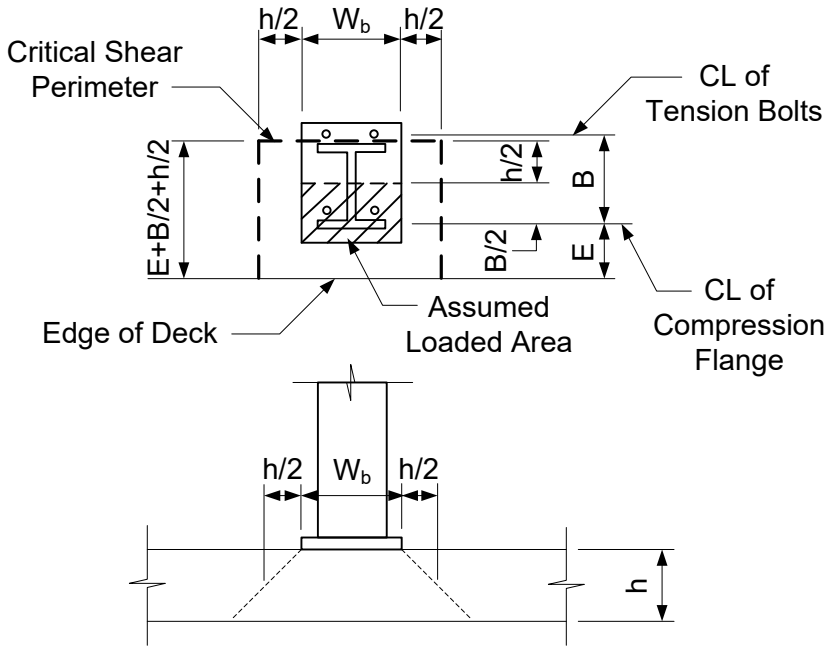

Figure 17.6-6
Assumed Load Distribution for Punching Shear

As used in Figure 17.6-6:

B	=	Distance between centroids of tensile and compressive stress resultants in post (inches)
E	=	Distance from edge of slab to centroid of compressive stress resultant in post (inches)
h	=	Depth of slab (inches)
W_b	=	Width of base plate (inches)

The design loads for Design Case 3 are dead and live loads, as illustrated in Figure 17.6-7.

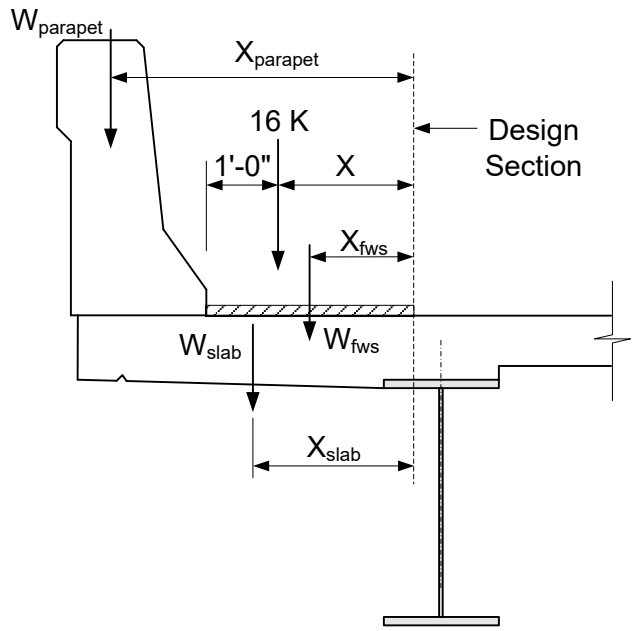

Figure 17.6-7
Design Case 3

As presented in **LRFD [Table 4.6.2.1.3-1]**, the equivalent strip (in the longitudinal direction), in units of inches, for live load on an overhang for Design Case 3 is:

Equivalent strip = 45.0 + 10.0X

Where:

X = Distance from load to point of support (feet), as illustrated in Figure 17.6-7

The multiple presence factor of 1.20 for one lane loaded and a dynamic load allowance of 33% should be applied, and the moment due to live load and dynamic load allowance is then computed.

Based on the computations for the three design cases, the controlling design case and design location are identified. The factored design moment is used to compute the required reinforcing steel. Cracking in the overhang must be checked for the service limit state in accordance with **LRFD [5.6.7]**. The controlling overhang reinforcement for cantilever deck slabs is shown in Table 17.6-2 and Table 17.6-3 for single slope and sloped face concrete parapets, and in Table 17.6-4 and Table 17.6-5 for steel railing Type “NY”/“M”. Type “W” railing is no longer allowed on girder structures.

If the area of reinforcing steel required in the overhang is greater than the area of reinforcing steel provided by the standard transverse reinforcement over the interior girders, it shall be placed as detailed in Figure 17.6-8.

17.6.1 Rail Loading for Slab Structures

For concrete slab superstructures, the designer is required to consider the rail loading and provide adequate transverse reinforcing steel, accordingly. The top transverse slab reinforcement for both concrete parapet and steel railing Type “NY”, "M" or "W" are shown on the Standard Details.

17.6.2 WisDOT Overhang Design Practices

WisDOT policy item:

Current design practice in Wisconsin limits the standard slab overhang length to 3’-7”, measured from the centerline of the exterior girder to the edge of the slab. A 4’-0” overhang is allowed for some wide flange prestressed concrete girders (54W”, 72W”, 82W”). A 4’-6” overhang may be used where a curved roadway is placed on straight girders at the discretion of the designer. The total overhang when a cantilevered sidewalk is used is limited to 5’-0”, measured from the centerline of the exterior girder to the edge of the sidewalk. A minimum of 6” from the edge of the top flange to the edge of the deck should be provided, with 9” preferred.

The overhang length has been limited to prevent rotation of the girder and bending of the girder web during construction caused by the eccentric load from the cantilevered forming brackets. The upper portion of these brackets attaches to the girder top flange, and the lower portion bears against the girder web. If the girder rotates or the web bends at the bracket bearing point, the end of the bracket will move downward because of bracket rotation. If the rails supporting the paving machine are located near the end of the bracket, the paving machine will move downward more than the girder and the anticipated profile grade line will not be achieved. Factors affecting girder rotation are diaphragm spacing, stiffness, connections and girder torsional stiffness. Factors affecting web bending are stiffener spacing and web thickness. Do not place a note or detail on the plan for exterior girder bracing required by the contractor as this is covered by the specs.

In the following tables, the slab thickness, "t", is the slab thickness between interior girders. The area of steel shown in the following tables is the controlling value from Design Case 1, 2 or 3. The value shown is the larger area of steel required at the front face of the barrier or at the design section. Girder Type 1 shall include steel girders and the following prestressed girders; 28-inch, 36-inch, 36W-inch, 45W-inch. Prestressed girders used for rehabilitation projects, 45-inch, 54-inch and 70-inch, shall also be considered to be Girder Type 1. Girder Type 2 shall include the following prestressed girders; 54W-inch, 72W-inch and 82W-inch.

If the area of reinforcing steel required in the overhang is greater than the area of reinforcing steel provided by the standard transverse reinforcement over the interior girders, reinforcement must be added to satisfy the overhang design requirements. The amount of reinforcement that must be added in the overhang is the amount required to satisfy the overhang design requirement minus the amount provided by the standard transverse reinforcement over the interior girders. This additional reinforcement should be carried for the bar development length past the exterior girder centerline. The reinforcement shall be placed as detailed in Figure 17.6-8. Use either a number 4 or 5 bar to satisfy this requirement. The additional bar shall be placed at one or two times the standard transverse bar spacing as required.

Effective Overhang (Feet)	Deck Thickness Between Girders, "t" (Inches)						
	8	8.5	9	9.5	10	10.5	11
1.75	0.749	0.690	0.640	0.597	0.562	0.529	0.514
2.00	0.747	0.690	0.643	0.603	0.568	0.536	0.510
2.25	0.766	0.706	0.655	0.612	0.576	0.545	0.517
2.50	0.781	0.718	0.666	0.622	0.584	0.551	0.523
2.75	0.793	0.728	0.675	0.629	0.591	0.557	0.527
3.00	0.805	0.738	0.682	0.636	0.596	0.562	0.532
3.25	0.815	0.745	0.688	0.642	0.601	0.566	0.535
3.50	0.824	0.752	0.694	0.646	0.605	0.569	0.538
3.75	0.849	0.761	0.700	0.650	0.608	0.572	0.541
4.00	0.959	0.862	0.785	0.688	0.636	0.590	0.544

Table 17.6-2

Reinforcing Steel (in^2/ft) for Cantilever Deck Slabs with Single Slope or Sloped Face Concrete Parapets --- Girder Type 1

Effective Overhang (Feet)	Deck Thickness Between Girders, "t" (Inches)						
	8	8.5	9	9.5	10	10.5	11
1.25	0.749	0.691	0.644	0.603	0.568	0.537	0.511
1.5	0.761	0.700	0.649	0.607	0.570	0.537	0.510
1.75	0.761	0.700	0.649	0.606	0.570	0.537	0.510
2	0.761	0.700	0.649	0.606	0.570	0.537	0.510
2.25	0.740	0.681	0.632	0.591	0.555	0.547	0.526
2.5	0.735	0.678	0.629	0.588	0.553	0.559	0.541
2.75	0.732	0.674	0.626	0.586	0.550	0.549	0.557
3	0.730	0.673	0.626	0.584	0.550	0.539	0.553
3.25	0.729	0.672	0.624	0.584	0.549	0.528	0.543

Table 17.6-3

Reinforcing Steel (in^2/ft) for Cantilever Deck Slabs with Single Slope or Sloped Face Concrete Parapets --- Girder Type 2

Effective Overhang (Feet)	Deck Thickness Between Girders, "t" (Inches)						
	8	8.5	9	9.5	10	10.5	11
1.75	0.277	0.277	0.277	0.277	0.251	0.202	0.159
2.00	0.287	0.287	0.287	0.287	0.264	0.220	0.180
2.25	0.295	0.295	0.295	0.295	0.274	0.234	0.198
2.50	0.302	0.302	0.302	0.302	0.282	0.246	0.212
2.75	0.307	0.307	0.307	0.307	0.290	0.255	0.224
3.00	0.312	0.312	0.312	0.312	0.295	0.278	0.263
3.25	0.394	0.394	0.394	0.394	0.392	0.389	0.340
3.50	0.465	0.465	0.465	0.465	0.464	0.436	0.412
3.75	0.497	0.497	0.497	0.497	0.477	0.489	0.480
4.00	0.567	0.567	0.567	0.567	0.542	0.501	0.504

Table 17.6-4
Reinforcing Steel (in^2/ft) for Cantilever Deck Slabs with Tubular Railing Type "NY"/"M"
Girder Type 1

Effective Overhang (Feet)	Deck Thickness Between Girders, "t" (Inches)						
	8	8.5	9	9.5	10	10.5	11
1.25	0.542	0.435	0.345	0.272	0.213	0.161	0.117
1.5	0.542	0.435	0.345	0.272	0.213	0.161	0.117
1.75	0.525	0.435	0.345	0.272	0.213	0.161	0.117
2	0.423	0.423	0.345	0.269	0.203	0.147	0.096
2.25	0.290	0.280	0.228	0.185	0.146	0.114	0.128
2.5	0.237	0.237	0.217	0.176	0.151	0.146	0.160
2.75	0.275	0.275	0.275	0.263	0.247	0.234	0.222
3	0.269	0.269	0.269	0.269	0.269	0.256	0.244
3.25	0.334	0.334	0.334	0.334	0.334	0.330	0.314

Table 17.6-5
Reinforcing Steel (in^2/ft) for Cantilever Deck Slabs with Tubular Railing Type "NY"/"M"
Girder Type 2

Notes:

1. Tables show the total area of transverse deck reinforcement required per foot.

2. The values in Table 17.6-2, Table 17.6-3, Table 17.6-4 and Table 17.6-5 are based on the following design criteria:

    - f'c = 4 ksi
    - fy = 60 ksi
    - Top steel clearance = 2 1/2"
    - Effective Overhang as illustrated in Figure 17.6-1

3. For Tubular Railing Type "NY"/"M", the No. 6 "U" bars located at the rail post locations should not be included when calculating the total available area of reinforcement.

4. The values in the shaded region are satisfied by the standard transverse reinforcement for all girder spacings and standard transverse deck reinforcement. No additional checks or reinforcement are required.

5. Details for additional overhang reinforcement are shown in Figure 17.6-8. Detail "A" shall be used with Table 17.6-2, Table 17.6-3 and Table 17.6-5. Detail "B" shall be used with Table 17.6-4.

6. For bridge decks with raised sidewalks, the additional reinforcement shown in Table 17.6-2, Table 17.6-3, Table 17.6-4, and Table 17.6-5, need not be used. See Standard Detail 17.01 – Median and Raised Sidewalk Details – for information pertaining to the additional reinforcement to be used at raised sidewalks.

Example Use of Tables:

Given Information:

54W" PSG, 15" from CL girder to Design Section -- (Girder Type 2)

Girder Spacing = 7'-0"

Overhang = 3'-0", Effective Overhang = 1'-9"

Type "NY" rail

From Table 17.5-1:

Deck thickness = 8"

Design Section at 15", use #5's @ 8.5", As provided = 0.43 in^2/ft

From Table 17.6-5:

Transverse area of steel required = 0.542 in^2/ft

Therefore:

Additional area of steel required = 0.542 - 0.43 = 0.112 in^2/ft

Use either one or two times the spacing of the standard transverse reinforcement.

Lapping every other bar: use #4's @ 17", As = 0.14 in^2/ft, use Detail "A".

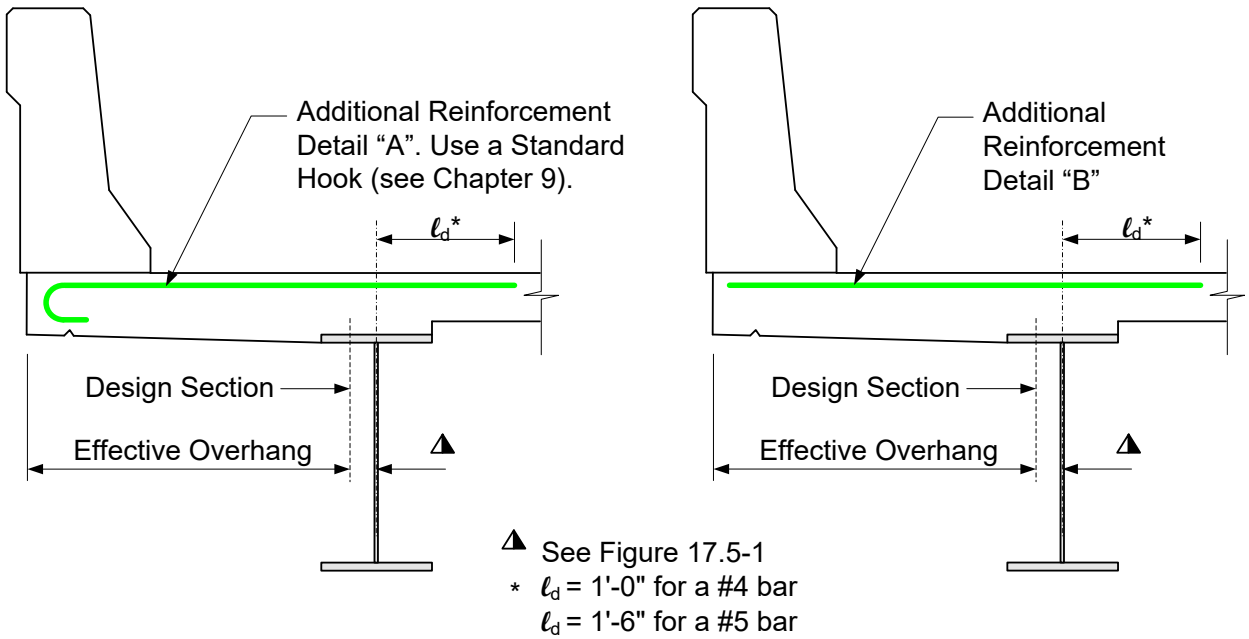

Figure 17.6-8
Overhang Reinforcement Details

To reiterate:

1. Details for additional overhang reinforcement are shown in Figure 17.6-8. Detail "A" shall be used with Table 17.6-2, Table 17.6-3 and Table 17.6-5. Detail "B" shall be used with Table 17.6-4.

2. Girder Type 1 shall include steel girders and the following prestressed girders; 28-inch, 36-inch, 36W-inch, 45W-inch. Prestressed girders used for rehabilitation projects, 45-inch, 54-inch and 70-inch, shall also be considered to be Girder Type 1. Girder Type 2 shall include the following prestressed girders; 54W-inch, 72W-inch and 82W-inch.

17.7 Construction Joints

Optional transverse construction joints are permitted on continuous concrete deck structures to limit the concrete volume in a single pour. Refer to the Standard Detail for Slab Pouring Sequence for the optimum slab pouring sequence. On steel structures over 300 feet long, transverse construction joints, if used, are to be placed at 0.6 of the span length beyond the pier in the direction of the pour. For continuous prestressed concrete girder bridges, optional transverse construction joints should be located midway between the cut-off points for continuity reinforcing steel or at 0.75 of the span, whichever is closest to the pier.

The rate of placing concrete for continuous steel girders shall equal or exceed 0.5 of the span length per hour but need not exceed 100 cubic yards per hour. Transverse construction joints may be omitted with approval of Bureau of Structures.

When the deck width of a girder superstructure exceeds 120 feet or the width of a slab superstructure exceeds 52 feet, a longitudinal construction joint with reinforcement through the joint shall be detailed. For decks between 90 and 120 feet, an optional joint shall be detailed. Longitudinal joints should not be located directly above girders and should be at least 6 inches from the edge of the top flange of the girder. Longitudinal joints are preferably located beneath the median or parapet. Otherwise, the joint should be located along the edge of the lane line or in the middle of the lane. The longitudinal construction joint should be used for staged construction and for other cold joint applications within the deck. Longitudinal construction joint details are provided in Standard Details 24.11 – Slab Pouring Sequence and 18.02 – Continuous Flat Slab.

Optional longitudinal construction joints shall be detailed accordingly in the plans. Longitudinal construction joints requested by the contractor are to be approved by the engineer. Optional and contractor requested joints are to be located as previously mentioned.

Open joints may be used in a median or between parapets. Considerations should be given to sealing open joints with compression seals or other sealants.

The structure plans should permit the contractor to propose an alternate construction joint schedule subject to approval of the engineer.

17.8 Bridge Deck Protective Systems

17.8.1 General

FHWA encourages states that require the use of de-icers to employ bridge deck protective systems. The major problem resulting in bridge deck deterioration is delamination of the concrete near the top mat of the reinforcing steel followed by subsequent spalling of the surface concrete. Research shows that the most prevalent cause of extensive deck deterioration is corrosion of the reinforcing steel due to the intrusion of chlorides into the concrete from repeated de-icer applications during snow and/or ice removal.

Several types of bridge deck protective systems are currently available. Some have been approved by FHWA based on their initial performance. Some of the more common types of protective systems are epoxy coated reinforcing steel, galvanized or stainless steel reinforcing steel, microsilica modified concrete or polymer impregnated concrete, cathodic protection and deck sealers. Epoxy coated reinforcing steel and deck sealers are preferred by WisDOT.

Structures other than box culverts that are designed to carry an earth fill are required to have waterproofing membrane systems on the deck to protect the slab. This includes bridges designed for future grade changes.

17.8.2 Design Guidance

All deck reinforcement bars shall be epoxy coated and the top reinforcing bars shall have a minimum of 2 ½ inches of cover.

All decks shall receive a protective surface treatment. Other locations for protective surface treatment should include: parapet, parapet wing, median, sidewalk and edge of deck/slab and 1’-0” underside of deck/slab when open railings are utilized.

Additional protective systems may be desired to minimize future rehabilitations. One or a combination of systems may be used on large projects such as Mega Projects. Contact the WisDOT Bureau of Structures Design Section for approval and project specific guidance. The following systems are currently being used and should be considered on new structures and deck rehabilitations:

- High Performance Concrete (HPC) – This is typically used within the bridge superstructure (deck, diaphragms, parapets, structural approach slabs, etc.) on urban interchange projects

- Polymer overlays - This system extends the decks service life before rehabilitation is required.

- Stainless steel deck reinforcement – Use of stainless steel in lieu of epoxy bars may be justified for urban interchange projects and complex structures. Savings from reducing the number of rehabilitation projects and user costs can be substantial. Currently, only the enhanced corrosion protection benefits shall be utilized and reinforcement shall be selected per the epoxy coated deck design tables. The use of

stainless reinforcing steel shall be approved by Chief Structures Development or Design Engineer and may require a life cycle analysis.

17.9 Bridge Approaches

The structure approach slab, or approach pavement, is part of the roadway design plans. Structure approach standards are provided in the Facilities Development Manual (FDM).

Guidance for the selection of pavement types for bridge approaches is as shown in FDM 14-10-15.

Considerations for site materials, drainage and backfill are provided in Chapter 12 – Abutments. Most approach pavement failures are related to settlement of embankment or foundation materials. Past experience shows that significant settlement is most likely to occur where marginal materials are used. Designers are encouraged to provide perforated underdrains wrapped in geotextile fabric placed in a trench filled with crushed stone. Also, abutment backfill material should be granular in nature and consolidated under optimum moisture conditions.

17.10 Design of Precast Prestressed Concrete Deck Panels

17.10.1 General

An advantage of stay-in-place forms is that they can be placed in less time than it takes to place the forms for a conventional deck. There is also a labor savings because the extra step of removing deck forms is not required. Stay-in-place forms are often the preferred system for shallow box girders because of the difficulty of removing forms in a confined space.

When determined ideal for a project, precast concrete deck panels should be detailed in the contract documents. The contractor is responsible for the shop plans of the panels and any other changes that may be required to the reinforcing steel in the cast-in-place portion of the deck. Contract documents should also include an option for the contractor to use a conventional deck. Contact the Bureau of Structures Design Section for current precast concrete deck panel Special Provisions and for other considerations.

When a conventional deck is detailed in the contract documents and the contractor is interested in utilizing precast deck panels, the department may consider their usage on a project-specific basis. The contractor would be responsible for the shop plans of the panels and any other changes that may be required to the reinforcing steel in the cast-in-place portion of the deck. Payment to a contractor who chooses to use stay-in-place forms is based on the contract prices bid for the conventional cast-in-place deck.

Deck panels are only used between the inside faces of the exterior girders. The overhangs outside the exterior girders are formed and the concrete placed in the same way as in a conventional cast-in-place deck. On skewed decks, the contractor may form and cast the skewed portion of the deck full depth or they may use skewed end deck panels which may be individually precast or saw-cut from square end planks.

One potential issue with decks formed using concrete deck panels is that cracks often form in the cast-in-place concrete over the transverse joints between panels and along the edges of the panels parallel to the girders. Reflection cracking is less of a problem when these panels are used on prestressed concrete girders than on steel girders. Simple-span prestressed concrete girder bridges have less reflective cracking than continuous-span prestressed concrete girder bridges.

17.10.2 Deck Panel Design

The design of precast prestressed concrete deck panels shown in Table 17.10-1 is based on *AASHTO LRFD* design criteria. These panels were designed for flexure due to the HL-93 design truck live load, dead load of the plastic concrete supported by the panels, a construction load of 50 psf, dead load of the panels and a future wearing surface of 20 psf. The live load moments were obtained from **LRFD [Table A4-1]**.

At the request of precast deck panel fabricators, only two strand sizes are used – 3/8 inch and 1/2 inch. Strand spacing is given in multiples of 2 inches.

WisDOT exception to AASHTO:

A 3-inch minimum panel thickness is used, even though **LRFD [9.7.4.3.1]** specifies a minimum thickness of 3.5 inches.

The decision to use a 3-inch minimum panel was based on the successful use of 3-inch panels by other agencies over many years. In addition, a minimum of 5 inches of cast-in-place concrete is preferred for crack control and reinforcing steel placement. A 3.5-inch panel thickness would require an 8.5-inch deck, which would not allow direct substitution of panels for a traditionally designed 8-inch deck.

A study performed at Iowa State University determined that a 3-inch thick panel with coated 3/8-inch strands at midthickness spaced at 6 inches, along with epoxy-coated 6 x 6 – W2.9 x W2.9 welded wire fabric, was adequate to prevent concrete splitting during strand detensioning. The use of #3 bars placed perpendicular to the strands at 9" spacing also prevents concrete splitting.

Panel thicknesses were increased by ½ -inch whenever a strand spacing of less than 6 inches was required. Strands with a ½-inch diameter were used in panels 3½ inches thick or greater when 3/8-inch strands spaced at 6 inches were not sufficient.

The allowable tensile stress in the panels, as presented in **LRFD [Table 5.9.2.3.2b-1]**, is as follows:

$0.0948\lambda\sqrt{f'_c} \leq 0.3$ ksi ; where λ = conc. density modification factor **LRFD [5.4.2.8]**, and has a value of 1.0 for normal weight conc.

This allowable tensile stress limit is based on f'_c in units of ksi and is for components with bonded prestressing tendons or reinforcement that are subjected to severe corrosive conditions.

The transfer length of the strands is assumed to be 60 strand diameters at a stress of 202.5 ksi. The development length, L_d, of the strands, as presented in **LRFD [5.9.4.3.2]**, is assumed to be as follows:

$$L_d = k\left(f_{ps} - \frac{2}{3}f_{pe}\right)d_b$$

Where:

k	=	1.0 for pretensioned members with a depth less than 24 inches
d_b	=	Nominal strand diameter (inches)
f_{ps}	=	Average stress in prestressing steel at the time when the nominal resistance of the member is required (ksi)

f_{pe} = Effective stress in prestressing steel after losses (ksi)

L_d = Development length beyond critical section (inches)

The minimum panel width is the length required for the panel to extend 4" onto the top flange as shown in Table 17.10-1. A linear reduction in f_{pe} is required if the panel width is less than two times the development length. The values shown in Table 17.10-1 consider this linear reduction.

The designs in Table 17.10-1 are based on uncoated prestressing strands. Grit-impregnated, epoxy-coated strands cost four times as much as uncoated strands but require about half the transfer and development length as uncoated strands. A cover of 1 1/4 inches is adequate to provide protection from chlorides for uncoated strands using a 5 ksi concrete mix. However, for bridges with high traffic volume, a 6 ksi mix is recommended.

LRFD [9.7.4.3.2] specifies that the strands need not extend beyond the panels into the cast-in-place concrete above the beams. This simplifies construction of the panels at the plant since they can be saw cut to the required length. Installation in the field is also simplified because extended strands may interfere with girder shear connectors. As a substitute for the strands that don't extend out of the panels, #4 bars spaced at twice the spacing of the transverse bars are placed on top of the panels over the girders in the cast-in-place concrete. These bars anchor the panels together to prevent or reduce longitudinal cracking over the ends of the panels and also resist any positive continuity moments that may develop. Also by not extending the strands into the cast-in-place concrete, the uncoated strands are not exposed to chlorides that may seep through cracks that may develop in the cast-in-place concrete.

LRFD [5.6.3.3] requires that the moment capacity of a flexural member be greater than the cracking moment based on the modulus of rupture. This requirement may be waived if the moment capacity is greater than 1.33 times the factored design moment. The purpose of this requirement is to provide a minimum amount of reinforcement in a flexural member so that a flexural failure will not be sudden or occur without warning. Tests have shown that for slabs on girders, the failure mode is a punching shear failure and not a flexural failure. ACI 10.5.4 also recognizes the difference between slabs and beams and does not require the same minimum reinforcement for slabs. For these reasons, **LRFD [5.6.3.3]** was not considered in the designs of the panels shown in Table 17.10-1. However, panels with a width of 6 feet or more meet the requirements of **LRFD [5.6.3.3]**.

17.10.3 Transverse Reinforcement for Cast-in-Place Concrete on Deck Panels

The design of the transverse reinforcing steel in the cast-in-place concrete placed on deck panels is based on *AASHTO LRFD*. The live load moments used to determine the size and spacing of the transverse reinforcing bars placed in the top of the cast-in-place concrete are from **LRFD [Table A4-1]**. The reinforcing steel in the cast-in-place concrete is also designed for a future wearing surface of 20 psf. With stay-in-place forms, there are no negative moments from the dead load of the cast-in-place concrete. The required reinforcing steel shown in Table 17.10-2 is based on both the strength requirement and crack control requirement.

Crack control was checked in accordance with **LRFD [5.6.7]** and as shown in 17.5.3.1. A concrete strength of 4 ksi was assumed, and the haunch height over the girders was not considered.

The distance from the centerline of the girder to the design section is from **LRFD [4.6.2.1.6]**. For prestressed concrete girders, use the values in Figure 17.5-1.

The reinforcing steel in Table 17.10-2 does not account for deck overhangs. However, Table 17.6-2, Table 17.6-3, Table 17.6-4 and Table 17.6-5 provide the minimum reinforcing steel required in the overhangs. Also for any portion of a deck not supported by deck panels, use Table 17.5-1 for determining the required reinforcing steel.

17.10.3.1 Longitudinal Reinforcement

For continuous prestressed concrete girders, the longitudinal reinforcing steel over the piers is the same as that required for a conventional deck. For steel girders, see 17.5.3.2 for longitudinal continuity reinforcement.

17.10.4 Details

Precast deck panels should extend a minimum of 1.5 inches beyond the face of concrete diaphragms at the substructure units. The transverse joints between panels in adjacent bays should be staggered, preferably a distance about 1/2 panel length. Staggering the joints helps to minimize transverse reflective cracking.

Panels should never rest directly on a girder flange. According to **LRFD [9.7.4.3.4]**, “The ends of the formwork panels shall be supported on a continuous mortar bed or shall be supported during construction in such a manner that the cast-in-place concrete flows into the space between the panel and the supporting component to form a concrete bedding.” The minimum width of bearing on the flange of a girder for grout support is 3 inches. See Figure 17.10-1 and Figure 17.10-2 for additional information.

High-density expanded polystyrene is used to support the panels prior to the placement of the grout under the panel. The polystyrene is cut to the required haunch height so a constant slab thickness is maintained. Fiber board or sheathing panel supports are not allowed because the slight deflection of polystyrene compresses the concrete underneath the panel and results in less reflective longitudinal cracking along the panel edge.

The main function of the polystyrene is to form the haunch height and to form a dam for the grout placement. The grout must be placed before placement of the deck concrete.

Some agencies specify a maximum haunch height. When it is exceeded, they allow the contractor to thicken the slab. Wisconsin does not specify a maximum haunch height and leaves that decision to the designer, who is better informed to make that decision based on the specific situation of their project.

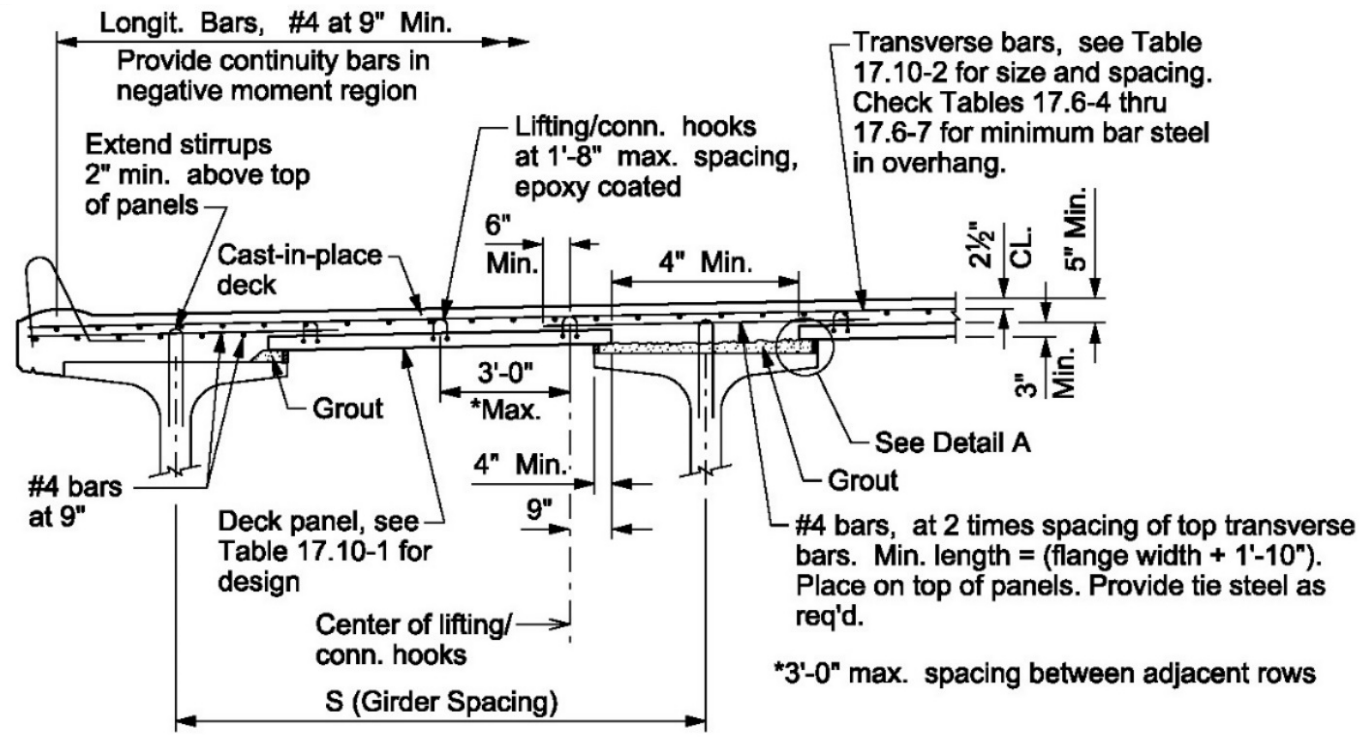

Transverse Section

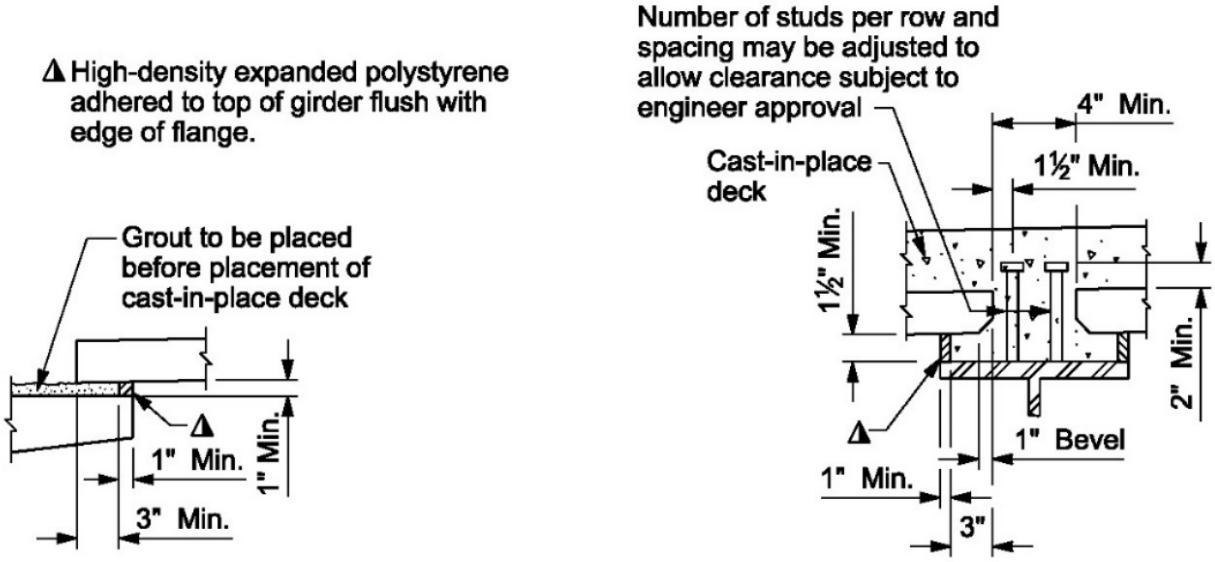

DETAIL A

ALTERNATE DETAIL A STEEL GIRDER

Figure 17.10-1
Transverse Section through Slab on Girders with Deck Panel and Details

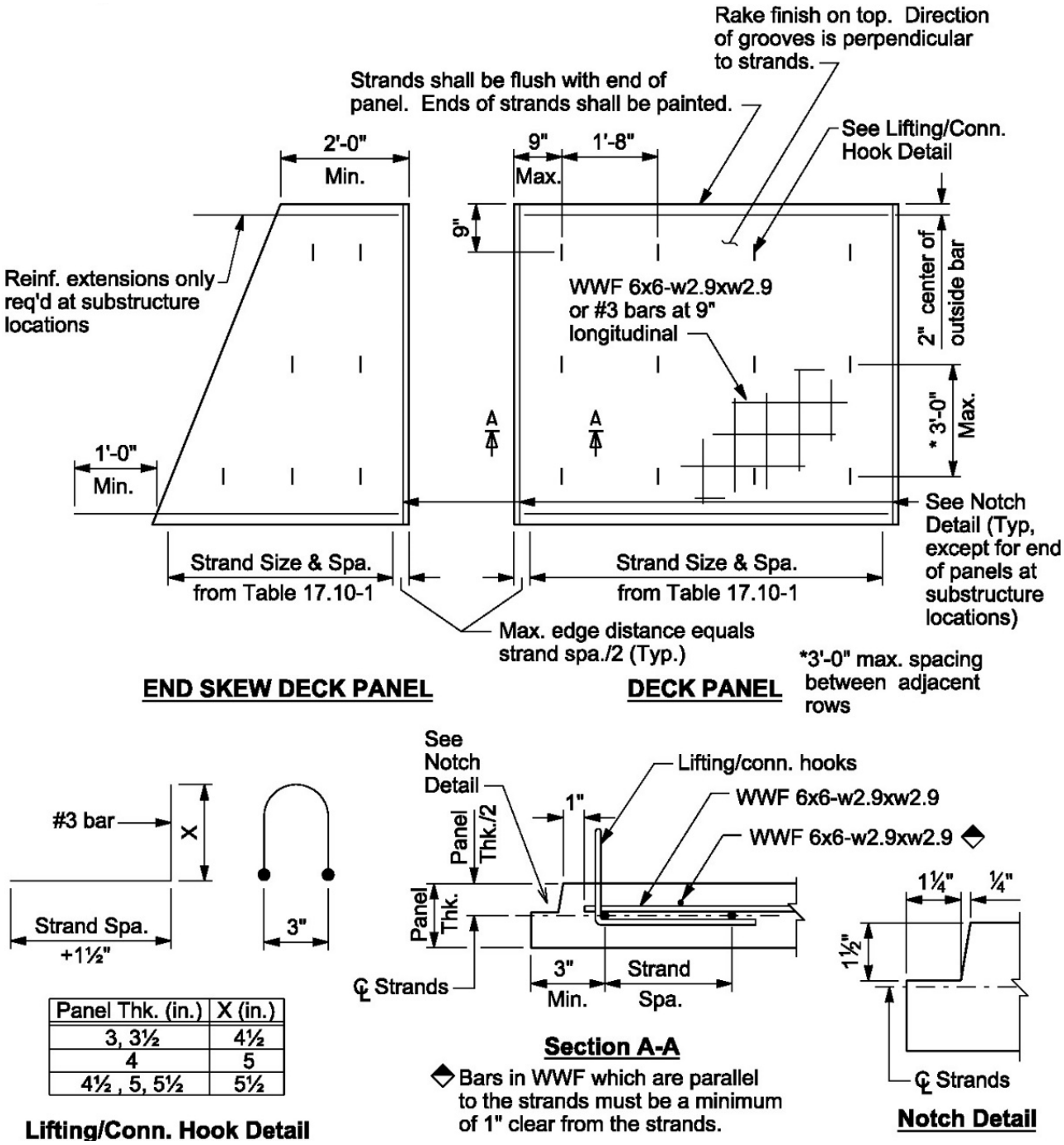

Figure 17.10-2
Deck Panel Details

Girder Spacing "S"	Panel Thick. (Inches)	Total Slab Thick. (Inches)	Top Flange Width (Inches)												
			12		16		18		24		30		48		
			Strand		Strand		Strand		Strand		Strand		Strand		
			Spa. Inches	Pi Kips	Spa. Inches	Pi Kips	Spa. Inches	Pi Kips	Spa. Inches	Pi Kips	Spa. Inches	Pi Kips	Spa. Inches	Pi Kips	
4'-6"	3	8	10	13.17	10	12.33	10	11.92	10	11.08	10	11.08	10	11.08	3/8" Diameter Strands
4'-9"	3	8	10	13.58	10	12.75	10	12.75	10	11.50	10	11.08	10	11.08	
5'-0"	3	8	10	14.42	10	13.58	10	13.17	10	12.33	10	11.08	10	11.08	
5'-3"	3	8	10	14.83	10	14.00	10	13.58	10	12.75	10	11.92	10	11.08	
5'-6"	3	8	10	15.67	10	14.83	10	14.42	10	13.17	10	12.33	10	11.08	
5'-9"	3	8	10	16.50	10	15.67	10	15.25	10	14.00	10	13.17	10	11.50	
6'-0"	3	8	8	14.25	10	16.50	10	16.08	10	14.83	10	13.58	10	11.50	
6'-3"	3	8	8	15.45	8	14.25	10	16.92	10	15.67	10	14.42	10	11.92	
6'-6"	3	8	8	16.12	8	15.45	8	14.78	10	16.50	10	15.25	10	12.33	
6'-9"	3	8	8	17.12	8	16.12	8	15.78	8	14.25	10	16.08	10	13.17	
7'-0"	3	8	6	14.19	8	17.12	8	16.45	8	15.45	8	14.25	10	13.58	
7'-3"	3	8	6	14.94	6	14.19	6	13.62	8	16.12	8	15.12	10	14.42	
7'-6"	3	8	6	15.69	6	14.94	6	14.69	8	17.12	8	15.78	10	15.25	
7'-9"	3	8	6	16.44	6	15.69	6	15.44	6	14.44	8	16.78	10	16.50	
8'-0"	3	8	6	17.19	6	16.44	6	16.19	6	15.19	6	14.19	8	14.25	
8'-3"	3.5	8.5	6	16.76	6	16.01	6	15.76	6	14.76	6	13.47	8	14.14	
8'-6"	3.5	8.5	10	29.48	6	16.76	6	16.51	6	15.51	6	14.51	8	14.97	
8'-9"	3.5	8.5	8	26.44	10	30.06	10	29.06	6	16.26	6	15.26	8	15.97	
9'-0"	3.5	8.5	8	27.44	8	26.44	8	26.10	6	17.01	6	16.01	8	16.64	
9'-3"	3.5	8.5	8	28.77	8	27.77	8	27.10	10	30.06	6	16.76	6	14.01	
9'-6"	4	9	8	27.76	8	26.76	8	25.95	10	29.22	6	16.37	8	17.20	
9'-9"	4	9	8	29.09	8	27.76	8	27.43	10	30.62	6	17.12	6	14.37	
10'-0"	4	9	8	30.09	8	29.09	8	28.43	8	27.09	10	30.20	6	15.12	
10'-3"	4	9	6	25.48	8	30.09	8	29.76	8	28.09	8	26.76	6	15.87	
10'-6"	4	9	6	26.23	6	25.48	8	30.76	8	29.09	8	27.76	6	16.62	
10'-9"	4	9.5	6	26.73	6	25.73	6	25.23	8	29.43	8	27.76	6	16.12	
11'-0"	4	9.5	6	27.48	6	26.73	6	26.23	8	30.43	8	28.76	6	16.87	
11'-3"	4	9.5	6	28.48	6	27.48	6	26.98	6	25.73	8	30.09	10	30.20	1/2" Diameter Strands
11'-6"	4	9.5	6	29.48	6	28.48	6	27.98	6	26.73	6	25.23	8	25.95	
11'-9"	4	10	6	30.23	6	28.98	6	28.48	6	26.98	6	25.48	8	25.95	
12'-0"	4.5	10	6	29.62	6	28.62	6	28.12	6	26.62	6	25.37	8	26.50	
12'-3"	4.5	10	6	30.62	6	29.62	6	29.12	6	27.62	6	26.12	8	27.83	
12'-6"	5	10	6	30.34	6	29.34	6	28.84	6	27.59	6	26.34	8	28.28	
12'-9"	5	10.5	6	30.59	6	29.59	6	29.09	6	27.59	6	26.34	8	27.95	
13'-0"	5.5	10.5	6	30.36	6	29.36	6	29.11	6	27.61	6	26.36	8	28.77	
13'-3"	5.5	10.5	4	23.52	6	30.36	6	29.86	6	28.61	6	27.36	8	29.77	
13'-6"	5.5	10.5	4	24.18	4	23.52	4	23.18	6	29.36	6	28.11	8	30.77	

13'-9"	6	11	4	23.39	6	30.41	6	30.16	6	28.66	6	27.41	8	29.96	
14'-0"	6	11	4	24.06	4	23.39	4	23.06	6	29.66	6	28.16	8	30.96	

Table 17.10-1

Precast Prestressed Concrete Deck Panel Design Table

Notes:

- Designed per AASHTO LRFD Specifications with HL 93 Loading.
- f'c = 6.0 ksi
- f'ci = 4.4 ksi
- f'c slab = 4.0 ksi
- f's = 270 ksi (low relaxation)
- Design loading includes 20 psf for future wearing surface and 50 psf for construction load. Pi's in Table are a minimum and may be increased to a maximum of 0.75 x f_s x A_s. Strands are located at the centroid of the panels.

Girder Spacing "S"	Total Slab Thick. Inches	Distance From C/L of Girder to Design Section (Inches)					
		3	4	5	6	10	15
4'-6"	8	#4 @ 9	#4 @ 9.5	#4 @ 10	#4 @ 10	#4 @ 11.5	#4 @ 12.5
4'-9"	8	#4 @ 8	#4 @ 8.5	#4 @ 9	#4 @ 9.5	#4 @ 11	#4 @ 12.5
5'-0"	8	#4 @ 7	#4 @ 7.5	#4 @ 8	#4 @ 8.5	#4 @ 10.5	#4 @ 12.5
5'-3"	8	#4 @ 6.5	#4 @ 7	#4 @ 7.5	#4 @ 8	#4 @ 10	#4 @ 12
5'-6"	8	#4 @ 6.5	#4 @ 6.5	#4 @ 7	#4 @ 7.5	#4 @ 9.5	#4 @ 12
5'-9"	8	#4 @ 6.5	#4 @ 6.5	#4 @ 6.5	#4 @ 7	#4 @ 9	#4 @ 11.5
6'-0"	8	#4 @ 6.5	#4 @ 6.5	#4 @ 6.5	#4 @ 6.5	#4 @ 8.5	#4 @ 11
6'-3"	8	#4 @ 6.5	#4 @ 6.5	#4 @ 6.5	#4 @ 6.5	#4 @ 8.5	#4 @ 11
6'-6"	8	#4 @ 6.5	#4 @ 6.5	#4 @ 6.5	#4 @ 6.5	#4 @ 8	#4 @ 10.5
6'-9"	8	#4 @ 6	#4 @ 6.5	#4 @ 6.5	#4 @ 6.5	#4 @ 7.5	#4 @ 10.5
7'-0"	8	#5 @ 7.5	#5 @ 8	#4 @ 6.5	#4 @ 6.5	#4 @ 7	#4 @ 10
7'-3"	8	#5 @ 7.5	#5 @ 7.5	#4 @ 6	#4 @ 6.5	#4 @ 6.5	#4 @ 10
7'-6"	8	#5 @ 7.5	#5 @ 7.5	#4 @ 6	#4 @ 6.5	#4 @ 6.5	#4 @ 9.5
7'-9"	8	#5 @ 7	#5 @ 7.5	#5 @ 7.5	#4 @ 6.5	#4 @ 6.5	#4 @ 8.5

8'-0"	8	#5 @ 7	#5 @ 7.5	#5 @ 7.5	#4 @ 6	#4 @ 6.5	#4 @ 8
8'-3"	8.5	#5 @ 7.5	#5 @ 8	#4 @ 6.5	#4 @ 6.5	#4 @ 6.5	#4 @ 8
8'-6"	8.5	#5 @ 7.5	#5 @ 8	#4 @ 6.5	#4 @ 6.5	#4 @ 6.5	#4 @ 8
8'-9"	8.5	#5 @ 7.5	#5 @ 7.5	#4 @ 6.5	#4 @ 6.5	#4 @ 6.5	#4 @ 7.5
9'-0"	8.5	#5 @ 7.5	#5 @ 7.5	#5 @ 8	#4 @ 6.5	#4 @ 6.5	#4 @ 7.5
9'-3"	8.5	#5 @ 7.5	#5 @ 7.5	#5 @ 8	#4 @ 6.5	#4 @ 6.5	#4 @ 7
9'-6"	9	#5 @ 7.5	#5 @ 8	#5 @ 8	#5 @ 8.5	#5 @ 9.5	#4 @ 7
9'-9"	9	#5 @ 7.5	#5 @ 7.5	#5 @ 8	#5 @ 8	#5 @ 9.5	#4 @ 7
10'-0"	9	#5 @ 7	#5 @ 7.5	#5 @ 7.5	#5 @ 8	#5 @ 9	#4 @ 6.5
10'-3"	9	#5 @ 7	#5 @ 7	#5 @ 7.5	#5 @ 7.5	#5 @ 8.5	#5 @ 9.5
10'-6"	9	#5 @ 7	#5 @ 7	#5 @ 7	#5 @ 7.5	#5 @ 8.5	#5 @ 9
10'-9"	9.5	#5 @ 7	#5 @ 7.5	#5 @ 7.5	#5 @ 7.5	#5 @ 8.5	#5 @ 9
11'-0"	9.5	#5 @ 7	#5 @ 7	#5 @ 7.5	#5 @ 7.5	#5 @ 8.5	#5 @ 9
11'-3"	9.5	#5 @ 7	#5 @ 7	#5 @ 7	#5 @ 7.5	#5 @ 8	#5 @ 9
11'-6"	9.5	#5 @ 6.5	#5 @ 7	#5 @ 7	#5 @ 7	#5 @ 8	#5 @ 9
11'-9"	10	#5 @ 7	#5 @ 7	#5 @ 7.5	#5 @ 7.5	#5 @ 8	#5 @ 9
12'-0"	10	#5 @ 7	#5 @ 7	#5 @ 7	#5 @ 7.5	#5 @ 8	#5 @ 9
12'-3"	10	#5 @ 6.5	#5 @ 7	#5 @ 7	#5 @ 7	#5 @ 8	#5 @ 8.5
12'-6"	10	#5 @ 6.5	#5 @ 6.5	#5 @ 7	#5 @ 7	#5 @ 7.5	#5 @ 8.5
12'-9"	10.5	#5 @ 7	#5 @ 7	#5 @ 7	#5 @ 7.5	#5 @ 8	#5 @ 8.5
13'-0"	10.5	#5 @ 6.5	#5 @ 7	#5 @ 7	#5 @ 7	#5 @ 8	#5 @ 8.5
13'-3"	10.5	#5 @ 6.5	#5 @ 6.5	#5 @ 7	#5 @ 7	#5 @ 7.5	#5 @ 8.5
13'-6"	10.5	#5 @ 6.5	#5 @ 6.5	#5 @ 7	#5 @ 7	#5 @ 7.5	#5 @ 8.5
13'-9"	11	#5 @ 6.5	#5 @ 7	#5 @ 7	#5 @ 7	#5 @ 8	#5 @ 8
14'-0"	11	#5 @ 6.5	#5 @ 6.5	#5 @ 7	#5 @ 7	#5 @ 7.5	#5 @ 8

Table 17.10-2

Transverse Reinforcing Steel for Deck Slabs on Precast Concrete Deck Panels

Notes:

- Designed per AASHTO LRFD with HL-93 Loading.
- f'c deck = 4.0 ksi
- fy = 60 ksi
- Steel is 2 ½" clear from top of slab. Designed for 20 psf future wearing surface. "Total Slab Thickness" includes thickness of deck panel and poured in place concrete.
- Overhang deck steel may require greater than the number 4 or 5 bar as indicated in 17.6.2.