## Table of Contents

19.1 Introduction ..... 3
19.1.1 Pretensioning ..... 3
19.1.2 Post-Tensioning ..... 3
19.2 Basic Principles ..... 4
19.3 Pretensioned Member Design ..... 7
19.3.1 Design Strengths ..... 7
19.3.2 Loading Stages ..... 8
19.3.2.1 Prestress Transfer ..... 8
19.3.2.2 Losses ..... 8
19.3.2.2.1 Elastic Shortening ..... 8
19.3.2.2.2 Time-Dependent Losses ..... 9
19.3.2.2.3 Fabrication Losses ..... 9
19.3.2.3 Service Load ..... 10
19.3.2.3.1 Prestressed I-Girder ..... 10
19.3.2.3.2 Prestressed Box Girder ..... 11
19.3.2.4 Factored Flexural Resistance ..... 11
19.3.2.5 Fatigue Limit State ..... 12
19.3.3 Design Procedure ..... 12
19.3.3.1 Prestressed I-Girder Member Spacing ..... 12
19.3.3.2 Prestressed Box Girder Member Spacing ..... 12
19.3.3.3 Dead Load ..... 13
19.3.3.4 Live Load ..... 13
19.3.3.5 Live Load Distribution ..... 13
19.3.3.6 Dynamic Load Allowance ..... 14
19.3.3.7 Prestressed I-Girder Deck Design ..... 14
19.3.3.8 Composite Section ..... 14
19.3.3.9 Design Stress ..... 15
19.3.3.10 Prestress Force ..... 16
19.3.3.11 Service Limit State ..... 17
19.3.3.12 Raised, Draped or Partially Debonded Strands ..... 18
19.3.3.12.1 Raised Strand Patterns ..... 19
19.3.3.12.2 Draped Strand Patterns ..... 19

19.3.3.12.3 Partially Debonded Strand Patterns ..... 21
19.3.3.13 Strength Limit State ..... 22
19.3.3.13.1 Factored Flexural Resistance ..... 22
19.3.3.13.2 Minimum Reinforcement ..... 25
19.3.3.14 Non-prestressed Reinforcement ..... 26
19.3.3.15 Horizontal Shear Reinforcement ..... 26
19.3.3.16 Web Shear Reinforcement ..... 28
19.3.3.17 Continuity Reinforcement ..... 31
19.3.3.18 Camber and Deflection ..... 33
19.3.3.18.1 Prestress Camber ..... 34
19.3.3.18.2 Dead Load Deflection ..... 37
19.3.3.18.3 Residual Camber ..... 38
19.3.4 Prestressed I-Girder Deck Forming ..... 38
19.3.4.1 Equal-Span Continuous Structures ..... 39
19.3.4.2 Unequal Spans or Curve Combined With Tangent ..... 40
19.3.5 Construction Joints ..... 40
19.3.6 Strand Types ..... 40
19.3.7 Construction Dimensional Tolerances ..... 41
19.3.8 Prestressed I-Girder Sections ..... 41
19.3.8.1 Prestressed I-Girder Standard Strand Patterns ..... 45
19.3.9 Prestressed Box Girders Post-Tensioned Transversely ..... 45
19.3.9.1 Available Prestressed Box Girder Sections and Maximum Span Lengths ..... 46
19.3.9.2 Decks and Overlays ..... 47
19.3.9.3 Grout between Prestressed Box Girders ..... 47
19.4 Field Adjustments of Pretensioning Force ..... 48
19.5 References ..... 50
19.6 Design Examples ..... 51

## 19.1 Introduction

This chapter provides information intended for prestressed I-girders. Prestressed box girders and general prestressed concrete guidelines are also included in this chapter.

The definition of prestressed concrete as given by the ACI Committee on Prestressed Concrete is:

> "Concrete in which there has been introduced internal stresses of such magnitude and distribution that the stresses resulting from given external loadings are counteracted to a desired degree. In reinforced concrete members the prestress is commonly introduced by tensioning the steel reinforcement."

This internal stress is induced into the member by either of the following prestressing methods.

### 19.1.1 Pretensioning

In pretensioning, the tendons are first stressed to a given level and then the concrete is cast around them. The tendons may be composed of wires, bars or strands.

The most common system of pretensioning is the long line system, by which a number of units are produced at once. First the tendons are stretched between anchorage blocks at opposite ends of the long stretching bed. Next the spacers or separators are placed at the desired member intervals, and then the concrete is placed within these intervals. When the concrete has attained a sufficient strength, the steel is released and its stress is transferred to the concrete via bond.

### 19.1.2 Post-Tensioning

In post-tensioning, the concrete member is first cast with one or more post-tensioning ducts or tubes for future insertion of tendons. Once the concrete is sufficiently strong, the tendons are stressed by jacking against the concrete. When the desired prestress level is reached, the tendons are locked under stress by means of end anchorages or clamps. Subsequently, the duct is filled with grout to protect the steel from corrosion and give the added safeguard of bond.

In contrast to pretensioning, which is usually incorporated in precasting (casting away from final position), post-tensioning lends itself to cast-in-place construction.

## 19.2 Basic Principles

This section defines the internal stress that results from either prestressing method.

First consider the simple beam shown in Figure 19.2-1.

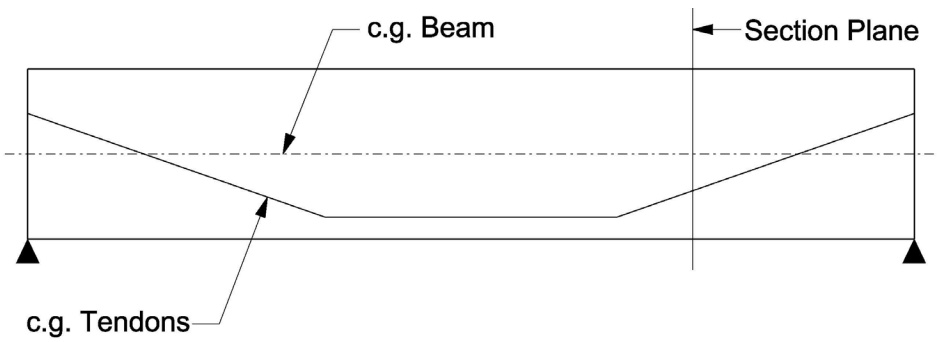


**Figure 19.2-1**
Simple Span Prestressed Concrete Beam

The horizontal component, P, of the tendon force, F, is assumed constant at any section along the length of the beam.

Also, at any section of the beam the forces in the beam and in the tendon are in equilibrium. Forces and moments may be equated at any section.

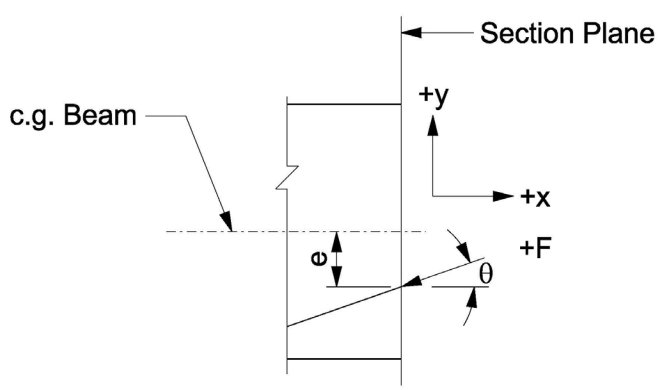


**Figure 19.2-2**
Assumed Sign Convention for Section Forces

The assumed sign convention is as shown in Figure 19.2-2 with the origin at the intersection of the section plane and the center of gravity (centroidal axis) of the beam. This convention indicates compression as positive and tension as negative.

The eccentricity of the tendon can be either positive or negative with respect to the center of gravity; therefore it is unsigned in the general equation. The reaction of the tendon on the beam is always negative; therefore the horizontal component is signed as:

$$P = F\cos\theta$$

Then, by equating forces in the x-direction, the reaction, P, of the tendon on the concrete produces a compressive stress equal to:

$$f_1 = \frac{P}{A}$$

Where:

A = Cross-sectional area of the beam

Since the line of action of the reaction, P, is eccentric to the centroidal axis of the beam by the amount e, it produces a bending moment.

$$M = Pe$$

This moment induces stresses in the beam given by the flexure formula:

$$f_2 = \frac{My}{I} = \frac{Pey}{I}$$

Where:

y = Distance from the centroidal axis to the fiber under consideration, with an unsigned value in the general equations

I = Moment of inertia of the section about its centroidal axis

The algebraic sum of $f_1$ and $f_2$ yields an expression for the total prestress on the section when the beam is not loaded.

$$f_p = f_1 + f_2 = \frac{P}{A} + \frac{Pey}{I}$$

Now, by substituting $I = Ar^2$, where r is the radius of gyration, into the above expression and arranging terms, we have:

$$f_p = \frac{P}{A}\left(1 + \frac{ey}{r^2}\right)$$

These stress conditions are shown in Figure 19.2-3.

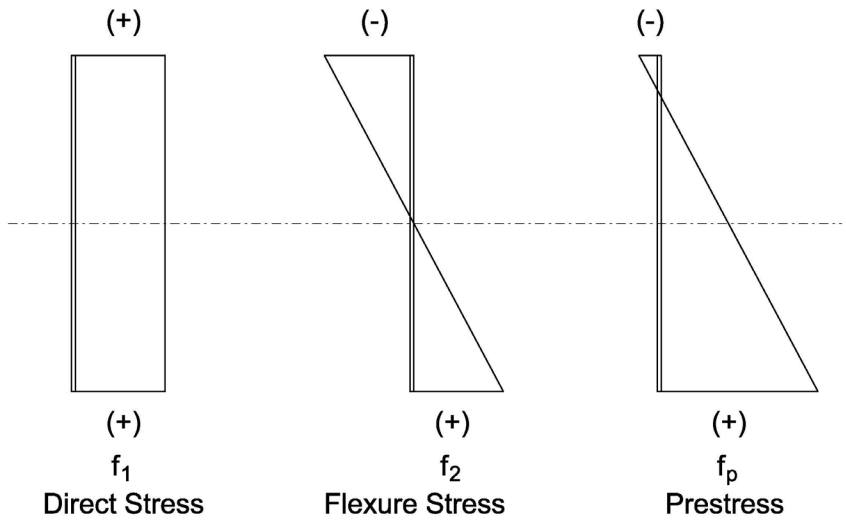


**Figure 19.2-3**
Calculation of Concrete Stress Due to Prestress Force

Finally, we equate forces in the y-direction which yields a shear force, V, over the section of the beam due to the component of the tendon reaction.

$$V = F \sin\theta = P \tan\theta$$

## 19.3 Pretensioned Member Design

This section outlines several important considerations associated with the design of conventional pretensioned members.

### 19.3.1 Design Strengths

The typical specified design strengths for pretensioned members are:

| | | |
|---|---|---|
| Prestressed I-girder concrete: | $f'_c$ | = 6 to 8 ksi |
| Prestressed box girder concrete: | $f'_c$ | = 5 ksi |
| Prestressed concrete (at release): | $f'_{ci}$ | = 0.80 to 0.85 $f'_c \leq$ 6.8 ksi |
| Deck and diaphragm concrete: | $f'_c$ | = 4 ksi |
| Prestressing steel: | $f_{pu}$ | = 270 ksi |
| Grade 60 reinforcement: | $f_y$ | = 60 ksi |

The *actual required* compressive strength of the concrete at prestress transfer, $f'_{ci}$, is to be stated on the plans.

**WisDOT policy item:**

For prestressed I-girders, the use of concrete with strength greater than 8 ksi is only allowed with the prior approval of the BOS Development Section. Occasional use of strengths up to 8.5 ksi may be allowed. Strengths exceeding these values are difficult for local fabricators to consistently achieve as the coarse aggregate strength becomes the controlling factor.

For prestressed box girders, the use of concrete with strength greater than 5 ksi is only allowed with prior approval of the BOS Development Section.

The use of 8 ksi concrete for prestressed I-girders and 6.8 ksi for $f'_{ci}$ still allows the fabricator to use a 24-hour cycle for girder fabrication. There are situations in which higher strength concrete in the prestressed I-girders may be considered for economy, provided that $f'_{ci}$ does not exceed 6.8 ksi. Higher strength concrete may be considered if the extra strength is needed to avoid using a less economical superstructure type or if a shallower girder can be provided and its use justified for sufficient reasons (min. vert. clearance, etc.) Using higher strength concrete to eliminate a girder line is not the preference of the Bureau of Structures. It is often more economical to add an extra girder line than to use debonded strands with the minimum number of girder lines. After the number of girders has been determined, adjustments in girder spacing should be investigated to see if slab thickness can be minimized and balance between interior and exterior girders optimized.

Prestressed I-girders below the required 28-day concrete strength (or 56-day concrete strength for $f'_c$ = 8 ksi) will be accepted if they provide strength greater than required by the design and at the reduction in pay schedule in the *Wisconsin Standard Specifications for Highway and Structure Construction*.

Low relaxation prestressing strands are required.

### 19.3.2 Loading Stages

The loads that a member is subjected to during its design life and those stages that generally influence the design are discussed in **LRFD [5.9]** and in the following sections. The allowable stresses at different loading stages are defined in **LRFD [5.9.2.2]** and **LRFD [5.9.2.3]**.

#### 19.3.2.1 Prestress Transfer

Prestress transfer is the initial condition of prestress that exists immediately following the release of the tendons (transfer of the tendon force to the concrete). The eccentricity of the prestress force produces an upward camber. In addition, a stress due to the dead load of the member itself is also induced. This is a stage of temporary stress that includes a reduction in prestress due to elastic shortening of the member.

#### 19.3.2.2 Losses

After elastic shortening losses, the external loading is the same as at prestress transfer. However, the internal stress due to the prestressing force is further reduced by losses resulting from relaxation due to creep of the prestressing steel together with creep and shrinkage of the concrete. It is assumed that all losses occur prior to application of service loading.

**LRFD [5.9.3]** provides guidance about prestress losses for both pretensioned and post-tensioned members. This section presents a refined and approximate method for the calculation of time-dependent prestress losses such as concrete creep and shrinkage and prestressing steel relaxation.

**<u>WisDOT policy item:</u>**

WisDOT policy is to use the approximate method described in **LRFD [5.9.3.3]** to determine time-dependent losses, since this method does not require the designer to assume the age of the concrete at the different loading stages.

Losses for pretensioned members that are considered during design are listed in the following sections.

##### 19.3.2.2.1 Elastic Shortening

Per **LRFD [5.9.3.2.3a]**, the loss due to elastic shortening, $\Delta f_{pES1}$ (ksi), in pretensioned concrete members shall be taken as:

$$\Delta f_{pES1} = \frac{E_p}{E_{ct}} f_{cgp}$$

Where:

| | | |
|---|---|---|
| $E_p$ | = | Modulus of elasticity of prestressing steel = 28,500 ksi **LRFD [5.4.4.2]** |
| $E_{ct}$ | = | Modulus of elasticity of concrete at transfer or time of load application in ksi (see 19.3.3.8) |
| $f_{gcp}$ | = | Concrete stress at the center of gravity of prestressing tendons due to the prestressing force immediately after transfer and the self-weight of the member at the section of maximum moment (ksi) |

### 19.3.2.2.2 Time-Dependent Losses

Per **LRFD [5.9.3.3],** an estimate of the long-term losses due to steel relaxation as well as concrete creep and shrinkage on standard precast, pretensioned members shall be taken as:

$$\Delta f_{pLT} = 10.0\frac{f_{pi}A_{ps}}{A_g}\gamma_h\gamma_{st} + 12.0\gamma_h\gamma_{st} + \Delta f_{pR}$$

Where:

$$\gamma_h = 1.7 - 0.01H$$

$$\gamma_{st} = \frac{5}{(1+f'_{ci})}$$

| | | |
|---|---|---|
| $f_{pi}$ | = | Prestressing steel stress immediately prior to transfer (ksi) |
| H | = | Average annual ambient relative humidity in %, taken as 72% in Wisconsin |
| $\Delta f_{pR}$ | = | Relaxation loss estimate taken as 2.4 ksi for low relaxation strands or 10.0 ksi for stress-relieved strands (ksi) |

The losses due to elastic shortening must then be added to these time-dependent losses to determine the total losses. For non-standard members with unusual dimensions or built using staged segmental construction, the refined method of **LRFD [5.9.3.4]** shall be used. For prestressed box girders time-dependent losses shall be determined using the refined method of **LRFD [5.9.3.4]**.

### 19.3.2.2.3 Fabrication Losses

Fabrication losses are not considered by the designer, but they affect the design criteria used during design. Anchorage losses which occur during stressing and seating of the prestressed strands vary between 1% and 4%. Losses due to temperature change in the strands during cold weather prestressing are 6% for a 60°F change. The construction specifications permit a 5% difference in the jack pressure and elongation measurement without any adjustment.

### 19.3.2.3 Service Load

During service load, the member is subjected to the same loads that are present after prestress transfer and losses occur, in addition to the effects of the prestressed I-girder and prestressed box girder load-carrying behavior described in the next two sections.

#### 19.3.2.3.1 Prestressed I-Girder

In the case of a prestressed I-girder, the dead load of the deck and diaphragms are always carried by the basic girder section on a simple span. At strand release, the girder dead load moments are calculated based on the full girder length. For all other loading stages, the girder dead load moments are based on the span length. This is due to the type of construction used (that is, unshored girders simply spanning from one substructure unit to another for single-span as well as multi-span structures).

The live load plus dynamic load allowance along with any superimposed dead load (curb, parapet or median strip which is placed after the deck concrete has hardened) are carried by the continuous composite section.

**WisDOT exception to AASHTO:**

The standard pier diaphragm is considered to satisfy the requirements of **LRFD [5.12.3.3.5]** and shall be considered to be fully effective.

In the case of multi-span structures with fully effective diaphragms, the longitudinal distribution of the live load, dynamic load allowance and superimposed dead loads are based on a continuous span structure. This continuity is achieved by:

a. Placing non-prestressed (conventional) reinforcement in the deck area over the interior supports.

b. Casting concrete between and around the abutting ends of adjacent girders to form a diaphragm at the support. Girders shall be in line at interior supports and equal numbers of girders shall be used in adjacent spans. The use of variable numbers of girders between spans requires prior approval by BOS.

It is preferred, but not required, to have a length ratio of two adjacent spans not exceeding 1.5. Short end spans, especially with expansion abutments, can be problematic with regards to having enough dead load to utilize non-anchored laminated elastomeric bearings.

If girder depth changes, the girders would be designed as if the bridge was discontinuous at the shared pier; however, the continuity reinforcement should be designed as if the bridge was being designed continuous at the shared pier. The loads to the shared pier should be determined as if for a continuous bridge (i.e. simple span for non-composite loads and continuous for composite loads).

Bridges may have varying girder spacing between spans. A historically common configuration in Wisconsin for prestressed I-girder superstructures is a four-span bridge with continuous

girders in spans 2 & 3 and different (wider) girder spacing in spans 1 & 4 (Note: this configuration is not recommended for new structures). A replacement deck for such bridges would be designed as continuous, although the rating would be as for separate units – single span, two-span and single span.

#### 19.3.2.3.2 Prestressed Box Girder

In the case of prestressed box girders with a thin concrete overlay, the dead load together with the live load and dynamic load allowance are carried by the basic girder section.

When this girder type has a composite section, the dead load of the deck is carried by the basic section and the live load, dynamic load allowance and any superimposed dead loads are carried by the composite section. A composite section shall consist of a reinforced deck, 6" minimum thickness, with composite shear reinforcement extending into the deck.

**WisDOT policy item:**

The use of prestressed box girders is subject to prior-approval by the Bureau of Structures. These structures are currently limited to the following requirements:

- Single spans
- Composite section details (design and rating based on non-composite section)
- 30 degree maximum skew
- AADT < 3,500 on non-NHS roadways

Variations to these requirements require approval by the Bureau of Structures.

#### 19.3.2.4 Factored Flexural Resistance

At the final stage, the factored flexural resistance of the composite section is considered. Since the member is designed on a service load basis, it must be checked for its factored flexural resistance at the Strength I limit state. See section 17.2.3 for a discussion on limit states.

The need for both service load and strength computations lies with the radical change in a member's behavior when cracks form. Prior to cracking, the gross area of the member is effective. As a crack develops, all the tension in the concrete is picked up by the reinforcement. If the percentage of reinforcement is small, there is very little added capacity between cracking and failure.

#### 19.3.2.5 Fatigue Limit State

At the final stage, the member is checked for the Fatigue I limit state. See section 17.2.3 for a discussion on limit states. Allowable compressive stresses in the concrete and tensile stresses in the non-prestressed reinforcement are checked.

### 19.3.3 Design Procedure

The intent of this section is to provide the designer with a general outline of steps for the design of pretensioned members. Sections of interest during design include, but are not limited to, the following locations:

- 10th points
- Hold-down points
- Regions where the prestress force changes (consider the effects of transfer and development lengths, as well as the effects of debonded strands)
- Critical section(s) for shear

The designer must consider the amount of prestress force at each design section, taking into account the transfer length and development length, if appropriate.

#### 19.3.3.1 Prestressed I-Girder Member Spacing

A trial prestressed I-girder arrangement is made by using Table 19.3-1 and Table 19.3-2 as a guide. An ideal spacing results in equal strands for interior and exterior girders, together with an optimum slab thickness. Current practice is to use a minimum haunch of (1-1/4" plus deck cross slope times one-half top flange width) for section property calculations and then use a 3" average haunch for concrete preliminary quantity calculations. After preliminary design this value should be revised as needed as outlined in 19.3.4. The maximum slab overhang dimensions are detailed in 17.6.2.

For prestressed I-girder bridges, other than pedestrian or other unusual structures, four or more girders shall be used.

#### 19.3.3.2 Prestressed Box Girder Member Spacing

The prestressed box girder is used in an adjacent multi-beam system only. Precast units are placed side by side and locked (post-tensioned) together. The span length, desired roadway width and live loading control the size of the member.

When selecting a 3' wide section vs. 4' wide section, do not mix 3' wide and 4' wide sections across the width of the bridge. Examine the roadway width produced by using all 3' wide sections or all 4' wide sections and choose the system that is the closest to but greater than the required roadway width. While 3' wide sections may produce a slightly narrower roadway width 4' wide sections are still preferred since they require fewer sections. Verify the required

roadway width is possible when considerations are made for the roadway cross-slope. Table 19.3-3 states the approximate span limitations for each section depth. Coordinate roadway width with roadway designers and consider some variability. See the Standards for prestressed box girder details.

### 19.3.3.3 Dead Load

For a detailed discussion of the application of dead load, refer to 17.2.4.1.

The dead load moments and shears due to the girder and concrete deck are computed for simple spans. When superimposed dead loads are considered, the superimposed dead load moments are based on continuous spans.

A superimposed dead load of 20 psf is to be included in all designs which account for a possible future concrete overlay wearing surface. The future wearing surface shall be applied between the faces of curbs or parapets and shall be equally distributed among all the girders in the cross section.

For a cross section without a sidewalk, any curb or parapet dead load is distributed equally to all girders.

For a cross section with a sidewalk and barrier on the overhang, sidewalk and barrier dead loads shall be applied to the exterior girder by the lever rule. These loads shall also be applied to the interior girder by dividing the weight equally among all the girders. A more detailed discussion of dead load distribution can be found in 17.2.8.

### 19.3.3.4 Live Load

The HL-93 live load shall be used for all new bridges. Refer to section 17.2.4.2 for a detailed description of the HL-93 live load, including the design truck, design tandem, design lane, and double truck.

### 19.3.3.5 Live Load Distribution

The live load distribution factors shall be computed as specified in **LRFD [4.6.2.2].** Table 17.2-7 summarizes the equations required for prestressed I-girders. The moment and shear distribution factors for prestressed I-girders are determined using equations that consider girder spacing, span length, deck thickness, the number of girders, skew and the longitudinal stiffness parameter. See the WisDOT policy item for live load distribution factors for prestressed box girders.

Separate shear and moment distribution factors are computed for interior and exterior girders. The applicability ranges of the distribution factors shall also be considered. If the applicability ranges are not satisfied, then conservative assumptions must be made based on sound engineering judgment.

**WisDOT policy item:**

The typical cross section for prestressed box girders shall be type "g" as illustrated in **LRFD [Table 4.6.2.2.1-1]**.

For prestressed box girders, the St. Venant torsional inertia, J, may be calculated as closed thin-walled sections for sections with voids, and as solid sections for sections without voids in accordance with **LRFD [C4.6.2.2.1]**.

See 17.2.8 for additional information regarding live load distribution.

### 19.3.3.6 Dynamic Load Allowance

The dynamic load allowance, IM, is given by **LRFD [3.6.2]**. Dynamic load allowance equals 33% for all live load limit states except the fatigue limit state and is not applied to pedestrian loads or the lane load portion of the HL-93 live load. See 17.2.4.3 for further information regarding dynamic load allowance.

### 19.3.3.7 Prestressed I-Girder Deck Design

The design of concrete decks on prestressed I-girders is based on **LRFD [4.6.2.1]**. Moments from truck wheel loads are distributed over a width of deck which spans perpendicular to the girders. This width is known as the distribution width and is given by **LRFD [Table 4.6.2.1.3-1]**. See 17.5 for further information regarding deck design.

### 19.3.3.8 Composite Section

The effective flange width is the width of the deck slab that is to be taken as effective in composite action for determining resistance for all limit states. The effective flange width, in accordance with **LRFD [4.6.2.6]**, is equal to the tributary width of the girder for interior girders. For exterior girders, it is equal to one half the effective flange width of the adjacent interior girder plus the overhang width. The effective flange width shall be determined for both interior and exterior beams.

Since the deck concrete has a lower strength than the girder concrete, it also has a lower modulus of elasticity. Therefore, when computing composite section properties, the effective flange width (as stated above) must be reduced by the ratio of the modulus of elasticity of the deck concrete divided by the modulus of elasticity of the girder concrete.

**WisDOT exception to AASHTO:**

WisDOT uses the formulas shown below to determine $E_c$ for prestressed girder design. For 6 ksi girder concrete, $E_c$ is 5,500 ksi, and for 4 ksi deck concrete, $E_c$ is 4,125 ksi. The $E_c$ value of 5,500 ksi for 6 ksi girder concrete strength was determined from deflection studies. These equations are used in place of those presented in **LRFD [5.4.2.4]** for the following calculations: strength, section properties, and deflections due to externally applied dead and live loads.

For slab concrete strength other than 4 ksi, $E_c$ is calculated from the following formula:

$$E_c = \frac{4{,}125\sqrt{f'_c}}{\sqrt{4}} \text{ (ksi)}$$

For girder concrete strengths other than 6 ksi, $E_c$ is calculated from the following formula:

$$E_c = \frac{5{,}500\sqrt{f'_c}}{\sqrt{6}} \text{ (ksi)}$$

**WisDOT policy item:**

WisDOT uses the equation presented in **LRFD [5.4.2.4]** (and shown below) to calculate the modulus of elasticity at the time of release using the specified value of f'ci. This value of $E_i$ is used for loss calculations and for girder camber due to prestress forces and girder self-weight.

$$E_c = 33{,}000 \cdot K_1 \cdot w_c^{1.5} \sqrt{f'_{ci}}$$

Where:

| | | |
|---|---|---|
| $K_1$ | = | Correction factor for source of aggregate, use 1.0 unless previously approved by BOS. |
| $w_c$ | = | Unit weight of concrete, 0.150 (kcf) |
| $f'_{ci}$ | = | Specified compressive strength of concrete at the time of release (ksi) |

### 19.3.3.9 Design Stress

In many cases, stress at the Service III limit state in the bottom fiber at or near midspan after losses will control the flexural design. Determine a trial strand pattern for this condition and proceed with the flexural design, adjusting the strand pattern if necessary.

The design stress is the sum of the Service III limit state bottom fiber stresses due to non-composite dead load on the basic girder section, plus live load, dynamic load allowance and superimposed dead load on the composite section, as follows:

$$f_{des} = \frac{M_{d(nc)}}{S_{b(nc)}} + \frac{M_{d(c)} + M_{(LL+IM)}}{S_{b(c)}}$$

Where:

| | | |
|---|---|---|
| $f_{des}$ | = | Service III design stress at section (ksi) |
| $M_{d(nc)}$ | = | Service III non-composite dead load moment at section (k-in) |
| $M_{d(c)}$ | = | Service III superimposed dead load moment at section (k-in) |
| $M_{(LL+IM)}$ | = | Service III live load plus dynamic load allowance moment at section (k-in) |

| | | |
|---|---|---|
| $S_{b(nc)}$ | = | Non-composite section modulus for bottom of basic beam ($in^3$) |
| $S_{b(c)}$ | = | Composite section modulus for bottom of basic beam ($in^3$) |

The point of maximum stress is generally 0.5 of the span for both end and intermediate spans. But for longer spans (over 100'), the 0.4 point of the end span may control and should be checked.

### 19.3.3.10 Prestress Force

With $f_{des}$ known, compute the required effective stress in the prestressing steel after losses, $f_{pe}$, needed to counteract all the design stress except an amount of tension equal to the tensile stress limit listed in **LRFD [Table 5.9.2.3.2b-1]**. The top of the girder is subjected to severe corrosion conditions and the bottom of the girder is subjected to moderate exposure. The Service III tensile stress at the bottom fiber after losses for pretensioned concrete shall not exceed $0.19\lambda\sqrt{f'_c}$ (or 0.6 ksi) ; where $\lambda$ = concrete density modification factor **LRFD [5.4.2.8]**, and has a value of 1.0 for normal weight concrete. Therefore:

$$f_{pe} = f_{des} - \min(0.19\sqrt{f'_c} \text{ or } 0.6 \text{ ksi})$$

Note: A conservative approach used in hand calculations is to assume that the allowable tensile stress equals zero.

Applying the theory discussed in 19.2:

$$f_{pe} = \frac{P_{pe}}{A}\left(1 + \frac{ey}{r^2}\right)$$

Where:

| | | |
|---|---|---|
| $P_{pe}$ | = | Effective prestress force after losses (kips) |
| A | = | Basic beam area ($in^2$) |
| e | = | Eccentricity of prestressing strands with respect to the centroid of the basic beam at section (in) |
| r | = | $\sqrt{\frac{I}{A}}$ of the basic beam (in) |

For prestressed box girders, assume an e and apply this to the above equation to determine $P_{pe}$ and the approximate number of strands. Then a trial strand pattern is established using the Standard Details as a guide, and a check is made on the assumed eccentricity. For prestressed

I-girders, $f_{pe}$ is solved for several predetermined patterns and is tabulated in the Standard Details.

Present practice is to detail all spans of equal length with the same number of strands, unless a span requires more than three additional strands. In this case, the different strand arrangements are detailed along with a plan note stating: "The manufacturer may furnish all girders with the greater number of strands."

### 19.3.3.11 Service Limit State

Several checks need to be performed at the service limit state. Refer to the previous narrative in 19.3.3 for sections to be investigated and section 17.2.3.2 for discussion on the service limit state. Note that Service I limit state is used when checking compressive stresses and Service III limit state is used when checking tensile stresses.

The following should be verified by the engineer:

- Verify that the Service III tensile stress due to beam self-weight and prestress applied to the basic beam at transfer does not exceed the limits presented in **LRFD [Table 5.9.2.3.1b-1]**, which depend upon whether or not the strands are bonded and satisfy stress requirements. This will generally control at the top of the beam near the beam ends where the dead load moment approaches zero and is not able to counter the tensile stress at the top of the beam induced by the prestress force. When the calculated tensile stress exceeds the stress limits, the strand pattern must be modified by draping or partially debonding the strand configuration.

- Verify that the Service I compressive stress due to beam self-weight and prestress applied to the basic beam at transfer does not exceed 0.65 $f'_{ci}$, as presented in **LRFD [5.9.2.3.1a]**. This will generally control at the bottom of the beam near the beam ends or at the hold-down point if using draped strands.

- Verify that the Service III tensile stress due to all dead and live loads applied to the appropriate sections after losses does not exceed the limits presented in **LRFD [Table 5.9.2.3.2b-1]**. No tensile stress shall be permitted for unbonded strands. The tensile stress of bonded strands shall not exceed $0.19\lambda\sqrt{f'_c}$ (or 0.6 ksi) as all strands shall be considered to be in moderate corrosive conditions. This will generally control at the bottom of the beam near midspan and at the top of the continuous end of the beam. The value of $\lambda$ is 1.0 for normal weight concrete **LRFD [5.4.2.8]**.

- Verify that the Service I compressive stress due to all dead and live loads applied to the appropriate sections after losses does not exceed the limits presented in **LRFD [Table 5.9.2.3.2a-1]**. Two checks need to be made for girder bridges. The compressive stress due to the sum of effective prestress and permanent loads shall not exceed 0.45 $f'_c$ (ksi). The compressive stress due to the sum of effective prestress, permanent loads and transient loads shall not exceed $0.60\phi_w f'_c$ (ksi). The term $\phi_w$, a reduction factor applied to thin-walled box girders, shall be 1.0 for WisDOT standard girders.

- Verify that Fatigue I compressive stress due to fatigue live load and one-half the sum of effective prestress and permanent loads does not exceed 0.40 $f'_c$ (ksi) **LRFD [5.5.3.1]**.

- Verify that the Service I compressive stress at the top of the deck due to all dead and live loads applied to the appropriate sections after losses does not exceed 0.40 $f'_c$.

**WisDOT policy item:**

The top of the prestressed I-girders at interior supports shall be designed as reinforced concrete members at the strength limit state in accordance with **LRFD [5.12.3.3.6]**. In this case, the stress limits for the service limit state shall not apply to this region of the precast girder.

### 19.3.3.12 Raised, Draped or Partially Debonded Strands

When straight strands are bonded for the full length of a prestressed girder, the tensile and compressive stresses near the ends of the girder will likely exceed the allowable service limit state stresses. This occurs because the strand pattern is designed for stresses at or near midspan, where the dead load moment is highest and best able to balance the effects of the prestress. Near the ends of the girder this dead load moment approaches zero and is less able to balance the prestress force. This results in tensile stresses in the top of the girder and compressive stresses in the bottom of the girder. The allowable initial tensile and compressive stresses are presented in the first two bullet points of 19.3.3.11. These stresses are a function of $f'_{ci}$, the compressive strength of concrete at the time of prestress force transfer. Transfer and development lengths should be considered when checking stresses near the ends of the girder.

The designer should start with a straight (raised), fully bonded strand pattern. If this overstresses the girder near the ends, the following methods shall be utilized to bring the girder within the allowable stresses. These methods are listed in order of preference and discussed in the following sections:

1. Use raised strand pattern (If excessive top flange reinforcement or if four or more additional strands versus a draped strand pattern are required, consider the draped strand alternative)

2. Use draped strand pattern

3. Use partially debonded strand pattern (to be used sparingly)

Only show one strand pattern per span (i.e. Do not show both raised and draped span alternatives for a given span).

A different girder spacing may need to be selected. It is often more economical to add an extra girder line than to maximize the number of strands and use debonding.

Prestressed box girders strands are to be straight, bonded, and located as shown in the Standard Details.

### 19.3.3.12.1 Raised Strand Patterns

Some of the standard strand patterns listed in the Standard Details show a raised strand pattern. Generally strands are placed so that the center of gravity of the strand pattern is as close as possible to the bottom of the girder. With a raised strand pattern, the center of gravity of the strand pattern is raised slightly and is a constant distance from the bottom of the girder for its entire length. Present practice is to show a standard raised arrangement as a preferred alternate to draping for short spans. For longer spans, debonding at the ends of the strands is an alternate (see 19.3.3.12.3). Use 0.6" strands for all raised patterns.

### 19.3.3.12.2 Draped Strand Patterns

Draping some of the strands is another available method to decrease stresses from prestress at the ends of the I-beam where the stress due to applied loads are minimum.

The typical strand profile for this technique is shown in Figure 19.3-1.

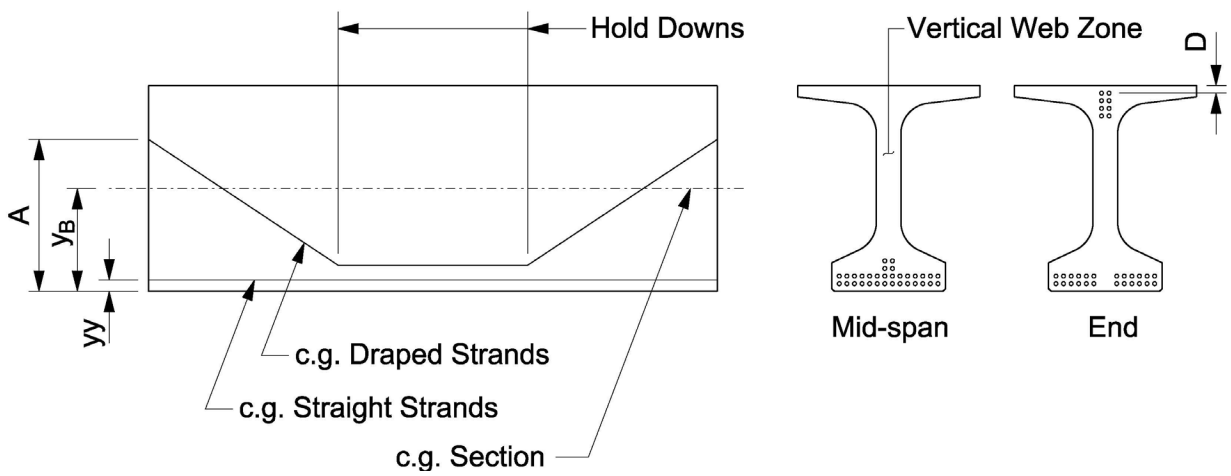


**Figure 19.3-1**
Typical Draped Strand Profile

Note that all the strands that lie within the "vertical web zone" of the mid-span arrangement are used in the draped group.

The engineer should show only one strand size for the draped pattern on the plans. Use only 0.5" strands for the draped pattern on 28" and 36" prestressed I-girders and 0.6" strands for all raised (straight) patterns for these shapes. Use 0.6" strands, only, for 36W", 45W", 54W", 72W" and 82W" prestressed I-girders. See Chapter 40 standards for 45", 54" and 70" prestressed I-girders.

Hold-down points for draped strands are located approximately between the 1/3 point and the 4/10 point from each end of the girder. The Standard Details, Prestressed Girder Details, show B values at the 1/4 point of the girder. On the plan sheets provide values for $B_{min}$ and $B_{max}$ as determined by the formulas shown on the Standards.

The maximum slope specified for draped strands is 12%. This limit is determined from the safe uplift load per strand of commercially available strand restraining devices used for hold-downs. The minimum distance, D, allowed from center of strands to top of flange is 2”. For most designs, the maximum allowable slope of 12% will determine the location of the draped strands. Using a maximum slope will also have a positive effect on shear forces.

Initial girder stresses are checked at the end of the transfer length, which is located 60 strand diameters from the girder end. The transfer length is the embedment length required to develop $f_{pe}$, the effective prestressing steel stress (ksi) after losses. The prestressing steel stress varies linearly from 0.0 to $f_{pe}$ along the transfer length.

The longer full development length of the strand is required to reach the larger prestressing steel stress at nominal resistance, $f_{ps}$ (ksi). The strand stress is assumed to increase linearly from $f_{pe}$ to $f_{ps}$ over the distance between the transfer length and development length.

Per **LRFD [5.9.4.3.2]**, the development length is:

$$\ell_d \geq \kappa\left(f_{ps} - \frac{2}{3}f_{pe}\right)d_b$$

Where:

| | | |
|---|---|---|
| $d_b$ | = | Nominal strand diameter (in) |
| $\kappa$ | = | 1.0 for members with a depth less than or equal to 24”, and 1.6 for members with a depth of greater than 24” |

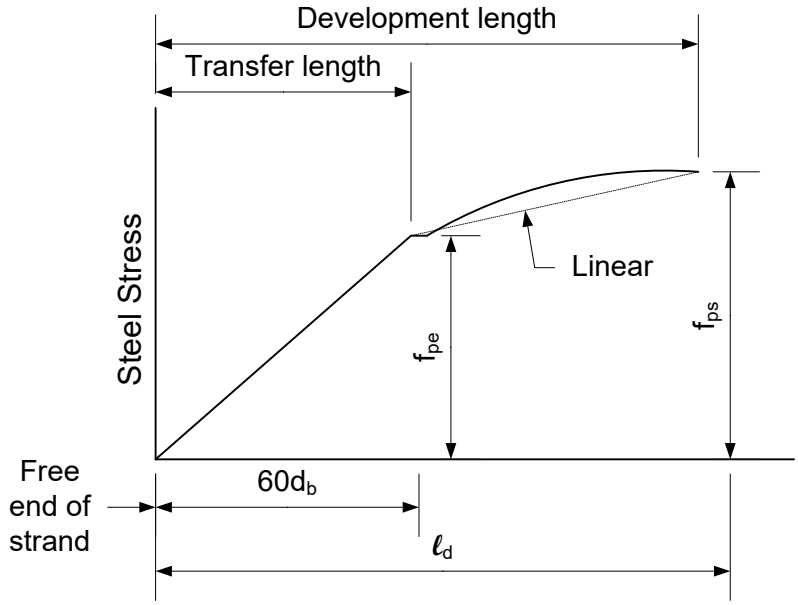


**Figure 19.3-2**
Transfer and Development Length

### 19.3.3.12.3 Partially Debonded Strand Patterns

The designer may use debonded strands if a raised or draped strand configuration fails to meet the allowable service stresses. The designer should exercise caution when using debonded strands as this may not result in the most economical design. Partially debonded strands are fabricated by wrapping sleeves around individual strands for a specified length from the ends of the girder, rendering the bond between the strand and the girder concrete ineffective for the wrapped, or shielded, length.

Bond breakers should only be applied to interior strands as girder cracking has occurred when they were applied to exterior strands. In computing bond breaker lengths, consideration is given to the theoretical stresses at the ends of the girder. These stresses are due entirely to prestress. As a result, the designer may compute a stress reduction based on certain strands having bond breakers. This reduction can be applied along the length of the debonded strands.

Partially debonded strands must adhere to the requirements listed in **LRFD [5.9.4.3.3]**. The list of requirements is as follows:

- The development length of partially debonded strands shall be calculated in accordance with **LRFD [5.9.4.3.2]** with $\kappa = 2.0$.
- The number of debonded strands shall not exceed 25% of the total number of strands.

- The number of debonded strands in any horizontal row shall not exceed 40% of the strands in that row.
- The length of debonding shall be such that all limit states are satisfied with consideration of the total developed resistance (transfer and development length) at any section being investigated.
- Not more than 40% of the debonded strands, or four strands, whichever is greater, shall have debonding terminated at any section.
- The strand pattern shall be symmetrical about the vertical axis of the girder. The consideration of symmetry shall include not only the strands being debonded but their debonded length as well, with the goal of keeping the center of gravity of the prestress force at the vertical centerline of the girder at any section. If the center of gravity of the prestress force deviates from the vertical centerline of the girder, the girder will twist, which is undesirable.
- Exterior strands in each horizontal row shall be fully bonded for crack control purposes.

### 19.3.3.13 Strength Limit State

The design factored positive moment is determined using the following equation:

$$M_u = 1.25DC + 1.50DW + 1.75(LL + IM)$$

The Strength I limit state is applied to both simple and continuous span structures. See 17.2.4 for further information regarding loads and load combinations.

#### 19.3.3.13.1 Factored Flexural Resistance

The nominal flexural resistance assuming rectangular behavior is given by **LRFD [5.6.3.2.3]** and **LRFD [5.6.3.2.2]**.

The section will act as a rectangular section as long as the depth of the equivalent stress block, a, is less than or equal to the depth of the compression flange (the structural deck thickness). Per **LRFD [5.6.3.2.2]**:

$$a = c\beta_1$$

Where:

| | | |
|---|---|---|
| c | = | Distance from extreme compression fiber to the neutral axis assuming the tendon prestressing steel has yielded (in) |
| $\beta_1$ | = | Stress block factor **LRFD [5.6.2.2]** |

By neglecting the area of mild compression and tension reinforcement, the equation presented in **LRFD [5.7.3.1.1]** for rectangular section behavior reduces to:

$$c = \frac{A_{ps} f_{pu}}{\alpha_1 f'_c \beta_1 b + k A_{ps} \frac{f_{pu}}{d_p}}$$

Where:

| | | |
|---|---|---|
| $A_{ps}$ | = | Area of prestressing steel ($in^2$) |
| $f_{pu}$ | = | Specified tensile strength of prestressing steel (ksi) |
| $f'_c$ | = | Compressive strength of the flange ($f'_{c(deck)}$ for rectangular section) (ksi) |
| b | = | Width of compression flange (in) |
| k | = | 0.28 for low relaxation strand per **LRFD [C5.6.3.1.1]** |
| $d_p$ | = | Distance from extreme compression fiber to the centroid of the prestressing tendons (in) |

$\alpha_1$ = Stress block factor; equals 0.85 (for $f'_C \leq 10.0$ ksi) **LRFD [5.6.2.2]**

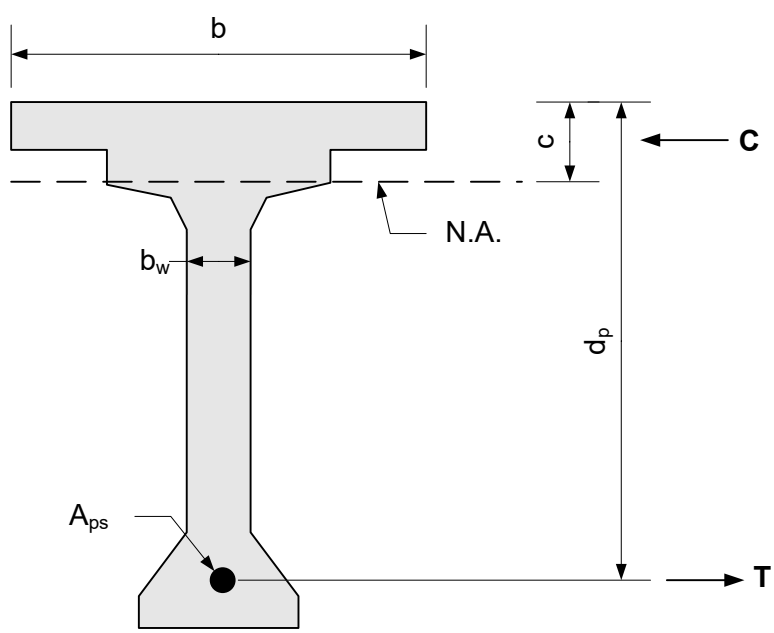


**Figure 19.3-3**
Depth to Neutral Axis, c

Verify that rectangular section behavior is allowed by checking that the depth of the equivalent stress block, a, is less than or equal to the structural deck thickness. If it is not, then T-section behavior provisions should be followed. If the T-section provisions are used, the compression block will be composed of two different materials with different compressive strengths. In this situation, **LRFD [C5.6.2.2]** recommends using $\beta_1$ and $\alpha_1$ corresponding to the lower $f'_c$. The following equation for c shall be used for T-section behavior: **LRFD [5.6.3.1.1]**

$$c = \frac{A_{ps} f_{pu} - \alpha_1 f'_c (b - b_w) h_f}{\alpha_1 f'_c \beta_1 b_w + k A_{ps} \frac{f_{pu}}{d_p}}$$

Where:

| | | |
|---|---|---|
| $b_w$ | = | Width of web (in) – use the top flange width if the compression block does not extend below the haunch. |
| $h_f$ | = | Depth of compression flange (in) |

The factored flexural resistance presented in **LRFD [5.6.3.2.2]** is simplified by neglecting the area of mild compression and tension reinforcement. Furthermore, if rectangular section behavior is allowed, then $b_w = b$, where $b_w$ is the web width as shown in Figure 19.3-3. The equation then reduces to:

$$M_r = \phi A_{ps} f_{ps} \left( d_p - \frac{a}{2} \right)$$

Where:

| | | |
|---|---|---|
| $M_r$ | = | Factored flexural resistance (kip-in) |
| $\phi$ | = | Resistance factor |
| $f_{ps}$ | = | Average stress in prestressing steel at nominal bending resistance (refer to **LRFD [5.6.3.1.1]**) (ksi) |

If the T-section provisions must be used, the factored moment resistance equation is then:

$$M_r = \phi A_{ps} f_{ps} \left( d_p - \frac{a}{2} \right) + \alpha_1 \phi f'_c (b - b_w) h_f \left( \frac{a}{2} - \frac{h_f}{2} \right)$$

Where:

| | | |
|---|---|---|
| $h_f$ | = | Depth of compression flange with width, b (in) |

The engineer must then verify that $M_r$ is greater than or equal to $M_u$.

**WisDOT exception to AASHTO:**

WisDOT standard prestressed I-girders and strand patterns are tension-controlled. The $\varepsilon_t$ check, as specified in **LRFD [5.6.2.1]**, is not required when the standard girders and strand patterns are used, and $\phi = 1$.

### 19.3.3.13.2 Minimum Reinforcement

Per **LRFD [5.6.3.3]**, the minimum amount of prestressed reinforcement provided shall be adequate to develop a $M_r$ at least equal to the lesser of $M_{cr}$, or $1.33M_u$.

$M_{cr}$ is the cracking moment, and is given by:

$$M_{cr} = \gamma_3 [ S_c ( \gamma_1 f_r + \gamma_2 f_{cpe} ) - 12M_{dnc} [(S_c/S_{nc}) - 1] ]$$

Where:

| | | |
|---|---|---|
| $S_c$ | = | Section modulus for the extreme fiber of the composite section where tensile stress is caused by externally applied loads ($in^3$) |
| $f_r$ | = | Modulus of rupture (ksi) |
| $f_{cpe}$ | = | Compressive stress in concrete due to effective prestress forces only (after losses) at extreme fiber of section where tensile stress is caused by externally applied loads (ksi) |
| $M_{dnc}$ | = | Total unfactored dead load moment acting on the basic beam (k-ft) |
| $S_{nc}$ | = | Section modulus for the extreme fiber of the basic beam where tensile stress is caused by externally applied loads ($in^3$) |
| $\gamma_1$ | = | 1.6 flexural cracking variability factor |
| $\gamma_2$ | = | 1.1 prestress variability factor |
| $\gamma_3$ | = | 1.0 for prestressed concrete structures |

Per **LRFD [5.4.2.6]**, the modulus of rupture for normal weight concrete is given by:

$f_r = 0.24\lambda\sqrt{f'_c}$ ; where $\lambda$ = conc. density modification factor **LRFD [5.4.2.8]**, and has a value of 1.0 for normal weight conc.

### 19.3.3.14 Non-prestressed Reinforcement

Non-prestressed reinforcement consists of bar steel reinforcement used in the conventional manner. It is placed longitudinally along the top of the member to carry any tension which may develop after transfer of prestress. The designer should completely detail all rebar layouts including stirrups.

The amount of reinforcement is that which is sufficient to resist the total tension force in the concrete based on the assumption of an uncracked section.

For draped designs, the control is at the hold-down point of the girder. At the hold-down point, the initial prestress is acting together with the girder dead load stress. This is where tension due to prestress is still maximum and compression due to girder dead load is decreasing.

For non-draped designs, the control is at the end of the member where prestress tension exists but dead load stress does not.

Note that a minimum amount of reinforcement is specified in the Standards. This is intended to help prevent serious damage due to unforeseeable causes like improper handling or storing.

### 19.3.3.15 Horizontal Shear Reinforcement

The horizontal shear reinforcement resists the Strength I limit state horizontal shear that develops at the interface of the slab and girder in a composite section. The dead load used to calculate the horizontal shear should only consider the DC and DW dead loads that act on the composite section. See 17.2.4 for further information regarding the treatment of dead loads and load combinations.

$$V_u = 1.25DC + 1.50DW + 1.75(LL + IM)$$

$$V_{ni} \geq V_{ui} / \phi$$

Where:

| | | |
|---|---|---|
| $V_u$ | = | Maximum strength limit state vertical shear (kips) |
| $V_{ui}$ | = | Strength limit state horizontal shear at the girder/slab interface (kips) |
| $V_{ni}$ | = | Nominal interface shear resistance (kips) |
| $\phi$ | = | 0.90 per **LRFD [5.5.4.2]** |

The shear stress at the interface between the slab and the girder is given by:

$$v_{ui} = \frac{V_u}{b_{vi} d_v}$$

Where:

| | | |
|---|---|---|
| $v_{ui}$ | = | Factored shear stress at the slab/girder interface (ksi) |
| $b_{vi}$ | = | Interface width to be considered in shear transfer (in) |
| $d_v$ | = | Distance between the centroid of the girder tension steel and the mid-thickness of the slab (in) |

The factored horizontal interface shear shall then be determined as:

$$V_{ui} = 12 v_{ui} b_{vi}$$

The nominal interface shear resistance shall be taken as:

$$V_{ni} = cA_{cv} + \mu\left[A_{vf} f_y + P_c\right]$$

Where:

| | | |
|---|---|---|
| $A_{cv}$ | = | Concrete area considered to be engaged in interface shear transfer. This value shall be set equal to $12b_{vi}$ (ksi) |
| c | = | Cohesion factor specified in **LRFD [5.7.4.4]**. This value shall be taken as 0.28 ksi for WisDOT standard girders with a cast-in-place deck |
| $\mu$ | = | Friction factor specified in **LRFD [5.7.4.4]**. This value shall be taken as 1.0 for WisDOT standard girders with a cast-in-place deck (dim.) |
| $A_{vf}$ | = | Area of interface shear reinforcement crossing the shear plan within the area $A_{cv}$ ($in^2$) |
| $f_y$ | = | Yield stress of shear interface reinforcement not to exceed 60 (ksi) |
| $P_c$ | = | Permanent net compressive force normal to the shear plane (kips) |

$P_c$ shall include the weight of the deck, haunch, parapets, and future wearing surface. A conservative assumption that may be considered is to set $P_c = 0.0$.

The nominal interface shear resistance, $V_{ni}$, shall not exceed the lesser of:

$$V_{ni} \le K_1 f'_c A_{cv} \quad \text{or} \quad V_{ni} \le K_2 A_{cv}$$

Where:

| | | |
|---|---|---|
| $K_1$ | = | Fraction of concrete strength available to resist interface shear as specified in **LRFD [5.7.4.4]**. This value shall be taken as 0.3 for WisDOT standard girders with a cast-in-place deck (dim.) |
| $K_2$ | = | Limiting interface shear resistance as specified in **LRFD [5.7.4.4]**. This value shall be taken as 1.8 ksi for WisDOT standard girders with a cast-in-place deck |

**WisDOT policy item:**

The stirrups that extend into the deck slab presented on the Standards are considered adequate to satisfy the minimum reinforcement requirements of **LRFD [5.7.4.2]**

### 19.3.3.16 Web Shear Reinforcement

Web shear reinforcement consists of placing conventional reinforcement perpendicular to the axis of the girder.

**WisDOT policy item:**

Web shear reinforcement shall be designed by **LRFD [5.7.3.4.2]** (General Procedure) using the Strength I limit state for WisDOT standard girders.

WisDOT prefers girders with spacing symmetrical about the midspan in order to simplify design and fabrication. The designer is encouraged to simplify the stirrup arrangement as much as possible. For vertical stirrups, the required area of web shear reinforcement is given by the following equation:

$$A_v \geq \frac{(V_n - V_c)s}{f_y d_v \cot\theta} \quad \text{(or } 0.0316\lambda\sqrt{f'_c}\frac{b_v s}{f_y} \text{ minimum , } \textbf{LRFD [5.7.2.5]}\text{)}$$

Where:

| | | |
|---|---|---|
| $A_v$ | = | Area of transverse reinforcement within distance, s ($in^2$) |
| $V_n$ | = | Nominal shear resistance (kips) |
| $V_c$ | = | Nominal shear resistance of the concrete (kips) |
| s | = | Spacing of transverse reinforcement (in) |
| $f_y$ | = | Specified minimum yield strength of transverse reinforcement (ksi) |
| $d_v$ | = | Effective shear depth as determined in **LRFD [5.7.2.8]** (in) |
| $\theta$ | = | Angle of inclination of diagonal compressive stresses as determined in **LRFD 5.7.3.4** (degrees) |
| $b_v$ | = | Minimum web width within the depth $d_v$, (in) |
| $\lambda$ | = | Concrete density modification factor; for normal weight conc. = 1.0, **LRFD [5.4.2.8]** |

$\theta$ shall be taken as follows:

$$\theta = 29 + 3500\varepsilon_s$$

Where:

$\varepsilon_s$ = Net longitudinal tensile strain in the section at the centroid of the tension reinforcement.

$$= \frac{\left(\frac{|M_u|}{d_v} + 0.5N_u + |V_u - V_p| - A_{ps}f_{po}\right)}{E_sA_s + E_pA_{ps}}$$

Where:

$|M_u|$ = Absolute value of the factored moment at the section, not taken less than $|V_u - V_p|d_v$ (kip-in.)

$N_u$ = Factored axial force, taken as positive if tensile and negative if compression (kip)

$V_p$ = Component of prestressing force in the direction of the shear force; positive if resisting the applied shear (kip)

$A_{ps}$ = Area of prestressing steel on the flexural tension side of the member ($in^2$).

$A_s$ = Area of nonprestressing steel on the flexural tension side of the member ($in^2$).

$f_{po}$ = A parameter taken as modulus of elasticity of prestressing steel multiplied by the locked-in difference in strain between the prestressing steel and the surrounding concrete (ksi).

$$V_u = 1.25DC + 1.5DW + 1.75(LL + IM)$$
$$V_n = V_u / \phi$$

Where:

$V_u$ = Strength I Limit State shear force (kips)

$\phi$ = 0.90 per **LRFD [5.5.4.2]**

See 17.2 for further iformation regarding load combinations.

Per **LRFD [5.7.3.3]**, determine $V_c$ as given by:

$$V_c = 0.0316\beta\lambda\sqrt{f'_c}\, b_v d_v$$

Where:

$\beta$ = Factor indicating ability of diagonally cracked concrete to transmit tension and shear. **LRFD [5.7.3.4]**

$\lambda$ = Concrete density modification factor; for normal weight conc. = 1.0, **LRFD [5.4.2.8]**

Where:

$\beta = \frac{4.8}{(1+750\varepsilon_s)}$ (For sections containing at least the minimum amount of transverse reinforcement specified in **LRFD [5.7.2.5]**)

**WisDOT policy item:**
Based on past performance, for prestressed I-girders the upper limit for web reinforcement spacing, $s_{max}$, per **LRFD [5.7.2.6]** will be reduced to 18 inches.

When determining shear reinforcement, spacing requirements as determined by analysis at 1/10th points, for example, should be carried-out to the next 1/10th point. As an illustration, spacing requirements for the 1/10th point should be carried out to very close to the 2/10th point, as the engineer, without a more refined analysis, does not know what the spacing requirements would be at the 0.19 point. For the relatively small price of stirrups, don't shortchange the shear capacity of the prestressed girder.

The web reinforcement spacing shall not exceed the maximum permitted spacing determined as:

- If $\upsilon_u < 0.125f'_c$, then $s_{max} = 0.8d_v \leq 18"$
- If $\upsilon_u \geq 0.125f'_c$, then $s_{max} = 0.4d_v \leq 12"$

Where:

$$\upsilon_u = \frac{V_u - \phi V_p}{\phi b_v d_v}$$ per **LRFD [5.7.2.8]**.

The nominal shear resistance, $V_c + V_s$, is limited by the following:

$$V_c + \frac{A_v f_y d_v \cot\theta}{s} \leq 0.25f'_c b_v d_v$$

Reinforcement in the form of vertical stirrups is required at the extreme ends of the girder. The stirrups are designed to resist 4% of the total prestressing force at transfer at a unit stress of 20 ksi and are placed within h/4 of the girder end, where h is the total girder depth. For a distance of 1.5d from the ends of the beams, reinforcement shall be placed to confine the prestressing steel in the bottom flange. The reinforcement shall be shaped to enclose the strands, shall be a #3 bar or greater and shall be spaced at less than or equal to 6". Note that the reinforcement shown on the Standard Details sheets satisfies these requirements.

Welded wire fabric may be used for the vertical reinforcement. It must be deformed wire with a minimum size of D18.

Per **LRFD [5.7.3.5]**, at the inside edge of the bearing area to the section of critical shear, the longitudinal reinforcement on the flexural tension side of the member shall satisfy:

$$A_s f_y + A_{ps} f_{ps} \geq \left( \frac{V_u}{\phi} - 0.5V_s \right) \cot\theta$$

In the above equation, $\cot\theta$ is as defined in the $V_c$ discussion above, and $V_s$ is the shear reinforcement resistance at the section considered. Any lack of full reinforcement development shall be accounted for. Note that the reinforcement shown on the Standard Detail sheets satisfies these requirements.

### 19.3.3.17 Continuity Reinforcement

The design of non-prestressed reinforcement for negative moment at the support is based on the Strength I limit state requirements of **LRFD [5.6.3]**:

$$M_u = 1.25DC + 1.50DW + 1.75(LL + IM)$$

**LRFD [5.5.4.2]** allows a $\phi$ factor equal to 0.9 for tension-controlled reinforced concrete sections such as the bridge deck.

The continuity reinforcement consists of mild steel reinforcement in the deck in the negative moment region over the pier. Consider both the non-composite and the superimposed dead loads and live loads for the Strength I design of the continuity reinforcement in the deck.

Moment resistance is developed in the same manner as shown in 19.3.3.13.1 for positive moments, except that the bottom girder flange is in compression and the deck is in tension. The moment resistance is formed by the couple resulting from the compression force in the bottom flange and the tension force from the longitudinal deck steel. Consider $A_s$ to consist of the longitudinal deck steel present in the deck slab effective flange width as determined in 19.3.3.8. The distance, $d_p$, is taken from the bottom of the girder flange to the center of the longitudinal deck steel.

**WisDOT exception to AASHTO:**

Composite sections formed by WisDOT standard prestressed I-girders shall be considered to be tension-controlled for the design of the continuity reinforcement. The $\varepsilon_t$ check, as specified in **LRFD [5.6.2.1]**, is not required, and $\phi = 0.9$.

**WisDOT policy item:**

New bridge designs shall consider only the top mat of longitudinal deck steel when computing the continuity reinforcement capacity.

**WisDOT policy item:**

The continuity reinforcement shall be based on the greater of either the interior girder design or exterior girder and detailed as typical reinforcement for the entire width of the bridge deck. However, do not design the continuity steel based on the exterior girder design beneath a raised sidewalk. The continuity steel beneath a raised sidewalk should not be used for rating.

Based on the location of the neutral axis, the bottom flange compressive force may behave as either a rectangle or a T-section. On WisDOT standard prestressed I-girders, if the depth of the compression block, a, falls within the varying width of the bottom flange, the compression block acts as an idealized T-section. In this case, the width, b, shall be taken as the bottom flange width, and the width, $b_w$, shall be taken as the bottom flange width at the depth "a". During T-section behavior, the depth, $h_f$, shall be taken as the depth of the bottom flange of full width, b. See Figure 19.3-4 for details. Ensure that the deck steel is adequate to satisfy $M_r \geq M_u$.

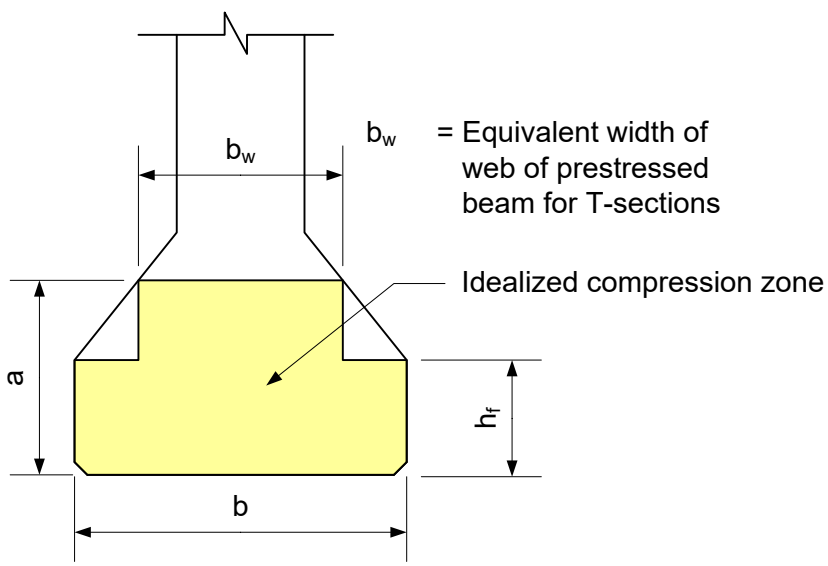


**Figure 19.3-4**
T-Section Compression Flange Behavior

The continuity reinforcement should also be checked to ensure that it meets the crack control provisions of **LRFD [5.6.7]**. This check shall be performed assuming severe exposure conditions. Only the superimposed loads shall be considered for the Service and Fatigue requirements.

The concrete between the abutting girder ends is usually of a much lesser strength than that of the girders. However, tests[1] have shown that, due to lateral confinement of the diaphragm concrete, the girder itself fails in ultimate negative compression rather than failure in the material between its ends. Therefore the ultimate compressive stress, $f'_c$, of the girder concrete is used in place of that of the diaphragm concrete.

This assumption has only a slight effect on the computed amount of reinforcement, but it has a significant effect on keeping the compression force within the bottom flange.

The continuity reinforcement shall conform to the Fatigue provisions of **LRFD [5.5.3]**.

The transverse spacing of the continuity reinforcement is usually taken as the whole or fractional spacing of the D bars as given in 17.5.3.2. Grade 60 bar steel is used for continuity reinforcement. Required development lengths for deformed bars are given in Chapter 9 – Materials.

**WisDOT exception to AASHTO:**

The continuity reinforcement is not required to be anchored in regions of the slab that are in compression at the strength limit state as stated in **LRFD [5.12.3.3]**. The following locations shall be used as the cut off points for the continuity reinforcement:

1. When ½ the bars satisfy the Strength I moment envelope (considering both the non-composite and composite loads) as well as the Service and Fatigue moment envelopes (considering only the composite moments), terminate ½ of the bars. Extend these bars past this cutoff point a distance not less than the girder depth or 1/16 the clear span for embedment length requirements.

2. Terminate the remaining one-half of the bars an embedment length beyond the point of inflection. The inflection point shall be located by placing a 1 klf load on the composite structure. This cut-off point shall be at least 1/20 of the span length or 4' from point 1, whichever is greater.

Certain secondary features result when spans are made continuous. That is, positive moments develop over piers due to creep[5], shrinkage and the effects of live load and dynamic load allowance in remote spans. The latter only exists for bridges with three or more spans.

These positive moments are somewhat counteracted by negative moments resulting from differential shrinkage[4] between the cast-in-place deck and precast girders along with negative moments due to superimposed dead loads. However, recent field observations cited in **LRFD [C5.12.3.3.2]** suggest that these moments are less than predicted by analysis. Therefore, negative moments caused by differential shrinkage should be ignored in design.

**WisDOT exception to AASHTO:**

WisDOT requires the use of a negative moment connection only. The details for a positive moment connection per **LRFD [5.12.3.3]** are not compatible with the Standard Details and should not be provided.

### 19.3.3.18 Camber and Deflection

The prestress camber and dead load deflection are used to establish the vertical position of the deck forms with respect to the girder. The theory presented in the following sections apply to a narrow set of circumstances. The designer is responsible for ensuring that the theoretical camber accounts for the loads applied to the girder. For example, if the diaphragms of a prestressed I-girder are configured so there is one at each of the third points instead of one at

midspan, the term in the equation for $\Delta_{nc(DL)}$ related to the diaphragms in 19.3.3.18.2 would need to be modified to account for two point loads applied at the third points instead of one point load applied at midspan.

Deflection effects due to individual loads may be calculated separately and superimposed, as shown in this section. The *PCI Design Handbook* provides design aids to assist the designer in the evaluation of camber and deflection, including cambers for prestress forces and loads, and beam design equations and diagrams.

Figure 19.3-5 illustrates a typical prestressed I-girder with a draped strand profile.

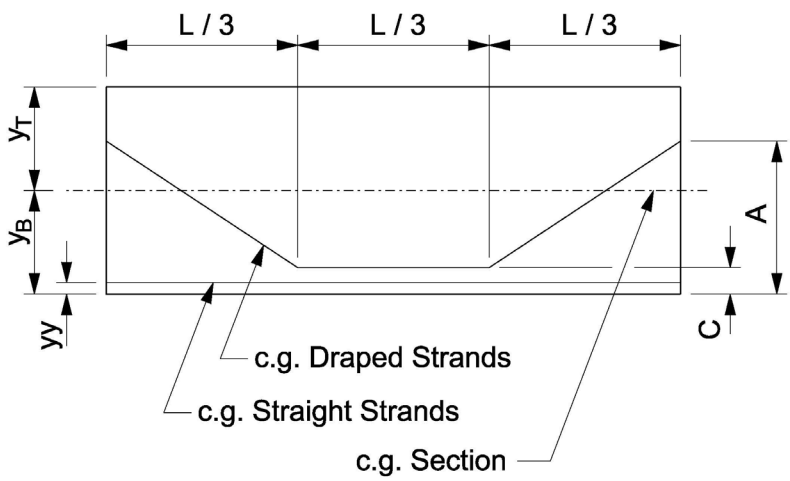


**Figure 19.3-5**
Typical Draped Strand Profile

### 19.3.3.18.1 Prestress Camber

The prestressing strands produce moments in the girder as a result of their eccentricity and draped pattern. These moments induce a camber in the girder. The values of the camber are calculated as follows:

Eccentric straight strands induce a constant moment of:

$$M_1 = \frac{1}{12}\left(P_i^s\left(y_B - yy\right)\right)$$

Where:

| | | |
|---|---|---|
| $M_1$ | = | Moment due to initial prestress force in the straight strands minus the elastic shortening loss (k-ft) |
| $P_i^s$ | = | Initial prestress force in the straight strands minus the elastic shortening loss (kips) |
| $y_B$ | = | Distance from center of gravity of beam to bottom of beam (in) |

| | | |
|---|---|---|
| yy | = | Distance from center of gravity of straight strands to bottom of beam (in) |

This moment produces an upward deflection at midspan which is given by:

$$\Delta_s = \frac{M_1 L^2}{8E_i I_b} \quad \text{(with all units in inches and kips)}$$

For moments expressed in kip-feet and span lengths expressed in feet, this equation becomes the following:

$$\Delta_s = \frac{M_1 L^2}{8E_i I_b}\left(\frac{12}{1}\right)\left(\frac{12^2}{1}\right) = \frac{M_1 L^2}{8E_i I_b}\left(\frac{1728}{1}\right)$$

$$\Delta_s = \frac{216 M_1 L^2}{E_i I_b} \quad \text{(with units as shown below)}$$

Where:

| | | |
|---|---|---|
| $\Delta_s$ | = | Deflection due to force in the straight strands minus elastic shortening loss (in) |
| L | = | Span length between centerlines of bearing (ft) |
| $E_i$ | = | Modulus of elasticity at the time of release (see 19.3.3.8) (ksi) |
| $I_b$ | = | Moment of inertia of basic beam ($in^4$) |

The draped strands induce the following moments at the ends and within the span:

$$M_2 = \frac{1}{12}\left(P_i^D (A - C)\right), \text{ which produces upward deflection, and}$$

$$M_3 = \frac{1}{12}\left(P_i^D (A - y_B)\right), \text{ which produces downward deflection when A is greater than } y_B$$

Where:

| | | |
|---|---|---|
| $M_2$, $M_3$ | = | Components of moment due to initial prestress force in the draped strands minus the elastic shortening loss (k-ft) |
| $P_i^D$ | = | Initial prestress force in the draped strands minus the elastic shortening loss (kips) |
| A | = | Distance from bottom of beam to center of gravity of draped strands at centerline of bearing (in) |
| C | = | Distance from bottom of beam to center of gravity of draped strands between hold-down points (in) |

These moments produce a net upward deflection at midspan, which is given by:

$$\Delta_D = \frac{216L^2}{E_i I_b}\left(\frac{23}{27}M_2 - M_3\right)$$

Where:

$\Delta_D$ = Deflection due to force in the draped strands minus elastic shortening loss (in)

The combined upward deflection due to prestress is:

$$\Delta_{PS} = \Delta_s + \Delta_D = \frac{216L^2}{E_i I_b}\left(M_1 + \frac{23}{27}M_2 - M_3\right)$$

Where:

$\Delta_{PS}$ = Deflection due to straight and draped strands (in)

The downward deflection due to beam self-weight at release is:

$$\Delta_{o(DL)} = \frac{5W_b L^4}{384E_i I_b} \quad \text{(with all units in inches and kips)}$$

Using unit weights in kip per foot, span lengths in feet, E in ksi and $I_b$ in inches$^4$, this equation becomes the following:

$$\Delta_s = \frac{5W_b L^4}{384E_i I_b}\left(\frac{1}{12}\right)\left(\frac{12^4}{1}\right) = \frac{5W_b L^4}{384E_i I_b}\left(\frac{20736}{12}\right)$$

$$\Delta_{o(DL)} = \frac{22.5W_b L^4}{E_i I_b} \quad \text{(with units as shown below)}$$

Where:

$\Delta_{o(DL)}$ = Deflection due to beam self-weight at release (in)

$W_b$ = Beam weight per unit length (k/ft)

Therefore, the anticipated prestress camber at release is given by:

$$\Delta_i = \Delta_{PS} - \Delta_{o(DL)}$$

Where:

$\Delta_i$ = Prestress camber at release (in)

Camber, however, continues to grow after the initial strand release. For determining substructure beam seats, average concrete haunch values (used for both DL and quantity calculations) and the required projection of the vertical reinforcement from the tops of the prestressed girders, **a camber multiplier of 1.4 shall be used**. This value is multiplied by the theoretical camber at release value.

### 19.3.3.18.2 Dead Load Deflection

The downward deflection of a prestressed I-girder due to the dead load of the deck and a midspan diaphragm is:

$$\Delta_{nc(DL)} = \frac{5W_{deck}L^4}{384EI_b} + \frac{P_{dia}L^3}{48EI_b} \quad \text{(with all units in inches and kips)}$$

Using span lengths in units of feet, unit weights in kips per foot, E in ksi, and $I_b$ in inches$^4$, this equation becomes the following:

$$\Delta_s = \frac{5W_{deck}L^4}{384EI_b}\left(\frac{1}{12}\right)\left(\frac{12^4}{1}\right) + \frac{P_{dia}L^3}{48EI_b}\left(\frac{12^3}{1}\right) = \frac{5W_{deck}L^4}{384EI_b}\left(\frac{20736}{12}\right) + \frac{P_{dia}L^3}{48EI_b}\left(\frac{1728}{1}\right)$$

$$\Delta_{o(DL)} = \frac{22.5W_bL^4}{EI_b} + \frac{36P_{dia}L^3}{EI_b} \quad \text{(with units as shown below)}$$

Where:

| | | |
|---|---|---|
| $\Delta_{nc(DL)}$ | = | Deflection due to non-composite dead load (deck and midspan diaphragm) (in) |
| $W_{deck}$ | = | Deck weight per unit length (k/ft) |
| $P_{dia}$ | = | Midspan diaphragm weight (kips) |
| E | = | Girder modulus of elasticity at final condition (see 19.3.3.8) (ksi) |

A similar calculation is done for parapet and sidewalk loads on the composite section. Provisions for deflections due to future wearing surface shall not be included.

For girder structures with raised sidewalks, loads shall be distributed as specified in Chapter 17, and separate deflection calculations shall be performed for the interior and exterior girders.

#### 19.3.3.18.3 Residual Camber

Residual camber is the camber that remains after the prestress camber has been reduced by the composite and non-composite dead load deflection. Residual camber is computed as follows:

$$RC = \Delta_i - \Delta_{nc(DL)} - \Delta_{c(DL)}$$

### 19.3.4 Prestressed I-Girder Deck Forming

Deck forming requires computing the relationship between the top of girder and bottom of deck necessary to achieve the desired vertical roadway alignment. Current practice for design is to use a minimum haunch of 2" at the edge of the girder flange. This will facilitate current deck forming practices which use 1/2" removable hangers and 3/4" plywood, and it will allow for variations in prestress camber. Also, future deck removal will be less likely to damage the top girder flanges. See 19.3.3.1 for the method to determine haunch height for section properties. An average haunch height of 3 inches minimum can be used for determining haunch weight for preliminary design. It should be noted that the actual haunch values for weight calculations should be compared with the estimated values during final design. If there are significant differences in these values, the design should be revised. The actual average haunch height should be used to calculate the concrete quantity reported on the plans as well as the value reported on the prestressed girder details sheet. The actual haunch values at the girder ends shall be used for determining beam seat elevations.

For designs involving vertical curves, Figure 19.3-6 shows two different cases.

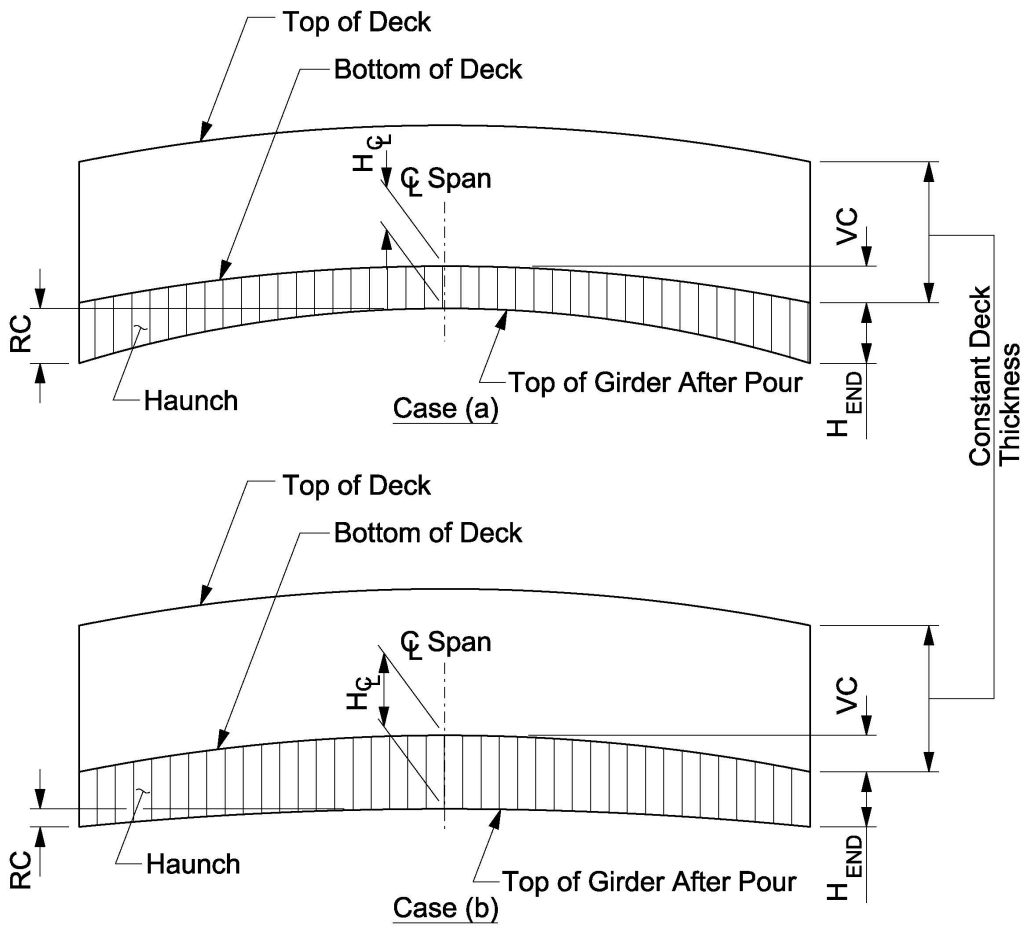


**Figure 19.3-6**
Relationship between Top of Girder and Bottom of Deck

In Case (a), VC is less than the computed residual camber, RC, and the minimum haunch occurs at midspan. In Case (b), VC is greater than RC and the minimum haunch occurs at the girder ends.

Deck forms are set to accommodate the difference between the bottom of the deck and the top of the girder under all dead loads placed at the time of construction, including the wet deck concrete and superimposed parapet and sidewalk loads. The deflection of superimposed future wearing surface and live loads are not included.

### 19.3.4.1 Equal-Span Continuous Structures

For equal-span continuous structures having all spans on the same vertical alignment, the deck forming is the same for each span. This is due to the constant change of slope of the vertical curve or tangent and the same RC per span.

The following equation is derived from Figure 19.3-6:

$$+H_{END} = RC - VC + (+H_{CL})$$

Where:

| | | |
|---|---|---|
| $H_{END}$ | = | See Figure 19.3-6 (in) |
| RC | = | Residual camber, positive for upward (in) |
| VC | = | Difference in vertical curve, positive for crest vertical curves and negative for sag vertical curves (in) |
| $H_{CL}$ | = | See Figure 19.3-6 (in) |

### 19.3.4.2 Unequal Spans or Curve Combined With Tangent

For unequal spans or when some spans are on a vertical curve and others are on a tangent, a different approach is required. Generally the longer span or the one off the curve dictates the haunch required at the common support. Therefore, it is necessary to pivot the girder about its midspan in order to achieve an equal condition at the common support. This is done mathematically by adding together the equation for each end (abutment and pier), as follows:

$$(+H_{LT}) + (+H_{RT}) = 2[RC - VC + (+H_{CL})]$$

Where:

| | | |
|---|---|---|
| $H_{LT}$ | = | $H_{END}$ at left (in) |
| $H_{RT}$ | = | $H_{END}$ at right (in) |

With the condition at one end known due to the adjacent span, the condition at the other end is computed.

### 19.3.5 Construction Joints

The transverse construction joints should be located in the deck midway between the cut-off points of the continuity reinforcement or at the 0.75 point of the span, whichever is closest to the pier. The construction joint should be located at least 1' from the cut-off points.

This criteria keeps stresses in the slab reinforcement due to slab dead load at a minimum and makes deflections from slab dead load closer to the theoretical value.

### 19.3.6 Strand Types

Low relaxation strands (0.5” and 0.6” in diameter) are currently used in prestressed I-girder and prestressed box girder designs and are shown on the plans. Strand patterns and initial prestressing forces are given on the plans, and deflection data is also shown.

## 19.3.7 Construction Dimensional Tolerances

Refer to the *AASHTO LRFD Bridge Construction Specifications* for the required dimensional tolerances.

## 19.3.8 Prestressed I-Girder Sections

WisDOT BOS employs two prestress I-girder section families. One I section family follows the AASHTO standard section, while the other section family follows a wide flange bulb-tee, see Figure 19.3-7. These sections employ draped strand patterns with undraped alternates where feasible. Undraped strand patterns, when practical, should be specified on the designs. For these sections, the cost of draping far exceeds savings in strands. See the Standard Details for the prestressed I-girder sections' draped and undraped strand patterns. Note, for the 28" prestressed I-girder section the 16 and 18 strand patterns require bond breakers.

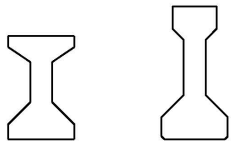


WisDOT Standard Girder Shapes

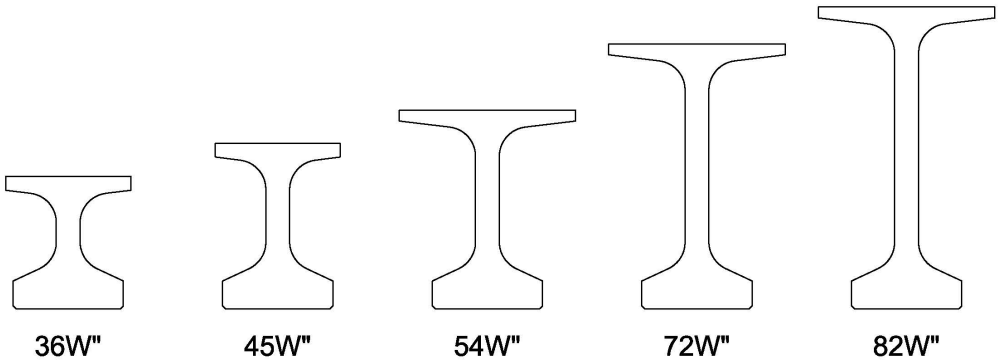


WisDOT Wide Flange Girder Shapes

**Figure 19.3-7**
Prestressed I-Girder Family Details

Table 19.3-1 and Table 19.3-2 provide span lengths versus interior girder spacings for HL-93 live loading on single-span and multiple-span structures for prestressed I-girder sections. Girder spacings are based on using low relaxation strands at $0.75f_{pu}$, concrete haunch thicknesses, slab thicknesses from Chapter 17 – Superstructures - General and a future wearing surface. For these tables, a line load of 0.300 klf is applied to the girder to account for superimposed dead loads.

Several girder shapes have been retired from standard use on new structures. These include the following sizes; 45-inch, 54-inch and 70-inch. These girder shapes are used for girder replacements, widening and for curved new structures where the wide flange sections are not practical. See Chapter 40 – Bridge Rehabilitation for additional information on these girder shapes.

Due to the wide flanges on the 54W, 72W and 82W and the variability of residual camber, haunch heights frequently exceed 2”. An average haunch of 4” was used for all wide flange girders in the following tables. **Do not push the span limits/girder spacing during preliminary design.** See Table 19.3-2 for guidance regarding use of excessively long prestressed I-girders.

Tables are based on:

- Interior prestressed I-girders, 0.5” or 0.6” dia. strands (in accordance with the Standard Details).
- $f'_c$ girder = 8,000 psi
- $f'_c$ slab = 4,000 psi
- Haunch height (dead load) = 2 ½” for 28” and 36” girders

  = 4” for 45W”,54W”,72W” and 82W” girders
- Haunch height (section properties) = 2”
- Required $f'_c$ girder at initial prestress < 6,800 psi

| 28" Prestressed I-Girder | | |
|---|---|---|
| Girder Spacing | Single Span | 2 Equal Spans |
| 6’-0” | 59 | 65 |
| 6’-6” | 58 | 63 |
| 7’-0” | 56 | 62 |
| 7’-6” | 55 | 60 |
| 8’-0” | 54 | 59 |
| 8’-6” | 52 | 57 |
| 9’-0” | 51 | 56 |
| 9’-6” | 50 | 54 |
| 10’-0” | 49 | 53 |
| 10’-6” | 48 | 52 |
| 11’-0” | 47 | 51 |
| 11’-6” | 46 | 50 |
| 12’-0” | 45 | 48 |

| 36" Prestressed I-Girder | | |
|---|---|---|
| Girder Spacing | Single Span | 2 Equal Spans |
| 6’-0” | 76 | 82 |
| 6’-6” | 74 | 80 |
| 7’-0” | 69 | 78 |
| 7’-6” | 66 | 76 |
| 8’-0” | 65 | 75 |
| 8’-6” | 63 | 69 |
| 9’-0” | 62 | 67 |
| 9’-6” | 60 | 65 |
| 10’-0” | 59 | 64 |
| 10’-6” | 58 | 63 |
| 11’-0” | 51 | 61 |
| 11’-6” | 50 | 60 |
| 12’-0” | 49 | 58 |

| 36W" Prestressed I-Girder | | |
|---|---|---|
| Girder Spacing | Single Span | 2 Equal Spans |
| 6’-0” | 94 | 101 |
| 6’-6” | 92 | 99 |
| 7’-0” | 90 | 97 |
| 7’-6” | 88 | 95 |
| 8’-0” | 87 | 93 |
| 8’-6” | 85 | 91 |
| 9’-0” | 83 | 90 |
| 9’-6” | 82 | 87 |
| 10’-0” | 80 | 86 |
| 10’-6” | 79 | 84 |
| 11’-0” | 77 | 82 |
| 11’-6” | 76 | 81 |
| 12’-0” | 73 | 79 |

| 45W" Prestressed I-Girder | | |
|---|---|---|
| Girder Spacing | Single Span | 2 Equal Spans |
| 6’-0” | 111 | 120 |
| 6’-6” | 109 | 117 |
| 7’-0” | 107 | 115 |
| 7’-6” | 105 | 113 |
| 8’-0” | 103 | 111 |
| 8’-6” | 101 | 108 |
| 9’-0” | 99 | 106 |
| 9’-6” | 97 | 104 |
| 10’-0” | 95 | 102 |
| 10’-6” | 94 | 100 |
| 11’-0” | 92 | 98 |
| 11’-6” | 90 | 96 |
| 12’-0” | 88 | 94 |

**Table 19.3-1**
Maximum Span Length vs. Girder Spacing

| 54W" Prestressed I-Girder | | |
|---|---|---|
| Girder Spacing | Single Span | 2 Equal Spans |
| 6'-0" | 125 | 134 |
| 6'-6" | 123 | 132 |
| 7'-0" | 120 | 129 |
| 7'-6" | 118 | 127 |
| 8'-0" | 116 | 125 |
| 8'-6" | 114 | 122 |
| 9'-0" | 112 | 120 |
| 9'-6" | 110 | 117 |
| 10'-0" | 108 | 115 |
| 10'-6" | 106 | 114 |
| 11'-0" | 104 | 111 |
| 11'-6" | 103 | 110 |
| 12'-0" | 100 | 107 |

| 72W" Prestressed I-Girder | | |
|---|---|---|
| Girder Spacing | Single Span | 2 Equal Spans |
| 6'-0" | 153* | 164*⊗ |
| 6'-6" | 150 | 161*⊗ |
| 7'-0" | 148 | 158* |
| 7'-6" | 145 | 156* |
| 8'-0" | 143 | 153* |
| 8'-6" | 140 | 150 |
| 9'-0" | 138 | 148 |
| 9'-6" | 135 | 144 |
| 10'-0" | 133 | 142 |
| 10'-6" | 131 | 140 |
| 11'-0" | 129 | 137 |
| 11'-6" | 127 | 135 |
| 12'-0" | 124 | 132 |

| 82W" Prestressed I-Girder | | |
|---|---|---|
| Girder Spacing | Single Span | 2 Equal Spans |
| 6'-0" | 166*⊗ | 177*⊗ |
| 6'-6" | 163*⊗ | 174*⊗ |
| 7'-0" | 161*⊗ | 172*⊗ |
| 7'-6" | 158* | 169*⊗ |
| 8'-0" | 156* | 166*⊗ |
| 8'-6" | 152 | 163*⊗ |
| 9'-0" | 150 | 160*⊗ |
| 9'-6" | 147 | 157* |
| 10'-0" | 145 | 154* |
| 10'-6" | 143 | 152 |
| 11'-0" | 140 | 149 |
| 11'-6" | 138 | 147 |
| 12'-0" | 135 | 144 |

**Table 19.3-2**
Maximum Span Length vs. Girder Spacing

* For lateral stability during lifting these girder lengths may require pick-up point locations greater than distance d (girder depth) from the ends of the girder. The designer shall assume that the pick-up points will be at the 1/10 points from the end of the girder and provide extra non-prestressed steel in the top flange, if required, and check the concrete strength near the

lift location based on $f'_{ci}$. A note should be placed on the girder details sheet to reflect that the girder was analyzed for a potential lift at the 1/10 point.

⊗ Due to difficulty manufacturing, transporting and erecting excessively long prestressed girders, consideration should be given to utilizing an extra pier to minimize use of such girders. Approval from the Bureau of Structures is required to utilize any girder over 158 ft. long. (Currently, there is still a moratorium on the use of all 82W"). Steel girders may be considered if the number of piers can be reduced enough to offset the higher costs associated with a steel superstructure.

### 19.3.8.1 Prestressed I-Girder Standard Strand Patterns

The standard strand patterns presented in the Standard Details were developed to eliminate some of the trial and error involved in the strand pattern selection process. These standard strand patterns should be used whenever possible, with a straight strand arrangement preferred over a draped strand arrangement. The designer is responsible for ensuring that the selected strand pattern meets all LRFD requirements.

Section 19.3.3 discusses the key parts of the design procedure, and how to effectively use the standard strand patterns along with Table 19.3-1 and Table 19.3-2.

The amount of drape allowed is controlled by the girder size and the 2" clearance from center of strand to top of girder. See the appropriate Standard Girder Details for guidance on draping.

## 19.3.9 Prestressed Box Girders Post-Tensioned Transversely

These sections may be used for skews up to 30° with the transverse post-tensioning ducts placed along the skew. Skews over 30° are not recommended, but if absolutely required the transverse post-tensioning ducts should be placed perpendicular to the prestressed sections. Also for skews over 30° a more refined method of analysis should be used such as an equivalent plate analysis or a finite element analysis.

Details for transverse post-tensioning are shown in the Standard Details. Each post-tensioning duct contains three ½" diameter strands which produce a total post-tensioning force per duct of 86.7 kips.

Prestressed box girders are subject to high chloride ion exposure because of longitudinal cracking that sometimes occurs between the boxes or from drainage on the fascia girders when an open steel railing system is used. To reduce permeability the concrete mix is required to contain fly ash as stated in 503.2.2 of the Standard Specifications.

When these sections are in contact with water for 5-year flood events or less, the sections must be cast solid for long term durability. When these sections are in contact with water for the 100-year flood event or less, any voids in the section must be cast with a non-water-absorbing material.

Table 19.3-3 provides approximate span limitations for prestressed box girder sections. It also gives the section properties associated with these members. Criteria for developing these tables are shown below Table 19.3-3.

### 19.3.9.1 Available Prestressed Box Girder Sections and Maximum Span Lengths

Precasters have forms available to make six prestressed girder box sections ranging in depth from 12” to 42”. Each section can be made in widths of 36” and 48”, but 48” is more efficient and is the preferred width. Typical box section information is shown in the Standard Details.

Table 19.3-3 shows available section depths, section properties, and maximum span length. All sections have voids except the 12” deep section.

| | Section No. | Section Depth (inches) | Section Area, A, ($in^2$) | Moment of Inertia, I, ($in^4$) | Section Modulus, ($in^3$) | | Torsional Inertia, J, ($in^4$) | Max. Span (ft) |
|---|---|---|---|---|---|---|---|---|
| | | | | | $S_{Top}$ | $S_{Bottom}$ | | |
| 3’-0” Section Width | 1 | 12 | 422 | 5,101 | 848 | 852 | 15,955 | 24 |
| | 2 | 17 | 452 | 14,047 | 1,648 | 1,657 | 23,797 | 40 |
| | 3 | 21 | 492 | 25,240 | 2,398 | 2,410 | 39,928 | 49 |
| | 4 | 27 | 565 | 50,141 | 3,706 | 3,722 | 68,925 | 58 |
| | 5 | 33 | 625 | 85,010 | 5,142 | 5,162 | 102,251 | 64 |
| | 6 | 42 | 715 | 158,749 | 7,546 | 7,573 | 158,033 | 77 |
| 4’-0” Section Width | 1 | 12 | 566 | 6,829 | 1,136 | 1,140 | 22,600 | 25 |
| | 2 | 17 | 584 | 18,744 | 2,201 | 2,210 | 38,427 | 39 |
| | 3 | 21 | 624 | 33,501 | 3,184 | 3,197 | 65,395 | 49 |
| | 4 | 27 | 697 | 65,728 | 4,860 | 4,877 | 114,924 | 59 |
| | 5 | 33 | 757 | 110,299 | 6,674 | 6,696 | 173,031 | 68 |
| | 6 | 42 | 847 | 203,046 | 9,655 | 9,683 | 272,267 | 80 |

**Table 19.3-3**
Prestressed Box Girder Section Properties and Maximum Span Length

Table based on:

- HL93 loading and AASHTO LRFD Bridge Design Specifications
- Simple span
- $f'_c$ = 5 ksi and $f'_{ci}$ = 4.25 ksi
- 0.5” dia. or 0.6” dia., low relaxation prestressing strands at $0.75f'_s$
- $f'_s$ = 270.0 ksi
- 6” min. concrete deck (which doesn’t contribute to stiffness of section)
- Single slope parapet 42SS weight distributed evenly to all girder sections
- 30° skew used to compute diaphragm weight

- 2 ¾” of grout between sections
- Post-tensioning diaphragms located as stated in the Standard Details
- 30’-0” minimum clear bridge width (eleven 3’-0” sections, eight 4’-0” sections)

### 19.3.9.2 Decks and Overlays

There are three types of systems.

1. Reinforced Concrete Deck (design non-composite, detail composite)
2. Concrete Overlay, Grade E or C (non-composite)
3. Asphaltic Overlay with Waterproofing Membrane (not allowed)

### 19.3.9.3 Grout between Prestressed Box Girders

These sections are set 1” apart with a ±¼” tolerance. The space between sections is filled with a grout mix prior to post-tensioning the sections transversely. Post-tensioning is not allowed until the grout has cured for at least 48 hours and has attained a compressive strength of 3000psi.

## 19.4 Field Adjustments of Pretensioning Force

When strands are tensioned in open or unheated areas during cold weather they are subject to loss due to change in temperature. This loss can be compensated for by noting the change in temperature of the strands between tensioning and initial set of the concrete. For purposes of uniformity the strand temperature at initial concrete set is taken as 80°F.

Minor changes in temperature have negligible effects on the prestress force, therefore only at strand temperatures of 50°F and lower are increases in the tensioning force made.

Since plan prestress forces are based on 75% of the ultimate for low relaxation strands it is necessary to utilize the AASHTO allowable of temporarily overstressing up to 80% to provide for the losses associated with fabrication.

The following example outlines these losses and shows the elongation computations which are used in conjunction with jack pressure gages to control the tensioning of the strands.

Computation for Field Adjustment of Prestress Force

Known:

22 - 1/2", 7 wire low relaxation strands, $A_{ps}$ = 0.1531 $in^2$

$P_{pj}$ = 710.2 kips (jacking force from plan)

$T_1$ = 40°F (air temperature at strand tensioning)

$T_2$ = 80°F (concrete temperature at initial set)

L = 300' = 3,600" (distance from anchorage to reference point)

$L_1$ = 240' = 2,880" (length of cast segment)

$E_p$ = 29,000 ksi (of prestressing tendons, sample tested from each spool)

C = 0.0000065 (coefficient of thermal expansion for steel, per degree F.)

COMPUTE:

jacking force per strand = $P_{pj}$ = 710.2/22 = 32.3 kips

$DL_1$ = PL/AE = 32.3 x 3600/(0.1531 x 29,000) = 26.1"

Initial Load of 1.5 Kips to set the strands

$DL_2$ = 1.5 x 3600/(0.1531 x 29000) = 1.22"

$DL_3$ = Slippage in Strand Anchors = 0.45" (Past Experience)

$DL_4$ = Movement in Anchoring Abutments = 0.25" (Past Experience)

$DL_5 = C \times L_1 \times (T_2 - T_1) = 0.0000065 \times 2880 \times 40 = 0.75"$

$P_{Loss} = DL_5 \times A \times E/L = 0.749 \times 0.1531 \times 29000/3600 = 0.9$ Kips

Total Prestress Force = $P + P_{Loss} = 32.3 + 0.9 = 33.2$ Kips

Total Elongation = $DL_1 + DL_3 + DL_4 + DL_5 = 27.55"$

Elongation After Initial Load = 27.55 - 1.22 = 26.33"

## 19.5 References

1. Whitney, C. S., "*Plastic Theory of Reinforced Concrete Design*", ASCE Trans., 107, 1942, p. 251.

2. Karr, P. H., Kriz, L. B. and Hognestad, E., "*Precast-Prestressed Concrete Bridges 1. Pilot Tests of Continuous Beams*", Portland Cement Association Development Department, Bulletin D34.

3. Mattock, A. H. and Karr, P. H., "*Precast-Prestressed Concrete Bridges 3. Further Tests of Continuous Girders*", Portland Cement Association Development Department, Bulletin D43.

4. Freyermuth, Clifford L., "*Design of Continuous Highway Bridges with Precast, Prestressed Concrete Girders (EB014.01E)*", Portland Cement Association, 1969.

5. Lin, T. Y. and Burns, N. H., "*Design of Prestressed Concrete Structures*", Third Edition, J. Wiley, 1981.

## 19.6 Design Examples

E19-1 Single Span Bridge, 72W Girders, LRFD

E19-2 2 Span Bridge, 54W Girders, Continuity Reinforcement, LRFD

E19-3 Single Span Adjacent Box Beam, LRFD

E19-4 Lifting Check for Prestressed Girders, LRFD

This page intentionally left blank.

Table of Contents

E19-1 Single Span Bridge, 72W" Prestressed Girders LRFD . . . . . 2
E19-1.1 Design Criteria . . . . . 2
E19-1.2 Modulus of Elasticity of Beam and Deck Material. . . . . 3
E19-1.3 Section Properties . . . . . 3
E19-1.4 Girder Layout . . . . . 4
E19-1.5 Loads . . . . . 4
E19-1.5.1 Dead Loads. . . . . 5
E19-1.5.2 Live Loads . . . . . 5
E19-1.6 Load Distribution to Girders . . . . . 6
E19-1.6.1 Distribution Factors for Interior Beams:. . . . . 7
E19-1.6.2 Distribution Factors for Exterior Beams:. . . . . 7
E19-1.6.3 Distribution Factors for Fatigue:. . . . . 9
E19-1.7 Limit States and Combinations . . . . . 9
E19-1.7.1 Load Factors . . . . . 9
E19-1.7.2 Dead Load Moments . . . . . 10
E19-1.7.3 Live Load Moments . . . . . 10
E19-1.7.4 Factored Moments . . . . . 11
E19-1.8 Composite Girder Section Properties . . . . . 12
E19-1.9 Preliminary Design Information . . . . . 13
E19-1.10 Preliminary Design Steps . . . . . 16
E19-1.10.1 Determine Amount of Prestress. . . . . 16
E19-1.10.2 Prestress Loss Calculations . . . . . 18
E19-1.10.2.1 Elastic Shortening Loss. . . . . 18
E19-1.10.2.2 Approximate Estimate of Time Dependant Losses. . . . . 19
E19-1.10.3 Design of Strand Drape. . . . . 20
E19-1.10.4 Stress Checks at Critical Sections. . . . . 26
E19-1.11 Calculate Jacking Stress. . . . . 31
E19-1.12 Flexural Strength Capacity at Midspan. . . . . 32
E19-1.13 Shear Analysis . . . . . 37
E19-1.14 Longitudinal Tension Flange Capacity . . . . . 46
E19-1.15 Composite Action Design for Interface Shear Transfer. . . . . 47
E19-1.16 Deflection Calculations . . . . . 49
E19-1.17 Camber Calculations . . . . . 49

## E19-1 Single Span Bridge, 72W" Prestressed Girders - LRFD

This example shows design calculations for a single span prestressed gider bridge. The *AASHTO LRFD Bridge Design Specifications* are followed as stated in the text of this chapter. ***(Example is current through LRFD Eighth Edition - 2017)***

### E19-1.1 Design Criteria

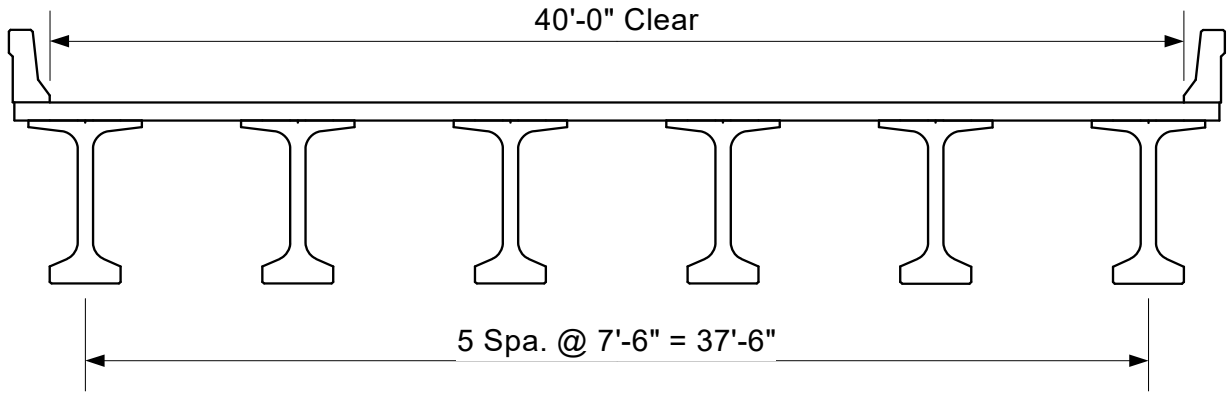


| | | |
|---|---|---|
| $L := 146$ | center to center of bearing, ft | |
| $L_g := 147$ | total length of the girder (the girder extends 6 inches past the center of bearing at each abutment). | |
| $w_b := 42.5$ | out to out width of deck, ft | |
| $w := 40$ | clear width of deck, 2 lane road, 3 design lanes, ft | |
| $f'_c := 8$ | girder concrete strength, ksi | |
| $f'_{ci} := 6.8$ | girder initial concrete strength, ksi | New limit for release strength. |
| $f'_{cd} := 4$ | deck concrete strength, ksi | |
| $f_{pu} := 270$ | low relaxation strand, ksi | |
| $d_b := 0.6$ | strand diameter, inches | |
| $A_{strand} := 0.217$ | area of strand, $in^2$ | |
| $w_p := 0.387$ | weight of Wisconsin Type LF parapet, klf | |
| $t_s := 8$ | slab thickness, in | |
| $t_{se} := 7.5$ | effective slab thickness, in | |
| $skew := 20$ | skew angle, degrees | |
| $E_s := 28500$ | ksi, Modulus of Elasticity of the Prestressing Strands | |
| $w_c := 0.150$ | kcf | |

## E19-1.2 Modulus of Elasticity of Beam and Deck Material

Based on past experience, the modulus of elasticity for the precast and deck concrete are given in Chapter 19 as $E_{beam6} := 5500\,ksi$ and $E_{deck4} := 4125\,ksi$ for concrete strengths of 6 and 4 ksi respectively. The values of E for different concrete strengths are calculated as follows (ksi):

$$E_{beam8} := 5500 \cdot \frac{\sqrt{f'_c \cdot 1000}}{\sqrt{6000}} \qquad \boxed{E_{beam8} = 6351} \qquad E_B := E_{beam8}$$

$$E_D := E_{deck4}$$

$$n := \frac{E_B}{E_D} \qquad \boxed{n = 1.540}$$

Note that this value of $E_B$ is used for strength, composite section property, and long term deflection (deck and live load) calculations.

The value of the modulus of elasticity at the time of release is calculated in accordance with **LRFD [C5.4.2.4]**. This value of $E_{ct}$ is used for loss and instantaneous deflection (due to prestress and dead load of the girder) calculations.

$$E_{beam6.8} := 33000 \cdot w_c^{1.5} \cdot \sqrt{f'_{ci}} \qquad \boxed{E_{beam6.8} = 4999} \qquad E_{ct} := E_{beam6.8}$$

## E19-1.3 Section Properties

72W Girder Properties:

| | | | |
|---|---|---|---|
| $w_{tf} := 48$ | in | | |
| $t_t := 5.5$ | in | | |
| $t_w := 6.5$ | in | | |
| $t_b := 13$ | in | | |
| $ht := 72$ | in | | |
| $b_w := 30$ | width of bottom flange, in | | |
| $A_g := 915$ | $in^2$ | | |
| $r_{sq} := 717.5$ | $in^2$ | $y_b := -34.87$ | in |
| $I_g := 656426$ | $in^4$ | $S_t := 17680$ | $in^3$ |
| $y_t := 37.13$ | in | $S_b := -18825$ | $in^3$ |

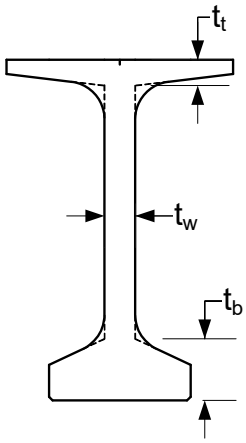

$e_g := y_t + 2 + \frac{t_{se}}{2}$ $\boxed{e_g = 42.88}$ in

Web Depth: $d_w := ht - t_t - t_b$ $\boxed{d_w = 53.50}$ in

$K_g := n \cdot \left(I_g + A_g \cdot e_g^2\right)$ **LRFD [Eq 4.6.2.2.1-1]** $\boxed{K_g = 3600866}$ $in^4$

## E19-1.4 Girder Layout

Chapter 19 suggests that at a 146 foot span, the girder spacing should be approximately 7'-6" with 72W girders.

$S := 7.5$ ft

Assume a minimum overhang of 2.5 feet (2 ft flange + 6" overhang), $s_{oh} := 2.5$

$n_{spa} := \frac{w_b - 2 \cdot s_{oh}}{S}$ $\boxed{n_{spa} = 5.000}$

Use the next lowest integer: $n_{spa} := \text{ceil}(n_{spa})$ $\boxed{n_{spa} = 5}$

Number of girders: $ng := n_{spa} + 1$ $\boxed{ng = 6}$

Overhang Length: $s_{oh} := \frac{w_b - S \cdot n_{spa}}{2}$ $\boxed{s_{oh} = 2.50}$ ft

Recalculate the girder spacing based on a minimum overhang, $s_{oh} := 2.5$

$S := \frac{w_b - 2 \cdot s_{oh}}{n_{spa}}$ $\boxed{S = 7.50}$ ft

## E19-1.5 Loads

| | |
|---|---|
| $w_g := 0.953$ | weight of 72W girders, klf |
| $w_d := 0.100$ | weight of 8-inch deck slab (interior), ksf |
| $w_h := 0.125$ | weight of 2.5-in haunch, klf |
| $w_{di} := 0.460$ | weight of diaphragms on interior girder (assume 2), kips |
| $w_{dx} := 0.230$ | weight of diaphragms on exterior girder, kips |
| $w_{ws} := 0.020$ | future wearing surface, ksf |
| $w_p = 0.387$ | weight of parapet, klf |

## E19-1.5.1 Dead Loads

Dead load on non-composite (DC):

exterior:

$$w_{dlxi} := w_g + w_d \cdot \left(\frac{S}{2} + s_{oh}\right) + w_h + 2 \cdot \frac{w_{dx}}{L}$$

$w_{dlxi} = 1.706$ klf

interior:

$$w_{dlii} := w_g + w_d \cdot S + w_h + 2 \cdot \frac{w_{di}}{L}$$

$w_{dlii} = 1.834$ klf

* Dead load on composite (DC):

$$w_p := \frac{2 \cdot w_p}{ng}$$

$w_p = 0.129$ klf

* Wearing Surface (DW):

$$w_{ws} := \frac{w \cdot w_{ws}}{ng}$$

$w_{ws} = 0.133$ klf

* **LRFD [4.6.2.2.1]** states that permanent loads on the deck may be distributed uniformly among the beams. This method is used for the parapet and future wearing surface loads.

## E19-1.5.2 Live Loads

For Strength 1 and Service 1 and 3:

HL-93 loading = truck + lane **LRFD [3.6.1.3.1]**

tandem + lane

DLA of 33% applied to truck or tandem, but not to lane per **LRFD [3.6.2.1].**

For Fatigue:

**LRFD [5.5.3]** states that fatigue of the reinforcement need not be checked for fully prestressed components designed to have extreme fiber tensile stress due to Service III Limit State within the tensile stress limit specified in **LRFD [Table 5.9.2.3.2b-1]**.

For fully prestressed components, the compressive stress due to the Fatigue I load combination and one half the sum of effective prestress and permanent loads shall not exceed 0.40 f'c after losses.

DLA of 15% applied to design truck with a 30 foot axle spacing.

For the Wisconsin Standard Permit Vehicle (Wis-250) Check:

The Wis-250 vehicle is to be checked during the design calculations to make sure it can carry a minimum vehicle weight of 190 kips. See Chapter 45 - Bridge Ratings for calculations.

## E19-1.6 Load Distribution to Girders

In accordance with **LRFD [Table 4.6.2.2.1-1]**, this structure is a Type "K" bridge.

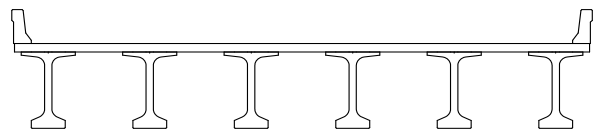

Distribution factors are in accordance with **LRFD [Table 4.6.2.2.2b-1]**. For an interior beam, the distribution factors are shown below:

For one Design Lane Loaded:

$$0.06 + \left(\frac{S}{14}\right)^{0.4} \cdot \left(\frac{S}{L}\right)^{0.3} \cdot \left(\frac{K_g}{12.0 \cdot L \cdot t_{se}^{\ 3}}\right)^{0.1}$$

For Two or More Design Lanes Loaded:

$$0.075 + \left(\frac{S}{9.5}\right)^{0.6} \cdot \left(\frac{S}{L}\right)^{0.2} \cdot \left(\frac{K_g}{12.0 \cdot L \cdot t_{se}^{\ 3}}\right)^{0.1}$$

Criteria for using distribution factors - Range of Applicability per **LRFD [Table 4.6.2.2.2b-1]**.

$$DeckSpan := \begin{cases} \text{"OK"} & \text{if } 3.5 \le S \le 16 \\ \text{"NG"} & \text{otherwise} \end{cases}$$

$$DeckThickness := \begin{cases} \text{"OK"} & \text{if } 4.5 \le t_{se} \le 12 \\ \text{"NG"} & \text{otherwise} \end{cases}$$

$$BridgeSpan := \begin{cases} \text{"OK"} & \text{if } 20 \le L \le 240 \\ \text{"NG"} & \text{otherwise} \end{cases}$$

$$NoBeams := \begin{cases} \text{"OK"} & \text{if } ng \ge 4 \\ \text{"NG"} & \text{otherwise} \end{cases}$$

$$LongitStiffness := \begin{cases} \text{"OK"} & \text{if } 10000 \le K_g \le 7000000 \\ \text{"NG"} & \text{otherwise} \end{cases}$$

$$x := \begin{pmatrix} S & \text{DeckSpan} \\ t_{se} & \text{DeckThickness} \\ L & \text{BridgeSpan} \\ ng & \text{NoBeams} \\ K_g & \text{LongitStiffness} \end{pmatrix} \qquad x = \begin{pmatrix} 7.5 & \text{"OK"} \\ 7.5 & \text{"OK"} \\ 146.0 & \text{"OK"} \\ 6.0 & \text{"OK"} \\ 3600866.5 & \text{"OK"} \end{pmatrix}$$

## E19-1.6.1 Distribution Factors for Interior Beams:

One Lane Loaded:

$$g_{i1} := 0.06 + \left(\frac{S}{14}\right)^{0.4} \cdot \left(\frac{S}{L}\right)^{0.3} \cdot \left(\frac{K_g}{12.0 \cdot L \cdot t_{se}^{\,3}}\right)^{0.1} \qquad \boxed{g_{i1} = 0.435}$$

Two or More Lanes Loaded:

$$g_{i2} := 0.075 + \left(\frac{S}{9.5}\right)^{0.6} \cdot \left(\frac{S}{L}\right)^{0.2} \cdot \left(\frac{K_g}{12.0 \cdot L \cdot t_{se}^{\,3}}\right)^{0.1} \qquad \boxed{g_{i2} = 0.636}$$

$$g_i := \max(g_{i1}, g_{i2}) \qquad \boxed{g_i = 0.636}$$

Note: The distribution factors above already have a multiple presence factor included that is used for service and strength limit states. For fatigue limit states, the 1.2 multiple presence factor should be divided out.

## E19-1.6.2 Distribution Factors for Exterior Beams:

Two or More Lanes Loaded:

Per **LRFD [Table 4.6.2.2.2d-1]** the distribution factor shall be calculated by the following equations:

$$w_{parapet} := \frac{w_b - w}{2}$$ Width of parapet overlapping the deck $\boxed{w_{parapet} = 1.250}$ ft

$$d_e := s_{oh} - w_{parapet}$$ Distance from the exterior web of exterior beam to the interior edge of parapet, ft. $\boxed{d_e = 1.250}$ ft

Note: Conservatively taken as the distance from the center of the exterior girder.

Check range of applicability for de:

$$d_{e_check} := \begin{cases} \text{"OK"} & \text{if } -1.0 \le d_e \le 5.5 \\ \text{"NG"} & \text{otherwise} \end{cases}$$

$d_{e_check} = \text{"OK"}$

Note: While AASHTO allows the $d_e$ value to be up to 5.5, the deck overhang (from the center of the exterior girder to the edge of the deck) is limited by WisDOT policy as stated in Chapter 17 of the Bridge Manual.

$$e := 0.77 + \frac{d_e}{9.1}$$

$e = 0.907$

$$g_{x2} := e \cdot g_i$$

$g_{x2} = 0.577$

One Lane Loaded:

Per **LRFD [Table 4.6.2.2.2d-1]** the distribution factor shall be calculated by the Lever Rule.

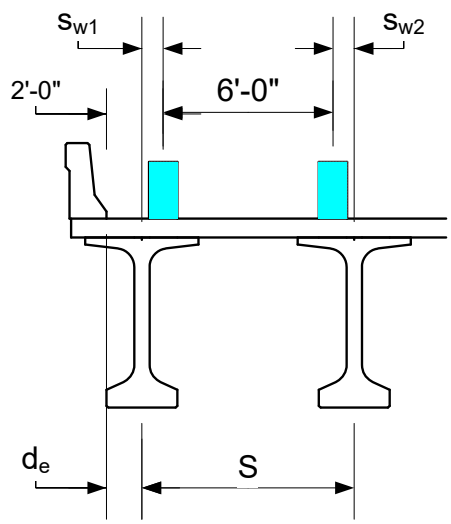


$s_{w1} := d_e - 2$ Distance from center of exterior girder to outside wheel load, ft. $s_{w1} = -0.750$ ft

$s_{w2} := S + s_{w1} - 6$ Distance from wheel load to first interior girder, ft. $s_{w2} = 0.750$ ft

$$R_x := \frac{S + s_{w1} + s_{w2}}{S \cdot 2}$$

$R_x = 0.500$ % of a lane load

Add the single lane multi-presence factor, $m := 1.2$

$$g_{x1} := R_x \cdot 1.2$$

$g_{x1} = 0.600$

The exterior girder distribution factor is the maximum value of the One Lane Loaded case and the Two or More Lanes Loaded case:

$g_x := \max(g_{x1}, g_{x2})$ $\boxed{g_x = 0.600}$

Note: The interior girder has a larger live load distribution factor and a larger dead load than the exterior girder. Therefore, for this example, the interior girder is likely to control.

### E19-1.6.3 Distribution Factors for Fatigue:

The distribution factor for fatigue is the single lane distribution factor with the multi-presence factor, $m = 1.200$ , removed:

$g_{if} := \frac{g_{i1}}{1.2}$ $\boxed{g_{if} = 0.362}$

## E19-1.7 Limit States and Combinations

The limit states, load factors and load combinations shall be applied as required and detailed in chapter 17 of this manual and as indicated below.

### E19-1.7.1 Load Factors

From **LRFD [Table 3.4.1-1 & Table 3.4.1-4]**:

| | DC | DW | LL |
|---|---|---|---|
| Strength 1 | $\gamma st_{DC} := 1.25$ | $\gamma st_{DW} := 1.50$ | $\gamma st_{LL} := 1.75$ |
| Service 1 | $\gamma s1_{DC} := 1.0$ | $\gamma s1_{DW} := 1.0$ | $\gamma s1_{LL} := 1.0$ |
| Service 3 | $\gamma s3_{DC} := 1.0$ | $\gamma s3_{DW} := 1.0$ | $\gamma s3_{LL} := 0.8$ |
| | | | Check Tension Stress |
| Fatigue I | | | $\gamma f_{LL} := 1.75$ |

Dynamic Load Allowance (IM) is applied to the truck and tandem.

## E19-1.7.2 Dead Load Moments

The unfactored dead load moments are listed below (values are in kip-ft):

| Unfactored Dead Load Interior Girder Moments (kip-ft) | | | | |
|---|---|---|---|---|
| Tenth Point (Along Span) | DC girder at release | DC non-composite | DC composite | DW composite |
| 0 | 35 | 0 | 0 | 0 |
| 0.1 | 949 | 1759 | 124 | 128 |
| 0.2 | 1660 | 3128 | 220 | 227 |
| 0.3 | 2168 | 4105 | 289 | 298 |
| 0.4 | 2473 | 4692 | 330 | 341 |
| 0.5 | 2574 | 4887 | 344 | 355 |

The $DC_{nc}$ values are the component non-composite dead loads and include the weight of the girder, haunch, diaphragms and the deck.

The $DC_c$ values are the component composite dead loads and include the weight of the parapets.

The $DW_c$ values are the composite dead loads from the future wearing surface.

Note that the girder dead load moments at release are calculated based on the girder length. The moments for other loading conditions are calculated based on the span length (center to center of bearing).

## E19-1.7.3 Live Load Moments

The unfactored live load load moments (per lane including impact) are listed below (values are in kip-ft). Note that the impact factor is applied only to the truck portion of the HL-93 loads. A separate analysis run will be required if results without impact are desired.

| Unfactored Live Load + Impact Moments per Lane (kip-ft) | | | |
|---|---|---|---|
| Tenth Point | Truck | Tandem | Fatigue |
| 0 | 0 | 0 | 0 |
| 0.1 | 1783 | 1474 | 937 |
| 0.2 | 2710 | 2618 | 1633 |
| 0.3 | 4100 | 3431 | 2118 |
| 0.4 | 4665 | 3914 | 2383 |
| 0.5 | 4828 | 4066 | 2406 |

The Wisconsin Standard Permit Vehicle should also be checked. See Chapter 45 - Bridge Rating for further information.

The unfactored live load moments per lane are calculated by applying the appropriate distribution factor to the controlling moment. For the interior girder:

$g_i = 0.636$

$M_{LL} = g_i \cdot 4828$ $\boxed{M_{LL} = 3072.8}$ kip-ft

$\boxed{g_{if} = 0.362}$

$M_{LLfat} := g_{if} \cdot 2406$ $\boxed{M_{LLfat} = 871.4}$ kip-ft

## E19-1.7.4 Factored Moments

WisDOT's policy is to set all of the load modifiers, $\eta$, equal to 1.0. The factored moments for each limit state are calculated by applying the appropriate load factor to the girder moments. For the interior girder:

Strength 1

$$M_{str} := \eta \cdot \left[\gamma st_{DC} \cdot \left(M_{DLnc} + M_{DLc}\right) + \gamma st_{DW} \cdot M_{DWc} + \gamma st_{LL} \cdot M_{LL}\right]$$

$$= 1.0 \cdot \left[1.25 \cdot \left(M_{DLnc} + M_{DLc}\right) + 1.50 \cdot M_{DWc} + 1.75 \cdot M_{LL}\right]$$ $\boxed{M_{str} = 12449.3}$ kip-ft

Service 1 (for compression checks)

$$M_{s1} := \eta \cdot \left[\gamma s1_{DC} \cdot \left(M_{DLnc} + M_{DLc}\right) + \gamma s1_{DW} \cdot M_{DWc} + \gamma s1_{LL} \cdot M_{LL}\right]$$

$$= 1.0 \cdot \left[1.0 \cdot \left(M_{DLnc} + M_{DLc}\right) + 1.0 \cdot M_{DWc} + 1.0 \cdot M_{LL}\right]$$ $\boxed{M_{s1} = 8659.3}$ kip-ft

Service 3 (for tension checks)

$$M_{s3} := \eta \cdot \left[\gamma s3_{DC} \cdot \left(M_{DLnc} + M_{DLc}\right) + \gamma s3_{DW} \cdot M_{DWc} + \gamma s3_{LL} \cdot M_{LL}\right]$$

$$= 1.0 \cdot \left[1.0 \cdot \left(M_{DLnc} + M_{DLc}\right) + 1.0 \cdot M_{DWc} + 0.8 \cdot M_{LL}\right]$$ $\boxed{M_{s3} = 8044.7}$ kip-ft

Service 1 and 3 non-composite DL alone

$M_{nc} := \eta \cdot \gamma s1_{DC} \cdot M_{DLnc}$ $\boxed{M_{nc} = 4887.5}$ kip-ft

Fatigue 1

$M_{fat} := \eta \cdot \gamma f_{LL} \cdot M_{LLfat}$ $\boxed{M_{fat} = 1524.9}$ kip-ft

## E19-1.8 Composite Girder Section Properties

Calculate the effective flange width in accordance with **LRFD [4.6.2.6]** and section 17.2.11 of the Wisconsin Bridge Manual:

$w_e := S \cdot 12$ $\boxed{w_e = 90.00}$ in

The effective width, $w_e$, must be adjusted by the modular ratio, n, to convert to the same concrete material (modulus) as the girder.

$w_{eadj} := \frac{w_e}{n}$ $\boxed{w_{eadj} = 58.46}$ in

Calculate the composite girder section properties:

effective slab thickness; $\boxed{t_{se} = 7.50}$ in

effective slab width; $\boxed{w_{eadj} = 58.46}$ in

haunch thickness; $hau := 2.00$ in

total height; $h_c := ht + hau + t_{se}$

$\boxed{h_c = 81.50}$ in

$\boxed{n = 1.540}$

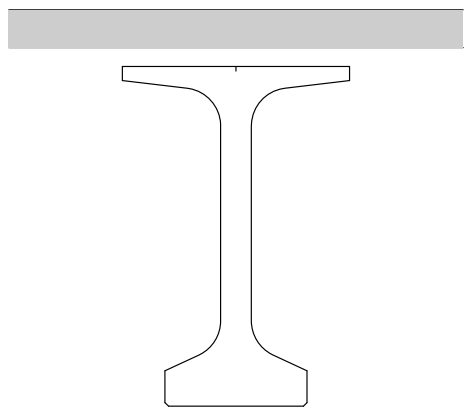

Note: The area of the concrete haunch is not included in the calculation of the composite section properties.

| Component | Ycg | A | AY | $AY^2$ | I | $I+AY^2$ |
|---|---|---|---|---|---|---|
| Deck | 77.75 | 438 | 34088 | 2650309 | 2055 | 2652364 |
| Girder | 34.87 | 915 | 31906 | 1112564 | 656426 | 1768990 |
| Haunch | 73 | 0 | 0 | 0 | 0 | 0 |
| Summation | | 1353 | 65994 | | | 4421354 |

$\boxed{\Sigma A = 1353}$ $in^2$

$\boxed{\Sigma AY = 65994}$ $in^3$

$\boxed{\Sigma IplusAYsq = 4421354}$ $in^4$

$y_{cgb} := \frac{-\Sigma AY}{\Sigma A}$ $\boxed{y_{cgb} = -48.8}$ in

$y_{cgt} := ht + y_{cgb}$ $\boxed{y_{cgt} = 23.2}$ in

$A_{cg} := \Sigma A$ $\boxed{A_{cg} = 1353}$ $in^2$

$I_{cg} := \Sigma IplusAYsq - A_{cg} \cdot y_{cgb}^2$ $\boxed{I_{cg} = 1203475}$ $in^4$

$S_{cgt} := \frac{I_{cg}}{y_{cgt}}$ $\boxed{S_{cgt} = 51786}$ $in^3$

$S_{cgb} := \frac{I_{cg}}{y_{cgb}}$ $\boxed{S_{cgb} = -24681}$ $in^3$

Deck:

$S_{cgdt} := n \cdot \frac{I_{cg}}{y_{cgt} + hau + t_{se}}$ $\boxed{S_{cgdt} = 56594}$ $in^3$

$S_{cgdb} := n \cdot \frac{I_{cg}}{y_{cgt} + hau}$ $\boxed{S_{cgdb} = 73411}$ $in^3$

## E19-1.9 Preliminary Design Information

Calculate initial girder loads, service loads, and estimate prestress losses. This information will be utilized in the preliminary design steps.

Note: The initial girder loads will be used to check stresses at transfer (before losses) and the service loads will be used to check stresses while in service (after losses). These calculations and the estimated prestress losses will then be used to select the number of strands for final design calculations.

At transfer (Interior Girder):

$M_{iend} := 0$ kip-ft

$M_g := w_g \cdot \frac{L_g^2}{8}$ $\boxed{M_g = 2574.2}$ kip-ft

At service (Interior Girder):

Service 1 Moment $\boxed{M_{s1} = 8659.3}$ kip-ft

Service 3 Moment $\boxed{M_{s3} = 8044.7}$ kip-ft

Service 1 Moment Components:

non-composite moment (girder + deck) $M_{nc} = 4887.5$ kip-ft

composite moment (parapet, FWS and LL)

$M_{1c} := M_{s1} - M_{nc}$ $M_{1c} = 3771.8$ kip-ft

Service 3 Moment Components:

non-composite moment (girder + deck) $M_{nc} = 4887.5$ kip-ft

composite moment (parapet, FWS and LL)

$M_{3c} := M_{s3} - M_{nc}$ $M_{3c} = 3157.2$ kip-ft

At service the prestress has decreased (due to CR, SH, RE):

Estimated time dependant losses $F_{Delta} := 32.000$ ksi

Note: The estimated time dependant losses (for low relaxation strands) will be re-calculated using the approximate method in accordance with **LRFD [5.9.3.3]** once the number of strands has been determined.

Assume an initial strand stress; $f_{tr} := 0.75 \cdot f_{pu}$ $f_{tr} = 202.500$ ksi

Based on experience, assume $\Delta f_{pES_est} := 18$ ksi loss from elastic shortening. As an alternate initial estimate, **LRFD [C.5.9.3.2.3a]** suggests assuming a 10% ES loss.

$ES_{loss} := \frac{\Delta f_{pES_est}}{f_{tr}} \cdot 100$ $ES_{loss} = 8.889$ %

$f_i := f_{tr} - \Delta f_{pES_est}$ $f_i = 184.500$ ksi

The total loss is the time dependant losses plus the ES losses:

$loss := F_{Delta} + \Delta f_{pES_est}$ $loss = 50.0$ ksi

$loss_{\%} := \frac{loss}{f_{tr}} \cdot 100$ $loss_{\%} = 24.7$ % (estimated)

If $T_o$ is the initial prestress, then (1-loss)*$T_o$ is the remaining:

$$T = \left(1 - loss_{\%}\right) \cdot T_O$$

$$ratio := 1 - \frac{loss_{\%}}{100}$$

$$\boxed{ratio = 0.753}$$

$$T = ratio \cdot T_O$$

## E19-1.10 Preliminary Design Steps

The following steps are utilized to design the prestressing strands:

1) Design the amount of prestress to prevent tension at the bottom of the beam under the full load at center span after losses.

2) Calculate the prestress losses and check the girder stresses at mid span at the time of transfer.

3) Design the eccentricity of the strands at the girder end to avoid tension or compression over-stress at the time of transfer.

4) If required, design debonding of strands to prevent over-stress at the girder ends.

5) Check resulting stresses at the critical sections of the girder at the time of transfer and after losses.

## E19-1.10.1 Determine Amount of Prestress

Design the amount of prestress to prevent tension at the bottom of the beam under the full load (at center span) after losses.

Near center span, after losses, T = the remaining effective prestress, aim for no tension at the bottom. Use Service I for compression and Service III for tension.

For this example, the interior girder has the controlling moments.

Calculate the stress at the bottom of the beam due to combination of non-composite and composite loading (Service 3 condition):

$$f_b := \frac{M_{nc} \cdot 12}{S_b} + \frac{M_{3c} \cdot 12}{S_{cgb}} \qquad \boxed{f_b = -4.651} \text{ ksi}$$

Stress at bottom due to prestressing (after losses):

$$f_{bp} = \frac{T}{A} \cdot \left(1 + e \cdot \frac{y_b}{r^2}\right) \qquad \text{where } T = \left(1 - loss_{\%}\right) \cdot T_o$$

and $f_{bp} := -f_b$ desired final prestress.

We want this to balance out the tensile stress calculated above from the loading, i.e. an initial compression. Since we are making some assumptions on the actual losses, we are ignoring the allowable tensile stress in the concrete for these calculations.

$$f_{bp} = \frac{\left(1 - loss_{\%}\right) \cdot T_o}{A} \cdot \left(1 + e \cdot \frac{y_b}{r^2}\right) \qquad \text{(after losses)}$$

OR:

$$\frac{f_{bp}}{1 - loss_{\%}} = \frac{T_o}{A} \cdot \left(1 + e \cdot \frac{y_b}{r^2}\right)$$

$$f_{bpi_1} := \frac{f_{bp}}{1 - \frac{loss_{\%}}{100}}$$

$f_{bpi_1} = 6.175$ ksi

desired bottom initial prestress (before losses)

If we use the actual allowable tensile stress in the concrete, the desired bottom initial prestress is calculated as follows:

The allowable tension, from **LRFD [5.9.2.3.2b]**, is:

$f_{tall} := 0.19 \cdot \lambda \sqrt{f'_c} \le 0.6$ ksi; $\lambda = 1.0$ (norm. wgt. conc.) **LRFD [5.4.2.8]**

$f_{tall} = 0.537$ ksi

The desired bottom initial prestress (before losses):

$f_{bpi_2} := f_{bpi_1} - f_{tall}$

$f_{bpi_2} = 5.638$ ksi

Determine the stress effects for different strand patterns on the 72W girder:

$A_{strand} = 0.21 in^2$

$f'_s := 270000$ psi

$f_s := 0.75 \cdot f'_s$

$f_s = 202500$ psi

$P := A_{strand} \cdot \frac{f_s}{1000}$

$P = 43.94$ kips

$$f_{bpi} := \frac{P \cdot N}{A_g} \cdot \left(1 + e \cdot \frac{y_b}{r_{sq}}\right)$$

(bottom initial prestress - before losses)

The values of $f_{bpi}$ for various strand patterns is shown in the following table.

| 72W Stress Effects | | |
|---|---|---|
| Pi (per strand) = 43.94 kips | | |
| No. Strands | e (in) | bottom stress (ksi) |
| 36 | -31.09 | 4.3411 |
| 38 | -30.98 | 4.5726 |
| 40 | -30.87 | 4.8030 |
| 42 | -30.77 | 5.0333 |
| 44 | -30.69 | 5.2648 |
| 46 | -30.52 | 5.4858 |
| 48 | -30.37 | 5.7075 |
| 50 | -30.23 | 5.9290 |
| 52 | -30.10 | 6.1504 |

Solution:
Try $ns := 44$ strands, 0.6 inch diameter.
Initial prestress at bottom $f_{bpi} := 5.2648$ ksi,
Eccentricity, $e_s := -30.69$ inches; actual tension should be less than allowed.

## E19-1.10.2 Prestress Loss Calculations

The loss in prestressing force is comprised of the following components:

1) Elastic Shortening (ES), shortening of the beam as soon as prestress is applied.

2) Shrinkage (SH), shortening of the concrete as it hardens, time function.

3) Creep (CR), slow shortening of concrete due to permanent compression stresses in the beam, time function.

4) Relaxation (RE), the tendon slowly accommodates itself to the stretch and the internal stress drops with time

### E19-1.10.2.1 Elastic Shortening Loss

at transfer (before ES loss) **LRFD [5.9.2.2]**

$$T_{oi} := ns \cdot f_{tr} \cdot A_{strand} \qquad \boxed{= 44 \cdot 0.75 \cdot 270 \cdot A_{strand} = 1933} \text{ kips}$$

The ES loss estimated above was: $\Delta f_{pES_est} = 18.0$ ksi, or $ES_{loss} = 8.889$ %. The resulting force in the strands after ES loss:

$$T_o := \left(1 - \frac{ES_{loss}}{100}\right) \cdot T_{oi} \qquad \boxed{T_o = 1761.6} \text{ kips}$$

If we assume all strands are straight we can calculate the initial elastic shortening loss;

$$f_{cgp} := \frac{T_o}{A_g} + \left(T_o \cdot e_s\right) \cdot \frac{e_s}{I_g} + M_g \cdot 12 \cdot \frac{e_s}{I_g} \qquad \boxed{f_{cgp} = 3.009} \text{ ksi}$$

$$\boxed{E_{ct} = 4999} \text{ ksi}$$

$$E_p := E_s \qquad \boxed{E_p = 28500} \text{ ksi}$$

$$\Delta f_{pES} := \frac{E_p}{E_{ct}} \cdot f_{cgp} \qquad \boxed{\Delta f_{pES} = 17.152} \text{ ksi}$$

This value of $\Delta f_{pES}$ is in agreement with the estimated value above; $\Delta f_{pES_est} = 18.00$ ksi. If these values did not agree, $T_o$ would have to be recalculated using $f_{tr}$ minus the new value of $\Delta f_{pES}$, and a new value of $f_{cgp}$ would be determined. This iteration would continue until the assumed and calculated values of $\Delta f_{pES}$ are in agreement.

The initial stress in the strand is:

$$f_i := f_{tr} - \Delta f_{pES}$$

$f_i = 185.348$ ksi

The force in the beam after transfer is:

$$T_o := ns \cdot A_{strand} \cdot f_i$$

$T_o = 1770$ kips

Check the design to avoid premature failure at the center of the span at the time of transfer.
Check the stress at the center span (at the plant) at both the top and bottom of the girder.

$$f_{ttr} := \frac{T_o}{A_g} + \frac{T_o \cdot e_s}{S_t} + \frac{M_g \cdot 12}{S_t}$$

$f_{ttr} = 0.609$ ksi

$$f_{btr} := \frac{T_o}{A_g} + \frac{T_o \cdot e_s}{S_b} + \frac{M_g \cdot 12}{S_b}$$

$f_{btr} = 3.178$ ksi

temporary allowable stress (compression) **LRFD [5.9.2.3.1a]**:

$$f_{ciall} := 0.65 \cdot f'_{ci}$$

$f_{ciall} = 4.420$ ksi

Is the stress at the bottom of the girder less than the allowable? check = "OK"

## E19-1.10.2.2 Approximate Estimate of Time Dependant Losses

Calculate the components of the time dependant losses; shrinkage, creep and relaxation, using the approximate method in accordance with **LRFD [5.9.3.3]**.

$$\Delta f_{pLT} = 10.0 \cdot \frac{f_{pi} \cdot A_{strand}}{A_g} \cdot \gamma_h \cdot \gamma_{st} + 12.0 \cdot \gamma_h \cdot \gamma_{st} + \Delta f_{pR}$$

From **LRFD [Figure 5.4.2.3.3-1]**, the average annual ambient relative humidity, $H := 72$ %.

$\gamma_h := 1.7 - 0.01 \cdot H$ $\boxed{\gamma_h = 0.980}$

$\gamma_{st} := \dfrac{5}{1 + f'_{ci}}$ $\boxed{\gamma_{st} = 0.641}$

$\Delta f_{pR} := 2.4$ ksi for low relaxation strands

$\Delta f_{pCR} := 10.0 \cdot \dfrac{f_{tr} \cdot A_{strand} \cdot ns}{A_g} \cdot \gamma_h \cdot \gamma_{st}$ $\boxed{\Delta f_{pCR} = 13.274}$ ksi

$\Delta f_{pSR} := 12.0 \cdot \gamma_h \cdot \gamma_{st}$ $\boxed{\Delta f_{pSR} = 7.538}$ ksi

$\Delta f_{pRE} := \Delta f_{pR}$ $\boxed{\Delta f_{pRE} = 2.400}$ ksi

$\Delta f_{pLT} := \Delta f_{pCR} + \Delta f_{pSR} + \Delta f_{pRE}$ $\boxed{\Delta f_{pLT} = 23.213}$ ksi

The total estimated prestress loss (Approximate Method):

$\Delta f_p := \Delta f_{pES} + \Delta f_{pLT}$ $\boxed{\Delta f_p = 40.365}$ ksi

$\boxed{\dfrac{\Delta f_p}{f_{tr}} \cdot 100 = 19.93}$ % total prestress loss

This value is slightly less than but in general agreement with the initial estimated $loss_{\%} = 24.691$ .

The remaining stress in the strands and total force in the beam after all losses is:

$f_{pe} := f_{tr} - \Delta f_p$ $\boxed{f_{pe} = 162.13}$ ksi

$T := ns \cdot A_{strand} \cdot f_{pe}$ $\boxed{T = 1548}$ kips

## E19-1.10.3 Design of Strand Drape

Design the eccentricity of the strands at the end to avoid tension or compression over stress at the time of transfer. Check the top stress at the end. If the strands are straight, $M_g = 0$.

top:

$f_{tetr} := \dfrac{T_o}{A_g} + \dfrac{T_o \cdot e_s}{S_t}$ $\boxed{f_{tetr} = -1.138}$ ksi

high tension stress

In accordance with **LRFD [Table 5.9.2.3.1b]**, the temporary allowable tension stress is calculated as follows (assume there is no bonded reinforcement):

$f_{tiall} := -\min\left(0.0948 \cdot \lambda \sqrt{f'_{ci}}, 0.2\right)$ λ = 1.0 (normal wgt. conc.) **LRFD [5.4.2.8]** $f_{tiall} = -0.200$ ksi

bottom:

$$f_{betr} := \frac{T_o}{A_g} + \frac{T_o \cdot e_s}{S_b}$$

$f_{betr} = 4.819$ ksi

$f_{ciall} = 4.420$ ksi

high compressive stress

The tension at the top is too high, and the compression at the bottom is also too high!!

Drape some of the strands upward to decrease the top tension and decrease the compression at the bottom.

Find the required position of the steel centroid to avoid tension at the top. Conservatively set the top stress equal to zero and solve for "e":

$$f_{tetr} = \frac{T_o}{A_g} + \frac{T_o \cdot e_s}{S_t}$$

$$e_{sendt} := \frac{S_t}{T_o} \cdot \left(0 - \frac{T_o}{A_g}\right)$$

$e_{sendt} = -19.32$ inches or higher

Therefore, we need to move the resultant centroid of the strands up:

$move := e_{sendt} - e_s$ $move = 11.37$ inches upward

Find the required position of the steel centroid to avoid high compression at the bottom of the beam. Set the bottom compression equal to the allowable stress and find where the centroid of $ns = 44$ strands needs to be:

$$f_{betr} = \frac{T_o}{A_g} + \frac{T_o \cdot e_s}{S_b}$$

Set equal to allowed: $f_{betr} := f_{ciall}$

$$e_{sendb} := \frac{S_b}{T_o} \cdot \left(f_{ciall} - \frac{T_o}{A_g}\right)$$

$e_{sendb} = -26.44$ inches or higher

Top stress condition controls:

$e_{send} := \max\left(e_{sendt}, e_{sendb}\right)$ $e_{send} = -19.32$ inches

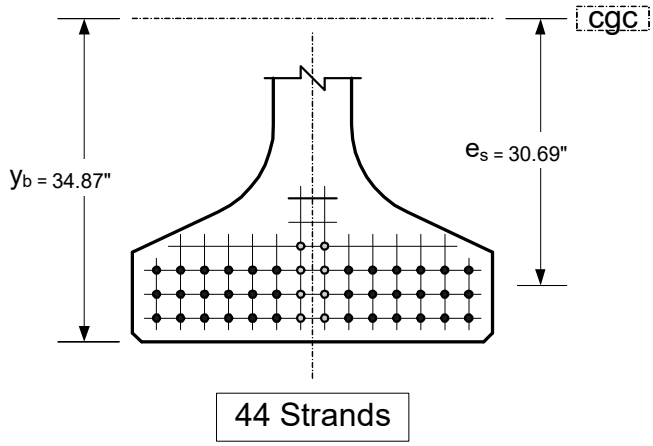


36 undraped strands
8 draped strands

**LRFD [Table 5.10.1-1]** requires 2 inches of cover. However, WisDOT uses 2 inches to the center of the strand, and 2 inch spacing between centers.

The center $ns_d := 8$ strands will be draped at the end of the girder.

Find the center of gravity of the remaining $ns_s = 36$ straight strands from the bottom of the girder:

$$Y_s := \frac{12 \cdot 2 + 12 \cdot 4 + 12 \cdot 6}{ns_s}$$

$Y_s = 4.00$ inches from the bottom of the girder

OR:

$$y_s := y_b + Y_s$$

$y_s = -30.87$ inches from the center of gravity of the girder (cgc)

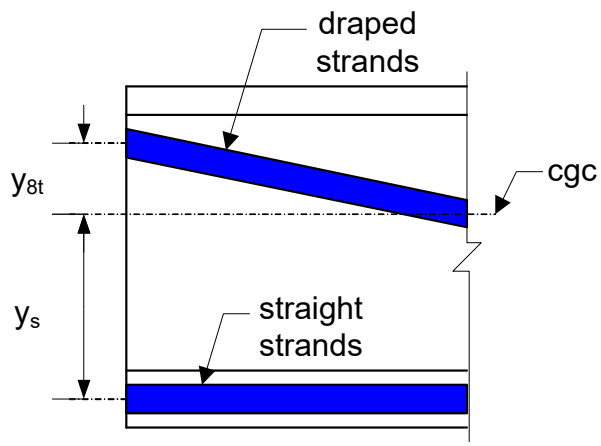


$y_{8t}$ is the eccentricity of the draped strands at the end of the beam. We want the eccentricity of all of the strands at the end of the girder to equal, $e_{send} = -19.322$ inches for stress control.

$$e_{send} = \frac{ns_s \cdot y_s + ns_d \cdot y_{8t}}{ns}$$

$$y_{8t} := \frac{ns \cdot e_{send} - ns_s \cdot y_s}{ns_d}$$ $y_{8t} = 32.64$ inches above the cgc

However, $y_t = 37.13$ inches to the top of the beam. If the draped strands are raised $y_{8t} = 32.64$ inches or more above the cgc, the stress will be OK.

Drape the center strands the maximum amount: Maximum drape for $ns_d = 8$ strands:

$y_{8t} := y_t - 5$ $y_{8t} = 32.13$ in

$e_s = -30.69$ in

$y_{8t} - e_s = 62.82$ in

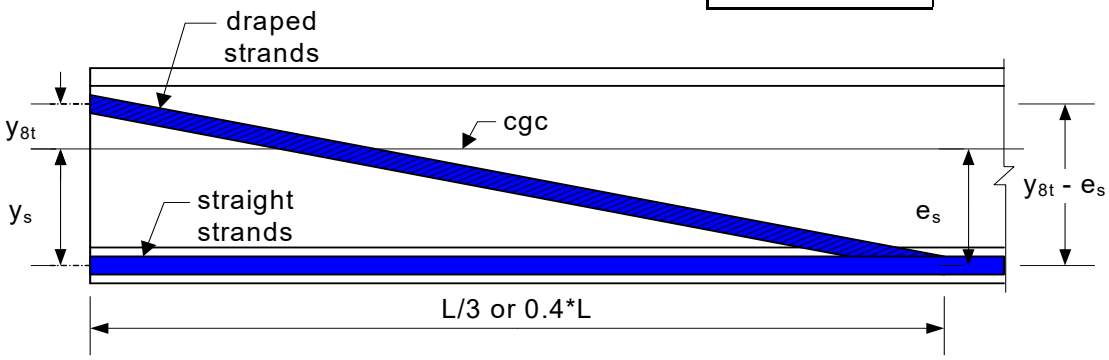


Try a drape length of: $\frac{L_g}{3} = 49.00$ feet $HD := \frac{L_g}{3}$

The eccentricity of the draped strands at the hold down point:

$e_{8hd} := y_b + 5$ $e_{8hd} = -29.870$ in

Strand slope, $slope := \frac{y_{8t} - e_{8hd}}{(HD \cdot 12)} \cdot 100$ $slope = 10.54$ %

Is the slope of the strands less than 12%? check = "OK"

12% is a suggested maximum slope, actual acceptable slope is dependant on the form capacity or on the fabricator.

Calculate the values of A, $B_{min}$, $B_{max}$ and C to show on the plans:

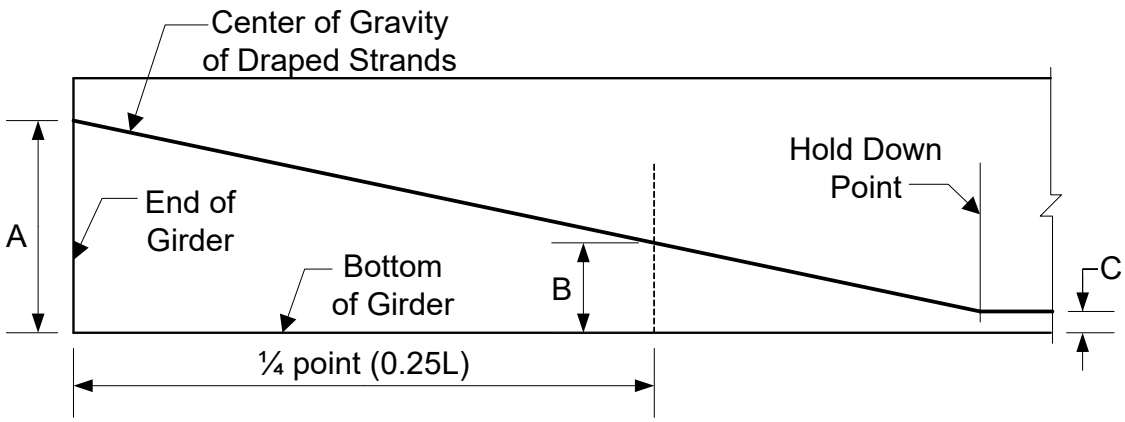


$A := |y_b| + y_{8t}$ $\quad A = 67.00$ in

$C := 5.00$ in

$B_{min} := \frac{A + 3C}{4}$ $\quad B_{min} = 20.50$ in

$B_{max} := B_{min} + 3$ $\quad B_{max} = 23.50$ in

Check hold down location for $B_{max}$ to make sure it is located between $L_g/3$ and $0.4*L_g$:

$slope_{Bmax} := \frac{A - B_{max}}{0.25 \cdot L_g \cdot 12}$ $\quad slope_{Bmax} = 0.099$ ft/ft

$x_{Bmax} := \frac{A - C}{slope_{Bmax}} \cdot \frac{1}{12}$ $\quad x_{Bmax} = 52.38$ ft

$L_g \cdot 0.4 = 58.80$ ft

Is the resulting hold down location less than $0.4*L_g$? $\quad$ check = "OK"

Check the girder stresses at the end of the transfer length of the strands at release:

Minimum moment on section = girder moment at the plant

The transfer length may be taken as:

$l_{tr} := 60 \cdot d_b$ $\quad l_{tr} = 36.00$ in

$x := \frac{l_{tr}}{12}$ $\quad x = 3.00$ feet

The eccentricity of the draped strands and the entire strand group at the transfer length is:

$$y_{8tt} := y_{8t} - \frac{slope}{100} \cdot x \cdot 12$$

$y_{8tt} = 28.334$ in

$$e_{st} := \frac{ns_s \cdot y_s + 8 \cdot y_{8tt}}{ns}$$

$e_{st} = -20.106$ in

The moment at the end of the transfer length due to the girder dead load:

$$M_{gt} := \frac{w_g}{2} \cdot \left(L_g \cdot x - x^2\right)$$

$M_{gt} = 206$ kip-ft

The girder stresses at the end of the transfer length:

$$f_{tt} := \frac{T_o}{A_g} + \frac{T_o \cdot e_{st}}{S_t} + \frac{M_{gt} \cdot 12}{S_t}$$

$f_{tt} = 0.061$ ksi

$f_{tiall} = -0.200$ ksi

Is $f_{tt}$ less than $f_{tiall}$?

check = "OK"

$$f_{bt} := \frac{T_o}{A_g} + \frac{T_o \cdot e_{st}}{S_b} + \frac{M_{gt} \cdot 12}{S_b}$$

$f_{bt} = 3.693$ ksi

$f_{ciall} = 4.420$ ksi

Is $f_{bt}$ less than $f_{ciall}$?

check = "OK"

E19-1.10.4 Stress Checks at Critical Sections

| Critical Sections | Critical Conditions | | |
|---|---|---|---|
| | At Transfer | Final | Fatigue |
| Girder Ends | X | | |
| Midspan | X | X | X |
| Hold Down Points | X | X | X |

Data:

$T_o = 1770$ kips $T = 1548$ kips

$M_{nc} = 4887$ kip-ft $M_{s3} = 8045$ kip-ft

$M_{s1} = 8659$ kip-ft $M_g = 2574$ kip-ft

Need moments at hold down points: $\frac{L_g}{3} = 49.00$ feet, from the end of the girder.

girder: $M_{ghd} = 2288$ kip-ft

non-composite: $M_{nchd} = 4337$ kip-ft

Service I composite: $M_{1chd} = 3371$ kip-ft

Service III composite: $M_{3chd} = 2821$ kip-ft

Note: The release girder moments shown above at the hold down location are calculated based on the total girder length.

**Check the girder at the end of the beam (at the transfer length):**

$e_{st} = -20.11$ inches $f_{tiall} = -0.200$ ksi $f_{ciall} = 4.420$ ksi

At transfer, $M_{gt} = 206$ kip-ft

Top of girder (Service 3):

$$f_{tei} := \frac{T_o}{A_g} + \frac{T_o \cdot e_{st}}{S_t} + \frac{M_{gt} \cdot 12}{S_t}$$

$f_{tei} = 0.061$ ksi

Is $f_{tei}$ greater than $f_{tiall}$? check = "OK"

Bottom of girder (Service 1):

$$f_{bei} := \frac{T_o}{A_g} + \frac{T_o \cdot e_{st}}{S_b} + \frac{M_{gt} \cdot 12}{S_b}$$

$f_{bei} = 3.693$ ksi

Is $f_{bei}$ less than $f_{ciall}$? check = "OK"

**Check at the girder and deck at midspan:**

$e_s = -30.69$ inches

Initial condition at transfer: $f_{tiall} = -0.200$ ksi $f_{ciall} = 4.420$ ksi

Top of girder stress (Service 3):

$$f_{ti} := \frac{T_o}{A_g} + \frac{T_o \cdot e_s}{S_t} + \frac{M_g \cdot 12}{S_t}$$ $f_{ti} = 0.609$ ksi

Is $f_{ti}$ greater than $f_{tiall}$? check = "OK"

Bottom of girder stress (Service 1):

$$f_{bi} := \frac{T_o}{A_g} + \frac{T_o \cdot e_s}{S_b} + \frac{M_g \cdot 12}{S_b}$$ $f_{bi} = 3.178$ ksi

Is $f_{bi}$ less than $f_{ciall}$? check = "OK"

Final condition:

Allowable Stresses,**LRFD [5.9.2.3.2]**:

There are two compressive stress limits: (Service 1) **LRFD [5.9.2.3.2a]**

$f_{call1} := 0.45 \cdot f'_c$ PS + DL $f_{call1} = 3.600$ ksi

$f_{call2} := 0.60 \cdot f'_c$ LL + PS + DL $f_{call2} = 4.800$ ksi

(Service 3) **LRFD [5.9.2.3.2b]** (Moderate Corrosion Condition)

tension: $f_{tall} = -0.19 \cdot \lambda \sqrt{f'_c}$ $\lambda = 1.0$ (normal wgt. conc.) **LRFD [5.4.2.8]**

$f_{tall} := -0.19 \cdot \sqrt{f'_c}$ $|f_{tall}| \le 0.6$ ksi $f_{tall} = -0.537$ ksi

Allowable Stresses (Fatigue),**LRFD [5.5.3]**:

Fatige compressive stress limit:

$f_{call_fat} := 0.40 \cdot f'_c$ LLfat + 1/2(PS + DL) $f_{call_fat} = 3.200$ ksi

Top of girder stress (Service 1):

$$f_{t1} := \frac{T}{A_g} + \frac{T \cdot e_s}{S_t} + \frac{M_{DLnc} \cdot 12}{S_t} + \frac{(M_{DLc} + M_{DWc}) \cdot 12}{S_{cgt}}$$

$f_{t1} = 2.484$ ksi

$$f_{t2} := \frac{T}{A_g} + \frac{T \cdot e_s}{S_t} + \frac{M_{DLnc} \cdot 12}{S_t} + \frac{(M_{DLc} + M_{DWc} + M_{LL}) \cdot 12}{S_{cgt}}$$

$f_{t2} = 3.196$ ksi

Is $f_t$ less than $f_{call}$?

check1 = "OK"

check2 = "OK"

Top of girder stress (Fatigue 1):

$$f_{tfat} := \frac{1}{2}\left(\frac{T}{A_g} + \frac{T \cdot e_s}{S_t} + \frac{M_{DLnc} \cdot 12}{S_t}\right) + \frac{\left[\frac{1}{2}(M_{DLc} + M_{DWc}) + M_{LLfat}\right] \cdot 12}{S_{cgt}}$$

$f_{tfat} = 1.444$ ksi

Is $f_{tfat}$ less than $f_{call_fat}$?

check = "OK"

Bottom of girder stress (Service 3):

$$f_b := \frac{T}{A_g} + \frac{T \cdot e_s}{S_b} + \frac{M_{nc} \cdot 12}{S_b} + \frac{(M_{s3} - M_{nc}) \cdot 12}{S_{cgb}}$$

$f_b = -0.435$ ksi

Is $f_{tb}$ greater than $f_{tall}$?

check = "OK"

Top of deck stress (Service 1):

$f_{dall} := 0.40 \cdot f'_{cd}$

$f_{dall} = 1.600$ ksi

$$f_{dt} := \frac{(M_{s1} - M_{nc}) \cdot 12}{S_{cgdt}}$$

$f_{dt} = 0.800$ ksi

Is $f_{dt}$ less than $f_{dall}$?

check = "OK"

Bottom of deck stress (Service 1):

$$f_{db} := \frac{(M_{s1} - M_{nc}) \cdot 12}{S_{cgdb}}$$

$f_{db} = 0.617$ ksi

Is $f_{db}$ less than $f_{dall}$?

check = "OK"

**Check at hold-down location:**

At transfer: $f_{tiall} = -0.200$ ksi $f_{ciall} = 4.420$ ksi

Top of girder stress (Service 3):

$$f_{t3i} := \frac{T_o}{A_g} + \frac{T_o \cdot e_s}{S_t} + \frac{M_{ghd} \cdot 12}{S_t}$$

$f_{t3i} = 0.415$ ksi

Is $f_{t3i}$ greater than $f_{tiall}$?

check = "OK"

Bottom of girder stress (Service 1):

$$f_{b3i} := \frac{T_o}{A_g} + \frac{T_o \cdot e_s}{S_b} + \frac{M_{ghd} \cdot 12}{S_b}$$

$f_{b3i} = 3.361$ ksi

Is $f_{b3i}$ less than $f_{ciall}$?

check = "OK"

Final condition, after losses, full load: $f_{tall} = -0.537$ ksi $f_{call2} = 4.800$ ksi

Top of girder stress (Service 1):

$$f_{t3} := \frac{T}{A_g} + \frac{T \cdot e_s}{S_t} + \frac{M_{nchd} \cdot 12}{S_t} + \frac{M_{1chd} \cdot 12}{S_{cgt}}$$

$f_{t3} = 2.729$ ksi

Is $f_{t3}$ less than $f_{call2}$?

check = "OK"

Top of girder stress (Fatigue 1):

$$f_{tfat} := \frac{1}{2} \cdot \left( \frac{T}{A_g} + \frac{T \cdot e_s}{S_t} + \frac{M_{nchd} \cdot 12}{S_t} \right) + \frac{M_{fatchd} \cdot 12}{S_{cgt}}$$

$f_{tfat} = 1.373$ ksi

Is $f_{tfat}$ less than $f_{call_fat}$?

check = "OK"

Bottom of girder stress (Service 3):

$$f_{b3} := \frac{T}{A_g} + \frac{T \cdot e_s}{S_b} + \frac{M_{nchd} \cdot 12}{S_b} + \frac{M_{3chd} \cdot 12}{S_{cgb}}$$

$f_{b3} = 0.080$ ksi

Is $f_{b3}$ greater than $f_{tall}$?

check = "OK"

$f_{dall} = 1.600$ ksi

Top of deck stress (Service 1):

$$f_{dt3} := \frac{(M_{1chd}) \cdot 12}{S_{cgdt}}$$

$f_{dt3} = 0.715$ ksi

Is $f_{dt}$ less than $f_{dall}$?

check = "OK"

Bottom of deck stress (Service 1):

$$f_{db3} := \frac{(M_{1chd}) \cdot 12}{S_{cgdb}}$$

$f_{db3} = 0.551$ ksi

Is $f_{db}$ less than $f_{dall}$?

check = "OK"

Summary of Design Stresses:

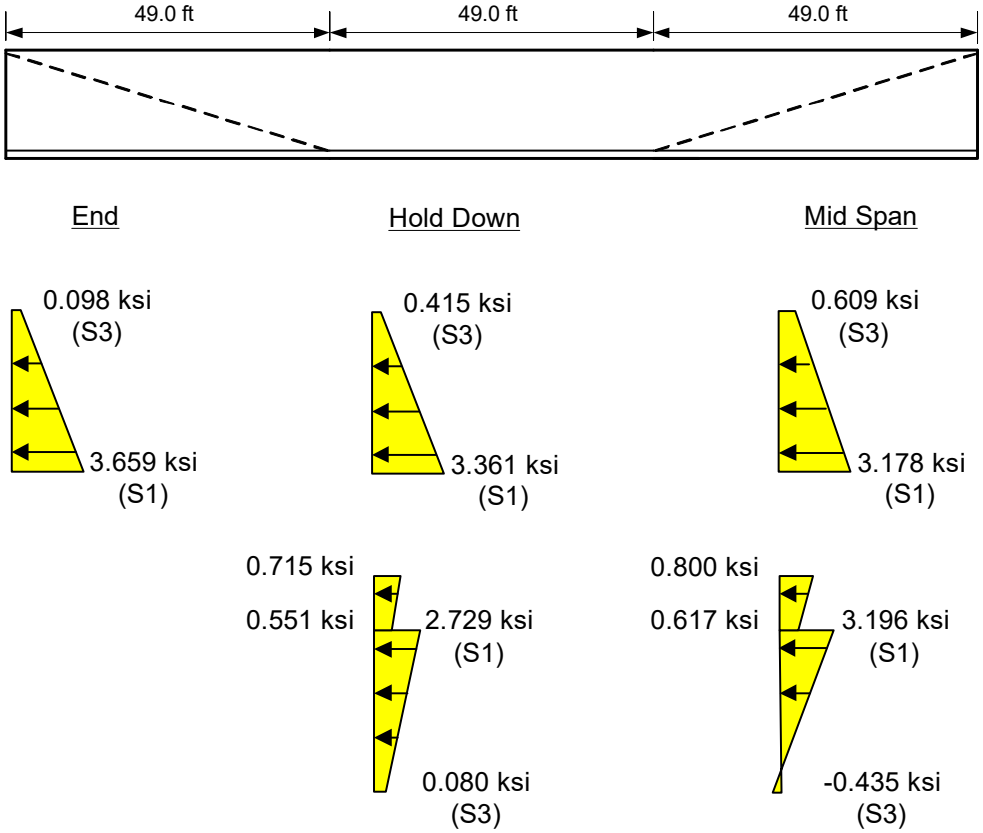


Initial Allowable:

compression := $f_{ciall}$ = 4.42 ksi

Final Allowable:

$compression_1 := f_{call1} = 3.6$ ksi

$compression_2 := f_{call2} = 4.8$ ksi

compression_fatigue := $f_{call_fat} = 3.2$ ksi

tension = $f_{tall} = -0.537$ ksi **All stresses are acceptable!**

## E19-1.11 Calculate Jacking Stress

The fabricator is responsible for calculation of the jacking force. See **LRFD [5.9.2]** for equations for low relaxation strands.

## E19-1.12 Flexural Strength Capacity at Midspan

Check $f_{pe}$ in accordance with **LRFD [5.6.3.1.1]**:

$f_{pe} = 162.13$ ksi $\qquad 0.5 \cdot f_{pu} = 135.00$ ksi

Is $0.5 * f_{pu}$ less than $f_{pe}$? $\qquad$ check = "OK"

Then at failure, we can assume that the tendon stress is:

$$f_{ps} = f_{pu}\left(1 - k \cdot \frac{c}{d_p}\right)$$

where:

$$k = 2\left(1.04 - \frac{f_{py}}{f_{pu}}\right)$$

From **LRFD [Table C5.6.3.1.1-1]**, for low relaxation strands, $k := 0.28$.

"c" is defined as the distance between the neutral axis and the compression face (inches).

Assumed dimensions:

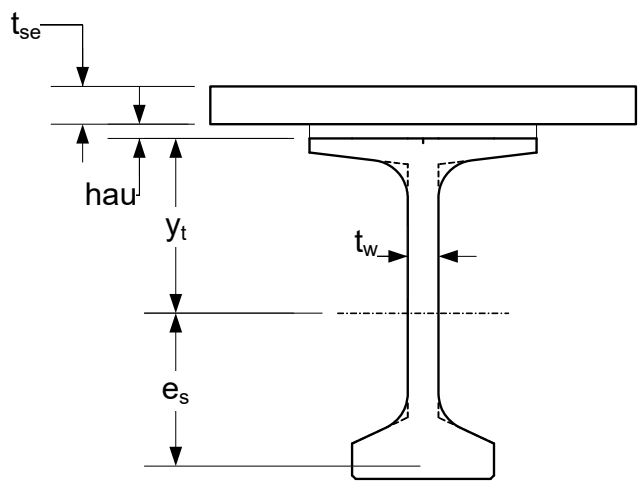


Assume that the compression block is in the deck. Calculate the capacity as if it is a rectangular section (with the compression block in the flange). The neutral axis location,calculated in accordance with **LRFD [5.6.3.1.1]** for a rectangular section, is:

$$c = \frac{A_{ps} \cdot f_{pu}}{\alpha_1 \cdot f'_{cd} \cdot \beta_1 \cdot b + k \cdot A_{ps} \cdot \frac{f_{pu}}{d_p}}$$

where:

$A_{ps} := ns \cdot A_{strand}$ $\boxed{A_{ps} = 9.55}$ $in^2$

$b := w_e$ $\boxed{b = 90.00}$ in

**LRFD [5.6.2.2]** $\alpha_1 := 0.85$ (for $f'_{cd} \le 10.0$ ksi)

$\beta_1 := \max\left[0.85 - \left(f'_{cd} - 4\right) \cdot 0.05, 0.65\right]$ $\boxed{\beta_1 = 0.850}$

$d_p := y_t + hau + t_{se} - e_s$ $\boxed{d_p = 77.32}$ in

$$c := \frac{A_{ps} \cdot f_{pu}}{\alpha_1 \cdot f'_{cd} \cdot \beta_1 \cdot b + k \cdot A_{ps} \cdot \frac{f_{pu}}{d_p}}$$ $\boxed{c = 9.57}$ in

$a := \beta_1 \cdot c$ $\boxed{a = 8.13}$ in

The calculated value of "a" is greater than the deck thickness. Therefore, the rectangular assumption is incorrect and the compression block extends into the haunch. Calculate the neutral axis location and capacity for a flanged section:

$h_f := t_{se}$ depth of compression flange $\boxed{h_f = 7.500}$ in

$w_{tf} = 48.00$ width of top flange, inches

$$c := \frac{A_{ps} \cdot f_{pu} - \alpha_1 \cdot f'_{cd} \cdot \left(b - w_{tf}\right) \cdot h_f}{\alpha_1 \cdot f'_{cd} \cdot \beta_1 \cdot w_{tf} + k \cdot A_{ps} \cdot \frac{f_{pu}}{d_p}}$$ $\boxed{c = 10.178}$ in

$a := \beta_1 \cdot c$ $\boxed{a = 8.65}$ in

This is within the depth of the haunch (9.5 inches). Therfore our assumption is OK.

Now calculate the effective tendon stress at ultimate:

$$f_{ps} := f_{pu} \cdot \left(1 - k \cdot \frac{c}{d_p}\right)$$ $\boxed{f_{ps} = 260.05}$ ksi

$T_u := f_{ps} \cdot A_{ps}$ $\boxed{T_u = 2483}$ kips

Calculate the nominal moment capacity of the composite section in accordance with **LRFD [5.6.3.2]; [5.6.3.2.2]**

$$M_n := \left[A_{ps} \cdot f_{ps} \cdot \left(d_p - \frac{a}{2}\right) + \alpha_1 \cdot f'_{cd} \cdot (b - w_{tf}) \cdot h_f \cdot \left(\frac{a}{2} - \frac{h_f}{2}\right)\right] \cdot \frac{1}{12}$$

$M_n = 15155$ kip-ft

For prestressed concrete, $\phi_f := 1.00$, **LRFD [5.5.4.2]**. Therefore the usable capacity is:

$M_r := \phi_f \cdot M_n$ $M_r = 15155$ kip-ft

The required capacity:

Interior Girder Moment $M_{str} = 12449$ kip-ft

Exterior Girder Moment $M_{strx} = 11183$ kip-ft

Check the section for minimum reinforcement in accordance with **LRFD [5.6.3.3]** for the interior girder:

$1.33 \cdot M_{str} = 16558$ kip-ft

$f_r = 0.24 \cdot \lambda \sqrt{f'_c}$ = modulus of rupture (ksi) **LRFD [5.4.2.6]**

$f_r := 0.24 \cdot \sqrt{f'_c}$ $\lambda$ = 1.0 (normal wgt. conc.) **LRFD [5.4.2.8]** $f_r = 0.679$ ksi

$$f_{cpe} := \frac{T}{A_g} + \frac{T \cdot e_s}{S_b}$$

$f_{cpe} = 4.216$ ksi

$M_{dnc} := M_{nc}$ $M_{dnc} = 4887$ kip-ft

$S_c := -S_{cgb}$ $S_c = 24681$ $in^3$

$S_{nc} := -S_b$ $S_{nc} = 18825$ $in^3$

$\gamma_1 := 1.6$ flexural cracking variability factor

$\gamma_2 := 1.1$ prestress variability factor

$\gamma_3 := 1.0$ for prestressed concrete structures

$$M_{cr} := \gamma_3 \cdot \left[ S_c \cdot \left( \gamma_1 \cdot f_r + \gamma_2 \cdot f_{cpe} \right) \cdot \frac{1}{12} - M_{dnc} \cdot \left( \frac{S_c}{S_{nc}} - 1 \right) \right]$$ $M_{cr} = 10251$ kip-ft

Is $M_r$ greater than the lesser value of $M_{cr}$ and 1.33*$M_{str}$? check = "OK"

The moment capacity looks good, with some over strength for the interior girder. However, we must check the capacity of the exterior girder since the available flange width is less.

Check the exterior girder capacity:

The effective flange width for exterior girder is calculated in accordance with **LRFD [4.6.2.6]** as one half the effective width of the adjacent interior girder plus the overhang width :

$$w_{ex_oh} := s_{oh} \cdot 12$$ $w_{ex_oh} = 30.0$ in

$$w_{ex} := \frac{w_e}{2} + w_{ex_oh}$$ $w_{ex} = 75.00$ in

$b_x := w_{ex}$ effective deck width of the compression flange.

Calculate the neutral axis location for a flanged section:

**LRFD [5.6.2.2]** $\alpha_1 = 0.850$ $\beta_1 = 0.850$

$$c_x := \frac{A_{ps} \cdot f_{pu} - \alpha_1 \cdot f'_{cd} \cdot \left( b_x - w_{tf} \right) \cdot h_f}{\alpha_1 \cdot f'_{cd} \cdot \beta_1 \cdot w_{tf} + k \cdot A_{ps} \cdot \frac{f_{pu}}{d_p}}$$ $c_x = 12.76$ in

$$a_x := \beta_1 \cdot c_x$$ $a_x = 10.85$ in

Now calculate the effective tendon stress at ultimate:

$$f_{ps_x} := f_{pu} \cdot \left( 1 - k \cdot \frac{c_x}{d_p} \right)$$ $f_{ps_x} = 257.52$ ksi

The nominal moment capacity of the composite section (exterior girder) ignoring the increased strength of the concrete in the girder flange:

$$M_{n_x} := \left[ A_{ps} \cdot f_{ps} \cdot \left( d_p - \frac{a_x}{2} \right) + \alpha_1 \cdot f'_{cd} \cdot \left( b_x - w_{tf} \right) \cdot h_f \cdot \left( \frac{a_x}{2} - \frac{h_f}{2} \right) \right] \cdot \frac{1}{12}$$

$M_{n_x} = 14972$ kip-ft

$M_{r_x} := \phi_f \cdot M_{n_x}$ $\boxed{M_{r_x} = 14972}$ kip-ft

$\boxed{1.33M_{strx} = 14874}$ kip-ft

Is $M_{r_x}$ greater than $1.33*M_{strx}$? $\boxed{check = \text{"OK"}}$

Since $M_{r_x}$ is greater than $1.33*M_{strx}$, the check for $M_{cr}$ does not need to be completed.

## E19-1.13 Shear Analysis

A separate analysis must be conducted to estimate the total shear force in each girder for shear design purposes.

Calculate the shear distribution to the girders, **LRFD [Table 4.6.2.2.3a-1]**:

Interior Beams:

One lane loaded:

$$g_{vi1} := 0.36 + \frac{S}{25}$$ $$g_{vi1} = 0.660$$

Two or more lanes loaded:

$$g_{vi2} := 0.2 + \frac{S}{12} - \left(\frac{S}{35}\right)^2$$ $$g_{vi2} = 0.779$$

$$g_{vi} := \max(g_{vi1}, g_{vi2})$$ $$g_{vi} = 0.779$$

Note:The distribution factors above include the multiple lane factor. The skew correction factor, is required by a WisDOT policy item for all girders.

Apply the shear magnification factor in accordance with **LRFD [4.6.2.2.3c]**.

$$skew_{correction} := 1.0 + 0.2 \cdot \left(\frac{12L \cdot t_{se}^3}{K_g}\right)^{0.3} \cdot \tan\left(skew \cdot \frac{\pi}{180}\right)$$

$$L = 146.00$$

$$t_s = 8.00$$

$$K_g = 3600866$$

$$skew = 20.000$$ $$skew_{correction} = 1.045$$

$$g_{vi} := g_{vi} \cdot skew_{correction}$$ $$g_{vi} = 0.814$$

Exterior Beams:

Two or more lanes loaded:

The distance from the centerline of the exterior beam to the inside edge of the parapet, $d_e = 1.25$ feet.

$e_v := 0.6 + \frac{d_e}{10}$ $\boxed{e_v = 0.725}$

$g_{vx2} := e_v \cdot g_{vi}$ $\boxed{g_{vx2} = 0.590}$

With a single lane loaded, we use the lever rule (same as before). Note that the multiple presence factor has already been applied to $g_{x2}$..

$g_{vx1} := g_{x1} = e \cdot g_i$ $\boxed{g_{vx1} = 0.600}$

$g_{vx} := \max(g_{vx1}, g_{vx2})$ $\boxed{g_{vx} = 0.600}$

$g_{vx} := g_{vx} \cdot skew_{correction}$ $\boxed{g_{vx} = 0.627}$

The interior girder will control. It has a larger distribution factor and a larger dead load.

Conduct a bridge analysis as before with similar load cases for the maximum girder shear forces. We are interested in the Strength 1 condition now for shear design.

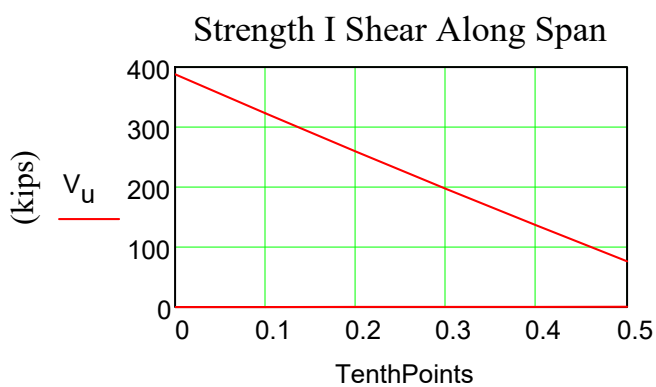


$\boxed{Vu_{0.0} = 388.1}$ kips

$\boxed{Vu_{0.5} = 76.2}$ kips

General Procedure for Prestressed Sections, **LRFD [5.7.3.4.2]**

$b_v := t_w$ $\boxed{b_v = 6.50}$ in

The critical section for shear is taken at a distance of $d_v$ from the face of the support, **LRFD [5.7.3.2]**.

$d_v$ = effective shear depth taken as the distance between the resultants of the tensile and compressive forces due to flexure. It need not be taken less than the greater of $0.9*d_e$ or 0.72h (inches). **LRFD [5.7.2.8]**

The first estimate of $d_v$ is calculated as follows:

$$d_v := -e_s + y_t + hau + t_{se} - \frac{a}{2} \qquad \boxed{d_v = 72.99} \quad \text{in}$$

However, since there are draped strands for a distance of $HD = 49.00$ feet from the end of the girder, a revised value of $e_s$ should be calculated based on the estimated location of the critical section. Since the draped strands will raise the center of gravity of the strand group near the girder end, try a smaller value of "$d_v$" and recalculate "$e_s$" and "a".

Try $d_v := 64.50$ inches.

For the standard bearing pad of width, $w_{brg} := 8$ inches, the distance from the end of the girder to the critical section:

$$L_{crit} := \left(\frac{w_{brg}}{2} + d_v\right)\cdot\frac{1}{12} + 0.5 \qquad \boxed{L_{crit} = 6.21} \text{ ft}$$

Calculate the eccentricity of the strand group at the critical section.

$$y_{8t_crit} := y_{8t} - \frac{slope}{100}\cdot L_{crit}\cdot 12 \qquad \boxed{y_{8t_crit} = 24.27} \text{ in}$$

$$e_{s_crit} := \frac{ns_s\cdot y_s + ns_d\cdot y_{8t_crit}}{ns_s + ns_d} \qquad \boxed{e_{s_crit} = -20.84} \text{ in}$$

Calculation of compression stress block based on revised eccentricity:

$$d_{p_crit} := y_t + hau + t_{se} - e_{s_crit} \qquad \boxed{d_{p_crit} = 67.47} \text{ in}$$

$$A_{ps_crit} := \left(ns_d + ns_s\right)\cdot A_{strand} \qquad \boxed{A_{ps_crit} = 9.55} \text{ in}^2$$

Also, the value of $f_{pu}$, should be revised if the critical section is located less than the development length from the end of the beam. The development length for a prestressing strand is calculated in accordance with **LRFD [5.9.4.3.2]**:

$K := 1.6$ for prestressed members with a depth greater than 24 inches

$\boxed{d_b = 0.600}$ in

$$l_d := K\cdot\left(f_{ps} - \frac{2}{3}\cdot f_{pe}\right)\cdot d_b \qquad \boxed{l_d = 145.9} \text{ in}$$

The transfer length may be taken as: $l_{tr} := 60\cdot d_b$ $\boxed{l_{tr} = 36.00}$ in

Since $L_{crit} = 6.208$ feet is between the transfer length and the development length, the design stress in the prestressing strand is calculated as follows:

$$f_{pu_crit} := f_{pe} + \frac{L_{crit}\cdot 12 - l_{tr}}{l_d - l_{tr}}\cdot\left(f_{ps} - f_{pe}\right) \qquad \boxed{f_{pu_crit} = 196} \text{ ksi}$$

For rectangular section behavior:

**LRFD [5.6.2.2]** $\alpha_1 = 0.850$ $\beta_1 = 0.850$

$$c := \frac{A_{ps_crit} \cdot f_{pu_crit}}{\alpha_1 \cdot f'_{cd} \cdot \beta_1 \cdot b + k \cdot A_{ps_crit} \cdot \frac{f_{pu_crit}}{d_{p_crit}}}$$

$c = 7.002$ in

$$a_{crit} := \beta_1 \cdot c$$

$a_{crit} = 5.951$ in

Calculation of shear depth based on refined calculations of $e_s$ and a:

$$d_{v_crit} := -e_{s_crit} + y_t + hau + t_{se} - \frac{a_{crit}}{2}$$

$d_{v_crit} = 64.50$ in

This value matches the assumed value of $d_v$ above. OK!

The nominal shear resistance of the section is calculated as follows, **LRFD [5.8.3.3]**:

$$V_n = \min\left(V_c + V_s + V_p, 0.25 \cdot f'_c \cdot b_v \cdot d_v + V_p\right)$$

The nominal shear resistance of the concrete is calculated as follows:

$$V_c = 0.0316 \cdot \beta \cdot \lambda \cdot \sqrt{f'_c} \cdot b_v \cdot d_v$$

where:

$$\beta = \frac{4.8}{1 + 750 \cdot \varepsilon_s}$$

$$\varepsilon_s = \frac{\frac{|M_u|}{d_v} \cdot 0.5 \cdot N_u + |V_u - V_p| - A_{ps} \cdot f_{po}}{E_s \cdot A_s + E_p \cdot A_{ps}}$$

$\varepsilon_s$ = Net longitudinal tensile strain in the section at the centroid of the tension reinforcement.

$|M_u|$ = Absolute value of the factored moment at the section, not taken less than $|V_u - V_p| d_v$ (kip-in)

$N_u$ = Factored axial force, taken as positive if tensile and negative if compression (kips).

$V_p$ = Componet of prestressing force in the direction of the shear force positive if resisiting the applied shear(kips)

$f_{po}$ = A parameter taken as modulus of elasticity of prestressing steel multiplied by the locked-in difference in strain between the prestressing steel and the surrounding concrete (ksi).

Values at the critical section, $L_{crit} = 6.21$ feet from the end of the girder at the abutment, are as follows:

$d_v = 64.50$

$N_u := 0$ kips

$V_u \equiv 360.4$ kips

$V_p := ns_d \cdot A_{strand} \cdot f_{pe} \cdot \frac{slope}{100}$ $V_p = 29.68$ kips

$f_{po} := 0.70 \cdot f_{pu}$ $f_{po} = 189.00$ ksi

$M_u = \max(M_{u1}, M_{u2}) \cdot 12$

$M_{u1} := 1880.2$ kip-ft

$M_{u2} := |V_u - V_p| \cdot \frac{d_v}{12} = 1777.6$ kip-ft

$M_u := \max(M_{u1}, M_{u2}) \cdot 12 = 22562.40$ kip-in

$A_{ps} \equiv 5.78$ area of prestressing steel on the flexural tension side, $in^2$

$A_s := 0.0$ area of nonprestressing steel on the flexural tension side, $in^2$

$A_{ct} := 505.8$ area of concrete on the flexural tension side, $in^2$

Calculation of net longitudinal tensile strain at the centroid of the tension reinforcement per **LRFD [5.7.3.4.2]**:

$$\varepsilon_{s1} := \frac{\frac{|M_u|}{d_v} + 0.5 \cdot N_u + |V_u - V_p| - A_{ps} \cdot f_{po}}{E_s \cdot A_s + E_p \cdot A_{ps}} \qquad \varepsilon_{s1} = -0.0025$$

Since the value is negative, recalculate the strain value using the concrete term shown below:

$$\varepsilon_{s2} := \frac{\frac{|M_u|}{d_v} + 0.5 \cdot N_u + |V_u - V_p| - A_{ps} \cdot f_{po}}{E_s \cdot A_s + E_p \cdot A_{ps} + E_c \cdot A_{ct}} \qquad \varepsilon_{s2} = -0.000122$$

Strain limits: $-0.0004 < \varepsilon_s < 0.006$

$$\varepsilon_s := \begin{cases} \min(\varepsilon_{s1}, 0.006) & \text{if } \varepsilon_{s1} > 0 \\ \max(\varepsilon_{s2}, -0.00040) & \text{otherwise} \end{cases} \qquad \varepsilon_s = -0.000122$$

$$\beta := \frac{4.8}{1 + 750 \cdot \varepsilon_s} \qquad \beta = 5.283$$

Calculate the nominal shear resistance of the concrete:

$$V_c := 0.0316 \cdot \beta \cdot \lambda \cdot \sqrt{f'_c} \cdot b_v \cdot d_v \qquad V_c = 198.0 \text{ kips}$$

Calculate the required shear resistance:

$\phi_v := 0.9$ **LRFD [5.5.4.2]**

$V_{u_crit} = \gamma st_{DC} \cdot (V_{DCnc} + V_{DCc}) + \gamma st_{DW} \cdot V_{DWc} + \gamma st_{LL} \cdot Vu_{LL}$

where:

$V_{DCnc} = 123.43$ kips

$V_{DCc} = 8.68$ kips

$V_{DWc} = 8.97$ kips

$Vu_{LL} = 105.05$ kips

$V_{u_crit} = 362.4$ kips $V_n := \frac{V_{u_crit}}{\phi_v}$ $V_n = 402.7$ kips

Transverse Reinforcing Design at Critical Section:

The required steel capacity:

$V_s := V_n - V_c - V_p$ $V_s = 175.1$ kips

$A_v := 0.40$ in$^2$ for #4 rebar

$f_y := 60$ ksi

Transverse Reinforcing Design at Critical Section:

$d_v = 64.50$ in

$\theta := 29 + 3500 \cdot \varepsilon_s$ **LRFD [5.7.3.4.2]** $\theta = 28.573$

$\cot\theta = 1.836$

$V_s = A_v \cdot f_y \cdot d_v \cdot \frac{\cot\theta}{s}$ **LRFD [Eq 5.7.3.3-4]** reduced when $\alpha$ = 90 degrees.

$s := A_v \cdot f_y \cdot d_v \cdot \frac{\cot\theta}{V_s}$ $s = 16.24$ in

Check Maximum Spacing, **LRFD [5.7.2.6]**:

$v_u := \frac{V_{u_crit}}{\phi_v \cdot b_v \cdot d_v}$ $v_u = 0.961$ ksi

Max. stirrup spacing per WisDOT policy item is 18" $0.125 \cdot f'_c = 1.000$ ksi

$s_{max1} := \begin{cases} \min(0.8 \cdot d_v, 18) & \text{if } v_u < 0.125 \cdot f'_c \\ \min(0.4 \cdot d_v, 12) & \text{if } v_u \geq 0.125 \cdot f'_c \end{cases}$ $s_{max1} = 18.00$ in

Check Minimum Reinforcing, **LRFD [5.7.2.5]**:

$$s_{max2} := \frac{A_v \cdot f_y}{0.0316 \cdot \lambda \sqrt{f'_c} \cdot b_v}$$

λ = 1.0 (normal wgt. conc.) **LRFD [5.4.2.8]**

$s_{max2} = 41.31$ in

$$s_{max} := \min(s_{max1}, s_{max2})$$

$s_{max} = 18.00$ in

The critical section for shear is located within the predetermined stirrup spacing provided on the Standard Detail.

Therefore use the maximum spacing of $s := 16.0$ inches.

$$V_s := A_v \cdot f_y \cdot d_v \cdot \frac{\cot\theta}{s}$$

$V_s = 177.7$ kips

Check $V_n$ requirements:

$$Vn_1 := V_c + V_s + V_p$$

$Vn_1 = 405.3$ kips

$$Vn_2 := 0.25 \cdot f'_c \cdot b_v \cdot d_v + V_p$$

$Vn_2 = 868.2$ kips

$$V_n := \min(Vn_1, Vn_2)$$

$V_n = 405.3$ kips

$$V_r := \phi_v \cdot V_n$$

$V_r = 364.8$ kips

$V_{u_crit} = 362.4$ kips

Is $V_{u_crit}$ less than $V_r$?

check = "OK"

Web reinforcing is required in accordance with **LRFD [5.7.2.3]** whenever:

$$V_u \geq 0.5 \cdot \phi_v \cdot (V_c + V_p)$$

(all values shown are in kips)

At critical section from end of girder: $V_{u_crit} = 362.4$ $\quad 0.5 \cdot \phi_v \cdot (V_c + V_p) = 102.4$

From calculations similar to those shown above,

At hold down point: $V_{u_hd} = 177.2$ $\quad 0.5 \cdot \phi_v \cdot (V_{c_hd} + V_{p_hd}) = 62.6$

At mid-span: $V_{u_mid} = 76.2$ $\quad 0.5 \cdot \phi_v \cdot (V_{c_mid} + V_{p_mid}) = 36.2$

Therefore, use web reinforcing over the entire beam.

Resulting Shear Design:

Use #4 U shaped stirrups at 18-inch spacing between the typical end sections. Unless a large savings in rebar can be realized, use a single stirrup spacing between the standard end sections.

## E19-1.14 Longitudinal Tension Flange Capacity

The tensile capacity of the longitudinal reinforcement must meet the requirements of **LRFD [5.7.3.5].**

The tensile force is checked at the critical section for shear:

The values of $M_u$, $d_v$, $V_u$, $V_s$, $V_p$ and $\theta$ are taken at the location of the critical section. $N_u = 0$

$$T_{ps_crit} = \frac{|M_u|}{d_v \cdot \phi_f} + \frac{0.5 \cdot N_u}{\phi_v} + \left( \left| \frac{V_u}{\phi_f} - V_p \right| - 0.5 \cdot V_s \right) \cdot \cot\theta \qquad T_{ps_crit} = 798.1 \text{ kips}$$

actual capacity of the straight strands:

$$ns_s \cdot A_{strand} \cdot f_{pu_crit} = 1534.6 \text{ kips}$$

Is the capacity of the straight strands greater than $T_{ps}$? check = "OK"

The tensile force is checked at the edge of the bearing:

The strand is anchored $l_{px} := 10$ inches. The transfer and development lengths for a prestressing strand are calculated in accordance with **LRFD [5.9.4.3.2]**:

$l_{tr} = 36.00$ in

$l_d = 145.9$ in

Since $l_{px}$ is less than the transfer length, the design stress in the prestressing strand is calculated as follows:

The assumed crack plane crosses the centroid of the straight strands at

$$l_{px'} := l_{px} + Y_s \cdot \cot\theta \qquad Y_s = 4.00 \text{ in} \qquad l_{px'} = 17.34 \text{ in}$$

$$f_{pb} := \frac{f_{pe} \cdot l_{px'}}{60 \cdot d_b} \qquad f_{pb} = 78.12 \text{ ksi}$$

Tendon capacity of the straight strands: $ns_s \cdot A_{strand} \cdot f_{pb} = 610.2$ kips

The values of $V_u$, $V_s$, $V_p$ and $\theta$ may be taken at the location of the critical section.

Over the length $d_v$, the average spacing of the stirrups is:

$$s_{ave} := \frac{6 \cdot 4.25 + 6 \cdot 5.0}{12} \qquad s_{ave} = 4.63 \text{ in}$$

$$V_s := A_v \cdot f_y \cdot d_v \cdot \frac{\cot\theta}{s_{ave}} \qquad V_s = 614.6 \text{ kips}$$

The vertical component of the draped strands is: $V_p = 29.7$ kips

The factored shear force at the critical section is: $V_u = 360.4$ kips

Minimum capacity required at the front of the bearing:

$$T_{breqd} := \left(\frac{V_u}{\phi_v} - 0.5 \cdot V_s - V_p\right) \cdot \cot\theta$$

$T_{breqd} = 116.6$ kips

Is the capacity of the straight strands greater than $T_{breqd}$? check = "OK"

## E19-1.15 Composite Action - Design for Interface Shear Transfer

The total shear to be transferred to the flange between the end of the beam and mid-span is equal to the compression force in the compression block of the flange and haunch in strength condition. For slab on girder bridges, the shear interface force is calculated in accordance with **LRFD [5.7.4.5]**.

$b_{vi} := 18$ in width of top flange available to bond to the deck

$d_v = 64.50$ in

$$v_{ui} := \frac{V_{u_crit}}{b_{vi} \cdot d_v}$$

$v_{ui} = 0.312$ ksi

$V_{ui} := v_{ui} \cdot 12 \cdot b_{vi}$ $V_{ui} = 67.4$ kips/ft

$V_n = c \cdot A_{cv} + \mu \cdot (A_{vf} \cdot f_y + P_c)$ **LRFD [5.7.4.3]**

The nominal shear resistance, $V_n$, used in design shall not be greater than the lesser of:

$V_{n1} = K_1 \cdot f'_{cd} \cdot A_{cv}$ or $V_{n2} = K_2 \cdot A_{cv}$

$c := 0.28$ ksi

$\mu := 1.0$

$K_1 := 0.3$

$K_2 := 1.8$

$A_{cv} := b_{vi} \cdot 12$ Area of concrete considered to be engaged in interface shear transfer. $A_{cv} = 216$ in²/ft

$P_c := 0.0$ kips/ft Conservatively set the permanent net compressive force normal to the shear plane to zero.

From earlier calculations, the maximum #4 stirrup spacing used is $s = 18.0$ inches.

$A_{vf} := \frac{A_v}{s} \cdot 12$ $\boxed{A_{vf} = 0.267}$ in²/ft

$V_n := c \cdot A_{cv} + \mu \cdot (A_{vf} \cdot f_y + P_c)$ $\boxed{V_n = 76.5}$ kips/ft

$V_{n1} := K_1 \cdot f'_{cd} \cdot A_{cv}$ $\boxed{V_{n1} = 259.2}$ kips/ft

$V_{n2} := K_2 \cdot A_{cv}$ $\boxed{V_{n2} = 388.8}$ kips/ft

$V_n := \min(V_n, V_{n1}, V_{n2})$ $\boxed{V_n = 76.5}$ kips/ft

$V_r := \phi_v \cdot V_n$ $\boxed{V_r = 68.8}$ kips/ft

$\boxed{V_{ui} = 67.4}$ kips/ft

Is $V_r$ greater than $V_{ui}$? $\boxed{\text{check} = \text{"OK"}}$

Solution:
#4 stirrups spaced at $s = 18.0$ inches is adequate to develop the required interface shear resistance for the entire length of the girder.

## E19-1.16 Deflection Calculations

Check the Live Load deflection with the vehicle loading as specified in **LRFD [3.6.1.3.2]**; design truck alone or 25% of the design truck + the lane load.

The deflection shall be limited to L/800.

The moment of inertia of the entire bridge shall be used.

$\Delta_{limit} := \frac{L \cdot 12}{800}$ $\boxed{\Delta_{limit} = 2.190}$ inches

$I_{cg} = 1203475.476$

$ng = 6$ number of girders

$I_{bridge} := I_{cg} \cdot ng$ $\boxed{I_{bridge} = 7220853}$ $in^4$

From CBA analysis with 3 lanes loaded, the truck deflection controlled:

$\Delta_{truck} := 0.648$ in

Applying the multiple presence factor from **LRFD Table [3.6.1.1.2-1]** for 3 lanes loaded:

$\Delta := 0.85 \cdot \Delta_{truck}$ $\boxed{\Delta = 0.551}$ in

Is the actual deflection less than the allowable limit, $\Delta < \Delta$ limit? $\boxed{check = \text{"OK"}}$

## E19-1.17 Camber Calculations

Moment due to straight strands:

Number of straight strands: $\boxed{ns_s = 36}$

Eccentricity of the straight strands: $\boxed{y_s = -30.87}$ in

$P_{i_s} := ns_s \cdot A_{strand} \cdot (f_{tr} - \Delta f_{pES})$ $\boxed{P_{i_s} = 1448}$ kips

$M_1 := P_{i_s} \cdot |y_s|$ $\boxed{M_1 = 44698}$ kip-in

Upward deflection due to straight strands:

Length of the girder: $\boxed{L_g = 147}$ ft

Modulus of Elasticity of the girder at release: $\boxed{E_{ct} = 4999}$ ksi

Moment of inertia of the girder: $\boxed{I_g = 656426}$ $in^4$

$\Delta_s := \frac{M_1 \cdot L_g^2}{8 \cdot E_{ct} \cdot I_g} \cdot 12^2$ $\boxed{\Delta_s = 5.298}$ in

Moment due to draped strands:

$P_{i_d} := ns_d \cdot A_{strand} \cdot (f_{tr} - \Delta f_{pES})$ $\boxed{P_{i_d} = 321.8}$ kips

$\boxed{A = 67.00}$ in

$\boxed{C = 5.00}$ in

$M_2 := P_{i_d} \cdot (A - C)$ $\boxed{M_2 = 19949.4}$ kip-in

$M_3 := P_{i_d} \cdot (A - |y_b|)$ $\boxed{M_3 = 10338.3}$ kip-in

Upward deflection due to draped strands:

$$\Delta_d := \frac{L_g^2}{8 \cdot E_{ct} \cdot I_g} \cdot \left(\frac{23}{27} \cdot M_2 - M_3\right) \cdot 12^2$$ $\boxed{\Delta_d = 0.789}$ in

Total upward deflection due to prestress:

$\Delta_{PS} := \Delta_s + \Delta_d$ $\boxed{\Delta_{PS} = 6.087}$ in

Downward deflection due to beam self weight at release:

$$\Delta_{gi} := \frac{5 \cdot w_g \cdot L^4}{384 \cdot E_{ct} \cdot I_g} \cdot 12^3$$ $\boxed{\Delta_{gi} = 2.969}$ in

Anticipated prestress camber at release:

$\Delta_i := \Delta_{PS} - \Delta_{gi}$ $\boxed{\Delta_i = 3.118}$ in

The downward deflection due to the dead load of the deck and diaphragms:

Calculate the additional non-composite dead loads for an interior girder:

$w_{nc} := w_{dlii} - w_g$ $\boxed{w_{nc} = 0.881}$ klf

Modulus of Elasticity of the beam at final strength $\boxed{E_B = 6351}$ ksi

$$\Delta_{nc} := \frac{5 \cdot w_{nc} \cdot L^4}{384 \cdot E_B \cdot I_g} \cdot 12^3$$ $\boxed{\Delta_{nc} = 2.161}$ in

The downward deflection due to the dead load of the parapets is calculated as follows. Note that the deflections due to future wearing surface loads are not considered.

Calculate the composite dead loads for an interior girder:

$w_{ws} := 0$ klf

$w_c := w_p + w_{ws}$ $\boxed{w_c = 0.129}$ klf

$$\Delta_c := \frac{5 \cdot w_c \cdot L^4}{384 \cdot E_B \cdot I_{cg}} \cdot 12^3$$ $\boxed{\Delta_c = 0.173}$ in

The total downward deflection due to dead loads acting on an interior girder:

$$\Delta_{DL} := \Delta_{nc} + \Delta_c$$ $\boxed{\Delta_{DL} = 2.334}$ in

The residual camber for an interior girder:

The anticipated prestress camber at release shall be multiplied by a camber multiplier (1.4) for calculating haunch heights.

$$RC := 1.4 \cdot \Delta_i - \Delta_{DL}$$ $\boxed{RC = 2.031}$ in

This page intentionally left blank.

Table of Contents

E19-2 Two-Span 54W" Girder, Continuity Reinforcement - LRFD . . . . . 2
E19-2.1 Design Criteria . . . . . 2
E19-2.2 Modulus of Elasticity of Beam and Deck Material. . . . . 3
E19-2.3 Section Properties . . . . . 3
E19-2.4 Girder Layout . . . . . 4
E19-2.5 Loads . . . . . 4
E19-2.5.1 Dead Loads. . . . . 4
E19-2.5.2 Live Loads . . . . . 5
E19-2.6 Load Distribution to Girders . . . . . 5
E19-2.6.1 Distribution Factors for Interior Beams:. . . . . 6
E19-2.6.2 Distribution Factors for Exterior Beams:. . . . . 7
E19-2.7 Load Factors. . . . . 9
E19-2.8 Dead Load Moments . . . . . 9
E19-2.9 Live Load Moments . . . . . 10
E19-2.10 Factored Moments. . . . . 10
E19-2.11 Composite Girder Section Properties. . . . . 11
E19-2.12 Flexural Strength Capacity at Pier . . . . . 12
E19-2.13 Bar Cut Offs . . . . . 17

## E19-2 Two-Span 54W" Girder, Continuity Reinforcement - LRFD

This example shows design calculations for the continuity reinforcement for a two span prestressed girder bridge. The *AASHTO LRFD Bridge Design Specifications* are followed as stated in the text of this chapter.***(Example is current through LRFD Eighth Ed. - 2017)***

### E19-2.1 Design Criteria

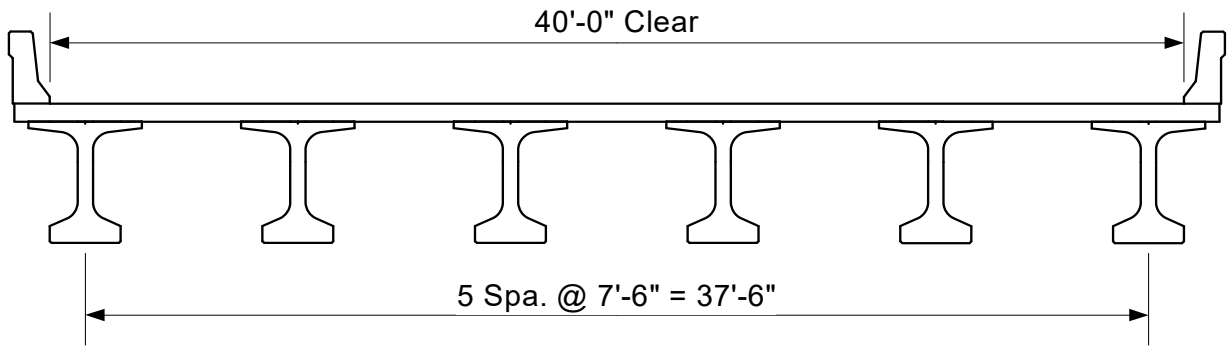


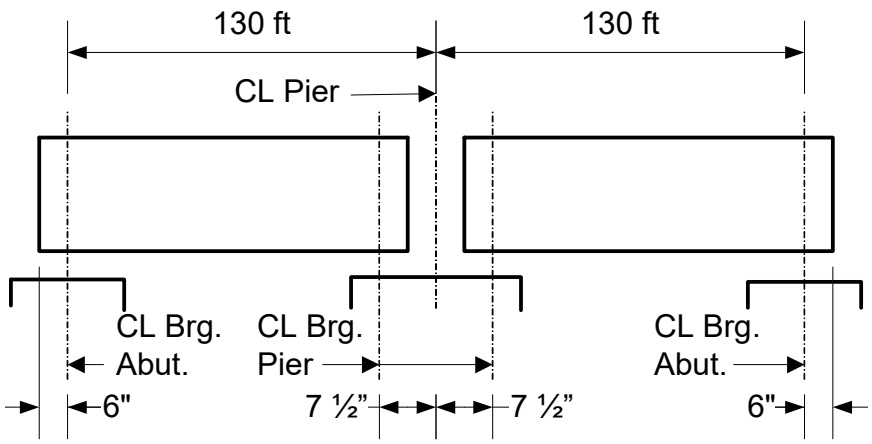


| | |
|---|---|
| $L := 130$ | center of bearing at abutment to CL pier for each span, ft |
| $L_g := 130.375$ | total length of the girder (the girder extends 6 inches past the center of bearing at the abutment and 1.5" short of the center line of the pier). |
| $w_b := 42.5$ | out to out width of deck, ft |
| $w := 40$ | clear width of deck, 2 lane road, 3 design lanes, ft |
| $f'_c := 8$ | girder concrete strength, ksi |
| $f'_{cd} := 4$ | deck concrete strength, ksi |
| $f_y := 60$ | yield strength of mild reinforcement, ksi |

| | |
|---|---|
| $w_p := 0.387$ | weight of Wisconsin Type LF parapet, klf |
| $t_s := 8$ | slab thickness, in |
| $t_{se} := 7.5$ | effective slab thickness, in |
| $skew := 0$ | skew angle, degrees |
| $w_c := 0.150$ | kcf |
| $E_s := 29000$ | ksi, Modulus of Elasticity of the reinforcing steel |

## E19-2.2 Modulus of Elasticity of Beam and Deck Material

Based on past experience, the modulus of elasticity for the precast and deck concrete are given in Chapter 19 as $E_{beam6} := 5500$ ksi and $E_{deck4} := 4125$ ksi for concrete strengths of 6 and 4 ksi respectively. The values of E for different concrete strengths are calculated as follows (ksi):

$$E_{beam8} := 5500 \cdot \frac{\sqrt{f'_c \cdot 1000}}{\sqrt{6000}} \qquad \boxed{E_{beam8} = 6351} \qquad E_B := E_{beam8}$$

$$E_D := E_{deck4}$$

$$n := \frac{E_B}{E_D} \qquad \boxed{n = 1.540}$$

## E19-2.3 Section Properties

54W Girder Properties:

| | |
|---|---|
| $w_{tf} := 48$ | in |
| $t_t := 4.625$ | in |
| $t_w := 6.5$ | in |
| $t_b := 10.81$ | in |
| $ht := 54$ | in |
| $b_w := 30$ | width of bottom flange, in |
| $A_g := 798$ | $in^2$ |
| $I_g := 321049$ | $in^4$ |
| $y_t := 27.70$ | in |
| $y_b := -26.30$ | in |

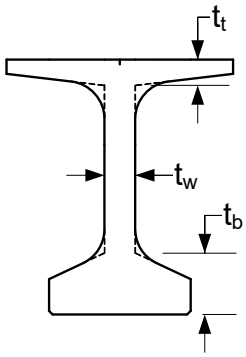


$$e_g := y_t + 2 + \frac{t_{se}}{2} \qquad \boxed{e_g = 33.45} \quad \text{in}$$

$S_t := 11592$ in³

$S_b := -12205$ in³

**LRFD [Eq 4.6.2.2.1-1]**

$K_g := n \cdot \left(I_g + A_g \cdot e_g^2\right)$ $\boxed{K_g = 1868972}$ in⁴

## E19-2.4 Girder Layout

Chapter 19 suggests that at a 130 foot span, the girder spacing should be 7'-6" with 54W girders.

$S := 7.5$ ft

Assume a minimum overhang of 2.5 feet (2 ft flange + 6" overhang), $s_{oh} := 2.5$

$ns := \frac{w_b - s_{oh}}{S}$ $\boxed{ns = 5.333}$

Use the lowest integer: $ns := \text{floor}(ns)$ $\boxed{ns = 5}$

Number of girders: $ng := ns + 1$ $\boxed{ng = 6}$

Overhang Length: $s_{oh} := \frac{w_b - S \cdot ns}{2}$ $\boxed{s_{oh} = 2.50}$ ft

## E19-2.5 Loads

$w_g := 0.831$ weight of 54W girders, klf

$w_d := 0.100$ weight of 8-inch deck slab (interior), ksf

$w_h := 0.100$ weight of 2-in haunch, klf

$w_{di} := 0.410$ weight of diaphragms on interior girder (assume 2), kips

$w_{dx} := 0.205$ weight of diaphragms on exterior girder, kips

$w_{ws} := 0.020$ future wearing surface, ksf

$w_p = 0.387$ weight of parapet, klf

### E19-2.5.1 Dead Loads

Dead load on non-composite (DC):

exterior:

$w_{dlxi} := w_g + w_d \cdot \left(\frac{S}{2} + s_{oh}\right) + w_h + 2 \cdot \frac{w_{dx}}{L}$ $\boxed{w_{dlxi} = 1.559}$ klf

interior:

$$w_{dlii} := w_g + w_d \cdot S + w_h + 2 \cdot \frac{w_{di}}{L}$$ $\boxed{w_{dlii} = 1.687}$ klf

* Dead load on composite (DC):

$$w_p := \frac{2 \cdot w_p}{ng}$$ $\boxed{w_p = 0.129}$ klf

* Wearing Surface (DW):

$$w_{ws} := \frac{w \cdot w_{ws}}{ng}$$ $\boxed{w_{ws} = 0.133}$ klf

* **LRFD [4.6.2.2.1]** states that permanent loads on the deck may be distributed uniformly among the beams. This method is used for the parapet and future wearing surface loads.

## E19-2.5.2 Live Loads

For Strength 1 and Service 1:

HL-93 loading = truck + lane **LRFD [3.6.1.3.1]**

truck pair + lane

DLA of 33% applied to truck or tandem, but not to lane per **LRFD [3.6.2.1].**

For Fatigue 1:

HL-93 truck (no lane) with 15% DLA and 30 ft rear axle spacing per **LRFD [3.6.1.4.1].**

## E19-2.6 Load Distribution to Girders

In accordance with **LRFD [Table 4.6.2.2.1-1]**, this structure is a Type "K" bridge.

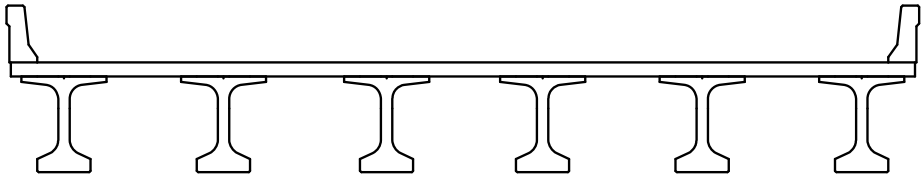

Distribution factors are in accordance with **LRFD [Table 4.6.2.2.2b-1]**. For an interior beam, the distribution factors are shown below:

For one Design Lane Loaded:

$$0.06 + \left(\frac{S}{14}\right)^{0.4} \cdot \left(\frac{S}{L}\right)^{0.3} \cdot \left(\frac{K_g}{12.0 \cdot L \cdot t_{se}^{\,3}}\right)^{0.1}$$

For Two or More Design Lanes Loaded:

$$0.075 + \left(\frac{S}{9.5}\right)^{0.6} \cdot \left(\frac{S}{L}\right)^{0.2} \cdot \left(\frac{K_g}{12.0 \cdot L \cdot t_{se}^{\,3}}\right)^{0.1}$$

Criteria for using distribution factors - Range of Applicability per **LRFD [Table 4.6.2.2.2b-1]**.

$$DeckSpan := \begin{cases} \text{"OK"} & \text{if } 3.5 \le S \le 16 \\ \text{"NG"} & \text{otherwise} \end{cases}$$

$$DeckThickness := \begin{cases} \text{"OK"} & \text{if } 4.5 \le t_{se} \le 12 \\ \text{"NG"} & \text{otherwise} \end{cases}$$

$$BridgeSpan := \begin{cases} \text{"OK"} & \text{if } 20 \le L \le 240 \\ \text{"NG"} & \text{otherwise} \end{cases}$$

$$NoBeams := \begin{cases} \text{"OK"} & \text{if } ng \ge 4 \\ \text{"NG"} & \text{otherwise} \end{cases}$$

$$LongitStiffness := \begin{cases} \text{"OK"} & \text{if } 10000 \le K_g \le 7000000 \\ \text{"NG"} & \text{otherwise} \end{cases}$$

$$x := \begin{pmatrix} S & DeckSpan \\ t_{se} & DeckThickness \\ L & BridgeSpan \\ ng & NoBeams \\ K_g & LongitStiffness \end{pmatrix} \qquad x = \begin{pmatrix} 7.5 & \text{"OK"} \\ 7.5 & \text{"OK"} \\ 130.0 & \text{"OK"} \\ 6.0 & \text{"OK"} \\ 1868972.4 & \text{"OK"} \end{pmatrix}$$

## E19-2.6.1 Distribution Factors for Interior Beams:

One Lane Loaded:

$$g_{i1} := 0.06 + \left(\frac{S}{14}\right)^{0.4} \cdot \left(\frac{S}{L}\right)^{0.3} \cdot \left(\frac{K_g}{12.0 \cdot L \cdot t_{se}^{\,3}}\right)^{0.1} \qquad \boxed{g_{i1} = 0.427}$$

Two or More Lanes Loaded:

$$g_{i2} := 0.075 + \left(\frac{S}{9.5}\right)^{0.6} \cdot \left(\frac{S}{L}\right)^{0.2} \cdot \left(\frac{K_g}{12.0 \cdot L \cdot t_{se}^{\ 3}}\right)^{0.1}$$ $\boxed{g_{i2} = 0.619}$

$$g_i := \max(g_{i1}, g_{i2})$$ $\boxed{g_i = 0.619}$

Note: The distribution factors above already have a multiple lane factor included that is used for service and strength limit states. The distribution factor for One Lane Loaded should be used for the fatigue vehicle and the 1.2 multiple presence factor should be divided out.

## E19-2.6.2 Distribution Factors for Exterior Beams:

Two or More Lanes Loaded:

Per **LRFD [Table 4.6.2.2.2d-1]** the distribution factor shall be calculated by the following equations:

$$w_{parapet} := \frac{w_b - w}{2}$$ Width of parapet overlapping the deck $\boxed{w_{parapet} = 1.250}$ ft

$$d_e := s_{oh} - w_{parapet}$$ Distance from the exterior web of exterior beam to the interior edge of parapet, ft. $\boxed{d_e = 1.250}$ ft

Note: Conservatively taken as the distance from the center of the exterior girder.

Check range of applicability for de:

$$d_{e_check} := \begin{cases} \text{"OK"} & \text{if } -1.0 \le d_e \le 5.5 \\ \text{"NG"} & \text{otherwise} \end{cases}$$ $\boxed{d_{e_check} = \text{"OK"}}$

Note: While AASHTO allows the $d_e$ value to be up to 5.5, the deck overhang (from the center of the exterior girder to the edge of the deck) is limited by WisDOT policy as stated in Chapter 17 of the Bridge Manual.

$$e := 0.77 + \frac{d_e}{9.1}$$ $\boxed{e = 0.907}$

$$g_{x1} := e \cdot g_i$$ $\boxed{g_{x1} = 0.562}$

One Lane Loaded:

Per **LRFD [Table 4.6.2.2.2d-1]** the distribution factor shall be calculated by the Lever Rule.

Calculate the distribution factor by the Lever Rule:

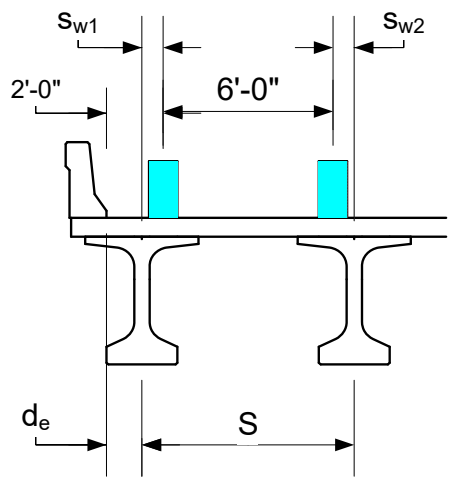


$s_{w1} := d_e - 2$ Distance from center of exterior girder to outside wheel load, ft. $s_{w1} = -0.75$ ft

$s_{w2} := S + s_{w1} - 6$ Distance from wheel load to first interior girder, ft. $s_{w2} = 0.75$ ft

$$R_x := \frac{S + s_{w1} + s_{w2}}{S \cdot 2}$$ $R_x = 0.500$ % of a lane load

Add the single lane multi-presence factor, $m := 1.2$

$g_{x2} := R_x \cdot 1.2$ $g_{x2} = 0.600$

The exterior girder distribution factor is the maximum value of the One Lane Loaded case and the Two or More Lanes Loaded case:

$g_x := \max(g_{x1}, g_{x2})$ $g_x = 0.600$

Note: The interior girder has a larger live load distribution factor and a larger dead load than the exterior girder. Therefore, for this example, the interior girder is likely to control.

## E19-2.7 Load Factors

From **LRFD [Table 3.4.1-1]**:

| | DC | DW | LL |
|---|---|---|---|
| Strength 1 | $\gamma st_{DC} := 1.25$ | $\gamma st_{DW} := 1.50$ | $\gamma st_{LL} := 1.75$ |
| Service 1 | $\gamma s1_{DC} := 1.0$ | $\gamma s1_{DW} := 1.0$ | $\gamma s1_{LL} := 1.0$ |
| Fatigue 1 | $\gamma f_{DC} := 1.0$ | $\gamma f_{DW} := 1.0$ | $\gamma f_{LL} := 1.75$ |

Impact factor (DLA) is applied to the truck and tandem.

## E19-2.8 Dead Load Moments

The unfactored dead load moments are listed below (values are in kip-ft):

| **Unfactored Dead Load Interior Girder Moments (ft-kips)** | | | |
|---|---|---|---|
| Tenth Point | DC non-composite | DC composite | DW composite |
| 0.5 | 3548 | 137 | 141 |
| 0.6 | 3402 | 99 | 102 |
| 0.7 | 2970 | 39 | 40 |
| 0.8 | 2254 | -43 | -45 |
| 0.9 | 1253 | -147 | -151 |
| 1.0 | 0 | -272 | -281 |

The $DC_{nc}$ values are the component non-composite dead loads and include the weight of the girder, haunch, diaphragms and the deck.

The $DC_c$ values are the component composite dead loads and include the weight of the parapets.

The $DW_c$ values are the composite dead loads from the future wearing surface.

Note that the girder dead load moments (a portion of $DC_{nc}$) are calculated based on the CL bearing to CL bearing length. The other $DC_{nc}$ moments are calculated based on the span length (center of bearing at the abutment to centerline of the pier).

## E19-2.9 Live Load Moments

The unfactored live load moments (per lane including impact) are listed below (values are in kip-ft). Note that the impact factor is applied only to the truck portion of the HL-93 loads. A separate analysis run will be required if results without impact are desired.

| Unfactored Live Load + Impact Moments per Lane (kip-ft) | | | | |
|---|---|---|---|---|
| Tenth Point | Truck Pair | Truck + Lane | - Fatigue | + Fatigue |
| 0.5 | -- | -921 | -476 | 1644 |
| 0.6 | -- | -1106 | -572 | 1497 |
| 0.7 | -- | -1290 | -667 | 1175 |
| 0.8 | -1524 | -1474 | -762 | 718 |
| 0.9 | -2046 | -1845 | -857 | 262 |
| 1 | -3318 | -2517 | -953 | 0 |

The unfactored live load moments per lane are calculated by applying the appropriate distribution factor to the controlling moment. For the interior girder:

$$g_i = 0.619$$

$$M_{LL} = g_i \cdot -3317.97 \qquad \boxed{M_{LL} = -2055} \quad \text{kip-ft}$$

The single lane distribution factor should be used and the multiple presence factor of 1.2 must be removed from the fatigue moments.

$$M_{LLfatigue} = g_{i1} \cdot -952.64 \cdot \frac{1}{1.2} \qquad \boxed{M_{LLfatigue} = -339} \quad \text{kip-ft}$$

## E19-2.10 Factored Moments

The factored moments for each limit state are calculated by applying the appropriate load factor to the girder moments. For the interior girder:

Strength 1

$$M_u := \eta \cdot \left(\gamma st_{DC} \cdot M_{DCc} + \gamma st_{DW} \cdot M_{DWc} + \gamma st_{LL} \cdot M_{LL}\right)$$

$$= 1.0 \cdot \left(1.25 \cdot M_{DCc} + 1.50 \cdot M_{DWc} + 1.75 \cdot M_{LL}\right) \qquad \boxed{M_u = -4358} \quad \text{kip-ft}$$

Service 1 (for compression checks in prestress and crack control in deck)

$$M_{s1} := \eta \cdot \left(\gamma s1_{DC} \cdot M_{DCc} + \gamma s1_{DW} \cdot M_{DWc} + \gamma s1_{LL} \cdot M_{LL}\right)$$

$$= 1.0 \cdot \left(1.0 \cdot M_{DCc} + 1.0 \cdot M_{DWc} + 1.0 \cdot M_{LL}\right) \qquad \boxed{M_{s1} = -2608} \quad \text{kip-ft}$$

Fatigue 1

$M_f := \eta \cdot (\gamma f_{DC} \cdot M_{DCc} + \gamma f_{DW} \cdot M_{DWc} + \gamma f_{LL} \cdot M_{LLfatigue})$

$= 1.0 \cdot (1.0 \cdot M_{DCc} + 1.0 \cdot M_{DWc} + 1.75 \cdot M_{LLfatigue})$ $\boxed{M_f = -1147}$ kip-ft

$Mf_{DL} := \eta \cdot (\gamma f_{DC} \cdot M_{DCc} + \gamma f_{DW} \cdot M_{DWc})$ $\boxed{Mf_{DL} = -553}$ kip-ft

$Mf_{LL} := \eta \cdot \gamma f_{LL} \cdot M_{LLfatigue}$ $\boxed{Mf_{LL} = -594}$ kip-ft

## E19-2.11 Composite Girder Section Properties

Calculate the effective flange width in accordance with Chapter 17.2.11.

$w_e := S \cdot 12$ $\boxed{w_e = 90.00}$ in

The effective width, $w_e$, must be adjusted by the modular ratio, $n = 1.54$ , to convert to the same concrete material (modulus) as the girder.

$w_{eadj} := \frac{w_e}{n}$ $\boxed{w_{eadj} = 58.46}$ in

Calculate the composite girder section properties:

effective slab thickness; $\boxed{t_{se} = 7.50}$ in

effective slab width; $\boxed{w_{eadj} = 58.46}$ in

haunch thickness; $hau := 2.00$ in

total height; $h_c := ht + hau + t_{se}$

$\boxed{h_c = 63.50}$ in

$\boxed{n = 1.540}$

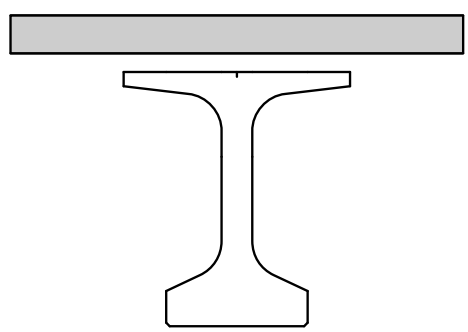

Note: The area of the concrete haunch is not included in the calculation of the composite section properties.

| Component | Ycg | A | AY | $AY^2$ | I | $I+AY^2$ |
|---|---|---|---|---|---|---|
| Deck | 59.75 | 438 | 26197 | 1565294 | 2055 | 1567349 |
| Girder | 26.3 | 798 | 20987 | 551969 | 321049 | 873018 |
| Haunch | 55 | 0 | 0 | 0 | 0 | 0 |
| Summation | | 1236 | 47185 | | | 2440367 |

$\Sigma A := 1236$ $in^2$

$\Sigma AY := 47185$ $in^4$

$\Sigma IplusAYsq := 2440367$ $in^4$

$y_{cgb} := \frac{-\Sigma AY}{\Sigma A}$ $\boxed{y_{cgb} = -38.2}$ in

$y_{cgt} := ht + y_{cgb}$ $\boxed{y_{cgt} = 15.8}$ in

$A_{cg} := \Sigma A$ $in^2$

$I_{cg} := \Sigma IplusAYsq - A_{cg} \cdot y_{cgb}^2$ $\boxed{I_{cg} = 639053}$ $in^4$

Deck:

$S_c := n \cdot \frac{I_{cg}}{y_{cgt} + hau + t_{se}}$ $\boxed{S_c = 38851}$ $in^4$

## E19-2.12 Flexural Strength Capacity at Pier

All of the continuity reinforcement shall be placed in the top mat. Therefore the effective depth of the section at the pier is:

$cover := 2.5$ in

$bar_{trans} := 5$ (transverse bar size)

$Bar_D(bar_{trans}) = 0.625$ in (transverse bar diameter)

$Bar_{No} = 9$

$Bar_D(Bar_{No}) = 1.13$ in (Assumed bar size)

$$d_e := ht + hau + t_s - cover - Bar_D(bar_{trans}) - \frac{Bar_D(Bar_{No})}{2}$$ $d_e = 60.31$ in

For flexure in non-prestressed concrete, $\phi_f := 0.9$.

The width of the bottom flange of the girder, $b_w = 30.00$ inches.

$$R_u := \frac{M_u \cdot 12}{\phi_f \cdot b_w \cdot d_e^2}$$ $R_u = 0.532$ ksi

$$\rho := 0.85 \frac{f'_c}{f_y} \cdot \left(1 - \sqrt{1 - \frac{2 \cdot R_u}{0.85 \cdot f'_c}}\right)$$ $\rho = 0.00925$

$$A_s := \rho \cdot b_w \cdot d_e$$ $A_s = 16.74$ $in^2$

This reinforcement is distributed over the effective flange width calculated earlier, $w_e = 90.00$ inches. The required continuity reinforcement in $in^2/ft$ is equal to:

$$As_{req} := \frac{A_s}{\frac{w_e}{12}}$$ $As_{req} = 2.232$ $in^2/ft$

From Chapter 17, Table 17.5-3, for a girder spacing of $S = 7.5$ feet and a deck thickness of $t_s = 8.0$ inches, use a longitudinal bar spacing of #4 bars at $s_{longit} := 8.5$ inches. The continuity reinforcement shall be placed at 1/2 of this bar spacing, .

#9 bars at 4.25 inch spacing provides an $As_{prov} = 2.82$ $in^2/ft$, or the total area of steel provided:

$$As := As_{prov} \cdot \frac{w_e}{12}$$ $As = 21.18$ $in^2$

Calculate the capacity of the section in flexure at the pier:

Check the depth of the compression block:

Assume $f_s = f_y$ **LRFD [5.6.2.2]** $\alpha_1 := 0.85$ (for $f'_c \leq 10.0$ ksi)

$$a := \frac{As \cdot f_y}{\alpha_1 \cdot b_w \cdot f'_c}$$ $a = 6.228$ in

This is within the thickness of the bottom flange height of 7.5 inches.

If $\frac{c}{d_s} \leq 0.6$ for ($f_y = 60$ ksi) **LRFD [5.6.2.1]**, the reinforcement has yielded and the assumption is correct.

**LRFD [5.7.2.2]** $\beta_1 := 0.65$ ; $c := \frac{a}{\beta_1}$ $\boxed{c = 9.582}$ in

$\frac{c}{d_s} = 0.16 < 0.6$ therefore, the reinforcement will yield

$M_n := As \cdot f_y \cdot \left(d_e - \frac{a}{2}\right) \cdot \frac{1}{12}$ $\boxed{M_n = 6056}$ kip-ft

$M_r := \phi_f \cdot M_n$ $\boxed{M_r = 5451}$ kip-ft

$\boxed{M_u = 4358}$ kip-ft

Is $M_u$ less than $M_r$? $\boxed{\text{check} = \text{"OK"}}$

Check the minimum reinforcement limits in accordance with **LRFD [5.6.3.3]**:

$f_r = 0.24 \cdot \lambda \sqrt{f'_{cd}}$ = modulus of rupture (ksi) **LRFD [5.4.2.6]**

$f_r := 0.24 \cdot \sqrt{f'_{cd}}$ $\lambda = 1.0$ (normal wgt. conc.) **LRFD [5.4.2.8]** $\boxed{f_r = 0.480}$ ksi

$M_{cr} = \gamma_3 (\gamma_1 \cdot f_r) S_c$

Where:

$\gamma_1 := 1.6$ flexural cracking variability factor

$\gamma_3 := 0.67$ ratio of yield strength to ultimate tensile strength of the reinforcement for A615, Grade 60 reinforcement

$M_{cr} := 1.1 f_r \cdot S_c \cdot \frac{1}{12}$ $\boxed{M_{cr} = 1709}$ kip-ft

$\boxed{1.33 \cdot M_u = 5796}$ kip-ft

Is $M_r$ greater than the lesser value of $M_{cr}$ and $1.33 * M_u$? $\boxed{\text{check} = \text{"OK"}}$

Check the Service I crack control requirements in accordance with **LRFD [5.6.7]**:

$\rho := \frac{As}{b_w \cdot d_e}$ $\boxed{\rho = 0.01170}$

$n := \frac{E_s}{E_B}$ $\boxed{n = 4.566}$

$k := \sqrt{(\rho \cdot n)^2 + 2 \cdot \rho \cdot n} - \rho \cdot n$ $\boxed{k = 0.278}$

$j := 1 - \frac{k}{3}$ $\boxed{j = 0.907}$

Note that the value of $d_c$ should not include the 1/2-inch wearing surface.

$d_c := cover - 0.5 + Bar_D(bar_{trans}) + \frac{Bar_D(Bar_{No})}{2}$ $\boxed{d_c = 3.19}$ in

$\boxed{M_{s1} = 2608}$ kip-ft

$f_s := \frac{M_{s1}}{As \cdot j \cdot d_e} \cdot 12 \le 0.6 f_y$ $\boxed{f_s = 27.006}$ ksi $\le 0.6 f_y$ O.K.

The height of the composite section, h, is:

$h := ht + hau + t_{se}$ $\boxed{h = 63.500}$ in

$\beta := 1 + \frac{d_c}{0.7 \cdot (h - d_c)}$ $\boxed{\beta = 1.076}$

$\gamma_e := 0.75$ for Class 2 exposure

$S_{max} := \frac{700 \gamma_e}{\beta \cdot f_s} - 2 \cdot d_c$ $\boxed{S_{max} = 11.70}$ in

$\boxed{spa = 4.25}$ in

Is the bar spacing less than $S_{max}$? $\boxed{check = \text{"OK"}}$

Check the Fatigue 1 reinforcement limits in accordance with **LRFD [5.5.3]**:

$\gamma f_{LL} \cdot \Delta f \le \Delta F_{TH}$ where $\Delta F_{TH} := 26 - 22 \frac{f_{min}}{f_y}$

$\Delta F_{TH} := 26 - 0.367 f_{min}$ (for $f_y = 60$ ksi)

$f_{min}$ is equal to the stress in the reinforcement due to the moments from the permanent loads combined with the Fatigue I load combination. $\Delta f$ is the stress range resulting from the fatigue vehicle.

Check stress in section for determination of use of cracked or uncracked section properties:

$f_{top} := \frac{M_f}{S_c} \cdot 12$ $\boxed{f_{top} = 0.354}$ ksi

$f_{limit} := 0.095 \cdot \sqrt{f'_c}$ $\boxed{f_{limit} = 0.269}$ ksi

Therefore: $\boxed{SectionProp = \text{"Cracked"}}$

If we assume the neutral axis is in the bottom flange, the distance from cracked section neutral axis to bottom of compression flange, $y_{cr}$, is calculated as follows:

$$\frac{b_w \cdot y_{cr}^2}{2} = n \cdot As \cdot (d_e - y_{cr})$$

$$y_{cr} := \frac{n \cdot As}{b_w} \cdot \left( \sqrt{1 + \frac{2 \cdot b_w \cdot d_e}{n \cdot As}} - 1 \right)$$ $\boxed{y_{cr} = 16.756}$ in <u>No Good</u>

Assume the neutral axis is in the web:

$t_{bf_min} := 7.5$

$t_{bf_max} := 15$ $t_{taper} := t_{bf_max} - t_{bf_min}$ $\boxed{t_{taper} = 7.500}$

$t_{web} := 7$ $w_{taper} := b_w - t_w$ $\boxed{w_{taper} = 23.500}$

$$(w_{taper}) \cdot t_{bf_min} \cdot \left( x - \frac{t_{bf_min}}{2} \right) + t_w \cdot \frac{x^2}{2} \ldots$$
$$+ \left( \frac{w_{taper} \cdot t_{taper}}{2} \right) \cdot \left( x - t_{bf_min} - \frac{t_{taper}}{3} \right) - n \cdot As \cdot (d_e - x) = 0$$

CG of cracked section, $\boxed{x = 17.626}$ in

Cracked section moment of inertia:

$$I_{cr} := \frac{w_{taper} \cdot t_{bf_min}^3}{12} + w_{taper} \cdot t_{bf_min} \cdot \left( x - \frac{t_{bf_min}}{2} \right)^2 + \frac{t_{web} \cdot x^3}{3} \ldots$$
$$+ \frac{w_{taper} \cdot t_{taper}^3}{36} + \frac{w_{taper} \cdot t_{taper}}{2} \cdot \left( x - t_{bf_min} - \frac{t_{taper}}{2} \right)^2 + n \cdot As \cdot (d_e - x)^2$$

$\boxed{I_{cr} = 227583}$ $in^4$

Distance from centroid of tension reinforcement to the cracked section neutral axis:

$y_{rb} := d_e - x$ $\quad y_{rb} = 42.685$ in

$f_{min} := n \cdot \frac{M_f \cdot y_{rb}}{I_{cr}} \cdot 12$ $\quad f_{min} = 11.785$ ksi

$\Delta F_{TH} := 26 - 0.367 \cdot f_{min}$ (for $f_y = 60$ ksi) $\quad \Delta F_{TH} = 21.675$ ksi

$\Delta f := n \cdot \frac{|M_{LLfatigue}| \cdot y_{rb}}{I_{cr}} \cdot 12$ $\quad \Delta f = 3.488$ ksi

$\gamma f_{LL} \cdot \Delta f = 6.104$ ksi

Is $\gamma f_{LL} \cdot \Delta f$ less than $\Delta F_{TH}$? $\quad$ check = "OK"

## E19-2.13 Bar Cut Offs

The first cut off is located where half of the continuity reinforcement satisfies the moment diagram. Non-composite moments from the girder and the deck are considered along with the composite moments when determining the Strength I moment envelope. (It should be noted that since the non-composite moments are opposite in sign from the composite moments in the negative moment region, the minimum load factor shall be applied to the non-composite moments.) Only the composite moments are considered when checking the Service and Fatigue requirements.

$spa' := spa \cdot 2$ $\quad spa' = 8.50$ in

$As' := \frac{As}{2}$ $\quad As' = 10.588$ $in^2$

$a' := \frac{As' \cdot f_y}{\alpha_1 \cdot b_w \cdot f'_c}$ $\quad a' = 3.11$ in

$M_{n'} := As' \cdot f_y \cdot \left(d_e - \frac{a'}{2}\right) \cdot \frac{1}{12}$ $\quad M_{n'} = 3111$ kip-ft

$M_{r'} := \phi_f \cdot M_{n'}$ $M_{r'} = 2799$ kip-ft

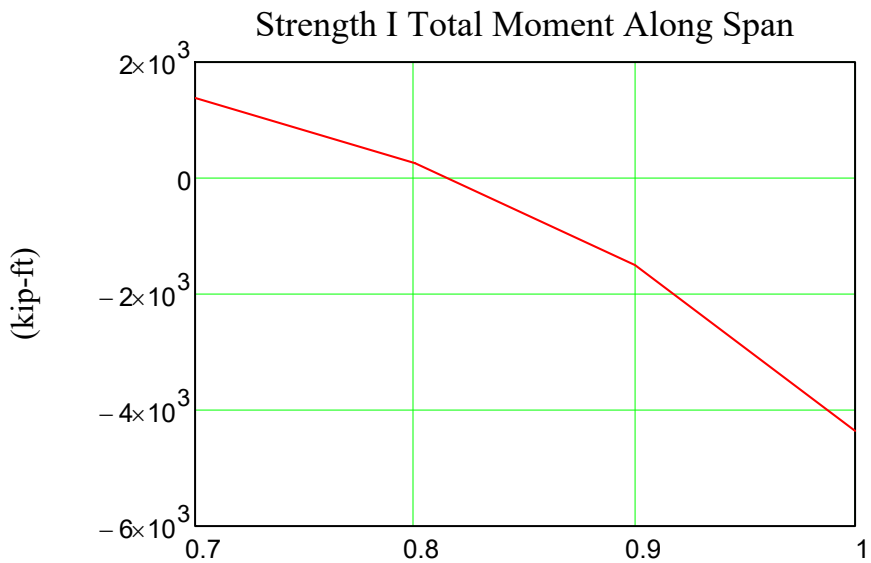


Based on the moment diagram, try locating the first cut off at $cut_1 := 0.90$ span. Note that the Service I crack control requirements control the location of the cut off.

$M_{r'} = 2799$ kip-ft

$Mu_{cut1} = 1501$ kip-ft

$Ms_{cut1} = 1565$ kip-ft

Is $Mu_{cut1}$ less than $M_{r'}$? check = "OK"

Check the minimum reinforcement limits in accordance with **LRFD [5.6.3.3]**:

$M_{cr} = 1709$ kip-ft

$1.33 \cdot Mu_{cut1} = 1996$ kip-ft

Is $M_{r'}$ greater than the lesser value of $M_{cr}$ and $1.33*Mu_{cut1}$? check = "OK"

Check the Service I crack control requirements in accordance with **LRFD [5.6.7]**:

$\rho' := \frac{As'}{b_w \cdot d_e}$ $\rho' = 0.00585$

$k' := \sqrt{(\rho' \cdot n)^2 + 2 \cdot \rho' \cdot n} - \rho' \cdot n$ $k' = 0.206$

$j' := 1 - \frac{k'}{3}$ $j' = 0.931$

$Ms_{cut1} = 1565$ kip-ft

$f_{s'} := \frac{Ms_{cut1}}{As' \cdot j' \cdot d_e} \cdot 12 \quad \le 0.6 f_y$ $f_{s'} = 31.582$ ksi $\le 0.6 f_y$ O.K.

$\beta = 1.076$

$\gamma_e = 0.750$

$S_{max'} := \frac{700 \gamma_e}{\beta \cdot f_{s'}} - 2 \cdot d_c$ $S_{max'} = 9.08$ in

$spa' = 8.50$ in

Is the bar spacing less than $S_{max}$? check = "OK"

Check the Fatigue 1 reinforcement limits in accordance with **LRFD [5.5.3]**:

The factored moments at the cut off are: $Mf_{DLcut1} = 298$ kip-ft

$Mf_{LLcut1} = 534$ kip-ft

$Mfpos_{LLcut1} = 163$ kip-ft

$Mf_{cut1} := Mf_{DLcut1} + Mf_{LLcut1}$ $Mf_{cut1} = 833$ kip-ft

Check stress in section for determination of use of cracked or uncracked section properties:

$f_{top_cut1} := \frac{Mf_{cut1}}{S_c} \cdot 12$ $f_{top_cut1} = 0.257$ ksi

$f_{limit} := 0.095 \cdot \sqrt{f'_c}$ $f_{limit} = 0.269$ ksi

Therefore: SectionProp = "Un-Cracked"

$f_{min_cut1} := n \cdot \frac{Mf_{cut1}}{S_c} \cdot 12$ $f_{min_cut1} = 1.174$ ksi

$\Delta F_{TH_cut1} := 26 - 0.367 \cdot f_{min_cut1}$ (for $f_y = 60$ ksi) $\Delta F_{TH_cut1} = 25.569$ ksi

The live load range is the sum of the positive and negative fatigue moments:

$Mf_{LLrange} := Mf_{LLcut1} + Mfpos_{LLcut1}$ $Mf_{LLrange} = 698$ kip-ft

$\gamma fLL\Delta f_cut1 := n \cdot \frac{Mf_{LLrange}}{S_c} \cdot 12$ $\gamma fLL\Delta f_cut1 = 0.984$ ksi

Is $\gamma f_{LL} \cdot \Delta f$ less than $\Delta F_{TH}$? check = "OK"

Therefore this cut off location, $cut_1 = 0.90$, is OK. The bar shall be extended past the cut off point a distance not less than the maximum of the following, **LRFD [5.10.8.1.2c]**:

$$extend := \begin{pmatrix} d_e \\ 12 \cdot Bar_D(Bar_{No}) \\ 0.0625 \cdot L \cdot 12 \end{pmatrix} \qquad extend = \begin{pmatrix} 60.311 \\ 13.536 \\ 97.500 \end{pmatrix}$$

$\frac{\max(extend)}{12} = 8.13$ ft

$X_1 := L \cdot (1 - cut_1) + \frac{\max(extend)}{12}$ $X_1 = 21.12$ feet

USE $X_1 = 22$ feet from the CL of the pier.

The second bar cut off is located at the point of inflection under a uniform 1.0 klf composite dead load. At $cut_2 = 0.750$, $M_{cut2} = (79)$ kip-ft. Extend the bar the max(extend) distance calculated above past this point, or 4 feet past the first cut off, whichever is greater.

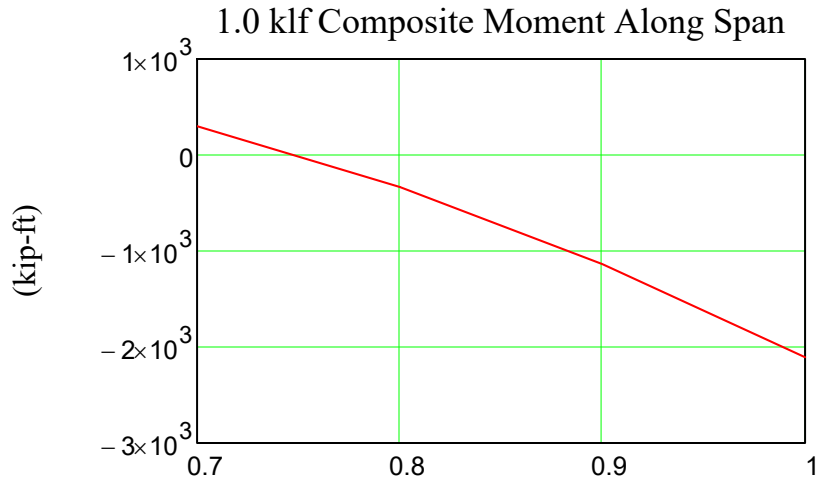


$X_{2a} := L \cdot (1 - cut_2) + \frac{max(extend)}{12}$ $\boxed{X_{2a} = 40.63}$ feet from the center of the pier

$X_{2b} := X_1 + 4$ $\boxed{X_{2b} = 26.00}$ feet from the center of the pier

$X_2 := max(X_{2a}, X_{2b})$ $\boxed{X_2 = 40.63}$ feet

USE $\boxed{X_2 = 41}$ feet from the CL of the pier.

This page intentionally left blank.

Table of Contents

E19-3 Box Section Beam ..... 2
E19-3.1 Preliminary Structure Data ..... 2
E19-3.2 Live Load Distribution ..... 4
E19-3.2.1 Distribution for Moment ..... 4
E19-3.2.2 Distribution for Shear ..... 5
E19-3.3 Live Load Moments ..... 7
E19-3.4 Dead Loads ..... 7
E19-3.5 Dead Load Moments ..... 9
E19-3.6 Design Moments ..... 10
E19-3.7 Load Factors ..... 11
E19-3.8 Factored Moments ..... 11
E19-3.9 Allowable Stress ..... 12
E19-3.9.1 Temporary Allowable Stresses ..... 12
E19-3.9.2 Final Condition Allowable Stresses ..... 12
E19-3.10 Preliminary Design Steps ..... 13
E19-3.10.1 Determine Amount of Prestress ..... 13
E19-3.10.1.1 Estimate the Prestress Losses ..... 14
E19-3.10.1.2 Determine Number of Strands ..... 15
E19-3.10.2 Prestress Loss Calculations ..... 16
E19-3.10.2.1 Elastic Shortening Loss ..... 16
E19-3.10.2.2 Approximate Estimate of Time Dependant Losses ..... 17
E19-3.10.3 Check Stresses at Critical Locations ..... 18
E19-3.11 Flexural Capacity at Midspan ..... 21
E19-3.12 Shear Analysis ..... 23
E19-3.13 Non-Prestressed Reinforcement (Required near top of girder) ..... 29
E19-3.14 Longitudinal Tension Flange Capacity: ..... 30
E19-3.15 Live Load Deflection Calculations ..... 31
E19-3.16 Camber Calculations ..... 32

## E19-3 Box Section Beam

This example shows design calculations for a single span prestressed box multi-beam bridge having a 2" concrete overlay and is designed for a 20 pound per square foot future wearing surface. The *AASHTO LRFD Bridge Design Specifications* are followed as stated in the text of this chapter. ***(Example is current through LRFD Seventh Edition - 2016 Interim. Note: Example has not been updated to current Bridge Manual guidance and should be used for informational purposes only)***

### E19-3.1 Preliminary Structure Data

Design Data
A-1 Abutments at both ends
Skew: 0 degrees
Live Load: HL-93
Roadway Width: 28 ft. minimum clear

| | |
|---|---|
| $L := 44$ | Span Length, single span, ft |
| $L_g := 44.5$ | Girder Length, the girder extends 3" past the CL bearing at each abutment, single span, ft |
| $N_L := 2$ | Number of design lanes |
| $t_{overlay} := 2$ | Minimum overlay thickness, inches |
| $f_{pu} := 270$ | Ultimate tensile strength for low relaxation strands, ksi |
| $d_s := 0.5$ | Strand diameter, inches |
| $A_s := 0.1531$ | Area of prestressing strands, $in^2$ |
| $E_s := 28500$ | Modulus of elasticity of the prestressing strands, ksi |
| $f'_c := 5$ | Concrete strength (prestressed box girder), ksi |
| $f'_{ci} := 4.25$ | Concrete strength at release, ksi |
| $K_1 := 1.0$ | Aggregate correction factor |
| $w_c := 0.150$ | Unit weight of concrete for box girder, overlay, and grout, kcf |
| $fy := 60$ | Bar steel reinforcement, Grade 60, ksi. |
| $w_{rail} := 0.075$ | Weight of Type "M" rail, klf |
| $Wh_{rail} := 0.42$ | Width of horizontal members of Type "M" rail, feet |
| $\mu := 0.20$ | Poisson's ratio for concrete, **LRFD [5.4.2.5]** |

Based on past experience, the modulus of elasticity for the precast concrete are given in Chapter 19 as $E_{beam6} := 5500$ ksi for a concrete strength of 6 ksi. The values of E for different concrete strengths are calculated as follows:

$E_{beam5} := 5500 \cdot \frac{\sqrt{f'_c \cdot 1000}}{\sqrt{6000}}$ $\boxed{E_{beam5} = 5021}$ ksi

$E_B := E_{beam5}$

The modulus of elasticity at the time of release is calculated in accordance with **LRFD [C5.4.2.4]**.

$E_{beam4.25} := 33000 \cdot K_1 \cdot w_c^{1.5} \cdot \sqrt{f'_{ci}}$ $\boxed{E_{beam4.25} = 3952}$ ksi

$E_{ct} := E_{beam4.25}$

Based on the preliminary data, Section 19.3.9 of this chapter and Table 19.3-3, select a 4'-0" wide pretensioned box section having a depth of 1'-9" (Section 3), as shown on Bridge Manual Standard 19.15. The actual total deck width provided is calculated below.

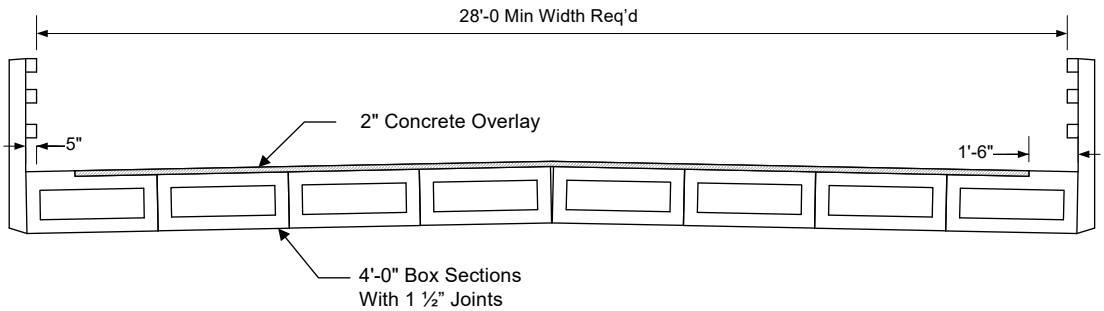


$n_{beams} := 8$

$n_{joints} := n_{beams} - 1$ $\boxed{n_{joints} = 7}$

$W_s := 4$ Width of section, ft

$W_j := 1.5$ Width of joints, inches

Overall width of the bridge, ft

$W_b := n_{beams} \cdot W_s + n_{joints} \cdot \frac{W_j}{12}$ $\boxed{W_b = 32.875}$ feet

Clear width of the bridge, ft

$W_{b_clear} := W_b - 2 \cdot Wh_{rail}$ $\boxed{W_{b_clear} = 32.035}$ feet

$W_{curb} := 1.5$ Width of curb on exterior girder (for steel rails), feet

$S := W_s + \frac{W_j}{12}$ Effective spacing of sections $\boxed{S = 4.125}$ feet

Section Properties, 4 ft x 1'-9" deep Box, Section 3

$D_s := 1.75$ Depth of section, ft

$A := 595$ Area of the box girder, $in^2$

$t_w := 5$ Thickness of each vertical element, in

$r_{sq} := 55.175$ $in^2$

$y_t := 10.5$ in

$y_b := -10.5$ in

$S_t := 3137$ Section modulus, $in^3$

$S_b := -3137$ Section modulus, $in^3$

$I := 32942$ Moment of inertia, $in^4$

$J := 68601$ St. Venant's torsional inertia, $in^4$

## E19-3.2 Live Load Distribution

The live load distribution for adjacent box beams is calculated in accordance with **LRFD [4.6.2.2.2]**. Note that if the section does not fall within the applicability ranges, the lever rule shall be used to determine the distribution factor.

### E19-3.2.1 Distribution for Moment

For interior beams, the live load moment distribution factor is calculated as indicated in **LRFD [Table 4.6.2.2.2b-1]** for cross section type "g" if connected only enough to prevent relative vertical displacement. This distribution factor applies regardless of the number of lanes loaded.

$K := \sqrt{\frac{(1+\mu)\cdot I}{J}}$ $\boxed{K = 0.759}$

$C := \min\left[K\cdot\left(\frac{W_b}{L}\right), K\right]$ $\boxed{C = 0.567}$

When C is less than 5:

$D := 11.5 - N_L + 1.4\cdot N_L\cdot(1 - 0.2\cdot C)^2$ $\boxed{D = 11.701}$

$g_{int_m} := \frac{S}{D}$ $\boxed{g_{int_m} = 0.353}$

For exterior beams, the live load moment distribution factor is calculated as indicated in **LRFD [Table 4.6.2.2.2d-1]** for cross section type "g".

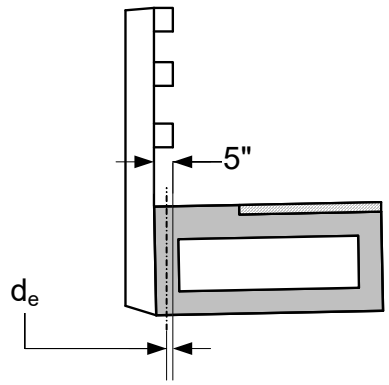


$$d_e := \frac{5}{12} \cdot \frac{1}{2} - Wh_{rail}$$

Distance from the center of the exterior web to the face of traffic barrier, ft.

$$d_e = -0.212 \text{ feet}$$

For one design lane loaded:

$$e_1 := \max\left(1.125 + \frac{d_e}{30}, 1\right) \qquad e_1 = 1.118$$

$$g_{ext1} := g_{int_m} \cdot e_1 \qquad g_{ext1} = 0.394$$

For two or more design lanes loaded:

$$e_2 := \max\left(1.04 + \frac{d_e}{25}, 1\right) \qquad e_2 = 1.032$$

$$g_{ext2} := g_{int_m} \cdot e_2 \qquad g_{ext2} = 0.364$$

Use the maximum value from the above calculations to determine the controlling exterior girder distribution factor for moment.

$$g_{ext_m} := \max(g_{ext1}, g_{ext2}) \qquad g_{ext_m} = 0.394$$

The distribution factor for fatigue is the single lane distribution factor with the multi-presence factor, $m := 1.2$, removed:

$$g_f := \frac{g_{ext1}}{1.2} \qquad g_f = 0.328$$

## E19-3.2.2 Distribution for Shear

Interior Girder

This section does not fall in the range of applicability for shear distribution for interior girders of bridge type "g". I = 32942 in$^4$ and the limit is 40000 < I < 610,000, per **LRFD [Table 4.6.2.2.3a-1]**. Therefore, use the lever rule.

For the single lane loaded, only one wheel can be located on the box section. With the single lane multi presence factor, the interior girder shear distribution factor is:

$g_{int_v1} := 0.5 \cdot 1.2$ $\boxed{g_{int_v1} = 0.600}$

For two or more lanes loaded, center adjacent vehicles over the beam. One load from each vehicle acts on the beam.

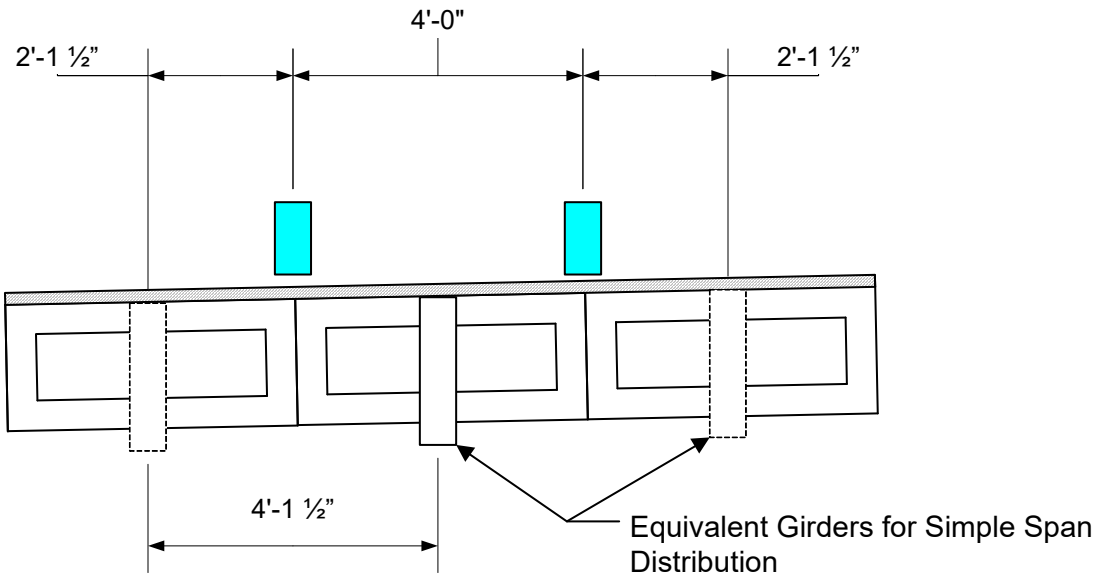


$g_{int_v2} := 0.5 \cdot \frac{2.125}{4.125} \cdot 2$ $\boxed{g_{int_v2} = 0.515}$

$g_{int_v} := \max(g_{int_v1}, g_{int_v2})$ $\boxed{g_{int_v} = 0.600}$

Exterior Girder

For the exterior girder, the range of applicability of **LRFD [T-4.6.2.2.3b-1]** for bridge type "g" is satisfied.

For the single lane loaded:

$e_{v1} := \max\left(1.25 + \frac{d_e}{20}, 1.0\right)$ $\boxed{e_{v1} = 1.239}$

$g_{ext_v1} := e_{v1} \cdot g_{int_v1}$ $\boxed{g_{ext_v1} = 0.744}$

For two or more lanes loaded:

$b := W_s \cdot 12$ $\boxed{b = 48}$ inches

$$e_{v2} := \max\left[1 + \left(\frac{d_e + \frac{b}{12} - 2.0}{40}\right)^{0.5}, 1.0\right]$$ $e_{v2} = 1.211$

$$g_{ext_v2} := e_{v2} \cdot g_{int_v2}$$ $g_{ext_v2} = 0.624$

$$g_{ext_v} := \max(g_{ext_v1}, g_{ext_v2})$$ $g_{ext_v} = 0.744$

## E19-3.3 Live Load Moments

The HL-93 live load moment per lane on a 44 foot span is controlled by the design tandem plus lane. The maximum value at mid-span, including a dynamic load allowance of 33%, is $M_{LL_lane} := 835.84$ kip-ft per lane.

$$M_{LLint} := M_{LL_lane} \cdot g_{int_m}$$ $M_{LLint} = 294.7$ kip-ft

$$M_{LLext} := M_{LL_lane} \cdot g_{ext_m}$$ $M_{LLext} = 329.4$ kip-ft

The Fatige live load moment per lane on a 44 foot span at mid-span, including a dynamic load allowance of 15%, is $M_{LLfat_lane} := 442.4$ kip-ft per lane.

$$M_{LLfat} := M_{LLfat_lane} \cdot g_f$$ $M_{LLfat} = 145.3$ kip-ft

## E19-3.4 Dead Loads

Interior Box Girders

Box Girder $w_g := \frac{A}{12^2} \cdot w_c$ $w_g = 0.620$ klf

Internal Concrete Diaphragm (at center of span)

$$w_{diaph} := 1.17 \cdot \left(D_s - \frac{10}{12}\right) \cdot \left(W_s - \frac{10}{12}\right) \cdot w_c$$ $w_{diaph} = 0.509$ kips

Equivalent uniform load: $w_{d_mid} := 2 \cdot \frac{w_{diaph}}{L}$ $w_{d_mid} = 0.023$ klf

Internal Concrete Diaphragm (at ends of span)

$$w_{diaph_end} := 2.83 \cdot \left(D_s - \frac{10}{12}\right) \cdot \left(W_s - \frac{10}{12}\right) \cdot w_c \qquad \boxed{w_{diaph_end} = 1.232} \text{ kips}$$

Equivalent uniform load:

$$w_{d_end} := 8 \cdot \frac{w_{diaph_end} \cdot 1.17}{L^2} \qquad \boxed{w_{d_end} = 0.006} \text{ klf}$$

$$w_d := w_{d_mid} + w_{d_end} \qquad \boxed{w_d = 0.029} \text{ klf}$$

For the interior girders, all dead loads applied after the post tensioning has been completed are distributed equally to all of the girders.

Overlay

$$w_o := \frac{\frac{t_{overlay}}{12} \cdot \left(W_b - W_{curb} \cdot 2\right) \cdot w_c}{n_{beams}} \qquad \boxed{w_o = 0.093} \text{ klf}$$

Joint Grout

$$w_j := \frac{W_j}{12} \cdot \left(D_s + \frac{t_{overlay}}{12}\right) \cdot w_c \cdot \frac{n_{joints}}{n_{beams}} \qquad \boxed{w_j = 0.031} \text{ klf}$$

"M" Rail

$$w_r := \frac{2 \cdot w_{rail}}{n_{beams}} \qquad \boxed{w_r = 0.019} \text{ klf}$$

Future Wearing Surface

$$w_{fws} := \frac{W_b \cdot 0.020}{n_{beams}} \qquad \boxed{w_{fws} = 0.082} \text{ klf}$$

$$w_{DCint} := w_g + w_d + w_o + w_j + w_r \qquad \boxed{w_{DCint} = 0.792} \text{ klf}$$

$$w_{DWint} := w_{fws} \qquad \boxed{w_{DWint} = 0.082} \text{ klf}$$

Exterior Box Girders

Box Girder $w_{g_ext} := \frac{A + 2 \cdot W_{curb} \cdot 12}{12^2} \cdot w_c$ $w_{g_ext} = 0.657$ klf

Internal Concrete Diaphragms $w_d = 0.029$ klf

For the exterior girders, all dead loads applied directly to the girder are applied.

Overlay $w_{o_ext} := \frac{t_{overlay}}{12} \cdot (S - W_{curb}) \cdot w_c$ $w_{o_ext} = 0.066$ klf

Joint Grout $w_{j_ext} := \frac{1}{2} \cdot \frac{W_j}{12} \cdot \left(D_s + \frac{t_{overlay}}{12}\right) \cdot w_c$ $w_{j_ext} = 0.018$ klf

Type M Rail $w_{r_ext} := w_{rail}$ $w_{r_ext} = 0.075$ klf

Future Wearing Surface

$w_{fws_ext} := S \cdot 0.020$ $w_{fws_ext} = 0.083$ klf

$w_{DCext} := w_{g_ext} + w_d + w_{o_ext} + w_{j_ext} + w_{r_ext}$

$w_{DCext} = 0.845$ klf

$w_{DWext} := w_{fws_ext}$ $w_{DWext} = 0.083$ klf

## E19-3.5 Dead Load Moments

Moment of the girder and internal diaphragms alone, based on total girder length.

$M_{gi} := (w_g + w_d) \cdot \frac{L_g^2}{8}$ $M_{gi} = 160.6$ kip-ft

$M_{gext} := (w_{g_ext} + w_d) \cdot \frac{L_g^2}{8}$ $M_{gext} = 169.9$ kip-ft

Interior Girder

$M_{DCint} := w_{DCint} \cdot \frac{L^2}{8}$ $\boxed{M_{DCint} = 191.8}$ kip-ft

$M_{DWint} := w_{DWint} \cdot \frac{L^2}{8}$ $\boxed{M_{DWint} = 19.9}$ kip-ft

Exterior Girder

$M_{DCext} := w_{DCext} \cdot \frac{L^2}{8}$ $\boxed{M_{DCext} = 204.5}$ kip-ft

$M_{DWext} := w_{DWext} \cdot \frac{L^2}{8}$ $\boxed{M_{DWext} = 20.0}$ kip-ft

## E19-3.6 Design Moments

Calculate the total moments on the interior and exterior girders to determine which girder will control the design.

$M_{T_int} := M_{DCint} + M_{DWint} + M_{LLint}$ $\boxed{M_{T_int} = 506.3}$ kip-ft

$M_{T_ext} := M_{DCext} + M_{DWext} + M_{LLext}$ $\boxed{M_{T_ext} = 553.9}$ kip-ft

Since the Dead Load moments are very close and the exterior Live Load moments are greater than the interior moments, the exterior girder controls for this design example. Note: an interior box girder section design will not be provided in this example. However, the interior girder shall not have less load carrying capacity then the exterior girder.

$M_{DC} := M_{DCext}$ $\boxed{M_{DC} = 204.5}$ kip-ft

$M_{DW} := M_{DWext}$ $\boxed{M_{DW} = 20}$ kip-ft

$M_{LL} := M_{LLext}$ $\boxed{M_{LL} = 329.4}$ kip-ft

$M_{LLf} := M_{LLfat}$ $\boxed{M_{LLf} = 145.3}$ kip-ft

## E19-3.7 Load Factors

From **LRFD [Table 3.4.1-1 & Table 3.4.1-4]**:

| | DC | DW | LL |
|---|---|---|---|
| Strength 1 | $\gamma st_{DC} := 1.25$ | $\gamma st_{DW} := 1.50$ | $\gamma st_{LL} := 1.75$ |
| Service 1 | $\gamma s1_{DC} := 1.0$ | $\gamma s1_{DW} := 1.0$ | $\gamma s1_{LL} := 1.0$ |
| Service 3 | $\gamma s3_{DC} := 1.0$ | $\gamma s3_{DW} := 1.0$ | $\gamma s3_{LL} := 0.8$ |
| Fatigue 1 | | | $\gamma f_{LL} := 1.5$ |

## E19-3.8 Factored Moments

WisDOT's policy is to set all of the load modifiers, $\eta$, equal to 1.0. The factored moments for each limit state are calculated by applying the appropriate load factor to the girder moments. For the exterior girder:

Strength 1

$$M_{str} := \eta \cdot \left(\gamma st_{DC} \cdot M_{DC} + \gamma st_{DW} \cdot M_{DW} + \gamma st_{LL} \cdot M_{LL}\right)$$

$$= 1.0 \cdot \left(1.25 \cdot M_{DC} + 1.50 \cdot M_{DW} + 1.75 \cdot M_{LL}\right) \qquad \boxed{M_{str} = 862} \quad \text{kip-ft}$$

Service 1 (for compression checks)

$$M_{s1} := \eta \cdot \left(\gamma s1_{DC} \cdot M_{DC} + \gamma s1_{DW} \cdot M_{DW} + \gamma s1_{LL} \cdot M_{LL}\right)$$

$$= 1.0 \cdot \left(1.0 \cdot M_{DC} + 1.0 \cdot M_{DW} + 1.0 \cdot M_{LL}\right) \qquad \boxed{M_{s1} = 554} \quad \text{kip-ft}$$

Service 3 (for tension checks)

$$M_{s3} := \eta \cdot \left(\gamma s3_{DC} \cdot M_{DC} + \gamma s3_{DW} \cdot M_{DW} + \gamma s3_{LL} \cdot M_{LL}\right)$$

$$= 1.0 \cdot \left(1.0 \cdot M_{DC} + 1.0 \cdot M_{DW} + 0.8 \cdot M_{LL}\right) \qquad \boxed{M_{s3} = 488} \quad \text{kip-ft}$$

Fatigue 1 (for compression checks)

$$M_{f1} := \eta \cdot \left[\frac{1}{2} \cdot \left(M_{DC} + M_{DW}\right) + \gamma f_{LL} \cdot M_{LLf}\right]$$

$$= 1.0 \cdot \left[\frac{1}{2} \cdot \left(M_{DC} + M_{DW}\right) + 1.5 \cdot M_{LLf}\right] \qquad \boxed{M_{f1} = 330} \quad \text{kip-ft}$$

## E19-3.9 Allowable Stress

Allowable stresses are determined for 2 stages for prestressed girders. Temporary allowable stresses are set for the loading stage at release of the prestressing strands. Final condition allowable stresses are checked at service.

### E19-3.9.1 Temporary Allowable Stresses

The temporary allowable stress (compression) **LRFD [5.9.4.1.1]**:

$f_{ciall} := 0.65 \cdot f'_{ci}$ $\boxed{f_{ciall} = 2.763}$ ksi

In accordance with **LRFD [Table 5.9.4.1.2-1]**, the temporary allowable tension stress is calculated as follows (assume there is no bonded reinforcement):

$f_{tiall} := -\min\left(0.0948 \cdot \lambda \sqrt{f'_{ci}}, 0.2\right)$ λ = 1.0 (normal wgt. conc.) **LRFD [5.4.2.8]** $\boxed{f_{tiall} = -0.195}$ ksi

If bonded reinforcement is present in the top flange, the temporary allowable tension stress is calculated as follows:

$f_{tiall_bond} := -0.24 \cdot \lambda \sqrt{f'_{ci}}$ λ = 1.0 (normal wgt. conc.) **LRFD [5.4.2.8]** $\boxed{f_{tiall_bond} = -0.495}$ ksi

### E19-3.9.2 Final Condition Allowable Stresses

Allowable Stresses,**LRFD [5.9.4.2.1]**:

There are two compressive service stress limits:

$f_{call1} := 0.45 \cdot f'_c$ PS + DL $\boxed{f_{call1} = 2.250}$ ksi

$f_{call2} := 0.60 \cdot f'_c$ LL + PS + DL $\boxed{f_{call2} = 3.000}$ ksi

There is one tension service stress limit **LRFD [5.9.4.2.2]**:

$f_{tall} = -0.19 \cdot \lambda \sqrt{f'_c}$ λ = 1.0 (normal wgt. conc.) **LRFD [5.4.2.8]**

$f_{tall} := -0.19 \cdot \sqrt{f'_c}$ LL + PS + DL $|f_{tall}| \le 0.6$ ksi $\boxed{f_{tall} = -0.425}$ ksi

There is one compressive fatigue stress limit **LRFD [5.5.3.1]**:

$f_{call_f} := 0.40 \cdot f'_c$ LLf + 1/2(PS + DL) $\boxed{f_{call_f} = 2.000}$ ksi

## E19-3.10 Preliminary Design Steps

The following steps are utilized to design the prestressing strands:

1) Design the amount of prestress to prevent tension at the bottom of the beam under the full load at center span after losses.

2) Calculate the prestress losses and check the girder stresses at mid span at the time of transfer.

3) Check resulting stresses at the critical sections of the girder at the time of transfer (before losses and while in service (after losses).

## E19-3.10.1 Determine Amount of Prestress

Design the amount of prestress to prevent tension at the bottom of the beam under the full loac (at center span) after losses.

Near center span, after losses, T = the remaining effective prestress, aim for no tension at the bottom. Use Service I for compression and Service III for tension.

For this example, the exterior girder has the controlling moments.

Calculate the stress at the bottom of the beam due to the Service 3 loading:

$$f_b := \frac{M_{s3} \cdot 12}{S_b} \qquad \boxed{f_b = -1.867} \text{ ksi}$$

Stress at bottom due to prestressing:

$$f_{bp} = \frac{T}{A} \cdot \left(1 + e \cdot \frac{y_b}{r^2}\right)$$

and $f_{bp} := \left|f_b\right|$ desired final prestress.

We want this to balance out the tensile stress calculated above from the loading, i.e. an initial compression. The required stress due to prestress force at bottom of section to counteract the Service 3 loads:

$$\boxed{f_{bp} = 1.867} \text{ ksi}$$

## E19-3.10.1.1 Estimate the Prestress Losses

At service the prestress has decreased (due to CR, SH, RE):

Estimated time dependant losses $F_{Delta} \equiv 30$ ksi

Note: The estimated time dependant losses (based on experience for low relaxation strands) will be re-calculated using the approximate method in accordance with **LRFD [5.9.5.3]** once the number of strands has been determined.

Assume an initial strand stress; $f_{tr} := 0.75 \cdot f_{pu}$ $f_{tr} = 202.5$ ksi

Based on experience, assume $\Delta f_{pES_est} := 9.1$ ksi loss from elastic shortening. As an alternate initial estimate, **LRFD [C.5.9.5.2.3a]** suggests assuming a 10% ES loss.

$$ES_{loss} := \frac{\Delta f_{pES_est}}{f_{tr}} \cdot 100$$ $ES_{loss} = 4.494$ %

$$f_i := f_{tr} - \Delta f_{pES_est}$$ $f_i = 193.4$ ksi

The total loss is the time dependant losses plus the ES losses:

$$loss := F_{Delta} + \Delta f_{pES_est}$$ $loss = 39.1$ ksi

$$loss_{\%} := \frac{loss}{f_{tr}} \cdot 100$$ $loss_{\%} = 19.309$ % (estimated)

If $T_o$ is the initial prestress, then (1-loss)*$T_o$ is the remaining:

$$T = \left(1 - loss_{\%}\right) \cdot T_o$$

$$ratio := 1 - \frac{loss_{\%}}{100}$$ $ratio = 0.807$

$$T = ratio \cdot T_o$$

$$f_{bp} = \frac{\left(1 - loss_{\%}\right) \cdot T_o}{A} \cdot \left(1 + e \cdot \frac{y_b}{r^2}\right)$$

OR:

$$\frac{f_{bp}}{1 - loss_{\%}} = \frac{T_o}{A} \cdot \left(1 + e \cdot \frac{y_b}{r^2}\right)$$

$$f_{bpi} := \frac{f_{bp}}{1 - \frac{loss_{\%}}{100}}$$

$f_{bpi} = 2.313$ ksi

desired bottom initial prestress

E19-3.10.1.2 Determine Number of Strands

$A_s = 0.153$ $in^2$

$f_{pu} = 270$ ksi

$f_s := 0.75 \cdot f_{pu}$

$f_s = 202.5$ ksi

$P := A_s \cdot f_s$

$P = 31.003$ kips per strand

$$f_{bp} := \frac{P \cdot N}{A} \cdot \left(1 + e \cdot \frac{y_b}{r_{sq}}\right)$$

$y_b = -10.5$ Distance from the centroid of the 21" depth to the bottom of the box section, in.

For the 4'-0 wide box sections, there can be up to 22 strands in the bottom row and 2 rows of strands in the sides of the box. Calculate the eccentricity for the maximum number of strands that can be placed in the bottom row of the box:

$e_b := y_b + 2$ $e_b = -8.5$ Eccentricity to the bottom row of strands, inches

$e_s := e_b$

$e_s = -8.5$ inches

$$N_{req} := \frac{f_{bpi} \cdot A}{P} \cdot \frac{1}{1 + e_s \cdot \frac{y_b}{r_{sq}}}$$

$N_{req} = 17$ strands

Therefore, try $N := 16$ strands since some final tension in the bottom of the girder is allowed.

Place 2 of the strands in the second row:

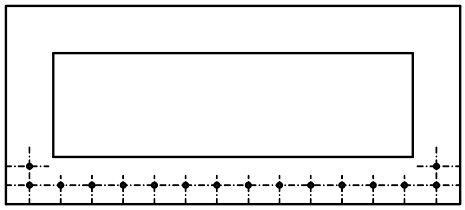

$$e_s := \frac{e_b \cdot 14 + (e_b + 2) \cdot 2}{16}$$

$e_s = -8.25$ inches

## E19-3.10.2 Prestress Loss Calculations

The loss in prestressing force is comprised of the following components:

1) Elastic Shortening (ES), shortening of the beam as soon as prestress is applied. Can this be compensated for by overstressing?

2) Shrinkage (SH), shortening of the concrete as it hardens, time function.

3) Creep (CR), slow shortening of concrete due to permanent compression stresses in the beam, time function.

4) Relaxation (RE), the tendon slowly accommodates itself to the stretch and the internal stress drops with time

### E19-3.10.2.1 Elastic Shortening Loss

at transfer (before ES loss) **LRFD [5.9.5.2]**

$T_{oi} := N \cdot f_{tr} \cdot A_s$ $= 16 \cdot 0.75 \cdot 270 \cdot 0.1531 = 496$ kips

The ES loss estimated above was: $\Delta f_{pES_est} = 9.1$ ksi, or $ES_{loss} = 4.494$ %. The resulting force in the strands after ES loss:

$$T_o := \left(1 - \frac{ES_{loss}}{100}\right) \cdot T_{oi}$$

$T_o = 474$ kips

Since all strands are straight, we can calculate the initial elastic shortening loss;

$$f_{cgp} := \frac{T_o}{A} + (T_o \cdot e_s) \cdot \frac{e_s}{I} + M_{gi} \cdot 12 \cdot \frac{e_s}{I}$$

$f_{cgp} = 1.264$ ksi

$E_{ct} = 3952$ ksi

$E_p := E_s$

$E_p = 28500$ ksi

$$\Delta f_{pES} := \frac{E_p}{E_{ct}} \cdot f_{cgp}$$ $\Delta f_{pES} = 9.118$ ksi

This value of $\Delta f_{pES}$ is in agreement with the estimated value above; $\Delta f_{pES_est} = 9.10$ ksi. If these values did not agree, $T_o$ would have to be recalculated using $f_{tr}$ minus the new value of $\Delta f_{pES}$, and a new value of $f_{cgp}$ would be determined. This iteration would continue until the assumed and calculated values of $\Delta f_{pES}$ are in agreement.

The initial stress in the strand is:

$$f_i := f_{tr} - \Delta f_{pES}$$ $f_i = 193.382$ ksi

The force in the beam after transfer is:

$$T_o := N \cdot A_s \cdot f_i$$ $T_o = 474$ kips

Check the design to avoid premature failure at the center of the span at the time of transfer. Check the stress at the center span (at the plant) at both the top and bottom of the girder.

$$f_{ttr} := \frac{T_o}{A} + \frac{T_o \cdot e_s}{S_t} + \frac{M_{gi} \cdot 12}{S_t}$$ $f_{ttr} = 0.200$ ksi

$$f_{btr} := \frac{T_o}{A} + \frac{T_o \cdot e_s}{S_b} + \frac{M_{gi} \cdot 12}{S_b}$$ $f_{btr} = 1.392$ ksi

temporary allowable stress (tension) $f_{tiall} = -0.195$ ksi

temporary allowable stress (compression) $f_{ciall} = 2.763$ ksi

Is the stress at the top of the girder less than the allowable? check = "OK"

Is the stress at the bottom of the girder less than the allowable? check = "OK"

## E19-3.10.2.2 Approximate Estimate of Time Dependant Losses

Calculate the components of the time dependant losses; shrinkage, creep and relaxation, using the approximate method in accordance with **LRFD [5.9.5.3]**.

$$\Delta f_{pLT} = 10.0 \cdot \frac{f_{pi} \cdot A_s}{A_g} \cdot \gamma_h \cdot \gamma_{st} + 12.0 \cdot \gamma_h \cdot \gamma_{st} + \Delta f_{pR}$$

From **LRFD [Figure 5.4.2.3.3-1]**, the average annual ambient relative humidity, $H := 72$ %.

$\gamma_h := 1.7 - 0.01 \cdot H$ $\quad \gamma_h = 0.980$

$\gamma_{st} := \dfrac{5}{1 + f'_{ci}}$ $\quad \gamma_{st} = 0.952$

$\Delta f_{pR} := 2.4$ ksi for low relaxation strands

$\Delta f_{pCR} := 10.0 \cdot \dfrac{f_{tr} \cdot A_s \cdot N}{A} \cdot \gamma_h \cdot \gamma_{st}$ $\quad \Delta f_{pCR} = 7.781$ ksi

$\Delta f_{pSR} := 12.0 \cdot \gamma_h \cdot \gamma_{st}$ $\quad \Delta f_{pSR} = 11.200$ ksi

$\Delta f_{pRE} := \Delta f_{pR}$ $\quad \Delta f_{pRE} = 2.400$ ksi

$\Delta f_{pLT} := \Delta f_{pCR} + \Delta f_{pSR} + \Delta f_{pRE}$ $\quad \Delta f_{pLT} = 21.381$ ksi

The total estimated prestress loss (Approximate Method):

$\Delta f_p := \Delta f_{pES} + \Delta f_{pLT}$ $\quad \Delta f_p = 30.499$ ksi

$\dfrac{\Delta f_p}{f_{tr}} \cdot 100 = 15.061$ % total prestress loss

This value is less than but in general agreement with the initial estimated $loss_{\%} = 19.3$ .

The remaining stress in the strands and total force in the beam after all losses is:

$f_{pe} := f_{tr} - \Delta f_p$ $\quad f_{pe} = 172.00$ ksi

$T := N \cdot A_s \cdot f_{pe}$ $\quad T = 421$ kips

## E19-3.10.3 Check Stresses at Critical Locations

Check the girder stresses at the end of the transfer length of the strands at release:

Minimum moment on section = girder moment at the plant

$$M_{gz} = \frac{w_g}{2} \cdot \left(L_g \cdot z - z^2\right)$$

Stress in the bottom fiber at transfer:

$$f_{bz} = \frac{T_o}{A} + \frac{T_o \cdot e_{sz}}{S_b} + \frac{M_{gz}}{S_b}$$

The transfer length may be taken as:

$l_{tr} := 60 \cdot d_s$ $\boxed{l_{tr} = 30.00}$ in

$x := \frac{l_{tr}}{12}$ $\boxed{x = 2.50}$ feet

The moment at the end of the transfer length due to the girder dead load:

$$M_{gt} := \frac{w_{g_ext}}{2} \cdot \left(L_g \cdot x - x^2\right) + \left(\frac{w_{diaph} \cdot x}{2} + w_{diaph_end} \cdot x\right)$$

$\boxed{M_{gt} = 38}$ kip-ft

The girder stresses at the end of the transfer length:

$$f_{tt} := \frac{T_o}{A} + \frac{T_o \cdot e_s}{S_t} + \frac{M_{gt} \cdot 12}{S_t}$$

$\boxed{f_{tt} = -0.303}$ ksi

$\boxed{f_{tiall} = -0.195}$ ksi

$\boxed{check = \text{"NG"}}$

If bonded reinforcement is provided in the top flange, the allowable stress is:

$f_{tiall_bond} = -0.495$ ksi

Is $f_{tt}$ less than $f_{tiall_ond}$? $\boxed{check = \text{"OK"}}$

$$f_{bt} := \frac{T_o}{A} + \frac{T_o \cdot e_s}{S_b} + \frac{M_{gt} \cdot 12}{S_b}$$

$\boxed{f_{bt} = 1.896}$ ksi

$\boxed{f_{ciall} = 2.763}$ ksi

Is $f_{bt}$ less than $f_{ciall}$? $\boxed{check = \text{"OK"}}$

Check final stresses after all losses at the mid-span of the girder:

Top of girder stress (Compression - Service 1):

$$f_{t1} := \frac{T}{A} + \frac{T \cdot e_s}{S_t} + \frac{\left(M_{DC} + M_{DW}\right) \cdot 12}{S_t}$$

PS + DL $\boxed{f_{t1} = 0.459}$ ksi

$\boxed{check = \text{"OK"}}$

$$f_{t2} := \frac{T}{A} + \frac{T \cdot e_s}{S_t} + \frac{M_{s1} \cdot 12}{S_t}$$ LL + PS + DL $f_{t2} = 1.719$ ksi

check = "OK"

Bottom of girder stress (Compression - Service 1):

$$f_{b1} := \frac{T}{A} + \frac{T \cdot e_s}{S_b} + \frac{(M_{DC} + M_{DW}) \cdot 12}{S_b}$$ PS + DL $f_{b1} = 0.958$ ksi

check = "OK"

Bottom of girder stress (Tension - Service 3):

$$f_b := \frac{T}{A} + \frac{T \cdot e_s}{S_b} + \frac{M_{s3} \cdot 12}{S_b}$$ $f_b = -0.051$ ksi

check = "OK"

Top of girder stress (Compression - Fatigue 1):

$$f_{tf1} := \frac{1}{2} \cdot \left[ \frac{T}{A} + \frac{T \cdot e_s}{S_t} + \frac{(M_{DC} + M_{DW}) \cdot 12}{S_t} \right] + \frac{M_{LLf} \cdot 12}{S_t}$$ 1/2(PS + DL) + LLf

$f_{t1} = 0.459$ ksi

check = "OK"

**allowable stress (tension)** $f_{tall} = -0.425$ ksi

**allowable stress (compression)** $f_{call1} = 2.250$ ksi

$f_{call2} = 3.000$ ksi

$f_{call_f} = 2.000$ ksi

## E19-3.11 Flexural Capacity at Midspan

Check $f_{pe}$ in accordance with **LRFD [5.7.3.1.1]**:

$f_{pe} = 172$ ksi $0.5 \cdot f_{pu} = 135$ ksi

Is $0.5 * f_{pu}$ less than $f_{pe}$? check = "OK"

Then at failure, we can assume that the tendon stress is:

$$f_{ps} = f_{pu}\left(1 - k \cdot \frac{c}{d_p}\right)$$

where:

$$k = 2\left(1.04 - \frac{f_{py}}{f_{pu}}\right)$$

From **LRFD [Table C5.7.3.1.1-1]**, for low relaxation strands, $k := 0.28$.

"c" is defined as the distance between the neutral axis and the compression face (inches).

Assume that the compression block is in the top section of the box. Calculate the capacity as if it is a rectangular section. The neutral axis location,calculated in accordance with **LRFD 5.7.3.1.1** for a rectangular section, is:

$$c = \frac{A_{ps} \cdot f_{pu}}{\alpha_1 \cdot f'_c \cdot \beta_1 \cdot b + k \cdot A_{ps} \cdot \frac{f_{pu}}{d_p}}$$

where:

$A_{ps} := N \cdot A_s$ $A_{ps} = 2.45$ $in^2$

$b := W_s \cdot 12$ $b = 48.00$ in

**LRFD [5.7.2.2]** $\alpha_1 := 0.85$ (for $f'_c \leq 10.0$ ksi)

$\beta_1 := \max\left[0.85 - \left(f'_c - 4\right) \cdot 0.05, 0.65\right]$ $\beta_1 = 0.800$

$d_p := y_t - e_s$ $d_p = 18.75$ in

$$c := \frac{A_{ps} \cdot f_{pu}}{\alpha_1 \cdot f'_c \cdot \beta_1 \cdot b + k \cdot A_{ps} \cdot \frac{f_{pu}}{d_p}}$$ $c = 3.82$ in

$a := \beta_1 \cdot c$ $a = 3.06$ in

This is within the depth of the top slab (5-inches). Therefore our assumption is OK.

Now calculate the effective tendon stress at ultimate:

$$f_{ps} := f_{pu} \cdot \left(1 - k \cdot \frac{c}{d_p}\right)$$ $f_{ps} = 254.6$ ksi

$$T_u := f_{ps} \cdot A_{ps}$$ $T_u = 624$ kips

Calculate the nominal moment capacity of the section in accordance with **LRFD [5.7.3.2]**:

$$M_n := \left[A_{ps} \cdot f_{ps} \cdot \left(d_p - \frac{a}{2}\right)\right] \cdot \frac{1}{12}$$

$M_n = 895$ kip-ft

For prestressed concrete, $\phi_f := 1.00$, **LRFD [5.5.4.2.1]**. Therefore the usable capacity is:

$$M_r := \phi_f \cdot M_n$$ $M_r = 895$ kip-ft

The required capacity:

Exterior Girder Moment

$$M_u := M_{str}$$ $M_u = 862$ kip-ft

Check the section for minimum reinforcement in accordance with **LRFD [5.7.3.3.2]** for the interior girder:

$1.33 \cdot M_u = 1147$ kip-ft

$f_r = 0.24 \cdot \lambda \sqrt{f'_c}$ = modulus of rupture (ksi) **LRFD [5.4.2.6]**

$f_r := 0.24 \cdot \sqrt{f'_c}$ $\lambda = 1.0$ (normal wgt. conc.) **LRFD [5.4.2.8]** $f_r = 0.537$ ksi

$$f_{cpe} := \frac{T}{A} + \frac{T \cdot e_s}{S_b}$$ $f_{cpe} = 1.816$ ksi

$$S_c := -S_b$$ $S_c = 3137$ ksi

$\gamma_1 := 1.6$ flexural cracking variability factor

$\gamma_2 := 1.1$ prestress variability factor

$\gamma_3 := 1.0$ for prestressed concrete structures

$M_{cr} := \gamma_3 \cdot \left[ S_c \cdot \left( \gamma_1 \cdot f_r + \gamma_2 \cdot f_{cpe} \right) \cdot \frac{1}{12} \right]$ $M_{cr} = 747$ kip-ft

Is $M_r$ greater than the lesser value of $M_{cr}$ and $1.33*M_u$? check = "OK"

## E19-3.12 Shear Analysis

A separate analysis must be conducted to estimate the total shear force in each girder for shear design purposes.

The live load shear distribution factors to the girders are calculated above in E19-3.2.2.

$g_{int_v} = 0.600$

$g_{ext_v} = 0.744$

From section E19-3.4, the uniform dead loads on the girders are:

Interior Girder

$w_{DCint} = 0.792$ klf

$w_{DWint} = 0.082$ klf

Exterior Girder

$w_{DCext} = 0.845$ klf

$w_{DWext} = 0.083$ klf

However, the internal concrete diaphragms were applied as total equivalent uniform loads to determine the maximum mid-span moment. The diaphragm weights should be applied as poin loads for the shear calculations.

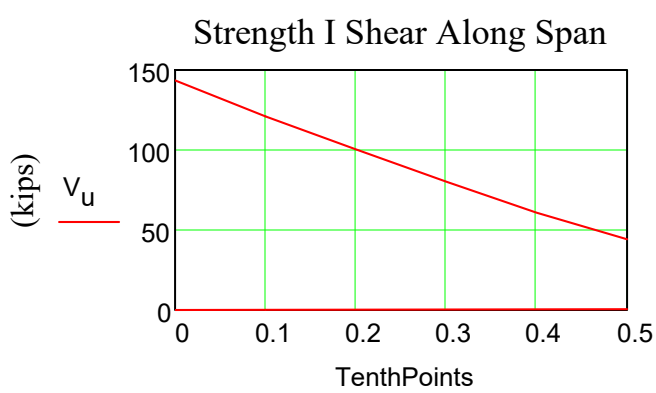


$Vu_{0.0} = 143.5$ kips

$Vu_{0.5} = 44.2$ kips

Simplified Procedure for Prestressed and Nonprestressed Sections, **LRFD [5.8.3.4.3]**

$b_v := 2t_w$ $\boxed{b_v = 10.00}$ in

The critical section for shear is taken at a distance of $d_v$ from the face of the support, **LRFD [5.8.3.2]**.

$d_v$ = effective shear depth taken as the distance between the resultants of the tensile and compressive forces due to flexure. It need not be taken less than the greater of $0.9*d_e$ or 0.72h (inches). **LRFD [5.8.2.9]**

The first estimate of $d_v$ is calculated as follows:

$d_v := -e_s + y_t - \frac{a}{2}$ $\boxed{d_v = 17.22}$ in

For the standard bearing pad of width, $w_{brg} := 8$ inches, the distance from the end of the girder to the critical section:

$L_{crit} := (w_{brg} + d_v) \cdot \frac{1}{12}$ $\boxed{L_{crit} = 2.10}$ ft

The eccentricity of the strand group at the critical section is:

$\boxed{e_s = -8.25}$ in

Calculation of compression stress block:

$\boxed{d_p = 18.75}$ in

$\boxed{A_{ps} = 2.45}$ $in^2$

Also, the value of $f_{pu}$, should be revised if the critical section is located less than the development length from the end of the beam. The development length for a prestressing strand is calculated in accordance with **LRFD [5.11.4.2]**:

$K := 1.0$ for prestressed members with a depth less than 24 inches

$\boxed{d_s = 0.5}$ in

$l_d := K \cdot \left(f_{ps} - \frac{2}{3} \cdot f_{pe}\right) \cdot d_s$ $\boxed{l_d = 70.0}$ in

The transfer length may be taken as: $l_{tr} := 60 \cdot d_s$ $\boxed{l_{tr} = 30.00}$ in

Since $L_{crit} = 2.102$ feet is between the transfer length and the development length, the design stress in the prestressing strand is calculated as follows:

$f_{pu_crit} := f_{pe} \cdot \frac{L_{crit} \cdot 12}{l_{tr}}$ $\boxed{f_{pu_crit} = 145}$ ksi

$T_{crit} := N \cdot A_s \cdot f_{pu_crit}$ $\boxed{T_{crit} = 354}$ kips

For rectangular section behavior:

$\boxed{\alpha_1 = 0.850}$ $\boxed{\beta_1 = 0.800}$

$c_{crit} := \frac{A_{ps} \cdot f_{pu_crit}}{\alpha_1 \cdot f'_c \cdot \beta_1 \cdot b + k \cdot A_{ps} \cdot \frac{f_{pu_crit}}{d_p}}$ $\boxed{c_{crit} = 2.102}$ in

$a_{crit} := \beta_1 \cdot c_{crit}$ $\boxed{a_{crit} = 1.682}$ in

Calculation of shear depth based on refined calculations of a:

$d_{v_crit} := -e_s + y_t - \frac{a_{crit}}{2}$ $\boxed{d_{v_crit} = 17.91}$ in

This value matches the assumed value of $d_v$ above. OK!

$d_v := d_{v_crit}$

The location of the critical section from the end of the girder is:

$L_{crit} := (w_{brg} + d_v) \cdot \frac{1}{12}$ $\boxed{L_{crit} = 2.159}$ ft

The location of the critical section from the center line of bearing at the abutment is:

$crit := L_{crit} - 0.25$ $\boxed{crit = 1.909}$ ft

The nominal shear resistance of the section is calculated as follows, **LRFD [5.8.3.3]**:

$$V_n = \min\left(V_c + V_s + V_p, 0.25 \cdot f'_c \cdot b_v \cdot d_v + V_p\right)$$

where $V_p := 0$ in the calculation of $V_n$, if the simplified procedure is used (**LRFD [5.8.3.4.3]**).

Note, the value of $V_p$ does not equal zero in the calculation of $V_{cw}$.

$V_d$ = shear force at section due to unfactored dead load and includes both DC and DW (kips)

$V_i$ = factored shear force at section due to externally applied loads (Live Loads) occurring simultaneously with $M_{max}$ (kips). (Not necessarily equal to $V_u$.)

$M_{cre}$ = moment causing flexural cracking at section due to externally applied loads (kip-in)

$M_{max}$ = maximum factored moment at section due to externally applied loads (Live Loads) (kip-in)

$M_{dnc}$ = total unfactored dead load moment acting on the noncomposite section (kip-ft)

Values for the following moments and shears are at the critical section, $L_{crit} = 2.16$ feet from the end of the girder at the abutment.

$\boxed{V_d = 18.3}$ kips

$\boxed{V_i = 109.5}$ kips

$\boxed{M_{dnc} = 37.3}$ kip-ft

$\boxed{M_{max} = 111.7}$ kip-ft

However, the equations below require the value of $M_{max}$ to be in kip-in:

$\boxed{M_{max} = 1340}$ kip-in

$f_r = -0.20 \cdot \lambda \sqrt{f'_c}$ = modulus of rupture (ksi) **LRFD [ 5.4.2.6]**

$f_r := -0.20 \cdot \sqrt{f'_c}$ $\lambda$ = 1.0 (normal wgt. conc.) **LRFD [5.4.2.8]** $\boxed{f_r = -0.447}$ ksi

$\boxed{T = 421}$ kips

$$f_{cpe} := \frac{T_{crit}}{A} + \frac{T_{crit} \cdot e_s}{S_b}$$

$\boxed{f_{cpe} = 1.527}$ ksi

$\boxed{M_{dnc} = 37}$ kip-ft

$\boxed{M_{max} = 1340}$ kip-in

$S_c := S_b$ $\boxed{S_c = -3137}$ $in^3$

$S_{nc} := S_b$ $\boxed{S_{nc} = -3137}$ $in^3$

$$M_{cre} := S_c \cdot \left( f_r - f_{cpe} - \frac{12 M_{dnc}}{S_{nc}} \right)$$

$\boxed{M_{cre} = 5746}$ kip-in

Calculate $V_{ci}$, **LRFD [5.8.3.4.3]** $\lambda$ = 1.0 (normal wgt. conc.) **LRFD [5.4.2.8]**

$V_{ci1} := 0.06 \cdot \lambda \sqrt{f'_c} \cdot b_v \cdot d_v$ $\boxed{V_{ci1} = 24.0}$ kips

$V_{ci2} := 0.02 \cdot \lambda \sqrt{f'_c} \cdot b_v \cdot d_v + V_d + \frac{V_i \cdot M_{cre}}{M_{max}}$ $\boxed{V_{ci2} = 495.9}$ kips

$V_{ci} := \max(V_{ci1}, V_{ci2})$ $\boxed{V_{ci} = 495.9}$ kips

$f_t := \frac{T_{crit}}{A} + \frac{T_{crit} \cdot e_s}{S_t} + \frac{M_{dnc} \cdot 12}{S_t}$ $\boxed{f_t = -0.194}$ ksi

$f_b := \frac{T_{crit}}{A} + \frac{T_{crit} \cdot e_s}{S_b} + \frac{M_{dnc} \cdot 12}{S_b}$ $\boxed{f_b = 1.384}$ ksi

$\boxed{y_b = -10.50}$ in

$\boxed{h = 21.00}$ in

$f_{pc} := f_b - y_b \cdot \frac{f_t - f_b}{h}$ $\boxed{f_{pc} = 0.595}$ ksi

$V_{p_cw} := 0$ (no strands are draped) $\boxed{V_{p_cw} = 0.0}$ kips

Calculate $V_{cw}$, **LRFD [5.8.3.4.3]** $\lambda = 1.0$ (normal wgt. conc.) **LRFD [5.4.2.8]**

$V_{cw} := \left(0.06 \cdot \lambda \sqrt{f'_c} + 0.30 \cdot f_{pc}\right) \cdot b_v \cdot d_v + V_{p_cw}$ $\boxed{V_{cw} = 56.0}$ kips

$V_c := \min(V_{ci}, V_{cw})$ $\boxed{V_c = 56.0}$ kips

Calculate the required shear resistance:

$\phi_v := 0.9$ **LRFD [5.5.4.2]**

$V_{u_crit} = \gamma st_{DC} \cdot V_{DCnc} + \gamma st_{DW} \cdot V_{DWnc} + \gamma st_{LL} \cdot Vu_{LL}$

$V_n := \frac{V_{u_crit}}{\phi_v}$ $\boxed{V_n = 147.6}$ kips

Transverse Reinforcing Design at Critical Section:

The required steel capacity:

$V_s := V_n - V_c - V_p$ $\boxed{V_s = 91.6}$ kips

$A_v := 0.40$ $in^2$ for 2 - #4 rebar

$f_y := 60$ ksi

$\boxed{d_v = 17.91}$ in

$$\cot\theta := \begin{cases} 1 & \text{if } V_{ci} < V_{cw} \\ \min\left(1.0 + 3\cdot\frac{f_{pc}}{\sqrt{f'_c}}, 1.8\right) & \text{otherwise} \end{cases}$$

$\boxed{\cot\theta = 1.799}$

$$V_s = A_v\cdot f_y\cdot d_v\cdot\frac{\cot\theta}{s}$$

**LRFD Eq 5.8.3.3-4** reduced per **C5.8.3.3-1** when $\alpha$ = 90 degrees.

$$s := A_v\cdot f_y\cdot d_v\cdot\frac{\cot\theta}{V_s}$$

$\boxed{s = 8.441}$ in

Check Maximum Spacing, **LRFD [5.8.2.7]**:

$$v_u := \frac{V_{u_crit}}{\phi_v\cdot b_v\cdot d_v}$$

$\boxed{v_u = 0.824}$ ksi

$\boxed{0.125\cdot f'_c = 0.625}$

$$s_{max1} := \begin{cases} \min(0.8\cdot d_v, 24) & \text{if } v_u < 0.125\cdot f'_c \\ \min(0.4\cdot d_v, 12) & \text{if } v_u \geq 0.125\cdot f'_c \end{cases}$$

$\boxed{s_{max1} = 7.16}$ in

Check Minimum Reinforcing, **LRFD [5.8.2.5]**:

$$s_{max2} := \frac{A_v\cdot f_y}{0.0316\cdot\lambda\sqrt{f'_c}\cdot b_v}$$

$\lambda$ = 1.0 (normal wgt. conc.) **LRFD [5.4.2.8]**

$\boxed{s_{max2} = 33.97}$ in

$$s_{max} := \min(s_{max1}, s_{max2})$$

$\boxed{s_{max} = 7.16}$ in

Therefore use a maximum spacing of $s := 7$ inches.

$$V_s := A_v\cdot f_y\cdot d_v\cdot\frac{\cot\theta}{s}$$

$\boxed{V_s = 110.4}$ kips

Check $V_n$ requirements:

$$Vn_1 := V_c + V_s + V_p$$

$\boxed{Vn_1 = 166}$ kips

$$Vn_2 := 0.25\cdot f'_c\cdot b_v\cdot d_v + V_p$$

$\boxed{Vn_2 = 224}$ kips

$$V_n := \min(Vn_1, Vn_2)$$

$\boxed{V_n = 166}$ kips

$$V_r := \phi_v\cdot V_n$$

$\boxed{V_r = 149.81}$ kips

$V_{u_crit} = 132.85$ kips

Is $V_{u_crit}$ less than $V_r$? check = "OK"

Web reinforcing is required in accordance with **LRFD [5.8.2.4]** whenever:

$$V_u \geq 0.5 \cdot \phi_v \cdot (V_c + V_p)$$ (all values shown are in kips)

At critical section from end of girder: $V_{u_crit} = 133$ $0.5 \cdot \phi_v \cdot (V_c + V_p) = 25$

Therefore, use web reinforcing over the entire beam.

Resulting Shear Design:

Use #4 U shaped stirrups at 7-inch spacing between the typical end sections. Unless a large savings in rebar can be realized, use a single stirrup spacing between the standard end sections.

## E19-3.13 Non-Prestressed Reinforcement (Required near top of girder)

The following method is used to calculate the non-prestressed reinforcement in the top flange at the end of the girder. **LRFD [T-5.9.4.1.2-1]**

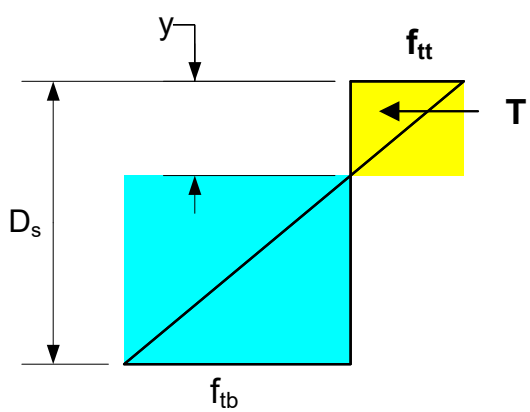


$f_{tt} = -0.303$ ksi

$f_{bt} = 1.896$ ksi

$D_s = 1.75$ feet

$b = 48$ inches

$$Y := \frac{f_{tt} \cdot D_s \cdot 12}{f_{tt} - f_{bt}}$$ $Y = 2.898$ inches

$$T := \frac{|f_{tt}| \cdot b \cdot Y}{2}$$ $T = 21.101$ kips

$f_y = 60$

$$A_{reqd} := \frac{T}{0.5 \cdot f_y}$$ $A_{reqd} = 0.703$ $in^2$

Therefore, use standard reinforcement; 5 #4 bars, As = 5*0.20 = 1.00 in$^2$

## E19-3.14 Longitudinal Tension Flange Capacity:

The total capacity of the tension reinforcing must meet the requirements of **LRFD [5.8.3.5].** The capacity is checked at the critical section for shear:

$$T_{ps} := \frac{M_{max}}{d_v \cdot \phi_f} + \left( \left| \frac{V_{u_crit}}{\phi_v} - V_{p_cw} \right| - 0.5 \cdot V_s \right) \cdot \cot\theta \qquad \boxed{T_{ps} = 241} \quad \text{kips}$$

actual capacity of the straight strands:

$$\boxed{N \cdot A_s \cdot f_{pu_crit} = 354} \qquad \text{kips}$$

Is the capacity of the straight strands greater than $T_{ps}$? $\boxed{check = \text{"OK"}}$

Check the tension capacity at the edge of the bearing:

The strand is anchored $l_{px} := 8$ inches. The transfer and development lengths for a prestressing strand are calculated in accordance with **LRFD [5.11.4.2]**:

$$\boxed{l_{tr} = 30.00} \quad \text{in}$$

$$\boxed{l_d = 70.0} \quad \text{in}$$

Since $l_{px}$ is less than the transfer length, the design stress in the prestressing strand is calculated as follows:

The assumed crack plane crosses the centroid of the straight strands at

$$Y_s := \left| y_b - e_s \right| \qquad \boxed{Y_s = 2.25} \quad \text{in}$$

$$l_{px'} := l_{px} + Y_s \cdot \cot\theta \qquad \boxed{l_{px'} = 12.05} \quad \text{in}$$

$$f_{pb} := \frac{f_{pe} \cdot l_{px'}}{60 \cdot d_s} \qquad \boxed{f_{pb} = 69.07} \quad \text{ksi}$$

Tendon capacity of the straight strands: $\boxed{N \cdot A_s \cdot f_{pb} = 169}$ kips

The values of $V_u$, $V_s$, $V_p$ and $\theta$ may be taken at the location of the critical section.

Over the length $d_v$, the average spacing of the stirrups is:

$s_{ave} := s$ $\boxed{s_{ave} = 7.00}$ in

$V_s := A_v \cdot f_y \cdot d_v \cdot \frac{\cot\theta}{s_{ave}}$ $\boxed{V_s = 110}$ kips

The vertical component of the draped strands is: $\boxed{V_{p_cw} = 0}$ kips

The factored shear force at the critical section is: $\boxed{V_{u_crit} = 133}$ kips

Minimum capacity required at the front of the bearing:

$T_{breqd} := \left(\frac{V_{u_crit}}{\phi_v} - 0.5 \cdot V_s - V_{p_cw}\right) \cdot \cot\theta$ $\boxed{T_{breqd} = 166}$ kips

Is the capacity of the straight strands greater than $T_{breqd}$? $\boxed{check = \text{"OK"}}$

## E19-3.15 Live Load Deflection Calculations

Check the Live Load deflection with the vehicle loading as specified in **LRFD [3.6.1.3.2]**; design truck alone or 25% of the design truck + the lane load.

The deflection shall be limited to L/800.

The moment of inertia of the entire bridge shall be used.

$\Delta_{limit} := \frac{L \cdot 12}{800}$ $\boxed{\Delta_{limit} = 0.660}$ inches

$\boxed{I = 32942}$ $in^4$

$\boxed{n_{beams} = 8}$

$I_{bridge} := I \cdot n_{beams}$ $\boxed{I_{bridge} = 263536}$ $in^4$

From CBA analysis with 2 lanes loaded, the truck deflection controlled:

$\Delta_{truck} := 0.347$ in

Applying the multiple presence factor from **LRFD [Table 3.6.1.1.2-1]** for 2 lanes loaded:

$\Delta := 1.0 \cdot \Delta_{truck}$ $\boxed{\Delta = 0.347}$ in

Is the actual deflection less than the allowable limit, $\Delta < \Delta$ limit? $\boxed{check = "OK"}$

## E19-3.16 Camber Calculations

Moment due to straight strands:

Number of straight strands: $\boxed{N = 16}$

Eccentricity of the straight strands: $\boxed{e_s = -8.25}$ in

$P_{i_s} := N \cdot A_s \cdot (f_{tr} - \Delta f_{pES})$ $\boxed{P_{i_s} = 474}$ kips

$M_1 := P_{i_s} \cdot |e_s|$ $\boxed{M_1 = 3908}$ kip-in

Upward deflection due to straight strands:

Length of the girder: $\boxed{L_g = 45}$ ft

Modulus of Elasticity of the girder at release: $\boxed{E_{ct} = 3952}$ ksi

Moment of inertia of the girder: $\boxed{I = 32942}$ $in^4$

$$\Delta_s := \frac{M_1 \cdot L_g^2}{8 \cdot E_{ct} \cdot I} \cdot 12^2$$ $\boxed{\Delta_s = 1.07}$ in

Total upward deflection due to prestress:

$\Delta_{PS} := \Delta_s$ $\boxed{\Delta_{PS} = 1.07}$ in

Downward deflection due to beam self weight at release:

$$\Delta_{gi} := \frac{5 \cdot (w_g + w_d) \cdot L_g^4}{384 \cdot E_{ct} \cdot I} \cdot 12^3$$ $\boxed{\Delta_{gi} = 0.44}$ in

Anticipated prestress camber at release:

$\Delta_i := \Delta_{PS} - \Delta_{gi}$ $\boxed{\Delta_i = 0.63}$ in

The downward deflection due to the dead load of the joint grout, overlay, railing and future wearing surface:

Calculate the additional non-composite dead loads for an exterior girder:

$w_{nc} := w_{j_ext} + w_{o_ext} + w_{r_ext} + w_{fws_ext}$ $\boxed{w_{nc} = 0.241}$ klf

Modulus of Elasticity of the beam at final strength $\boxed{E_B = 5021}$ ksi

$$\Delta_{nc} := \frac{5 \cdot w_{nc} \cdot L^4}{384 \cdot E_B \cdot I} \cdot 12^3$$

$\boxed{\Delta_{nc} = 0.123}$ in

The residual camber for an exterior girder:

$$RC := \Delta_i - \Delta_{nc}$$

$\boxed{RC = 0.507}$ in

This page intentionally left blank.

Table of Contents

E19-4 Lifting Check for Prestressed Girders, LRFD ..... 2
E19-4.1 Design Criteria ..... 2
E19-4.2 Lifting Stresses ..... 2
E19-4.3 Check Compression Stresses due to Lifting ..... 4
E19-4.4 Check Tension Stresses due to Lifting ..... 4
E19-4.5 Design Top Flange Reinforcement ..... 4

## E19-4 Lifting Check for Prestressed Girders, LRFD

This example shows design calculations for the lifting check for the girder in design example E19-1. The *AASHTO LRFD Bridge Design Specifications* are followed as stated in the text of this chapter. ***(Example is current through LRFD Seventh Edition - 2016 Interim)***

### E19-4.1 Design Criteria

$L_{girder} := 146$ feet

$f'_{ci} := 6.8$ ksi $\qquad f_y := 60$ ksi

girder_size = "72W-inch"

$w_{top_flg} = 48$ inches $\qquad w_{girder} = 0.953$ kips/ft

$t_{top_flg_min} = 3$ inches $\qquad S_{bot} = -18825$ $in^3$

$t_{top_flg_max} = 5.5$ inches $\qquad S_{top} = 17680$ $in^3$

$t_w = 6.5$ inches

Lift point is assumed to be at the 1/10th point of the girder length.

### E19-4.2 Lifting Stresses

Initial Girder Stresses (Taken from Prestressed Girder Output):

At the 1/10th Point, (positive values indicate compression)

$f_{i_top_0.1} := 0.284$ ksi

$f_{i_bot_0.1} := 3.479$ ksi

The initial stresses in the girder (listed above) are due to the prestressed strands and girder dead load moment. The girder dead load moment and resulting stresses are based on the girder being simply supported at the girder ends. These resulting stresses are subtracted from the total initial stresses to give the stresses resulting from the pressing force alone.

Moments and Shears due to the girder self weight:

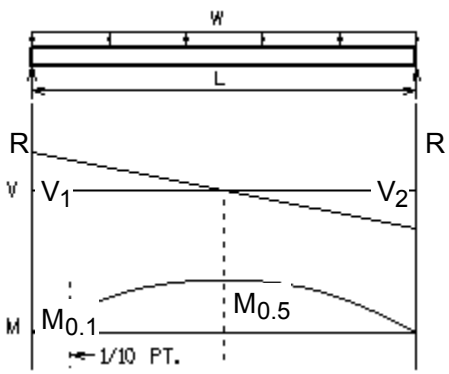


$R := \frac{1}{2} \cdot (w_{girder}) \cdot L_{girder}$ $\boxed{R = 69.569}$ kips

$V_1 := R$ $\boxed{V_1 = 69.569}$ kips

$V_2 := R$ $\boxed{V_2 = 69.569}$ kips

$$M_{gird0.1} := \frac{(w_{girder}) \cdot (0.1 \cdot L_{girder})}{2} \cdot (L_{girder} - 0.1 L_{girder})$$

$\boxed{M_{gird0.1} = 914.14}$ kip-ft

Top of girder stresses due to prestress forces:

$$f_{top_prestr} := f_{i_top_0.1} - \frac{M_{gird0.1} \cdot 12}{S_{top}}$$ $\boxed{f_{top_prestr} = -0.336}$ ksi

$$f_{bot_prestr} := f_{i_bot_0.1} - \frac{M_{gird0.1} \cdot 12}{S_{bot}}$$ $\boxed{f_{bot_prestr} = 4.062}$ ksi

The girder dead load moment and resulting stresses are calculated based on the girder being supported at the lift points. The resulting stresses are added to the stresses due to the prestress forces to give the total stresses during girder picks.

Moments and Shears at the Lift Points, 1/10 point, due to the girder self weight.

$\boxed{R = 69.569}$ kips

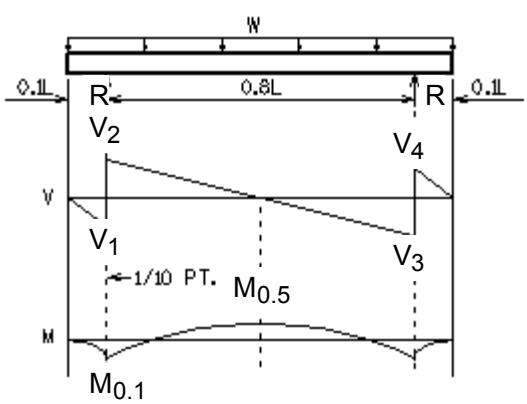


$V'_1 := -w_{girder} \cdot 0.1 \cdot L_{girder}$

$\boxed{V'_1 = -13.914}$ kips

$V'_2 := V'_1 + R$ $\boxed{V'_2 = 55.655}$ kips

$V'_3 := V'_2 - (w_{girder} \cdot 0.8 \cdot L_{girder})$

$\boxed{V'_3 = -55.655}$ kips

$V'_4 := V'_3 + R$ $\boxed{V'_4 = 13.914}$ kips

$$M_{gird0.1_Lift} := \frac{1}{2} \cdot V'_1 \cdot (L_{girder} \cdot 0.1)$$ $\boxed{M_{gird0.1_Lift} = -101.57}$ kip-ft

Top of girder stresses due to lifting forces (postive stress values indicate compression.):

$f_{top_Lift} := f_{top_prestr} + \frac{M_{gird0.1_Lift} \cdot 12}{S_{top}}$ $\boxed{f_{top_Lift} = -0.405}$ ksi

$f_{bot_Lift} := f_{bot_prestr} + \frac{M_{gird0.1_Lift} \cdot 12}{S_{bot}}$ $\boxed{f_{bot_Lift} = 4.126}$ ksi

## E19-4.3 Check Compression Stresses due to Lifting

Check temporary allowable stress (compression) **LRFD [5.9.4.1.1]**:

$f_{ciall} := 0.65 \cdot f'_{ci}$ where $f'_{ci} = 6.8$ ksi $\boxed{f_{ciall} = 4.42}$ ksi

Is the stress at the bottom of the girder less than the allowable? $\boxed{check_{f_bot} = \text{"OK"}}$

If stress at the bottom of girder is greater than allowable, calculate $f'_{ci_reqd}$

$f'_{ci_reqd} := \frac{f_{bot_Lift}}{0.65}$

## E19-4.4 Check Tension Stresses due to Lifting

The temporary allowable tension, from **LRFD [Table 5.9.4.1.2-1]**, is:

$f_{tall} := -0.24 \cdot \lambda \sqrt{f'_{ci}}$ $\lambda = 1.0$ (normal wgt. conc.) **LRFD [5.4.2.8]** $\boxed{f_{tall} = -0.626}$ ksi

$\boxed{f_{top_Lift} = -0.405}$ ksi

Is the stress at the top of the girder less than the allowable? $\boxed{check_{f_top} = \text{"OK"}}$

Therefore, proportion the reinforcement in the top flange using an allowable stress of:

$f_s := \min(0.5 \cdot f_y, 30)$ $\boxed{f_s = 30}$ ksi

## E19-4.5 Design Top Flange Reinforcement

Calculate the location of the neutral axis:

$h_{girder} = 72$ in

$f_{top_Lift} = -0.405$ ksi

$f_{bot_Lift} = 4.126$ ksi

$$y = h_{girder} \cdot \frac{f_{top_Lift}}{f_{top_Lift} - f_{bot_Lift}}$$

$y = 6.441$ in

$y_{Location}$ = "Y is located in the girder web."

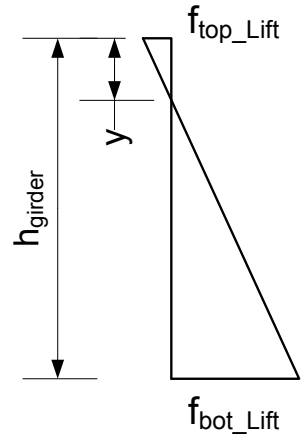


Calculate the average flange thickness:

$$A_1 = \frac{1}{2} \cdot (t_{top_flg_min} + t_{top_flg_max}) \cdot (w_{top_flg} - t_w)$$ $A_1 = 176.375$ $in^2$

$$t_1 = \frac{1}{2} \cdot (t_{top_flg_min} + t_{top_flg_max})$$ $t_1 = 4.25$ in

$$A_2 = t_{top_flg_max} \cdot t_w$$ $A_2 = 35.75$ $in^2$

$$t_2 = t_{top_flg_max}$$ $t_2 = 5.5$ in

$$t_{top_flg_avg} = \frac{A_1 \cdot t_1 + A_2 \cdot t_2}{A_1 + A_2}$$ $t_{top_flg_avg} = 4.461$ in

Determine the values of the stress at the average flange thickness.

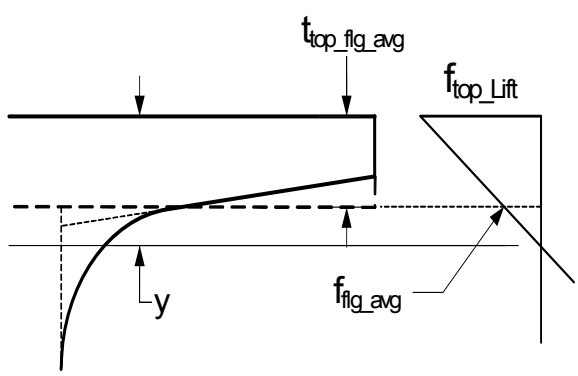

At $t_{top_flg_avg} = 4.461$ inches from the top of the girder:

$$f_{flg_avg} = \frac{f_{top_Lift}}{y} \cdot (y - t_{top_flg_avg})$$ $f_{flg_avg} = -0.125$ ksi

Calculate the tension force in the girder flange.

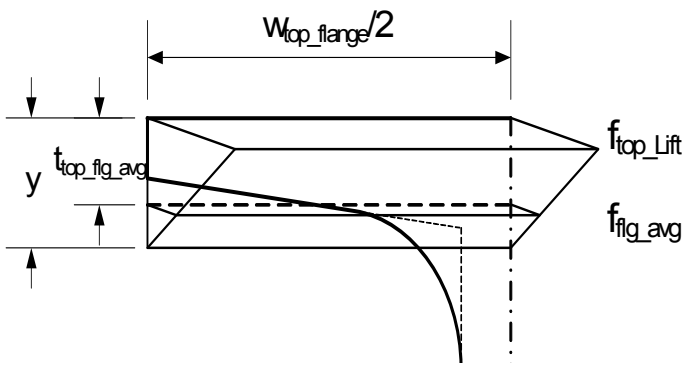


$$T_{flg_avg} = \frac{1}{2} \cdot (f_{top_Lift} + f_{flg_avg}) \cdot t_{top_flg_avg} \cdot w_{top_flg}$$ $T_{flg_avg} = -56.742$ kips

Calculate the tension force in the girder web (this minor force can be ignored for simplification).

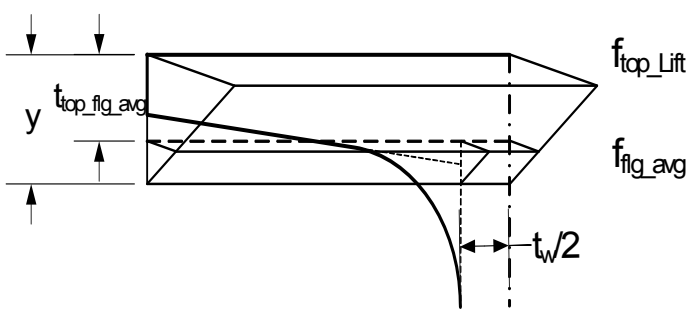


$$T_{web} = \frac{1}{2} \cdot f_{flg_avg} \cdot (y - t_{top_flg_avg}) \cdot t_w$$ $T_{web} = -0.802$ kips

$$T_{total} = T_{flg_avg} + T_{web}$$ $T_{total} = -57.544$ kips

$T = 57.544$ kips

$$As_{Reqd} := \frac{T}{f_s}$$ $As_{Reqd} = 1.918$ $in^2$

Use 6 bars in the Top Flange: $Number_Bars := 6$

Try #6 Bars: $Bar_{No} \equiv 6$

$A_s := \frac{As_{Reqd}}{Number_Bars}$ $\boxed{A_s = 0.32}$ $in^2$ per bar

Area of a #6 Bar: $\boxed{Bar_A(Bar_{No}) = 0.442}$ $in^2$ per bar

Is the area of steel per bar greater than required? $\boxed{check_{As} = \text{"OK"}}$

Therefore, use 6 - #6 Bars in Top Flange of Girder for 0.1 point lifting locations.

Note that these bars should be terminated where no longer required by design and lapped with 6 #4 bars as shown on the Standard Details.

This page intentionally left blank.