Table of Contents

24.1 Introduction 5
24.1.1 Types of Steel Girder Structures 5
24.1.2 Structural Action of Steel Girder Structures 5
24.1.3 Fundamental Concepts of Steel I-Girders 5
24.2 Materials 11
24.2.1 Bars and Plates 12
24.2.2 Rolled Sections 12
24.2.3 Threaded Fasteners 12
24.2.3.1 Bolted Connections 13
24.2.4 Quantity Determination 14
24.3 Design Specification and Data 15
24.3.1 Specifications 15
24.3.2 Resistance 15
24.3.3 References for Horizontally Curved Structures 15
24.3.4 Design Considerations for Skewed Supports 15
24.4 Design Considerations 20
24.4.1 Design Loads 20
24.4.1.1 Dead Load 20
24.4.1.2 Traffic Live Load 21
24.4.1.3 Pedestrian Live Load 21
24.4.1.4 Temperature 21
24.4.1.5 Wind 21
24.4.2 Minimum Depth-to-Span Ratio 21
24.4.3 Live Load Deflections 22
24.4.4 Uplift and Pouring Diagram 22
24.4.5 Bracing 23
24.4.5.1 Intermediate Diaphragms and Cross Frames 23
24.4.5.2 End Diaphragms 25
24.4.5.3 Lower Lateral Bracing 25
24.4.6 Girder Selection 26
24.4.6.1 Rolled Girders 26
24.4.6.2 Plate Girders 26

24.4.7 Welding 28
24.4.8 Dead Load Deflections, Camber and Blocking 32
24.4.9 Expansion Hinges 33
24.5 Repetitive Loading and Toughness Considerations 34
24.5.1 Fatigue Strength 34
24.5.2 Charpy V-Notch Impact Requirements 35
24.5.3 Non-Redundant Type Structures 35
24.6 Design Approach - Steps in Design 37
24.6.1 Obtain Design Criteria 37
24.6.2 Select Trial Girder Section 38
24.6.3 Compute Section Properties 39
24.6.4 Compute Dead Load Effects 40
24.6.5 Compute Live Load Effects 40
24.6.6 Combine Load Effects 41
24.6.7 Check Section Property Limits 41
24.6.8 Compute Plastic Moment Capacity 42
24.6.9 Determine If Section is Compact or Non-compact 42
24.6.10 Design for Flexure – Strength Limit State 42
24.6.11 Design for Shear 42
24.6.12 Design Transverse Intermediate Stiffeners and/or Longitudinal Stiffeners 43
24.6.13 Design for Flexure – Fatigue and Fracture 43
24.6.14 Design for Flexure – Service Limit State 43
24.6.15 Design for Flexure – Constructability Check 43
24.6.16 Check Wind Effects on Girder Flanges 44
24.6.17 Draw Schematic of Final Steel Girder Design 44
24.6.18 Design Bolted Field Splices 44
24.6.19 Design Shear Connectors 44
24.6.20 Design Bearing Stiffeners 44
24.6.21 Design Welded Connections 44
24.6.22 Design Diaphragms, Cross-Frames and Lateral Bracing 45
24.6.23 Determine Deflections, Camber, and Elevations 45
24.7 Composite Design 46
24.7.1 Composite Action 46

24.7.2 Values of n for Composite Design 46
24.7.3 Composite Section Properties 47
24.7.4 Computation of Stresses 47
24.7.4.1 Non-composite Stresses 47
24.7.4.2 Composite Stresses 47
24.7.5 Shear Connectors 48
24.7.6 Continuity Reinforcement 49
24.8 Field Splices 51
24.8.1 Location of Field Splices 51
24.8.2 Splice Material 51
24.8.3 Design 51
24.8.3.1 Obtain Design Criteria 51
24.8.3.1.1 Section Properties Used to Compute Stresses 51
24.8.3.1.2 Constructability 52
24.8.3.2 Compute Flange Splice Design Loads 53
24.8.3.2.1 Factored Loads 53
24.8.3.2.2 Section Properties 53
24.8.3.2.3 Factored Stresses 53
24.8.3.2.4 Controlling Flange 54
24.8.3.2.5 Flange Splice Design Forces 54
24.8.3.3 Design Flange Splice Plates 54
24.8.3.3.1 Yielding and Fracture of Splice Plates 55
24.8.3.3.2 Block Shear 56
24.8.3.3.3 Net Section Fracture 57
24.8.3.3.4 Fatigue of Splice Plates 57
24.8.3.3.5 Control of Permanent Deformation 57
24.8.3.4 Design Flange Splice Bolts 58
24.8.3.4.1 Shear Resistance 58
24.8.3.4.2 Slip Resistance 58
24.8.3.4.3 Bolt Spacing 58
24.8.3.4.4 Bolt Edge Distance 59
24.8.3.4.5 Bearing at Bolt Holes 59
24.8.3.5 Compute Web Splice Design Loads 59

24.8.3.5.1 Girder Shear Forces at the Splice Location 60
24.8.3.5.2 Web Moments and Horizontal Force Resultant 60
24.8.3.6 Design Web Splice Plates 60
24.8.3.6.1 Shear Yielding of Splice Plates 61
24.8.3.6.2 Fracture and Block Shear Rupture of the Web Splice Plates 61
24.8.3.6.3 Flexural Yielding of Splice Plates 62
24.8.3.6.4 Fatigue of Splice Plates 62
24.8.3.7 Design Web Splice Bolts 63
24.8.3.7.1 Shear in Web Splice Bolts 63
24.8.3.7.2 Bearing Resistance at Bolt Holes 64
24.8.3.8 Schematic of Final Splice Configuration 65
24.9 Bearing Stiffeners 67
24.9.1 Plate Girders 67
24.9.2 Rolled Beams 67
24.9.3 Design 67
24.9.3.1 Projecting Width 67
24.9.3.2 Bearing Resistance 68
24.9.3.3 Axial Resistance 69
24.9.3.4 Effective Column Section 69
24.10 Transverse Intermediate Stiffeners 71
24.10.1 Proportions 72
24.10.2 Moment of Inertia 72
24.11 Longitudinal Stiffeners 75
24.11.1 Projecting Width 76
24.11.2 Moment of Inertia 76
24.11.3 Radius of Gyration 77
24.12 Construction 79
24.12.1 Web Buckling 80
24.12.2 Deck Placement Analysis 81
24.13 Painting 89
24.14 Floor Systems 90
24.15 Box Girders 91
24.16 Design Examples 93

24.1 Introduction

Steel girders are recommended due to depth of section considerations for short span structures and due to their economy in comparison with other materials or structure types for longer span structures.

24.1.1 Types of Steel Girder Structures

This chapter considers the following common types of steel girder structures:

- Plate girder
- Rolled girder
- Box girder

A plate girder structure is selected over a rolled girder structure for longer spans or when greater versatility is required. Generally rolled girders are used for web depths less than 36" on short span structures of 80' or less.

24.1.2 Structural Action of Steel Girder Structures

Box girder, rolled girder and plate girder bridges are primarily flexural structures which carry their loads by bending between the supports. The degree of continuity of the steel girders over their intermediate supports determines the structural action within the steel bridge. The main types of structural action are as follows:

- Simply-supported structures
- Multiple-span continuous structures
- Multiple-span continuous hinged structures

Simply-supported structures are generally used for single, short-span structures. Multiple-span steel girder structures are designed as continuous spans. When the overall length of the continuous structure exceeds approximately 900', a transverse expansion joint is provided by employing girder hinges and a modular watertight expansion device.

The 900' guideline is based on the abutments having expansion bearings and a pier or piers near the center of the continuous segment having fixed bearings. More than one fixed pier shall be used when four or more piers are utilized or when a steep grade (greater than 3%) exists. When one abutment has fixed bearings, see Chapter 12 – Abutments for the limitation on the length of a continuous segment.

24.1.3 Fundamental Concepts of Steel I-Girders

This section describes basic concepts of I-girder sections to aid in understanding the design provisions for steel I-sections presented in *AASHTO LRFD*. This section is cursory in nature.

The behavior of non-composite steel I-section members subject to flexure is similar to the behavior of composite I-section members in negative flexure. A qualitative bending moment versus rotation relationship for a homogeneous compact web section is presented Figure 24.1-1.

A homogeneous section is defined as a section in which the flanges and web have the same nominal yield strength.

In *AASHTO LRFD*, a compact web section is defined as a non-composite section (or a composite section in negative flexure) that has a web with a slenderness at or below which the section can achieve a maximum flexural resistance, M_{max}, equal to the plastic moment, M_p, prior to web bend-buckling having a statistically significant influence on the response. In addition, specific steel grade, ductility, flange slenderness and lateral bracing requirements must also be satisfied. Compact web sections are typically shallower sections, with thicker webs, than non-compact sections. Compact web sections are often rolled beams or welded girder sections with proportions similar to rolled beams.

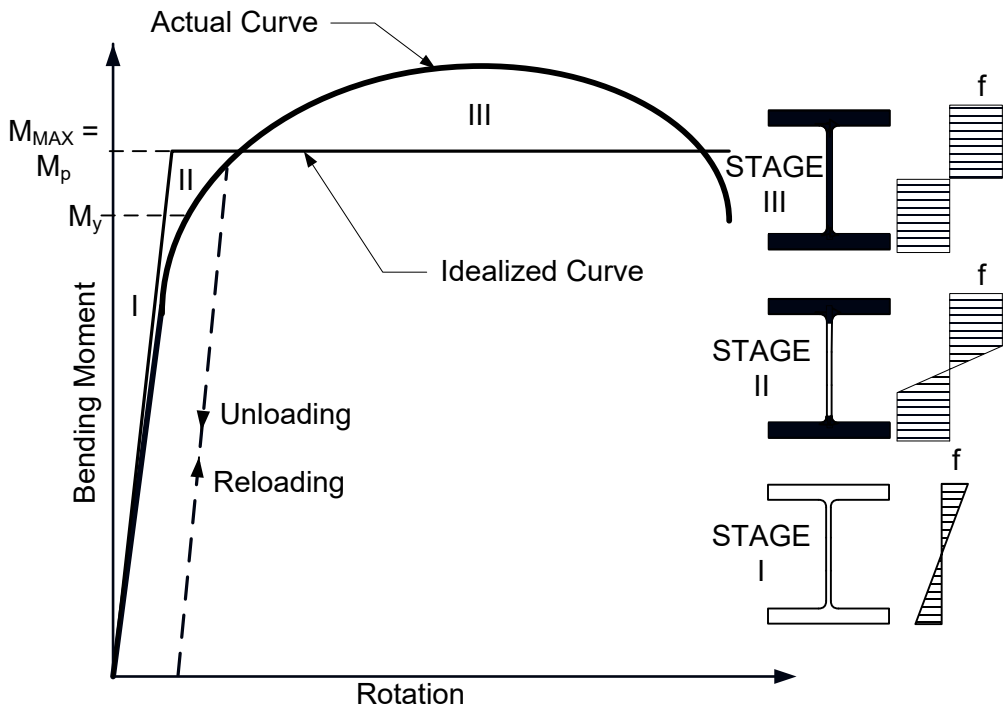

Figure 24.1-1
Bending Moment versus Rotation for Homogeneous Compact Web Section

Proceeding along the actual curve shown in Figure 24.1-1, the initial Stage I behavior represents completely elastic behavior. As the section approaches the theoretical yield moment, M_y, the presence of residual stresses will result in some inelastic behavior in the outer fibers of the cross section before the calculated M_y is reached. At Stage II, yielding continues and begins to progress throughout the section as the section approaches the plastic moment, M_p. At Stage III, the entire cross section has yielded; that is, each component of the cross

section is assumed to be at F_y. The idealized curve shown in Figure 24.1-1 is assumed for design. The dotted line shown in Figure 24.1-1 illustrates the behavior of a member that is loaded with a moment greater than M_y and then unloaded.

Figure 24.1-2 shows a moment versus rotation relationship for a homogeneous slender web section. In *AASHTO LRFD*, a slender web section is defined as a non-composite section (or a composite section in negative flexure) that has a web with a slenderness at or above which the theoretical elastic bend-buckling stress in flexure is reached in the web prior to reaching the yield strength of the compression flange. Because web bend-buckling is assumed to occur in such sections, a web load-shedding factor, R_b, must be introduced to account for the effect of the post-bend-buckling resistance or redistribution of the web compressive stresses to the compression flange resulting from the bend-buckling of the web.

The maximum flexural resistance, M_{max}, is taken as the smaller of R_bM_{yc} and M_{yt} for a homogeneous slender-web section, where M_{yc} and M_{yt} are the yield moments with respect to the compression and tension flanges, respectively. Like a compact web section, residual stresses will contribute to yielding and some inelastic behavior will occur prior to reaching M_{max}, as shown in Figure 24.1-2. However, unlike a compact web section, a slender web section has little or no available inelastic rotation capacity after reaching M_{max}. Therefore, the flexural resistance drops off quite rapidly after reaching M_{max}, and redistribution of moments is not permitted when these sections are used at interior piers.

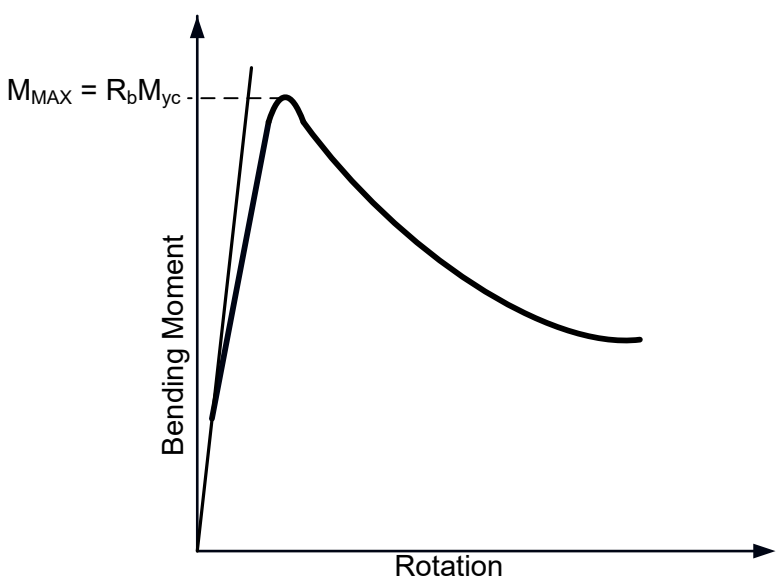

Figure 24.1-2
Moment versus Curvature for Homogeneous Slender Web Section

Sections with a web slenderness between the slenderness limits for a compact web and a slender web section are termed non-compact web sections. This represents a change from previous AASHTO Specifications, which defined sections as either compact or non-compact and did not distinguish between a non-compact and a slender web.

In *AASHTO LRFD*, a non-compact web section is defined as a non-composite section (or a composite section in negative flexure) that has a web satisfying steel grade requirements and with a slenderness at or below the limit at which theoretical elastic web bend-buckling does not occur for elastic stress levels, computed according to beam theory, smaller than the limit of the nominal flexural resistance.

Because web bend-buckling is not assumed to occur, R_b is taken equal to 1.0 for these sections. The maximum flexural resistance of a non-compact web section, M_{max}, is taken as the smaller of $R_{pc}M_{yc}$ and $R_{pt}M_{yt}$. It falls between M_{max} for a compact web and a slender web section as a linear function of the web slenderness ratio. R_{pc} and R_{pt} are termed web plastification factors for the compression and tension flange, respectively. The web plastification factors are essentially effective shape factors that define a smooth linear transition in the maximum flexural resistance between M_y and M_p.

The basic relationship between M_{max} and the web slenderness $2D_c/t_w$ given in *AASHTO LRFD* is presented in Figure 24.1-3. Figure 24.1-3 assumes that yielding with respect to the compression flange controls. The relationship between M_{max} and web slenderness is defined in terms of all three types of sections – compact web, non-compact web and slender web.

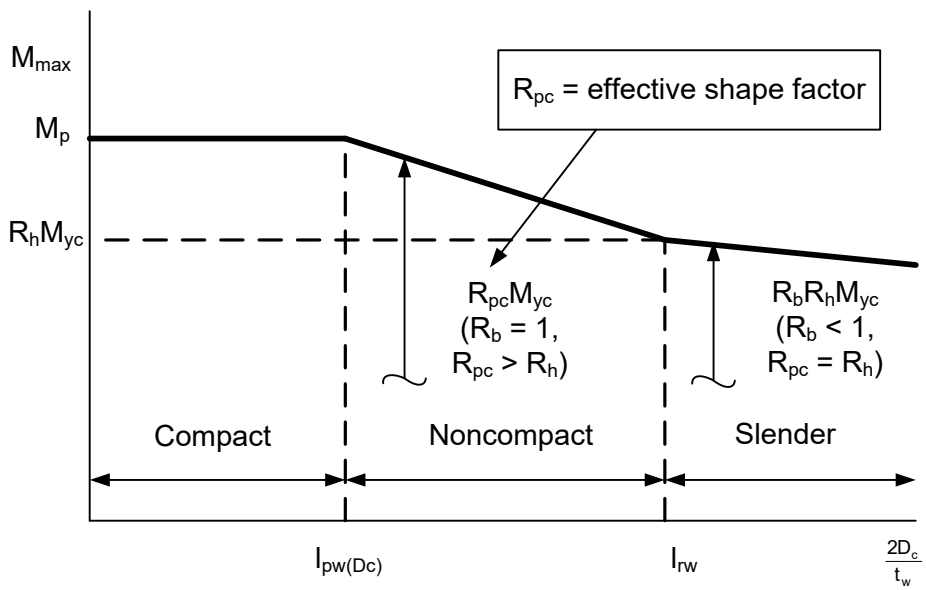

Figure 24.1-3
M_{max} versus Web Slenderness

In *AASHTO LRFD*, the flexural resistance for slender web sections is expressed in terms of stress. For compact web and non-compact web sections, in which the maximum potential flexural resistance equals or exceeds M_y, the resistance equations are more conveniently expressed in terms of bending moment.

Lateral torsional buckling can result if the compression flange of an I-section member does not have adequate lateral support. The member deflects laterally in a torsional mode before the

compressive bending stress reaches the yield stress. Lateral torsional buckling is illustrated in Figure 24.1-4.

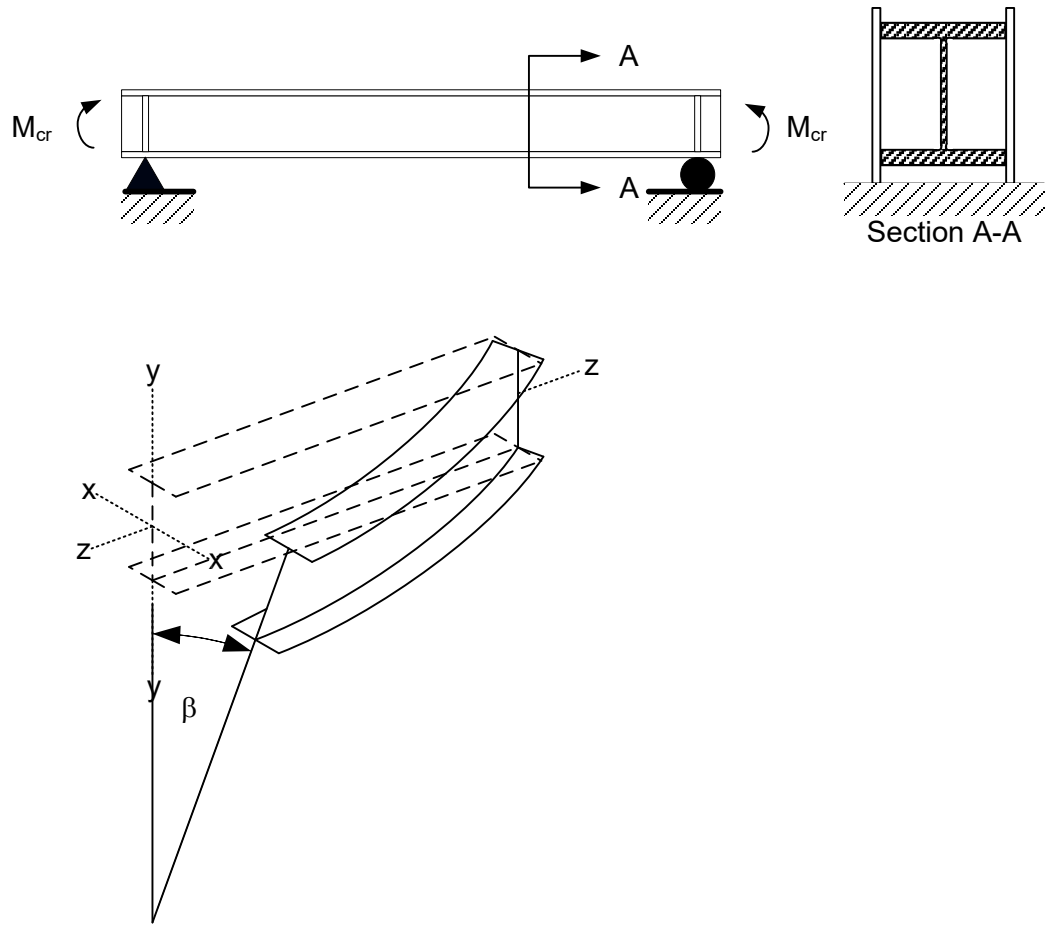

Figure 24.1-4
Lateral Torsional Buckling in a Doubly Symmetric I-section Member

As presented in Figure 24.1-5, *AASHTO LRFD* has adopted a simple linear expression to approximate the lateral-torsional buckling resistance of discretely braced compression flanges in the inelastic range. Figure 24.1-5 also shows the basic form of the flange local buckling equations in *AASHTO LRFD*, which is similar to the form of the lateral-torsional buckling equations.

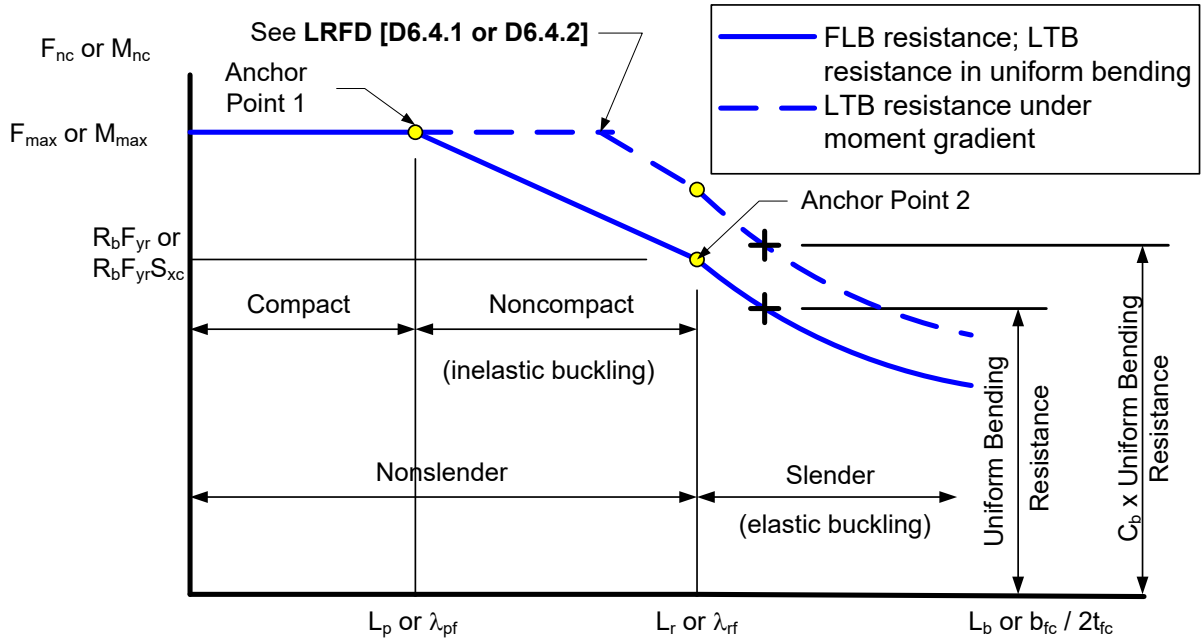

Figure 24.1-5
Form of the Compression-Flange Resistance Equations in *AASHTO LRFD*

24.2 Materials

Structural steels currently used conform to ASTM A709 Specifications designated Grades 36, 50 and 50W. *AASHTO LRFD* gives the necessary design information for each grade of steel. Steel girders may utilize High-Performance Steel (HPS); however it may come at a premium price due to the limited number of mills that are rolling HPS. The limited number of mills may also have adverse effects on the delivery schedule.

HPS is currently produced by either quenching and tempering (Q&T) or by thermo-mechanical-controlled-processing (TMCP). TMCP HPS is currently available in plate thicknesses up to 2" and in maximum plate lengths from approximately 50' to 125' depending on weights. Q&T HPS is available in plate thicknesses from 2" to 4" (or less for larger plate widths), but because of the furnaces that are used in the tempering process, it is subject to a maximum plate-length limitation of 600" (50') or less, depending on weights. Therefore, whenever Q&T HPS is used (generally when HPS plates over 2" in thickness are specified), the maximum plate-length limitation should be considered when laying out flange (and web) transitions in a girder.

For fracture toughness, HPS provides significant toughness improvements given, that by default, Charpy V-notch requirements satisfy the more stringent Zone 3 requirements in all temperature zones. For welding, most of the bridge steels specified in the ASTM A709 Specifications can be welded without special precautions or procedures. However, special procedures should be followed to improve weldability and ensure high-quality welds when HPS is used.

Hybrid girder design utilizing HPS Grade 70 steel (Grade 70 is only available in HPS) for the flanges and Grade 50 steel for the web may be considered as a viable alternative. Such an arrangement has recently proven to be a popular option, primarily in regions of negative flexure.

For unpainted structures over stream crossings, Grade 50W weathering steel is recommended throughout.

Cracks have been observed in steel girders due to fabrication, fatigue, brittle fractures and stress corrosion. To insure against structural failure, the material is tested for plane-strain fracture toughness. As a result of past experience, the Charpy V-notch test is currently required on all grades of steel used for girders.

Plate width and length availability is an important consideration when it comes to sizing girder flanges. The availability of plate material varies from mill to mill. Generally, plates are available in minimum widths ranging from 48" to 60" and in maximum widths ranging from 150" to 190". *AASHTO/NSBA Steel Bridge Collaboration*, "*Guidelines to Design for Constructibility, G12.1*" (2016) contains some example plate length and width availability information from a single mill. However, a fabricator and/or mill should be consulted regarding the most up-to-date plate availability information. The maximum available plate length is generally a function of the plate width and thickness, steel grade and production process.

For additional information about plate widths and lengths, including maximum sizes for shipping and erection, see 24.4.6.2.

For additional information about materials, see Chapter 9 – Materials.

24.2.1 Bars and Plates

Bars and plates are grouped under flat rolled steel products that are designated by size as follows:

- Bars – 8" or less in width
- Plates – over 8" in width

WisDOT policy item:

AASHTO LRFD allows a minimum thickness of 5/16" for most structural steel members. Current WisDOT policy is to employ a minimum thickness of 7/16" for primary members and a minimum of 3/8" for secondary structural steel members.

Optional splices are permitted on plates which are detailed over 60' long. Refer to the latest steel product catalogs for steel sections and rolled stock availability.

24.2.2 Rolled Sections

A wide variety of structural steel shapes are produced by steel manufacturers. Design and detail information is available in the *AISC Manual of Steel Construction*, and information on previously rolled shapes is given in *AISC Iron and Steel Beams 1873 to 1952*. Refer to the latest steel product catalogs for availability and cost, as some shapes are not readily available and their use could cause costly construction delays.

24.2.3 Threaded Fasteners

The design of bolted connections is covered in **LRFD [6.13.2]**. As specified in **LRFD [6.13.2.1]**, bolted steel parts must fit solidly together after the bolts are tightened. The bolted parts may be coated or uncoated. It must be specified in the contract documents that all joint surfaces, including surfaces adjacent to the bolt head and nut, be free of scale (except for tight mill scale), dirt or other foreign material. All material within the grip of the bolt must be steel.

High-strength bolts are installed to have a specified initial tension, which results in an initial pre-compression between the joined parts. At service load levels, the transfer of the loads between the joined parts may then occur entirely via friction, with no bearing of the bolt shank against the side of the hole. Until the friction force is overcome, the shear resistance of the bolt and the bearing resistance of the bolt hole will not affect the ability to transfer the load across the shear plane between the joined parts.

In general, high-strength bolted connections designed according to *AASHTO LRFD* will have a higher reliability than the connected parts because the resistance factors for the design of bolted connections were selected to provide a higher level of reliability than those chosen for member design. Also, the controlling strength limit state in the connected part (for example, yielding or deflection) is typically reached well before the controlling strength limit state in the

connection (for example, the bolt shear resistance or the bearing resistance of the connected material).

AASHTO LRFD recognizes two types of high-strength bolted connections – slip-critical connections and bearing-type connections. The resistance of all high-strength bolted connections in transmitting shear across a shear plane between bolted steel parts is the same whether the connection is a slip-critical or bearing-type connection. The slip-critical connection has an additional requirement that slip must not occur between the joined parts at service load levels.

Slip-critical (or friction) type connections are used on bridges since the connections are subject to stress reversals and bolt slippage is undesirable. High strength bolts in friction type connections are not designed for fatigue. The allowable unit stresses, minimum spacing and edge distance as given in *AASHTO LRFD* are used in designing and detailing the required number of bolts. A490 bolts, conforming to ASTM F3125, shall not be used in tension connections due to their low fatigue strength. Generally, A325 bolts, conforming to ASTM F3125, are used for steel connections unless the higher strength A490 bolt is warranted. If at all possible, avoid specifying A490, Type 3 bolts on plans for unpainted structures. All bolt threads should be clean and lubricated with oil or wax prior to tightening.

Steel connections shall be made with high strength bolts conforming to A325 and A490. Galvanized A490 bolts cannot be substituted for A325 bolts; if A490 bolts are galvanized, failure may occur due to hydrogen embrittlement. ASTM specifications limit galvanizing to A325 or lower strength fasteners. All bolts for a given project should be from the same location and manufacturer.

High strength pin bolts may be used as an alternate to A325 bolts. The shank and head of the high strength steel pin bolt and the collar fasteners shall meet the chemical composition and mechanical property requirements of A325, Types 1 or 3 (weathering).

24.2.3.1 Bolted Connections

Bolted connections shall be designed as follows:

1. All field connections are made with 3/4" high strength bolts unless noted or shown otherwise.

2. Holes for bolted connections shall not be more than 1/16" greater than the nominal bolt diameter.

3. Faying surfaces of friction type connections are blast cleaned and free from all foreign material. Note that AASHTO LRFD allows various design stresses depending on surface condition of bolted parts.

4. Bolts are installed with a flat, smooth, hardened circular washer under the nut or bolt head, whichever element is turned in tightening the connection.

5. A smooth, hardened, bevel washer is used where bolted parts in contact exceed a 1 to 20 maximum slope.

6. Where clearance is required, washers are clipped on one side to a point not closer than seven-eighths of the bolt diameter from the center of the washer.

7. After all bolts in the connections are installed, each fastener shall be tightened equal to the proof load for the given bolt diameter as specified by ASTM A490 bolts and galvanized A325 bolts shall not be reused.

Retightening previously tightened bolts which may have been loosened by tightening of adjacent bolts is not considered a reuse.

24.2.4 Quantity Determination

For information about determining structural steel and bolt weight, see subsection 506.4 of the *State of Wisconsin Standard Specification for Highway and Structure Construction.*

For new structures, the bolt length is not required on the plans. For rehabilitation plans, when connecting new steel to existing steel, indicate either the required grip or the thickness of the existing material, in addition to the bolt diameter. Bolt weight should be included with the specified structural steel of the lower strength material being joined.

24.3 Design Specification and Data

24.3.1 Specifications

Refer to the design and construction related materials as presented in the following specifications:

1. Bridge Welding Code: AASHTO/AWS-D1.5.

2. American Institute of Steel Construction (AISC) Manual of Steel Construction.

24.3.2 Resistance

Material properties required to compute the nominal and factored resistance values are given in *AASHTO LRFD*. Information for the more common structural components used on bridges is provided in Chapter 9 - Materials.

24.3.3 References for Horizontally Curved Structures

Standard for Girder Layout on Curve shows the method for laying out kinked steel girders on horizontally curved bridges. For horizontally curved structures, girders can either be kinked at field splice locations or they can be curved throughout. Curved girders are generally preferable because they result in a constant overhang and are generally more aesthetically pleasing. For a kinked girder, lateral bending may be concentrated at the location of the kink.

For horizontally curved steel girders, **LRFD [2.5.2.6.3]** suggests that the maximum span-to-depth ratio for the steel girder be limited to ArcSpan/25 (or less depending on certain conditions). An increase in the preferred minimum depth for curved steel girders reflects the fact that the outermost curved girder receives a disproportionate share of the load and needs to be stiffer. Increasing the depth and stiffness of all the girders in a curved-bridge system leads to smaller relative deflections between girders and to smaller cross-frame forces as a result. Deeper girders also result in reduced out-of-plane girder rotations, which may make the bridge easier to erect. Similarly, in curved and straight steel bridges with skewed supports, cross-frame forces are directly related to the relative girder deflections, and increasing the girder depth and stiffness can help control the relative deflections. For additional information about cross frames and diaphragms, see 24.4.5.

24.3.4 Design Considerations for Skewed Supports

Modern highway design must recognize vehicle speed and right-of-way cost. These factors have reversed the position of the bridge designer from determining the layout of a bridge, including the approaching roadway and span arrangement, to designing bridges for a predetermined space. This allotted space may limit bridge depth, span arrangement and pier location. Additional constraints on the design include sight distances, setbacks and other constraints such as environmental and aesthetic factors. This plethora of constraining factors makes the design of bridges more challenging rather than limiting. Skewed supports are one of the most common factors introduced in modern bridge design. Spanning streams or

highways not perpendicular to the bridge alignment frequently requires the introduction of skewed supports.

The engineer is best served if the skew of the supports can be reduced. Reduction of the skew often involves increasing the span, which may lead to deeper girders. When girder depth is limited, this may not be a practical solution. However, reduction of skew has the advantage of reducing abutment and/or pier length. This cost reduction should always be balanced against any increase in superstructure cost related to the use of longer spans. Simply minimizing the square footage of the bridge deck is often not the most economical solution.

One of the most problematic skew arrangements is variable skew of adjacent substructure units. This arrangement leads to different length girders with different stiffnesses, and subsequently, different vertical deflections. Hence, reduction of skew on one support while it remains on the other is not a desirable way to address skew, and such a skew arrangement should be used only as a last resort.

Multi-girder bridges are integral structures with transverse elements. Analysis of the structure must acknowledge the restoring forces in the transverse members. In multi-girder bridges with right supports and equal-stiffness girders, the action of these restoring forces is implied within the wheel-load distribution factors that are often employed. Parallel skews have equal length girders with equal stiffnesses. However, when the relative stiffness of points on adjacent girders attached by cross frames or diaphragms is different (for example, when the cross frames or diaphragms are perpendicular to the girders), the design becomes more problematic. The skew affects the analysis of these types of skewed bridges by the difference in stiffness at points connected by perpendicular cross frames.

It should be noted that dead load as well as live load is affected by skew. The specifications address the effect of skew on live load by providing correction factors to account for the effect of skew on the wheel-load distribution factors for bending moment and end support shear in the obtuse corner (see **LRFD [Table 4.6.2.2.2e-1]** and **LRFD [Table 4.6.2.2.3c-1]**, respectively). There is currently no provision requiring dead load on skewed bridges to be addressed differently than for other bridges. For additional information about the effects of skew on live load distribution factors, see 17.2.8.

The effect of skew is far from constant on all bridges. The significance of skew is increased with increasing skew with respect to the girder line, with increased deflections and in simple spans. Skewed simple spans seem to be more problematic than continuous spans with the same skew.

Arrangement of cross frames and diaphragms is challenging for sharply skewed girder bridges. If the skew is 15 degrees or less and both supports have the same skew, it is usually desirable to skew the cross frames or diaphragms to be parallel with the supports. This arrangement permits the cross frames or diaphragms to be attached to the girders at points of equal stiffness, thus reducing the relative deflection between cross frame and diaphragm ends, and thus, the restoring forces in these members. *AASHTO LRFD* permits parallel skews up to 20 degrees.

WisDOT policy item:

For skews greater than 15 degrees, the cross frames and diaphragms must be placed perpendicular to the girders.

Typically, the cross frames or diaphragms can be staggered. This arrangement reduces the transverse stiffness because the flanges flex laterally and relieve some of the force in the cross frames or diaphragms. There is a resultant increase in lateral bending moment in the flanges. Often, this lateral bending is not critical and the net result is a desirable reduction in cross-frame forces or diaphragm forces. Smaller cross-frame forces or diaphragm forces permit smaller cross-frame or diaphragm members and smaller, less expensive cross-frame or diaphragm connections. Alternatively, they are placed in a contiguous pattern with the cross frames or diaphragms matched up on both sides of the interior girders, except near the bearings. This arrangement provides the greatest transverse stiffness. Thus, cross-frame forces or diaphragm forces are relatively large, and the largest amount of load possible is transferred across the bridge. This results in the largest reduction of load in the longitudinal members (that is, the girders). The bearings at oblique points receive increased load.

The exterior girders always have cross frames or diaphragms on one side, but since there are no opposing cross frames or diaphragms on the other side, lateral flange bending is usually small in these girders, which often have critical vertical bending moments compared to the interior girders. Interior girders are generally subjected to larger lateral flange bending moments when a staggered cross-frame arrangement is employed.

In lieu of a refined analysis, **LRFD [C6.10.1]** contains a suggested estimate of 10.0 ksi for the total unfactored lateral flange bending stress, f_ℓ, due to the use of discontinuous cross-frame or diaphragm lines in conjunction with a skew angle exceeding 15 degrees. It is further suggested that this value be proportioned to dead and live load in the same proportion as the unfactored major-axis dead and live load bending stresses. It is currently presumed that the same value of the flange lateral buckling, f_ℓ, should be applied to interior and exterior girders, although the suggested value is likely to be conservative for exterior girders for the reason discussed previously. Therefore, lateral flange bending due to discontinuous cross-frame lines in conjunction with skew angles exceeding 15 degrees is best handled by a direct structural analysis of the bridge superstructure.

At piers, it is usually not necessary to use a cross-frame or diaphragm line along the pier. Nor is it necessary to have a cross frame or diaphragm at each bearing. It is necessary to have a perpendicular cross frame or diaphragm at each bearing that is fixed laterally in order to transfer loads into the bearing. Otherwise, lateral bending in the bottom flange is excessive. Some means should be provided to allow for jacking the girder to replace bearings. At abutments and other simple supports, a row of cross frames or diaphragms is always required to support the free edge of the deck. The end rotation of the girders creates forces in these cross frames or diaphragms, which in turn create end moments in the girders. Usually the end moments are negative. Note that the larger the rotation and deflection of the girders, the larger the end moments. In some cases, these end moments are important. Generally, they cannot be avoided. However, by placing the deck at the ends of the bridge last, the tensile stresses in the deck can be minimized.

Differential deflections between the ends of the cross frames in skewed bridges along with differential rotations of the girders (about an axis transverse to the longitudinal axis of the girders) result in twist of the girders, which can make girder erection and fit-up of the cross-frame connections more difficult as the dead load is applied. As discussed in **LRFD [C6.7.2]**, in order for the girder webs of straight skewed I-girder bridges to end up theoretically vertical (or plumb) at the bearings under either the steel or full dead load condition, the cross frames or diaphragms must be detailed for that condition in order to introduce the necessary reverse twist into the girders during the erection so that the girders will rotate back to a theoretically plumb position as the corresponding dead load is applied. The steel dead load condition refers to the condition after the erection of the steel is completed. The full dead load condition refers to the condition after the full non-composite dead load, including the concrete deck, is applied. The cross frames or diaphragms may have to be forced into position in this case, but this can usually be accomplished in straight skewed I-girder bridges without inducing significant locked-in stresses in the girder flanges or the cross frames or diaphragms. The twist, ϕ, of the girders at the end supports in a straight skewed I-girder bridge can either be determined from a refined analysis, or it can be approximated from the following equation:

$$\phi = \frac{\left[\mathrm{Sin}\left(\mathrm{Tan}^{-1}\theta\right)d\right]}{\mathrm{Tan}\ \alpha}$$

Where:

α	=	Skew angle of the end support measured with respect to the longitudinal axis of the girder (radians)
θ	=	Girder end rotation due to the appropriate dead load about an axis transverse to the longitudinal axis of the girder (radians)
d	=	Girder depth (in.)

Alternatively, the girders may be erected in the no-load condition (that is, the condition where the girders are erected plumb under a theoretically zero-stress condition neglecting any stress due to the weight of the steel acting between points of temporary support), with the cross frames or diaphragms detailed to fit theoretically stress-free. In this case, the girders will rotate out-of-plumb as the corresponding dead load is applied. Therefore, the engineer should consider the effect of any potential errors in the horizontal roadway alignment under the full dead load condition resulting from the girder rotations. Also, it should be ensured that the rotation capacity of the bearings is sufficient to accommodate the twist or that the bearings are installed so that their rotation capacities are not exceeded.

For straight skewed I-girder bridges, **LRFD [6.7.2]** requires that the contract documents clearly state an intended erected position of the girders (that is, either girder webs theoretically plumb or girder webs out-of-plumb) and the condition under which that position is to be theoretically achieved (that is, either the no-load condition, steel dead load condition or full dead load condition). The provisions of **LRFD [2.5.2.6.1]** related to bearing rotations for straight skewed I-girder bridges are also to be applied. These provisions are intended to ensure that the computed girder rotations at bearings for the accumulated factored loads corresponding to the

engineer's assumed construction sequence do not exceed the specified rotational capacity of the bearings.

It should be apparent that all of the issues relating to skewed bridges are related to deflection. The smaller the deflections, both dead load and live load, the less critical are the above issues. Thus, deep girders and low design stresses are beneficial to skewed bridges.

For additional information about bracing, including cross frames and diaphragms, see 24.4.5.

24.4 Design Considerations

Steel girder structures are analyzed and designed using LRFD. *AASHTO LRFD* provides the details for designing simple and continuous steel girders for various span lengths using LRFD.

WisDOT Policy Item:

Do no utilize optional **LRFD (Appendix A6)** providing Flexural Resistance of Straight Composite I-Sections in Negative Flexure and Straight Non-composite I-Sections with Compact or Non-compact Webs.

Design considerations common to all superstructure types, including distribution of loads, dead load, traffic live load, pedestrian load and wind load, are presented in Chapter 17 – Superstructures - General.

24.4.1 Design Loads

24.4.1.1 Dead Load

For steel girder structures, dead loads should be computed based on the following:

1. The weight of the concrete haunch is determined by estimating the haunch depth at 2-1/2" and the width equal to a weighted average of the top flange width.

2. The weight of steel beams and girders is determined from the AISC Manual of Steel Construction. Haunched webs of plate girders are converted to an equivalent uniform partial dead load.

3. The weight of secondary steel members such as bracing, shear studs and stiffeners can be estimated at 30 plf for interior girders and 20 plf for exterior girders.

4. A dead load of 20 psf carried by the composite section is added to account for a future wearing surface.

AASHTO LRFD specifies that the effect of creep is to be considered in the design of composite girders which have dead loads acting on the composite sections. As specified in **LRFD [6.10.1.1.1a]** and **LRFD [6.10.1.1.1b]**, for the calculation of the stresses in a composite girder, the properties of the steel section alone should be used for permanent loads applied before the concrete deck has hardened or is made composite. The properties of the long-term 3n composite section should be used for permanent loads applied after the concrete deck has hardened or is made composite. The properties of the short-term n composite section should be used for transient loads applied after the concrete deck is made composite. **LRFD [6.10.1.1.1d]** requires that n be used to compute concrete deck stresses due to all permanent and transient loads.

Information regarding dead load deflections is given in 24.4.8

24.4.1.2 Traffic Live Load

For information about LRFD traffic live load, see 17.2.4.2.

24.4.1.3 Pedestrian Live Load

For information about LRFD pedestrian live load, see 17.2.4.4.

24.4.1.4 Temperature

Steel girder bridges are designed for a coefficient of linear expansion equal to .0000065/°F at a temperature range from -30 to 120°F. Refer to Chapter 28 – Expansion Devices for expansion joint requirements, and refer to Chapter 27 – Bearings for the effect of temperature forces on bearings.

24.4.1.5 Wind

For information about LRFD wind load, see Chapter 17 – Superstructures – General, including the WisDOT Policy item in 17.2.3.1 regarding wind speeds during a deck pour. In addition, see 24.6.16 for wind effects on girder flanges and 24.6.22 for design of bracing.

24.4.2 Minimum Depth-to-Span Ratio

Traditional minimum depths for constant depth superstructures are provided in **LRFD [Table 2.5.2.6.3-1]**. For steel simple-span superstructures, the minimum overall depth of the composite girder (concrete slab plus steel girder) is 0.040L and the minimum depth of the I-beam portion of the composite girder is 0.033L. For steel continuous-span superstructures, the minimum overall depth of the composite girder (concrete slab plus steel girder) is 0.032L and the minimum depth of the I-beam portion of the composite girder is 0.027L. For trusses, the minimum depth is 0.100L.

For a given span length, a preliminary, approximate steel girder web depth can be determined by referring to Table 24.4-1. This table is based on previous design methods and should therefore be used for preliminary purposes only. However, it remains a useful tool for approximating an estimated range of web depths for a given span length. Recommended web depths are given for parallel flanged steel girders. The girder spacings and web depths were determined from an economic study, deflection criteria and load-carrying capacity of girders for a previous design method.

From a known girder spacing, the effective span is computed as shown in Figure 17.5-1. From the effective span, the slab depth and required slab reinforcement are determined from tables in Chapter 17 – Superstructures - General, as well as the additional slab reinforcement required due to slab overhang.

10' Girder Spacing, 9" Deck		12' Girder Spacing, 10" Deck	
Span Lengths (Ft.)	Web Depth (In.)	Span Lengths (Ft.)	Web Depth (In.)
90 – 115	48	90 – 103	48
116 – 131	54	104 – 119	54
132 – 140	60	120 – 127	60
141 – 149	66	128 – 135	66
150 – 163	72	136 – 146	72
164 – 171	78	147 – 153	78
172 – 180	84	154 – 163	84
181 – 190	90	164 – 170	90
191 – 199	96	171 – 177	96
200 – 207	102	178 – 184	102
208 – 215	108	185 – 192	108

Table 24.4-1
Parallel Flange Girder Recommended Depths
For 2-Span Bridges with Equal Span Lengths)

24.4.3 Live Load Deflections

WisDOT requirements for allowable live load deflection are described in 17.2.12, and the computation of actual live load deflection is explained in 17.2.13.

Limiting the live load deflection ensures a minimum degree of stiffness in the steel girders and helps when constructing the bridge. This is especially important when using higher-strength high-performance steels which can result in shallower and more flexible girders, particularly on curved and/or skewed bridges.

24.4.4 Uplift and Pouring Diagram

Permanent hold-down devices are used to attach the superstructure to the substructure at the bearing when any combination of loading using Strength I loading combination (see **LRFD [C3.4.1]**) produces uplift. Also, permanent hold-down devices are required on alternate girders that cross over streams with less than 2' clearance for a 100-year flood where expansion bearings are used. These devices are required to prevent the girder from moving off the bearings during extreme flood conditions.

Uplift generally occurs under live loading on continuous spans when the span ratio is greater than 1 to 1.75. However, a span ratio of 1.75 should be avoided. Under extreme span ratios,

the structure may be in uplift for dead load. When this occurs, it is necessary to jack the girders upward at the bearings and insert shim plates to produce a downward dead load reaction. The use of simple spans or hinged continuous spans is also considered for this case.

On two-span bridges of unequal span lengths, the slab is poured in the longer span first. Cracking of the concrete slab in the positive moment region has occurred on bridges with extreme span ratios when the opposite pouring sequence has been followed. When the span exceeds 120', consider some method to control positive cracking such as limited pouring time, the use of retarders and sequence of placing.

On multiple-span structures, determine a pouring sequence that causes the least structure deflections and permits a reasonable construction sequence. Refer to Standard for Slab Pouring Sequence for concrete slab pouring requirements. Temporary hold-down devices are placed at the ends of continuous girders where the slab pour ends if permanent hold-down devices are not required. The temporary hold-down devices prevent uplift and unseating of the girders at the bearings during the pouring sequence. Consideration should be given to including temporary hold-down devices at the end of the bridge where deck removal begins on deck replacement projects.

Standard hold-down devices having a capacity of 20 kips are attached symmetrically to alternate girders or to all the girders as required. Hold-down devices are designed by considering line bearing acting on a pin. Refer to Standard for Hold Down Devices for permanent and temporary hold-down details. To compute uplift, a shear influence line is first obtained. Next the wheel load distribution factor is determined in the same manner as for live load deflection. The number of loaded lanes is based on the width of the bridge between curbs. The live load plus dynamic load allowance is uniformly distributed to all the girders and is adjusted based on the appropriate multiple presence factor (see **LRFD [3.6.1.1.2]**). The live load is increased 100 percent and applied to the shear influence line to produce maximum uplift. The allowance for future wearing surface should not be included in uplift computations when this additional dead load increases the end reaction.

For additional information about construction and constructability verifications, see 24.12.

24.4.5 Bracing

All bracing systems must be attached to the main girder connection stiffener by bolted connections.

24.4.5.1 Intermediate Diaphragms and Cross Frames

Diaphragms or cross frames are required at each support and at regular intervals throughout the span in all bays. Although not explicitly stated in *AASHTO LRFD*, a common rule of thumb, based on previous editions of the *AASHTO Specifications*, is to use a maximum cross-frame spacing of 25 feet. The cross-frame spacing can affect the required flange thicknesses, as well as constructability checks for stability before the deck is cured. Currently, stay-in-place forms should not be considered to provide adequate bracing to the top flange.

The spacing should be adjusted to miss any splice material. The transverse bracing is placed parallel to the skew for angles up to and including 15 degrees. Transverse bracing is placed

normal to the girders for skew angles greater than 15 degrees. When diaphragms are stepped slightly out of straight through alignment, the girder flanges will experience the greatest torsional stress. Larger steps in diaphragm spacing allow the torsional moment to distribute over a longer girder section. On curved girder structures, the diaphragms are placed straight through radial lines to minimize the effects of torsion since the diaphragms or cross frames are analyzed as primary load-carrying members.

Diaphragm details and dimensions are given on Standards for Plate Girder Diaphragms & Cross Frames and Rolled Girder Diaphragms. Diaphragms carry moment and tensile stresses caused by girder deflections. In the composite slab region, the steel section acts similar to the lower chord of a vierendeel truss and is in tension. A rigidly connected diaphragm resists bending due to girder deflection and tends to distribute the load. It is preferable to place diaphragms at the 0.4 point of the end spans on continuous spans and at the center of interior spans when this can be accomplished without an increase in total number. Also, if practical, place diaphragms adjacent to a field splice between the splice and the pier. Bolted diaphragm connections are used in place of welded diaphragm connections. All cross framing is attached to this main girder connection stiffener using bolted gusset plates.

Cross framing is used for web depths over 48". The bracing consists of two diagonal members connected at their intersection and one bottom chord member. The bottom chord is designed as a secondary compression member. The diagonals are designed as secondary tension members. The length of a minimum 1/4" fillet weld size is determined for each member based on a minimum of 75 percent of the member strength.

On spans over 200' in length, the stresses caused by wind load on part of the erected girders without the slab in place may control the size of the members. Construction loads are also considered in determining member size.

On girders where longitudinal stiffeners are used, the relative position of the stiffener to the cross frame is checked. When the longitudinal stiffener interferes with the cross frame, cope the gusset plate attached to the vertical stiffener and attach the cross frame to the gusset plates, as shown in Figure 24.4-1.

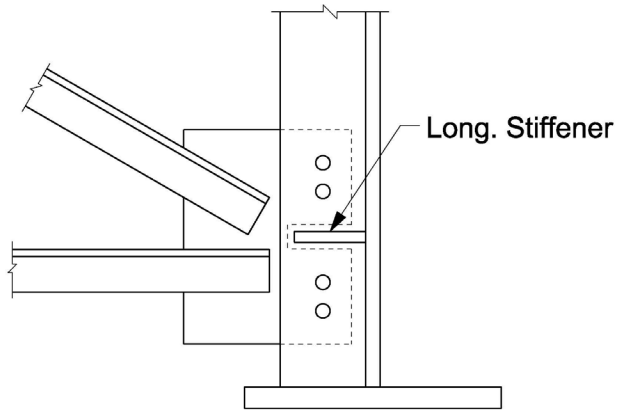

Figure 24.4-1
Cross Frame Where Longitudinal Stiffener is Used

24.4.5.2 End Diaphragms

End diaphragms are placed horizontally along the abutment end of beams or girders and at other points of discontinuity in the structure. Channel sections are generally used for end diaphragms, and they are designed as simply-supported edge beams. The live load moment plus dynamic load allowance is determined by placing one wheel load or two wheel loads 4' apart and correcting for the skew angle at the center line of the member. Generally, the dead load moment of the overlying slab and diaphragm is insignificant and as such is neglected. End diaphragm details and dimensions are given on Standard for End Diaphragms.

End diaphragms are either bolted or welded to gussets attached to the girders at points of discontinuity in the superstructure. The gusset plates are bolted to the bearing stiffeners. The same connection detail is used throughout the structure. The connections are designed for shear only where joined at a web since very little moment is transferred without a flange connection. The connection is designed for the shear due to live load plus dynamic load allowance from the wheel loads.

24.4.5.3 Lower Lateral Bracing

Lateral bracing requirements for the bottom flanges are to be investigated. Bureau of Structures (BOS) practice is to eliminate the need for bracing by either increasing flange sizes or reducing the distance between cross frames. The controlling case for this stress is usually at a beam cutoff point. At cutoff points, the condition of maximum stress exists with the smallest flange size, where wind loads have the greatest effect. A case worth examining is the temporary stress that exists in top flanges during construction. Top flange plates, which are often only 12" wide, can be heavily stressed by wind load. A temporary bracing system placed by the contractor may be in order.

On an adjacent span to one requiring lower lateral bracing, the bracing is extended one or two panel lengths into that span. The lower lateral bracing system is placed in the exterior bays of

the bridge and in at least 1/3 of the bays of the bridge. On longer spans, the stresses caused by wind load during construction will generally govern the member size.

Curved girders in Wisconsin generally do not have extremely long span lengths, and the curvature of the girders forms an arch which is usually capable of resisting the wind forces prior to placing the slab.

24.4.6 Girder Selection

The exterior girder section is always designed and detailed such that it is equal to or larger than the interior girder sections. Guidelines for ratios of girder depth to length of span are provided in 24.4.2. The following criteria are used to determine the selection and sizes of girder sections. For additional rules of thumb regarding economical design considerations, see 24.6.2.

24.4.6.1 Rolled Girders

Rolled girders without cover plates are preferred. Cover plates are not recommended due to fatigue considerations and higher fabrication costs.

24.4.6.2 Plate Girders

Basic cross-section proportion limits for flanges of steel I-girders are specified in **LRFD [6.10.2.2]**. The limits apply to both tension and compression flanges. The minimum width of flanges, b_f, is specified as:

$$b_f \geq D/6$$

Where:

D = Web depth

This limit is a lower limit, and flange widths should not be set based on this limit. Practical size flanges should easily satisfy this limitation based on satisfaction of other design criteria. Fabricators prefer that flange widths never be less than 12” to prevent distortion and cupping of the flanges during welding, which sets a practical lower limit.

Composite design has led to a significant reduction in the size of compression flanges in regions of positive flexure as economical composite girders normally have smaller top flanges than bottom flanges. In regions of positive flexure during deck placement, more than half the web is typically in compression. As a result, maximum moments generated during the deck-casting sequence, coupled with top compression flanges that are too narrow, can lead to out-of-plane distortions of the compression flanges and web during construction. The following relationship from **LRFD [C6.10.3.4]** is a suggested guideline on the minimum top compression flange width, b_{fc}, that should be provided in these regions to help minimize potential problems in these cases:

$$b_{fc} \geq L/85$$

Where:

L = Length of the girder shipping piece

Satisfaction of this simple guideline can also help ensure that individual field sections will be stable for handling both in the fabrication shop and in the field. Adherence to this guideline can also facilitate erection without any required special stiffening trusses or falsework. It is recommended that the above two equations be used to establish a minimum required top-flange width in regions of positive flexure in composite girders.

As a practical matter, fabricators order flange material from wide plate, typically between 72" and 96" wide. They either weld the shop splices in the individual flanges after cutting them to width or they weld the different thickness plates together to form one wide plate and then strip the individual flanges. In the latter case, the individual flange widths must be kept constant within an individual shipping piece, which is preferred. Changing of flange widths at shop splices should be avoided if at all possible. Stripping the individual flanges from a single wide plate allows for fewer weld starts and stops and results in only one set of run-on and run-off tabs. It is estimated that up to 35% of the labor required to join the flanges can be saved by specifying changes in thickness rather than width within a field section.

A fabricator will generally order plate with additional width and length for cutting tolerance, sweep tolerance and waste. Waste is a particular concern when horizontally curved flanges are cut curved. The engineer should give some consideration as to how the material might be ordered and spliced; a fabricator can always be consulted for assistance. Flanges should be sized (including width, thickness and length) so that plates can be ordered and spliced with minimal waste. *AASHTO/NSBA Steel Bridge Collaboration*, "*Guidelines to Design for Constructability, G12.1*" (2016) is a free publication available from AASHTO which contains some specific recommendations and illustrative examples related to this issue.

The following additional guidelines are used for plate girder design and detailing:

1. Maximum change in flange plate thickness is 1" and preferably less.
2. The thinner plate is not less than 1/2 the thickness of the thicker flange plate.
3. Plate thicknesses are given in the following increments:
4. 1/16" up to 1"
5. 1/8" between 1" and 2"
6. 1/4" above 2"
7. Minimum plate size on the top flange of a composite section in the positive moment region is variable depending on the depth of web, but not less than 12" x ¾" for web

depths less than or equal to 66” and 14” x ¾” for web depths greater than 66”. Thinner plates become wavy and require extra labor costs to straighten within tolerances.

8. For plate girder flange widths, use 2” increments.

9. For plate girder web depths, use 3” increments.

10. Changes in plate widths or depths are to follow recommended standard transition distances and/or radii. The minimum size flange plates of 16" x 1 1/2" at the point of maximum negative moment and 16" x 1" for the bottom flange at the point of maximum positive moment are recommended for use on plate girders. The use of a minimum flange width on plate girders is necessary to maintain adequate stiffness in the girder so it can be fabricated, transported and erected. Deeper web plates with small flanges may use less steel, but they create problems during fabrication and construction. However, flange sizes on plate girders with web depths 48" or less may be smaller.

11. Flange plate sizes are detailed based on recommended maximum span lengths given in Table 24.4-1 for parallel flanged girders. The most economical girder is generally the one having the least total weight but is determined by comparing material costs and welding costs for added stiffener details. Plates over 60'-90’ (depending on thickness and material) are difficult to obtain, and butt splices are detailed to limit flange plates to these lengths or less. It is better to detail more flange butt splices than required and leave the decision to utilize them up to the fabricator. All butt splices are made optional to the extent of available lengths, and payment is based on the plate sizes shown on the plans. As previously described, detail flange plates to the same width and vary the thicknesses. This allows easier fabrication when cutting plate widths. Change widths, if necessary, only at field splices.

12. Minimum web thickness is 7/16" for girder depths less than or equal to 60". An economical web thickness usually has a few transverse stiffeners. Refer to 24.10 for transverse stiffener requirements. Due to fatigue problems, use of longitudinal stiffeners for plate girders is not encouraged.

24.4.7 Welding

Welding design details shall conform to current requirements of *Bridge Welding Code: AASHTO/AWS-D1.5*. Weld details are not shown on the plans but are specified by using standard symbols as given on Figure 24.4-2 and Figure 24.4-3. Weld sizes are based on the size required due to stress or the minimum size for plate thicknesses being connected.

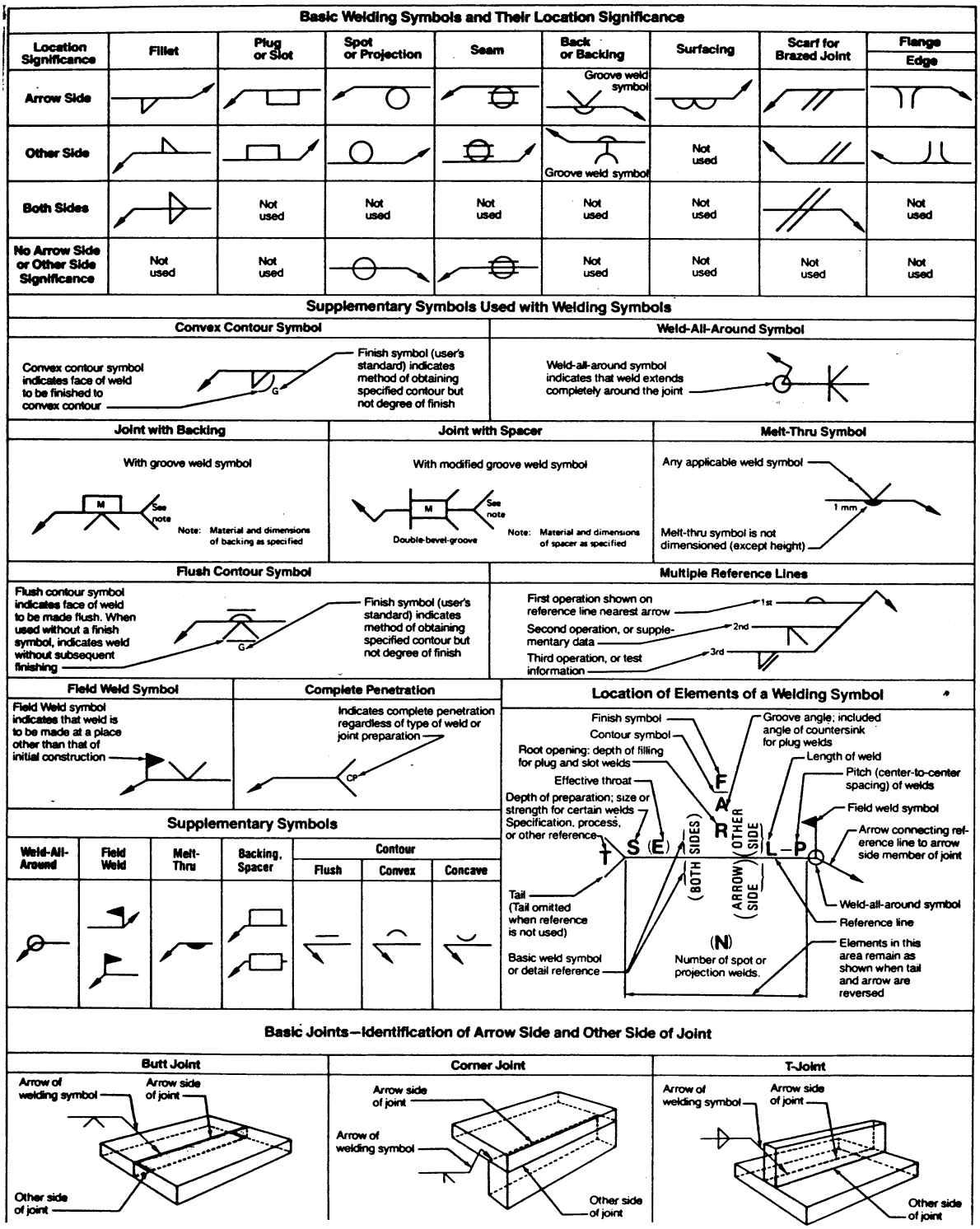

Figure 24.4-2
Basic Welding Symbols

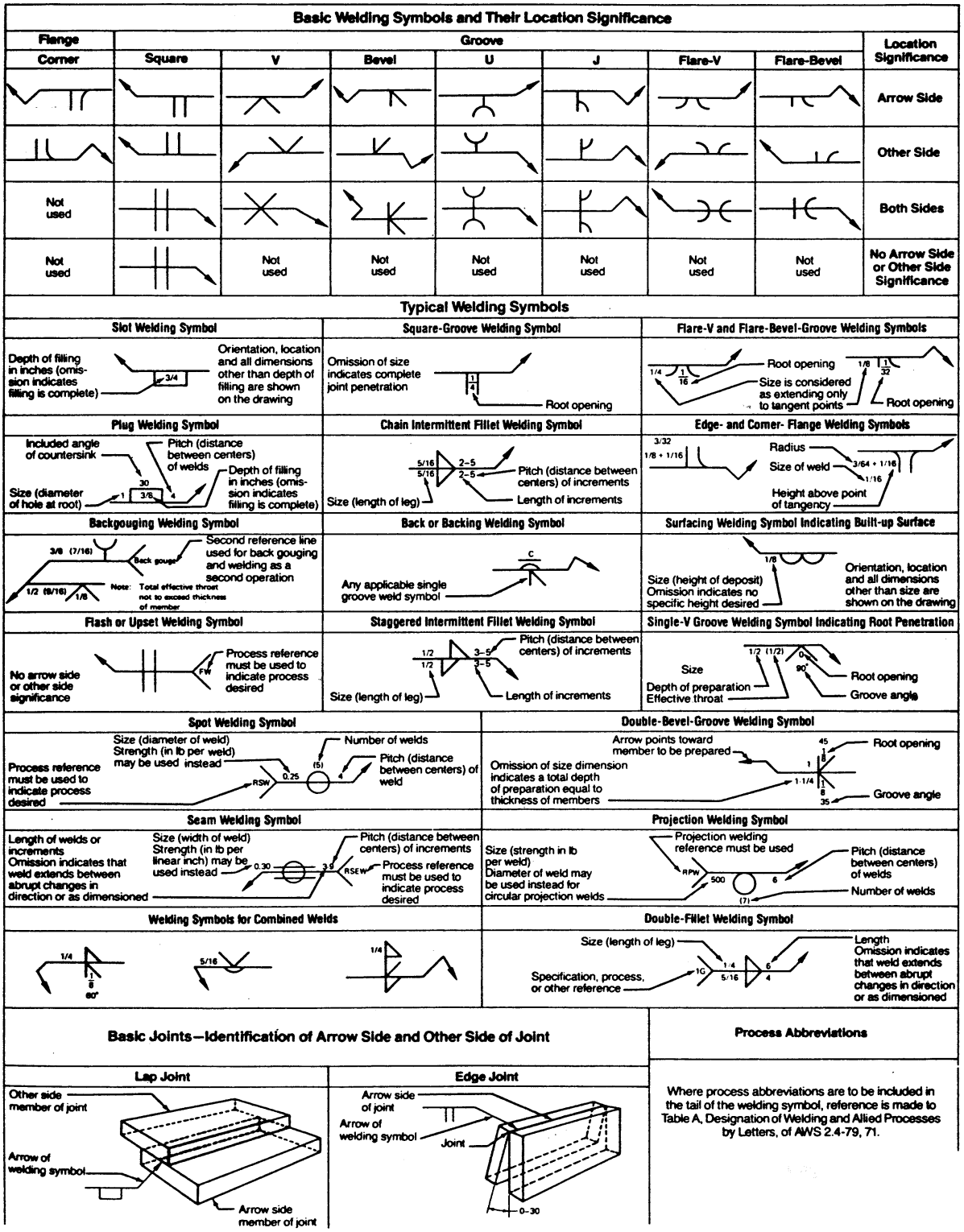

Figure 24.4-3
Basic Welding Symbols (Continued)

Fillet welds are the most widely used welds due to their ease of fabrication and overall economy. Fillet welds generally require less precision during fit-up, and the edges of the joined pieces seldom need special preparation such as beveling or squaring. Fillet welds have a triangular cross section and do not fully fuse the cross-sectional area of the parts they join, although full-strength connections can be developed with fillet welds.

The size of a fillet weld is given as the leg size of the fillet. The effective area of a fillet weld is taken equal to the effective length of the weld times the effective throat (**LRFD [6.13.3.3]**). The effective length is to be taken as the overall length of the full-size fillet. The effective throat dimension of a fillet weld is nominally the shortest distance from the joint root to the weld face, which for a typical fillet weld with equal legs of nominal size, a, is taken equal to 0.707a.

When placing a fillet weld, the welder builds up the weld to the full dimension as near to the beginning of the weld as possible. However, there is always a slight tapering off of the weld where the weld starts and ends. Therefore, a minimum effective length of the weld is required. As specified in **LRFD [6.13.3.5]**, the minimum effective length of a fillet weld is to be taken as four times its leg size, but not less than 1.5 inches.

As specified in **LRFD [6.13.3.4]**, maximum thickness (size) requirements for fillet welds along edges of connected parts depend on the thickness of the parts being connected (unless the weld is specifically designated on the contract documents to be built out to obtain full throat thickness).

The minimum thickness (size) of a fillet weld is based on the thickness of the thicker part joined, as specified on Standard for Plate Girder Details and in Table 24.4-2.

Base Metal Thickness of Thicker Part Joined	Minimum Size of Fillet Weld
Up to ½”	3/16”
Over ½” to ¾”	1/4”
Over ¾” to 1½”	5/16”
Over 1½” to 2¼”	3/8”
Over 2¼” to 6”	1/2”

Table 24.4-2
Minimum Size of Fillet Welds

The fillet weld size is not required to exceed the thickness of the thinner part joined. Refer to *AASHTO LRFD* for minimum effective fillet weld length and end return requirements.

According to **LRFD [6.13.3.2.4a]**, the factored resistance, R_r, of fillet-welded connections at the strength limit state subject to tension or compression parallel to the axis of the weld is to be taken as the corresponding factored resistance of the base metal. Note that fillet welds joining component elements of built-up members (such as girder flange-to-web welds) need not be designed for the tensile or compressive stress in those elements parallel to the axis of

the welds. According to **LRFD [6.13.3.2.4b]**, the factored resistance, R_r, of fillet-welded connections at the strength limit state subject to shear on the effective area is to be taken as follows:

$$Rr = 0.6\phi_{e2}F_{exx}$$

Where:

ϕ_{e2} = Resistance factor for shear on the throat of the weld metal in fillet welds specified in **LRFD [6.5.4.2]** (= 0.80)

F_{exx} = Classification strength of the weld metal (ksi) (for example, for E70 weld metal, F_{exx} = 70 ksi)

If a certain size fillet weld must be used in adjacent areas of a particular joint, it is desirable to use the same size weld to allow the same electrodes and welding equipment to be used for that joint and to simplify the inspection.

24.4.8 Dead Load Deflections, Camber and Blocking

Show the total dead load deflections, including composite dead load (without future wearing surface) acting on the composite section, at tenth points of each span. Distribute the composite dead load evenly to all girders and provide one deflection value for a typical interior girder. Chapter 17 – Superstructure-General illustrates three load cases for exterior girder design with raised sidewalks, cases that provide a conservative envelope to ensure adequate girder capacity. However, the above composite dead load distribution should be used for deflection purposes. Total deflections and deflections for concrete only are computed to the nearest 0.1" and shown on a deflection diagram.

A separate deflection value for interior and exterior girders *may* be provided if the difference, accounting for load transfer between girders, warrants multiple values. A weighted distribution of composite dead load could be used for deflection purposes *only*. For example, an extremely large composite load over the exterior girder could be distributed as 40-30-30 percent to the exterior and first two interior girders respectively. Use good engineering judgment whether to provide separate deflection values for individual girder lines. In general, this is not necessary.

When straight girder sections between splice joints are erected, final girder elevations usually vary in height between the girder and roadway elevations due to dead load deflections and vertical curves. Since a constant slab thickness is detailed, a concrete haunch between the girder and slab is used to adjust these variations. If these variations exceed 3/4", the girder is cambered to reduce the variation of thickness in the haunch. This is done for all new girders, including widenings. Straight line chords between splice points are sometimes used to create satisfactory camber. If separate deflections are required for exterior girders, as described in Chapter 6 – Plan Preparation and Chapter 17 – Superstructure-General, provide only one camber value for all girders that is a best fit.

Welded girders are cambered by cutting the web plates to a desired curvature. During fabrication, all web plates are cut to size since rolled plates received from the mill are not

straight. There is a problem in fabricating girders that have specified cambers less than 3/4", so they are not detailed.

Rolled sections are cambered by the application of heat in order that less camber than recommended by AISC specifications may be used. The concrete haunch is used to control the remaining thickness variations.

A blocking diagram is given for all continuous steel girder bridges on a vertical curve. Refer to Standard for Blocking & Slab Haunch Details for blocking and slab haunch details. Blocking heights to the nearest 1/16" are given at all bearings, field splices and shop splice points. The blocking dimensions are from a horizontal base line passing through the lower end of the girder at the centerline of bearing.

The plans should show in a table the top of steel elevations after erection at each field splice and at the centerline of all bearings.

It should be noted that the plans are detailed for horizontal distances. The fabricator must detail all plates to the erected position considering dead loads. Structure erection considerations are three-dimensional, considering slope lengths and member rotation for member end cuts.

24.4.9 Expansion Hinges

The expansion hinge as shown on Standard for Expansion Hinge Joint Details is used where pin and hanger details were previously used. The expansion hinge is more redundant and, if necessary, the bearings can easily be replaced.

24.5 Repetitive Loading and Toughness Considerations

AASHTO LRFD specifies requirements for repetitive loading and toughness considerations. Fatigue design and detail guidelines are provided, and material impact testing for fracture toughness is required. These requirements are based on performance evaluations over the past several decades on existing highways and bridges under the effects of repetitive vehicle loading.

The direct application of fatigue specifications to main load-carrying members has generally been apparent to most bridge designers. Therefore, main members have been designed with the appropriate details. However, fatigue considerations in the design of secondary members and connections have not always been so obvious. Many of these members interact with main members and receive more numerous cycles of load at a higher level of stress range than assumed. As a result, most of the fatigue problems surfacing in recent years have involved cracking initiated by secondary members.

24.5.1 Fatigue Strength

In *AASHTO LRFD*, fatigue is defined as the initiation and/or propagation of cracks due to repeated variation of normal stress with a tensile component. The fatigue life of a detail is defined as the number of repeated stress cycles that results in fatigue failure of a detail, and the fatigue design life is defined as the number of years that a detail is expected to resist the assumed traffic loads without fatigue cracking. In *AASHTO LRFD*, the fatigue design life is based on either Fatigue I for infinite load-induced fatigue life or Fatigue II for finite load-induced fatigue life.

WisDOT Policy Item

Only consider the Fatigue I limit state for steel design.

The main factors governing fatigue strength are the applied stress, the number of loading cycles and the type of detail. The designer has the option of either limiting the stress range to acceptable levels or choosing details which limit the severity of the stress concentrations.

Details involving connections that experience fatigue crack growth from weld toes and weld ends where there is high stress concentration provide the lowest allowable stress range. This applies to both fillet and groove welded details. Details which serve the intended function and provide the highest fatigue strength are recommended.

Generally, details involving failure from internal discontinuities such as porosity, slag inclusion, cold laps and other comparable conditions will have a high allowable stress range. This is primarily due to the fact that geometrical stress concentrations at such discontinuities do not exist, other than the effect of the discontinuity itself.

AASHTO LRFD provides the designer with eight basic design range categories for redundant and non-redundant load path structures. The stress range category is selected based on the highway type and the detail employed. The designer may wish to make reference to *Bridge Fatigue Guide Design and Details*, by John W. Fisher.

24.5.2 Charpy V-Notch Impact Requirements

Recognizing the need to prevent brittle fracture failures of main load-carrying structural components, AASHTO adopted provisions for Charpy V-Notch impact testing in 1974. Impact testing offers an important measure of material quality, particularly in terms of ductility. Brittleness is detected prior to placing the material in service to prevent member service failures. Wisconsin *Standard Specifications for Highway and Structure Construction* require Charpy V-Notch tests on all girder flange and web plates, flange splice plates, hanger bars, links, rolled beams and flange cover plates. Special provisions require higher Charpy V-Notch values for non-redundant structure types.

For the Charpy V-Notch impact test, small, notched steel specimens are loaded at very high strain rates as the specimen absorbs the impact from a pendulum. The maximum height the pendulum rises after impact measures the amount of energy absorbed in foot-pounds.

The AASHTO fracture control plan uses three different temperature zones (designated Zones 1, 2 and 3) to qualify the fracture toughness of bridge steels. The three zones are differentiated by their minimum operating (or service) temperatures, which are given in **LRFD [Table 6.6.2-1]**. In Wisconsin, use Zone 2 requirements.

Separate fracture toughness requirements are given in **LRFD [Table 6.6.2-2]** for non-fracture-critical and fracture-critical members (or components). A fracture-critical member (FCM) is defined as a component in tension whose failure is expected to result in the collapse of the bridge or the inability of the bridge to perform its function. FCMs are subject to more stringent Charpy V-Notch fracture toughness requirements than non-fracture-critical members. For FCMs, High Performance Steel (HPS) shall be used with Zone 2 requirements.

According to **LRFD [6.6.2]**, the engineer has the responsibility to identify all bridge members or components that are fracture critical and clearly delineate their location on the contract plans. Examples of FCMs in bridges include certain truss members in tension, suspension cables, tension components of girders in two-girder systems, pin and link systems in suspended spans, cross girders and welded tie girders in tied-arches. In addition, any attachment having a length in the direction of the tension stress greater than 4 inches and welded to the tension area of a component of a FCM is also to be considered fracture critical.

24.5.3 Non-Redundant Type Structures

Previous AASHTO fatigue and fracture toughness provisions provided satisfactory fracture control for multi-girder structures when employed with good fabrication and inspection practices. However, concern existed that some additional factor of safety against the possibility of brittle fracture should be provided in the design of non-redundant type structures such as single-box and two-box girders, two-plate girders or truss systems where failure of a single element could cause collapse of the structure. A case in point was the collapse of the Point Pleasant Bridge over the Ohio River. HPS shall be used for non-redundant structures.

Primary factors controlling the susceptibility of non-redundant structures to brittle fracture are the material toughness, flaw size and stress level. One of the most effective methods of reducing brittle fracture is lowering the stress range imposed on the member. AASHTO provides an increased safety factor for non-redundant members by requiring a shift of one

range of loading cycles for fatigue design with corresponding reduction of stress range for critical stress categories. The restrictive ranges for certain categories require the designer to investigate the use of details which do not fall in critical stress categories or induce brittle fracture. For non-fracture-critical members including bolted tie girders found in tied arch bridges, multiple box girder structures (3 boxes) and hanger plates, HPS shall also be used.

As per a FHWA directive, two-girder box girder structures are to be considered non-redundant.

For I-girder bridges, other than pedestrian or other unusual structures, four or more girders shall be used.

24.6 Design Approach - Steps in Design

24.6.1 Obtain Design Criteria

The first design step for a steel girder is to choose the correct design criteria. The design criteria include the following:

- Number of spans
- Span lengths
- Skew angles
- Number of girders
- Girder spacing
- Deck overhang
- Cross-frame spacing
- Flange and web yield strengths
- Deck concrete strength
- Deck reinforcement strength
- Deck thickness
- Dead loads
- Roadway geometry
- Haunch depth

For steel girder design, the following load combinations are generally considered:

- Strength I
- Service II
- Fatigue I

The extreme event limit state (including earthquake load) is generally not considered for a steel girder design.

The following steps are taken in determining the girder or beam spacing and the slab thickness:

1. The girder spacing (and the resulting number of girders) for a structure is determined by considering the desirable girder depth and the span lengths. Refer to 24.4.2 for design aids. Where depth or deflection limitations do not control the design, it is usually more economical to use fewer girders with a wider spacing and a thicker slab. Four girders are generally considered to be the minimum, and five girders are desirable to facilitate future redecking.

2. The slab overhang on exterior girders is limited to 3'-7" measured from the girder centerline to the edge of slab. The overhang is limited to prevent rotation and bending of the web during construction caused by the forming brackets. The overhang width is generally determined such that the moments and shears in the exterior girder are similar to those in the interior girder. In addition, the overhang is set such that the positive and negative moments in the deck slab are balanced. A common rule of thumb is to make the overhang approximately 0.28 to 0.5 times the girder spacing. For girders less than, or equal to 36-inches in depth, limit the overhang to the girder depth, and preferably no wider than 0.80 the girder depth. The limits for raised sidewalk overhangs on the Standard for Median and Raised Sidewalk Details are likely excessive for such shallow girders.

3. Check if a thinner slab and the same number of members can be used by slightly reducing the spacing.

24.6.2 Select Trial Girder Section

Before the dead load effects can be computed, a trial girder section must be selected. This trial girder section is selected based on previous experience and based on preliminary design. Based on this trial girder section, section properties and dead load effects will be computed. Then specification checks will be performed to determine if the trial girder section successfully resists the applied loads. If the trial girder section does not pass all specification checks or if the girder optimization is not acceptable, then a new trial girder section must be selected and the design process must be repeated.

The following tips are presented to help bridge designers in developing an economical steel girder for most steel girder designs. Other design tips are available in various publications from the American Institute of Steel Construction (AISC) and from steel fabricators.

- Girder depth – The minimum girder depth is specified in **LRFD [2.5.2.6.3]**. An estimate of the optimum girder depth can be obtained from trial runs using design software. The web depth may be varied by several inches more or less than the optimum without significant cost penalty. Refer to 24.4.2 for recommended girder depths for a given girder spacing and span length.

- Web thickness – A "nominally stiffened" web (approximately 1/16 inch thinner than "unstiffened") will generally provide the least cost alternative or very close to it. However, for web depths of approximately 50” or less, unstiffened webs may be more economical.

- Plate transitions – For rolled sections, a change in section should occur only at field splice locations. For plate girders, include the change in section at butt splices and

check the maximum rolling lengths of plates to see if additional butt splices are required. The fabricator may assume the cost of extending the heavier plate and eliminating the butt splice; this option has been used by fabricators on numerous occasions. Shim plates are provided at the bearing to allow for either option. A common rule of thumb is to use no more than three plates (two shop splices) in the top or bottom flange of field sections up to 130 feet long. In some cases, a single flange plate size can be carried through the full length of the field section. Estimate field splice locations at approximately the 7/10 point of continuous spans.

- Flange widths – Flange widths should remain constant within field sections. The use of constant flange widths simplifies construction of the deck. The unsupported length in compression of the shipping piece divided by the minimum width of the compression flange in that piece should be less than approximately 85. High bearing reactions at the piers of continuous girders may govern the width of the bottom flange.

- Flange transitions – It is good design practice to reduce the flange cross-sectional area by no more than approximately one-half of the area of the heavier flange plate. This reduces the build-up of stress at the transition.

- Haunched girders – On haunched plate girders, the length of the parabolic haunch is approximately 1/4 of the span length. The haunch depth is 1 1/2 times the midspan depth.

It should be noted that during the optimization process, minor adjustments can be made to the plate sizes and transition locations without needing to recompute the analysis results. However, if significant adjustments are made, such that the moments and shears would change significantly, then a revised analysis is required.

24.6.3 Compute Section Properties

See 17.2.11 for determining composite slab width.

For a composite superstructure, several sets of section properties must be computed. The initial dead loads (or the non-composite dead loads) are applied to the girder-only section. The superimposed dead loads are applied to the composite section based on a modular ratio of 3n, as described in **LRFD [6.10.1.1.1]**. The live loads are applied to the composite section based on a modular ratio of n.

For girders with shear connectors provided throughout their entire length and with slab reinforcement satisfying the provisions of **LRFD [6.10.1.7]**, stresses due to loads applied to the composite section for the Fatigue I and Service II limit states may be computed using the short-term composite section, based on a modular ratio of n, assuming the concrete slab to be fully effective for both positive and negative flexure.

For the strength limit state, since the deck concrete is in tension in the negative moment region, the deck reinforcing steel contributes to the composite section properties and the deck concrete does not.

For LRFD, Wisconsin places shear connectors in both the positive and negative moment regions of continuous steel girder bridges, and both regions are considered composite in analysis and design computations. Negative flexure concrete deck reinforcement is considered in the section property calculations.

24.6.4 Compute Dead Load Effects

The girder must be designed to resist the dead load effects, as well as the other load effects. Various types of dead loads and their corresponding load factors are described in 17.2.4 and 17.2.5.

For the steel girder, the dead load per unit length varies due to the change in plate sizes. The moments and shears due to the weight of the steel girder can be computed using analysis software. Since the actual plate sizes are entered as input, the moments and shears are computed based on the actual, varying plate sizes.

Distribution of dead load to the girders is described in 17.2.8.

The stiffness of the composite section is used for determining live load and composite dead load moments and shears. When computing live load values, the composite section is based on n, and when computing composite dead load values, the composite section is based on 3n. Non-composite dead load moments and shears are computed based on the stiffness of the non-composite steel section.

24.6.5 Compute Live Load Effects

The girder must also be designed to resist the live load effects. The live load consists of an HL-93 loading. Similar to the dead load, the live load moments and shears for an HL-93 loading can be obtained from an analysis computer program.

For all limit states other than fatigue and fracture, the dynamic load allowance, IM, is 0.33. However, it is important to note that the dynamic load allowance is applied only to the design truck or tandem. The dynamic load allowance is not applied to pedestrian loads or to the design lane load.

Live load distribution factors must be computed as specified in **LRFD [4.6.2.2]**, as shown in Table 24.6-1.

WisDOT Policy Item

For beams with variable moment of inertia, the longitudinal stiffness parameter, Kg (**LRFD [4.6.2.2.1-1]**), shall be based on a weighted average of properties, over the entire length of the bridge.

In addition to computing the live load distribution factors, their ranges of applicability must also be checked. If they are not satisfied, then conservative assumptions must be made based on sound engineering judgment. Additional information about distribution of live load to the girders is presented in 17.2.8.

For skewed bridges, WisDOT does not consider skew correction factors for moment.

Live Load Distribution Factor	AASHTO LRFD Reference
Moments in Interior Beams	**LRFD [Table 4.6.2.2.2b-1]**
Moments in Exterior Beams	**LRFD [C4.6.2.2.2d]** and **LRFD [Table 4.6.2.2.2d-1]**
Moment Reduction for Skew	Not Applicable for WisDOT
Shear in Interior Beams	**LRFD [Table 4.6.2.2.3a-1]**
Shear in Exterior Beams	**LRFD [C4.6.2.2.2d]** and **LRFD [Table 4.6.2.2.3b-1]**
Shear Correction for Skew	**LRFD [Table 4.6.2.2.3c-1]**

Table 24.6-1
Live Load Distribution Factors

24.6.6 Combine Load Effects

The next step is to combine the load effects for each of the applicable limit states. Load effects are combined in accordance with **LRFD [Table 3.4.1-1]** and **LRFD [Table 3.4.1-2]**.

After combining load effects, the next ten design steps consist of verifying the structural adequacy of the steel girder using appropriate sections of *AASHTO LRFD*. For steel girder designs, specification checks are generally performed at the following locations:

- Span tenth points
- Locations of plate transitions
- Locations of stiffener spacing transitions

However, it should be noted that the maximum moment within a span may not necessarily occur at any of the above locations.

Check the loads of the interior and exterior members to see if one or both members are to be designed.

24.6.7 Check Section Property Limits

Several checks are required to ensure that the proportions of the girder section are within specified limits, as presented in **LRFD [6.10.2]**. The first section proportion check relates to the web slenderness, and the second set of section proportion checks relate to the general proportions of the section.

24.6.8 Compute Plastic Moment Capacity

For composite sections, the plastic moment, M_p, must be calculated as the first moment of plastic forces about the plastic neutral axis. The methodology for the plastic moment capacity computations is presented in **LRFD [Appendix D6.1]**.

24.6.9 Determine If Section is Compact or Non-compact

The next step in the design process is to determine if the section is compact or non-compact, as described in **LRFD [6.10.6.2.2]**. This, in turn, will determine which formulae should be used to compute the flexural capacity of the girder.

24.6.10 Design for Flexure – Strength Limit State

The next step is to compute the flexural resistance of the girder at each section. These computations vary, depending on whether the section is composite or non-composite, whether the section is compact or non-compact, and whether the section is in positive flexure or negative flexure. The following sections of *AASHTO LRFD* can be used:

- Compact, composite section in positive flexure – **LRFD [6.10.7.1]**
- Non-compact, composite section in positive flexure – **LRFD [6.10.7.2]**
- Composite sections in negative flexure – **LRFD [6.10.8]**
- Non-composite sections – **LRFD [6.10.8]**

WisDOT Policy Item:

Do not utilize optional **LRFD [Appendix B6]** for Moment Redistribution from Interior-Pier I-Sections in Straight Continuous-Span Bridges.

24.6.11 Design for Shear

Shear must be checked at each section of the girder. However, shear is generally maximum at or near the supports.

The first step in the design for shear is to check if the web must be stiffened. A "nominally stiffened" web (approximately 1/16 inch thinner than "unstiffened") will generally provide the least cost alternative or very close to it. However, for web depths of approximately 50 inches or less, unstiffened webs may be more economical.

It should be noted that in end panels, the shear is limited to either the shear yield or shear buckling in order to provide an anchor for the tension field in adjacent interior panels. Tension field is not allowed in end panels. The design procedure for shear in the end panel is presented in **LRFD [6.10.9.3.3]**.

24.6.12 Design Transverse Intermediate Stiffeners and/or Longitudinal Stiffeners

If transverse intermediate stiffeners and/or longitudinal stiffeners are used, they must be designed. The design of transverse intermediate stiffeners is described in 24.10, and the design of longitudinal stiffeners is described in 24.11.

24.6.13 Design for Flexure – Fatigue and Fracture

Load-induced fatigue must be considered in a steel girder design. Fatigue considerations may include:

- Welds connecting the shear studs to the girder
- Welds connecting the flanges and the web
- Welds connecting stiffeners to the girder

The specific fatigue considerations depend on the unique characteristics of the girder design. Specific fatigue details and detail categories are explained and illustrated in **LRFD [Table 6.6.1.2.3-1]**.

In addition to the nominal fatigue resistance computations, fatigue requirements for webs must also be checked. These checks are required to control out-of-plane flexing of the web due to flexure or shear under repeated live loading.

24.6.14 Design for Flexure – Service Limit State

The girder must be checked for service limit state control of permanent deflection. This check is intended to prevent objectionable permanent deflections due to expected severe traffic loadings that would impair rideability. Service II is used for this check.

In addition to the check for service limit state control of permanent deflection, the girder must also be checked for live load deflection, as described in 24.4.3.

24.6.15 Design for Flexure – Constructability Check

The girder must also be checked for flexure during construction. The girder has already been checked in its final condition when it behaves as a composite section. It is the responsibility of the contractor to ensure that allowable stresses aren't exceeded during steel erection. The engineer is to make certain allowable stresses aren't exceeded from the time the steel erection is complete through final service, including during the deck pour. In addition, check the lateral bracing without the deck slab.

Before constructability checks can be performed, the slab pouring sequence must be determined. Refer to Standard for Slab Pouring Sequence. Determine the maximum amount of concrete that can be poured in a day. Determine deflections based on the proposed pouring sequence. The effects of the deck pouring sequence will often control the design of the top flange in the positive moment regions of composite girders.

Lateral torsional buckling can occur when the compression flange is not laterally supported. The laterally unsupported compression flange tends to buckle out-of-plane between the points of lateral support. Because the tension flange is kept in line, the girder section twists when it moves laterally. This behavior is commonly referred to as lateral torsional buckling. Lateral torsional buckling is generally most critical for the moments induced during the deck pouring sequence. If lateral torsional buckling occurs, the plastic moment resistance, Mp, cannot be reached.

In addition to checking the nominal flexural resistance during construction, the nominal shear resistance must also be checked.

24.6.16 Check Wind Effects on Girder Flanges

The next step is to check wind effects on the girder flanges. Wind effects generally do not control a steel girder design, and they are generally considered for the exterior girders only.

24.6.17 Draw Schematic of Final Steel Girder Design

If all of the above specification checks are satisfied, then the trial girder section is acceptable and can be considered the final girder section. It is often useful to draw a schematic summarizing the design of the final girder section.

However, if any of the specification checks are not satisfied or if the design is found to be overly conservative, then the trial girder section must be revised appropriately, and the specification checks must be repeated for the new trial girder section.

24.6.18 Design Bolted Field Splices

If bolted field splices are used, they must be designed, as described in 24.8.

24.6.19 Design Shear Connectors

For a composite steel girder, the shear connectors must be designed, as described in 24.7.5. The shear connector spacing must be computed based on fatigue and strength limit states.

24.6.20 Design Bearing Stiffeners

The next step is to design the bearing stiffeners, as described in 24.9.

24.6.21 Design Welded Connections

Welded connections are required at several locations on the steel superstructure, and all welds must be designed. Base metal, weld metal and welding design details must conform to the requirements of the *ANSI/AASHTO/AWS Bridge Welding Code D1.5*.

In most cases, the minimum weld thickness provides a welded connection that satisfies all design requirements. Therefore, the minimum weld thickness is generally a good starting point when designing a fillet weld.

Determine the distance from the piers where field welding to the top flange for construction purposes is not permitted (other than for shear studs).

24.6.22 Design Diaphragms, Cross-Frames and Lateral Bracing

Diaphragms and cross-frames must be designed in accordance with **LRFD [6.7.4]**. Diaphragms and cross-frames may be placed at the following locations along the bridge:

- At the end of the structure
- Across interior supports
- Intermittently along the span

When investigating the need for diaphragms or cross-frames and when designing them, the following must be considered:

- Transfer of lateral wind loads from the bottom of the girder to the deck and from the deck to the bearings
- Stability of the bottom flange for all loads when it is in compression
- Stability of the top flange in compression prior to curing of the deck
- Distribution of vertical dead and live loads applied to the structure

Diaphragms or cross-frames can be specified as either temporary (if they are required only during construction) or permanent (if they are required during construction and in the bridge's final condition).

At a minimum, *AASHTO LRFD* requires that diaphragms and cross-frames be designed for the following transfer of wind loads based on **LRFD [4.6.2.7]** and for applicable slenderness requirements in accordance with **LRFD [6.8.4]** or **LRFD [6.9.3]**. In addition, connection plates must satisfy the requirements of **LRFD [6.6.1.3.1]**.

Refer to Standards 24.03 through 24.06 for information about the design of lateral bracing and end diaphragms. Consideration must be given to connection details susceptible to fatigue crack growth.

24.6.23 Determine Deflections, Camber, and Elevations

Determine the dead load deflections, blocking, camber, top of steel elevations and top of slab elevations. Camber and blocking are described in 24.4.8.

24.7 Composite Design

24.7.1 Composite Action

Composite action is present in steel girder superstructures when the steel beams or girders feature shear connectors which are embedded within the concrete slab. The shear connectors prevent slip and vertical separation between the bottom of the slab and the top of the steel member. Unless temporary shoring is used, the steel members deflect under the dead load of the wet concrete before the shear connectors become effective. However, since temporary shoring is not used in Wisconsin, composite action applies only to live loads and to portions of dead load placed after the concrete deck has hardened.

In the positive moment region, the concrete deck acts in compression and the composite section includes the slab concrete. However, in the negative moment region, the concrete deck acts in tension and the composite section includes the bar steel reinforcement in the slab.

As previously described, for LRFD, Wisconsin places shear connectors in both the positive and negative moment regions of continuous steel girder bridges, and both regions are considered composite in analysis and design computations. Negative flexure concrete deck reinforcement is considered in the section property calculations.

WisDOT policy item:

For rehabilitation projects, do not add shear studs in the negative moment region if none exist. Likewise, do not add additional studs in the positive moment region if shear connectors are provided and were designed for shear (not slab anchors on approximately 3'-0" to 4'-0" spacing).

If slab anchors are provided, consider as non-composite and add shear connectors if necessary for rating purposes. If adequate shear connector embedment into the deck is not achieved, additional reinforcement should be provided as per Figure 17.5-1.

24.7.2 Values of n for Composite Design

The effective composite concrete slab is converted to an equivalent steel area by dividing by n. For f'_c = 4 ksi, use n = 8.

f'_c	=	Minimum ultimate compressive strength of the concrete slab at 28 days
n	=	Ratio of modulus of elasticity of steel to that of concrete

The actual calculation of creep stresses in composite girders is theoretically complex and not necessary for the design of composite girders. Instead, a simple approach has been adopted for design in which a modular ratio appropriate to the duration of the load is used to compute the corresponding elastic section properties. As specified in **LRFD [6.10.1.1.1b]**, for transient loads applied to the composite section, the so-called ″short-term″ modular ratio, n, is used. However, for permanent loads applied to the composite section, the so-called ″long-term″ modular ratio, 3n, is used. The short-term modular ratio is based on the initial tangent modulus, E_c, of the concrete, while the long-term modular ratio is based on an effective apparent

modulus, E_c/k, to account for the effects of creep. In U.S. practice, a value of k equal to 3 has been accepted as a reasonable value.

24.7.3 Composite Section Properties

The minimum effective slab thickness is equal to the nominal slab thickness minus 1/2" for wearing surface. The maximum effective slab width is defined in **LRFD [4.6.2.6]**.

24.7.4 Computation of Stresses

24.7.4.1 Non-composite Stresses

For non-composite sections, flexural stresses are computed using only non-composite (steel-only) section properties, as follows:

$$f_b = \frac{\text{DLM (DC1)}}{\text{S(steel only)}} + \frac{\text{DLM (DC2 \& DW)}}{\text{S(steel only)}} + \frac{\text{LLM (Traffic)}}{\text{S(steel only)}} + \frac{\text{LLM (Pedestrian)}}{\text{S(steel only)}}$$

24.7.4.2 Composite Stresses

For composite sections, flexural stresses in the steel girder subjected to positive flexure are computed using appropriate non-composite (steel-only) and composite section properties, as follows:

$$f_b = \frac{\text{DLM (DC1)}}{\text{S(steel only)}} + \frac{\text{DLM (DC2 \& DW)}}{\text{S(composite,3n)}} + \frac{\text{LLM (Traffic)}}{\text{S(composite,n)}} + \frac{\text{LLM (Pedestrian)}}{\text{S(composite,n)}}$$

For composite sections, flexural stresses in the concrete deck subjected to positive flexure are computed as follows:

$$f_b = \frac{\text{DLM(DC2 + DW)}}{\text{S(composite,n)}} + \frac{\text{LLM(Traffic)}}{\text{S(composite,n)}} + \frac{\text{LLM(Pedestrian)}}{\text{S(Composite,n)}}$$

Where:

f_b	=	Computed steel flexural stress
DLM	=	Dead lead moment
LLM	=	Live load moment
S	=	Elastic section modulus
DC1	=	DC dead load resisted by the steel section only (for example, steel girder, concrete deck, concrete haunch, cross-frames and stiffeners)

DC2	=	DC dead load resisted by the composite section (for example, concrete parapets)
DW	=	Dead load due to future wearing surface and utilities

24.7.5 Shear Connectors

Refer to Standard for Plate Girder Details for shear connector details. Three shop or field welded 7/8" diameter studs at a length of 5" are placed on the top flange. The studs are equally spaced with a minimum clearance of 1 1/2" from the edge of the flange. On girders having thicker haunches where stud embedment is less than 2" into the slab, longer studs should be used to obtain the minimum embedment of 2".

Connectors which fall on the flange field splice plates should be repositioned near the ends of the splice plate. The maximum spacing of shear connectors is 2'. Connector spacings should begin a minimum of 9" from the centerline of abutments.

To determine the locations of shear connectors along the length of the girder, two general requirements must be satisfied:

- Spacing (or pitch) requirements governed by fatigue, as presented in **LRFD [6.10.10.1]**
- Number of connector requirements governed by strength, as presented in **LRFD [6.10.10.4]**

For the fatigue limit state, the pitch, p, of the shear connectors must satisfy the following equation:

$$p \leq \frac{nZ_r}{V_{sr}}$$

Where:

N	=	Number of shear connectors in a cross section
V_{sr}	=	Horizontal fatigue shear range per unit length (kips/in.)
Z_r	=	Shear fatigue resistance of an individual shear connector determined as specified in **LRFD [6.10.10.2]** (kips)

When computing the value for V_{sr}, the maximum value of composite moment of inertia in the span can be used.

For the strength limit state, the minimum number of required shear connectors, n, is computed for a given region according to the following equation:

$$n = \frac{P}{Q_r}$$

Where:

P = Total nominal shear force determined as specified in **LRFD [6.10.10.4.2]** (kips)

Q_r = Factored shear resistance of one shear connector (kips)

The given regions over which the required number of shear connectors is distributed are defined based on the point of maximum moment due to live load plus dynamic load allowance. This value is used because it applies to the composite section and is easier to locate than a maximum of the sum of all the moments acting on the composite section.

In most cases, the connector spacing (using three connectors per row) based on fatigue requirements is more than adequate for the strength design requirements. However for relatively long spans, additional shear connectors may be required to satisfy the strength design requirements.

In addition to the above general requirements, special shear connector requirements at points of permanent load contraflexure are presented in **LRFD [6.10.10.3]**.

Additional information and equations used for LRFD design of shear connectors are presented in **LRFD [6.10.10]**. In addition, a design example for shear connectors is also provided in this *Bridge Manual*.

24.7.6 Continuity Reinforcement

For continuous steel girder bridges, continuity reinforcement in the concrete deck must be considered in regions of negative flexure, as specified in **LRFD [6.10.1.7]**. Continuity reinforcement consisting of small bars with close spacing is intended to control concrete deck cracking.

If the longitudinal tensile stress in the concrete deck due to either the factored construction loads or the Service II load combination exceeds ϕf_r, then the following continuity reinforcement requirements must be satisfied:

- The total cross-sectional area of the longitudinal reinforcement in the deck shall be greater than or equal to one percent of the total cross-sectional area of the concrete deck.
- The required reinforcement shall be placed in two layers uniformly distributed across the deck width, with two-thirds being in the top layer and one-third in the bottom layer.

- The specified minimum yield strength, fy, of the reinforcing steel shall not be less than 60 ksi.
- The size of the reinforcement bars shall not exceed No. 6 bars.
- The spacing of the reinforcement bars shall not exceed 12 inches.

Tables 17.5-3 and 17.5-4 meet the criteria specified above.

In computing ϕf_r, f_r shall be taken as the modulus of rupture of the concrete (see **LRFD [5.4.2.6]**) and ϕ shall be taken as 0.90, which is the appropriate resistance factor for concrete in tension (see **LRFD [5.5.4.2]**). The longitudinal stresses in the concrete deck are computed as specified in **LRFD [6.10.1.1.1d]**. Superimposed dead loads and live loads are considered to be resisted by the composite section using the short-term modular ratio, n. Non-composite dead loads are supported by the girders alone.

Terminate the continuity reinforcement at the point of non-composite dead load contraflexure plus a development length. The bars are lapped to No. 4 bars.

For non-composite slabs in the negative moment region (on rehabilitation projects), extend the longitudinal reinforcement in Tables 17.5-3 and 17.5-4 a development length beyond the first shear connectors.

24.8 Field Splices

24.8.1 Location of Field Splices

Field splices shall be placed at the following locations whenever it is practical:

- At or near a point of dead load contraflexure for continuous spans
- Such that the maximum rolling length of the flange plates is not exceeded, thus eliminating one or more butt splices
- At a point where the fatigue in the net section of the base metal is minimized
- Such that section lengths between splices are limited to 120', unless special conditions govern

24.8.2 Splice Material

For homogeneous girders, the splice material is the same as the members being spliced. Generally, 3/4" diameter high-strength A325 bolted friction-type connectors, conforming to ASTM F3125, are used unless the proportions of the structure warrant larger diameter bolts.

24.8.3 Design

The following is a general description of the basic steps required for field splice design. These procedures and the accompanying equations are described in greater detail in **LRFD [6.13.6]**.

24.8.3.1 Obtain Design Criteria

The first design step is to identify the appropriate design criteria. This includes defining material properties, identifying relevant superstructure information and determining the splice location based on the criteria presented in 24.8.1.

Resistance factors used for field splice design are as presented in 17.2.6.

When calculating the nominal slip resistance of a bolt in a slip-critical connection, the value of the surface condition factor, K_s, shall be taken as follows for the surfaces in contact (faying):

- For steel with fully painted surfaces, use Ks = 0.30.
- For unpainted, blast-cleaned steel or steel with organic zinc paint, use Ks = 0.50.

Where a section changes at a splice, the smaller of the two connected sections should be used in the design, as specified in **LRFD [6.13.6.1.1]**.

24.8.3.1.1 Section Properties Used to Compute Stresses

The section properties used to compute stresses are described in **LRFD [6.10.1.1.1]**.

For calculating flexural stresses in sections subjected to positive flexure, the composite sections for short-term (transient) and long-term (permanent) moments shall be based on n and 3n, respectively.

For calculating flexural stresses in sections subjected to negative flexure, the composite section for both short-term and long-term moments shall consist of the steel section and the longitudinal reinforcement within the effective width of the concrete deck, except as specified otherwise in **LRFD [6.6.1.2.1]**, **LRFD [6.10.1.1.1d]** or **LRFD [6.10.4.2.1]**.

WisDOT policy item:

When computing composite section properties based on the steel section and the longitudinal reinforcement within the effective width of the concrete deck, only the top layer of reinforcement shall be considered.

Where moments due to short-term and long-term loads are of opposite sign at the strength limit state, the associated composite section may be used with each of these moments if the resulting net stress in the concrete deck due to the sum of the factored moments is compressive. Otherwise, the provisions of **LRFD [6.10.1.1.1c]** shall be used to determine the stresses in the steel section. Stresses in the concrete deck shall be determined as specified in **LRFD [6.10.1.1.1d]**.

However, for members with shear connectors provided throughout their entire length that also satisfy the provisions of **LRFD [6.10.1.7]**:

- Flexural stresses caused by Service II loads applied to the composite section may be computed using the short-term or long-term composite section, as appropriate, assuming the concrete deck is effective for both positive and negative flexure, as described in **LRFD [6.10.4.2.1]**.

- Live load stresses and stress ranges for fatigue design may be computed using the short-term composite section assuming the concrete deck to be effective for both positive and negative flexure, as described in **LRFD [6.6.1.2.1]**.

WisDOT policy item:

When stresses at the top and bottom of the web are required for web splice design, the flange stresses at the mid-thickness of the flanges can be conservatively used. This allows use of the same stress values for both the flange and web splices, which simplifies the calculations.

24.8.3.1.2 Constructability

As described in **LRFD [6.13.6.1.4a]**, splice connections shall be proportioned to prevent slip during the erection of the steel and during the casting of the concrete deck.

24.8.3.2 Compute Flange Splice Design Loads

Commercially available software programs can be used to obtain the design dead loads and live loads at the splice. The live loads should include dynamic load allowance and distribution factors.

Splices are typically designed for the Strength I, Service II and Fatigue I load combinations. The load factors for these load combinations are presented in 17.2.5. The stresses corresponding to these load combinations should be computed at the mid-thickness of the top and bottom flanges.

24.8.3.2.1 Factored Loads

For the Strength I and Service II load combinations, factored loads must be computed for the following two cases:

- Case 1: Dead load + Positive live load
- Case 2: Dead load + Negative live load

For the Fatigue I load combination, the following two load cases are used to compute the factored loads:

- Case 1: Positive live load
- Case 2: Negative live load

Minimum and maximum load factors are applied as appropriate to compute the controlling loading.

24.8.3.2.2 Section Properties

Section properties based on the gross area of the steel girder are used for computation of the maximum flexural stresses due to the factored loads for the Strength I, Service II and Fatigue I load combinations, as described in **LRFD [6.13.6.1.4a]** and **LRFD [C6.13.6.1.4a]**.

24.8.3.2.3 Factored Stresses

After the factored loads and section properties have been computed, factored stresses must be computed for each of the following cases:

- Strength I load combination – Dead load + Positive live load
- Strength I load combination – Dead load + Negative live load
- Service II load combination – Dead load + Positive live load
- Service II load combination – Dead load + Negative live load

- Fatigue I load combination – Positive live load
- Fatigue I load combination – Negative live load

Factored stresses are computed by dividing the factored moments by the appropriate section moduli.

24.8.3.2.4 Controlling Flange

As described in **LRFD [C6.13.6.1.4c]**, the controlling flange is defined as either the top or bottom flange for the smaller section at the point of splice, whichever flange has the maximum ratio of the elastic flexural stress at its mid-thickness due to the factored loads for the loading condition under investigation to its factored flexural resistance. The other flange is termed the non-controlling flange. In areas of stress reversal, the splice must be checked independently for both positive and negative flexure. For composite sections in positive flexure, the controlling flange is typically the bottom flange. For sections in negative flexure, either flange may qualify as the controlling flange.

24.8.3.2.5 Flange Splice Design Forces

After the factored stresses have been computed, the flange splice design forces can be computed as specified in **LRFD [6.13.6.1.4c]**. The design forces are computed for both the top and bottom flange for each load case (positive and negative live load). For the Strength I load combination, the design force is computed as the design stress times the smaller effective flange area on either side of the splice. When a flange is in compression, the gross flange area is used.

Service II load combination design forces must also be computed. As specified in **LRFD [6.13.6.1.4c]**, bolted connections for flange splices should be designed as slip-critical connections for the service level flange design force. This design force is computed as the Service II design stress multiplied by the smaller gross flange area on either side of the splice.

The flange slip resistance must exceed the larger of the following:

- Service II flange forces
- Factored flange forces from the moments at the splice due to constructability (erection and/or deck pouring sequence), as described in **LRFD [6.13.6.1.4a]**

For the Fatigue I load combination, the stress range at the mid-thickness of both flanges must be computed.

24.8.3.3 Design Flange Splice Plates

The next step is to design the flange splice plates. The width of the outside plate should be at least as wide as the width of the narrowest flange at the splice. The width of the inside plate must allow sufficient clearance for the web and for inserting and tightening the web and flange

splice bolts. Fill plates are used when the flange plate thickness changes at the splice location. A typical flange splice configuration is presented in Figure 24.8-1.

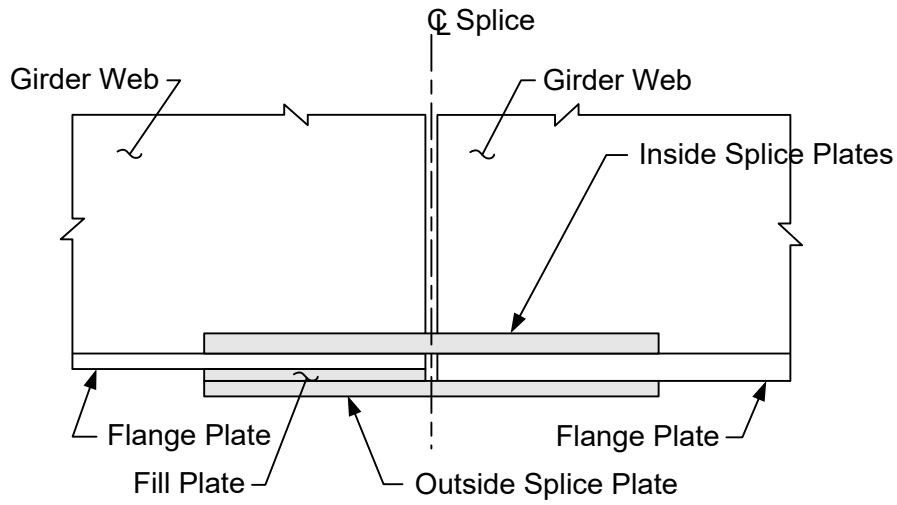

Figure 24.8-1
Bottom Flange Splice Configuration

If the combined area of the inside splice plates is within ten percent of the area of the outside splice plate, then both the inside and outside splice plates may be designed for one-half the flange design force, as described in **LRFD [C6.13.6.1.4c]**. However, if the areas of the inside and outside splice plates differ by more than ten percent, then the flange design force should be proportioned to the inside and outside splice plates. This is calculated by multiplying the flange design force by the ratio of the area of the splice plate under consideration to the total area of the inner and outer splice plates.

24.8.3.3.1 Yielding and Fracture of Splice Plates

The design force in the splice plates at the Strength I load combination shall not exceed the factored resistances for yielding and fracture, as described in **LRFD [6.13.5.2]** and **LRFD [6.8.2]**.

For a tension member, the net width shall be determined for each chain of holes extending across the member along any transverse, diagonal or zigzag line. This is determined by subtracting from the width of the element the sum of the width of all holes in the chain and adding the quantity $s^2/4g$ for each space between consecutive holes in the chain. For non-staggered holes, the minimum net width is the width of the element minus the width of bolt holes in a line straight across the width.

For a compression member, the gross area is used for these design checks.

24.8.3.3.2 Block Shear

All tension connections, including connection plates, splice plates and gusset plates, shall be investigated to ensure that adequate connection material is provided to develop the factored resistance of the connection. Block shear rupture resistance is described in **LRFD [6.13.4]**. A bolt pattern must be assumed prior to checking an assumed block shear failure mode.

Block shear rupture will usually not govern the design of splice plates of typical proportion.

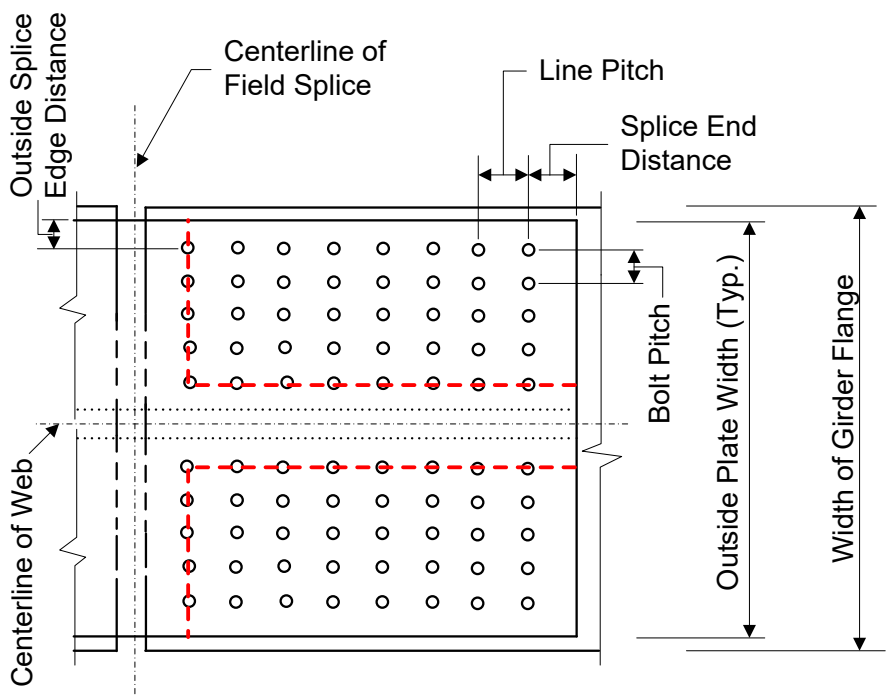

Figure 24.8-2
Double – L Block Shear Path, Flange and Splice Plates

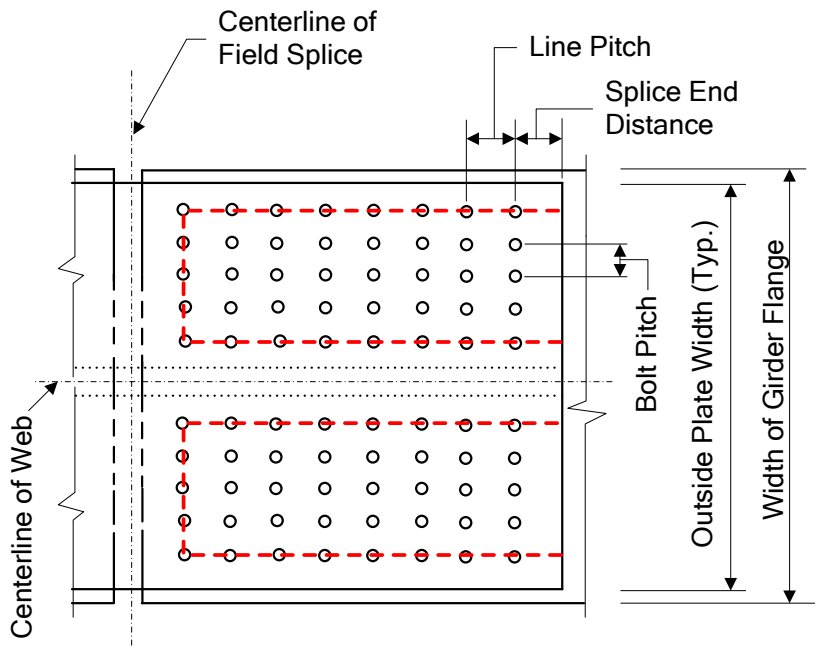

Figure 24.8-3
Double – U Block Shear Path, Flange and Splice Plates

24.8.3.3.3 Net Section Fracture

When checking flexural members at the Strength I load combination or for constructability, all cross sections containing holes in the tension flange must satisfy the fracture requirements of **LRFD [6.10.1.8]**.

24.8.3.3.4 Fatigue of Splice Plates

Check the fatigue stresses in the base metal of the flange splice plates adjacent to the slip-critical connections. Fatigue normally does not govern the design of the splice plates. However, a fatigue check of the splice plates is recommended whenever the area of the flange splice plates is less than the area of the smaller flange to which they are attached.

The fatigue detail category under the condition of Mechanically Fastened Connections for checking the base metal at the gross section of high-strength bolted slip-resistant connections is Category B.

24.8.3.3.5 Control of Permanent Deformation

A check of the flexural stresses in the splice plates at the Service II load combination is not explicitly specified in *AASHTO LRFD*. However, whenever the combined area of the inside and outside flange splice plates is less than the area of the smaller flange at the splice, such a check is recommended.

24.8.3.4 Design Flange Splice Bolts

After the flange splice plates have been designed, the flange splice bolts must be designed for shear, slip resistance, spacing, edge distance and bearing requirements.

24.8.3.4.1 Shear Resistance

Shear resistance computations for bolted connections are described in **LRFD [6.13.2.7]**. The first step is to determine the number of bolts for the flange splice plates that are required to develop the Strength I design force in the flange in shear, assuming the bolts in the connection have slipped and gone into bearing. A minimum of two rows of bolts should be provided to ensure proper alignment and stability of the girder during construction.

The factored resistance of the bolts in shear must be determined, assuming the threads are excluded from the shear planes. For the flange splice bolts, the number of bolts required to provide adequate shear strength is determined by assuming the design force acts on two shear planes, known as double shear.

Requirements for filler plates are presented in **LRFD [6.13.6.1.5]**. When bolts carrying loads pass through fillers 0.25 inches or more in thickness in axially loaded connections, including girder flange splices, either of the following is required:

- The fillers shall be extended beyond the gusset or splice material and shall be secured by enough additional bolts to distribute the total stress in the member uniformly over the combined section of the member and the filler.

- The fillers need not be extended and developed provided that the factored resistance of the bolts in shear at the Strength I load combination is reduced by the factor presented in **LRFD [6.13.6.1.5]**.

24.8.3.4.2 Slip Resistance

As specified in **LRFD [6.13.6.1.4c]**, bolted connections for flange splices shall be designed as slip-critical connections for the Service II flange design force or the flange design force from constructability, whichever governs. Slip resistance computations for bolted connections are described in **LRFD [6.13.2.8]**.

When checking for slip of the bolted connection for a flange splice with inner and outer splice plates, the slip resistance should always be determined by dividing the flange design force equally to the two slip planes, regardless of the ratio of the splice plate areas. Slip of the connection cannot occur unless slip occurs on both planes.

24.8.3.4.3 Bolt Spacing

The minimum spacing between centers of bolts in standard holes shall be no less than three times the diameter of the bolt.

The maximum spacing for sealing must be checked to prevent penetration of moisture in the joints, in accordance with **LRFD [6.13.2.6.2]**. Sealing must be checked for a single line adjacent to a free edge of an outside plate or shape (for example, when the bolts along the edges of the plate are parallel to the direction of the applied force) and along the free edge at the end of the splice plate.

24.8.3.4.4 Bolt Edge Distance

Edge distance requirements must be checked as specified in **LRFD [6.13.2.6.6]**. The minimum required edge distance is measured as the distance from the center of any bolt in a standard hole to an edge of the plate.

The maximum edge distance shall not be more than eight times the thickness of the thinnest outside plate or 5.0 inches.

24.8.3.4.5 Bearing at Bolt Holes

Finally, bearing at the bolt holes must be checked, as specified in **LRFD [6.13.2.9]**. The flange splice bolts are checked for bearing of the bolts on the connected material under the maximum Strength I design force. The design bearing strength of the connected material is calculated as the sum of the bearing strengths of the individual bolt holes parallel to the line of the applied force.

If the bearing resistance is exceeded, it is recommended that the edge distance be increased slightly, in lieu of increasing the number of bolts or thickening the flange splice plates.

24.8.3.5 Compute Web Splice Design Loads

The next step is to compute the web splice design loads for each of the following cases:

- Strength I load combination – Dead load + Positive live load
- Strength I load combination – Dead load + Negative live load
- Service II load combination – Dead load + Positive live load
- Service II load combination – Dead load + Negative live load
- Fatigue I load combination – Positive live load
- Fatigue I load combination – Negative live load

As specified in **LRFD [6.13.6.1.4b]**, web splice plates and their connections shall be designed for the following loads:

- Girder shear forces at the splice location
- Moment due to the eccentricity of the shear at the point of splice

- The portion of the flexural moment assumed to be resisted by the web at the point of the splice

24.8.3.5.1 Girder Shear Forces at the Splice Location

As previously described, any number of commercially available software programs can be used to obtain the design dead loads and live loads at the splice. The live loads must include dynamic load allowance and distribution factors.

24.8.3.5.2 Web Moments and Horizontal Force Resultant

Because the portion of the flexural moment assumed to be resisted by the web is to be applied at the mid-depth of the web, a horizontal design force resultant must also be applied at the mid-depth of the web to maintain equilibrium. The web moment and horizontal force resultant are applied together to yield a combined stress distribution equivalent to the unsymmetrical stress distribution in the web. For sections with equal compressive and tensile stresses at the top and bottom of the web (that is, with the neutral axis located at the mid-depth of the web), the horizontal design force resultant will equal zero.

In the computation of the portion of the flexural moment assumed to be resisted by the web and the horizontal design force resultant in the web, the flange stresses at the midthickness of the flanges can be conservatively used, as described in **LRFD [C6.13.6.1.4b]**. This allows use of the same stress values for both the flange and web splices, which simplifies the calculations.

The moment due to the eccentricity of the design shear is resisted solely by the web and always acts about the mid-depth of the web (that is, the horizontal force resultant is zero). This moment is computed as the design shear times the distance from the centerline of the splice to the centroid of the connection on the side of the joint under consideration.

The total web moment for each load case is computed as the sum of these two moments.

In general, the web splice is designed under the conservative assumption that the maximum moment and shear at the splice will occur under the same loading condition.

24.8.3.6 Design Web Splice Plates

After the web splice design forces are computed, the web splice must be designed. First, a preliminary web splice bolt pattern is determined. The outermost rows of bolts in the web splice plate must provide sufficient clearance from the flanges to provide clearance for assembly (see the *AISC Manual of Steel Construction* for required bolt assembly clearances). The web is spliced symmetrically by plates on each side with a thickness not less than one-half the thickness of the web. A typical web splice configuration is presented in Figure 24.8-4.

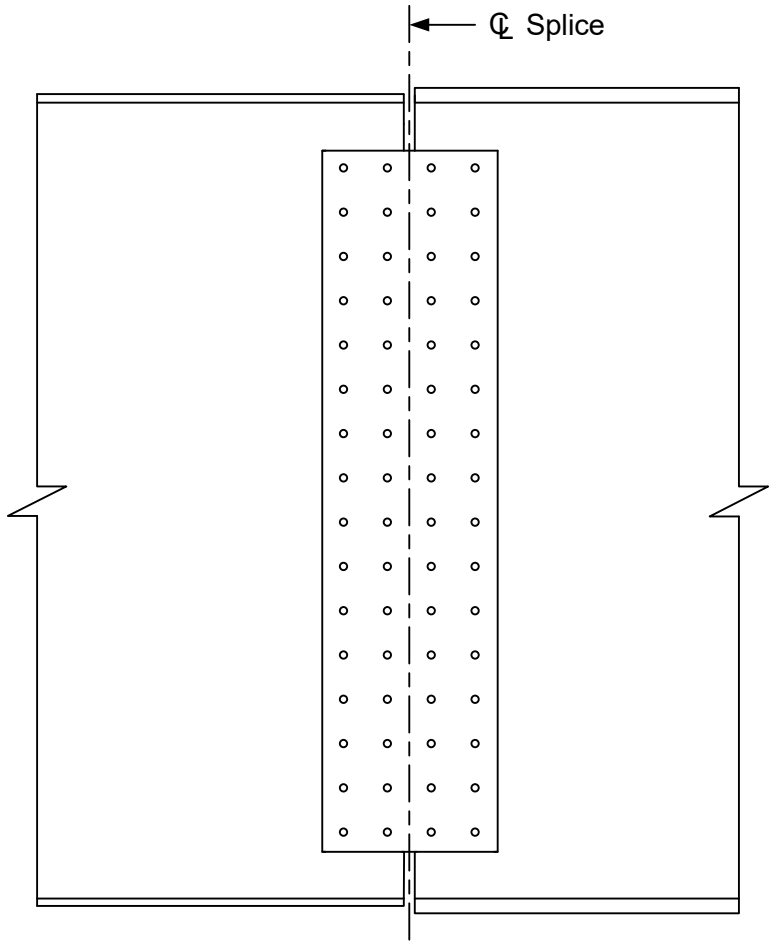

Figure 24.8-4
Web Splice Configuration

The web splice plates should be extended as near as practical the full depth of the web between flanges without impinging on bolt assembly clearances. Also, at least two vertical rows of bolts in the web on each side of the splice should be used. This may result in an over-designed web splice, but it is considered good engineering practice.

24.8.3.6.1 Shear Yielding of Splice Plates

Shear yielding on the gross section of the web splice plates must be checked under the Strength I design shear force, as specified in **LRFD [6.13.6.1.4b]**.

24.8.3.6.2 Fracture and Block Shear Rupture of the Web Splice Plates

Fracture must be investigated on the net section extending across the full plate width, in accordance with **LRFD [6.13.6.1.4b]**. In addition, block shear rupture resistance must be checked in accordance with **LRFD [6.13.4]**. Connection plates, splice plates and gusset plates shall be investigated to ensure that adequate connection material is provided to develop the

factored resistance of the connection. Strength I load combination checks for fracture on the net section of web splice plates and block shear rupture normally do not govern for plates of typical proportion.

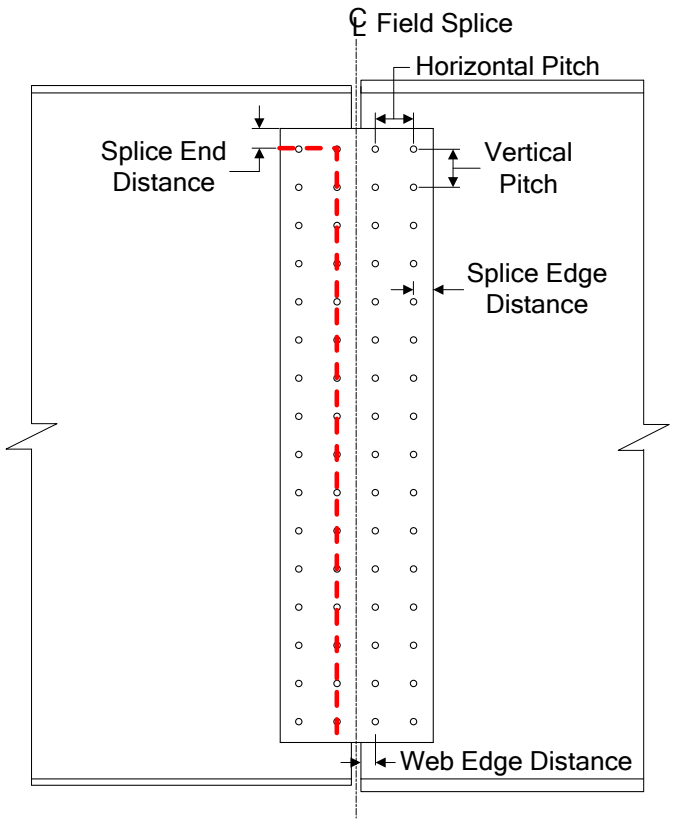

Figure 24.8-5
Block Shear Path, Web Splice

24.8.3.6.3 Flexural Yielding of Splice Plates

Flexural yielding on the gross section of the web splice plates must be checked for the Strength I load combination due to the total web moment and the horizontal force resultant. Flexural yielding must be checked for dead load and positive live load, as well as dead load and negative live load. Flexural yielding of splice plates is checked in accordance with **LRFD [6.13.6.1.4b]**.

24.8.3.6.4 Fatigue of Splice Plates

In addition, fatigue of the splice plates must be checked. Fatigue is checked at the edge of the splice plates which is subject to a net tensile stress. The normal stresses at the edge of the splice plates due to the total positive and negative fatigue load web moments and the corresponding horizontal force resultants are computed.

Check the fatigue stresses in the base metal of the web splice plates adjacent to the slip-critical connections. Fatigue normally does not govern the design of the splice plates. However, a fatigue check of the splice plates is recommended whenever the area of the web splice plates is less than the area of the web at the splice.

The fatigue detail category under the condition of Mechanically Fastened Connections for checking the base metal at the gross section of high-strength bolted slip-resistant connections is Category B.

WisDOT policy item:

For the Fatigue I load combination, the stress range at the mid-thickness of both flanges may be used when checking fatigue in the web.

24.8.3.7 Design Web Splice Bolts

Similar to the flange splice bolts, the web splice bolts must be designed for shear, slip resistance, spacing, edge distance and bearing requirements. These bolt requirements are described in 24.8.3.4.

24.8.3.7.1 Shear in Web Splice Bolts

Shear in the web splice bolts is checked in accordance with **LRFD [6.13.6.1.4b]**. The polar moment of inertia, I_p, of the bolt group on each side of the web centerline with respect to the centroid of the connection is computed as follows:

$$I_p = \frac{n \cdot m}{12} \cdot \left[s^2 \cdot \left(n^2 - 1\right) + g^2 \cdot \left(m^2 - 1\right)\right]$$

Where:

n	=	Number of bolts in each vertical row
m	=	Number of vertical rows of bolts
s	=	Vertical pitch of bolts (inches)
g	=	Horizontal pitch of bolts (inches)

The polar moment of inertia is required to determine the shear force in a given bolt due to the applied web moments. Shear in the web splice bolts is checked for each of the following cases:

- Strength I load combination – Dead load + Positive live load
- Strength I load combination – Dead load + Negative live load
- Service II load combination – Dead load + Positive live load

- Service II load combination – Dead load + Negative live load

Under the most critical combination of the design shear, moment and horizontal force, it is assumed that the bolts in the web splice have slipped and gone into bearing. The shear strength of the bolts are computed assuming double shear and assuming the threads are excluded from the shear planes.

Since the bolt shear strength for both the flange and web splices is based on the assumption that the threads are excluded from the shear planes, an appropriate note should be placed on the drawings to ensure that the splice is detailed to exclude the bolt threads from the shear planes.

24.8.3.7.2 Bearing Resistance at Bolt Holes

Bearing of the web splice bolts on the connected material must be checked for the Strength I load combination, assuming the bolts have slipped and gone into bearing, as specified in **LRFD [6.13.2.9]**. The design bearing strength of the girder web at the location of the extreme bolt in the splice is computed as the minimum resistance along the two orthogonal shear failure planes shown in Figure 24.8-6. The maximum force (vector resultant) acting on the extreme bolt is compared to this calculated strength, which is conservative since the components of this force parallel to the failure surfaces are smaller than the maximum force.

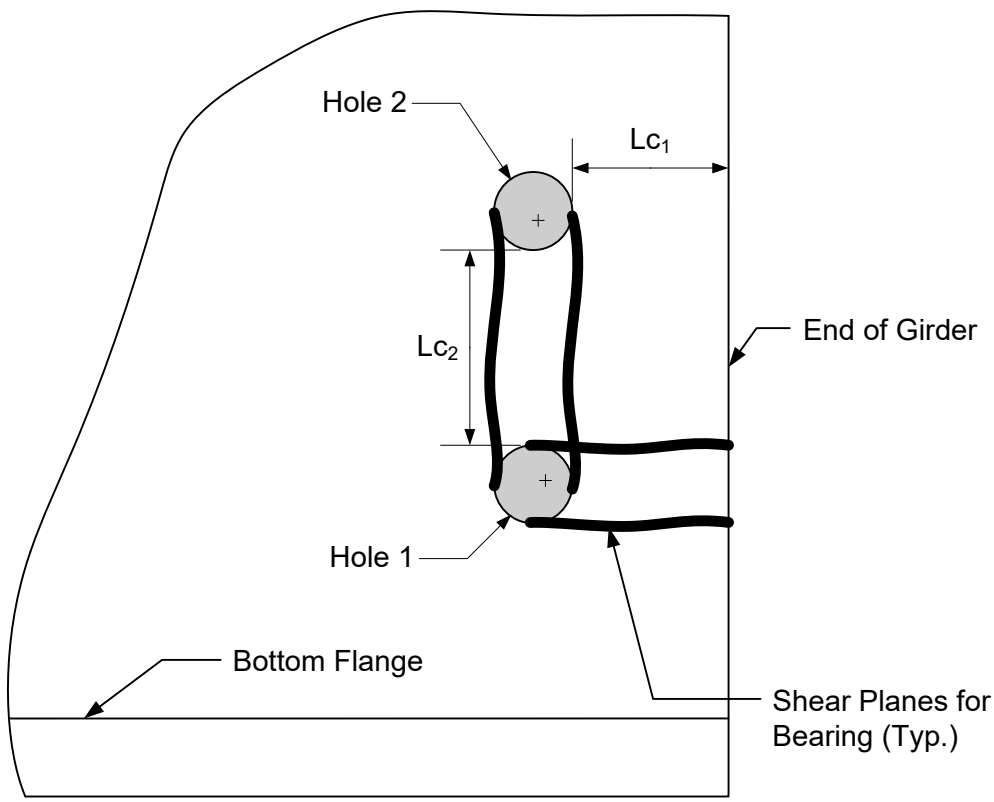

Figure 24.8-6
Bearing Resistance at Girder Web Bolt Holes

To determine the applicable equation for the calculation of the nominal bearing resistance, the clear distance between holes and the clear end distance must be calculated and compared to the value of two times the nominal diameter of the bolt. If the bearing resistance is exceeded, it is recommended that the edge distance be increased slightly, in lieu of increasing the number of bolts or thickening the web splice plates.

24.8.3.8 Schematic of Final Splice Configuration

After the flange splice plates, flange splice bolts, web splice plates and web splice bolts have been designed and detailed, a schematic of the final splice configuration can be developed. A sample schematic of a final splice configuration is presented in Figure 24.8-7.

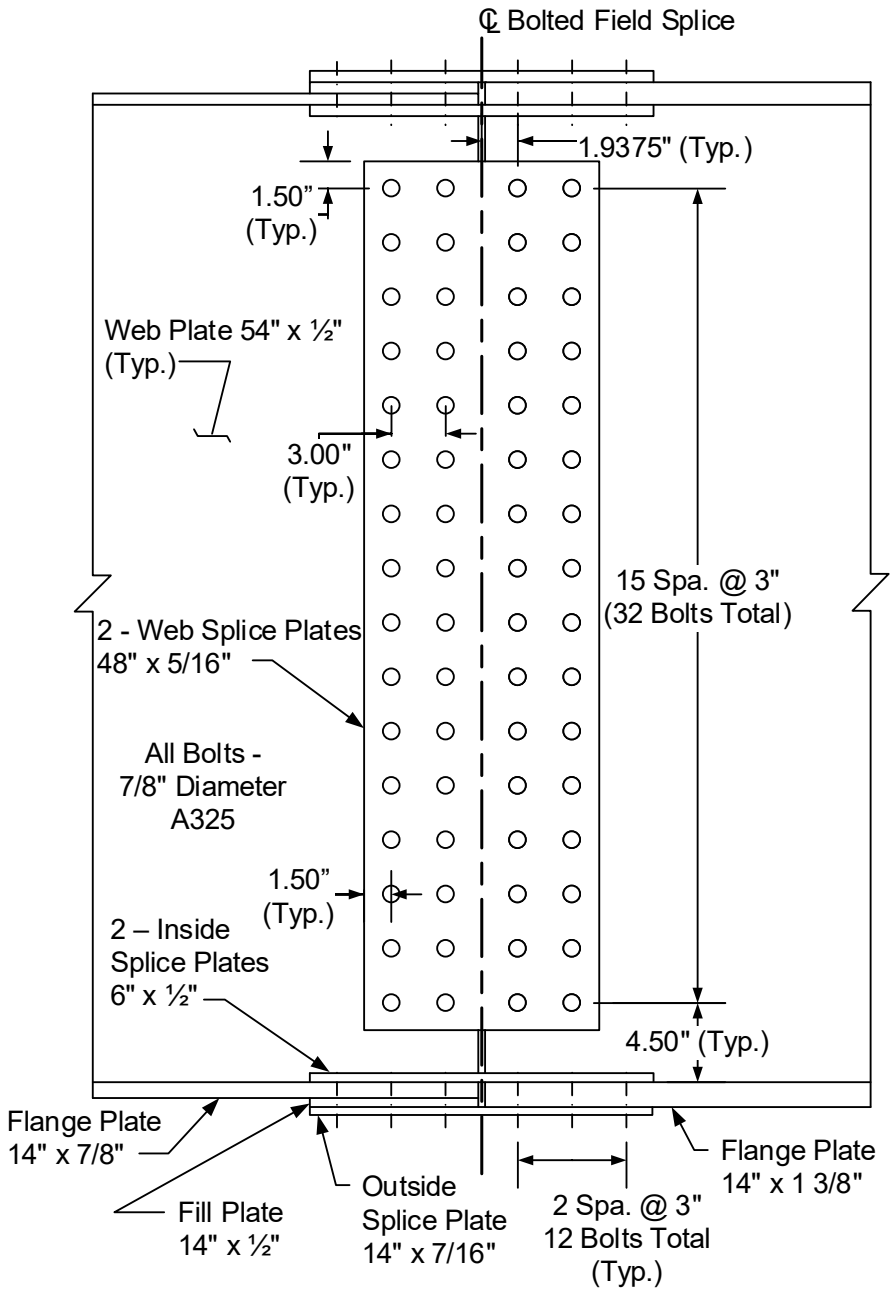

Figure 24.8-7
Sample Schematic of Final Splice Configuration

The schematic includes all plates, dimensions, bolt spacings, edge distances and bolt material and diameter.

A design example for field splices is provided in this *Bridge Manual*.

24.9 Bearing Stiffeners

For skew angles greater than 15°, bearing stiffeners are placed normal to the web of the girder. However, for skew angles of 15° or less, they may be placed parallel to the skew at the abutments and piers to support the end diaphragms or cross framing.

For structures on grades of 3 percent or greater, the end of the girder section at joints is to be cut vertical. This eliminates the large extension and clearance problems at the abutments.

24.9.1 Plate Girders

As specified in **LRFD [6.10.11.2.1]**, bearing stiffeners must be placed on the webs of built-up sections at all bearing locations. Bearing stiffeners are placed over the end bearings of welded plate girders and over the intermediate bearings of continuous welded plate girders. The bearing stiffeners extend as near as practical to the outer edges of the flange plate. They consist of two or more plates placed on both sides of the web. They are ground to a tight fit and fillet welded at the top flange, welded to the web on both sides with the required fillet weld and attached to the bottom flange with full penetration groove welds.

24.9.2 Rolled Beams

At bearing locations on rolled shapes and at other locations on built-up sections or rolled shapes subjected to concentrated loads, where the loads are not transmitted through a deck or deck system, either bearing stiffeners must be provided or else the web must satisfy the provisions of **LRFD [D6.5]** (Appendix D to Section 6). According to the provisions of **LRFD [D6.5]**, webs without bearing stiffeners at the indicated locations are to be investigated for the limit states of web local yielding and web crippling. The section must either be modified to comply with these requirements or else bearing stiffeners must be placed on the web at the locations under consideration.

24.9.3 Design

The design of bearing stiffeners is covered in **LRFD [6.10.11.2]**. Bearing stiffeners, which are aligned vertically on the web, are designed as columns to resist the reactions at bearing locations and at other locations subjected to concentrated loads where the loads are not transmitted through a deck or deck system.

24.9.3.1 Projecting Width

As specified in **LRFD [6.10.11.2.2]**, the projecting width, b_t, of each bearing stiffener element must satisfy the following requirement in order to prevent local buckling of the bearing stiffener plates:

$$b_t \leq 0.48 t_p \sqrt{\frac{E}{F_{ys}}}$$

Where:

t_p = Thickness of the projecting stiffener element (in.)

E = Modulus of elasticity of stiffener (ksi)

F_{ys} = Specified minimum yield strength of the stiffener (ksi)

The projecting width and thickness of the projecting stiffener element are illustrated in Figure 24.9-1.

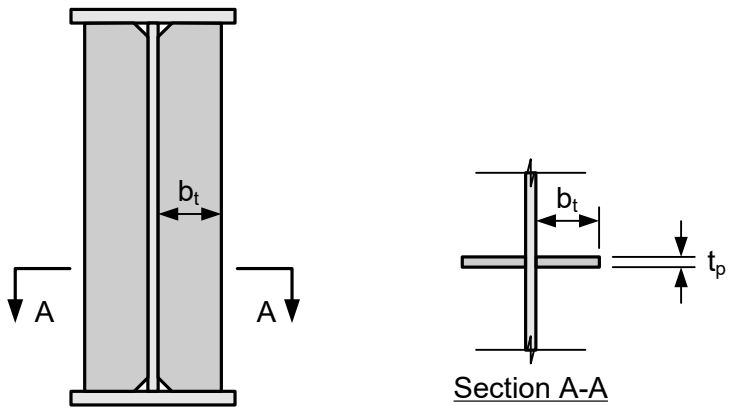

Figure 24.9-1
Projecting Width of a Bearing Stiffener

24.9.3.2 Bearing Resistance

Bearing stiffeners must be clipped to clear the web-to-flange fillet welds and to bring the stiffener plates tight against the flange through which they receive their load. As a result, the area of the plates in direct bearing on the flange is less than the gross area of the plates. As specified in **LRFD [6.10.11.2.3]**, the factored bearing resistance, $(R_{sb})_r$, of the fitted ends of bearing stiffeners is to be taken as:

$$(R_{sb})_r = \phi_b (R_{sb})_n$$

Where:

ϕ_b = Resistance factor for bearing on milled surfaces specified in **LRFD [6.5.4.2]** (= 1.0)

$(R_{sb})_n$ = Nominal bearing resistance for the fitted ends of bearing stiffeners (kips) = 1.4 $A_{pn}F_{ys}$ (**LRFD [6.10.11.2.3-2]**)

A_{pn} = Area of the projecting elements of the stiffener outside of the web-to-flange fillet welds but not beyond the edge of the flange (in^2)

F_{ys} = Specified minimum yield strength of the stiffener (ksi)

24.9.3.3 Axial Resistance

As previously mentioned, bearing stiffeners are designed as columns. As specified in **LRFD [6.10.11.2.4a]**, the factored axial resistance of the stiffeners, P_r, is to be determined as specified in **LRFD [6.9.2.1]** using the specified minimum yield strength of the stiffener plates, F_{ys}, in order to account for the effect of any early yielding of lower strength stiffener plates. The factored resistance of components in axial compression is given in **LRFD [6.9.2.1]** as:

$$P_r = \phi_c P_n$$

Where:

ϕ_c = Resistance factor for axial compression specified in **LRFD [6.5.4.2]** (= 0.90)

P_n = Nominal compressive resistance specified in **LRFD [6.9.4.1]** (kips)

For bearing stiffeners, the nominal compressive resistance, P_n, is computed as follows, based on **LRFD [6.9.4.1]**:

If $\lambda \leq 2.25$, then: $P_n = 0.66^{\lambda} F_{ys} A_s$

If $\lambda > 2.25$, then: $P_n = \dfrac{0.88 F_{ys} A_s}{\lambda}$

Where:

$$\lambda = \left(\frac{K\ell}{r_s \pi}\right)\frac{F_{ys}}{E}$$

F_{ys} = Specified minimum yield strength of the stiffener (ksi)

A_s = Area of effective column section of the bearing stiffeners (see below) (in.^{2})

$K\ell$ = Effective length of the effective column taken as 0.75D, where D is the web depth (refer to **LRFD [6.10.11.2.4a]**) (in.)

r_s = Radius of gyration of the effective column about the plane of buckling computed about the mid-thickness of the web (refer to **LRFD [6.10.11.2.4a]**) (in.)

24.9.3.4 Effective Column Section

The effective column section of the bearing stiffeners is defined in **LRFD [6.10.11.2.4b]**. For stiffeners bolted to the web, the effective column section is to consist of only the stiffener

elements. For stiffeners consisting of two plates welded to the web, the effective column section is to consist of the two stiffener plates, plus a centrally located strip of web extending not more than $9t_w$ on each side of the stiffeners, as illustrated in Figure 24.9-2.

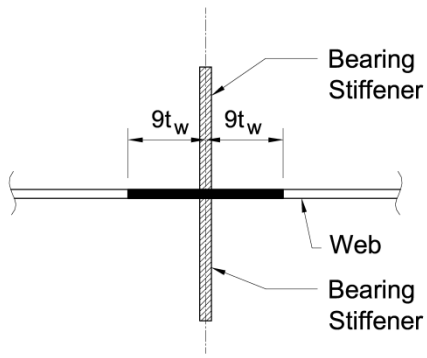

Figure 24.9-2
Effective Column Section for Welded Bearing Stiffener Design (One Pair of Stiffeners)

If more than one pair of stiffeners is used, the effective column section is to consist of all the stiffener plates, plus a centrally located strip of web extending not more than $9t_w$ on each side of the outer projecting elements of the group.

Additional information and equations used for LRFD design of bearing stiffeners are presented in **LRFD [6.10.11.2]**. In addition, a design example for bearing stiffeners is also provided in this *Bridge Manual*.

24.10 Transverse Intermediate Stiffeners

The design of transverse web stiffeners is specified in **LRFD [6.10.11.1]**. Transverse stiffeners are used to increase the shear resistance of a girder and are aligned vertically on the web.

The term connection plate is given to a transverse stiffener to which a cross-frame or diaphragm is connected. A connection plate can serve as a transverse stiffener for shear design calculations.

As specified in **LRFD [6.10.11.1.1]**, stiffeners used as connection plates must be attached to both flanges. According to **LRFD [6.6.1.3.1]**, attachment of the connection plate to the flanges must be made by welding or bolting. When the diaphragms are connected to the transverse intermediate stiffeners, the stiffeners are welded to both the tension and compression flanges. Flange stresses are usually less than the Category C allowable fatigue stresses produced by this detail which the designer should verify.

Stiffeners in straight girders not used as connection plates are to be welded to the compression flange and tight fit to the tension flange. A tight fit can help straighten the flange tilt without the application of heat. According to **LRFD [6.10.11.1.1]**, single-sided stiffeners on horizontally curved girders should be attached to both flanges to help retain the cross-sectional shape of the girder when subjected to torsion and to avoid high localized bending within the web, particularly near the top flange due to the torsional restraint of the concrete deck. For the same reason, it is required that pairs of transverse stiffeners on horizontally curved girders be tight fit or attached to both flanges.

Indicate on the plans the flange to which stiffeners are welded. The stiffeners are attached to the web with a continuous fillet weld. The dead load moment diagram is used to define the compression flange.

In the fabrication of tub sections, webs are often joined to top flanges and the connection plates and transverse stiffeners (not serving as connection plates) are installed, and then these assemblies are attached to a common box flange. The details in this case must allow the welding head to clear the bottom of the connection plates and stiffeners so the webs can be welded continuously to the box flange inside the tub section. A detail must also be provided to permit the subsequent attachment of the connection plates to the box flange (and any other transverse stiffeners that are to be attached to the box flange).

In Wisconsin, if longitudinal stiffeners are required, the transverse stiffeners are placed on one side of the web of the interior member and the longitudinal stiffener on the opposite side of the web. Place intermediate stiffeners on one side of interior members when longitudinal stiffeners are not required. Transverse stiffeners are placed on the inside web face of exterior members. If longitudinal stiffeners are required, they are placed on the outside web face of exterior members as shown on Standard for Plate Girder Details.

Transverse stiffeners can be eliminated by increasing the thickness of the web. On plate girders under 50" in depth, consider thickening the web to eliminate all transverse stiffeners. Within the constant depth portion of haunched plate girders over 50" deep, consider thickening the web to eliminate the longitudinal stiffener and most, but likely not all, of the transverse stiffeners within the span. The minimum size of transverse stiffeners is 5 x ½".

Transverse stiffeners are placed on the inside face of all exterior girders where the slab overhang exceeds 1'-6" as shown on Standard for Plate Girder Details. The stiffeners are to prevent web bending caused by construction of the deck slab where triangular overhang brackets are used to support the falsework.

If slab overhang is allowed to exceed the recommended 3'-7" on exterior girders, the web and stiffeners should be analyzed to resist the additional bending during construction of the deck. Overhang construction brackets may overstress the stiffeners. It may also be necessary to provide longitudinal bracing between stiffeners to prevent localized web deformations which did occur on a structure having 5' overhangs.

24.10.1 Proportions

As specified in **LRFD [6.10.11.1.2]**, the width, b_t, of each projecting transverse stiffener element must satisfy requirements related to the web depth, the flange width and the thickness of the projecting stiffener elements. The width, b_t, is illustrated in Figure 24.10-1.

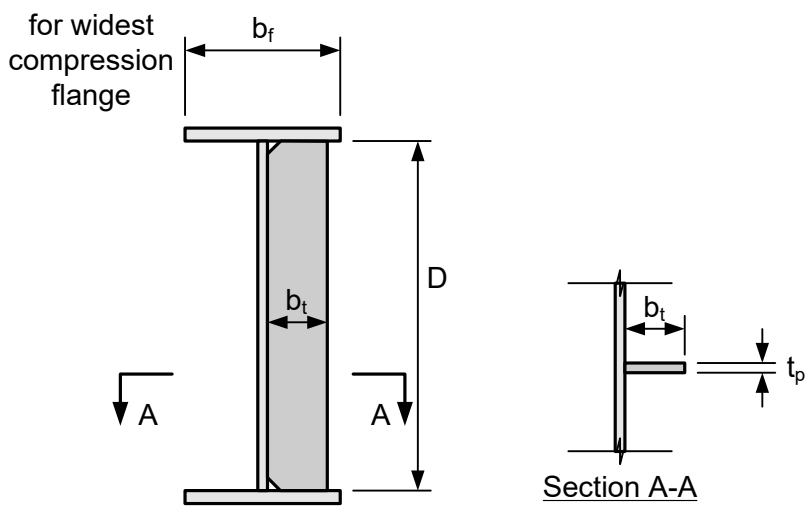

Figure 24.10-1
Projecting Width of Transverse Stiffeners

Fabricators generally prefer a ½" minimum thickness for stiffeners and connection plates.

24.10.2 Moment of Inertia

For the web to adequately develop the shear-buckling resistance, or the combined shear-buckling and post-buckling tension-field resistance, the transverse stiffener must have sufficient rigidity to maintain a vertical line of near zero lateral deflection of the web along the line of the stiffener. Therefore, the bending rigidity (or moment of inertia) is the dominant parameter governing the performance of transverse stiffeners.

As specified in **LRFD [6.10.11.1.3]**, for transverse stiffeners adjacent to web panels in which neither panel supports shear forces larger than the shear-buckling resistance, the moment of inertia of the transverse stiffener, I_t, must satisfy the smaller of the following two equations:

$$I_t \geq bt_w^3 J$$

and

$$I_t \geq \frac{D^4 \rho_t^{1.3}}{40}\left(\frac{F_{yw}}{E}\right)^{1.5}$$

Where:

I_t	=	Moment of inertia of the transverse stiffener taken about the edge in contact with the web for single stiffeners and about the mid-thickness of the web for stiffener pairs (in.^{4})
B	=	Smaller of d_o and D (in.)
d_o	=	Smaller of the adjacent panel widths (in.)
D	=	Web depth (in.)
t_w	=	Web thickness (in.)
J	=	Stiffener bending rigidity parameter taken as follows:

$$J = \frac{2.5}{\left(d_o/D\right)^2} - 2.0 \geq 0.5$$

ρ_t	=	Larger of F_{yw}/F_{crs} and 1.0
F_{yw}	=	Specified minimum yield strength of the web (ksi)
F_{crs}	=	Local buckling stress for the stiffener (ksi) taken as follows:

$$Fcrs = \frac{0.31E}{\left(b_t/t_p\right)^2} \leq F_{ys}$$

F_{ys}	=	Specified minimum yield strength of the stiffener (ksi)
b_t	=	Projecting width of the stiffener (in.)

t_p = Thickness of the projecting stiffener element (in.)

If the shear force in one of both panels is such that the web post-buckling or tension-field resistance is required, the moment of inertia of the transverse stiffener need only satisfy the second equation presented above.

For single-sided stiffeners, a significant portion of the web is implicitly assumed to contribute to the bending rigidity so that the neutral axis of the stiffener is assumed to be located close to the edge in contact with the web. Therefore, for this case, the moment of inertia is taken about this edge and the contribution of the web to the moment of inertia about the neutral axis is neglected for simplicity.

Transverse stiffeners used in panels with longitudinal web stiffeners must also satisfy the following relationship:

$$I_t \geq \left(\frac{b_t}{b_\ell}\right)\left(\frac{D}{3d_o}\right)I_\ell$$

Where:

I_t = Moment of inertia of the transverse web stiffener taken about the edge in contact with the web for single stiffeners and about the mid-thickness of the web for stiffener pairs (in.^{4})

b_t = Projecting width of the transverse stiffener (in.)

b_ℓ = Projecting width of the longitudinal stiffener (in.)

D = Web depth (in.)

d_o = Smaller of the adjacent web panel widths (in.)

I_ℓ = Moment of inertia of the longitudinal stiffener determined as specified in **LRFD [6.10.11.3.3]** (in.^{4})

Additional information and equations used for LRFD design of transverse intermediate stiffeners are presented in **LRFD [6.10.11.1]**. In addition, a design example for transverse intermediate stiffeners is also provided in this *Bridge Manual*.

24.11 Longitudinal Stiffeners

The design of longitudinal web stiffeners is specified in **LRFD [6.10.11.3]**. Longitudinal stiffeners are aligned horizontally on the web along the length of the girder and divide the web panel into smaller sub-panels. As specified in **LRFD [6.10.2.1]**, longitudinal stiffeners are required whenever the web slenderness D/t_w exceeds 150. They are used to provide additional bend-buckling resistance to the webs of deeper girders. Longitudinal stiffeners, where required, are to consist of a plate welded to one side of the web or a bolted angle.

As specified in **LRFD [6.10.11.3.1]**, longitudinal stiffeners are to be located vertically on the web such that adequate web bend-buckling resistance is provided for constructability and at the service limit state. It also must be verified that the section has adequate nominal flexural resistance at the strength limit state with the longitudinal stiffener in the selected position.

At composite sections in negative flexure and non-composite sections, it is recommended that the longitudinal stiffener initially be located at $0.4D_c$ from the inner surface of the compression flange. For composite sections in negative flexure, D_c would be conservatively calculated for the section consisting of the steel girder plus the longitudinal reinforcement. For non-composite sections, D_c would be based on the section consisting of the steel girder alone. As a preliminary approximation, a distance of 1/5 of the depth of the web may be used as the distance from the longitudinal stiffener to the inner surface of the compression flange.

On the exterior members, the longitudinal stiffeners are placed on the outside face of the web as shown on Standard for Plate Girder Details. If the longitudinal stiffener is required throughout the length of span on an interior member, the longitudinal stiffener is placed on one side of the web and the transverse stiffeners on the opposite side of the web. Longitudinal stiffeners are normally used in the haunch area of long spans and on a selected basis in the uniform depth section.

Where longitudinal stiffeners are used, place intermediate transverse stiffeners next to the web splice plates at a field splice. The purpose of these stiffeners is to prevent web buckling before the girders are erected and spliced.

In some cases, particularly in regions of stress reversal, it may be necessary or desirable to use two longitudinal stiffeners on the web. It is possible to have an overlap of longitudinal stiffeners near the top flange and near the bottom flange due to the variation between maximum positive and maximum negative moment.

It is preferred that longitudinal stiffeners be placed on the opposite side of the web from transverse stiffeners. At bearing stiffeners and connection plates where the longitudinal stiffener and transverse web element must intersect, a decision must be made as to which element to interrupt. According to **LRFD [6.10.11.3.1]**, wherever practical, longitudinal stiffeners are to extend uninterrupted over their specified length, unless otherwise permitted in the contract documents, since longitudinal stiffeners are designed as continuous members to improve the web bend buckling resistance. In such cases, the interrupted transverse elements must be fitted and attached to both sides of the longitudinal stiffener with connections sufficient to develop the flexural and axial resistance of the transverse element. If the longitudinal stiffener is interrupted instead, it should be similarly attached to all transverse elements. All interruptions must be carefully designed with respect to fatigue, especially if the longitudinal

stiffener is not attached to the transverse web elements, as a Category E or E′ detail may exist at the termination points of each longitudinal stiffener-to-web weld. Copes should always be provided to avoid intersecting welds.

Longitudinal stiffeners are subject to the same flexural strain as the web at their vertical position on the web. As a result, the stiffeners must have sufficient strength and rigidity to resist bend buckling of the web (at the appropriate limit state) and to transmit the stresses in the stiffener and an effective portion of the web as an equivalent column. Therefore, as specified in **LRFD [6.10.11.3.1]**, the flexural stress in the longitudinal stiffener due to the factored loads, f_s, must satisfy the following at the strength limit state and when checking constructability:

$$f_s \leq \phi_f R_h F_{ys}$$

Where:

ϕ_f	=	Resistance factor for flexure specified in **LRFD [6.5.4.2]** (= 1.0)
R_h	=	Hybrid factor specified in **LRFD [6.10.1.10.1]**
F_{ys}	=	Specified minimum yield strength of the longitudinal stiffener (ksi)

24.11.1 Projecting Width

As specified in **LRFD [6.10.11.3.2]**, the projecting width, b_ℓ, of the longitudinal stiffener must satisfy the following requirement in order to prevent local buckling of the stiffener plate:

$$b_\ell \leq 0.48 t_s \sqrt{\frac{E}{F_{ys}}}$$

Where:

t_s	=	Thickness of the longitudinal stiffener (in.)
F_{ys}	=	Specified minimum yield strength of the stiffener (ksi)

24.11.2 Moment of Inertia

As specified in **LRFD [6.10.11.3.3]**, to ensure that a longitudinal stiffener will have adequate rigidity to maintain a horizontal line of near zero lateral deflection in the web to resist bend buckling of the web (at the appropriate limit state), the moment of inertia of the stiffener acting in combination with an adjacent strip of web must satisfy the following requirement:

$$I_\ell \geq D t_w^3 \left[2.4 \left(\frac{d_o}{D} \right)^2 - 0.13 \right] \beta$$

Where:

I_ℓ	=	Moment of inertia of the longitudinal stiffener including an effective width of the web equal to $18t_w$ taken about the neutral axis of the combined section (in.^{4}). If F_{yw} is smaller than F_{ys}, the strip of web included in the effective section must be reduced by the ratio of F_{yw}/F_{ys}.
D	=	Web depth (in.)
t_w	=	Web thickness (in.)
d_o	=	Transverse stiffener spacing (in.)
β	=	Curvature correction factor for longitudinal stiffener rigidity (equal to 1.0 for longitudinal stiffeners on straight webs)

Longitudinal stiffeners on horizontally curved webs require greater rigidity than on straight webs because of the tendency of curved webs to bow. This is reflected by including the factor β in the above equation, which is a simplification of a requirement for longitudinal stiffeners on curved webs. For longitudinal stiffeners on straight webs, β equals 1.0.

The moment of inertia (and radius of gyration) of the longitudinal stiffener is taken about the neutral axis of an equivalent column cross section consisting of the stiffener and an adjacent strip of web with a width of $18t_w$.

24.11.3 Radius of Gyration

As specified in **LRFD [6.10.11.3.3]**, to ensure that the longitudinal stiffener acting in combination with an adjacent strip of web as an effective column section can withstand the axial compressive stress without lateral buckling, the radius of gyration, r, of the effective column section must satisfy the following requirement:

$$r \geq \frac{0.16 d_o \sqrt{\frac{F_{ys}}{E}}}{\sqrt{1 - 0.6 \frac{F_{yc}}{R_h F_{ys}}}}$$

Where:

r	=	Radius of gyration of the longitudinal stiffener including an effective width of the web equal to $18t_w$ taken about the neutral axis of the combined section (in.)
d_o	=	Transverse stiffener spacing (in.)
F_{ys}	=	Specified minimum yield strength of the longitudinal stiffener (ksi)

F_{yc} = Specified minimum yield strength of the compression flange (ksi)

R_h = Hybrid factor determined as specified in **LRFD [6.10.1.10.1]**

Additional information and equations used for LRFD design of longitudinal stiffeners are presented in **LRFD [6.10.11.3]**.

24.12 Construction

When the deck slab is poured, the exterior girder tends to rotate between the diaphragms. This problem may result if the slab overhang is greater than recommended and/or if the girders are relatively shallow in depth. This rotation causes the rail supporting the finishing machine to deflect downward and changes the roadway grade unless the contractor provides adequate lateral timber bracing.

Stay-in-place steel forms are not recommended for use. Steel forms have collected water that permeates through the slab and discharges across the top flanges of the girders. As a result, flanges frequently corrode. Since there are cracks in the slab, this is a continuous problem.

Where built-up box sections are used, full penetration welds provide a stronger joint than fillet welds and give a more aesthetically pleasing appearance. However, they are also more costly.

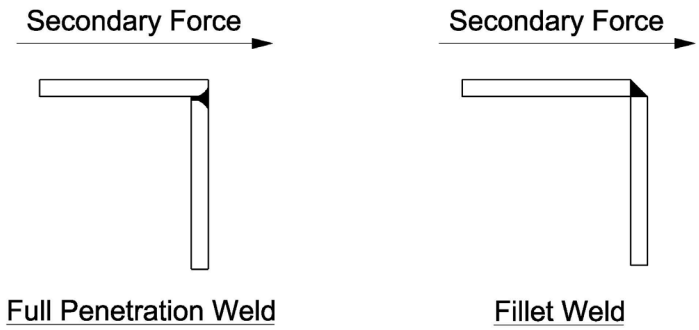

Figure 24.12-1
Welds for Built-up Box Sections

The primary force of the member is tension or compression along the axis of the member. The secondary force is a torsional force on the member cross section which produces a shearing force across the weld.

During construction, holes may be drilled in the top flanges in the compression zone to facilitate anchorage of posts for safety lines. The maximum hole size is 3/4" diameter, and prior to pouring the concrete deck, a bolt must be placed in each hole.

LRFD [6.10.3] describes the constructability design requirements for a steel girder bridge. Provisions are provided for the following constructability checks:

- Nominal yielding
- Reliance on post-buckling resistance
- Potential uplift at bearings
- Webs without bearings stiffeners
- Holes in tension flanges

- Load-resisting bolted connections
- Flexure in discretely braced flanges
- Flexure in continuously braced flanges
- Shear in interior panels of webs with transverse stiffeners
- Dead load deflections

24.12.1 Web Buckling

The buckling behavior of a slender web plate subject to pure bending is similar to the buckling behavior of a flat plate. Through experimental tests, it has been observed that web bend-buckling behavior is essentially a load-deflection rather than a bifurcation phenomenon; that is, a distinct buckling load is not observed.

Since web plates in bending do not collapse when the theoretical buckling load is reached, the available post-buckling strength can be considered in determining the nominal flexural resistance of sections with slender webs at the strength limit state. However, during the construction condition, it is desirable to limit the bending deformations and transverse displacements of the web.

The advent of composite design has led to a significant reduction in the size of compression flanges in regions of positive flexure. As a result, more than half of the web of the non-composite section will be in compression in these regions during the construction condition before the concrete deck has hardened or is made composite. As a result, the web is more susceptible to bend-buckling in this condition.

To control the web plate bending strains and transverse displacements during construction, *AASHTO LRFD* uses the theoretical web bend-buckling load as a simple index. The web bend-buckling resistance, F_{crw}, is specified in **LRFD [6.10.1.9.1]** as follows:

$$Fcrw = \frac{0.9Ek}{\left(D/t_w\right)^2}$$

Where:

E	=	Modulus of elasticity of the steel (ksi)
K	=	Bend-buckling coefficient (see below)
D	=	Depth of web (in.)
t_w	=	Thickness of web (in.)

For webs without longitudinal stiffeners, the bend-buckling coefficient, k, is as follows:

$$k = \frac{9}{(D_c/D)^2}$$

Where:

D_c = Depth of web in compression in the elastic range (in.)

F_{crw} is not to exceed the smaller of R_hF_{yc} and $F_{yw}/0.7$, where F_{yc} and F_{yw} are the specified minimum yield strengths of the compression flange and web, respectively, and R_h is the hybrid factor.

According to **LRFD [6.10.3.2]**, the maximum compression-flange stress in a non-composite I-section due to the factored loads, calculated without consideration of flange lateral bending, must not exceed the resistance factor for flexure, ϕ_f, times F_{crw} for all critical stages of construction. This requirement also applies at sections where top flanges of tub girders are subject to compression during construction. For closed-box sections, **LRFD [6.11.3.2]** states that the maximum longitudinal flange stress due to the factored loads, calculated without consideration of longitudinal warping, must not exceed ϕ_fF_{crw} at sections where non-composite box flanges are subject to compression during construction. (A box flange is defined in *AASHTO LRFD* as a flange connected to two webs.) For tub or closed-box sections with inclined webs, D_c should be taken as the depth of the web in compression measured along the slope (that is, D_c divided by the cosine of the angle of inclination of the web plate with respect to the vertical) when computing F_{crw}. Should F_{crw} be exceeded for the construction condition, the engineer has several options to consider:

- Provide a larger compression flange or a smaller tension flange to reduce D_c.
- Adjust the deck-placement sequence to reduce the compressive stress in the web.
- Provide a thicker web.
- As a last resort, should the previous options not prove practical or cost-effective, provide a longitudinal web stiffener.

24.12.2 Deck Placement Analysis

Depending on the length of the bridge, the construction of the deck may require placement in sequential stages. Therefore, certain sections of the steel girders will become composite before other sections. If certain placement sequences are followed, temporary moments induced in the girders during the deck placement can be significantly higher than the final non-composite dead load moments after the sequential placement is complete.

Therefore, **LRFD [6.10.3.4]** requires that sections in positive flexure that are non-composite during construction but composite in the final condition must be investigated for flexure according to the provisions of **LRFD [6.10.3.2]** during the various stages of the deck

placement. Furthermore, changes in the load, stiffness and bracing during the various stages are to be considered in the analysis.

Example:

Consider the sample deck placement shown in Figure 24.12-2 for a three-span continuous bridge. The deck placement sequence is based on Standard for Slab Pouring Sequence.

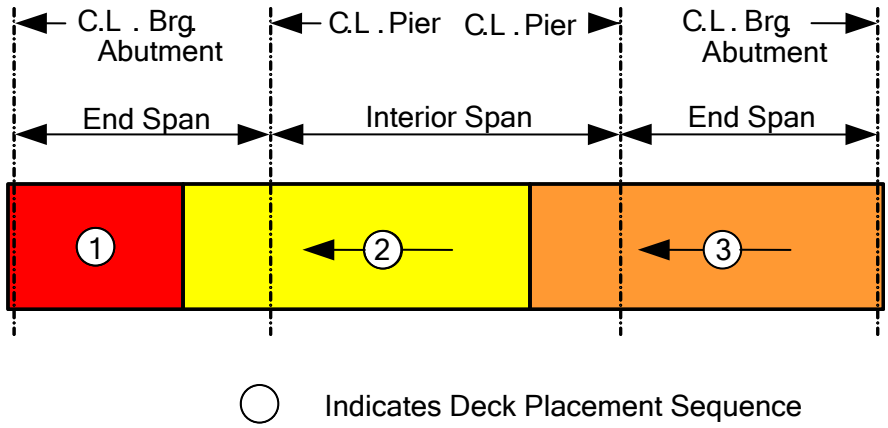

Figure 24.12-2
Deck Placement Sequence

Figure 24.12-3 through Figure 24.12-6 show elevation views of a girder which will be used to show the results for each stage of the deck placement sequence assumed for this example in Figure 24.12-2. In Figure 24.12-3, the girders are in place but no deck concrete has yet been placed. The entire girder length is non-composite at this stage. Before the deck is placed, the non-composite girder must resist the moments due to the girder self-weight and any additional miscellaneous steel weight. The moments due to these effects are shown at Location A, which is the location of maximum positive moment in the first end span.

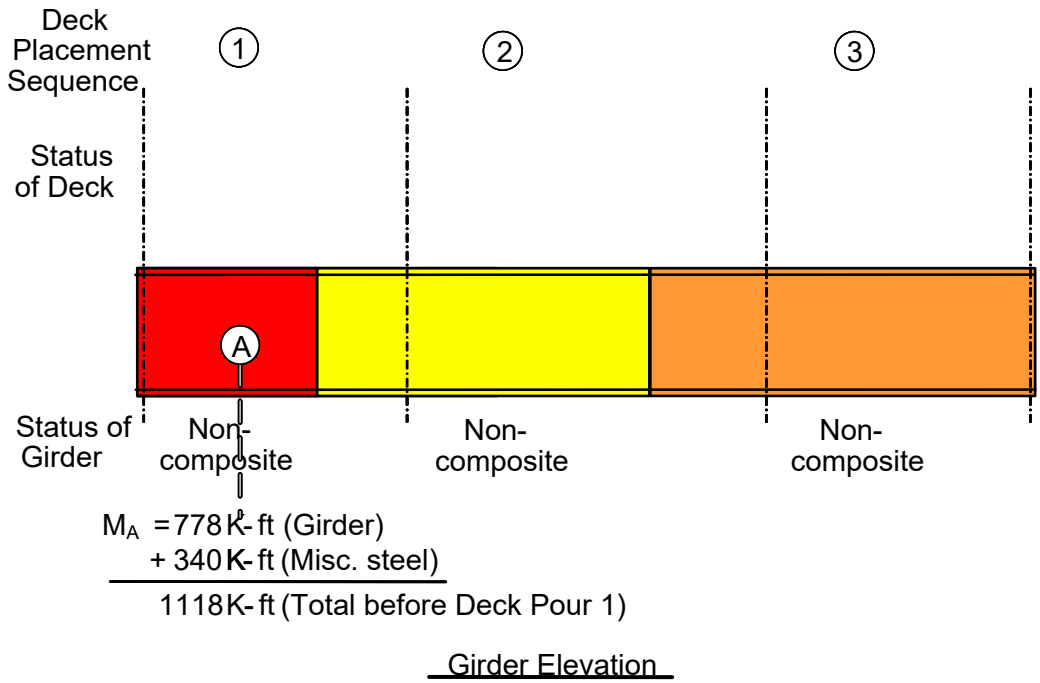

Figure 24.12-3
Girder Elevation View

Figure 24.12-4 shows the first deck placement (Cast 1), which is cast in the first portion of the first span. The moment due to the wet concrete load, which consists of the weight of the deck and deck haunches, is added to the moments due to the girder self-weight and miscellaneous steel weight. Since the concrete in this first placement has not yet hardened, the moment due to the first deck placement is resisted by the non-composite girder. The cumulative positive moment in the girder at Location A after the first deck placement is +3,565 kip-ft, which is the maximum positive moment this section will experience during the assumed placement sequence. This moment is larger than the moment of +3,542 kip-ft that would be computed at this location assuming a simultaneous placement of the entire deck (that is, ignoring the sequential stages).

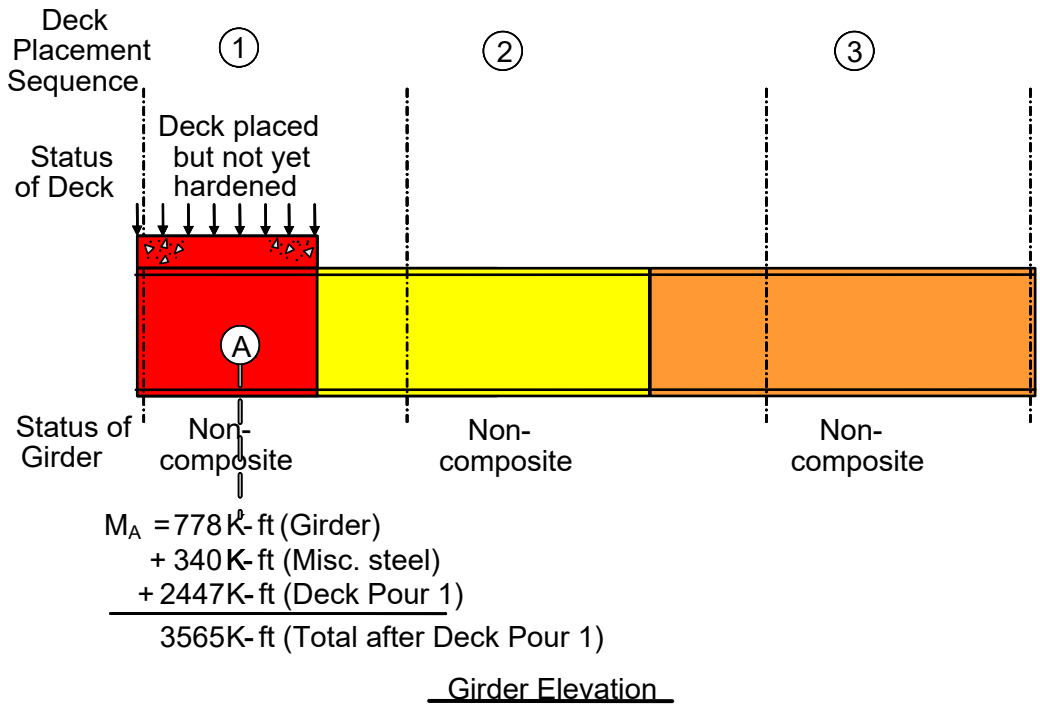

Figure 24.12-4
Deck Placement Analysis 1

The next deck placement (Cast 2) is located immediately adjacent to Cast 1, as shown in Figure 24.12-5. The concrete in the first placement is now assumed to be hardened so that those portions of the girder are now composite. Therefore, as required in **LRFD [6.10.3.4]**, those portions of the girder are assumed composite in the analysis for this particular deck placement. The remainder of the girder is non-composite. Since the deck casts are relatively short-term loadings, the short-term modular ratio, n, is used to compute the composite stiffness. The previous casts are assumed to be fully hardened in this case, but adjustments to the composite stiffness to reflect the actual strength of the concrete in the previous casts at the time of this particular placement could be made, if desired. The cumulative moment at Location A has decreased from +3,565 kip-ft after Cast 1 to +3,449 kip-ft after Cast 2, because the placement in Cast 2 causes a negative moment in the end spans.

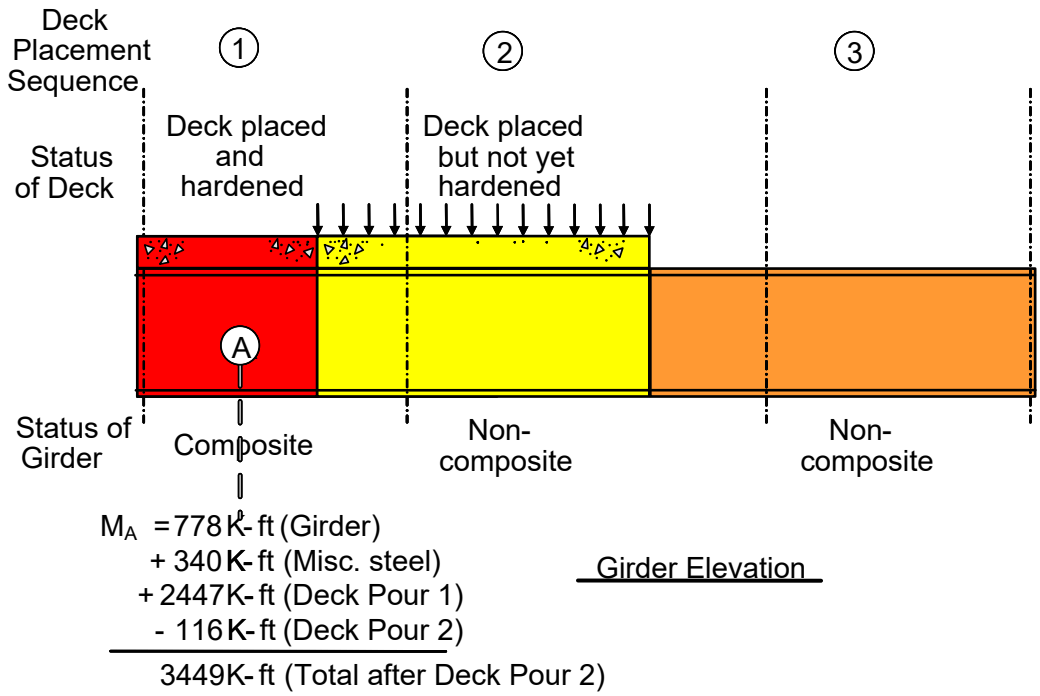

Figure 24.12-5
Deck Placement Analysis 2

The last deck placement (Cast 3) is located immediately adjacent to Cast 2, as presented in Figure 24.12-6. Again, the concrete in Casts 1 and 2 is assumed to be fully hardened in the analysis for Cast 3. The cumulative moment at Location A has increased slightly from +3,449 kip-ft to +3,551 kip-ft, which is less than the moment of +3,565 kip-ft experienced at Location A after Cast 1.

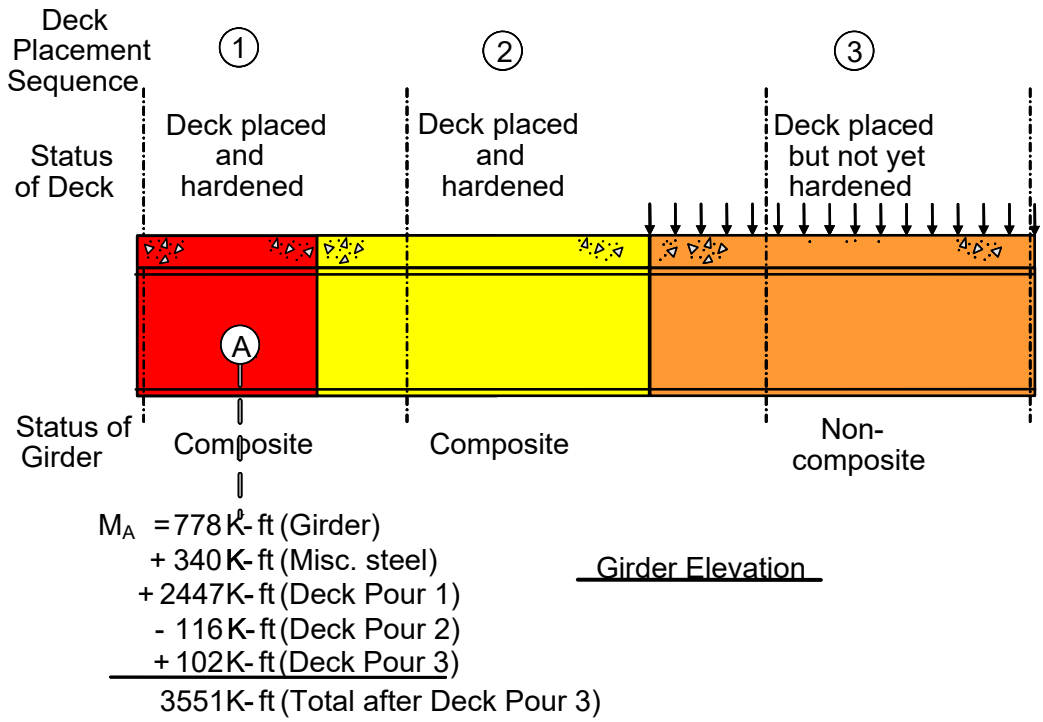

Figure 24.12-6
Deck Placement Analysis 3

Table 24.12-1 shows a more complete set of the unfactored dead-load moments in the end span (Span 1) from the abutment to the end of Cast 1 computed from the example deck placement analysis. Data are given at 19.0-foot increments along the span, measured from the abutment. The end of Cast 1 is located 102.5 feet from the abutment, based on the requirements of Standard for Slab Pouring Sequence. Location A is 76.0 feet from the abutment. In addition to the moments due to each of the individual casts, Table 24.12-1 gives the moments due to the steel weight and the additional miscellaneous steel. Also included are the sum of the moments due to the three casts and the moments due to the weight of the concrete deck and haunches assuming that the concrete is placed simultaneously on the non-composite girders instead of in sequential steps. The maximum moment occurs after Cast 1.

Length (ft)	0.0	19.0	38.0	57.0	76.0	95.0
Steel Weight	0	400	663	789	778	630
Additional Miscellaneous Steel	0	166	278	336	340	290
Cast 1	0	1190	1994	2413	2447	2096
Cast 2	0	-29	-58	-87	-116	-145
Cast 3	0	25	51	76	102	127
Sum of Casts	0	1186	1987	2402	2433	2078
Deck & Haunches (Simultaneous Cast)	0	1184	1983	2396	2424	2067

Table 24.12-1
Moments from Deck Placement Analysis (K-ft)

The slight differences in the moments on the last line of Table 24.12-1 (assuming a simultaneous placement of the entire slab) and the sum of the moments due to the three casts are due to the changes in the girder stiffness with each sequential cast. The principle of superposition does not apply directly in the deck-placement analyses, since the girder stiffness changes at each step of the analysis. Although the differences in the moments are small in this example, they can be significantly greater depending on the span configuration. The effects of the deck placement sequence must be considered during design.

In regions of positive flexure, the non-composite girder should be checked for the effect of the maximum accumulated deck-placement moment. This moment at 76 feet from Abutment 1 is computed as:

$$M = 778 + 340 + 2{,}447 = 3{,}565 \text{ kip-ft}$$

This value agrees with the moment at this location shown in Figure 24.12-4.

In addition to the dead load moments during the deck placement, unfactored dead load deflections and reactions can also be investigated similarly during the construction condition.

When investigating reactions during the construction condition, if uplift is found to be present during deck placement, the following options can be considered:

- Rearrange the concrete casts.
- Specify a temporary load over that support.
- Specify a tie-down bearing.

- Perform another staging analysis with zero bearing stiffness at the support experiencing lift-off.

24.13 Painting

The final coat of paint on all steel bridges shall be an approved color. Exceptions to this policy may be considered on an individual basis for situations such as scenic river crossings, unique or unusual settings or local community preference. The Region is to submit requests for an exception along with the Structure Survey Report. The *AMS Standard Color Numbers* available for use on steel structures are shown in Chapter 9 - Materials.

Unpainted weathering steel is used on bridges over streams and railroads. All highway grade separation structures require the use of painted steel, since unpainted steel is subject to excessive weathering from salt spray distributed by traffic. On weathering steel bridges, the end 6' of any steel adjacent to either side of an expansion joint and/or hinge is required to have two shop coats of paint. The second coat is to be brown color similar to rusted steel. Do not paint the exterior face of the exterior girders for aesthetic reasons, but paint the hanger bar on the side next to the web. Additional information on painting is presented in Chapter 9 - Materials.

For painted steel plate I-girders utilize a three-coat system defined by the Standard Specification bid item “Painting Epoxy System (Structure)”. For painted tub girders use a two-coat system defined by the STSP “Painting Polysiloxane System (Structure)”, which includes painting of the inside of the tubs.

Paint on bridges affects the slip resistance of bolted connections. Since faying surfaces that are not galvanized are typically blast-cleaned as a minimum, a Class A surface condition should only be used to compute the slip resistance when Class A coatings are applied or when unpainted mill scale is left on the faying surface. Most commercially available primers will qualify as Class B coatings.

24.14 Floor Systems

In the past, floor systems utilizing two main girders were used on long span structures. Current policy is to use multiple plate girder systems for bridges having span lengths up to 400'. Multiple girder systems are preferred since they are redundant; that is, failure of any single member will not cause failure of the structure.

In a two-girder system, the main girders are designed equally to take the dead load and live load unless the roadway cross section is unsymmetrical. The dead load and live load carried by the intermediate stringers is transferred to the floor beams, which transmit the load to the main girders. In designing the main girders, it is an acceptable practice to assume the same load distribution along the stringers as along the girder and ignore the concentrated loads at the floor beam connections.

The design criteria used for such girders is the same as the criteria used for plate girders and rolled sections. Particular attention should be paid to the sufficiency of the girder connection details and to the lateral bracing requirements and connections.

24.15 Box Girders

Box girders present a smooth, uncluttered appearance under the bridge deck due to the lack of transverse bracing and due to their closed section. Enhanced torsional rigidity can make box girders a favorable choice for horizontally curved bridges. However, due to redundancy concerns, use of single-box and two-box girder bridges should be avoided unless absolutely necessary.

In the design of box girders, the concrete slab is designed as a portion of the top flange and also as the support between the two girder webs which satisfies the requirement for being considered a closed box section.

During construction, the box girder requires additional bracing to support the web until the slab is in place. The additional bracing can either be temporary bracing that is removed after the slab is cured or permanent bracing that is left in place. In either case, it is an additional cost item. In addition, temporary bracing is required between the girders to transfer wind loads until the deck slab is poured.

Current experience shows that box girders may require more material than conventional plate girders. On longer spans, additional bracing between girders is required to transfer lateral loads.

Several requirements in *AASHTO LRFD* are specific to box girders. For box girders, sections in positive flexure shall not have a yield strength in excess of 70 ksi. The following web slenderness requirement from **LRFD [6.11.6.2.2]** must also be satisfied:

$$\frac{2D_{cp}}{t_w} \leq 3.76\sqrt{\frac{E}{F_{yc}}}$$

Where:

D_{cp} = Depth of web in compression at plastic moment (in.)

t_w = Web thickness (in.)

F_{yc} = Specified minimum yield strength of the compression flange (ksi)

Other requirements for positive flexure in box girders are presented in **LRFD [6.11.6.2.2]**. Steel sections in negative flexure must not use the provisions in Appendices A or B of the *AASHTO LRFD* specifications.

When computing effective flange widths for closed-box sections, the distance between the outside of the webs at the tops is to be used in lieu of the web thickness in the general requirements. For closed box sections, the spacing should be taken as the spacing between the centerlines of the box sections.

When computing section properties for closed-box sections with inclined webs, the moment of inertia of the webs about a horizontal axis at the mid-depth of the web should be adjusted for

the web slope by dividing by the cosine of the angle of inclination of the web plate to the vertical. Also, inspection manholes are often inserted in the bottom flanges of closed-box sections near supports. These manholes should be subtracted from the bottom-flange area when computing the elastic section properties for use in the region of the access hole. If longitudinal flange stiffeners are present on the closed-box section, they are often included when computing the elastic section properties.

When investigating web bend-buckling resistance for closed-box sections, **LRFD [6.11.3.2]** states that the maximum longitudinal flange stress due to the factored loads, calculated without consideration of longitudinal warping, must not exceed $\phi_f F_{crw}$ at sections where non-composite box flanges are subject to compression during construction. For more information about the web bend-buckling resistance of box girders, refer to 24.12.1. In *AASHTO LRFD*, a box flange is defined as a flange connected to two webs.

Torsion in structural members is generally resisted through a combination of St. Venant torsion and warping torsion. For closed cross-sections such as box girders, St. Venant torsion generally dominates. Box girders possess favorable torsional characteristics which make them an attractive choice for horizontally curved bridges. However, due to redundancy concerns, use of single-box and two-box girder bridges should be avoided unless absolutely necessary.

WisDOT policy item:

Rigorous analysis of single-box and two-box girder bridges to eliminate the need for in-depth fracture critical inspections is not allowed.

Full-depth, solid diaphragms between box girders shall be used at the one-third points (min.) in each span.

BOS approval is required for all box girders.

24.16 Design Examples

E24-1 2-Span Continuous Steel Plate Girder Bridge, LRFD

E24-2 Bolted Field Splice, LRFD

This page intentionally left blank.

Table of Contents

E24-1 2-Span Continous Steel Plate Girder Bridge LRFD . . . 2
E24-1.1 Obtain Design Criteria . . . 2
E24-1.2 Select Trial Girder Section . . . 5
E24-1.3 Compute Section Properties . . . 6
E24-1.4 Compute Dead Load Effects . . . 11
E24-1.5 Compute Live Load Effects . . . 15
E24-1.6 Combine Load Effects . . . 21
E24-1.7 Check Section Proportion Limits Positive Moment Region . . . 28
E24-1.8 Compute Plastic Moment Capacity Positive Moment Region . . . 30
E24-1.9 Determine if Section is Compact or Noncompact Positive Moment Region . . . 32
E24-1.10 Design for Flexure Strength Limit State Positive Moment Region . . . 33
E24-1.11 Design for Shear Positive Moment Region . . . 36
E24-1.12 Design Transverse Intermediate Stiffeners Positive Moment Region . . . 36
E24-1.13 Design for Flexure Fatigue and Fracture Limit State Positive Moment Region . . . 36
E24-1.14 Design for Flexure Service Limit State Positive Moment Region . . . 37
E24-1.15 Design for Flexure Constructibility Check Positive Moment Region . . . 39
E24-1.16 Check Wind Effects on Girder Flanges Positive Moment Region . . . 43
E24-1.17 Check Section Proportion Limits Negative Moment Region . . . 43
E24-1.18 Compute Plastic Moment Capacity Negative Moment Region . . . 44
E24-1.19 Determine if Section is a Compact-Web, Noncompact-Web, or Slender-Web Section Negative Moment Region . . . 47
E24-1.20 Design for Flexure Strength Limit State Negative Moment Region . . . 48
E24-1.21 Design for Shear Negative Moment Region . . . 50
E24-1.22 Design Transverse Intermediate Stiffeners Negative Moment Region . . . 54
E24-1.23 Design for Flexure Fatigue and Fracture Limit State Negative Moment Region . . . 57
E24-1.24 Design for Flexure Service Limit State Negative Moment Region . . . 58
E24-1.25 Design for Flexure Constructibility Check Negative Moment Region . . . 59
E24-1.26 Check Wind Effects on Girder Flanges Negative Moment Region . . . 60
E24-1.27 Draw Schematic of Final Steel Girder Design . . . 64
E24-1.28 Design Shear Connectors . . . 65
E24-1.29 Design Bearing Stiffeners . . . 73

E24-1 2-Span Continous Steel Plate Girder Bridge - LRFD

This example shows design calculations conforming to the *AASHTO LRFD Eight Edition -2017* as supplemented by the *WisDOT Bridge Manual* . Sample design calculations are shown for the following steel superstructure regions or components:

- Interior girder design at the controlling positive moment region
- Interior girder design at the controlling negative moment region
- Transverse stiffener design
- Shear connector design
- Bearing stiffener design

E24-1.1 Obtain Design Criteria

The first design step for a steel girder is to choose the correct design criteria. [24.6.1]

The steel girder design criteria are obtained from Figure E24-1.1-1 through Figure E24-1.1-3 (shown below), and from the referenced articles and tables in the *AASHTO LRFD Bridge Design Specifications, Eigth Edition*. An interior plate girder will be designed for an HL-93 live load for this example. The girder will be designed to be composite throughout. (Note: Figure 5.2-1 contains recommended economical span lengths for steel girders.)

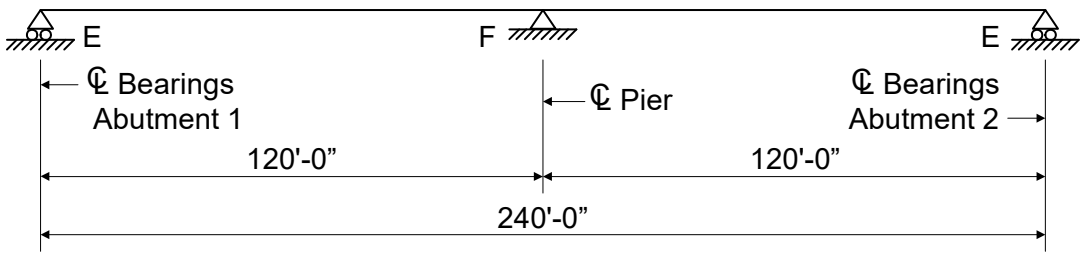

Legend:
E = Expansion Bearings
F = Fixed Bearings

Figure E24-1.1-1
Span Configuration

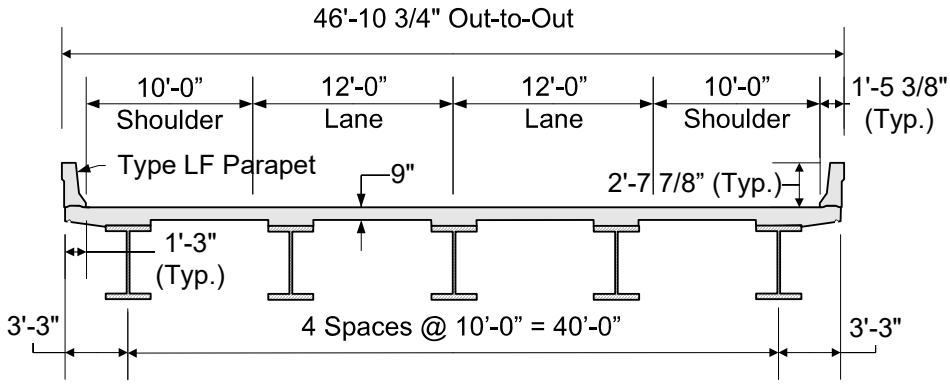

Figure E24-1.1-2
Superstructure Cross Section

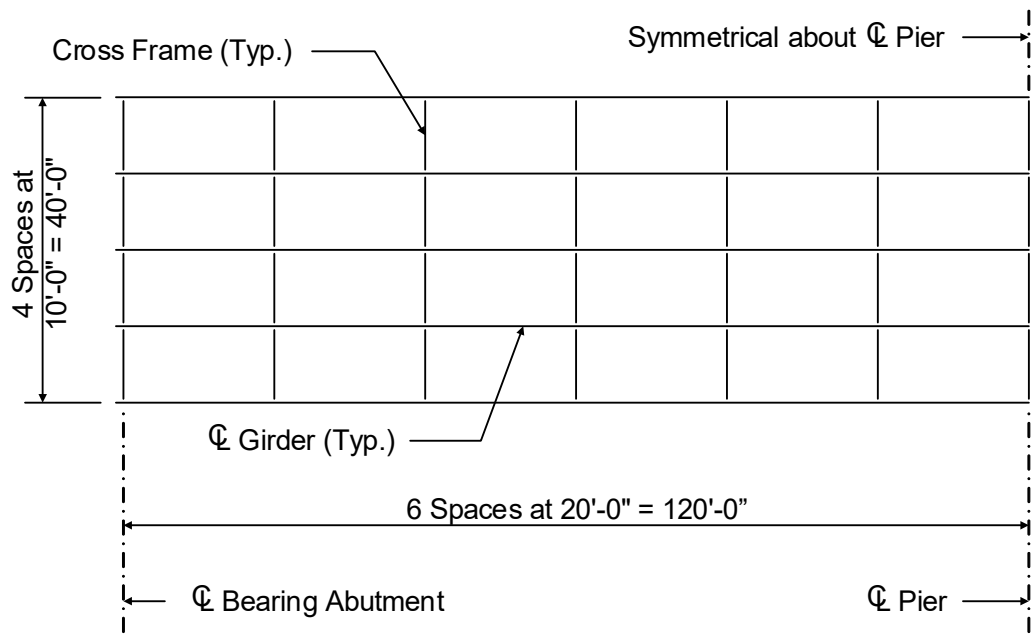

Figure E24-1.1-3
Framing Plan

Design criteria:

$N_{spans} := 2$	Number of spans	
$L := 120$	ft	span length
$Skew := 0$	deg	skew angle
$N_b := 5$	number of girders	
$S := 10.0$	ft	girder spacing
$S_{overhang} := 3.25$	ft	deck overhang (Per Chapter 17.6.2, WisDOT practice is to limit the overhang to 3'-7", however, economical overhang range is 0.28S - 0.35S based on parapet weight.)
$L_b := 240$	in	cross-frame spacing **LRFD [6.7.4]**
$F_{yw} := 50$	ksi	web yield strength **LRFD [Table 6.4.1-1]**
$F_{yf} := 50$	ksi	flange yield strength **LRFD [Table 6.4.1-1]**
$f'_c := 4.0$	ksi	concrete 28-day compressive strength **LRFD [5.4.2.1 & Table C5.4.2.1-1]**
$f_y := 60$	ksi	reinforcement strength **LRFD [5.4.3 & 6.10.1.7]**

$E_s := 29000$	ksi	modulus of elasticity **LRFD [6.4.1]**
$t_{deck} := 9.0$	in	total deck thickness
$t_s := 8.5$	in	effective deck thickness
$t_{overhang} := 9.5$	in	total overhang thickness
$t_{effoverhang} := 9.0$	in	effective overhang thickness
$W_s := 0.490$	kcf	steel density **LRFD [Table 3.5.1-1]**
$w_c := 0.150$	kcf	concrete density **LRFD [Table 3.5.1-1 & C3.5.1]**
$DL_{misc} := 0.030$	kip/ft	additional miscellaneous dead load (per girder) (Chapter 17.2.4.1)
$W_{par} := 0.464$	kip/ft	parapet weight (each) (Type 32SS)
$W_{fws} := 0.020$	ksf	future wearing surface (Chapter 17.2.4.1)
$w_{deck} := 46.50$	ft	deck width
$w_{roadway} := 44.0$	ft	roadway width
$d_{haunch} := 3.75$	in	haunch depth (from top of web for design) (for construction, the haunch is measured from the top of the top flange)
$ADTT_{SL} := 3000$	Average Daily Truck Traffic (Single-Lane)	

Design factors from AASHTO LRFD Bridge Design Specifications:

Load factors, γ, **LRFD [Table 3.4.1-1 & Table 3.4.1-2]**:

Load Combinations and Load Factors							
Limit State	Load Factors						
	DC	DW	LL	IM	WS	WL	EQ
Strength I	1.25	1.50	1.75	1.75	-	-	-
Service II	1.00	1.00	1.30	1.30	-	-	-
Fatigue I	-	-	1.75	1.75	-	-	-

Table E24-1.1-1
Load Combinations and Load Factors

The abbreviations used in Table E24-1.1-1 are as defined in **LRFD [3.3.2]**.

The extreme event limit state (including earthquake load) is generally not considered for a

steel girder design.

Resistance factors,ϕ, **LRFD [6.5.4.2]**:

Resistance Factors	
Type of Resistance	**Resistance Factor**
For flexure	1.00
For shear	1.00
For axial compression	0.90

Table E24-1.1-2
Resistance Factors

Dynamic load allowance **LRFD [Table 3.6.2.1-1]**:

Dynamic Load Allowance	
Limit State	**Dynamic Load Allowance, IM**
Fatigue and Fracture Limit State	15%
All Other Limit States	33%

Table E24-1.1-3
Dynamic Load Allowance

E24-1.2 Select Trial Girder Section

Before the dead load effects can be computed, a trial girder section must be selected. [24.6.2] This trial girder section is selected based on previous experience and based on preliminary design. For this design example, the trial girder section presented in Figure E24-1.2-1 will be used. Based on this trial girder section, section properties and dead load effects will be computed. Then specification checks will be performed to determine if the trial girder section successfully resists the applied loads. If the trial girder section does not pass all specification checks or if the girder optimization is not acceptable, then a new trial girder section must be selected and the design process must be repeated.

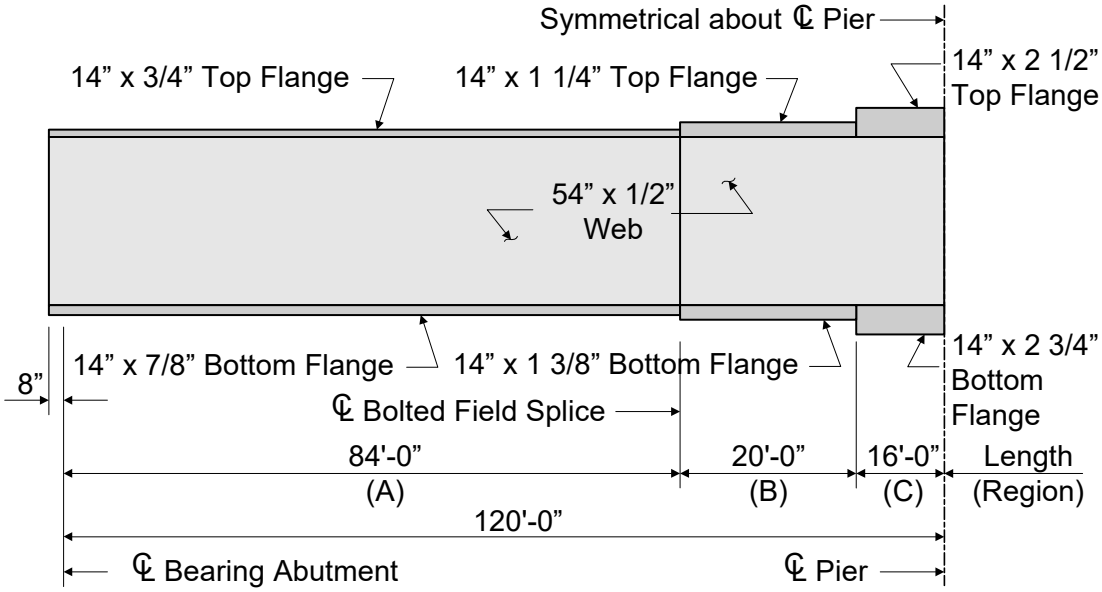

Figure E24-1.2-1
Plate Girder Elevation

The AASHTO/NSBA Steel Bridge Collaboration Document "Guidelines for Design for Constructibility" recommends a 3/4" minimum flange thickness. Wisconsin requires a 3/4" minimum flange thickness.

E24-1.3 Compute Section Properties

Since the superstructure is composite, several sets of section properties must be computed **LRFD [6.10.1.1]**. The initial dead loads (or the noncomposite dead loads) are applied to the girder-only section. For permanent loads assumed to be applied to the long-term composite section, the long-term modular ratio of 3n is used to transform the concrete deck area **LRFD [6.10.1.1.1b]**. For transient loads assumed applied to the short-term composite section, the short-term modular ratio of n is used to transform the concrete deck area.

For girders with shear connectors provided throughout their entire length and with slab reinforcement satisfying the provisions of **LRFD [6.10.1.7]**, stresses due to loads applied to the composite section for the fatigue limit state may be computed using the short-term composite section assuming the concrete slab to be fully effective for both positive and negative flexure **LRFD [6.6.1.2.1 & 6.10.5.1]**.

For girders with shear connectors provided throughout their entire length that also satisfy the provisions of **LRFD [6.10.1.7]**, flexural stresses caused by Service II loads applied to the composite section may be computed using the short-term or long-term composite section, as appropriate, assuming the concrete deck is effective for both positive and negative flexure **LRFD [6.10.4.2.1]**.

In general, both the exterior and interior girders must be considered, and the controlling design is used for all girders, both interior and exterior. However, design computations for the interior girder only are presented in this example.

The modular ratio, n, is computed as follows:

$$n := \frac{E_s}{E_c}$$

Where:

E_s = Modulus of elasticity of steel (ksi)

E_c = Modulus of elasticity of concrete (ksi)

$E_s = 29000$ ksi **LRFD [6.4.1]**

$E_c := 33000 \cdot K_1 \cdot \left(w_c^{1.5}\right) \cdot \sqrt{f'_c}$ **LRFD [5.4.2.4]**

Where:

K_1 = Correction factor for source of aggregate to be taken as 1.0 unless determined by physical test, and as approved by the authority of jurisdiction. For WisDOT, K_1 = 1.0.

w_c = Unit weight of concrete (kcf)

f'_c = Specified compressive strength of concrete (ksi)

$w_c = 0.150$ kcf **LRFD [Table 3.5.1-1 & C3.5.1]**

$f'_c = 4.0$ ksi **LRFD [Table 5.4.2.1-1 & 5.4.2.1]**

$K_1 := 1$ **LRFD [5.4.2.4]**

$E_c := 33000 \cdot K_1 \cdot \left(w_c^{1.5}\right) \cdot \sqrt{f'_c}$ $\boxed{E_c = 3834}$ ksi

$n := \frac{E_s}{E_c}$ $\boxed{n = 7.6}$ **LRFD [6.10.1.1.1b]**

Therefore, use: $n := 8$

The effective flange width is computed as follows (Chapter 17.2.11):

For interior beams, the effective flange width is taken as the average spacing of adjacent beams:

$W_{effflange} := S$ $\boxed{W_{effflange} = 10.00}$ ft

or

$\boxed{W_{effflange} \cdot 12 = 120.00}$ in

Based on Table 17.5-3 of Chapter 17 for a 9" deck and 10'-0" girder spacing, the top mat

longitudinal continuity reinforcement bar size and spacing is #6 bars at 7.5" spacing. The area of the top mat longitudinal continuity deck reinforcing steel in the negative moment region is computed below for the effective flange width. For the section properties in Table E24-1.3-3, the location of the centroid of the top mat longitudinal reinforcement is conservatively taken as one-half the structural slab thickness or 8.5" / 2 = 4.25".

$$A_{deckreinf} := 1 \times 0.44 \cdot \frac{W_{effflange} \cdot 12}{7.5} \qquad \boxed{A_{deckreinf} = 7.04} \quad in^2$$

For this design example, the slab haunch is 3.75 inches throughout the length of the bridge. That is, the bottom of the slab is located 3.75 inches above the top of the web (for construction, it is measured from the top of the top flange). For this design example, this distance is used in computing the location of the centroid of the slab. However, the area of the haunch is conservatively not considered in the section properties for this example.

Based on the trial plate sizes shown in Figure E24-1.2-1, the noncomposite and composite section properties for Region A, B, and C are computed as shown in the following tables **LRFD [6.6.1.2.1, 6.10.5.1, 6.10.4.2.1]**. The distance to the centroid is measured from the bottom of the girder.

Region A Section Properties (0 - 84 Feet)						
Section	**Area, A (inches^2)**	**Centroid, d (inches)**	**A*d (inches^3)**	**I_o (inches^4)**	**A*y^2 (inches^4)**	**I_{total} (inches^4)**
Girder only:						
Top flange	10.500	55.250	580.1	0.5	8441.1	8441.6
Web	27.000	27.875	752.6	6561.0	25.8	6586.8
Bottom flange	12.250	0.438	5.4	0.8	8576.1	8576.9
Total	49.750	26.897	1338.1	6562.3	17043.0	23605.3
Composite (3n):						
Girder	49.750	26.897	1338.1	23605.3	13668.5	37273.7
Slab	42.500	62.875	2672.2	255.9	16000.2	16256.0
Total	92.250	43.472	4010.3	23861.1	29668.6	53529.8
Composite (n):						
Girder	49.750	26.897	1338.1	23605.3	33321.4	56926.6
Slab	127.500	62.875	8016.6	767.7	13001.9	13769.5
Total	177.250	52.777	9354.7	24372.9	46323.2	70696.2
Section	**y_{botgdr} (inches)**	**y_{topgdr} (inches)**	**$y_{topslab}$ (inches)**	**S_{botgdr} (inches^3)**	**S_{topgdr} (inches^3)**	**$S_{topslab}$ (inches^3)**
Girder only	26.897	28.728	---	877.6	821.7	---
Composite (3n)	43.472	12.153	23.653	1231.4	4404.7	2263.1
Composite (n)	52.777	2.848	14.348	1339.5	24820.6	4927.1

Table E24-1.3-1
Region A Section Properties

Region B Section Properties (84 - 104 Feet)						
Section	**Area, A (inches^2)**	**Centroid, d (inches)**	**A*d (inches^3)**	**I_o (inches^4)**	**A*y^2 (inches^4)**	**I_{total} (inches^4)**
Girder only:						
Top flange	17.500	56.000	980.0	2.3	14117.0	14119.3
Web	27.000	28.375	766.1	6561.0	16.3	6577.3
Bottom flange	19.250	0.688	13.2	3.0	13940.2	13943.2
Total	63.750	27.598	1759.4	6566.3	28073.5	34639.8
Composite (3n):						
Girder	63.750	27.598	1759.4	34639.8	13056.1	47695.9
Slab	42.500	63.375	2693.4	255.9	19584.1	19840.0
Total	106.250	41.909	4452.8	34895.7	32640.2	67535.9
Composite (n):						
Girder	63.750	27.598	1759.4	34639.8	36266.9	70906.7
Slab	127.500	63.375	8080.3	767.7	18133.5	18901.1
Total	191.250	51.449	9839.7	35407.4	54400.4	89807.8
Section	**y_{botgdr} (inches)**	**y_{topgdr} (inches)**	**$y_{topslab}$ (inches)**	**S_{botgdr} (inches^3)**	**S_{topgdr} (inches^3)**	**$S_{topslab}$ (inches^3)**
Girder only	27.598	29.027	---	1255.2	1193.4	---
Composite (3n)	41.909	14.716	25.716	1611.5	4589.2	2626.2
Composite (n)	51.449	5.176	16.176	1745.6	17351.7	5552.0

Table E24-1.3-2
Region B Section Properties

For the strength limit state, since the deck concrete is in tension in the negative moment region, the deck reinforcing steel contributes to the composite section properties and the deck concrete does not.

As previously explained, for this design example, the concrete slab will be assumed to be fully effective for both positive and negative flexure for service and fatigue limit states.

Region C Section Properties (104 - 120 Feet)						
Section	**Area, A (inches^2)**	**Centroid, d (inches)**	**A*d (inches^3)**	**I_o (inches^4)**	**A*y^2 (inches^4)**	**I_{total} (inches^4)**
Girder only:						
Top flange	35.000	58.000	2030.0	18.2	30009.7	30027.9
Web	27.000	29.750	803.3	6561.0	28.7	6589.7
Bottom flange	38.500	1.375	52.9	24.3	28784.7	28809.0
Total	100.500	28.718	2886.2	6603.5	58823.1	65426.6
Composite (deck concrete using 3n):						
Girder	100.500	28.718	2886.2	65426.6	11525.0	76951.6
Slab	42.500	64.750	2751.9	255.9	27253.3	27509.2
Total	143.000	39.427	5638.1	65682.5	38778.3	104460.8
Composite (deck concrete using n):						
Girder	100.500	28.718	2886.2	65426.6	40802.5	106229.1
Slab	127.500	64.750	8255.6	767.7	32162.0	32929.6
Total	228.000	48.868	11141.8	66194.3	72964.4	139158.7
Composite (top longitudinal deck reinforcement only):						
Girder	100.500	28.718	2886.2	65426.6	559.2	65985.8
Deck reinf.	7.040	64.750	455.8	0.0	7982.4	7982.4
Total	107.540	31.077	3342.0	65426.6	8541.6	73968.2
Section	**y_{botgdr} (inches)**	**y_{topgdr} (inches)**	**y_{deck} (inches)**	**S_{botgdr} (inches^3)**	**S_{topgdr} (inches^3)**	**S_{deck} (inches^3)**
Girder only	28.718	30.532	---	2278.2	2142.9	---
Composite (3n)	39.427	19.823	29.573	2649.5	5269.7	3532.3
Composite (n)	48.868	10.382	20.132	2847.7	13403.3	6912.2
Composite (reba	31.077	28.173	33.673	2380.2	2625.5	2196.7

Table E24-1.3-3
Region C Section Properties

The section properties used to compute the unfactored dead and live load moments and shears for each girder region are given in the following table in accordance with the requirements of **LRFD [6.10.1.5]**.

Girder Region (ft)	Moment of Inertia Used (in^4)		
	Beam Self Weight, Misc Dead Loads, Concrete Deck & Haunch (Noncomposite)	Wisconsin Barrier, Future Wearing Surface (Composite)	Hl-93 Live Load (Composite)
Region A (0-84)	23605.3	53529.8	70696.2
Region B (84-104)	34639.8	67535.9	89807.8
Region C (104-120)	65426.6	104460.8	139158.7

Table E24-1.3-4
Section Properties Used to Generate Design Moments and Shears

E24-1.4 Compute Dead Load Effects

The girder must be designed to resist the dead load effects, as well as the other load effects. The dead load components consist of some dead loads that are resisted by the noncomposite section, as well as other dead loads that are resisted by the composite section. In addition, some dead loads are factored with the DC load factor and other dead loads are factored with the DW load factor. The following table summarizes the various dead load components that must be included in the design of a steel girder.

Dead Load Components		
Resisted by	**Type of Load Factor**	
	DC	**DW**
Noncomposite section	• Steel girder • Concrete deck • Concrete haunch • Stay-in-place deck forms • Miscellaneous dead load (including cross-frames, stiffeners, etc.)	
Composite section	• Concrete parapets	• Future wearing surface & utilities

Table E24-1.4-1
Dead Load Components

For the steel girder, the dead load per unit length varies due to the change in plate sizes. The moments and shears due to the weight of the steel girder can be computed using readily available analysis software. Since the actual plate sizes are entered as input, the moments and shears are computed based on the actual, varying plate sizes.

The dead load per unit length for Regions A, B, and C is calculated as follows:

$A_A = 49.75$ in^2 Region A (0 - 84 feet)(Table E24-1.3-1)

$A_B = 63.75$ in^2 Region B (84 - 104 feet)(Table E24-1.3-2)

$A_C = 100.50$ in^2 Region C (104 - 120 feet)(Table E24-1.3-3)

Weight of Girder per region:

$$DL_A := W_s \cdot \frac{A_A}{12^2} \qquad \boxed{DL_A = 0.169} \text{ klf}$$

$$DL_B := W_s \cdot \frac{A_B}{12^2} \qquad \boxed{DL_B = 0.217} \text{ klf}$$

$DL_C := W_s \cdot \frac{A_C}{12^2}$ $\boxed{DL_C = 0.342}$ klf

For the concrete deck, the dead load per unit length for an interior girder is computed as follows:

$w_c = 0.150$ kcf

$S = 10.00$ ft

$t_{deck} = 9.00$ in

$DL_{deck} := w_c \cdot S \cdot \frac{t_{deck}}{12}$ $\boxed{DL_{deck} = 1.125}$ kip/ft

For the concrete haunch, the dead load per unit length varies due to the change in top flange plate sizes. The moments and shears due to the concrete haunch are computed based on the actual, varying haunch thickness.

The haunch dead load per unit length for Region A, B, and C is calculated as follows:

$width_{flange} := 14$ in Top flange width is consistent in all three regions.

$t_{flangeA} := 0.75$ in Top flange thickness in Region A

$t_{flangeB} := 1.25$ in Top flange thickness in Region B

$t_{flangeC} := 2.5$ in Top flange thickness in Region C

$d_{haunch} = 3.75$ in Distance from top of web to bottom of deck as detailed in E24-1.1

$d_{hA} := d_{haunch} - t_{flangeA}$ $\boxed{d_{hA} = 3.00}$ in

$d_{hB} := d_{haunch} - t_{flangeB}$ $\boxed{d_{hB} = 2.50}$ in

$d_{hC} := d_{haunch} - t_{flangeC}$ $\boxed{d_{hC} = 1.25}$ in

$w_c = 0.150$ kcf

$DL_{hA} := \frac{width_{flange} \cdot d_{hA}}{12^2} \cdot w_c$ $\boxed{DL_{hA} = 0.044}$ klf

$DL_{hB} := \frac{width_{flange} \cdot d_{hB}}{12^2} \cdot w_c$ $\boxed{DL_{hB} = 0.036}$ klf

$$DL_{hC} := \frac{width_{flange} \cdot d_{hC}}{12^2} \cdot w_c$$ $\boxed{DL_{hC} = 0.018}$ klf

Total weight of deck and haunch per region:

$DL_{dhA} := DL_{deck} + DL_{hA}$ $\boxed{DL_{dhA} = 1.169}$ klf

$DL_{dhB} := DL_{deck} + DL_{hB}$ $\boxed{DL_{dhB} = 1.161}$ klf

$DL_{dhC} := DL_{deck} + DL_{hC}$ $\boxed{DL_{dhC} = 1.143}$ klf

For the miscellaneous dead load (including cross-frames, stiffeners, and other miscellaneous structural steel), the dead load per unit length is assumed to be as follows:

$DL_{misc} = 0.030$ kip/ft See E24-1.1

For the concrete parapets, the dead load per unit length is computed as follows, assuming that the superimposed dead load of the two parapets is distributed uniformly among all of the girders **LRFD [4.6.2.2.1]**:

$W_{par} = 0.464$ kip/ft (Type LF)

$N_b = 5$

$$DL_{par} := \frac{W_{par} \cdot 2}{N_b}$$ $\boxed{DL_{par} = 0.186}$ kip/ft

For the future wearing surface, the dead load per unit length is computed as follows, assuming that the superimposed dead load of the future wearing surface is distributed uniformly among all of the girders **LRFD [4.6.2.2.1]**:

$W_{fws} = 0.020$ ksf

$w_{roadway} = 44.0$ ft

$N_b = 5$

$$DL_{fws} := \frac{W_{fws} \cdot w_{roadway}}{N_b}$$ $\boxed{DL_{fws} = 0.176}$ kip/ft

Since the plate girder and its section properties are not uniform over the entire length of the bridge, an analysis software was used to compute the dead load moments and shears.

The following two tables present the unfactored dead load moments and shears, as computed by an analysis computer program. Since the bridge is symmetrical, the moments and shears in Span 2 are symmetrical to those in Span 1.

Dead Load Moments - Interior Beams (Kip-Feet)											
Dead Load Component	Location in Span 1										
	0.0L	0.1L	0.2L	0.3L	0.4L	0.5L	0.6L	0.7L	0.8L	0.9L	1.0L
Steel Girder	0.0	71.7	119.1	142.1	140.7	114.9	64.8	-9.8	-112.1	-246.9	-430.4
Concrete Deck & Haunches	0.0	487.6	808.0	961.3	947.3	766.2	417.9	-97.6	-780.3	-1630.2	-2647.3
Other Dead Loads Acting on Grider Alone	0.0	12.9	21.5	25.7	25.7	21.3	12.6	-0.4	-17.8	-39.5	-65.4
Concrete Parapets	0.0	80.0	133.1	159.5	159.1	131.9	78.0	-2.8	-110.3	-244.6	-405.7
Future Wearing Surface	0.0	75.7	126.0	150.9	150.6	124.8	73.8	-2.6	-104.4	-231.5	-383.9

Table E24-1.4-2
Dead Load Moments

Dead Load Shears - Interior Beams (Kips)											
Dead Load Component	Location in Span 1										
	0.0L	0.1L	0.2L	0.3L	0.4L	0.5L	0.6L	0.7L	0.8L	0.9L	1.0L
Steel Girder	7.0	5.0	2.9	0.9	-1.1	-3.2	-5.2	-7.2	-9.8	-13.1	-17.5
Concrete Deck & Haunches	47.6	33.7	19.7	5.8	-8.1	-22.1	-36.0	-49.9	-63.9	-77.8	-91.7
Other Dead Loads Acting on Grider Alone	1.3	0.9	0.5	0.2	-0.2	-0.5	-0.9	-1.3	-1.6	-2.0	-2.3
Concrete Parapets	7.8	5.5	3.3	1.1	-1.1	-3.4	-5.6	-7.8	-10.1	-12.3	-14.5
Future Wearing Surface	7.4	5.2	3.1	1.0	-1.1	-3.2	-5.3	-7.4	-9.5	-11.6	-13.8

Table E24-1.4-3
Dead Load Shears

E24-1.5 Compute Live Load Effects

The girder must also be designed to resist the live load effects **LRFD [3.6.1.2]**. The live load consists of an HL-93 loading. Similar to the dead load, the live load moments and shears for an HL-93 loading were obtained from an analysis computer program.

Based on Table E24-1.1-3, for all limit states other than fatigue and fracture, the dynamic load allowance, IM, is as follows **LRFD [3.6.2.1]**:

$IM := 0.33$

The live load distribution factors for moment for an interior girder are computed as follows **LRFD [4.6.2.2.2]**:

First, the longitudinal stiffness parameter, K_g, must be computed **LRFD [4.6.2.2.1]**:

$$K_g = n \cdot \left(I + A \cdot e_g^{\,2}\right)$$

Where:

I = Moment of inertia of beam (in^4)

A = Area of stringer, beam, or girder (in^2)

e_g = Distance between the centers of gravity of the basic beam and deck (in)

Longitudinal Stiffness Parameter, K_g				
	Region A (Pos. Mom.)	**Region B (Intermediate)**	**Region C (At Pier)**	**Weighted Average ***
Length (Feet)	84	20	16	
n	8	8	8	
I (Inches^4)	23,605.3	34,639.8	65,426.6	
A (Inches^2)	49.750	63.750	100.500	
e_g (Inches)	35.978	35.777	36.032	
K_g (Inches^4)	704,020	929,915	1,567,250	856,767

Table E24-1.5-1
Longitudinal Stiffness Parameter

After the longitudinal stiffness parameter is computed, **LRFD [Table 4.6.2.2.1-1]** is used to find the letter corresponding with the superstructure cross section. The letter corresponding with the superstructure cross section in this design example is "a."

If the superstructure cross section does not correspond with any of the cross sections illustrated in **LRFD [Table 4.6.2.2.1-1]**, then the bridge should be analyzed as presented in **LRFD [4.6.3]**.

Based on cross section "a", **LRFD [Table 4.6.2.2.2b-1 & Table 4.6.2.2.2.3a-1]** are used to compute the distribution factors for moment and shear, respectively.

Check the range of applicability as follows **LRFD [Table 4.6.2.2.2b-1]**:

$\boxed{3.5 \le S \le 16.0}$

Where:

S = Spacing of beams or webs (ft)

$S = 10.00$ ft OK

$\boxed{4.5 \le t_s \le 12.0}$

Where:

t_s = Depth of concrete slab (in)

$t_s = 8.5$ in OK

$\boxed{20 \le L \le 240}$

Where:

L = Span of beam (ft)

$L := 120$ ft OK

$\boxed{N_b \ge 4}$

Where:

N_b = Number of beams, stringers, or girders

$N_b = 5.00$ OK

$\boxed{10000 \le K_g \le 7000000}$

$K_g := 856767$ in^4 OK

For one design lane loaded, the distribution of live load per lane for moment in interior beams is as follows **LRFD [4.6.2.2.2b-1]**:

$$g_{int_moment_1} := 0.06 + \left(\frac{S}{14}\right)^{0.4}\left(\frac{S}{L}\right)^{0.3}\left(\frac{K_g}{12.0L \cdot t_s^{\,3}}\right)^{0.1}$$

$\boxed{g_{int_moment_1} = 0.473}$ lanes

For two or more design lanes loaded, the distribution of live load per lane for moment in interior beams is as follows **LRFD [Table 4.6.2.2.2b-1]**:

$$g_{int_moment_2} := 0.075 + \left(\frac{S}{9.5}\right)^{0.6}\left(\frac{S}{L}\right)^{0.2}\left(\frac{K_g}{12.0 \cdot L \cdot t_s^{\,3}}\right)^{0.1}$$

$\boxed{g_{int_moment_2} = 0.700}$ lanes

The live load distribution factors for shear for an interior girder are computed in a similar manner. The range of applicability is similar to that for moment **LRFD [Table 4.6.2.2.3a-1]**.

For one design lane loaded, the distribution of live load per lane for shear in interior beams is as follows:

$$g_{int_shear_1} := 0.36 + \frac{S}{25.0}$$

$\boxed{g_{int_shear_1} = 0.760}$ lanes

For two or more design lanes loaded, the distribution of live load per lane for shear in interior beams is as follows:

$$g_{int_shear_2} := 0.2 + \frac{S}{12} - \left(\frac{S}{35}\right)^{2.0}$$

$\boxed{g_{int_shear_2} = 0.952}$ lanes

Since this bridge has no skew, the skew correction factor does not need to be considered for this design example **LRFD [4.6.2.2.2e & 4.6.2.2.3c]**.

This design example is based on an interior girder. However, for illustrative purposes, the live load distribution factors for an exterior girder are computed below, as follows **LRFD [4.6.2.2.2]**:

The distance, d_e, is defined as the distance between the web centerline of the exterior girder and the interior edge of the curb. For this design example, based on Figure E24-1.1-2:

$d_e := S_{overhang} - 1.25$ ft

Check the range of applicability as follows **LRFD [Table 4.6.2.2.2d-1]**:

$-1.0 \le d_e \le 5.5$

$\boxed{d_e = 2.00}$ ft OK

For one design lane loaded, the distribution of live load per lane for moment in exterior beams is computed using the lever rule, as follows:

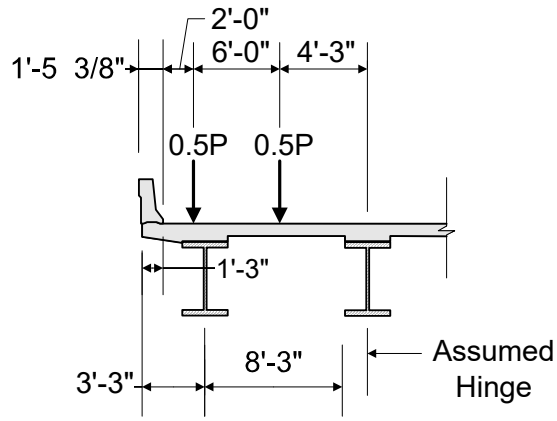

Figure E24-1.5-1
Lever Rule

$x_1 := S - 6 + (d_e - 2)$ $\qquad$ $x_2 := S + (d_e - 2)$

$$g_{ext_moment_1} := \frac{(0.5)\cdot(x_1) + (0.5)\cdot(x_2)}{S}$$

$\boxed{g_{ext_moment_1} = 0.700}$ lanes

$mpf := 1.20$

$g_{ext_moment_1} := g_{ext_moment_1}\cdot mpf$

$\boxed{g_{ext_moment_1} = 0.840}$

lanes
(for strength limit state)

For two or more design lanes loaded, the distribution of live load per lane for moment in exterior beams is as follows **LRFD [Table 4.6.2.2.2d-1]**:

The correction factor for distribution, e, is computed as follows:

$$e := 0.77 + \frac{d_e}{9.1}$$

$\boxed{e = 0.990}$

$g_{ext_moment_2} := e\cdot g_{int_moment_2}$

$\boxed{g_{ext_moment_2} = 0.693}$ lanes

The live load distribution factors for shear for an exterior girder are computed in a similar manner. The range of applicability is similar to that for moment **LRFD [Table 4.6.2.2.3.b-1]**.

For one design lane loaded, the distribution of live load per lane for shear in exterior beams is computed using the lever rule, as illustrated in Figure E24-1.5-1 and as follows:

$$g_{ext_shear_1} := \frac{(0.5)\cdot(x_1) + (0.5)\cdot(x_2)}{S}$$

$\boxed{g_{ext_shear_1} = 0.700}$ lanes

$g_{ext_shear_1} := g_{ext_shear_1}\cdot mpf$

$\boxed{g_{ext_shear_1} = 0.840}$

lanes
(for strength limit state)

For two or more design lanes loaded, the distribution of live load per lane for shear in exterior beams is as follows **LRFD [Table 4.6.2.2.3b-1]**:

$$e := 0.6 + \frac{d_e}{10} \qquad \boxed{e = 0.800}$$

$$g_{ext_shear_2} := e \cdot g_{int_shear_2} \qquad \boxed{g_{ext_shear_2} = 0.761} \quad \text{lanes}$$

In beam-slab bridge cross-sections with diaphragms or cross-frames, the distribution factor for the exterior beam can not be taken to be less than that which would be obtained by assuming that the cross-section deflects and rotates as a rigid cross-section. **LRFD [C4.6.2.2.2d]** provides one approximate approach to satisfy this requirement. The multiple presence factor provisions of **LRFD [3.6.1.1.2]** must be applied when this equation is used. This is not shown here since an interior girder is being designed.

Since this bridge has no skew, the skew correction factor does not need to be considered for this design example **LRFD [4.6.2.2.2e & 4.6.2.2.3c]**.

The controlling distribution factors for moment and shear for the interior girder are given below.

Interior Girder Distribution Factors		
	Moment DF	**Shear DF**
One Lane	0.473	0.760
Two or More Lanes	0.700	0.952

Table E24-1.5-2
Summary of Interior Girder Distribution Factors

The following table presents the unfactored maximum positive and negative live load moments and shears for HL-93 and fatigue live loading for interior beams, as computed using an analysis computer program. These values include the controlling live load distribution factor given above for two or more lanes, and they also include dynamic load allowance. Since the bridge is symmetrical, the moments and shears in Span 2 are symmetrical to those in Span 1.

Live Load Moments - Interior Beams (Kip-Feet)											
Live Load Effect	Location in Span 1										
	0.0L	0.1L	0.2L	0.3L	0.4L	0.5L	0.6L	0.7L	0.8L	0.9L	1.0L
Maximum Positive	0.0	863.8	1470.0	1871.8	2037.7	2001.3	1785.7	1384.6	826.7	258.3	0.0
Maximum Negative	0.0	-114.8	-229.6	-344.4	-459.9	-574.7	-689.5	-804.3	-919.1	-1274.7	-2065.7
Fatigue Range	0.0	401.6	668.1	836.1	888.5	862.6	787.9	618.3	406.9	457.7	508.6

Table E24-1.5-3
Live Load Moments

Live Load Shears - Interior Beams (Kips)											
Live Load Effect	Location in Span 1										
	0.0L	0.1L	0.2L	0.3L	0.4L	0.5L	0.6L	0.7L	0.8L	0.9L	1.0L
Maximum Positive	114.4	97.1	80.1	64.4	50.1	37.2	25.9	16.2	8.2	2.5	0.0
Maximum Negative	-13.0	-13.5	-21.4	-34.4	-48.3	-62.6	-77.1	-91.6	-105.9	-119.7	-132.9
Fatigue Range	59.2	51.3	43.6	40.8	43.6	44.9	46.6	48.7	52.2	55.4	58.8

Table E24-1.5-4
Live Load Shears

The design live load values for HL-93 and fatigue loading, as presented in the previous tables, are computed based on the product of the live load effect per lane and live load distribution factor. These values also include the effects of dynamic load allowance. However, it is important to note that the dynamic load allowance is applied only to the design truck or tandem. The dynamic load allowance is not applied to pedestrian loads or to the design lane load **LRFD [3.6.1, 3.6.2, 4.6.2.2]**.

E24-1.6 Combine Load Effects

After the load factors and load combinations have been established (see E24-1.1), the section properties have been computed (see E24-1.3), and all of the load effects have been computed (see E24-1.4 and E24-1.5), the force effects must be combined for each of the applicable limit states.

For this design example, η equals 1.00 **LFRD[1.3]**. (For more detailed information about η, refer to E24-1.1.)

The maximum positive moment (located at 0.4L) for the Strength I Limit State is computed as follows **LRFD [3.4.1]**:

$LF_{DC} := 1.25$

$M_{DC} := 140.7 + 947.3 + 25.7 + 159.1$ $\boxed{M_{DC} = 1272.8}$ kip-ft

$LF_{DW} := 1.50$

$M_{DW} := 150.6$ kip-ft

$LF_{LL} := 1.75$

$M_{LL} := 2037.7$ kip-ft

$M_{total} := LF_{DC} \cdot M_{DC} + LF_{DW} \cdot M_{DW} + LF_{LL} \cdot M_{LL}$ $\boxed{M_{total} = 5382.9}$ kip-ft

Similarly, the maximum stress in the top of the girder due to positive moment (located at 0.4L) for the Strength I Limit State is computed as follows:

Noncomposite dead load:

$M_{noncompDL} := 140.7 + 947.3 + 25.7$ $\boxed{M_{noncompDL} = 1113.70}$ kip-ft

$S_{topgdr} := 821.7$ in^3

$f_{noncompDL} := \dfrac{-M_{noncompDL} \cdot (12)}{S_{topgdr}}$ $\boxed{f_{noncompDL} = -16.26}$ ksi

Parapet dead load (composite):

$M_{parapet} := 159.1$ kip-ft

$S_{topgdr} := 4404.7$ in^3

$f_{parapet} := \dfrac{-M_{parapet} \cdot (12)}{S_{topgdr}}$ $\boxed{f_{parapet} = -0.43}$ ksi

Future wearing surface dead load (composite):

$M_{fws} := 150.6$ kip-ft

$S_{topgdr} := 4404.7$ in^3

$f_{fws} := \frac{-M_{fws} \cdot (12)}{S_{topgdr}}$ $\boxed{f_{fws} = -0.41}$ ksi

Live load (HL-93) and dynamic load allowance:

$M_{LL} = 2037.70$ kip-ft

$S_{topgdr} := 24820.6$ in^3

$f_{LL} := \frac{-M_{LL} \cdot (12)}{S_{topgdr}}$ $\boxed{f_{LL} = -0.99}$ ksi

Multiplying the above stresses by their respective load factors and adding the products results in the following combined stress for the Strength I Limit State **LRFD [3.4.1]**:

$$f_{Str} := (LF_{DC} \cdot f_{noncompDL}) + (LF_{DC} \cdot f_{parapet}) + (LF_{DW} \cdot f_{fws}) + (LF_{LL} \cdot f_{LL})$$

$\boxed{f_{Str} = -23.21}$ ksi

Similarly, all of the combined moments, shears, and flexural stresses can be computed at the controlling locations. A summary of those combined load effects for an interior beam is presented in the following three tables, summarizing the results obtained using the procedures demonstrated in the above computations.

Combined Effects at Location of Maximum Positive Moment				
Summary of Unfactored Values:				
Loading	**Moment (K-ft)**	**f_{botgdr} (ksi)**	**f_{topgdr} (ksi)**	**$f_{topslab}$ (ksi)**
Noncomposite DL	1113.7	15.23	-16.26	0.00
Parapet DL	159.1	1.55	-0.43	-0.05
FWS DL	150.6	1.47	-0.41	-0.05
LL - HL-93	2037.7	18.25	-0.99	-0.62
LL - Fatigue Range	888.5	7.96	-0.43	-0.27
Summary of Factored Values:				
Limit State	**Moment (K-ft)**	**f_{botgdr} (ksi)**	**f_{topgdr} (ksi)**	**$f_{topslab}$ (ksi)**
Strength I	5382.9	55.12	-23.21	-1.21
Service II	4072.4	41.98	-18.39	-0.90
Fatigue I	1554.9	13.93	-0.75	-0.47

Table E24-1.6-1
Combined Effects at Location of Maximum Positive Moment

As shown in the above table, the Strength I Limit State elastic stress in the bottom of the girder exceeds the girder yield stress. However, for this design example, this value is not used because of the local yielding that is permitted to occur at this section at the strength limit state.

Combined Effects at Location of Maximum Negative Moment				
Summary of Unfactored Values (Assuming Concrete Not Effective):				
Loading	**Moment (K-ft)**	**f_{botgdr} (ksi)**	**f_{topgdr} (ksi)**	**f_{deck} (ksi)**
Noncomposite DL	-3143.1	-16.56	17.60	0.00
Parapet DL	-405.7	-2.05	1.85	2.22
FWS DL	-383.9	-1.94	1.75	2.10
LL - HL-93	-2065.7	-10.41	9.44	11.28
Summary of Unfactored Values (Assuming Concrete Effective):				
Loading	**Moment (K-ft)**	**f_{botgdr} (ksi)**	**f_{topgdr} (ksi)**	**f_{deck} (ksi)**
Noncomposite DL	-3143.1	-16.56	17.60	0.00
Parapet DL	-405.7	-1.84	0.92	0.09
FWS DL	-383.9	-1.74	0.87	0.08
LL - HL-93	-2065.7	-8.70	1.85	0.45
LL - Fatigue Range	-506.3	-2.13	0.45	0.11
Summary of Factored Values:				
Limit State	**Moment (K-ft)**	**f_{botgdr} (ksi)**	**f_{topgdr} (ksi)**	**f_{deck} (ksi)**
Strength I *	-8626.8	-44.38	43.47	25.66
Service II **	-6618.1	-31.45	21.80	0.75
Fatigue I **	-886.0	-3.73	0.79	0.19

Legend:

* Strength I Limit State stresses are based on section properties assuming the deck concrete is not effective, and f_{deck} is the stress in the deck reinforcing steel.

** Service II and Fatigue I Limit State stresses are based on section properties assuming the deck concrete is effective, and f_{deck} is the stress in the deck concrete.

Table E24-1.6-2
Combined Effects at Location of Maximum Negative Moment

Combined Effects at Location of Maximum Shear	
Summary of Unfactored Values:	
Loading	**Shear (kips)**
Noncomposite DL	111.5
Parapet DL	14.5
FWS DL	13.8
LL - HL-93	132.9
LL - Fatigue Range	58.8
Summary of Factored Values:	
Limit State	**Shear (kips)**
Strength I	410.8
Service II	312.6
Fatigue I	102.9

Table E24-1.6-3
Combined Effects at Location of Maximum Shear

Envelopes of the factored Strength I moments and shears are presented in the following two figures. Maximum and minimum values are presented. As mentioned previously, all remaining design computations in this example are based on the interior girder. The basic approach illustrated in the subsequent design calculations applies equally to the exterior and interior girders (with some exceptions noted) once the load effects in each girder have been determined.

Factored Moments - Interior Beams (Kip-feet)											
Load Effect	Location in Span 1										
	0.0L	0.1L	0.2L	0.3L	0.4L	0.5L	0.6L	0.7L	0.8L	0.9L	1.0L
Strength I (Max)	0.0	2440.5	4113.6	5112.8	5382.9	4982.4	3952.3	2280.9	14.5	-2596.7	-5011.9
Strength I (Min)	0.0	727.9	1139.3	1234.4	1012.1	474.4	-379.3	-1549.7	-3040.7	-5279.5	-8626.8
Service II (Max)	0.0	1850.8	3118.7	3872.8	4072.4	3760.8	2968.5	1686.8	-50.2	-2056.9	-3932.7
Service II (Min)	0.0	578.7	909.2	991.8	825.5	412.0	-249.3	-1158.8	-2319.7	-4049.8	-6618.1
Fatigue I	0.0	821.8	1404.7	1762.0	1915.1	1953.9	1912.0	1704.8	1366.9	1042.3	886.1

Table E24-1.6-4
Factored Moments

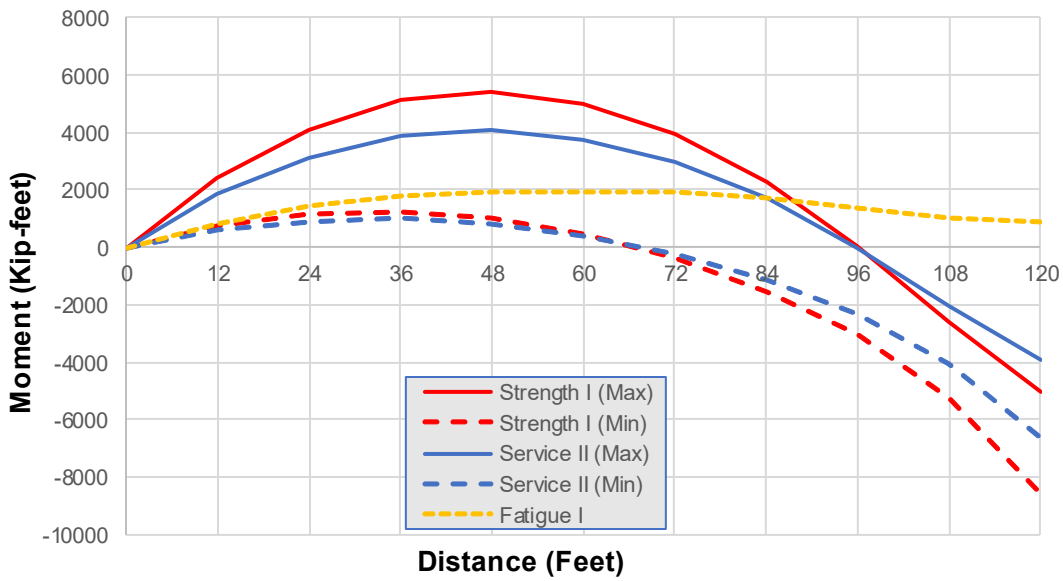

Figure E24-1.6-1
Envelope of Moments

Factored Shears - Interior Beams (Kips)											
Live Load/Fatigue	Location in Span 1										
	0.0L	0.1L	0.2L	0.3L	0.4L	0.5L	0.6L	0.7L	0.8L	0.9L	1.0L
Strength I	67.9	40.6	0.1	-48.7	-99.4	-150.9	-202.6	-254.2	-306.3	-358.4	-410.7
Service II	54.2	32.8	1.6	-35.7	-74.4	-113.8	-153.3	-192.7	-232.5	-272.4	-312.5
Fatigue I	103.6	89.7	76.3	71.4	76.3	78.6	81.5	85.3	91.3	97.0	102.8

Table E24-1.6-5
Factored Shears

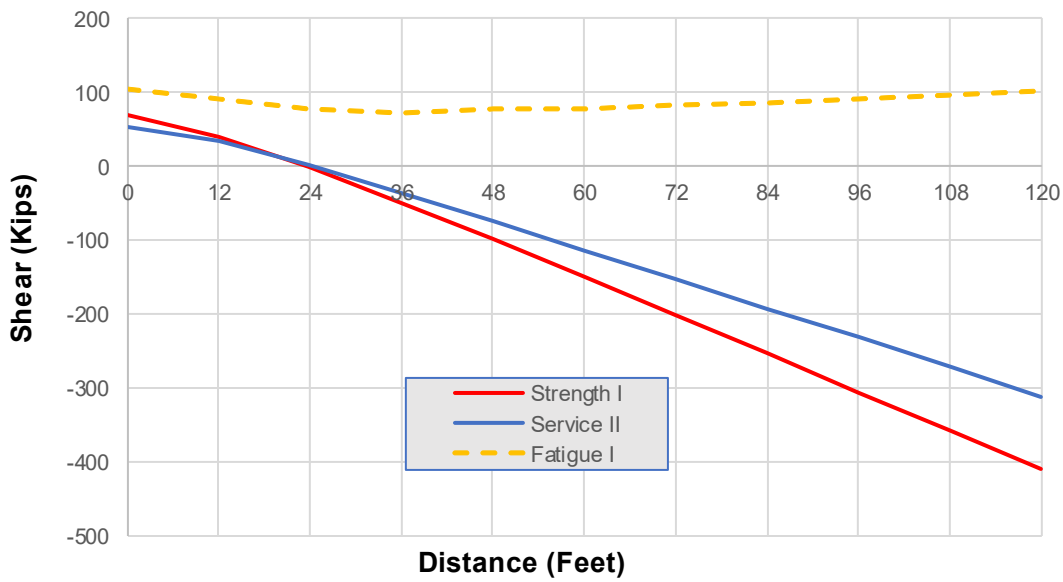

Figure E24-1.6-2
Envelope of Shears

Two design sections will be checked for illustrative purposes. First, all specification checks will be performed for the location of maximum positive moment, which is at 0.4L in Span 1. Second, all specification checks for these same design steps will be performed for the location of maximum negative moment and maximum shear, which is at the pier.

The following specification checks are for the location of maximum positive moment, which is at 0.4L in Span 1, as shown in Figure E24-1.6-3.

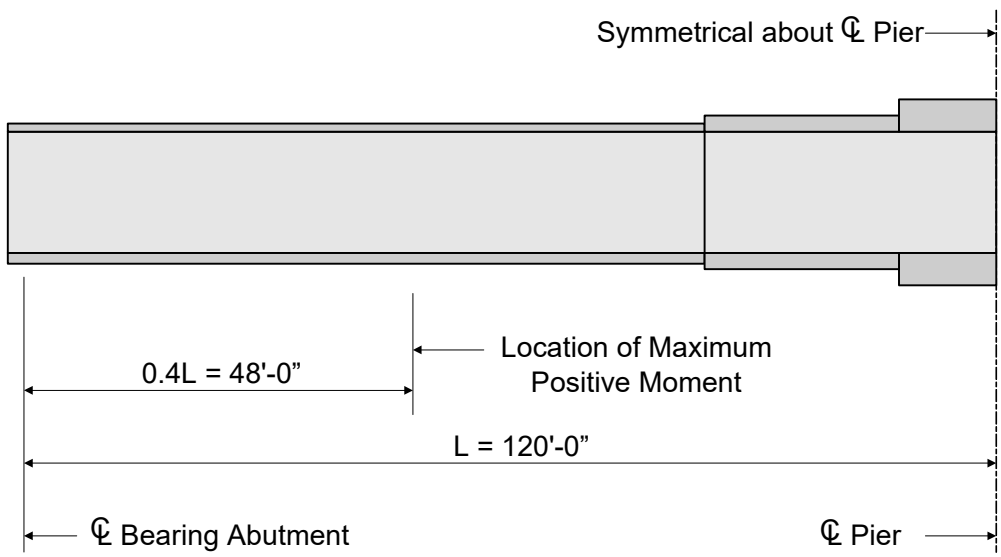

Figure E24-1.6-3
Location of Maximum Positive Moment

E24-1.7 Check Section Proportion Limits - Positive Moment Region

Several checks are required to ensure that the proportions of the trial girder section are within specified limits **LRFD [6.10.2]**.

The first section proportion check relates to the web slenderness **LRFD [6.10.2.1]**. For a section without longitudinal stiffeners, the web must be proportioned such that:

$$\frac{D}{t_w} \le 150$$

Where:

D = Clear distance between flanges (in)

t_w = Web thickness (in)

$D := 54$ in

$t_w := 0.50$ in

$$\boxed{\frac{D}{t_w} = 108.00}$$ OK

The second set of section proportion checks relate to the general proportions of the section **LRFD [6.10.2.2]**. The compression and tension flanges must be proportioned such that:

$$\frac{b_f}{2 \cdot t_f} \le 12.0$$

Where:

b_f = Full width of the flange (in)

t_f = Flange thickness (in)

$b_f := 14$ $t_f := 0.75$

$$\boxed{\frac{b_f}{2 \cdot t_f} = 9.33}$$ OK

$$b_f \ge \frac{D}{6}$$

$$\boxed{\frac{D}{6} = 9.00}$$ in OK

$$t_f \ge 1.1 \cdot t_w$$

$$\boxed{1.1 t_w = 0.55}$$ in OK

$$0.1 \le \frac{I_{yc}}{I_{yt}} \le 10$$

Where:

I_{yc} = moment of inertia of the compression flange of a steel section about the vertical axis in the plane of the web (in^4)

I_{yt} = moment of inertia of the tension flange of a steel section about the vertical axis in the plane of the web (in^4)

$$I_{yc} := \frac{0.75 \cdot 14^3}{12}$$

$$\boxed{I_{yc} = 171.50}$$ in^4

$$I_{yt} := \frac{0.875 \cdot 14^3}{12}$$

$$\boxed{I_{yt} = 200.08}$$ in^4

$$\boxed{\frac{I_{yc}}{I_{yt}} = 0.857}$$ OK

E24-1.8 Compute Plastic Moment Capacity - Positive Moment Region

For composite sections, the plastic moment, M_p, is calculated as the first moment of plastic forces about the plastic neutral axis **LRFD [Appendix D6.1]**.

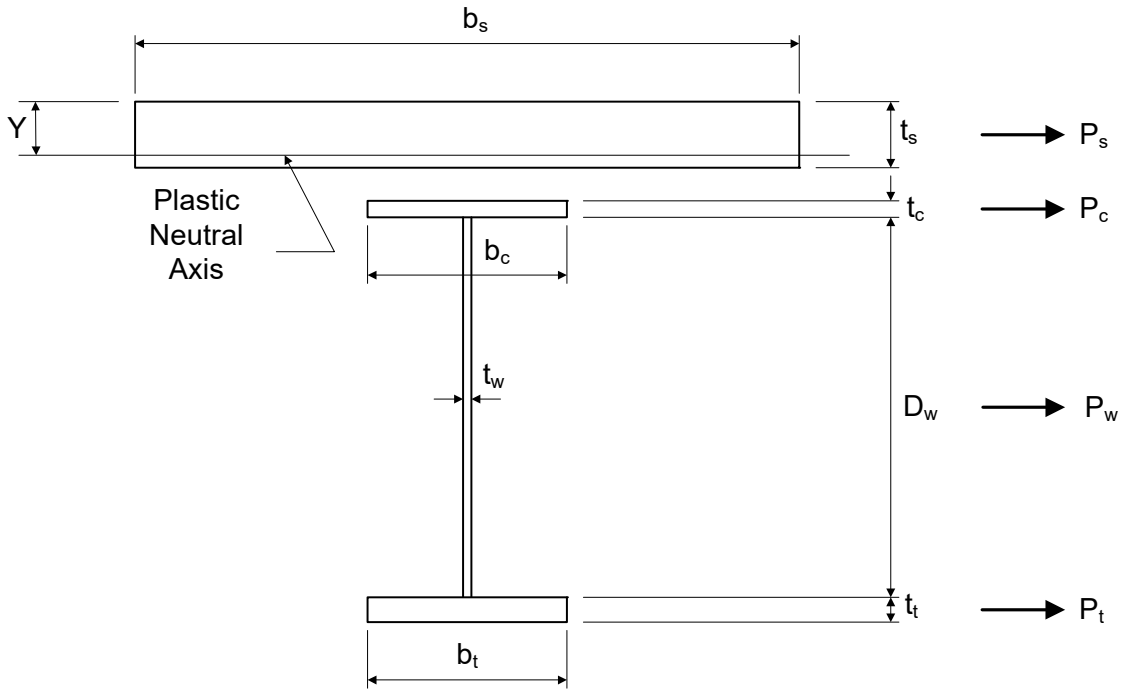

Figure E24-1.8-1
Computation of Plastic Moment Capacity for Positive Bending Sections

For the tension flange:

$$P_t = F_{yt} \cdot b_t \cdot t_t$$

Where:

F_{yt} = Specified minimum yield strength of a tension flange (ksi)

b_t = Full width of the tension flange (in)

t_t = Thickness of tension flange (in)

$F_{yt} := 50$ ksi

$b_t := 14$ in

$t_t := 0.875$ in

$P_t := F_{yt} \cdot b_t \cdot t_t$ $\boxed{P_t = 613}$ kips

For the web:

$P_w := F_{yw} \cdot D \cdot t_w$

Where:

F_{yw} = Specified minimum yield strength of a web (ksi)

$F_{yw} = 50$ ksi

$D = 54$ in

$t_w = 0.50$ in

$P_w := F_{yw} \cdot D \cdot t_w$ $\boxed{P_w = 1350}$ kips

For the compression flange:

$P_c = F_{yc} \cdot b_c \cdot t_c$

Where:

F_{yc} = Specified minimum yield strength of a compression flange (ksi)

b_c = Full width of the compression flange (in)

t_c = Thickness of compression flange (in)

$F_{yc} := 50$ ksi

$b_c := 14$ in

$t_c := 0.75$ in

$P_c := F_{yc} \cdot b_c \cdot t_c$ $\boxed{P_c = 525}$ kips

For the slab:

$P_s = 0.85 \cdot f'_c \cdot b_s \cdot t_s$

Where:

b_s = Effective width of concrete deck (in)

t_s = Thickness of concrete deck (in)

$f'_c = 4.00$ ksi

$b_s := 120$ in

$t_s = 8.5$ in

$P_s := 0.85 \cdot f'_c \cdot b_s \cdot t_s$ $\boxed{P_s = 3468}$ kips

The forces in the longitudinal reinforcement may be conservatively neglected in regions of positive flexure.

Check the location of the plastic neutral axis, as follows:

$P_t + P_w = 1963$ kips $\quad$ $P_c + P_s = 3993$ kips

$P_t + P_w + P_c = 2488$ kips $\quad$ $P_s = 3468$ kips

Since $P_t + P_w + P_c < P_s$, the plastic neutral axis is located within the slab **LRFD [Table D6.1-1]**. Since the slab reinforcement is being neglected in regions of positive flexure, Case III, V, or VII can be used. All three cases yield the same results with the reinforcement terms P_{rt} and P_{rb} set equal to zero.

$$Y := (t_s)\cdot\left(\frac{P_c + P_w + P_t}{P_s}\right) \qquad Y = 6.10 \text{ in}$$

Check that the position of the plastic neutral axis, as computed above, results in an equilibrium condition in which there is no net axial force.

$$\text{Compression} := 0.85\cdot f'_c\cdot b_s\cdot Y \qquad \text{Compression} = 2488 \text{ kips}$$

$$\text{Tension} := P_t + P_w + P_c \qquad \text{Tension} = 2488 \text{ kips} \quad \text{OK}$$

The plastic moment, M_p, is computed as follows, where d is the distance from an element force (or element neutral axis) to the plastic neutral axis **LRFD [Table D6.1-1]**:

$$d_c := \frac{-t_c}{2} + 3.75 + t_s - Y \qquad d_c = 5.78 \text{ in}$$

$$d_w := \frac{D}{2} + 3.75 + t_s - Y \qquad d_w = 33.15 \text{ in}$$

$$d_t := \frac{t_t}{2} + D + 3.75 + t_s - Y \qquad d_t = 60.59 \text{ in}$$

$$M_p := \frac{\frac{Y^2\cdot P_s}{2\cdot t_s} + \left(P_c\cdot d_c + P_w\cdot d_w + P_t\cdot d_t\right)}{12} \qquad M_p = 7707 \text{ kip-ft}$$

E24-1.9 Determine if Section is Compact or Noncompact - Positive Moment Region

Since the section is in a straight bridge, the next step in the design process is to determine if the section is compact or noncompact. This, in turn, will determine which formulae should be used to compute the flexural capacity of the girder.

If the specified minimum yield strengths of the flanges do not exceed 70.0 ksi and the girder does not have longitudinal stiffeners, then the first step is to check the compact-section web slenderness provisions, as follows **LRFD [6.10.6.2.2]**:

$$\frac{2 \cdot D_{cp}}{t_w} \le 3.76 \cdot \sqrt{\frac{E}{F_{yc}}}$$

Where:

D_{cp} = Depth of web in compression at the plastic moment (in)

Since the plastic neutral axis is located within the slab,

$D_{cp} := 0$ in

Therefore the web is deemed compact. Since this is a composite section in positive flexure and there are no holes in the tension flange at this section, the flexural resistance is computed as defined by the composite compact-section positive flexural resistance provisions of **LRFD [6.10.7.1.2]**.

E24-1.10 Design for Flexure - Strength Limit State - Positive Moment Region

Since the section was determined to be compact, and since it is a composite section in the positive moment region with no holes in the tension flange, the flexural resistance is computed in accordance with **LRFD [6.10.7.1.2]**.

$$M_n = 1.3 \cdot R_h \cdot M_y$$

Where:

R_h = Hybrid factor

M_y = Yield Moment (kip-in)

All design sections of this girder are homogenous. That is, the same structural steel is used for the top flange, the web, and the bottom flange. Therefore, the hybrid factor, R_h, is as follows **LRFD [6.10.1.10.1]**:

$R_h := 1.0$

The yield moment, M_y, is computed as follows **LRFD [Appendix D6.2.2]**:

$$F_y = \frac{M_{D1}}{S_{NC}} + \frac{M_{D2}}{S_{LT}} + \frac{M_{AD}}{S_{ST}}$$

Where:

M_{D1} = Bending moment caused by the factored permanent load applied before the concrete deck has hardened or is made composite (kip-in)

S_{NC} = Noncomposite elastic section modulus (in^3)

M_{D2} = Bending moment caused by the factored permanent load applied to the long-term composite section (kip-in)

S_{LT} = Long-term composite elastic section modulus (in^3)

M_{AD} = Additional bending moment that must be applied to the short-term composite section to cause nominal yielding in either steel flange (kip-in)

S_{ST} = Short-term composite elastic section modulus (in^3)

$M_y = M_{D1} + M_{D2} + M_{AD}$

$F_y := 50$ ksi

$M_{D1} := (1.25 \cdot 1113.7)$ $\boxed{M_{D1} = 1392}$ kip-ft

$M_{D2} := (1.25 \cdot 159.1) + (1.50 \cdot 150.6)$ $\boxed{M_{D2} = 425}$ kip-ft

For the bottom flange:

$S_{NC} := 877.6$ in^3

$S_{LT} := 1231.4$ in^3

$S_{ST} := 1339.5$ in^3

$$M_{AD} := \left[\frac{S_{ST}}{12^3} \cdot \left(F_y \cdot 144 - \frac{M_{D1}}{\frac{S_{NC}}{12^3}} - \frac{M_{D2}}{\frac{S_{LT}}{12^3}}\right)\right]$$ $\boxed{M_{AD} = 2994}$ kip-ft

$M_{ybot} := M_{D1} + M_{D2} + M_{AD}$ $\boxed{M_{ybot} = 4811}$ kip-ft

For the top flange:

$S_{NC} := 821.7$ in^3

$S_{LT} := 4404.7$ in^3

$S_{ST} := 24820.6$ in^3

$$M_{AD} := \frac{S_{ST}}{12^3} \cdot \left(F_y \cdot 144 - \frac{M_{D1}}{\frac{S_{NC}}{12^3}} - \frac{M_{D2}}{\frac{S_{LT}}{12^3}}\right)$$ $\boxed{M_{AD} = 58974}$ kip-ft

$M_{ytop} := M_{D1} + M_{D2} + M_{AD}$ $\boxed{M_{ytop} = 60791}$ kip-ft

The yield moment, M_y, is the lesser value computed for both flanges. Therefore, M_y is determined as follows **LRFD [Appendix D6.2.2]**:

$M_y := \min(M_{ybot}, M_{ytop})$ $\boxed{M_y = 4811}$ kip-ft

Therefore, for the positive moment region of this design example, the nominal flexural resistance is computed as follows **LRFD [6.10.7.1.2]**:

$D_p \le 0.1D_t$

$D_p := Y$ $\boxed{D_p = 6.10}$ in

$D_t := 0.875 + 54 + .75 + 3 + 8.5$ $\boxed{D_t = 67.13}$ in

$\boxed{0.1 \cdot D_t = 6.713}$ in OK

Therefore

$M_n := M_p$ $\boxed{M_n = 7707}$ kip-ft

Since this is neither a simple span nor a continuous span where the span and the sections in the negative-flexure region over the interior supports satisfy the special conditions outlined at the end of **LRFD [6.10.7.1.2]**, the nominal flexural resistance of the section must not exceed the following:

$M_n := 1.3 \cdot R_h \cdot M_y$ $\boxed{M_n = 6255}$ kip-ft

The ductility requirement is checked as follows **LRFD [6.10.7.3]**:

$D_p \le 0.42D_t$

Where:

D_p = Distance from top of the concrete deck to the neutral axis of the composite section at the plastic moment (in)

D_t = Total depth of the composite section (in)

$\boxed{0.42 \cdot D_t = 28.19}$ in OK

The factored flexural resistance, M_r, is computed as follows (note that since there is no curvature, skew and wind load is not considered under the Strength I load combination, the flange lateral bending stress is taken as zero in this case **LRFD [6.10.7.1.1]**:

$$M_u + \frac{1}{3}(0) \le \phi_f M_n$$

Where:

M_u = Moment due to the factored loads (kip-in)

M_n = Nominal flexural resistance of a section (kip-in)

$\phi_f := 1.00$

$M_r := \phi_f \cdot M_n$ $\boxed{M_r = 6255}$ kip-ft

The positive flexural resistance at this design section is checked as follows:

$$\Sigma\eta_i \cdot \gamma_i \cdot Q_i \le R_r$$

or in this case:

$$\Sigma\eta \cdot \gamma \cdot M_u \le M_r$$

$\eta := 1.00$

As computed in E24-1.6,

$\Sigma \cdot \gamma \cdot M_u = 5383$ kip-ft

Therefore

$\Sigma\eta \cdot \gamma \cdot M_u = 5383$ kip-ft

$M_r = 6255$ kip-ft OK

E24-1.11 Design for Shear - Positive Moment Region

Shear must be checked at each section of the girder **LRFD [6.10.9]**. However, shear is minimal at the location of maximum positive moment, and it is maximum at the pier.

Therefore, for this design example, the required shear design computations will be presented later for the girder design section at the pier.

It should be noted that in end panels, the shear is limited to either the shear yield or shear buckling in order to provide an anchor for the tension field in adjacent interior panels. Tension field is not allowed in end panels. The design procedure for shear in the end panel is presented in **LRFD [6.10.9.3.3c]**.

E24-1.12 Design Transverse Intermediate Stiffeners - Positive Moment Region

As stated above, shear is minimal at the location of maximum positive moment but is maximum at the pier. Therefore, the required design computations for transverse intermediate stiffeners will be presented later for the girder design section at the pier **LRFD [6.10.11.1]**.

E24-1.13 Design for Flexure - Fatigue and Fracture Limit State - Positive Moment Region

Load-induced fatigue must be considered in a plate girder design **LRFD [6.6.1]**.

For this design example, fatigue will be checked for the fillet-welded connection of a transverse intermediate stiffener serving as a cross-frame connection plate to the girder at the location of maximum positive moment. This detail corresponds to Description 4.1 in **LRFD [Table 6.6.1.2.3-1]**, and it is classified as Detail Category C'. The fatigue detail at the inner fiber of the tension flange, where the transverse intermediate stiffener is welded to the flange, is subject to a net tensile stress by inspection. However, for simplicity, the computations will conservatively compute the fatigue stress at the outer fiber of the tension flange.

The fatigue detail being investigated in this design example is illustrated in the following figure:

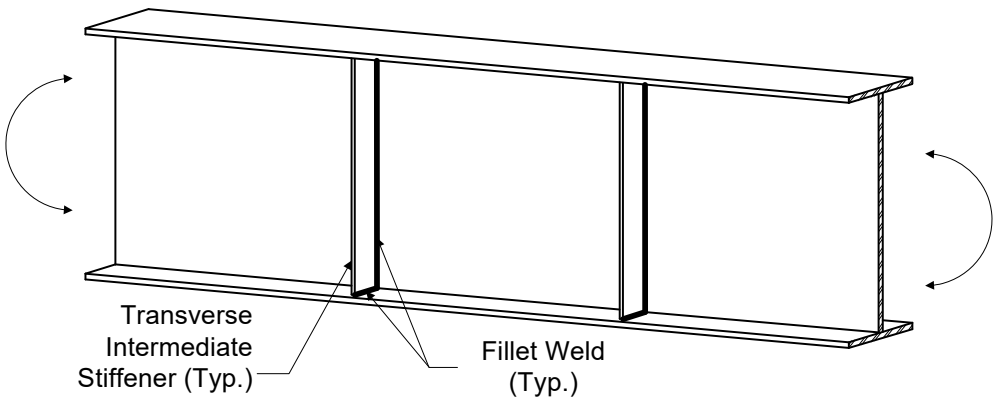

Figure E24-1.13-1
Load-Induced Fatigue Detail

The nominal fatigue resistance is computed as follows **LRFD [6.6.1.2.5]**:

NOTE: WisDOT policy is to design for infinite fatigue life (ADTT not considered) and use Fatigue I limit state.

$$\Delta F_n = \Delta F_{TH}$$

Where:

ΔF_{TH} = Constant-amplitude fatigue threshold **LRFD [Table 6.6.1.2.5-3]** (ksi)

$\Delta F_{TH} := 12.00$ ksi

$\Delta F_n = 12.00$ ksi

The factored fatigue stress range in the outer fiber base metal at the weld at the location of maximum positive moment was previously computed in Table E24-1.6-1, as follows:

$f_{botgdr} := 13.93$ ksi

$f_{botgdr} \leq \Delta F_n$ NG

NOTE: A new trial girder section is required to statisfy the above fatigue requirement.

In addition to the above fatigue detail check, a special fatigue requirement for webs must also be checked **LRFD [6.10.6]**. These calculations will be presented later for the girder design section at the pier [E24-1.23].

E24-1.14 Design for Flexure - Service Limit State - Positive Moment Region

The girder must be checked for service limit state control of permanent deflection **LRFD [6.10.4.2]**. This check is intended to prevent objectionable permanent deflections due to expected severe traffic loadings that would impair rideability. The Service II load combination is used for this check.

The stresses for steel flanges of composite sections must satisfy the following requirements **LRFD [6.10.4.2.2]**:

Top flange:

$$f_f \le 0.95 R_h \cdot F_{yf}$$

Bottom flange

$$f_f + \frac{f_l}{2} \le 0.95 R_h \cdot F_{yf}$$

Since there is no curvature and no discontinuous diaphragm lines in conjunction with skews exceeding 20 degrees, f_l is taken equal to zero at the service limit state in this case. The factored Service II flexural stress was previously computed in Table E24-1.6-1 as follows:

$f_{botgdr} := 41.98$ ksi

$f_{topgdr} := -18.39$ ksi

$\boxed{0.95 \cdot R_h \cdot F_{yf} = 47.50}$ ksi OK

As indicated in **LRFD [6.10.4.2.2]**, the web bend buckling check at the service limit state must be checked for all sections according to equation 6.10.4.2.2-4 with the execption of composite sections in positive flexure that meet the requirement of **LRFD [6.10.2.1.1]** (D/tw ≤ 150). Since $\frac{D}{t_w} = 108$ [E24-1.7] , equation 6.10.4.2.2-4 does not need to be considered for this location.

In addition to the check for service limit state control of permanent deflection, the girder can also be checked for live load deflection **LRFD [2.5.2.6.2]**. Although this check is optional for a concrete deck on steel girders, it is included in this design example.

Using an analysis computer program, the maximum live load deflection is computed to be the following:

$\Delta_{max} := 1.14$ in

This maximum live load deflection is computed based on the following:

1. All design lanes are loaded.
2. All supporting components are assumed to deflect equally.
3. For composite design, the design cross section includes the entire width of the roadway.
4. The number and position of loaded lanes is selected to provide the worst effect.
5. The live load portion of Service I Limit State is used.
6. Dynamic load allowance is included.
7. The live load is taken from **LRFD [3.6.1.3.2]**.

As recommended in LRFD [2.5.2.6.2] for "vehicular load, general", the deflection limit is as follows:

$Span := 120$ ft

$\Delta_{allowable} := \left(\frac{Span}{800}\right)\cdot(12)$ $\boxed{\Delta_{allowable} = 1.80}$ in OK

E24-1.15 Design for Flexure - Constructibility Check - Positive Moment Region

The girder must also be checked for flexure during construction **LRFD [6.10.3.2]**. The girder has already been checked in its final condition when it behaves as a composite section. The constructibility must also be checked for the girder prior to the hardening of the concrete deck when the girder behaves as a noncomposite section.

As previously stated, a deck pouring sequence will not be considered in this design example. However, it is required to consider the effects of the deck pouring sequence in an actual design because it will often control the design of the top flange and the cross-frame spacing in the positive moment regions of composite girders. The calculations illustrated below, which are based on the final noncomposite dead load moments after the sequential placement is complete would be employed to check the girder for the critical actions resulting from the deck pouring sequence. For an exterior girder, deck overhang effects must also be considered according to **LRFD [6.10.3.4]**. Since an interior girder is designed in this example, those effects are not considered here.

Based on the flowchart for constructibility checks in **LRFD [Appendix C6]**, nominal yielding of both flanges must be checked as well as the flexural resistance of the compression flange. For discretely braced flanges (note f_l is taken as zero since this is an interior girder and there are no curvature, skew, deck overhang or wind load effects considered) **LRFD [6.10.3.2.1 & 6.10.3.2.2]**:

$$f_{bu} + f_l \le \phi_f \cdot R_h \cdot F_{yf}$$

The flange stress, f_{bu}, is taken from Table E24-1.6-1 for the noncomposite dead load for the top flange since no deck placement analysis was performed. By inspection, since lateral flange bending is not considered, and no live load effects are considered, Strength IV is the controlling limit state and the compression flange is the controlling flange.

$f_{bu} := 1.5\cdot 16.26$ ksi $\boxed{f_{bu} = 24.39}$ ksi

$\boxed{\phi_f \cdot R_h \cdot F_{yf} = 50.00}$ ksi OK

The flexural resistance calculation ensures that the compression flange has sufficient strength with respect to lateral torsional and flange local buckling based limit states, including the consideration of flange lateral bending where these effects are judged to be significant. The equation is in **LRFD [6.10.3.2]**:

$$f_{bu} + \frac{1}{3}\cdot f_l \le \phi_f \cdot F_{nc}$$

Where:

F_{nc} = Nominal flexural resistance of the flange (ksi)

For straight I-girder bridges with compact or noncompact webs, the nominal resistance may be calculated from **LRFD [Appendix A6.3.3]** which includes the beneficial contribution of the

St. Venant constant, J, in the calculation of the lateral torsional buckling resistance. This example will not use **LRFD [Appendix A6.3.3]**, but a check of the noncompact slenderness limit of web using **LRFD [6.10.6.2.3]** is included for reference.

$D_c := 28.73 - 0.75$ $\boxed{D_c = 27.98}$ in

$\boxed{\frac{2 \cdot D_c}{t_w} = 111.92}$

$\lambda_{rw} := 5.7 \cdot \sqrt{\frac{E_s}{F_{yc}}}$ $\boxed{\lambda_{rw} = 137.27}$

$\frac{2 \cdot D_c}{t_w} < 5.7 \cdot \sqrt{\frac{E}{F_{yc}}}$ OK

Although the noncomposite section has a nonslender web according to equation 1 of **LRFD [6.10.6.2.3]**, for this example, these beneficial effects will conservatively not be utilized.

The nominal flexural resistance of the compression flange is therefore taken as the smaller of the local buckling resistance and the lateral torsional buckling resistance calculated according to **LRFD [6.10.8.2]**.

Local buckling resistance **LRFD [6.10.8.2.2]**:

$$\lambda_f = \frac{b_{fc}}{2 \cdot t_{fc}}$$

Where:

λ_f = Slenderness ratio for the compression flange

b_{fc} = Full width of the compression flange (in)

t_{fc} = Thickness of the compression flange (in)

$b_{fc} := 14$ in (see Figure E24-1.2-1)

$t_{fc} := 0.75$ in (see Figure E24-1.2-1)

$\lambda_f := \frac{b_{fc}}{2 \cdot t_{fc}}$ $\boxed{\lambda_f = 9.33}$

$\lambda_{pf} := 0.38 \cdot \sqrt{\frac{E_s}{F_{yc}}}$

Where:

λ_{pf} = Limiting slenderness ratio for a compact flange

$\boxed{\lambda_{pf} = 9.15}$

Since $\lambda_f > \lambda_{pf}$, F_{nc} must be calculated by the following equation:

$$F_{nc} = \left[1 - \left(1 - \frac{F_{yr}}{R_h \cdot F_{yc}}\right) \cdot \left(\frac{\lambda_f - \lambda_{pf}}{\lambda_{rf} - \lambda_{pf}}\right)\right] \cdot R_b \cdot R_h \cdot F_{yc}$$

Where:

F_{yr} = Compression-flange stress at the onset of nominal yielding within the cross-section, including residual stress effects, but not including compression-flange lateral bending, taken as the smaller of $0.7F_{yc}$ and F_{yw}, but not less than $0.5F_{yc}$

λ_{rf} = Limiting slenderness ratio for a noncompact flange

R_b = Web load-shedding factor **LRFD [6.10.1.10.2]**

$F_{yr} := \max(\min(0.7 \cdot F_{yc}, F_{yw}), 0.5 \cdot F_{yc})$ $\boxed{F_{yr} = 35.00}$ ksi

$\lambda_{rf} := 0.56 \cdot \sqrt{\frac{E_s}{F_{yr}}}$ $\boxed{\lambda_{rf} = 16.12}$

$R_b := 1.0$

$$F_{nc} := \left[1 - \left(1 - \frac{F_{yr}}{R_h \cdot F_{yc}}\right) \cdot \left(\frac{\lambda_f - \lambda_{pf}}{\lambda_{rf} - \lambda_{pf}}\right)\right] \cdot R_b \cdot R_h \cdot F_{yc}$$

$\boxed{F_{nc} = 49.61}$ ksi

Lateral torsional buckling resistance **LRFD [6.10.8.2.3]**:

For the noncomposite loads during construction:

$Depth_{comp} := 55.625 - 26.897$ (see Figure E24-1.2-1 and Table E24-1.3-1)

$\boxed{Depth_{comp} = 28.73}$ in

The effective radius of gyration, r_t, for lateral torsional buckling is calculated as follows:

$$r_t := \frac{b_{fc}}{\sqrt{12 \cdot \left(1 + \frac{1}{3} \cdot \frac{D_c \cdot t_w}{b_{fc} \cdot t_{fc}}\right)}}$$

Where:

D_c = Depth of the web in compression in the elastic range (in). For composite sections see **LRFD [Appendix D6.3.1]**

$t_{topfl} := 0.75$ in

$D_c := Depth_{comp} - t_{topfl}$ $\boxed{D_c = 27.98}$ in

$$r_t := \frac{b_{fc}}{\sqrt{12 \cdot \left(1 + \frac{1}{3} \cdot \frac{D_c \cdot t_w}{b_{fc} \cdot t_{fc}}\right)}}$$ $r_t = 3.36$ in

The limiting unbraced length, L_p, to achieve the nominal flexural resistance of $R_b R_h F_{yc}$ under uniform bending is calculated as follows:

$$L_p := 1.0 \cdot r_t \cdot \sqrt{\frac{E_s}{F_{yc}}}$$ $L_p = 80.99$ in

The limiting unbraced length, L_r, to achieve the onset of nominal yielding in either flange under uniform bending with consideration of compression-flange residual stress effects is calculated as follows:

$$L_r := \pi \cdot r_t \cdot \sqrt{\frac{E_s}{F_{yr}}}$$ $L_r = 304.13$ in

$L_b = 240.00$ in

The moment gradient correction factor, C_b, is computed as follows:

Note since f_{mid} is greater than f_2 at the location of maximum positive moment (see Figure E24-1.1-3), use C_b = 1.0 according to **LRFD [6.10.8.2.3]**.

$C_b := 1.00$

Therefore:

$$F_{nc} := C_b \cdot \left[1 - \left(1 - \frac{F_{yr}}{R_h \cdot F_{yc}}\right) \cdot \left(\frac{L_b - L_p}{L_r - L_p}\right)\right] \cdot R_b \cdot R_h \cdot F_{yc}$$

$F_{nc} = 39.3$ ksi

Use

(minimum of local buckling and lateral torsional buckling) $F_{nc} := 39.3$ ksi

$\phi_f \cdot F_{nc} = 39.30$ ksi

$f_{bu} + \frac{1}{3} \cdot (0) = 24.39$ ksi OK

Web bend-buckling during construction must also be checked according to equation 3 of **LRFD [6.10.3.2.1]**. However, since the noncomposite section has previously been shown to have a nonslender web, web bend-buckling need not be checked in this case according to **LRFD [6.10.3.2.1]**.

In addition to checking the nominal flexural resistance during construction, the nominal shear resistance must also be checked **LRFD [6.10.3.2.3]**. However, shear is minimal at the

location of maximum positive moment, and it is maximum at the pier in this case.

Therefore, for this design example, the nominal shear resistance for constructibility will be presented later for the girder design section at the pier.

E24-1.16 - Check Wind Effects on Girder Flanges - Positive Moment Region

As stated in previously, for this design example, the interior girder is being designed.

Wind effects generally do not control a steel girder design, and they are generally considered for the exterior girders only **LRFD [6.10.1.6 & C4.6.2.7.1]**. However, for this design example, wind effects will be presented later for the girder design section at the pier for illustration only.

Specification checks have been completed for the location of maximum positive moment, which is at 0.4L in Span 1.

E24-1.17 Check Section Proportion Limits - Negative Moment Region

Now the specification checks are repeated for the location of maximum negative moment, which is at the pier, as shown in Figure E24-1.17-1. This is also the location of maximum shear in this case.

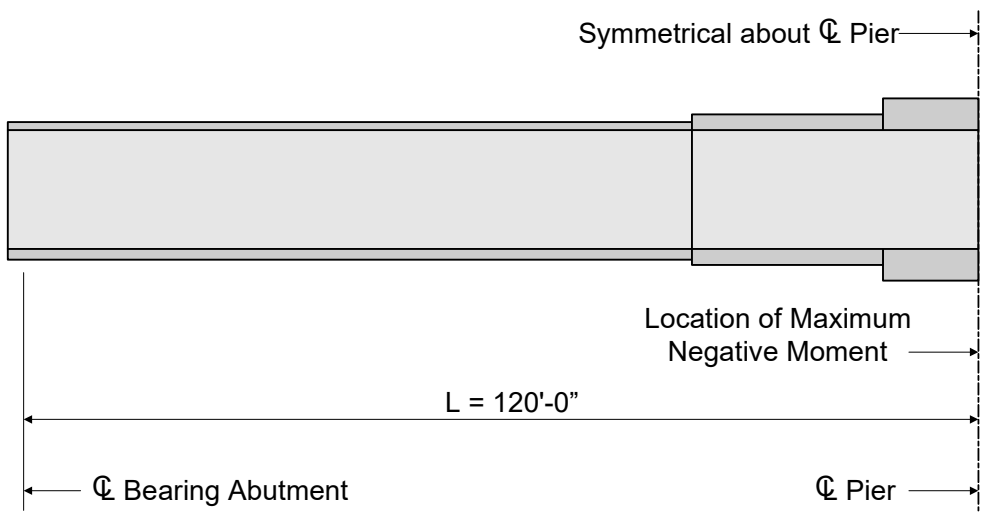

Figure E24-1.17-1
Location of Maximum Negative Moment

Several checks are required to ensure that the proportions of the girder section are within specified limits **LRFD [6.10.2]**.

The first section proportion check relates to the web slenderness **LRFD [6.10.2.1]**. For a section without longitudinal stiffeners, the web must be proportioned such that:

$$\frac{D}{t_w} \leq 150 \qquad \boxed{\frac{D}{t_w} = 108.00} \qquad \text{OK}$$

The second set of section proportion checks relate to the general proportions of the section

LRFD [6.10.2.2]. The compression and tension flanges must be proportioned such that:

$$\frac{b_f}{2 \cdot t_f} \le 12.0$$

$b_f := 14$

$t_f := 2.50$

$$\boxed{\frac{b_f}{2 \cdot t_f} = 2.80}$$ OK

$$b_f \ge \frac{D}{6}$$ $\boxed{\frac{D}{6} = 9.00}$ in OK

$$t_f \ge 1.1 \cdot t_w$$ $\boxed{1.1 t_w = 0.55}$ in OK

$$0.1 \le \frac{I_{yc}}{I_{yt}} \le 10$$

$$I_{yc} := \frac{2.75 \cdot 14^3}{12}$$ $\boxed{I_{yc} = 628.83}$ in^4

$$I_{yt} := \frac{2.50 \cdot 14^3}{12}$$ $\boxed{I_{yt} = 571.67}$ in^4

$$\boxed{\frac{I_{yc}}{I_{yt}} = 1.100}$$ OK

E24-1.18 Compute Plastic Moment Capacity - Negative Moment Region

For composite sections, the plastic moment, M_p, is calculated as the first moment of plastic forces about the plastic neutral axis **LRFD [Appendix D6.1]**. For composite sections in negative flexure, the concrete deck is ignored and the longitudinal deck reinforcement is included in the computation of M_p.

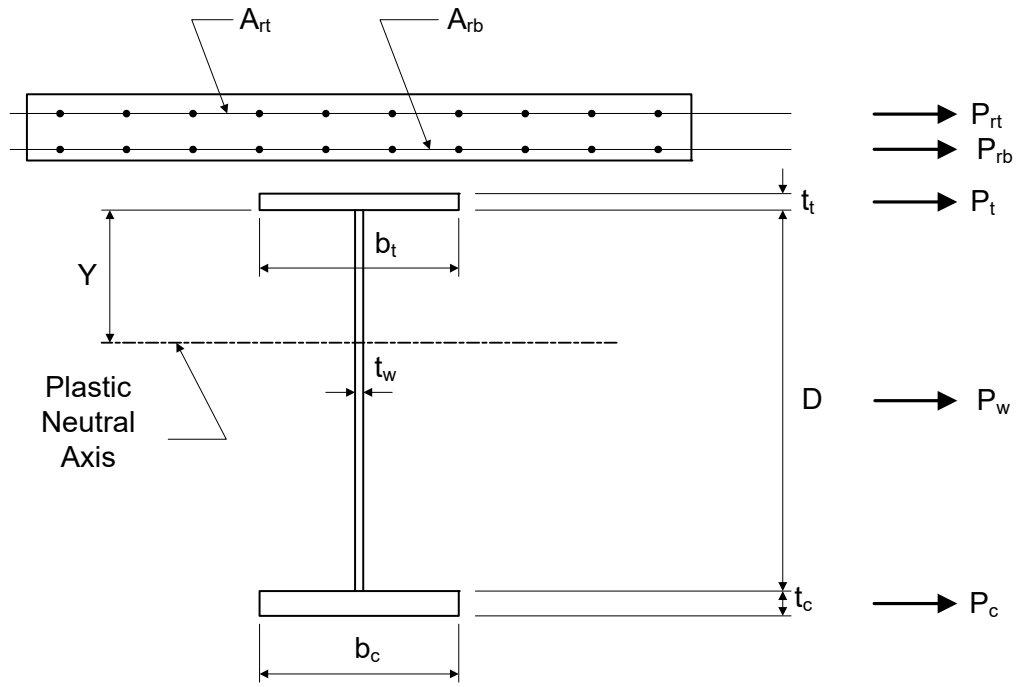

Figure E24-1.18-1
Computation of Plastic Moment Capacity for Negative Bending Sections

The plastic force in the tension flange, P_t, is calculated as follows:

$t_t := 2.50$ in

$P_t := F_{yt} \cdot b_t \cdot t_t$ $\boxed{P_t = 1750}$ kips

The plastic force in the web, P_w, is calculated as follows:

$P_w := F_{yw} \cdot D \cdot t_w$ $\boxed{P_w = 1350}$ kips

The plastic force in the compression flange, P_c, is calculated as follows:

$t_c := 2.75$ in

$P_c := F_{yc} \cdot b_c \cdot t_c$ $\boxed{P_c = 1925}$ kips

The plastic force in the top layer of longitudinal deck reinforcement, P_{rt}, used to compute the plastic moment is calculated as follows:

$P_{rt} = F_{yrt} \cdot A_{rt}$

Where:

F_{yrt} = Specified minimum yield strength of the top layer of longitudinal concrete deck reinforcement (ksi)

A_{rt} = Area of the top layer of longitudinal reinforcement within the effective concrete deck width (in^2)

$F_{yrt} := 60$ ksi

$A_{rt} := 0.44 \cdot \left(\frac{W_{effflange} \cdot 12}{7.5} \right)$ $\boxed{A_{rt} = 7.04}$ in^2

$P_{rt} := F_{yrt} \cdot A_{rt}$ $\boxed{P_{rt} = 422}$ kips

This example conservatively ignores the contribution from the bottom layer of longitudinal deck reinforcement, but the calculation is included for reference. The plastic force in the bottom layer of longitudinal deck reinforcement, P_{rb}, used to compute the plastic moment is calculated as follows:

$P_{rb} = F_{yrb} \cdot A_{rb}$

Where:

F_{yrb} = Specified minimum yield strength of the bottom layer of longitudinal concrete deck reinforcement (ksi)

A_{rb} = Area of the bottom layer of longitudinal reinforcement within the effective concrete deck width (in^2)

$F_{yrb} := 60$ ksi

$A_{rb} := 0 \cdot \left(\frac{W_{effflange} \cdot 12}{1} \right)$ $\boxed{A_{rb} = 0.00}$ in^2

$P_{rb} := F_{yrb} \cdot A_{rb}$ $\boxed{P_{rb} = 0}$ kips

Check the location of the plastic neutral axis, as follows:

$\boxed{P_c + P_w = 3275}$ kips

$\boxed{P_t + P_{rb} + P_{rt} = 2172}$ kips

$\boxed{P_c + P_w + P_t = 5025}$ kips

$\boxed{P_{rb} + P_{rt} = 422}$ kips

Therefore the plastic neutral axis is located within the web **LRFD [Appendix Table D6.1-2]**.

$Y := \left(\frac{D}{2} \right) \cdot \left(\frac{P_c - P_t - P_{rt} - P_{rb}}{P_w} + 1 \right)$ $\boxed{Y = 22.05}$ in

Although it will be shown in the next design step that this section qualifies as a nonslender

web section at the strength limit state, the optional provisions of Appendix A to **LRFD [6]** are not employed in this example. Thus, the plastic moment is not used to compute the flexural resistance and therefore does not need to be computed.

E24-1.19 Determine if Section is a Compact-Web, Noncompact-Web, or Slender-Web Section - Negative Moment Region

Since the section is in a straight bridge, the next step in the design process is to determine if the section is a compact-web, noncompact-web, or slender-web section. This, in turn, will determine which formulae should be used to compute the flexural capacity of the girder.

Where the specified minimum yield strengths of the flanges do not exceed 70.0 ksi and the girder does not have longitudinal stiffeners, then the first step is to check the noncompact-web slenderness limit, as follows **LRFD [6.10.6.2.3]**:

$$\frac{2 \cdot D_c}{t_w} \le 5.7\sqrt{\frac{E_s}{F_{yc}}} \qquad \lambda_{rw} := 5.7\sqrt{\frac{E_s}{F_{yc}}}$$

At sections in negative flexure, D_c of the composite section consisting of the steel section plus the longitudinal reinforcement is to be used at the strength limit state.

$D_c := 31.077 - 2.75$ (see Figure E24-1.2-1 and Table E24-1.3-3)

$\boxed{D_c = 28.33}$ in

$\boxed{\frac{2 \cdot D_c}{t_w} = 113.3}$

$\boxed{5.7 \cdot \sqrt{\frac{E_s}{F_{yc}}} = 137.3}$

The section is a nonslender web section (i.e. either a compact-web or noncompact-web section). Next, check:

$I_{yc} := \frac{2.75 \cdot 14^3}{12}$ $\boxed{I_{yc} = 628.83}$ in^4

$I_{yt} := \frac{2.5 \cdot 14^3}{12}$ $\boxed{I_{yt} = 571.67}$ in^4

$\boxed{\frac{I_{yc}}{I_{yt}} = 1.10}$ > 0.3 OK

Therefore, the web qualifies to use the optional provisions of **LRFD [Appendix A6]** to compute the flexural resistance. However, since the web slenderness is closer to the noncompact web slenderness limit than the compact web slenderness limit in this case, the simpler equations of **LRFD [6.10.8]**, which assume slender-web behavior and limit the resistance to Fyc or below, will conservatively be applied in this example to compute the flexural resistance at the strength limit state. The investigation proceeds by calculating the flexural resistance of the discretely braced compression flange.

E24-1.20 Design for Flexure - Strength Limit State - Negative Moment Region

The nominal flexural resistance of the compression flange shall be taken as the smaller of the local buckling resistance and the lateral torsional buckling resistance **LRFD [6.10.8.2.2 & 6.10.8.2.3]**.

Local buckling resistance **LRFD [6.10.8.2.2]**:

$b_{fc} := 14$ (see Figure E24-1.2-1)

$t_{fc} := 2.75$ (see Figure E24-1.2-1)

$\lambda_f := \frac{b_{fc}}{2 \cdot t_{fc}}$ $\boxed{\lambda_f = 2.55}$

$\lambda_{pf} := 0.38 \cdot \sqrt{\frac{E_s}{F_{yc}}}$ $\boxed{\lambda_{pf} = 9.15}$

Since $\lambda_f < \lambda_{pf}$, F_{nc} is calculated using the following equation:

$F_{nc} := R_b \cdot R_h \cdot F_{yc}$

Since $2D_c/t_w$ is less than λ_{rw} (calculated above), R_b is taken as 1.0 **LRFD [6.10.1.10.2]**.

$\boxed{F_{nc} = 50.00}$ ksi

Lateral torsional buckling resistance **LRFD [6.10.8.2.3]**:

$r_t := \frac{b_{fc}}{\sqrt{12 \cdot \left(1 + \frac{1}{3} \cdot \frac{D_c \cdot t_w}{b_{fc} \cdot t_{fc}}\right)}}$ $\boxed{r_t = 3.81}$ in

$L_p := 1.0 \cdot r_t \cdot \sqrt{\frac{E_s}{F_{yc}}}$ $\boxed{L_p = 91.86}$ in

$L_r := \pi \cdot r_t \cdot \sqrt{\frac{E_s}{F_{yr}}}$ $\boxed{L_r = 344.93}$ in

$L_b = 240.00$

The moment gradient correction factor, C_b, is computed as follows:

Where the variation in the moment along the entire length between brace points is concave in shape, which is the case here, $f_1 = f_0$. (calculated below based on the definition of f_0 given in **LRFD [6.10.8.2.3]**).

$M_{NCDC0.8L} := 112.1 + 780.3 + 17.8$ $\boxed{M_{NCDC0.8L} = 910.20}$ kip-ft

$S_{NCDC0.8L} := 2278.2$ in^3

The section properties specified for the 0.8 pt are the properties found at the pier based on **LRFD [6.10.8.2.3]**.

$M_{par0.8L} := 110.3$ kip-ft

$M_{fws0.8L} := 104.4$ kip-ft

$M_{LL0.8L} := 919.1$ kip-ft

$S_{rebar0.8L} := 2380.2$ in^3

$$f_1 := 1.25 \cdot \frac{M_{NCDC0.8L} \cdot 12}{S_{NCDC0.8L}} + 1.25 \cdot \frac{M_{par0.8L} \cdot 12}{S_{rebar0.8L}} + 1.50 \cdot \frac{M_{fws0.8L} \cdot 12}{S_{rebar0.8L}} + 1.75 \cdot \frac{M_{LL0.8L} \cdot 12}{S_{rebar0.8L}}$$

$\boxed{f_1 = 15.59}$ ksi

$f_2 := 44.38$ ksi (Table E24-1.6-2)

$$\boxed{\frac{f_1}{f_2} = 0.35}$$

$$C_b := 1.75 - 1.05 \cdot \left(\frac{f_1}{f_2}\right) + 0.3 \cdot \left(\frac{f_1}{f_2}\right)^2 < 2.3$$ $\boxed{C_b = 1.42}$

Therefore:

$F_{yr} := \max(\min(0.7 \cdot F_{yc}, F_{yw}), 0.5 \cdot F_{yc})$ $\boxed{F_{yr} = 35.00}$ ksi

$$F_{nc} := C_b \cdot \left[1 - \left(1 - \frac{F_{yr}}{R_h \cdot F_{yc}}\right) \cdot \left(\frac{L_b - L_p}{L_r - L_p}\right)\right] \cdot R_b \cdot R_h \cdot F_{yc}$$

$\boxed{F_{nc} = 58.46}$ ksi

$F_{nc} \le R_b \cdot R_h \cdot F_{yc}$ $\boxed{R_b \cdot R_h \cdot F_{yc} = 50.00}$ ksi

Use:

$F_{nc} := 50.00$ ksi

$\boxed{\phi_f \cdot F_{nc} = 50.00}$ ksi

$f_{bu} := 44.38$ ksi (Table E24-1.6-2)

Since there are no curvature or skew effects and wind is not considered under the Strength I load combination, f_l is taken equal to zero. Therefore:

$f_{bu} + \frac{1}{3}\cdot(0) = 44.38$ ksi OK

The investigation proceeds by calculating the flexural resistance of the continuously braced tension flange **LRFD [6.10.8.1.3 & 6.10.8.3]**.

$f_{bu} \le \phi_f \cdot R_h \cdot F_{yf}$ $\phi_f \cdot R_h \cdot F_{yf} = 50.00$ ksi

(Table E24-1.6-2) $f_{bu} := 43.47$ ksi OK

E24-1.21 - Design for Shear - Negative Moment Region

Shear must be checked at each section of the girder. For this design example, shear is maximum at the pier.

The first step in the design for shear is to check if the web must be stiffened. The nominal shear resistance, V_n, of unstiffened webs of hybrid and homogeneous girders is **LRFD [6.10.9.2]**:

$$V_n = C \cdot V_p$$

Where:

C = Ratio of the shear-buckling resistance to the shear yield strength in accordance with **LRFD [6.10.9.3.2]**, with the shear-buckling coefficient, k, taken equal to 5.0

V_p = Plastic shear force (kips)

$k := 5.0$

$\frac{D}{t_w} = 108.00$

$1.12 \cdot \sqrt{\frac{E_s \cdot k}{F_{yw}}} = 60.31$

$1.40 \cdot \sqrt{\frac{E_s \cdot k}{F_{yw}}} = 75.39$

Therefore,

$$\frac{D}{t_w} \ge 1.40 \cdot \sqrt{\frac{E \cdot k}{F_{yw}}}$$

$$C := \frac{1.57}{\left(\frac{D}{t_w}\right)^2} \cdot \left(\frac{E_s \cdot k}{F_{yw}}\right)$$ $C = 0.390$

The plastic shear force, V_p, is then:

$V_p := 0.58 \cdot F_{yw} \cdot D \cdot t_w$ $V_p = 783.0$ kips

$V_n := C \cdot V_p$ $\boxed{V_n = 305.6}$ kips

The factored shear resistance, V_r, is computed as follows **LRFD [6.10.9.1]**:

$\phi_v := 1.00$

$V_r := \phi_v \cdot V_n$ $\boxed{V_r = 305.6}$ kips

The shear resistance at this design section is checked as follows:

$\Sigma \eta_i \cdot \gamma_i \cdot Q_i \le R_r$

Or in this case:

$\Sigma \eta_i \cdot \gamma_i \cdot V_i \le V_r$

$\eta_i := 1.00$

As computed in E24-1.6, the factored Strength I Limit State shear at the pier is as follows:

$\Sigma \eta_i \cdot \gamma_i \cdot V_i = 410.8$ kips

$\boxed{V_r = 305.6}$ kips

Since the shear resistance of an unstiffened web is less than the actual design shear, the web must be stiffened.

The transverse intermediate stiffener spacing is 120 inches. The spacing of the transverse intermediate stiffeners does not exceed 3D, therefore the design section can be considered stiffened and the provisions of **LRFD [6.10.9.3]** apply.

The section must be checked against the web to flange proportion limits for interior web panels **LRFD [6.10.9.3.2]**.

$$\frac{2 \cdot D \cdot t_w}{b_{fc} \cdot t_{fc} + b_{ft} \cdot t_{ft}} \le 2.5$$

Where:

b_{ft} = Full width of tension flange (in)

t_{ft} = Thickness of tension flange (in)

$b_{ft} := 14.0$

$t_{ft} := 2.50$

$$\boxed{\frac{2 \cdot D \cdot t_w}{b_{fc} \cdot t_{fc} + b_{ft} \cdot t_{ft}} = 0.73}$$ OK

The nominal shear resistance , V_n, of the interior web panel at the pier is then:

$$V_n = V_p \cdot \left[C + \frac{0.87 \cdot (1 - C)}{\sqrt{1 + \left(\frac{d_o}{D}\right)^2}} \right]$$

Where:

C = Ratio of the shear-buckling resistance to the shear yield strength

d_0 = Transverse stiffener spacing (in)

$d_o := 120$

$k := 5 + \frac{5}{\left(\frac{d_o}{D}\right)^2}$ $\boxed{k = 6.01}$

$\boxed{\frac{D}{t_w} = 108.00}$

$\boxed{1.12 \cdot \sqrt{\frac{E_s \cdot k}{F_{yw}}} = 66.14}$

$\boxed{1.40 \cdot \sqrt{\frac{E_s \cdot k}{F_{yw}}} = 82.67}$

$$\frac{D}{t_w} \geq 1.40 \cdot \sqrt{\frac{E \cdot k}{F_{yw}}}$$

$C := \frac{1.57}{\left(\frac{D}{t_w}\right)^2} \cdot \left(\frac{E_s \cdot k}{F_{yw}}\right)$ $\boxed{C = 0.469}$

$V_p = 783.00$

$V_n := V_p \cdot \left[C + \frac{0.87 \cdot (1 - C)}{\sqrt{1 + \left(\frac{d_o}{D}\right)^2}} \right]$ $\boxed{V_n = 515.86}$ kips

The factored shear resistance, V_r, is computed as follows:

$\phi_v := 1.00$

$V_r := \phi_v \cdot V_n$ $\boxed{V_r = 515.86}$ kips

As previously computed, for this design example:

$\Sigma\eta_i \cdot \gamma_i \cdot V_i = 410.8$ kips

$V_r = 515.86$ kips OK

Therefore, the girder design section at the pier satisfies the shear resistance requirements for the web.

E24-1.22 Design Transverse Intermediate Stiffeners - Negative Moment Region

It is assumed that the transverse intermediate stiffeners consist of plates welded to one side of the web. The required interface between the transverse intermediate stiffeners and the top and bottom flanges is described in **LRFD [6.10.11.1.1]**.

The transverse intermediate stiffener configuration is assumed to be as presented in the following figure.

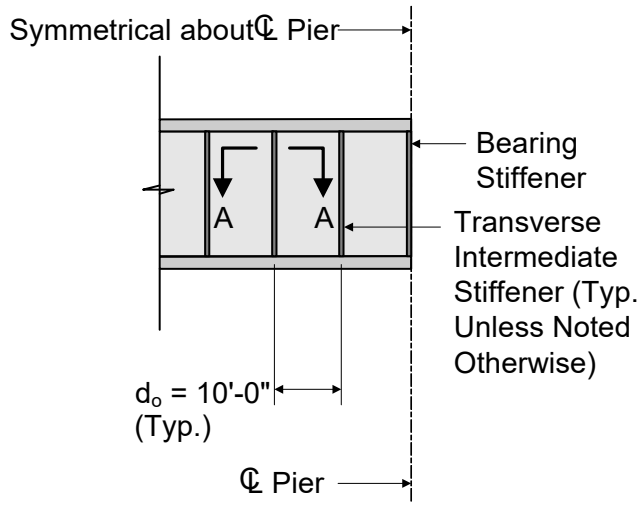

Partial Girder Elevation at Pier

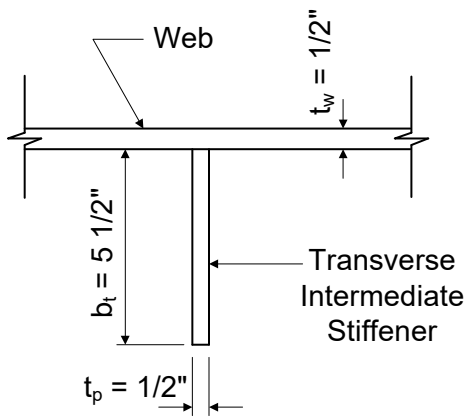

Section A-A

Figure E24-1.22-1
Transverse Intermediate Stiffener

The first specification check is for the projecting width of the transverse intermediate stiffener. The width, b_t, of each projecting stiffener element must satisfy the following **LRFD [6.10.11.1.2]**:

$b_t \geq 2.0 + \frac{D}{30.0}$ and $16.0 \cdot t_p \geq b_t \geq 0.25 b_f$

Where:

t_p = Thickness of the projecting stiffener element (in)

b_f = Full width of the widest compression flange within the field section under consideration (in)

$b_t := 5.5$ in

$D := 54$ in

$t_p := 0.50$ in

$b_f = 14.00$ in

$\boxed{2.0 + \frac{D}{30.0} = 3.80}$ in OK

$\boxed{16.0 \cdot t_p = 8.00}$ in

$\boxed{0.25 \cdot b_f = 3.50}$ in OK

The moment of inertia, I_t, of the transverse stiffener must satisfy the following since each panel adjacent to the stiffener supports a shear force larger than the shear buckling resistance ($V_{cr} = CV_p$) **LRFD [6.10.11.1.3]**:

If $I_{t2} > I_{t1}$, then :

$$I_t \geq I_{t1} + (I_{t2} - I_{t1})\left(\frac{V_u - \phi_v \cdot V_{cr}}{\phi_v \cdot V_n - \phi_v \cdot V_{cr}}\right)$$

Otherwise:

$$I_t \geq I_{t2}$$

$$I_{t1} = b \cdot t_w^3 \cdot J$$

Where:

b = The smaller of do and D (in)

J = Stiffener bending rigidity parameter

$b := \min(d_o, D)$ $b = 54.00$ in

$$J := \max\left[\frac{2.5}{\left(\frac{d_o}{D}\right)^2} - 2.0, 0.5\right] \qquad J = 0.50$$

$$I_{t1} := b \cdot t_w^3 \cdot J = 3.38 \qquad \text{in}^4$$

$$I_{t2} = \frac{D^4 \cdot \rho_t^{1.3}}{40} \cdot \left(\frac{F_{yw}}{E}\right)^{1.5}$$

Where:

ρ_t = The larger of F_{yw}/F_{crs} and 1.0

The local buckling stress for the stiffener, F_{crs}, is calculated as follows:

$$F_{crs} = \frac{0.31 \cdot E_s}{\left(\frac{b_t}{t_p}\right)^2} \le F_{ys}$$

Where:

F_{ys} = Specified minimum yield strength of the stiffener (ksi)

$$\boxed{\frac{0.31 \cdot E_s}{\left(\frac{b_t}{t_p}\right)^2} = 74.30} \qquad \text{ksi}$$

$$F_{ys} := 50.00 \qquad \text{ksi}$$

Use

$$F_{crs} := \min\left[F_{ys}, \frac{0.31 \cdot E_s}{\left(\frac{b_t}{t_p}\right)^2}\right] \qquad \boxed{F_{crs} = 50.00} \qquad \text{ksi}$$

$$\rho_t := \max\left(\frac{F_{yw}}{F_{crs}}, 1.0\right) \qquad \boxed{\rho_t = 1.00}$$

$$\boxed{I_{t2} := \frac{D^4 \cdot \rho_t^{1.3}}{40} \cdot \left(\frac{F_{yw}}{E_s}\right)^{1.5} = 15.22} \qquad \text{in}^4$$

Since $I_{t2} > I_{t1}$, the moment of inertia, I_t, of the transverse stiffener must satisfy:

$$I_t \geq I_{t1} + \left(I_{t2} - I_{t1}\right)\left(\frac{V_u - \phi_v \cdot V_{cr}}{\phi_v \cdot V_n - \phi_v \cdot V_{cr}}\right)$$

$V_u := 410.8$ kip

$V_{cr} := C \cdot V_p = 367.53$ kip

$V_n = 515.86$ kip

$$I_{t1} + \left(I_{t2} - I_{t1}\right)\left(\frac{V_u - \phi_v \cdot V_{cr}}{\phi_v \cdot V_n - \phi_v \cdot V_{cr}}\right) = 6.83 \quad \text{in}^4$$

$$I_t := \frac{t_p \cdot b_t^3}{3} \qquad \boxed{I_t = 27.73} \quad \text{in}^4$$

Therefore,

$$I_t \geq I_{t1} + \left(I_{t2} - I_{t1}\right)\left(\frac{V_u - \phi_v \cdot V_{cr}}{\phi_v \cdot V_n - \phi_v \cdot V_{cr}}\right) \qquad \text{OK}$$

E24-1.23 Design for Flexure - Fatigue and Fracture Limit State - Negative Moment Region

For this design example, sample nominal fatigue resistance computations were presented previously (E24-1.13) for the girder section at the location of maximum positive moment **LRFD [6.6.1]**. Detail categories are explained and illustrated in **LRFD [Table 6.6.1.2.3-1]**.

In addition to the nominal fatigue resistance computations, a special fatigue requirement for webs must also be checked **LRFD [6.10.5.3]**. This check is required to control out-of-plane flexing of the web due to shear under repeated live loading.

The check is made using fatigue range live load shear in combination with the shear due to the unfactored permanent load. This total shear is limited to the shear buckling resistance ($V_{cr} = CV_p$), as follows:

$$V_u \leq V_{cr}$$

Based on the unfactored shear values in Table E24-1.6-3:

$V_u = V_{noncomp} + V_{par} + V_{fws} + 1.75V_{LLfatiguerange}$

$V_u := 111.5 + 14.5 + 13.8 + (1.75 \cdot 58.8)$ $\boxed{V_u = 242.70}$ kips

$C = 0.469$ See E24-1.21

$V_p = 783.00$ kips See E24-1.21

$V_{cr} := C \cdot V_p$ $\boxed{V_{cr} = 367.53}$ kips

$V_u \le V_{cr}$ OK

Therefore, the special fatigue requirement for webs for shear is satisfied.

Other fatigue resistance calculations in the negative moment region are not shown here, but would be similar to the sample check illustrated previously for the positive moment region (E24-1.13).

E24-1.24 Design for Flexure - Service Limit State - Negative Moment Region

The girder must be checked for service limit state control of permanent deflection **LRFD [6.10.4]**. Service II Limit State is used for this check.

The flange stress checks of **LRFD [6.10.4.2.2]** will not control for composite sections in negative flexure for which the nominal flexural resistance under the strength load combinations given in **LRFD [Table 3.4.1-1]** is determined according to the slender-web provision of **LRFD [6.10.8]**, which is the case in this example.

However, for sections in negative flexure, the web must satisfy the web bend buckling check given by equation 4 of **LRFD [6.10.4.2.2]** at the service limit state, using the appropriate value of the depth of the web in compression in the elastic range, D_c.

$$f_c \le F_{crw}$$

$$F_{crw} := \frac{0.9 \cdot E_s \cdot k}{\left(\frac{D}{t_w}\right)^2} \qquad \text{(LRFD 6.10.1.9.1-1)}$$

Where:

k = Bend-buckling coefficient = $9/(D_c/D)^2$

The factored Service II flexural stress was previously computed in Table E24-1.6-2 as follows:

$f_{botgdr} := -31.45$ ksi

$f_{topgdr} := 21.80$ ksi

As previously explained, for this design example, the concrete slab is assumed to be fully effective for both positive and negative flexure for service limit states. Therefore, when this assumption is made, D_c must be computed as follows as indicated in **LRFD [Appendix D6.3.1]**:

$$D_c = \left(\frac{-f_c}{|f_c| + f_t}\right) \cdot d - t_{fc} \ge 0$$

$Depth_{gdr} := 59.25$ in (see Figure E24-1.2-1)

$$Depth_{comp} := \frac{-f_{botgdr}}{|f_{botgdr}| + f_{topgdr}} \cdot Depth_{gdr} \qquad \boxed{Depth_{comp} = 34.99} \text{ in}$$

$t_{botfl} := 2.75$ in

$D_c := Depth_{comp} - t_{botfl}$ $\boxed{D_c = 32.24}$ in

$D := 54.0$ in

$k := \dfrac{9.0}{\left(\dfrac{D_c}{D}\right)^2}$ $\boxed{k = 25.24}$

$\boxed{\dfrac{0.9 \cdot E_s \cdot k}{\left(\dfrac{D}{t_w}\right)^2} = 56.49}$ ksi

$F_{crw} := \min\left[\dfrac{0.9 \cdot E_s \cdot k}{\left(\dfrac{D}{t_w}\right)^2}, R_h \cdot F_{yc}, \dfrac{F_{yw}}{0.7}\right]$ $\boxed{F_{crw} = 50.00}$ ksi

$t_{bf} := 2.75$ in

$f_c := f_{botgdr} \cdot \left(\dfrac{D_c}{D_c + t_{bf}}\right)$ $\boxed{f_c = -28.98}$ ksi OK

E24-1.25 Design for Flexure - Constructibility Check - Negative Moment Region

The girder must also be checked for flexure during construction **LRFD [6.10.3.2]**. The girder has already been checked in its final condition when it behaves as a composite section. The constructibility must also be checked for the girder prior to the hardening of the concrete deck when the girder behaves as a noncomposite section.

For discretely braced flanges in compression with a compact or noncompact web and with f_l equal to zero (interior girder), equation 2 is used. This check is similar to the check performed in E24-1.20 and will not be checked here.

For the interior girder in this case (where $f_l = 0$), the sizes of the flanges at the pier section are controlled by the strength limit state flexural resistance checks illustrated previously. Therefore, separate constructibility checks on the flanges need not be made. However, the web bend buckling resistance of the noncomposite pier section during construction must be checked according to equation 3 of **LRFD [6.10.3.2.1]**, as follows:

$f_{bu} \le \phi_f \cdot F_{crw}$

Check first if the noncomposite section at the pier is a nonslender web section. From Table E24-1.3-3 **LRFD [6.10.6.2.3]**:

$D_c := 28.718 - 2.75$ $\boxed{D_c = 25.97}$ in

$$\boxed{\frac{2 \cdot D_c}{t_w} = 103.87}$$

$$\boxed{\lambda_{rw} = 137.27}$$

$$\frac{2 \cdot D_c}{t_w} < \lambda_{rw} \qquad \text{OK}$$

The section is therefore a nonslender web section (i.e. a noncompact web section), web bend buckling need not be checked in this case according to **LRFD [6.10.3.2.1]**.

In addition to checking the flexural resistance during construction, the shear resistance in the web must also be checked prevent shear buckling of the web during construction as follows **LRFD [6.10.3.3]**:

$V_{cr} := C \cdot V_p$ $\boxed{V_{cr} = 367.53}$ kips

$V_r := \phi_v \cdot V_{cr}$ $\boxed{V_r = 367.53}$ kips

$V_u := (1.25 \cdot 111.5)$ $\boxed{V_u = 139.38}$ kips OK

Therefore, the design section at the pier satisfies the construct bility specification checks.

E24-1.26 Check Wind Effects on Girder Flanges - Negative Moment Region

Wind effects generally do not control a steel girder design, and they are generally considered for the exterior girders only **LRFD [C6.10.1.6 & C4.6.2.7.1]**. However, for illustrative purposes, wind effects are presented below for the girder design section at the pier. A bridge height of greater than 30 feet is used in this design step to illustrate the required computations **LRFD [3.8.1.1]**.

The stresses in the bottom flange are combined as follows **LRFD [6.10.8.1.1]**:

$$\left(f_{bu} + \frac{1}{3} f_l\right) \le \phi_f \cdot F_{nc}$$

$$f_l = \frac{6 \cdot M_w}{t_{fb} \cdot b_{fb}^2} \qquad \text{(LRFD 6.10.1.6)}$$

Since the deck provides horizontal diaphragm action and since there is wind bracing in the superstructure, the maximum wind moment, M_w, on the loaded flange is determined as follows:

$$M_w = \frac{W \cdot L_b^2}{10}$$

$$\frac{L_b}{12} = 20.00 \qquad \text{ft}$$

$$W = \frac{\eta \cdot \gamma \cdot P_D \cdot d}{2}$$

$\eta := 1.0$

$\gamma := 0.40$ for Strength V Limit State

Assume that the bridge is to be constructed in a city. The design horizontal wind pressure, P_D, is computed as follows **LRFD [3.8.1.2]**:

$$P_D = P_B \cdot \left(\frac{V_{DZ}}{V_B}\right)^2$$

Where:

P_B = Base wind pressure **LRFD [Table 3.8.1.1-1]** (ksf)

V_{DZ} = Design wind velocity at design elevation Z (mph)

V_B = Base wind velocity of 100 mph for a 30.0 ft height

$P_B := 0.050$ ksf

$V_B := 100$ mph

$$V_{DZ} = 2.5 \cdot V_o \cdot \left(\frac{V_{30}}{V_B}\right) \cdot \ln\left(\frac{Z}{Z_o}\right)$$

Where:

V_{30} = Wind velocity at 30.0 feet above low ground or above design water level (mph)

V_0 = Friction velocity **LRFD [Table 3.8.1.1-1]** (mph)

Z = Height of structure at which wind loads are being calculated as measured from low ground, or from water level, > 30.0 feet

Z_0 = Friction length of upstream fetch **LRFD [Table 3.8.1.1-1]** (ft)

$V_o := 12.0$ MPH for a bridge located in a city

$V_{30} := 60$ MPH assumed wind velocity at 30 feet above low ground or above design water level at bridge site

$V_B = 100$ MPH

$Z := 35$ ft assumed height of structure at which wind loads are being calculated as measured from low ground or from

water level

$Z_o := 8.20$ ft for a bridge located in a city

$V_{DZ} := 2.5 \cdot V_o \cdot \left(\frac{V_{30}}{V_B}\right) \cdot \ln\left(\frac{Z}{Z_o}\right)$ $V_{DZ} = 26.12$ MPH

$P_D := P_B \cdot \left(\frac{V_{DZ}}{V_B}\right)^2$ $P_D = 0.0034$ ksf

$d := 8.45$ ft from bottom of girder to top of barrier

$W := P_D \cdot d$ $W = 0.0288$ kips/ft

LRFD [3.8.1.2.1] states that the total wind loading, W, must not be taken less than 0.30 klf on beam or girder spans, therefore use P_D as computed below:

$W := 0.30$ kips/ft

$P_D := \frac{W}{d}$ $P_D = 0.0355$ ksf

After the design horizontal wind pressure has been computed, the factored wind force per unit length applied to the flange is computed as follows **LRFD [C4.6.2.7.1]**:

$W := \frac{\eta \cdot \gamma \cdot P_D \cdot d}{2}$ $W = 0.060$ kips/ft

Next, the maximum lateral moment in the flange due to the factored wind loading is computed as follows:

$M_w := \frac{W \cdot \left(\frac{L_b}{12}\right)^2}{10}$ $M_w = 2.40$ kip-ft

Finally, the flexural stress at the edges of the bottom flange due to factored wind loading is computed as follows **LRFD [6.10.8.1.1]**:

$t_{fb} := 2.75$ in

$b_{fb} := 14.0$ in

$f_l := \frac{6 \cdot -M_w \cdot 12}{t_{fb} \cdot b_{fb}^2}$ $f_l = -0.321$ ksi

The load factor for live load is 1.35 for the Strength V Limit State. However, it is 1.75 for the Strength I Limit State, which we have already investigated. Therefore, it is clear that wind

effects will not control the design of this steel girder. Nevertheless, the following computations are presented simply to demonstrate that wind effects do not control this design:

$$f_{bu} := 1.25 \cdot (-16.56 + -2.05) + 1.50(-1.94) + 1.35(-10.41)$$

$$\boxed{f_{bu} = -40.23} \quad \text{ksi}$$

$$\boxed{f_{bu} + \frac{1}{3} f_l = -40.33} \quad \text{ksi}$$

$$\boxed{F_{nc} = 50.00} \quad \text{ksi}$$

$$f_{bu} + \frac{1}{3} f_l \le \phi_f \cdot F_{nc} \quad \text{OK}$$

E24-1.27 Draw Schematic of Final Steel Girder Design

Since all of the specification checks were satisfied (except as noted in Section E24-1.13), the trial girder section presented in E24-1.2 is acceptable. If any of the specification checks were not satisfied or if the design were found to be overly conservative, then the trial girder section would need to be revised appropriately, and the specification checks would need to be repeated for the new trial girder section.

The following is a schematic of the final steel girder configuration:

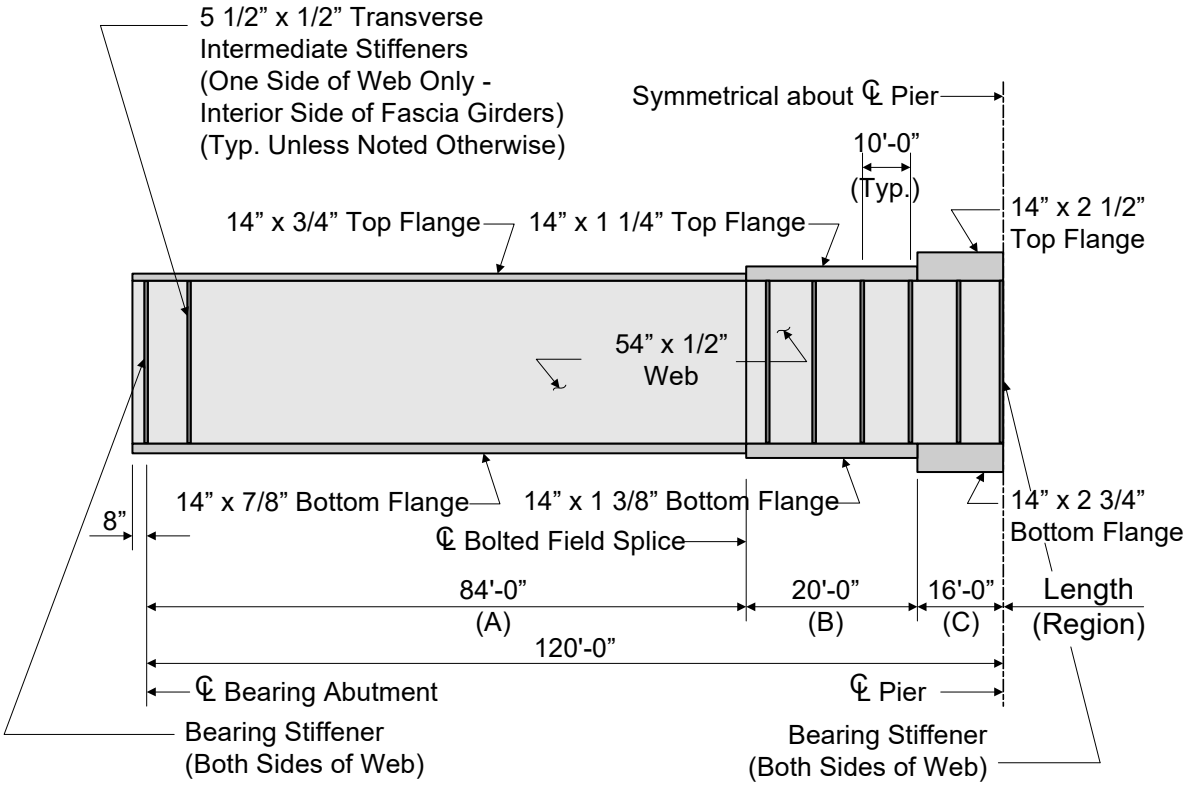

Figure E24-1.27-1
Final Plate Girder Elevation

For this design example, only the location of maximum positive moment, the location of maximum negative moment, and the location of maximum shear were investigated. However, the above schematic shows the plate sizes and stiffener spacing throughout the entire length of the girder.

Design computations for shear connectors and bearing stiffeners now follow.

E24-1.28 Design Shear Connectors

For continuous composite bridges, shear connectors are normally provided throughout the length of the bridge. In the negative flexure region, since the longitudinal reinforcement is considered to be a part of the composite section, shear connectors must be provided **LRFD [6.10.10.1]**.

Studs are used as shear connectors. The shear connectors must permit a thorough compaction of the concrete to ensure that their entire surfaces are in contact with the concrete. In addition, the shear connectors must be capable of resisting both horizontal and vertical movement between the concrete and the steel.

The following figure shows the stud shear connector proportions, as well as the location of the stud head within the concrete deck.

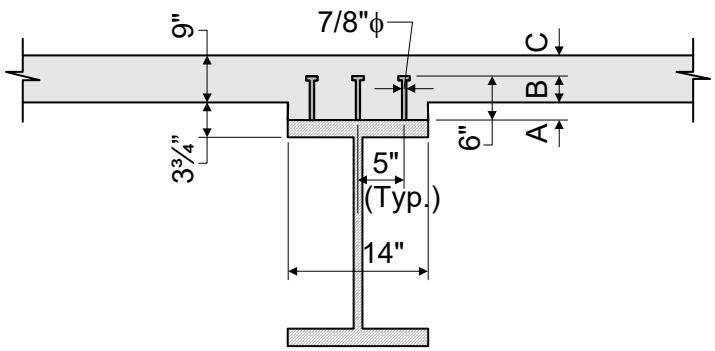

Figure E24-1.28-1
Stud Shear Connectors

Shear Connector Embedment			
Flexure Region	**A**	**B**	**C**
Positive	3.00"	3.00"	6.00"
Intermediate	2.50"	3.50"	5.50"
Negative	1.25"	4.75"	4.25"

Table E24-1.28-1
Shear Connector Embedment

The ratio of the height to the diameter of a stud shear connector must not be less than 4.0 **LRFD [6.10.10.1.1]**. For this design example, the ratio is computed based on the dimensions presented in Figure E24-1.28-1, as follows:

$Height_{stud} := 6.0$ in

$Diameter_{stud} := 0.875$ in

$$\boxed{\frac{Height_{stud}}{Diameter_{stud}} = 6.86}$$ OK

The pitch of the shear connectors must be determined to satisfy the fatigue limit state as specified in **LRFD [6.10.10.2 & 6.10.10.3]**, as applicable. The resulting number of shear connectors must not be less than the number required to satisfy the strength limit states as

specified in **LRFD [6.10.10.4]**.

The pitch, p, of the shear connectors must satisfy the following equation **LRFD [6.10.10.1.2]**:

$$p \le \frac{n \cdot Z_r}{V_{sr}}$$

Where:

n = Number of shear connectors in a cross-section

Z_r = Shear fatigue resistance of an individual shear connector **LRFD [6.10.10.2]** (kip)

V_{sr} = Horizontal fatigue shear range per unit length (kip-in)

The shear fatigue resistance of an individual shear connector, Z_r, is taken as:

$ADTT_{SL} = 3000$ > 960, Therefore, use Fatigue 1 load combinations with fatigue shear resistance for infinite life as follows:

$$Z_r := 5.5 \cdot d^2$$

Where:

d = Diameter of the stud (in)

The horizontal fatigue shear range per unit length, V_{sr}, is taken as:

$$V_{sr} = \sqrt{V_{fat}^2 + F_{fat}^2}$$

Where:

V_{fat} = Longitudinal fatigue shear range per unit length

F_{fat} = Radial fatigue shear range per unit length (kip-in)

The longitudinal fatigue shear range per unit length, V_{fat}, is taken as:

$$V_{fat} = \frac{V_f \cdot Q}{I}$$

Where:

V_f = Vertical shear force range under the fatigue load combination in **LRFD [Table 3.4.1-1]** with the fatigue live load taken as specified in **LRFD [3.6.1.4]** (kip)

Q = First moment of the transformed short-term area of the concrete deck about the neutral axis of the short-term composite section (in^3)

I = Moment of inertia of the short-term composite section (in^4)

The radial fatigue shear range per unit length, F_{fat}, is taken as the larger of:

$$F_{fat1} = \frac{A_{bot} \cdot \sigma_{flg} \cdot l}{w \cdot R}$$

$$F_{fat2} = \frac{F_{rc}}{w}$$

Where:

A_{bot} = Area of the bottom flange (in^2)

σ_{flg} = Range of longitudinal fatigue stress in the bottom flange without consideration of flange lateral bending (ksi)

l = Distance between brace points (ft)

w = Effective length of deck (in) taken as 48.0 in, except at end supports where w may be taken as 24.0 in

R = Minimum girder radius within the panel (ft)

F_{rc} = Net range of cross-frame or diaphragm force at the top flange (kip)

Since this bridge utilizes straight spans and has no skew, the radial fatigue shear range, F_{fat} is taken as zero. Therefore:

$$V_{sr} = V_{fat}$$

In the positive flexure region, the maximum fatigue live load shear range is located at the abutment. For illustration purposes, this example uses the average fatigue live load shear range in the positive moment region and assumes it acts at 0.4L. In reality, the required pitch should be calculated throughout the entire length of the girder. The actual pitch should be chosen such that it is less than or equal to the required pitch. The factored average value is computed as follows:

$V_f := 1.75 \cdot (43.60)$ $\boxed{V_f = 76.30}$ kips

The parameters I and Q are based on the short-term composite section and are determined using the deck within the effective flange width. In the positive flexure region:

$n := 3$ (see Figure E24-1.28-1)

$I := 70696.16$ in^4 (see Table E24-1.3-1)

$Q := \left[\frac{(8.5) \cdot (120)}{8}\right] \cdot (62.875 - 52.777)$ $\boxed{Q = 1287.49}$ in^3

$V_{fat} := \frac{V_f \cdot Q}{I}$ $\boxed{V_{fat} = 1.39}$ kip/in

$V_{sr} := V_{fat}$ $\boxed{V_{sr} = 1.39}$ kip/in

$d := 0.875$ in

$Z_r := 5.5 \cdot d^2$ $\boxed{Z_r = 4.21}$ kips

$p := \frac{n \cdot Z_r}{V_{sr}}$ $\boxed{p = 9.09}$ in

In the negative flexure region:

$n := 3$ (see Figure E24-1.28-1)

From **LRFD [C6.10.10.1.2]**, in the negative flexure region, the parameters I and Q may be determined using the reinforcement within the effective flange width for negative moment, unless the concrete slab is considered to be fully effective for negative moment in computing the longitudinal range of stress, as permitted in **LRFD [6.6.1.2.1]**. For this design example, I and Q are assumed to be computed considering the concrete slab to be fully effective.

$I := 139158.7$ in^4 (see Table E24-1.3-3)

$Q := \left[\frac{(8.5) \cdot (120)}{8}\right] \cdot (64.750 - 48.868)$ $\boxed{Q = 2024.95}$ in^3

$V_f := 1.75 \cdot (58.8)$ $\boxed{V_f = 102.90}$ kips

$V_{fat} := \frac{V_f \cdot Q}{I}$ $\boxed{V_{fat} = 1.50}$ kip/in

$V_{sr} := V_{fat}$ $\boxed{V_{sr} = 1.50}$ kip/in

$p := \frac{n \cdot Z_r}{V_{sr}}$ $\boxed{p = 8.44}$ in

Therefore, based on the above pitch computations to satisfy the fatigue limit state, use the following pitch throughout the entire girder length:

$p := 8$ in

As stated earlier, the shear connector pitch typically is not the same throughout the entire length of the girder. In reality, most girder designs use a variable pitch, which is beneficial economically.

However, for simplicity in this design example, a constant shear connector pitch of 8 inches will be used.

In addition, the shear connectors must satisfy the following pitch requirements **LRFD [6.10.10.1.2]**:

$p \le 24$ in OK

$p \ge 6 \cdot d$ $\boxed{6 \cdot d = 5.25}$ in OK

For transverse spacing, the shear connectors must be placed transversely across the top flange of the steel section and may be spaced at regular or variable intervals **LRFD [6.10.10.1.3]**.

Stud shear connectors must not be closer than 4.0 stud diameters center-to-center transverse to the longitudinal axis of the supporting member.

$4 \cdot d = 3.50$ in

$Spacing_{transverse} := 5.0$ in (see Figure E24-1.28-1) OK

In addition, the clear distance between the edge of the top flange and the edge of the nearest shear connector must not be less than 1.0 inch.

$D_{clear} := \frac{14}{2} - 5 - \frac{d}{2}$ $\boxed{D_{clear} = 1.56}$ in OK

The clear depth of concrete cover over the tops of the shear connectors should not be less than 2.0 inches, and shear connectors should penetrate at least 2.0 inches into the deck **LRFD [6.10.10.1.4]**. Based on the shear connector penetration information presented in Table E24-1.28-1, both of these requirements are satisfied.

For the strength limit state, the factored resistance of the shear connectors, Q_r, is computed as follows **LRFD [6.10.10.4.1]**:

$Q_r = \phi_{sc} \cdot Q_n$

$\phi_{sc} := 0.85$ (LRFD 6.5.4.2)

The nominal shear resistance of one stud shear connector embedded in a concrete slab, Q_n, is computed as follows **LRFD [6.10.10.4.3]**:

$Q_n = 0.5 \cdot A_{sc} \cdot \sqrt{f'_c \cdot E_c} \le A_{sc} \cdot F_u$

Where:

A_{sc} = Cross-sectional area of a stud shear connector (in^2)

F_u = Specified minimum tensile strength of a stud shear connector from **LRFD [6.4.4]** (ksi)

$A_{sc} := \pi \cdot \frac{d^2}{4}$ $\boxed{A_{sc} = 0.601}$ in^2

$F_u := 60.0$ ksi

$E_c := 3834$ ksi

$Q_n := \min\left(0.5 \cdot A_{sc} \cdot \sqrt{f'_c \cdot E_c}, A_{sc} \cdot F_u\right)$ $\boxed{Q_n = 36.08}$ kips

$Q_r := \phi_{sc} \cdot Q_n$ $\boxed{Q_r = 30.67}$ kips

The number of shear connectors provided over the section being investigated must not be less than the following **LRFD [6.10.10.4.1]**:

$$n = \frac{P}{Q_r}$$

For continuous spans that are composite for negative flexure in their final condition, the nominal shear force, P, must be calculated for the following regions **LRFD [6.10.10.4.2]**:

1. Between points of maximum positive design live load plus impact moments and adjacent ends of the member

2. Between points of maximum positive design live load plus impact moment and centerlines of adjacent interior supports

For Region 1:

$$P = \sqrt{P_p^{\,2} + F_p^{\,2}}$$

Where:

P_p = Total longitudinal shear force in the concrete deck at the point of maximum positive live load plus impact moment (kips)

F_p = Total radial shear force in the concrete deck at the point of maximum positive live load plus impact moment (kips)

The total longitudinal shear force in the concrete deck at the point of maximum positive live load plus impact moment, P_p, is taken as the lesser of:

$P_{1p} := 0.85 \cdot f'_c \cdot b_s \cdot t_s$

or

$P_{2p} := F_{yw} \cdot D \cdot t_w + F_{yt} \cdot b_{ft} \cdot t_{ft} + F_{yc} \cdot b_{fc} \cdot t_{fc}$

$t_{ft} := 0.875$ in (see E24-1.27)

$t_{fc} := 0.75$ in (see E24-1.27)

$P_p := \min\left(0.85 \cdot f'_c \cdot b_s \cdot t_s, F_{yw} \cdot D \cdot t_w + F_{yt} \cdot b_{ft} \cdot t_{ft} + F_{yc} \cdot b_{fc} \cdot t_{fc}\right)$

$\boxed{P_p = 2488}$ kips

For straight spans or segments, F_p may be taken equal to zero which gives **LRFD [6.10.10.4.2]**:

$P := P_p$ $\boxed{P = 2488}$ kips

Therefore, the number of shear connectors provided between the section of maximum positive moment and each adjacent end of the member must not be less than the following **LRFD [6.10.10.4.1]**:

$n := \frac{P}{Q_r}$ $\boxed{n = 81.1}$

For region 2:

$$P = \sqrt{P_T^2 + F_T^2}$$

Where:

P_T = Total longitudinal shear force in the concrete deck between the point of maximum positive live load plus impact moment and the centerline of an adjacent interior support (kips)

F_T = Total radial shear force in the concrete deck between the point of maximum positive live load plus impact moment and the centerline of an adjacent interior support (kips)

The total longitudinal shear force in the concrete deck between the point of maximum positive live load plus impact moment and the centerline of an adjacent interior support, P_T, is taken as:

$$P_T = P_p + P_n$$

Where:

P_n = Total longitudinal shear force in the concrete deck over an interior support (kips)

The total longitudinal shear force in the concrete deck over an interior support, P_n, is taken as the lesser of:

$$P_{1n} := F_{yw} \cdot D \cdot t_w + F_{yt} \cdot b_{ft} \cdot t_{ft} + F_{yc} \cdot b_{fc} \cdot t_{fc}$$

or

$$P_{2n} := 0.45 \cdot f'_c \cdot b_s \cdot t_s$$

$t_{ft} := 2.5$ in (see E24-1.27)

$t_{fc} := 2.75$ in (see E24-1.27)

$$P_n := \min\left(F_{yw} \cdot D \cdot t_w + F_{yt} \cdot b_{ft} \cdot t_{ft} + F_{yc} \cdot b_{fc} \cdot t_{fc}, 0.45 \cdot f'_c \cdot b_s \cdot t_s\right)$$

$P_n = 1836$ kips

$P_T := P_p + P_n$ $P_T = 4324$ kips

For straight spans or segments, F_T may be taken equal to zero which gives:

$P := P_T$ $P = 4324$ kips

Therefore, the number of shear connectors provided between the section of maximum positive moment and the centerline of the adjacent interior pier must not be less than the following **LRFD [6.10.10.4.1]**:

$$n := \frac{P}{Q_r} \qquad n = 141.0$$

The distance between the end of the girder and the location of maximum positive moment is approximately equal to:

$L := 48.0$ ft (see Table E24-1.4-2)

Using a pitch of 8 inches, as previously computed for the fatigue limit state, and using the above length, the number of shear connectors provided is as follows:

$$n := 3 \cdot \frac{L \cdot (12)}{p} \qquad n = 216.0$$ OK

Similarly the distance between the section of the maximum positive moment and the interior support is equal to:

$L := 120.0 - 48.0$ $L = 72.0$ ft (see Table E24-1.4-2)

Using a pitch of 8 inches, as previously computed for the fatigue limit state, and using the above length, the number of shear connectors provided is as follows:

$$n := 3 \cdot \frac{L \cdot (12)}{p} \qquad n = 324.0$$ OK

Therefore, using a pitch of 8 inches for each row, with three stud shear connectors per row, throughout the entire length of the girder satisfies both the fatigue limit state requirements of **LRFD [6.10.10.1.2 & 6.10.10.2]** and the strength limit state requirements of **LRFD [6.10.10.4]**.

Use a shear stud spacing as illustrated in the following figure.

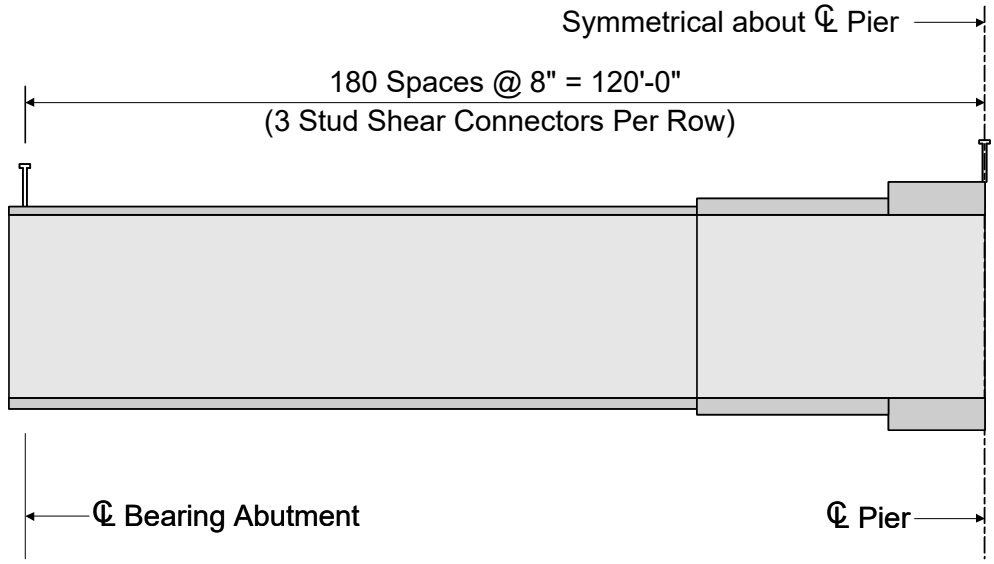

Figure E24-1.28-2
Shear Connector Spacing

E24-1.29 Design Bearing Stiffeners

Bearing stiffeners are required to resist the bearing reactions and other concentrated loads, either in the final state or during construction **LRFD [6.10.11.2.1]**.

For plate girders, bearing stiffeners are required to be placed on the webs at all bearing locations. At all locations supporting concentrated loads where the loads are not transmitted through a deck or deck system, either bearing stiffeners are to be provided or the web must satisfy the provisions of **LRFD [Appendix D6.5]**.

Therefore, for this design example, bearing stiffeners are required at both abutments and at the pier. The following design of the abutment bearing stiffeners illustrates the bearing stiffener design procedure.

The bearing stiffeners in this design example consist of one plate welded to each side of the web. The connections to the web will be designed to transmit the full bearing force due to factored loads and is presented in E24-1.30.

The stiffeners extend the full depth of the web and, as closely as practical, to the outer edges of the flanges.

The following figure illustrates the bearing stiffener layout at the abutments.

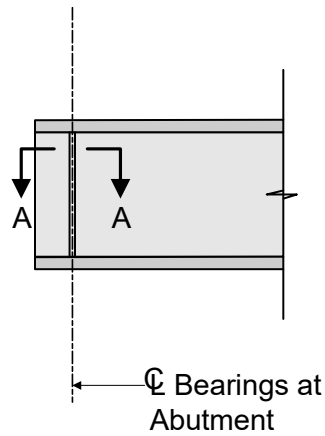

Partial Girder Elevation at Abutment

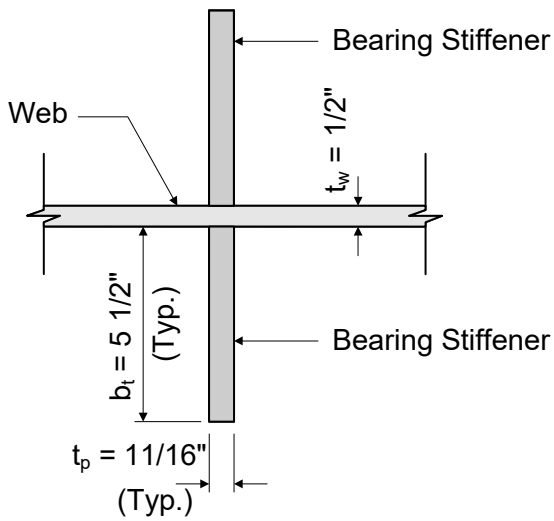

Section A-A

Figure E24-1.29-1
Bearing Stiffeners at Abutments

The projecting width, b_t, of each bearing stiffener element must satisfy the following equation **LRFD [6.10.11.2.2]**. This provision is intended to prevent local buckling of the bearing stiffener plates.

$$b_t \leq 0.48 \cdot t_p \cdot \sqrt{\frac{E}{F_{ys}}}$$

Where:

t_p = Tickness of the projecting stiffener element (in)

F_{ys} = Specified minimum yield strength of the stiffener (ksi)

$b_t := 5.5$ in (see Figure E24-1.29-1)

$t_p := \frac{11}{16}$ in (see Figure E24-1.29-1)

$F_{ys} := 50$

$$\boxed{0.48 \cdot t_p \cdot \sqrt{\frac{E_s}{F_{ys}}} = 7.95} \text{ in} \quad \text{OK}$$

The bearing resistance must be sufficient to resist the factored reaction acting on the bearing stiffeners **LRFD [6.10.11.2.3]**. The factored bearing resistance, R_{sbr}, is computed as follows:

$R_{sbr} = \phi_b \cdot R_{sbn}$

$\phi_b := 1.00$ (LRFD 6.5.4.2)

$R_{sbn} = 1.4 \cdot A_{pn} \cdot F_{ys}$

Where:

A_{pn} = Area of the projecting elements of the stiffener outside of the web-to-flange fillet welds but not beyond the edge of the flange (in^2)

Part of the stiffener must be clipped to clear the web-to-flange weld. Thus the area of direct bearing is less than the gross area of the stiffener. The bearing area, A_{pn}, is taken as the area of the projecting elements of the stiffener outside of the web-to-flange fillet welds but not beyond the edge of the flange. This is illustrated in the following figure:

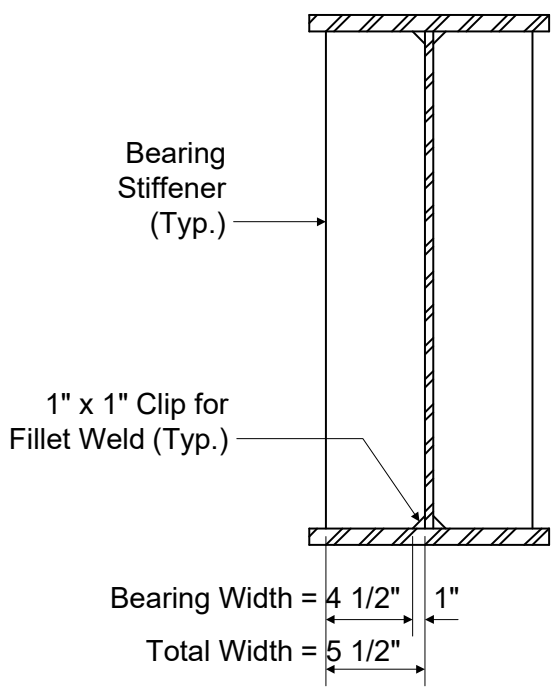

Figure E24-1.29-2
Bearing Width

$b_{brg} := b_t - 1.0$ $\boxed{b_{brg} = 4.50}$ in

$A_{pn} := 2b_{brg} \cdot t_p$ $\boxed{A_{pn} = 6.19}$ in^2

$R_{sbr} := \phi_b \cdot 1.4 \cdot A_{pn} \cdot F_{ys}$ $\boxed{R_{sbr} = 433.13}$ kips

The factored bearing reaction at the abutment is computed as follows, using load factors as presented in **LRFD [Table 3.4.1-1 & Table 3.4.1-2]** and using reactions obtained from Table E24-1.4-3 and Table E24-1.5-2:

$React_{Factored} := (1.25 \cdot 63.7) + (1.50 \cdot 7.4) + (1.75 \cdot 114.4)$

$\boxed{React_{Factored} = 290.93}$ kips

Therefore, the bearing stiffener at the abutment satisfies the bearing resistance requirements.

The final bearing stiffener check relates to the axial resistance of the bearing stiffeners **LRFD [6.10.11.2.4]**. The factored axial resistance is determined as specified in **LRFD [6.9.2.1]**. The radius of gyration is computed about the midthickness of the web, and the effective length is taken as 0.75D, where D is the web depth **LRFD [6.10.11.2.4a]**.

For stiffeners consisting of two plates welded to the web, the effective column section consists of the two stiffener elements, plus a centrally located strip of web extending not more than $9t_w$ on each side of the stiffeners **LRFD [6.10.11.2.4.b]**. This is illustrated in the following figure:

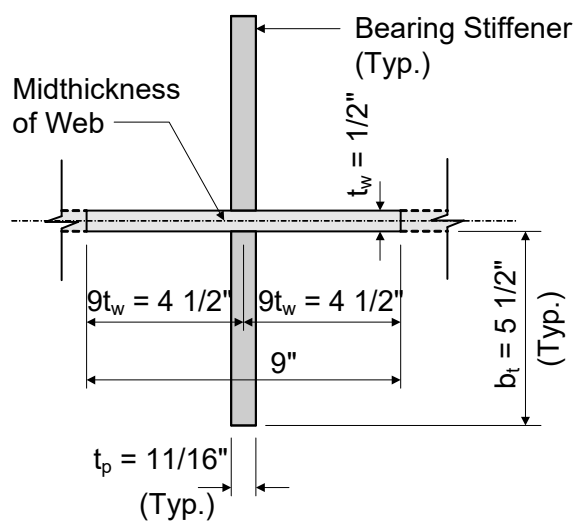

Figure E24-1.29-3
Bearing Stiffener Effective Section

$P_r = \phi_c \cdot P_n$ (LRFD 6.9.2.1)

$\phi_c := 0.90$ (LRFD 6.5.4.2)

Bearing stiffeners only need to be designed for Flexural Buckling failure (Torsional Buckling and Flexural Torsional Buckling are not applicable) **LRFD [6.9.4.1.1]**.

First, calculate the elastic critical buckling resistance, Pe, based on **LRFD [6.9.4.1.2]**.

$$P_e = \frac{A_g \cdot \left(\pi^2 \cdot E_s\right)}{\left(\frac{kl}{r_s}\right)^2}$$

Where:

kl = Taken as 0.75D, where D is the web depth (in)

r_s = Radius of gyration about the midthickness of the web (in)

A_g = Cross-sectional area of the effective section (in^2)

$kl := (0.75)\cdot(54)$ $\boxed{kl = 40.50}$ in

$I_s := \frac{\left(0.6875\cdot 11.5^3\right) + \left(8.3125\cdot 0.5^3\right)}{12}$ $\boxed{I_s = 87.22}$ in^4

$A_g := (0.6875\cdot 11.5) + (8.3125\cdot 0.5)$ $\boxed{A_g = 12.06}$ in^2

$r_s := \sqrt{\frac{I_s}{A_g}}$ $\boxed{r_s = 2.69}$ in

$P_e := \frac{A_g \cdot \left(\pi^2 \cdot E_s\right)}{\left(\frac{kl}{r_s}\right)^2}$ $P_e = 15220$ kip

Next, calculate the equivalent nominal yield resistance, P_o, given as:

$P_o := Q\cdot F_y \cdot A_g$ (LRFD 6.9.4.1.1)

Where:

Q = slender element reduction factor, taken as 1.0 for bearing stiffeners

$P_o := 1.0 F_y \cdot A_g$ $P_o = 603$ kip

$\frac{P_e}{P_o} = 25.23$ Since $P_e/P_o > 0.44$, Use equation 1 from **LRFD [6.9.4.1.1]**.

$P_n := \left[0.658^{\left(\frac{P_o}{P_e}\right)}\right] \cdot P_o$ $\boxed{P_n = 593.20}$ kips

$P_r := \phi_c \cdot P_n$ $\boxed{P_r = 533.88}$ kips

$\boxed{React_{Factored} = 290.93}$ kips OK

Therefore, the bearing stiffener at the abutment satisfies the axial bearing resistance requirements.

The bearing stiffener at the abutment satisfies all bearing stiffener requirements. Use the bearing stiffener as presented in Figure E24-1.29-2 and Figure E24-1.29-3.

Table of Contents

E24-2 Bolted Field Splice, LRFD . . . 2
E24-2.1 Introduction . . . 2
E24-2.2 Obtain Design Criteria . . . 3
E24-2.3 Select Girder Section as Basis for Field Splice Design . . . 5
E24-2.4 Flange Splice Design Loads . . . 5
E24-2.5 Loads Factors . . . 5
E24-2.5.1 Strength I Limit State . . . 6
E24-2.5.2 Service II Limit State . . . 6
E24-2.6 Flange Splice Plates Dimensions . . . 7
E24-2.7 Strength Limit State Design of Flange Splice Plates . . . 8
E24-2.7.1 Bolt Design . . . 8
E24-2.7.1.1 Bottom Flange Bolts . . . 8
E24-2.7.1.1.1 Design Yield Resistance . . . 8
E24-2.7.1.1.2 The Shear Resistance of the Bolt . . . 9
E24-2.7.1.1.3 Number of Bolts . . . 11
E24-2.7.1.1.4 Bolts Spacing . . . 12
E24-2.7.1.1.5 Bearing at Bolt Holes . . . 15
E24-2.7.1.2 Top Flange Bolts . . . 17
E24-2.7.1.2.1 Design Yield Resistance of the Top Flange . . . 17
E24-2.7.1.2.2 Shear Resistance of the Bolts . . . 17
E24-2.7.1.2.3 Number of Bolts . . . 18
E24-2.7.2 Moment Resistance . . . 19
E24-2.7.2.1 Positive Moment . . . 19
E24-2.7.2.2 Negative Moment . . . 20
E24-2.7.3 Bottom Splice Plates . . . 21
E24-2.7.3.1 - Tension . . . 21
E24-2.7.3.2 - Compression . . . 28
E24-2.7.4 - Checking Flexural Members at the Strength Limit for Constructibility . . . 28
E24-2.8 Service Limit State Design of the Flange Splice Plates . . . 29
E24-2.8.1 Flange Bolts Slip Resistance: . . . 29
E24-2.8.1.1 Service II Positive Moment . . . 30
E24-2.8.1.2 Service II Negative Moment . . . 30
E24-2.8.1.3 Deck Casting . . . 31
E24-2.8.2 Control of Permanent Deformation . . . 31
E24-2.9 Filler Plates . . . 31
E24-2.10 Web Design . . . 32
E24-2.10.1 Web Splice Design Loads . . . 32
E24-2.10.2 Web Splice Configuration . . . 32
E24-2.10.3 Strength Limit State Design of the Web Plates . . . 33
E24-2.10.3 .1 Bolt Design . . . 34
E24-2.10.3.1.1 Number of Bolts and Spacing . . . 34
E24-2.10.3.1.2 Bearing at Bolt Holes . . . 37
E24-2.10.3.2 Shear Resistance of the Connection Element . . . 38
E24-2.10.4 Service Limit State Design of the Flange Splice Plates . . . 42
E24-2.11 Draw Schematic of Final Bolted Field Splice Design . . . 43

E24-2 Bolted Field Splice, LRFD

E24-2.1 Introduction

This splice design example shows design calculations conforming to the *AASHTO LRFD Bridge Design Specifications (Eighth Edition - 2017)* as supplemented by the *WisDOT Bridge Manual (January 2019)*.

According to **LRFD [6.13.6.1.3a] & LRFD [6.13.6.1.3b]**

- Splices should be made at or near points of dead load contraflexure.
- Inside and outside splice plates are used for flange splices, and two splice plates are used at both sides for the web splice
- The combined area of the flange and web splices plates often equal or exceed the areas of the smaller flanges and web to which they are attached
- Bolted splices for flexural members shall be designed using slip-critical connections as specified in **LRFD[6.13.2.1.1.]**
- Oversize or slotted holes are not permitted to be used for bolted splices
- Web and flange splices in areas of stress reversal shall be investigated for both positive and negative flexure to determine the governing condition.
- All the moments are assumed to be resisted by the flange splices. Should the factored moments exceed the moment resistance provided by the flange splices, the web splice is assumed to resist the additional moment in addition to its design shear.

As per **LRFD [C6.13.6.1.3a],** the method specified below ignores the moment due to eccentricity of the shear

E24-2.2 Obtain Design Criteria

Note: This example uses the girder from example E24-1
Presented in Figure E24-2.2-1 is the steel girder configuration and the bolted field splice location.

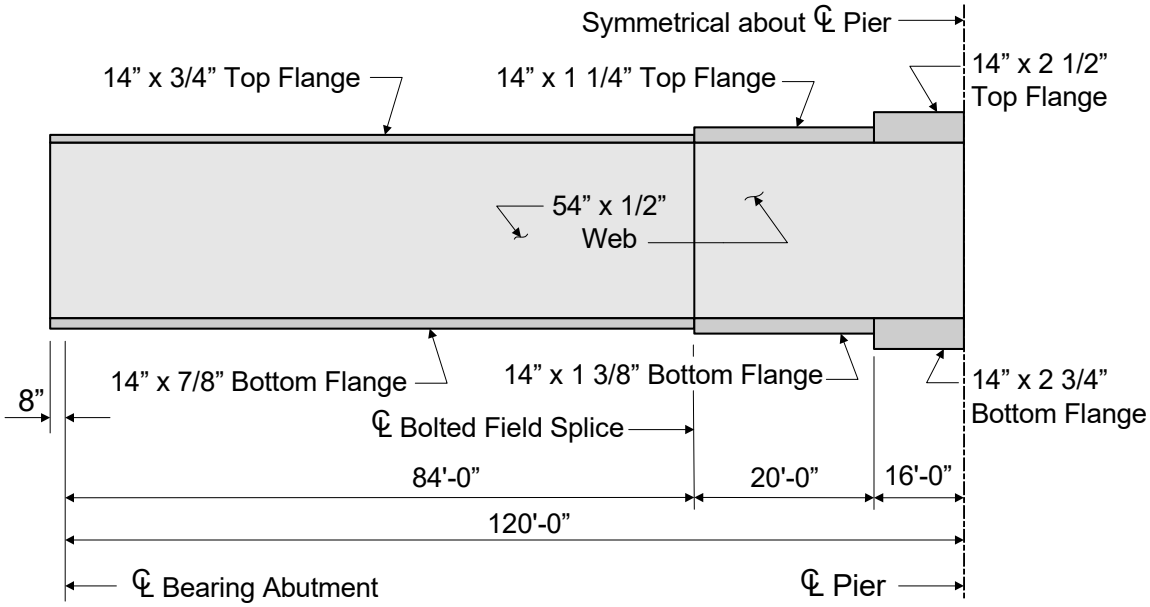

Figure E24-2.2-1
Plate Girder Elevation

Filler plate thickness: $t_{fill} := 0.50$ in

Filler plate width: $b_{fill} := 14$ in

The steel properties of the girder and splice plates are as follows:

Yield strength: $F_y := 50$ ksi

Tensile strength: $F_u := 65$ ksi

For specification checks requiring the flange yield strength:

$F_{yf} := 50$ ksi

The plate dimensions of the girder on the <u>left side</u> of the splice from Figure E24-2.2-1 are as follows:

Web thickness: $t_w := 0.50$ in

Web depth: $D := 54$ in

Top flange width: $b_{fltL} := 14$ in

Top flange thickness: $t_{fltL} := 0.75$ in

Bottom flange width: $b_{flbL} := 14$ in

Bottom flange thickness: $t_{flbL} := 0.875$ in

The plate dimensions of the girder on the <u>right side</u> of the splice from Figure E24-2.2-1 are as follows:

Web thickness: $t_w = 0.50$ in

Web depth: $D = 54.00$ in

Top flange width: $b_{fltR} := 14$ in

Top flange thickness: $t_{fltR} := 1.25$ in

Bottom flange width: $b_{flbR} := 14$ in

Bottom flange thickness: $t_{flbR} := 1.375$ in

The properties of the splice bolts are as follows:

Bolt diameter: $d_b := 0.875$ in **LRFD [6.13.2.5]**

Bolt cross area $A_b := \pi \cdot \frac{d_b^2}{4} = 0.60$ in^2

Bolt hole diameter (for design purposes add 1/16" to standard hole diameter):

$d_{hole} := \frac{15}{16}$ in **LRFD Table [6.13.2.4.2-1]**

Bolt tensile strength: $F_{ub} := 120$ ksi **LRFD table [6.4.3.1.1-1]**

The properties of the concrete deck are as follows:

Effective slab thickness: $t_{seff} := 8.5$ in

Modular ratio: $n := 8$

Haunch depth (measured from top of web):

$d_{haunch} := 3.75$ in

Effective flange width: $W_{eff} := 120$ in

The area of longitudinal deck reinforcing steel in the negative moment region is for the top and bottom mat is given as number 6 bars at 7.5 inch spacing. The area of steel in the effective flange width is then:

For the top steel:

$$A_{deckreinftop} := (0.44) \cdot \frac{W_{eff}}{7.5} = 7.04 \quad in^2$$

For the bottom steel:

$$A_{deckreinfbot} := (0.44) \cdot \frac{W_{eff}}{7.5} = 7.04 \quad in^2$$

<u>Resistance factors</u> **LRFD [6.5.4.2]**:

Flexure: $\phi_f := 1.00$

Shear: $\phi_v := 1.00$

Axial compression, composite: $\phi_c := 0.90$

Tension, fracture in net section: $\phi_u := 0.80$

Tension, yielding in gross section: $\phi_y := 0.95$

Bolts bearing on material: $\phi_{bb} := 0.80$

ASTM F3125 Grade A325 and A490 bolts in shear: $\phi_s := 0.80$

Block shear: $\phi_{bs} := 0.80$

For shear, rupture in connection element $\phi_{vu} := 0.80$

E24-2.3 Select Girder Section as Basis for Field Splice Design

Where a section changes at a splice, the smaller of the two connected sections shall be used in the design **LRFD [6.13.6.1.1]**. Therefore, the bolted field splice in this example will be designed based on the left adjacent girder section properties. This will be referred to as the Left Girder throughout the calculations. The girder located to the right of the bolted field splice will be designated the Right Girder.

E24-2.4 Flange Splice Design Loads

A summary of the unfactored moments at the splice from example 24-1 are listed below. The live loads include dynamic load allowance and distribution factors.

The moments due to fatigue are not listed below as **LRFD [C6.13.6.1.3a]** states that the combined area of the flange and web splices plates often equal or exceed the areas of the smaller flanges and web to which they are attached, and the flanges and web are usually checked separately for either equivalent or more critical fatigue category details. Therefore, fatigue of the splices will not control and not need to be checked.

Dead load moments:

Non-composite: $M_{NDL} := -107.8$ kip-ft

Composite: $M_{CDL} := -2.8$ kip-ft

Future wearing surface: $M_{FWS} := -2.6$ kip-ft

Live load moments:

HL-93 positive: $M_{PLL+IL} := 1384.6$ kip-ft

HL-93 negative: $M_{NLL+IL} := -804.3$ kip-ft

E24-2.5 Loads Factors

Bolted splices for flexural members shall be designed using slip critical connection. Slip critical connections are proportioned to prevent slip under load combination Service II and to provide bearing and shear resistance under the applicable strength limit state load combinations. The load factors for these load combinations are selected based on **LRFD Tables [3.4.1-1] & [3.4.1-2]**:

Load Factors				
State	Strength I		Service II	
Load	max	min	max	min
DC	1.25	0.90	1.00	1.00
DW	1.50	0.65	1.00	1.00
LL	1.75	1.35	1.30	1.30

Table E24-2.5-1
Load Factors

E24-2.5.1 Strength I Limit State

Both positive and negative moments are investigated in Strength I and Service II limit state. Load factors are selected from the above table to produce the largest moments.

Max. Positive Moment

$$M_{u+} := 0.9(M_{NDL} + M_{CDL}) + 0 \cdot M_{FWS} + 1.75 \cdot M_{PLL+IL} = 2323.51$$ kip-ft

Max. Negative Moment

$$M_{u-} := 1.25 \cdot (M_{NDL} + M_{CDL}) + 1.5 \cdot M_{FWS} + 1.75 \cdot M_{NLL+IL} = -1549.67$$ kip-ft

The future wearing surface is excluded to get the largest negative moment

E24-2.5.2 Service II Limit State

Max. Positive Moment

$$M_{+} := 1 \cdot (M_{NDL} + M_{CDL}) + 0 \cdot M_{FWS} + 1.3 \cdot M_{PLL+IL} = 1689.38$$ kip-ft

Max. Negative Moment

$$M_{-} := 1 \cdot (M_{NDL} + M_{CDL}) + 1 \cdot M_{FWS} + 1.3 \cdot M_{NLL+IL} = -1158.79$$ kip-ft

Type	M(+) [K.ft]	M(-) [K.ft]
Strength I	2323.51	-1549.67
Service II	1689.38	-1158.80

Table E24-2.5.2-1
Summary of Design Moments
From 24E-1

E24-2.6 Flange Splice Plates Dimensions

LRFD [C6.13.6.1.3a]: the combined area of the flange and web splices plates often equal or exceed the areas of the smaller flanges and web to which they are attached

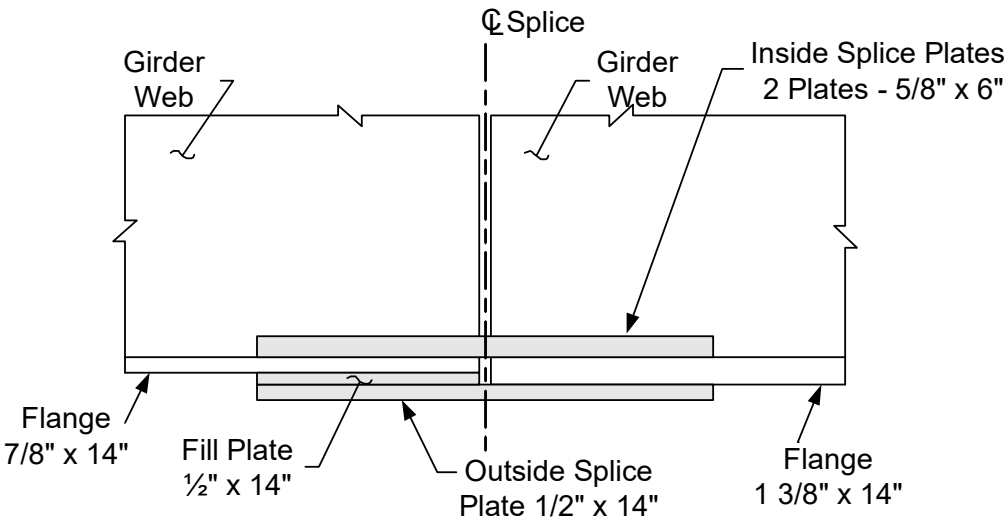

Figure E24-2.6-1
Bottom Flange Splice

The dimensions of the elements involved in the bottom flange splice from Figure E24-2.6-1 are:

Thickness of inside splice plate:	$t_{in} := 0.625$	in
Width of inside splice plate:	$b_{in} := 6$	in
Number of inside plates:	$N_{inp} := 2$	Plates
Thickness of outside splice plate:	$t_{out} := 0.5$	in
Width of outside splice plate:	$b_{out} := 14$	in
Thickness of the filler plate:	$t_{fill} = 0.50$	in
Width of the filler plate:	$b_{fill} = 14.00$	in

E24-2.7 Strength Limit State Design of Flange Splice Plates

E24-2.7.1 Bolt Design

E24-2.7.1.1 Bottom Flange Bolts

According to **LRFD [6.13.6.1.3b]** the flange splice plates and their connections shall be designed to develop the smaller design yield resistance of the flanges at the point of splice. The total number of bolts on one side of the splice are determined by dividing the smaller design yield resistance at the point of splice, P_{fy}, by the factored shear resistance of the bolts. Then the bearing resistance of the flange splice bolts holes shall be checked at the strength limit state.

E24-2.7.1.1.1 Design Yield Resistance of the Bottom Flange at the Point of the Splice

The design yield resistance of each flange, P_{fy}, at the point of splice shall be taken as:

$P_{fy} = F_{yf} \cdot A_e$ **LRFD [6.13.6.1.3b-1]**:

Where a section changes at splice, the smaller P_{fy} of the two connected sections shall be used in the design. In this example, the bottom flange on the left has a smaller area with the same F_y.

NOTE: A minimum two rows of bolts on each side of the joint to be used to ensure proper alignment and stability of the girder during construction.
Assuming 4 rows of bolts across the width of the flange

$Row_No := 4$

The effective area of flange A_e:

$$A_e = \left(\frac{\phi_u \cdot F_u}{\phi_y \cdot F_{yf}}\right) \cdot A_n \le A_g$$ **LRFD [6.13.6.1.3b-2]**:

Where:

ϕ_u = Resistance factor for fracture of tension members **LRFD [6.5.4.2]**
ϕ_y = Resistance factor for yielding of tension members **LRFD [6.5.4.2]**
A_n = Net area of the tension flange (in^2) **LRFD [6.8.3]**
A_g = Gross area of the tension flange (in^2)
F_u = Specified minimum tensile strength of the tension flange (ksi) **LRFD [Table 6.4.1-1]**
F_{yf} = Specified minimum yield strength of the flange under consideration (ksi)

The net area of bottom flange A_{n_bot}:

$A_{n_bot} := \left(b_{flbL} - Row_No \cdot d_{hole}\right) \cdot t_{flbL} = 8.97$ in^2

The gross area of bottom flange A_{g_bot}:

$A_{g_bot} := b_{flbL} \cdot t_{flbL} = 12.25$ in^2

The effective area of bottom flange A_{e_bot}:

$A_{e_bot} := \min\left(\frac{\phi_u}{\phi_y}\frac{F_u}{F_y} \cdot A_{n_bot}, A_{g_bot}\right) = 9.82$ in^2

The design yield resistance of bottom flange, P_{fy_bot}

$P_{fy_bot} := A_{e_bot} \cdot F_{yf} = 490.92$ Kips

E24-2.7.1.1.2 The Shear Resistance of the Bolt

LRFD [6.13.2.7] Factored shear resistance of bolt (ASTM F3125) at the strength limit state in joints whose length between the extreme fasteners measured parallel to the line of action of force is less than 38.0 in shall be taken as:

$R_{n1} = 0.56A_b \cdot F_{ub} \cdot N_{st}$ When threads are excluded **LRFD Eq. [6.13.2.7.1]**

$R_{n2} = 0.45A_b \cdot F_{ub} \cdot N_{st}$ When threads are included **LRFD Eq. [6.13.2.7.2]**

ϕ_s = Resistance factor for bolt in shear **LRFD [6.5.4.2]**

A_b = Area of the bolt corresponding to the nominal diameter (in^2)

F_{ub} = Specified minimum tensile strength of the bolt specified in **LRFD [6.4.3]** (Ksi)

N_{st} = Number of shear planes per bolt

LRDF[6.13.2.7]: When joint length exceeds 38.0 in., reduction factor of 0.83 is applied to $\phi_s \cdot R_n$. This reduction is applied only to lap splice tension connection.

Number of shear planes at bottom flange N_{sb}:

LRFD C6.13.6.1.3b

- If inner and outer flange splice plates do not differ by more than 10%, the connections are proportioned assuming double shear connection (N_s=2) and P_{fy} at the strength limit state is assumed divided equally to the inside and outside plates and their connections.
- When the inner and outer flange splice plates differ by more than 10%, the design force P_{fy} in each splice plates and its connection at the strength limit state should determined by multiplying P_{fy} by the ratio of the area of the splice plate under consideration to the total area of inner and outer splice plates and the connection are proportioned for the maximum calculated splice plate force acting on a single shear plane (N_s=1).

The area of inner splice plates at bottom flange A_{inn_bot}:

$A_{inn_bot} := N_{inp} \cdot (t_{in} \cdot b_{in}) = 7.50$ in^2

The area of outside splice plate at bottom flange A_{out_bot}:

$A_{out_bot} := t_{out} \cdot b_{out} = 7.00$ in^2

$$\left(1 - \frac{A_{out_bot}}{A_{inn_bot}}\right) = 0.07$$

The difference between the outer and inner flange splice plates is less than 10%, therefore, P_{fy} will be divided equally to the inner and outer splice plates and their connections and the connections are proportioned assuming a double shear connection.

$N_{sb} := 2$ Plates

Total splice area at bottom flange:

$A_{Bot_splice} := A_{inn_bot} + A_{out_bot} = 14.50$ in^2 .> $A_{BF} := t_{flbL} \cdot b_{flbL} = 12.25$ in^2

See **LRFD [C6.13.6.1.3b]** to determine if the bolt threads are included or excluded from the shear plane.

In this example, the bolt diameter = 0.875 less than 1.0 in., so the <u>threads are excluded</u> from the shear planes.

Therefore

$$\phi_s \cdot R_n = \phi_s \cdot R_{n1} = 64.65 \quad \text{kips}$$

Due to unequal thickness of the top and bottom flanges on the left and right side of the splice, filler plates need to be used. When filler plate is 0.25 in. or more in thickness there are two options **LRFD [6.13.6.1.4]**:

- Either the fillers shall be extended and secured by additional bolts and no need to reduce the factored shear resistance of the bolts
- Or the filler need not be extended and the strength limit state of the bolts in shear will be reduced by the following factor:

$$R := \left(\frac{1 + \gamma}{1 + 2\gamma}\right)$$

The reduction factor is only applied on the side of the connection with the filler.

Where:

γ $= A_f / A_p$

A_f = Sum of the area of the fillers on the top and bottom of the connected plate (in^2)

A_p = Smaller of either the connected plate area or the sum of the splice plate areas on the top and bottom of the connected plate (in^2)

The outer flange splice plate and flange width will be equal in the splice.

Sum of the area of the fillers on the top and bottom of the connected plate:

$A_f := b_{fill} t_{fill}$ $A_f = 7.00$ in^2

The smaller of either the connected plate area (i.e., girder flange) or the sum of the splice plate areas on the top and bottom of the connected plate determines A_p.

Bottom flange area A_{g_bot}:

$A_{g_bot} = 12.25$ in^2

Sum of splice plate areas is equal to the gross areas of the inside and outside splice plates:

$A_{Bot_splice} = 14.50$ in^2

The minimum of the areas is:

$A_{p_b} := \min(A_{BF}, A_{Bot_splice})$ $A_{p_b} = 12.25$ in^2

Therefore:

$\gamma := \frac{A_f}{A_{p_b}}$ $\gamma = 0.57$

The reduction factor due to the filler is determined to be:

$R_{fill_bot} := \left(\frac{1+\gamma}{1+2\gamma}\right)$ $R_{fill_bot} = 0.73$

To determine the total number of bolts required for the bottom flange splice, divide the applied Strength I flange design force by the reduced allowable bolt shear strength:

$R_{bot} = \phi_s \cdot R_{nb} \cdot R_{fill_bot}$ $R_{bot} := 47.41$ kips

E24-2.7.1.1.3 Number of Bolts

To determine the total number of bolts required for the bottom flange splice, divide the applied Strength I flange design force by the reduced allowable bolt shear strength:

The number of bolts required per side is:

$N_{bot_calculated} := \frac{P_{fy_bot}}{R_{bot}}$ $N_{bot_calculated} = 10.35$ Bolts

Use 4 rows with 3 bolts per row for bottom flange without stagger on each side of the splice to resist the maximum Strength I flange design force in shear is twelve.

$N_{bot} := 12$ Bolts

E24-2.7.1.1.4 Bolts Spacing

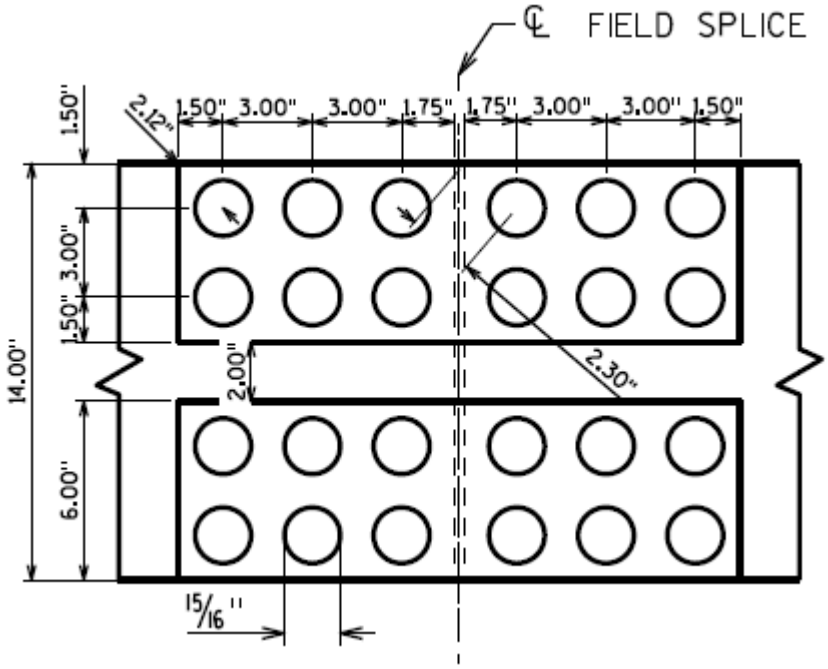

Figure E24-2.7.1.1.4-1
Bottom Flange Inside Splice

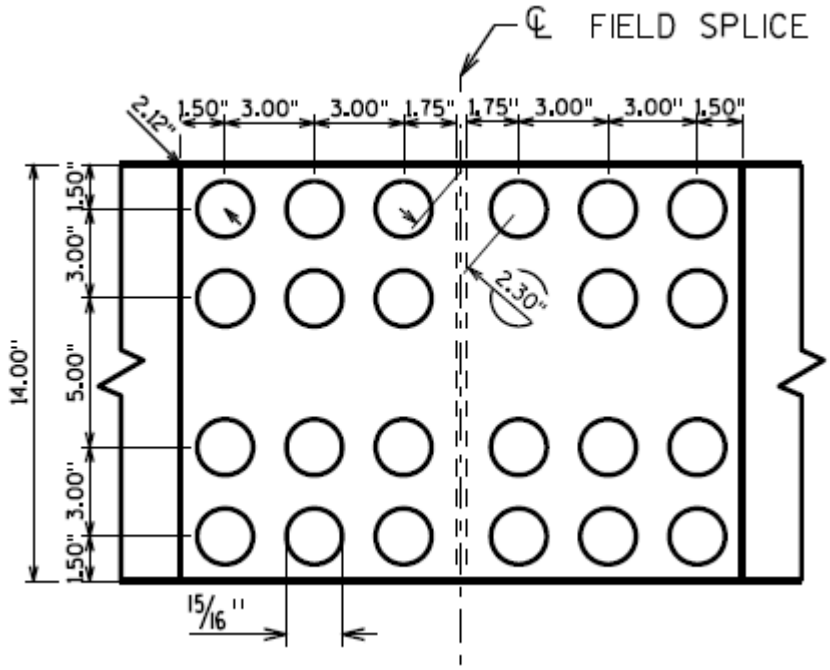

Figure E24-2.7.1.1.4-2
Bottom Flange Outside Splice

The minimum spacing LRFD[6.13.2.6.1]:
The minimum spacing between centers of bolts in standard holes shall be no less than three times the diameter of the bolt **LRFD[6.13.2.6.1]**.

$d_b = 0.875$ in

$s_{min} := 3 \cdot d_b$ $s_{min} = 2.63$ in

Use $s = 3.00$ in See figures E24-2.7.1.1.4-1 and E24-2.7.1.1.4-2

The minimum spacing requirement is satisfied.

The maximum spacing for sealing LRFD [6.13.2.6.2]:

For a single line adjacent to a free edge of an outside plate or shape when the bolts are not staggered:

$s \le (4.0 + 4.0 \cdot t) \le 7.0$ When the bolts are not staggered **LRFD [6.13.2.6.2-1]**:

Where:

t = Thickness of the thinner outside plate or shape (in)

$t_{out} = 0.5000$ in

Maximum spacing for sealing at the edge:

$4 + 4 \cdot t_{out} = 6.00$ in

$s \le 6 \le 7.00$ OK

Next, check for sealing along the free edge at the end of the splice plate. The bolts are not staggered, therefore the applicable equation is:

$s \le (4.00 + 4.00 \cdot t) \le 7.00$

Maximum spacing along the free edge at the end of the splice plate:

$s_{end} := 5.00$ in

Maximum spacing for sealing at the end of the splice plate:

$4.0 + 4.0 \cdot t_{out} = 6.00$ in

$s_{end} \le 6 \le 7.00$ OK

The maximum pitch for stitch bolts LRFD [6.13.2.6.3]:

The maximum pitch requirements are applicable only for mechanically fastened built-up members and will not be applied in this example.

The end distance LRFD [6.13.2.6.5]:

The minimum required edge distance is measured as the distance from the center of any bolt in a standard hole to an edge of the plate. For a 7/8" diameter bolt measured to a sheared edge, the minimum edge distance is 1 1/8" **LRFD Table [6.13.2.6.6-1]**. Referring to Figures E24-2.7.1.1.4-1 thru E24-2.7.1.1.4-2, it is clear that the minimum edge distance specified for this example is 1 1/2" and thus satisfies the minimum requirement.

The maximum edge distance D_{max} shall not be more than eight times the thickness of the thinnest outside plate or five inches.

Usually the maximum distance is measured prependicular to the edge of the flange plate or the splice plate. However, this example check the maximum distance from the corner of the bolt to the corner of the flange plate and the corner of the splice plate.

$D_{max} \le 8 \cdot t \le 5.00$ in

$t := t_{out}$ $\quad t_{out} = 0.5000$ in

$8 \cdot t_{out} = 4.00$ in

The maximum distance from the bolts to the corner of the girder flange is:

$D_{max} := \sqrt{1.50^2 + 1.75^2} = 2.30$ in

$2.30 \cdot in \le 4.0 \cdot in$ OK

The maximum distance from the corner bolts to the corner of the splice plate is equal to:

$\sqrt{1.5^2 + 1.5^2} = 2.12$ in

$2.12 \cdot in \le 4.0 \cdot in$ OK

E24-2.7.1.1.5 Bearing at Bolt Holes **LRFD [6.13.2.9]**:

Check bearing of the bolts on the connected material under the maximum Strength I Limit State design force. The maximum Strength I bottom flange design force, as calculated before, is the smaller of the P_{fy} of the two connected sections at the splice:

$$P_{cu} := 490.92 \quad \text{kips}$$

The design bearing strength of the connected material is calculated as the sum of the bearing strengths of the individual bolt holes parallel to the line of the applied force.

The element of the bottom flange splice that controls the bearing check in this design example is the flange plate on the left side.

For standard holes, oversize holes, short-slotted holes loaded in any direction, and long-slotted holes parallel to the applied bearing force, the nominal resistance of interior and end bolt hole at the strength limit state, R_n, shall be taken as:

- With bolts spaced at a clear distance between holes not less than 2.0d with a clear end distance not less than 2.0d:

$$R_n = 2.4dtF_u \qquad \textbf{LRFD [6.13.2.9-1]}$$

- If either the clear distance between holes is less than 2.0d, or the clear end distance less than 2.0d:

$$R_n = 1.2L_c tF_u \qquad \textbf{LRFD [6.13.2.9-2]}$$

Where:

L_c = Clear distance between holes or between the hole and the end of the member in the direction of the applied bearing force (in)

To determine the applicable equation for the calculation of the nominal resistance, the clear distance between holes and the clear end distance must be calculated and compared to the value of two times the nominal diameter of the bolt. This check yields:

$d_b = 0.875$ in $\qquad 2 \cdot d_b = 1.75$ in

$d_{hole} = 0.938$ in

For the bolts adjacent to the end of the flange plate, the edge distance is 1 1/2". Therefore, the clear end distance between the edge of the hole and the end of the splice plate:

$$L_{c_1} := 1.75 - \frac{d_{hole}}{2} \qquad L_{c_1} = 1.28 \quad \text{in}$$

The center-to-center distance between bolts in the direction of the force is three inches. Therefore, the clear distance between edges of adjacent holes is computed as:

$$L_{c_2} := 3.00 - d_{hole} \qquad L_{c_2} = 2.06 \quad \text{in}$$

For the flange plate on the left side:

$t_{flbL} = 0.875$ in

$F_u = 65.00$ ksi

The nominal resistance for the end row of bolt holes is computed as follows:

$R_{n_1} := 4 \cdot \left(1.2 \cdot L_{c_1} \cdot t_{flbL} \cdot F_u\right)$ $R_{n_1} = 349.78$ kips

The nominal resistance for the remaining bolt holes is computed as follows:

$R_{n_2} := 8 \cdot \left(2.4 \cdot d_b \cdot t_{flbL} \cdot F_u\right)$ $R_{n_2} = 955.50$ kips

The total nominal resistance of the bolt holes is:

$R_n := R_{n_1} + R_{n_2}$ $R_n = 1305.28$ kips

$\phi_{bb} = 0.80$

$R_r := \phi_{bb} \cdot R_n$ $R_r = 1044.23$ kips

Check:

$P_{cu} = 490.92$ kips $<$ $R_r = 1044.23$ kips OK

E24-2.7.1.2 Top Flange Bolts

E24-2.7.1.2.1 Design Yield Resistance of the Top Flange

The top flange on the left has a smaller area with the same F_y., so the top flange on the left will control

The net area of top flange A_{n_top}:

$$A_{n_top} := \left(b_{fltL} - Row_No \cdot d_{hole}\right) \cdot t_{fltL} = 7.69 \qquad in^2$$

The gross area of top flange A_{g_top}:

$$A_{g_top} := b_{fltL} \cdot t_{fltL} = 10.50 \qquad in^2$$

The effective area of top flange A_{e_top}:

$$A_{e_top} := \min\left(\frac{\phi_u}{\phi_y}\frac{F_u}{F_y} \cdot A_{n_top}, A_{g_top}\right) = 8.42 \qquad in^2$$

The design yield resistance of top flange, P_{fy_top}

$$P_{fy_top} := A_{e_top} \cdot F_{yf} = 420.79 \qquad Kip$$

E24-2.7.1.2.2 Shear Resistance of the Bolts

The area of inner splice plates at top flange A_{inn_top}:

$$A_{inn_top} := N_{inp} \cdot t_{in} \cdot b_{in} = 7.50 \qquad in^2$$

The area of outside splice plate at top flange A_{out_top}:

$$A_{out_top} := t_{out} \cdot b_{out} = 7.00 \qquad in^2$$

$$\left(1 - \frac{A_{out_top}}{A_{inn_top}}\right) = 0.07$$

Total splice area at top flange:

$$A_{Top_splice} := A_{inn_top} + A_{out_top} = 14.50 \quad in^2 \quad .> \quad A_{g_TF} := t_{fltL} \cdot b_{fltL} = 10.50 \quad in^2$$

The difference between the outer and inner flange splice plates is less than 10%, therefore, P_{fy} will be divided equally to the inner and outer splice plates and their connections and the connections are proportioned assuming a double shear connection (N_s=2).

$$N_{st} := 2 \qquad Planes$$

the bolt diameter = 0.875 less than 1.0 in., so the <u>threads are excluded</u> from the shear planes.

Threads_bottom is excluded

$\phi_s \cdot R_{nt} = 64.65$ Kips

The outer flange splice plate and flange width will be equal in the splice.

There is reduction factor that needs to be applied due to filler plate

Sum of the area of the fillers on the top and bottom of the connected plate:

$A_f := b_{fill} t_{fill}$ $A_f = 7.00$ in^2

The smaller of either the connected plate area (i.e., girder flange) or the sum of the splice plate areas on the top and bottom of the connected plate determines A_p.

Top flange area A_{g_TF}:

$A_{g_TF} = 10.50$ in^2

Sum of splice plate areas is equal to the gross areas of the inside and outside splice plates:

$A_{Top_splice} = 14.50$ in^2

The minimum of the areas is:

$A_{p_t} := \min(A_{Top_splice}, A_{g_TF})$ $A_{p_t} = 10.50$ in^2

Therefore:

$\gamma := \frac{A_f}{A_{p_t}}$ $\gamma = 0.67$

The reduction factor is determined to be:

$R_{fill_top} := \left(\frac{1+\gamma}{1+2\gamma}\right)$ $R_{fill_top} = 0.71$

$R_{top} := \phi_s \cdot R_n \cdot R_{fill_top}$ $R_{top} = 46.18$ kips

E24-2.7.1.2.3 Number of Bolts

$N_{top_calculated} := \frac{P_{fy_top}}{R_{top}}$ $N_{top_calculated} = 0.56$ bolts

Use 4 rows with 3 bolts per row on each side of the splice of the top flange

$N_{top} := 12$ Bolts

E24-2.7.2 Moment Resistance

E24-2.7.2.1 Positive Moment

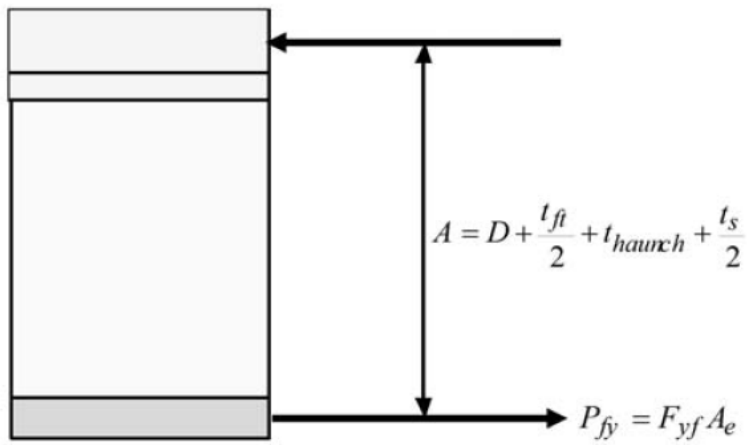

Figure E24-2.7.2.1-1
LRFD Figure [C6.13.6.1.3b-1] Calculation of the Moment Resistance Provided by the Flange Splices for Composite Sections Subject to Positive Flexure

LRFD [6.13.6.1.3b]: For composite sections subject to positive flexure, the moment resistance provided by the flange splices at the strength limit state shall be computed as **P_{fy} for the bottom flange** times the moment arm taken as the vertical distance from the mid-thickness of the bottom flange to the mid thickness of the concrete deck including the concrete haunch.

Use P_{fy} for the bottom flange = 490.92 Kip

Flange moment arm: $A_+ := D + \frac{t_{flbL}}{2} + d_{haunch} + \frac{t_{seff}}{2} = 62.44$ in

The haunch thickness d_{haunch} is measure from the top of the web to the bottom of concrete deck

$M_{f+} := P_{fy_bot} \cdot \frac{A_+}{12} = 2554.32$ Kip.ft

$M_{u+} = 2323.51$ kip-ft

$M_{f+} > M_{u+}$ OK

Hence, the flange splices are able to resist the applied positive moment, and the web splice will not contribute to resist any portion of moment

E24-2.7.2.2 Negative Moment

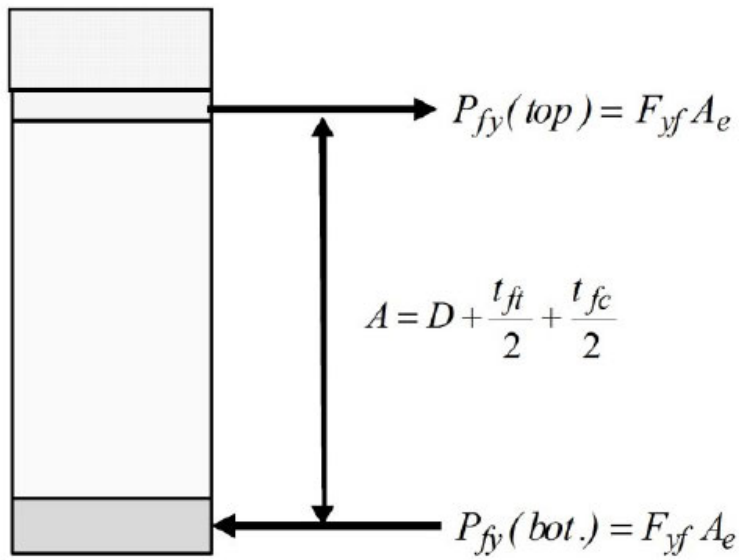

Figure E24-2.7.2.2-1
LRFD Figure [C6.13.6.1.3b-2] Calculation of the Moment Resistance Provided by the Flange Splices for Composite Sections Subject to Negative Flexure and Non-composite Sections

LRFD [6.13.6.1.3b]: For composite sections subject to negative flexure and non-composite sections subject to positive or negative flexure, the moment resistance provided by the flange splices at the strength limit state shall be computed as **P_{fy} for the top or bottom flange**, which is smaller, times the moment arm taken as the vertical distance between the mid-thickness of the top and bottom flanges.

Use the smaller value of P_{fy} for the top and bottom flange = 420.79 Kip

$P_{fy_N} := \min(P_{fy_top}, P_{fy_bot}) = 420.79$ OK

Flange negative moment arm: $A_- := D + \frac{t_{flbL}}{2} + \frac{t_{fltL}}{2} = 54.81$ in

$M_{f-} := P_{fy_N} \cdot \frac{A_-}{12} = 1922.04$ Kip.ft

$M_{u-} = -1549.67$ kip-ft

$M_{f-} > |M_{u-}|$ OK

The flange splices are able to resist the applied negative moment, and the web splice will not contribute to resist any portion of moment

E24-2.7.3 Bottom Splice Plates

E24-2.7.3.1 - Tension **LRFD [6.13.5.2]**:

LRFD [C6.13.6.1.3b] Splice plate subjected to tension is to be checked at the strength limit state for:

- Yielding on the gross section
- Fracture on the net section
- Block shear rupture

Cross section yielding

As the inner and outer splice plates do not differ by more than 10%, P_{fy} is equally divided to the inner and the outer flange splice plates

$P_{cu} := P_{fy_bot} = 490.92$ kips

The factored tensile resistance for yielding on the gross section, P_r, is taken from **LRFD [6.8.2.1]**:

$P_r = \phi_y \cdot P_{ny}$ **LRFD [6.8.2.1-1]**

Where:

P_{ny} = Nominal tensile resistance for yielding in gross section (kips)
= $F_y A_g$

F_y = Specified minimum yield strength (ksi)

A_g = Gross cross-sectional area of the member (in^2)

ϕ_y = Resistance factor for yielding of tension members

$P_r = \phi_y \cdot F_y \cdot A_g$

$F_y = 50.00$ ksi

$\phi_y = 0.95$

For yielding of the outside splice plate P_{ro}:

$A_g := A_{out_bot}$ $A_g = 7.00$ in^2

$P_r := \phi_y \cdot F_y \cdot A_g$ $P_r = 332.50$ kips

The outside splice plate takes half of the design load:

$$P_r = 332.50 > \frac{P_{cu}}{2} = 245.46 \quad \text{OK}$$

For yielding of the inside splice plates P_{ri}:

$A_g := A_{inn_bot}$ $\quad A_g = 7.50$ $\quad in^2$

$P_r := \phi_y \cdot F_y \cdot A_g$ $\quad P_r = 356.25$ $\quad$ kips

The inside splice plate takes half of the design load:

$$P_r = 356.25 \quad > \quad \frac{P_{cu}}{2} = 245.46 \quad \text{OK}$$

Fracture in net section

The factored tensile resistance for fracture on the net section, P_r, is calculated by:

$P_r = \phi_u \cdot P_{nu}$ **LRFD [6.8.2.1-2]**

Where:

P_{nu} = Nominal tensile resistance for fracture in net section (kips)
$= F_u A_n R_p U$

F_u = Tensile strength (ksi)

R_p = Reduction factor for holes taken equal to 0.90 for bolt holes punched full size and 1.0 for bolt holes drilled full size or subpunched and reamed to size.

A_n = Net area of the member (in^2) **LRFD [6.8.3]**

U = Reduction factor to account for shear lag; 1.0 for components in which force effects are transmitted to all elements, and as specified in **LRFD [6.8.2.2]** for other cases

ϕ_u = Resistance factor for fracture of tension members

$P_r = \phi_u \cdot F_u \cdot A_n \cdot R_p \cdot U$

$F_u = 65.00$

$\phi_u = 0.80$

$U := 1.0$

$R_p := 1.0$

For non-staggered holes, such as in this design example, the minimum net width is the width of the element minus the number of bolt holes in a line straight across the width **LRFD [6.8.3]**.

For fracture of the outside splice plate:

The net width is:

$d_{hole} = 0.938$ in

The nominal area of the outside splice plate is determined to be:

$A_{n(out_b)} := (b_{out} - Row_No \cdot d_{hole}) \cdot t_{out} = 5.13$ in^2

The net area of the connecting element is limited to $0.85A_g$ **LRFD [6.13.5.2]**:

$A_n \le 0.85 \cdot A_g$

$A_{g(out_b)} := t_{out} \cdot b_{out} = 7.00$ in^2

$A_{n(out_b)} = 5.13$ in^2 < $0.85 \cdot A_{g(out_b)} = 5.95$ in^2 OK

$P_r := \phi_u \cdot F_u \cdot A_{n(out_b)} \cdot U$ $P_r = 266.50$ kips

The outside splice plate takes half of the design flange force:

$P_r = 266.50$ kips > $\frac{P_{cu}}{2} = 245.46$ kips OK

For fracture of the inside splice plates:

The nominal area is determined to be:

$A_{n(in_b)} := N_{inp}(b_{in} - 2 \cdot d_{hole}) \cdot t_{in} = 5.16$ in^2

The net area of the connecting element is limited to $0.85A_g$:

$A_n \le 0.85 \cdot A_g$

$A_{g(in_b)} := N_{inp} \cdot b_{in} \cdot t_{in} = 7.50$

$A_{n(in_b)} = 5.16$ in^2 < $0.85 \cdot A_{g(in_b)} = 6.38$ in^2 OK

$P_r := \phi_u \cdot F_u \cdot A_{n(in_b)} \cdot U$ $P_r = 268.13$ kips

The inside splice plates take half of the design flange force:

$P_r = 268.13$ kips > $\frac{P_{cu}}{2} = 245.46$ kips OK

Block shear rupture LRFD [6.13.4]

A) Outside splice plate:

Failure mode 1:

A bolt pattern must be assumed prior to checking an assumed block shear failure mode. An initial bolt pattern for the bottom flange splice, along with the first assumed failure mode, is shown in Figure Figure E24-2.7.3.1-1. The outside splice plate will now be checked for block shear.

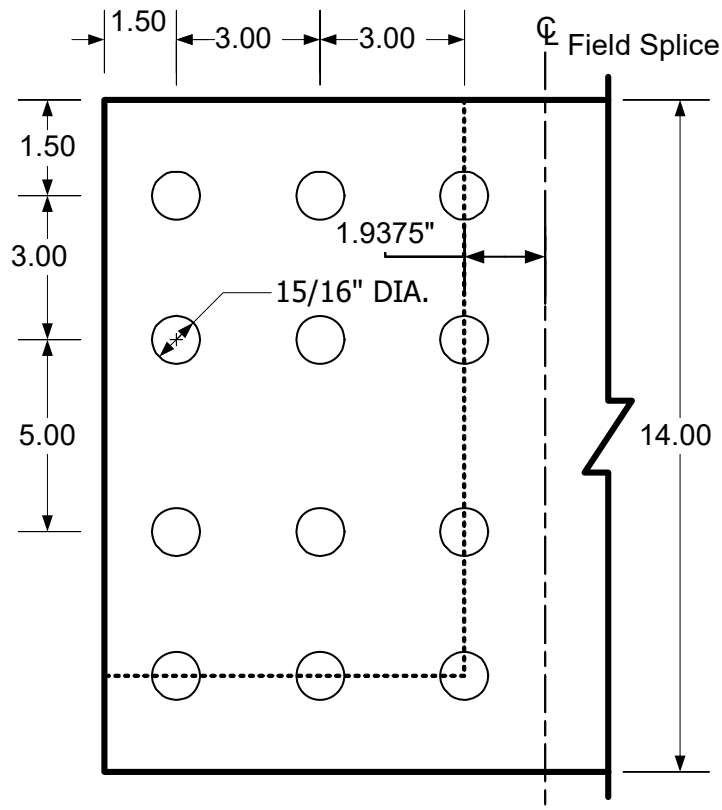

Figure E24-2.7.3.1-1
Outside Splice Plate - Failure Mode 1

Applying the factored resistance equations presented previously to the outside splice plate for failure mode 1:

Gross area along the plane resisting shear stress:

$A_{vg} := [2\cdot(3.00) + 1.50]\cdot t_{out}$ $\quad A_{vg} = 3.75$ $\quad in^2$

Net area along the plane resisting shear stress:

$A_{vn} := \left[2\cdot(3.00) + 1.50 - 2.5\cdot d_{hole}\right]\cdot t_{out}$ $\quad A_{vn} = 2.58$ $\quad in^2$

Net area along the plane resisting tension stress:

$A_{tn} := \left[[2\cdot(3.00) + 5.00 + 1.50] - 3.5\cdot d_{hole}\right]\cdot t_{out}$ $\quad A_{tn} = 4.61$ $\quad in^2$

$U_{bs} := 1.0$

$R_{r1} := \phi_{bs} \cdot R_p \cdot (0.58 \cdot F_u \cdot A_{vn} + U_{bs} \cdot F_u \cdot A_{tn}) = 317.44$

$R_{r2} := \phi_{bs} \cdot R_p \cdot (0.58 \cdot F_y \cdot A_{vg} + U_{bs} \cdot F_u \cdot A_{tn}) = 326.69$

$R_r := \min(R_{r1}, R_{r2})$

$R_r = 317.44$ kips

Check:

$R_r = 317.44$ kips $> \frac{P_{cu}}{2} = 245.46$ kips OK

Failure mode 2:

See Figure Figure E24-2.7.3.1-2 for failure mode 2:

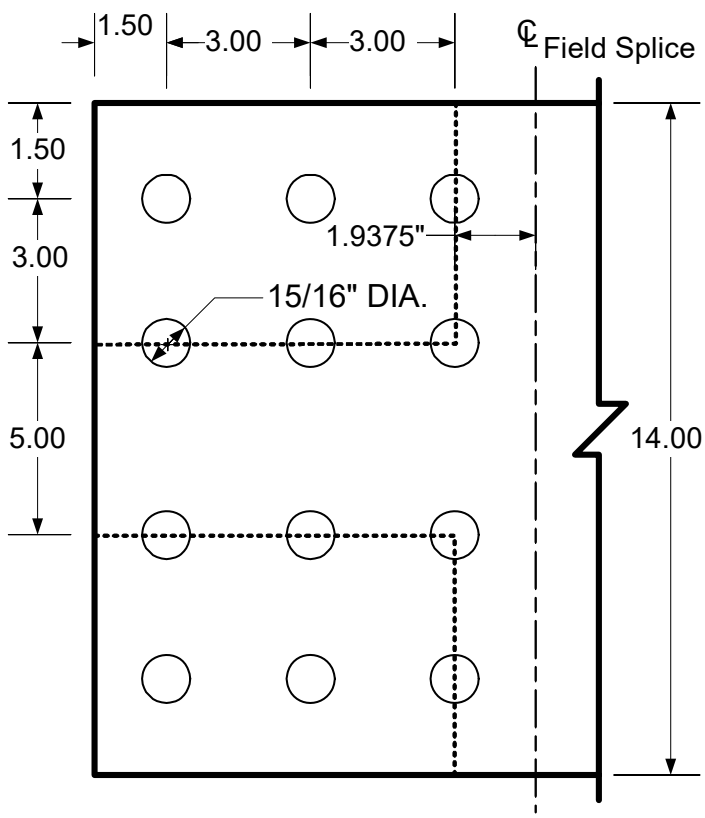

Figure E24-2.7.3.1-2
Outside Splice Plate - Failure Mode 2

$$R_r = 316.39 \quad \text{kips} > \frac{P_{cu}}{2} = 245.46 \quad \text{kips} \quad \text{OK}$$

B) Inside splice plates:

The inside splice plates will now be checked for block shear. See Figure Figure E24-2.7.3.1-3 for the assumed failure mode:

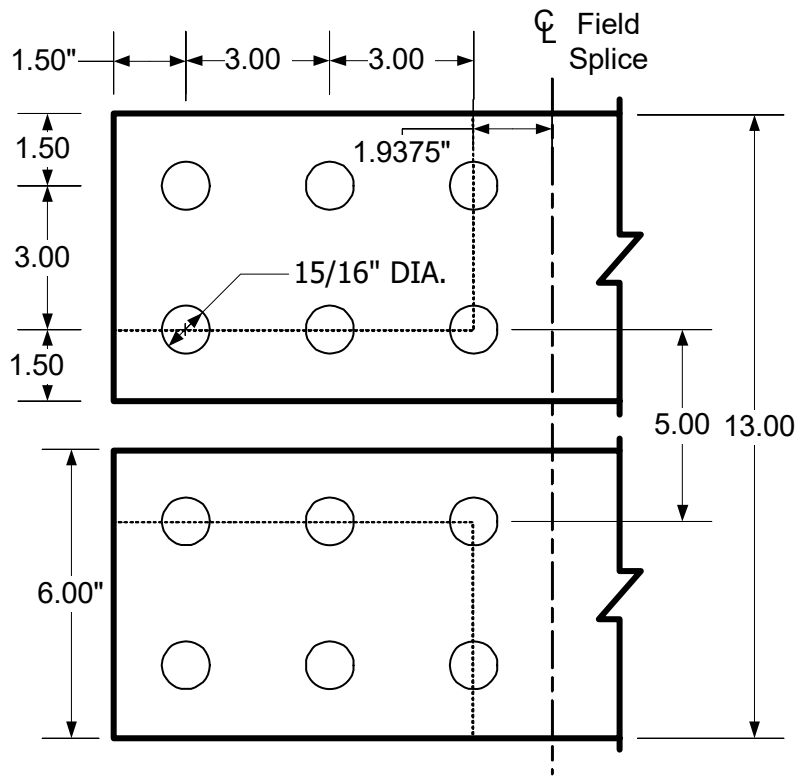

Figure E24-2.7.3.1-3
Inside Splice Plates - Block Shear Check

The calculations for the inside splice plates are not shown since they are similar to those shown previously for failure mode 1 and 2. The final check for the inside splice plates is shown below.

Check:

$$R_r = 395.48 \quad \text{kips} > \frac{P_{cu}}{2} = 245.46 \quad \text{kips} \quad \text{OK}$$

C) Girder bottom flange:

The girder bottom flange will now be checked for block shear. See Figure Figure E24-2.7.3.1-4 for the assumed failure mode:

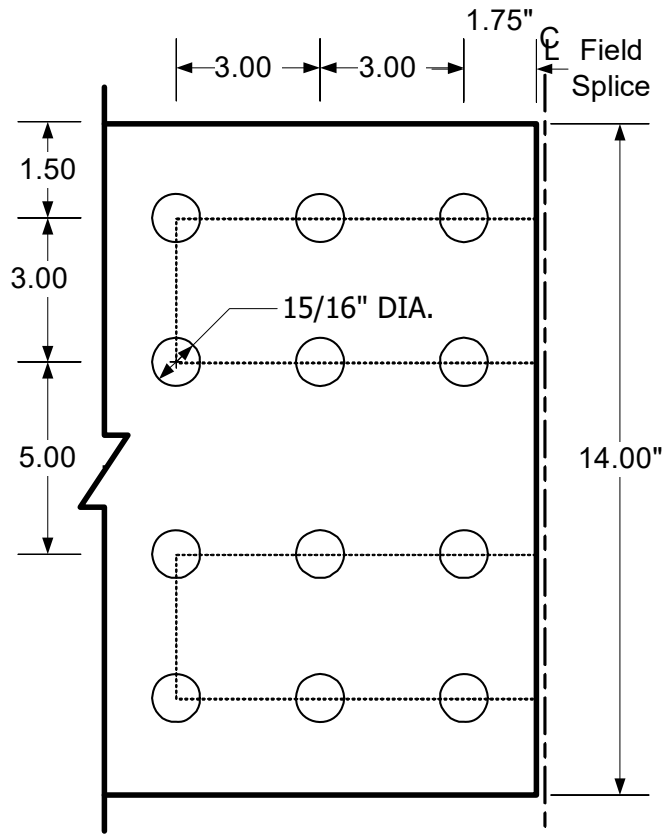

Figure E24-2.7.3.1-4
Bottom Flange - Block Shear Check

The calculations for the girder bottom flange are not shown since they are similar to those shown previously for the inside splice plates. The final check for the girder bottom flange is shown below.

Check:

$$R_r = 758.37 \quad \text{kips} > P_{cu} = 490.92 \quad \text{kips} \quad \text{OK}$$

E24-2.7.3.2 - Compression

Flange splice plate subjected to compression at the strength limit state is to be checked for yielding on the gross section of the plates. However, no need to check this requirement as it is satisfied in the tension check

Also, no need to check the plate buckling due to the compression load, as the bolt spacing is close.

LRFD [6.13.2.6.3] To prevent buckling in compression, the maximum spacing between bolts shal not exceed 12.t, and the gage, g, between adjacent lines of bolts shall not exceed 24.t

Where:

t = Thickness of the thinner outside plate or shape (in)

$t_{buckling} := \min(t_{out}, t_{fltL}) = 0.50$ in

$12 \cdot t_{buckling} = 6.00$ in

$24 \cdot t_{buckling} = 12.00$ in

Both requirements are met and buckling will not occure.

E24-2.7.4 - Checking Flexural Members at the Strength Limit for Constructibility

LRFD 6.10.1.8-1 should be satisfied at all cross-sections containing holes in the tension flange. In this example, this equation was checked in separate calculation and it is satisfied for both flanges of the girder at the splice at the stength limit state.

E24-2.8 Service Limit State Design of the Flange Splice Plates

E24-2.8.1 Flange Bolts - Slip Resistance:

Bolted connections for flange splices shall be designed as slip-critical connections for the Service II flange design force, or the flange design force during deck casting, whichever governs **LRFD [6.13.6.1.3a]**.

LRFD [C6.13.6.1.3b] When checking for slip of the bolted connection for a flange splice with inner and outer splice plates, the slip resistance should always be determined by dividing the flange design force equally to the two slip planes regardless of the ratio of the splice plate areas. Slip of the connection cannot occur unless slip occurs on both planes.

Furthermore, for slip-critical connections, the nominal slip resistance of a bolt shall not be adjusted for the effect of the fillers. The resistance to slip between filler and either connected part is comparable to that which would exist between the connection parts if fillers were not present.

The factored resistance of bolt for slip-critical connections, R_r, is calculated from **LRFD [6.13.2.2 & 6.13.2.8]**:

$$R_r = R_n \cdot 1$$

Where R_n is the nominal resistance:

$$R_n = K_h \cdot K_s \cdot N_s \cdot P_t \qquad \textbf{LRFD [6.13.2.8-1]}$$

Where:

K_h = Hole size factor **LRFD [Table 6.13.2.8-2]**

K_s = Surface condition factor **LRFD [Table 6.13.2.8-3]**

N_s = Number of slip planes per bolt

P_t = Minimum required bolt tension (kips) **LRFD [Table 6.13.2.8-1]**

Determine the factored resistance per bolt assuming a Class B surface condition for the faying surface, standard holes (which are required per **LRFD [6.13.6.1.3a]**) and two slip planes per bolt:

Class B surfaces are unpainted blast-cleaned surfaces and blast-cleaned surfaces with Class B coatings **LRFD [6.13.2.8]**.

$K_h := 1.0$

$K_s := 0.50$

$N_s := 2$

$P_t := 39.0$ kips

$R_n := K_h \cdot K_s \cdot N_s \cdot P_t$ $R_n = 39.00$ kip / Bolt

E24-2.8.1.1 Service II Positive Moment

For composite section subject to positive moment, use slip resistance of the bottom flange splice bolts.

The factored slip resistance of the bottom flange splice with 12 bolts R_r

$R_r := R_n \cdot 12 = 468.00$ kip

Flange Moment Arm (A_+) as calculated before:

$A_+ = 62.44$ in

Service II Positive Moment M_+:

$M_+ := 1 \cdot (M_{NDL} + M_{CDL}) + 0 \cdot M_{FWS} + 1.3 \cdot M_{PLL+IL} = 1689.38$ kip-ft

$M_{slip_bot} := R_r \cdot \frac{A_+}{12} = 2435.06$ kip-ft > $M_+ = 1689.38$ kip-ft OK

E24-2.8.1.2 Service II Negative Moment

For composite section subject to negative moment, use slip resistance of the bottom or top flange splice bolts, which is smaller.

The factored slip resistance of the top flange splice with 12 bolts R_r

$R_r := R_n \cdot 12 = 468.00$ kip

Flange Moment Arm (A_-) as calculated before:

$A_- = 54.81$ in

Service II Negative Moment M_+:

$M_- := 1 \cdot (M_{NDL} + M_{CDL}) + 1 \cdot M_{FWS} + 1.30 \cdot M_{NLL+IL} = -1158.79$ kip-ft

$M_{slip_top} := R_r \cdot \frac{A_-}{12} = 2137.69$ kip-ft > $M_- = -1158.79$ kip-ft OK

E24-2.8.1.3 Deck Casting

For non-composite section, use the slip resistance of the bottom or top flange splice bolts, which is smaller. The deck casting will not control in this example.

E24-2.8.2 Control of Permanent Deformation

When the combined area of the inside and outside flange splice plates is greater than the area of the smaller bottom flange at the point of splice, the permanent deflection under the Service II load combination need not be checked.

E24-2.9 Filler Plates

LRFD [6.13.6.1.4] The specified minimum yield strength of the fillers 0.25 inch or greater in thickness should not be less than the larger of 70 percent of the specified minimum yield strength of the connected plate and 36 ksi.

E24-2.10 Web Design

E24-2.10.1 Web Splice Design Loads

Girder shear forces at the splice location:

A summary of the unfactored shears at the splice location from the initial trial of the girder design are listed below. The live loads include distribution factors.

Dead load shears:

Non-composite:

$V_{NDL} := -58.4$ kips

Composite:

$V_{CDL} := -7.8$ kips

Future wearing surface:

$V_{FWS} := -7.4$ kips

Live Load shears:

HL-93 positive:

$V_{PLL} := 16.2$ kips

HL-93 negative:

$V_{NLL} := -91.6$ kips

E24-2.10.2 Web Splice Configuration

Two vertical rows of bolts with sixteen bolts per row will be used. The typical bolt spacings, both horizontally and vertically, are as shown in Figure E24-2.10.2-1. The outermost rows of bolts are located 4 1/2" from the flanges to provide clearance for assembly (see the *AISC Manual of Steel Construction* for required bolt assembly clearances). The web is spliced symmetrically by plates on each side with a thickness not less than one-half the thickness of the web. Assume 3/8" x 48" splice plates on each side of the web.

The splice plates shall be extended as near as practical for the full depth between flanges without impinging on bolt assembly clearance

For bolted web splices with thickness differences of 0.0625 inch or less, filler plates should not be provided

Web splice plate thickness: $t_{wp} := 0.375$ in

Web splice plate length: $L_{wp} := 48$ in

Number of web splice plates: $N_{wp} := 2$ Plates

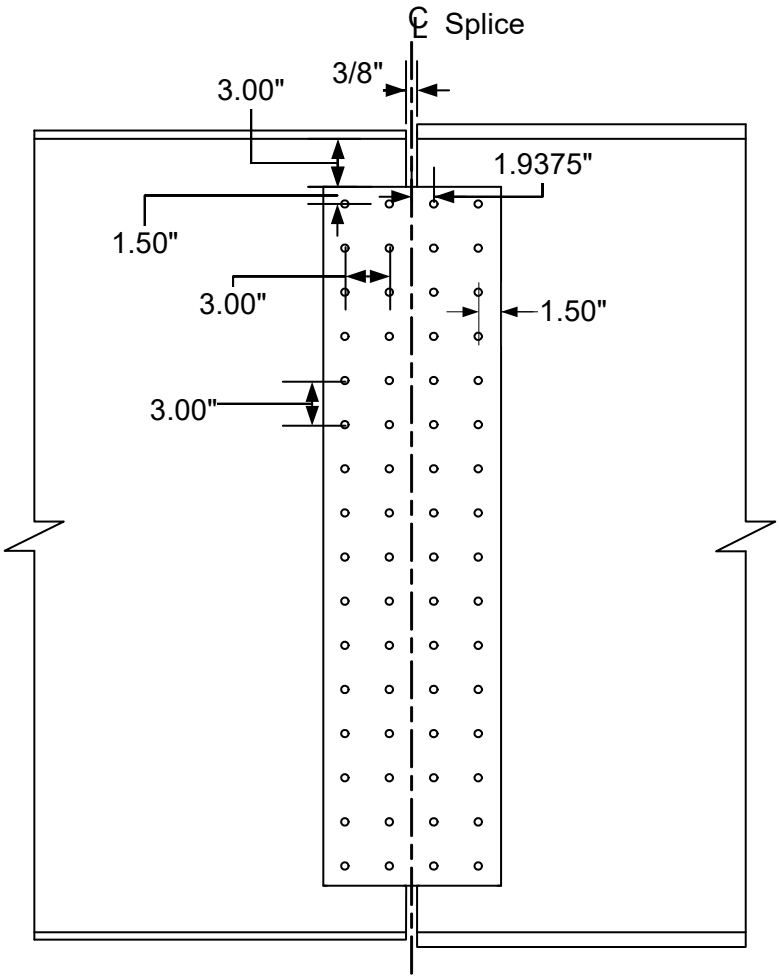

Figure E24-2.10.2-1
Web Splice

3" spacing was selected, but 4.5" may work.

E24-2.10.3 Strength Limit State Design of the Web Plates

In this example, the moment resistance of the flanges is sufficient to resist the factored moment at the strength limit state, so the web will not contribute to resist any moment.

Should the factored moments exceed the moment resistance provided by the flange splices, the web splice is assumed to resist the additional moment as addressed in **LRFD [6.13.6.1.3c]** in addition to its design shear.

E24-2.10.3 .1 Bolt Design

E24-2.10.3.1.1 Number of Bolts and Spacing

- **LRFD [6.13.6.1.3c]** As a minimum, web splice plates and their connections shall be designed at the strength limit state for a design web force taken equal to the smaller factored shear resistance of the web at the point of splice
- The factored shear resistance of the bolts should be based on threads included in the shear planes, unless the web splice-plate thickness exceeds 0.5 inch.
- The small moment induced by the eccentricity of the web may be ignored at all limit states.
- As a minimum, two vertical rows of bolts spaced at maximum spacing for sealing bolts specified in **LRFD [6.13.2.6.2]** should be provided, with a closer spacing and or additional rows provided only as needed.
- Unlike the tension splice connection, the length reduction factor of 0.83 is not applied to the web splice when the web splice connection exceeds 38.0 inch.
- The total number of bolts on one side of the splice are determined by dividing the smaller shear resistance at the point of splice, V_r, by the factored shear resistance of the bolts. Then the bearing resistance of the flange splice bolts holes shall be checked at the strength limit state.

The smaller shear resistance of web as calculated in EX24-1:

$$V_n := 305.6 \quad \text{kips}$$

$$V_r := \phi_v \cdot V_n = 305.60 \quad \text{kips}$$

Using a splice plate at each side of the web, the connection is double shear connection

$$N_{st} = 2.00 \quad \text{Planes}$$

When threads are included **LRFD Eq. [6.13.2.7.2]**

$$R_n := 0.45 A_b \cdot F_{ub} \cdot N_{st} = 64.94 \quad \text{kips}$$

$$\phi_s \cdot R_n = 51.95 \quad \text{kips}$$

Number of bolts in web:

$$N_b := \frac{V_r}{(\phi_s \cdot R_n)} = 5.88 \quad \text{Bolts}$$

The minimum spacing LRFD[6.13.2.6.1]:
The minimum spacing between centers of bolts in standard holes for sealing against the penetration shall be no less than three times the diameter of the bolt.

$d_b = 0.875$ in

$s_{min} := 3 \cdot d_b$ $s_{min} = 2.63$ in

Using 3 inch spacing will meet the minimum spacing requirement

$s := 3.00$ in

The Maximum spacing for sealing LRFD [6.13.2.6.2]:

For a single line adjacent to a free edge of an outside plate or shape when the bolts are not staggered (for example, the bolts along the edges of the plate parallel to the direction of the applied force):

$s \le (4.0 + 4.0 \cdot t) \le 7.0$ When the bolts are not staggered **LRFD [6.13.2.6.2-1]**:

Where:

t = Thickness of the splice plate (in)

$t_{wp} = 0.3750$ in

Maximum spacing for sealing at the edge parallel to the applied force:

$4 + 4 \cdot t_{wp} = 5.50$ in

$s \le 5.5 \le 7.00$ OK

Next, check for sealing along the free edge at the end of the splice plate. The bolts are not staggered, therefore the applicable equation is:

$s \le (4.00 + 4.00 \cdot t) \le 7.00$

Maximum spacing along the free edge at the end of the splice plate:

$s_{end} := 3.875$ in

Maximum spacing for sealing at the end of the splice plate:

$4.0 + 4.0 \cdot t_{wp} = 5.50$ in

$s_{end} \le 5.5 \le 7.00$ OK

The maximum pitch for stitch bolts LRFD [6.13.2.6.3]:

The maximum pitch requirements are applicable only for mechanically fastened built-up members and will not be applied in this example.

The end distance LRFD [6.13.2.6.5]:

The minimum required edge distance is measured as the distance from the center of any bolt in a standard hole to an edge of the plate. For a 7/8" diameter bolt measured to a sheared edge, the minimum edge distance is 1 1/2" **LRFD Table [6.13.2.6.6-1]**. Referring to Figure E24-2.10.2-1, it is clear that the minimum edge distance specified for this example is 1 1/2" and thus satisfies the minimum requirement.

The maximum edge distance shall not be more than eight times the thickness of the thinnest outside plate or five inches.

$D_{max} \le 8 \cdot t \le 5.00$ in

$t := t_{wp}$ $t_{wp} = 0.3750$ in

$8 \cdot t_{wp} = 3.00$ in

The maximum distance from the corner bolts to the corner of the splice plate is equal to:

$D_{max} := \sqrt{1.5^2 + 1.5^2} = 2.12$ in

$2.12 \cdot in \le 4.0 \cdot in$ OK

Therefore, the total number of web bolts on each side of the splice required to meet the maximum bolt spacing, assuming two vertical rows per side with sixteen bolts per row :

$N_b := 32$ Bolts per side

$N_{bl} := 16$ Bolts per line

E24-2.10.3.1.2 Bearing at Bolt Holes

LRFD [6.13.2.9]

Since the sum of splice plates thickness times F_u is greater than the web splice plate times F_u, the left girder web controls the bearing resistance of the connection. In addition, the flange splice plates are sufficient to resist the moment without cotribution from the web, therefore, only bearing parallel to the shear resistance is to be checked.

The flange is sufficient to resist the moment, then:

$T := V_r$

$d_b = 0.875$ in $\qquad 2 \cdot d_b = 1.75$ in

$d_{hole} = 0.938$ in

For the two bolts at the bottom of the web plate, the edge distance is 3". Therefore, the clear end distance between the edge of the hole and the end of the web in the direction of the applied force:

$L_{c_1} := 3 - \frac{d_{hole}}{2} \qquad L_{c_1} = 2.53$ in

$L_{c_1} > 2 \cdot d_b$ Then $R_n = 2.4dtF_u$ **LRFD [6.13.2.9-1]**

The nominal resistance of the bottom bolt holes (two holes) is computed as follows:

$R_{n_1} := 2 \cdot (2.4 \cdot d_b \cdot t_w \cdot F_u) \qquad R_{n_1} = 136.50$ kips

The vertical center-to-center distance between bolts in the direction of the force is three inches. Therefore, the clear distance between edges of adjacent holes is computed as:

$L_{c_2} := 3.00 - d_{hole} \qquad L_{c_2} = 2.06$ in

$L_{c_2} > 2 \cdot d_b$ Then $R_n = 2.4dtF_u$ **LRFD [6.13.2.9-1]**

The nominal resistance for the remaining bolt holes (30 holes) is computed as follows:

$R_{n_2} := 30 \cdot (2.4 \cdot d_b \cdot t_w \cdot F_u) \qquad R_{n_2} = 2047.50$ kips

The total nominal resistance of the bolt holes is:

$R_n := R_{n_1} + R_{n_2}$ $R_n = 2184.00$ kips

$\phi_{bb} = 0.80$

$R_r := \phi_{bb} \cdot R_n$ $R_r = 1747.20$ kips

Check:

$V_r = 305.60$ kips < $R_r = 1747.20$ kips OK

E24-2.10.3.2 Shear Resistance of the Connection Element

LRFD [6.13.6.1.3c]

The design web force at the strength limit state shall not exceed the lesser of the factored shear resistance of the web splice plates determined from:

Shear yielding of the connection element
Shear rupture of the connection element
Block shear resistance of the connection element (normally does not govern)

Shear yielding of the connection element LRFD [6.13.5.3]

For shear yielding, the factored shear resistance of the connection element shall be taken as:

$R_r := \phi_v \cdot 0.58 \cdot F_y \cdot A_{vg}$

ϕ_v = Resistance factor for shear **LRFD [6.5.4.2]**

A_{vg} = Gross area of the connection element subject to shear (in^2)

F_y = Specified minimum yield strength of the connection element (ksi)

$A_{vg} := t_{wp} \cdot L_{wp} = 18.00$ in^2

Using two plates total ($N_{wp} = 2$) with one plate on each side of the web

the shear yielding resistanceis

$R_r := \phi_v \cdot 0.58 \cdot F_y \cdot N_{wp} A_{vg} = 1044.00$ kips

$R_r > V_r$ kips OK

Shear rupture of the connection element LRFD [6.13.5.3]

For shear rupture, the factored shear resistance of the connection element shall be taken as:

$R_r := \phi_{vu} \cdot 0.58 \cdot R_p \cdot F_u \cdot A_{vn}$ **LRFD [6.13.5.3-2]**

ϕ_{vu} = Resistance factor for shear rupture of connection elements **LRFD [6.5.4.2]**

A_{vn} = Net area of the connection element subject to shear (in^2)

F_u = Tensile strength of the connection element (ksi)

R_p = Reduction factor for holes taken equal to 0.90 for bolt holes punched full size and 1.0 for bolt holes drilled full size or subpunched and reamed to size

$A_{vn} := t_{wp} \cdot (L_{wp} - 16 \cdot d_{hole}) = 12.38$ in^2

Using two plates with one plate on each side of the web

the shear yielding resistance

$R_r := \phi_{vu} \cdot 0.58 \cdot R_p \cdot F_u \cdot N_{wp} A_{vn} = 746.46$ kips

$R_r > V_r$ kips OK

Block shear rupture of the connection element LRFD [6.13.4]

Strength I Limit State checks for fracture on the net section of web splice plates and block shear rupture normally do not govern for plates of typical proportion. These checks are provided in this example for completeness.

From E24-2.6, the factored shear resistance was determined to be:

$V_r = 305.60$ kips

Gross area along the plane resisting shear stress:

$A_{vg} := N_{wp} \cdot (L_{wp} - 1.50) \cdot t_{wp}$ $A_{vg} = 34.88$ in^2

Net area along the plane resisting shear stress:

$A_{vn} := N_{wp} \cdot [L_{wp} - 1.50 - 15.50 \cdot (d_{hole})] \cdot t_{wp}$ $A_{vn} = 23.98$ in^2

Net area along the plane resisting tension stress:

$A_{tn} := N_{wp} \cdot \left[1.50 + 3.0 - 1.5 \cdot \left(d_{hole}\right)\right] \cdot t_{wp}$ $A_{tn} = 2.32$ in^2

$U_{bs} := 1.0$

$R_{r1} := \phi_{bs} \cdot R_p \cdot \left(0.58 \cdot F_u \cdot A_{vn} + U_{bs} \cdot F_u \cdot A_{tn}\right) = 843.79$

$R_{r2} := \phi_{bs} \cdot R_p \cdot \left(0.58 \cdot F_y \cdot A_{vg} + U_{bs} \cdot F_u \cdot A_{tn}\right) = 929.76$

$R_r := \min\left(R_{r1}, R_{r2}\right)$

$R_r = 843.79$ kips

Check:

$V_r = 305.60$ kips < $R_r = 843.79$ kips OK

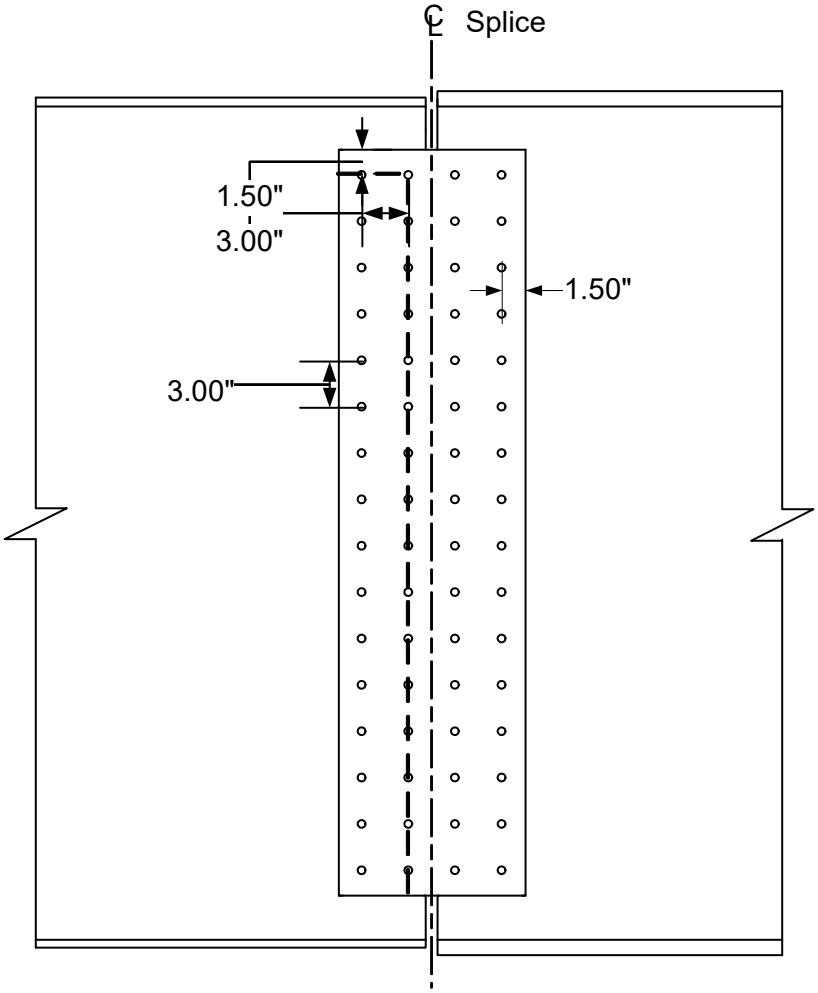

Figure E24-2.10.3.2-1
Block Shear Failure Mode - Web Splice Plate

E24-2.10.4 Service Limit State Design of the Flange Splice Plates

LRFD [6.13.6.1.3c] The factored shear for checking slip shall be taken as the shear in the web at the point of the splice under Load Combination Service II or the shear in the web due to the deck casting sequence, whichever governs.

Should the nominal slip resistance provided by the flange bolts not be sufficient to resist the flange slip force due to the factored moment at the point of splice as determined in Article **LRFD [6.13.6.1.3b]**, the web splice bolts shall be, instead, be checked for slip under a web slip force taken equal to the vector sum of the factored shear and the portion of the flange slip force that exceeds the nominal slip resistance of the flange bolts.

Furthermore, Positive and negative shear under Load Combination Service II, which is greater, should be investigated.

By inpsection, the Service II negative shear controls

$$V_{N_ServiceII} := 1\cdot\left(V_{NDL} + V_{CDL}\right) + 1\cdot\left(V_{FWS}\right) + 1.3\cdot\left(V_{NLL}\right) = -192.68$$

The nominal resistance of one bolt:

$$R_n := K_h\cdot K_s\cdot N_s\cdot P_t$$ **LRFD [6.13.2.8-1]**

$$R_n = 39.00$$ kip/Bolt

The factored slip resistance of the web splice of 32 bolts R_r

$$R_r := R_n\cdot 32 = 1248.00$$ kip

$$R_r > \left|V_{N_ServiceII}\right|$$ kip OK

E24-2.11 Draw Schematic of Final Bolted Field Splice Design

Figure E24-2.11-1 shows the final bolted field splice as determined in this design example.

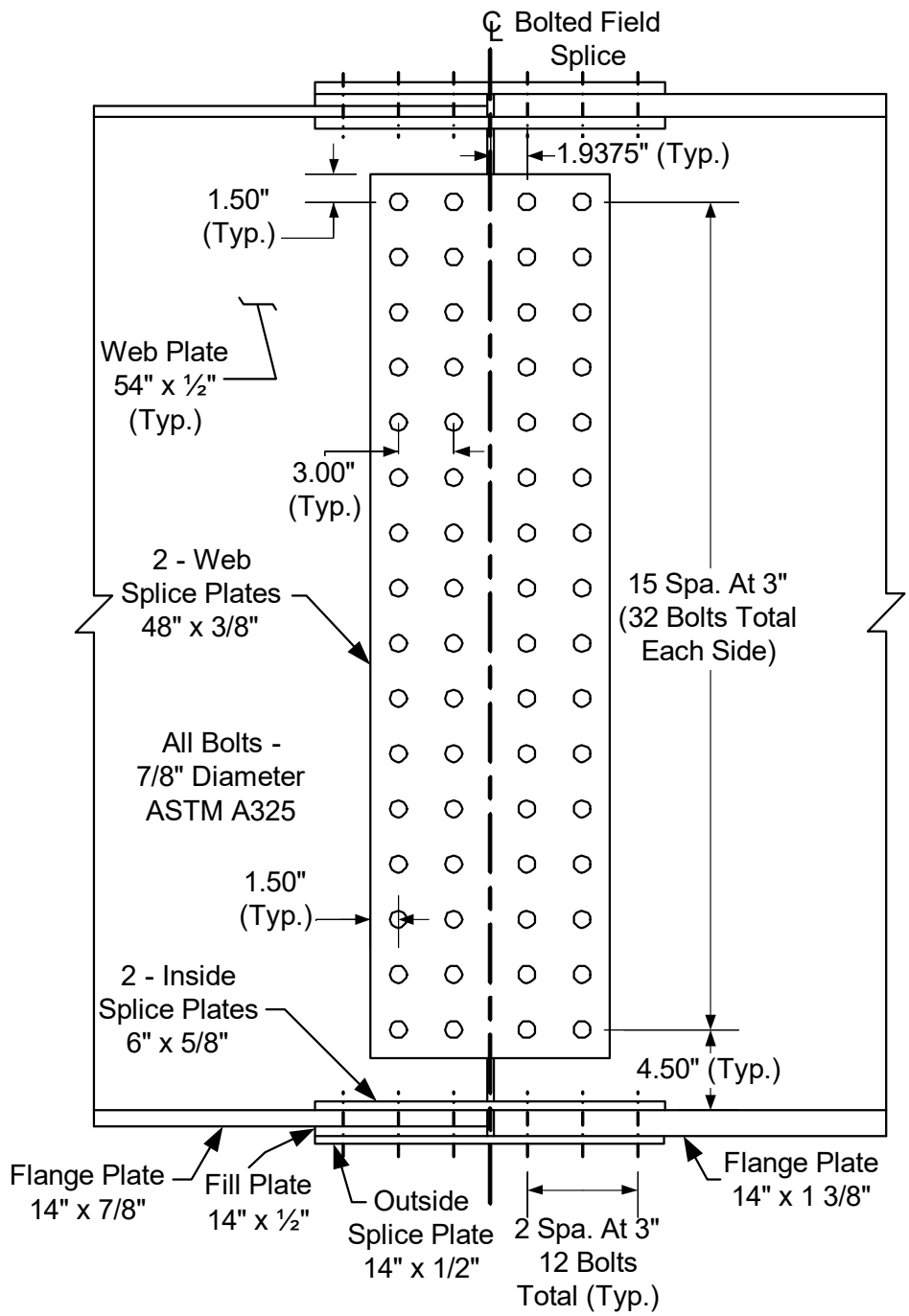

Figure E24-2.11-1
Final Bolted Field Splice Design

This page intentionally left blank.