Table of Contents

45.1 Introduction 5
45.1.1 Purpose of the Load Rating Chapter 5
45.1.2 Scope of Use 5
45.1.3 Governing Standards for Load Rating 5
45.1.4 Purpose of Load Rating 6
45.2 History of Load Rating 7
45.2.1 What is a Load Rating? 7
45.2.2 Evolution of Design Vehicles 7
45.2.3 Evolution of Inspection Requirements 8
45.2.4 Coupling Design with In-Service Loading 9
45.2.5 Federal Bridge Formula 9
45.3 Load Rating Process 10
45.3.1 Load Rating a New Bridge (New Bridge Construction) 10
45.3.1.1 When a Load Rating is Required (New Bridge Construction) 10
45.3.2 Load Rating an Existing (In-Service) Bridge 10
45.3.2.1 When a Load Rating is Required (Existing In-Service Bridge) 11
45.3.3 What Should be Rated 11
45.3.3.1 Superstructure 12
45.3.3.2 Substructure 14
45.3.3.3 Deck 15
45.3.4 Data Collection 15
45.3.4.1 Existing Plans 15
45.3.4.2 Shop Drawings and Fabrication Plans 15
45.3.4.3 Inspection Reports 16
45.3.4.4 Other Records 16
45.3.5 Highway Structure Information System (HSIS) 17
45.3.6 Load Rating Methodologies – Overview 17
45.3.7 Load and Resistance Factor Rating (LRFR) 17
45.3.7.1 Limit States 19
45.3.7.2 Load Factors 22
45.3.7.3 Resistance Factors 23
45.3.7.4 Condition Factor: ϕ_C 23

45.3.7.5 System Factor: ϕ_S 24
45.3.7.6 Design Load Rating 24
45.3.7.6.1 Design Load Rating Live Load 25
45.3.7.7 Legal Load Rating 25
45.3.7.7.1 Legal Load Rating Live Load 25
45.3.7.8 Permit Load Rating 25
45.3.7.8.1 Permit Load Rating Live Load 25
45.3.7.9 Load Distribution for Load and Resistance Factor Rating 26
45.3.8 Load Factor Rating (LFR) 26
45.3.8.1 Load Factors for Load Factor Rating 27
45.3.8.2 Live Loads for Load Factor Rating 29
45.3.8.3 Load Distribution for Load Factor Rating 29
45.3.9 Allowable Stress Rating (ASR) 29
45.3.9.1 Stress Limits for Allowable Stress Rating 30
45.3.9.2 Live Loads for Allowable Stress Rating 30
45.3.9.3 Load Distribution for Allowable Stress Rating 30
45.3.10 Engineering Judgment, Condition-Based Ratings, and Load Testing 31
45.3.11 Refined Analysis 32
45.4 Load Rating Computer Software 34
45.4.1 Rating Software Utilized by WisDOT 34
45.4.2 Computer Software File Submittal Requirements 34
45.5 General Requirements 35
45.5.1 Loads 35
45.5.1.1 Material Unit Weights 35
45.5.1.2 Live Loads 35
45.5.1.3 Dead Loads 36
45.5.2 Material Structural Properties 36
45.5.2.1 Reinforcing Steel 36
45.5.2.2 Concrete 37
45.5.2.3 Prestressing Steel Strands 38
45.5.2.4 Structural Steel 39
45.5.2.5 Timber 39
45.5.2.5.1 Timber Adjustment Factors 40

45.6 WisDOT Load Rating Policy and Procedure – Superstructure 42
45.6.1 Prestressed Concrete 42
45.6.1.1 I-Girder 42
45.6.1.1.1 Variable Girder Spacing (Flare) 43
45.6.1.2 Box and Channel Girders 43
45.6.2 Cast-in-Place Concrete 43
45.6.2.1 Slab (Flat or Haunched) 43
45.6.3 Steel 43
45.6.3.1 Fatigue 44
45.6.3.2 Rolled I-Girder, Plate Girder, and Box Girder 44
45.6.3.2.1 Curvature and/or Kinked Girders 45
45.6.3.2.2 Skew 45
45.6.3.2.3 Variable Girder Spacing (Flare) 46
45.6.3.3 Truss 46
45.6.3.3.1 Gusset Plates 46
45.6.3.4 Bascule-Type Movable Bridges 46
45.6.4 Timber 46
45.6.4.1 Timber Slab 46
45.7 WisDOT Load Rating Policy and Procedure – Substructure 48
45.7.1 Timber Pile Abutments and Bents 48
45.8 WisDOT Load Rating Policy and Procedure – Culverts 49
45.8.1 Rating New Culverts 49
45.8.1.1 New Concrete Box Culverts 49
45.8.1.2 New Concrete Pipe Culverts 49
45.8.1.3 New Steel Pipe Culverts 49
45.8.2 Rating Existing (In-Service) Culverts 50
45.8.2.1 In-Service Concrete Box Culverts 50
45.8.2.2 In-Service Concrete Pipe Culverts 50
45.8.2.3 In-Service Steel Pipe Culverts 51
45.9 Load Rating Documentation and Submittals 52
45.9.1 Load Rating Calculations 52
45.9.2 Load Rating Summary Forms 52
45.9.3 Load Rating on Plans 53

45.9.4 Computer Software File Submittals 54
45.9.5 Submittals for Bridges Rated Using Refined Analysis 54
45.9.6 Other Documentation Topics 54
45.10 Load Postings 57
45.10.1 Overview 57
45.10.2 Load Posting Live Loads 57
45.10.3 Load Posting Analysis 63
45.10.3.1 Limit States for Load Posting Analysis 64
45.10.3.2 Legal Load Rating Load Posting Equation (LRFR) 65
45.10.3.3 Distribution Factors for Load Posting Analysis 65
45.10.4 Load Posting Signage 65
45.11 Over-Weight Truck Permitting 67
45.11.1 Overview 67
45.11.2 Multi-Trip (Annual) Permits 67
45.11.3 Single Trip Permits 67
45.12 Wisconsin Standard Permit Vehicle (Wis-SPV) 69
45.12.1 Background 69
45.12.2 Analysis 69
45.13 References 71
45.14 Rating Examples 73

45.1 Introduction

Constructed in 1928, the Silver Bridge was an eyebar-chain suspension bridge spanning over the Ohio River between Point Pleasant, West Virginia and Gallipolis, Ohio. On December 15th, 1967 the bridge collapsed, killing 46 people. The resulting investigation revealed that the cause of the collapse was the failure of a single eyebar in a suspension chain. In addition, post-failure analysis showed that the Silver Bridge had been carrying much heavier loads than what it had been originally designed for. At the time of its original design, a typical automobile weighed around 1,500 lbs and the maximum permitted gross weight for a truck was 20,000 lbs. In 1967, those figures had increased to 4,000 lbs and 60,000 lbs respectively.

The Silver Bridge tragedy prompted the bridge engineering community to re-evaluate accepted practice. Clearly, what had been accepted practice was no longer sufficient to guarantee the safety of the travelling public. The Silver Bridge investigation resulted in the development of the National Bridge Inspection Standards (NBIS). These standards require each State Highway Department of Transportation to inspect, prepare reports, and determine load ratings for bridge structures on all public roads. Soon after the development of the NBIS, supporting documents, including the FHWA Bridge *Inspector's Reference Manual* and the AASHTO *Manual for Condition Evaluation of Bridge*s were developed to help in implementing these standards.

45.1.1 Purpose of the Load Rating Chapter

The purpose of this chapter is to document Wisconsin Department of Transportation (WisDOT) policy and procedures as they relate to the load rating and load posting of structures in the state of Wisconsin. The development of a load rating may require some degree of engineering judgment. This chapter aims to provide direction on best practice as it relates to these load rating decisions. Guidance is also provided for recommended procedures and required documentation.

45.1.2 Scope of Use

All requirements presented in this chapter are to be followed by WisDOT Bureau of Structures (BOS) staff, as well as any consultants performing load rating or load posting work for WisDOT. Local municipalities and consultants working on their behalf shall also follow the requirements of this chapter.

45.1.3 Governing Standards for Load Rating

The two primary sources for load rating and load posting guidance in Wisconsin are the AASHTO *Manual for Bridge Evaluation (MBE)* and this chapter of the *Wisconsin Bridge Manual*.

AASHTO Manual for Bridge Evaluation (MBE)

In 2011, AASHTO released *The Manual for Bridge Evaluation (MBE)*. The manual replaced the earlier manuals: *The Manual for Condition Evaluation and Load and Resistance Factor Rating (LRFR) of Highway Bridges (AASHTO LRFR) and Manual for Condition Evaluation of*

Bridges. Although the manual emphasizes the LRFR method, it also provides rating procedures for the Load Factor Rating (LFR) and Allowable Stress Rating (ASR) methodologies. For this reason, it will be the governing manual utilized by WisDOT for load rating structures.

Wisconsin Bridge Manual (WBM), Chapter 45

The Wisconsin Bridge Manual is not an exhaustive resource for load rating and load posting requirements. Unless noted otherwise, this chapter is intended to serve as a supplement to the AASHTO MBE, offering commentary, interpretations, clarification, or additional information as deemed necessary.

Two other commonly utilized references are:

- AASHTO Standard Specification for Highway Bridges, 17th Edition – 2002
- AASHTO LRFD Bridge Design Specifications

See 45.13 for a more complete list of recommended references.

45.1.4 Purpose of Load Rating

Above all else, the primary purpose of a load rating is to ensure that every bridge in the Wisconsin inventory is safe for public use; that it can safely carry legal-weight traffic. The definition of "legal-weight" is discussed in more detail in 45.2.4 and 45.2.5. When the load rating for a bridge decreases beyond a certain threshold – when it can no longer safely carry legal-weight traffic - it may be necessary to restrict heavier loads in order to maintain safety. This is what is referred to as a load posting and is presented in more detail in 45.10.

There are secondary purposes for maintaining load ratings for every structure in the state. Some of these include:

- The Federal Highway Administration (FHWA) requires a current load rating for each bridge as a part of the state National Bridge Inventory (NBI) report.
- Load ratings and load rating analysis files are used for the evaluation of over-weight permit vehicles.
- Decisions on repair and rehabilitation activities are affected by load ratings.
- Decisions on planning for bridge rehabilitation and replacements are affected by load ratings.

45.2 History of Load Rating

This section provides a historical perspective on the load rating process. The intent is to provide a historical context for current load rating and load posting practices in order for load rating engineers to better understand both AASHTO, FHWA, and WisDOT policies.

45.2.1 What is a Load Rating?

A load rating is the relative measure of a structure's capacity to carry live load. As standard practice, FHWA currently requires that two capacity ratings be submitted with the NBI file; the inventory rating and operating rating. The inventory rating is the load level that a structure can safely sustain for an indefinite period. The operating rating is the absolute maximum permissible load level to which a structure may be subjected. As stated above, a load rating is the relative measure of a structure's capacity to carry live load. The logical next question is, "relative to what?" It would be convenient if a simple parameter such as gross vehicle weight could be used to determine a bridge's capacity. However, the actual capacity depends on many factors, such as the gross vehicle weight, the axle configuration, the distribution of loads between the axles, the tire gauge on each axle, etc. It is a generally accepted principle that a bridge that can carry a given load on two axles is capable of carrying the same load (or potentially a larger load) spread over several axles.

In general, FHWA requires that the standard AASHTO HS truck or lane loading be used as the live load when load rating with the Load Factor Rating method (LFR) and the Allowable Stress Rating (ASR) and that the AASHTO HL-93 loading be utilized as the live load when load rating with the Load and Resistance Factor method (LRFR). These standard rating vehicles and rating methodologies are discussed in greater detail in 45.3.6.

45.2.2 Evolution of Design Vehicles

As it is not practical to rate a bridge for the nearly infinite number of axle configurations of trucks on our highways, bridges are rated for standard vehicles that are representative of the actual vehicles in use. As was noted during the investigation of the Silver Bridge collapse (see 45.1), the weight of vehicles travelling over the nation's inventory of bridges has changed dramatically over time. As the size and configuration of vehicles operating on the road has changed, so have the standard design vehicles.

Early bridge design in the United States lacked standardization regarding design live loads. Prior to the widespread presence of automobiles, design live loads were taken as surface loads, intended to represent pedestrian and horse traffic. Documentation in various publications from the early 1900s suggests that 80 psf may have been commonly used. An article in *Engineering News* in 1914 illustrates the opinion that better live load models were necessary, stating, "…these older types of loading are inadequate for purposes of design to take care of modern conditions; they should be replaced by some types of typical motor trucks." A number of live load models were proposed by various entities in the following years, but the first live load that resembled modern day loads was introduced in 1931 in the 1st Edition of the AASHTO Standard Specification for Highway Design. The basic design vehicle in this code was a single unit truck weighing 40,000 lbs. – the H20 design vehicle (See Figure 3.7.6A of the AASHTO Standard Specifications for Highway Bridges, 17th Edition).

As the network of roads and bridges in the United States grew, so did the size and weight of the vehicles operating on them. Recognizing this, the engineering community moved to reflect the changing transportation landscape in the 1944 AASHTO Standard Specification by introducing the HS-20 design vehicle; a tractor-semi trailer combination with three axles, weighing a total of 72,000 lbs. (See Figure 3.7.7A of the AASHTO Standard Specifications for Highway Bridges, 17th Edition) This remains the primary rating vehicle for Load Factor Rating (LFR) and Allowable Stress Rating (ASR). Rating methodologies are discussed further in 45.3.6.

The growth in size and weight of in-service vehicles has continued, and current AASHTO design vehicles are not guaranteed to reflect the actual in-service loading. In the late 1970s and early 1980s, some states moved to using an HS-25 design vehicle in order to more closely approximate an observed increase in the size and weight of truck traffic. Wisconsin adopted an HS-25 design vehicle for a short period of time around 2005 as a precursor to adopting Load and Resistance Factor Design and Rating (LRFD/LRFR).

Discussed in more detail in 45.3.7, LRFD was the next dramatic change in the standard design vehicle. Designated as HL-93, the LRFD design loads include a design vehicle identical to the HS-20, but also include a number of other live load models, including a lane load, a tandem, a double-truck, and a fatigue truck. The HL-93 loading represents the most current design live loads, per AASHTO code. See 17.2.4.2 for a more detailed treatment of the HL-93 loading.

45.2.3 Evolution of Inspection Requirements

In the years following World War II, the United States saw a boom in the construction of roads and bridges. As we're aware today, maintaining accurate, up-to-date documentation on the condition of a bridge is critical to assessing its load carrying capacity; its load rating. However, during this period of expansion, little emphasis was placed on safety inspections or maintenance of in-service bridges. This changed with the Silver Bridge collapse, referenced above. In 1971, the National Bridge Inspection Standards (NBIS) were published, creating national policy regarding inspection procedures, frequency of inspections, qualifications of inspection personnel, inspection reports, and maintenance of state bridge inventories.

While the NBIS represented a dramatic step forward in terms of maintaining safe bridges for the travelling public, the history of bridge design, rating, and inspection is largely reactionary. In the late 1970s, several significant culvert failures prompted an increased emphasis on culverts, eventually resulting in the *Culvert Inspection Manual*, published in 1986. The failure of the Mianus River Bridge in Connecticut in 1983 was a catalyst in the creation of the *Inspection of Fracture Critical Bridge Members*, published in 1986. FHWA published a technical advisory in 1988, *Scour at Bridges*, in response to the collapse of the Schoharie Creek Bridge in New York in 1987 due to scour. Closer to home, the 2000 failure of one of the spans of the Hoan Bridge in Milwaukee, WI brought to national attention to potential danger of highly-constrained connection details. And most recently, the collapse of the I-35W bridge in Minneapolis, MN highlighted the need to more closely inspect and load rate gusset plates. The National Bridge Inspection Standards are under continual review to ensure that the best information is available to engineers who design, load rate, repair, and rehabilitate bridge structures. Discussed in more detail in 45.3.4.3, it is critical that the load rating engineer review

the most recent inspection reports and consider the current state of deterioration when load rating a bridge.

45.2.4 Coupling Design with In-Service Loading

As discussed above, design live load vehicles have evolved through the years in an attempt to accurately represent actual in-service traffic. However, until the mid-1950s, there was no legislative connection between the size and weight of in-service traffic and the design capacity of the nation's bridges. Put more simply, with some local or regional exceptions, it was generally legal to drive any size truck, anywhere. In 1956, this began to change. Congress legislated limits on maximum axle weight (18,000 lbs. on a single axle, 32,000 lbs. for a tandem axle), and gross weight (73,280 lbs.), though there were "grandfather" provisions included. However, even with these limitations, it was still very possible to have a vehicle configuration deemed legal according to the above provisions, but that would induce force effects in excess of the bridge design capacity. Arguably the most significant change in truck size and weight legislation came in 1974 when Congress established the Federal Bridge Formula. The Federal Bridge Formula remains the foundation of truck size and weight legislation today.

45.2.5 Federal Bridge Formula

In the late 1950s, AASHTO conducted an extensive series of field tests to study the effects of truck traffic on pavements and bridges. Based on these tests and an extensive structural analysis effort, the Federal Bridge Formula was developed. The formula is intended to limit the weights of shorter trucks to levels which will limit the overstress in well-maintained bridges designed with HS-20 loading to about 3% and in well-maintained HS-15 bridges to about 30%. While often displayed in table format, the actual formula is as follows.

$$W = 500\{\left[\frac{LN}{N-1}\right] + 12N + 36\}$$

Where: W = the maximum weight in pounds that can be carried on a group of two or more axles to the nearest 500 lbs.

L = the spacing in feet between the outer axles of any two or more axles

N = the number of axles being considered

There are numerous resources readily available to more extensively explain the use of the formula, but it's important to note that the allowable weight is dependent on the number of axles and the axle spacing. In general, the Federal Bridge Formula is the basis of defining a legal-weight vehicle configuration in Wisconsin. Unless specifically covered via state statute, vehicles that do not conform to the formula must apply for a permit in order to travel over bridges in the Wisconsin. Over-weight truck permitting is discussed further in 45.11. When it is determined that a bridge is not able to safely carry the legal-weight loads, the structure must be load posted. Load postings are discussed in more detail in 45.10.

45.3 Load Rating Process

The following section provides direction on general policies and procedures related to the process for developing a bridge load rating for WisDOT.

45.3.1 Load Rating a New Bridge (New Bridge Construction)

New bridges shall be rated using Load and Resistance Factor Rating (LRFR) methodology. See 45.3.6 for a discussion on rating methodologies.

45.3.1.1 When a Load Rating is Required (New Bridge Construction)

It is mandatory for all new bridges to be load rated. Bridges being analyzed for staged construction shall satisfy the requirements of LRFR for each construction stage. For staged construction, utilize the same load factors, resistance factors, load combinations, etc. as required for the final configuration, unless approved by the WisDOT Bureau of Structures Rating Unit.

45.3.2 Load Rating an Existing (In-Service) Bridge

If an existing bridge was designed using LRFD methodology, it shall be rated using LRFR.

If an existing bridge was designed using Load Factor Design (LFD) methodology, it shall be rated using Load Factor Rating (LFR). It is also acceptable to rate using LRFR, but this shall be approved in advance by the WisDOT Bureau of Structures Rating Unit.

If an existing bridge was designed using Allowable Stress Design (ASD) methodology, it shall be rated using LFR. It is also acceptable to rate using LRFR, but this shall be approved in advance by the WisDOT Bureau of Structures Rating Unit. There is an exception for bridges with timber or concrete masonry superstructures. For these types only, it is acceptable to utilize Allowable Stress Rating (ASR). See 45.3.6 for a discussion on rating methodologies.

Bridges being analyzed for staged construction during a rehabilitation project shall satisfy the requirements of the appropriate rating methodology (LRFR, LFR, or ASR) for each construction stage. Utilize the same load factors, resistance factors, load combinations, etc. as required for the final configuration, unless approved by the WisDOT Bureau of Structures Rating Unit.

Consultants are required to investigate the level of effort required for a given load rating prior to negotiating a contract with WisDOT. This is critical in order to accurately estimate the number of hours required for the load rating. It is also strongly recommended that the rating analysis be performed as early as possible for a rehabilitation project, in the case the ratings are unexpectedly low and the scope of the project requires adjustment in order to improve the ratings.

45.3.2.1 When a Load Rating is Required (Existing In-Service Bridge)

WisDOT policy items:

The load rating effort for rehabilitation projects is intended to be independent of previous ratings. Previous analysis files should be used for information and verification purposes only.

Bridges shall be load rated for any project that results in a change in the loads applied to a structure or to an individual structural element that would typically require a load rating (See 45.3.3 for requirements on what elements should be rated). This requirement includes any of (but is not limited to) the following activities:

- Superstructure replacement
- Deck replacement
- Deck overlays
  - New overlays – concrete, asphalt, or polymer
  - Removal of existing overlays and placement of a new overlay
- Bridge widenings
- Superstructure alterations (re-aligning girders, adding girders, etc.)

(Note: WisDOT recognizes that some of the activities noted above may not result in an appreciable change to the load rating. However, it is WisDOT policy to use these instances as an opportunity for quality control of the load rating for that structure and to verify that the load rating takes into account any current deterioration.)

Bridges shall be load rated if there is noted (inspection reports or otherwise) a significant change in the ability of a member to carry load, i.e. deterioration or distortion.

Bridges require a load rating assessment due to impact damage. This assessment may not necessarily include a re-calculation of the load rating if the damage is deemed to be minimal by a qualified engineer.

45.3.3 What Should be Rated

In general, primary load-carrying members are required to be load rated. Secondary elements may be load rated if there is significant deterioration or if there is question regarding the original design capacity. The load rating engineer is responsible for the decision on load rating secondary elements.

If the load rating engineer, utilizing engineering judgment, determines that certain members or components will not control the rating, then a full analysis of the non-controlling element is not required. Justification for member selection should be clearly stated in the load rating

calculations submitted to WisDOT Bureau of Structures. See 45.9 for more information on submittal requirements.

45.3.3.1 Superstructure

- Steel Girder Structures

Primary elements for rating include girders (interior and exterior), floorbeams (if present), and stringers (if present). The concrete deck as it relates to any composite action with the girder (and potentially reinforcing steel in the deck for negative moment applications), is also part of the primary system. While cross frames are considered primary members in a curved girder structure or steel tub girder, these members are not considered to be controlling members, and do not need to be analyzed for load rating purposes. If the inspection report indicates signs of distortion or buckling, the cross frame shall be evaluated and the effects on the adjacent girders considered.

Shiplap joints (if present), and pin-and-hanger joints (if present) also may be considered primary elements. Contact the Bureau of Structures Rating Unit to discuss load ratings for these elements.

Secondary elements include bolted web or flange splices, cross frames and/or diaphragms, stringer-to-floorbeam connections (if present), and floorbeam-to-girder connections (if present).

- Prestressed Concrete Girder Structures

Primary elements for rating include prestressed girders (interior and exterior). The concrete deck (and potentially reinforcing steel in the deck for negative moment applications), as it relates to any composite action with the girder, is also part of the primary system.

Secondary elements include diaphragms.

- Concrete Slab Structures

Primary elements for rating include the structural concrete slab.

Another primary element for rating could include an integral concrete pier cap, if there is no pier cap present. This would take the form of increased transverse reinforcement at the pier, likely combined with a haunched slab design.

- Steel Truss Structures

Primary elements for rating include truss chord members, truss diagonal members, gusset plates connecting truss chord or truss diagonal members, floor beams (if present), and stringers (if present). If any panel points of the truss were designed as braced, bracing members and connections may be considered primary elements.

Secondary elements include splices, stringer-to-floorbeam connections (if present), floorbeam-to-truss connections (if present), lateral bracing, and any gusset plates used to connect secondary elements.

- Timber Girder or Slab Structures

Primary elements for rating include timber girders or timber slab members.

Secondary elements include diaphragms (solid sawn or cross-bracing), stiffener beams, or any tie rods that are present.

- Concrete Box or Channel Structures

Primary elements for rating include concrete box girders.

Secondary elements include diaphragms and shiplap joint connections (if present).

- Additional Elements and Other Structures Types

Transfer girders, straddle bents and/or integral pier caps are considered primary elements. If these elements are present supporting the superstructure to be rated, they are to be included in the load rating.

Other superstructure types should be load rated based on the judgment of the load rating Engineer of Record. The structure types noted below most likely require refined analysis methods to accurately determine the controlling load rating. See 45.3.11 for WisDOT guidance on refined analysis.

- Steel arch
- Curved or kinked steel girder
- Steel tub girder
- Rigid frame structure (steel or concrete)
- Steel bascule or vertical lift
- Cable-stayed or suspension
- Other more complex structure types that may require efforts beyond typical line girder analysis

As with more typical superstructure types, the load rating engineer should thoroughly review inspection reports when making the decision on what superstructure elements may require a load rating.

45.3.3.2 Substructure

Substructures generally do not control the load rating. Scenarios where substructure element conditions may prompt a load rating include, but are not limited to:

- Collision or impact damage
- Substructure components with significant deterioration, particularly those with a lack of redundancy
- Scour, undermining, or settlement which may affect a footing's bearing capacity or a column's unbraced length

WisDOT policy items:

Reinforced concrete piers are not typically rated. However, if the pier – and particularly the pier cap - has large cracks, significant spalling, or exposed reinforcement that shows deterioration, a more thorough evaluation may be appropriate. Reinforced concrete pier caps exhibiting signs of shear cracks may also warrant further evaluation.

In general, reinforced concrete abutments do not require a load rating. However, if the abutment has large cracks, tipping, displacement, or other movement, a more thorough evaluation may be appropriate.

In either of the cases above, contact the Bureau of Structures Rating Unit to discuss the level of effort required for evaluation.

- Extensive section loss from corrosion or rot. WisDOT recommends reviewing inspection reports and paying particular attention for the following scenarios:
    - Exposed steel pile bents
    - Exposed steel pile abutments
    - Exposed timber pile bents
    - Exposed timber pile abutments
    - Exposed timber pile caps

Based on experience, WisDOT has found the above elements to be particularly susceptible to deterioration, particularly if wet conditions are present. If deterioration is significant, these substructure members may control the rating. In the case of timber piles, calculated ratings may be low, even with little or no deterioration. See 45.7.1 for further discussion on timber piles.

The load rating engineer should thoroughly review inspection reports when making the decision on what substructure elements may require a load rating.

45.3.3.3 Deck

Reinforced concrete decks on redundant, multi-girder bridges are not typically load rated. A load rating would only be required in cases of significant deterioration, damage, or to investigate particularly heavy wheel or axle loads. A deck designed using an antiquated design load (H-10, H-15, etc.) may also warrant a load rating.

Other deck types (timber, filled corrugated steel) generally have lower capacity than reinforced concrete decks. This should be taken under consideration when load rating a structure with one of these deck types. Other deck types may also be more susceptible to damage or deterioration.

It is the responsibility of the load rating engineer to determine if a load rating for the deck is required.

45.3.4 Data Collection

Proper and complete data collection is essential for the accurate load rating of a bridge. It is the responsibility of the load rating engineer to gather all essential data and to assess its reliability. When assumptions are used, they should be noted and justified.

45.3.4.1 Existing Plans

Existing design plans are used to determine original design loads, bridge geometry, member section properties, and member material properties. It is important to review all existing plans; original plans as well as plans for any rehabilitation projects (deck replacements, overlays, etc.). If possible, as-built plans should be consulted as well. These plans reflect any changes made to the design plans during construction. Repair plans that document past repairs to the structure may also be available and should be reviewed, if they exist.

If no plans exist or if existing plans are illegible, field measurements may be required to determine bridge geometries and member section properties. Assumptions may have to be made on material properties. Direction on material assumptions is addressed in 45.5.2.

45.3.4.2 Shop Drawings and Fabrication Plans

Shop drawings and fabrication plans can be an extremely valuable source of information when performing a load rating. Shop drawings and fabrication plans are probably the most accurate documentation of what members and materials were actually used during construction, and may contain information not found in the design plans.

WisDOT has an inventory of shop drawings and fabrication plans, but they do not exist for every existing bridge. If the load rating engineer feels shop drawings and/or fabrication plans are required in order to accurately perform the load rating, contact the Bureau of Structures Rating Unit for assistance.

45.3.4.3 Inspection Reports

When rating an existing bridge, it is critical to review inspection reports, particularly the most recent report. Any notes regarding deterioration, particularly deterioration in primary load-carrying members, should be paid particular attention. It is the responsibility of the load rating engineer to evaluate any recorded deterioration and determine how to properly model that deterioration in a load rating analysis. Reviewing historical inspection reports can offer insight as to the rate of growth of any reported deterioration. Inspection reports can also be used to verify existing overburden.

Inspections of bridges on the State Trunk Highway Network are performed by trained personnel from the Regional maintenance sections utilizing guidelines established in the latest edition of the *WisDOT Structure Inspection Manual*. Engineers from the Bureau of Structures may assist in the inspection of bridges with unique structural problems or when it is suspected that a reduction in load capacity is warranted. To comply with the National Bridge Inspection Standards (NBIS), it is required that all bridges be routinely inspected at intervals not to exceed two years. More frequent inspections are performed for bridges which are posted for load capacity or when it is warranted based on their condition. In addition, special inspections such as underwater diving or fracture critical are performed when applicable. Inspectors enter inspection information into the Highway Structures Information System (HSIS), an on-line bridge management system developed by internally by WisDOT. For more information on HSIS, see 45.3.5. For questions on inspection-related issues, please contact the Bureau of Structures Maintenance Section.

45.3.4.4 Other Records

Other records may exist that can offer additional information or insight into bridge design, construction, or rehabilitation. In some cases, these records may override information found in design plans. It is the responsibility of the load rating engineer to gather all pertinent information and decide how to use that information. Examples of records that may exist include:

- Standard plans – generic design plans that were sometimes used for concrete t-girder structures, concrete slab structures, steel truss structures, and steel through-girder structures.
- Correspondences
- Material test reports
- Mill reports
- Non-destructive test reports
- Photographs
- Repair records
- Historic rating analysis

Once a bridge has been removed, records are removed from HSIS. However, if the bridge was removed after 2003, information may still be available by contacting the Bureau of Structures Bridge Management Unit.

45.3.5 Highway Structure Information System (HSIS)

The Highway Structure Information System (HSIS) is an on-line database used to store a wide variety of bridge information. Data stored in HSIS is used to create the National Bridge Inventory (NBI) file that is submitted annually to FHWA. Much of this data can be useful for the load rating engineer when performing a rating. HSIS is also the central source for documents such as plans and maintenance records. Other information, such as design calculations, rating calculations, fabrication drawings, and items mentioned in 45.3.4.4 may also be found in HSIS. For more information on HSIS, see the WisDOT Bureau of Structures web page or contact the Bureau of Structures Bridge Management Unit.

45.3.6 Load Rating Methodologies – Overview

There are two primary methods of load rating bridge structures that are currently utilized by WisDOT. Both methods are detailed in the AASHTO MBE. They are as follows:

- Load and Resistance Factor Rating (LRFR)
- Load Factor Rating (LFR)

Load and Resistance Factor Rating is the most current rating methodology and has been the standard for new bridges in Wisconsin since approximately 2007. LRFR employs the same basic principles as LFR for the load factors, but also utilizes multipliers on the capacity side of the rating equation, called resistance factors, to account for uncertainties in member condition, material properties, etc. This method is covered in 45.3.7, and a detailed description of this method can also be found in **MBE [6A]**.

Load Factor Rating (LFR) has been used since the early 1990s to load rate bridges in Wisconsin. The factor of safety for LFR-based rating comes from assigning multipliers, called load factors, to both dead and live loads. A detailed description of this method can be found in 45.3.8 and also in **MBE [6B]**.

Allowable Stress Rating (ASR) is a third method of load rating structures. ASR was the predominant load rating methodology prior to the implementation of LFR. It is not commonly used for modern load rating, though it is still permitted to be used for select superstructure types (See 45.3.2). The basic philosophy behind this method assigns an appropriate factor of safety to the limiting stress of the material being analyzed. The maximum stress in the member produced by actual loadings is then checked for sufficiency. A more detailed description of this method can be found in 45.3.9 below and also in **MBE [6B]**.

45.3.7 Load and Resistance Factor Rating (LRFR)

The basic rating equation for LRFR, per **MBE [Equation 6A.4.2.1-1]**, is:

$$RF = \frac{C - (\gamma_{DC})(DC) - (\gamma_{DW})(DW) \pm (\gamma_P)(P)}{(\gamma_{LL})(LL + IM)}$$

For the Strength Limit States (primary limit state when load rating using LRFR):

$$C = \phi_C \phi_S \phi R_n$$

Where the following lower limit shall apply:

$$\phi_C \phi_S \geq 0.85$$

Where:

RF	=	Rating factor
C	=	Capacity
R_n	=	Nominal member resistance
DC	=	Dead-load effect due to structural components and attachments
DW	=	Dead-load effect due to the wearing surface and utilities
P	=	Permanent loads other than dead loads
LL	=	Live load effects
IM	=	Dynamic load allowance
γ_{DC}	=	LRFR load factor for structural components and attachments
γ_{DW}	=	LRFR load factor for wearing surfaces and utilities
γ_P	=	LRFR load factor for permanent loads other than dead loads = 1.0
γ_{LL}	=	LRFR evaluation live load factor
ϕ_c	=	Condition factor
ϕ_s	=	System factor
ϕ	=	LRFR resistance factor

The LRFR methodology is comprised of three distinct procedures:

- Design Load Rating (first level evaluation) – Used for verification during the design phase, a design load rating is performed on both new and existing structures alike. See 45.3.7.6 for more information.
- Legal Load Rating (second level evaluation) – If required, the legal load rating is used to determine whether or not the bridge in question can safely carry legal-weight traffic; whether or not a load posting is required. See 45.3.7.7 for more information.

- Emergency Vehicle Load Rating – the Legal Load Rating also includes a separate analysis of FAST Act emergency vehicles (EVs), which may exceed weight limits in place for other vehicles but are considered "legal" because they do not require a permit. The emergency vehicle load rating is used to determine whether or not the bridge in question can safely carry emergency vehicles; whether or not an emergency vehicle-specific weight restriction is required.

- Permit Load Rating (third level evaluation) – The permit load rating is used to determine whether or not over-legal weight vehicles may travel across a bridge. See 45.3.7.8 for more information.

The results of each procedure serve specific uses (as noted above) and also guide the need for further evaluations to verify bridge safety or serviceability. A flow chart outlining this approach is shown in Figure 45.3-1. The procedures are structured to be performed in a sequential manner, as needed, starting with the design load rating. Load rating for emergency vehicles is only required when a bridge fails the design load rating (RF < 0.9) at the inventory level. Load rating for AASHTO legal loads is only required when a bridge fails the design load rating (RF < 1.0) at the operating level.

Note that when designing a new structure, it is required that the rating factor be greater than one for the HL-93 vehicle at the inventory level (note also that new designs shall include a dead load allotment for a future wearing surface); therefore, a legal load rating will never be required on a newly designed structure.

Similarly, only bridges that pass the legal load rating at the operating level (RF ≥ 1.0) can be evaluated utilizing the permit load rating procedures. See 45.11 for more information on over-weight permitting.

45.3.7.1 Limit States

The concept of limit states is discussed in detail in the AASHTO LRFD design code (**LRFD [3.4.1]**). The application of limit states to the design of Wisconsin bridges is discussed in 17.2.3.

Service limit states are utilized to limit stresses, deformations, and crack widths under regular service conditions. Satisfying service limits during the design-phase is critical in order for the structure in question to realize its full intended design-life. WisDOT policy regarding load rating using service limit states is as follows:

<u>Steel Superstructures</u>

- The Service II limit state shall be satisfied (inventory rating > 1.0) during design.

- For design or legal load ratings for in-service bridges, the Service II rating shall be checked at the inventory and operating level.

- The Service II limit state should be considered for permit load rating at the discretion of the load rating engineer.

Reinforced Concrete Superstructures

- WisDOT does not consider the Service I limit state during design.
- For design or legal load ratings of new or in-service bridges, the Service I rating is not required.
- The Service I limit state should be considered for permit load rating at the discretion of the load rating engineer.

Prestressed Concrete Superstructures

- The Service III limit state shall be satisfied (inventory rating > 1.0) during the design phase for a new bridge.
- For rehabilitation design load ratings of an in-service bridge, the Service III limit state should be considered for legal load rating at the discretion of the load rating engineer, but in general, it is not required for prestressed girders that do not show signs of distress. The Service III limit state is not required for a permit load rating.
- For design or legal load ratings of new or in-service bridges, the Service I limit state is not required. The Service I limit state should be considered for permit load rating at the discretion of the load rating engineer.

See Table 45.3-1 for live load factors to use for each limit state. Service limit states checks that are considered optional are shaded.

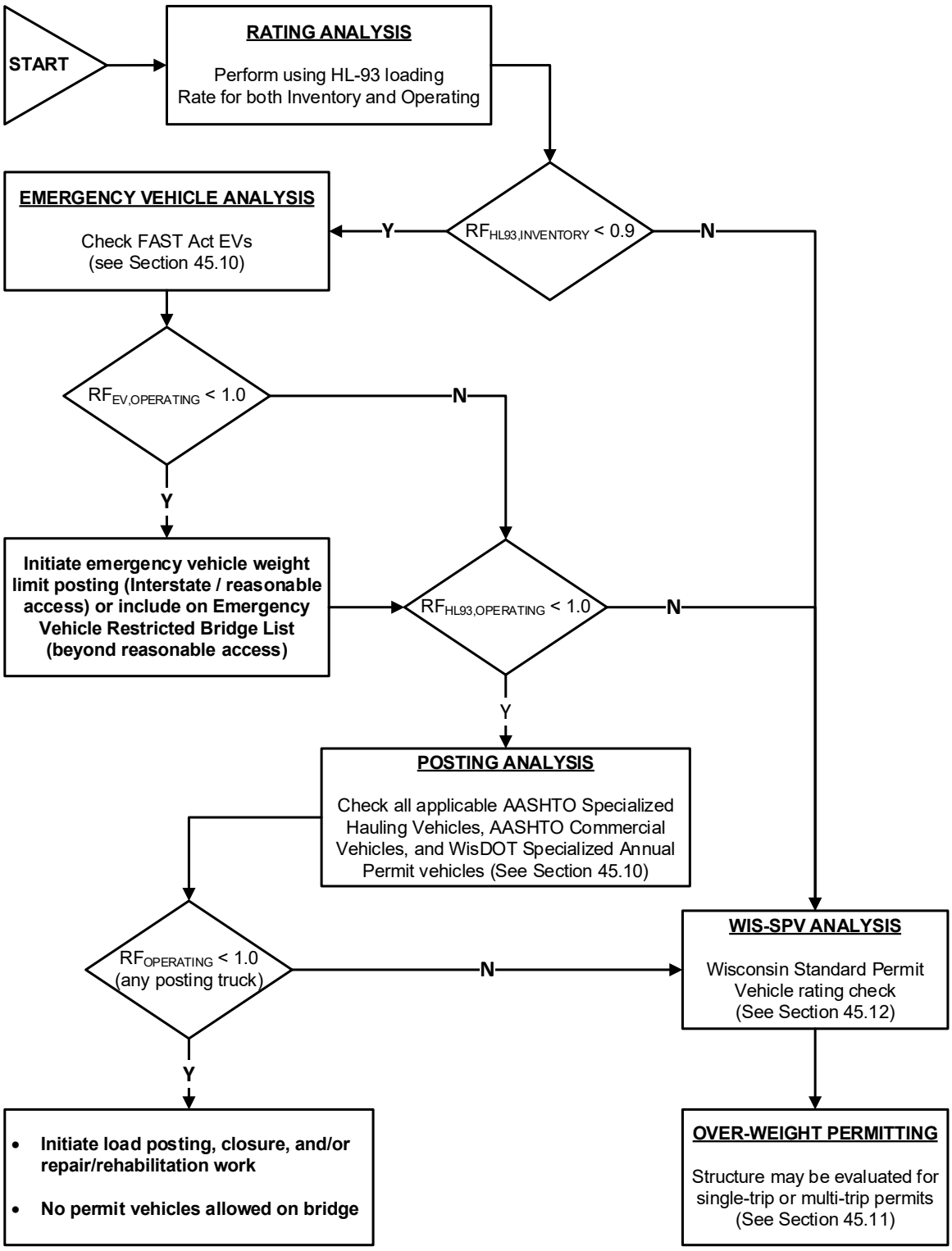

Figure 45.3-1
Load and Resistance Factor Rating Flow Chart

45.3.7.2 Load Factors

The load factors for the Design Load Rating shall be taken as shown in Table 45.3-1. The load factors for the Legal Load Rating shall be taken as shown in Table 45.3-1 and Table 45.3-2.

For emergency vehicles, alternate live load factors determined in accordance with NCHRP Project 20-07 / Task 410 may be used. If alternate live load factors are used, this shall be noted in the Load Rating Summary Form, along with assumptions of one-way ADTT and emergency vehicle crossings per day.

The load factors for the Permit Load Rating shall be taken as shown in Table 45.3-1 and Table 45.3-3 . Again, note that the shaded values in Table 45.3-1 indicate optional checks that are currently not required by WisDOT.

Bridge Type	Limit State	Dead Load DC	Dead Load DW	Design Load		Legal Load	Permit Load
				Inventory	Operating		
				LL	LL	LL	LL
Steel	Strength I, II	1.25	1.50	1.75	1.35	Table 45.3-2	Table 45.3-3
	Service II	1.00	1.00	1.30	1.00	1.30	1.00
Reinforced Concrete	Strength I, II	1.25	1.50	1.75	1.35	Table 45.3-2	Table 45.3-3
	Service I	1.00	1.00	--	--	--	1.00
Prestressed Concrete	Strength I, II	1.25	1.50	1.75	1.35	Table 45.3-2	Table 45.3-3
	Service III	1.00	1.00	0.80	--	1.00	--
	Service I	1.00	1.00	--	--	--	1.00
Timber	Strength I, II	1.25	1.50	1.75	1.35	Table 45.3-2	Table 45.3-3

Table 45.3-1
Limit States and Live Load Factors (γ_{LL}) for LRFR

Loading Type	Live Load Factor
AASHTO Legal Vehicles, State Specific Vehicles, and Lane Type Legal Load Models	1.45
Specialized Haul Vehicles (SU4, SU5, SU6, SU7)	1.45
FAST Act Emergency Vehicles (EV2, EV3) **Alternate load factors per NCHRP Project 20-07/Task 410 are allowed.*	1.30*

Table 45.3-2
Live Load Factors (γ_{LL}) for Legal Loads in LRFR

Permit Type	Loading Condition	Distribution Factor	Live Load Factor
Annual	Mixed with Normal Traffic	Two or more lanes	1.30
Single Trip	Mixed with Normal Traffic	One Lane	1.20
Single Trip	Escorted with no other vehicles on the bridge	One Lane	1.10

Table 45.3-3
Live Load Factors (γ_{LL}) for Permit Loads in LRFR

45.3.7.3 Resistance Factors

The resistance factor, ϕ, is used to reduce the computed nominal resistance of a structural element. This factor accounts for variability of material properties, structural dimensions and workmanship, and uncertainty in prediction of resistance. Resistance factors for concrete and steel structures are presented in Section 17.2.6, and resistance factors for timber structures are presented in **MBE [6A.7.3]**.

45.3.7.4 Condition Factor: ϕ_C

The condition factor provides a reduction to account for the increased uncertainty in the resistance of deteriorated members and the likely increased future deterioration of these members during the period between inspection cycles.

WisDOT policy items:

Current WisDOT policy is to set the condition factor equal to 1.0.

45.3.7.5 System Factor: ϕ_S

System factors are multipliers applied to the nominal resistance to reflect the level of redundancy of the complete superstructure system. Bridges that are less redundant will have their factor member capacities reduced, and, accordingly, will have lower ratings. The aim of the system factor is to provide reserve capacity for safety of the traveling public. See Table 45.3-4 for WisDOT system factors.

Superstructure Type	ϕ_S
Welded Members in Two-Girder/Truss/Arch Bridges	0.85
Riveted Members in Two-Girder/Truss/Arch Bridges	0.90
Multiple Eyebar Members in Truss Bridges	0.90
Three-Girder Bridges with Girder Spacing ≤ 6.0 ft	0.85
Four-Girder Bridges with Girder Spacing ≤ 4.0 ft	0.95
All Other Girder and Slab Bridges	1.00
Floorbeam Spacings > 12.0 ft and Non-Continuous Stringers	0.85
Redundant Stringer Subsystems Between Floorbeams	1.00

Table 45.3-4
System Factors for WisDOT

45.3.7.6 Design Load Rating

The design load rating assesses the performance of bridges utilizing the LRFD design loading, producing an inventory and operating rating. Note that when designing a new structure, it is required that the RF > 1.0 at the inventory level. In addition to providing a relative measure of bridge capacity, the design load rating also serves as a screening process to identify bridges that should be load rated for legal loads. If a structure has an inventory RF < 0.9, it may not be able to safely carry emergency vehicles, and if it has an operating RF < 1.0, it may not be able to safely carry other legal-weight traffic and therefore a legal load rating must be performed. If a structure has rating factors above these thesholds, , proceeding to the legal load rating is not required. However, the load rating engineer is still required to rate the Wisconsin Standard Permit Vehicle (Wis-SPV) as shown in 45.12.

45.3.7.6.1 Design Load Rating Live Load

The LRFD design live load, HL-93, shall be utilized as the rating vehicle(s). The components of the HL-93 loading are described in 17.2.4.2.

45.3.7.7 Legal Load Rating

Bridges that do not satisfy the HL-93 design load rating check (RF < 1.0 at operating level) shall be evaluated for legal loads to determine if legal-weight traffic should be restricted; whether a load posting is required. Additionally, bridges that do not satisfy the HL-93 design load rating check (RF < 0.9 at inventory level) shall be evaluated for FAST Act emergency vehicle loads to determine if emergency vehicle-specific weight limits are required. If the load rating engineer determines that a load posting is required, please notify the Bureau of Structures Rating Unit. For more information on the load posting of bridges, see 45.10.

45.3.7.7.1 Legal Load Rating Live Load

The live loads used for legal load rating calculations are a combination of AASHTO-prescribed vehicles, Wisconsin-specific vehicles, and FAST Act emergency vehicles. The vehicles to be used for the legal load rating are described in 45.10.

45.3.7.8 Permit Load Rating

Permit load rating is the level of load rating analysis required for all structures when performing the Wisconsin Standard Permit Vehicle (Wis-SPV) design check as illustrated in 45.12. The results of the Wis-SPV analysis are used in the regulation of multi-trip permits. The actual permitting process for State-owned bridges is internal to the WisDOT Bureau of Structures.

Permit load rating is also used for issuance of single trip permits. For each single trip permit, the actual truck configuration is analyzed for every structure it will cross. The single trip permitting process for State-owned bridges is internal to WisDOT Bureau of Structures.

For more information on over-weight truck permitting, see 45.11.

45.3.7.8.1 Permit Load Rating Live Load

For any bridge design (new or rehabilitation) or bridge re-rate, the Wisconsin Standard Permit Vehicle (Wis-SPV) shall be analyzed (Figure 45.3-1). Specifics on this analysis can be found in 45.12.

For specific single trip permit applications, the actual truck configuration described in the permit shall be the live load used to analyze all pertinent structures. Permit analysis for State-owned bridges is internal to the WisDOT Bureau of Structures.

WisDOT policy items:

WisDOT interpretation of **MBE [6A.4.5.4.1]** is for spans up to 200'-0", only the permit vehicle shall be considered present in a given lane. For spans 200'-0" in length or greater an additional lane

load shall be applied to simulate closely following vehicles. The lane load shall be taken as 0.2 klf in each lane and shall only be applied to those portions of the span(s) where the loading effects add to the permit load effects.

Also note, as stated in the footnote of **MBE [Table 6A.4.5.4.2a-1]**, when using a single-lane LRFD distribution factor, the 1.2 multiple presence factor should be divided out from the distribution factor equations.

45.3.7.9 Load Distribution for Load and Resistance Factor Rating

In general, live load distribution factors should be calculated based on the guidance of the current AASHTO LRFR Standard Design specifications. For WisDOT-specific guidance on the placement and distribution of live loads, see 17.2.7 or 18.4.5.1 for concrete slab superstructures and 17.2.8 for concrete deck on girder superstructures.

See also 45.5.1.2 for specific direction on the placement of live loads for rating and posting.

Dead loads shall be distributed as described in 17.2.7 for concrete slab superstructures and 17.2.8 for concrete deck on girder superstructures.

45.3.8 Load Factor Rating (LFR)

The basic rating equation for Load Factor Rating can be found in **MBE [Equation 6B.4.1-1]** and is:

$$RF = \frac{C - A_1 D}{A_2 L(1 + I)}$$

Where:

RF	=	Rating factor for the live load carrying capacity
C	=	Capacity of the member
D	=	Dead load effect on the member
L	=	Live load effect on the member
I	=	Impact factor to be used with the live load effect
A_1	=	Factor for dead load
A_2	=	Factor for live load

Unlike LRFR, load factor rating does not have three prescribed levels of rating analysis. However, in practice, the process is similar for both LRFR and LFR.

The first step is to perform a rating analysis to determine inventory and operating ratings. Based on the results of the rating analysis, a posting analysis should be performed when:

- The inventory rating factor is less than or equal to 1.0 (HS-20) – Emergency Vehicles (EVs) only, see Figure 45.10-5; or
- The operating rating factor is less than or equal to 1.2 (HS-24) – Specialized Hauling Vehicles (SHVs) only, see Figure 45.10-2; or
- The operating rating factor is less than or equal to 1.0 (HS-20) for all other posting vehicles.

An emergency vehicle analysis is performed to determine whether a bridge can safely carry emergency vehicles, which may exceed legal weight limits in place for other vehicles. A posting analysis is performed to determine whether a bridge can safely carry other legal-weight traffic. Both analyses are performed at the operating level. See 45.10 for more information.

Permit analysis is used to determine whether or not over legal-weight vehicles may travel across a bridge. See 45.11 for more information on over-weight vehicle permitting.

A flow chart outlining this approach is shown in Figure 45.3-2. The procedures are structured to be performed in a sequential manner, as needed.

45.3.8.1 Load Factors for Load Factor Rating

See Table 45.3-5 for load factors to be used when rating with the LFR method. The nominal capacity, C, is the same regardless of the rating level desired.

For emergency vehicles, alternate live load factors determined in accordance with NCHRP Project 20-07 / Task 410 may be used. If alternate live load factors are used, this shall be noted in the Load Rating Summary Form, along with assumptions of one-way ADTT and emergency vehicle crossings per day.

LFR Live Load Factors		
Rating Level	A_1	A_2
Inventory	1.3	2.17
Operating	1.3	1.3

Table 45.3-5
LFR Live Load Factors

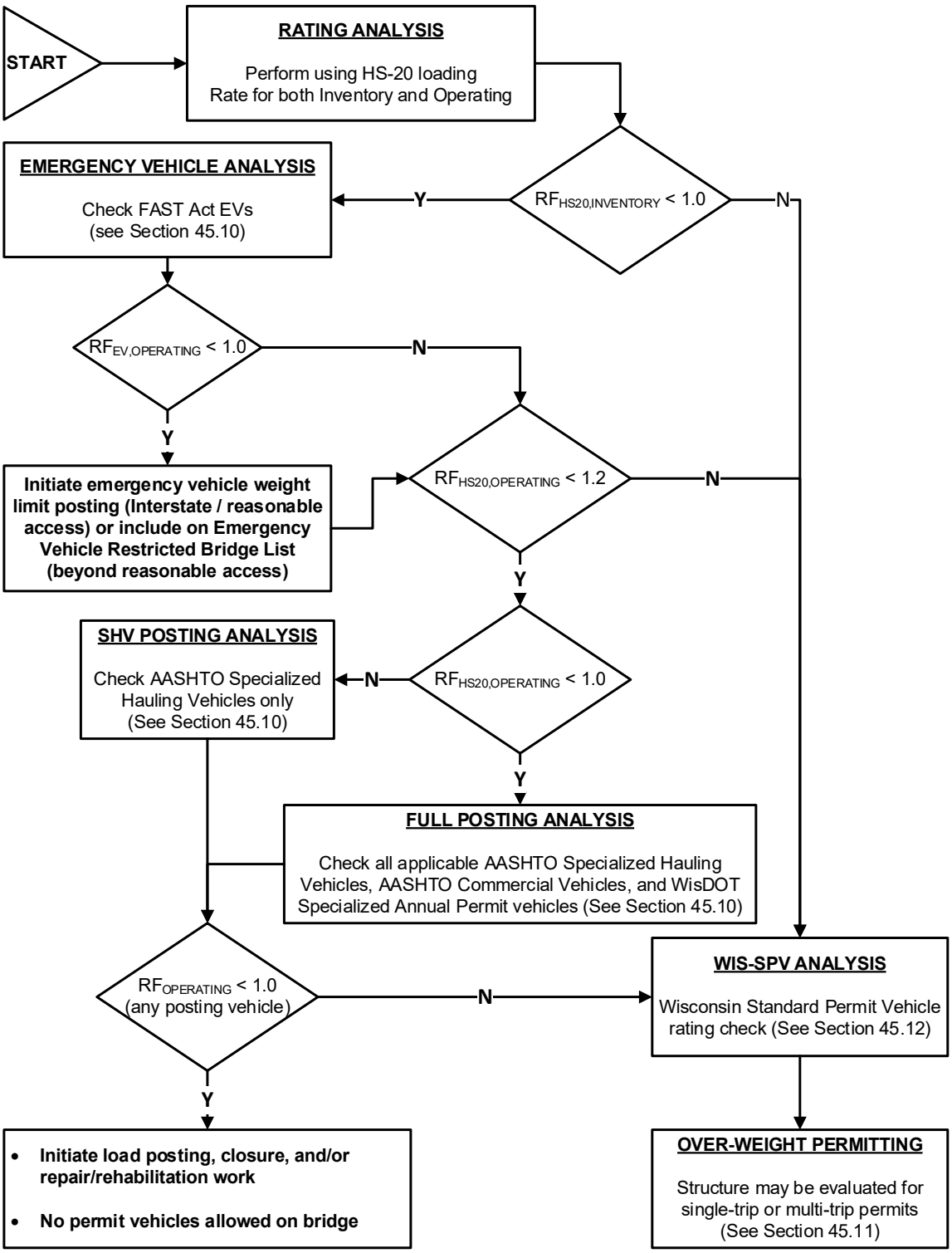

Figure 45.3-2
Load Factor Rating and Allowable Stress Rating Flow Chart

45.3.8.2 Live Loads for Load Factor Rating

Similar to LRFR, there are three potential checks to be made in LFR that are detailed in the flow chart shown in Figure 45.3-2.

- For purposes of calculating the inventory and operating rating of the structure, the live load to be used should be the HS20 truck or lane loading as shown in Figures 17.2-1 and 17.2-3.
- The live load(s) to be used for analysis are a combination of AASHTO-prescribed vehicles, Wisconsin-specific vehicles, and FAST Act emergency vehicles. For more information on load posting analysis, refer to 45.10.2.
- For conducting the Wisconsin Standard Permit Vehicle analysis, use the loading shown in Figure 45.12-1.

45.3.8.3 Load Distribution for Load Factor Rating

In general, distribution factors should be calculated based on the guidance of the *AASHTO Standard Design Specifications, 17th Edition*.

See 45.5.1.2 for specific direction on the placement of live loads for rating and posting.

Dead loads shall be distributed as described in 17.2.7 for concrete slab superstructures and 17.2.8 for concrete deck on girder superstructures.

45.3.9 Allowable Stress Rating (ASR)

The basic rating equation can be found in **MBE [Equation 6B.4.1-1]** and is:

$$RF = \frac{C - D}{L(1 + I)}$$

Where:

RF	=	Rating factor for the live load carrying capacity
C	=	Capacity of the member
D	=	Dead load effect on the member
L	=	Live load effect on the member
I	=	Impact factor to be used with the live load effect

Unlike LRFR, allowable stress rating does not have three prescribed levels of rating analysis. However, in practice, the process is similar for both LRFR and ASR.

The first step is to perform a rating analysis to determine inventory and operating ratings. Based on the results of the rating analysis, a posting analysis should be performed when:

- The inventory rating factor is less than or equal to 1.0 (HS-20) – Emergency Vehicles (EVs) only, see Figure 45.10-5; or
- The operating rating factor is less than or equal to 1.2 (HS-24) – Specialized Hauling Vehicles (SHVs) only, see Figure 45.10-2; or
- The operating rating factor is less than or equal to 1.0 (HS-20) for all other posting vehicles.

An emergency vehicle analysis is performed to determine whether a bridge can safely carry emergency vehicles, which may exceed legal weight limits in place for other vehicles. A posting analysis is performed to determine whether a bridge can safely carry other legal-weight traffic. Both analyses are performed at the operating level. See 45.10 for more information.

Permit analysis is used to determine whether or not over legal-weight vehicles may travel across a bridge. See 45.11 for more information on over-weight vehicle permitting.

A flow chart outlining this approach is shown in Figure 45.3-2. The procedures are structured to be performed in a sequential manner, as needed.

45.3.9.1 Stress Limits for Allowable Stress Rating

The inventory and operating stress limits used in ASR vary by material. See **MBE [6B]** for more information.

45.3.9.2 Live Loads for Allowable Stress Rating

Similar to LRFR and LFR, there are three potential checks to be made in ASR.

- For purposes of calculating the inventory and operating rating of the structure, the live load to be used should be the HS-20 truck or lane loading as shown in Figures 17.2-1 and 17.2-3.
- The live load(s) to be used for analysis are a combination of AASHTO-prescribed vehicles, Wisconsin-specific vehicles, and FAST Act emergency vehicles. For more information on load posting analysis, refer to 45.10.2.
- For conducting the Wisconsin Standard Permit Vehicle analysis, use the loading shown in Figure 45.12-1.

45.3.9.3 Load Distribution for Allowable Stress Rating

In general, distribution factors should be calculated based on the guidance of the *AASHTO Standard Design Specifications, 17th Edition*.

See 45.5.1.2 for specific direction on the placement of live loads for rating and posting.

Dead loads shall be distributed as described in 17.2.7 for concrete slab superstructures and 17.2.8 for concrete deck on girder superstructures.

45.3.10 Engineering Judgment, Condition-Based Ratings, and Load Testing

Engineering judgment or condition-based ratings alone shall not be used to determine the capacity of a bridge when sufficient structural information is available to perform a calculation-based method of analysis.

Ratings determined by the method of field evaluation and documented engineering judgment may be considered when the capacity cannot be calculated due to one or more of the following reasons:

- No bridge plans available
- Concrete bridges with unknown reinforcement

The engineer shall consider all available information, including:

- Condition of load carrying elements (inspection reports – current and historic)
- Year of construction
- Material properties of members (known or assumed per 45.5.2)
- Type of construction
- Redundancy of load path
- Field measurements
- Comparable structures with known construction details
- Changes since original construction
- Loading (past, present, and future)
- Other information that may contribute to making a more-informed decision

If the engineer of record is considering using a judgment- or inspection-based load rating, a thorough visual observation of the bridge should be conducted, including observing actual traffic patterns for the in-service bridge.

The criteria applied to determine a rating by field evaluation and documented engineering judgment shall be documented via the Load Rating Summary Form (see 45.9) accompanied by any and all related inspection reports, any calculation performed to assist in the rating and

assumptions used for those calculations, a written description of the observed traffic patterns for the bridge, relevant correspondences, and any available, relevant photographs of the bridge or bridge condition.

Bridge owners may also consider nondestructive proof load tests in order to establish a safe capacity for bridges in which a load rating cannot be calculated.

WisDOT policy items:

Consult the Bureau of Structures Rating Unit before moving forward with an engineering judgment-based, inspection-based load rating, or with a load testing procedure on either the State or Local system.

45.3.11 Refined Analysis

Methods of refined analysis are discussed in **LRFD [4.6.3]**. These include the use of 2D and 3D finite element modeling of bridge structures, which preclude the use of live load distribution factor equations and instead rely on the relative stiffness of elements in the analytical model for distribution of applied loads. As such, a 2D or 3D model requires the inclusion of elements contributing to the transverse distribution of loads, such as deck and cross frame elements that are otherwise not directly considered in a line girder or strip width analysis. Additional guidance on refined analysis can be found in the AASHTO/NSBA publication "G13.1 Guidelines for Steel Girder Bridge Analysis, 2nd Edition" and the FHWA "Manual of Refined Analysis" (anticipated 2017).

WisDOT policy items:

Prior to using refined analysis, consult the Bureau of Structures Rating Unit. Additional documentation is required when performing a refined analysis; see 45.9 for these requirements.

The Bureau of Structures does not require a specific piece of software be used by consultant engineers when performing a refined load rating analysis. See 45.4 for information on load rating computer software.

Refined analysis for load rating purposes is required for certain structure types, and/or structures with certain geometric characteristics. In other instances a refined analysis may be utilized to improve the structure rating for the purpose of avoiding load posting or to improve the capacity for permitting.

A refined analysis is required for the following structure types:

- Steel rigid frames
- Bascule-type movable bridges
- Tied arches
- Cable stayed or suspension bridges

- Steel box (tub) girder bridges

A refined analysis is require if any of the following geometric characteristics are present within the structural system to be load rated:

- Steel girder structure curved in plan, not meeting the criteria discussed in 45.6.3.2.1.
- Steel girder structure skewed 40 degrees or more, with cross framing type discussed in 45.6.3.2.2.
- Skew varies between adjacent supports by more than 20 degrees.

A refined analysis *may* be required if any of the following geometric characteristics are present within the structural system to be load rated. Contact the Bureau of Structures Rating Unit prior to determine the level of effort to rate the structure.

- Steel girder structures with flared girder spacing, such that the change in girder spacing over the span length is greater or equal to 0.015 ($\Delta S/L \geq 0.015$).
- Structures with complex framing plans; those having discontinuous girders utilizing transfer girders in-span.
- Superstructure supported by flexible supports (e.g. straddle bent with integral pier cap). *Note: These "flexible" supports are considered primary members and are to be included in a load rating.*

45.4 Load Rating Computer Software

Though not required, computer software is a common tool used for load rating. WisDOT BOS encourages the use of software for its benefits in increased efficiency and accuracy. However, the load rating engineer must be aware that software is a tool; the engineer maintains responsibility for understanding and verifying any load rating obtained from computer software and should have a full understanding of all underlying assumptions. The load rating engineer is responsible for ensuring that any software used to develop a rating performs that rating in accordance with relevant AASHTO specifications and taking into account specific WisDOT policy noted in this chapter.

45.4.1 Rating Software Utilized by WisDOT

The Bureau of Structures currently uses a mix of software developed in-house and software available commercially. For a list of software currently used by WisDOT for each primary structure type, see the Bureau of Structures website:

https://wisconsindot.gov/Pages/doing-bus/eng-consultants/cnslt-rsrces/strct/default.aspx

WisDOT does not currently mandate the use of any particular software for load ratings.

45.4.2 Computer Software File Submittal Requirements

When load rating software is used as a tool to derive the load rating for a bridge project (new or rehabilitation), the electronic input file shall be included with the project submittal.

Some superstructure types may require advanced modeling techniques in order to fully and accurately capture the structural response. See 45.3.11 for more information on refined analysis.

See 45.9 (Documentation and Submittals) for more information.

45.5 General Requirements

45.5.1 Loads

45.5.1.1 Material Unit Weights

The following assumptions for material unit weights shall be used when performing a load rating, unless there is project-specific information.

Asphalt	145 pcf
Reinforced Concrete	150 pcf
Soil or Gravel	120 pcf
Steel	490 pcf
Water	62.4 pcf
Timber	50 pcf
½" Thin Epoxy Overlay	5 psf

45.5.1.2 Live Loads

Live loads shall be per 45.3.7 (LRFR), 45.3.8 (LFR), and 45.3.9 (ASR).

WisDOT policy items:

Inventory and operating ratings shall consider the possibility of truck loads on sidewalks. However, posting and permitting analysis need not be calculated with wheel placement on sidewalks.

Lane placement in accordance with AASHTO design specifications may not be consistent with actual usage of a bridge as defined by its striped lanes, and could result in conservative load ratings for bridge types such as trusses, two-girder bridges, ramp structures, arches and bridges with exterior girders governing the ratings via lever rule live load distribution assumptions.

WisDOT policy items:

Upon the approval of the Bureau of Structures Rating Unit, a load rating may be performed by placing truck loads only within the striped lanes. When this alternative is utilized, placement of striped lanes on the bridge shall be field verified and documented in the inspection report, per **MBE [6A.2.3.2]** and **[6B.6.2.2]**.

45.5.1.3 Dead Loads

Dead loads are determined based on the weight and dimensions of the elements in question and shall be distributed as noted in sections above. The following is further guidance offered by WisDOT related to various dead loads.

- The top ½" (or greater if a concrete overlay was placed integral with the deck at the time of pour) of a monolithic concrete deck should be considered a wearing surface. It shall not be considered structural, and thus not used to compute section properties or for composite action.

- For an overlay placed integral with the deck at the time of original construction, the overlay thickness shall be considered a wearing surface. It should not be considered structural, and thus not used to compute section properties or for composite action.

- For a bridge with an existing overlay, only the full remaining thickness of the original deck (original thickness – thickness milled off during overlay process) may be considered structural.

- If the design of a new bridge includes an allowance for a future wearing surface, parapets, sidewalks, or other dead loads, that load shall be excluded during the load rating. A load rating is considered a snapshot of current capacity and should only include loads actually in-place at the time of the rating.

- The weight of the concrete haunch for girder superstructures should be included in the non-composite dead load. The actual average haunch height may be used for load calculations. It is also acceptable to calculate the haunch dead load effect assuming the haunch thickness to vary along the length of the beam, if actual, precise haunch thicknesses are known.

45.5.2 Material Structural Properties

Material properties shall be as stated in AASHTO *MBE* or as stated in this chapter. Often when rating a structure without a complete set of plans, material properties are unknown. The following section can be used as a guideline for the rating engineer when dealing with structures with unknown material properties. If necessary, material testing may be needed to analyze a structure.

45.5.2.1 Reinforcing Steel

The allowable unit stresses and yield strengths for reinforcing steel can be found in Table 45.5-1. When the condition of the steel is unknown, they may be used without reduction. Note that Wisconsin started to use Grade 40 bar steel about 1955-1958; this should be noted on the plans.

Reinforcing Steel Grade	Inventory Allowable (psi)	Operating Allowable (psi)	Minimum Yield Point (psi)
Unknown	18,000	25,000	33,000
Structural Grade	19,800	27,000	36,000
Grade 40 (Intermediate)	20,000	28,000	40,000
Grade 60	24,000	36,000	60,000

Table 45.5-1
Yield Strength of Reinforcing Steel

45.5.2.2 Concrete

The following are the maximum allowable unit stresses in concrete in pounds per square inch (see Table 45.5-2). Note that the "Year Built" column may be used if concrete strength is not available from the structure plans.

Year Built	Inventory Allowable (psi)	Operating Allowable (psi)	Compressive Strength (F'c) (psi)	Modular Ratio
Before 1959	1000	1500	2500	12
1959 and later	1400	1900	3500	10
For all non-prestressed slabs 1975 and later	1600	2400	4000	8
Prestressed girders before 1964 and all prestressed slabs	2000	3000	5000	6
1964 and later for prestressed girders	2400	3000	6000	5

Table 45.5-2
Minimum Compressive Strengths of Concrete

45.5.2.3 Prestressing Steel Strands

Table 45.5-3 contains values for uncoated Seven-Wire Stressed-Relieved and Low Relaxation Strands:

Year Built	Grade	Nominal Diameter of Strand (In)	Nominal Steel Area of Strand (In^2)	Yield Strength (psi)	Breaking Strength (psi)
Prior To 1963	250	$^{7}/_{16}$ (0.438)	0.108	213,000	250,000
Prior To 1963	250	½ (0.500)	0.144	212,500	250,000
1963 To Present	270	½ (0.500)	0.153	229,000	270,000
1973 To Present	270 Low Relaxation	½ (0.500)	0.153	242,500	270,000
1995 to Present	270 Low Relaxation	$^{9}/_{16}$ (0.600)	0.217	242,500	270,000

Table 45.5-3
Tensile Strength of Prestressing Strands

The "Year Built" column is for informational purposes only. The actual diameter of strand and grade should be obtained from the structure plans.

45.5.2.4 Structural Steel

The **MBE [Table 6B.5.2.1-1]** gives allowable stresses for steel based on year of construction or known type of steel. For newer bridges, refer to AASHTO design specifications.

Steel Type		AASHTO Designation	ASTM Designation	Minimum Tensile Strength, Fu (psi)	Minimum Yield Strength, Fy (psi)
Unknown Steel	Built prior to 1905			52,000	26,000
	1905 to 1936			60,000	30,000
	1936 to 1963				33,000
	After 1963				36,000
Carbon Steel		M 94 (1961)	A 7 (1967)	60,000	33,000
Nickel Steel		M 96 (1961)	A 8 (1961)	90,000	55,000
Silicon Steel	up to 1-1/8" thick	M 95 (1961)	A 94	75,000	50,000
	1-1/8" to 2" thick		A 94	72,000	47,000
	2" to 4" thick		A 94 (1966)	70,000	45,000
Low Alloy Steel			A441	75,000	50,000

Table 45.5-4
Minimum Yield Strength Values for Common Steel Types

45.5.2.5 Timber

If plans are available, values and adjustment factors will be taken from the most recent edition of the *National Design Specifications for Wood Construction* (NDS) based on the species and grade of the timber as given on the plans. On older plans that may give the stresses, the stress used for the ratings will be the values from the NDS that correspond with the applicable capacity provisions. If plans are not available, Table 45.5-5 shall be used to estimate the allowable stresses.

For operating ratings, all stresses, in determining capacity, will be multiplied by 1.33.

Bridge Type	Component	Species and Grade	Bending Stress (F_b), psi	Shear Stress (F_v), psi
Longitudinal Nail Laminated Slab Bridges	Slab	Douglas Fir-Larch No. 1 & Btr NDS 2012 Table 4A	1200	180
Longitudinal Glued Laminated Slab Bridges	Slab	20F-V7 NDS 2012 Table 5A	2000	265
Girder-Deck Bridges	Girder, Glu-lam	20F-V7 NDS 2012 Table 5A	2000	265
	Girder, Solid-Sawn	Douglas Fir-Larch Select Structural NDS 2012 Table 4D	1600	170
	Transverse Deck, Glulam	20F-V7 NDS 2012 Table 5A	1600	265
	Transverse Deck, Solid-Sawn	Douglas Fir-Larch No. 1 & Btr NDS 2012 Table 4A	1200	180
Longitudinal Stress-laminated Bridges	Slab, Glu-lam	20F-V7 NDS 2012 Table 5A	2000	265
	Slab, Solid Sawn	Douglas Fir-Larch No. 1 & Btr NDS 2012 Table 4A	1200	180
Substructure Components		**Species and Grade**	**Compression Stress (F_C) psi**	**E_{min} psi**
Timber Piles		Pacific Coast Douglas Fir NDS 2012 Table 6A	1300	690,000

Table 45.5-5
Maximum Allowable Stress for Timber Components

45.5.2.5.1 Timber Adjustment Factors

The following is guidance offered by WisDOT related to timber adjustment factors.

- Load Duration (C_D): Bending, shear, and compression stresses shall be multiplied by 1.15 (traffic load duration).
- Wet Service (C_M): Bending and shear stresses shall be multiplied by the appropriate factor per the footnotes in NDS by assuming that the timber is wet in service. An exception to this is if the rating engineer considers the deck's surface to be impervious,

then C_M shall be 1.0. For large glulam girders covered with deck and wearing surface in good condition such that the girders remain dry, C_M = 1.0.

- Beam Stability (C_L): All girders with decks fastened in the normal manner shall be assumed to have continuous lateral stability and C_L shall be 1.0. If the girders are not prevented from rotating at the points of bearing, or rating engineer determines that there is not continuous lateral support on the compression edge, C_L shall be determined by **NDS [3.3.3]**.

- Size (C_F): Bending stresses for sawn lumber shall be multiplied by the appropriate factor per the footnotes in NDS.

- Volume (C_v): Bending stresses for glued laminated timber shall be multiplied by the appropriate factor per the footnotes in NDS.

- Flat Use (C_{fu}): Bending stresses shall be multiplied by the appropriate factor per NDS, for plank decking loaded on the wide face.

- Repetitive Member (C_r): Bending stresses shall be multiplied by 1.15 on longitudinal nail laminated bridges and on nail laminated decks. For deck planks, 1.15 may be used if they are covered by bituminous surface or perpendicular planks for load distribution and are spaced not more than 24” on center.

- Condition Treatment Factor (C_{pt}): Piling, Bending, Shear, and Compression stresses shall be multiplied by: 1.0 for all douglas fir pile installed prior to 1985, and by 0.9 for all other piles.

- Load Sharing Factor (C_{ls}): This shall be typically be 1.0 for all bents. A higher value may be used per **NDS [6.3.11]** when multiple piles are connected by concrete caps or equivalent force distributing elements so that the pile group deforms together.

- Column Stability (C_P): Compression stresses in bents shall by multiplied by C_p per **NDS [3.7]**. “d” in the formula shall be the minimum measured remaining pile dimension. Unless determined otherwise by the rating engineer, it shall be assumed that all the piles shall have the area and C_p of the worst pile.

The adjusted allowable stress used in ratings shall be the given stress multiplied by all the applicable adjustment factors.

45.6 WisDOT Load Rating Policy and Procedure – Superstructure

This section contains WisDOT policy items or guidance related to the load rating of various types of bridge superstructures.

45.6.1 Prestressed Concrete

For bridges designed to be continuous over interior supports, the negative capacity shall come from the reinforcing steel in the concrete deck. Conservatively, only the top mat of steel deck reinforcing steel should be considered when rating for negative moment. If this assumption results in abnormally low ratings for negative moment, contact the Bureau of Structures Rating Unit for consultation.

Elastic gains in prestressed concrete elements shall be neglected for a conservative approach.

Shear design equations for prestressed concrete bridges have evolved through various revisions of the AASHTO design code. Because of this, prestressed concrete bridges designed during the 1960s and 1970s may not meet current shear capacity requirements. Shear capacity should be calculated based on the most current AASHTO code, either LFR or LRFR. Shear should be considered when determining the controlling ratings for a structure. If shear capacities are determined to be insufficient, the load rating engineer of record should contact the Bureau of Structures Rating Unit for consultation. If an existing bridge was designed using the Simplified Procedure for shear, the Simplified Procedure **LRFD [5.8.3.4.3]** (7th Edition - 2014) may be considered for shear ratings.

If an option is given on the structure plans to use either stress relieved or low relaxation strand, or $^{7}/_{16}$" or $^{1}/_{2}$" diameter strand, consult the shop drawings for the structure to see which option was exercised. If the shop drawings are not available, all possible options should be analyzed and the option which gives the lowest operating rating should be reported.

45.6.1.1 I-Girder

Bridges may have varying girder spacing between spans. A historically common configuration in Wisconsin for prestressed I-girder superstructures is a four-span bridge with continuous girders in spans 2 & 3 and different (wider) girder spacing in spans 1 & 4 (Note: this configuration is not recommended for new structures). Since the girders don't align, the bridge would need to be rated as three separate units – single span, two-span and single span.

When the shear failure plane crosses multiple stirrup zones, guidance given in the **MBE [6A.5.8]** should be followed to determine an average shear reinforcement area per unit length existing within the shear failure plane. The shear failure plane is assumed to cross through mid-depth of the section with a 45-degree angle of inclination.

It is common practice to use the average haunch height in order to locate the concrete deck in relation to the top of the girder. It is also acceptable to use the actual, precise haunch thicknesses, if they are known. Absent information on the depth of the haunch, 1 ¼" may be assumed. The area of the haunch may be used in calculating section properties, but it is common practice to conservatively ignore for purpose of section properties (haunch dead load

must be taken into account). Appropriate consideration of the haunch is the responsibility of the load rating engineer.

45.6.1.1.1 Variable Girder Spacing (Flare)

Girder spacings may vary over the length of a given girder (flared girder configuration). Some analysis software may allow for a varying distribution factor along the length of the girder. This is the most accurate and thus preferred method for dealing with a flared girder layout.

Alternatively, conservative assumptions may be made regarding the live load distribution and the assigned dead load to the girder being analyzed. The rating engineer is responsible for determining the appropriate assumptions and for ensuring that they produce conservative results. The methods described in **LRFD [C4.6.2.2.1]** are acceptable. All assumptions made shall be clearly noted in the calculations and in the load rating summary sheet (See 45.9.1).

45.6.1.2 Box and Channel Girders

For adjacent prestressed box and channel girders, the concrete topping may be considered structural when rebar extends from the girders up into the concrete topping.

45.6.2 Cast-in-Place Concrete

45.6.2.1 Slab (Flat or Haunched)

When using Load Factor Rating (LFR) or Allowable Stress Rating (ASR) and calculating the single lane load distribution factor for concrete slab bridges, the distribution width, E, shall be taken as 12'-0".

Some concrete slab bridges may have been designed with an integral concrete pier cap. This would take the form of increased transverse reinforcement at the pier, most likely combined with a haunched slab design. It is WisDOT experience that the integral pier cap will very rarely control the load ratings and a specific evaluation is not required. However, if the pier cap shows signs of distress, a more detailed load rating evaluation may be required. Consult the Bureau of Structures Load Rating Unit in these cases.

45.6.3 Steel

Consistent with the WisDOT policy item in 24.6.10, moment redistribution should not be considered as a part of the typical rating procedure for a steel superstructure. Moment redistribution may be considered for special cases (to avoid a load posting, etc.). Contact the Bureau of Structures Rating Unit with any questions on the use of moment redistribution.

Plastic analysis shall be used for steel members as permitted by AASHTO specifications, including (but not limited to) Article 6.12.2 (LRFR) and Articles 10.48.1, 10.53.1.1, and 10.54.2.1 (LFR). Plastic analysis shall not be used for members with significant deterioration. Per code, sections must be properly braced in order to consider plastic capacity. For questions on the use of plastic analysis, contact the Bureau of Structures Rating Unit.

If there are no plans for a bridge with a steel superstructure carrying a concrete deck, it shall be assumed to be non-composite for purposes of load rating unless there is sufficient documentation to prove that it was designed for composite action and that shear studs or angles were used in the construction.

When performing a rating on a bridge with a steel superstructure element (deck girder, floorbeam, or stringer) carrying a concrete deck, the element should be assumed to have full composite action if it was designed for composite action and it has shear studs or angles that are spaced at no more than 2'-0" centers.

Steel girder bridges in Wisconsin have not typically been designed to use the concrete deck as part of a composite system for negative moment. A typical design will show a lack of composite action in the negative moment regions (i.e., no shear studs). However, if design drawings indicate that the concrete deck is composite with the steel girder in negative moment regions, the negative moment steel in the concrete deck shall conservatively consist of only the top mat of steel over the piers.

For steel superstructures, an additional dead load allowance should be made to account for miscellaneous items such as welds, bolts, connection plates, etc., unless these items are all specifically accounted for in the analysis. See 24.4.1.1 for guidance on this additional dead load allowance. Alternatively, the actual weight of all the miscellaneous items can be tabulated and added to the applied dead load.

WisDOT policy items:

When load rating in-service bridges, WisDOT does not consider the overload limitations of Section 10.57 of the AASHTO Standard Specification.

45.6.3.1 Fatigue

For structures originally designed using LRFD, fatigue shall not be part of the rating evaluation.

For structures originally designed using ASD or LFD, fatigue ratings shall not be reported as the controlling rating. However, a fatigue evaluation may be considered for load ratings accompanying a major rehabilitation effort, if fatigue-prone details (category C or lower) are present. Fatigue detail categories are provided in **LRFD Table [6.6.1.2.3-1]**. Contact WisDOT Bureau of Structures Rating Unit on appropriate level of effort for any fatigue evaluation.

45.6.3.2 Rolled I-Girder, Plate Girder, and Box Girder

Application of the lever rule in calculating distribution factors for exterior girders may be overly conservative in some short-span steel bridges with closely spaced girders and slab overhangs. In this case, the live load bending moment for the exterior girder may be determined by applying the fraction of a wheel line determined by multiplying the value of the interior stringers or beams by:

W_e/S, where:

W_e = Top slab width as measured from the outside face of the slab to the midpoint between the exterior and interior stringer or beam. The cantilever dimension of any slab extending beyond the exterior girder shall not exceed S/2, measured from the centerline of the exterior beam.

S = Average stringer spacing in feet.

Alternately, live load distribution for this case may be determined by refined methods of analysis or with consideration of lane stripe placement as described in 45.5.1.2.

It is common practice to use the average haunch height in order to locate the concrete deck in relation to the top of the girder. It is also acceptable to use the actual, precise haunch thicknesses, if they are known. Absent information on the depth of the haunch, 1 ¼" may be assumed. The area of the haunch may be used in calculating section properties, but it is common practice to conservatively ignore for purpose of section properties (haunch dead load must be taken into account). Appropriate consideration of the haunch is the responsibility of the load rating engineer.

45.6.3.2.1 Curvature and/or Kinked Girders

The effects of curvature shall be considered for all curved steel girder structures. For structures meeting the criteria specified in **LRFD [4.6.1.2.4]** or the **Curved Steel Girder Guide Specification [4.2]**, the structure may be analyzed as if it were straight. However, regardless of the degree of curvature, the effects of curvature on flange lateral bending must always be considered in the analysis, either directly through a refined analysis or through an approximate method as detailed in **LRFD [C4.6.1.2.4b]** or the **Curved Steel Girder Guide Specification [4.2.1]**. This is applicable to discretely braced flanges. If a flange is continuously braced (e.g. encased in concrete or anchored to deck by shear connectors) then it need not be considered. In determining the load rating, flange lateral bending stress shall be added to the major axis bending flange stress, utilizing the appropriate equations specified in LRFD. When using the Curved Steel Girder Guide Specification, flange lateral bending stress reduces the allowable flange stress.

45.6.3.2.2 Skew

Load rating of steel structures with discontinuous cross-frames, in conjunction with skews exceeding 20 degrees shall consider flange lateral bending stress, either directly through a refined analysis or using approximate values provided in **LRFD [C6.10.1]**. This requirement only applies to structures with multi-member cross frames (X or K-brace), and full depth diaphragms between girders. Flange lateral bending stress is most critical when the bottom flange is stiffened transversely (discretely braced). For structures with shorter single member diaphragms (e.g. C or MC-shapes) between girders, where the bottom flange is less restrained, the load rating need not consider flange lateral bending stress due to skew.

Flange lateral bending stress, whether due to skew or curvature, is handled the same in a load rating equation. Refer to the flange lateral bending discussion in 45.6.3.2.1 for more information.

45.6.3.2.3 Variable Girder Spacing (Flare)

Girder spacings may vary over the length of a given girder (flared girder configuration). Some analysis software may allow for a varying distribution factor along the length of the girder. This is the most accurate and thus preferred method for dealing with a flared girder layout.

Alternatively, conservative assumptions may be made regarding the live load distribution and the assigned dead load to the girder being analyzed. The rating engineer is responsible for determining the appropriate assumptions and for ensuring that they produce conservative results. The methods described in **LRFD [C4.6.2.2.1]** are acceptable. All assumptions made should be clearly noted in the calculations and in the load rating summary sheet (See 45.9.1).

If the girders are flared such that the ratio of change in girder spacing to span length is greater than or equal to 0.015, then a refined analysis may be required. Consult the Bureau of Structures Rating Unit for structures that meet this criteria.

45.6.3.3 Truss

45.6.3.3.1 Gusset Plates

WisDOT requires gusset plates to be load rated anytime the loads applied to a structure are altered (see 45.3). Gusset plates should also be evaluated with reports of any significant deterioration. Rating procedures shall follow those specified in the AASHTO MBE.

45.6.3.4 Bascule-Type Movable Bridges

Apply twice the normal dynamic impact factor to live loading of the end floorbeam per **AASHTO LRFD Movable Spec [2.4.1.2.4]**. The end floorbeam will likely control the load rating of bascule bridges built before 1980.

45.6.4 Timber

As a material, timber is unique in that material strengths are tied to the load rating methodology used for analysis (typically ASD or LRFR for timber). Because of this and because of the fact that design/rating specifications have changed through the years, the load rating engineer must carefully consider the appropriate material strengths to use for a given member. When referencing historic plans, WisDOT recommends using the plans to determine the type of material (species and grade), but then using contemporary sources (including tables in 0) to determine material strengths and for rating methodology.

Based on experience, WisDOT recommends evaluating timber superstructures for posting vehicles when the rating factor falls below 1.25 instead of the typical 1.0. See 45.10 for more information on load posting.

45.6.4.1 Timber Slab

For longitudinal nail laminated slab bridges, the wheel load shall be distributed to a strip width equal to:

(wheel width) + 2x(deck thickness).

On bridges that are showing lamination slippage, breakage on the underside, or loose stiffener beam connections, the strip width shall be reduced to:

(wheel width) + 1x(deck thickness).

45.7 WisDOT Load Rating Policy and Procedure – Substructure

45.7.1 Timber Pile Abutments and Bents

Any decay or damage will result in the reduction of the load-carrying capacity based on a loss of cross-sectional area (for shear and compression) or in a reduction of the section modulus (for moment). The capacity of damaged timber bents will be based on the remaining cross-sectional area of the pile and the column stability factor (C_p) using “d”, the least remaining dimension of the column. Such reductions will be determined by the rating engineer based on field measurements, when available.

Timber piles with significant deterioration and/or tipping shall be load rated with consideration of lateral earth pressure and redundancy. Piles shall be assumed to be fixed 6 feet below the stream bed or ground line and pinned at their tops.

45.8 WisDOT Load Rating Policy and Procedure – Culverts

45.8.1 Rating New Culverts

Ratings for new bridge-length (assigned a B number) culverts should be determined based on culvert type. See below for more guidance and see 45.9 for documentation and submittal requirements.

The Bureau of Structures does not currently require rating calculations to be submitted for new culverts that are not of bridge-length. However, these may be required in the future. When they are designed with software that readily produces load ratings, those ratings should be included on plan and calculation submittals. As a minimum, the design vehicle and design overburden depth shall be shown on plans. When load ratings are not calculated, ratings shall be reported as:

- Inventory rating factor: 1.05
- Operating rating factor: 1.35
- Wisconsin Standard Permit Vehicle (Wis-SPV): 255 kips

45.8.1.1 New Concrete Box Culverts

Concrete box culverts shall be load rated per AASHTO specifications.

The fill depth in relation to the structure dimensions will determine the live load effect on the structure. For structures that experience little or no live load based on analysis, the ratings reported on plans and in the load rating summary form shall not exceed the ratings noted below:

- Inventory rating factor: 2.0
- Operating rating factor: 3.0
- Wisconsin Standard Permit Vehicle (Wis-SPV): 250 kips

45.8.1.2 New Concrete Pipe Culverts

A concrete pipe culvert system (culvert and fill) shall be designed to carry HL-93 loading and the Wis-SPV as described in 36.1.3. Ratings shall be reported as:

- Inventory rating factor: 1.0
- Operating rating factor: 1.67
- Wisconsin Standard Permit Vehicle (Wis-SPV): 190 kips

45.8.1.3 New Steel Pipe Culverts

A steel pipe culvert system (culvert and fill) shall be designed to carry HL-93 loading and the Wis-SPV as described in 36.1.3. Ratings shall be reported as:

- Inventory rating factor: 1.0
- Operating rating factor: 1.67
- Wisconsin Standard Permit Vehicle (Wis-SPV): 190 kips

45.8.2 Rating Existing (In-Service) Culverts

Ratings for existing (in-service) bridge-length culverts shall be determined based on culvert type and the depth of fill over the culvert. See below for more guidance and see 45.9 for documentation and submittal requirements.

The Bureau of Structures currently does not require rating calculations to be submitted for in-service culverts that are not of bridge-length. If deterioration or other significant changes warrant consideration of a load posting for an in-service culvert that is not of bridge-length, contact the Bureau of Structures on what is required for a load posting evaluation.

45.8.2.1 In-Service Concrete Box Culverts

In-service concrete box culverts with 6’-0” or less of fill may require a load rating. In-service concrete box culverts with more than 6’-0” of fill over the top slab and in fair or better condition based on the most recent inspection report do not require a calculated load rating. Ratings shall be reported as:

- Inventory rating factor: 1.0
- Operating rating factor: 1.67
- Wisconsin Standard Permit Vehicle (Wis-SPV): 190 kips

WisDOT policy items:

For in-service concrete boxes with less than 6’-0” of fill or with more than 6’-0” of fill, but in poor condition, contact the Bureau of Structures Rating Unit for direction on what is required for a load rating.

45.8.2.2 In-Service Concrete Pipe Culverts

An in-service concrete pipe culvert in fair or better condition does not require a calculated load rating. Ratings shall be reported as:

- Inventory rating factor: 1.0
- Operating rating factor: 1.67
- Wisconsin Standard Permit Vehicle (Wis-SPV): 190 kips

WisDOT policy items:

For in-service concrete pipe culverts in poor condition, contact the Bureau of Structures Rating Unit for direction on what is required for a load rating.

45.8.2.3 In-Service Steel Pipe Culverts

An in-service steel pipe culvert in fair or better condition does not require a calculated load rating. Ratings shall be reported as:

- Inventory rating factor: 1.0
- Operating rating factor: 1.67
- Wisconsin Standard Permit Vehicle (Wis-SPV): 190 kips

WisDOT policy items:

For in-service steel pipe culverts in poor condition, contact the Bureau of Structures Rating Unit for direction on what is required for a load rating.

45.9 Load Rating Documentation and Submittals

The Bridge Rating and Management Unit is responsible for maintaining information for every structure in the Wisconsin inventory, including load ratings. This information is used throughout the life of the structure to help inform decisions on potential load postings, repairs, rehabilitation, and eventual structure replacement. That being the case, it is critical that WisDOT collect and store complete and accurate documentation regarding load ratings.

45.9.1 Load Rating Calculations

The rating engineer is required to submit load rating calculations. Calculations should be comprehensive and presented in a logical, organized manner. The submitted calculations should include a summary of all assumptions used (if any) to derive the load rating.

45.9.2 Load Rating Summary Forms

After the structure has been load rated, the WisDOT Bridge Load Rating Summary Form shall be completed and utilized as a cover sheet for the load rating calculations (see Figure 45.9-1). This form may be obtained from the Bureau of Structures or is available on the following website:

https://wisconsindot.gov/Pages/doing-bus/eng-consultants/cnslt-rsrces/strct/plan-submittal.aspx

If required, the Refined Analysis Rating Form (see 45.9.5 and Figure 45.9-2) is available at the same location.

Instructions for completing the forms are as follows:

Load Rating Summary Form

1. Fill out applicable Bridge Data, Structure Type, and Construction History information using HSIS as reference.

2. Check what rating method and rating vehicle was used to rate the bridge in the spaces provided.

3. Enter the inventory/operating ratings, controlling element, controlling force effect, and live load distribution factor for the rating vehicle.

    a. If the load distribution was determined through refined methods (i.e., finite element analysis), it is not necessary to record the live load distribution factor. Instead, enter “REFINED” in the space provided and use the “Remarks/Recommendations” section to describe the methods used to determine live load distribution.

4. The rating for the Wisconsin Special Permit vehicle (Wis-SPV) is always required and shall be given on the rating sheet for both a multi-lane distribution and a single-lane distribution. Make sure not to include the future wearing surface in these calculations.

All reported ratings are based on current conditions and do not reflect future wearing surfaces. Enter the Maximum Vehicle Weight (MVW) for the Wis-SPV analysis, controlling element, controlling force effect, and live load distribution factor.

5. When necessary, AASHTO legal and WisDOT Specialized annual Permit vehicles shall be analyzed and load postings determined per the requirements of 45.10.

    a. Enter the lowest operating rating in kips for each appropriate vehicle type, along with corresponding controlling element and force effect, as well as live load distribution factor.

    b. If a posting vehicle analysis was performed, check the box indicating if a load posting is required or not required. The weight limit in tons is automatically calculated when posting vehicle rating factors are below 1.0. If analysis shows that a load posting is required, specify the level of posting and contact the Bureau of Structures Rating Unit immediately.

6. When necessary, emergency vehicles shall be analyzed and weight limit restrictions determined per the requirements of 45.10.

    a. Enter the lowest operating rating factor for each emergency vehicle, along with corresponding controlling element and force effect, as well as live load distribution factor.

    b. Check the box indicating if an emergency vehicle weight limit is required or not required. The single axle, tandem axle, and gross vehicle weight limits are automatically calculated when emergency vehicle rating factors are below 1.0. If analysis shows that an emergency vehicle weight limit is required, specify the level of the limit and contact the Bureau of Structures Rating Unit immediately.

7. Enter all additional remarks as required to clarify the load capacity calculations.

8. It is necessary for the responsible engineer to sign and seal the form in the space provided. This is true even for rehabilitation projects with no change to the ratings.

45.9.3 Load Rating on Plans

The plans shall contain the following rating information:

- Inventory Load Rating – The plans shall have either the HS value of the inventory rating if using LFR or the rating factor for the HL-93 if using LRFR. For LFR ratings, the rating should be rounded down to the nearest whole number. <u>This rating shall be based on the current conditions of the bridge at the point when the construction is complete and shall not use the future wearing surface.</u> See 6.2.2.3.4 for more information on reporting ratings on plans.

- Operating Load Rating – The plans shall have either the HS value of the operating rating if using LFR or the rating factor for the HL-93 if using LRFR. For LFR ratings, the rating should be rounded down to the nearest whole number. <u>This rating shall be based</u>

on the current conditions of the bridge at the point when the construction is complete and shall not use the future wearing surface. See 6.2.2.3.4 for more information.

- Wisconsin Special Permit Vehicle – The plans shall also contain the results of the Wis-SPV analysis utilizing single-lane distribution and assuming that the vehicle is mixing with normal traffic and that the full dynamic load allowance is utilized. This rating shall be based on the current conditions of the bridge at the point when the construction is complete and shall not use the future wearing surface. The recorded rating for this is the total allowable vehicle weight rounded down to the nearest 10 kips. If the value exceeds 250 kips, limit the plan value to 250 kips. See 6.2.2.3.4 for more information.

45.9.4 Computer Software File Submittals

If analysis software is used to determine the load rating, the software input file shall be provided as a part of the submittal. The name of the analysis software and version should be noted on the Load Rating Summary form in the location provided.

45.9.5 Submittals for Bridges Rated Using Refined Analysis

Additional pages of documentation are required when performing a refined analysis. In addition to the Load Rating Summary Form, also submit the Refined Analysis Rating Form as shown in Figure 45.9-2.

45.9.6 Other Documentation Topics

Structures with Two Different Rating Methods

There may be situations where a given superstructure contains elements that were constructed at different times. In these situations, two different rating methods are used during the design/rating process. For example, a girder replacement or widening. In this case, the new girder(s) would be designed/rated using LRFR, while the existing girders would be rated using LFR. A Load Rating Summary Form shall be submitted for both new & existing structure analysis methods; controlling LRFR rating of the new superstructure components, and controlling LFR rating of the existing superstructure. Both sets of controlling rating values (new & existing) shall be noted on the plan set, as noted in 6.2.2.3.4.

Wisconsin Department of Transportation

Bridge Load Rating Summary

v. 07-2020

Bridge Data

Bridge Number:	
Owner:	
Municipality:	
Feature On:	
Feature Under:	
Design Loading:	

Traffic Count:		Truck Traffic %:	
Overburden Depth (in):			
Inspection Date:			
NBI Condition Ratings:			
Deck	Superstructure	Substructure	Culvert

Structure Type

Span #	Material	Configuration	Length (ft)
1			

Construction History

Year	Work Performed

Load Rating Summary

Rating Method:		Ratings	Controlling Element	Controlling Force Effect	LL Distribution Factor
		Inventory			
Rating Vehicle:		Operating			
Wisconsin SPV		MVW (k)	Controlling Element	Controlling Force Effect	LL Distribution Factor
Single Lane (w/o FWS)					
Multi Lane (w/o FWS)					

Load Posting Analysis (when required per Wisconsin Bridge Manual, Chapter 45)

Posting Vehicle		Vehicle GVW (k)	Rating Factor	Weight Limit (T)	Controlling Element	Controlling Force Effect	LL Distribution Factor
AASHTO Legal Vehicles	Type 3	50		N/A			
	Type 3S2	72		N/A			
	Type 3-3	80		N/A			
	SU4	54		N/A			
	SU5	62		N/A			
	SU6	69.5		N/A			
	SU7	77.5		N/A			
WisDOT Spec.	PUP	98		N/A			
	Semi	98		N/A			
FAST Act EVs	EV2	57.5		N/A			
	EV3	86		N/A			

Posting for Legal/Specialized Permit Vehicles:

X Not Required

Required T

Weight Limits for Emergency Vehicles:

X Not Required

Required T Single Axle// T Tandem // T Gross

Computer Software and Version Used:	

Additional Remarks:

Load Rating Engineer

Name:

Date:

Figure 45.9-1

Bridge Load Rating Summary Form

In Addition to this form, submit electronic analysis files (eg. .MDX, .bdb)

ANALYSIS FILE SUMMARY (FILL OUT FOR EACH ANALYSIS FILE SUBMITTED)

Analysis Type:	☐ Grid/Grillage ☐ Plate & Ecc. Beam ☐ 3D FEM ☐ Other *(describe below)*
Analysis Program:	☐ MDX ☐ AASHTOWare ☐ CSI Bridge ☐ LARSA ☐ Other
Program Version:	
File Name:	
File Description:	Describe the purpose of the file. Example: This file is used for the Wis-SPV rating using single lane distribution.
Analysis Assumptions:	Highlight key assumptions in modeling. (This section may be omitted if submitting MDX or AASHTOWare analysis files. This section may also be omitted if submitting separate document containing analysis assumptions and results). Example of things to include: a description of the finite element model, simplifications made to model, exceptions to original design plans, loads applied, how loads are applied (e.g. equally distributed to all girders), support conditions, composite/non-composite sections.
Summary of Results:	Summarize results. (This section may be omitted if submitting MDX or AASHTOWare analysis files. This section may also be omitted if submitting separate document containing analysis assumptions and results). Provide table of results for service load reactions, moment, shear, and/or stress output for members at 10th points (minimum) for the appropriate load cases. Provide a table of capacities at each 10th point, such that load ratings can be directly computed with appropriate load and/or resistance and impact factors. Provide example or typical calculations.

Figure 45.9-2
Refined Analysis Rating Form

45.10 Load Postings

45.10.1 Overview

Legal-weight for vehicles travelling over bridges is determined by state-specific statutes, which are based in part on the Federal Bridge Formula. The Federal Bridge Formula is discussed in 45.2.5. When a bridge does not have the capacity to carry legal-weight traffic, more stringent load limits are placed on the bridge – a load posting. Currently in Wisconsin, load postings are based on gross vehicle weight; there is no additional consideration for number of axles or axle spacing. Load posting signage is discussed further in 45.10.4.

A separate analysis is conducted for emergency vehicles (EVs). As a result of the 2015 Fixing America's Surface Transportation Act (FAST Act), FHWA requires bridges to be load rated for emergency vehicles where they are exempt from regular weight limits, and restricted if necessary. When a bridge does not have the capacity to carry the FAST Act EVs, emergency vehicle-specific load postings are required for bridges on the Interstate and within reasonable access to the Interstate. Because Wisconsin statutes also exempt emergency vehicles from state laws governing weight provisions, bridges located beyond reasonable access with insufficient capacity will be placed on the Emergency Vehicles Restricted Bridge List (under development). Weight limit restrictions for emergency vehicles are based on a combination of the single axle, tandem axle, and gross vehicle weight limits, discussed further in 45.10.3. Additional information on FAST Act EV load rating requirements may be found in FHWA's memorandum, "Action: Load Rating for the FAST Act's Emergency Vehicles" (November 2016) and the technical guidance, "Questions and Answers: Load Rating for the FAST Act's Emergency Vehicles, Revision R01" (March 2018).

In order to remain open to traffic, a bridge should be capable of carrying a minimum gross live load weight of three tons at the Operating level. Bridges not capable of carrying a minimum gross live load weight of three tons at the Operating level must be closed. As stated in the **MBE [6A.8.1]** and **[6B.7.1]**, when deciding whether to close or post a bridge, the Owner should consider the character of traffic, the volume of traffic, the likelihood of overweight vehicles, and the enforceability of weight posting.

The owner of a bridge has the responsibility and authority to load post a bridge as required. The State Bridge Maintenance Engineer has the authority to post a bridge and must issue the approval to post any State bridge.

WisDOT policy items:

Consult the Bureau of Structures Rating Unit as soon as possible with any analysis that results in a load posting or emergency vehicle weight limit for any structure on the State or Local system.

45.10.2 Load Posting Live Loads

The live loads to be used in the rating formula for posting considerations are any of the three typical AASHTO Commercial Vehicles (Type 3, Type 3S2, Type 3-3) shown in Figure 45.10-1, any of the four AASHTO Specialized Hauling Vehicles (SHVs - SU4, SU5, SU6, SU7) shown

in Figure 45.10-2, the WisDOT Specialized Annual Permit Vehicles shown in Figure 45.10-3, and the Wisconsin Standard Permit Vehicle shown in Figure 45.12-1.

The AASHTO Commercial Vehicles and Specialized Hauling Vehicles are modeled on actual in-service vehicle configurations. These vehicles comply with the provisions of the Federal Bridge Formula and can thus operate freely without permit; they are legal weight/configuration.

The WisDOT Specialized Annual Permit Vehicles are Wisconsin-specific vehicles. They represent vehicle configurations made legal in Wisconsin through the legislative process and current Wisconsin state statutes.

The Wisconsin Standard Permit Vehicle (Wis-SPV) is a configuration used internally by WisDOT to assist in the regulation of multi-trip (annual) permits. Multi-trip permits and the Wis-SPV are discussed in more detail in 45.11.2 and 45.12.

As stated in **MBE [6A.4.4.2.1a]**, for spans up to 200', only the vehicle shall be considered present in the lane for positive moments. It is unnecessary to place more than one vehicle in a lane for spans up to 200' because the load factors provided have been modeled for this possibility. For spans 200' in length or greater, the AASHTO Type 3-3 truck multiplied by 0.75 shall be analyzed combined with a lane load as shown in Figure 45.10-4. The lane load shall be taken as 0.2 klf in each lane and shall only be applied to those portions of the span(s) where the loading effects add to the vehicle load effects.

Also, for negative moments and reactions at interior supports, a lane load of 0.2 klf combined with two AASHTO Type 3-3 trucks multiplied by 0.75 shall be used. The trucks should be heading in the same direction and should be separated by 30 feet as shown in Figure 45.10-4. There are no span length limitations for this negative moment requirement.

When the lane-type load model (see Figure 45.10-4) governs the load rating, the equivalent truck weight for use in calculating a safe load capacity for the bridge shall be taken as 80 kips as is specified in **MBE [6A.4.4.4]**.

For emergency vehicle weight limits, FHWA has determined that, for the purpose of load rating, two emergency vehicle configurations (EV2 and EV3) produce effects in typical bridges that envelop the effects resulting from the family of typical emergency vehicles covered by the FAST Act. The EV2 and EV3 are shown in Figure 45.10-5.

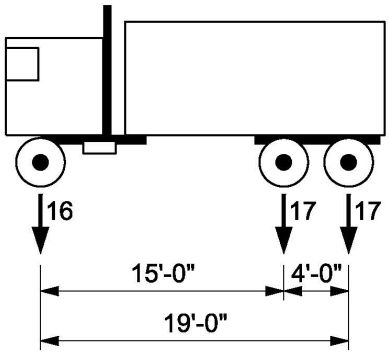

Indicated concentrations are axle loads in kips.

Type 3 Unit Weight = 50 Kips (25 tons)

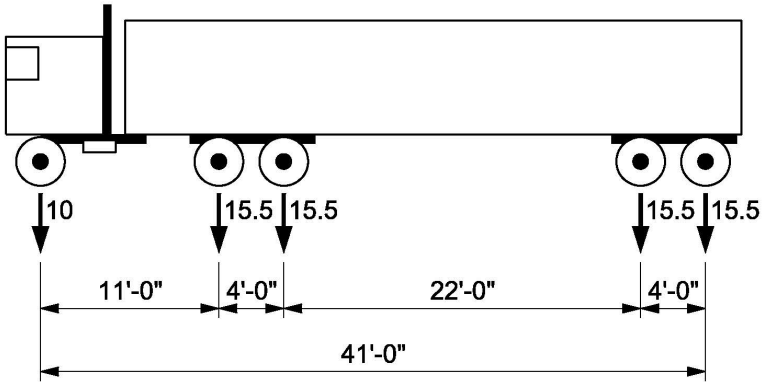

Type 3S2 Unit Weight = 72 Kips (36 tons)

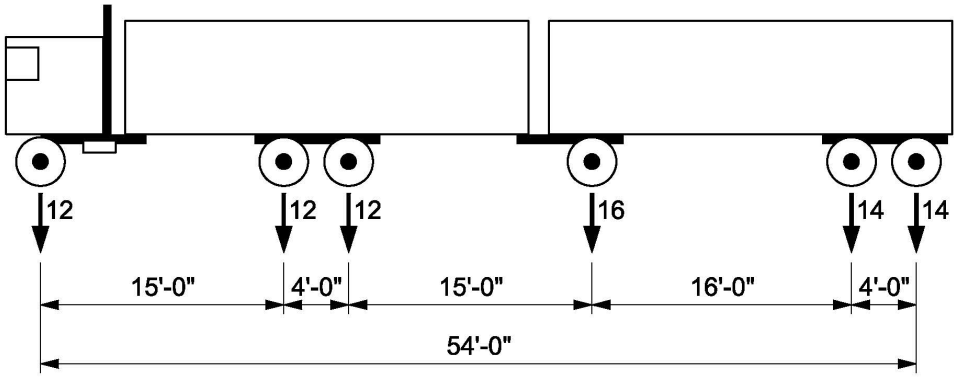

Type 3-3 Unit Weight = 80 Kips (40 tons)

Figure 45.10-1
AASHTO Commercial Vehicles

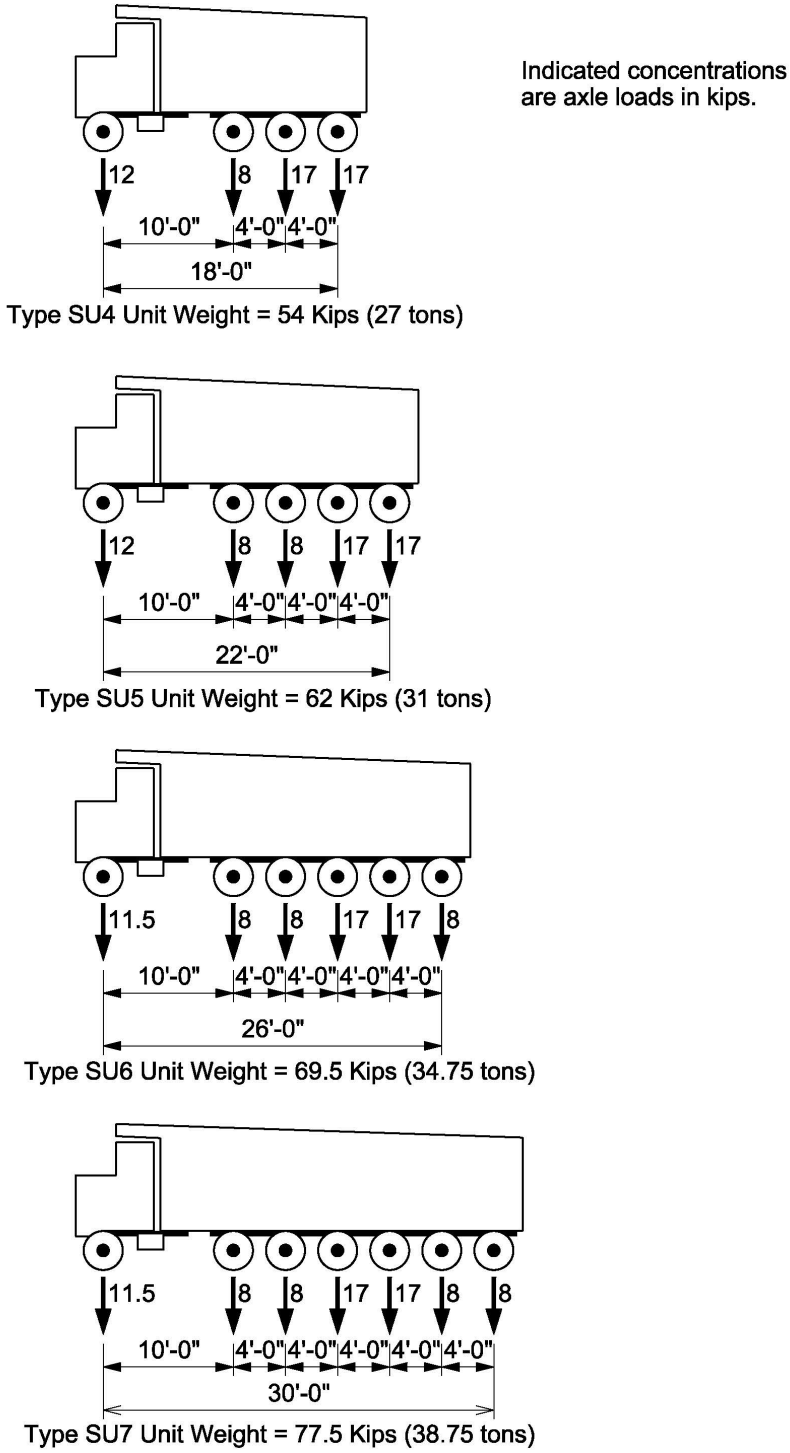

Figure 45.10-2
AASHTO Specialized Hauling Vehicles (SHVs)

Indicated concentrations
are axle loads in kips.

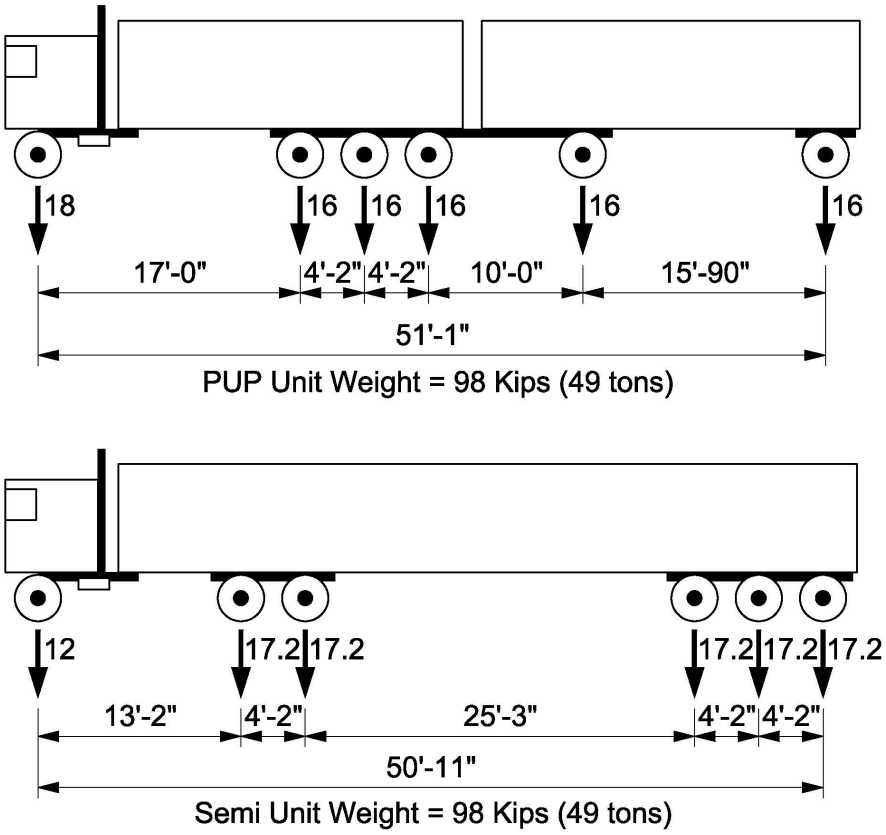

Figure 45.10-3
WisDOT Specialized Annual Permit Vehicles

Indicated concentrations are axle loads in kips (75% of type 3-3).

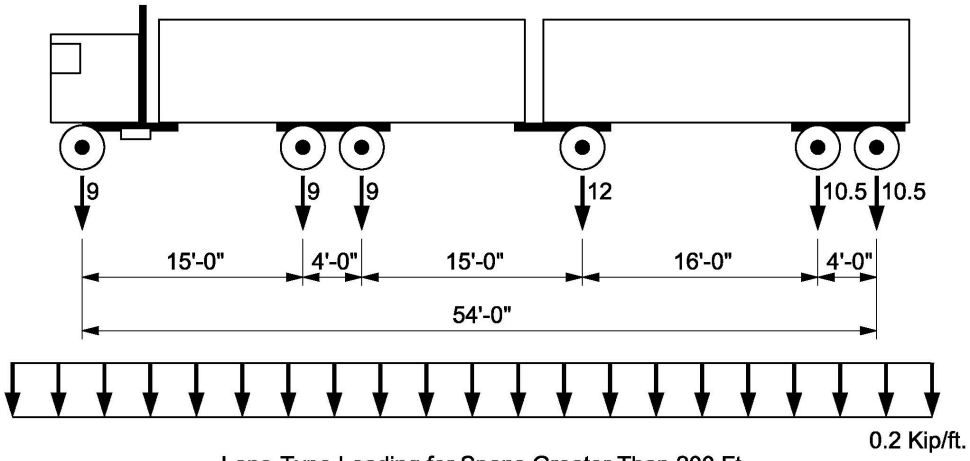

Lane-Type Loading for Spans Greater Than 200 Ft.

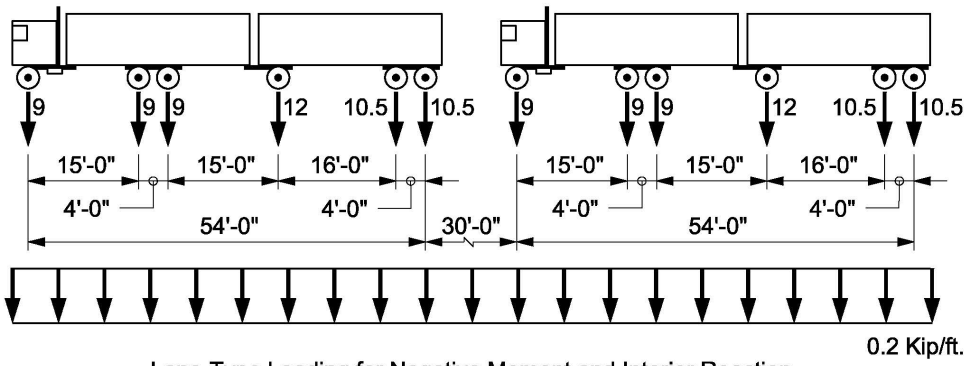

Lane-Type Loading for Negative Moment and Interior Reaction.

Figure 45.10-4
Lane Type Legal Load Models

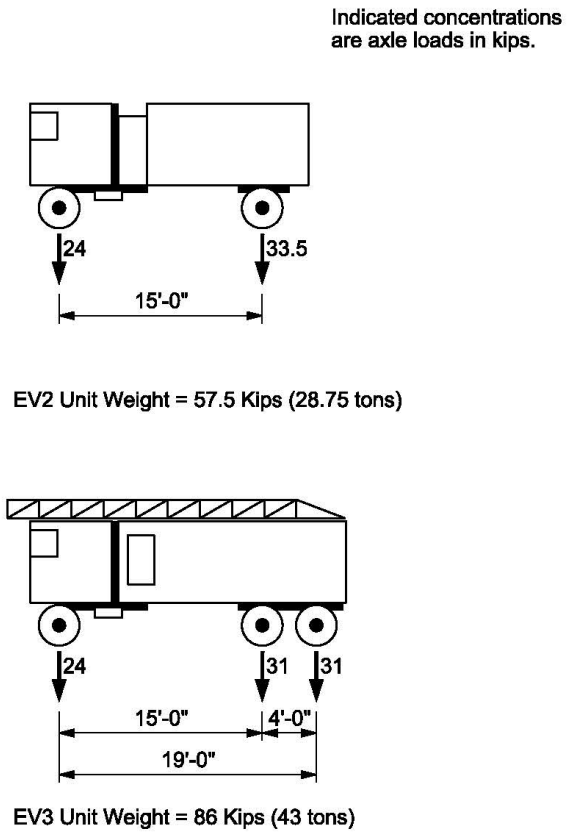

Figure 45.10-5
Emergency Vehicle Load Models

45.10.3 Load Posting Analysis

All posting vehicles shall be analyzed at the operating level. A load posting analysis is required when the calculated rating factor at operating level for a bridge is:

- Less than 1.0 for HL-93 loading using LRFR methodology.
- Less than 1.0 for HS-20 loading using LFR/ASR methodology; or
- Less than or equal to 1.2 for LFR/ASR methodology (SHV analysis only)

A load posting analysis is very similar to a load rating analysis, except the posting live loads noted in 45.10.2 are used instead of typical LFR or LRFR live loading.

If the calculated rating factor at operating is less than 1.0 for a given load posting vehicle, then the bridge shall be posted, with the exception of the Wis-SPV. For State Trunk Highway Bridges, current WisDOT policy is to post structures with a Wisconsin Standard Permit Vehicle (Wis-SPV) rating of 120 kips or less. If the RF ≥ 1.0 for a given vehicle at the operating level, then a posting is not required for that particular vehicle.

A bridge is posted for the lowest restricted weight limit of any of the standard posting vehicles. To calculate the capacity, in tons, on a bridge for a given posting vehicle utilizing LFR, multiply the rating factor by the gross vehicle weight in tons. To calculate the posting load for a bridge analyzed with LRFR, refer to 45.10.3.2.

Posting or weight limit analysis for emergency vehicles occurs separately; it is required when the calculated rating factor at inventory level for a bridge is:

- Less than 0.9 for HL-93 loading using LRFR methodology; or
- Less than 1.0 for HS-20 loading using LFR/ASR methodology.

If the calculated rating factor at operating rating is less than 1.0 for a given emergency vehicle, then the bridge shall have an emergency vehicle-specific weight limit restriction, as follows:

- If $RF_{EV2} < 1.0$ and $RF_{EV3} < 1.0$
  - Single Axle = Minimum (RF_{EV2} x 16.75 tons, RF_{EV3} x 31 tons)
  - Tandem = Minimum (RF_{EV2} x 28.75 tons, RF_{EV3} x 31 tons)
  - Gross = Minimum (RF_{EV2} x 28.75 tons, RF_{EV3} x 43 tons)
- If only $RF_{EV2} < 1.0$
  - Single Axle = RF_{EV2} x 16.75 tons
  - Tandem = RF_{EV2} x 28.75 tons
  - Gross = RF_{EV2} x 28.75 tons
- If $RF_{EV2} < 1.0$ and $RF_{EV3} < 1.0$
  - Single Axle = Minimum (16 tons, RF_{EV3} x 31 tons)
  - Tandem = RF_{EV3} x 31 tons
  - Gross = RF_{EV3} x 43 tons

Sign postings may or may not be required for emergency vehicles, depending on their location. Refer to 45.10.4.

45.10.3.1 Limit States for Load Posting Analysis

For LFR methodology, load posting analysis should consider strength-based limit states only.

For LRFR methodology, load posting analysis should consider strength-based limit states, but also some service-based limit states, per Table 45.3-1.

45.10.3.2 Legal Load Rating Load Posting Equation (LRFR)

When using the LRFR method and the operating rating factor (RF) calculated for each legal truck described above is greater than 1.0, the bridge does not need to be posted. When for any legal truck the RF is between 0.3 and 1.0, then the following equation should be used to establish the safe posting load for that vehicle (see **MBE [Equation 6A8.3-1]**):

$$\text{Posting} = \frac{W}{0.7}\left[(RF) - 0.3\right]$$

Where:

RF	=	Legal load rating factor
W	=	Weight of the rating vehicle

When the rating factor for any vehicle type falls below 0.3, then that vehicle type should not be allowed on the bridge. If necessary, the structure may need to be closed until it can be repaired, strengthened, or replaced. This formula is only valid for LRFR load posting calculations.

45.10.3.3 Distribution Factors for Load Posting Analysis

WisDOT policy items:

The AASHTO Commercial Vehicles and Specialized Hauling Vehicles shall be analyzed using a multi-lane distribution factor for bridge widths 18’-0” or larger. Single lane distribution factors are used for bridge widths less than 18’-0”.

The WisDOT Specialized Annual Permit Vehicles shown in Figure 45.10-3 shall be analyzed using a single-lane distribution factor, regardless of bridge width.

The Wisconsin Standard Permit Vehicle (Wis-SPV) shall be analyzed for load postings using a multi-lane distribution factor for bridge widths 18’-0” or larger. Single lane distribution factors are used for bridge widths less than 18’-0”.

45.10.4 Load Posting Signage

Current WisDOT policy is to post State bridges for a single gross weight, in tons. Bridges that cannot carry the maximum weight for the vehicles described in 45.10.2 at the operating level are posted with the standard sign shown in Figure 45.10-6. This sign shows the bridge capacity for the governing load posting vehicle, in tons. The sign should conform to the requirements of the *Wisconsin Manual for Uniform Traffic Control Devices (WMUTCD)*.

In the past, local bridges were occasionally posted with the signs shown in Figure 45.10-7 using the H20, Type 3 and Type 3S2 vehicles. The H20 represented the two-axle vehicle, the Type 3 represented the three-axle vehicle and the Type 3S2 represented the combination vehicle. This practice is not encouraged by WisDOT and is generally not allowed for State-owned structures, except with permission from the State Bridge Maintenance Engineer.

Emergency vehicle posting signs, however, are based on a combination of the single axle, tandem axle, and gross vehicle weight limits, as shown in Figure 45.10-8. Emergency vehicle posting signs are only required for bridges on the Interstate and within reasonable access (one road mile) to or from an Interstate interchange.

WEIGHT LIMIT 10 TONS	BRIDGE CLOSED

Figure 45.10-6
Standard Signs Used for Posting Bridges

WEIGHT LIMIT 2 AXLE VEHICLES 15 TONS 3 AXLE VEHICLES 20 TONS COMBINATION VEHICLES 30 TONS	WEIGHT LIMIT 2 AXLE VEHICLES 14 TONS 3 AXLE VEHICLES 18 TONS COMBINATION VEHICLES 28 TONS	WEIGHT LIMIT 2 AXLE VEHICLES 14 TONS 3 AXLE VEHICLES 18 TONS COMBINATION VEHICLES 28 TONS

Figure 45.10-7
Historic Load Posting Signs

EMERGENCY VEHICLE WEIGHT LIMIT	
SINGLE AXLE	15 TONS
TANDEM	25 TONS
GROSS	35 TONS

Figure 45.10-8
Emergency Vehicle Load Posting Signs

45.11 Over-Weight Truck Permitting

45.11.1 Overview

Size and weight provisions for vehicles using the Wisconsin network of roads and bridges are specified in the Wisconsin Statutes, Chapter 348: Vehicles – Size, Weight and Load. Weight limits for legal-weight traffic and over-weight permit requirements are defined in detail in this chapter. The webpage for Chapter 348 is shown below.

https://docs.legis.wisconsin.gov/statutes/statutes/348

Over-weight permit requests are processed by the WisDOT Oversize Overweight (OSOW) Permit Unit in the Bureau of Highway Maintenance. The permit unit collaborates with the WisDOT Bureau of Structures Rating Unit to ensure that permit vehicles are safely routed on the Wisconsin inventory of bridges.

While the Wisconsin Statutes contain several industry-specific size and weight annual permits, in general, there are two permit types in Wisconsin: multi-trip (annual) permits and single-trip permits.

45.11.2 Multi-Trip (Annual) Permits

Multi-trip permits are granted for non-divisible loads such as machines, self-propelled vehicles, mobile homes, etc. They typically allow unlimited trips and are available for a range of three months to one year. The permit vehicle may mix with typical traffic and move at normal speeds. Multi-trip permits are required to adhere to road and bridge load postings and are subject to additional restrictions based on restricted bridge lists supplied by the WisDOT Bureau of Structures Rating Unit and published by the WisDOT OSOW Permit Unit. The restricted bridge lists are developed based on the analysis of the Wisconsin Standard Permit Vehicle (Wis-SPV). For more information on the Wis-SPV and required analysis, see 45.12. The carrier is responsible for their own routing, and are required to avoid these restrictions and load postings.

Vehicles applying for a multi-trip permit are limited to 170,000 pounds gross vehicle weight, plus additional restrictions on maximum length, width, height, and axle weights. Please refer to the WisDOT Oversize Overweight (OSOW) Permits website or the Wisconsin Statues (link above) for more information.

https://www.dot.wisconsinwisconsindot.gov/business/carriers/osowgeneral.htm

45.11.3 Single Trip Permits

Non-divisible loads which exceed the annual permit restrictions may be moved by the issuance of a single trip permit. When a single trip permit is issued, the applicant is required to indicate on the permit the origin and destination of the trip and the specific route that is to be used. A separate permit is required for access to local roads. Each single trip permit vehicle is individually analyzed by WisDOT for all state-owned structures that it encounters on the designated permit route.

Live load distribution for single trip permit vehicles is based on single lane distribution. This is used because these permit loads are infrequent and are likely the only heavy loads on the structure during the crossing. The analysis is performed at the operating level.

At the discretion of the engineer evaluating the single trip permit, the dynamic load allowance (or impact for LFR) may be neglected provided that the maximum vehicle speed can be reduced to 5 MPH prior to crossing the bridge and for the duration of the crossing.

In some cases, the truck may be escorted across the bridge with no other vehicles allowed on the bridge during the crossing. If this is the case, then the live load factor (LRFR analysis) can be reduced from 1.20 to 1.10 as shown in Table 45.3-3. It is recommended that the truck be centered on the bridge if it is being escorted with no other vehicles allowed on the bridge during the crossing.

Vehicles with non-standard axle gauges may also receive special consideration. This may be achieved by performing a more-rigorous analysis of a given bridge that takes into account the specific load configuration of the permit vehicle in question instead of using standard distribution factors that are based on standard-gauge axles. Alternatively, modifications may be made to the standard distribution factor in order to more accurately reflect how the load of the permit vehicle is transferred to the bridge superstructure. How non-standard gauge axles are evaluated is at the discretion of the engineer evaluating the permit.

45.12 Wisconsin Standard Permit Vehicle (Wis-SPV)

45.12.1 Background

The Wis-SPV configuration is shown in Figure 45.12-1. It is an 8-axle, 190,000lbs vehicle. It was developed through a Wisconsin research project that investigated the history of multi-trip permit configurations operating in Wisconsin. The Wis-SPV was designed to completely envelope the force effects of all multi-trip permit vehicles operating in Wisconsin and is used internally to help regulate multi-trip permits.

45.12.2 Analysis

- New Bridge Construction

For any new bridge design, the Wis-SPV shall be analyzed. The Wis-SPV shall be evaluated at the operating level. When performing this design check for the Wis-SPV, the vehicle shall be evaluated for single-lane distribution assuming that the vehicle is mixing with normal traffic and that the full dynamic load allowance is utilized. For this design rating, a future wearing surface shall be considered. Load distribution for this check is based on the interior strip or interior girder and the distribution factors given in Section 17.2.7, 17.2.8, or 18.4.5.1 where applicable. See also the WisDOT policy item in 45.3.7.8.1.

For LRFR, the Wis-SPV design check shall be a permit load rating and shall be evaluated for the limit states noted in Table 45.3-1 and Table 45.3-3.

The design engineer shall check to ensure the design has a RF > 1.0 (gross vehicle load of 190 kips) for the Wis-SPV. If the design is unable to meet this minimum capacity, the engineer is required to adjust the design until the bridge can safely handle a minimum gross vehicle load of 190 kips.

Results of the Wis-SPV analysis shall be reported per 45.9.

- Bridge Rehabilitation Projects

For rehabilitation design, analysis of the Wis-SPV shall be performed as described above for new bridge construction. All efforts should be made to obtain a RF > 1.0 (gross vehicle load of 190 kips) within the confines of the scope of the project. However, it is recognized that it may not be possible to increase the Wis-SPV rating without a significant change in scope of the project. In these cases, consult the Bureau of Structures Rating Unit for further direction.

Results of the Wis-SPV analysis shall be reported per 45.9.

- Existing (In-Service) Bridges

When performing a rating for an existing (in-service) bridge, analysis of the Wis-SPV shall be performed as described above for new bridge construction. In this case – where the bridge in question is being load rated but not altered in any way – the results of the Wis-SPV analysis need simply be reported as calculated per 45.9. If the results of this analysis produce a rating

factor less than 1.0 (gross vehicle load less than 190 kips), notify the Bureau of Structures Rating Unit.

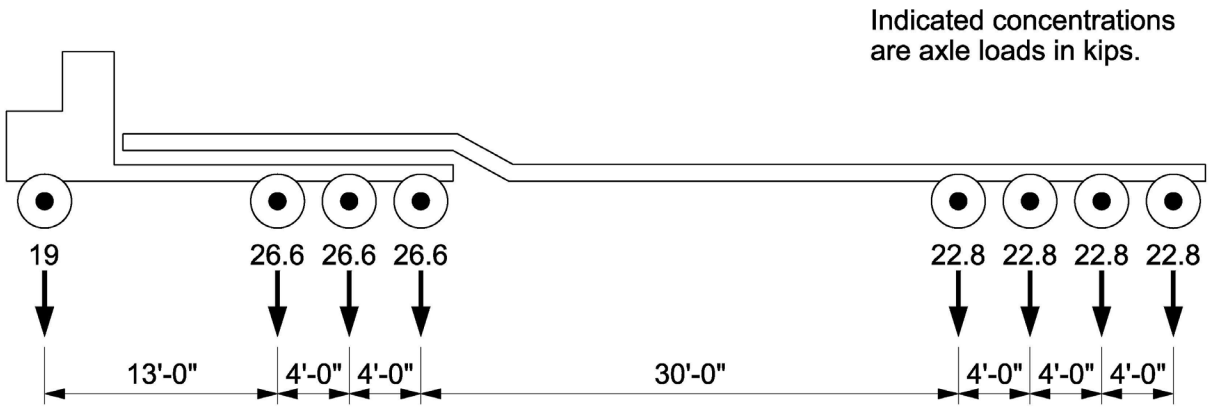

Figure 45.12-1
Wisconsin Standard Permit Vehicle (Wis-SPV)

45.13 References

1. *Final Report on Full-Scale Bridge Testing* by E. G. Burdette and D. W. Goodpasture, Department of Civil Engineer, University of Tennessee, 1971.

2. *The AASHTO Road Test*, Report 4 Bridge Research by the Highway Research Board, Washington, D.C. 1962.

3. *Standard Specifications for Highway Bridges* by American Association of State Highway and Transportation Officials.

4. *AASHTO LRFD Bridge Design Specifications* by American Association of State Highway and Transportation Officials

5. *The Manual for Bridge Evaluation, 2015 Interim Revisions* by American Association of State Highway and Transportation Officials, 2015.

6. *Structure Inspection Manual* by Wisconsin Department of Transportation, 2003.

7. *Reinforced Concrete Design* by C. K. Wang and C. G. Salmon.

8. *Plastic Design of Steel Frames* by Lynn S. Beedle.

9. National Cooperative Highway Research Program Report 312.

10. National Cooperative Highway Research Program Project 12-63.

11. *Post-Tensioning Manual* by Post-Tensioning Institute.

12. Wisconsin Statutes, Vol. 4, Chapter 348.

13. *Summary of Motor Vehicle Size and Weight Regulations in Wisconsin* by Dept. of Transportation, Division of Motor Vehicles.

14. *Evolution of Vehicular Live Load Models During the Interstate Design Era and Beyond*, John M. Kulicki and Dennis R. Mertz, Transportation Research Circular; 50 Years of Interstate Structures.

15. *Bridge Inspector's Reference Manual;* Federal Highway Administration.

16. *The Collapse of the Silver Bridge*, Chris LeRose; www.wvculture.org/history/wvhs1504.html

17. Engineering News, September 1914; L.R. Manville and R.W. Gastmeyer

18. *AASHTO Guide Specifications for Horizontally Curved Steel Girder Highway Bridges*, by American Association of State Highway and Transportation Officials, 2003.

19. *G13.1 Guidelines for Steel Girder Bridge Analysis* by American Association of State Highway and Transportation Officials and by National Steel Bridge Alliance (NSBA), 2nd Ed., 2014.

20. *Questions and Answers: Load Rating for the FAST Act's Emergency Vehicles, Revisions R01* by Federal Highway Administration Office of Bridges and Structures, 2018.

21. *Load Rating for the FAST Act Emergency Vehicles EV-2 and EV-3*, National Cooperative Highway Research Program Project 20-07 / Task 410, 2019.

45.14 Rating Examples

E45-1	Reinforced Concrete Slab Rating Example LRFR
E45-2	Single Span PSG Bridge, LRFD Design, Rating Example LRFR
E45-3	Two Span 54W" Prestressed Girder Bridge Continuity
E45-4	Steel Girder Rating Example LRFR
E45-5	Reinforced Concrete Slab Rating Example LFR
E45-6	Single Span PSG Bridge Rating Example LFR
E45-7	Two Span 54W" Prestressed Girder Bridge Continuity Reinforcement, Rating Example LFR
E45-8	Steel Girder Rating Example LFR

This page intentionally left blank.

Table of Contents

E45-1 Reinforced Concrete Slab Rating Example - LRFR 2
E45-1.1 Design Criteria 3
E45-1.2 Analysis of an Interior Strip one foot width 4
E45-1.2.1 Dead Loads (DC, DW) 4
E45-1.2.2 Live Load Distribution (Interior Strip) 4
E45-1.2.3 Nominal Flexural Resistance: (Mn) 5
E45-1.2.4 General Load Rating Equation (for flexure) 6
E45-1.2.5 Design Load (HL-93) Rating 7
E45-1.2.6 Permit Vehicle Load Ratings 9
E45-1.2.6.1 Wis-SPV Permit Rating with Single Lane Distribution w/ FWS 9
E45-1.2.6.2 Wis-SPV Permit Rating with Single Lane Distribution w/o FWS 11
E45-1.2.6.3 Wis-SPV Permit Rating with Multi Lane Distribution w/o FWS 13
E45-1.3 Summary of Rating 14

E45-1 Reinforced Concrete Slab Rating Example - LRFR

The 3-span continuous haunched slab structure shown in the Design Example from Chapter 18 is rated below. This same basic procedure is applicable for flat slab structures. For LRFR, the Bureau of Structures rates concrete slab structures for the Design Load (HL-93) and for Permit Vehicle Loads on an Interior Strip. The Permit Vehicle may be the Wisconsin Standard Permit Vehicle (Wis-SPV) or an actual Single-Trip Permit Vehicle. This bridge was analyzed using a slab width equal to one foot.

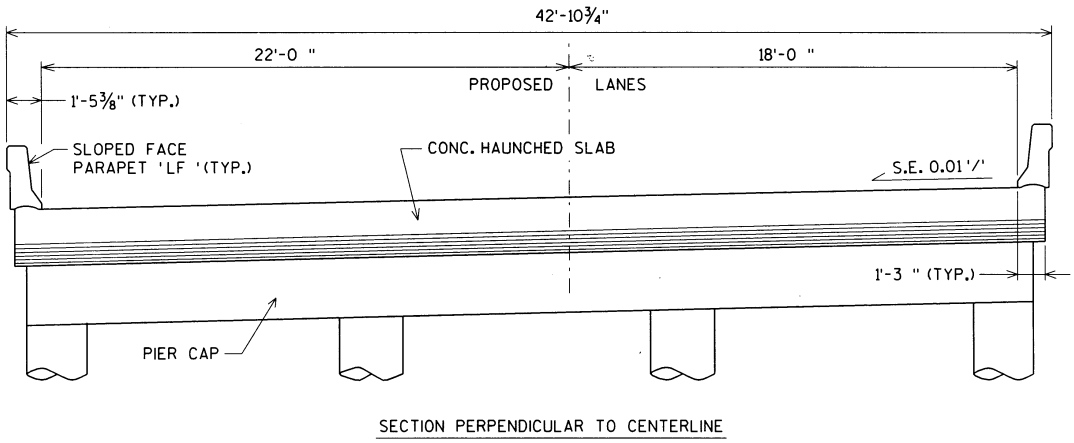

Figure E45-1.1

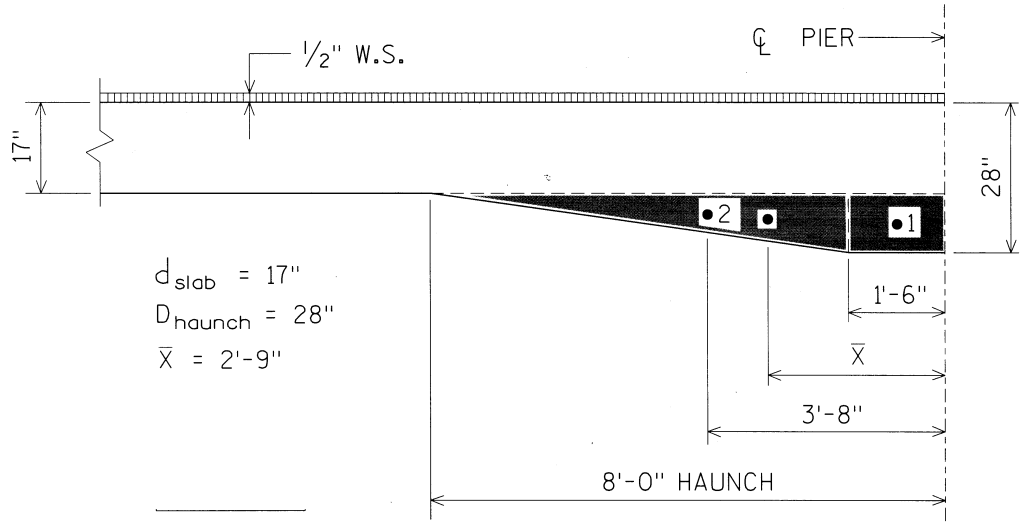

Figure E45-1.2

E45-1.1 Design Criteria

Geometry:

$L_1 := 38.0$	ft	Span 1 Length
$L_2 := 51.0$	ft	Span 2 Length
$L_3 := 38.0$	ft	Span 3 Length
$slab_{width} := 42.5$	ft	out to out width of slab
$skew := 6$	deg	skew angle (RHF)
$w_{roadway} := 40.0$	ft	clear roadway width
$cover_{top} := 2.5$	in	concrete cover on top bars (includes 1/2in wearing surface)
$cover_{bot} := 1.5$	in	concrete cover on bottom bars
$d_{slab} := 17$	in	slab depth (not including 1/2in wearing surface)
$D_{haunch} := 28$	in	haunch depth (not including 1/2in wearing surface)
$A_{st_0.4L} := 1.71$	$\frac{in^2}{ft}$	Area of longitudinal bottom steel at 0.4L (# 9's at 7in centers)
$A_{st_pier} := 1.88$	$\frac{in^2}{ft}$	Area of longitudinal top steel at Pier (# 8's at 5in centers)

Material Properties:

$f'_c := 4$	ksi	concrete compressive strength
$f_y := 60$	ksi	yield strength of reinforcement
$E_c := 3800$	ksi	modulus of elasticity of concrete
$E_s := 29000$	ksi	modulus of elasticity of reinforcement
$n := 8$		E_s / E_c (modular ratio)

Weights:

$w_c := 150$	pcf	concrete unit weight
$w_{LF} := 387$	plf	weight of Type LF parapet (each)

E45-1.2 Analysis of an Interior Strip - one foot width

Use Strength Limit States to rate the concrete slab bridge. **MBE [6A.4.2.2]**

The influence of ADTT and skew on force effects are ignored for slab bridges (See 18.3.2.2).

E45-1.2.1 Dead Loads (DC, DW)

The slab dead load, DC_{slab}, and the section properties of the slab, do not include the 1/2 inch wearing surface. But the 1/2 inch wearing surface load, DC_{WS}, of 6 psf must be included in the analysis of the slab. For a one foot slab width:

$DC_{ws} := 6$ 1/2 inch wearing surface load, plf

The parapet dead load is uniformly distributed over the full width of the slab when analyzing an Interior Strip. For a one foot slab width:

$$DC_{para} := 2 \cdot \frac{w_{LF}}{slab_{width}} \qquad \boxed{DC_{para} = 18} \quad \text{plf}$$

The unfactored dead load moments, M_{DC}, due to slab dead load (DC_{slab}), parapet dead load (DC_{para}), and the 1/2 inch wearing surface (DC_{ws}) are shown in Chapter 18 Example (Table E18.4).

The structure was designed for a possible future wearing surface, DW_{FWS}, of 20 psf.

$DW_{FWS} := 20$ Possible wearing surface, plf

E45-1.2.2 Live Load Distribution (Interior Strip)

Live loads are distributed over an equivalent width, E, as calculated below.
The live loads to be placed on these widths are axle loads (i.e., two lines of wheels) and the full lane load. The equivalent distribution width applies for both live load moment and shear.

Single - Lane Loading: $E = 10.0 + 5.0 \cdot (L_1 \cdot W_1)^{0.5}$ in

Multi - Lane Loading: $E = 84.0 + 1.44 \cdot (L_1 \cdot W_1)^{0.5} \leq 12.0 \cdot \frac{W}{N_L}$ in

Where:

L_1 = modified span length taken equal to the lesser of the actual span or 60ft (L_1 in ft)

W_1 = modified edge to edge width of bridge taken to be equal to the lesser of the actual width or 60ft for multi-lane loading, or 30ft for single-lane loading (W_1 in ft)

W = physical edge to edge width of bridge (W in ft)

N_L = number of design lanes as specified in **LRFD [3.6.1.1.1]**

For single-lane loading:

(Span 1, 3) $E := 10.0 + 5.0 \cdot (38 \cdot 30)^{0.5}$ $\boxed{E = 178.819}$ in

(Span 2) $E := 10.0 + 5.0 \cdot (51 \cdot 30)^{0.5}$ $\boxed{E = 205.576}$ in

For multi-lane loading:

$$12.0 \cdot \frac{W}{N_L} = 12.0 \cdot \frac{42.5}{3} = 170 \quad \text{in}$$

(Span 1, 3) $E := 84.0 + 1.44 \cdot (38 \cdot 42.5)^{0.5}$ $\boxed{E = 141.869}$ in <170" O.K.

(Span 2) $E := 84.0 + 1.44 \cdot (51 \cdot 42.5)^{0.5}$ $\boxed{E = 151.041}$ in <170" O.K.

E45-1.2.3 Nominal Flexural Resistance: (M_n)

The depth of the compressive stress block, (a) is (See 18.3.3.2.1):

$$a = \frac{A_s \cdot f_s}{\alpha_1 \cdot f'_c \cdot b}$$

where:

A_s = area of developed reinforcement at section (in^2)

f_s = stress in reinforcement (ksi)

$f'_c = 4$ ksi

$b := 12$ in

$\alpha_1 := 0.85$ (for $f'_C \leq 10.0$ ksi) **LRFD [5.6.2.2]**

As shown throughout the Chapter 18 Example, when f_s is assumed to be equal to f_y, and is used to calculate (a), the value of c/d_s will be < 0.6 (for f_y = 60 ksi) per **LRFD [5.6.2.1]** Therefore the assumption that the reinforcement will yield ($f_s = f_y$) is correct. The value for (c) and (d_s) are calculated as:

$$c = \frac{a}{\beta_1}$$

$\beta_1 := 0.85$

d_s = slab depth(excl. 1/2" wearing surface) - bar clearance - 1/2 bar diameter

For rectangular sections, the nominal moment resistance, M_n, (tension reinforcement only) equals:

$$M_n = A_s \cdot f_y \cdot \left(d_s - \frac{a}{2}\right)$$

Minimum Reinforcement Check

All sections throughout the bridge meet minimum reinforcement requirements, because this was checked in the chapter 18 Design example. Therefore, no adjustment to nominal resistance (M_n) or moment capacity is required. **MBE [6A.5.6]**

E45-1.2.4 General Load - Rating Equation (for flexure)

$$RF = \frac{C - (\gamma_{DC}) \cdot (M_{DC}) - (\gamma_{DW}) \cdot (M_{DW})}{\gamma_L \cdot (M_{LL_IM})}$$ **MBE [6A.4.2.1]**

For the Strength Limit State:

$$C = (\phi_c)(\phi_s)(\phi) \cdot R_n$$

where:

$R_n = M_n$ (for flexure)

$(\phi_c)(\phi_s) \geq 0.85$

Factors affecting Capacity (C):

Resistance Factor (ϕ), for Strength Limit State **MBE [6.5.3]**

$\phi := 0.9$ for flexure (all reinforced concrete section in the Chapter 18 Example were found to be tension-controlled sections as defined in **LRFD [5.6.2.1]**).

Condition Factor (ϕ_c) per Chapter 45.3.2.4

$\phi_c := 1.0$

System Factor (ϕ_s) Per Chapter 45.3.2.5

$\phi_s := 1.0$ for a slab bridge

E45-1.2.5 Design Load (HL-93) Rating

Use Strength I Limit State to find the Inventory and Operating Ratings **MBE [6A.4.2.2, 6A.5.4.1]**

Equivalent Strip Width (E) and Distribution Factor (DF):

Use the smaller equivalent width (single or multi-lane), when (HL-93) live load is to be distributed, for Strength I Limit State. Multi-lane loading values will control for this bridge.

The distribution factor, DF, is computed for a slab width equal to one foot.

$$DF = \frac{1}{E}$$ (where E is in feet)

The multiple presence factor, m, has been included in the equations for distribution width, E, and therefore is not used to adjust the distribution factor, DF, **LRFD [3.6.1.1.2]**.

Spans 1 & 3:

DF = 1/(141"/12) = 0.0851 lanes / ft-slab

Span 2:

DF = 1/(151"/12) = 0.0795 lanes / ft-slab

Look at the distribution factor calculated for each span and select the largest value. This single value is to be applied along the entire length of the bridge.
Therefore use: $DF := 0.0851$ s / ft-slab for all spans.

Dynamic Load Allowance (IM)

$IM := 33 \quad \%$ **MBE [6A.4.4.3]**

Live Loads (LL)

The live load combinations used for Strength I Limit State are shown in the Chapter 18 Example in Table E18.2 and E18.3. The unfactored moments due to Design Lane, Design Tandem, Design Truck and 90%{Double Design Truck + Design Lanes] are shown in Chapter 18 Example (Table E18.4).

Rating for Flexure

$$RF = \frac{(\phi_c)(\phi_s)(\phi)\cdot M_n - (\gamma_{DC})\cdot(M_{DC}) - (\gamma_{DW})\cdot(M_{DW})}{\gamma_L\cdot(M_{LL_IM})}$$

Load Factors

$\gamma_{DC} := 1.25$	Chapter 45 Table 45.3-1
$\gamma_{DW} := 1.50$	WisDOT policy is to always use 1.50; Chapter 45 Table 45.3-1
$\gamma_{Li} := 1.75$	(Inventory Rating) Chapter 45 Table 45.3-1
$\gamma_{Lo} := 1.35$	(Operating Rating) Chapter 45 Table 45.3-1

The Design Load Rating was checked at 0.1 pts. along the structure and at the slab/haunch intercepts. The governing location, for this example, is in span 1 at the 0.4 pt.

Span 1 (0.4 pt.)

Inventory:

$$RF_i = \frac{(\phi_c)(\phi_s)(\phi)\cdot M_n - (\gamma_{DC})\cdot(M_{DC}) - (\gamma_{DW})\cdot(M_{DW})}{\gamma_{Li}\cdot(M_{LL_IM})}$$

$A_{st_0.4L} = 1.71 \ \frac{in^2}{ft}$ and $\alpha_1 := 0.85$ (for $f'_c \leq 10.0$ ksi) **LRFD [5.6.2.2]**

$d_s := 17.0 - cover_{bot} - \frac{1.128}{2}$ $\boxed{d_s = 14.94}$ in

$a := \frac{A_{st_0.4L}\cdot f_y}{\alpha_1\cdot f'_c\cdot b}$ $\boxed{a = 2.51}$ in

$M_n := A_{st_0.4L}\cdot f_y\cdot\left(d_s - \frac{a}{2}\right)$ $\boxed{M_n = 1403.4}$ kip – in

$\boxed{M_n = 117.0}$ kip – ft

$M_{DC} := 18.1$ kip – ft (from Chapter 18 Example, Table E18.4)

$M_{DW} := 0.0$ kip – ft (additional wearing surface not for HL-93 rating runs)

The positive live load moment shall be the largest caused by the following (from Chapter 18 Example, Table E18.4):

Design Tandem (+IM) + Design Lane: (37.5 kip-ft + 7.9 kip-ft) = 45.4 kip-ft
Design Truck (+IM) + Design Lane: (35.4 kip-ft + 7.9 kip-ft) = 43.3 kip-ft

Therefore:

$M_{LL_IM} := 45.4$ kip – ft

Inventory:

$$RF_i := \frac{(\phi_c)(\phi_s)(\phi)\cdot M_n - (\gamma_{DC})\cdot(M_{DC}) - (\gamma_{DW})\cdot(M_{DW})}{\gamma_{Li}\cdot(M_{LL_IM})}$$

$\boxed{RF_i = 1.04}$

Operating:

$$RF_o := \frac{(\phi_c)(\phi_s)(\phi)\cdot M_n - (\gamma_{DC})\cdot(M_{DC}) - (\gamma_{DW})\cdot(M_{DW})}{\gamma_{Lo}\cdot(M_{LL_IM})}$$

$\boxed{RF_o = 1.35}$

Rating for Shear:

Slab bridge designed for dead load and (HL-93) live load moments in conformance with **LRFD [4.6.2.3]** may be considered satisfactory in shear **LRFD [5.12.2.1]**. This bridge was designed using this procedure, therefore a shear rating is not required.

The Rating Factors, RF, for Inventory and Operating Rating are shown on the plans and also on the load rating summary sheet.

E45-1.2.6 Permit Vehicle Load Ratings

For any bridge design (new or rehabilitation) or bridge re-rate, the Wisconsin Standard Permit Vehicle (Wis-SPV) shall be analyzed (per 45.6).

The bridge shall be analyzed for this vehicle considering both single-lane and multi-lane distribution. Also, the vehicle will be analyzed assuming it is mixing with other traffic on the bridge and that full dynamic load allowance is utilized. Future wearing surface will not be considered.

Since this example is rating a newly designed bridge, an additional check is required. The designer shall ensure that the results of a single-lane analysis utilizing the future wearing surface are greater than 190 kips MVW.

Use Strength II Limit State to find the Permit Vehicle Load Rating **MBE[6A.4.2.2, 6A.5.4.2.1]**.

E45-1.2.6.1 Wis-SPV Permit Rating with Single Lane Distribution w/ FWS

Equivalent Strip Width (E) and Distribution Factor (DF)

The equivalent width from single-lane loading is used, when Permit Vehicle live load is to be distributed, for Strength II Limit State **MBE [6A.4.5.4.2]**.

Calculate the distribution factor, DF, and divide it by (1.20) to remove the effects of the multiple presence factor (m), which are present in the equation for equivalent width (E) **MBE [6A.3.2, C6A.4.5.4.2b]**.

The distribution factor, DF, is computed for a slab width equal to one foot.

$$DF = \frac{1}{E \cdot (1.20)} \qquad \text{(where E is in feet)}$$

Spans 1 &3:

DF = 1/(178"/12)(1.20) = 0.0562 lanes / ft-slab

Span 2:

DF = 1/(205"/12)(1.20) = 0.0488 lanes / ft-slab

Look at the distribution factor calculated for each span and select the largest value.
This single value is to be applied along the entire length of the bridge.

Therefore use: $DF := 0.0562$ s / ft-slab for all spans.

Dynamic Load Allowance (IM)

$IM = 33 \quad \%$ **MBE [6A.4.5.5]**

Rating for Flexure

$$RF = \frac{(\phi_c)(\phi_s)(\phi)\cdot M_n - (\gamma_{DC})\cdot(M_{DC}) - (\gamma_{DW})\cdot(M_{DW})}{\gamma_L\cdot(M_{LL_IM})}$$

Load Factors

$\gamma_{DC} := 1.25$ Chapter 45 Table 45.3-1

$\gamma_{DW} := 1.50$ WisDOT policy is to always use 1.50; Chapter 45 Table 45.3-1

$\gamma_L := 1.20$ WisDOT Policy is to designate the (Wis_SPV) as a "Single-Trip" vehicle with no escorts. Current policy is to select the value for γ_L from Chapter 45 Table 45.3-3

The Maximum Permit Vehicle Load was checked at 0.1 pts. along the structure and at the slab/haunch intercepts. The governing location is the C/L of Pier.

At C/L of Pier

Permit Vehicle:

$$RF = \frac{(\phi_c)(\phi_s)(\phi)\cdot M_n - (\gamma_{DC})\cdot(M_{DC}) - (\gamma_{DW})\cdot(M_{DW})}{\gamma_L\cdot(M_{LL_IM})}$$

$A_{st_pier} := 1.88 \ \frac{in^2}{ft}$ and $\alpha_1 := 0.85$ (for $f'_C \leq 10.0$ ksi) **LRFD [5.6.2.2]**

$d_s := 28.0 - (cover_{top} - 0.5) - \frac{1.00}{2}$ $\boxed{d_s = 25.5}$ in

$a := \frac{A_{st_pier}\cdot f_y}{\alpha_1\cdot f'_c\cdot b}$ $\boxed{a = 2.76}$ in

$M_n := A_{st_pier}\cdot f_y\cdot\left(d_s - \frac{a}{2}\right)$ $\boxed{M_n = 2720.5}$ kip – in

$\boxed{M_n = 226.7}$ kip – ft

$M_{DC} := 59.2$ kip – ft (from Chapter 18 Example, Table E18.4)

$M_{DW} := 1.5$ kip – ft

The live load moment at the C/L of Pier due to the Wisconsin Standard Permit Vehicle (Wis-SPV) having a gross vehicle load of 190 kips and utilizing single lane distribution is:

$$M_{LL_IM} := 65.2 \quad kip - ft$$

Permit:

$$RF_{permit} := \frac{(\phi_c)(\phi_s)(\phi)\cdot M_n - (\gamma_{DC})\cdot(M_{DC}) - (\gamma_{DW})\cdot(M_{DW})}{\gamma_L\cdot(M_{LL_IM})}$$

$$\boxed{RF_{permit} = 1.63}$$

The maximum Wisconsin Standard Permit Vehicle (Wis_SPV) load is:

$RF_{permit}\cdot(190) = 310$ kips which is > 190k, Check OK

This same procedure used for the (Wis-SPV) can also be used when evaluating the bridge for an actual "Single-Trip Permit" vehicle.

Rating for Shear:

WisDOT does not rate Permit Vehicles on slab bridges based on shear.

E45-1.2.6.2 Wis-SPV Permit Rating with Single Lane Distribution w/o FWS

Equivalent Strip Width (E) and Distribution Factor (DF)

The equivalent width from single-lane loading is used, when Permit Vehicle live load is to be distributed, for Strength II Limit State **MBE [6A.4.5.4.2]**.

Calculate the distribution factor, DF, and divide it by (1.20) to remove the effects of the multiple presence factor (m), which are present in the equation for equivalent width (E) **MBE [6A.3.2, C6A.4.5.4.2b]**.

The distribution factor, DF, is computed for a slab width equal to one foot.

$$DF = \frac{1}{E\cdot(1.20)} \qquad \text{(where E is in feet)}$$

Spans 1 &3:

DF = 1/(178"/12)(1.20) = 0.0562 lanes / ft-slab

Span 2:

DF = 1/(205"/12)(1.20) = 0.0488 lanes / ft-slab

Look at the distribution factor calculated for each span and select the largest value.
This single value is to be applied along the entire length of the bridge.

Therefore use: $DF := 0.0562$ / ft-slab for all spans.

Dynamic Load Allowance (IM)

$IM = 33$ % **MBE [6A.4.5.5]**

Rating for Flexure

$$RF = \frac{(\phi_c)(\phi_s)(\phi)\cdot M_n - (\gamma_{DC})\cdot(M_{DC}) - (\gamma_{DW})\cdot(M_{DW})}{\gamma_L\cdot(M_{LL_IM})}$$

Load Factors

$\gamma_{DC} := 1.25$ Chapter 45 Table 45.3-1

$\gamma_L := 1.20$ WisDOT Policy is to designate the (Wis_SPV) as a "Single-Trip" vehicle with no escorts. Current policy is to select the value for γ_L from Chapter 45 Table 45.3-3

The Maximum Permit Vehicle Load was checked at 0.1 pts. along the structure and at the slab/haunch intercepts. The governing location is the C/L of Pier.

At C/L of Pier

Permit Vehicle:

$$RF = \frac{(\phi_c)(\phi_s)(\phi)\cdot M_n - (\gamma_{DC})\cdot(M_{DC}) - (\gamma_{DW})\cdot(M_{DW})}{\gamma_L\cdot(M_{LL_IM})}$$

$A_{st_pier} := 1.88 \frac{in^2}{ft}$ and $\alpha_1 := 0.85$ (for $f'_c \leq 10.0$ ksi) **LRFD [5.6.2.2]**

$d_s := 28.0 - (cover_{top} - 0.5) - \frac{1.00}{2}$ $\boxed{d_s = 25.5}$ in

$a := \frac{A_{st_pier}\cdot f_y}{\alpha_1\cdot f'_c\cdot b}$ $\boxed{a = 2.76}$ in

$M_n := A_{st_pier}\cdot f_y\cdot\left(d_s - \frac{a}{2}\right)$ $\boxed{M_n = 2720.5}$ kip – in

$\boxed{M_n = 226.7}$ kip – ft

$M_{DC} := 59.2$ kip – ft (from Chapter 18 Example, Table E18.4)

The live load moment at the C/L of Pier due to the Wisconsin Standard Permit Vehicle (Wis-SPV) having a gross vehicle load of 190 kips and utilizing single lane distribution is:

$$M_{LL_IM} := 65.2 \quad kip - ft$$

Permit:

$$RF_{permit} := \frac{(\phi_c)(\phi_s)(\phi)\cdot M_n - (\gamma_{DC})\cdot(M_{DC})}{\gamma_L\cdot(M_{LL_IM})}$$

$$\boxed{RF_{permit} = 1.66}$$

The maximum Wisconsin Standard Permit Vehicle (Wis_SPV) load is:

$$RF_{permit}\cdot(190) = 316 \quad kips$$

This same procedure used for the (Wis-SPV) can also be used when evaluating the bridge for an actual "Single-Trip Permit" vehicle.

E45-1.2.6.3 Wis-SPV Permit Rating with Multi Lane Distribution w/o FWS

Rating for Flexure

$$RF = \frac{(\phi_c)(\phi_s)(\phi)\cdot M_n - (\gamma_{DC})\cdot(M_{DC})}{\gamma_L\cdot(M_{LL_IM})}$$

The capacity of the bridge to carry the Permit Vehicle Load was checked at 0.1 pts. along the structure and at the slab/haunch intercepts. The governing location is at the C/L of Pier.

Load Factors

$\gamma_{DC} := 1.25$	Chapter 45 Table 45.3-1
$\gamma_{DW} := 1.50$	WisDOT policy is to always use 1.50; Chapter 45 Table 45.3-1
$\gamma_L := 1.30$	WisDOT Policy when analyzing the Wis-SPV as an "Annual Permit" vehicle with no escorts

At C/L of Pier

Permit Vehicle:

$$RF_{permit} = \frac{(\phi_c)(\phi_s)(\phi)\cdot M_n - (\gamma_{DC})\cdot(M_{DC})}{\gamma_L\cdot(M_{LL_IM})}$$

$M_n = 226.7$ kip – ft (as shown previously)

$M_{DC} = 59.2$ kip – ft (as shown previously)

The live load moment at the C/L of Pier due to the Wisconsin Permit Vehicle (Wis_SPV) having a gross vehicle load of 190 kips and a DF of 0.0851 lanes/ft-slab:

$M_{LL_IM} := 98.7$ kip – ft

$$RF_{permit} := \frac{(\phi_c)(\phi_s)(\phi)\cdot M_n - (\gamma_{DC})\cdot(M_{DC})}{\gamma_L\cdot(M_{LL_IM})}$$

$$\boxed{RF_{permit} = 1.01}$$

The Wisconsin Standard Permit Vehicle (Wis_SPV) load that can be carried by the bridge is:

$RF_{permit}\cdot(190) = 193$ kips

E45-1.3 Summary of Rating

Slab - Interior Strip							
Limit State		Design Load Rating		Legal Load Rating	Permit Load Rating (kips)		
		Inventory	Operating		Single DF w/ FWS	Single DF w/o FWS	Multi DF w/o FWS
Strength I	Flexure	1.04	1.34	N/A	310	316	193
Service I		N/A	N/A	N/A	Optional	Optional	Optional

Table of Contents

E45-2 Single Span PSG Bridge, LRFD Design, Rating Example - LRFR 2
E45-2.1 Preliminary Data. 2
E45-2.2 Girder Section Properties 3
E45-2.3 Composite Girder Section Properties 5
E45-2.4 Dead Load Analysis Interior Girder. 6
E45-2.5 Live Load Analysis Interior Girder Live Load Distribution Factors (g) 7
E45-2.5.1 Moment Distribution Factors for Interior Beams:. 8
E45-2.5.2 Shear Distribution Factors for Interior Beams:. 8
E45-2.5.3 Live Load Moments 9
E45-2.6 Compute Nominal Flexural Resistance at Midspan 9
E45-2.7 Compute Nominal Shear Resistance at First Critical Section. 14
E45-2.8 Longitudinal Tension Flange Capacity:. 19
E45-2.9 Design Load Rating 21
E45-2.10 Legal Load Rating 23
E45-2.11 Permit Load Rating 24
E45-2.12 Summary of Rating Factors 27

E45-2 Single Span PSG Bridge, LRFD Design, Rating Example - LRFR

The bridge was built in 2007 and has no deterioration. There is no overlay on the structure.

This example will perform the LRFR rating calculations for the bridge that was designed in Chapter 19 of this manual (E19-1). Though it is necessary to rate both interior and exterior girders to determine the minimum capacity, the below rating will analyze the interior girder only.

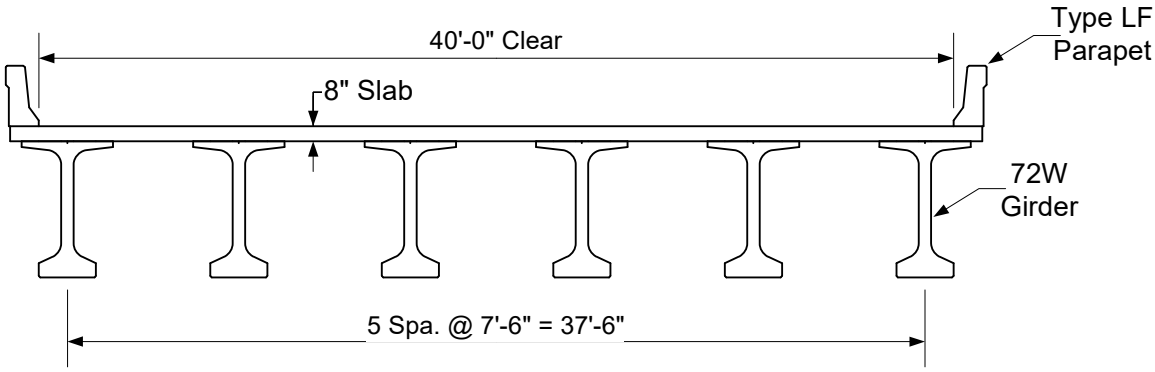

Figure E45-2.1

E45-2.1 Preliminary Data

$L := 146$	center to center of bearing, ft
$f'_c := 8$	girder concrete strength, ksi
$f'_{cd} := 4$	deck concrete strength, ksi
$f_{pu} := 270$	strength of low relaxation strand, ksi
$d_b := 0.6$	strand diameter, inches
$A_s := 0.217$	area of strand, in2
$t_s := 8$	slab thickness, in
$t_{se} := 7.5$	effective slab thickness (slab thickness - 1/2 in wearing surface), in
$w_p := 0.387$	weight of Wisconsin Type LF parapet, klf
$w_c := 0.150$	weight of concrete, kcf
$H_{avg} := 2$	average thickness of haunch, in
$w := 40$	clear width of deck, 2 lane road, 3 design lanes, ft
$S := 7.5$	spacing of the girders, ft
$ng := 6$	number of girders

E45-2.2 Girder Section Properties

72W Girder Properties (46 strands, 8 draped):

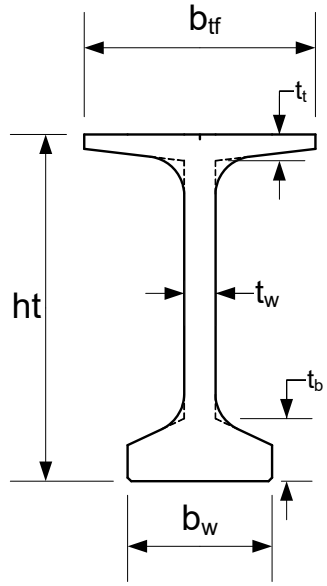

$b_{tf} := 48$	width of top flange, in
$t_t := 5.5$	avg. thickness of top flange, in
$t_w := 6.5$	thickness of web, in
$t_b := 13$	avg. thickness of bottom flange, in
$ht := 72$	height of girder, in
$b_w := 30$	width of bottom flange, in
$A_g := 915$	area of girder, in^2
$I_g := 656426$	moment of inertia of girder, in^4
$y_t := 37.13$	centriod to top fiber, in
$y_b := -34.87$	centroid to bottom fiber, in
$S_t := 17680$	section modulus for top, in^3
$S_b := -18825$	section modulus for bottom, in^3
$w_g := 0.953$	weight of girder, klf
$ns := 46$	number of strands
$e_s := -30.52$	centriod to cg strand pattern

$$e_g := y_t + 2 + \frac{t_{se}}{2}$$ $\boxed{e_g = 42.88}$ in

Web Depth: $d_w := ht - t_t - t_b$ $\boxed{d_w = 53.50}$ in

$$E_{beam8} := 5500 \cdot \frac{\sqrt{f'_c \cdot 1000}}{\sqrt{6000}}$$ $\boxed{E_{beam8} = 6351}$ $E_B := E_{beam8}$

Modulus of elasticity at time of release (used to for loss calculations):

$$E_{beam6.8} := 33000 \cdot K_1 \cdot w_c^{1.5} \cdot \sqrt{f'_{ci}}$$ $\boxed{E_{beam6.8} = 4999}$ $E_{ct} := E_{beam6.8}$

$E_D := E_{deck4}$

$$n := \frac{E_B}{E_D}$$ $\boxed{n = 1.540}$

$$K_g := n \cdot \left(I_g + A_g \cdot e_g^2\right)$$ **LRFD [Eq 4.6.2.2.1-1]** $\boxed{K_g = 3600866}$ in^4

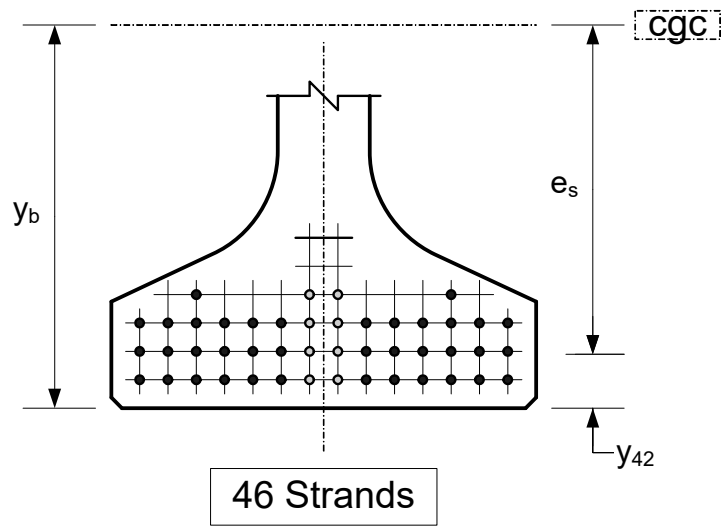

Figure E45-2.2

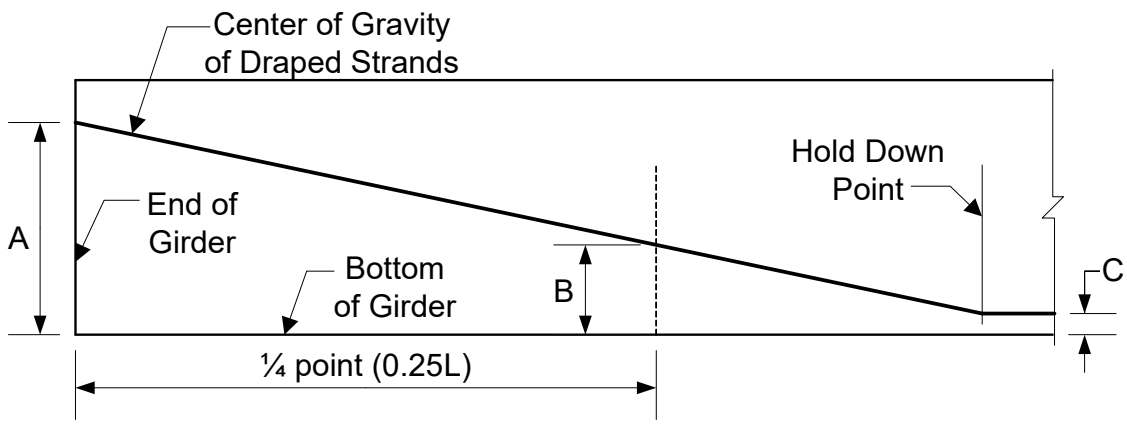

Figure E45-2.3

$A := 67$ in

$C := 5$ in

$B_{min} := 20.5$ in

$B_{max} := 23.5$ in

$$B_{avg} := \frac{B_{min} + B_{max}}{2}$$

$B_{avg} = 22.0$ in

$$slope := \left[\frac{A - B_{avg}}{(0.25)\cdot L\cdot 12}\right]\cdot 100$$

$slope = 10.274$ %

E45-2.3 Composite Girder Section Properties

Calculate the effective flange width in accordance with 17.2.11 and **LRFD [4.6.2.6]**:

$b_{eff} := S \cdot 12$ $\boxed{b_{eff} = 90.00}$ in

The effective width, b_{eff}, must be adjusted by the modular ratio, n, to convert to the same concrete material (modulus) as the girder.

$b_{eadj} := \frac{b_{eff}}{n}$ $\boxed{b_{eadj} = 58.46}$ in

Calculate the composite girder section properties:

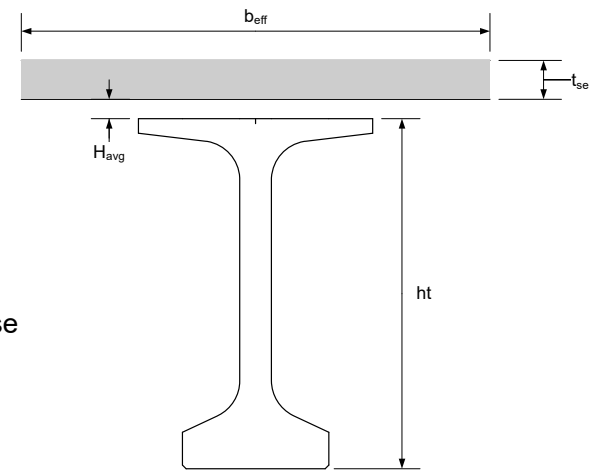

effective slab thickness; $\boxed{t_{se} = 7.50}$ in

effective slab width; $\boxed{b_{eadj} = 58.46}$ in

haunch thickness; $\boxed{H_{avg} = 2.00}$ in

total height; $h_c := ht + H_{avg} + t_{se}$

$\boxed{h_c = 81.50}$ in

$\boxed{n = 1.540}$

Note: The area of the concrete haunch is not included in the calculation of the composite section properties.

Component	Ycg	A	AY	AY^2	I	$I+AY^2$
Deck	77.75	438	34089	2650458	2055	2652513
Girder	34.87	915	31906	1112564	656426	1768990
Haunch	73	0	0	0	0	0
Summation		1353	65996			4421503

$\Sigma A := 1353$ in^2

$\Sigma AY := 65996$ in^3

$\Sigma IplusAYsq := 4421503$ in^4

$y_{cgb} := \frac{-\Sigma AY}{\Sigma A}$ $\boxed{y_{cgb} = -48.8}$ in

$y_{cgt} := ht + y_{cgb}$ $\boxed{y_{cgt} = 23.2}$ in

$A_{cg} := \Sigma A$ $\boxed{A_{cg} = 1353}$ in^2

$I_{cg} := \Sigma IplusAYsq - A_{cg} \cdot y_{cgb}^2$ $\boxed{I_{cg} = 1202381}$ in^4

$S_{cgt} := \frac{I_{cg}}{y_{cgt}}$ $\boxed{S_{cgt} = 51777}$ in^3

$S_{cgb} := \frac{I_{cg}}{y_{cgb}}$ $\boxed{S_{cgb} = -24650}$ in^3

E45-2.4 Dead Load Analysis - Interior Girder

Dead load on non-composite (DC_1):

weight of 72W girders $\boxed{w_g = 0.953}$ klf

weight of 2-in haunch

$w_h := \left(\frac{H_{avg}}{12}\right) \cdot \left(\frac{b_{tf}}{12}\right) \cdot (w_c)$ $\boxed{w_h = 0.100}$ klf

weight of diaphragms $\boxed{w_D := 0.006}$ klf

weight of slab

$w_d := \left(\frac{t_s}{12}\right) \cdot (S) \cdot (w_c)$ $\boxed{w_d = 0.750}$ ksf

$DC_1 := w_g + w_h + w_D + w_d$ $\boxed{DC_1 = 1.809}$ klf

$V_{DC1} := \frac{DC_1 \cdot L}{2}$ $\boxed{V_{DC1} = 132}$ kips

$M_{DC1} := \frac{DC_1 \cdot L^2}{8}$ $\boxed{M_{DC1} = 4820}$ kip-ft

* Dead load on composite (DC_2):

weight of single parapet, klf $w_p = 0.387$ klf

weight of 2 parapets, divided equally to all girders, klf

$$DC_2 := \frac{w_p \cdot 2}{ng}$$ $DC_2 = 0.129$ klf

$$V_{DC2} := \frac{DC_2 \cdot L}{2}$$ $V_{DC2} = 9$ kips

$$M_{DC2} := \frac{DC_2 \cdot L^2}{8}$$ $M_{DC2} = 344$ kip-ft

* Wearing Surface (DW): There is no current wearing surface on this bridge. However, it is designed for a 20 psf future wearing surface. Thus, it will be used in the calculations for the Wisconsin Standard Permit Vehicle Design Check, Section 45.12.

$$DW := \frac{w \cdot 0.020}{ng}$$ $DW = 0.133$ klf

$$V_{DW} := \frac{DW \cdot L}{2}$$ $V_{DW} = 10$ kips

$$M_{DW} := \frac{DW \cdot L^2}{8}$$ $M_{DW} = 355$ kip-ft

* **LRFD [4.6.2.2.1]** states that permanent loads on the deck may be distributed uniformly among the beams. This method is used for the parapet and future wearing surface loads.

E45-2.5 Live Load Analysis - Interior Girder

Live Load Distribution Factors (g)

In accordance with **LRFD [Table 4.6.2.2.1-1]**, this structure is a Type "K" bridge.

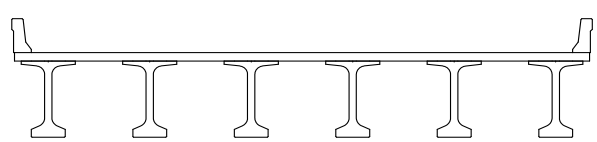

Distribution factors are in accordance with **LRFD [Table 4.6.2.2.2b-1]**. For an interior beam, the distribution factors are shown below:

For one Design Lane Loaded:

$$0.06 + \left(\frac{S}{14}\right)^{0.4} \cdot \left(\frac{S}{L}\right)^{0.3} \cdot \left(\frac{K_g}{12.0 \cdot L \cdot t_{se}^{\ 3}}\right)^{0.1}$$

For Two or More Design Lanes Loaded:

$$0.075 + \left(\frac{S}{9.5}\right)^{0.6} \cdot \left(\frac{S}{L}\right)^{0.2} \cdot \left(\frac{K_g}{12.0 \cdot L \cdot t_{se}^{\ 3}}\right)^{0.1}$$

E45-2.5.1 Moment Distribution Factors for Interior Beams:

One Lane Loaded:

$$g_{i1} := 0.06 + \left(\frac{S}{14}\right)^{0.4} \cdot \left(\frac{S}{L}\right)^{0.3} \cdot \left(\frac{K_g}{12.0 \cdot L \cdot t_{se}^{\ 3}}\right)^{0.1} \qquad \boxed{g_{i1} = 0.435}$$

Two or More Lanes Loaded:

$$g_{i2} := 0.075 + \left(\frac{S}{9.5}\right)^{0.6} \cdot \left(\frac{S}{L}\right)^{0.2} \cdot \left(\frac{K_g}{12.0 \cdot L \cdot t_{se}^{\ 3}}\right)^{0.1} \qquad \boxed{g_{i2} = 0.636}$$

$$g_i := \max(g_{i1}, g_{i2}) \qquad \boxed{g_i = 0.636}$$

Note: The distribution factors above already have a multiple presence factor included that is used for service and strength limit states. For permit load analysis utilizing single lane distribution, the 1.2 multiple presence factor should be divided out.

E45-2.5.2 Shear Distribution Factors for Interior Beams:

One Lane Loaded:

$$g_{v1} := 0.36 + \frac{S}{25} \qquad \boxed{g_{v1} = 0.660}$$

Two or More Lanes Loaded:

$$g_{v2} := 0.2 + \frac{S}{12} - \left(\frac{S}{35}\right)^2 \qquad \boxed{g_{v2} = 0.779}$$

$$g_v := \max(g_{v1}, g_{v2}) \qquad \boxed{g_v = 0.779}$$

E45-2.5.3 Live Load Moments

The unfactored live load load moments (per lane including impact) are listed below (values are in kip-ft). Note that the dynamic load allowance is applied only to the truck portion of the HL-93 loads.

Unfactored Live Load + Impact Moments per Lane (kip-ft)		
Tenth Point	Truck	Tandem
0	0	0
0.1	1783	1474
0.2	2710	2618
0.3	4100	3431
0.4	4665	3914
0.5	4828	4066

The unfactored live load moments per lane are calculated by applying the appropriate distribution factor to the controlling moment. For the interior girder:

$g_i = 0.636$

$M_{LLIM} := g_i \cdot 4828$ $\boxed{M_{LLIM} = 3073}$ kip-ft

E45-2.6 Compute Nominal Flexural Resistance at Midspan

At failure, we can assume that the tendon stress is:

$$f_{ps} = f_{pu}\left(1 - k \cdot \frac{c}{d_p}\right)$$

where:

$$k = 2\left(1.04 - \frac{f_{py}}{f_{pu}}\right)$$

From **LRFD Table [C5.6.3.1.1-1]**, for low relaxation strands, $k := 0.28$.

"c" is defined as the distance between the neutral axis and the compression face (inches).

Assumed dimensions:

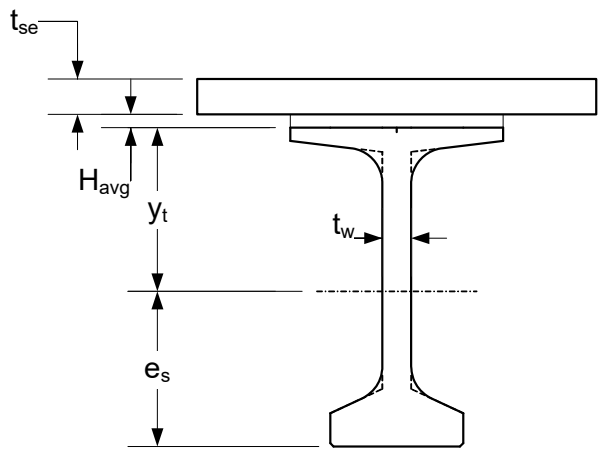

Figure E45-2.4

Assume that the compression block is in the deck. Calculate the capacity as if it is a rectangular section (with the compression block in the flange). The neutral axis location,calculated in accordance with **LRFD 5.6.3.1.1** for a rectangular section, is:

$$c = \frac{A_{ps} \cdot f_{pu}}{\alpha_1 \cdot f'_{cd} \cdot \beta_1 \cdot b + k \cdot A_{ps} \cdot \frac{f_{pu}}{d_p}}$$

where:

$A_{ps} := ns \cdot A_s$ $\quad$ $A_{ps} = 9.98$ in^2

$b := b_{eff}$ $\quad$ $b = 90.00$ in

LRFD [5.6.2.2] $\quad \alpha_1 := 0.85 \quad$ (for $f'_{cd} \le 10.0$ ksi)

$\beta_1 := \max\left[0.85 - \left(f'_{cd} - 4\right) \cdot 0.05, 0.65\right]$ $\quad$ $\beta_1 = 0.850$

$d_p := y_t + H_{avg} + t_{se} - e_s$ $\quad$ $d_p = 77.15$ in

$$c := \frac{A_{ps} \cdot f_{pu}}{\alpha_1 \cdot f'_{cd} \cdot \beta_1 \cdot b + k \cdot A_{ps} \cdot \frac{f_{pu}}{d_p}}$$ $\quad$ $c = 9.99$ in

$a := \beta_1 \cdot c$ $\quad$ $a = 8.49$ in

The calculated value of "a" is greater than the deck thickness. Therefore, the rectangular assumption is incorrect and the compression block extends into the haunch. Calculate the neutral axis location and capacity for a flanged section:

$h_f := t_{se}$ $\quad$ depth of compression flange $\quad$ $t_{se} = 7.500$ in

$b_{tf} = 48.00$ $\quad$ width of top flange, inches

$$c := \frac{A_{ps} \cdot f_{pu} - \alpha_1 \cdot f'_{cd} \cdot (b - b_{tf}) \cdot h_f}{\alpha_1 \cdot f'_{cd} \cdot \beta_1 \cdot b_{tf} + k \cdot A_{ps} \cdot \frac{f_{pu}}{d_p}}$$ $\boxed{c = 10.937}$ in

$a := \beta_1 \cdot c$ $\boxed{a = 9.30}$ in

This is above the base of the haunch (9.5 inches) and nearly to the web of the girder. Assume OK.
Now calculate the effective tendon stress at ultimate:

$f_{ps} := f_{pu} \cdot \left(1 - k \cdot \frac{c}{d_p}\right)$ $\boxed{f_{ps} = 259.283}$ ksi

$T_u := f_{ps} \cdot A_{ps}$ $\boxed{T_u = 2588}$ kips

Calculate the nominal moment capacity of the composite section in accordance with **LRFD [5.6.3.2], [5.6.3.2.2]**:

$$M_n := \left[A_{ps} \cdot f_{ps} \cdot \left(d_p - \frac{a}{2}\right) + \alpha_1 \cdot f'_{cd} \cdot (b - b_{tf}) \cdot h_f \cdot \left(\frac{a}{2} - \frac{h_f}{2}\right)\right] \cdot \frac{1}{12}$$

$\boxed{M_n = 15717}$ kip-ft

For prestressed concrete, $\phi_f := 1.00$, **LRFD [5.5.4.2]**. Therefore the usable capacity is:

$M_r := \phi_f \cdot M_n$ $\boxed{M_r = 15717}$ kip-ft

Check Minimum Reinforcement
The amount of reinforcement must be sufficient to develop M_r equal to the lesser of M_{cr} or 1.33 M_u per **LRFD [5.6.3.3]**

$\gamma_{LL} := 1.75$ $\gamma_{DC} = 1.250$ $\eta := 1.0$

$Mu := \eta \cdot \left[\gamma_{DC} \cdot (M_{DC1} + M_{DC2}) + \gamma_{LL} \cdot M_{LLIM}\right]$ $\boxed{Mu = 11832}$ kip-ft

$\boxed{1.33 \cdot Mu = 15737}$ kip-ft

Calculate M_{cr} next and compare its value with 1.33 Mu

M_{cr} is calculated as follows:

$f_r = 0.24 \cdot \lambda \sqrt{f'_c}$ = modulus of rupture (ksi) **LRFD [5.4.2.6]**

$f_r := 0.24 \cdot \sqrt{f'_c}$ $\lambda = 1.0$ (normal wgt. conc.) **LRFD [5.4.2.8]** $f_r = 0.679$ ksi

$f_{cpe} := \frac{T}{A_g} + \frac{T \cdot e_s}{S_b}$ $f_{cpe} = 4.341$ ksi

$M_{dnc} := M_{DC1}$ $M_{dnc} = 4820$ kip-ft

$S_c := -S_{cgb}$ $S_c = 24650$ ksi

$S_{nc} := -S_b$ $S_{nc} = 18825$ ksi

$\gamma_1 := 1.6$ flexural cracking variability factor

$\gamma_2 := 1.1$ prestress variability factor

$\gamma_3 := 1.0$ for prestressed concrete members

$$M_{cr} := \gamma_3 \cdot \left[S_c \cdot \left(\gamma_1 \cdot f_r + \gamma_2 \cdot f_{cpe} \right) \cdot \frac{1}{12} - M_{dnc} \cdot \left(\frac{S_c}{S_{nc}} - 1 \right) \right]$$ $M_{cr} = 10547$ kip-ft

$M_{cr} = 10547$ kip-ft $<$ $1.33Mu = 15737$, therefore M_{cr} controls

This satisfies the minimum reinforcement check since $M_{cr} < M_r$

Elastic Shortening Loss

at transfer (before ES loss) **LRFD [5.9.3.2]**

$T_{oi} := ns \cdot f_{tr} \cdot A_s$ $= 46 \cdot 202.5 \cdot 0.217 = 2021$ kips

The ES loss estimated above was: $\Delta f_{pES_est} := 17$ ksi, or $ES_{loss} = 7.900$ %. The resulting force in the strands after ES loss:

$T_o := \left(1 - \frac{ES_{loss}}{100}\right) \cdot T_{oi}$ $T_o = 1862$ kips

If we assume all strands are straight we can calculate the initial elastic shortening loss;

$$f_{cgp} := \frac{T_o}{A_g} + (T_o \cdot e_s) \cdot \frac{e_s}{I_g} + M_g \cdot 12 \cdot \frac{e_s}{I_g}$$ $f_{cgp} = 3.240$ ksi

$E_{ct} = 4999$ ksi

$$E_p := E_s$$ $E_p = 28500$ ksi

$$\Delta f_{pES} := \frac{E_p}{E_{ct}} \cdot f_{cgp}$$ $\Delta f_{pES} = 18.471$ ksi

$$f_i := f_{tr} - \Delta f_{pES}$$ $f_i = 184.029$ ksi

Approximate Estimate of Time Dependant Losses

Calculate the components of the time dependant losses; shrinkage, creep and relaxation, using the approximate method in accordance with **LRFD [5.9.3.3]**.

$$\Delta f_{pLT} = 10.0 \cdot \frac{f_{pi} \cdot A_s}{A_g} \cdot \gamma_h \cdot \gamma_{st} + 12.0 \cdot \gamma_h \cdot \gamma_{st} + \Delta f_{pR}$$

From **LRFD [Figure 5.4.2.3.3-1]**, the average annual ambient relative humidity, $H := 72$ %.

$$\gamma_h := 1.7 - 0.01 \cdot H$$ $\gamma_h = 0.980$

$$\gamma_{st} := \frac{5}{1 + f'_{ci}}$$ $\gamma_{st} = 0.641$

$\Delta f_{pR} := 2.4$ ksi for low relaxation strands

$$\Delta f_{pCR} := 10.0 \cdot \frac{f_{tr} \cdot A_s \cdot ns}{A_g} \cdot \gamma_h \cdot \gamma_{st}$$ $\Delta f_{pCR} = 13.878$ ksi

$$\Delta f_{pSR} := 12.0 \cdot \gamma_h \cdot \gamma_{st}$$ $\Delta f_{pSR} = 7.538$ ksi

$$\Delta f_{pRE} := \Delta f_{pR}$$ $\Delta f_{pRE} = 2.400$ ksi

$$\Delta f_{pLT} := \Delta f_{pCR} + \Delta f_{pSR} + \Delta f_{pRE}$$ $\Delta f_{pLT} = 23.816$ ksi

The total estimated prestress loss (Approximate Method):

$$\Delta f_p := \Delta f_{pES} + \Delta f_{pLT}$$

$\boxed{\Delta f_p = 42.288}$ ksi

$\boxed{\frac{\Delta f_p}{f_{tr}} \cdot 100 = 20.883}$ % total prestress loss

The remaining stress in the strands and total force in the beam after all losses is:

$$f_{pe} := f_{tr} - \Delta f_p$$

$\boxed{f_{pe} = 160.21}$ ksi

E45-2.7 Compute Nominal Shear Resistance at First Critical Section

Note: **MBE [6A.5.8]** does not require a shear evaluation for the Design Load Rating or the Legal Load Rating provided the bridge shows no visible sign of shear distress. However, for this example, we will show one iteration for the Design Load Rating.

The shear analysis is always required for Permit Load Rating.

The following will illustrate the calculation at the first critical section only. Due to the variation of resistances for shear along the length of the prestressed concrete I-beam, it is not certain what location will govern. Therefore, a systematic evaluation of the shear and the longitudinal yield criteria based on shear-moment interation should be performed along the length of the beam.

Simplified Procedure for Prestressed and Nonprestressed Sections, **LRFD [5.8.3.4.3]**

$$b_v := t_w$$

$\boxed{b_v = 6.50}$ in

The critical section for shear is taken at a distance of d_v from the face of the support, **LRFD [5.7.3.2]**.

d_v = effective shear depth taken as the distance between the resultants of the tensile and compressive forces due to flexure. It need not be taken less than the greater of $0.9*d_e$ or 0.72h (inches). **LRFD [5.7.2.8]**

The first estimate of d_v is calculated as follows:

$$d_v := -e_s + y_t + H_{avg} + t_{se} - \frac{a}{2}$$

$\boxed{d_v = 72.50}$ in

However, since there are draped strands for a distance of $HD := 49$ from the end of the girder, a revised value of e_s should be calculated based on the estimated location of the critical section. Since the draped strands will raise the center of gravity of the strand group near the girder end, try a smaller value of "d_v" and recalculate "e_s" and "a".

Try $d_v := 65$ inches.

For the standard bearing pad of width, $w_{brg} := 8$ inches, the distance from the end of the girder to the critical section:

$$L_{crit} := \left(\frac{w_{brg}}{2} + d_v\right)\cdot\frac{1}{12} + 0.5 \qquad \boxed{L_{crit} = 6.25} \text{ ft}$$

Calculate the eccentricity of the strand group at the critical section.

$$slope = 10.274$$

$$y_{8t} := A + y_b$$

$$y_{8t} = 32.130$$

$ns_{sb} := 38$ number of undraped strands

$ns_d := 8$ number of draped strands

Find the center of gravity for the 38 straight strands from the bottom of the girder:

$$Y_S := \frac{12\cdot 2 + 12\cdot 4 + 12\cdot 6 + 2\cdot 8}{ns_{sb}} \qquad \boxed{Y_S = 4.211} \text{ in}$$

$$y_s := y_b + Y_S \qquad y_s = -30.659 \text{ in}$$

$$y_{8t_crit} := y_{8t} - \frac{slope}{100}\cdot L_{crit}\cdot 12 \qquad \boxed{y_{8t_crit} = 24.42} \text{ in}$$

$$e_{s_crit} := \frac{ns_{sb}\cdot y_s + ns_d\cdot y_{8t_crit}}{ns_{sb} + ns_d} \qquad \boxed{e_{s_crit} = -21.08} \text{ in}$$

Calculation of compression stress block based on revised eccentricity:

$$d_{p_crit} := y_t + H_{avg} + t_{se} - e_{s_crit} \qquad \boxed{d_{p_crit} = 67.71} \text{ in}$$

Note that the area of steel is based on the number of bonded strands.

$$A_{ps_crit} := (ns)\cdot A_s \qquad \boxed{A_{ps_crit} = 9.98} \text{ in}^2$$

Also, the value of f_{pu}, should be revised if the critical section is located less than the development length from the end of the beam. The development length for a prestressing strand is calculated in accordance with **LRFD [5.9.4.3.2]**:

$K := 1.6$ for prestressed members with a depth greater than 24 inches

$d_b = 0.600$ in

$l_d := K \cdot \left(f_{ps} - \frac{2}{3} \cdot f_{pe}\right) \cdot d_b$ $\quad l_d = 146.4$ in

The transfer length may be taken as: $l_{tr} := 60 \cdot d_b$ $\quad l_{tr} = 36.00$ in

Since $L_{crit} = 6.250$ feet is between the transfer length and the development length, the design stress in the prestressing strand is calculated as follows:

$$f_{pu_crit} := f_{pe} + \frac{L_{crit} \cdot 12 - l_{tr}}{l_d - l_{tr}} \cdot \left(f_{ps} - f_{pe}\right)$$

$f_{pu_crit} = 195$ ksi

For rectangular section behavior:

$$c := \frac{A_{ps_crit} \cdot f_{pu_crit}}{\alpha_1 \cdot f'_{cd} \cdot \beta_1 \cdot b + k \cdot A_{ps_crit} \cdot \frac{f_{pu_crit}}{d_{p_crit}}}$$

$c = 7.267$ in

$a_{crit} := \beta_1 \cdot c$ $\quad a_{crit} = 6.177$ in

Calculation of shear depth based on refined calculations of e_s and a:

$$d_{v_crit} := -e_{s_crit} + y_t + H_{avg} + t_{se} - \frac{a_{crit}}{2}$$

$d_{v_crit} = 64.62$ in

This value matches the assumed value of d_v above. OK!

The nominal shear resistance of the section is calculated as follows, **LRFD [5.7.3.3]**:

$$V_n = \min\left(V_c + V_s + V_p, 0.25 \cdot f'_c \cdot b_v \cdot d_v + V_p\right)$$

where $V_p := 0$ in the calculation of V_n, if the simplified procedure is used (**LRFD [5.8.3.4.3]**).

V_d = shear force at section due to unfactored dead load and includes both DC and DW (kips)

V_i = factored shear force at section due to externally applied loads occurring simultaneously with M_{max} (kips). (Not necessarily equal to V_u.)

M_{cre} = moment causing flexural cracking at section due to externally applied loads (kip-in)

M_{max} = maximum factored moment at section due to externally applied loads (kip-in)

M_{dnc} = total unfactored dead load moment acting on the noncomposite section (kip-ft)

Values for the following moments and shears are at the critical section, $L_{crit} = 6.25$ feet from the end of the girder at the abutment.

$V_{DCnc} = 121.7$ kips

$V_{DCc} = 8.7$ kips

$V_{DWc} = 9.0$ kips

$Vi_{LL} := Vi_{LL_lane} \cdot g_{vi}$ $\quad Vi_{LL} = 100.5$ kips

$V_i := 1.75 \cdot Vi_{LL}$ $\quad V_i = 175.9$ kips

$V_d := V_{DCc} + V_{DCnc} + V_{DWc}$ $\quad V_d = 139.3$ kips

$V_u := 1.25 \cdot (V_{DCnc} + V_{DCc}) + 1.5 \cdot V_{DWc} + 1.75 \cdot Vi_{LL}$ $\quad V_u = 352.2$ kips

$M_{dnc} := 730$ kip-ft

$M_{max} := 837$ kip-ft

However, the equations below require the value of M_{max} to be in kip-in:

$M_{max} = 10044$ kip-in

$f_r = -0.20 \cdot \lambda \sqrt{f'_c}$ = modulus of rupture (ksi) **LRFD [5.4.2.6]**

$f_r := -0.20 \cdot \sqrt{f'_c}$ $\quad \lambda = 1.0$ (normal wgt. conc.) **LRFD [5.4.2.8]** $\quad f_r = -0.566$ ksi

$T_{crit} := A_{ps_crit} \cdot f_{pe}$ $\boxed{T_{crit} = 1599}$ kips

$f_{cpe} := \frac{T_{crit}}{A_g} + \frac{T_{crit} \cdot e_{s_crit}}{S_b}$ $\boxed{f_{cpe} = 3.539}$ ksi

$\boxed{M_{dnc} = 730}$ kip-ft

$\boxed{M_{max} = 10044}$ kip-in

$S_c := S_{cgb}$ $\boxed{S_c = -24650}$ in^3

$S_{nc} := S_b$ $\boxed{S_{nc} = -18825}$ in^3

$M_{cre} := S_c \cdot \left(f_r - f_{cpe} - \frac{12 M_{dnc}}{S_{nc}} \right)$ $\boxed{M_{cre} = 89699}$ kip-in

Calculate V_{ci}, **LRFD [5.8.3.4.3]** λ = 1.0 (normal wgt. conc.) **LRFD [5.4.2.8]**

$V_{ci1} := 0.06 \cdot \lambda \sqrt{f'_c} \cdot b_v \cdot d_v$ $\boxed{V_{ci1} = 71.7}$ kips

$V_{ci2} := 0.02 \cdot \lambda \sqrt{f'_c} \cdot b_v \cdot d_v + V_d + \frac{V_i \cdot M_{cre}}{M_{max}}$ $\boxed{V_{ci2} = 1733.9}$ kips

$V_{ci} := \max(V_{ci1}, V_{ci2})$ $\boxed{V_{ci} = 1733.9}$ kips

$f_t := \frac{T_{crit}}{A_g} + \frac{T_{crit} \cdot e_{s_crit}}{S_t} + \frac{M_{dnc} \cdot 12}{S_t}$ $\boxed{f_t = 0.337}$ ksi

$f_b := \frac{T_{crit}}{A_g} + \frac{T_{crit} \cdot e_{s_crit}}{S_b} + \frac{M_{dnc} \cdot 12}{S_b}$ $\boxed{f_b = 3.073}$ ksi

$\boxed{y_{cgb} = -48.78}$ in

$\boxed{ht = 72.00}$ in

$f_{pc} := f_b - y_{cgb} \cdot \frac{f_t - f_b}{ht}$ $\boxed{f_{pc} = 1.219}$ ksi

$V_{p_cw} := ns_d \cdot A_s \cdot f_{pe} \cdot \frac{slope}{100}$ $\boxed{V_{p_cw} = 28.6}$ kips

Calculate V_{cw}, **LRFD [5.8.3.4.3]** λ = 1.0 (normal wgt. conc.) **LRFD [5.4.2.8]**

$V_{cw} := \left(0.06 \cdot \lambda \sqrt{f'_c} + 0.30 \cdot f_{pc}\right) \cdot b_v \cdot d_v + V_{p_cw}$ $\boxed{V_{cw} = 254.8}$ kips

$V_c := \min(V_{ci}, V_{cw})$ $\boxed{V_c = 254.8}$ kips

Calculate the shear resistance at L_{crit}:

$\phi_v := 0.9$ **LRFD [5.5.4.2]**

$s := 20$ in

$A_v := 0.40$ in^2 for #4 rebar

$f_y := 60$ ksi

$d_v = 65.00$ in

$$\cot\theta := \begin{cases} 1 & \text{if } V_{ci} < V_{cw} \\ \min\left(1.0 + 3\cdot\frac{f_{pc}}{\sqrt{f'_c}}, 1.8\right) & \text{otherwise} \end{cases}$$

$\cot\theta = 1.800$

$$V_s := A_v\cdot f_y\cdot d_v\cdot\frac{\cot\theta}{s}$$

LRFD Eq 5.7.3.3-4 reduced per **C5.7.3.3-1** when α = 90 degrees.

$V_s = 140$ kips

$Vn_1 := V_c + V_s + V_p$ $Vn_1 = 395$ kips

$Vn_2 := 0.25\cdot f'_c\cdot b_v\cdot d_v + V_p$ $Vn_2 = 845$ kips

$V_n := \min(Vn_1, Vn_2)$ $V_n = 395$ kips

$V_r := \phi_v\cdot V_n$ $V_r = 355.69$ kips

E45-2.8 Longitudinal Tension Flange Capacity:

The total capacity of the tension reinforcing must meet the requirements of **LRFD [5.7.3.5].** The capacity is checked at the critical section for shear:

$$V_u := 1.25\cdot(V_{DC1} + V_{DC2}) + 1.50\cdot(V_{DW}) + 1.75\cdot(Vu_{LL})$$

$V_u = 367.320$ kips

$$T_{ps} := \frac{M_{max}}{d_v\cdot\phi_f} + \left(\frac{V_u}{\phi_v} - 0.5\cdot V_s - V_{p_cw}\right)\cdot\cot\theta$$

$T_{ps} = 711$ kips

actual capacity of the straight bonded strands:

$ns_{sb} \cdot A_s \cdot f_{pu_crit} = 1610$ kips

Is the capacity of the straight bonded strands greater than T_{ps}? check = "OK"

Check the tension Capacity at the edge of the bearing:

The strand is anchored $l_{px} := 10$ inches. The transfer and development lengths for a prestressing strand are calculated in accordance with **LRFD [5.9.4.3.2]**:

$l_{tr} = 36.00$ in

$l_d = 146.4$ in

Since l_{px} is less than the transfer length, the design stress in the prestressing strand is calculated as follows:

The assumed crack plane crosses the centroid of the straight strands at

$l_{px'} := l_{px} + Y_S \cdot \cot\theta$ $Y_S = 4.211$ in $l_{px'} = 17.58$ in

$f_{pb} := \dfrac{f_{pe} \cdot l_{px'}}{60 \cdot d_b}$ $f_{pb} = 78.23$ kips

Tendon capacity of the straight bonded strands: $ns_{sb} \cdot A_s \cdot f_{pb} = 645$ kips

The values of V_u, V_s, V_p and θ may be taken at the location of the critical section.

Over the length d_v, the average spacing of the stirrups is:

$s_{ave} := \dfrac{6 \cdot 4.5 + 3 \cdot s}{9}$ $s_{ave} = 9.67$ in

$V_s := A_v \cdot f_y \cdot d_v \cdot \dfrac{\cot\theta}{s_{ave}}$ $V_s = 290$ kips

The vertical component of the draped strands is: $V_{p_cw} = 29$ kips

The factored shear force at the critical section is: $V_{u_crit} = 352$ kips

E45-2.9 Design Load Rating

At the Strength I Limit State:

$$RF = \frac{(\phi_c)(\phi_s)(\phi)R_n - \gamma_{DC}(DC_1) - \gamma_{DW}(DW_1)}{\gamma_L(LL + IM)}$$

Live Load Factors taken from Table 45.3-1

$\gamma_{L_inv} := 1.75$ $\gamma_{DC} := 1.25$ $\gamma_{servLL} := 0.8$

$\gamma_{L_op} := 1.35$ $\phi_c := 1.0$ $\phi_s := 1.0$

$\phi := 1.0$ for flexure

$\phi := 0.9$ for shear

For Flexure

Inventory Level

$$RF_{Mom_Inv} := \frac{(1)(1)(1)(M_n) - \gamma_{DC}\cdot(M_{DC1} + M_{DC2})}{\gamma_{L_inv}\cdot(M_{LLIM})}$$

$$\boxed{RF_{Mom_Inv} = 1.723}$$

Operating Level

$$RF_{Mom_Op} := \frac{(1)(1)(1)(M_n) - \gamma_{DC}\cdot(M_{DC1} + M_{DC2})}{\gamma_{L_op}\cdot(M_{LLIM})}$$

$$\boxed{RF_{Mom_Op} = 2.233}$$

For Shear at first critical section

Inventory Level

$$RF_{shear_Inv} := \frac{(1)(1)(0.9)(V_n) - \gamma_{DC}\cdot(V_{DCnc} + V_{DCc})}{\gamma_{L_inv}\cdot(V_{iLL})}$$

$$\boxed{RF_{shear_Inv} = 1.096}$$

Operating Level

$$RF_{shear_Op} := \frac{(1)(1)(0.9)(V_n) - \gamma_{DC}\cdot(V_{DCnc} + V_{DCc})}{\gamma_{L_op}\cdot(V_{iLL})}$$

$RF_{shear_Op} = 1.421$

At the Service III Limit State (Inventory Level):

$$RF = \frac{f_R - \gamma_D\cdot(f_D)}{\gamma_{servLL}(f_{LLIM})}$$

$T := ns\cdot A_s\cdot f_{pe}$ $T = 1599$ kips

$f_{pb} := \frac{T}{A_g} + \frac{T\cdot(e_s)}{S_b}$ $f_{pb} = 4.341$ ksi

Allowable Tensile Stress **LRFD [5.9.2.3.2b]**

$t_{all} = -0.19\cdot\lambda\sqrt{f'_c}$ $\lambda = 1.0$ (normal wgt. conc.) **LRFD [5.4.2.8]**

$t_{all} := -0.19\cdot\sqrt{f'_c}$; $|t_{all}| \le 0.6$ ksi $t_{all} = -0.537$ ksi

$f_R := f_{pb} - t_{all}$ $f_R = 4.878$ ksi

Live Load Stresses:

$f_{LLIM} := \frac{M_{LLIM}\cdot 12}{S_{cgb}}$ $f_{LLIM} = 1.496$ ksi

Dead Load Stresses:

$f_{DL} := \frac{M_{DC1}\cdot 12}{S_b} + \frac{M_{DC2}\cdot 12}{S_{cgb}}$ $f_{DL} = 3.240$ ksi

$RF_{serviceIII} := \frac{f_R - 1.0\cdot(f_{DL})}{\gamma_{servLL}\cdot(f_{LLIM})}$ $RF_{serviceIII} = 1.369$

E45-2.10 Legal Load Rating

Since the Operating Design Load Rating RF>1.0, the Legal Load Rating is not required. The Legal Load computations that follow have been done for illustrative purposes only. Shear ratings have not been illustrated.

Live Loads used will be the AASHTO Legal Loads per Figure 45.10-1 and AASHTO Specialized Hauling Vehicles per Figure 45.10-2.

$g_i = 0.636$

$IM := 33$ %

* WisDOT does not allow for a dynamic load allowance reduction based on the smoothness of the roadway surface. Thus, IM=33%

At the Strength I Limit State:

$$RF = \frac{(\phi_c)(\phi_s)(\phi)R_n - \gamma_{DC}(DC_1) - \gamma_{DW}(DW_1)}{\gamma_L(LL + IM)}$$

Live Load Factors taken from Tables 45.3-1 and 45.3-2

$\phi_c := 1.0$ $\phi_s := 1.0$

$\phi := 1.0$

$\gamma_{L_Legal} := 1.45$ $\gamma_{DC} := 1.25$

$\gamma_{L_SU} := 1.45$

For Flexure

$$RF_{Legal} := \frac{(1)(1)(1)(M_n) - \gamma_{DC}\cdot(M_{DC1} + M_{DC2})}{\gamma_{L_Legal}\cdot(M_{LLIM})}$$

$$RF_{SU} := \frac{(1)(1)(1)(M_n) - \gamma_{DC}\cdot(M_{DC1} + M_{DC2})}{\gamma_{L_SU}\cdot(M_{LLIM})}$$

AASHTO Type	Truck Type	Truck Weight (Tons)	M_{LL} (Per Lane) (ft-kips)	M_{LLIM} ($M_{LL} * IM * g_i$) ft-kips	RF Strength I Flexure	Safe Load Capacity (Tons)	Posting?
Commercial Trucks	Type 3	25	1671.0	1413.4	4.520	113	No
	Type 3S2	36	2150.0	1818.6	3.513	126	No
	Type 3-3	40	2260.0	1911.7	3.342	134	No
Specialized Hauling Vehicles	SU4	27	1831.0	1548.8	4.124	111	No
	SU5	31	2062.8	1744.9	3.661	113	No
	SU6	34.75	2294.6	1940.9	3.291	114	No
	SU7	38.75	2540.8	2149.2	2.972	115	No

As expected, all rating factors are well above 1.0. However, if any of the rating factors would have fallen below 1.0, the posting capacity would have been calculated per 45.10.3.2:

$$\text{Posting} := \left(\frac{W}{0.7}\right)[(RF) - 0.3]$$

E45-2.11 Permit Load Rating

For any bridge design (new or rehabilitation) or bridge re-rate, the Wisconsin Standard Permit Vehicle (Wis-SPV) shall be analyzed per 45.12.

The bridge shall be analyzed for this vehicle considering both single-lane and multi-lane distribution. Also, the vehicle will be analyzed assuming it is mixing with other traffic on the bridge and that full dynamic allowance is utilized. Future wearing surface shall be included.

Since this example is rating a newly designed bridge, an additional check is required. The designer shall ensure that the results of the single-lane analysis are greater than 190 kips MVW.

Also, divide out the 1.2 multiple presence factor per **MBE [6A.4.5.4.2]** for the single lane distribution factor run.

For 146' span:

$M190_{LL} := 4930.88$ kip-ft per lane

$V190_{LL} := 145.08$ kips at $\boxed{d_v = 65}$ in

for Strength Limit State

Single Lane Distribution w/ Future Wearing surface (Design check per 45.12)

$g_{m1} := 0.435 \frac{1}{1.2}$ $\boxed{g_{m1} = 0.363}$

$g_{v1} := .660 \cdot \frac{1}{1.2}$ $\boxed{g_{v1} = 0.550}$

For flexure:

$M_{190LLIM} := M190_{LL} \cdot g_{m1} \cdot 1.33$ $\boxed{M_{190LLIM} = 2377}$ kip-ft

$$RF_{190_moment} := \frac{\left[(1)(1)(1)M_n\right] - 1.25 \cdot \left(M_{DC1} + M_{DC2}\right) - 1.5 \cdot \left(M_{DW}\right)}{1.2\left(M_{190LLIM}\right)}$$

$\boxed{RF_{190_moment} = 3.060}$

$Wt := RF_{190_moment} \cdot 190$ $\boxed{Wt = 581}$ kips >> 190 kips, OK

For shear:

$V_{190LLIM} := V190_{LL} \cdot g_{v1} \cdot 1.33$ $\boxed{V_{190LLIM} = 106}$ kips

$$RF_{190_shear} := \frac{\left[(1)(1)(0.9)V_n\right] - 1.25 \cdot \left(V_{DCnc} + V_{DCc}\right) - 1.5\left(V_{DW}\right)}{1.2\left(V_{190LLIM}\right)}$$

$\boxed{RF_{190_shear} = 1.399}$

$Wt := RF_{190_shear} \cdot 190$ $\boxed{Wt = 266}$ kips > 190 kips, OK

Single Lane Distribution w/o Future Wearing surface (For plans and rating sheet only)

$g_{m1} := 0.435 \frac{1}{1.2}$ $\boxed{g_{m1} = 0.363}$

$g_{v1} := .660 \cdot \frac{1}{1.2}$ $\boxed{g_{v1} = 0.550}$

For flexure:

$M_{190LLIM} := M190_{LL} \cdot g_{m1} \cdot 1.33$ $\boxed{M_{190LLIM} = 2377}$ kip-ft

$$RF_{190_moment} := \frac{\left[(1)(1)(1)M_n\right] - 1.25\cdot\left(M_{DC1} + M_{DC2}\right)}{1.2\left(M_{190LLIM}\right)}$$

$RF_{190_moment} = 3.247$

$Wt := RF_{190_moment}\cdot 190$ $\quad Wt = 617$

For shear:

$V_{190LLIM} := V190_{LL}\cdot g_{v1}\cdot 1.33$ $\quad V_{190LLIM} = 106$ kips

$$RF_{190_shear} := \frac{\left[(1)(1)(0.9)V_n\right] - 1.25\cdot\left(V_{DCnc} + V_{DCc}\right)}{1.2\left(V_{190LLIM}\right)}$$

$RF_{190_shear} = 1.514$

$Wt := RF_{190_shear}\cdot 190$ $\quad Wt = 288$

Multi-Lane Distribution w/o Future Wearing Surface (For plans and rating sheet only)

$g_{m2} := 0.636$ $\quad g_{m2} = 0.636$

$g_{v2} := .779$ $\quad g_{v2} = 0.779$

For flexure:

$M_{190LLIM} := M190_{LL}\cdot g_{m2}\cdot 1.33$ $\quad M_{190LLIM} = 4171$ kip-ft

$$RF_{190_moment} := \frac{\left[(1)(1)(1)M_n\right] - 1.25\cdot\left(M_{DC1} + M_{DC2}\right)}{1.3\left(M_{190LLIM}\right)}$$

$RF_{190_moment} = 1.708$

$Wt := RF_{190_moment}\cdot 190$ $\quad Wt = 325$

For shear:

$V_{190LLIM} := V190_{LL} \cdot g_{v2} \cdot 1.33$ $\boxed{V_{190LLIM} = 150}$ kips

$$RF_{190_shear} := \frac{(1)(1)(0.9)V_n - 1.25 \cdot (V_{DCnc} + V_{DCc})}{1.3(V_{190LLIM})}$$

$\boxed{RF_{190_shear} = 0.987}$

$Wt := RF_{190_shear} \cdot 190$ $\boxed{Wt = 187}$

E45-2.12 Summary of Rating Factors

Interior Girder							
Limit State		Design Load Rating		Legal Load Rating	Permit Load Rating (kips)		
		Inventory	Operating		Single Lane w/ FWS	Single Lane w/o FWS	Multi Lane w/o FWS
Strength I	Flexure	1.723	2.233	N/A	581	617	325
	Shear	1.096	1.421	N/A	266	288	187
Service III		1.369	N/A	N/A	N/A	N/A	N/A
Service I		N/A	N/A	N/A	Optional	Optional	Optional

This page intentionally left blank.

Table of Contents

E45-3 Two Span 54W" Prestressed Girder Bridge - Continuity Reinforcement, LRFD Design, Rating Example - LRFR . . . 2
E45-3.1 Design Criteria . . . 3
E45-3.2 Modulus of Elasticity of Beam and Deck Material . . . 3
E45-3.3 Section Properties . . . 3
E45-3.4 Girder Layout . . . 4
E45-3.5 Loads . . . 4
E45-3.5.1 Dead Loads . . . 4
E45-3.5.2 Live Loads . . . 5
E45-3.6 Load Distribution to Girders . . . 5
E45-3.6.1 Distribution Factors for Interior Beams: . . . 6
E45-3.8 Dead Load Moments . . . 7
E45-3.9 Live Load Moments . . . 8
E45-3.10 Composite Girder Section Properties . . . 8
E45-3.11 Flexural Strength Capacity at Pier . . . 10
E45-3.12 Design Load Rating . . . 11
E45-3.13 Permit Load Rating . . . 11
E45-3.14 Summary of Rating Factors . . . 12

E45-3 Two Span 54W" Prestressed Girder Bridge - Continuity Reinforcement, LRFD Design, Rating Example - LRFR

This example will perform the LRFR rating calcualtions for the bridge that was designed in Chapter 19 of this manual (E19-2). Though it is necessary to rate both the interior and exterior girders to determine the minimum capacity, this example will analyze the interior girder only in the negative moment region (continuity reinforcement).

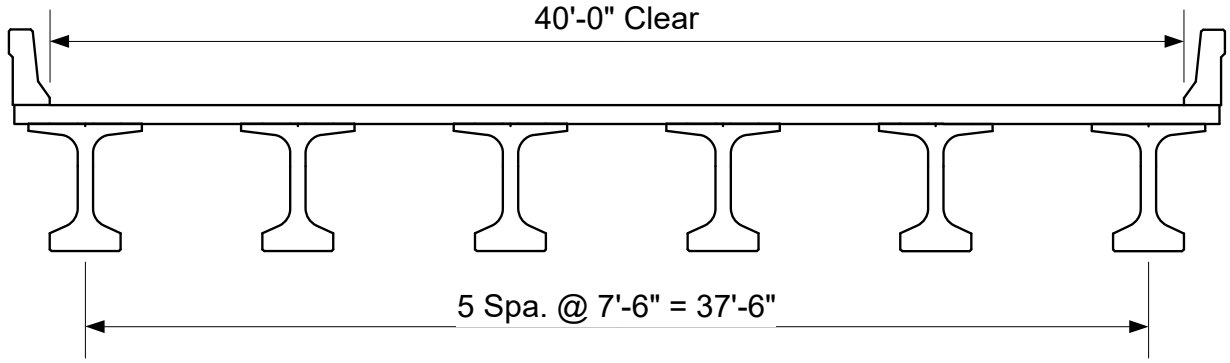

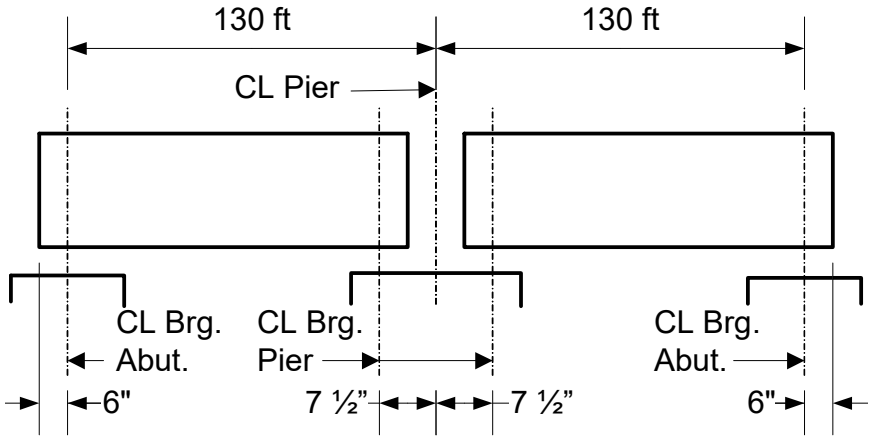

E45-3.1 Design Criteria

$L := 130$	center of bearing at abutment to CL pier for each span, ft
$L_g := 130.375$	total length of the girder (the girder extends 6 inches past the center of bearing at the abutment and 1.5" short of the center line of the pier).
$w_b := 42.5$	out to out width of deck, ft
$w := 40$	clear width of deck, 2 lane road, 3 design lanes, ft
$f'_c := 8$	girder concrete strength, ksi
$f'_{cd} := 4$	deck concrete strength, ksi
$f_y := 60$	yield strenght of mild reinforcement, ksi

$E_s := 29000$	ksi, Modulus of Elasticity of the reinforcing steel
$w_p := 0.387$	weight of Wisconsin Type LF parapet, klf
$t_s := 8$	slab thickness, in
$t_{se} := 7.5$	effective slab thickness, in
$skew := 0$	skew angle, degrees
$w_c := 0.150$	kcf
$h := 2$	height of haunch, inches

E45-3.2 Modulus of Elasticity of Beam and Deck Material

Based on past experience, the modulus of elasticity for the precast and deck concrete are given in Chapter 19 as $E_{beam6} := 5500$ ksi and $E_{deck4} := 4125$ ksi for concrete strengths of 6 and 4 ksi respectively. The values of E for different concrete strengths are calculated as follows (ksi):

$$E_{beam8} := 5500 \cdot \frac{\sqrt{f'_c \cdot 1000}}{\sqrt{6000}} \qquad \boxed{E_{beam8} = 6351} \qquad E_B := E_{beam8}$$

$$E_D := E_{deck4}$$

$$n := \frac{E_B}{E_D} \qquad \boxed{n = 1.540}$$

E45-3.3 Section Properties

54W Girder Properties:

$w_{tf} := 48$	in
$t_w := 6.5$	in
$ht := 54$	in
$b_w := 30$	width of bottom flange, in
$A_g := 798$	in^2
$I_g := 321049$	in^4
$y_t := 27.70$	in
$y_b := -26.30$	in

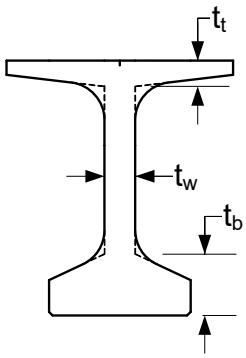

E45-3.4 Girder Layout

$S := 7.5$	Girder Spacing, feet
$s_{oh} := 2.50$	Deck overhang, feet
$ng := 6$	Number of girders

E45-3.5 Loads

$w_g := 0.831$	weight of 54W girders, klf
$w_d := 0.100$	weight of 8-inch deck slab (interior), ksf
$w_h := 0.100$	weight of 2-in haunch, klf
$w_{di} := 0.410$	weight of each diaphragm on interior girder (assume 2), kips
$w_{ws} := 0.020$	future wearing surface, ksf
$w_p = 0.387$	weight of parapet, klf

E45-3.5.1 Dead Loads

Dead load on non-composite (DC):

interior:

$$w_{dlii} := w_g + w_d \cdot S + w_h + 2 \cdot \frac{w_{di}}{L}$$

$\boxed{w_{dlii} = 1.687}$ klf

* Dead load on composite (DC):

$$w_p := \frac{2 \cdot w_p}{ng}$$

$\boxed{w_p = 0.129}$ klf

* Wearing Surface (DW):

$$w_{ws} := \frac{w \cdot w_{ws}}{ng}$$

$\boxed{w_{ws} = 0.133}$ klf

* **LRFD [4.6.2.2.1]** states that permanent loads on the deck may be distributed uniformly among the beams. This method is used for the parapet and future wearing surface loads.

E45-3.5.2 Live Loads

For Stength 1 and Service 1:

HL-93 loading = truck + lane **LRFD [3.6.1.3.1]**

truck pair + lane

DLA of 33% applied to truck or tandem, but not to lane per **LRFD [3.6.2.1].**

For Fatigue:

HL-93 truck (no lane) with 15% DLA and 30 ft rear axle spacing per **LRFD [3.6.1.4.1].**

E45-3.6 Load Distribution to Girders

In accordance with **LRFD [Table 4.6.2.2.1-1]**,
this structure is a Type "K" bridge.

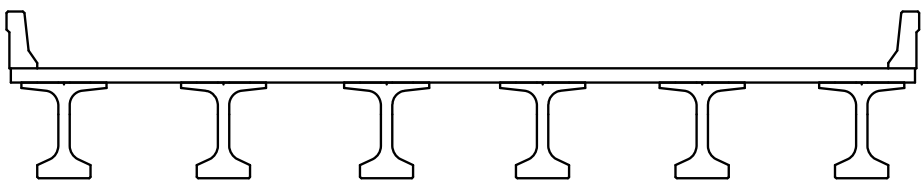

Distribution factors are in accordance with **LRFD [Table 4.6.2.2.2b-1]**. For an interior beam, the distribution factors are shown below:

For one Design Lane Loaded:

$$0.06 + \left(\frac{S}{14}\right)^{0.4} \cdot \left(\frac{S}{L}\right)^{0.3} \cdot \left(\frac{K_g}{12.0 \cdot L \cdot t_{se}^{\,3}}\right)^{0.1}$$

For Two or More Design Lanes Loaded:

$$0.075 + \left(\frac{S}{9.5}\right)^{0.6} \cdot \left(\frac{S}{L}\right)^{0.2} \cdot \left(\frac{K_g}{12.0 \cdot L \cdot t_{se}^{\,3}}\right)^{0.1}$$

$e_g := y_t + h + \frac{t_{se}}{2}$ $\boxed{e_g = 33.45}$ in

LRFD [Eq 4.6.2.2.1-1]

$K_g := n \cdot \left(I_g + A_g \cdot e_g^{\,2}\right)$ $\boxed{K_g = 1868972}$ in^4

Criteria for using distribtion factors - Range of Applicability per **LRFD [Table 4.6.2.2.2b-1]**.

$$DeckSpan := \begin{cases} \text{"OK"} & \text{if } 3.5 \le S \le 16 \\ \text{"NG"} & \text{otherwise} \end{cases}$$

$$DeckThickness := \begin{cases} \text{"OK"} & \text{if } 4.5 \le t_s \le 12 \\ \text{"NG"} & \text{otherwise} \end{cases}$$

$$BridgeSpan := \begin{cases} \text{"OK"} & \text{if } 20 \le L \le 240 \\ \text{"NG"} & \text{otherwise} \end{cases}$$

$$NoBeams := \begin{cases} \text{"OK"} & \text{if } ng \ge 4 \\ \text{"NG"} & \text{otherwise} \end{cases}$$

$$LongitStiffness := \begin{cases} \text{"OK"} & \text{if } 10000 \le K_g \le 7000000 \\ \text{"NG"} & \text{otherwise} \end{cases}$$

$$x := \begin{pmatrix} S & DeckSpan \\ t_s & DeckThickness \\ L & BridgeSpan \\ ng & NoBeams \\ K_g & LongitStiffness \end{pmatrix} \qquad x = \begin{pmatrix} 7.5 & \text{"OK"} \\ 8.0 & \text{"OK"} \\ 130.0 & \text{"OK"} \\ 6.0 & \text{"OK"} \\ 1868972.4 & \text{"OK"} \end{pmatrix}$$

E45-3.6.1 Distribution Factors for Interior Beams:

One Lane Loaded:

$$g_{i1} := 0.06 + \left(\frac{S}{14}\right)^{0.4} \cdot \left(\frac{S}{L}\right)^{0.3} \cdot \left(\frac{K_g}{12.0 \cdot L \cdot t_{se}^{\,3}}\right)^{0.1} \qquad g_{i1} = 0.427$$

Two or More Lanes Loaded:

$$g_{i2} := 0.075 + \left(\frac{S}{9.5}\right)^{0.6} \cdot \left(\frac{S}{L}\right)^{0.2} \cdot \left(\frac{K_g}{12.0 \cdot L \cdot t_{se}^{\,3}}\right)^{0.1} \qquad g_{i2} = 0.619$$

$$g_i := \max(g_{i1}, g_{i2}) \qquad g_i = 0.619$$

Note: The distribution factors above already have a multiple lane factor included. For the Wis-SPV Design Check, the distribution factor for One Lane Loaded should be used and the 1.2 multiple presence factor should be divided out.

E45-3.8 Dead Load Moments

The unfactored dead load moments are listed below (values are in kip-ft):

Unfactored Dead Load Interior Girder Moments, (ft-kips)			
Tenth Point	DC non-composite	DC composite	DW composite
0.5	3548	137	141
0.6	3402	99	102
0.7	2970	39	40
0.8	2254	-43	-45
0.9	1253	-147	-151
1.0	0	-272	-281

The DC_{nc} values are the component non-composite dead loads and include the weight of the girder, haunch, diaphragms and the deck.

The DC_c values are the component composite dead loads and include the weight of the parapets.

The DW_c values are the composite dead loads from the future wearing surface.

Note that the girder dead load moments (a portion of DC_{nc}) are calculated based on the CL bearing to CL bearing length. The other DC_{nc} moments are calculated based on the span length (center of bearing at the abutment to centerline of the pier).

E45-3.9 Live Load Moments

The unfactored live load load moments (per lane including impact) are listed below (values are in kip-ft). Note that the impact factor is applied only to the truck portion of the HL-93 loads. A separate analysis run will be required if results without impact are desired.

Unfactored Live Load + Impact Moments per Lane (kip-ft)		
Tenth Point	Truck Pair	Truck + Lane
0.5	--	-921
0.6	--	-1106
0.7	--	-1290
0.8	-1524	-1474
0.9	-2046	-1845
1	-3318	-2517

The unfactored live load moments per lane are calculated by applying the appropriate distribution factor to the controlling moment. For the interior girder:

$g_i = 0.619$

$M_{LL} = g_i \cdot -3317.97$ $\boxed{M_{LL} = -2055}$ kip-ft

E45-3.10 Composite Girder Section Properties

Calculate the effective flange width in accordance with Chapter 17.2.11.

The effective flange width is calculated as the minimum of the following two values:

$w_e := S \cdot 12$ $\boxed{w_e = 90.00}$ in

The effective width, w_e, must be adjusted by the modular ratio, $n = 1.54$, to convert to the same concrete material (modulus) as the girder.

$w_{eadj} := \frac{w_e}{n}$ $\boxed{w_{eadj} = 58.46}$ in

Calculate the composite girder section properties:

effective slab thickness; $t_{se} = 7.50$ in

effective slab width; $w_{eadj} = 58.46$ in

haunch thickness; $h = 2.0$ in

total height; $h_c := ht + h + t_{se}$

$h_c = 63.50$ in

$n = 1.540$

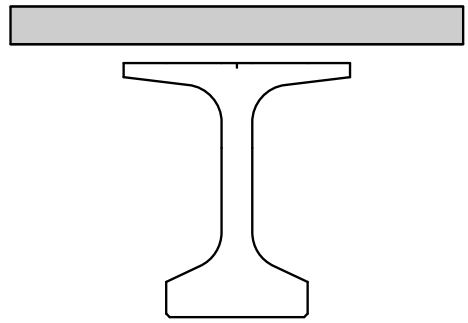

Note: The area of the concrete haunch is not included in the calculation of the composite section properties.

Component	Ycg	A	AY	AY^2	I	$I+AY^2$
Deck	59.75	438	26197	1565294	2055	1567349
Girder	26.3	798	20987	551969	321049	873018
Haunch	55	0	0	0	0	0
Summation		1236	47185			2440367

$\Sigma A := 1236$ in^2

$\Sigma AY := 47185$ in^4

$\Sigma IplusAYsq := 2440367$ in^4

$y_{cgb} := \frac{-\Sigma AY}{\Sigma A}$ $y_{cgb} = -38.2$ in

$y_{cgt} := ht + y_{cgb}$ $y_{cgt} = 15.8$ in

$A_{cg} := \Sigma A$ in^2

$I_{cg} := \Sigma IplusAYsq - A_{cg} \cdot y_{cgb}^2$ $I_{cg} = 639053$ in^4

Deck:

$S_c := n \cdot \frac{I_{cg}}{y_{cgt} + h + t_{se}}$ $S_c = 38851$ in^4

E45-3.11 Flexural Strength Capacity at Pier

All of the continuity reinforcement is placed in the top mat. Therefore the effective depth of the section at the pier is:

$cover := 2.5$ in

$bar_{trans} := 5$ (transverse bar size)

$Bar_D(bar_{trans}) = 0.625$ in (transverse bar diameter)

$Bar_{No} = 10$

$Bar_D(Bar_{No}) = 1.27$ in (Assumed bar size)

$$d_e := ht + h + t_s - cover - Bar_D(bar_{trans}) - \frac{Bar_D(Bar_{No})}{2}$$ $\boxed{d_e = 60.24}$ in

For flexure in non-prestressed concrete, $\phi_f := 0.9$.

The width of the bottom flange of the girder, $b_w = 30.00$ inches.

The continuity reinforcement is distributed over the effective flange width calculated earlier, $w_e = 90.00$ inches.

From E19-2, use a longitudinal bar spacing of #4 bars at $s_{longit} := 8.5$ inches. The continuity reinforcement is placed at 1/2 of this bar spacing, .

#10 bars at 4.25 inch spacing provides an $\boxed{As_{prov} = 3.57}$ in^2/ft, or the total area of steel provided:

$$As := As_{prov} \cdot \frac{w_e}{12}$$ $\boxed{As = 26.80}$ in^2

Calculate the capacity of the section in flexure at the pier:

Check the depth of the compression block:

$\alpha_1 := 0.85$ (for $f'_c \leq 10.0$ ksi) **LRFD [5.6.2.2]**

$$a := \frac{As \cdot f_y}{\alpha_1 \cdot b_w \cdot f'_c}$$ $\boxed{a = 7.883}$ in

This is approximately equal to the thickness of the bottom flange height of 7.5 inches.

$$M_n := As \cdot f_y \cdot \left(d_e - \frac{a}{2}\right) \cdot \frac{1}{12}$$ $\boxed{M_n = 7544}$ kip-ft

$$M_r := \phi_f \cdot M_n$$ $\boxed{M_r = 6790}$ kip-ft

E45-3.12 Design Load Rating

This design example illustrates the rating checks required at the location of maximum negative moment. These checks are also required at the locations of continuity bar cut offs but are not shown here.

At the Strength I Limit State:

$$RF = \frac{(\phi_c)(\phi_s)(\phi)R_n - \gamma_{DC}(DC_1) - \gamma_{DW}(DW_1)}{\gamma_L(LL + IM)}$$

Load Factors taken from Table 45.3-1

$\gamma_{L_inv} := 1.75$ $\gamma_{DC} := 1.25$ $\gamma_{servLL} := 0.8$ $\phi_c := 1.0$ $\phi_s := 1.0$

$\gamma_{L_op} := 1.35$ $\gamma_{DW} := 1.50$ $\phi := 0.9$ for flexure

For Flexure

$M_n = 7544$ kip-ft $M_{DCc} = 272$ kip-ft $M_{LL} = 2055$ kip-ft

Inventory Level

$$RF_{Mom_Inv} := \frac{(\phi_c)(\phi_s)(\phi)(M_n) - \gamma_{DC}\cdot(M_{DCc})}{\gamma_{L_inv}\cdot(M_{LL})} \qquad RF_{Mom_Inv} = 1.793$$

Operating Level

$$RF_{Mom_Op} := \frac{(\phi_c)(\phi_s)(\phi)(M_n) - \gamma_{DC}\cdot(M_{DCc})}{\gamma_{L_op}\cdot(M_{LL})} \qquad RF_{Mom_Op} = 2.325$$

E45-3.13 Permit Load Rating

Check the Wisconsin Standard Permit Vehicle per 45.12

For a symetric 130' two span structure:

$MSPV_{LL} := 2738$ kip-ft per lane (includes Dynamic Load Allowance of 33%)

Per 45.12, for the Wisconsin Standard Permit Vehicle (Wis-SPV) Design Check use single lane distribution factor assuming a single trip permit vehicle with no escort vehicles and assuming full dynamic load allowance. Also, divide out the 1.2 multiple presence factor per **MBE [6A.4.5.4.2]** for the single lane distribution factor only.

Single Lane Distribution

$g_1 := g_{i1} \frac{1}{1.2}$ $\boxed{g_1 = 0.356}$

$M_{SPVLLIM} := (MSPV_{LL} + M_{Lane}) \cdot g_1$ $\boxed{M_{SPVLLIM} = 975}$ kip-ft

$$RF_{SPV_m1} := \frac{[(\phi_c)(\phi_s)(\phi)(M_n)] - 1.25 \cdot (M_{DCc}) - 1.5(M_{DWc})}{1.2(M_{SPVLLIM})}$$ $\boxed{RF_{SPV_m1} = 5.151}$

$Wt_1 := RF_{SPV_m1} \cdot 190$ $\boxed{Wt_1 = 979}$ kips >> 190 kips, OK

The rating for the Wis-SPV vehicle is now checked without the Future Wearing Surface. This value is reported on the plans.

$$RF_{SPV_m_pln} := \frac{[(\phi_c)(\phi_s)(\phi)(M_n)] - 1.25 \cdot (M_{DCc})}{1.2(M_{SPVLLIM})}$$ $\boxed{RF_{SPV_m_pln} = 5.511}$

$Wt_{pln} := RF_{SPV_m_pln} \cdot 190$ $\boxed{Wt_{pln} = 1047}$ kips

Since this value is greater than 250 kips, 250 kips is reported on the plans and on the Bridge Load Rating Summary form for the single-lane Permit Load Rating.

Multi-Lane Distribution

$g_2 := g_{i2}$ $\boxed{g_2 = 0.619}$

$M_{SPVLLIM} := MSPV_{LL} \cdot g_2$ $\boxed{M_{SPVLLIM} = 1696}$ kip-ft

$$RF_{SPV_m2} := \frac{[(\phi_c)(\phi_s)(\phi)(M_n)] - 1.25 \cdot (M_{DCc})}{1.3(M_{SPVLLIM})}$$ $\boxed{RF_{SPV_m2} = 2.925}$

$Wt_2 := RF_{SPV_m2} \cdot 190$ $\boxed{Wt_2 = 556}$ kips

Since this value is greater than 250 kips, 250 kips is reported on the Bridge Load Rating Summary form for the multi-lane Permit Load Rating.

E45-3.14 Summary of Rating Factors

Interior Girder						
Limit State		Design Load Rating		Legal Load	Permit Load Rating (kips)	
		Inventory	Operating	Rating	Single Lane	Multi-Lane
Strength 1	Flexure	1.79	2.32	N/A	250	250

Table of Contents

E45-4 Steel Girder Rating Example - LRFR . . . 2
E45-4.1 Preliminary Data . . . 2
E45-4.2 Compute Section Properties . . . 6
E45-4.3 Dead Load Analysis Interior Girder . . . 10
E45-4.4 Compute Live Load Distribution Factors for Interior Girder . . . 14
E45-4.5 Compute Plastic Moment Capacity Positive Moment Region . . . 18
E45-4.6 Determine if Section is Compact or Noncompact Positive Moment Region . . . 20
E45-4.7 Flexural Resistance of Composite Section Positive Moment Region . . . 21
E45-4.8 Design Load Rating @ 0.4L . . . 24
E45-4.9 Check Section Proportion Limits Negative Moment Region . . . 26
E45-4.10 Compute Plastic Moment Capacity Negative Moment Region . . . 27
E45-4.11 Determine if Section is a Compact-Web, Noncompact-Web, or Slender-Web Section Negative Moment Region . . . 29
E45-4.12 Rating for Flexure Strength Limit State Negative Moment Region . . . 30
E45-4.13 Design Load Rating @ Pier . . . 32
E45-4.14 Rate for Shear Negative Moment Region . . . 34
E45-4.15 Design Load Rating @ Pier for Shear . . . 35
E45-4.16 Permit Load Ratings . . . 36
E45-4.16.1 Wis-SPV Permit Rating with Single Lane Distribution w/ FWS . . . 36
E45-4.16.2 Wis-SPV Permit Rating with Single Lane Distribution w/o FWS . . . 37
E45-4.16.3 Permit Rating with Multi-Lane Distribution w/o FWS . . . 39
E45-4.17 Summary of Rating . . . 40

E45-4 Steel Girder Rating Example - LRFR

This example shows rating calculations conforming to the *AASHTO Manual for Condition Evaluation and Load and Resistance Factor Rating (LRFR) of Highway Bridges* as supplemented by the *WisDOT Bridge Manual (July 2008)*. This example will rate the design example E24-1 contained in the WisDOT Bridge Manual. **(Note: Example has not been updated for example E24-1 January 2016 updates)**

E45-4.1 Preliminary Data

An interior plate girder will be rated for this example. The girder was designed to be composite throughout. There is no overburden on the structure. In addition, inspection reports reveal no loss of section to any of the main load carrying members.

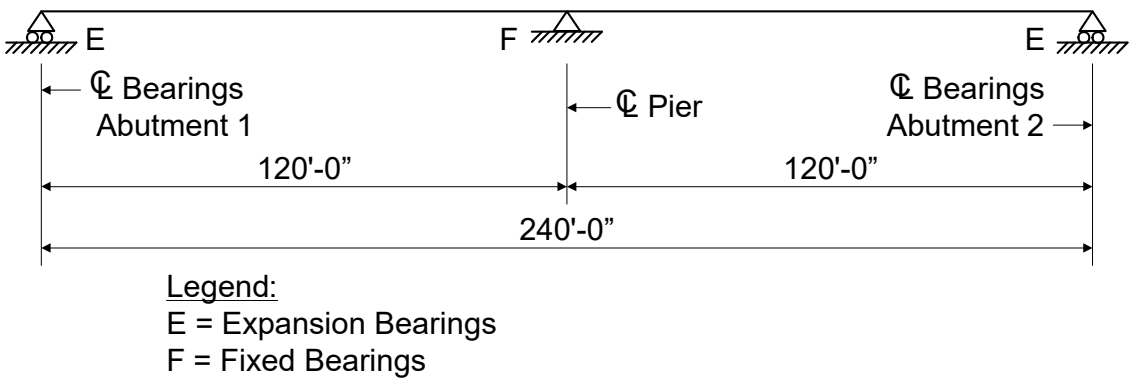

Figure E45-4.1-1
Span Configuration

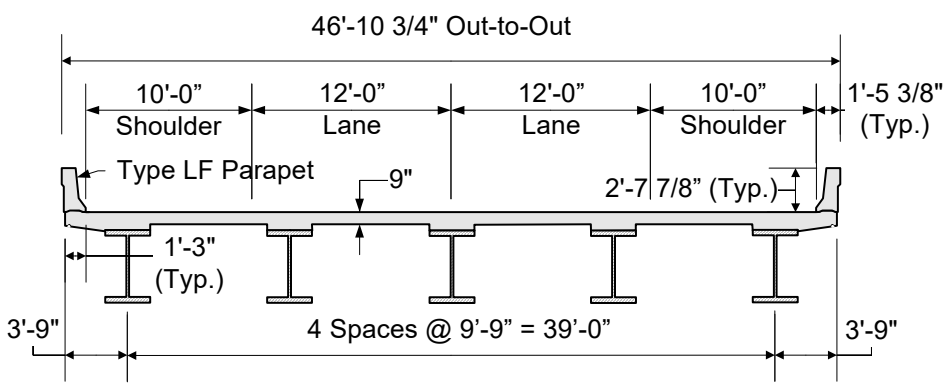

Figure E45-4.1-2
Superstructure Cross Section

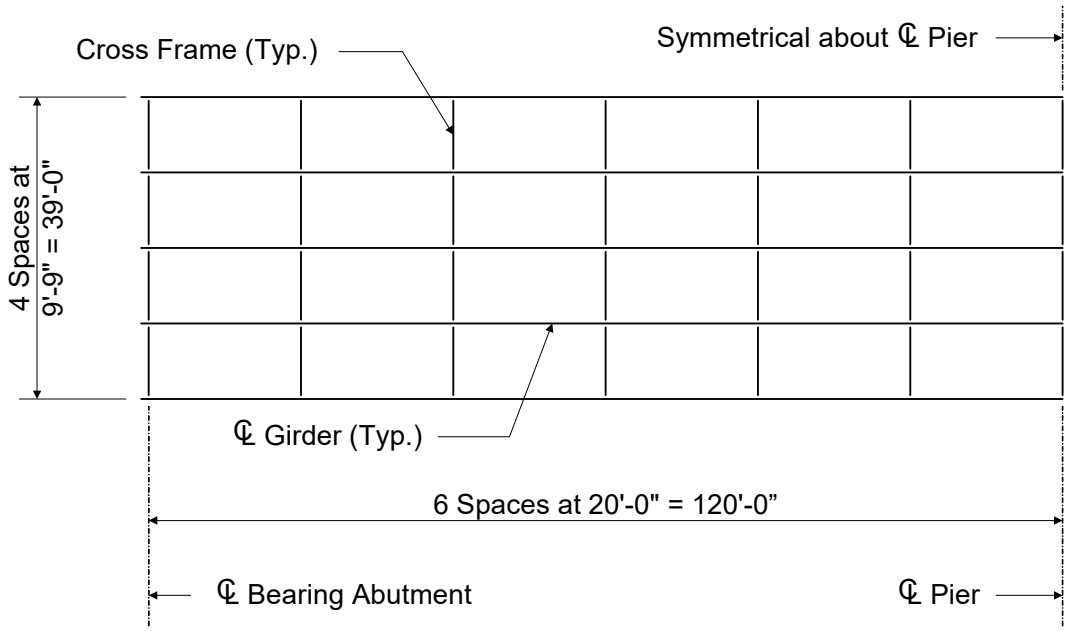

Figure E45-4.1-3
Framing Plan

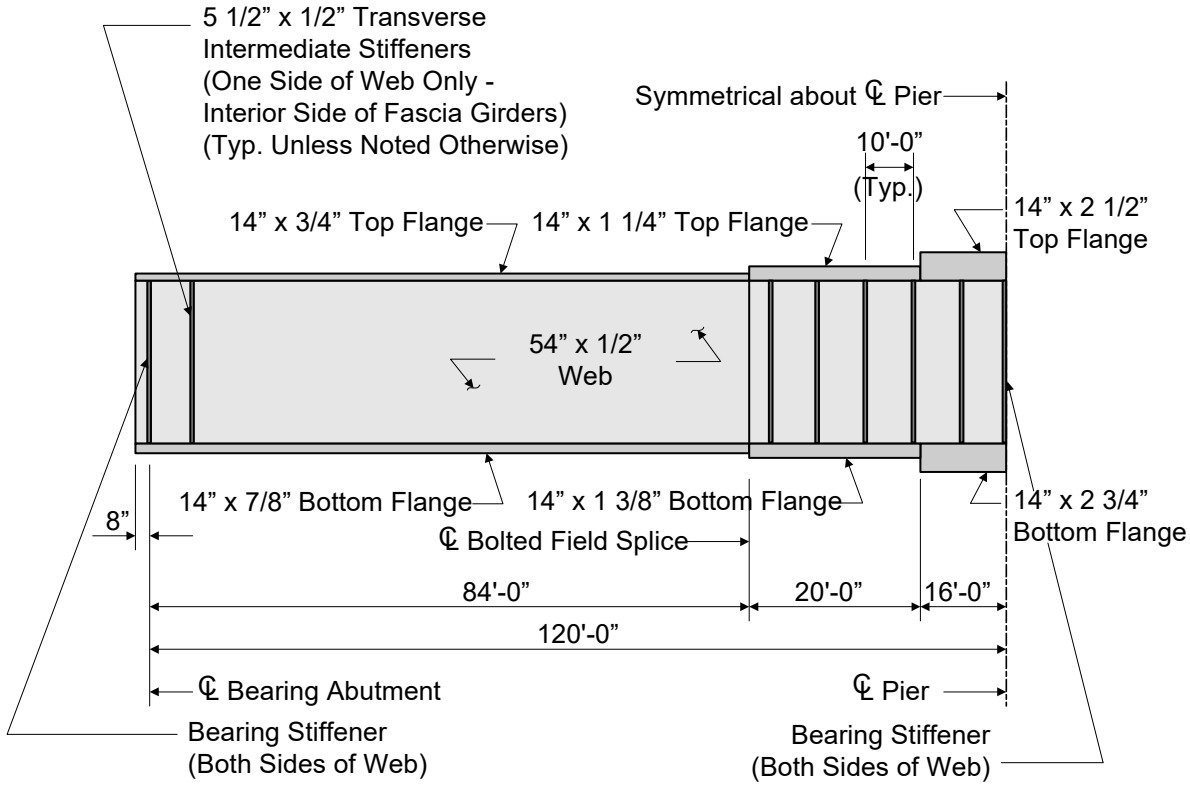

Figure E45-4.1-4
Interior Plate Girder Elevation

$N_{spans} := 2$	Number of spans	
$L := 120$	ft	span length
$Skew := 0$	deg	skew angle
$N_b := 5$	number of girders	
$S := 9.75$	ft	girder spacing
$S_{overhang} := 3.75$	ft	deck overhang
$L_b := 240$	in	cross-frame spacing
$F_{yw} := 50$	ksi	web yield strength
$F_{yf} := 50$	ksi	flange yield strength
$f'_c := 4.0$	ksi	concrete 28-day compressive strength
$f_y := 60$	ksi	reinforcement strength
$E_s := 29000$	ksi	modulus of elasticity
$t_{deck} := 9.0$	in	total deck thickness
$t_s := 8.5$	in	effective deck thickness when 1/2" future wearing surface is removed from total deck thickness
$w_s := 0.490$	kcf	steel density **LRFD[Table 3.5.1-1]**
$w_c := 0.150$	kcf	concrete density **LRFD[Table 3.5.1-1 & C3.5.1]**
$w_{misc} := 0.030$	kip/ft	additional miscellaneous dead load (per girder) per 17.2.4.1
$w_{par} := 0.387$	kip/ft	parapet weight (each)
$w_{fws} := 0.00$	kcf	future wearing surface is not used in rating analysis
$w_{deck} := 46.5$	ft	deck width
$w_{roadway} := 44.0$	ft	roadway width
$d_{haunch} := 3.75$	in	haunch depth (from top of web for design) (for construction, the haunch is measured from the top of the top flange)

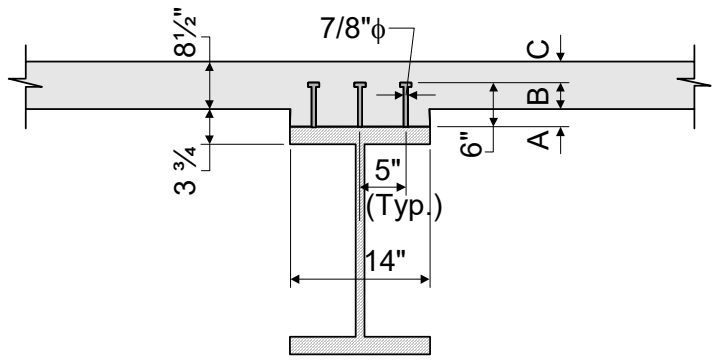

Figure E45-4.1-5
Composite Cross Section at Location of Maximum Positive Moment (0.4L)
(Note: 1/2" Intergral Wearing Surface has been removed for structural calcs.)

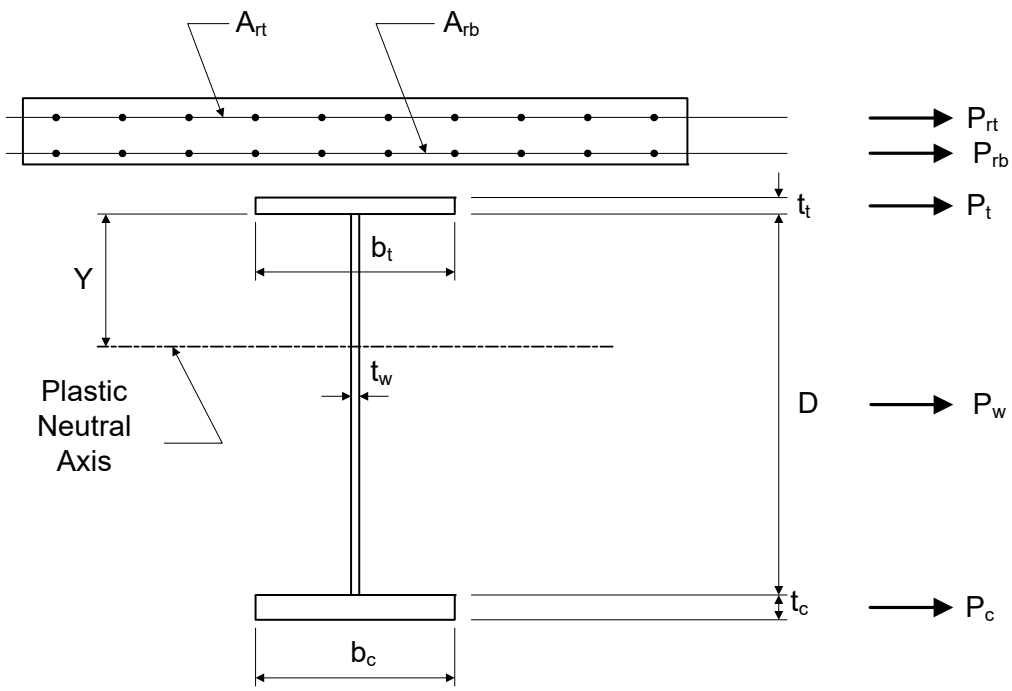

Figure E45-4.1-6
Composite Cross Section at Location of Maximum Negative Moment over Pier

$D := 54$ in

$t_w := 0.5$ in

E45-4.2 Compute Section Properties

Since the superstructure is composite, several sets of section properties must be computed **LRFD [6.10.1.1]**. The initial dead loads (or the noncomposite dead loads) are applied to the girder-only section. For permanent loads assumed to be applied to the long-term composite section, the long-term modular ratio of 3n is used to transform the concrete deck area **LRFD [6.10.1.1.1b]**. For transient loads assumed applied to the short-term composite section, the short-term modular ratio of n is used to transform the concrete deck area.

The modular ratio, n, is computed as follows:

$$n = \frac{E_s}{E_c}$$

Where:

E_s = Modulus of elasticity of steel (ksi)

E_c = Modulus of elasticity of concrete (ksi)

$E_s = 29000$ ksi **LRFD [6.4.1]**

$$E_c = 33000 \cdot K_1 \cdot \left(w_c^{1.5}\right) \cdot \sqrt{f'_c}$$ **LRFD [C5.4.2.4]**

Where:

K_1 = Correction factor for source of aggregate to be taken as 1.0 unless determined by physical test, and as approved by the authority of jurisdiction

w_c = Unit weight of concrete (kcf)

f'_c = Specified compressive strength of concrete (ksi)

$w_c = 0.15$ kcf **LRFD [Table 3.5.1-1 & C3.5.1]**

$f'_c = 4.00$ ksi

$K_1 := 1.0$ **LRFD [5.4.2.4]**

$$E_c := 33000 \cdot K_1 \cdot \left(w_c^{1.5}\right) \cdot \sqrt{f'_c}$$ $E_c = 3834$ ksi

$$n := \frac{E_s}{E_c}$$ $n = 7.6$ **LRFD [6.10.1.1.1b]**

Therefore, use: $n := 8$

The effective flange width is computed as follows .

For interior beams, the effective flange width is calculated as per **LRFD [4.6.2.6]**:

1. 12.0 times the average thickness of the slab, plus the greater of web thickness or one-half the width of the top flange of the girder:

$$b_{eff2} := \frac{12 \cdot t_s + \frac{14}{2}}{12}$$

This is no longer a valid criteria, however it has been left in place to avoid changing the entire example at this time.

$b_{eff2} = 9.08$ ft

2. The average spacing of adjacent beams:

$b_{eff3} := S$

$b_{eff3} = 9.75$ ft

Therefore, the effective flange width is:

$b_{effflange} := \min(b_{eff2}, b_{eff3})$

$b_{effflange} = 9.08$ ft

or

$b_{effflange} \cdot 12 = 109.00$ in

For this design example, the slab haunch is 3.75 inches throughout the length of the bridge. That is, the bottom of the slab is located 3.75 inches above the top of the web The area of the haunch is conservatively not considered in the section properties for this example.

Based on the plate sizes shown in Figure E45-4.1-4, the noncomposite and composite section properties for the positive moment region are computed as shown in the following table. The distance to the centroid is measured from the bottom of the girder.

Positive Moment Region Section Properties						
Section	**Area, A (Inches^2)**	**Centroid, d (Inches)**	**A*d (Inches^3)**	**I_o (Inches^4)**	**A*y^2 (Inches^4)**	**I_{total} (Inches^4)**
Girder only:						
Top flange	10.50	55.25	580.1	0.5	8441.1	8441.6
Web	27.00	27.88	752.6	6561.0	25.8	6586.8
Bottom flange	12.25	0.44	5.4	0.8	8576.1	8576.9
Total	49.75	26.90	1338.1	6562.3	17043.0	23605.3
Composite (3n):						
Girder	49.75	26.90	1338.1	23605.3	12293.9	35899.2
Slab	38.60	62.88	2427.2	232.4	15843.4	16075.8
Total	88.35	42.62	3765.3	23837.7	28137.3	51975.0
Composite (n):						
Girder	49.75	26.90	1338.1	23605.3	31511.0	55116.2
Slab	115.81	62.88	7281.7	697.3	13536.3	14233.6
Total	165.56	52.06	8619.8	24302.5	45047.3	69349.8
Section	**y_{botgdr} (Inches)**	**y_{topgdr} (Inches)**	**$y_{topslab}$ (Inches)**	**S_{botgdr} (Inches^3)**	**S_{topgdr} (Inches^3)**	**$S_{topslab}$ (Inches^3)**
Girder only	26.90	28.73	---	877.6	821.7	---
Composite (3n)	42.62	13.01	24.51	1219.6	3995.5	2120.7
Composite (n)	52.06	3.56	15.06	1332.0	19474.0	4604.5

Table E45-4.2-1
Positive Moment Region Section Properties

Similarly, the noncomposite and composite section properties for the negative moment region are computed as shown in the following table. The distance to the centroid is measured from the bottom of the girder **LRFD [6.6.1.2.1, 6.10.5.1, 6.10.4.2.1]**.

For the strength limit state, since the deck concrete is in tension in the negative moment region, the deck reinforcing steel contributes to the composite section properties and the deck concrete does not. However, per 45.6.3, only the top longitudinal mat of steel is used for rating purposes. Per the design example, the amount of longitudinal steel within the effective slab area is 6.39 in^2. This number will be used for the calculations below.

Negative Moment Region Section Properties						
Section	**Area, A (Inches^2)**	**Centroid, d (Inches)**	**A*d (Inches^3)**	**I_o (Inches^4)**	**A*y^2 (Inches^4)**	**I_{total} (Inches^4)**
Girder only:						
Top flange	35.00	58.00	2030.0	18.2	30009.7	30027.9
Web	27.00	29.75	803.3	6561.0	28.7	6589.7
Bottom flange	38.50	1.38	52.9	24.3	28784.7	28809.0
Total	100.50	28.72	2886.2	6603.5	58823.1	65426.6
Composite (deck concrete using 3n):						
Girder	100.50	28.72	2886.2	65426.6	10049.0	75475.6
Slab	38.60	64.75	2499.6	232.4	26161.1	26393.5
Total	139.10	38.72	5385.8	65659.0	36210.1	101869.2
Composite (deck concrete using n):						
Girder	100.50	28.72	2886.2	65426.6	37401.0	102827.7
Slab	115.81	64.75	7498.9	697.3	32455.9	33153.2
Total	216.31	48.01	10385.0	66123.9	69857.0	135980.9
Composite (deck reinforcement only):						
Girder	100.50	28.72	2886.2	65426.6	466.3	65892.9
Deck reinf.	6.39	64.75	413.8	0.0	7333.8	7333.8
Total	106.89	30.87	3299.9	65426.6	7800.1	73226.7
Section	**y_{botgdr} (Inches)**	**y_{topgdr} (Inches)**	**y_{deck} (Inches)**	**S_{botgdr} (Inches^3)**	**S_{topgdr} (Inches^3)**	**S_{deck} (Inches^3)**
Girder only	28.72	30.53	---	2278.2	2142.9	---
Composite (3n)	38.72	20.53	30.282	2631.1	4961.4	3364.0
Composite (n)	48.01	11.24	20.991	2832.4	12097.4	6478.2
Composite (rebar)	30.87	28.38	33.88	2371.9	2580.4	2161.5

Table E45-4.2-2
Negative Moment Region Section Properties

E45-4.3 Dead Load Analysis - Interior Girder

Dead Load Components		
Resisted by	**Type of Load Factor**	
	DC	**DW**
Noncomposite section	• Steel girder • Concrete deck • Concrete haunch • Stay-in-place deck forms • Misc. (including cross-frames, stiffeners, etc.)	
Composite section	• Concrete parapets	• Future wearing surface & utilities

Table E45-4.3-1
Dead Load Components

COMPONENTS AND ATTACHMENTS: DC1 (NON-COMPOSITE)

GIRDER:

For the steel girder, the dead load per unit length varies due to the change in plate sizes. The moments and shears due to the weight of the steel girder can be computed using readily available analysis software. Since the actual plate sizes are entered as input, the moments and shears are computed based on the actual, varying plate sizes.

DECK:

For the concrete deck, the dead load per unit length for an interior girder is computed as follows:

$w_c = 0.150$ kcf

$S = 9.75$ ft

$t_{deck} = 9.00$ in

$DL_{deck} := w_c \cdot S \cdot \frac{t_{deck}}{12}$ $\boxed{DL_{deck} = 1.097}$ kip/ft

HAUNCH:

For the concrete haunch, the dead load per unit length varies due to the change in top flange plate sizes. The moments and shears due to the weight of the concrete haunch can be computed using readily available analysis software. Since the top flange plate sizes are entered as input, the moments and shears due to the concrete haunch are computed based on the actual, varying haunch thickness.

MISC:

For the miscellaneous dead load (including cross-frames, stiffeners, and other miscellaneous structural steel), the dead load per unit length is assumed to be as follows (17.2.4.1):

$DL_{misc} := 0.030$ kip/ft

COMPONENTS AND ATTACHMENTS: DC2 (COMPOSITE)

PARAPET:

For the concrete parapets, the dead load per unit length is computed as follows, assuming that the superimposed dead load of the two parapets is distributed uniformly among all of the girders **LRFD [4.6.2.2.1]**:

$w_{par} = 0.39$ kip/ft

$N_b = 5$

$DL_{par} := \frac{w_{par} \cdot 2}{N_b}$ $\boxed{DL_{par} = 0.155}$ kip/ft

WEARING SURFACE: DW (COMPOSITE)

FUTURE WEARING SURFACE:

For this example, future wearing surface is only applied for permit vehicle rating checks.

Since the plate girder and its section properties are not uniform over the entire length of the bridge, an analysis software was used to compute the dead load moments and shears.

The following two tables present the unfactored dead load moments and shears, as computed by an analysis computer program. Since the bridge is symmetrical, the moments and shears in Span 2 are symmetrical to those in Span 1.

Dead Load Moments (Kip-feet)											
Dead Load Component	Location in Span 1										
	0.0L	0.1L	0.2L	0.3L	0.4L	0.5L	0.6L	0.7L	0.8L	0.9L	1.0L
Steel girder	0.0	71.8	119.3	142.5	141.3	115.8	66.0	-8.2	-110.2	-244.4	-423.9
Concrete deck & haunches	0.0	480.5	796.7	948.6	936.1	759.4	418.4	-86.9	-756.0	-1588.1	-2581.3
Miscellaneous Steel Weight	0.0	12.6	21.0	25.0	24.6	20.0	11.0	-2.3	-19.9	-41.8	-68.0
Concrete parapets	0.0	67.7	113.1	136.1	136.9	115.3	71.4	5.1	-83.4	-194.3	-327.5
Future wearing surface	0.0	76.9	128.4	154.6	155.4	130.9	81.0	5.8	-94.7	-220.6	-371.9

Table 45E-4.3-2
Dead Load Moments

Dead Load Shears (Kips)											
Dead Load Component	Location in Span 1										
	0.0L	0.1L	0.2L	0.3L	0.4L	0.5L	0.6L	0.7L	0.8L	0.9L	1.0L
Steel girder	7.0	5.0	2.9	0.9	-1.1	-3.1	-5.2	-7.2	-9.8	-12.9	-17.0
Concrete deck & haunches	46.9	33.2	19.5	5.8	-7.9	-21.6	-35.3	-49.0	-62.6	-76.1	-89.5
Miscellaneous Steel Weight	1.2	0.9	0.5	0.2	-0.2	-0.6	-0.9	-1.3	-1.7	-2.0	-2.4
Concrete parapets	6.6	4.7	2.9	1.0	-0.9	-2.7	-4.6	-6.5	-8.3	-10.2	-12.0
Future wearing surface	7.5	5.4	3.2	1.1	-1.0	-3.1	-5.2	-7.3	-9.4	-11.6	-13.7

Table 45E-4.3-3
Dead Load Shears

E45-4.4 Compute Live Load Distribution Factors for Interior Girder

The live load distribution factors for an interior girder are computed as follows **LRFD [4.6.2.2.2]**:

First, the longitudinal stiffness parameter, K_g, must be computed **LRFD [4.6.2.2.1]**:

$$K_g := n \cdot \left(I + A \cdot e_g^{\,2}\right)$$

Where:

I = Moment of inertia of beam (in^4)
A = Area of stringer, beam, or girder (in^2)
e_g = Distance between the centers of gravity of the basic beam and deck (in)

Longitudinal Stiffness Parameter, K_g				
	Region A (Pos. Mom.)	**Region B (Intermediate)**	**Region C (At Pier)**	**Weighted Average ***
Length (Feet)	84	20	16	
n	8	8	8	
I (Inches^4)	23,605.3	34,639.8	65,426.6	
A (Inches^2)	49.750	63.750	100.500	
e_g (Inches)	35.978	35.777	36.032	
K_g (Inches^4)	704,020	929,915	1,567,250	856,767

Table E45-4.4-1
Longitudinal Stiffness Parameter

After the longitudinal stiffness parameter is computed, **LRFD [Table 4.6.2.2.1-1]** is used to find the letter corresponding with the superstructure cross section. The letter corresponding with the superstructure cross section in this design example is "a."

If the superstructure cross section does not correspond with any of the cross sections illustrated in **LRFD [Table 4.6.2.2.1-1]**, then the bridge should be analyzed as presented in **LRFD [4.6.3]**.

Based on cross section "a", **LRFD [Table 4.6.2.2.2b-1 & Table 4.6.2.2.2.3a-1]** are used to compute the distribution factors for moment and shear, respectively.

For the 0.4L point:

$K_g = 856766.65$ in^4

$L := 120$ ft

For one design lane loaded, the distribution of live load per lane for moment in interior beams is as follows **LRFD [4.6.2.2.2b-1]**:

$$g_{m1} := 0.06 + \left(\frac{S}{14}\right)^{0.4}\left(\frac{S}{L}\right)^{0.3}\left(\frac{K_g}{12.0L \cdot t_s^{\,3}}\right)^{0.1}$$

$$\boxed{g_{m1} = 0.466}$$ lanes

For two or more design lanes loaded, the distribution of live load per lane for moment in interior beams is as follows **LRFD [Table 4.6.2.2.2b-1]**:

$$g_{m2} := 0.075 + \left(\frac{S}{9.5}\right)^{0.6}\left(\frac{S}{L}\right)^{0.2}\left(\frac{K_g}{12.0 \cdot L \cdot t_s^{\,3}}\right)^{0.1}$$

$$\boxed{g_{m2} = 0.688}$$ lanes

The live load distribution factors for shear for an interior girder are computed in a similar manner. The range of applicability is similar to that for moment **LRFD [Table 4.6.2.2.3a-1]**.

For one design lane loaded, the distribution of live load per lane for shear in interior beams is as follows:

$$g_{v1} := 0.36 + \frac{S}{25.0}$$ $$\boxed{g_{v1} = 0.750}$$ lanes

For two or more design lanes loaded, the distribution of live load per lane for shear in interior beams is as follows:

$$g_{v2} := 0.2 + \frac{S}{12} - \left(\frac{S}{35}\right)^{2.0}$$ $$\boxed{g_{v2} = 0.935}$$ lanes

Since this bridge has no skew, the skew correction factor does not need to be considered for this design example **LRFD [4.6.2.2.2e & 4.6.2.2.3c]**.

HL-93 Live Load Effects (for Interior Beams)											
Live Load Effect	**Location in Span 1**										
	0.0L	**0.1L**	**0.2L**	**0.3L**	**0.4L**	**0.5L**	**0.6L**	**0.7L**	**0.8L**	**0.9L**	**1.0L**
Maximum positive moment (K-ft)	0.0	848.1	1435.4	1780.1	1916.6	1859.0	1626.9	1225.6	699.7	263.6	0.0
Maximum negative moment (K-ft)	0.0	-134.3	-268.7	-403.0	-537.4	-671.7	-806.0	-940.4	-1087.0	-1591.6	-2414.2
Maximum positive shear (kips)	111.1	92.9	76.0	60.4	46.4	34.0	23.3	14.5	7.6	3.0	0.0
Maximum negative shear (kips)	-15.2	-15.7	-21.9	-35.0	-49.2	-63.6	-78.1	-92.3	-106.1	-119.3	-132.0

Table 45E-4.4-2
Live Load Effects

The live load values for HL-93 loading, as presented in the previous table, are computed based on the product of the live load effect per lane and live load distribution factor. These values also include the effects of dynamic load allowance. However, it is important to note that the dynamic load allowance is applied only to the design truck or tandem. The dynamic load allowance is not applied to pedestrian loads or to the design lane load **LRFD [3.6.1, 3.6.2, 4.6.2.2]**.

Two sections will be checked for illustrative purposes. First, the ratings will be performed for the location of maximum positive moment, which is at 0.4L in Span 1. Second, the ratings will be performed for the location of maximum negative moment and maximum shear, which is at the pier.

The following are for the location of maximum positive moment, which is at 0.4L in Span 1, as shown in Figure E45-4.4-1.

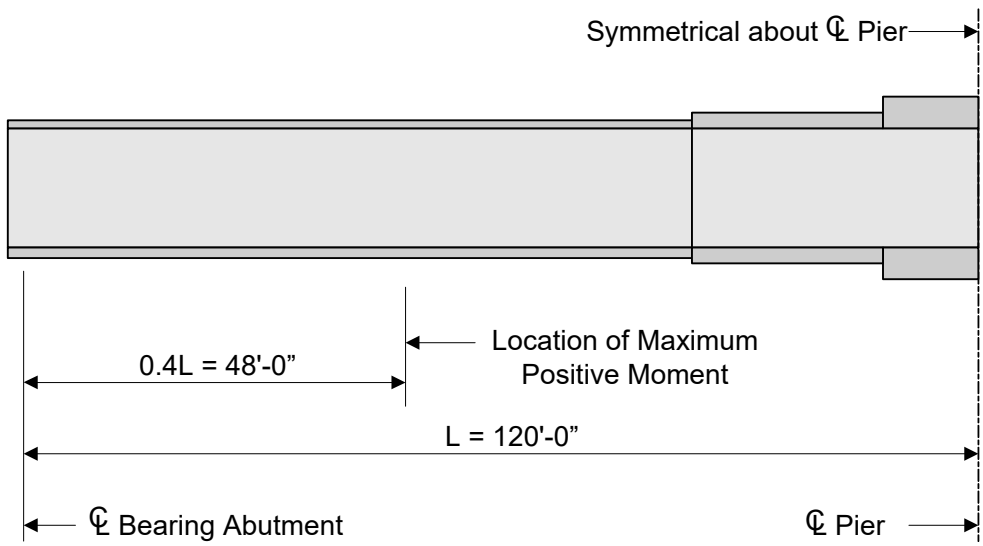

Figure E45-4.4-1
Location of Maximum Positive Moment

E45-4.5 Compute Plastic Moment Capacity - Positive Moment Region

For composite sections, the plastic moment, M_p, is calculated as the first moment of plastic forces about the plastic neutral axis **LRFD [Appendix D6.1]**.

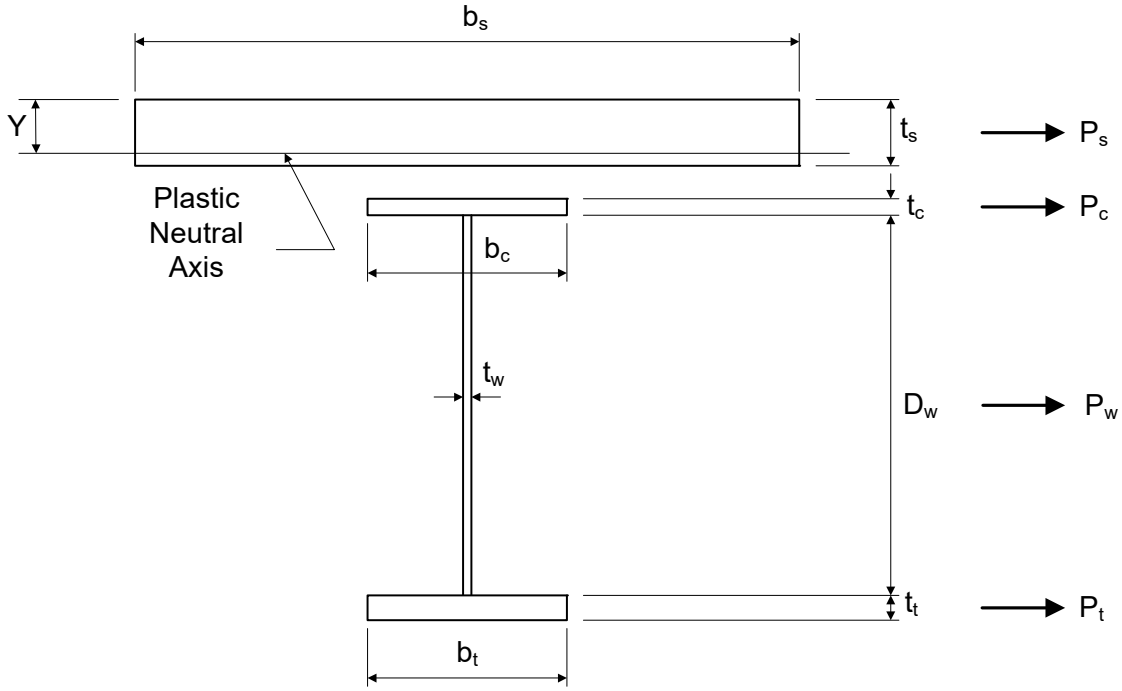

Figure E45-4.5-1
Computation of Plastic Moment Capacity for Positive Bending Sections

For the tension flange:

$$P_t = F_{yt} \cdot b_t \cdot t_t$$

Where:

F_{yt} = Specified minimum yield strength of a tension flange (ksi)

b_t = Full width of the tension flange (in)

t_t = Thickness of tension flange (in)

$F_{yt} := 50$ ksi

$b_t := 14$ in

$t_t := 0.875$ in

$P_t := F_{yt} \cdot b_t \cdot t_t$ $\boxed{P_t = 613}$ kips

For the web:

$P_w := F_{yw} \cdot D \cdot t_w$

Where:

F_{yw} = Specified minimum yield strength of a web (ksi)

$F_{yw} := 50$ ksi

$D = 54.00$ in

$t_w = 0.50$ in

$P_w := F_{yw} \cdot D \cdot t_w$ $\boxed{P_w = 1350}$ kips

For the compression flange:

$P_c = F_{yc} \cdot b_c \cdot t_c$

Where:

F_{yc} = Specified minimum yield strength of a compression flange (ksi)

b_c = Full width of the compression flange (in)

t_c = Thickness of compression flange (in)

$F_{yc} := 50$ ksi

$b_c := 14$ in

$t_c := 0.75$ in

$P_c := F_{yc} \cdot b_c \cdot t_c$ $\boxed{P_c = 525}$ kips

For the slab:

$P_s = 0.85 \cdot f'_c \cdot b_s \cdot t_s$

Where:

b_s = Effective width of concrete deck (in)

t_s = Thickness of concrete deck (in)

$f'_c = 4.00$ ksi

$b_s := 109$ in

$t_s = 8.50$ in

$P_s := 0.85 \cdot f'_c \cdot b_s \cdot t_s$ $\boxed{P_s = 3150}$ kips

The forces in the longitudinal reinforcement may be conservatively neglected in regions of positive flexure.

Check the location of the plastic neutral axis, as follows:

$P_t + P_w = 1963$ kips $\boxed{P_c + P_s = 3675}$ kips

$P_t + P_w + P_c = 2488$ kips $\boxed{P_s = 3150}$ kips

Therefore, the plastic neutral axis is located within the slab **LRFD [Table D6.1-1]**.

$$Y := (t_s)\cdot\left(\frac{P_c + P_w + P_t}{P_s}\right) \qquad \boxed{Y = 6.71} \text{ in}$$

Check that the position of the plastic neutral axis, as computed above, results in an equilibrium condition in which there is no net axial force.

$$\text{Compression} := 0.85\cdot f'_c\cdot b_s\cdot Y \qquad \boxed{\text{Compression} = 2487} \text{ kips}$$

$$\text{Tension} := P_t + P_w + P_c \qquad \boxed{\text{Tension} = 2488} \text{ kips} \quad \text{OK}$$

The plastic moment, M_p, is computed as follows, where d is the distance from an element force (or element neutral axis) to the plastic neutral axis **LRFD [Table D6.1-1]**:

$$d_c := \frac{-t_c}{2} + 3.75 + t_s - Y \qquad \boxed{d_c = 5.16} \text{ in}$$

$$d_w := \frac{D}{2} + 3.75 + t_s - Y \qquad \boxed{d_w = 32.54} \text{ in}$$

$$d_t := \frac{t_t}{2} + D + 3.75 + t_s - Y \qquad \boxed{d_t = 59.98} \text{ in}$$

$$M_p := \frac{\frac{Y^2\cdot P_s}{2\cdot t_s} + \left(P_c\cdot d_c + P_w\cdot d_w + P_t\cdot d_t\right)}{12} \qquad \boxed{M_p = 7643} \text{ kip-ft}$$

E45-4.6 Determine if Section is Compact or Noncompact - Positive Moment Region

Since the section is in a straight bridge, the next step in the design process is to determine if the section is compact or noncompact. This, in turn, will determine which formulae should be used to compute the flexural capacity of the girder.

If the specified minimum yield strengths of the flanges do not exceed 70.0 ksi and the girder does not have longitudinal stiffeners, then the first step is to check the compact-section web slenderness provisions, as follows **LRFD [6.10.6.2.2]**:

$$\frac{2\cdot D_{cp}}{t_w} \le 3.76\cdot\sqrt{\frac{E}{F_{yc}}}$$

Where:

D_{cp} = Depth of web in compression at the plastic moment (in)

Since the plastic neutral axis is located within the slab,

$D_{cp} := 0$ in

Therefore the web is deemed compact. Since this is a composite section in positive flexure and there are no holes in the tension flange at this section, the flexural resistance is computed as defined by the composite compact-section positive flexural resistance provisions of **LRFD [6.10.7.1.2]**.

E45-4.7 Flexural Resistance of Composite Section - Positive Moment Region

Since the section was determined to be compact, and since it is a composite section in the positive moment region with no holes in the tension flange, the flexural resistance is computed in accordance with **LRFD [6.10.7.1.2]**.

$$M_{n_0.4L} = 1.3 \cdot R_h \cdot M_y$$

Where:

R_h = Hybrid factor

M_y = Yield Moment (kip-in)

All design sections of this girder are homogenous. That is, the same structural steel is used for the top flange, the web, and the bottom flange. Therefore, the hybrid factor, R_h, is as follows **LRFD [6.10.1.10.1]**:

$R_h := 1.0$

The yield moment, M_y, is computed as follows **LRFD [Appendix D6.2.2]**:

$$F_y = \frac{M_{D1}}{S_{NC}} + \frac{M_{D2}}{S_{LT}} + \frac{M_{AD}}{S_{ST}}$$

Where:

M_{D1} = Bending moment caused by the factored permanent load applied before the concrete deck has hardened or is made composite (kip-in)

S_{NC} = Noncomposite elastic section modulus (in^3)

M_{D2} = Bending moment caused by the factored permanent load applied to the long-term composite section (kip-in)

S_{LT} = Long-term composite elastic section modulus (in^3)

M_{AD} = Additional bending moment that must be applied to the short-term composite section to cause nominal yielding in either steel flange (kip-in)

S_{ST} = Short-term composite elastic section modulus (in^3)

$M_y = M_{D1} + M_{D2} + M_{AD}$

$F_y := 50$ ksi

$M_{D1} := \left[1.25 \cdot \left(M_{girder} + M_{deck} + M_{misc}\right)\right]$ $\boxed{M_{D1} = 1378}$ kip-ft

$M_{D2} := \left(1.25 \cdot M_{DC2}\right)$ $\boxed{M_{D2} = 171}$ kip-ft

For the bottom flange:

$S_{NC_pos} = 877.63$ in^3

$S_{LT_pos} = 1219.60$ in^3

$S_{ST_pos} = 1332.01$ in^3

$$M_{AD} := \left[\frac{S_{ST_pos}}{12^3} \cdot \left(F_y \cdot 144 - \frac{M_{D1}}{\frac{S_{NC_pos}}{12^3}} - \frac{M_{D2}}{\frac{S_{LT_pos}}{12^3}}\right)\right]$$ $\boxed{M_{AD} = 3272}$ kip-ft

$M_{ybot} := M_{D1} + M_{D2} + M_{AD}$ $\boxed{M_{ybot} = 4821}$ kip-ft

For the top flange:

$S_{NC_pos_top} = 821.67$ in^3

$S_{LT_pos_top} = 3995.47$ in^3

$S_{ST_pos_top} = 19473.97$ in^3

$$M_{AD} := \frac{S_{ST_pos_top}}{12^3} \cdot \left(F_y \cdot 144 - \frac{M_{D1}}{\frac{S_{NC_pos_top}}{12^3}} - \frac{M_{D2}}{\frac{S_{LT_pos_top}}{12^3}}\right)$$

$\boxed{M_{AD} = 47658}$ kip-ft

$M_{ytop} := M_{D1} + M_{D2} + M_{AD}$ $\boxed{M_{ytop} = 49207}$ kip-ft

The yield moment, M_y, is the lesser value computed for both flanges. Therefore, M_y is determined as follows **LRFD [Appendix D6.2.2]**:

$M_y := \min\left(M_{ybot}, M_{ytop}\right)$ $\boxed{M_y = 4821}$ kip-ft

Therefore, for the positive moment region of this design example, the nominal flexural resistance is computed as follows **LRFD [6.10.7.1.2]**:

$D_p \le 0.1 D_t$

$D_p := Y$ $\boxed{D_p = 6.71}$ in

$D_t := 0.875 + 54 + .75 + 8$ $\boxed{D_t = 63.63}$ in

$\boxed{0.1 \cdot D_t = 6.36}$ $< D_p$

Therefore

$M_{n_0.4L} := M_p \cdot \left(1.07 - 0.7 \cdot \frac{D_p}{D_t}\right)$ $\boxed{M_{n_0.4L} = 7614}$ kip-ft

Since this is neither a simple span nor a continuous span where the span and the sections in the negative-flexure region over the interior supports satisfy the special conditions outlined at the end of **LRFD[6.10.7.1.2]**, the nominal flexural resistance of the section must not exceed the following:

$M_{n_0.4L} := 1.3 \cdot R_h \cdot M_y$ $\boxed{M_{n_0.4L} = 6267}$ kip-ft

The ductility requirement is checked as follows **LRFD [6.10.7.3]**:

$D_p \le 0.42 D_t$

Where:

D_p = Distance from top of the concrete deck to the neutral axis of the composite section at the plastic moment (in)

D_t = Total depth of the composite section (in)

$\boxed{0.42 \cdot D_t = 26.72}$ in OK

The factored flexural resistance, M_r, is computed as follows (note that since there is no curvature, skew and wind load is not considered under the Strength I load combination, the flange lateral bending stress is taken as zero in this case **LRFD [6.10.7.1.1]**:

$$M_u + \frac{1}{3}(0) \le \phi_f M_n$$

Where:

M_u = Moment due to the factored loads (kip-in)

M_n = Nominal flexural resistance of a section (kip-in)

$\phi_f := 1.00$

$M_r := \phi_f \cdot M_{n_0.4L}$ $\boxed{M_r = 6267}$ kip-ft

E45-4.8 Design Load Rating @ 0.4L

$$RF = \frac{\phi \cdot \phi_c \cdot \phi_s \cdot M_{n_0.4L} - \gamma_{DC}(DC)}{\gamma_L(LLIM)}$$

Where:

Load Factors per Table 45.3-1

$\gamma_{Linv} := 1.75$

$\gamma_{Lop} := 1.35$

$\gamma_{DC} := 1.25$

Resistance Factors

$\phi := 1.0$ **MBE [6A.7.3]**

$\phi_c := 1.0$ per 45.3.7.4

$\phi_s := 1.0$ per 45.3.7.5

$M_{DC1} := M_{girder} + M_{deck} + M_{misc}$ $M_{DC1} = 1102.07$ ft – kips

$M_{LLIM} := M_{LL}$ $M_{LLIM} = 1916.55$ ft – kips

A. Strength Limit State

Inventory

$$RF_{inv_0.4L} := \frac{\phi \cdot \phi_c \cdot \phi_s \cdot M_{n_0.4L} - \gamma_{DC} \cdot M_{DC1} - \gamma_{DC} \cdot M_{DC2}}{\gamma_{Linv} \cdot (M_{LLIM})}$$

$RF_{inv_0.4L} = 1.41$

Operating

$$RF_{op_0.4L} := \frac{\phi \cdot \phi_c \cdot \phi_s \cdot M_{n_0.4L} - \gamma_{DC} \cdot M_{DC1} - \gamma_{DC} \cdot M_{DC2}}{\gamma_{Lop} \cdot (M_{LLIM})}$$

$RF_{op_0.4L} = 1.82$

B. Service II Limit State

$$RF = \frac{f_R - \gamma_D \cdot (f_D)}{\gamma_L \cdot (f_{LLIM})}$$

Allowable Flange Stress per **LRFD 6.10.4.2.2**

$$f_R = 0.95 R_b \cdot R_h \cdot F_y$$

Checking only the tension flange as compression flanges typically do not control for composite sections.

$R_b := 1.0$ For tension flanges

$R_h := 1.0$ For non-hybrid sections

$f_R := 0.95 \cdot R_b \cdot R_h \cdot F_y$

$f_R = 47.50$ ksi

$f_D = f_{DC1} + f_{DC2}$

$$f_D := \left(\frac{M_{DC1} \cdot 12}{S_{NC_pos}}\right) + \left(\frac{M_{DC2} \cdot 12}{S_{LT_pos}}\right)$$

$f_D = 16.42$ ksi

$$f_{LLIM} := \frac{M_{LLIM} \cdot 12}{S_{ST_pos}}$$

$f_{LLIM} = 17.27$ ksi

Load Factors Per Table 45.3-1

$\gamma_D := 1.0$

$\gamma_{Lin} := 1.3$ Inventory

$\gamma_{Lop} := 1.0$ Operating

Inventory

$$RF_{inv_0.4L_service} := \frac{f_R - \gamma_D \cdot f_D}{\gamma_{Lin} \cdot f_{LLIM}}$$

$RF_{inv_0.4L_service} = 1.38$

Operating

$$RF_{op_0.4L_service} := \frac{f_R - \gamma_D \cdot f_D}{\gamma_{Lop} \cdot f_{LLIM}}$$

$RF_{op_0.4L_service} = 1.80$

E45-4.9 Check Section Proportion Limits - Negative Moment Region

Now the specification checks are repeated for the location of maximum negative moment, which is at the pier, as shown in Figure 24E1.17-1. This is also the location of maximum shear in this case.

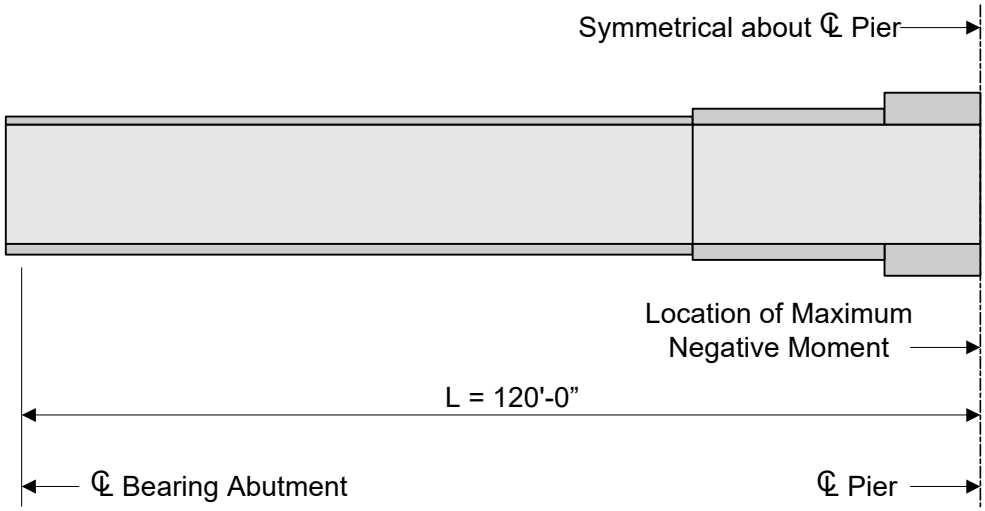

Figure E45-4.9-1
Location of Maximum Negative Moment

Several checks are required to ensure that the proportions of the girder section are within specified limits **LRFD [6.10.2]**.

The first section proportion check relates to the web slenderness **LRFD [6.10.2.1]**. For a section without longitudinal stiffeners, the web must be proportioned such that:

$$\frac{D}{t_w} \le 150 \qquad \boxed{\frac{D}{t_w} = 108.00} \qquad \text{OK}$$

The second set of section proportion checks relate to the general proportions of the section **LRFD [6.10.2.2]**. The compression and tension flanges must be proportioned such that:

$$\frac{b_f}{2 \cdot t_f} \le 12.0$$

$b_f := 14$

$t_f := 2.50$

$$\boxed{\frac{b_f}{2 \cdot t_f} = 2.80} \qquad \text{OK}$$

$$b_f \ge \frac{D}{6} \qquad \boxed{\frac{D}{6} = 9.00} \qquad \text{in} \qquad \text{OK}$$

$$t_f \ge 1.1 \cdot t_w \qquad \boxed{1.1 t_w = 0.55} \qquad \text{in} \qquad \text{OK}$$

$$0.1 \le \frac{I_{yc}}{I_{yt}} \le 10$$

$$I_{yc} := \frac{2.75 \cdot 14^3}{12}$$ $I_{yc} = 628.83$ in^4

$$I_{yt} := \frac{2.50 \cdot 14^3}{12}$$ $I_{yt} = 571.67$ in^4

$\frac{I_{yc}}{I_{yt}} = 1.100$ OK

E45-4.10 Compute Plastic Moment Capacity - Negative Moment Region

For composite sections, the plastic moment, M_p, is calculated as the first moment of plastic forces about the plastic neutral axis **LRFD [Appendix D6.1]**. For composite sections in negative flexure, the concrete deck is ignored and the longitudinal deck reinforcement is included in the computation of M_p.

The plastic force in the tension flange, P_t, is calculated as follows:

$t_t := 2.50$ in

$P_t := F_{yt} \cdot b_t \cdot t_t$ $P_t = 1750$ kips

The plastic force in the web, P_w, is calculated as follows:

$P_w := F_{yw} \cdot D \cdot t_w$ $P_w = 1350$ kips

The plastic force in the compression flange, P_c, is calculated as follows:

$t_c := 2.75$ in

$P_c := F_{yc} \cdot b_c \cdot t_c$ $P_c = 1925$ kips

The plastic force in the top layer of longitudinal deck reinforcement, P_{rt}, used to compute the plastic moment is calculated as follows:

$P_{rt} = F_{yrt} \cdot A_{rt}$

Where:

F_{yrt} = Specified minimum yield strength of the top layer of longitudinal concrete deck reinforcement (ksi)

A_{rt} = Area of the top layer of longitudinal reinforcement within the effective concrete deck width (in^2)

$F_{yrt} := 60$ ksi

$A_{rt} := 0.44 \cdot \left(\frac{b_{effflange} \cdot 12}{7.5} \right)$ $\boxed{A_{rt} = 6.39}$ in^2

$P_{rt} := F_{yrt} \cdot A_{rt}$ $\boxed{P_{rt} = 384}$ kips

The plastic force in the bottom layer of longitudinal deck reinforcement, P_{rb}, used to compute the plastic moment is calculated as follows (WisDOT Policy is to ignore bottom mat steel)

$P_{rb} = F_{yrb} \cdot A_{rb}$

Where:

F_{yrb} = Specified minimum yield strength of the bottom layer of longitudinal concrete deck reinforcement (ksi)

A_{rb} = Area of the bottom layer of longitudinal reinforcement within the effective concrete deck width (in^2)

$F_{yrb} := 60$ ksi

$A_{rb} := 0 \cdot \left(\frac{b_{effflange} \cdot 12}{1} \right)$ $\boxed{A_{rb} = 0.00}$ in^2

$P_{rb} := A_{rb} \cdot F_{yrb}$ $\boxed{P_{rb} = 0}$ kips

NOTE: For continuous girder type bridges, the negative moment steel shall conservatively consist of only the top mat of steel over the piers per **45.6.3**

Check the location of the plastic neutral axis, as follows:

$\boxed{P_c + P_w = 3275}$ kips

$\boxed{P_t + P_{rb} + P_{rt} = 2134}$ kips

$\boxed{P_c + P_w + P_t = 5025}$ kips

$\boxed{P_{rb} + P_{rt} = 384}$ kips

Therefore the plastic neutral axis is located within the web **LRFD [Appendix Table D6.1-2]**.

$Y := \left(\frac{D}{2} \right) \cdot \left(\frac{P_c - P_t - P_{rt} - P_{rb}}{P_w} + 1 \right)$ $\boxed{Y = 22.83}$ in

Although it will be shown in the next design step that this section qualifies as a nonslender web section at the strength limit state, the optional provisions of Appendix A to **LRFD [6]** are not employed in this example. Thus, the plastic moment is not used to compute the flexural resistance and therefore does not need to be computed.

E45-4.11 Determine if Section is a Compact-Web, Noncompact-Web, or Slender-Web Section - Negative Moment Region

Since the section is in a straight bridge, the next step is to determine if the section is a compact-web, noncompact-web, or slender-web section. This, in turn, will determine which formulae should be used to compute the flexural capacity of the girder.

Where the specified minimum yield strengths of the flanges do not exceed 70.0 ksi and the girder does not have longitudinal stiffeners, then the first step is to check the noncompact-web slenderness limit, as follows **LRFD [6.10.6.2.3]**:

$$\frac{2 \cdot D_c}{t_w} \le 5.7 \cdot \sqrt{\frac{E}{F_{yc}}}$$

At sections in negative flexure, D_c of the composite section consisting of the steel section plus the longitudinal reinforcement is to be used at the strength limit state.

$D_c := 30.872 - 2.75$ (see Figure 24E1.2-1 and Table 24E1.3-2)

$\boxed{D_c = 28.12}$ in

$\boxed{\frac{2 \cdot D_c}{t_w} = 112.5}$

$\boxed{5.7 \cdot \sqrt{\frac{E_s}{F_{yc}}} = 137.3}$

The section is a nonslender web section (i.e. either a compact-web or noncompact-web section). Next, check:

$I_{yc} := \frac{2.75 \cdot 14^3}{12}$ $\boxed{I_{yc} = 628.83}$ in^4

$I_{yt} := \frac{2.5 \cdot 14^3}{12}$ $\boxed{I_{yt} = 571.67}$ in^4

$\boxed{\frac{I_{yc}}{I_{yt}} = 1.10}$ > 0.3 OK

Therefore, the web qualifies to use the optional provisions of **LRFD [Appendix A6]** to compute the flexural resistance. However, since the web slenderness is closer to the noncompact web slenderness limit than the compact web slenderness limit in this case, the simpler equations of **LRFD [6.10.8]**, which assume slender-web behavior and limit the resistance to Fyc or below, will conservatively be applied in this example to compute the flexural resistance at the strength limit state. The investigation proceeds by calculating the flexural resistance of the discretely braced compression flange.

E45-4.12 Rating for Flexure - Strength Limit State - Negative Moment Region

The nominal flexural resistance of the compression flange shall be taken as the smaller of the local buckling resistance and the lateral torsional buckling resistance **LRFD [6.10.8.2.2 & 6.10.8.2.3]**.

Local buckling resistance **LRFD [6.10.8.2.2]**:

$b_{fc} := 14$ (see Figure 24E1.2-1)

$t_{fc} := 2.75$ (see Figure 24E1.2-1)

$\lambda_f := \frac{b_{fc}}{2 \cdot t_{fc}}$ $\boxed{\lambda_f = 2.55}$

$\lambda_{pf} := 0.38 \cdot \sqrt{\frac{E}{F_{yc}}}$ $\boxed{\lambda_{pf} = 9.15}$

Since $\lambda_f < \lambda_{pf}$, F_{nc} is calculated using the following equation:

$F_{nc} := R_b \cdot R_h \cdot F_{yc}$

Since $2D_c/t_w$ is less than λ_{rw} (calculated above), R_b is taken as 1.0 **LRFD [6.10.1.10.2]**.

$\boxed{F_{nc} = 50.00}$ ksi

Lateral torsional buckling resistance **LRFD [6.10.8.2.3]**:

$r_t := \frac{b_{fc}}{\sqrt{12 \cdot \left(1 + \frac{1}{3} \cdot \frac{D_c \cdot t_w}{b_{fc} \cdot t_{fc}}\right)}}$ $\boxed{r_t = 3.82}$ in

$L_p := 1.0 \cdot r_t \cdot \sqrt{\frac{E}{F_{yc}}}$ $\boxed{L_p = 91.90}$ in

$F_{yr} := \max(\min(0.7 \cdot F_{yc}, F_{yw}), 0.5 \cdot F_{yc})$ $\boxed{F_{yr} = 35.00}$ ksi

$L_r := \pi \cdot r_t \cdot \sqrt{\frac{E}{F_{yr}}}$ $\boxed{L_r = 345.07}$ in

$L_b = 240.00$

The moment gradient correction factor, C_b, is computed as follows:

Where the variation in the moment along the entire length between brace points is concave in shape, which is the case here, $f_1 = f_0$. (calculated below based on the definition of f_0 given in **LRFD [6.10.8.2.3]**).

$M_{NCDC0.8L} := 110.2 + 756.0 + 19.9$ $\quad M_{NCDC0.8L} = 886.10$ kip-ft

$S_{NCDC0.8L} := 2278.2$ in^3

$M_{par0.8L} := 83.4$ kip-ft

$M_{LL0.8L} := 1087.0$ kip-ft

$S_{rebar0.8L} := 2371.9$ in^3

$$f_1 := 1.25 \cdot \frac{M_{NCDC0.8L} \cdot 12}{S_{NCDC0.8L}} + 1.25 \cdot \frac{M_{par0.8L} \cdot 12}{S_{rebar0.8L}} + 1.75 \cdot \frac{M_{LL0.8L} \cdot 12}{S_{rebar0.8L}}$$

$f_1 = 15.99$ ksi

$f_2 := 46.50$ ksi (Table E24-1.6-2)

$\frac{f_1}{f_2} = 0.34$

$$C_b := 1.75 - 1.05 \cdot \left(\frac{f_1}{f_2}\right) + 0.3 \cdot \left(\frac{f_1}{f_2}\right)^2 < 2.3$$

$C_b = 1.42$

Therefore:

$$F_{nc} := C_b \cdot \left[1 - \left(1 - \frac{F_{yr}}{R_h \cdot F_{yc}}\right) \cdot \left(\frac{L_b - L_p}{L_r - L_p}\right)\right] \cdot R_b \cdot R_h \cdot F_{yc}$$

$F_{nc} = 58.72$ ksi

$F_{nc} \le R_b \cdot R_h \cdot F_{yc}$ $\quad R_b \cdot R_h \cdot F_{yc} = 50.00$ ksi

Use:

$F_{nc} := 50$ ksi

$\phi_f \cdot F_{nc} = 50.00$ ksi

$M_{n_1.0L} := F_{nc} \cdot S_{rebar} \cdot \left(\frac{1}{12}\right)$ $\quad M_{n_1.0L} = 9883.01$ ft – kips

E45-4.13 Design Load Rating @ Pier

$$RF = \frac{\phi \cdot \phi_c \cdot \phi_s \cdot M_{n_1.0L} - \gamma_{DC}(M_{DC_neg})}{\gamma_L(M_{LLIM_neg})}$$

Where:

Load Factors per Table 45.3-1

$\gamma_{Linv} := 1.75$

$\gamma_{Lop} := 1.35$

$\gamma_{DC} := 1.25$

Resistance Factors

$\phi := 1.0$ **MBE [6A.7.3]**

$\phi_c := 1.0$ per 45.3.7.4

$\phi_s := 1.0$ per 45.3.7.5

$M_{DC1_neg} := M_{girder_neg} + M_{deck_neg} + M_{misc_neg}$ $M_{DC1_neg} = -3073.22$ ft – kips

$M_{LLIM_neg} := M_{LL_neg}$ $M_{LLIM_neg} = -2414.17$ ft – kips

A. Strength Limit State

$$RF_{inv_1.0L} := \frac{\phi \cdot \phi_c \cdot \phi_s \cdot (-F_{nc}) - \gamma_{DC} \cdot \frac{M_{DC1_neg} \cdot 12}{S_{NC_neg}} - \gamma_{DC} \cdot \frac{M_{DC2_neg} \cdot 12}{S_{rebar}}}{\gamma_{Linv} \cdot \left(\frac{M_{LLIM_neg} \cdot 12}{S_{rebar}}\right)}$$

$RF_{inv_1.0L} = 1.30$

$$RF_{op_1.0L} := \frac{\phi \cdot \phi_c \cdot \phi_s \cdot (-F_{nc}) - \gamma_{DC} \cdot \frac{M_{DC1_neg} \cdot 12}{S_{NC_neg}} - \gamma_{DC} \cdot \frac{M_{DC2_neg} \cdot 12}{S_{rebar}}}{\gamma_{Lop} \cdot \left(\frac{M_{LLIM_neg} \cdot 12}{S_{rebar}}\right)}$$

$RF_{op_1.0L} = 1.68$

B. Service II Limit State

$$RF = \frac{f_R - \gamma_D \cdot (f_D)}{\gamma_L \cdot (f_{LLIM})}$$

Allowable Flange Stress per **LRFD [6.10.4.2.2]**

$$f_R := 0.95 \cdot R_h \cdot F_y$$

$R_h := 1.0$ For non-hybrid sections

$$f_R := 0.95 \cdot R_b \cdot R_h \cdot F_y$$

$f_R = 47.50$ ksi

$$f_D = f_{DC1} + f_{DC2}$$

$$f_D := -\left[\left(\frac{M_{DC1_neg} \cdot 12}{S_{NC_neg}}\right) + \left(\frac{M_{DC2_neg} \cdot 12}{S_{LT_neg}}\right)\right]$$

$f_D = 17.68$ ksi

$$f_{LLIM} := \frac{-M_{LL_neg} \cdot 12}{S_{rebar}}$$

$f_{LLIM} = 12.21$ ksi

Load Factors Per Table 45.3-1

$\gamma_D := 1.0$

$\gamma_{Lin} := 1.3$ Inventory

$\gamma_{Lop} := 1.0$ Operating

Inventory

$$RF_{inv_1.0L_service} := \frac{f_R - \gamma_D \cdot f_D}{\gamma_{Lin} \cdot f_{LLIM}}$$

$RF_{inv_1.0L_service} = 1.88$

Operating

$$RF_{op_1.0L_service} := \frac{f_R - \gamma_D \cdot f_D}{\gamma_{Lop} \cdot f_{LLIM}}$$

$RF_{op_1.0L_service} = 2.44$

E45-4.14 Rate for Shear - Negative Moment Region

Shear must be checked at each section of the girder. For this Rating example, shear is maximum at the pier, and will only be checked there for illustrative purposes.

The transverse intermediate stiffener spacing is 120". The spacing of the transverse intermediate stiffeners does not exceed 3D, therefore the section can be considered stiffened and the provisions of **LRFD [6.10.9.3]** apply.

$d_o := 120$ in

$D = 54.00$ in

$k := 5 + \frac{5}{\left(\frac{d_o}{D}\right)^2}$ $k = 6.01$

$\frac{D}{t_w} = 108.00$ $\frac{D}{t_w} \geq 1.40 \cdot \sqrt{\frac{E_s \cdot k}{F_{yw}}}$ $1.40 \cdot \sqrt{\frac{E_s \cdot k}{F_{yw}}} = 82.67$

$C := \frac{1.57}{\left(\frac{D}{t_w}\right)^2} \cdot \left(\frac{E_s \cdot k}{F_{yw}}\right)$ $\boxed{C = 0.469}$

The plastic shear force, V_p, is then:

$V_p := 0.58 \cdot F_{yw} \cdot D \cdot t_w$ $\boxed{V_p = 783.00}$ kips

$V_n := V_p \cdot \left[C + \frac{0.87 \cdot (1 - C)}{\sqrt{1 + \left(\frac{d_o}{D}\right)^2}}\right]$ $\boxed{V_n = 515.86}$ kips

The factored shear resistance, V_r, is computed as follows **LRFD [6.10.9.1]**:

$\phi_v := 1.00$

$V_r := \phi_v \cdot V_n$ $\boxed{V_r = 515.86}$ kips

HL-93 Maximum Shear @ Pier:

$V_{DC1} := V_{girder} + V_{deck} + V_{misc}$ $V_{DC1} = -108.84$ kips

$V_{DC2} = -12.03$ kips

$V_{LL} = -131.95$ kips

$M_{LLIM_neg} = -2414.17$ ft – kips

E45-4.15 Design Load Rating @ Pier for Shear

$$RF = \frac{\phi \cdot \phi_c \cdot \phi_s \cdot V_n - \gamma_{DC}(V_{DC})}{\gamma_L(V_{LLIM})}$$

Where:

Load Factors per Table 45.3-1

$\gamma_{Linv} := 1.75$

$\gamma_{Lop} := 1.35$

$\gamma_{DC} := 1.25$

Resistance Factors

$\phi := 1.0$ **MBE [6A.7.3]**

$\phi_c := 1.0$ per 45.3.7.4

$\phi_s := 1.0$ per 45.3.7.5

A. Strength Limit State

Inventory

$$RF_{inv_shear} := \frac{\phi \cdot \phi_c \cdot \phi_s \cdot (-V_n) - \gamma_{DC} \cdot (V_{DC1} + V_{DC2})}{\gamma_{Linv} \cdot (V_{LL})}$$

$$\boxed{RF_{inv_shear} = 1.58}$$

Operating

$$RF_{op_shear} := \frac{\phi \cdot \phi_c \cdot \phi_s \cdot (-V_n) - \gamma_{DC} \cdot (V_{DC1} + V_{DC2})}{\gamma_{Lop} \cdot (V_{LL})}$$

$$\boxed{RF_{op_shear} = 2.05}$$

Since RF>1.0 @ operating for all checks, Legal Load Ratings are not required for this example.

E45-4.16 - Permit Load Ratings

For any bridge design (new or rehabilitation) or bridge re-rate, the Wisconsin Standard Permit Vehicle (Wis-SPV) shall be analyzed (per 45.12). Since the span lengths are less than 200', the lane loading requirements will not be considered for positive moments.

The bridge shall be analyzed for this vehicle considering both single-lane and multi-lane distribution. Also, the vehicle will be analyzed assuming it is mixing with other traffic on the bridge and that full dynamic load allowance is utilized. Future wearing surface shall not be included.

Since this example is rating a newly designed bridge, an additional check is required. The designer shall ensure that the results of the single-lane analysis are greater than 190 kips MVW. Future wearing surface shall be included in the check.

E45-4.16.1 - Wis-SPV Permit Rating with Single Lane Distribution w/ FWS

The values from this analysis are used for performing the Wis-SPV design check per 45.12

Load Distribution Factors

Single Lane Interior DF - Moment $g_{m1} = 0.47$

Single Lane Interior DF - Shear $g_{v1} = 0.75$

Load Factors per Tables 45.3-1 and 45.3-3

$\gamma_L := 1.2$

$\gamma_{DC} := 1.25$ $\gamma_{DW} := 1.50$

Wis-SPV Moments and Shears (w/o Dynamic Load allowance or Distribution Factors included)

$M_{pos} := 2842.10$ kip-ft

$M_{neg} := 2185.68$ kip-ft

$V_{max} := 154.32$ kips

$$M_{0.4L} := \frac{g_{m1}}{1.2} \cdot 1.33 \cdot M_{pos}$$ $\boxed{M_{0.4L} = 1468.47}$ kip-ft

$$M_{1.0L} := \left(\frac{g_{m1}}{1.2}\right) \cdot \left(\left(1.33 \cdot M_{neg}\right)\right)$$ $\boxed{M_{1.0L} = 1129.31}$ kip-ft

$$V_{1.0L} := \left(\frac{g_{v1}}{1.2}\right)\cdot\left(\left(1.33\cdot V_{max}\right)\right) \qquad \boxed{V_{1.0L} = 128.28} \quad \text{kips}$$

$$RF_{pos} := \frac{\phi\cdot\phi_c\cdot\phi_s\cdot M_{n_0.4L} - \gamma_{DC}\cdot\left(M_{DC1} + M_{DC2}\right) - \gamma_{DW}\cdot M_{DW}}{\gamma_L\cdot\left(M_{0.4L}\right)}$$

$\boxed{RF_{pos} = 2.55}$ $\boxed{RF_{pos}\cdot 190 = 483.65}$ kips

$$RF_{neg} := \frac{\phi\cdot\phi_c\cdot\phi_s\cdot M_{n_1.0L} - \gamma_{DC}\cdot\left(-M_{DC1_neg} - M_{DC2_neg}\right) - \gamma_{DW}\cdot\left(-M_{DW_neg}\right)}{\gamma_L\cdot\left(M_{1.0L}\right)}$$

$\boxed{RF_{neg} = 3.74}$ $\boxed{RF_{neg}\cdot 190 = 711.43}$ kips

$$RF_{shear} := \frac{\phi\cdot\phi_c\cdot\phi_s\cdot V_n - \gamma_{DC}\cdot\left[-\left(V_{DC1} + V_{DC2}\right)\right] - \gamma_{DW}\cdot\left(-V_{DW}\right)}{\gamma_L\cdot\left(V_{1.0L}\right)}$$

$\boxed{RF_{shear} = 2.24}$ $\boxed{RF_{shear}\cdot 190 = 424.87}$ kips

424.87k > 190k minimum : CHECK OK

E45-4.16.2 - Wis-SPV Permit Rating with Single Lane Distribution w/o FWS

For use with plans and rating sheet only.

Load Distribution Factors

Single Lane Interior DF - Moment $g_{m1} = 0.47$

Single Lane Interior DF - Shear $g_{v1} = 0.75$

Load Factors per Tables 45.3-1 and 45.3-3

$\gamma_L := 1.2$

$\gamma_{DC} := 1.25$ $\gamma_{DW} := 1.50$

Wis-SPV Moments and Shears (w/o Dynamic Load allowance or Distribution Factors included)

$M_{pos} := 2842.10$ kip-ft

$M_{neg} := 2185.68$ kip-ft

$V_{max} := 154.32$ kips

$M_{0.4L} := \frac{g_{m1}}{1.2} \cdot 1.33 \cdot M_{pos}$ $\boxed{M_{0.4L} = 1468.47}$ kip-ft

$M_{1.0L} := \left(\frac{g_{m1}}{1.2}\right) \cdot \left(\left(1.33 \cdot M_{neg}\right)\right)$ $\boxed{M_{1.0L} = 1129.31}$ kip-ft

$V_{1.0L} := \left(\frac{g_{v1}}{1.2}\right) \cdot \left(\left(1.33 \cdot V_{max}\right)\right)$ $V_{1.0L} = 128.28$ kips

$$RF_{pos1} := \frac{\phi \cdot \phi_c \cdot \phi_s \cdot M_{n_0.4L} - \gamma_{DC} \cdot \left(M_{DC1} + M_{DC2}\right)}{\gamma_L \cdot \left(M_{0.4L}\right)}$$

$\boxed{RF_{pos1} = 2.68}$ $\boxed{RF_{pos1} \cdot 190 = 508.78}$ kips

$$RF_{neg1} := \frac{\phi \cdot \phi_c \cdot \phi_s \cdot M_{n_1.0L} - \gamma_{DC} \cdot \left(-M_{DC1_neg} - M_{DC2_neg}\right)}{\gamma_L \cdot \left(M_{1.0L}\right)}$$

$\boxed{RF_{neg1} = 4.16}$ $\boxed{RF_{neg1} \cdot 190 = 789.64}$ kips

$$RF_{shear1} := \frac{\phi \cdot \phi_c \cdot \phi_s \cdot V_n - \gamma_{DC} \cdot \left[-\left(V_{DC1} + V_{DC2}\right)\right]}{\gamma_L \cdot \left(V_{1.0L}\right)}$$

$\boxed{RF_{shear1} = 2.37}$ $\boxed{RF_{shear1} \cdot 190 = 450.24}$ kips

E45-4.16.3 - Permit Rating with Multi-Lane Distribution w/o FWS

For use with plans and rating sheet only.

Load Distribution Factors

Multi Lane Interior DF - Moment $g_{m2} = 0.69$

Multi Lane Interior DF - Shear $g_{v2} = 0.93$

Load Factors per Tables 45.3-1 and 45.3-3

$\gamma_L := 1.3$

$\gamma_{DC} := 1.25$

Wis-SPV Moments and Shears (w/o Dynamic Load allowance or Distribution Factors included)

$M_{pos} := 2842.10$ kip-ft

$M_{neg} := 2185.68$ kip-ft

$V_{max} := 154.32$ kips

Multi Lane Ratings

$M_{0.4L} := g_{m2} \cdot 1.33 \cdot M_{pos}$ $\boxed{M_{0.4L} = 2600.09}$ kip-ft

$M_{1.0L} := g_{m2} \cdot (1.33 \cdot M_{neg})$ $\boxed{M_{1.0L} = 1999.56}$ kip-ft

$V_{1.0L} := g_{v2} \cdot (1.33 \cdot V_{max})$ $\boxed{V_{1.0L} = 191.88}$ kips

$$RF_{pos_ml} := \frac{\phi \cdot \phi_c \cdot \phi_s \cdot M_{n_0.4L} - \gamma_{DC} \cdot (M_{DC1} + M_{DC2})}{\gamma_L \cdot (M_{0.4L})}$$

$\boxed{RF_{pos_ml} = 1.40}$ $\boxed{RF_{pos_ml} \cdot 190 = 265.24}$ kips

$$RF_{neg_ml} := \frac{\phi \cdot \phi_c \cdot \phi_s \cdot M_{n_1.0L} - \gamma_{DC} \cdot \left(-M_{DC1_neg} - M_{DC2_neg}\right)}{\gamma_L \cdot \left(M_{1.0L}\right)}$$

$RF_{neg_ml} = 2.17$ $RF_{neg_ml} \cdot 190 = 411.67$ kips

$$RF_{shear_ml} := \frac{\phi \cdot \phi_c \cdot \phi_s \cdot V_n - \gamma_{DC} \cdot \left[-\left(V_{DC1} + V_{DC2}\right)\right]}{\gamma_L \cdot \left(V_{1.0L}\right)}$$

$RF_{shear_ml} = 1.46$ $RF_{shear_ml} \cdot 190 = 277.84$ kips

E45-4.17 Summary of Rating

Steel Interior Girder							
Limit State		Design Load Rating		Legal Load Rating	Wis-SPV Ratings (kips)		
		Inventory	Operating		Single Lane w/ FWS	Single Lane w/o FWS	Multi Lane w/o FWS
Strength I @ 0.4L	Flexure	1.41	1.82	N/A	484	509	265
	Shear	N/A	N/A	N/A	N/A	N/A	N/A
Strength I @ 1.0L	Flexure	1.30	1.68	N/A	711	790	412
	Shear	1.58	2.05	N/A	425	450	278
Service II	0.4L	1.38	1.80	N/A	Optional		Optional
	1.0L	1.88	2.44	N/A	Optional		Optional

Table of Contents

E45-5 Reinforced Concrete Slab Rating Example LFR 2
E45-5.1 Design Criteria 2
E45-5.2 Analysis of an Interior Strip one foot width 3
E45-5.2.1 Dead Loads 3
E45-5.2.2 Live Load Distribution 3
E45-5.2.3 Nominal Flexural Resistance: (Mn) 4
E45-5.2.4 General Load Rating Equation (for flexure) 5
E45-5.2.5 Design Load (HS20) Rating 5
E45-5.2.6 Permit Vehicle Load Ratings 7
E45-5.2.6.1 Wis-SPV Permit Rating with Multi Lane Distribution 7
E45-5.2.6.2 Wis-SPV Permit Rating with Single Lane Distribution w/o FWS 9
E45-5.2.6.3 Wis-SPV Permit Rating with Single Lane Distribution w/ FWS 9
E45-5.3 Summary of Rating 9

E45-5 Reinforced Concrete Slab Rating Example - LFR

Reference E45-1 for bridge data. For LFR, the Bureau of Structures rates concrete slab structures for the Design Load (HS20) and for Permit Vehicle Loads on an interior strip equal to one foot width.

This example calculates ratings of the controlling locations at the 0.4 tenths point of span 1 for positive moment and at the pier for negative moment.

E45-5.1 Design Criteria

Geometry:

$L_1 := 38.0$	ft	Span 1 Length
$L_2 := 51.0$	ft	Span 2 Length
$L_3 := 38.0$	ft	Span 3 Length
$slab_{width} := 42.5$	ft	out to out width of slab
$cover_{top} := 2.5$	in	concrete cover on top bars (includes 1/2in wearing surface)
$cover_{bot} := 1.5$	in	concrete cover on bottom bars
$d_{slab} := 17$	in	slab depth (not including 1/2in wearing surface)
$b := 12$	in	Interior strip width for analysis
$D_{haunch} := 28$	in	haunch depth (not including 1/2in wearing surface)
$A_{st_0.4L} := 1.71$	$\frac{in^2}{ft}$	Area of longitudinal bottom steel at 0.4L (# 9's at 7in centers)
$A_{st_pier} := 1.88$	$\frac{in^2}{ft}$	Area of longitudinal top steel at Pier (# 8's at 5in centers)

Material Properties:

$f'_c := 4$	ksi	concrete compressive strength
$f_y := 60$	ksi	yield strength of reinforcement

Weights:

$w_c := 150$	pcf	concrete unit weight
$w_{LF} := 387$	plf	weight of Type LF parapet (each)

E45-5.2 Analysis of an Interior Strip - one foot width

Use Strength Limit States to rate the concrete slab bridge. **MBE [6B.5.3.2]**

E45-5.2.1 Dead Loads

The slab dead load, D_{slab}, and the section properties of the slab, do not include the 1/2 inch wearing surface. But the 1/2 inch wearing surface load, D_{WS}, of 6 psf must be including in the analysis of the slab. For a one foot slab width:

$D_{ws} := 6$ 1/2 inch wearing surface load, plf

The parapet dead load is uniformly distributed over the full width of the slab when analyzing an Interior Strip. For a one foot slab width:

$$D_{para} := 2 \cdot \frac{w_{LF}}{slab_{width}} \qquad \boxed{D_{para} = 18} \quad \text{plf}$$

The unfactored dead load moments, M_D, due to slab dead load (D_{slab}), parapet dead load (D_{para}), and the 1/2 inch wearing surface (D_{ws}) are shown in Chapter 18 Example E18-1 (Table E18.4). For LFR, the total deal load moment (M_D) is the sum of the values M_{DC} and M_{DW} tabulated separately for LRFD calculations.

The structure was designed for a possible future wearing surface, D_{FWS}, of 20 psf.

$D_{FWS} := 20$ Possible wearing surface, plf

E45-5.2.2 Live Load Distribution

Live loads are distributed over an equivalent width, E, as calculated below.
The live loads to be placed on these widths are wheel loads (i.e., one line of wheels) or half of the lane load. The equivalent distribution width applies for both live load moment and shear.

Multi - Lane Loading:	$E = 48.0 + 0.06 \cdot S$	$\leq$ 84 in	**Std [3.24.3.2]**
Single - Lane Loading:	$E = 144$	in	**[45.6.2.1]**

where:

S = effective span length, in inches

For multi-lane loading:

(Span 1, 3) $E_{m13} := \min[84, 48.0 + 0.06\cdot(38\cdot 12)]$

$\boxed{E_{m13} = 75.36}$ in

(Span 2) $E_{m2} := \min[84, 48.0 + 0.06\cdot(51\cdot 12)]$

$\boxed{E_{m2} = 84.00}$ in

For single-lane loading:

(Span 1, 3) $\boxed{E_{s13} := 144.0}$ in

(Span 2) $\boxed{E_{s2} := 144.0}$ in

E45-5.2.3 Nominal Flexural Resistance: (M_n)

The depth of the compressive stress block, (a) is:

$$a = \frac{A_s\cdot f_y}{0.85\cdot f'_c\cdot b}$$ **Std (8-17)**

For rectangular sections, the nominal moment resistance, M_n, (tension reinforcement only) equals:

$$M_n = A_s\cdot f_y\cdot\left(d_s - \frac{a}{2}\right)$$ **Std (8-16)**

where:

d_s = slab depth (excl. 1/2" wearing surface) - bar clearance - 1/2 bar diameter

Maximum Reinforcement Check

The area of reinforcement to be used in calculating nominal resistance (M_n) shall not exceed 75 percent of the reinforcement required for the balanced conditions **MBE [6B.5.3.2]**.

$$\rho_b := 0.85^2\cdot\left(\frac{f'_c}{f_y}\right)\cdot\frac{87}{87 + f_y} = 0.029$$

$$A_{smax} := \rho_b\cdot b\cdot d_s$$

E45-5.2.4 General Load - Rating Equation (for flexure)

$$RF = \frac{C - A_1 \cdot M_D}{A_2 \cdot M_L \cdot (1 + I)}$$ **MBE [6B.4.1]**

where:

$C := \phi \cdot M_n$

$\phi := 0.9$ **Std [8.16.1.2.2]**

A_1 = 1.3 for Dead Loads

A_2 = Live Load factor: 2.17 for Inventory, 1.3 for Operating

M_D = Unfactored Dead Load moments

M_L = Unfactored Live Load moments

I = Live Load Impact Factor (maximum 30%)

E45-5.2.5 Design Load (HS20) Rating

Equivalent Strip Width (E) and Distribution Factor (DF):

Use the multi-lane wheel distribution width for (HS20) live load.

The distribution factor, DF, is computed for a slab width equal to one foot.

$$DF = \frac{1}{E}$$ (where E is in feet)

Spans 1 & 3:

$$DF_{13} := \frac{12}{E_{m13}} = 0.159$$ wheels / ft-slab

Span 2:

$$DF_2 := \frac{12}{E_{m2}} = 0.143$$ wheels / ft-slab

Live Load Impact Factor (I)

$$I := \frac{50}{L + 125}$$ (maximum 0.3) **Std [3.8.2.1]**

Spans 1 & 3:

$$I_{13} := \min\left(0.3, \frac{50}{L_1 + 125}\right)$$ $\boxed{I_{13} = 0.3}$

Span 2:

$$I_2 := \min\left(0.3, \frac{50}{L_2 + 125}\right) \qquad \boxed{I_2 = 0.284}$$

Live Loads (LL)

The live loads shall be determined from live load analysis software using the higher of the HS2(Truck or Lane loads.

Rating for Flexure

$$RF = \frac{\phi \cdot M_n - 1.3 \cdot M_D}{A_2 \cdot M_L \cdot (1 + I)}$$

The Design Load Rating was checked at 0.1 pts. along the structure and at the slab/haunch intercepts. The governing limit state and location for the HS20 load is positive moment is in span 1 at the 0.4 pt.

Span 1 (0.4 pt.)

Flexural capacity:

$$A_{st_0.4L} = 1.71 \quad \frac{in^2}{ft}$$

$$d_s := 17.0 - cover_{bot} - \frac{1.128}{2} \qquad \boxed{d_s = 14.94} \quad in$$

$$a := \frac{A_{st_0.4L} \cdot f_y}{0.85 \cdot f'_c \cdot b} \qquad \boxed{a = 2.51} \quad in$$

$$A_{smax} := \rho_b \cdot b \cdot d_s = 5.109 \qquad A_{smax} > A_{st_0.4L} \quad OK$$

$$M_n := A_{st_0.4L} \cdot f_y \cdot \left(d_s - \frac{a}{2}\right) \qquad \boxed{M_n = 1403.4} \quad kip\text{-}in$$

$$\boxed{M_n = 117.0} \quad kip\text{-}ft$$

The dead load consists of the slab self-weight and parapet weight divided evenly along the slab width:

$M_D := 18.1 \quad kip - ft$ (from Chapter 18 Example, Table E18.4)

The positive live load moment shall be the largest caused by the following (from live load analysis software):

Design Lane:	17.48 kip-ft
Design Truck:	24.01 kip-ft

Therefore:

$M_L := 24.01 \quad kip - ft$

Inventory:

$$RF_i := \frac{\phi \cdot M_n - 1.3 \cdot M_D}{2.17 \cdot M_L \cdot (1 + I_{13})} = 1.21$$

Inventory Rating = HS21

Operating:

$$RF_o := \frac{\phi \cdot M_n - 1.3 \cdot M_D}{1.3 \cdot M_L \cdot (1 + I_{13})} = 2.01$$

Operating Rating = HS36

Rating for Shear:

Shear rating for concrete slab bridges may be ignored. Bending moment is assumed to control per **Std [3.24.4]**.

The Rating Factors, RF, for Inventory and Operating Rating are shown on the plans and also on the load rating summary sheet.

E45-5.2.6 Permit Vehicle Load Ratings

For any bridge design (new or rehabilitation) or bridge re-rate, the Wisconsin Standard Permit Vehicle (Wis-SPV) shall be analyzed per **[45.12]**.

The bridge shall be analyzed for this vehicle considering both single-lane and multi-lane distribution, and full dynamic load allowance is utilized. Future wearing surface will not be considered.

For a newly designed bridge, an additional check is required. The designer shall ensure that the results of a single-lane analysis utilizing the future searing surface are greater than 190 kips MVW.

E45-5.2.6.1 Wis-SPV Permit Rating with Multi Lane Distribution

The Maximum Permit Vehicle Load was checked at 0.1 pts. along the structure and at the slab/haunch intercepts. The governing location is the C/L of the Pier.

The distribution width and impact factors are the same as calculated for the HS20 load.

At C/L of Pier

Flexural capacity:

$A_{st_pier} = 1.88 \quad \frac{in^2}{ft}$

$d_{s_pier} := 28.0 - cover_{top} - \frac{8}{16}$ $\quad \boxed{d_{s_pier} = 25}$ in

$a_pier := \frac{A_{st_pier} \cdot f_y}{0.85 \cdot f'_c \cdot b}$ $\quad \boxed{a_pier = 2.76}$ in

$A_{smax_pier} := \rho_b \cdot b \cdot d_{s_pier} = 8.552$ in^2 $\quad A_{smax} > A_{st_pier}$ OK

$M_{n_pier} := A_{st_pier} \cdot f_y \cdot \left(d_{s_pier} - \frac{a_pier}{2}\right)$ $\quad \boxed{M_{n_pier} = 2664.1}$ kip-in

$\boxed{M_{n_pier} = 222}$ kip-ft

The dead load consists of the slab self-weight and parapet weight divided evenly along the slab width:

$M_{D_pier} := 59.2$ kip-ft (from Chapter 18 Example, Table E18.4)

From live load analysis software, the live load moment at the C/L of Pier due to the Wisconsin Standard Permit Vehicle (Wis-SPV) having a gross vehicle load of 190 kips and utilizing the maximum multi-lane distribution (at Spans 1 and 3) is:

$M_{LSPVm_pier} := 66.06$ kip-ft

Annual Permit:

$$RF_{mpermit} := \frac{\phi \cdot M_{n_pier} - 1.3 M_{D_pier}}{1.3 \cdot M_{LSPVm_pier} \cdot (1 + I_{13})} = 1.10$$

The maximum Wisconsin Standard Permit Vehicle (Wis_SPV) load is:

$RF_{mpermit} \cdot (190) = 209$ kips

E45-5.2.6.2 Wis-SPV Permit Rating with Single Lane Distribution w/o FWS

The live load moment at the C/L of Pier due to the Wis-SPV with single-lane loading may be determined by scaling the live load moment from multi-lane loading:

$$M_{LSPVs_pier} := M_{LSPVm_pier} \cdot \frac{E_{m13}}{E_{s13}} = 34.57 \quad \text{kip-ft}$$

Single-Trip Permit w/o FWS:

$$RF_{spermit} := \frac{\phi \cdot M_{n_pier} - 1.3 M_{D_pier}}{1.3 \cdot M_{LSPVs_pier} \cdot (1 + I_{13})} = 2.10$$

The Wisconsin Standard Permit Vehicle (Wis-SPV) load that can be carried by the bridge is:

$$RF_{spermit} \cdot (190) = 399 \quad \text{kips}$$

The Single-Lane MVW for the Wis-SPV is shown on the plans, up to a maximum of 250 kips. This same procedure used for the (Wis-SPV) can also be used when evaluating the bridge for an actual "Single-Trip Permit" vehicle.

E45-5.2.6.3 Wis-SPV Permit Rating with Single Lane Distribution w/ FWS

From Chapter 18 Example, Table E18.4, the applied moment at the pier from the future wearing surface is:

$$M_{DW_pier} := 4.9 \quad \text{kip-ft}$$

Single-Trip Permit w/ FWS:

$$RF_{spermit_fws} := \frac{\phi \cdot M_{n_pier} - 1.3 \cdot (M_{D_pier} + M_{DW_pier})}{1.3 \cdot M_{LSPVs_pier} \cdot (1 + I_{13})} = 1.99$$

The Wisconsin Standard Permit Vehicle (Wis-SPV) load that can be carried by the bridge is:

$$RF_{spermit_fws} \cdot (190) = 379 \quad \text{kips} \qquad > 190k \qquad \text{OK}$$

E45-5.3 Summary of Rating

Slab - Interior Strip					
Limit State	Design Load Rating		Permit Load Rating (kips)		
	Inventory	Operating	Multi DF w/o FWS	Single DF w/o FWS	Single DF w/ FWS
Flexure	HS21	HS36	209	399	379

This page intentionally left blank.

Table of Contents

E45-6 Single Span PSG Bridge Rating Example LFR 2
E45-6.1 Preliminary Data 2
E45-6.2 Girder Section Properties 3
E45-6.3 Composite Girder Section Properties 5
E45-6.4 Dead Load Analysis Interior Girder 6
E45-6.5 Live Load Analysis Interior Factors for Interior Beams: 8
E45-6.5.1 Moment and Shear Distribution Factors for Interior Beams: 8
E45-6.5.2 Live Load Moments 8
E45-6.6 Determination of Pretress Losses 9
E45-6.7 Compute Nominal Flexural Resistance at Midspan 11
E45-6.8 Compute Nominal Shear Resistance at First Critical Section 13
E45-6.9 Design Load Rating 16
E45-6.10 Permit Load Rating 19
E45-6.11 Summary of Rating Factors 21

E45-6 Single Span PSG Bridge Rating Example - LFR

Reference E45-2 for bridge data. For LFR, the Bureau of Structures rates structures for the Design Load (HS20) and for Permit Vehicle loads. The rating below analyzes an interior girder only, which typically governs.

E45-6.1 Preliminary Data

$L := 146$	center to center of bearing, ft
$f'_c := 8$	girder concrete strength, ksi
$f'_{ci} := 6.8$	girder initial concrete strength, ksi
$f'_{cd} := 4$	deck concrete strength, ksi
$f'_s := 270$	strength of low relaxation strand, ksi
$d_b := 0.6$	strand diameter, inches
$A_s := 0.217$	area of strand, in2
$t_s := 8$	slab thickness, in
$t_{se} := 7.5$	effective slab thickness (slab thickness - 1/2 in wearing surface), in
$w := 40$	clear width of deck, 2 lane road, 3 design lanes, ft
$w_p := 0.387$	weight of Wisconsin Type LF parapet, klf
$w_c := 0.150$	weight of concrete, kcf
$H_{avg} := 2$	average thickness of haunch, in
$S := 7.5$	spacing of the girders, ft
$ng := 6$	number of girders

E45-6.2 Girder Section Properties

72W Girder Properties (46 strands, 8 draped):

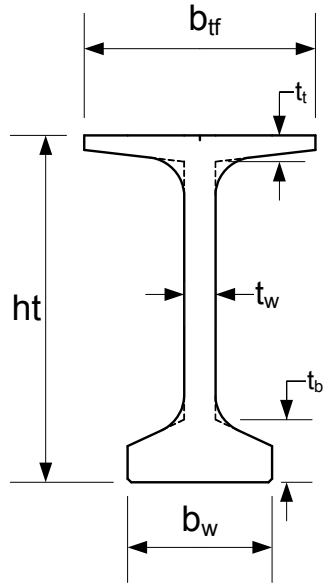

$b_{tf} := 48$ width of top flange, in

$t_t := 5.5$ avg. thickness of top flange, in

$t_w := 6.5$ thickness of web, in

$t_b := 13$ avg. thickness of bottom flange, in

$ht := 72$ height of girder, in

$b_w := 30$ width of bottom flange, in

$A_g := 915$ area of girder, in^2

$I_g := 656426$ moment of inertia of girder, in^4

$y_t := 37.13$ centroid to top fiber, in

$y_b := 34.87$ centroid to bottom fiber, in

$S_t := 17680$ section modulus for top, in^3

$S_b := 18825$ section modulus for bottom, in^3

$w_g := 0.953$ weight of girder, klf

$ns := 46$ number of strands

$e_s := 30.52$ centroid to cg strand pattern

$e_g := y_t + 2 + \frac{t_{se}}{2}$ $\boxed{e_g = 42.88}$ in

Web Depth: $d_w := ht - t_t - t_b$ $\boxed{d_w = 53.50}$ in

$E_s := 28500$ Modulus of Elasticity of the Prestressing Strands, ksi

Concrete modulus of elasticity per WisDOT policy in **[19.3.3.8]**:

$E_{deck4} := 4125$ $E_D := E_{deck4}$

$E_{beam8} := 5500 \cdot \frac{\sqrt{f'_c \cdot 1000}}{\sqrt{6000}}$ $\boxed{E_{beam8} = 6351}$ $E_B := E_{beam8}$

$E_{beam6.8} := 33000\,(.150)^{1.5} \cdot \sqrt{f'_{ci}}$ $\boxed{E_{beam6.8} = 4999}$ $E_{ct} := E_{beam6.8}$

$n := \frac{E_B}{E_D}$ $\boxed{n = 1.540}$

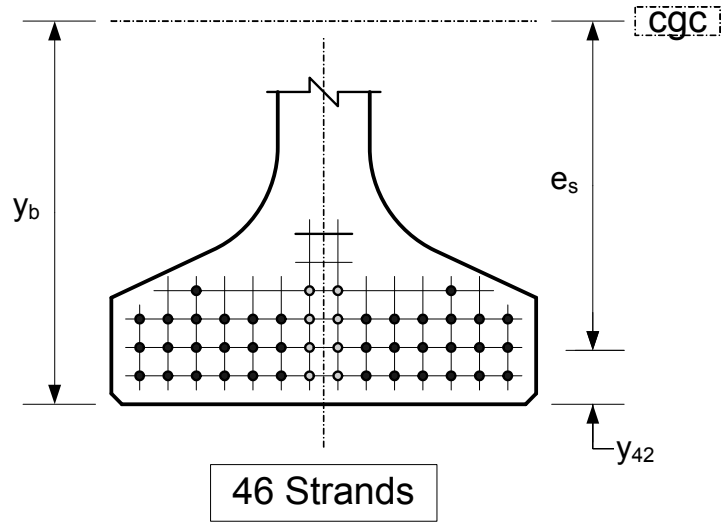

Figure E45-6.1

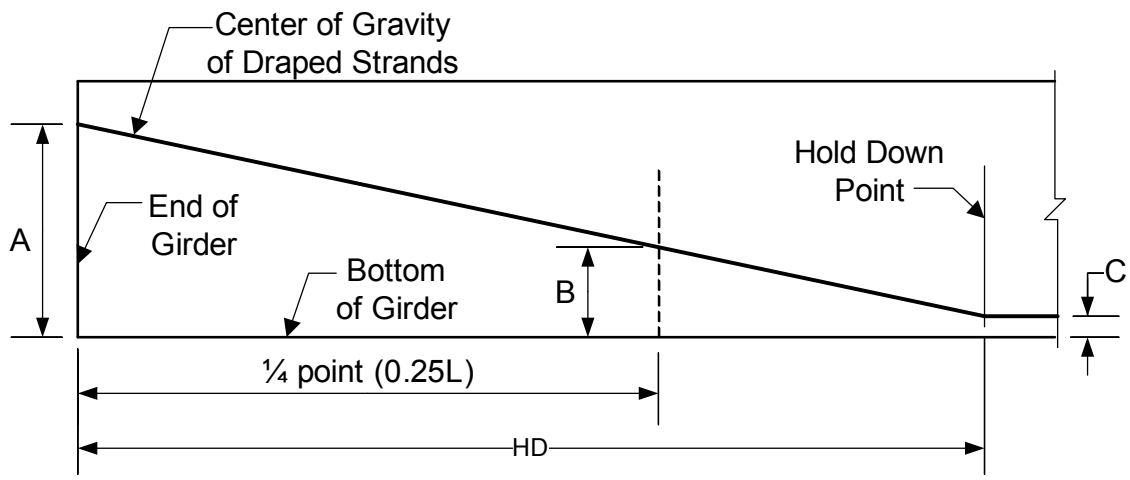

Figure E45-6.2

$A := 67$ in $\quad C := 5$ in $\quad B_{min} := 20.5$ in $\quad B_{max} := 23.5$ in

$$B_{avg} := \frac{B_{min} + B_{max}}{2} \qquad \boxed{B_{avg} = 22.0} \text{ in}$$

$$slope := \left[\frac{A - B_{avg}}{(0.25)\cdot L\cdot 12}\right]\cdot 100 \qquad \boxed{slope = 10.274} \ \%$$

$$HD := \frac{A - C}{\left(\frac{slope}{100}\right)\cdot 12} \qquad \boxed{HD = 50.29} \text{ ft}$$

E45-6.3 Composite Girder Section Properties

Calculate the effective flange width in accordance with **Std [9.8.3.1]**:

$$b_{eff} := \min\left[S \cdot 12, 12 \cdot t_{se} + t_w, \frac{(L \cdot 12)}{4}\right] \qquad \boxed{b_{eff} = 90} \quad \text{in}$$

The effective width, b_{eff}, must be adjusted by the modular ratio, n, to convert to the same concrete material (modulus) as the girder.

$$b_{eadj} := \frac{b_{eff}}{n} \qquad \boxed{b_{eadj} = 58.46} \quad \text{in}$$

Calculate the composite girder section properties:

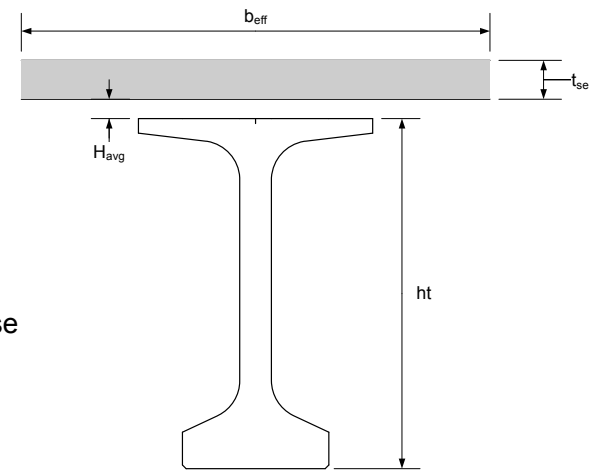

effective slab thickness; $\boxed{t_{se} = 7.50}$ in

effective slab width; $\boxed{b_{eadj} = 58.46}$ in

haunch thickness; $\boxed{H_{avg} = 2.00}$ in

total height; $h_c := ht + H_{avg} + t_{se}$

$\boxed{h_c = 81.50}$ in

$\boxed{n = 1.540}$

Note: The area of the concrete haunch is not included in the calculation of the composite section properties.

Component	Ycg	A	AY	AY^2	I	$I+AY^2$
Deck	77.75	438	34089	2650458	2055	2652513
Girder	34.87	915	31906	1112564	656426	1768990
Haunch	73	0	0	0	0	0
Summation		1353	65996			4421503

$\Sigma A := 1353$ in^2

$\Sigma AY := 65996$ in^3

$\Sigma IplusAYsq := 4421503$ in^4

$y_{cgb} := \frac{\Sigma AY}{\Sigma A}$ $\boxed{y_{cgb} = 48.8}$ in

$y_{cgt} := ht - y_{cgb}$ $\boxed{y_{cgt} = 23.2}$ in

$A_{cg} := \Sigma A$ $\boxed{A_{cg} = 1353}$ in^2

$I_{cg} := \Sigma IplusAYsq - A_{cg} \cdot y_{cgb}^2$ $\boxed{I_{cg} = 1202381}$ in^4

$S_{cgt} := \frac{I_{cg}}{y_{cgt}}$ $\boxed{S_{cgt} = 51777}$ in^3

$S_{cgb} := \frac{I_{cg}}{y_{cgb}}$ $\boxed{S_{cgb} = 24650}$ in^3

E45-6.4 Dead Load Analysis - Interior Girder

Dead load on non-composite (D_1):

weight of 72W girders $\boxed{w_g = 0.953}$ klf

weight of 2-in haunch

$w_h := \left(\frac{H_{avg}}{12}\right) \cdot \left(\frac{b_{tf}}{12}\right) \cdot (w_c)$ $\boxed{w_h = 0.100}$ klf

weight of diaphragms $\boxed{w_D := 0.006}$ klf

weight of slab

$w_d := \left(\frac{t_s}{12}\right) \cdot (S) \cdot (w_c)$ $\boxed{w_d = 0.750}$ klf

$D_1 := w_g + w_h + w_D + w_d$ $\boxed{D_1 = 1.809}$ klf

$V_{D1} := \frac{D_1 \cdot L}{2}$ $\boxed{V_{D1} = 132.1}$ kips

$M_{D1} := \frac{D_1 \cdot L^2}{8}$ $\boxed{M_{D1} = 4820}$ kip-ft

* Dead load on composite (D_2):

weight of single parapet, klf $w_p = 0.387$ klf

weight of 2 parapets, divided equally to all girders, klf

$$D_2 := \frac{w_p \cdot 2}{ng}$$ $D_2 = 0.129$ klf

$$V_{D2} := \frac{D_2 \cdot L}{2}$$ $V_{D2} = 9.4$ kips

$$M_{D2} := \frac{D_2 \cdot L^2}{8}$$ $M_{D2} = 344$ kip-ft

* Wearing Surface (DW): There is no current wearing surface on this bridge. However, it is designed for a 20 psf future wearing surface. Thus, it will be used in the calculations for the Wisconsin Standard Permit Vehicle Design Check, Section 45.12.

$$DW := \frac{w \cdot 0.020}{ng}$$ $DW = 0.133$ klf

$$V_{DW} := \frac{DW \cdot L}{2}$$ $V_{DW} = 9.7$ kips

$$M_{DW} := \frac{DW \cdot L^2}{8}$$ $M_{DW} = 355$ kip-ft

* **Std [3.23.2.3.1.1]** states that permanent loads on the deck may be distributed uniformly among the beams. This method is used for the parapet and future wearing surface loads.

Total Unfactored Dead Load

$$V_D := V_{D1} + V_{D2}$$ $V_D = 141.5$ kips

$$M_D := M_{D1} + M_{D2}$$ $M_D = 5164$ kip-ft

E45-6.5 Live Load Analysis - Interior Girder

E45-6.5.1 Moment and Shear Distribution Factors for Interior Beams:

Moment and Shear Distribution Factors for interior girders are in accordance with **Std [3.23.1.2, 3.23.2.2]**:

For one Design Lane Loaded:

$$DF_s := \frac{S}{7} \qquad \boxed{DF_s = 1.071}$$

For Two or More Design Lanes Loaded:

$$DF_m := \frac{S}{5.5} \qquad \boxed{DF_m = 1.364}$$

E45-6.5.2 Live Load Moments

The live load load moments from analysis software (per wheel including impact with multi-lane distribution factor applied) are listed below:

Unfactored Live Load + Impact Moments per Wheel (kip-ft)		
Tenth Point	Truck	Lane
0	0	0
0.1	710	687
0.2	1250	1221
0.3	1620	1603
0.4	1839	1832
0.5	1896	1908

The HS20 lane load controls at midspan.

$M_{LLIM} := 1908$ kip-ft

E45-6.6 Determination of Pretress Losses

Calculate the components of the prestress losses; shrinkage, elastic shortening, creep and relaxation, using the approximate method in accordance with **Std [9.16.2]**.

Shrinkage

Relative Humidity $RH := 72$

$$SH := \frac{(17000 - 150 \cdot RH)}{1000}$$ $\boxed{SH = 6.200}$ ksi

Elastic Shortening

$E_{ci} := E_{beam6.8} = 4999$ $\boxed{E_{ci} = 4999}$ ksi

$A_{ps} := ns \cdot A_s = 9.982$ $\boxed{A_{ps} = 9.982}$ in^2

Estimated initial tendon stress:

$P_{si} := 0.69 \cdot A_{ps} \cdot f'_s = 1860$ $\boxed{P_{si} = 1860}$ kips

Dead load moment of girder:

$$M_g := 12 \cdot w_g \cdot \frac{L^2}{8} = 30471$$ $\boxed{M_g = 30471}$ k-in

According to **PCI Bridge Design Manual [18.5.4.3]**:

$$f_{cir} := \frac{P_{si}}{A_g} + \frac{\left(P_{si} \cdot e_s^2\right)}{I_g} - \frac{M_g \cdot e_s}{I_g}$$ $\boxed{f_{cir} = 3.255}$ ksi

$$ES := \frac{E_s}{E_{ci}} \cdot f_{cir}$$ $\boxed{ES = 18.553}$ ksi

Creep of Concrete

Moment due to concrete deck weight:

$$M_{slab} := 12 \cdot \frac{\left(w_d \cdot L^2\right)}{8}$$ $M_{slab} = 23981$ k-in

Moment due to haunch weight:

$$M_{haunch} := 12 \cdot \frac{\left(w_h \cdot L^2\right)}{8}$$ $M_{haunch} = 3197$ k-in

Moment due to diaphragms:

$$M_{nc} := 12 \cdot \frac{\left(w_D \cdot L^2\right)}{8}$$ $M_{nc} = 191.8$ k-in

Moment due to composite DL:

$$M_c := M_{D2} \cdot 12$$ $M_c = 4125$ k-in

Centroid of composite section to C.G. of strand pattern:

$$e_c := e_s + \left(y_{cgb} - y_b\right)$$ $e_c = 44.428$ in

Concrete stress at C.G. of strands due to all DL except girder:

$$f_{cds} := \left(M_{slab} + M_{haunch} + M_{nc}\right) \cdot \frac{e_s}{I_g} + M_c \cdot \frac{e_c}{I_{cg}}$$ $f_{cds} = 1.425$ ksi

$$CR_c := 12 \cdot f_{cir} - 7 \cdot f_{cds}$$ $CR_c = 29.080$ ksi

Relaxation of Prestressing Steel

$$CR_s := 5 - 0.10 \cdot ES - 0.05 \cdot \left(SH + CR_c\right)$$ $CR_s = 1.381$ ksi

Total Prestress Losses

$$f_s := SH + ES + CR_c + CR_s$$ $f_s = 55.214$ ksi

E45-6.7 Compute Nominal Flexural Resistance at Midspan

At failure, we can assume that the tendon stress is:

$$f_{su} := f'_s \cdot \left[1 - \left(\frac{\gamma}{\beta_1}\right) \cdot \left(\rho \cdot \frac{f'_s}{f'_{cd}}\right)\right]$$ **Std [9.17.4.1]**

where:

$\gamma := 0.28$ for low relaxation strands **Std [9.1.2]**

$\beta_1 := 0.85$ for concrete deck in compression block, up to 4,000 psi **Std [8.16.2.7]**

Calculation of ρ:

$A_{ps} = 9.982$ in^2

$b := b_{eff} = 90.000$ in

$d := y_t + H_{avg} + t_{se} + e_s$ $\boxed{d = 77.150}$ in

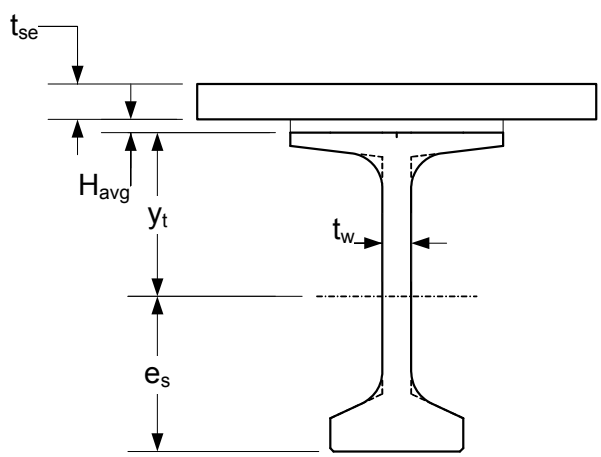

Figure E45-6.3

$$\rho := \frac{A_{ps}}{b \cdot d} = 0.00144$$

$\boxed{f_{su} = 261.4}$ ksi

Check the depth of the equivalent rectangular stress block, c, per **Std [9.17.2]**:

$$c := \frac{A_{ps} \cdot f_{su}}{0.85 f'_{cd} \cdot b}$$ $\boxed{c = 8.526}$ in

The calculated value of "c" is greater than the deck thickness, 7.5 in. Therefore, the rectangular assumption is incorrect and the compression block extends into the haunch. Calculate the capacity based upon a flanged section per **Std [9.17.3]**:

$$A_{sf} := 0.85 \cdot f'_{cd} \cdot \frac{(b - b_{tf}) \cdot t_{se}}{f_{su}}$$ $\boxed{A_{sf} = 4.098}$ in^2

$$A_{sr} := A_{ps} - A_{sf}$$ $\boxed{A_{sr} = 5.884}$ in^2

$$M_n := A_{sr} \cdot f_{su} \cdot d \cdot \left[1 - 0.6 \cdot \left(\frac{A_{sr} \cdot f_{su}}{b_{tf} \cdot d \cdot f'_{cd}}\right)\right] + 0.85 \cdot f'_{cd} \cdot (b - b_{tf}) \cdot t_{se} \cdot (d - 0.5 \cdot t_{se})$$

$M_n = 189875$ k-in

$\boxed{M_n = 15823}$ k-ft

For prestressed concrete members, $\phi := 1.0$

$\boxed{\phi \cdot M_n = 15823}$ k-ft

Check Minimum Reinforcement

The amount of reinforcement must be sufficient to develop ϕM_n equal to 1.2 times the cracking moment M_{cr} per **Std [9.18.2.1]**. If $\phi M_n < 1.2 M_{cr}$, the nominal moment capacity shall be reduced according to **MBE [6B.5.3.3]**:

M_{cr} is calculated as follows:

$$M_{cr} := S_c \cdot (f_r + f_{pe}) - M_{dnc} \cdot \left[\left(\frac{S_c}{S_b}\right) - 1\right]$$

$$f_r := 7.5 \cdot \frac{\sqrt{f'_c \cdot 1000}}{1000}$$ **Std [9.15.2.3]** $\boxed{f_r = 0.671}$ ksi

$$M_{dnc} := 12 \cdot M_{D1}$$ $\boxed{M_{dnc} = 57841}$ kip-in

Effective prestress force after losses

$$P_{se} := A_{ps} \cdot (0.75 f'_s - f_s)$$ $\boxed{P_{se} = 1470}$ kips

$S_{nc} := S_b$ $\boxed{S_{nc} = 18825}$ in^3

$r := \sqrt{\frac{I_g}{A_g}}$ $\boxed{r = 26.784}$ in

$f_{pe} := \frac{P_{se}}{A_g} \cdot \left(1 + \frac{e_s \cdot y_b}{r^2}\right)$ $\boxed{f_{pe} = 3.990}$ ksi

$S_c := S_{cgb}$ $\boxed{S_c = 24650}$ in^3

$\boxed{1.2 \cdot M_{cr} = 9700}$ kip-ft $< \phi \cdot M_n = 15823$ kip-ft

Therefore the requirement is satisfed.

E45-6.8 Compute Nominal Shear Resistance at First Critical Section

The following will illustrate the shear resistance calculation at the first critical section only. Due to the variation of resistances for shear along the length of the prestressed concrete I-beam, it is not certain what location will govern. Therefore, a systematic evaluation of the shear should be performed along the length of the beam.

The shear strength is the sum of contributions from nominal shear strength provided by concrete, V_c, and nominal shear strength provided by web reinforcement, V_s.

The critical section for shear is taken at a distance of H/2 from the face of the support per **Std [9.20.1.4]**.

$H := \frac{ht}{12} = 6.00$ ft $\boxed{\frac{H}{2} = 3.00}$ ft

The shear strength provided by concrete, V_c, is taken as the lesser of V_{ci} and V_{cw}:

$V_{ci} := 0.6 \cdot \sqrt{f'_c} \cdot b' \cdot d + V_d + \frac{V_i \cdot M_{cre}}{M_{max}} \geq 1.7\sqrt{f'_c} \cdot b' \cdot d$ **Std [9.20.2.2]**

$f'_c = 8.000$ ksi

$b' := t_w = 6.500$ in

$V_d := (D_1 + D_2) \cdot \left(\frac{L}{2} - \frac{H}{2}\right) = 135.7$ k Shear due to unfactored dead load

$$M_{cre} := \frac{I_{cg}}{Y_t} \cdot \left(6 \cdot \sqrt{f'_c} + f_{pe} - f_d\right)$$

Moment causing flexural cracking at section due to externally applied loads

$$M_{dnc} := \frac{\left(w_d + w_h + w_D + w_g\right) \cdot \left(\frac{H}{2}\right)}{2} \cdot \left(L - \frac{H}{2}\right) = 388.0 \quad \text{k-ft}$$

Moment due to noncomposite dead load

$$M_d := \frac{\left(D_1 + D_2\right) \cdot \left(\frac{H}{2}\right)}{2} \cdot \left(L - \frac{H}{2}\right) = 415.7 \quad \text{k-ft}$$

Moment due to total unfactored dead load

$$M_{dc} := \frac{\left(D_2\right) \cdot \left(\frac{H}{2}\right)}{2} \cdot \left(L - \frac{H}{2}\right) = 27.7 \quad \text{k-ft}$$

Moment due to composite dead load

$$f_d := \frac{M_{dnc} \cdot 12}{S_b} + \frac{M_{dc} \cdot 12}{S_{cgb}} = 0.261 \quad \text{ksi}$$

Stress at extreme tension fiber due to unfactored dead load

Since there are draped strands for a distance of $HD = 50.289$ ft from the end of the girder, a revised value of e_s should be calculated based on the estimated location of the critical section.

$ns_{sb} := 38$ number of undraped strands

$ns_d := 8$ number of draped strands

Find the center of gravity for the 38 straight strands from the bottom of the girder:

$$Y_{38S} := \frac{12 \cdot 2 + 12 \cdot 4 + 12 \cdot 6 + 2 \cdot 8}{ns_{sb}}$$

$\boxed{Y_{38S} = 4.211}$ in

Find the center of gravity for the 8 draped strands from the bottom of the girder:

$slope = 10.274$ %

$$Y_{8D} := A - \frac{H}{2} \cdot 12 \cdot \left(\frac{slope}{100}\right)$$

$\boxed{Y_{8D} = 63.301}$ in

Find the combined center of gravity for all strands from the bottom of the girder:

$$Y_{COMB} := \frac{ns_{sb} \cdot Y_{38S} + ns_d \cdot Y_{8D}}{ns_{sb} + ns_d}$$

$\boxed{Y_{COMB} = 14.487}$ in

Find the distance from the girder's centroid to the center of gravity of strands:

$$e_{s_crit} := y_b - Y_{COMB}$$

$\boxed{e_{s_crit} = 20.38}$ in

The shear depth from top of composite section to center of gravity of strands:

$d_v := \max(0.8 \cdot H, y_t + H_{avg} + t_{se} + e_{s_crit})$ $\boxed{d_v = 67.0}$ in

Find the revised value of fpe at the critical shear location:

$f_{pe} := \frac{P_{se}}{A_g} \cdot \left(1 + \frac{e_{s_crit} \cdot y_b}{r^2}\right)$ $\boxed{f_{pe} = 3.199}$ ksi

Therefore:

$Y_t := y_{cgb} = 48.778$ in

$M_{cre} := \frac{I_{cg}}{Y_t} \cdot \left(6 \cdot \frac{\sqrt{f'_c \cdot 1000}}{1000} + f_{pe} - f_d\right) \cdot \left(\frac{1}{12}\right)$ $\boxed{M_{cre} = 7137}$ k-ft

From live load analysis software:

$M_l := 159.71$ k-ft — from HS20 lane load at crit. section

$M_u := 1.3M_d + 2.17 \cdot M_l = 887.0$ k-ft — Maximum factored moment at section

$M_{max} := M_u - M_d = 471.3$ k-ft — Maximum factored moment due to externally applied loads

$V_{u_sim} := 291.6$ k — Maximum factored shear occurring simultaneously with M_{max}

$V_i := V_{u_sim} - V_d$ $\boxed{V_i = 155.9}$ kips

Therefore:

$V_{ci} := \max\left(0.6 \cdot \frac{\sqrt{f'_c \cdot 1000}}{1000} \cdot b' \cdot d_v + V_d + \frac{V_i \cdot M_{cre}}{M_{max}}, 1.7\sqrt{f'_c} \cdot b' \cdot d_v\right)$

$\boxed{V_{ci} = 2520.7}$ kips

$V_{cw} := \left(3.5\sqrt{f'_c} + 0.3 \cdot f_{pc}\right) \cdot b' \cdot d_v + V_p$

$f_{pc} := \frac{P_{se}}{A_g} - \frac{P_{se} \cdot e_{s_crit} \cdot (y_{cgb} - y_b)}{I_g} + \frac{12M_{dnc} \cdot (y_{cgb} - y_b)}{I_g}$

$\boxed{f_{pc} = 1.071}$ ksi

$V_p := \frac{ns_d}{ns} \cdot P_{se} \cdot \frac{slope}{100} = 26.269$ $\boxed{V_p = 26.3}$ kips

$\boxed{V_{cw} = 302.5}$ kips

$V_c := \min(V_{ci}, V_{cw})$ $\boxed{V_c = 302.5}$ kips

Shear strength provided by web reinforcement:

Calculate the shear resistance at H/2:

$s := 18$ in

$A_v := 0.40$ in^2 for #4 rebar stirrups

A more refined analysis using average spacing across multiple stirrup zones may be used (refer to **MBE [6A.5.8, 2015 Interim Revisions]**, however this example conservatively considers the maximum spacing between the current and adjacent analysis points.

$f_y := 60$ ksi

$d_v = 67.01$ in

$$V_s := \min\left(A_v \cdot f_y \cdot \frac{d_v}{s}, 8 \cdot \frac{\sqrt{f'_c \cdot 1000}}{1000} \cdot b' \cdot d_v\right) \qquad \boxed{V_s = 89.4} \text{ kips}$$

The nominal shear capacity is:

$\phi_v := 0.9$

$V_n := V_c + V_s = 391.9$ kips

$\boxed{\phi_v \cdot V_n = 352.7}$ kips

E45-6.9 Design Load Rating

The inventory rating checks include Concrete Tension, Concrete Compression, Prestressing Steel Tension, and Flexural and Shear Strength. The operating rating checks include Prestressing Steel Tension and Flexural and Shear Strength. Refer to per **MBE [6B.5.3.3].**

Unfactored stress due to prestress force after losses:

$$F_{p_bot} := \frac{-P_{se}}{A_g} \cdot \left(1 + \frac{e_s \cdot y_b}{r^2}\right) \qquad \boxed{F_{p_bot} = -3.990} \text{ ksi}$$

$$F_{p_top} := \frac{-P_{se}}{A_g} \cdot \left(1 - \frac{e_s \cdot y_t}{r^2}\right) \qquad \boxed{F_{p_top} = 0.931} \text{ ksi}$$

Unfactored dead load stress:

$$F_{d_bot} := \frac{12 \cdot M_{D1}}{S_b} + \frac{12 \cdot M_{D2}}{S_{cgb}}$$ $F_{d_bot} = 3.240$ ksi

$$F_{d_top} := \frac{-12 \cdot M_{D1}}{S_t} - \frac{12 M_{D2}}{S_{cgt}}$$ $F_{d_top} = -3.351$ ksi

Secondary prestress forces (assumed):

$F_s := 0$

Unfactored live load stress including impact:

$$F_{L_bot} := \frac{12 M_{LLIM}}{S_{cgb}}$$ $F_{L_bot} = 0.929$ ksi

$$F_{L_top} := \frac{-12 M_{LLIM}}{S_{cgt}}$$ $F_{L_top} = -0.442$ ksi

Concrete Tension Rating:

$$RF_{inv_t} := \frac{6 \frac{\sqrt{f'_c \cdot 1000}}{1000} - \left(F_{d_bot} + F_{p_bot} + F_s\right)}{F_{L_bot}}$$ $RF_{inv_t} = 1.386$

Concrete Compression Rating:

$$RF_{inv_c1} := \frac{-0.6 \cdot f'_c - \left(F_{d_top} + F_{p_top} + F_s\right)}{F_{L_top}}$$ $RF_{inv_c1} = 5.382$

$$RF_{inv_c2} := \frac{-0.4 \cdot f'_c - 0.5 \cdot \left(F_{d_top} + F_{p_top} + F_s\right)}{F_{L_top}}$$ $RF_{inv_c2} = 4.500$

Prestressing Steel Tension Rating:

$f'_y := 0.9 \cdot f'_s$ $f'_y = 243.0$ ksi

$$N := \text{round}\left(\frac{E_s}{E_{beam8}}\right)$$ $N = 4$

$$F_{d_ps} := N\cdot\left(M_g + M_{slab} + M_{haunch} + M_{nc}\right)\frac{e_s}{I_g} + N\cdot M_c\cdot\frac{e_c}{I_{cg}}$$

$F_{d_ps} = 11.367$ ksi

$$F_{p_ps} := \frac{P_{se}}{A_{ps}}$$

$F_{p_ps} = 147.286$ ksi

$$F_{L_ps} := N\cdot 12\cdot M_{LLIM}\cdot\frac{e_c}{I_{cg}}$$

$F_{L_ps} = 3.384$ ksi

$$RF_{inv_ps_tens} := \frac{0.8\cdot f'_y - \left(F_{d_ps} + F_{p_ps} + F_s\right)}{F_{L_ps}}$$

$RF_{inv_ps_tens} = 10.564$

$$RF_{op_ps_tens} := \frac{0.9\cdot f'_y - \left(F_{d_ps} + F_{p_ps} + F_s\right)}{F_{L_ps}}$$

$RF_{op_ps_tens} = 17.744$

Flexural Strength Rating:

$$RF_{inv_m} := \frac{\phi\cdot M_n - 1.3\cdot M_D}{2.17\cdot M_{LLIM}}$$

$RF_{inv_m} = 2.200$

$$RF_{op_m} := \frac{\phi\cdot M_n - 1.3\cdot M_D}{1.3\cdot M_{LLIM}}$$

$RF_{op_m} = 3.673$

Shear Strength Rating:

$V_L := 56.86$ kips from LL analysis software

$$RF_{inv_v} := \frac{\phi_v\cdot V_n - 1.3\cdot V_d}{2.17\cdot V_L}$$

$RF_{inv_v} = 1.429$

$$RF_{op_v} := \frac{\phi_v\cdot V_n - 1.3\cdot V_d}{1.3\cdot V_L}$$

$RF_{op_v} = 2.385$

E45-6.10 Permit Load Rating

For any bridge design (new or rehabilitation) or bridge re-rate, the Wisconsin Standard Permit Vehicle (Wis-SPV) shall be analyzed per 45.12.

The bridge shall be analyzed for this vehicle considering both single-lane and multi-lane distribution. Also, the vehicle will be analyzed assuming that full dynamic allowance is utilized. Future wearing surface shall be included.

Since this example is rating a newly designed bridge, an additional check is required. The designer shall ensure that the results of the single-lane analysis are greater than 190 kips MVW.

From live load analysis software, the force effects with distribution factor and impact included are:

$M190_{LLm} := 3985.01$ $M190_{LLs} := 3131.08$ kip-ft per girder at midspan

$V190_{LLm} := 120.55$ $V190_{LLs} := 94.72$ kips at $\frac{H}{2} = 3$ ft

$F_{L_ps_190m} := N \cdot 12 \cdot M190_{LLm} \cdot \frac{e_c}{I_{cg}}$ $\boxed{F_{L_ps_190m} = 7.068}$

$F_{L_ps_190s} := N \cdot 12 \cdot M190_{LLs} \cdot \frac{e_c}{I_{cg}}$ $\boxed{F_{L_ps_190s} = 5.553}$

Additional dead load from wearing surface at midspan:

$\boxed{M_{DW} = 355.3}$ kip-ft

Additional dead load from wearing surface at critical shear section:

$V_{DW} := DW \cdot \left(\frac{L}{2} - \frac{H}{2}\right)$ $\boxed{V_{DW} = 9.33}$ kips

$F_{dw_ps} := N \cdot (12 M_{DW}) \cdot \frac{e_c}{I_{cg}}$ $\boxed{F_{dw_ps} = 0.630}$ ksi

Multi-Lane w/o Future Wearing Surface:

$$RF_{190m_ps_t} := \frac{0.9 \cdot f'_y - \left(F_{d_ps} + F_{p_ps} + F_s\right)}{F_{L_ps_190m}}$$

$$\boxed{RF_{190m_ps_t} = 8.496}$$

$$RF_{op_190m_m} := \frac{\phi \cdot M_n - 1.3 \cdot M_D}{1.3 \cdot M190_{LLm}}$$

$$\boxed{RF_{op_190m_m} = 1.759}$$

$$RF_{op_190m_v} := \frac{\phi_v \cdot V_n - 1.3 \cdot V_d}{1.3 \cdot V190_{LLm}}$$

$$\boxed{RF_{op_190m_v} = 1.125}$$

Single-Lane w/o Future Wearing Surface:

$$RF_{190s_ps_t} := \frac{0.9 \cdot f'_y - \left(F_{d_ps} + F_{p_ps} + F_s\right)}{F_{L_ps_190s}}$$

$$\boxed{RF_{190s_ps_t} = 10.813}$$

$$RF_{op_190s_m} := \frac{\phi \cdot M_n - 1.3 \cdot M_D}{1.3 \cdot M190_{LLs}}$$

$$\boxed{RF_{op_190s_m} = 2.238}$$

$$RF_{op_190s_v} := \frac{\phi_v \cdot V_n - 1.3 \cdot V_d}{1.3 \cdot V190_{LLs}}$$

$$\boxed{RF_{op_190s_v} = 1.432}$$

Single-Lane w/ Future Wearing Surface:

$$RF_{190sws_ps_t} := \frac{0.9 \cdot f'_y - \left(F_{d_ps} + F_{dw_ps} + F_{p_ps} + F_s\right)}{F_{L_ps_190s}}$$

$$\boxed{RF_{190sws_ps_t} = 10.700}$$

$$RF_{op_190sws_m} := \frac{\phi \cdot M_n - 1.3 \cdot \left(M_D + M_{DW}\right)}{1.3 \cdot M190_{LLs}}$$

$$\boxed{RF_{op_190sws_m} = 2.125}$$

$$RF_{op_190sws_v} := \frac{\phi_v \cdot V_n - 1.3 \cdot \left(V_d + V_{DW}\right)}{1.3 \cdot V190_{LLs}}$$

$$\boxed{RF_{op_190sws_v} = 1.333}$$

E45-6.11 Summary of Rating Factors

Interior Girder						
Limit State		Design Load Rating		Permit Load Rating (kips)		
		Inventory	Operating	Single Lane w/ FWS	Single Lane w/o FWS	Multi Lane w/o FWS
Strength	Flexure	HS 44	HS 73	403	425	334
	Shear	HS 28	HS 47	253	272	213
Service	Concrete Tension	HS 27	N/A	N/A	N/A	N/A
	Concrete Compression 1	HS 107	N/A	N/A	N/A	N/A
	Concrete Compression 2	HS 90	N/A	N/A	N/A	N/A
	Steel Tension	HS 211	HS 354	2033	2068	1614

This page intentionally left blank.

Table of Contents

E45-7 Two Span 54W" Prestressed Girder Bridge Continuity Reinforcement, Rating Example LFR.....2
E45-7.1 Design Criteria.....2
E45-7.2 Modulus of Elasticity of Beam and Deck Material.....2
E45-7.3 Section Properties.....3
E45-7.4 Girder Layout.....3
E45-7.5 Loads.....3
E45-7.5.1 Dead Loads.....4
E45-7.5.2 Live Load Analysis Load Distribution to Interior Girders.....4
E45-7.6 Dead Load Moments.....5
E45-7.7 Live Load Moments.....6
E45-7.8 Composite Girder Section Properties.....6
E45-7.9 Flexural Strength Capacity at Pier.....8
E45-7.10 Design Load Rating.....9
E45-7.11 Permit Load Rating.....9
E45-7.12 Summary of Rating Factors.....10

E45-7 Two Span 54W" Prestressed Girder Bridge - Continuity Reinforcement, Rating Example - LFR

Reference E45-3 for bridge data. For LFR, the Bureau of Structures rates structures for the Design Load (HS20) and for Permit Vehicle loads. The rating below analyzes an interior girder only, which typically governs. The rating below analyzes an interior girder only in the negative moment region (continuity reinforcement).

E45-7.1 Design Criteria

$L := 130$	center of bearing at abutment to CL pier for each span, ft
$L_g := 130.375$	total length of the girder (the girder extends 6 inches past the center of bearing at the abutment and 1.5" short of the center line of the pier).
$w := 40$	clear width of deck, 2 lane road, 3 design lanes, ft
$f'_c := 8$	girder concrete strength, ksi
$f'_{cd} := 4$	deck concrete strength, ksi
$f_y := 60$	yield strenght of mild reinforcement, ksi
$E_s := 29000$	ksi, Modulus of Elasticity of the reinforcing steel
$w_p := 0.387$	weight of Wisconsin Type LF parapet, klf
$t_s := 8$	slab thickness, in
$t_{se} := 7.5$	effective slab thickness, in
$w_c := 0.150$	kcf
$h := 2$	height of haunch, inches

E45-7.2 Modulus of Elasticity of Beam and Deck Material

The modulus of elasticity for the precast and deck concrete are given in Chapter 19 as $E_{beam6} := 5500$ ksi and $E_{deck4} := 4125$ ksi for concrete strengths of 6 and 4 ksi respectively. The values of E for different concrete strengths are calculated as follows (ksi):

$$E_{beam8} := 5500 \cdot \frac{\sqrt{f'_c \cdot 1000}}{\sqrt{6000}} \qquad E_B := E_{beam8} \qquad \boxed{E_B = 6351}$$

$$E_D := E_{deck4} \qquad \boxed{E_D = 4125}$$

$$n := \frac{E_B}{E_D} \qquad \boxed{n = 1.540}$$

E45-7.3 Section Properties

54W Girder Properties:

$w_{tf} := 48$ in

$t_w := 6.5$ in

$ht := 54$ in

$b_w := 30$ width of bottom flange, in

$A_g := 798$ in^2

$I_g := 321049$ in^4

$y_t := 27.70$ in

$y_b := -26.30$ in

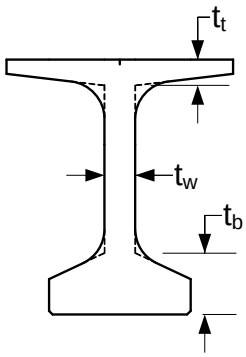

E45-7.4 Girder Layout

$S := 7.5$ Girder Spacing, feet

$ng := 6$ Number of girders

E45-7.5 Loads

$w_g := 0.831$ weight of 54W girders, klf

$w_d := 0.100$ weight of 8-inch deck slab (interior), ksf

$w_h := 0.100$ weight of 2-in haunch, klf

$w_{di} := 0.410$ weight of each diaphragm on interior girder (assume 2), kips

$w_{ws} := 0.020$ future wearing surface, ksf

$w_p = 0.387$ weight of parapet, klf

E45-7.5.1 Dead Loads

Dead load on non-composite (D_1):

interior:

$$w_{D1} := w_g + w_d \cdot S + w_h + 2 \cdot \frac{w_{di}}{L}$$

$w_{D1} = 1.687$ klf

* Dead load on composite (D_2):

$$w_{D2} := \frac{2 \cdot w_p}{ng}$$

$w_{D2} = 0.129$ klf

* Wearing Surface (DW):

$$w_{DW} := \frac{w \cdot w_{ws}}{ng}$$

$w_{DW} = 0.133$ klf

* **Std [3.23.2.3.1.1]** states that permanent loads on the deck may be distributed uniformly among the beams. This method is used for the parapet and future wearing surface loads.

E45-7.5.2 Live Load Analysis

Load Distribution to Interior Girders

Moment and Shear Distribution Factors for interior girders are in accordance with **Std [3.23.1.2, 3.23.2.2]**:

For one Design Lane Loaded:

$$DF_s := \frac{S}{7}$$

$DF_s = 1.071$

For Two or More Design Lanes Loaded:

$$DF_m := \frac{S}{5.5}$$

$DF_m = 1.364$

E45-7.6 Dead Load Moments

The unfactored dead load moments are listed below (values are in kip-ft):

Unfactored Dead Load Interior Girder Moments, (ft-kips)			
Tenth Point	D1 non-composite	D2 composite	DW composite
0.5	3548	137	141
0.6	3402	99	102
0.7	2970	39	40
0.8	2254	-43	-45
0.9	1253	-147	-151
1.0	0	-272	-281

The D_1 values are the component non-composite dead loads and include the weight of the girder, haunch, diaphragms and the deck.

The D_2 values are the component composite dead loads and include the weight of the parapets.

The DW values are the composite dead loads from the future wearing surface.

Note that the girder dead load moments (a portion of D_1) are calculated based on the CL bearing to CL bearing length. The other D_1 moments are calculated based on the span length (center of bearing at the abutment to centerline of the pier).

The total combined dead load is equal to:

$M_{DL} := -(M_{D1} + M_{D2})$ $\boxed{M_{DL} = 272.0}$ kips without wearing surface

$M_{DL_WS} := -(M_{D1} + M_{D2} + M_{DW})$ $\boxed{M_{DL_WS} = 553.0}$ kips with wearing surface

E45-7.7 Live Load Moments

The unfactored live load load moments (including distribution factor and impact) are listed below (values are in kip-ft) for the HS20 truck and lane loads.

Unfactored Live Load + Impact Moments per Lane (kip-ft)		
Tenth Point	HS20 Truck	HS20 Lane
0.5	-358	-365
0.6	-430	-438
0.7	-501	-511
0.8	-573	-584
0.9	-644	-875
1	-716	-1459

The unfactored live load moments per lane are calculated by applying the appropriate distribution factor to the controlling moment. For the interior girder:

$M_{LL} := 1459$ kip-ft

E45-7.8 Composite Girder Section Properties

Calculate the effective flange width in accordance with Chapter 17.2.11.

The effective flange width in accordance with **Std [9.8.3.1]**:

$$w_e := \min\left[S \cdot 12, 12 \cdot t_{se} + t_w, \frac{(L \cdot 12)}{4}\right] \qquad \boxed{w_e = 90.00} \text{ in}$$

The effective width, w_e, must be adjusted by the modular ratio, $n = 1.54$, to convert to the same concrete material (modulus) as the girder.

$$w_{eadj} := \frac{w_e}{n} \qquad \boxed{w_{eadj} = 58.46} \text{ in}$$

Calculate the composite girder section properties:

effective slab thickness; $t_{se} = 7.50$ in

effective slab width; $w_{eadj} = 58.46$ in

haunch thickness; $h = 2.0$ in

total height; $h_c := ht + h + t_{se}$

$h_c = 63.50$ in

$n = 1.540$

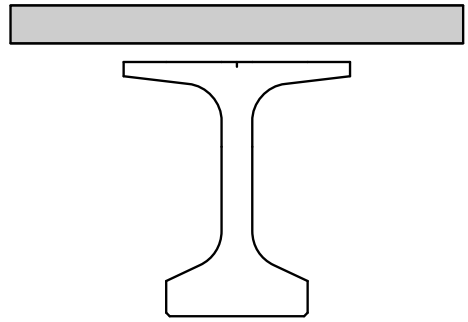

Note: The area of the concrete haunch is not included in the calculation of the composite section properties.

Component	Ycg	A	AY	AY^2	I	$I+AY^2$
Deck	59.75	438	26197	1565294	2055	1567349
Girder	26.3	798	20987	551969	321049	873018
Haunch	55	0	0	0	0	0
Summation		1236	47185			2440367

$\Sigma A := 1236$ in^2

$\Sigma AY := 47185$ in^4

$\Sigma IplusAYsq := 2440367$ in^4

$y_{cgb} := \frac{-\Sigma AY}{\Sigma A}$ $\quad y_{cgb} = -38.2$ in

$y_{cgt} := ht + y_{cgb}$ $\quad y_{cgt} = 15.8$ in

$A_{cg} := \Sigma A$ in^2

$I_{cg} := \Sigma IplusAYsq - A_{cg} \cdot y_{cgb}^2$ $\quad I_{cg} = 639053$ in^4

Deck:

$S_c := n \cdot \frac{I_{cg}}{y_{cgt} + h + t_{se}}$ $\quad S_c = 38851$ in^4

E45-7.9 Flexural Strength Capacity at Pier

All of the continuity reinforcement is placed in the top mat. Therefore the effective depth of the section at the pier is:

$cover := 2.5$ in

$bar_{trans} := 5$ (transverse bar size)

$Bar_D(bar_{trans}) = 0.625$ in (transverse bar diameter)

$Bar_{No} = 10$

$Bar_D(Bar_{No}) = 1.27$ in (Assumed bar size)

$$d_e := ht + h + t_s - cover - Bar_D(bar_{trans}) - \frac{Bar_D(Bar_{No})}{2}$$

$d_e = 60.24$ in

For flexure in non-prestressed concrete, $\phi_f := 0.9$.

The width of the bottom flange of the girder, $b_w = 30.00$ inches.

The continuity reinforcement is distributed over the effective flange width calculated earlier, $w_e = 90.00$ inches.

From E19-2, use a longitudinal bar spacing of #4 bars at $s_{longit} := 8.5$ inches. The continuity reinforcement is placed at 1/2 of this bar spacing, .

#10 bars at 4.25 inch spacing provides an $As_{prov} = 3.57$ in^2/ft, or the total area of steel provided:

$$As := As_{prov} \cdot \frac{w_e}{12}$$

$As = 26.80$ in^2

Calculate the capacity of the section in flexure at the pier:

Check the depth of the compression block:

$$a := \frac{As \cdot f_y}{0.85 \cdot b_w \cdot f'_c}$$

$a = 7.883$ in

This is approximately equal to the thickness of the bottom flange height of 7.5 inches. Therefore rectangular section strength calculation may be used.

$$M_n := As \cdot f_y \cdot \left(d_e - \frac{a}{2}\right) \cdot \frac{1}{12}$$

$M_n = 7544$ kip-ft

$\phi_f \cdot M_n = 6790$ kip-ft

E45-7.10 Design Load Rating

This design example illustrates the rating checks required at the location of maximum negative moment. These checks are also required at the locations of continuity bar cut offs but are not shown here.

$$RF_{inv} := \frac{\phi_f \cdot M_n - 1.3 \cdot M_{DL}}{2.17 \cdot M_{LL}}$$ $\boxed{RF_{inv} = 2.033}$

$$RF_{op} := \frac{\phi_f \cdot M_n - 1.3 \cdot M_{DL}}{1.3 \cdot M_{LL}}$$ $\boxed{RF_{op} = 3.393}$

E45-7.11 Permit Load Rating

Check the Wisconsin Standard Permit Vehicle per 45.12

For a symmetric 130' two span structure:

$MSPV_{LL} := 1029.8$ kip-ft per wheel line without impact

Per **Std [3.8.2.1]**:

$$IMPACT := \min\left(0.3, \frac{50}{L + 125}\right)$$ $\boxed{IMPACT = 0.196}$

Single Lane Distribution per Girder with Impact:

$$MSPV_{LLIMs} := MSPV_{LL} \cdot DF_s \cdot (1 + IMPACT)$$ $\boxed{MSPV_{LLIMs} = 1319.7}$ kip-ft

Multi Lane Distribution per Girder with Impact:

$$MSPV_{LLIMm} := MSPV_{LL} \cdot DF_m \cdot (1 + IMPACT)$$ $\boxed{MSPV_{LLIMm} = 1679.6}$ kip-ft

For any bridge design (new or rehabilitation) or bridge re-rate, the Wisconsin Standard Permit Vehicle (Wis-SPV) shall be analyzed per 45.12.

The bridge shall be analyzed for this vehicle considering both single-lane and multi-lane distribution. Also, the vehicle will be analyzed assuming that full dynamic allowance is utilized. Future wearing surface shall be included.

Since this example is rating a newly designed bridge, an additional check is required. The designer shall ensure that the results of the single-lane analysis are greater than 190 kips MVW.

Single Lane Distribution w/ FWS

$$RF_{SPVsws} := \frac{\phi_f \cdot M_n - 1.3 \cdot M_{DL_WS}}{1.3 \cdot MSPV_{LLIMs}}$$ $RF_{SPVsws} = 3.539$

$Wt_{SPVsws} := RF_{SPVsws} \cdot 190$ $Wt_{SPVsws} = 672.4$ kips >> 190 kips, OK

Single Lane Distribution w/o FWS

The rating for the Wis-SPV vehicle is now checked without the Future Wearing Surface. This value is reported on the plans.

$$RF_{SPVs} := \frac{\phi_f \cdot M_n - 1.3 \cdot M_{DL}}{1.3 \cdot MSPV_{LLIMs}}$$ $RF_{SPVs} = 3.752$

$Wt_{SPVs} := RF_{SPVs} \cdot 190$ $Wt_{SPVs} = 712.8$ kips

Since this value is greater than 250 kips, 250 kips is reported on the plans and on the Bridge Load Rating Summary form for the single-lane Permit Load Rating.

Multi-Lane Distribution w/o FWS

$$RF_{SPVm} := \frac{\phi_f \cdot M_n - 1.3 \cdot M_{DL}}{1.3 \cdot MSPV_{LLIMm}}$$ $RF_{SPVm} = 2.948$

$Wt_{SPVm} := RF_{SPVm} \cdot 190$ $Wt_{SPVm} = 560.1$ kips

Since this value is greater than 250 kips, 250 kips is reported on the Bridge Load Rating Summary form for the multi-lane Permit Load Rating.

E45-7.12 Summary of Rating Factors

Interior Girder						
Limit State		Design Load Rating		Legal Load	Permit Load Rating (kips)	
		Inventory	Operating	Rating	Single Lane	Multi-Lane
Strength 1	Flexure	HS 40	HS 67	N/A	250	250

Table of Contents

E45-8 Steel Girder Rating Example LFR 2
E45-8.1 Preliminary Data 2
E45-8.2 Compute Section Properties 4
E45-8.3 Dead Load Analysis Interior Girder 6
E45-8.4 Compute Live Load Distribution Factors for Interior Girder 11
E45-8.5 Compute Plastic Moment Capacity Positive Moment Region 14
E45-8.6 Design Load Rating @ 0.4L 18
E45-8.7 Check Section Proportion Limits Negative Moment Region 19
E45-8.8 Compute Plastic Moment Capacity Negative Moment Region 20
E45-8.9 Design Load Rating @ Pier 21
E45-8.10 Rate for Shear Negative Moment Region 22
E45-8.11 Design Load Rating @ Pier for Shear 23
E45-8.12 Permit Load Ratings 25
E45-8.12.1 Wis-SPV Permit Rating with Single Lane Distribution w/ FWS 26
E45-8.12.2 Wis-SPV Permit Rating with Single Lane Distribution w/o FWS 31
E45-8.12.3 Wis-SPV Permit Rating with Multi-Lane Distribution 32
E45-8.13 Summary of Rating 32

E45-8 Steel Girder Rating Example - LFR

Reference E45-4 for bridge data. For LFR, the Bureau of Structures rates structures for the Design Load (HS20) and for Permit Vehicle loads. The rating below analyzes an interior girder only, which typically governs.

E45-8.1 Preliminary Data

$N_{spans} := 2$	Number of spans	
$L := 120$	ft	span length
$N_b := 5$	number of girders	
$S := 9.75$	ft	girder spacing
$L_b := 240$	in	cross-frame spacing
$F_{yw} := 50$	ksi	web yield strength
$F_{yf} := 50$	ksi	flange yield strength
$f'_c := 4.0$	ksi	concrete 28-day compressive strength
$f_y := 60$	ksi	reinforcement strength
$E_s := 29000$	ksi	modulus of elasticity
$t_{deck} := 9.0$	in	total deck thickness
$t_s := 8.5$	in	effective deck thickness when 1/2" wearing surface is removed from total deck thickness
$w_s := 0.490$	kcf	steel density **Std [3.3.6]**
$w_c := 0.150$	kcf	concrete density **Std [3.3.6]**
$w_{misc} := 0.030$	kip/ft	additional miscellaneous dead load (per girder) per 17.2.4.1
$w_{par} := 0.387$	kip/ft	parapet weight (each)
$w_{deck} := 46.5$	ft	deck width
$d_{haunch} := 3.5$	in	haunch depth (from top of web for design) (for construction, the haunch is measured from the top of the top flange)

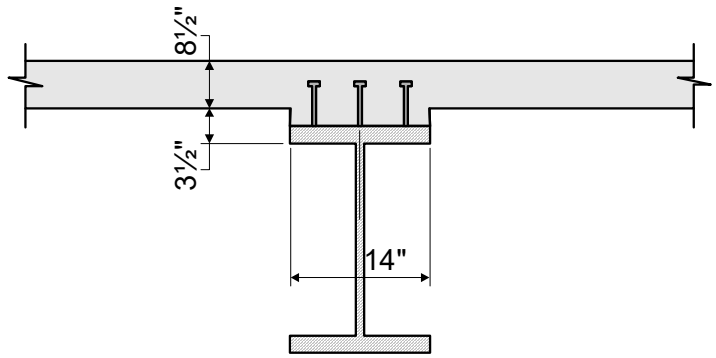

Figure E45-8.1-1
Composite Cross Section at Location of Maximum Positive Moment (0.4L)
(Note: 1/2" Intergral Wearing Surface has been removed for structural calcs.)

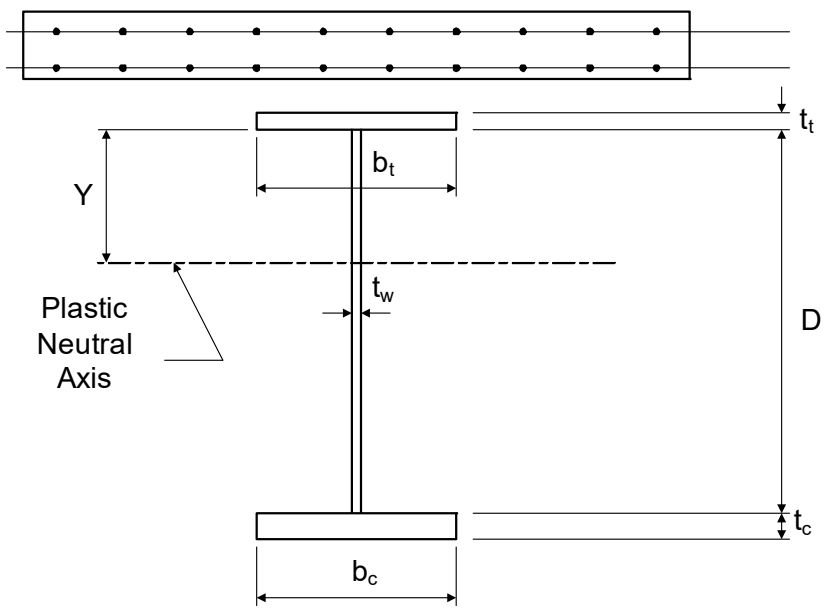

Figure E45-8.1-2
Composite Cross Section at Location of Maximum Negative Moment over Pier

$D := 54$ in

$t_w := 0.5$ in

E45-8.2 Compute Section Properties

Since the superstructure is composite, several sets of section properties must be computed. The initial dead loads (or the noncomposite dead loads) are applied to the girder-only section. For permanent loads assumed to be applied to the long-term composite section, the long-term modular ratio of 3n is used to transform the concrete deck area per **Std [10.35.1.4]**. For transient loads assumed applied to the short-term composite section, the short-term modular ratio of n is used to transform the concrete deck area.

The modular ratio, n, is for normal weight concrete is based upon f'_c per **Std [10.38.1.3]**. For f'_c= 4,000 psi,

$$n := 8$$

For interior beams, the effective flange width is calculated the lesser of the following widths per **Std [10.38.3.1]**.

1. One-fourth the span length of the girder:

$$b_{eff1} := \frac{L}{4} \qquad \boxed{b_{eff1} = 30.00} \quad \text{ft}$$

2. The distance center to center of the girders:

$$b_{eff2} := S \qquad \boxed{b_{eff2} = 9.75} \quad \text{ft}$$

3. Twelve times the least thickness of the slab:

$$b_{eff3} := \frac{(12 \cdot t_s)}{12} \qquad \boxed{b_{eff3} = 8.50} \quad \text{ft}$$

Therefore, the effective flange width is:

$$b_{effflange} := \min(b_{eff1}, b_{eff2}, b_{eff3}) \qquad \boxed{b_{effflange} = 8.50} \quad \text{ft}$$

or

$$\boxed{b_{effflange} \cdot 12 = 102.00} \quad \text{in}$$

For this design example, the slab haunch is 3.5 inches throughout the length of the bridge. That is, the bottom of the slab is located 3.5 inches above the top of the web. The area of the haunch is conservatively not considered in the section properties for this example.

Based on the plate sizes shown in Figure E45-4.1-4, the noncomposite and composite section properties for the positive moment region are computed as shown in the following table. The distance to the centroid is measured from the bottom of the girder.

The effect of creep from dead loads acting on the composite section shall be considered by checking stresses.

Positive Moment Region Section Properties						
Section	**Area, A (Inches^2)**	**Centroid, d (Inches)**	**A*d (Inches^3)**	**I_o (Inches^4)**	**A*y^2 (Inches^4)**	**I_{total} (Inches^4)**
Girder only:						
Top flange	10.500	55.250	580.1	0.5	8441.1	8441.6
Web	27.000	27.875	752.6	6561.0	25.8	6586.8
Bottom flange	12.250	0.438	5.4	0.8	8576.1	8576.9
Total	49.750	26.897	1338.1	6562.3	17043.0	23605.3
Composite (3n):						
Girder	49.750	26.897	1338.1	23605.3	11238.3	34843.6
Slab	36.125	62.625	2262.3	217.5	15477.0	15694.5
Total	85.875	41.926	3600.4	23822.8	26715.3	50538.0
Composite (n):						
Girder	49.750	26.897	1338.1	23605.3	29831.5	53436.8
Slab	108.375	62.625	6787.0	652.5	13694.3	14346.8
Total	158.125	51.384	8125.1	24257.8	43525.8	67783.6
Section	**y_{botgdr} (Inches)**	**y_{topgdr} (Inches)**	**$y_{topslab}$ (Inches)**	**S_{botgdr} (Inches^3)**	**S_{topgdr} (Inches^3)**	**$S_{topslab}$ (Inches^3)**
Girder only	26.897	28.728	---	877.6	821.7	---
Composite (3n)	41.926	13.699	24.949	1205.4	3689.3	2025.7
Composite (n)	51.384	4.241	15.491	1319.2	15982.9	4375.7

Table E45-8.2-1
Positive Moment Region Section Properties

Similarly, the noncomposite and composite section properties for the negative moment region are computed as shown in the following table. The distance to the centroid is measured from the bottom of the girder.

For the strength limit state, since the deck concrete is in tension in the negative moment region, the deck reinforcing steel contributes to the composite section properties and the deck concrete does not. However, per 45.6.3, only the top longitudinal mat of steel is used for rating purposes. With #6 bars at 7.5" o.c., the amount of longitudinal steel within the effective slab area is 5.98 in^2. Assume it is located 3 inches from the top of the slab. These values will be used for the calculations below.

Negative Moment Region Section Properties						
Section	**Area, A (Inches^2)**	**Centroid, d (Inches)**	**A*d (Inches^3)**	**I_o (Inches^4)**	**A*y^2 (Inches^4)**	**I_{total} (Inches^4)**
Girder only:						
Top flange	35.000	58.000	2030.0	18.2	30009.7	30027.9
Web	27.000	29.750	803.3	6561.0	28.7	6589.7
Bottom flange	38.500	1.375	52.9	24.3	28784.7	28809.0
Total	100.500	28.718	2886.2	6603.5	58823.1	65426.6
Composite (deck concrete using 3n):						
Girder	100.500	28.718	2886.2	65426.6	8995.9	74422.5
Slab	36.125	64.500	2330.1	217.5	25026.6	25244.1
Total	136.625	38.179	5216.3	65644.1	34022.5	99666.6
Composite (deck concrete using n):						
Girder	100.500	28.718	2886.2	65426.6	34639.7	100066.3
Slab	108.375	64.500	6990.2	652.5	32122.6	32775.1
Total	208.875	47.284	9876.4	66079.1	66762.3	132841.4
Composite (deck reinforcement only):						
Girder	100.500	28.718	2886.2	65426.6	435.2	65861.9
Deck reinf.	5.984	65.750	393.4	0.0	7309.8	7309.8
Total	106.484	30.799	3279.6	65426.6	7745.0	73171.6
Section	**y_{botgdr} (Inches)**	**y_{topgdr} (Inches)**	**y_{deck} (Inches)**	**S_{botgdr} (Inches^3)**	**S_{topgdr} (Inches^3)**	**S_{deck} (Inches^3)**
Girder only	28.718	30.532	---	2278.2	2142.9	---
Composite (3n)	38.179	21.071	30.571	2610.5	4730.1	3260.2
Composite (n)	47.284	11.966	21.466	2809.5	11101.3	6188.4
Composite (rebar)	30.799	28.451	34.951	2375.8	2571.9	2093.6

Table E45-8.2-2
Negative Moment Region Section Properties

E45-8.3 Dead Load Analysis - Interior Girder

Dead Load Components		
Resisted by	**Type of Load Factor**	
	DC	**DW**
Noncomposite section	• Steel girder • Concrete deck • Concrete haunch • Stay-in-place deck forms • Misc. (including cross-frames, stiffeners, etc.)	
Composite section	• Concrete parapets	• Future wearing surface & utilities

Table E45-8.3-1
Dead Load Components

COMPONENTS AND ATTACHMENTS: DC1 (NON-COMPOSITE)

GIRDER:

For the steel girder, the dead load per unit length varies due to the change in plate sizes. The moments and shears due to the weight of the steel girder can be computed using readily available analysis software. Since the actual plate sizes are entered as input, the moments and shears are computed based on the actual, varying plate sizes.

DECK:

For the concrete deck, the dead load per unit length for an interior girder is computed as follows:

$w_c = 0.150$ kcf

$S = 9.75$ ft

$t_{deck} = 9.00$ in

$DL_{deck} := w_c \cdot S \cdot \frac{t_{deck}}{12}$ $\boxed{DL_{deck} = 1.097}$ kip/ft

HAUNCH:

For the concrete haunch, the dead load per unit length varies due to the change in top flange plate sizes. The moments and shears due to the weight of the concrete haunch can be computed using readily available analysis software. Since the top flange plate sizes are entered as input, the moments and shears due to the concrete haunch are computed based on the actual, varying haunch thickness.

MISC:

For the miscellaneous dead load (including cross-frames, stiffeners, and other miscellaneous structural steel), the dead load per unit length is assumed to be as follows (17.2.4.1):

$DL_{misc} := 0.030$ kip/ft

COMPONENTS AND ATTACHMENTS: DC2 (COMPOSITE)

PARAPET:

For the concrete parapets, the dead load per unit length is computed as follows, assuming that the superimposed dead load of the two parapets is distributed uniformly among all of the girders per **Std (3.23.2.3.1.1]**:

$w_{par} = 0.387$ kip/ft

$N_b = 5$

$DL_{par} := \frac{w_{par} \cdot 2}{N_b}$ $\boxed{DL_{par} = 0.155}$ kip/ft

WEARING SURFACE: DW (COMPOSITE)

FUTURE WEARING SURFACE:

A future wearing surface of 20 psf will be used for the permit vehicle checks.

$DW := \frac{0.020 \cdot w_{deck}}{N_b}$ $\boxed{DW = 0.186}$ kip/ft

Since the plate girder and its section properties are not uniform over the entire length of the bridge, analysis software was used to compute the dead load moments and shears.

The following two tables present the unfactored dead load moments and shears, as computed by an analysis computer program. Since the bridge is symmetrical, the moments and shears in Span 2 are symmetrical to those in Span 1.

Dead Load Moments (Kip-feet)											
Dead Load Component	Location in Span 1										
	0.0L	0.1L	0.2L	0.3L	0.4L	0.5L	0.6L	0.7L	0.8L	0.9L	1.0L
Steel girder	0.0	71.7	119.0	141.9	140.5	114.7	64.7	-10.1	-112.5	-247.1	-427.0
Concrete deck & haunches	0.0	475.4	787.6	936.9	923.0	746.1	406.2	-96.8	-765.9	-1592.1	-2584.3
Miscellaneous Steel Weight	0.0	12.6	18.6	24.8	24.5	19.8	10.8	-2.6	-20.2	-42.2	-68.5
Concrete parapets	0.0	66.7	111.2	133.3	135.7	110.7	66.0	-1.0	-90.3	-201.9	-335.8
Future wearing surface	0.0	75.9	126.4	151.6	151.4	125.9	75.0	-1.2	-102.7	-229.6	-381.8

Table 45E-8.3-2
Dead Load Moments

Dead Load Shears (Kips)											
Dead Load Component	Location in Span 1										
	0.0L	0.1L	0.2L	0.3L	0.4L	0.5L	0.6L	0.7L	0.8L	0.9L	1.0L
Steel girder	7.0	5.0	2.9	0.9	-1.1	-3.2	-5.2	-7.2	-9.8	-12.9	-17.0
Concrete deck & haunches	46.4	32.8	19.2	5.6	-8.0	-21.5	-35.1	-48.7	-62.3	-78.9	-89.5
Miscellaneous Steel Weight	1.2	0.9	0.5	0.2	-0.2	-0.6	-0.9	-1.3	-1.7	-2.0	-2.4
Concrete parapets	6.5	4.6	2.8	0.9	-0.9	-2.8	-4.7	-6.5	-8.4	-10.2	-12.1
Future wearing surface	7.4	5.3	3.2	1.0	-1.1	-3.2	-5.3	-7.4	-9.5	-11.6	-13.7

Table 45E-8.3-3
Dead Load Shears

E45-8.4 Compute Live Load Distribution Factors for Interior Girder

The live load distribution factors for an interior girder are computed as follows from **Std [3.23.2.2]**:

For one Design Lane Loaded:

$$DF_s := \frac{S}{7} \qquad \boxed{DF_s = 1.39} \text{ wheels}$$

For Two or More Design Lanes Loaded:

$$DF_m := \frac{S}{5.5} \qquad \boxed{DF_m = 1.77} \text{ wheels}$$

The live load impact percentage increase is calcuated per Std [3.8.2.1]:

$$IMPACT := 100 \cdot \min\left(0.3, \frac{50}{L + 125}\right) \qquad \boxed{IMPACT = 20.41} \%$$

From live load analysis software, the live load effects (per wheel including impact) are listed in the following table:

HS20 Live Load Effects (for Interior Beams)											
Live Load Effect	**Location in Span 1**										
	0.0L	**0.1L**	**0.2L**	**0.3L**	**0.4L**	**0.5L**	**0.6L**	**0.7L**	**0.8L**	**0.9L**	**1.0L**
Maximum positive moment (K-ft)	0.0	710.6	1190.6	1462.0	1564.4	1513.7	1335.0	1032.5	643.3	206.2	0.0
Maximum negative moment (K-ft)	0.0	-102.5	-205.0	-307.5	-410.0	-512.5	-615.1	-717.6	-823.1	-1264.2	-1967.9
Maximum positive shear (kips)	77.0	59.7	50.5	41.6	33.1	25.2	17.6	11.0	5.6	1.8	0.0
Maximum negative shear (kips)	-10.2	-10.3	-15.6	-22.6	-32.7	-42.6	-50.7	-57.8	-64.0	-71.9	-80.8

Table 45E-8.4-2
Live Load Effects

Two sections will be checked for illustrative purposes. First, the ratings will be performed for the location of maximum positive moment, which is at 0.4L in Span 1. Second, the ratings will be performed for the location of maximum negative moment and maximum shear, which is at the pier.

The following are for the location of maximum positive moment, which is at 0.4L in Span 1, as shown in Figure E45-8.4-1.

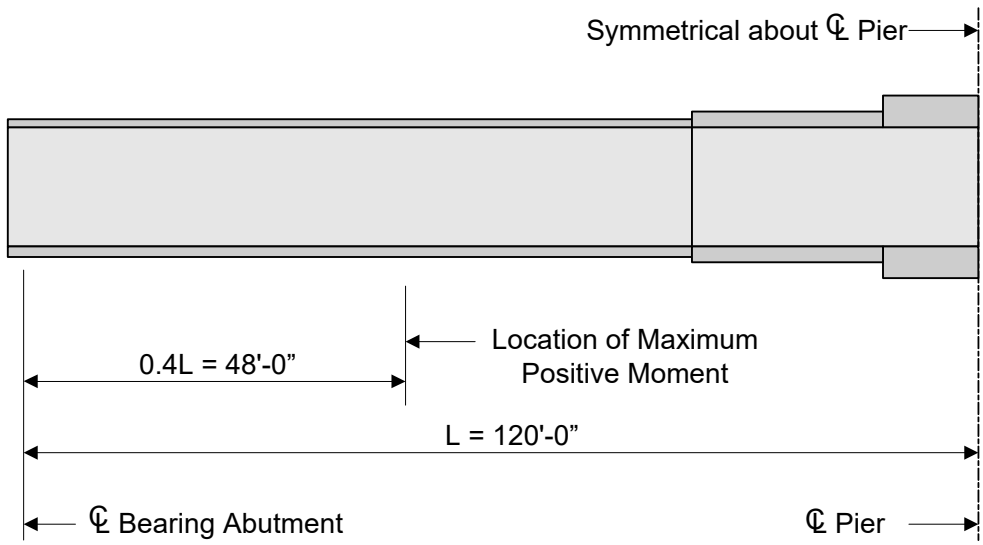

Figure E45-8.4-1
Location of Maximum Positive Moment

E45-8.5 Compute Plastic Moment Capacity - Positive Moment Region

For composite sections, the plastic moment, M_p, is calculated as the first moment of plastic forces about the plastic neutral axis per **Std [10.50.1.1]**.

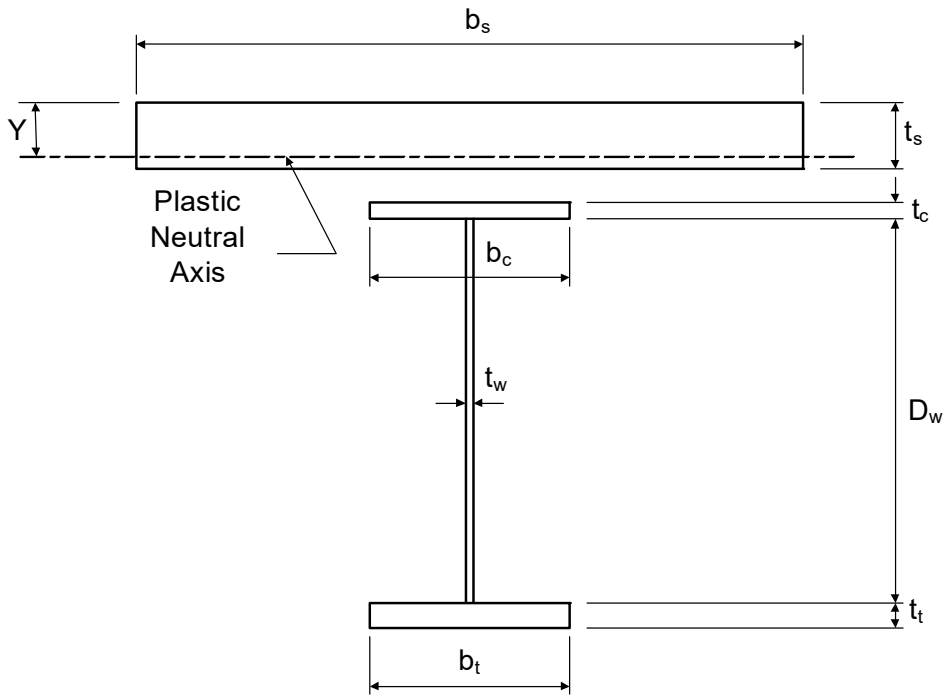

Figure E45-8.5-1
Computation of Plastic Moment Capacity for Positive Bending Sections

For the slab, the compressive force is equal to the smallest value given by the following equations:

$C_1 = 0.85 \cdot f'_c \cdot b_s \cdot t_s + (AF_y)_c$ **Std [Eq. 10-123]**

Where:

b_s = Effective width of concrete deck (in)

t_s = Thickness of concrete deck (in)

$f'_c = 4.00$ ksi

$b_s = 102.00$ in

$t_s = 8.50$ in

$(AF_y)_c$ is the product of the area and yield point of that part of reinforcement which lies in the compression zone of the slab. Neglecting this reinforcement contribution, the equation reduces to:

$C_1 := 0.85 \cdot f'_c \cdot b_s \cdot t_s$ $\boxed{C_1 = 2948}$ kips

$C_2 = (AF_y)_{bf} + (AF_y)_{tf} + (AF_y)_w$ **Std [Eq. 10-124]**

This equation reduces to equal the product of the girder steel area and its yield point:

$C_2 := (49.75) \cdot (50)$ $\boxed{C_2 = 2488}$ kips

The compressive force in the slab, C, is equal to:

$C := \min(C_1, C_2)$ $\boxed{C = 2488}$ kips

The depth of the stress block is computed from the compressive force in the slab:

$a := \dfrac{C}{0.85 \cdot f'_c \cdot b_s}$ **Std [Eq. 10-125]**

$\boxed{a = 7.17}$ in

Because C1 exceeds C2, the top portion of the steel section is not in compression. Therefore the plastic neutral axis (PNA) is located at the bottom of the concrete stress block, and no steel elements need to be checked for compactness. The plastic moment, M_p, is calculated using the force equilibrium method. The moment arm between the slab's compressive force and the PNA is equal to a/2, and the moment arm between the steel girder and the PNA is equal to 32.805 in.

$M_{p_slab} := C \cdot \dfrac{a}{2} = 8921$ $\boxed{M_{p_slab} = 8921}$ k-in

$M_{p_girder} := C_2 \cdot 32.805$ $\boxed{M_{p_girder} = 81602}$ k-in

$M_p := \dfrac{(M_{p_slab} + M_{p_girder})}{12}$ $\boxed{M_p = 7544}$ k-ft

In continuous spans with noncompact noncomposite or composite negative-moment pier sections, the maximum bending strength, M_n, of the composite positive-moment sections shall be taken as either the moment capacity at first yield or as:

$$M_n := M_y + A \cdot (M_{u_pier} - M_{s_pier})$$ **Std [Eq. 10-129d]**

Where:

M_y = the moment capacity at first yield of the compact positive moment section

$(M_{u_pier} - M_{s_pier})$ = moment capacity of the noncompact section at the pier from **Std [10.48.2]** or **[10.48.4]** minus the elastic moment at the pier for the loading producing maximum positive bending in the span.

A = distance from end support to the location of maximum positive moment divided by the span length for end spans.

The moment capacity and first yield, M_y, is computed as follows, considering the application of the factored dead and live loads to the steel and composite sections:

$$F_y = \frac{M_{D1}}{S_{NC}} + \frac{M_{D2}}{S_{LT}} + \frac{M_{AD}}{S_{ST}}$$

Where:

M_{D1} = Bending moment caused by the factored permanent load applied before the concrete deck has hardened or is made composite (kip-in)

S_{NC} = Noncomposite elastic section modulus (in^3)

M_{D2} = Bending moment caused by the factored permanent load applied to the long-term composite section (kip-in)

S_{LT} = Long-term composite elastic section modulus (in^3)

M_{AD} = Additional bending moment that must be applied to the short-term composite section to cause nominal yielding in either steel flange (kip-in)

S_{ST} = Short-term composite elastic section modulus (in^3)

$$M_y = M_{D1} + M_{D2} + M_{AD}$$

$F_y := 50$ ksi

$M_{D1} := [1.3 \cdot (M_{girder} + M_{deck} + M_{misc})]$ $\boxed{M_{D1} = 1414}$ kip-ft

$M_{D2} := (1.3 \cdot M_{DC2})$ $\boxed{M_{D2} = 176}$ kip-ft

For the bottom flange:

$S_{NC_pos} = 877.63$ in^3

$S_{LT_pos} = 1205.40$ in^3

$S_{ST_pos} = 1319.16$ in^3

$$M_{AD} := \left[\frac{S_{ST_pos}}{12^3}\cdot\left(F_y\cdot 12^2 - \frac{M_{D1}}{\frac{S_{NC_pos}}{12^3}} - \frac{M_{D2}}{\frac{S_{LT_pos}}{12^3}}\right)\right]$$

$\boxed{M_{AD} = 3177}$ kip-ft

$M_{ybot} := M_{D1} + M_{D2} + M_{AD}$ $\boxed{M_{ybot} = 4768}$ kip-ft

For the top flange:

$S_{NC_pos_top} = 821.67$ in^3

$S_{LT_pos_top} = 3689.31$ in^3

$S_{ST_pos_top} = 15982.90$ in^3

$$M_{AD} := \frac{S_{ST_pos_top}}{12^3}\cdot\left(F_y\cdot 144 - \frac{M_{D1}}{\frac{S_{NC_pos_top}}{12^3}} - \frac{M_{D2}}{\frac{S_{LT_pos_top}}{12^3}}\right)$$

$\boxed{M_{AD} = 38319}$ kip-ft

$M_{ytop} := M_{D1} + M_{D2} + M_{AD}$ $\boxed{M_{ytop} = 39910}$ kip-ft

The yield moment, M_y, is the lesser value computed for both flanges. Therefore, M_y is determined as follows:

$M_y := \min(M_{ybot}, M_{ytop})$ $\boxed{M_y = 4768}$ kip-ft

From calculations to follow for negative moment, moment capacity of the noncompact section at the pier is:

$M_{u_pier} := 9899$ k-ft

From live load analysis software, the elastic moment at the pier for the loading producing maximum positive bending in the span is:

$M_{s_pier} := 4431.52$ k-ft

The distance from end support to the location of maximum positive moment divided by the span length is:

$A := 0.4$

Therefore:

$M_n := M_y + A \cdot (M_{u_pier} - M_{s_pier})$ $\boxed{M_n = 6955}$ kip-ft

E45-8.6 Design Load Rating @ 0.4L

$$RF = \frac{M_n - A_1 \cdot M_{DL}}{A_2 (M_{LLIM})}$$

Where:

$M_{DL} := M_{girder} + M_{deck} + M_{misc} + M_{DC2}$ $\boxed{M_{DL} = 1224}$ kip-ft

$M_{LLIM} := M_{LL}$ $\boxed{M_{LLIM} = 1564}$ kip-ft

Inventory

$$RF_{inv_0.4L} := \frac{M_n - 1.3 \cdot M_{DL}}{2.17 \cdot (M_{LLIM})}$$ $\boxed{RF_{inv_0.4L} = 1.58}$

Operating

$$RF_{op_0.4L} := \frac{M_n - 1.3 \cdot M_{DL}}{1.3 \cdot (M_{LLIM})}$$ $\boxed{RF_{op_0.4L} = 2.64}$

E45-8.7 Check Section Proportion Limits - Negative Moment Region

Now the specification checks are repeated for the location of maximum negative moment, which is at the pier, as shown in Figure E45-8.7-1. This is also the location of maximum shear in this case.

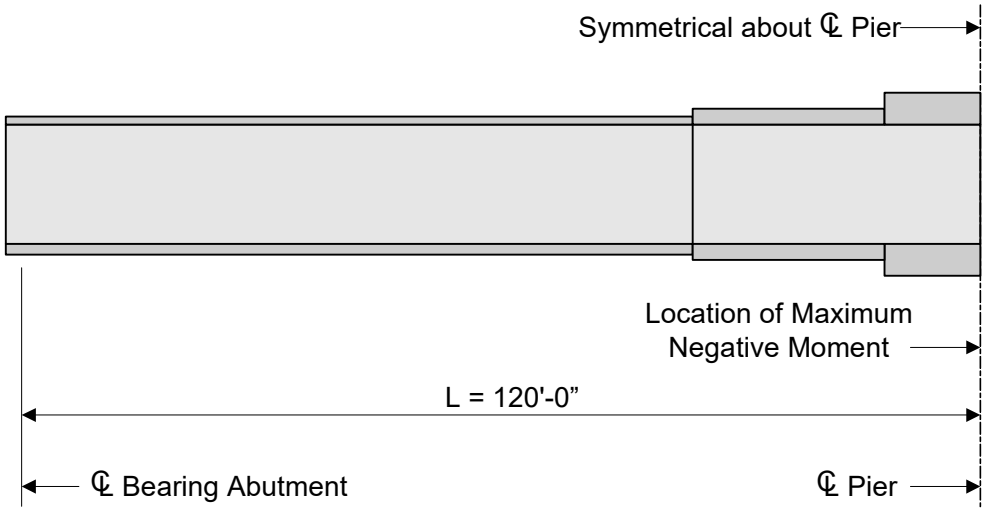

Figure E45-8.7-1
Location of Maximum Negative Moment

For a section to be compact, it must meet the proportion limits with **Std [10.48.1.1]**. For 50 ksi steel, these are as follows:

Compression Flange

$$\frac{b_f}{2 \cdot t_f} \le 18.4$$ **Std [Eq. 10-93]**

$b_f := 14$

$t_f := 2.75$

$$\boxed{\frac{b_f}{2 \cdot t_f} = 2.55}$$ OK

Web Thickness

$$\frac{D}{t_w} \le 86$$ **Std [Eq. 10-94]**

$D = 54.00$

$t_w = 0.50$

$$\boxed{\frac{D}{t_w} = 108.00}$$ FAILS

Therefore the section is noncompact at the pier. The requirements of Braced Noncompact Sections per **Std [10.48.2]** will be checked:

Compression Flange $\frac{b_f}{2 \cdot t_f} \le 24$ **Std [Eq. 10-100]**

$\boxed{\frac{b_f}{2 \cdot t_f} = 2.55}$ OK

Web Thickness $\frac{D}{t_w} \le 163$ **Std [Eq. 10-104]**

$\boxed{\frac{D}{t_w} = 108.00}$ OK

Lateral Bracing $L_b \le \frac{20000 \cdot A_f}{F_y \cdot d}$ **Std [Eq. 10-101]**

$A_f := (14)(2.75)$

$d := 54 + 2.75 + 2.5$

$L_b = 240.00$ $\boxed{\frac{20000 \cdot A_f}{F_y \cdot d} = 259.92}$ OK

E45-8.8 Compute Plastic Moment Capacity - Negative Moment Region

The negative moment capacity will be determined from **Std [10.50.2.2]** for noncompact negative moment sections.

Tension Flange $F_{ut} := F_y$

Compression Flange $F_{uc} := F_{cr} \cdot R_b$

$$F_{cr} := \frac{\left(4400 \cdot \frac{2t_f}{b_f}\right)^2}{1000} \le F_y$$

$$\frac{\left(4400 \cdot \frac{2t_f}{b_f}\right)^2}{1000} = 2987.96$$

Therefore $F_{cr} := F_y$ $\boxed{F_{cr} = 50.00}$ ksi

$R_b := 1.0$ due to adequate lateral bracing per **Std [Eq. 10-101]**

$F_{uc} := F_{cr} \cdot R_b = 50.00$ $\boxed{F_{uc} = 50.00}$ ksi

The moment capacity is taken as the lesser of the maximum strengths at the tension or compression flanges:

$S_{xt} := S_{rebar_top}$ $\boxed{S_{xt} = 2572}$ in^3

$M_{u1} := F_y \cdot \frac{S_{xt}}{12}$ $\boxed{M_{u1} = 10716}$ kip-ft

$S_{xc} := S_{rebar}$ $\boxed{S_{xc} = 2376}$ in^3

$M_{u2} := F_{cr} \cdot R_b \cdot \frac{S_{xc}}{12}$ $\boxed{M_{u2} = 9899}$ kip-ft

$M_{n_neg} := \min(M_{u1}, M_{u2})$ $\boxed{M_{n_neg} = 9899}$ kip-ft

E45-8.9 Design Load Rating @ Pier

$$RF = \frac{M_{n_neg} - A_1 \cdot M_{DL_neg}}{A_2 (M_{LLIM_neg})}$$

Where:

$M_{DL_neg} := M_{girder_neg} + M_{deck_neg} + M_{misc_neg} + M_{DC2_neg}$

$\boxed{M_{DL_neg} = -3415}$ kip-ft

$M_{LLIM_neg} := M_{LL_neg}$ $\boxed{M_{LLIM_neg} = -1968}$ kip-ft

A. Steel Flexure Moment Strength **MBE [6B.4.1]**

$$RF_{inv_1.0L} := \frac{-M_{n_neg} - 1.3 \cdot M_{DL_neg}}{2.17 \cdot (M_{LLIM_neg})}$$ $\boxed{RF_{inv_1.0L} = 1.28}$

$$RF_{op_1.0L} := \frac{-M_{n_neg} - 1.3 \cdot M_{DL_neg}}{1.3 \cdot (M_{LLIM_neg})}$$ $\boxed{RF_{op_1.0L} = 2.13}$

E45-8.10 Rate for Shear - Negative Moment Region

Shear must be checked at each section of the girder. For this Rating example, shear is maximum at the pier, and will only be checked there for illustrative purposes.

The transverse intermediate stiffener spacing is 120". The spacing of the transverse intermediate stiffeners does not exceed 3D, therefore the section can be considered stiffened and the provisions of **Std [10.48.8]** apply.

$d_o := 120$ in

$D = 54.00$ in

$$k := 5 + \frac{5}{\left(\frac{d_o}{D}\right)^2} \qquad \boxed{k = 6.01}$$

$$\frac{D}{t_w} = 108.00 \qquad \frac{D}{t_w} \geq 7500 \cdot \sqrt{\frac{k}{1000F_{yw}}} \qquad 7500 \cdot \sqrt{\frac{k}{1000F_{yw}}} = 82.24$$

$$C := \frac{4.5 \cdot 10^7 \cdot k}{\left(\frac{D}{t_w}\right)^2 \cdot (F_{yw} \cdot 1000)} = 0.46 \qquad \boxed{C = 0.464}$$

The plastic shear force, V_p, is then:

$$V_p := 0.58 \cdot F_{yw} \cdot D \cdot t_w \qquad \boxed{V_p = 783.0} \text{ kips}$$

Std [Eq. 10-115]

$$V_n := V_p \cdot \left[C + \frac{0.87 \cdot (1 - C)}{\sqrt{1 + \left(\frac{d_o}{D}\right)^2}}\right] \qquad \boxed{V_n = 513.1} \text{ kips}$$

Std [Eq. 10-114]

HS-20 Maximum Shear @ Pier:

$$V_{DL} := V_{girder} + V_{deck} + V_{misc} + V_{DC2} \qquad \boxed{V_{DL} = -121.0} \text{ kips}$$

$V_{LL} = -80.75$ kips

E45-8.11 Design Load Rating @ Pier for Shear

$$RF = \frac{V_n - A_1 \cdot V_{DL}}{A_2 \cdot V_{LL}}$$

Strength Limit State

Inventory

$$RF_{inv_shear} := \frac{-V_n - 1.3V_{DL}}{2.17 \cdot V_{LL}}$$ $\boxed{RF_{inv_shear} = 2.03}$

Operating

$$RF_{op_shear} := \frac{-V_n - 1.3V_{DL}}{1.3 \cdot V_{LL}}$$ $\boxed{RF_{op_shear} = 3.39}$

Combined Moment and Shear **MBE [L6B2.3]**

$V_D := -V_{DL} = 120.97$

$V_L := -V_{LL} = 80.75$ kips

$V_n = 513.1$ kips

$V_p = 783.00$ $C = 0.46$

For a composite noncompact section, the initial moment rating factor shall be taken as the smaller of the rating factors determined separately for the compression and tension flange. Stresses (f_D, f_L) are substituted for moments (M_D, M_L).

$M_D := -M_{DL_neg} = 3415$ kip-ft

$M_L := 1442.06$ Concurrent live load from analysis software

$$f_D := \max\left(\frac{12 \cdot M_D}{S_{xt}}, \frac{12 \cdot M_D}{S_{xc}}\right)$$ $\boxed{f_D = 17.25}$ ksi

$$f_L := \max\left(\frac{12 \cdot M_L}{S_{xt}}, \frac{12 \cdot M_L}{S_{xc}}\right)$$ $\boxed{f_L = 7.28}$ ksi

$F_n := F_y$

Step 1 - Determine initial rating factors ignoring interaction:

$RF_{v1_inv} := RF_{inv_shear}$ $\boxed{RF_{v1_inv} = 2.03}$

$RF_{m1_inv} := \dfrac{F_n - 1.3 \cdot f_D}{2.17 \cdot f_L}$ $\boxed{RF_{m1_inv} = 1.74}$

$RF_{v1_op} := RF_{op_shear}$ $\boxed{RF_{v1_op} = 3.39}$

$RF_{m1_op} := \dfrac{F_n - 1.3 \cdot f_D}{1.3 \cdot f_L}$ $\boxed{RF_{m1_op} = 2.91}$

Step 2 - Determine initial controlling rating factor ignoring interaction:

$RF_{mv1_inv} := \min(RF_{v1_inv}, RF_{m1_inv})$ $\boxed{RF_{mv1_inv} = 1.74}$

$RF_{mv1_op} := \min(RF_{v1_op}, RF_{m1_op})$ $\boxed{RF_{mv1_op} = 2.91}$

Step 3 - Determine the factored moment and shear using the initial controlling rating factor from Step 2 as follows:

$V_1 := 1.3 \cdot V_D + RF_{mv1_inv} \cdot 2.17 \cdot V_L$ $\boxed{V_1 = 462.9}$ kips

$f_1 := 1.3 \cdot f_D + RF_{mv1_inv} \cdot 2.17 \cdot f_L$ $\boxed{f_1 = 50.00}$ ksi

Step 4 - Determine the final controlling rating factor as follows:

$0.6V_n = 308$ $V_1 > 0.6V_n$

$0.75F_n = 37.5$ $f_1 > 0.75F_n$

CASE D applies:

$$RF_{mvf1_inv} := \frac{2.2V_n \cdot F_n - 1.3 \cdot V_D \cdot F_n - 1.6 \cdot 1.3 \cdot f_D \cdot V_n}{2.17 \cdot V_L \cdot F_n + 1.6 \cdot 2.17 \cdot f_L \cdot V_n} = 1.39$$

$$> \quad \frac{C \cdot V_p - 1.3V_D}{2.17 \cdot V_L} = 1.18$$

$$RF_{mvf1_op} := \frac{2.2V_n \cdot F_n - 1.3 \cdot V_D \cdot F_n - 1.6 \cdot 1.3 \cdot f_D \cdot V_n}{1.3 \cdot V_L \cdot F_n + 1.6 \cdot 1.3 \cdot f_L \cdot V_n} = 2.32$$

$$> \quad \frac{C \cdot V_p - 1.3V_D}{1.3 \cdot V_L} = 1.96$$

Therefore

$RF_{vf1_inv} := RF_{mvf1_inv}$ $\boxed{RF_{vf1_inv} = 1.39}$

$RF_{mf1_inv} := RF_{mvf1_inv}$ $\boxed{RF_{mf1_inv} = 1.39}$

$RF_{vf1_op} := RF_{mvf1_op}$ $\boxed{RF_{vf1_op} = 2.32}$

$RF_{mf1_op} := RF_{mvf1_op}$ $\boxed{RF_{mf1_op} = 2.32}$

Step 5 - If the controlling RF is different than the initial controlling RF, repeat Steps 2-4 (using the final controlling RF as the initial controlling RF):

$RF_{mv2_inv} := \min(RF_{vf1_inv}, RF_{mf1_inv})$ $RF_{mv2_inv} = 1.39$

$V_2 := 1.3 \cdot V_D + RF_{mv2_inv} \cdot 2.17 \cdot V_L$ $\boxed{V_2 = 400.4}$ kips

$V_2 > 0.6V_n$

$f_2 := 1.3 \cdot f_D + RF_{mv2_inv} \cdot 2.17 \cdot f_L$ $\boxed{f_2 = 44.36}$ ksi

$M_2 > 0.75M_{n_neg}$

CASE D applies again, so the calculation does not need to be repeated.

$RF_{mvf_inv} := RF_{mf1_inv}$ $\boxed{RF_{mvf_inv} = 1.39}$

$RF_{mvf_op} := RF_{mf1_op}$ $\boxed{RF_{mvf_op} = 2.32}$

Since RF>1.20 @ operating for all checks, posting vehicle checks are not required for this example.

E45-8.12 - Permit Load Ratings

For any bridge design (new or rehabilitation) or bridge re-rate, the Wisconsin Standard Permit Vehicle (Wis-SPV) shall be analyzed (per 45.12).

The bridge shall be analyzed for this vehicle considering both single-lane and multi-lane distribution. Also, the vehicle will be analyzed assuming full dynamic load allowance is utilized. Future wearing surface shall not be included.

Since this example is rating a newly designed bridge, an additional check is required. The designer shall ensure that the results of the single-lane analysis are greater than 190 kips MVW. Future wearing surface shall be included in the check.

E45-8.12.1 - Wis-SPV Permit Rating with Single Lane Distribution w/ FWS

The values from this analysis are used for performing the Wis-SPV design check per 45.12

Load Distribution Factors

Single Lane Interior DF $\boxed{DF_s = 1.39}$

Wis-SPV Moments and Shears from LL analysis software, with impact and distribution factors included:

$M_{LL_0.4L} := 2393.45$ kip-ft

$M_{LL_1.0L} := 1836.47$ kip-ft

$V_{LL_1.0L} := 132.47$ kips

The DL moments and shears with wearing surface included are:

$M_{DL_0.4L} := M_{girder} + M_{deck} + M_{misc} + M_{DC2} + M_{DW}$

$\boxed{M_{DL_0.4L} = 1379}$ kip-ft

$M_{DL_1.0L} := -(M_{girder_neg} + M_{deck_neg} + M_{misc_neg} + M_{DC2_neg} + M_{DW_neg})$

$\boxed{M_{DL_1.0L} = 3787}$ kip-ft

$V_{DL_1.0L} := -(V_{girder} + V_{deck} + V_{misc} + V_{DC2} + V_{DW})$

$\boxed{V_{DL_1.0L} = 134.7}$ kips

In continuous spans with noncompact noncomposite or composite negative-moment pier sections, the maximum bending strength, M_n, of the composite positive-moment sections shall be taken as either the moment capacity at first yield or as:

$M_n := M_y + A \cdot (M_{u_pier} - M_{s_pier})$ **Std [Eq. 10-129d]**

Where:

M_y	=	the moment capacity at first yield of the compact positive moment section
$(M_{u_pier} - M_{s_pier})$ =		moment capacity of the noncompact section at the pier from [10.48.2] or [10.48.4] minus the elastic moment at the pier for the loading producing maximum positive bending in the span.
A	=	distance from end support to the location of maximum positive moment divided by the span length for end spans.

The moment capacity and first yield, M_y, is computed as follows, considering the application of the factored dead and live loads to the steel and composite sections:

$$F_y = \frac{M_{D1}}{S_{NC}} + \frac{M_{D2}}{S_{LT}} + \frac{M_{AD}}{S_{ST}}$$

Where:

M_{D1} = Bending moment caused by the factored permanent load applied before the concrete deck has hardened or is made composite (kip-in)

S_{NC} = Noncomposite elastic section modulus (in^3)

M_{D2} = Bending moment caused by the factored permanent load applied to the long-term composite section (kip-in)

S_{LT} = Long-term composite elastic section modulus (in^3)

M_{AD} = Additional bending moment that must be applied to the short-term composite section to cause nominal yielding in either steel flange (kip-in)

S_{ST} = Short-term composite elastic section modulus (in^3)

$$M_y = M_{D1} + M_{D2} + M_{AD}$$

$F_y := 50$ ksi

$M_{D1} := 1.3 \cdot (M_{girder} + M_{deck} + M_{misc})$ $\boxed{M_{D1} = 1414}$ kip-ft

$M_{D2} := 1.3 \cdot (M_{DC2} + M_{DW})$ $\boxed{M_{D2} = 378}$ kip-ft

For the bottom flange:

$S_{NC_pos} = 877.63$ in^3

$S_{LT_pos} = 1205.40$ in^3

$S_{ST_pos} = 1319.16$ in^3

$$M_{AD} := \left[\frac{S_{ST_pos}}{12^3} \cdot \left(F_y \cdot 144 - \frac{M_{D1}}{\frac{S_{NC_pos}}{12^3}} - \frac{M_{D2}}{\frac{S_{LT_pos}}{12^3}}\right)\right]$$ $\boxed{M_{AD} = 2956}$ kip-ft

$M_{ybot} := M_{D1} + M_{D2} + M_{AD}$ $\boxed{M_{ybot} = 4749}$ kip-ft

For the top flange:

$S_{NC_pos_top} = 821.67$ in^3

$S_{LT_pos_top} = 3689.31$ in^3

$S_{ST_pos_top} = 15982.90$ in^3

$$M_{AD} := \frac{S_{ST_pos_top}}{12^3} \cdot \left(F_y \cdot 144 - \frac{M_{D1}}{\frac{S_{NC_pos_top}}{12^3}} - \frac{M_{D2}}{\frac{S_{LT_pos_top}}{12^3}} \right)$$ $\boxed{M_{AD} = 37444}$ kip-ft

$M_{ytop} := M_{D1} + M_{D2} + M_{AD}$ $\boxed{M_{ytop} = 39237}$ kip-ft

The yield moment, M_y, is the lesser value computed for both flanges. Therefore, M_y is determined as follows:

$M_y := \min(M_{ybot}, M_{ytop})$ $\boxed{M_y = 4749}$ kip-ft

The moment capacity of the noncompact section at the pier is:

$M_{u_pier} := M_{n_neg}$ $\boxed{M_{u_pier} = 9899}$ kip-ft

From live load analysis software, the elastic moment at the pier for the loading producing maximum positive bending in the span is:

$M_{s_pier} := 4918.05$ kip-ft

The distance from end support to the location of maximum positive moment divided by the span length is:

$A := 0.4$

Therefore:

$M_{n_spv} := M_y + A \cdot (M_{u_pier} - M_{s_pier})$ $\boxed{M_{n_spv} = 6742}$ kip-ft

At the pier, the flexural and shear capacity are equal to the values calculated for the HS20 load:

$M_{n_neg} = 9899$ kip-ft

$V_n = 513.1$ kips

The operating-level rating factors may then be calculated as:

$$RF_{pos} := \frac{M_{n_spv} - 1.3 \cdot M_{DL_0.4L}}{1.3 \cdot M_{LL_0.4L}}$$ $\boxed{RF_{pos} = 1.59}$

$\boxed{RF_{pos} \cdot 190 = 302.2}$ kips

$$RF_{neg} := \frac{M_{n_neg} - 1.3 \cdot M_{DL_1.0L}}{1.3 \cdot M_{LL_1.0L}}$$ $\boxed{RF_{neg} = 2.08}$

$\boxed{RF_{neg} \cdot 190 = 396.0}$ kips

$$RF_{shear} := \frac{V_n - 1.3 \cdot V_{DL_1.0L}}{1.3 \cdot V_{LL_1.0L}}$$ $\boxed{RF_{shear} = 1.96}$

$\boxed{RF_{shear} \cdot 190 = 373.0}$ kips

Combined Moment and Shear at Pier **MBE [L6B2.3]**

$V_D := V_{DL_1.0L} = 134.7$ kips

$V_L := V_{LL_1.0L} = 132.5$ kips

$V_n = 513.1$ kips

$V_p = 783.0$ kips $C = 0.46$

For a composite noncompact section, the initial moment rating factor shall be taken as the smaller of the rating factors determined separately for the compression and tension flange. Stresses (f_D, f_L) are substituted for moments (M_D, M_L).

$M_D := M_{DL_1.0L} = 3787$ kip-ft

$M_L := 1318.04$ kip-ft Concurrent single-lane Wis-SPV live load from analysis software

$$f_D := \max\left(\frac{12 \cdot M_D}{S_{xt}}, \frac{12 \cdot M_D}{S_{xc}}\right)$$ $\boxed{f_D = 19.13}$ ksi

$$f_L := \max\left(\frac{12 \cdot M_L}{S_{xt}}, \frac{12 \cdot M_L}{S_{xc}}\right)$$ $\boxed{f_L = 6.66}$ ksi

$F_n := F_y$

Step 1 - Determine initial rating factors ignoring interaction:

$RF_{v1_op} := RF_{shear}$ $\boxed{RF_{v1_op} = 1.96}$

$RF_{neg} := \dfrac{F_n - 1.3 \cdot f_D}{1.3 \cdot f_L}$ $\boxed{RF_{neg} = 2.90}$

Step 2 - Determine initial controlling rating factor ignoring interaction:

$RF_{mv1_op} := \min(RF_{v1_op}, RF_{m1_op})$ $\boxed{RF_{mv1_op} = 1.96}$

Step 3 - Determine the factored moment and shear using the initial controlling rating factor from Step 2 as follows:

$V_1 := 1.3 \cdot V_D + RF_{shear} \cdot 1.3 \cdot V_L = 513.11$ $\boxed{V_1 = 513.1}$ kips

$f_1 := 1.3 \cdot f_D + RF_{neg} \cdot 1.3 \cdot f_L = 50.00$ $\boxed{f_1 = 50.00}$ ksi

Step 4 - Determine the final controlling rating factor as follows:

$0.6V_n = 308$ kips $V_1 > 0.6V_n$

$0.75F_n = 37.5$ kips $f_1 > 0.75F_n$

CASE D applies:

$$RF_{mvf1_op} := \frac{2.2V_n \cdot F_n - 1.3 \cdot V_D \cdot F_n - 1.6 \cdot 1.3 \cdot f_D \cdot V_n}{1.3 \cdot V_L \cdot F_n + 1.6 \cdot 1.3 \cdot f_L \cdot V_n} = 1.74$$

$$> \quad \frac{C \cdot V_p - 1.3V_D}{1.3 \cdot V_L} = 1.09$$

Therefore

$RF_{vf1_op} := RF_{mvf1_op}$ $\boxed{RF_{vf1_op} = 1.74}$

$RF_{mf1_op} := RF_{mvf1_op}$ $\boxed{RF_{mf1_op} = 1.74}$

Step 5 - If the controlling RF is different than the initial controlling RF, repeat Steps 2-4 (using the final controlling RF as the initial controlling RF):

$RF_{mv2_op} := \min(RF_{vf1_op}, RF_{mf1_op}) = 1.74$ $\boxed{RF_{mv2_op} = 1.74}$

$V_2 := 1.3 \cdot V_D + RF_{mv2_op} \cdot 1.3 \cdot V_L = 473.91$ $\boxed{V_2 = 473.9}$ kips

$V_2 > 0.6V_n$

$f_2 := 1.3 \cdot f_D + RF_{mv2_op} \cdot 1.3 \cdot f_L = 39.89$ $\boxed{f_2 = 39.89}$ ksi

$M_2 > 0.75M_{n_neg}$

CASE D applies again, so the calculation does not need to be repeated.

$RF_{mvf_op} := RF_{mf1_op}$ $\boxed{RF_{mvf_op} = 1.74}$

$\boxed{RF_{mvf_op} \cdot 190 = 329.7}$ kips

Flexure at Positive Moment Controls

> 190k minimum : CHECK OK

E45-8.12.2 - Wis-SPV Permit Rating with Single Lane Distribution w/o FWS

For use with plans and rating sheet only.

By inspection, since the governing limit state and location for the single-lane Wis-SPV w/ FWS was positive moment at 0.4L, it will be the same for the single-lane Wis-SPV w/o FWS.

The positive moment capacity which is based upon M_y and M_s needs to be recalculated.

$M_y := 4768$ kip-ft from HS20 calculation w/o FWS

From live load analysis software, the elastic moment at the pier for the loading producing maximum positive bending in the span is:

$M_{s_pier} := 4431.52$ kip-ft

Therefore:

$M_{n_spv} := M_y + A \cdot (M_{u_pier} - M_{s_pier})$ $\boxed{M_{n_spv} = 6955}$ kip-ft

$M_{DL_0.4L} := M_{DL_0.4L} - M_{DW}$ $\boxed{M_{DL_0.4L} = 1224}$ kip-ft

$$RF_{pos} := \frac{M_{n_spv} - 1.3 \cdot M_{DL_0.4L}}{1.3 \cdot M_{LL_0.4L}}$$

$\boxed{RF_{pos} = 1.72}$

$\boxed{RF_{pos} \cdot 190 = 327.6}$ kips

E45-8.12.3 - Wis-SPV Permit Rating with Multi-Lane Distribution

The multi-lane SPV check is calculated w/o future wearing surface. The governing location and the flexural capacity are equal to the results from the single-lane analysis. From live load analysis software, the maximum moment at 0.4L is:

$M_{LL_0.4L} := 3046.21$ kip-ft

$$RF_{pos} := \frac{M_{n_spv} - 1.3 \cdot M_{DL_0.4L}}{1.3 \cdot M_{LL_0.4L}}$$

$\boxed{RF_{pos} = 1.35}$

$\boxed{RF_{pos} \cdot 190 = 257.4}$ kips

E45-8.13 Summary of Rating

Steel Interior Girder					
Limit State	Design Load Rating		Wis-SPV Ratings (kips)		
	Inventory	Operating	Single Lane w/ FWS	Single Lane w/o FWS	Multi Lane w/o FWS
Flexure @ 0.4L	HS 31	HS 52	302	327	257
Flexure @ 1.0L	HS 25	HS 42	396	N/A	N/A
Shear @ 1.0L	HS 40	HS 67	373	N/A	N/A
Combined Shear & Flexure @ 1.0L	HS 27	HS 46	329	N/A	N/A