STATE PROJECT NUMBER

STANDARD

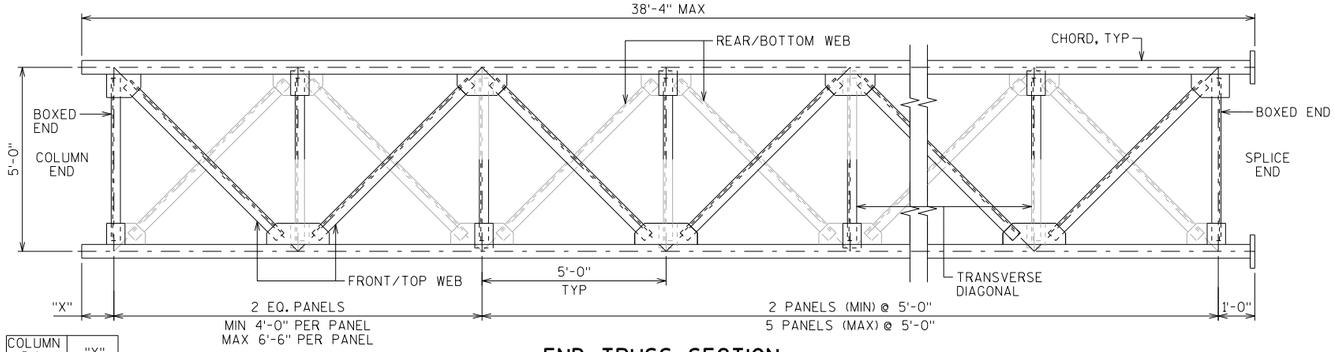

COLUMN DIA.	"X"
12¾"	10⅛"
14"	9½"
16"	8½"

END TRUSS SECTION

LOOKING AT F.F./TOP OF TRUSS

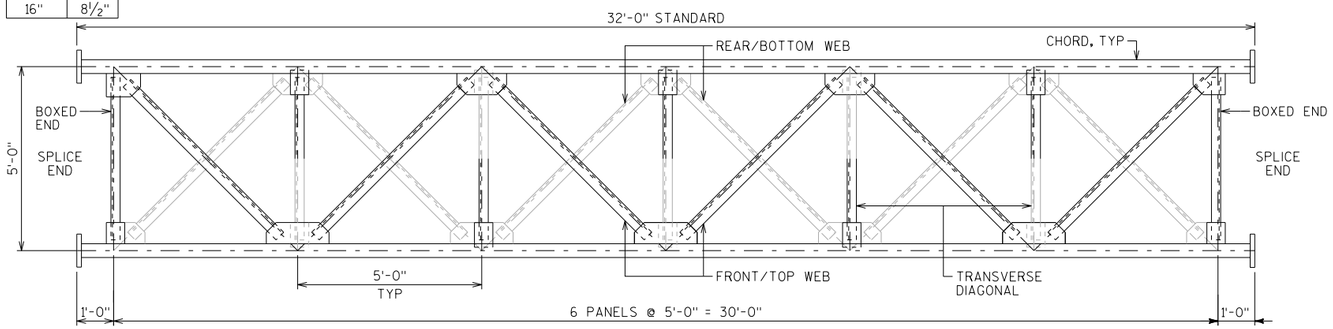

CENTER TRUSS SECTION

LOOKING AT F.F./TOP OF TRUSS

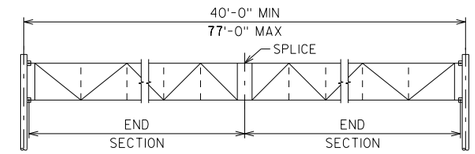

2 SECTION TRUSS

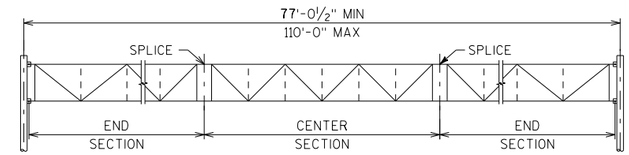

3 SECTION TRUSS

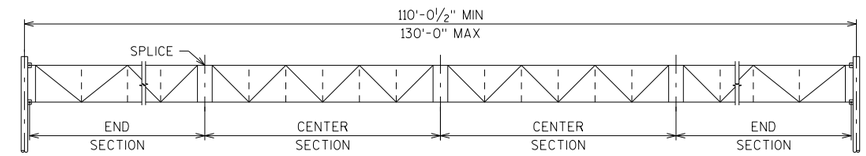

4 SECTION TRUSS

TRUSS CONFIGURATIONS

TRUSS SYMETRICAL ABOUT ℄ OF SPAN

INTERPOLATE FOR VALUES NOT SHOWN

CAMBER VALUES		
SPAN "L"	"Y"	
	TYPE I	DMS
60'-0"	1"	1¼"
82'-0"	1½"	1⅞"
102'-0"	2⅛"	2⅝"
114'-0"	2⅝"	3¼"
130'-0"	3¼"	4"

INTERPOLATE FOR VALUES NOT SHOWN.
DMS VALUES INCLUDE DL OF CATWALK.

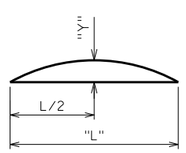

CAMBER DIAGRAM

CAMBER SHALL BE BUILT INTO THE TRUSS DURING FABRICATION. SHIM PLATES BETWEEN TRUSS SECTIONS TO CREATE CAMBER SHALL NOT BE ALLOWED.

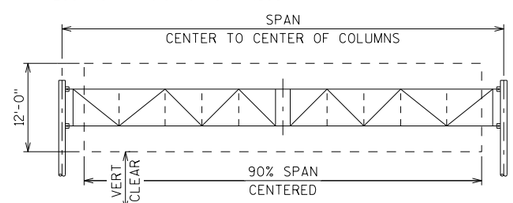

TYPE I SIGN LIMITS

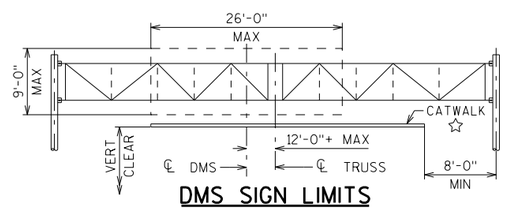

DMS SIGN LIMITS

4,500 LB MAX DMS WEIGHT, INCLUDES DMS VERTICAL SUPPORT MEMBERS

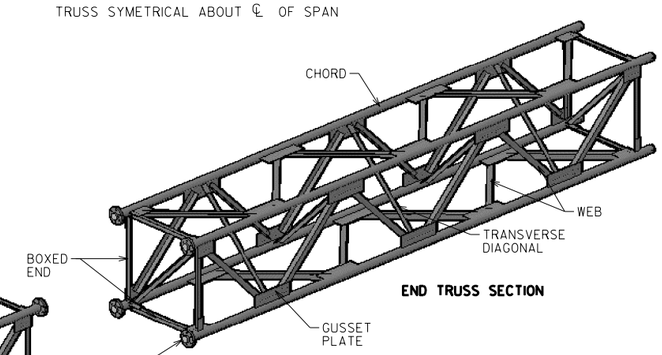

END TRUSS SECTION

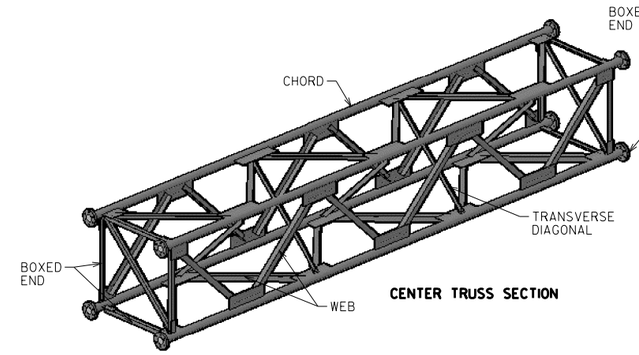

CENTER TRUSS SECTION

TYPICAL TRUSS SECTION

THE GENERAL PATTERN SHOWN ABOVE IS TO BE MAINTAINED WHEN ASSEMBLING TRUSSES. INTERIOR DIAGONALS SHOULD CONNECT TO TOP AND BOTTOM TRUSS WEB PANEL POINTS.

FULL SPAN 4-CHORD TRUSS MEMBER TABLE

STANDARD DESIGN TRUSS	TYPE I SIGN AREA (FT^2)	DMS AREA (FT^2)	MAXIMUM SPAN RANGE	CHORD OUTER DIA. X THK	WEB W X D X THK	BOXED END W X D X THK	TRANSVERSE DIAGONAL W X D X THK	SPLICE PLATE OUTER DIA. X THK	CHORD SPLICE NO. ¾" BOLTS
I	648	234	60'-0"	5.000" X 0.250"	L3½X3½X5/16	L3X3X¼	L3X3X¼	11" X 1½"	8
II	885	234	82'-0"	5.563" X 0.375"	L3½X3½X⅜	L3X3X¼	L3X3X¼	11⅝" X 1½"	8
III	1102	234	102'-0"	5.563" X 0.500"	L4X4X⅜	L3X3X¼	L3X3X¼	11⅝" X 1½"	8
IV	1232	234	114'-0"	6.625" X 0.375"	L4X4X7/16	L3X3X¼	L3X3X¼	1'-0⅝" X 1½"	8
V	1404	234	130'-0"	6.625" X 0.500"	L4X4X½	L3X3X¼	L3X3X¼	1'-0⅝" X 1½"	8

LEGEND

☆ FOR OSS WITH DMS ONLY, SEE "CATWALK DETAILS" SHEET

NO.	DATE	REVISION	BY

STATE OF WISCONSIN
DEPARTMENT OF TRANSPORTATION
STRUCTURES DESIGN SECTION

UPDATED: JULY 2020

DRAWN BY BOS | PLANS CK'D. BOS

4-CHORD TRUSS FULL SPAN TRUSS DETAILS

SHEET 1 OF VIII

SCALE = 2.00

8

8

STATE PROJECT NUMBER

STANDARD

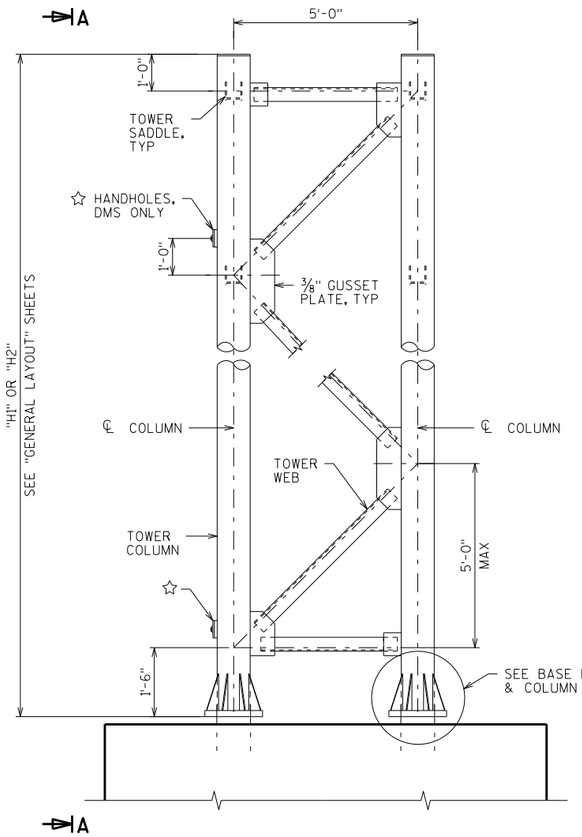

END VIEW COLUMN TRUSS

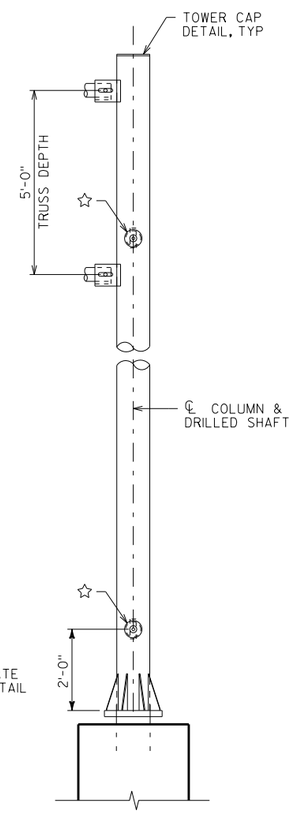

SECTION A-A

LOOKING AT F.F. OF STRUCTURE
OTHER COLUMN TRUSS SIMILAR

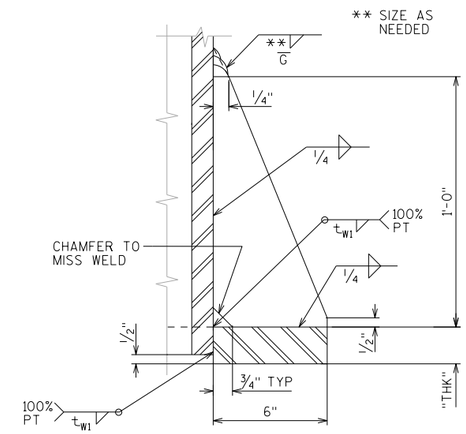

BASE PLATE STIFFENER DETAIL

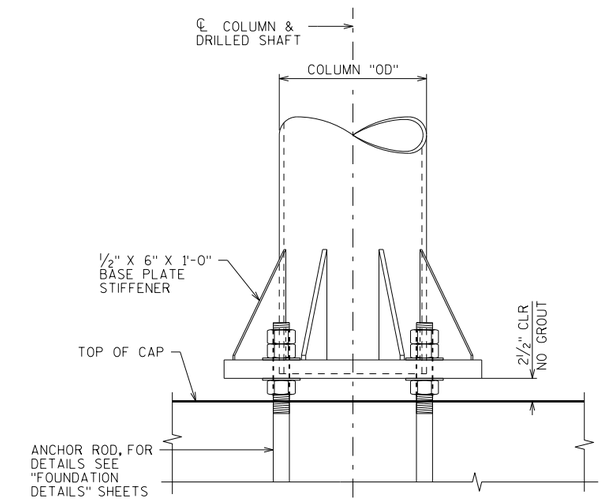

BASE PLATE & COLUMN DETAIL

LOOKING AT FRONT FACE OF STRUCTURE

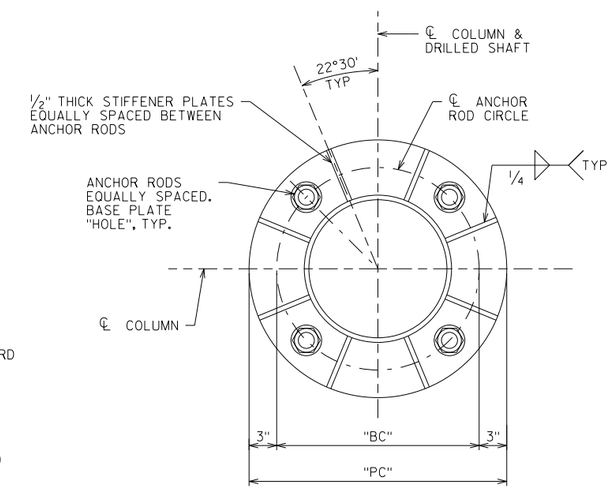

BASE PLATE

PLAN

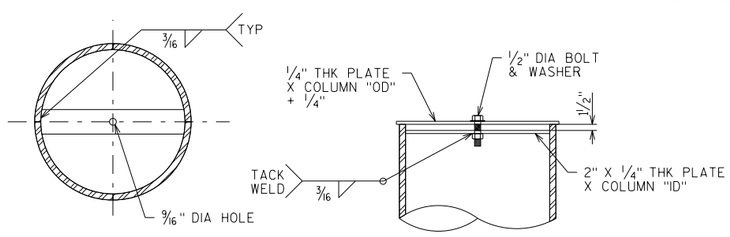

TOWER CAP DETAIL

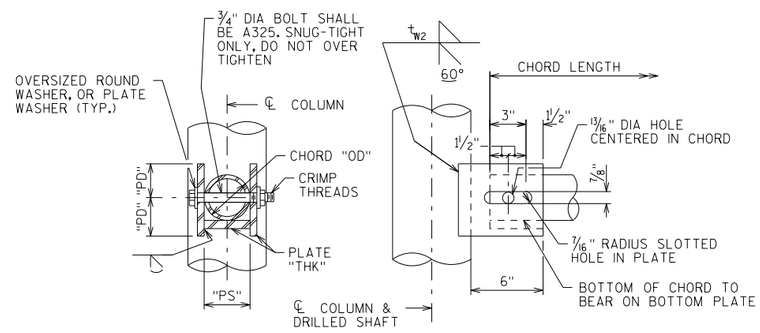

TOWER SADDLE CONNECTION DETAILS

BOLT AND HOLE DIMENSIONS SHOWN ARE MINIMUM

FULL SPAN 4-CHORD COLUMN MEMBER TABLE

STANDARD DESIGN TYPE	MAXIMUM COLUMN HEIGHT	COLUMN OUTER DIA x THK	WEB W x D x THK	STIFFENER W x D x THK	BASE PLATE					TOWER SADDLE CONNECTION			
					"t_{w1}"	"HOLE"	"THK"	"BC"	"PC"	"t_{w2}"	"THK"	"PS"	"PD"
I	31'-0"	12.75" x 0.250"	L3 1/2x3 1/2x3/8	6" x 12" x 1/2"	5/16"	1 13/16"	2"	1'-6 3/4"	2'-0 3/4"	1/4"	3/8"	5 3/16"	3 1/4"
II	31'-0"	12.75" x 0.375"	L4x4x3/8	6" x 12" x 1/2"	5/16"	1 13/16"	2"	1'-6 3/4"	2'-0 3/4"	1/4"	3/8"	5 3/4"	3 9/16"
III	31'-0"	12.75" x 0.500"	L4x4x1/2	6" x 12" x 1/2"	5/16"	2 1/16"	2"	1'-6 3/4"	2'-0 3/4"	1/4"	7/16"	5 3/4"	3 9/16"
IV	31'-0"	14.00" x 0.500"	L5x5x7/16	6" x 12" x 1/2"	5/16"	2 1/16"	2"	1'-8"	2'-2"	1/4"	7/16"	6 13/16"	4 1/16"
V	31'-0"	16.00" x 0.500"	L5x5x1/2	6" x 12" x 1/2"	5/16"	2 1/16"	2"	1'-10"	2'-4"	1/4"	1/2"	6 13/16"	4 1/16"

LEGEND

☆ FOR OSS WITH DMS ONLY, PROVIDE HANDHOLES AT COLUMN ADJACENT TO DMS. SEE "ELECTRICAL DETAILS" SHEET

NO.	DATE	REVISION	BY

STATE OF WISCONSIN
DEPARTMENT OF TRANSPORTATION
STRUCTURES DESIGN SECTION

UPDATED: JULY 2020

DRAWN BY BOS | PLANS CK'D. BOS

4-CHORD TRUSS FULL SPAN COLUMN DETAILS

SHEET II OF VIII

8

8

SCALE = 2.00

STATE PROJECT NUMBER

STANDARD

NOTE

FABRICATOR HAS THE OPTION TO USE NON-MITERED, RECTANGULAR GUSSET PLATES IN LIEU OF MITERED PLATES SHOWN ON THESE DETAILS.

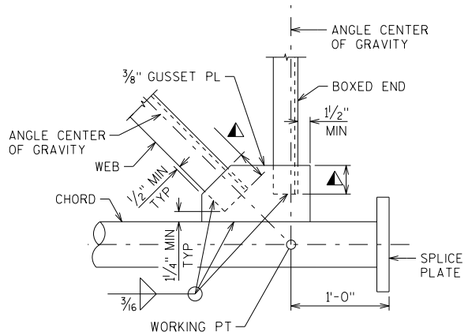

WELDED BOXED END CONNECTION

CONNECTION SHOWN AT CHORD SPLICE, CONNECTION AT COLUMN END SIMILAR

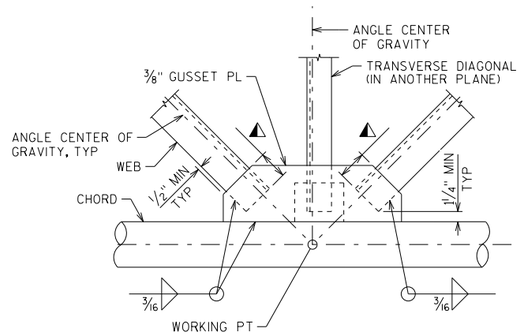

WELDED PANEL CONNECTION

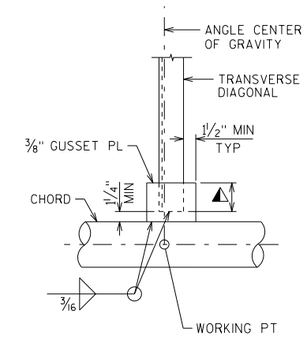

WELDED TRANSVERSE DIAGONAL CONNECTION

MEMBER CONNECTION DATA

STANDARD DESIGN TYPE	WELD LEG LENGTH		NO. OF BOLTS	
	◭	◐	◪	☆
I	3" MIN	4" MIN	3	3
II	3 1/2" MIN	6" MIN	3	3
III	3 1/2" MIN	6" MIN	5	3
IV	4" MIN	6 1/4" MIN	5	4
V	4 1/2" MIN	7 1/4" MIN	5	4

FOR ALL ANGLE TO GUSSET CONNECTIONS, BOLT SPACING = 2 1/2"

ANGLE DATA

ANGLE SIZE	$\bar{y}$	"X"
L3X3X1/4	0.836"	1 1/4"
L3 1/2X3 1/2X5/16	0.979"	1 1/2"
L3 1/2X3 1/2X3/8	1.00"	1 1/2'
L4X4X3/8	1.13"	1 1/2"
L4X4X7/16	1.15"	1 1/2"
L4X4X1/2	1.18	1 1/2"
L5X5X7/16	1.40"	2"
L5X5X1/2	1.42"	2"

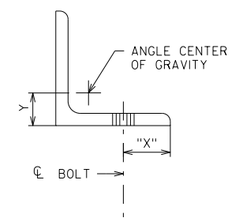

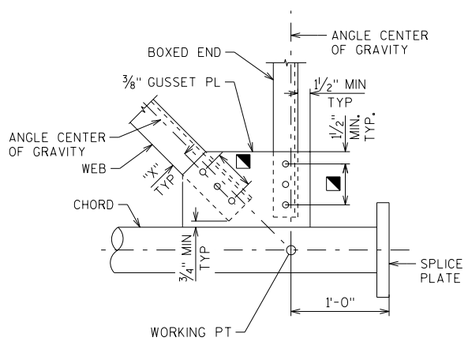

BOLTED BOXED END CONNECTION

CONNECTION SHOWN AT CHORD SPLICE, CONNECTION AT COLUMN END SIMILAR

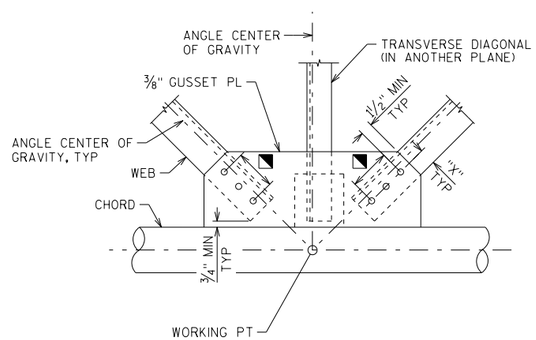

BOLTED PANEL CONNECTION

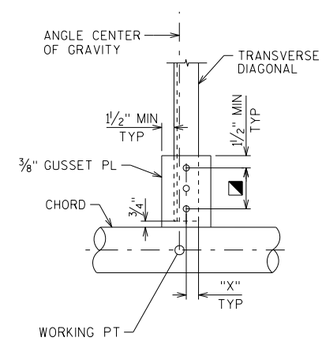

BOLTED TRANSVERSE DIAGONAL CONNECTION

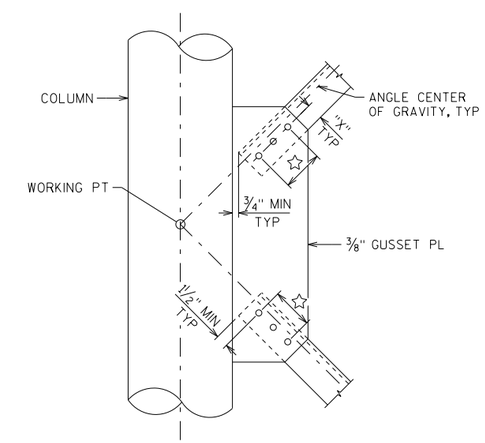

BOLTED COLUMN WEB CONNECTION

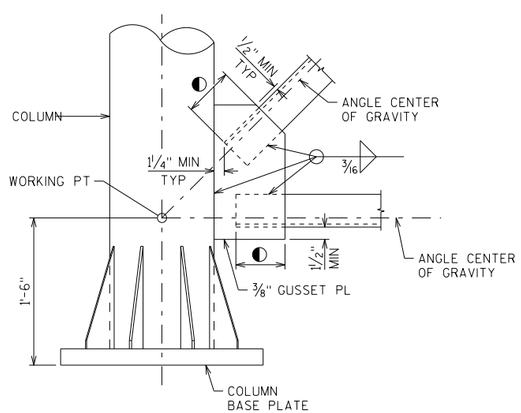

WELDED COLUMN BOTTOM CONNECTION

TOP CONNECTION SIMILAR

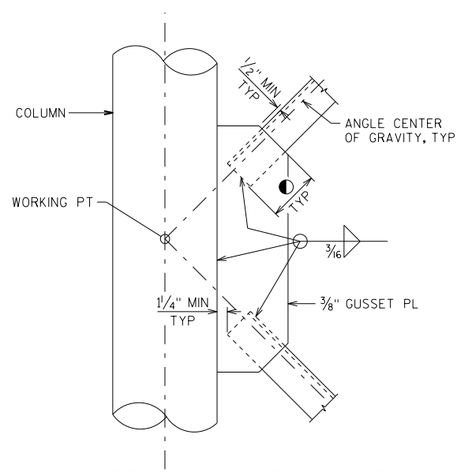

WELDED COLUMN WEB CONNECTION

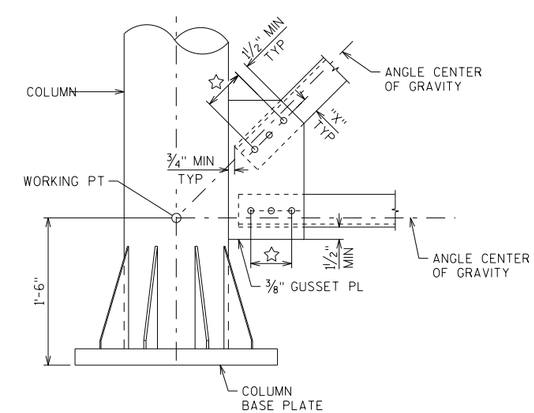

BOLTED COLUMN BOTTOM CONNECTION

TOP CONNECTION SIMILAR

8

8

NO.	DATE	REVISION	BY

STATE OF WISCONSIN
DEPARTMENT OF TRANSPORTATION
STRUCTURES DESIGN SECTION

UPDATED: JULY 2020

DRAWN BY BOS | PLANS CK'D. BOS

4-CHORD TRUSS FULL SPAN CONNECTIONS 1

SHEET III OF VIII

SCALE = 1.50

STATE PROJECT NUMBER

STANDARD

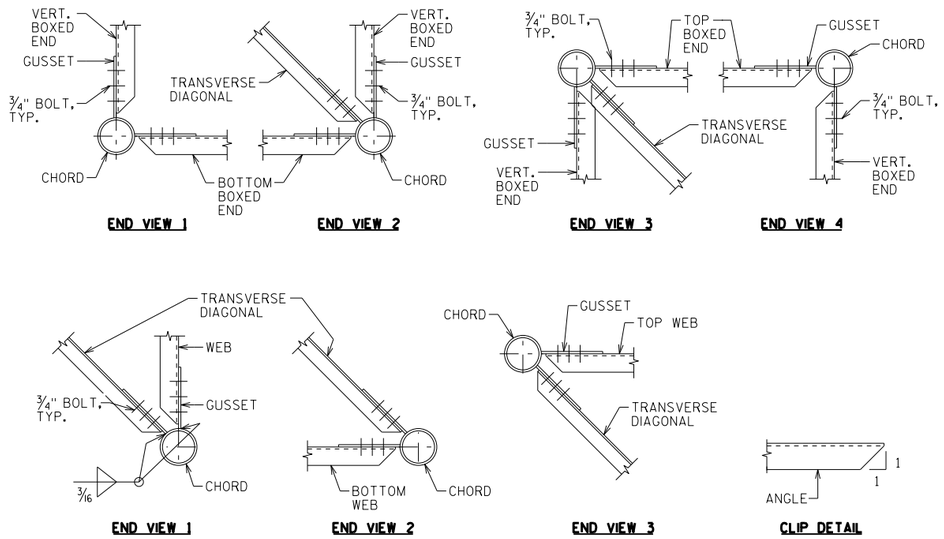

TRUSS CONNECTION DETAILS

BOLTED CONNECTIONS SHOWN, WELDED CONNECTIONS SIMILAR

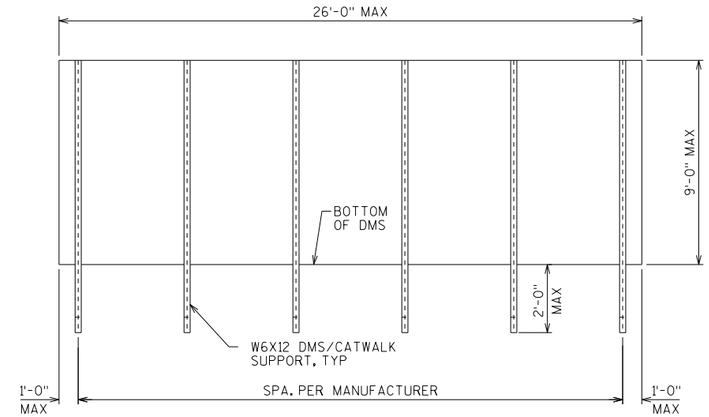

DMS MOUNTING POST SPACING DETAIL

POST SPACING MAY BE ADJUSTED AS REQUIRED IF CONFLICT WITH TRUSS IS ENCOUNTERED.

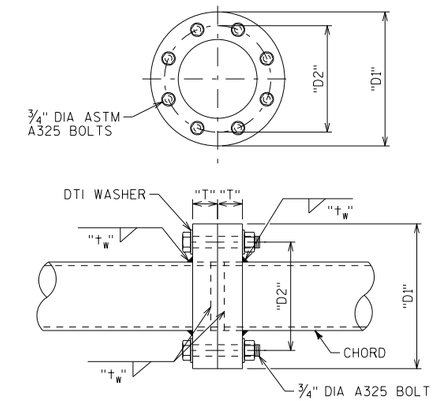

CHORD SPLICE PLATE DETAIL

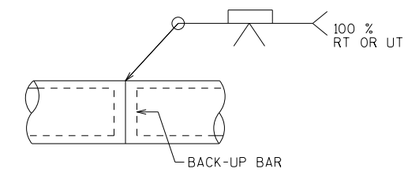

CHORD SPLICE

CHORD SPLICE CONNECTION DATA

STANDARD DESIGN TRUSS	"D1"	"D2"	"T"	"+w"	# OF BOLTS
I	11"	8"	1½"	5/16"	8
II	11⅝"	8⅝"	1½"	5/16"	8
III	11⅝"	8⅝"	1½"	⅜"	8
IV	1'-0⅝"	9⅝"	1½"	⅜"	8
V	1'-0⅝"	9⅝"	1½"	⅜"	8

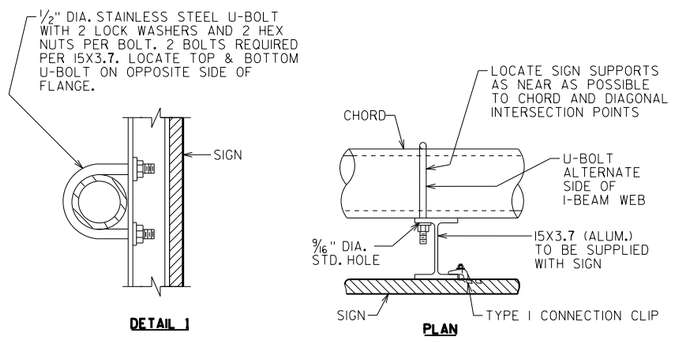

TYPICAL SIGN CONNECTION

USE FOR TYPE I AND II SIGNS
SEE SIGN PLATE MANUAL A4-7A & A4-7B FOR DETAILS

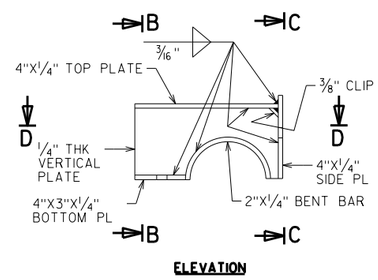

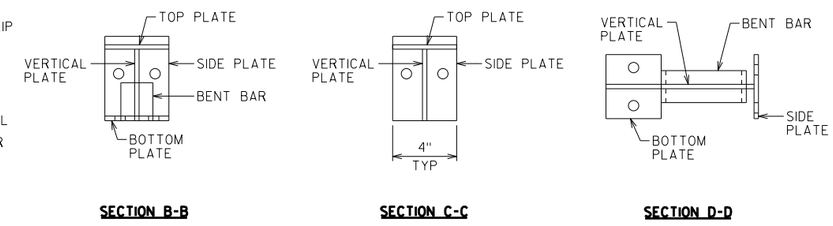

DMS WELDED PLATE CONNECTION DETAILS

TOP PLATE CLAMP SHOWN
BOTTOM PLATE CLAMP SIMILIAR

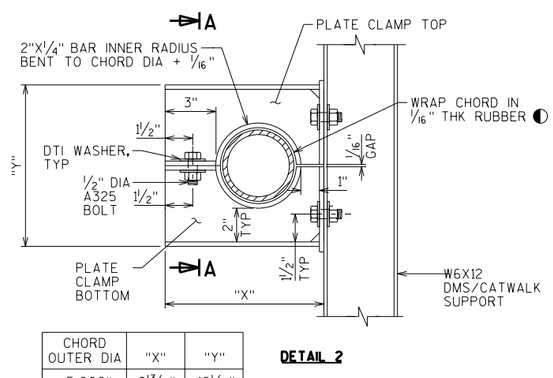

CHORD OUTER DIA	"X"	"Y"
5.000"	9 13/16"	10 1/16"
5.563"	10⅜"	10⅝"
6.625"	11 7/16"	11 11/16"

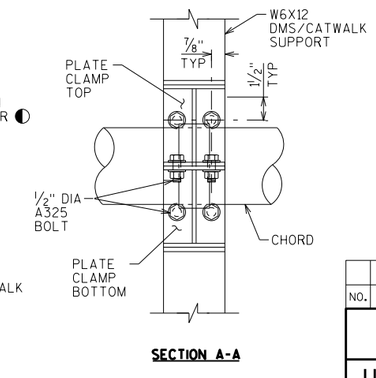

TYPICAL DMS CONNECTION

◐ NEOPRENE, GRADE 45±5, OTHERWISE MEETING THE REQUIREMENTS OF STD SPEC 506.2.6.1

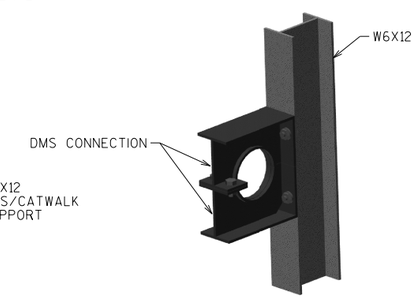

3-D VIEW DMS CONNECTION

CHORD NOT SHOWN FOR CLARITY

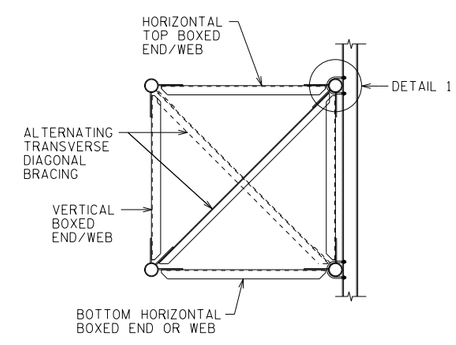

SECTION THRU TRUSS

FOR SIGN CONNECTION

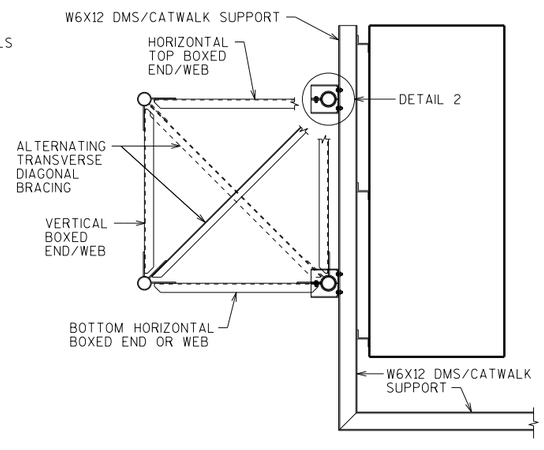

SECTION THRU TRUSS

FOR DMS/CATWALK CONNECTION

8

8

NO.	DATE	REVISION	BY

STATE OF WISCONSIN
DEPARTMENT OF TRANSPORTATION
STRUCTURES DESIGN SECTION

UPDATED: JULY 2020

DRAWN BY BOS | PLANS CK'D. BOS

4-CHORD TRUSS FULL SPAN CONNECTIONS 2

SHEET IV OF VIII

SCALE = 2.00

STATE PROJECT NUMBER

STANDARD

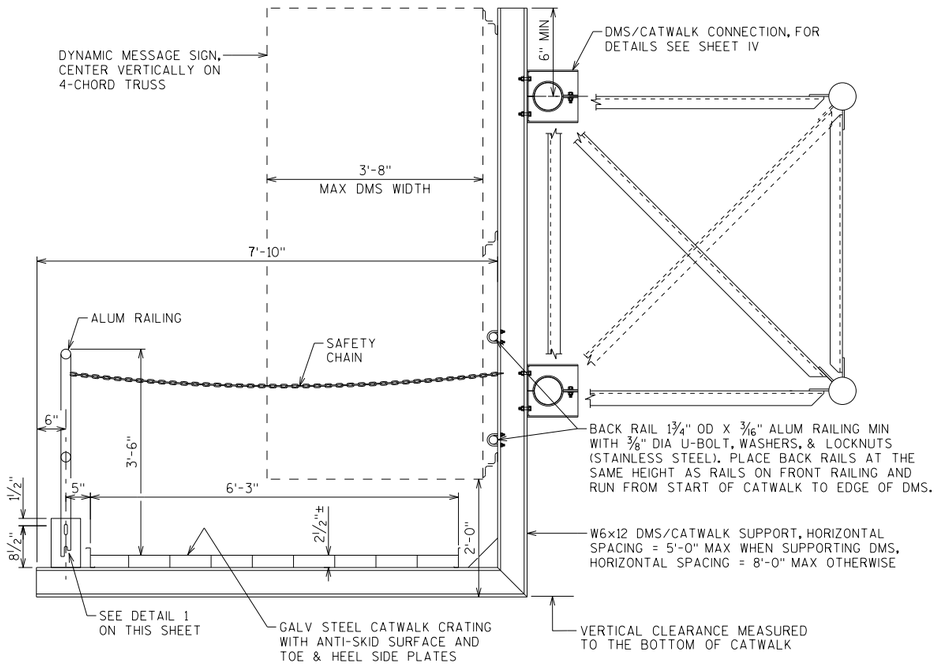

SECTION THRU WALKWAY

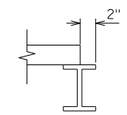

CATWALK TERMINATION DETAIL

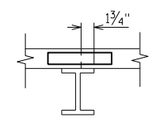

CATWALK SPLICE LOCATION DETAIL

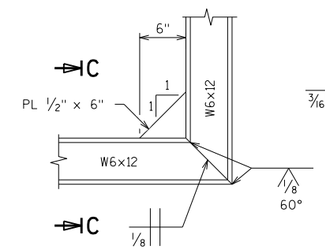

BRACKET DETAIL

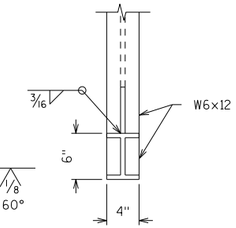

SECTION C-C

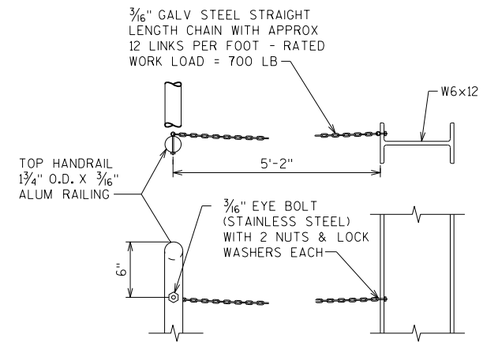

SAFETY CHAIN DETAIL

(PROVIDE SAFETY CHAIN AT EACH END OF THE CATWALK)

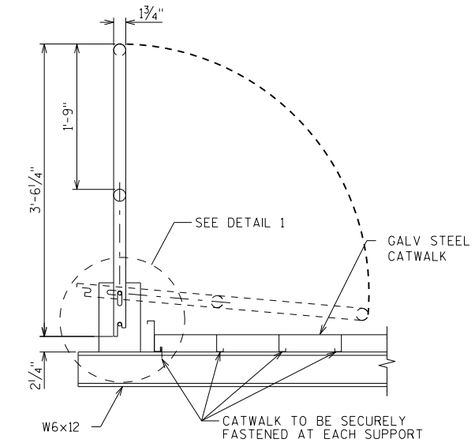

RAIL POST DETAIL

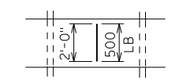

NOTE:
CATWALK GRATING SHALL MEET THE CURRENT AASHTO "LRFD SPECIFICATIONS FOR STRUCTURAL SUPPORTS FOR HIGHWAY SIGNS, LUMINAIRES, AND TRAFFIC SIGNALS", (500 LB LIVE LOAD DISTRIBUTED OVER 2'-0" TRANSVERSELY - MAX SPAN IS 8'-0"). CATWALK SHALL ALSO MEET CURRENT OSHA STD'S FOR WALKING-WORKING SURFACES.

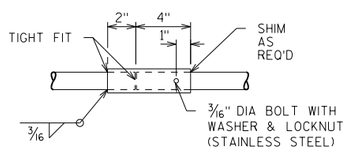

BACKRAIL SPLICE

ONE SPLICE ALLOWED FOR LENGTHS OVER 30'-0"

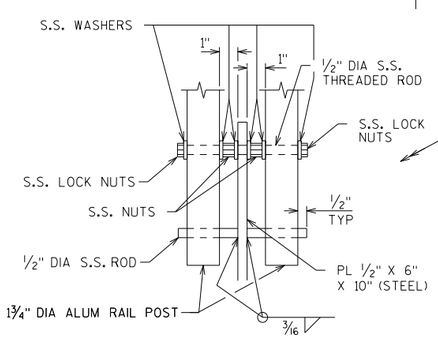

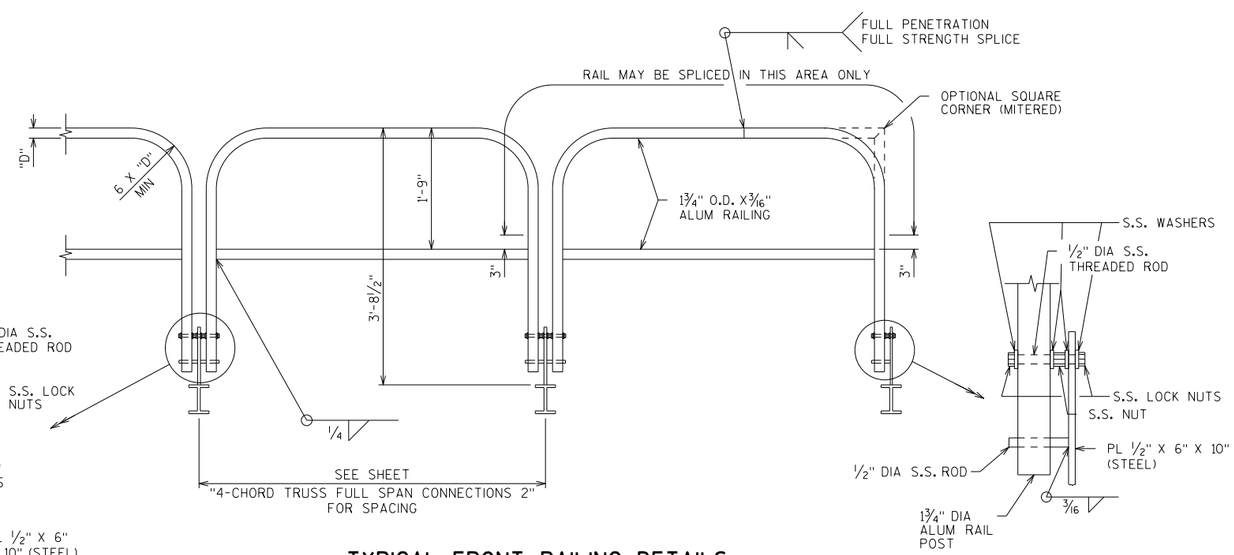

TYPICAL FRONT RAILING DETAILS

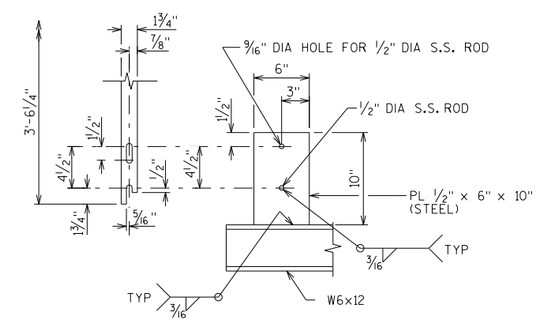

DETAIL 1

8

8

NO.	DATE	REVISION	BY

STATE OF WISCONSIN
DEPARTMENT OF TRANSPORTATION
STRUCTURES DESIGN SECTION

UPDATED: JULY 2020

DRAWN BY BOS | PLANS CK'D. BOS

4-CHORD TRUSS FULL SPAN CATWALK DETAILS

SHEET V OF VIII

SCALE = 1.25

STATE PROJECT NUMBER

STANDARD

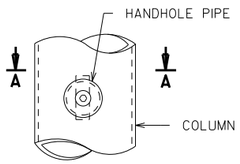

HANDHOLE DETAILS

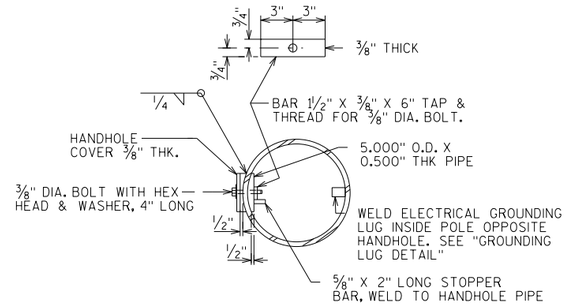

SECTION A-A

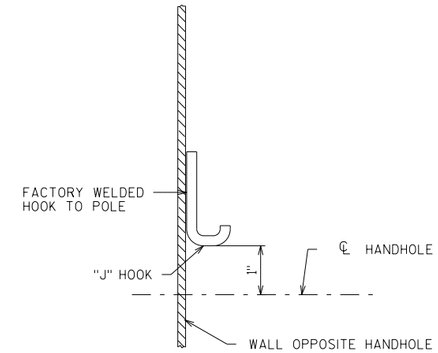

TYPICAL "J" HOOK LOCATION

THE "J" HOOK SHALL BE FACTORY WELDED TO THE INSIDE OF ALL COLUMNS CONTAINING ELECTRICAL WIRING. THE "J" HOOK SHALL BE ATTACHED ABOVE THE CENTERLINE OF THE UPPER HANDHOLE AND MOUNTED DIRECTLY OPPOSITE THE HANDHOLE AS SHOWN IN THE DRAWING.

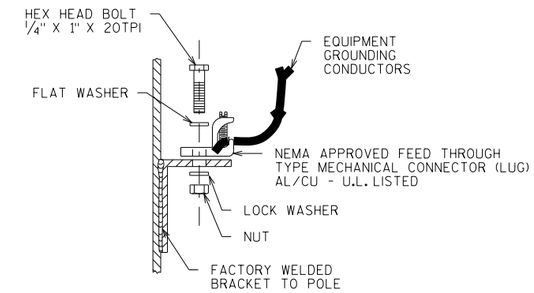

GROUNDING LUG DETAIL

NUT, BOLT AND WASHERS SHALL BE STAINLESS STEEL

HANDHOLE NOTES

HANDHOLES SHALL BE LOCATED IN ONE COLUMN OF THE SIGN BRIDGE STRUCTURE IF ELECTRICALLY OPERATED DEVICES ARE INSTALLED ON/IN THE STRUCTURE. COLUMNS WITH HANDHOLES SHALL BE NEAR THE ELECTRICAL SERVICE. THE CONTRACTOR SHALL VERIFY THE LOCATION OF THE ELECTRICAL SERVICE ENTRANCE WITH THE REGION TRAFFIC SECTION PRIOR TO FABRICATION OF THE SIGN BRIDGE COLUMNS AND MEMBERS. CONDUIT (AS REQ'D.) SHALL BE LOCATED, PLACED AND SIZED AS SHOWN ON THE ELECTRICAL PLAN DETAIL SHEETS.

UNLESS NOTED OTHERWISE, ALL HANDHOLE ELEMENTS TO BE GALVANIZED PER THE WISDOT STANDARD SPECIFICATIONS.

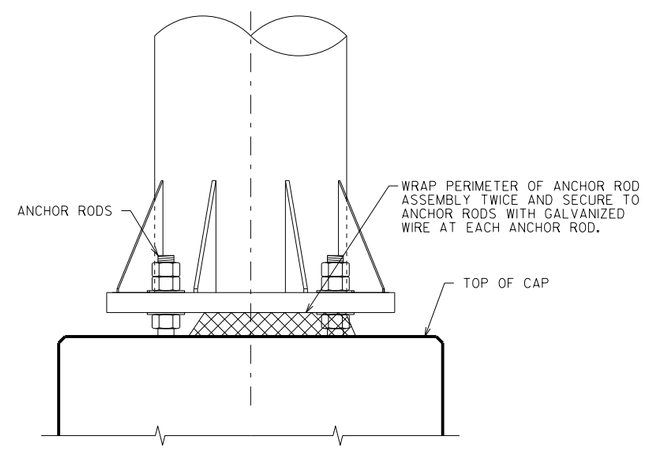

RODENT SCREEN

(ONLY REQ'D. WHEN ELECTRICAL DEVICES ARE INSTALLED)

8

8

NO.	DATE	REVISION	BY

STATE OF WISCONSIN
DEPARTMENT OF TRANSPORTATION
STRUCTURES DESIGN SECTION

UPDATED: JULY 2020

DRAWN BY BOS | PLANS CK'D. BOS

4-CHORD TRUSS
FULL SPAN
ELECTRICAL DETAILS

SHEET VI OF VIII

SCALE = 1.00

STATE PROJECT NUMBER

STANDARD

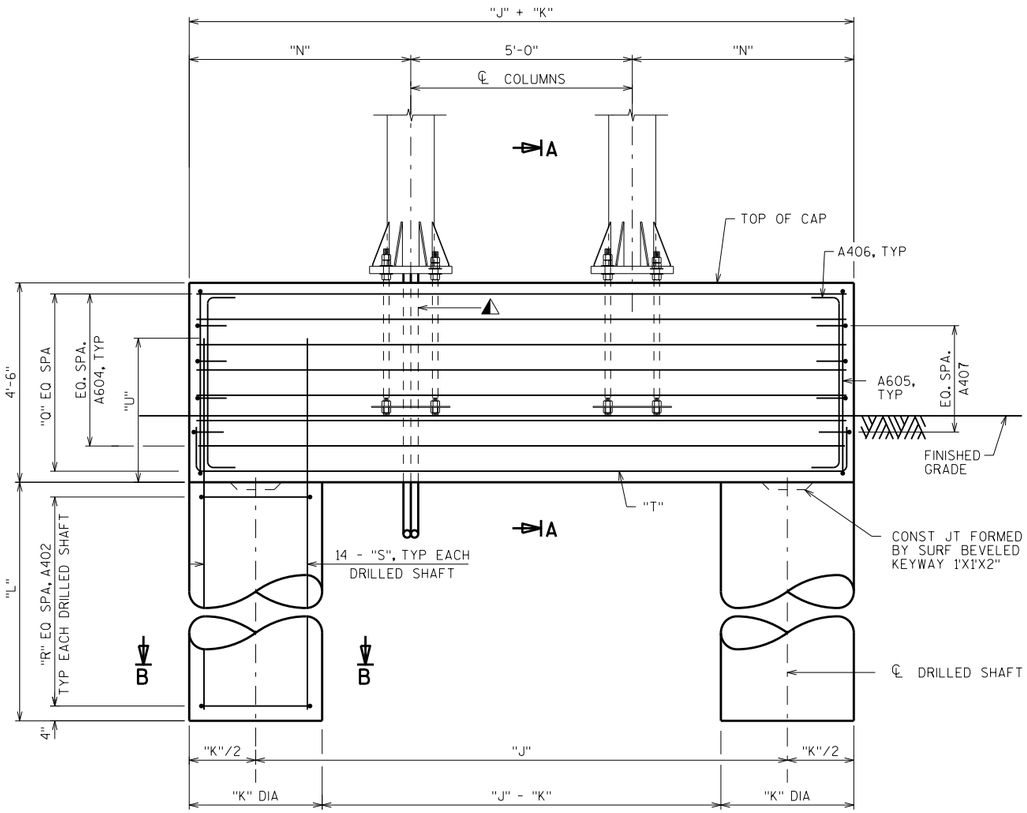

ELEVATION

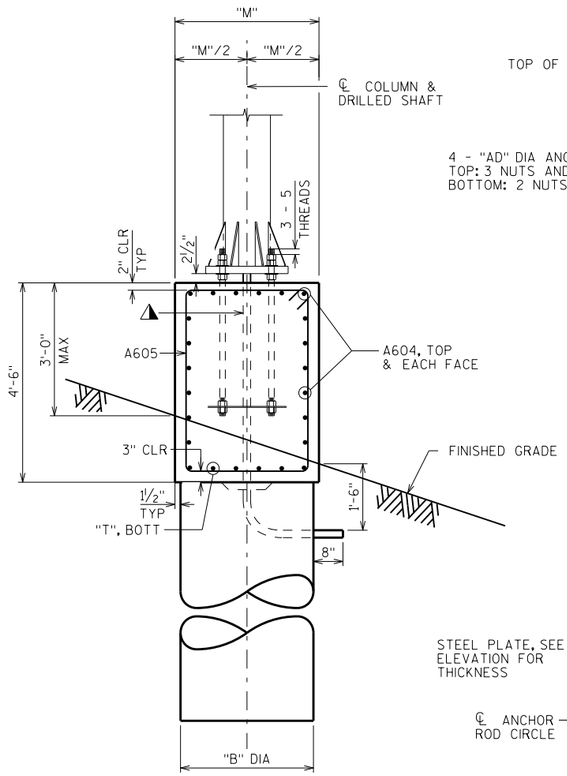

SECTION A-A

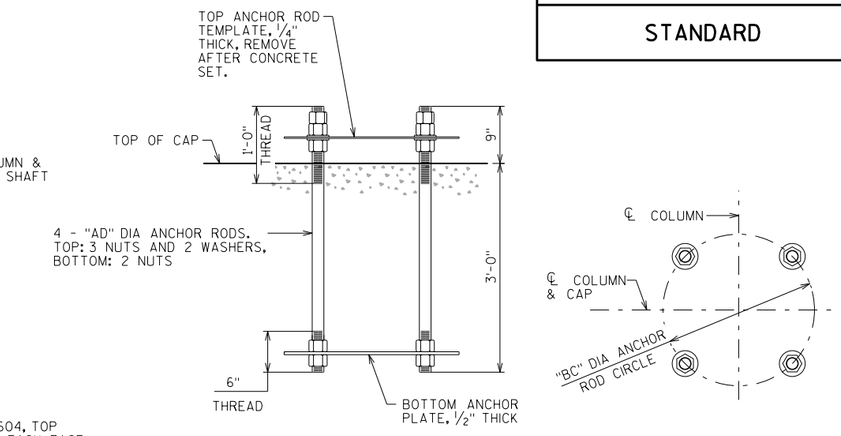

ELEVATION PLAN

ANCHOR ROD ASSEMBLY DETAILS

SINGLE ASSEMBLY SHOWN
4 ANCHOR RODS REQ'D PER ASSEMBLY

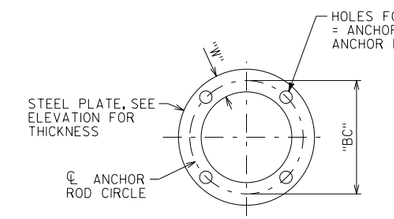

ANCHOR PLATE/TOP TEMPLATE
PLAN

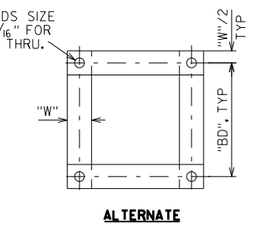

ALTERNATE
ANCHOR PLATE/TOP TEMPLATE
PLAN

FOUNDATION, REINFORCING & ANCHOR PLATE DATA

STD DESIGN TRUSS	FOUNDATION DIMENSIONS											ANCHOR PLATE DIMENSIONS			
	"J"	"K"	"L"	"M"	"N"	"Q"	"R"	"S"	"T"	"U"	"V"	"AD"	"BC"	"BD"	"W"
I	9'-0"	3'-0"	19'-0"	3'-3"	3'-6"	7	19	A801	A603	2'-2"	17	1½"	1'-6¾"	1'-1¼"	3"
II	12'-0"	3'-0"	22'-0"	3'-3"	5'-0"	7	22	A801	A603	2'-2"	23	1½"	1'-6¾"	1'-1¼"	3"
III	12'-0"	3'-6"	23'-0"	3'-9"	5'-3"	7	23	A901	A703	2'-9"	23	1¾"	1'-6¾"	1'-1¼"	3½"
IV	15'-0"	3'-6"	23'-0"	3'-9"	6'-9"	7	29	A901	A703	2'-9"	29	1¾"	1'-8"	1'-2⅛"	3½"
V	15'-0"	4'-0"	23'-0"	4'-3"	7'-0"	8	23	A1001	A703	3'-5"	29	1¾"	1'-10"	1'-3⅝"	3½"

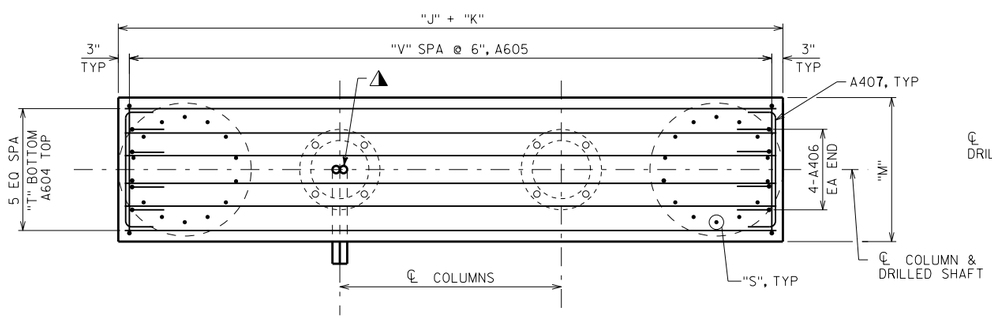

PLAN

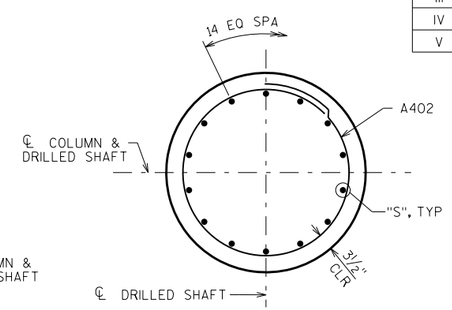

SECTION B-B
TYPICAL FOR EACH DRILLED SHAFT FOOTING

NOTES

CENTER ANCHOR ROD ASSEMBLY AND MAKE SURE IT IS PLUMB. MAINTAIN ANCHOR ROD PROJECTION ABOVE FOOTING AS DETAILED ON PLAN. ANCHOR ROD ASSEMBLY SHALL BE RIGIDLY SECURED IN POSITION DURING AND AFTER CONCRETE PLACEMENT. DO NOT WELD THE ANCHOR RODS.

LEGEND

◭ 2 - 2" DIA NONMETALLIC CONDUITS, INSTALL ONLY WITH DMS. EXTEND CONDUITS AS SHOWN AND CAP OR SEAL EACH END WITH A SUITABLE REMOVABLE PLUG. PLACE CONDUITS UNDER COLUMN ADJACENT TO THE DMS. CONDUITS INCIDENTAL TO THE FOUNDATION BID ITEMS.

NO.	DATE	REVISION	BY

STATE OF WISCONSIN
DEPARTMENT OF TRANSPORTATION
STRUCTURES DESIGN SECTION

UPDATED: JULY 2020

DRAWN BY BOS | PLANS CK'D. BOS

4-CHORD TRUSS FULL SPAN FOUNDATIONS 1

SHEET VII OF VIII

SCALE = 1.66

8

8

STATE PROJECT NUMBER

STANDARD

NOTE:
THE FIRST OR FIRST TWO DIGITS OF THE BAR MARK SIGNIFIES THE BAR SIZE

BILL OF BARS - STANDARD DESIGN TYPE I

BAR MARK	COAT	NO. REQ'D.	LENGTH	BENT	BAR SERIES	LOCATION
A801		56	24'-2"			DRILLED SHAFT - VERTICAL
A402		80	9'-0"	X		DRILLED SHAFT - HORIZONTAL
A603	X	12	13'-3"	X		CAP - LONGITUDINAL - BOTTOM
A604	X	36	11'-8"			CAP - LONGITUDINAL - TOP & SIDES
A605	X	48	14'-10"	X		CAP - STIRRUP
A406	X	16	5'-2"	X		CAP - VERTICAL - EACH END
A407	X	16	3'-5"	X		CAP - HORIZONTAL - EACH END

BILL OF BARS - STANDARD DESIGN TYPE II

BAR MARK	COAT	NO. REQ'D.	LENGTH	BENT	BAR SERIES	LOCATION
A801		56	24'-2"			DRILLED SHAFT - VERTICAL
A402		92	9'-0"	X		DRILLED SHAFT - HORIZONTAL
A603	X	12	16'-3"	X		CAP - LONGITUDINAL - BOTTOM
A604	X	36	14'-8"			CAP - LONGITUDINAL - TOP & SIDES
A605	X	60	14'-10	X		CAP - STIRRUP
A406	X	16	5'-2"	X		CAP - VERTICAL - EACH END
A407	X	16	3'-5"	X		CAP - HORIZONTAL - EACH END

BILL OF BARS - STANDARD DESIGN TYPE III

BAR MARK	COAT	NO. REQ'D.	LENGTH	BENT	BAR SERIES	LOCATION
A901		56	25'-9"			DRILLED SHAFT - VERTICAL
A402		96	10'-6"	X		DRILLED SHAFT - HORIZONTAL
A703	X	12	17'-1"	X		CAP - LONGITUDINAL - BOTTOM
A604	X	36	15'-2"			CAP - LONGITUDINAL - TOP & SIDES
A605	X	62	15'-10	X		CAP - STIRRUP
A406	X	16	5'-2"	X		CAP - VERTICAL - EACH END
A407	X	16	3'-11"	X		CAP - HORIZONTAL - EACH END

BILL OF BARS - STANDARD DESIGN TYPE IV

BAR MARK	COAT	NO. REQ'D.	LENGTH	BENT	BAR SERIES	LOCATION
A901		56	25'-9"			DRILLED SHAFT - VERTICAL
A402		120	10'-6"	X		DRILLED SHAFT - HORIZONTAL
A703	X	12	20'-1"	X		CAP - LONGITUDINAL - BOTTOM
A604	X	36	18'-2"			CAP - LONGITUDINAL - TOP & SIDES
A605	X	74	15'-10	X		CAP - STIRRUP
A406	X	16	5'-2"	X		CAP - VERTICAL - EACH END
A407	X	16	3'-11"	X		CAP - HORIZONTAL - EACH END

BILL OF BARS - STANDARD DESIGN TYPE V

BAR MARK	COAT	NO. REQ'D.	LENGTH	BENT	BAR SERIES	LOCATION
A1001		56	26'-5"			DRILLED SHAFT - VERTICAL
A402		96	12'-1"	X		DRILLED SHAFT - HORIZONTAL
A703	X	12	20'-7"	X		CAP - LONGITUDINAL - BOTTOM
A604	X	36	18'-8"			CAP - LONGITUDINAL - TOP & SIDES
A605	X	76	16'-10	X		CAP - STIRRUP
A406	X	16	5'-2"	X		CAP - VERTICAL - EACH END
A407	X	16	4'-5"	X		CAP - HORIZONTAL - EACH END

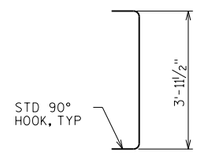

A406

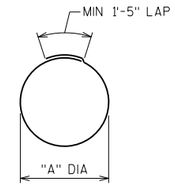

A402

DESIGN TYPE	"A"
I	2'-5"
II	2'-5"
III	2'-11"
IV	2'-11"
V	3'-5"

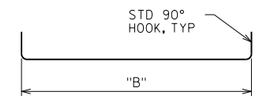

A603, A703

DESIGN TYPE	BAR MARK	"B"
I	A603	11'-7"
II	A603	14'-7"
III	A703	15'-1"
IV	A703	18'-1"
V	A703	18'-7"

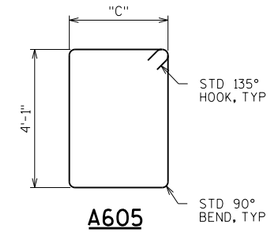

A605

DESIGN TYPE	"C"
I	2'-11"
II	2'-11"
III	3'-5"
IV	3'-5"
V	3'-11"

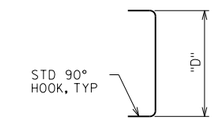

A407

DESIGN TYPE	"D"
I	2'-9½"
II	2'-9½"
III	3'-3½"
IV	3'-3½"
V	3'-9½"

BAR BENDING DIAGRAMS

NOTE:
BAR DIMENSIONS ARE OUT TO OUT OF BAR. THE FIRST OR FIRST TWO DIGITS OF A BAR MARK SIGNIFIES THE BAR SIZE.

ESTIMATED QUANTITIES - FOUNDATION

STANDARD DESIGN TRUSS	CONCRETE MASONRY (CY)	STEEL REINFORCEMENT HS (LBS)	STEEL REINFORCEMENT HS COATED (LBS)	ANCHOR ASSEMBLY 1½-INCH (EACH)	ANCHOR ASSEMBLY 1¾-INCH (EACH)	FOUNDATION DRILLNG (LF)		
						36" DIA.	42" DIA.	48" DIA.
I	33	4,100	2,030	4	----	76	----	----
II	40	4,170	2,520	4	----	88	----	----
III	53	5,580	2,810	----	4	----	92	----
IV	56	5,750	3,340	----	4	----	92	----
V	70	7,140	3,540	----	4	----	----	92

** QUANTITIES ARE FOR INFORMATION ONLY AND ARE BASED ON STANDARD STRUCTURE DIMENSIONS**

8

8

NO.	DATE	REVISION	BY

STATE OF WISCONSIN
DEPARTMENT OF TRANSPORTATION
STRUCTURES DESIGN SECTION

UPDATED: JULY 2020

DRAWN BY BOS | PLANS CK'D. BOS

4-CHORD TRUSS
FULL SPAN
FOUNDATIONS 2

SHEET VIII OF VIII

SCALE = 0.50