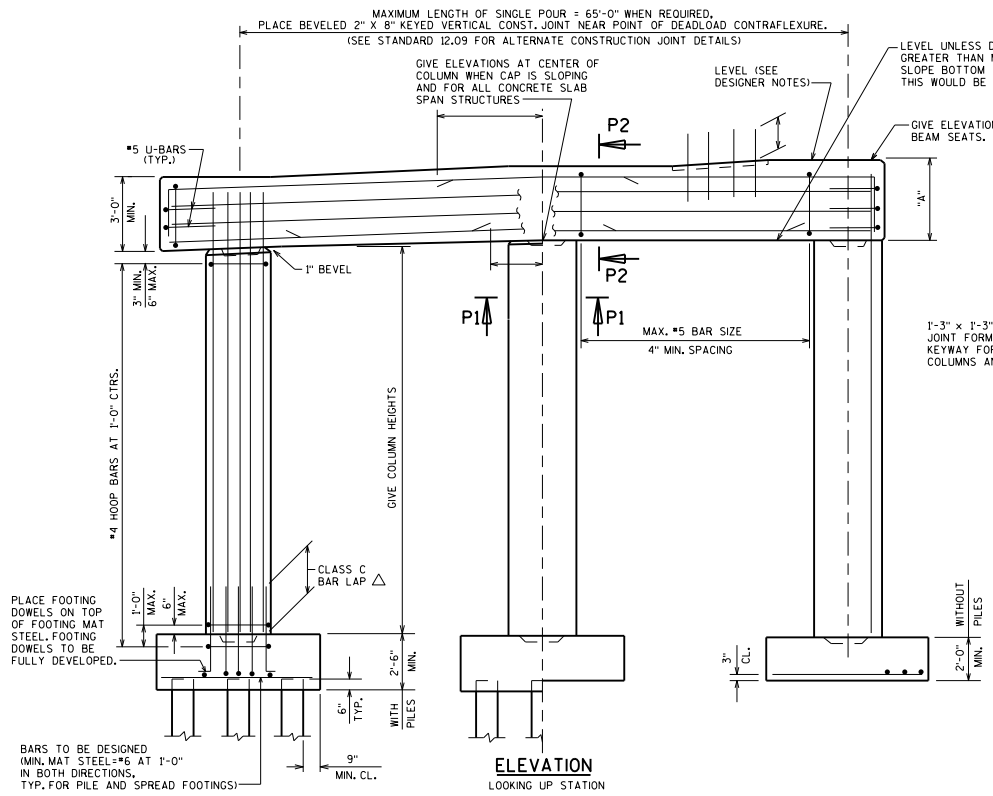

ELEVATION

LOOKING UP STATION

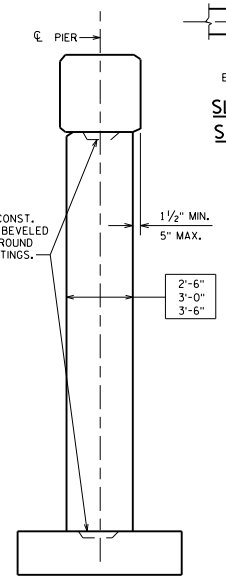

END VIEW

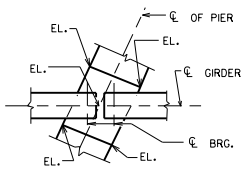

SLOPING BEAM SEAT DETAILS

DESIGNER NOTES

ALL BAR SPLICES TO BE BASED ON "CLASS C" TENSION LAP SPLICE UNLESS OTHERWISE SHOWN.

SLOPE TOP OF COLUMNS TO MATCH CAP WHEN THE BOTTOM OF THE CAP IS SLOPED. DETAIL BOTTOM OF CAP REINFORCEMENT TO CLEAR VERTICAL COLUMN REINFORCEMENT.

CAPS MAY BE MORE THAN 3" WIDER THAN COLUMNS IF THE EXTRA WIDTH IS NECESSARY TO SATISFY THE MINIMUM EDGE DISTANCE CRITERIA ADJACENT TO BEARINGS.

BEARING SEAT AREAS SHALL BE LEVEL EXCEPT FOR THE TWO CASES LISTED BELOW:

1. FOR GIRDERS WITH ½" ELASTOMERIC BEARING PADS AND THE GIRDER BOTTOM SLOPES MORE THAN 1%. ADD THESE TWO VALUES TO DETERMINE THE GIRDER SLOPE:
   - LONGITUDINAL GRADE OF GIRDER (PERCENT)
   - CAMBER EFFECT = 4(RC)/L X 100 (PERCENT), WHERE:
     RC = RESIDUAL CAMBER (INCHES)
     L = GIRDER LENGTH (INCHES)

2. WHEN A CAP IS USED FOR CONCRETE SLAB SUPERSTRUCTURES MAKE THE TOP OF THE CAP PARALLEL TO GRADE. SEE STANDARD 18.01.

BEAM SEATS MAY BE ANGLED TO MATCH SKEW AT THE DESIGN ENGINEER'S DISCRETION.

SEE STANDARD 12.01 FOR ADDITIONAL REINFORCING STEEL IN BEARING AREA FOR BEAM SEATS OF NON-SLOPED CAPS THAT ARE 4" OR MORE ABOVE LOWEST BEAM SEAT.

EPOXY COAT BAR STEEL DOWN TO TOP OF FOOTINGS IN ALL PIERS UNDER EXPANSION JOINTS AND ON ALL PIERS AT GRADE SEPARATIONS.

BAR STEEL REQUIRED FOR BENDING IN PIER CAP SHALL BE DETAILED IN LENGTHS AS REQUIRED FOR CONSTRUCTIBILITY AND BY DESIGN SPECIFICATIONS. MAXIMUM REQUIRED BAR STEEL IN THE TOP OF THE PIER CAP (NEGATIVE MOMENT STEEL) MAY BE DETAILED FULL LENGTH IF A MINOR COST INCREASE.

SEE BRIDGE MANUAL 13.4.10 FOR MULTI-COLUMNED PIER DESIGN REGARDING VEHICULAR COLLISON FORCE. THE PIER OPTIONS REPRESENTED ON THIS STANDARD DO NOT MEET THE REQUIREMENTS OF AASHTO LRFD 3.6.5. FOR VEHICULAR COLLISION FORCE.

△ NORMALLY THIS LAP IS OMITTED AND FOOTING DOWELS EXTENDED INTO THE CAP IF THE LAP IS GREATER THAN ONE-HALF THE COLUMN HEIGHT.

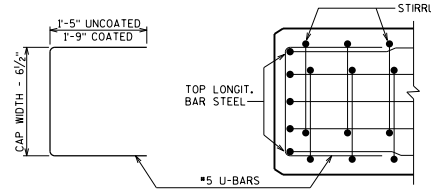

PLAN VIEW SHOWING END OF CAP REINF.

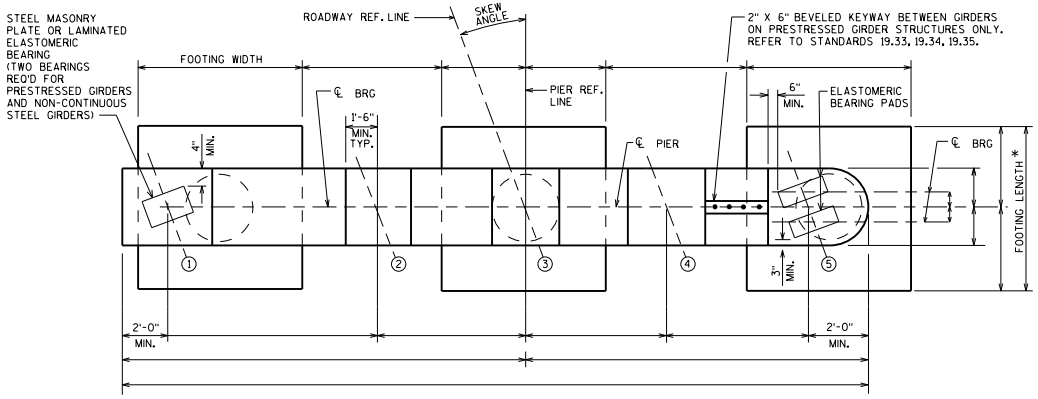

PLAN

SHOWING BOTH SQUARE AND ROUND ENDED CAP

*MAKE ALL FOOTING LENGTHS THE SAME WITHIN A GIVEN PIER.

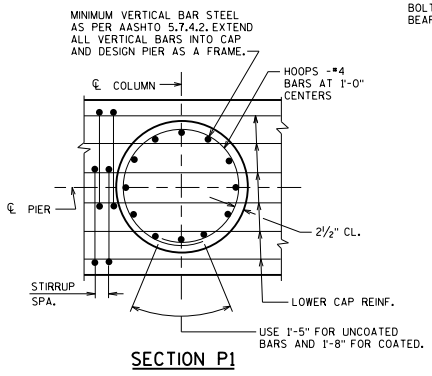

SECTION P1

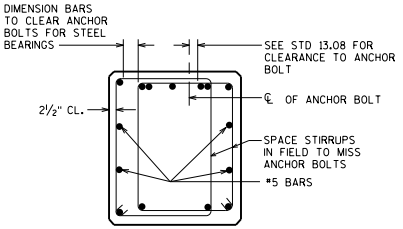

SECTION P2

MULTI-COLUMNED PIER

BUREAU OF STRUCTURES

APPROVED: Bill Oliva

DATE: 1-20

STANDARD 13.01

GIRDER STRUCTURES

CONCRETE SLAB STRUCTURES

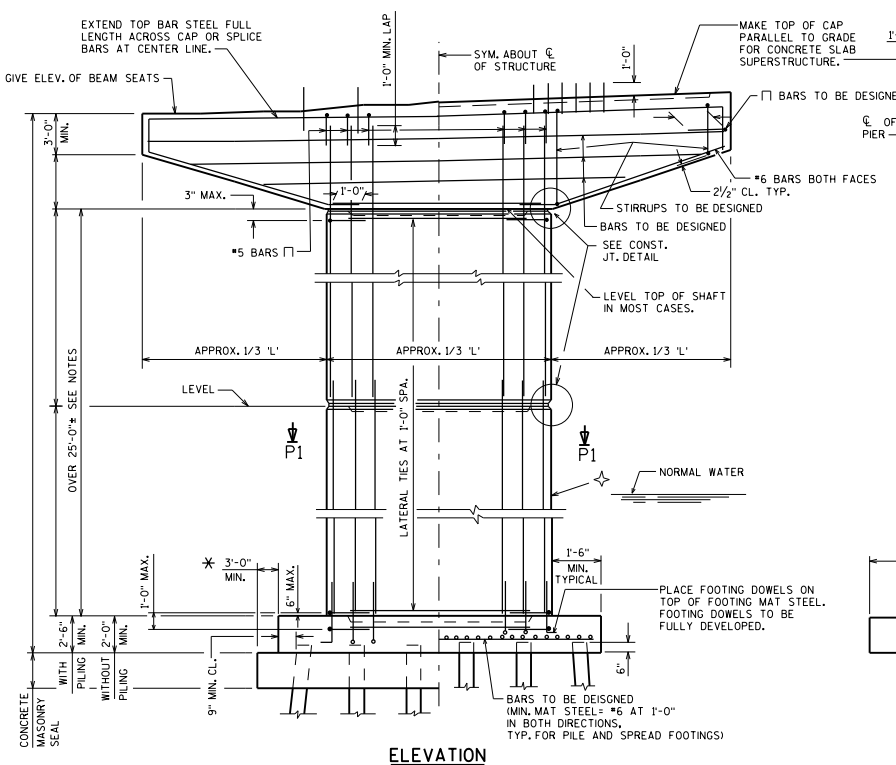

ELEVATION

LOOKING UP STATION

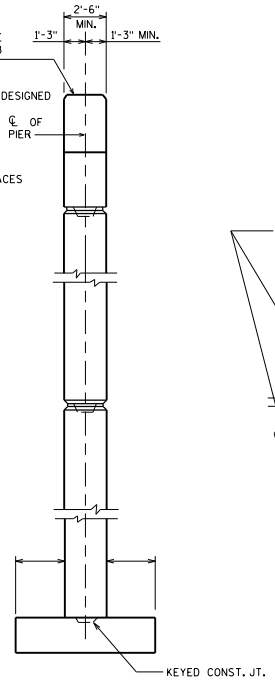

END VIEW

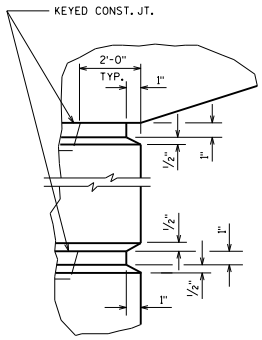

CONST. JT. DETAIL

DESIGNER NOTES

ALL BAR SPLICES TO BE BASED ON "CLASS C" TENSION LAP SPLICE UNLESS OTHERWISE SHOWN.

OPTIONAL KEYED CONSTRUCTION JOINTS IN SHAFT, IF PROVIDED, SHALL BE PLACED APPROXIMATELY 2'-0" ABOVE NORMAL WATER ELEVATION. OPTIONAL KEYED CONSTRUCTION JOINTS IN SHAFT SHOULD BE PROVIDED SO THAT THE MAXIMUM HEIGHT OF POUR NEED NOT EXCEED 25'-0"±. DETAIL BAR SPLICES AT OPTIONAL JOINTS IF THE BAR PROJECTION WOULD BE GREATER THAN 20'-0"±. RUSTICATIONS SHOWN IN "CONST. JT. DETAIL" MAY BE OMITTED AT THE OPTION OF THE DESIGNER.

KEYED CONSTRUCTION JOINTS SHALL BE FORMED BY BEVELED KEYWAY 4" DEEP X 1/3 THICKNESS OF SHAFT X 4'-0" LESS THAN LENGTH OF SHAFT.

☆ A STANDARD SHAFT TAPER OF 10% MAY BE USED AT THE OPTION OF THE DESIGNER. (LATERAL DIRECTION ONLY)

SHAFT MAY BE TAPERED IN ONE OR TWO DIRECTIONS WHEN REQUIRED FOR STRUCTURAL REASONS.

A NON-STANDARD SHAFT CROSS-SECTION, SHAPE, OR TAPER, NOT REQUIRED FOR STRUCTURAL REASONS, MAY BE USED ONLY WITH THE APPROVAL OF THE STRUCTURES DESIGN SECTION.

BEARING SEAT AREAS SHALL BE LEVEL EXCEPT FOR THE TWO CASES LISTED BELOW:

1. FOR GIRDERS WITH ½" ELASTOMERIC BEARING PADS WHEN THE BOTTOM OF THE GIRDERS SLOPE MORE THAN 1%. SEE STANDARD 13.01.

2. FOR CONCRETE SLAB SUPERSTRUCTURES MAKE THE TOP OF CAP PARALLEL TO GRADE. SEE STANDARD 18.01.

BEAM SEATS MAY BE ANGLED TO MATCH SKEW AT THE DESIGN ENGINEER'S DISCRETION.

SEE STANDARD 12.01 FOR ADDITIONAL REINFORCING STEEL IN BEARING AREA FOR BEAM SEATS OF NON-SLOPED CAPS THAT ARE 4 INCHES OR MORE ABOVE THE LOWEST BEAM SEAT.

◪ THIS MAXIMUM VERT. BAR SPACING APPLIES ONLY WHEN THE VERTICAL REINFORCEMENT IS 1% OR MORE OF THE GROSS CONCRETE AREA.

SEE STANDARD 13.01 FOR MINIMUM OFFSETS FROM BEARINGS TO SIDES OF CAP AND TO ADJACENT BEARING SEAT STEPS.

EPOXY COAT BAR STEEL DOWN TO TOP OF FOOTINGS IN ALL PIERS UNDER EXPANSION JOINTS AND ON ALL PIERS AT GRADE SEPARATIONS.

✳ INCREASE THIS DIMENSION IF NECESSARY TO PREVENT BATTERED PILES FROM DRIVING INTO SHEET PILING. ALSO INCREASE DIMENSION TO FACILITATE OVERHEAD SHEETING CLEARANCE IF THE TOP OF PIER IS BEYOND NORMAL SEAL SIZE AND NO CONSTRUCTION JOINT IS PROVIDED IN THE SHAFT/CAP REGION (E.G. TAPERED WALL PIERS OR SHORTER HAMMERHEADS WITH RADIUS TRANSITION FROM SHAFT TO CAP).

⊗ MAXIMUM SPACING BETWEEN UNRESTRAINED VERTICAL BAR AND RESTRAINED (TIED ACROSS MEMBER) VERTICAL BAR IS 24 INCHES.

PLAN NOTES

THE BAR SPLICES AT THE OPTIONAL KEYED CONSTRUCTION JOINTS MAY BE ELIMINATED WHETHER OR NOT THE JOINT IS UTILIZED. PAYMENT WILL BE FOR THE ACTUAL BARS INSTALLED.

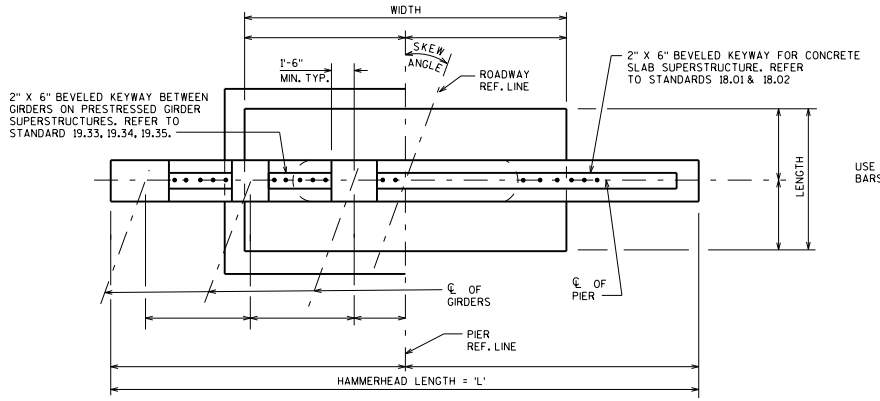

PLAN

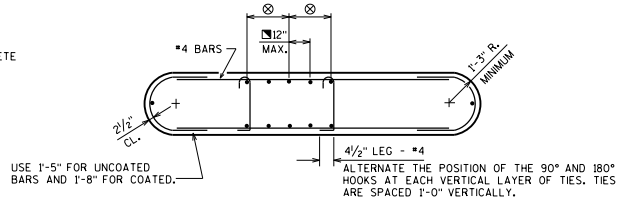

SECTION P1

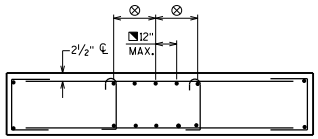

ALTERNATE SECTION P1

HAMMERHEAD PIER

BUREAU OF STRUCTURES

APPROVED: Bill Oliva

DATE: 1-15

STANDARD 13.02

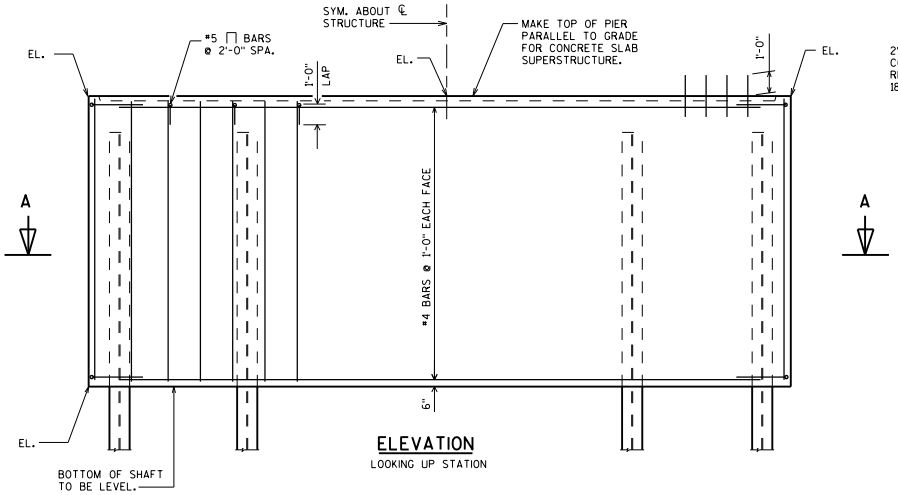

ELEVATION

LOOKING UP STATION

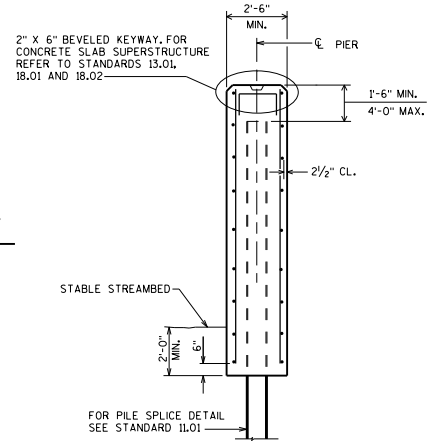

END VIEW

NOTES

TYPE 1 PIER — AT PIER __, CONCRETE POURED UNDERWATER WILL BE ALLOWED AND SHALL BE DONE IN ACCORDANCE WITH STANDARD SPEC 502.3.5.3. CONCRETE POURED UNDERWATER SHALL NOT EXCEED 10.0 FEET IN DEPTH, UNLESS APPROVED OTHERWISE.

TYPE 2 PIER — AT PIER __, COFFERDAM REQUIRED. CONCRETE POURED UNDERWATER WILL BE ALLOWED AND SHALL BE DONE IN ACCORDANCE WITH STANDARD SPEC 502.3.5.3. CONCRETE POURED UNDERWATER SHALL NOT EXCEED 10.0 FEET IN DEPTH, UNLESS APPROVED OTHERWISE.

TYPE 3 PIER — AT PIER __, COFFERDAM AND COFFERDAM DEWATERING REQUIRED. COFFERDAM SHALL BE DEWATERED PRIOR TO PLACING PIER CONCRETE.

DESIGNER NOTES

SEE BRIDGE MANUAL SECTION 13.2.3 AND STANDARD 13.09 FOR GUIDANCE ON PIER TYPES, DETAILS, AND APPLICABLE BID ITEMS.

SEE BRIDGE MANUAL SECTION 13.11.5 FOR GUIDANCE ON COFFERDAMS.

CONSTRUCTION JOINTS ARE NOT REQUIRED, REGARDLESS OF LENGTH OF PILE ENCASED PIER.

SEE STANDARD 13.01 FOR ADDITIONAL, APPLICABLE DESIGNER NOTES

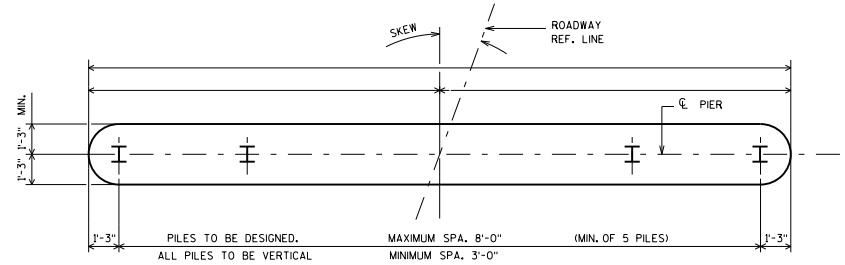

PLAN

STEEL PILING SHOWN. CAST IN PLACE CONC. PILING LAYOUT SIMILAR.

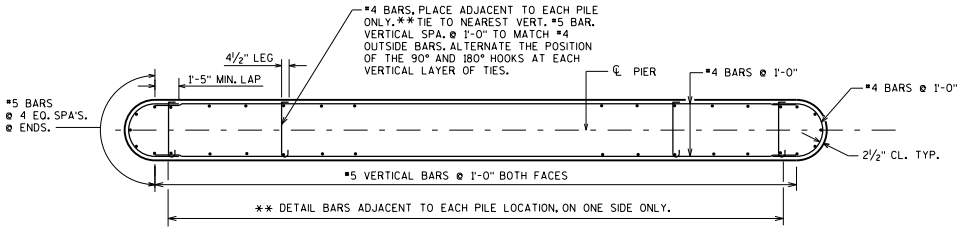

SECTION A-A

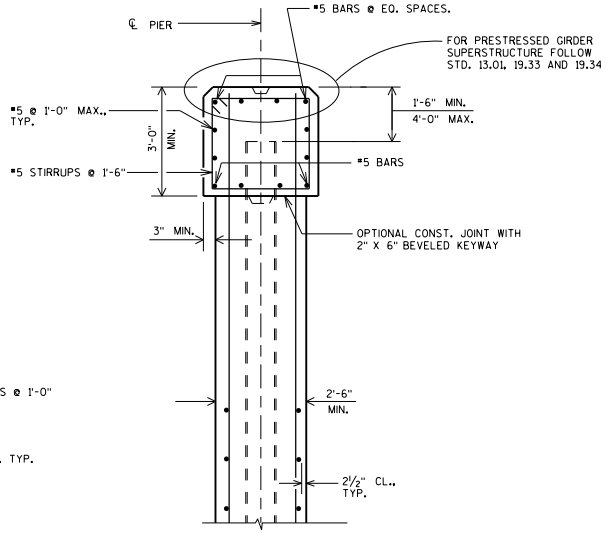

CAP TYPE DETAIL

USE WHEN ECONOMICAL FOR GIRDERS ON LARGE SKEWS

PILE ENCASED PIER

BUREAU OF STRUCTURES

APPROVED: Bill Oliva

DATE: 7-19

STANDARD 13.03

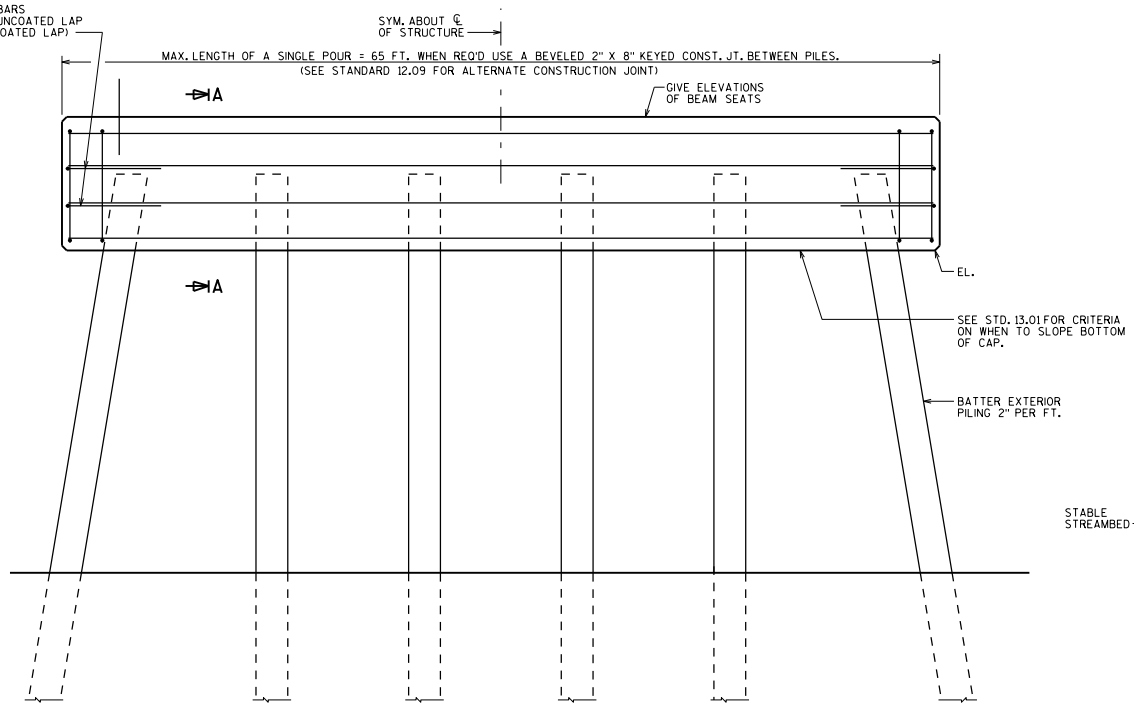

ELEVATION

LOOKING UP STATION

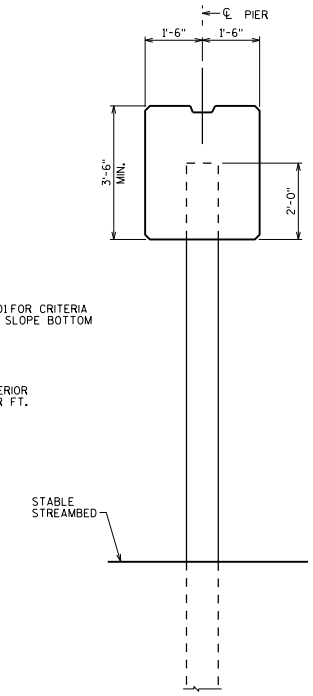

END VIEW

NOTES

PILES SHALL BE PAINTED IN ACCORDANCE WITH SECTION 550.3.11.3 OF THE STANDARD SPECIFICATIONS.

DESIGNER NOTES

ALL BAR SPLICES TO BE BASED ON "CLASS C" TENSION LAP SPLICE UNLESS OTHERWISE SHOWN.

BEARING SEAT AREAS SHALL BE LEVEL EXCEPT FOR THE TWO CASES LISTED BELOW:

1. FOR GIRDERS WITH ½" ELASTOMERIC BEARING PADS WHEN THE BOTTOM OF THE GIRDERS SLOPE MORE THAN 1%. SEE STANDARD 13.01.

2. FOR CONCRETE SLAB SUPERSTRUCTURES MAKE THE TOP OF THE CAP PARALLEL TO GRADE. SEE STANDARD 18.01.

BEAM SEATS MAY BE ANGLED TO MATCH SKEW AT THE DESIGN ENGINEER'S DISCRETION.

SEE STANDARD 12.01 FOR ADDITIONAL REINFORCING STEEL IN BEARING AREA FOR BEAM SEATS OF NON-SLOPED CAPS THAT ARE 4" OR MORE ABOVE LOWEST BEAM SEAT.

PILES SHALL BE 12¾" OR 14" DIAMETER CAST-IN-PLACE WITH MINIMUM WALL THICKNESS OF ⅜".

H-PILE USE REQUIRES PRIOR APPROVAL DURING DESIGN OF THE STRUCTURES DEVELOPMENT CHIEF, (608) 266-0075.

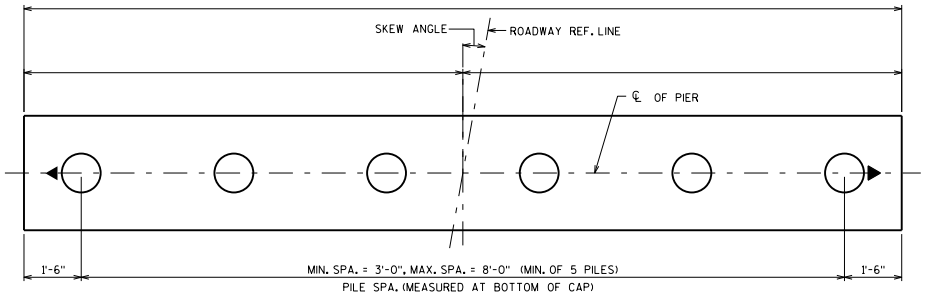

PLAN

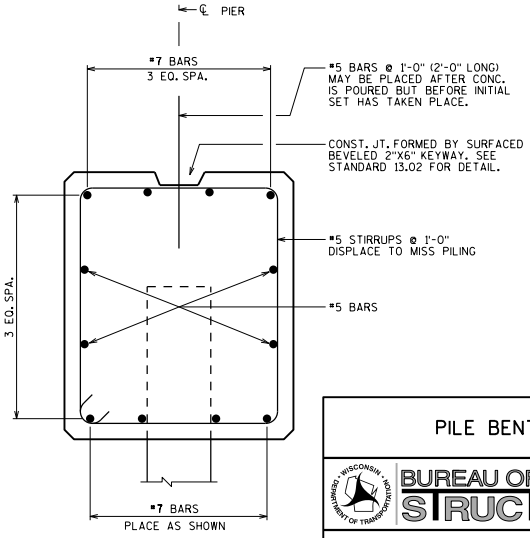

SECTION A-A

PILE BENT

BUREAU OF STRUCTURES

WISCONSIN DEPARTMENT OF TRANSPORTATION

APPROVED: Bill Oliva

DATE: 1-20

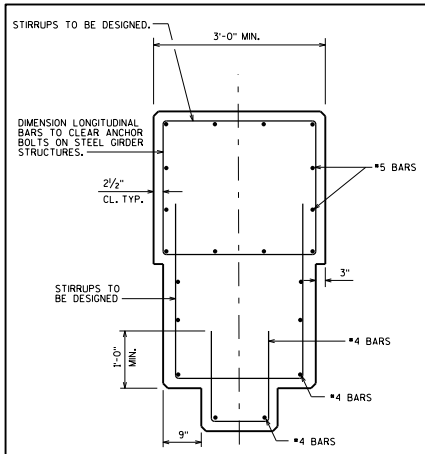

SECTION P1

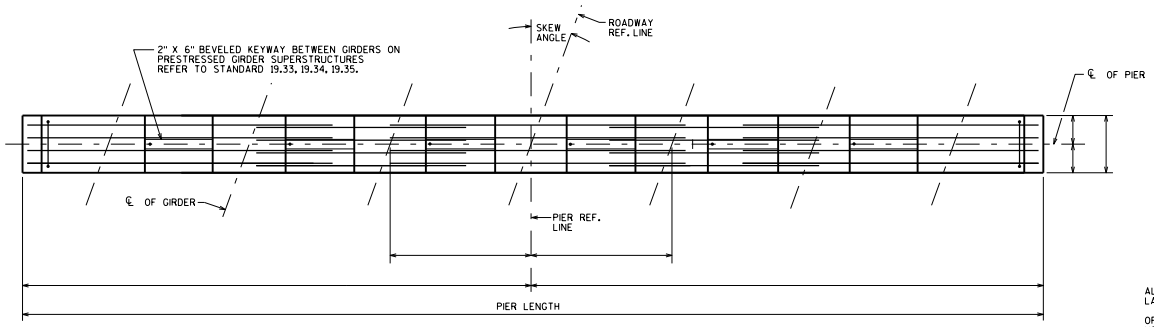

PLAN OF PIER CAP

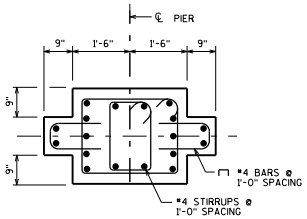

SECTION P2

DESIGNER NOTES

ALL BAR SPLICES TO BE BASED ON "CLASS C" TENSION LAP SPLICE UNLESS OTHERWISE SHOWN.

OPTIONAL KEYED CONSTRUCTION JOINTS IN COLUMNS (IF USED) AND REQUIRED KEYED JOINTS FOR FOOTINGS SHALL BE FORMED BY A BEVELED KEYWAY 2" DEEP x 1'-3" X 1'-3". EXPOSED EDGES OF CONSTRUCTION JOINTS SHALL BE FLUSH AND NOT BEVELED IN COLUMNS.

BEARING SEAT AREAS SHALL BE LEVEL EXCEPT FOR THE TWO CASES LISTED BELOW:

1. FOR GIRDERS WITH ½" ELASTOMERIC BEARING PADS WHEN THE BOTTOM OF THE GIRDERS SLOPE MORE THAN 1%. SEE STANDARD 13.01.

2. FOR CONCRETE SLAB SUPERSTRUCTURES MAKE THE TOP OF THE CAP PARALLEL TO GRADE. SEE STANDARD 18.01.

BEAM SEATS MAY BE ANGLED TO MATCH SKEW AT THE DESIGN ENGINEER'S DISCRETION.

SEE STANDARD 12.01 FOR ADDITIONAL REINFORCING STEEL IN BEARING AREA FOR BEAM SEATS THAT ARE 4" OR MORE ABOVE LOWEST BEAM SEAT.

EPOXY COAT BAR STEEL DOWN TO TOP OF FOOTINGS IN ALL PIERS UNDER EXPANSION JOINTS AND ON ALL PIERS AT GRADE SEPARATIONS.

BAR STEEL REQUIRED FOR BENDING IN PIER CAP SHALL BE DETAILED IN LENGTHS AS REQUIRED FOR CONSTRUCTIBILITY AND BY DESIGN SPECIFICATIONS. MAXIMUM REQUIRED BAR STEEL IN THE TOP OF THE PIER CAP (NEGATIVE MOMENT STEEL) MAY BE DETAILED FULL LENGTH IF A MINOR COST INCREASE.

SEE STANDARD 13.01 FOR MINIMUM OFFSETS FROM BEARINGS TO SIDES OF CAP AND TO ADJACENT BEARING SEAT STEPS.

FOR CASES WITH CRASH WALLS, DEFER TO NON-AESTHETIC TYPE MULTI-COLUMNED PIERS.

SEE BRIDGE MANUAL 13.4.10 FOR MULTI-COLUMNED PIER DESIGN REGARDING VEHICULAR COLLISION FORCE.

△ NORMALLY THIS LAP IS OMITTED AND FOOTING DOWELS EXTENDED INTO THE CAP IF THE LAP IS GREATER THAN ONE-HALF THE COLUMN HEIGHT.

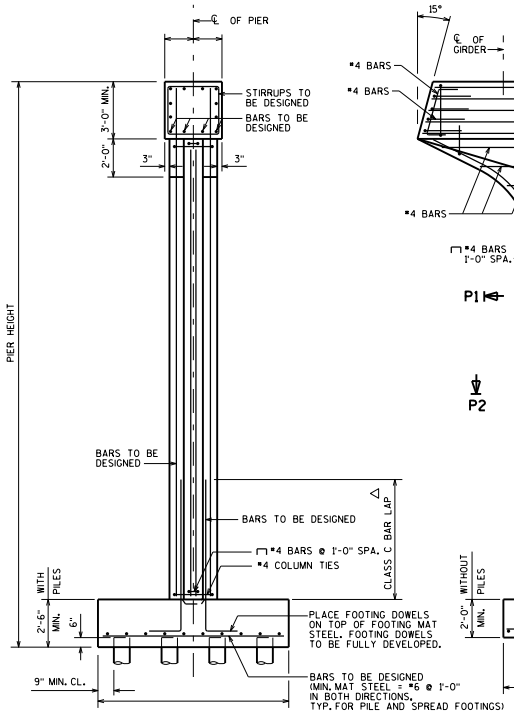

END VIEW

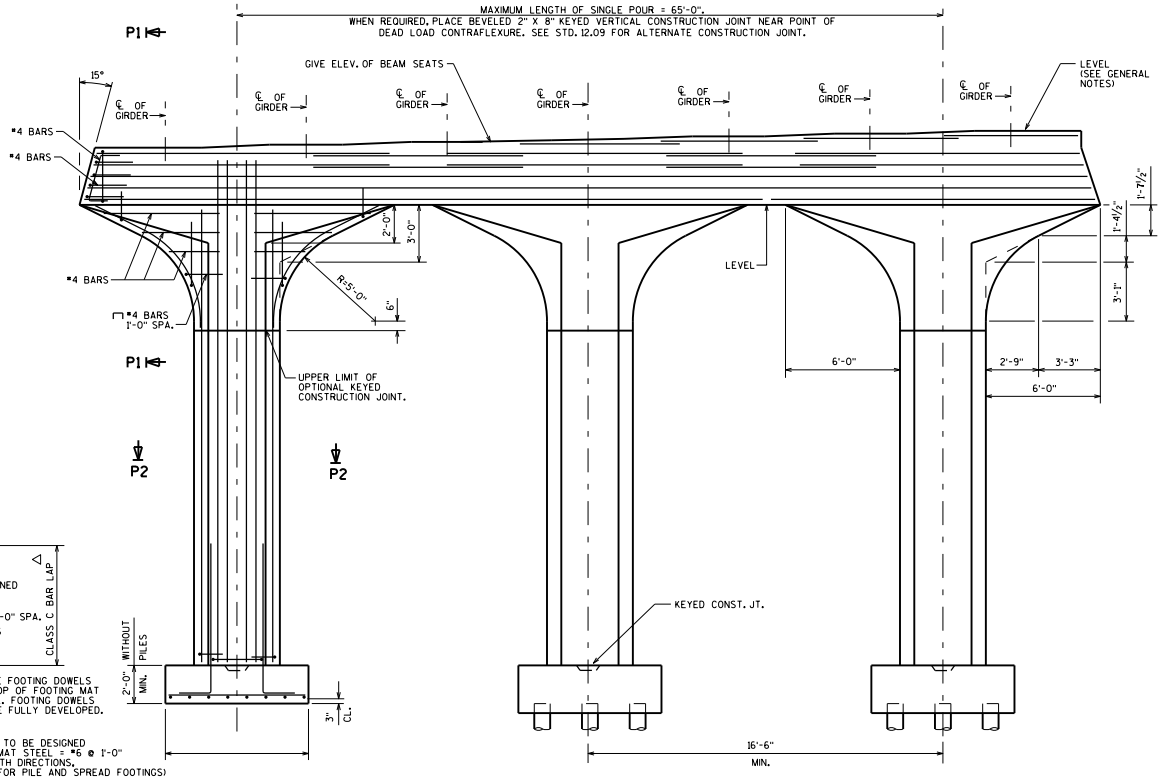

ELEVATION
LOOKING UP STATION

MULTI-COLUMNED PIER TYPE 2

BUREAU OF STRUCTURES

APPROVED: Bill Oliva

DATE: 1-20

STANDARD 13.05

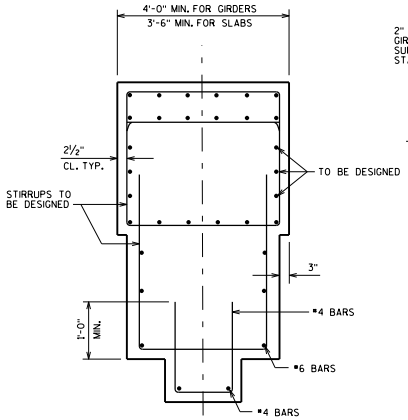

SECTION P1

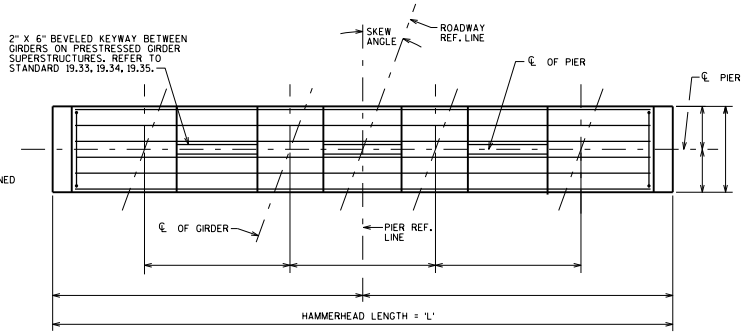

PLAN OF PIER CAP

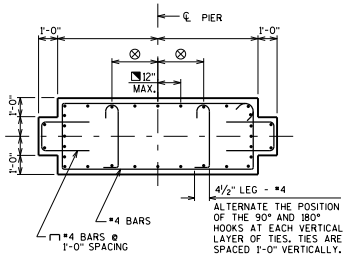

SECTION P2

NOTES

THE BAR SPLICES AT THE OPTIONAL KEYED CONSTRUCTION JOINTS MAY BE ELIMINATED WHETHER OR NOT THE JOINT IS UTILIZED. PAYMENT WILL BE FOR THE ACTUAL BARS INSTALLED.

DESIGNER NOTES (CON'T)

◥ THIS MAXIMUM VERT. BAR SPACING APPLIES ONLY WHEN THE VERTICAL REINFORCEMENT IS 1% OR MORE OF THE GROSS CONCRETE AREA.

⊗ MAXIMUM SPACING BETWEEN UNRESTRAINED VERTICAL BAR AND RESTRAINED (TIED ACROSS MEMBER) VERTICAL BAR IS 24 INCHES

DESIGNER NOTES

ALL BAR SPLICES TO BE BASED ON "CLASS C" TENSION LAP SPLICE UNLESS OTHERWISE SHOWN.

OPTIONAL KEYED CONSTRUCTION JOINTS IN SHAFT, IF PROVIDED, SHALL BE PLACED APPROXIMATELY 2'-0" ABOVE NORMAL WATER ELEVATION. OPTIONAL KEYED CONSTRUCTION JOINTS IN SHAFT SHOULD BE PROVIDED SO THAT THE MAXIMUM HEIGHT OF POUR NEED NOT EXCEED 25'-0"±. DETAIL BAR SPLICES AT OPTIONAL JOINTS IF THE BAR PROJECTION WOULD BE GREATER THAN 20'-0"±.

KEYED CONSTRUCTION JOINTS SHALL BE FORMED BY BEVELED KEYWAY 4" DEEP X 1/3 THICKNESS OF SHAFT X 4'-0" LESS THAN LENGTH OF SHAFT. EXPOSED EDGES OF CONSTRUCTION JOINT SHALL BE FLUSH AND NOT BEVELED.

BEARING SEAT AREAS SHALL BE LEVEL EXCEPT FOR THE TWO CASES LISTED BELOW:

1. FOR GIRDER WITH ½" ELASTOMERIC BEARING PADS WHEN THE BOTTOM OF THE GIRDERS SLOPE MORE THAN 1%. SEE STANDARD 13.01.

2. WHEN A CAP IS USED FOR CONCRETE SLAB SUPERSTRUCTURES MAKE THE TOP OF CAP PARALLEL TO GRADE. SEE STANDARD 18.01.

BEAM SEATS MAY BE ANGLED TO MATCH SKEW AT THE DESIGN ENGINEER'S DISCRETION.

SEE STANDARD 12.01 FOR ADDITIONAL REINFORCING STEEL IN BEARING AREA FOR BEAM SEATS THAT ARE 4" OR MORE ABOVE LOWEST BEAM SEAT.

FOR "HAMMERHEAD LENGTH" GREATER THAN 45'-0", CONSIDER A TWO SHAFT PIER FRAME RESEMBLING TWO HAMMERHEAD PIERS PLACED SIDE BY SIDE.

SEE STANDARD 13.01 FOR MINIMUM OFFSETS FROM BEARINGS TO SIDES OF CAP AND TO ADJACENT BEARING SEAT STEPS.

EPOXY COAT BAR STEEL DOWN TO TOP OF FOOTINGS IN ALL PIERS UNDER EXPANSION JOINTS AND ON ALL PIERS AT GRADE SEPARATIONS.

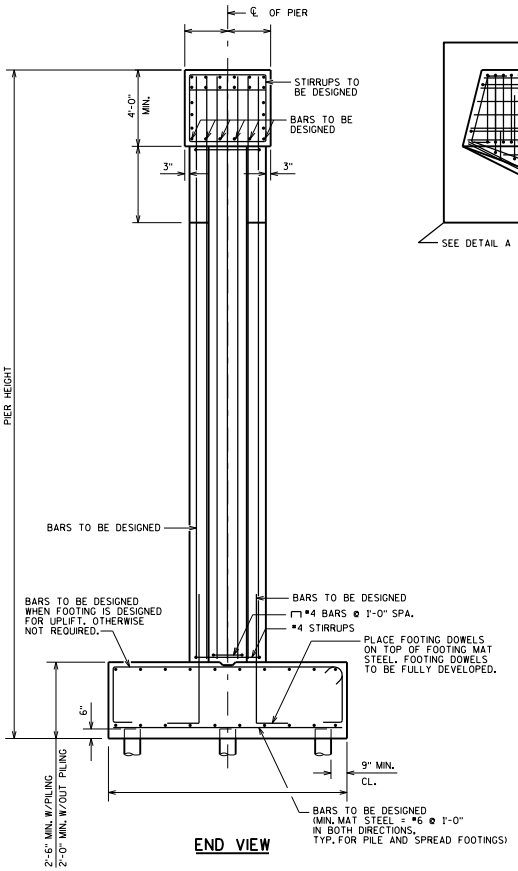

END VIEW

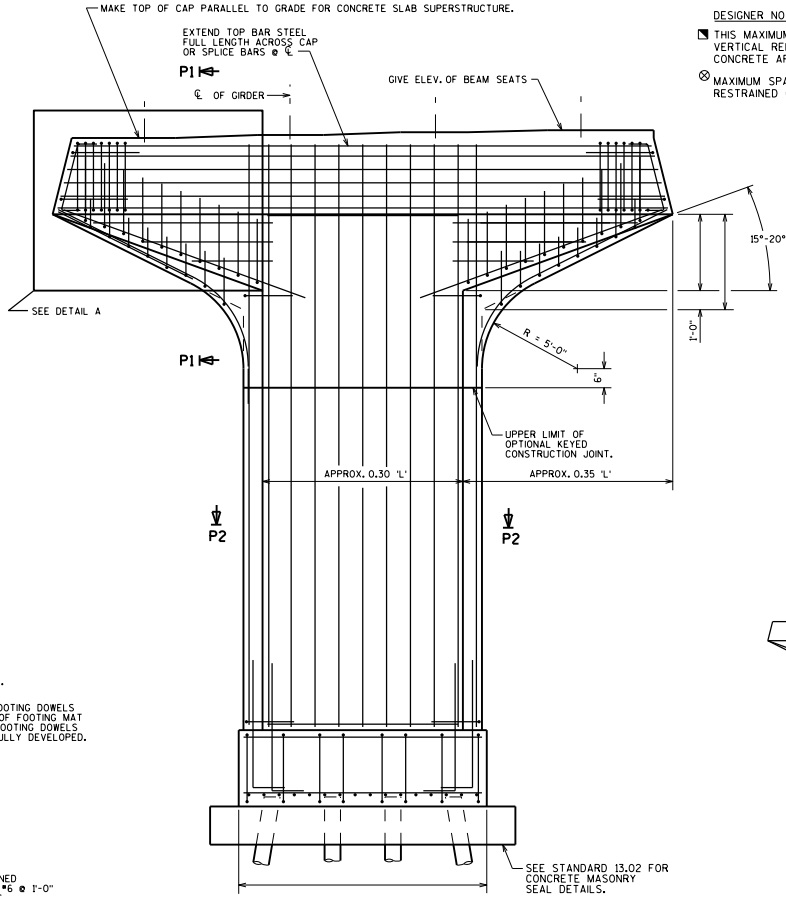

ELEVATION
LOOKING UP STATION

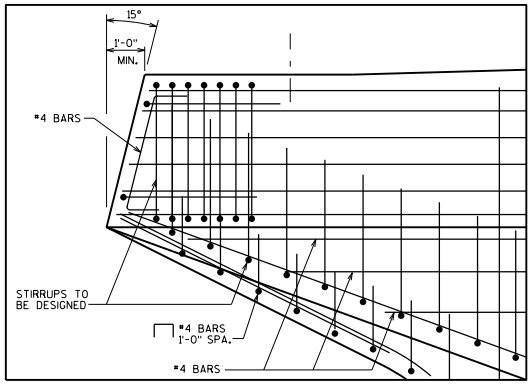

DETAIL A

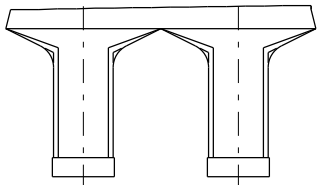

TWO SHAFT PIER

HAMMERHEAD PIER - TYPE 2

BUREAU OF STRUCTURES

APPROVED: Bill Oliva

DATE: 7-16

STANDARD 13.06

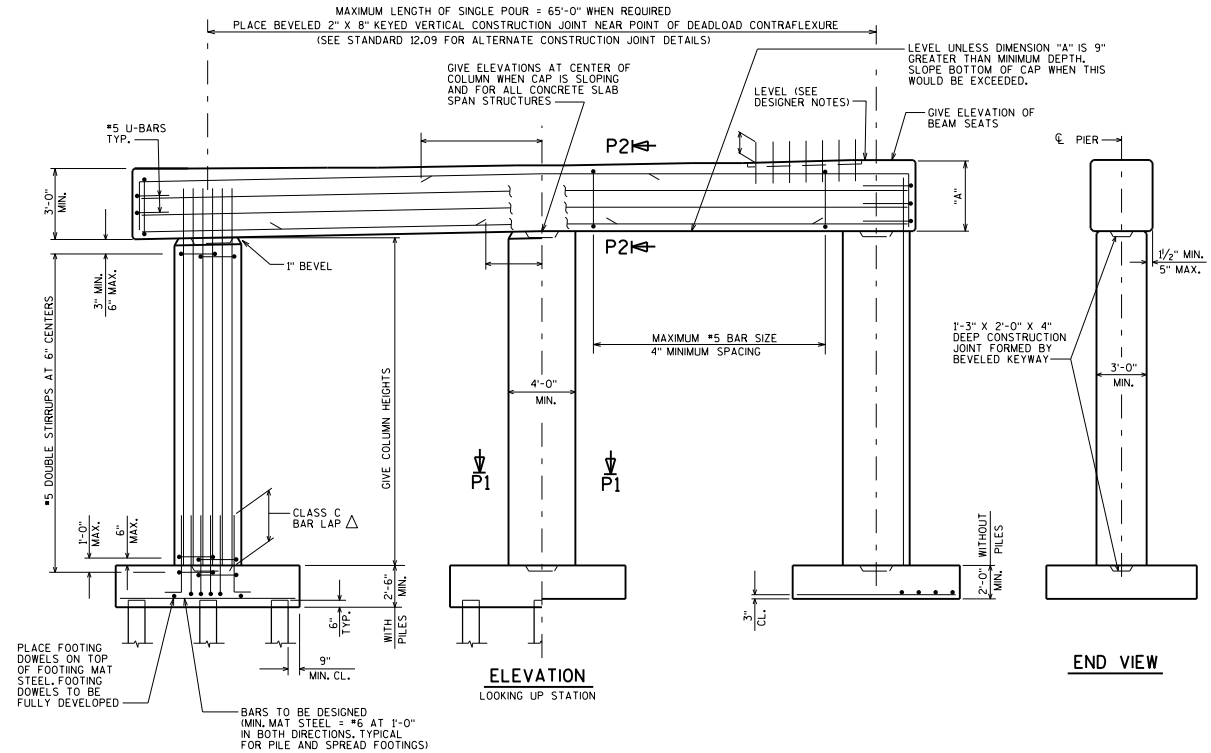

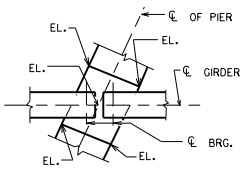

SLOPING BEAM SEAT DETAILS

DESIGNER NOTES

ALL BAR SPLICES TO BE BASED ON "CLASS C" TENSION LAP SPLICE UNLESS OTHERWISE SHOWN.

SLOPE TOP OF COLUMNS TO MATCH CAP WHEN THE BOTTOM OF THE CAP IS SLOPED. DETAIL BOTTOM OF CAP REINFORCEMENT TO CLEAR VERTICAL COLUMN REINFORCEMENT.

CAPS MAY BE MORE THAN 3" WIDER THAN COLUMNS IF THE EXTRA WIDTH IS NECESSARY TO SATISFY THE MINIMUM EDGE DISTANCE CRITERIA ADJACENT TO BEARINGS

BEARING SEAT AREAS SHALL BE LEVEL EXCEPT FOR THE TWO CASES LISTED BELOW:

1. FOR GIRDERS WITH ½" ELASTOMERIC BEARING PADS WHEN THE BOTTOM OF THE GIRDERS SLOPE MORE THAN 1%. SEE STANDARD 13.01.

2. WHEN A CAP IS USED FOR CONCRETE SLAB SUPERSTRUCTURES MAKE THE TOP OF THE CAP PARALLEL TO GRADE. SEE STANDARD 18.01.

BEAM SEATS MAY BE ANGLED TO MATCH SKEW AT THE DESIGN ENGINEER'S DISCRETION.

SEE STANDARD 12.01 FOR ADDITIONAL REINFORCING STEEL IN BEARING AREA FOR BEAM SEATS OF NON-SLOPED CAPS THAT ARE 4" OR MORE ABOVE LOWEST BEAM SEAT.

EPOXY COAT BAR STEEL DOWN TO TOP OF FOOTINGS IN ALL PIERS UNDER EXPANSION JOINTS AND ON ALL PIERS AT GRADE SEPARATIONS.

BAR STEEL REQUIRED FOR BENDING IN PIER CAP SHALL BE DETAILED IN LENGTHS AS REQUIRED FOR CONSTRUCTIBILITY AND BY DESIGN SPECIFICATIONS. MAXIMUM REQUIRED BAR STEEL IN THE TOP OF THE PIER CAP (NEGATIVE MOMENT STEEL) MAY BE DETAILED FULL LENGTH IF A MINOR COST INCREASE.

SEE BRIDGE MANUAL 13.4.10 FOR MULTI-COLUMNED PIER DESIGN REGARDING VEHICULAR COLLISON FORCE. THE PIER AS DETAILED ON THIS STANDARD IS ADEQUATE TO RESIST THE REQUIREMENTS OF AASHTO LRFD 3.6.5 FOR VEHICULAR COLLISION FORCE PROVIDED THAT RUSTICATIONS DO NOT EXEED 1½ INCH.

△ NORMALLY THIS LAP IS OMITTED AND FOOTING DOWELS EXTENDED INTO THE CAP IF THE LAP IS GREATER THAN ONE-HALF THE COLUMN HEIGHT.

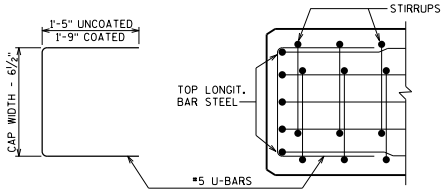

PLAN VIEW SHOWING END OF CAP REINF.

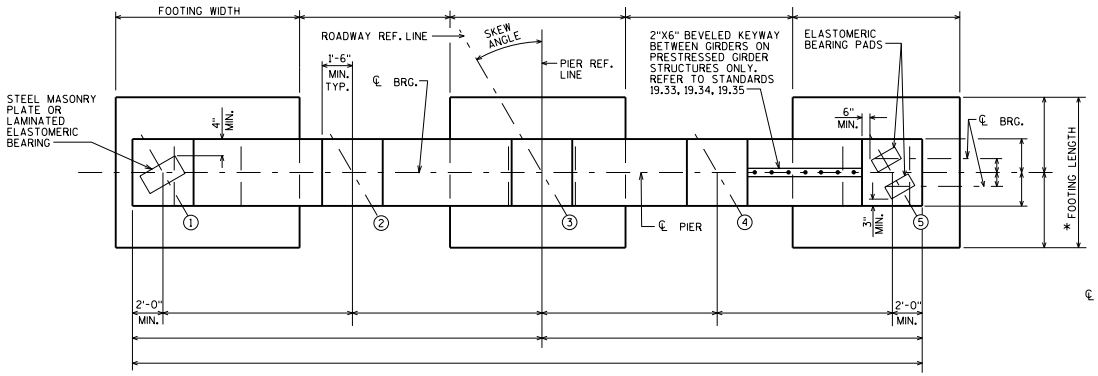

PLAN

*MAKE ALL FOOTING LENGTHS THE SAME LENGTH WITHIN A GIVEN PIER

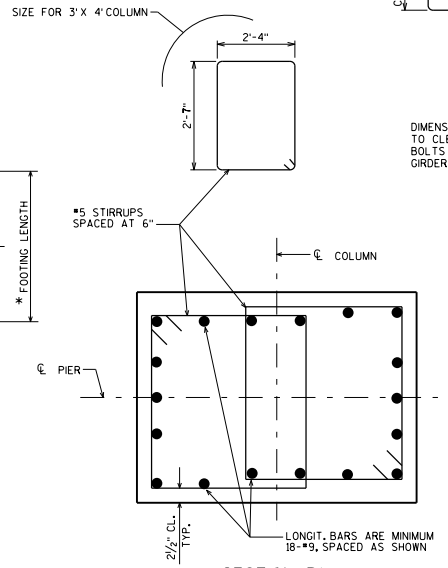

SECTION P1

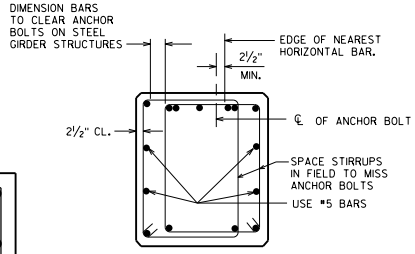

SECTION P2

MULTI-COLUMNED PIER WITH RECTANGULAR COLUMNS

BUREAU OF STRUCTURES

APPROVED: Bill Oliva

DATE: 1-20

STANDARD 13.07

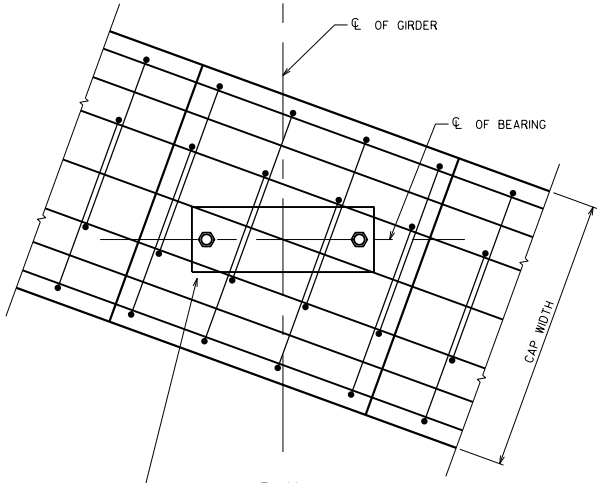

PLAN

PROVIDE ADEQUATE CLEARANCE FOR POST-INSTALLED ANCHORS

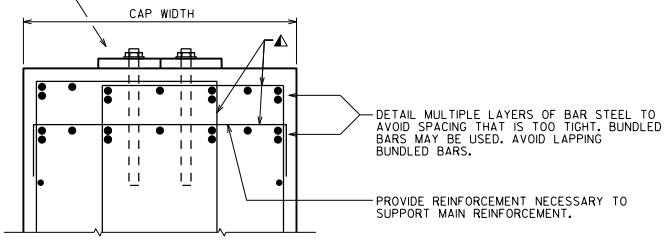

SECTION THRU PIER CAP

DESIGNER NOTES

PROVIDE 4" MIN. CLEAR BETWEEN ANCHOR BOLTS AND REINFORCEMENT.

FOR PIER CAPS UP TO 3'-6" WIDE, PROVIDE AT LEAST ONE 5" MIN. CLEARANCE BETWEEN REINFORCING BARS FOR CONCRETE PLACEMENT BY TREMIE AND FOR VIBRATION. FOR CAPS GREATER THAN 3'-6" WIDE, PROVIDE AT LEAST TWO SUCH GAPS.

SHOW ANCHORS LOCATIONS ON PIER CAP SHEETS.

ABUTMENT REINFORCEMENT LAYOUT SIMILAR TO PIER CAP REINFORCEMENT DETAILING.

NOTE

△1 DISPLACE TRANSVERSE STIRRUP BARS AS NEEDED TO PROVIDE 4" MIN. CLEAR BETWEEN ANCHOR BOLTS AND REINFORCEMENT.

PIER CAP REINFORCEMENT DETAILING

BUREAU OF STRUCTURES

APPROVED: Bill Oliva

DATE: 1-17

STANDARD 13.08

DESIGNER NOTES

PIER TYPES SHOWN ON THIS STANDARD ARE BASED ON THE OBSERVED WATER ELEVATION. OTHER FACTORS (VELOCITY, H2 ELEVATION, ETC.) SHOULD ALSO BE CONSIDERED WHEN SELECTING THE APPROPRIETE BID ITEMS AND PLAN NOTES.

PILE ENCASED PIER TYPES:

TYPE 1 - COFFERDAM BID ITEM NOT PROVIDED. CONSIDER PROVIDING UNDERWATER INSPECTION BID ITEM.

TYPE 2 - COFFERDAM AND UNDERWATER INSPECTION BID ITEMS REQUIRED.

TYPE 3 - COFFERDAM AND SEAL BID ITEMS REQUIRED.

WALL PIER ALTERNATIVES:
- SOLID WALL (AS SHOWN ON THIS STANDARD)
- HAMMERHEAD (SEE STANDARD 13.02)

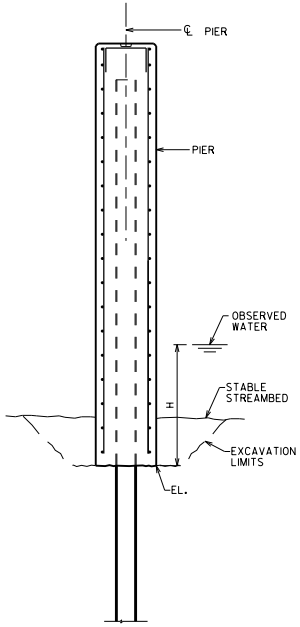

END VIEW

PILE ENCASED PIER - TYPE 1
(H ≤ 5.0 FEET)

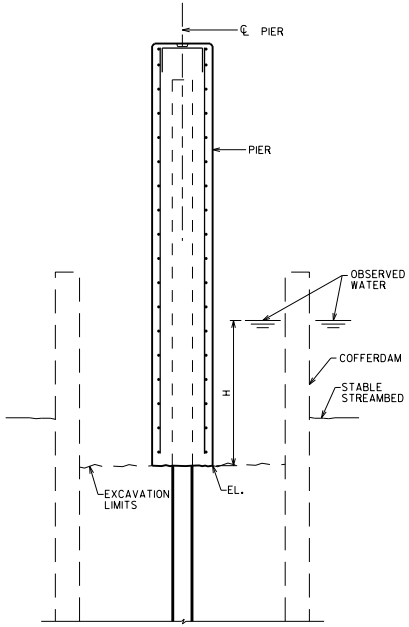

END VIEW

PILE ENCASED PIER - TYPE 2
(5.0 FT < H ≤ 10.0 FT)

ITEM NUMBER	BID ITEM	UNIT
206.5000	COFFERDAMS (STRUCTURE)	LS
502.9000.S	UNDERWATER SUBSTRUCTURE INSPECTION (STRUCTURE)	EACH

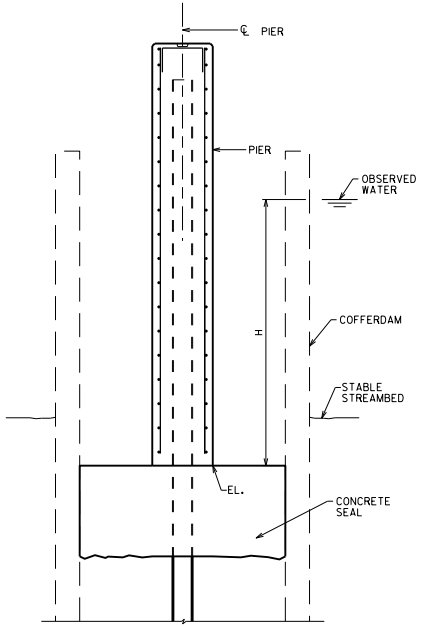

END VIEW

PILE ENCASED PIER - TYPE 3
(H > 10.0 FT)

ITEM NUMBER	BID ITEM	UNIT
206.5000	COFFERDAMS (STRUCTURE)	LS
502.1100	CONCRETE MASONRY SEAL	CY

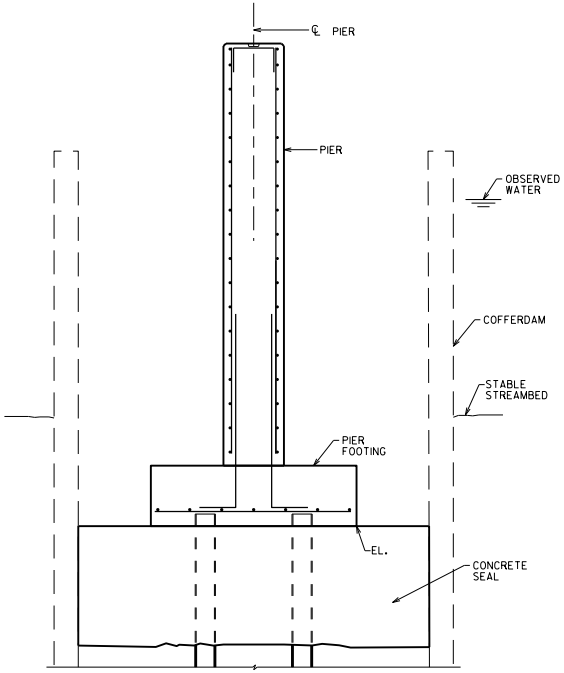

END VIEW

SOLID WALL PIER
(PILE ENCASED PIER ALTERNATIVE)

ITEM NUMBER	BID ITEM	UNIT
206.5000	COFFERDAMS (STRUCTURE)	LS
502.1100	CONCRETE MASONRY SEAL	CY

PILE ENCASED PIER (TYPES)

BUREAU OF STRUCTURES

APPROVED: Bill Oliva

DATE: 1-20

STANDARD 13.09

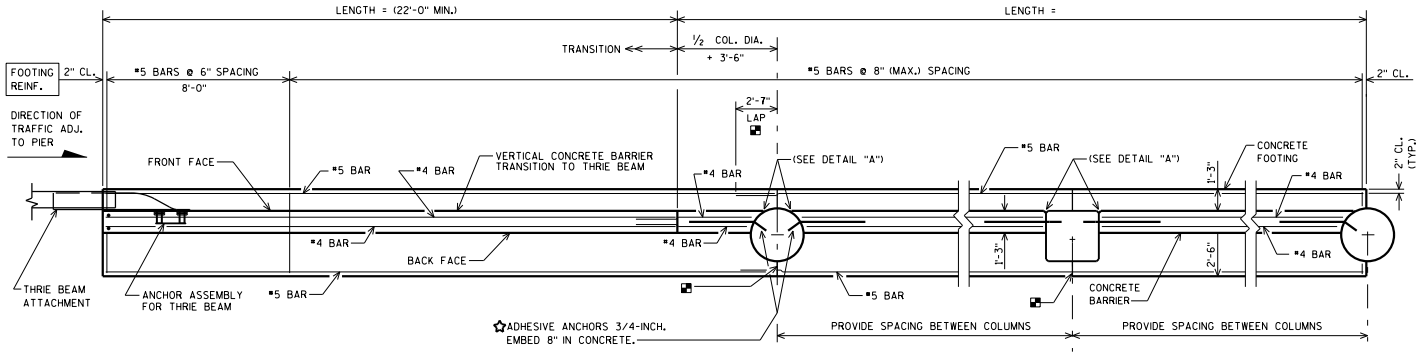

OPTIONAL CONSTRUCTION JOINTS IN FOOTINGS PLACED ALONG ℄ OF COLUMN. IF USED, LAP LONGITUDINAL REINFORCEMENT 2'-7" IN ADJACENT POUR.

PLAN

DETAILS FOR CIRCULAR AND RECTANGULAR COLUMNS

NOTES

DETAILS OF CONSTRUCTION MATERIALS AND WORKMANSHIP NOT SHOWN ON THIS DRAWING SHALL CONFORM TO THE PERTINENT REQUIREMENTS OF THE STANDARD SPECIFICATION AND THE APPLICABLE SPECIAL PROVISIONS.

BARRIER AND FOOTING SHALL CONSIST OF CAST IN PLACE CONSTRUCTION. NO JOINTS SHALL BE ALLOWED IN THE BARRIER. CONSTRUCTION JOINTS WILL ONLY BE ALLOWED IN THE FOOTING AT LOCATIONS SHOWN IN THE "PLAN VIEW".

DO NOT CUT OR DRILL INTO EXISTING COLUMN BAR STEEL.

ALL REINFORCEMENT SHALL BE EPOXY-COATED.

USE 2-INCH MINIMUM BAR CLEARANCE, EXCEPT AT FOOTINGS PROVIDE 3-INCH BAR CLEARANCE FROM BOTTOM OF FOOTING TO BOTTOM TRANSVERSE REINFORCEMENT.

PLACE REINFORCEMENT SUCH THAT IT WILL NOT CONFLICT WITH THE ANCHOR ASSEMBLY FOR THRIE BEAM ATTACHMENT.

PROVIDE 3/4-INCH BEVEL OR 1-INCH RADIUS ON BARRIER EDGES, TOP AND ENDS.

SEE STANDARD 13.11 FOR ADDITIONAL DETAILS.

SEE STANDARD 13.11 FOR DESIGNER NOTES.

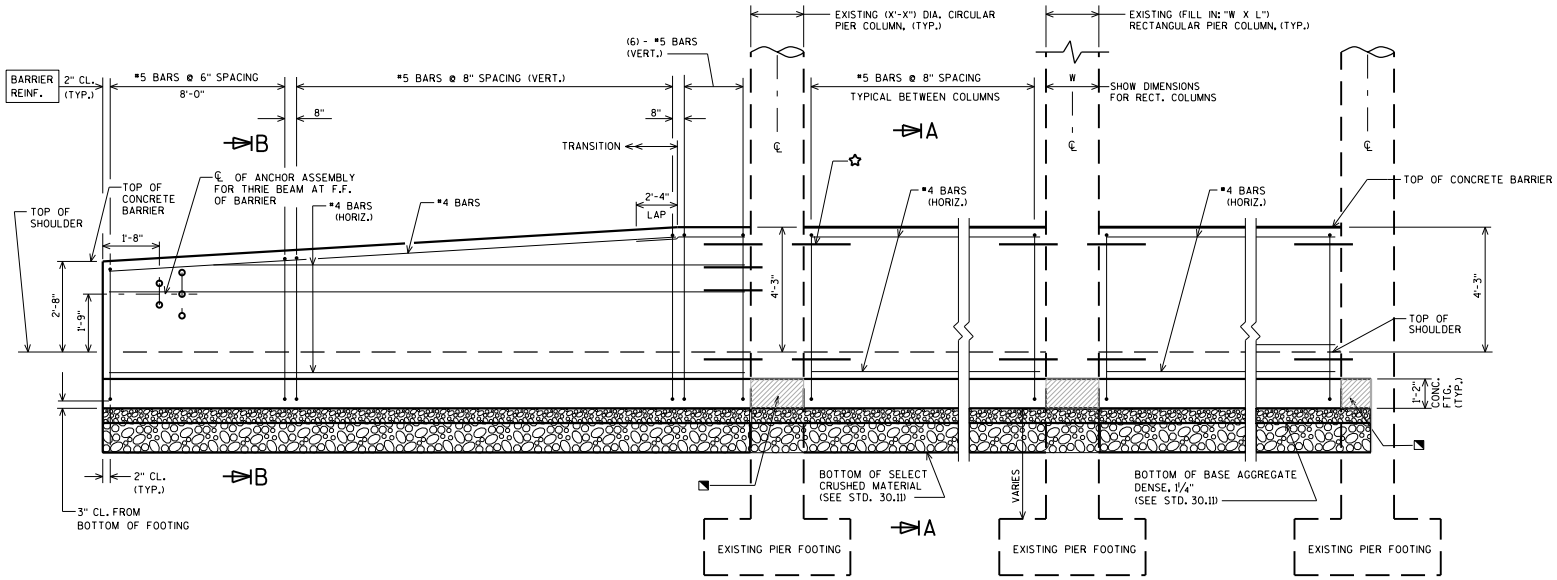

ELEVATION

LOOKING AT B.F. OF BARRIER

NOTE: 51- INCH BARRIER REFERS TO THE DISTANCE FROM THE TOP OF THE SHOULDER TO THE TOP OF THE BARRIER.

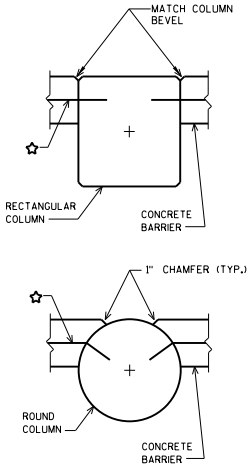

DETAIL A

F.F. OF BARRIER IS FLUSH WITH FACE OF COLUMN

ULTIMATE DESIGN STRESSES:

CONCRETE MASONRY ——— f'c = 4,000 P.S.I.
HIGH-STRENGTH BAR STEEL REINFORCEMENT, GRADE 60 ——— fy = 60,000 P.S.I.

PLACE ½" FILLER BETWEEN COLUMN AND CONCRETE FOOTING (TYP.)

51-INCH CONCRETE INTEGRAL BARRIER

BUREAU OF STRUCTURES

APPROVED: Bill Oliva

DATE: 7-16

STANDARD 13.10

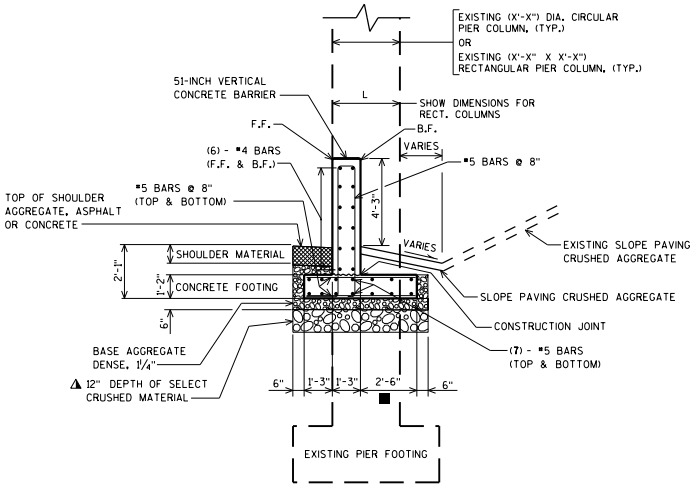

SECTION A-A

BETWEEN COLUMNS

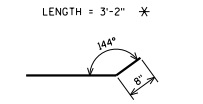

#6 BAR

USED WITH CIRCULAR COLUMNS (ADHESIVE ANCHOR)

✳ FOR RECTANGULAR COLUMN USE STRAIGHT BARS OF THIS LENGTH

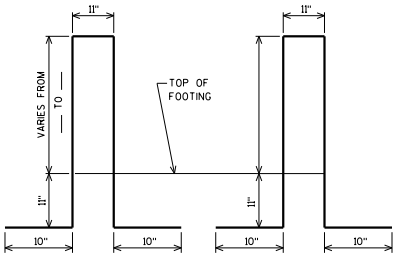

#5 BAR

BARRIER REINF. IN TRANSITION REGION

#5 BAR

BARRIER REINF. BETWEEN COLUMNS

BAR BENDING DIAGRAMS

BAR DIMENSIONS ARE OUT TO OUT OF BAR

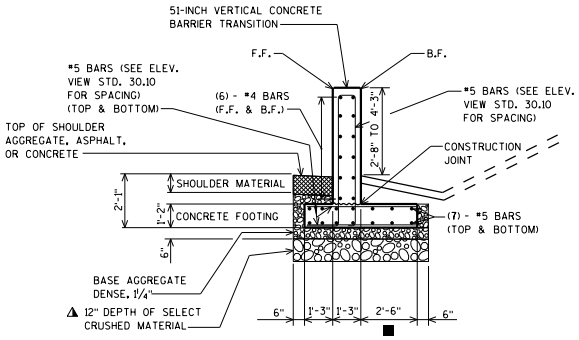

SECTION B-B

TRANSITION REGION

DESIGNER NOTES

THE DETAILS SHOWN ON STANDARDS 13.10 AND 13.11 ARE FOR VEHICLE PROTECTION AND ARE USED WITH EXISTING STRUCTURES.

CONSIDER PROVIDING AN ADDITIONAL TRANSITION SECTION ADJACENT TO THE OTHER EXTERIOR PIER COLUMN FOR THE FOLLOWING CONDITIONS:

- TWO-LANE ROAD IS ADJACENT TO BARRIER AND THERE IS A CONCERN FOR TRAFFIC TO CROSS-OVER.
- FUTURE TRAFFIC CONTROL NEEDS MAY CAUSE THE DIRECTION OF TRAFFIC ADJACENT TO BARRIER TO BE REVERSED.
- HAZARDS MAY EXIST IN THIS REGION THAT REQUIRE SHIELDING.

CONTACT THE REGIONAL OFFICE FOR VERIFICATION OF ANY OF THESE CONDITIONS.

THESE DETAILS MEET CRITERIA FOR TEST LEVELS TL-3/TL-4.

FOR VEHICLE PROTECTION, SEE FDM 11-35-1 TO DETERMINE WHEN BEAM GUARD OR CONCRETE BARRIER SHOULD BE PLACED BETWEEN THE TRAFFIC AND THE PIER, OR WHEN AN INTEGRAL BARRIER SHOULD BE USED.

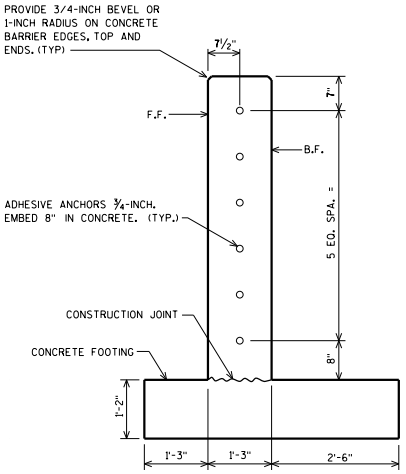

ADHESIVE ANCHOR LAYOUT

▲ 12" SELECT CRUSHED MATERIAL MAY BE ELIMINATED IF IT IS DETERMINED BY THE ENGINEER THAT THE EXISTING MATERIAL IS COMPACTED, GRANULAR MATERIAL.

■ FOR COLUMNS WITH "DIA." OR "L" GREATER THAN 3'-0", INCREASE THIS VALUE SO THAT B.F. OF FOOTING EXTENDS 9" BEYOND B.F. OF COLUMN.

F.F. = FRONT FACE
B.F. = BACK FACE

51-INCH VERTICAL CONCRETE BARRIER AND TRANSITION

SEE STANDARD 13.10 FOR ADDITIONAL DETAILS

INTEGRAL BARRIER DETAILS

BUREAU OF STRUCTURES

APPROVED: Bill Oliva

DATE: 7-16

STANDARD 13.11