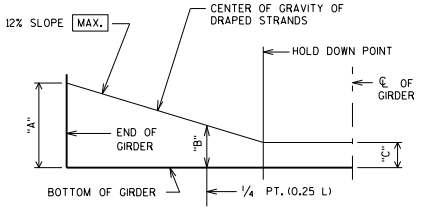

"A" TO BE GIVEN TO THE NEAREST 1"
"B" = ¼("A" + 3 "C") MIN.
"B" = ¼("A" + 3 "C") + 3" MAX.

RECORD DIMENSIONS "A", "B" & "C" ON FINAL PLANS.

LOCATION OF DRAPED STRANDS

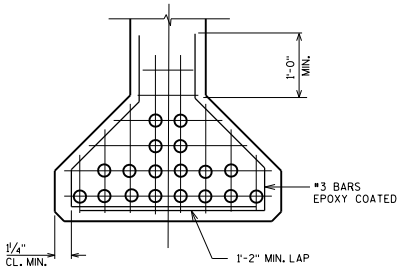

DETAIL A

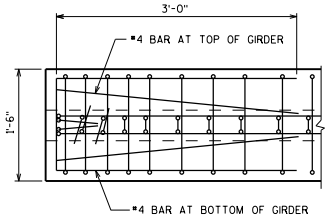

PLAN VIEW

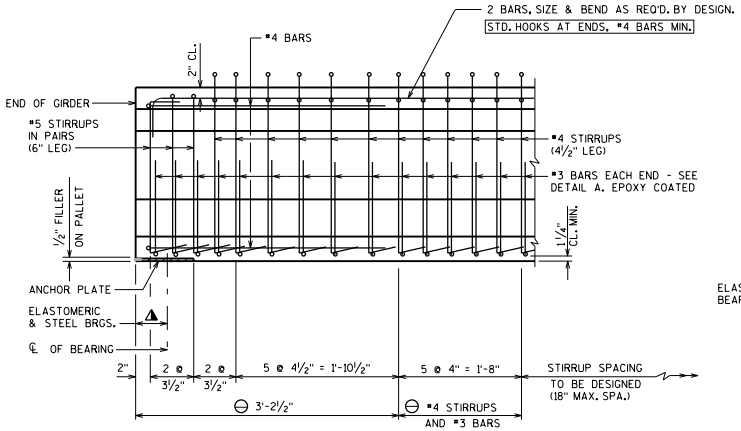

SUPPORT WITH STEEL OR ELASTOMERIC BRGS.

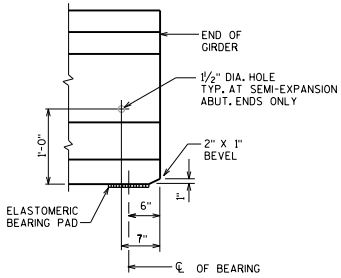

SUPPORT WITH ½" ELASTOMERIC BRG. PAD

SIDE VIEW OF GIRDER

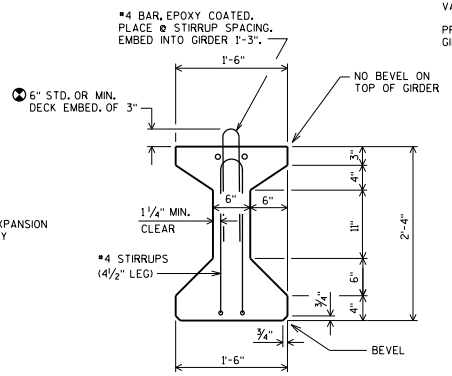

SECTION THRU GIRDER

STRANDS NOT SHOWN

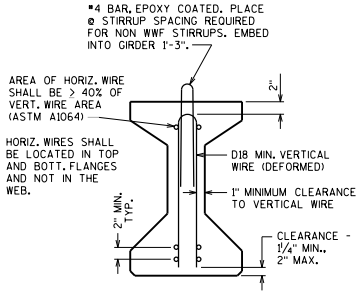

SECTION THRU GIRDER

SHOWING WELDED WIRE FABRIC (WWF) STIRRUPS
ASTM A1064 (FY = 70 KSI)

NOTES

TOP OF GIRDER TO BE ROUGH FLOATED AND BROOMED TRANSVERSELY, EXCEPT THE OUTSIDE 2" OF GIRDER, WHICH SHALL RECEIVE A SMOOTH FINISH. AN APPROVED CONCRETE SEALER SHALL BE APPLIED TO ALL SMOOTH SURFACES INCLUDING THE OUTSIDE 2" OF THE TOP FLANGE.

DO NOT APPLY CONCRETE SEALER OR EPOXY TO SURFACES RECEIVING APPLICATION OF CONCRETE STAINING.

THE GIRDERS SHALL BE PROVIDED WITH A SUITABLE LIFTING DEVICE FOR HANDLING AND ERECTING THE GIRDERS. SEE SECTION 503.3.3 OF STANDARD SPECIFICATIONS FOR GUIDANCE.

STRANDS SHALL BE FLUSH WITH END OF GIRDER. FOR GIRDER ENDS EMBEDDED COMPLETELY IN CONCRETE, END OF STRANDS SHALL BE COATED WITH NON-BITUMINOUS JOINT SEALER. FOR GIRDER ENDS THAT ARE FINALLY EXPOSED, COAT THE GIRDER ENDS, EXPOSED STRAND ENDS AND ALL NON-BONDING SURFACES WITHIN 2 FEET OF THE GIRDER ENDS WITH A NON-PIGMENTED EPOXY CONFORMING TO AASHTO M-235 TYPE III, GRADE 2, CLASS B OR C. THE EPOXY SHALL BE APPLIED AT LEAST 3 DAYS AFTER MOIST CURING HAS CEASED AND PRIOR TO THE APPLICATION OF THE SEALER.

ALL GIRDERS SHALL BE CAST FULL LENGTH AS SHOWN.

SPACING SHOWN FOR #4 STIRRUPS IS FOR GRADE 60 REINFORCEMENT.

AN EQUIVALENT OF WELDED WIRE FABRIC (WWF) ASTM A1064 MAY BE SUBSTITUTED FOR THE STIRRUP REINFORCEMENT SHOWN, UPON ACCEPTANCE OF THE STRUCTURES MAINTENANCE SECTION. IF USED, WWF SUBSTITUTION DETAILS SHALL BE SUBMITTED ELECTRONICALLY TO THE WISDOT FABRICATION LIBRARY AND ACCEPTED PRIOR TO SHOP DRAWING SUBMITTAL.

PRESTRESSING STRANDS SHALL BE (DIA.)-7-WIRE LOW-RELAXATION STRANDS WITH AN ULTIMATE STRENGTH OF 270,000 PSI.

DESIGNER NOTES

BID ITEM SHALL BE "PRESTRESSED GIRDER TYPE I 28-INCH".

SPECIFY CONCRETE STRENGTH AS REQUIRED BY DESIGN FROM A MINIMUM OF 6,000 PSI TO A MAX. OF 8,000 PSI. MAXIMUM RELEASE STRENGTH IS 6800 PSI. USE ONLY 0.5" DIA. STRAND FOR THE DRAPED PATTERN. THE MAX. NUMBER OF DRAPED 0.5" DIA. STRANDS IS 8. USE 0.6" DIA. FOR THE STRAIGHT PATTERN, UNLESS ONLY 0.5" DIA. WORK FOR KEEPING STRESSES AT ACCEPTABLE LEVELS.

REINFORCEMENT IN STANDARD END SECTION OF THE GIRDER IS BASED ON THE STANDARD STRAND PATTERNS LISTED ON STANDARD 19.02 AND THE SPAN LENGTHS SHOWN IN TABLE 19.3-1. USING DIFFERENT STRAND PATTERNS OR LONGER SPANS WILL REQUIRE A COMPLETE DESIGN OF THIS REINFORCEMENT, WHICH REQUIRES PRIOR APPROVAL FROM THE BUREAU OF STRUCTURES.

▲ VARIES FOR ELASTOMERIC BRGS. (STD. 27.07) AND STEEL BRGS. (STD. 27.09)

⊖ DETAIL TYPICAL AT EACH END

✪ THE DESIGN ENGINEER DETERMINES THIS VALUE BASED ON 2" MIN. HAUNCH AT EDGE OF GIRDER, X-SLOPE, PROFILE GRADE LINE AND CALCULATED RESIDUAL GIRDER CAMBER, INCLUDING THE CAMBER MULTIPLIER OF 1.4. THIS VALUE CAN VARY AND SHOULD BE GIVEN FOR EACH 1/3 OF THE GIRDER LENGTH. PROVIDE VALUES THAT MAINTAIN 3" MIN. DECK EMBEDMENT AND 2½" CLEAR FROM TOP OF DECK WHILE ACCOUNTING FOR ±¾" VARIANCE IN ACTUAL CAMBER VERSUS THE CALCULATED RESIDUAL CAMBER.

PROVIDE STIRRUP SPACING THAT IS SYMMETRICAL ABOUT THE C/L OF GIRDER.

28" PRESTRESSED GIRDER DETAILS

BUREAU OF STRUCTURES

APPROVED: Bill Oliva

DATE: 7-19

STANDARD 19.01

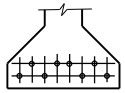

8 STRANDS

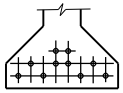

10 STRANDS

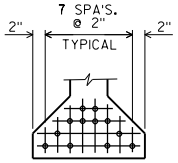

12 STRANDS

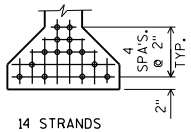

14 STRANDS

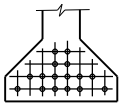

*16 STRANDS

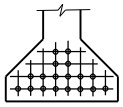

*18 STRANDS

* MAY REQUIRE DEBONDING AT ENDS, WHICH IS TO BE AVOIDED.

STANDARD ARRANGEMENTS TO RAISE CENTER OF GRAVITY TO AVOID DRAPING OF 0.6" DIA. STRANDS

(0.5" DIA. STRANDS MAY ALSO BE USED)

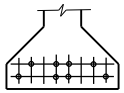

8 STRANDS

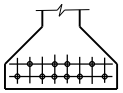

10 STRANDS

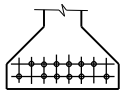

12 STRANDS

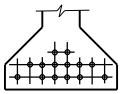

14 STRANDS

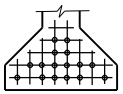

16 STRANDS

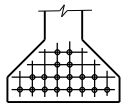

18 STRANDS

ARRANGEMENT AT ℄ SPAN - FOR GIRDERS WITH DRAPED 0.5" DIA. STRANDS

28" GIRDER

A = 312 SQ. IN.

r^2 = 91.95 IN.^{2}

y_T = 14.58 IN.

y_B = -13.42 IN.

I = 28,687 IN.^{4}

S_T = 1,968 IN.^{3}

S_B = -2,138 IN.^{3}

WT. = 325 #/FT.

PRE-TENSION

f_s^1 = 270,000 P.S.I

f_s = 0.75 x 270,000 = 202,500 P.S.I
for low relaxation strands

Pi PER 0.5" DIA. STRAND = 0.1531 X 202,500 = 31.00 KIPS

Pi PER 0.6" DIA. STRAND = 0.217 X 202,500 = 43.94 KIPS

$$\frac{y_B}{r^2} = \frac{-13.42}{91.95} = -0.1459 \text{ IN./IN.}^2$$

$$f_B(\text{init.}) = \frac{A_s f_s}{A}\left(1+\frac{e_s y_B}{r^2}\right)$$

(COMPRESSION IS POSITIVE)

NO. STRANDS	e_s (inches)	P(init.)=$A_s f_s$ (KIPS)	f_B (init.) (K/sq.in.)
STANDARD STRAND PATTERNS FOR UNDRAPED STRANDS (0.6" DIA.)			
8	-10.40	352	2.841
10	-9.80	439	3.419
12	-8.73	527	3.841
14	-7.97	615	4.264
*16	-9.4	703	5.345
*18	-9.6	791	6.087
STANDARD STRAND PATTERNS FOR DRAPED STRANDS (0.5" DIA.)			
8	-10.4	248	2.001
10	-10.6	310	2.531
12	-10.4	372	3.002
14	-10.0	434	3.421
16	-9.4	496	3.771
18	-9.6	558	4.294

DESIGNER NOTES

ON THE STRAND PATTERN SHEET, PLACE A BOX AROUND EACH STRAND PATTERN THAT APPLIES TO THE DESIGNED STRUCTURE AND LABEL THE SPAN IT IS USED IN.

28" PRESTRESSED GIRDER DESIGN DATA

BUREAU OF STRUCTURES

APPROVED: Bill Oliva

DATE: 7-17

STANDARD 19.02

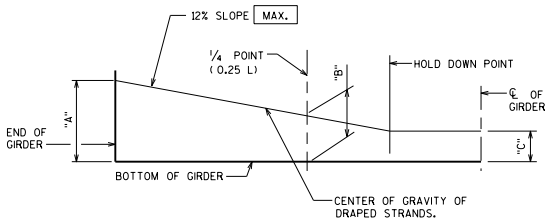

"A" TO BE GIVEN TO THE NEAREST 1"
"B" = 1/4("A" + 3 "C") MIN.
"B" = 1/4("A" + 3 "C") + 3" MAX.

RECORD DIMENSIONS "A", "B" & "C" ON FINAL PLANS.

LOCATION OF DRAPED STRANDS

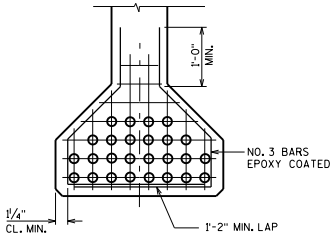

DETAIL A

NOTES

TOP OF GIRDER TO BE ROUGH FLOATED AND BROOMED TRANSVERSELY, EXCEPT THE OUTSIDE 2" OF GIRDER, WHICH SHALL RECEIVE A SMOOTH FINISH. AN APPROVED CONCRETE SEALER SHALL BE APPLIED TO ALL SMOOTH SURFACES INCLUDING THE OUTSIDE 2" OF THE TOP FLANGE.

DO NOT APPLY CONCRETE SEALER OR EPOXY TO SURFACES RECEIVING APPLICATION OF CONCRETE STAINING.

THE GIRDERS SHALL BE PROVIDED WITH A SUITABLE LIFTING DEVICE FOR HANDLING AND ERECTING THE GIRDERS. SEE SECTION 503.3.3 OF STANDARD SPECIFICATIONS FOR GUIDANCE.

STRANDS SHALL BE FLUSH WITH END OF GIRDER. FOR GIRDER ENDS EMBEDDED COMPLETELY IN CONCRETE, END OF STRANDS SHALL BE COATED WITH NON-BITUMINOUS JOINT SEALER. FOR GIRDER ENDS THAT ARE FINALLY EXPOSED, COAT THE GIRDER ENDS, EXPOSED STRAND ENDS AND ALL NON-BONDING SURFACES WITHIN 2 FEET OF THE GIRDER ENDS WITH A NON-PIGMENTED EPOXY CONFORMING TO AASHTO M-235 TYPE III, GRADE 2, CLASS B OR C. THE EPOXY SHALL BE APPLIED AT LEAST 3 DAYS AFTER MOIST CURING HAS CEASED AND PRIOR TO THE APPLICATION OF THE SEALER.

ALL GIRDERS SHALL BE CAST FULL LENGTH AS SHOWN.

SPACING SHOWN FOR #4 STIRRUPS IS FOR GRADE 60 REINFORCEMENT.

AN EQUIVALENT OF WELDED WIRE FABRIC (WWF) ASTM A1064 MAY BE SUBSTITUTED FOR THE STIRRUP REINFORCEMENT SHOWN, UPON ACCEPTANCE OF THE STRUCTURES MAINTENANCE SECTION. IF USED, WWF SUBSTITUTION DETAILS SHALL BE SUBMITTED ELECTRONICALLY TO THE WISDOT FABRICATION LIBRARY AND ACCEPTED PRIOR TO SHOP DRAWING SUBMITTAL.

PRESTRESSING STRANDS SHALL BE (DIA.)-7-WIRE LOW-RELAXATION STRANDS WITH AN ULTIMATE STRENGTH OF 270,000 PSI.

DESIGNER NOTES

BID ITEM SHALL BE "PRESTRESSED GIRDER TYPE I 36-INCH".

SPECIFY CONCRETE STRENGTH AS REQUIRED BY DESIGN FROM A MINIMUM OF 6,000 PSI TO A MAX. OF 8,000 PSI. MAXIMUM RELEASE STRENGTH IS 6800 PSI. USE ONLY 0.5" DIA. STRAND FOR THE DRAPED PATTERN. THE MAX. NUMBER OF DRAPED 0.5" DIA. STRANDS IS 8. USE 0.6" DIA. FOR THE STRAIGHT PATTERN, UNLESS ONLY 0.5" DIA. WORK FOR KEEPING STRESSES AT ACCEPTABLE LEVELS.

REINFORCEMENT IN STANDARD END SECTION OF THE GIRDER IS BASED ON THE STANDARD STRAND PATTERNS LISTED ON STANDARD 19.04 AND THE SPAN LENGTHS SHOWN IN TABLE 19.3-1. USING DIFFERENT STRAND PATTERNS OR LONGER SPANS WILL REQUIRE A COMPLETE DESIGN OF THIS REINFORCEMENT, WHICH REQUIRES PRIOR APPROVAL FROM THE BUREAU OF STRUCTURES.

▲ VARIES FOR ELASTOMERIC BRGS. (STD. 27.07) AND STEEL BRGS. (STD. 27.09)

⊖ DETAIL TYPICAL AT EACH END

✖ THE DESIGN ENGINEER DETERMINES THIS VALUE BASED ON 2" MIN. HAUNCH AT EDGE OF GIRDER, X-SLOPE, PROFILE GRADE LINE AND CALCULATED RESIDUAL GIRDER CAMBER, INCLUDING THE CAMBER MULTIPLIER OF 1.4. THIS VALUE CAN VARY AND SHOULD BE GIVEN FOR EACH 1/3 OF THE GIRDER LENGTH. PROVIDE VALUES THAT MAINTAIN 3" MIN. DECK EMBEDMENT AND 2 1/2" CLEAR FROM TOP OF DECK WHILE ACCOUNTING FOR ±3/4" VARIANCE IN ACTUAL CAMBER VERSUS THE CALCULATED RESIDUAL CAMBER.

PROVIDE STIRRUP SPACING THAT IS SYMMETRICAL ABOUT THE C/L OF GIRDER.

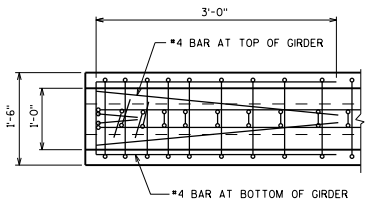

PLAN VIEW

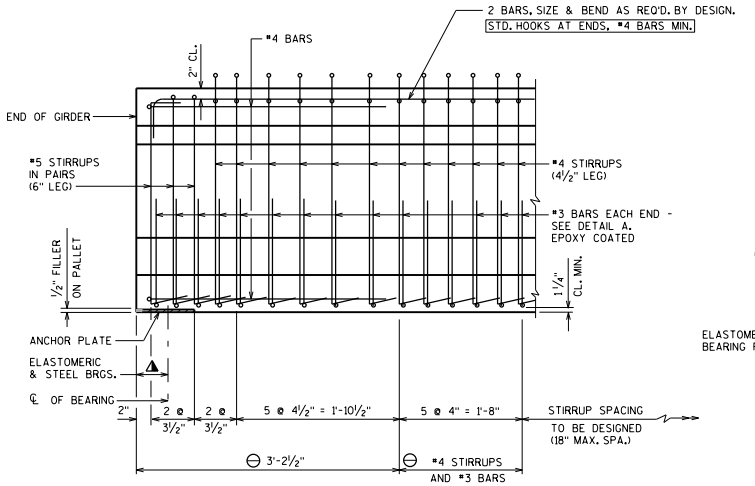

SUPPORT WITH STEEL OR ELASTOMERIC BRGS.

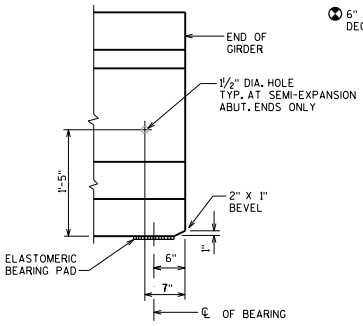

SUPPORT WITH 1/2" ELASTOMERIC BRG. PAD

SIDE VIEW OF GIRDER

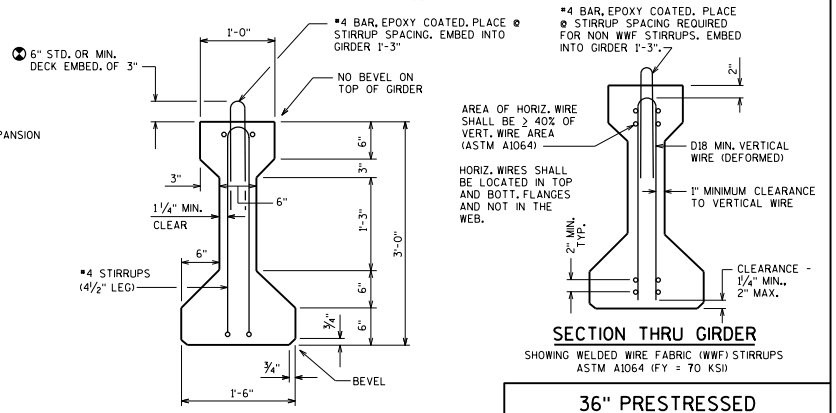

SECTION THRU GIRDER

STRANDS NOT SHOWN

SECTION THRU GIRDER

SHOWING WELDED WIRE FABRIC (WWF) STIRRUPS ASTM A1064 (FY = 70 KSI)

36" PRESTRESSED GIRDER DETAILS

BUREAU OF STRUCTURES

APPROVED: Bill Oliva

DATE: 7-19

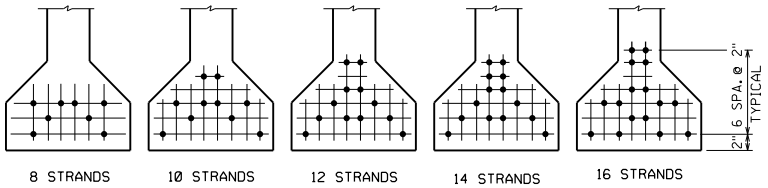

STANDARD ARRANGEMENTS TO RAISE CENTER OF GRAVITY TO AVOID DRAPING OF 0.6" DIA. STRANDS

(0.5" DIA. STRANDS MAY ALSO BE USED)

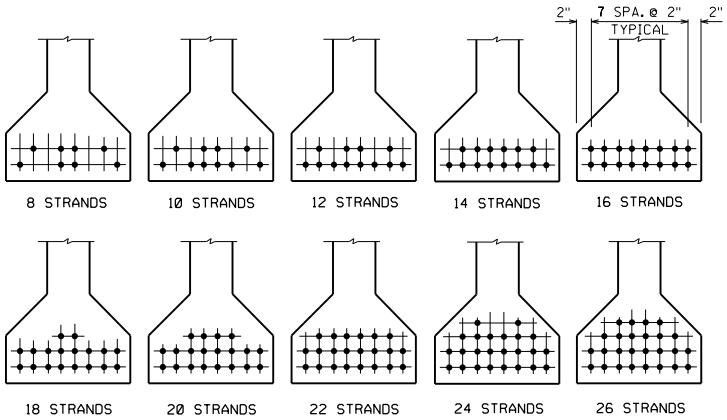

ARRANGEMENT AT ℄ SPAN - FOR GIRDERS WITH DRAPED 0.5" DIA. STRANDS

36" GIRDER

$A = 369$ SQ. IN.

$r^2 = 138.15$ IN.^{2}

$y_T = 20.17$ IN.

$y_B = -15.83$ IN.

$I = 50,979$ IN.^{4}

$S_T = 2,527$ IN.^{3}

$S_B = -3,220$ IN.^{3}

WT. = 384 #/FT.

PRE-TENSION

$f'_s = 270,000$ P.S.I

$f_s = 0.75 \times 270,000 = 202,500$ P.S.I
for low relaxation strands

Pi PER 0.5" DIA. STRAND = 0.1531 X 202,500 = 31.00 KIPS
Pi PER 0.6" DIA. STRAND = 0.217 X 202,500 = 43.94 KIPS

$$\frac{y_B}{r^2} = \frac{-15.83}{138.15} = -0.1146 \text{ IN./IN.}^2$$

$$f_B(\text{init.}) = \frac{A_s f_s}{A}\left(1 + \frac{e_s y_B}{r^2}\right)$$

(COMPRESSION IS POSITIVE)

NO. STRANDS	e_s (inches)	P(init.)=$A_s f_s$ (KIPS)	f_B (init.) (K/sq.in.)
STANDARD STRAND PATTERNS FOR UNDRAPED STRANDS (0.6" DIA.)			
8	-11.33	352	2.192
10	-10.23	439	2.584
12	-9.83	527	3.036
14	-9.26	615	3.435
16	-9.08	703	3.887
STANDARD STRAND PATTERNS FOR DRAPED STRANDS (0.5" DIA.)			
8	-12.83	248	1.660
10	-13.03	310	2.094
12	-13.16	372	2.528
14	-12.97	434	2.924
16	-12.83	496	3.320
18	-12.50	558	3.678
20	-12.23	620	4.034
22	-12.01	682	4.392
24	-11.66	744	4.710
26	-11.37	806	5.030

DESIGNER NOTES

ON THE STRAND PATTERN SHEET, PLACE A BOX AROUND EACH STRAND PATTERN THAT APPLIES TO THE DESIGNED STRUCTURE AND LABEL THE SPAN IT IS USED IN.

36" PRESTRESSED GIRDER DESIGN DATA

BUREAU OF STRUCTURES

APPROVED: Bill Oliva

DATE: 7-17

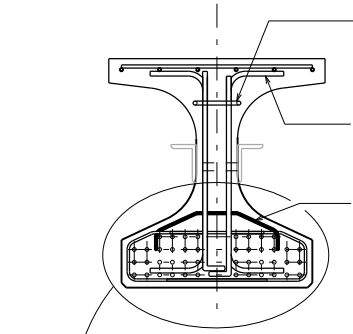

SECTION A-A

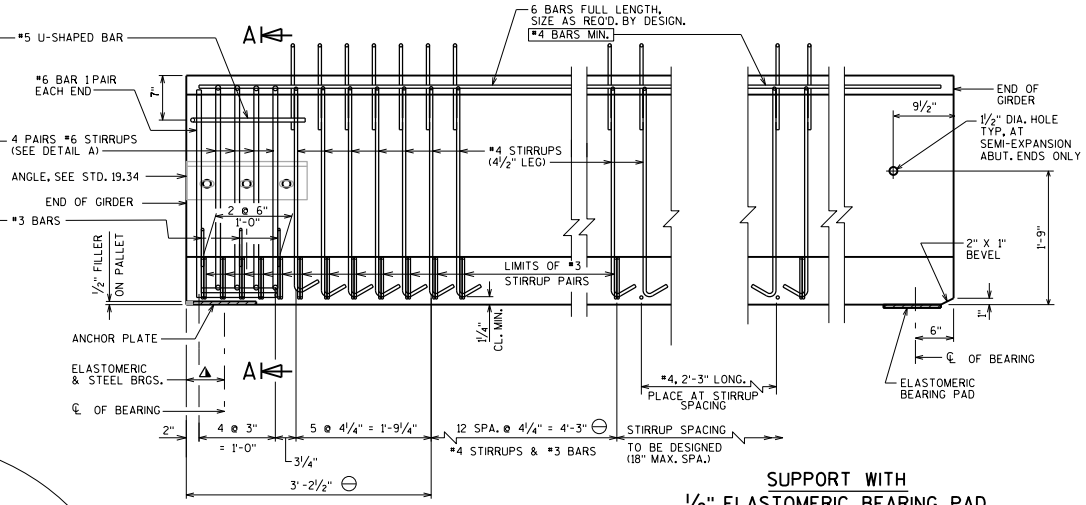

SUPPORT WITH STEEL OR ELASTOMERIC BRGS.

SUPPORT WITH 1/2" ELASTOMERIC BEARING PAD

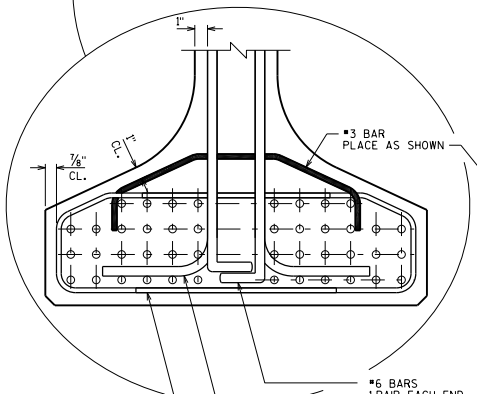

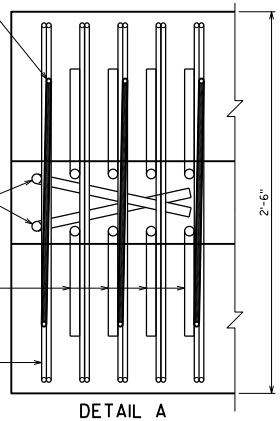

DETAIL A

BOTTOM FLANGE

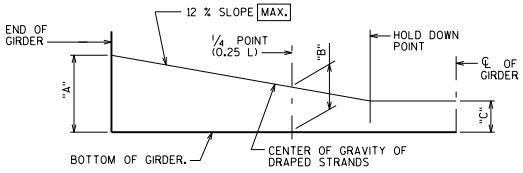

"A" TO BE GIVEN TO THE NEAREST 1"
"B" = 1/4("A" + 3 "C") MIN.
"B" = 1/4("A" + 3 "C") + 3" MAX.

RECORD DIMENSIONS "A", "B" & "C" ON FINAL PLANS.

LOCATION OF DRAPED STRANDS

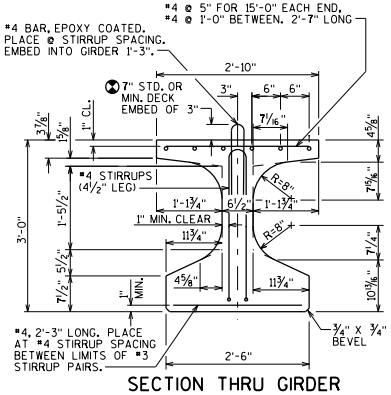

SECTION THRU GIRDER

STRANDS NOT SHOWN

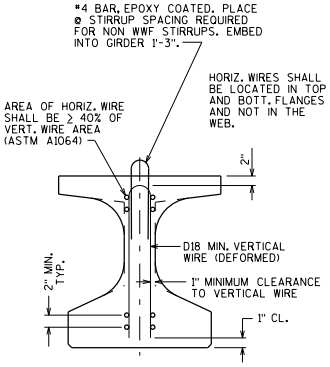

SECTION THRU GIRDER

SHOWING WELDED WIRE FABRIC (WWF) STIRRUPS ASTM A1064 (FY = 70 KSI)

NOTES

TOP OF GIRDER TO BE ROUGH FLOATED AND BROOMED TRANSVERSELY, EXCEPT THE OUTSIDE 8" OF GIRDER, WHICH SHALL RECEIVE A SMOOTH FINISH. AN APPROVED CONCRETE SEALER SHALL BE APPLIED TO ALL SMOOTH SURFACES INCLUDING THE OUTSIDE 8" OF THE TOP FLANGE.

DO NOT APPLY CONCRETE SEALER OR EPOXY TO SURFACES RECEIVING APPLICATION OF CONCRETE STAINING.

THE GIRDERS SHALL BE PROVIDED WITH A SUITABLE LIFTING DEVICE FOR HANDLING AND ERECTING THE GIRDERS. SEE SECTION 503.3.3 OF STANDARD SPECIFICATIONS FOR GUIDANCE.

STRANDS SHALL BE FLUSH WITH END OF GIRDER. FOR GIRDER ENDS EMBEDDED COMPLETELY IN CONCRETE, END OF STRANDS SHALL BE COATED WITH NON-BITUMINOUS JOINT SEALER. FOR GIRDER ENDS THAT ARE FINALLY EXPOSED, COAT THE GIRDER ENDS, EXPOSED STRAND ENDS AND ALL NON-BONDING SURFACES WITHIN 2 FEET OF THE GIRDER ENDS WITH A NON-PIGMENTED EPOXY CONFORMING TO AASHTO M-235 TYPE III, GRADE 2, CLASS B OR C. THE EPOXY SHALL BE APPLIED AT LEAST 3 DAYS AFTER MOIST CURING HAS CEASED AND PRIOR TO THE APPLICATION OF THE SEALER.

ALL GIRDERS SHALL BE CAST FULL LENGTH AS SHOWN.

SPACING SHOWN FOR #4 STIRRUPS IS FOR GRADE 60 REINFORCEMENT.

AN EQUIVALENT OF WELDED WIRE FABRIC (WWF) ASTM A1064 MAY BE SUBSTITUTED FOR THE STIRRUP REINFORCEMENT SHOWN, UPON APPROVAL OF THE STRUCTURES MAINTENANCE SECTION. IF USED, WWF SUBSTITUTION DETAILS SHALL BE SUBMITTED ELECTRONICALLY TO THE WISDOT FABRICATION LIBRARY AND ACCEPTED PRIOR TO SHOP DRAWING SUBMITTAL.

PRESTRESSING STRANDS SHALL BE 0.6" DIA.-7-WIRE LOW-RELAXATION STRANDS WITH AN ULTIMATE STRENGTH OF 270,000 PSI.

DESIGNER NOTES

BID ITEM SHALL BE "PRESTRESSED GIRDER TYPE I 36W-INCH".

SPECIFY CONCRETE STRENGTH AS REQUIRED BY DESIGN FROM A MINIMUM OF 6,000 PSI TO A MAX. OF 8,000 PSI. MAXIMUM RELEASE STRENGTH IS 6800 PSI. USE 0.6" DIA. STRAND FOR ALL PATTERNS. THE MAX. NUMBER OF DRAPED 0.6" DIA. STRANDS IS 8.

REINFORCEMENT IN STANDARD END SECTION OF THE GIRDER IS BASED ON THE STANDARD STRAND PATTERNS LISTED ON STANDARD 19.12 AND THE SPAN LENGTHS SHOWN IN TABLE 19.3-1. USING DIFFERENT STRAND PATTERNS OR LONGER SPANS WILL REQUIRE A COMPLETE DESIGN OF THIS REINFORCEMENT, WHICH REQUIRES PRIOR APPROVAL FROM THE BUREAU OF STRUCTURES.

△ VARIES FOR ELASTOMERIC BRGS. (STD. 27.07) AND STEEL BRGS. (STD. 27.09)

⊖ DETAIL TYPICAL AT EACH END

✪ THE DESIGN ENGINEER DETERMINES THIS VALUE BASED ON 2" MIN. HAUNCH AT EDGE OF GIRDER, X-SLOPE, PROFILE GRADE LINE AND CALCULATED RESIDUAL GIRDER CAMBER, INCLUDING THE CAMBER MULTIPLIER OF 1.4. THIS VALUE CAN VARY AND SHOULD BE GIVEN FOR EACH 1/3 OF THE GIRDER LENGTH. PROVIDE VALUES THAT MAINTAIN 3" MIN. DECK EMBEDMENT AND 2 1/2" CLEAR FROM TOP OF DECK WHILE ACCOUNTING FOR ±3/4" VARIANCE IN ACTUAL CAMBER VERSUS THE CALCULATED RESIDUAL CAMBER.

PROVIDE STIRRUP SPACING THAT IS SYMMETRICAL ABOUT THE C/L OF GIRDER.

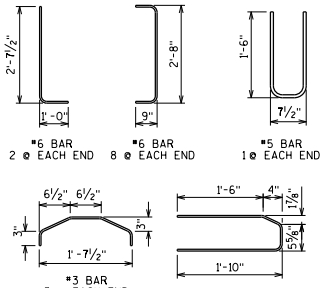

#6 BAR 2 @ EACH END

#6 BAR 8 @ EACH END

#5 BAR 1 @ EACH END

#3 BAR 3 @ EACH END (EPOXY COAT)

#3 BAR 23 PAIRS EACH END (EPOXY COATED)

36W" PRESTRESSED GIRDER DETAILS

BUREAU OF STRUCTURES

APPROVED: Bill Oliva

DATE: 7-18

STANDARD 19.11

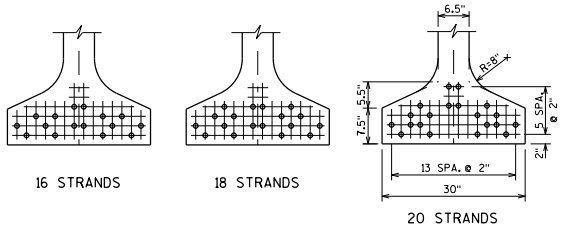

STANDARD ARRANGEMENTS TO RAISE CENTER OF GRAVITY TO AVOID DRAPING OF 0.6" DIA. STRANDS

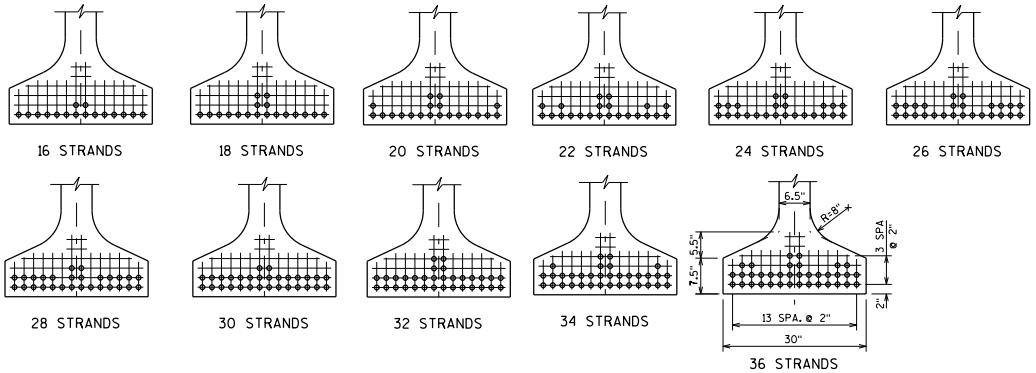

ARRANGEMENT AT ℄ SPAN - FOR GIRDERS WITH DRAPED 0.6" DIA. STRANDS

36W" GIRDER

A = 632 SQ. IN.

r^2 = 158.20 IN.^{2}

y_T = 19.37 IN.

y_B = -16.63 IN.

I = 99,980 IN.^{4}

S_T = 5,162 IN.^{3}

S_B = -6,012 IN.^{3}

WT. = 658 #/FT.

PRE-TENSION

f'_s = 270,000 P.S.I.

f_s = 0.75 X 270,000 = 202,500 P.S.I. for low relaxation strands

Pi PER 0.6" DIA. STRAND = 0.217 X 202,500 = 43.94 KIPS

$$\frac{y_B}{r^2} = \frac{-16.63}{158.20} = -0.10512 \text{ in/in}^2$$

$$f_B \text{ (init.)} = \frac{A_s f_s}{A}\left(1 + \frac{e_s y_B}{r^2}\right)$$

(COMPRESSION IS POSITIVE)

NO. STRANDS	e_s (inches)	P(init.)=$A_s f_s$ (KIPS)	f_B (init.) (K/sq.in.)
STANDARD STRAND PATTERNS FOR UNDRAPED STRANDS			
16	-12.13	703	2.531
18	-11.74	791	2.796
20	-11.03	879	3.003
STANDARD STRAND PATTERNS FOR DRAPED STRANDS			
16	-14.38	703	2.794
18	-13.96	791	3.088
20	-13.83	879	3.413
22	-13.72	967	3.737
24	-13.63	1055	4.061
26	-13.55	1143	4.385
28	-13.49	1230	4.706
30	-13.43	1318	5.030
32	-13.13	1406	5.295
34	-12.98	1494	5.589
36	-12.85	1582	5.885

DESIGNER NOTES

ON THE STRAND PATTERN SHEET, PLACE A BOX AROUND EACH STRAND PATTERN THAT APPLIES TO THE DESIGNED STRUCTURE AND LABEL THE SPAN IT IS USED IN.

36W" PRESTRESSED GIRDER DESIGN DATA

BUREAU OF STRUCTURES

APPROVED: Bill Oliva

DATE: 7-17

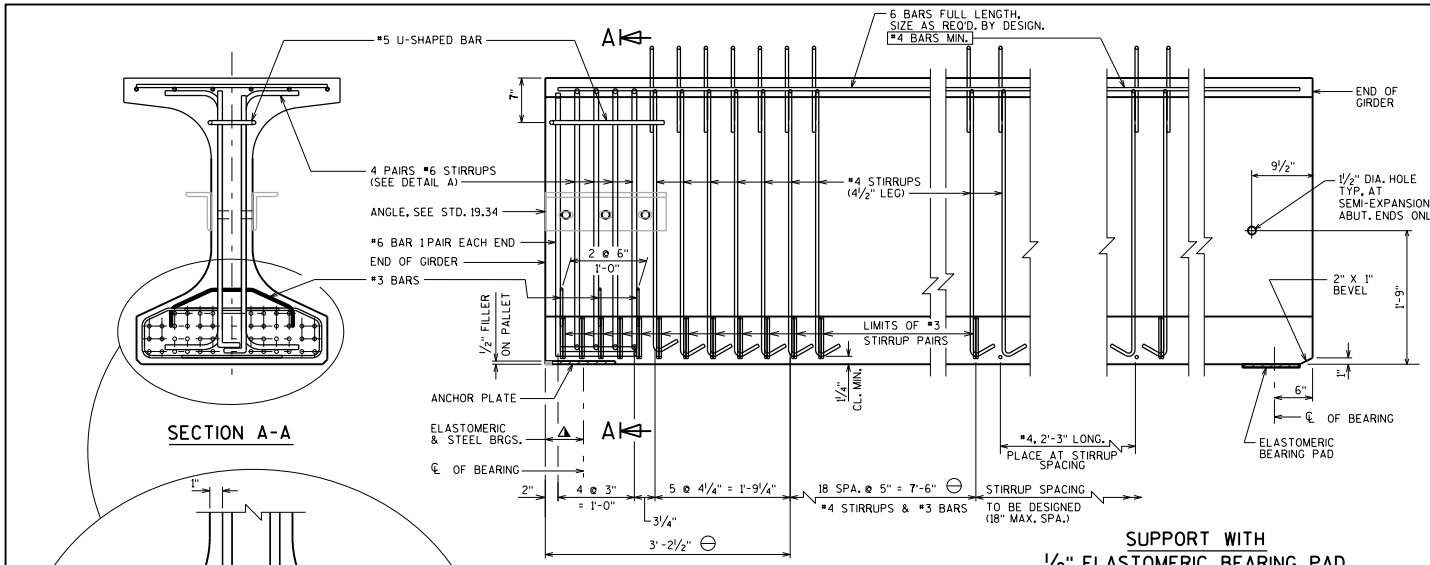

SECTION A-A

SUPPORT WITH STEEL OR ELASTOMERIC BRGS.

SUPPORT WITH 1/2" ELASTOMERIC BEARING PAD

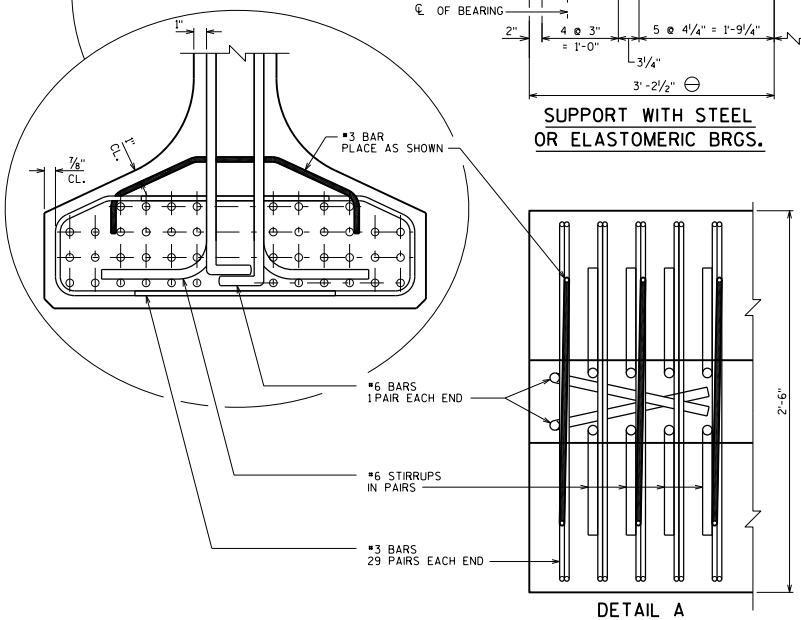

DETAIL A

BOTTOM FLANGE

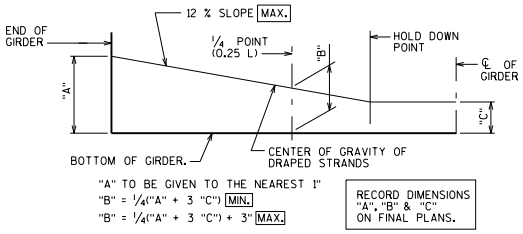

LOCATION OF DRAPED STRANDS

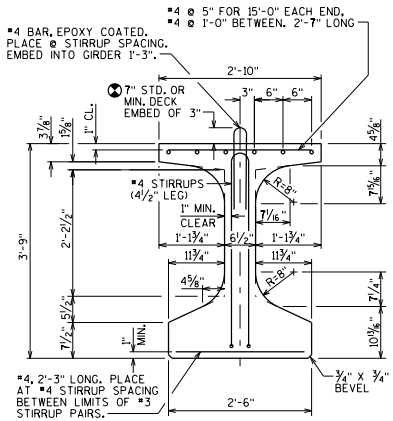

SECTION THRU GIRDER

STRANDS NOT SHOWN

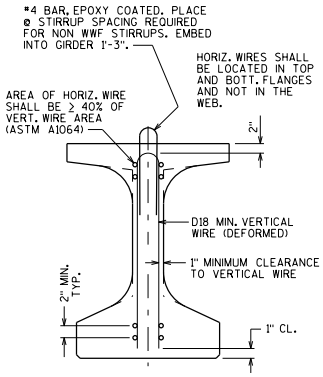

SECTION THRU GIRDER

SHOWING WELDED WIRE FABRIC (WWF) STIRRUPS ASTM A1064 (FY = 70 KSI)

NOTES

TOP OF GIRDER TO BE ROUGH FLOATED AND BROOMED TRANSVERSELY, EXCEPT THE OUTSIDE 8" OF GIRDER, WHICH SHALL RECEIVE A SMOOTH FINISH. AN APPROVED CONCRETE SEALER SHALL BE APPLIED TO ALL SMOOTH SURFACES INCLUDING THE OUTSIDE 8" OF THE TOP FLANGE.

DO NOT APPLY CONCRETE SEALER OR EPOXY TO SURFACES RECEIVING APPLICATION OF CONCRETE STAINING.

THE GIRDERS SHALL BE PROVIDED WITH A SUITABLE LIFTING DEVICE FOR HANDLING AND ERECTING THE GIRDERS. SEE SECTION 503.3.3 OF STANDARD SPECIFICATIONS FOR GUIDANCE.

STRANDS SHALL BE FLUSH WITH END OF GIRDER. FOR GIRDER ENDS EMBEDDED COMPLETELY IN CONCRETE, END OF STRANDS SHALL BE COATED WITH NON-BITUMINOUS JOINT SEALER. FOR GIRDER ENDS THAT ARE FINALLY EXPOSED, COAT THE GIRDER ENDS, EXPOSED STRAND ENDS AND ALL NON-BONDING SURFACES WITHIN 2 FEET OF THE GIRDER ENDS WITH A NON-PIGMENTED EPOXY CONFORMING TO AASHTO M-235 TYPE III, GRADE 2, CLASS B OR C. THE EPOXY SHALL BE APPLIED AT LEAST 3 DAYS AFTER MOIST CURING HAS CEASED AND PRIOR TO THE APPLICATION OF THE SEALER.

ALL GIRDERS SHALL BE CAST FULL LENGTH AS SHOWN.

SPACING SHOWN FOR #4 STIRRUPS IS FOR GRADE 60 REINFORCEMENT.

AN EQUIVALENT OF WELDED WIRE FABRIC (WWF) ASTM A1064 MAY BE SUBSTITUTED FOR THE STIRRUP REINFORCEMENT SHOWN, UPON APPROVAL OF THE STRUCTURES MAINTENANCE SECTION. IF USED, WWF SUBSTITUTION DETAILS SHALL BE SUBMITTED ELECTRONICALLY TO THE WISDOT FABRICATION LIBRARY AND ACCEPTED PRIOR TO SHOP DRAWING SUBMITTAL.

PRESTRESSING STRANDS SHALL BE 0.6" DIA.-7-WIRE LOW-RELAXATION STRANDS WITH AN ULTIMATE STRENGTH OF 270,000 PSI.

DESIGNER NOTES

BID ITEM SHALL BE "PRESTRESSED GIRDER TYPE I 45W-INCH".

SPECIFY CONCRETE STRENGTH AS REQUIRED BY DESIGN FROM A MINIMUM OF 6,000 PSI TO A MAX. OF 8,000 PSI. MAXIMUM RELEASE STRENGTH IS 6800 PSI. USE 0.6" DIA. STRAND FOR ALL PATTERNS. THE MAX. NUMBER OF DRAPED 0.6" DIA. STRANDS IS 8.

REINFORCEMENT IN STANDARD END SECTION OF THE GIRDER IS BASED ON THE STANDARD STRAND PATTERNS LISTED ON STANDARD 19.14 AND THE SPAN LENGTHS SHOWN IN TABLE 19.3-1. USING DIFFERENT STRAND PATTERNS OR LONGER SPANS WILL REQUIRE A COMPLETE DESIGN OF THIS REINFORCEMENT, WHICH REQUIRES PRIOR APPROVAL FROM THE BUREAU OF STRUCTURES.

▲ VARIES FOR ELASTOMERIC BRGS. (STD. 27.07) AND STEEL BRGS. (STD. 27.09)

⊖ DETAIL TYPICAL AT EACH END

THE DESIGN ENGINEER DETERMINES THIS VALUE BASED ON 2" MIN. HAUNCH AT EDGE OF GIRDER, X-SLOPE, PROFILE GRADE LINE AND CALCULATED RESIDUAL GIRDER CAMBER, INCLUDING THE CAMBER MULTIPLIER OF 1.4. THIS VALUE CAN VARY AND SHOULD BE GIVEN FOR EACH 1/3 OF THE GIRDER LENGTH. PROVIDE VALUES THAT MAINTAIN 3" MIN. DECK EMBEDMENT AND 2 1/2" CLEAR FROM TOP OF DECK WHILE ACCOUNTING FOR ±3/4" VARIANCE IN ACTUAL CAMBER VERSUS THE CALCULATED RESIDUAL CAMBER.

PROVIDE STIRRUP SPACING THAT IS SYMMETRICAL ABOUT THE C/L OF GIRDER.

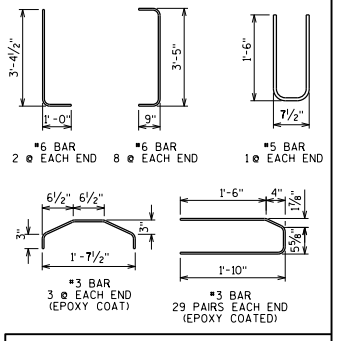

45W" PRESTRESSED GIRDER DETAILS

BUREAU OF STRUCTURES

APPROVED: Bill Oliva

DATE: 7-18

STANDARD 19.13

45W" GIRDER

A = 692 SQ. IN.

r^2 = 258.70 IN.^{2}

y_T = 24.26 IN.

y_B = -20.74 IN.

I = 178,971 IN.^{4}

S_T = 7,377 IN.^{3}

S_B = -8,629 IN.^{3}

WT. = 721 #/FT.

PRE-TENSION

f'_s = 270,000 P.S.I.

f_s = 0.75 X 270,000 = 202,500 P.S.I.
for low relaxation strands

Pi PER 0.6" DIA. STRAND = 0.217 X 202,500 = 43.94 KIPS

$$\frac{y_B}{r^2} = \frac{-20.74}{258.70} = -0.08017 \text{ in/in}^2$$

$$f_B \text{ (init.)} = \frac{A_s f_s}{A}\left(1 + \frac{e_s y_B}{r^2}\right)$$

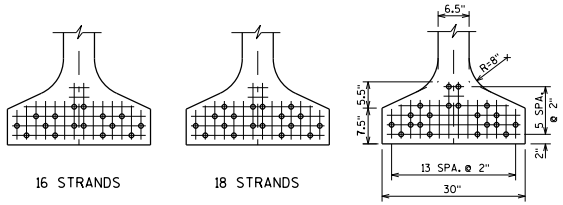

16 STRANDS 18 STRANDS 20 STRANDS

STANDARD ARRANGEMENTS TO RAISE CENTER OF GRAVITY TO AVOID DRAPING OF 0.6" DIA. STRANDS

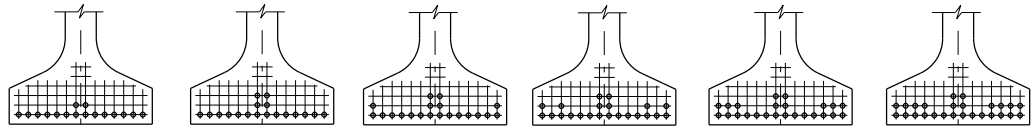

16 STRANDS 18 STRANDS 20 STRANDS 22 STRANDS 24 STRANDS 26 STRANDS

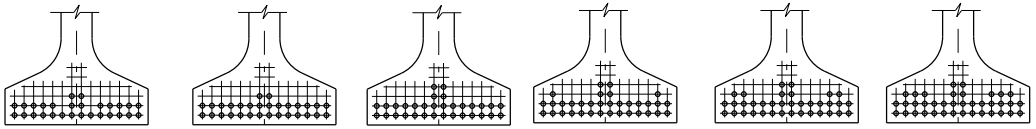

28 STRANDS 30 STRANDS 32 STRANDS 34 STRANDS 36 STRANDS 38 STRANDS

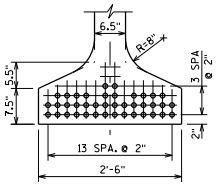

40 STRANDS

ARRANGEMENT AT ℄ SPAN - FOR GIRDERS WITH DRAPED 0.6" DIA. STRANDS

(COMPRESSION IS POSITIVE)

NO. STRANDS	e_s (inches)	P(init.)=$A_s f_s$ (KIPS)	f_B (init.) (K/sq.in.)
STANDARD STRAND PATTERNS FOR UNDRAPED STRANDS			
16	-16.24	703	2.339
18	-15.85	791	2.596
20	-15.14	879	2.812
STANDARD STRAND PATTERNS FOR DRAPED STRANDS			
16	-18.49	703	2.521
18	-18.07	791	2.799
20	-17.94	879	3.097
22	-17.83	967	3.394
24	-17.74	1055	3.693
26	-17.66	1143	3.991
28	-17.60	1230	4.285
30	-17.54	1318	4.583
32	-17.24	1406	4.840
34	-17.09	1494	5.117
36	-16.96	1582	5.395
38	-16.85	1670	5.674
40	-16.74	1758	5.950

DESIGNER NOTES

ON THE STRAND PATTERN SHEET, PLACE A BOX AROUND EACH STRAND PATTERN THAT APPLIES TO THE DESIGNED STRUCTURE AND LABEL THE SPAN IT IS USED IN.

45W" PRESTRESSED GIRDER DESIGN DATA

BUREAU OF STRUCTURES

APPROVED: Bill Oliva

DATE: 7-17

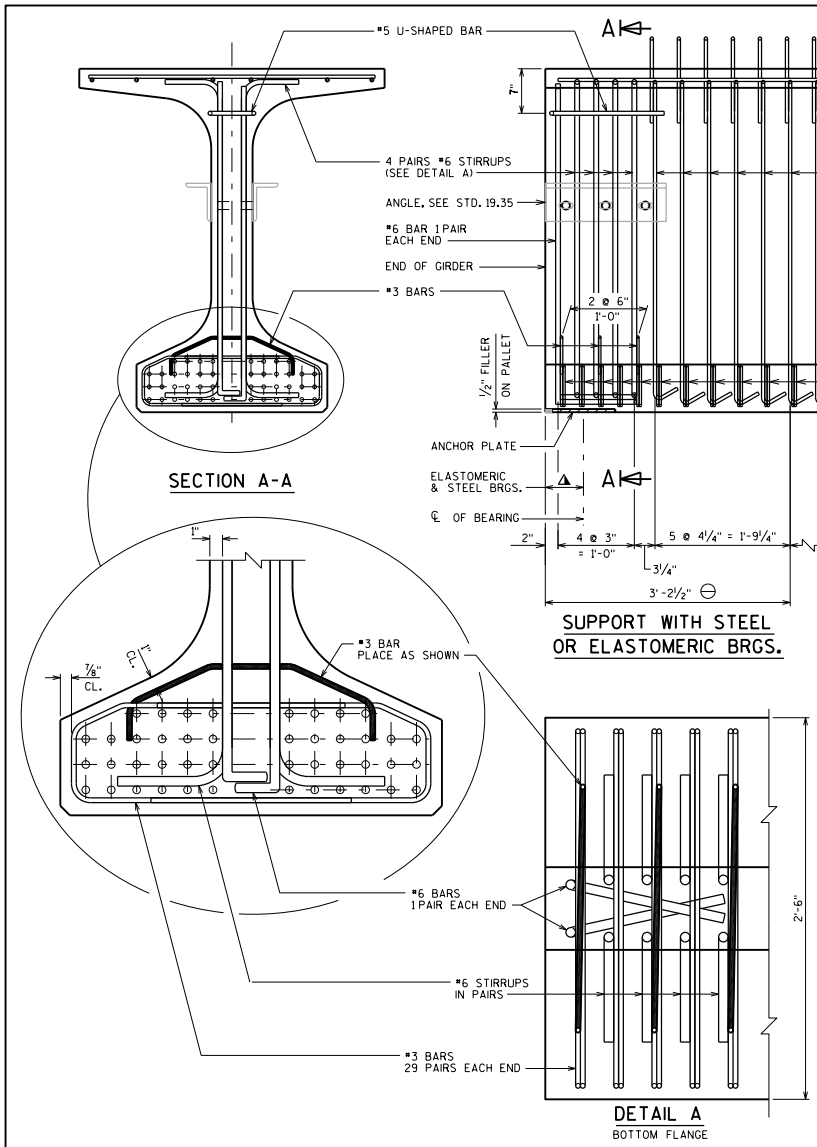

NOTES

TOP OF GIRDER TO BE ROUGH FLOATED AND BROOMED TRANSVERSELY, EXCEPT THE OUTSIDE 15" OF GIRDER, WHICH SHALL RECEIVE A SMOOTH FINISH. AN APPROVED CONCRETE SEALER SHALL BE APPLIED TO ALL SMOOTH SURFACES INCLUDING THE OUTSIDE 15" OF THE TOP FLANGE.

DO NOT APPLY CONCRETE SEALER OR EPOXY TO SURFACES RECEIVING APPLICATION OF CONCRETE STAINING.

THE GIRDERS SHALL BE PROVIDED WITH A SUITABLE LIFTING DEVICE FOR HANDLING AND ERECTING THE GIRDERS. SEE SECTION 503.3.3 OF STANDARD SPECIFICATIONS FOR GUIDANCE.

STRANDS SHALL BE FLUSH WITH END OF GIRDER. FOR GIRDER ENDS EMBEDDED COMPLETELY IN CONCRETE, END OF STRANDS SHALL BE COATED WITH NON-BITUMINOUS JOINT SEALER. FOR GIRDER ENDS THAT ARE FINALLY EXPOSED, COAT THE GIRDER ENDS, EXPOSED STRAND ENDS AND ALL NON-BONDING SURFACES WITHIN 2 FEET OF THE GIRDER ENDS WITH A NON-PIGMENTED EPOXY CONFORMING TO AASHTO M-235 TYPE III, GRADE 2, CLASS B OR C. THE EPOXY SHALL BE APPLIED AT LEAST 3 DAYS AFTER MOIST CURING HAS CEASED AND PRIOR TO THE APPLICATION OF THE SEALER.

ALL GIRDERS SHALL BE CAST FULL LENGTH AS SHOWN.

SPACING SHOWN FOR #4 STIRRUPS IS FOR GRADE 60 REINFORCEMENT.

AN EQUIVALENT OF WELDED WIRE FABRIC (WWF) ASTM A1064 MAY BE SUBSTITUTED FOR THE STIRRUP REINFORCEMENT SHOWN, UPON APPROVAL OF THE STRUCTURES MAINTENANCE SECTION. IF USED, WWF SUBSTITUTION DETAILS SHALL BE SUBMITTED ELECTRONICALLY TO THE WISDOT FABRICATION LIBRARY AND ACCEPTED PRIOR TO SHOP DRAWING SUBMITTAL.

PRESTRESSING STRANDS SHALL BE 0.6" DIA.-7-WIRE LOW-RELAXATION STRANDS WITH AN ULTIMATE STRENGTH OF 270,000 PSI.

DESIGNER NOTES

BID ITEM SHALL BE "PRESTRESSED GIRDER TYPE I 54W-INCH".

SPECIFY CONCRETE STRENGTH AS REQUIRED BY DESIGN FROM A MINIMUM OF 6,000 PSI TO A MAX. OF 8,000 PSI. MAXIMUM RELEASE STRENGTH IS 6800 PSI. USE 0.6" DIA. STRAND FOR ALL PATTERNS. THE MAX. NUMBER OF DRAPED 0.6" DIA. STRANDS IS 8.

REINFORCEMENT IN STANDARD END SECTION OF THE GIRDER IS BASED ON THE STANDARD STRAND PATTERNS LISTED ON STANDARD 19.16 AND THE SPAN LENGTHS SHOWN IN TABLE 19.3-2. USING DIFFERENT STRAND PATTERNS OR LONGER SPANS WILL REQUIRE A COMPLETE DESIGN OF THIS REINFORCEMENT, WHICH REQUIRES PRIOR APPROVAL FROM THE BUREAU OF STRUCTURES.

▲ VARIES FOR ELASTOMERIC BRGS. (STD. 27.07) AND STEEL BRGS. (STD. 27.09)

⊖ DETAIL TYPICAL AT EACH END

✱ THE DESIGN ENGINEER DETERMINES THIS VALUE BASED ON 2" MIN. HAUNCH AT EDGE OF GIRDER, X-SLOPE, PROFILE GRADE LINE AND CALCULATED RESIDUAL GIRDER CAMBER, INCLUDING THE CAMBER MULTIPLIER OF 1.4. THIS VALUE CAN VARY AND SHOULD BE GIVEN FOR EACH 1/3 OF THE GIRDER LENGTH. PROVIDE VALUES THAT MAINTAIN 3" MIN. DECK EMBEDMENT AND 2 1/2" CLEAR FROM TOP OF DECK WHILE ACCOUNTING FOR ±3/4" VARIANCE IN ACTUAL CAMBER VERSUS THE CALCULATED RESIDUAL CAMBER.

PROVIDE STIRRUP SPACING THAT IS SYMMETRICAL ABOUT THE C/L OF GIRDER.

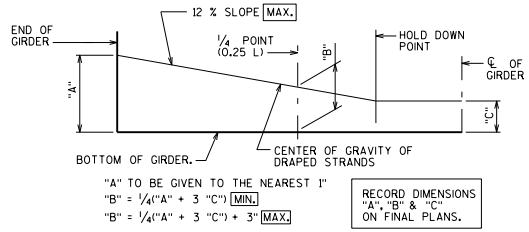

LOCATION OF DRAPED STRANDS

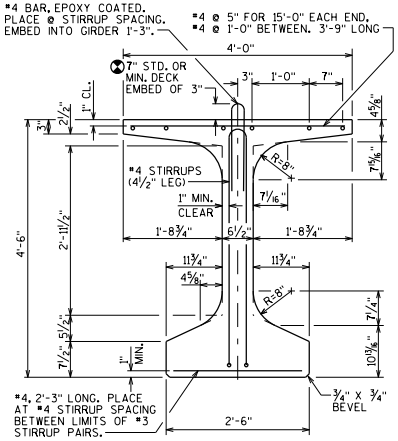

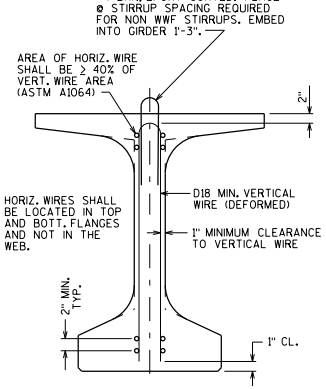

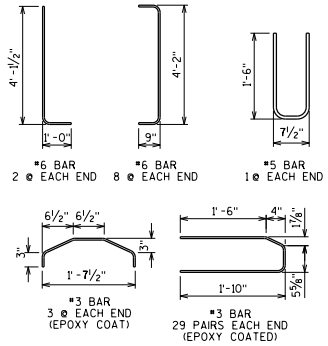

54W" PRESTRESSED GIRDER DETAILS

BUREAU OF STRUCTURES

APPROVED: Bill Oliva

DATE: 7-18

STANDARD 19.15

54W" GIRDER

A = 798 SQ. IN.

r^2 = 402.41 IN.^{2}

y_T = 27.70 IN.

y_B = -26.30 IN.

I = 321,049 IN.^{4}

S_T = 11,592 IN.^{3}

S_B = -12,205 IN.^{3}

WT. = 831 #/FT.

PRE-TENSION

f'_s = 270,000 P.S.I.

f_s = 0.75 X 270,000 = 202,500 P.S.I.
for low relaxation strands

Pi PER 0.6" DIA. STRAND = 0.217 X 202,500 = 43.94 KIPS

$$\frac{y_B}{r^2} = \frac{-26.30}{402.41} = -0.06536 \text{ in/in}^2$$

$$f_B \text{ (init.)} = \frac{A_s f_s}{A}\left(1 + \frac{e_s y_B}{r^2}\right)$$

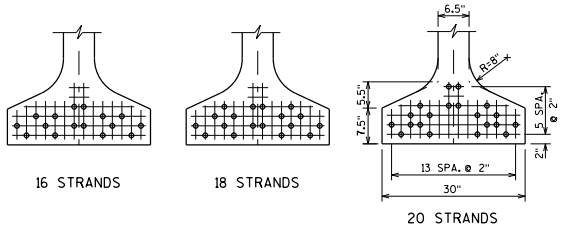

STANDARD ARRANGEMENTS TO RAISE CENTER OF GRAVITY TO AVOID DRAPING OF 0.6" DIA. STRANDS

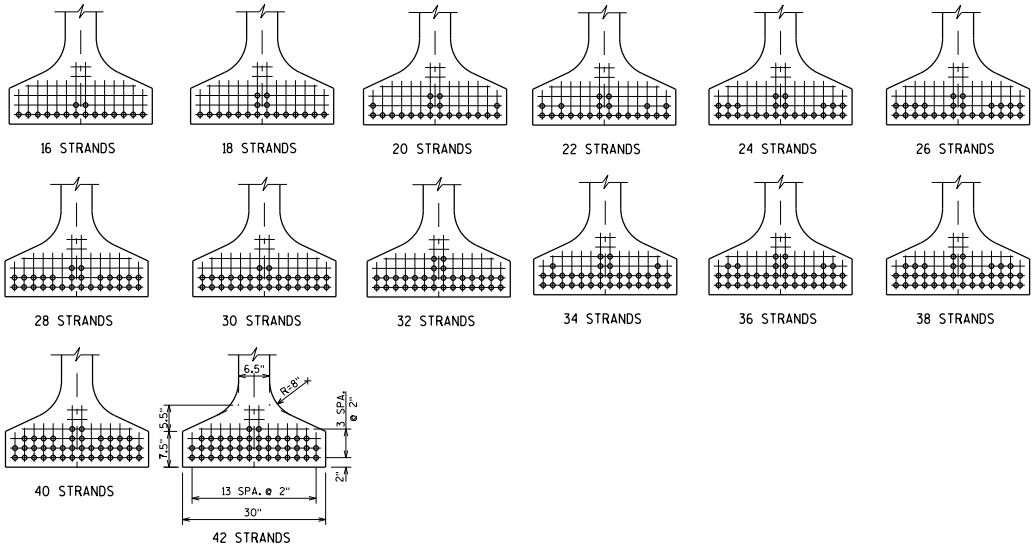

ARRANGEMENT AT ℄ SPAN - FOR GIRDERS WITH DRAPED 0.6" DIA. STRANDS

(COMPRESSION IS POSITIVE)

NO. STRANDS	e_s (inches)	P(init.)=$A_s f_s$ (KIPS)	f_B (init.) (K/sq.in.)
STANDARD STRAND PATTERNS FOR UNDRAPED STRANDS			
16	-21.80	703	2.136
18	-21.41	791	2.378
20	-20.70	879	2.592
STANDARD STRAND PATTERNS FOR DRAPED STRANDS			
16	-24.05	703	2.266
18	-23.63	791	2.522
20	-23.50	879	2.793
22	-23.39	967	3.065
24	-23.30	1055	3.336
26	-23.22	1143	3.607
28	-23.16	1230	3.875
30	-23.10	1318	4.146
32	-22.80	1406	4.387
34	-22.65	1494	4.643
36	-22.52	1582	4.901
38	-22.41	1670	5.159
40	-22.30	1758	5.413
42	-22.20	1846	5.670

DESIGNER NOTES

ON THE STRAND PATTERN SHEET, PLACE A BOX AROUND EACH STRAND PATTERN THAT APPLIES TO THE DESIGNED STRUCTURE AND LABEL THE SPAN IT IS USED IN.

54W" PRESTRESSED GIRDER DESIGN DATA

BUREAU OF STRUCTURES

APPROVED: Bill Oliva

DATE: 7-17

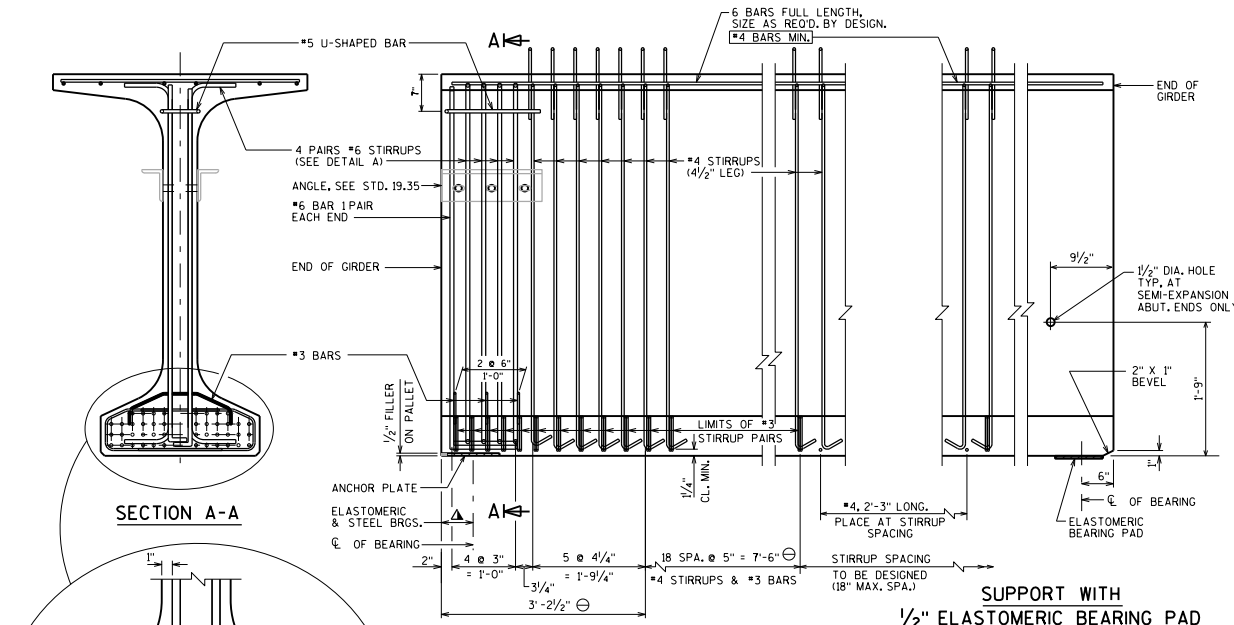

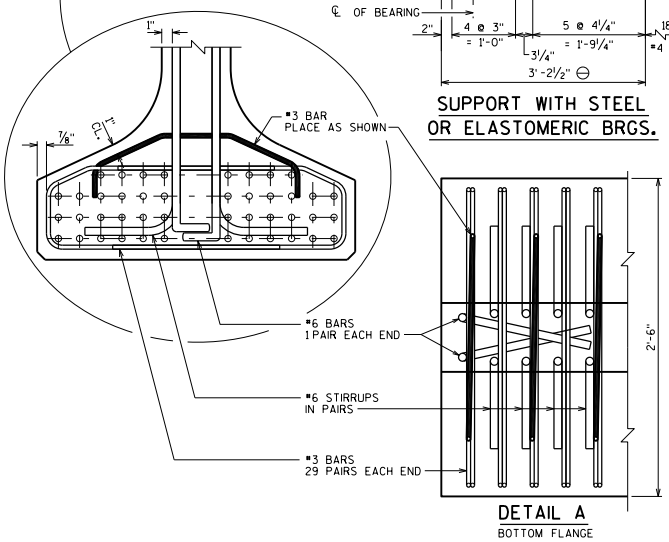

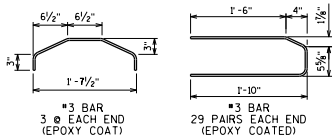

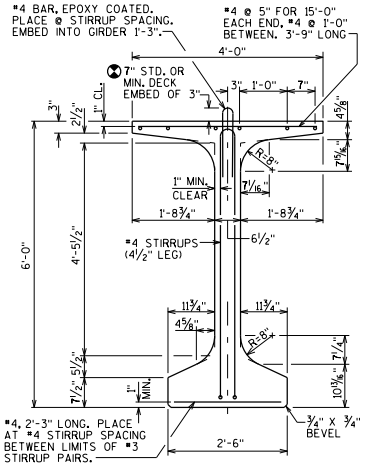

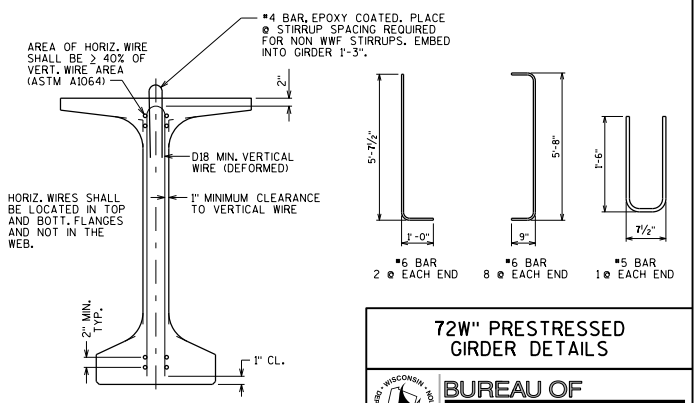

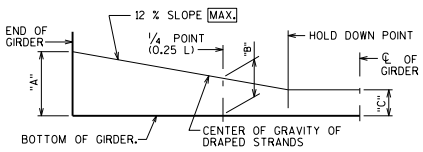

"A" TO BE GIVEN TO THE NEAREST 1"
"B" = ¼("A" + 3 "C") MIN.
"B" = ¼("A" + 3 "C") + 3" MAX.

RECORD DIMENSIONS "A", "B" & "C" ON FINAL PLANS.

LOCATION OF DRAPED STRANDS

NOTES

TOP OF GIRDER TO BE ROUGH FLOATED AND BROOMED TRANSVERSELY, EXCEPT THE OUTSIDE 15" OF GIRDER, WHICH SHALL RECEIVE A SMOOTH FINISH. AN APPROVED CONCRETE SEALER SHALL BE APPLIED TO ALL SMOOTH SURFACES INCLUDING THE OUTSIDE 15" OF THE TOP FLANGE.

DO NOT APPLY CONCRETE SEALER OR EPOXY TO SURFACES RECEIVING APPLICATION OF CONCRETE STAINING.

THE GIRDERS SHALL BE PROVIDED WITH A SUITABLE LIFTING DEVICE FOR HANDLING AND ERECTING THE GIRDERS.

STRANDS SHALL BE FLUSH WITH END OF GIRDER. FOR GIRDER ENDS EMBEDDED COMPLETELY IN CONCRETE, END OF STRANDS SHALL BE COATED WITH NON-BITUMINOUS JOINT SEALER. FOR GIRDER ENDS THAT ARE FINALLY EXPOSED, COAT THE GIRDER ENDS, EXPOSED STRAND ENDS AND ALL NON-BONDING SURFACES WITHIN 2 FEET OF THE GIRDER ENDS WITH A NON-PIGMENTED EPOXY CONFORMING TO AASHTO M-235 TYPE III, GRADE 2, CLASS B OR C. THE EPOXY SHALL BE APPLIED AT LEAST 3 DAYS AFTER MOIST CURING HAS CEASED AND PRIOR TO THE APPLICATION OF THE SEALER.

ALL GIRDERS SHALL BE CAST FULL LENGTH AS SHOWN.

SPACING SHOWN FOR #4 STIRRUPS IS FOR GRADE 60 REINFORCEMENT.

AN EQUIVALENT OF WELDED WIRE FABRIC (WWF) ASTM A1064 MAY BE SUBSTITUTED FOR THE STIRRUP REINFORCEMENT SHOWN, UPON APPROVAL OF THE STRUCTURES MAINTENANCE SECTION. IF USED, WWF SUBSTITUTION DETAILS SHALL BE SUBMITTED ELECTRONICALLY TO THE WISDOT FABRICATION LIBRARY AND ACCEPTED PRIOR TO SHOP DRAWING SUBMITTAL.

PRESTRESSING STRANDS SHALL BE 0.6" DIA.-7-WIRE LOW-RELAXATION STRANDS WITH AN ULTIMATE STRENGTH OF 270,000 PSI.

THIS NOTE APPLIES TO LONG SPANS AS DEFINED IN THE NOTES FOR THE 72W" GIRDER, TABLE 19.3-2 OF THE BRIDGE MANUAL: FOR STORAGE, HANDLING, AND TRANSPORTING, THIS GIRDER IS REINFORCED TO ALLOW A MAXIMUM OVERHANG FROM THE LIFTING LOCATION OR POINT OF SUPPORT OF UP TO 1/10 THE GIRDER LENGTH. THE CONTRACTOR IS RESPONSIBLE FOR LATERAL STABILITY OF THE GIRDER UNTIL THE DECK IS CURED. (IF NOTE DOESN'T APPLY, REFERENCE SECT. 503.3.3 OF STD. SPEC. FOR GUIDANCE)

DESIGNER NOTES

BID ITEM SHALL BE "PRESTRESSED GIRDER TYPE I 72W-INCH".

SPECIFY CONCRETE STRENGTH AS REQUIRED BY DESIGN FROM A MINIMUM OF 6,000 PSI TO A MAX. OF 8,000 PSI. MAXIMUM RELEASE STRENGTH IS 6800 PSI. USE 0.6" DIA. STRAND FOR ALL PATTERNS. THE MAX. NUMBER OF DRAPED 0.6" DIA. STRANDS IS 8.

REINFORCEMENT IN STANDARD END SECTION OF THE GIRDER IS BASED ON THE STANDARD STRAND PATTERNS LISTED ON STANDARD 19.18 AND THE SPAN LENGTHS SHOWN IN TABLE 19.3-2. USING DIFFERENT STRAND PATTERNS OR LONGER SPANS WILL REQUIRE A COMPLETE DESIGN OF THIS REINFORCEMENT, WHICH REQUIRE PRIOR APPROVAL FROM THE BUREAU OF STRUCTURES.

▲ VARIES FOR ELASTOMERIC BRGS. (STD. 27.07) AND STEEL BRGS (STD. 27.09)

⊖ DETAIL TYPICAL AT EACH END

✱ THE DESIGN ENGINEER DETERMINES THIS VALUE BASED ON 2" MIN. HAUNCH AT EDGE OF GIRDER, X-SLOPE, PROFILE GRADE LINE AND CALCULATED RESIDUAL GIRDER CAMBER, INCLUDING THE CAMBER MULTIPLIER OF 1.4. THIS VALUE CAN VARY AND SHOULD BE GIVEN FOR EACH 1/3 OF THE GIRDER LENGTH. PROVIDE VALUES THAT MAINTAIN 3" MIN. DECK EMBEDMENT AND 2½" CLEAR FROM TOP OF DECK WHILE ACCOUNTING FOR ±¾" VARIANCE IN ACTUAL CAMBER VERSUS THE CALCULATED RESIDUAL CAMBER.

PROVIDE STIRRUP SPACING THAT IS SYMMETRICAL ABOUT THE C/L OF GIRDER.

72W" PRESTRESSED GIRDER DETAILS

BUREAU OF STRUCTURES

APPROVED: Bill Oliva

DATE: 7-18

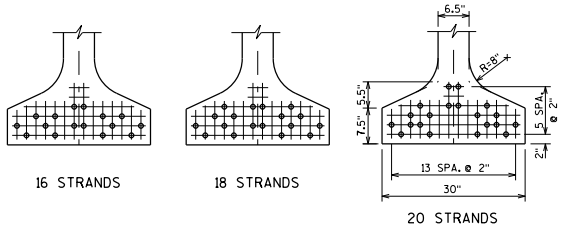

STANDARD ARRANGEMENTS TO RAISE CENTER OF GRAVITY TO AVOID DRAPING OF 0.6" DIA. STRANDS

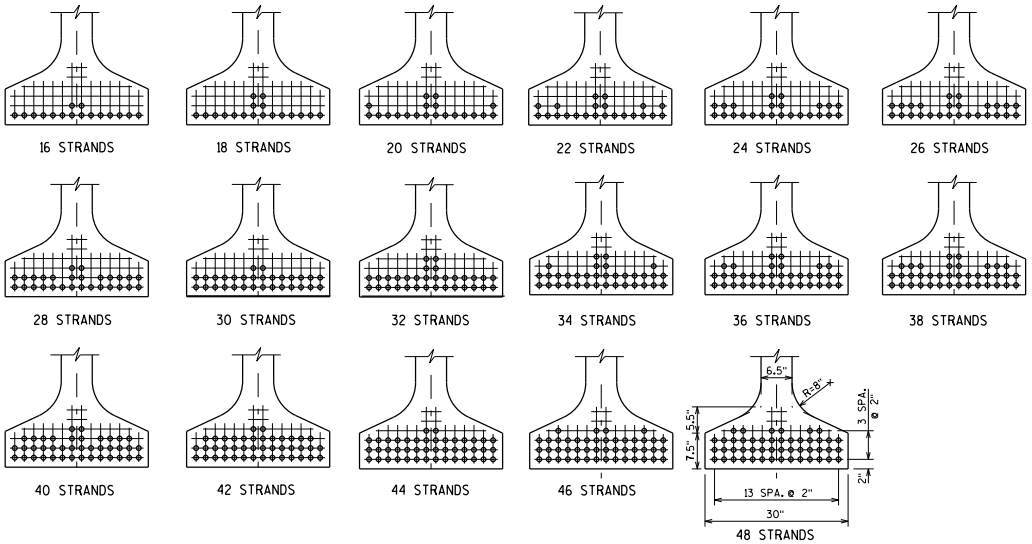

ARRANGEMENT AT ℄ SPAN - FOR GIRDERS WITH DRAPED 0.6" DIA. STRANDS

72W" GIRDER

A = 915 SQ. IN.

r^2 = 717.5 IN.^{2}

y_T = 37.13 IN.

y_B = -34.87 IN.

I = 656,426 IN.^{4}

S_T = 17,680 IN.^{3}

S_B = -18,825 IN.^{3}

WT. = 953 #/FT.

PRE-TENSION

f'_s = 270,000 P.S.I.

f_s = 0.75 X 270,000 = 202,500 P.S.I. for low relaxation strands

Pi PER 0.6" DIA. STRAND = 0.217 X 202,500 = 43.94 KIPS

$$\frac{y_B}{r^2} = \frac{-34.87}{717.50} = -0.0486 \text{ in/in}^2$$

$$f_B \text{ (init.)} = \frac{A_s f_s}{A}\left(1 + \frac{e_s y_B}{r^2}\right)$$

(COMPRESSION IS POSITIVE)

NO. STRANDS	e_s (inches)	P(init.)=$A_s f_s$ (KIPS)	f_B (init.) (K/sq.in.)
STANDARD STRAND PATTERNS FOR UNDRAPED STRANDS			
16	-30.37	703	1.902
18	-29.98	791	2.124
20	-29.27	879	2.328
STANDARD STRAND PATTERNS FOR DRAPED STRANDS			
16	-32.62	703	1.986
18	-32.20	791	2.217
20	-32.07	879	2.458
22	-31.96	967	2.698
24	-31.87	1055	2.939
26	-31.79	1143	3.179
28	-31.73	1230	3.417
30	-31.67	1318	3.657
32	-31.37	1406	3.880
34	-31.22	1494	4.110
36	-31.09	1582	4.341
38	-30.98	1670	4.574
40	-30.87	1758	4.803
42	-30.77	1846	5.034
44	-30.69	1933	5.265
46	-30.52	2021	5.484
48	-30.37	2109	5.707

DESIGNER NOTES

ON THE STRAND PATTERN SHEET, PLACE A BOX AROUND EACH STRAND PATTERN THAT APPLIES TO THE DESIGNED STRUCTURE AND LABEL THE SPAN IT IS USED IN.

72W" PRESTRESSED GIRDER DESIGN DATA

BUREAU OF STRUCTURES

APPROVED: Bill Oliva

DATE: 7-17

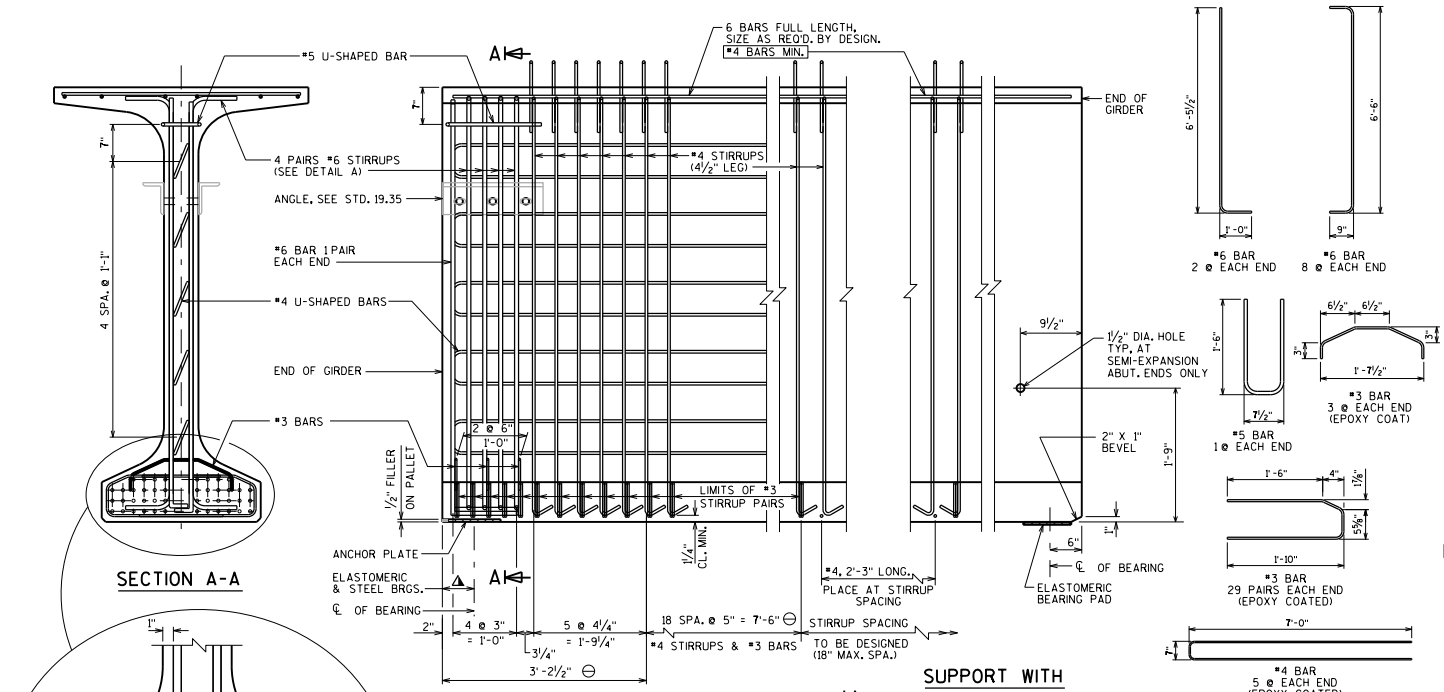

SECTION A-A

SUPPORT WITH STEEL OR ELASTOMERIC BRGS.

SUPPORT WITH ½" ELASTOMERIC BEARING PAD

NOTES

TOP OF GIRDER TO BE ROUGH FLOATED AND BROOMED TRANSVERSELY, EXCEPT THE OUTSIDE 15" OF GIRDER, WHICH SHALL RECEIVE A SMOOTH FINISH. AN APPROVED CONCRETE SEALER SHALL BE APPLIED TO ALL SMOOTH SURFACES INCLUDING THE OUTSIDE 15" OF THE TOP FLANGE.

DO NOT APPLY CONCRETE SEALER OR EPOXY TO SURFACES RECEIVING APPLICATION OF CONCRETE STAINING.

THE GIRDERS SHALL BE PROVIDED WITH A SUITABLE LIFTING DEVICE FOR HANDLING AND ERECTING THE GIRDERS.

STRANDS SHALL BE FLUSH WITH END OF GIRDER. FOR GIRDER ENDS EMBEDDED COMPLETELY IN CONCRETE, END OF STRANDS SHALL BE COATED WITH NON-BITUMINOUS JOINT SEALER. FOR GIRDER ENDS THAT ARE FINALLY EXPOSED, COAT THE GIRDER ENDS, EXPOSED STRAND ENDS AND ALL NON-BONDING SURFACES WITHIN 2 FEET OF THE GIRDER ENDS WITH A NON-PIGMENTED EPOXY CONFORMING TO AASHTO M-235 TYPE III, GRADE 2, CLASS B OR C. THE EPOXY SHALL BE APPLIED AT LEAST 3 DAYS AFTER MOIST CURING HAS CEASED AND PRIOR TO THE APPLICATION OF THE SEALER.

ALL GIRDERS SHALL BE CAST FULL LENGTH AS SHOWN.

SPACING SHOWN FOR #4 STIRRUPS IS FOR GRADE 60 REINFORCEMENT.

AN EQUIVALENT OF WELDED WIRE FABRIC (WWF) ASTM A1064 MAY MAY SUBSTITUTED FOR THE STIRRUP REINFORCEMENT SHOWN, UPON APPROVAL OF THE STRUCTURES MAINTENANCE SECTION. IF USED, WWF SUBSTITUTION DETAILS SHALL BE SUBMITTED ELECTRONICALLY TO THE WISDOT FABRICATION LIBRARY AND ACCEPTED PRIOR TO SHOP DRAWING SUBMITTAL.

PRESTRESSING STRANDS SHALL BE 0.6" DIA.-7-WIRE LOW-RELAXATION STRANDS WITH AN ULTIMATE STRENGTH OF 270,000 PSI.

THIS NOTE APPLIES TO LONG SPANS AS DEFINED IN THE NOTES FOR THE 82W" GIRDER, TABLE 19.3-2 OF THE BRIDGE MANUAL: FOR STORAGE, HANDLING, AND TRANSPORTING, THIS GIRDER IS REINFORCED TO ALLOW A MAXIMUM OVERHANG FROM THE LIFTING LOCATION OR POINT OF SUPPORT OF UP TO 1/10 THE GIRDER LENGTH. THE CONTRACTOR IS RESPONSIBLE FOR LATERAL STABILITY OF THE GIRDER UNTIL THE DECK IS CURED. (IF NOTE DOESN'T APPLY, REFERENCE SECT. 503.3.3 OF STD. SPEC. FOR GUIDANCE)

DESIGNER NOTES

BID ITEM SHALL BE "PRESTRESSED GIRDER TYPE I 82W-INCH".

SPECIFY CONCRETE STRENGTH AS REQUIRED BY DESIGN FROM A MINIMUM OF 6,000 PSI TO A MAX. OF 8,000 PSI. MAXIMUM RELEASE STRENGTH IS 6800 PSI. USE 0.6" DIA. STRAND FOR ALL PATTERNS. THE MAX. NUMBER OF DRAPED 0.6" DIA. STRANDS IS 8.

REINFORCEMENT IN STANDARD END SECTION OF THE GIRDER IS BASED ON THE STANDARD STRAND PATTERNS LISTED ON STANDARD 19.20 AND THE SPAN LENGTHS SHOWN IN TABLE 19.3-2. USING DIFFERENT STRAND PATTERNS OR LONGER SPANS WILL REQUIRE A COMPLETE DESIGN OF THIS REINFORCEMENT, WHICH REQUIRES PRIOR APPROVAL FROM THE BUREAU OF STRUCTURES.

▲ VARIES FOR ELASTOMERIC BRGS. (STD. 27.07) AND STEEL BRGS (STD. 27.09)

⊖ DETAIL TYPICAL AT EACH END

✱ THE DESIGN ENGINEER DETERMINES THIS VALUE BASED ON 2" MIN. HAUNCH AT EDGE OF GIRDER, X-SLOPE, PROFILE GRADE LINE AND CALCULATED RESIDUAL GIRDER CAMBER, INCLUDING THE CAMBER MULTIPLIER OF 1.4. THIS VALUE CAN VARY AND SHOULD BE GIVEN FOR EACH 1/3 OF THE GIRDER LENGTH. PROVIDE VALUES THAT MAINTAIN 3" MIN. DECK EMBEDMENT AND 2½" CLEAR FROM TOP OF DECK WHILE ACCOUNTING FOR ±¾" VARIANCE IN ACTUAL CAMBER VERSUS THE CALCULATED RESIDUAL CAMBER.

PROVIDE STIRRUP SPACING THAT IS SYMMETRICAL ABOUT THE C/L OF GIRDER.

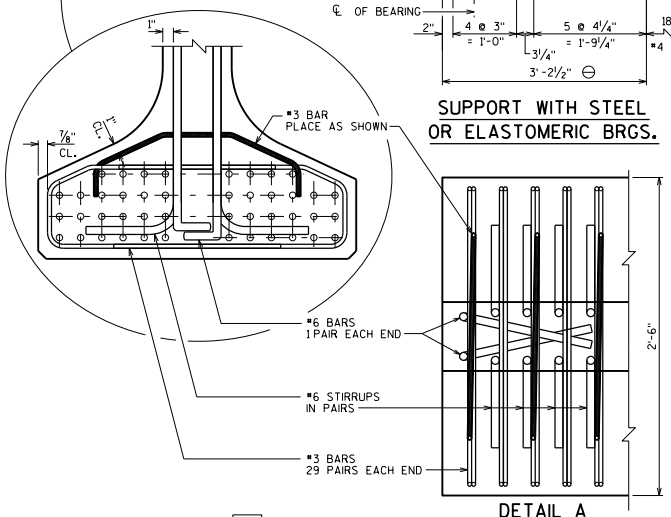

DETAIL A

BOTTOM FLANGE

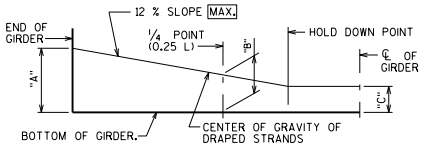

"A" TO BE GIVEN TO THE NEAREST 1"
"B" = ¼("A" + 3 "C") MIN.
"B" = ¼("A" + 3 "C") + 3" MAX.

RECORD DIMENSIONS "A", "B" & "C" ON FINAL PLANS.

LOCATION OF DRAPED STRANDS

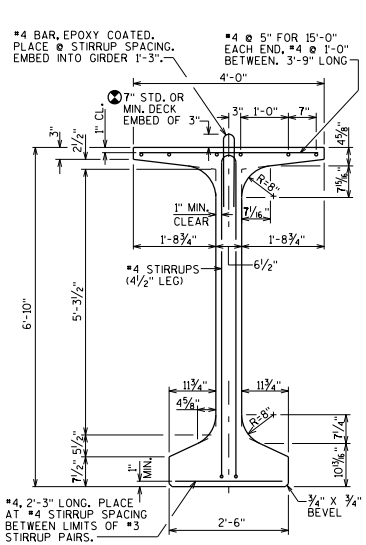

SECTION THRU GIRDER

STRANDS NOT SHOWN

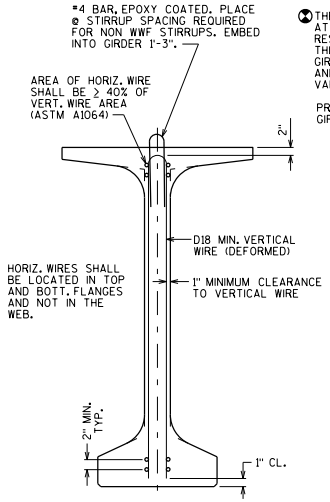

SECTION THRU GIRDER

SHOWING WELDED WIRE FABRIC (WWF) STIRRUPS ASTM A1064 (FY = 70 KSI)

THERE IS CURRENTLY A MORATORIUM ON THE USE OF 82W" PRESTRESSED GIRDERS.

82W" PRESTRESSED GIRDER DETAILS

BUREAU OF STRUCTURES

APPROVED: Bill Oliva

DATE: 7-18

STANDARD 19.19

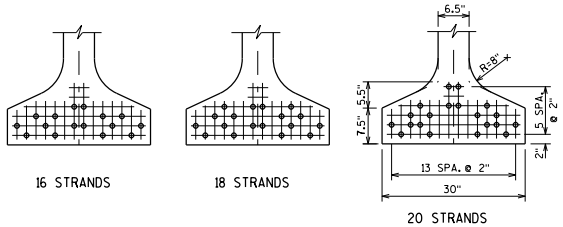

STANDARD ARRANGEMENTS TO RAISE CENTER OF GRAVITY TO AVOID DRAPING OF 0.6" DIA. STRANDS

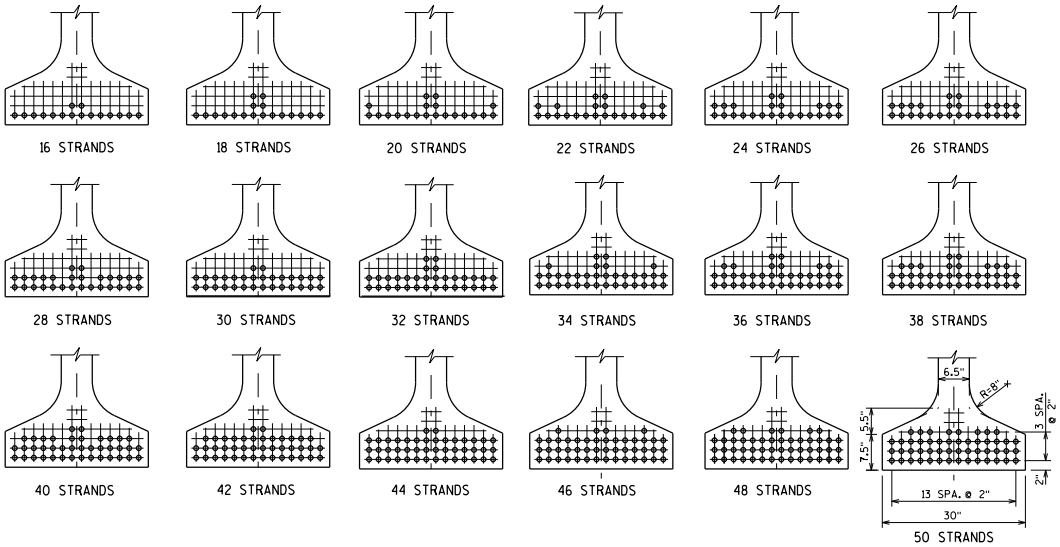

ARRANGEMENT AT ℄ SPAN - FOR GIRDERS WITH DRAPED 0.6" DIA. STRANDS

82W" GIRDER

A = 980 SQ. IN.

r^2 = 924.1 IN.^{2}

y_T = 42.32 IN.

y_B = -39.68 IN.

I = 905,453 IN.^{4}

S_T = 21,396 IN.^{3}

S_B = -22,819 IN.^{3}

WT. = 1021 #/FT.

PRE-TENSION

f'_s = 270,000 P.S.I.

f_s = 0.75 X 270,000 = 202,500 P.S.I.
for low relaxation strands

Pi PER 0.6" DIA. STRAND = 0.217 X 202,500 = 43.94 KIPS

$$\frac{y_B}{r^2} = \frac{-39.68}{924.10} = -0.04294 \text{ in/in}^2$$

$$f_B \text{ (init.)} = \frac{A_s f_s}{A}\left(1 + \frac{e_s y_B}{r^2}\right)$$

(COMPRESSION IS POSITIVE)

NO. STRANDS	e_s (inches)	P(init.)=$A_s f_s$ (KIPS)	f_B (init.) (K/sq.in.)
STANDARD STRAND PATTERNS FOR UNDRAPED STRANDS			
16	-35.18	703	1.801
18	-34.79	791	2.013
20	-34.08	879	2.209
STANDARD STRAND PATTERNS FOR DRAPED STRANDS			
16	-37.43	703	1.870
18	-37.01	791	2.090
20	-36.88	879	2.318
22	-36.77	967	2.545
24	-36.68	1055	2.772
26	-36.60	1143	3.000
28	-36.54	1230	3.224
30	-36.48	1318	3.451
32	-36.18	1406	3.664
34	-36.03	1494	3.883
36	-35.90	1582	4.104
38	-35.79	1670	4.323
40	-35.68	1758	4.542
42	-35.58	1846	4.762
44	-35.50	1933	4.978
46	-35.33	2021	5.191
48	-35.18	2109	5.404
50	-35.04	2197	5.616

DESIGNER NOTES

ON THE STRAND PATTERN SHEET, PLACE A BOX AROUND EACH STRAND PATTERN THAT APPLIES TO THE DESIGNED STRUCTURE AND LABEL THE SPAN IT IS USED IN.

THERE IS CURRENTLY A MORATORIUM ON THE USE OF 82W" PRESTRESSED GIRDERS.

82W" PRESTRESSED GIRDER DESIGN DATA

BUREAU OF STRUCTURES

APPROVED: Bill Oliva

DATE: 7-17

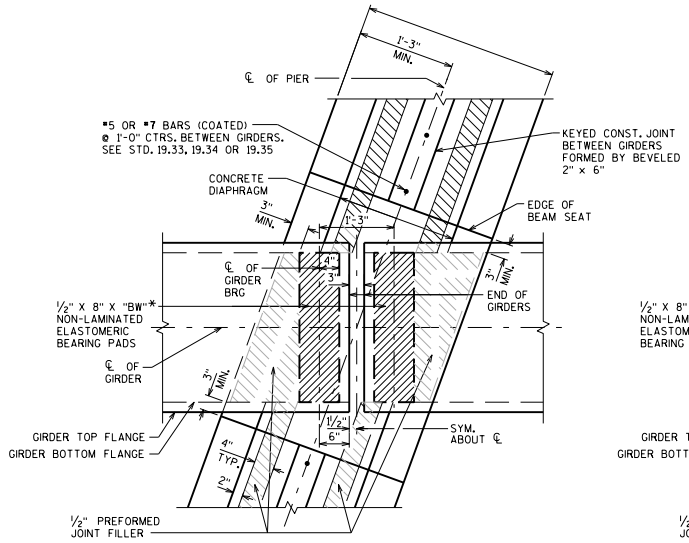

AT PIER

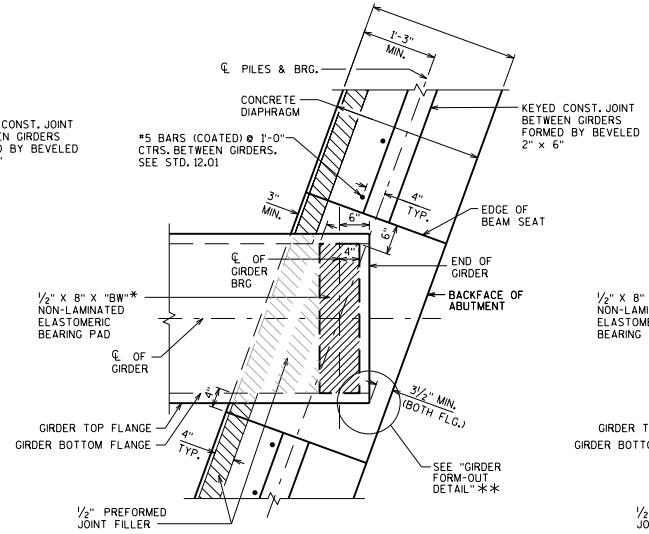

AT ABUTMENT

ABUTMENT: TYPE "A1 FIXED" AND "A5" W/O PAVING NOTCH

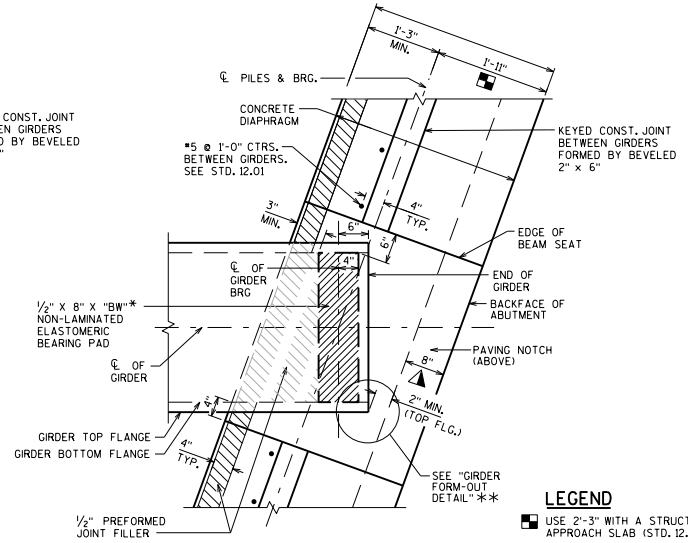

AT ABUTMENT

ABUTMENT: TYPE "A1 FIXED" AND "A5" WITH PAVING NOTCH.

LEGEND

- USE 2'-3" WITH A STRUCTURAL APPROACH SLAB (STD. 12.10)
- PAVING NOTCH IS 1'-0" WIDE IF STRUCTURAL APPROACH SLAB (STD. 12.10) IS USED.
- 1'-6" FOR 36W", 45W", 54", 54W", 70", 72W" & 82W" GIRDERS WITH SKEWS >25°.

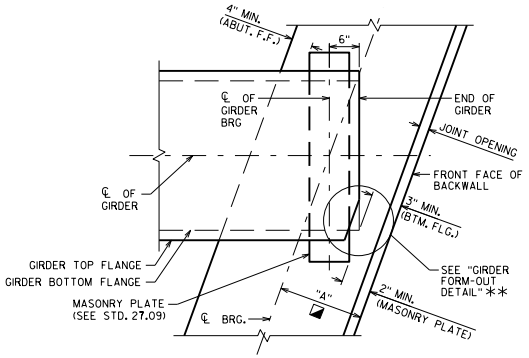

AT ABUTMENT WITH STEEL BRGS

ABUTMENT: TYPE "A3"
SEE TABLE FOR MIN. "A" VALUES REQ'D. TO MEET MIN. CLEARANCE CRITERIA ABOVE.

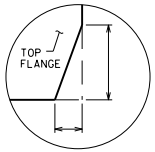

GIRDER FORM-OUT DETAIL**

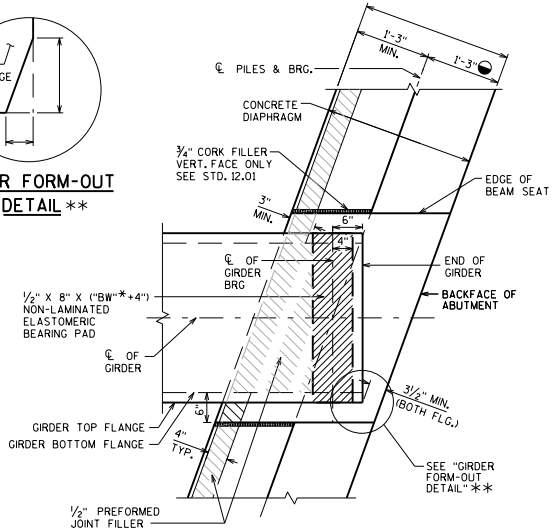

AT ABUTMENT

ABUTMENT: TYPE "A1 SEMI-EXP." W/O PAVING NOTCH

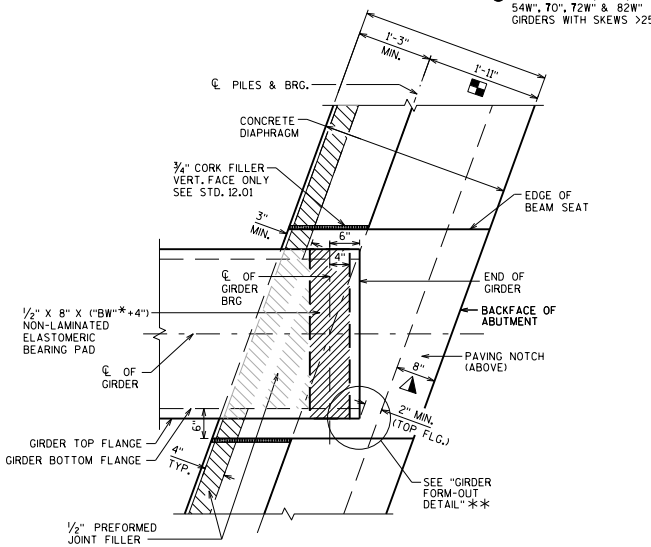

AT ABUTMENT

ABUTMENT: TYPE "A1 SEMI-EXP." WITH PAVING NOTCH.

MIN. "A" DIMENSION IN INCHES FOR A3 ABUTMENTS WITH STEEL BEARINGS AS SHOWN ON STD. 27.09.

◪"A" DIMENSION BASED ON BOTTOM FLANGE CLEARANCE IS CALCULATED USING 6" OFFSET FROM ℄ BRG. TO END OF GIRDER AND 3" MIN. OFFSET BETWEEN FLANGE AND BACKWALL TO ACCOMMODATE EXPANSION. IF CONDITIONS REQUIRE OFFSETS OTHER THAN THESE, THE "A" DIMENSION MUST BE CALCULATED. "A" DIMENSION BASED ON MASONRY PLATE CLEARANCE IS CALCULATED ASSUMING A 10" LONG PLATE. IF LONGER PLATE IS REQUIRED, RECALCULATE "A".

SKEW ANGLE (DEG.)	GIRDER DEPTHS									
	28"	36"	36W"	45"	45W"	54"	54W"	70"	72W"	82W"
0-5	12"	12"	12"	12"	12"	12"	12"	12"	12"	12"
> 5-15	12"	12"	13"	12"	13"	12.5"	13"	13"	13"	13"
> 15-25	12.5"	12.5"	15"	13"	15"	14"	15"	15"	15"	15"
> 25-35	(14")	(14")	(17.5")	(15")	(17.5")	(16.5")	(17.5")	16.5"	(17.5")	(17.5")
> 35-45	(15.5")	(15.5")	(20")	(17")	(20")	(18.5")	(20")	(18.5")	(20")	(20")
> 45-55	(17")	(17")	(21.5")	(18.5")	(21.5")	(20")	(21.5")	(20")	(21.5")	(21.5")

VALUES IN PARENTHESIS ARE CONTROLLED BY 2" CLR. CRITERIA AT EDGE OF MASONRY PLATE. VALUES MAY BE ADJUSTED IF MASONRY PLATE IS CLIPPED PER STANDARD 27.02.

PRESTRESSED GIRDER FLANGE WIDTH TABLE

GIRDER DEPTH	28"	36"	36W"	45"	45W"	54"	54W"	70"	72W"	82W"
TOP FLANGE WIDTH	18"	12"	34"	16"	34"	20"	48"	30"	48"	48"
BOTTOM FLANGE WIDTH "BW"*	18"	18"	30"	22"	30"	26"	30"	26"	30"	30"

DESIGNER NOTES

SEE PRESTRESSED GIRDER DETAILS FOR ADDITIONAL INFORMATION. BEARING PAD DETAILS FOR 45W" GIRDER SHOWN ON THIS SHEET. DETAILS FOR OTHER GIRDERS TYPES SIMILAR.

**WHEN NEEDED, FORM-OUT TOP FLANGE ON 36W", 45W", 54W", 70", 72W" & 82W" PRESTRESSED GIRDERS TO MEET MIN. CLR. REQ'D (SEE STD. 19.34, 19.35 OR 28.03). BOTTOM FLANGE FORM-OUT NOT ALLOWED.

BEARING PAD DETAILS FOR PRESTRESSED CONCRETE GIRDERS

WISCONSIN DEPARTMENT OF TRANSPORTATION
BUREAU OF STRUCTURES

APPROVED: Bill Oliva

DATE: 1-20

STANDARD 19.31

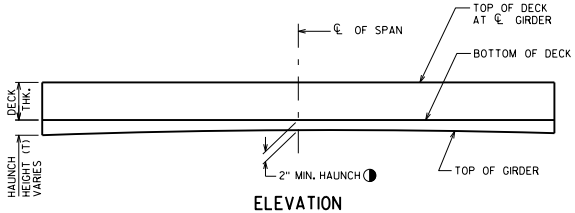

ELEVATION

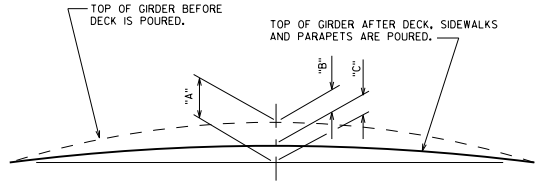

CAMBER & DEFLECTION DIAGRAM

* "A" = PRESTRESS CAMBER

* "B" = DEAD LOAD DEFLECTION * ROUND OFF TO NEAREST 1/8"

* "C" = RESIDUAL CAMBER

DESIGNER NOTES

◑ PRESENT PRACTICE IS TO USE A MINIMUM "HAUNCH HEIGHT" (AT EDGE OF GIRDER FLANGE) OF 2" FOR DESIGN CALCULATIONS.

THE MINIMUM HAUNCH (AT EDGE OF GIRDER FLANGE) ALLOWED IN CONSTRUCTION IS 1¼".

USE THE CALCULATED THEORETICAL AVERAGE "HAUNCH HEIGHT" AT CENTERLINE OF FLANGE FOR COMPUTING THE HAUNCH CONCRETE QUANTITY.

USE TOP OF DECK ELEVATIONS AND CALCULATED "HAUNCH HEIGHT" AT CENTERLINE OF GIRDER FOR COMPUTING BEAM SEAT ELEVATIONS AT SUBSTRUCTURES.

"INTERMEDIATE CONCRETE DIAPHRAGMS" SHALL BE USED ONLY WHEN THE USE OF STEEL DIAPHRAGMS IS NOT FEASIBLE BECAUSE OF UTILITIES OR FOR OTHER SPECIAL SITUATIONS. ONLY ONE TYPE OF INTERMEDIATE DIAPHRAGM SHALL BE SHOWN ON THE PLANS. THE USE OF BOTH INTERMEDIATE CONCRETE & STEEL DIAPHRAGMS ON THE SAME BRIDGE IS NOT ALLOWED.

FOR SKEWS ≤ 10°, PLACE INTERMEDIATE DIAPHRAGMS IN A STRAIGHT LINE. REFER TO STANDARD 19.36. PROVIDE OFFSET FOR SKEWS > 10°.

PIER PILASTERS ARE TYPICALLY NOT USED, BUT MAY BE USED AS PART OF THE BRIDGE AESTHETIC PACKAGE ON 28", 36", 45", 54" AND 70" PRESTRESSED GIRDERS. PILASTERS ARE NOT USED ON 36W", 45W", 54W", 72W" OR 82W".

◪ 10 1/2" MIN. FOR TYPE "M" RAILINGS
11" MIN. FOR TYPE "NY3/NY4" RAILINGS

DIAPHRAGM SPACING: FOR SPANS ≤ 80'-0" PLACE ONE DIAPHRAGM AT MID-LENGTH OF GIRDER. FOR SPANS OVER 80'-0", PLACE AT 1/3 AND 2/3 POINTS OF THE GIRDER LENGTH.

NOTE ON PLAN THAT DIAPHRAGM SPACING IS FROM THE GIRDER END.

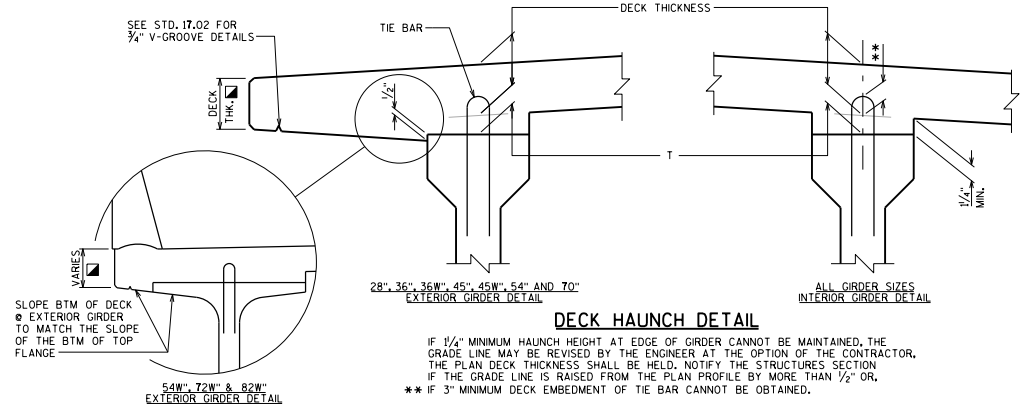

DECK HAUNCH DETAIL

IF 1¼" MINIMUM HAUNCH HEIGHT AT EDGE OF GIRDER CANNOT BE MAINTAINED, THE GRADE LINE MAY BE REVISED BY THE ENGINEER AT THE OPTION OF THE CONTRACTOR. THE PLAN DECK THICKNESS SHALL BE HELD. NOTIFY THE STRUCTURES SECTION IF THE GRADE LINE IS RAISED FROM THE PLAN PROFILE BY MORE THAN ½" OR,

** IF 3" MINIMUM DECK EMBEDMENT OF TIE BAR CANNOT BE OBTAINED.

TO DETERMINE 'T', ELEV. OF TOP OF GIR'S. AT ℄ OF SUBSTRUCTURE UNITS & AT 1/10 POINTS OF EACH SPAN SHALL BE TAKEN. THEN FOLLOW THIS PROCESS:

TOP OF DECK ELEV. AT FINAL GRADE
\- TOP OF GIRDER ELEVATION
\+ DEAD LOAD DEFLECTION
\- DECK THICKNESS
= HAUNCH HEIGHT 'T'

NOTE: AN AVERAGE HAUNCH ('T') OF WAS USED IN THE QUANTITY "CONCRETE MASONRY BRIDGES".

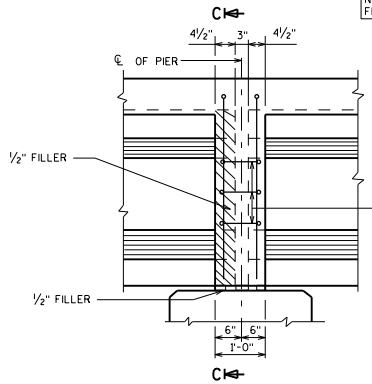

PILASTER DETAIL AT PIERS

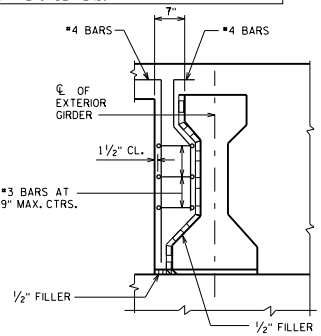

SECTION C-C

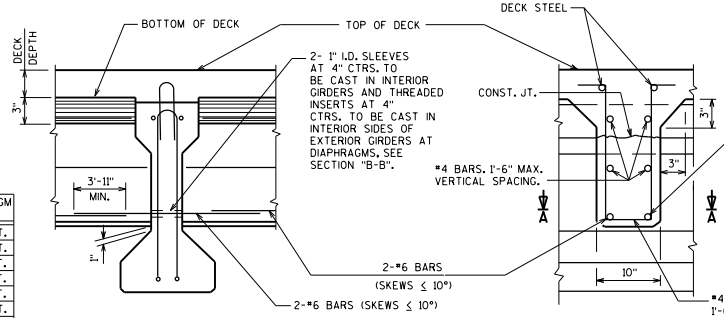

GIRDER DEPTH	DIAPHRAGM WEIGHT
28"	207#/FT.
36"	270#/FT.
36W"	259#/FT.
45"	338#/FT.
45W"	353#/FT.
54"	405#/FT.
54W"	446#/FT.
70"	634#/FT.
72W"	634#/FT.
82W"	738#/FT.

ELEVATION OF DIAPHRAGM

SECTION THRU DIAPHRAGM

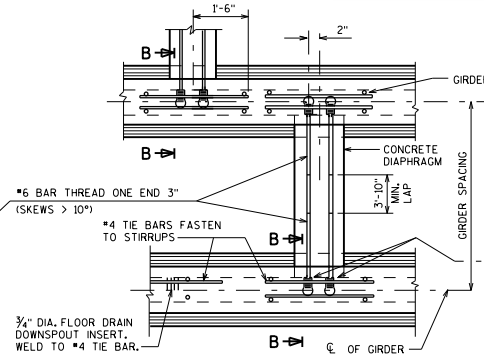

SECTION A-A
SKEW ANGLES > 10°

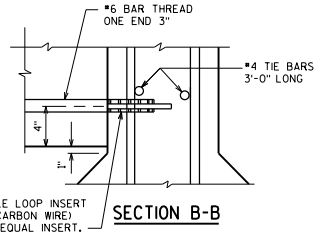

SECTION B-B

INTERMEDIATE CONCRETE DIAPHRAGM DETAILS

PRESTRESSED GIRDER DETAILS

BUREAU OF STRUCTURES

APPROVED: Bill Oliva DATE: 1-19

STANDARD 19.32

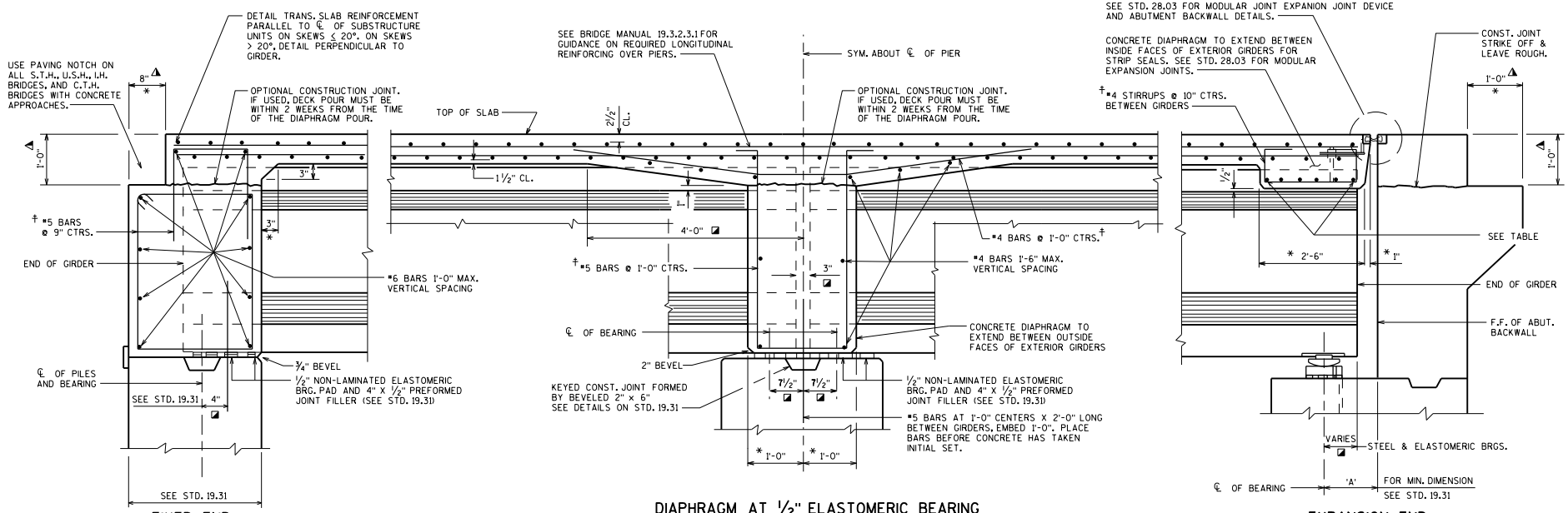

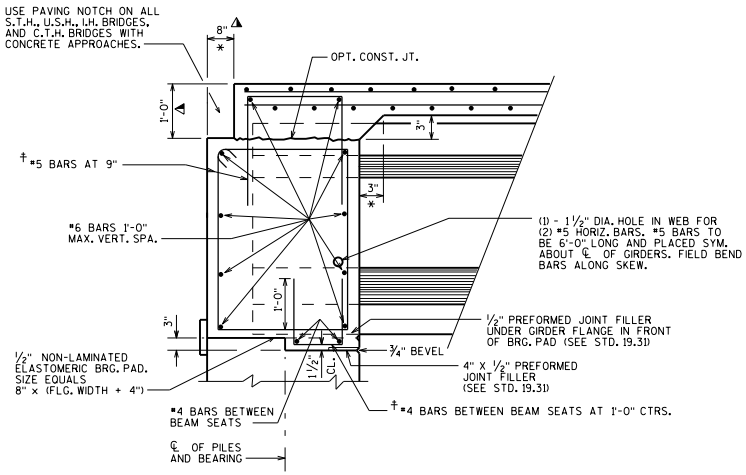

PRESTRESSED GIRDER WITH
SEMI-EXPANSION SEAT

EXPANSION END DIAPHRAGM STEEL

DIAPHRAGM LENGTH (ALONG SKEW) BETWEEN GIRDERS (℄ TO ℄ OF GRDS.)	NO. OF BARS & BAR SIZE	
	28"	36"
≤ 8'-4"	6 - #6	6 - #6
> 8'-4" ≤ 11'-4"	6 - #8	6 - #7
> 11'-4" ≤ 14'-9"		6 - #8

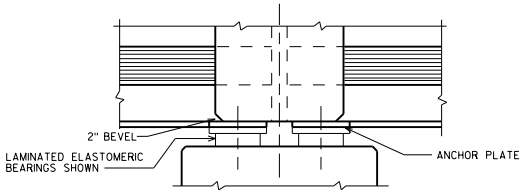

DIAPHRAGM AT STEEL OR ELASTOMERIC BEARINGS
SECTION THRU DIAPHRAGM AT PIER

FOR STEEL BEARINGS, FORM DIAPHRAGM APPROXIMATELY ½" ABOVE BEARING KEEPER BARS

DESIGNER NOTES

LAP LENGTHS FOR ALL BARS SHALL BE BASED ON A "CLASS C" TENSION LAP SPLICE, EXCEPT HORIZONTAL DIAPHRAGM BARS, IF SPLICED, CAN UTILIZE A "CLASS A" TENSION LAP SPLICE.

LEGEND

- ◪ DIMENSION IS TAKEN PARALLEL TO ℄ GIRDER.
- * DIMENSION IS TAKEN NORMAL TO ℄ SUBSTRUCTURE UNITS.
- ◭ PAVING NOTCH IS 1'-0" WIDE BY 1'-4" DEEP IF STRUCTUAL APPROACH SLAB (STD. 12.10) IS USED. SHOW NO. 9 STAINLESS STEEL BAR (STD. 12.12) FOR STRUCTURAL APPROACH SLAB ON THE SECTION THRU ABUT. OR ABUT. DIAPH.
- † BARS PLACED PARALLEL TO GIRDERS. SPACING PERPENDICULAR TO ℄ GIRDERS.

SEE STANDARD 19.34 FOR 36W" & 45W" PRESTESSED GIRDERS SLAB AND SUPERSTRUCTURE DETAILS

SEE STANDARD 19.35 FOR 54W", 72W" & 82W" PRESTRESSED GIRDERS SLAB & SUPERSTRUCTURE DETAILS.

28" & 36" PRESTRESSED GIRDERS SLAB & SUPERSTRUCTURE DETAILS

BUREAU OF STRUCTURES

APPROVED: Bill Oliva

DATE: 1-19

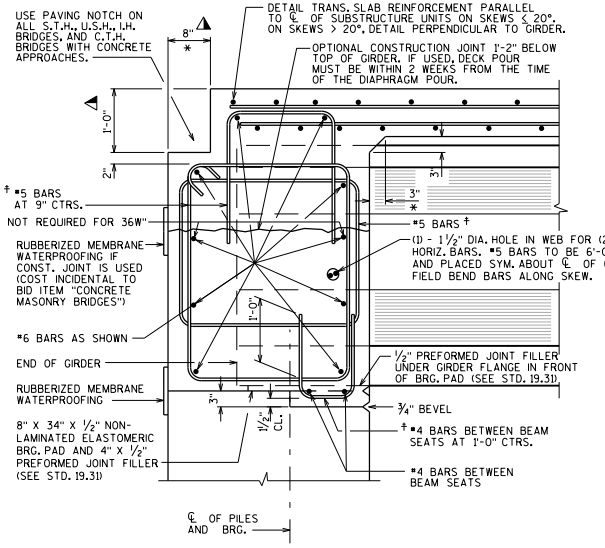

PRESTRESSED GIRDER WITH SEMI-EXPANSION SEAT

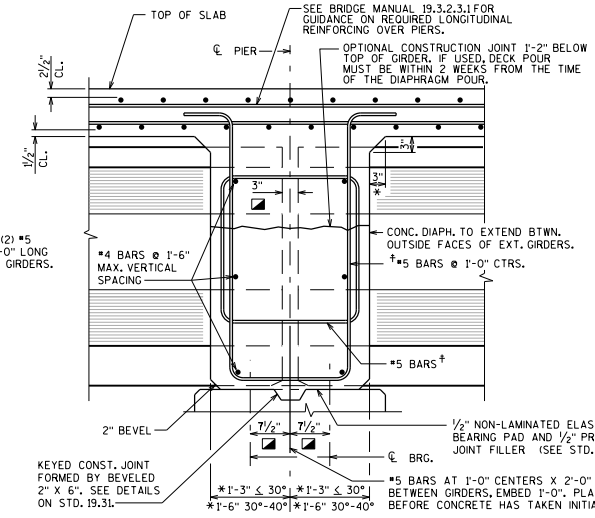

DIAPHRAGM AT ½" ELASTOMERIC BEARING

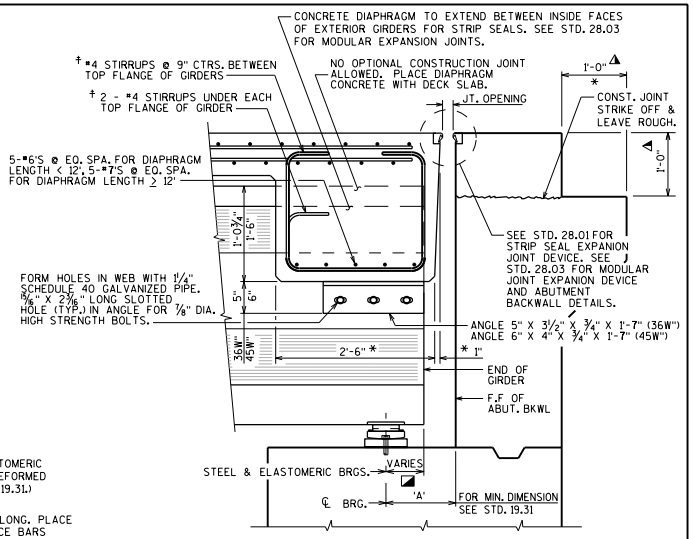

EXPANSION END

0° SKEW SHOWN (NON 0° SKEW SHOWN IN TOP VIEW)

LEGEND

- ◪ DIMENSION IS TAKEN PARALLEL TO ℄ GIRDER.
- * DIMENSION IS TAKEN NORMAL TO ℄ SUBSTRUCTURE UNITS.
- ◭ PAVING NOTCH IS 1'-0" WIDE BY 1'-4" DEEP IF STRUCTURAL APPROACH SLAB (STD. 12.10) IS USED. SHOW NO. 9 STAINLESS STEEL BAR (STD. 12.12) FOR STRUCTURAL APPROACH SLAB ON THE SECTION THRU ABUT. OR ABUT. DIAPH.
- † BARS PLACED PARALLEL TO GIRDERS. SPACING PERPENDICULAR TO ℄ GIRDERS.

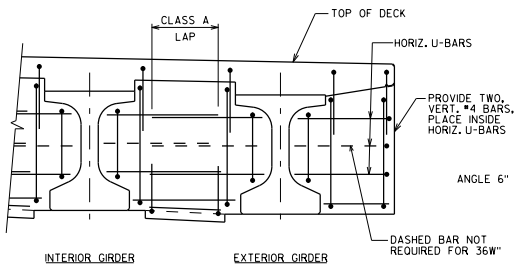

PART TRANSVERSE SECTION AT DIAPHRAGM SEMI EXPANSION END

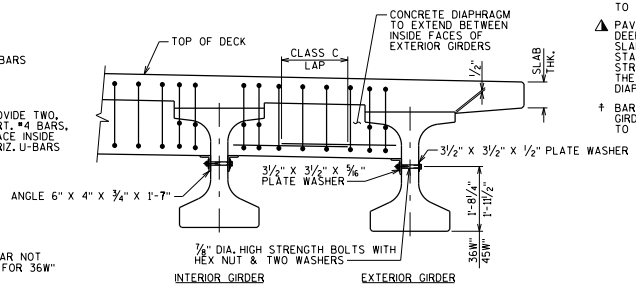

PART TRANSVERSE SECTION AT DIAPHRAGM EXPANSION END

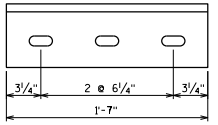

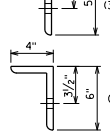

ANGLE

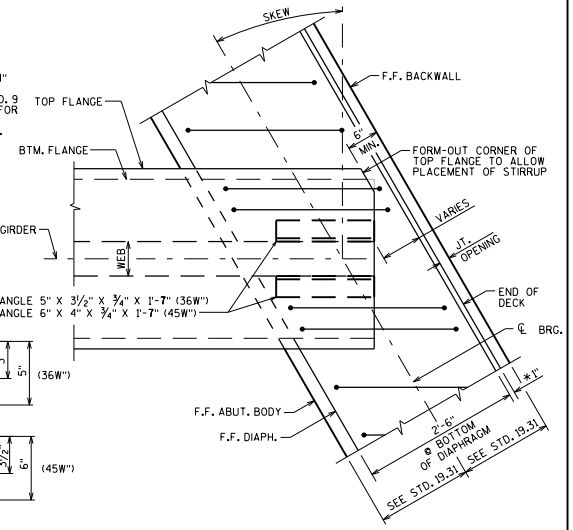

TOP VIEW OF DIAPHRAGM (EXPANSION END)

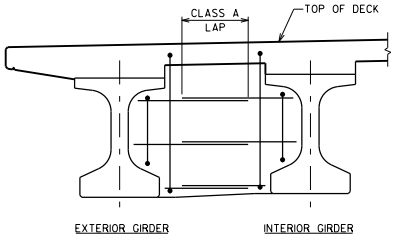

PART TRANSVERSE SECTION AT DIAPHRAGM PIER

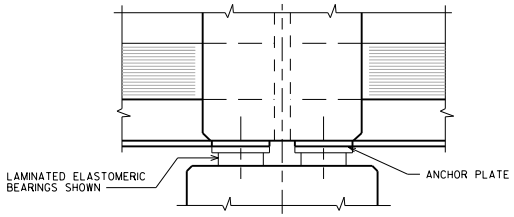

DIAPHRAGM AT STEEL OR ELASTOMERIC BEARINGS SECTION THRU DIAPHRAGM AT PIER

FOR STEEL BEARINGS, FORM DIAPHRAGM APPROXIMATELY ½" ABOVE BEARING KEEPER BARS

NOTES

ALL DIAPHRAGM SUPPORT HARDWARE SHALL BE INCIDENTAL TO "CONCRETE MASONRY BRIDGES".

DIAPHRAGM SUPPORT ANGLES SHALL BE ASTM A709 GRADE 36.

ALL DIAPHRAGM SUPPORT HARDWARE INCLUDING BOLTS, NUTS AND WASHERS SHALL BE GALVANIZED AFTER FABRICATION.

STEEL DIAPHRAGM SUPPORT ANGLE TO CONCRETE WEB CONNECTION SHALL BE SNUG-TIGHT PLUS ¼ TURN. HIGH STRENGTH BOLTS FOR WEB CONNECTION SHALL MEET THE REQUIREMENTS FOR ASTM A325 OR ASTM A449.

DESIGNER NOTE

LAP LENGTHS FOR DIAPHRAGM REINFORCEMENT SHALL BE BASED ON A CLASS "C" TENSION LAP SPLICE, UNLESS OTHERWISE NOTED.

PRESTRESSED 36W" & 45W" GIRDER SLAB & SUPERSTRUCTURE DETAILS

BUREAU OF STRUCTURES

APPROVED: Bill Oliva

DATE: 1-19

STANDARD 19.34

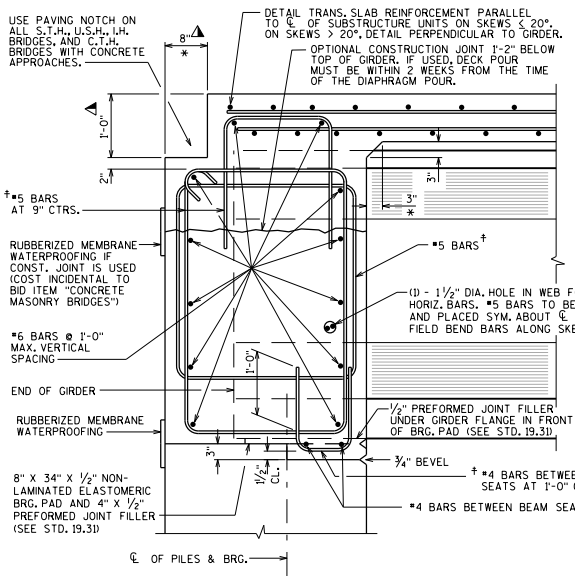

PRESTRESSED GIRDER WITH SEMI-EXPANSION SEAT

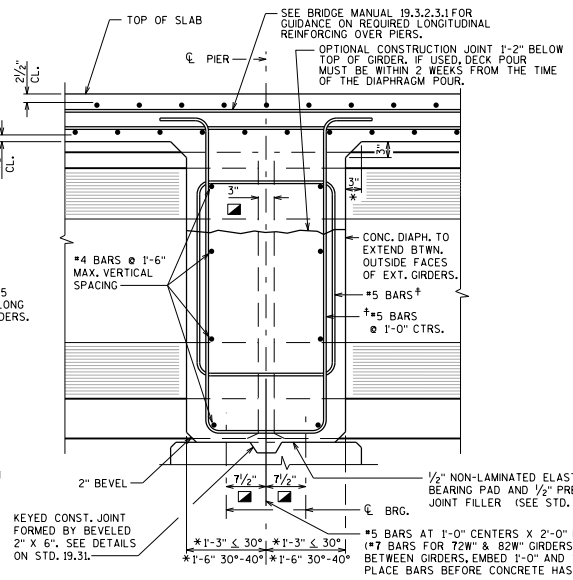

DIAPHRAGM AT ½" ELASTOMERIC BEARING

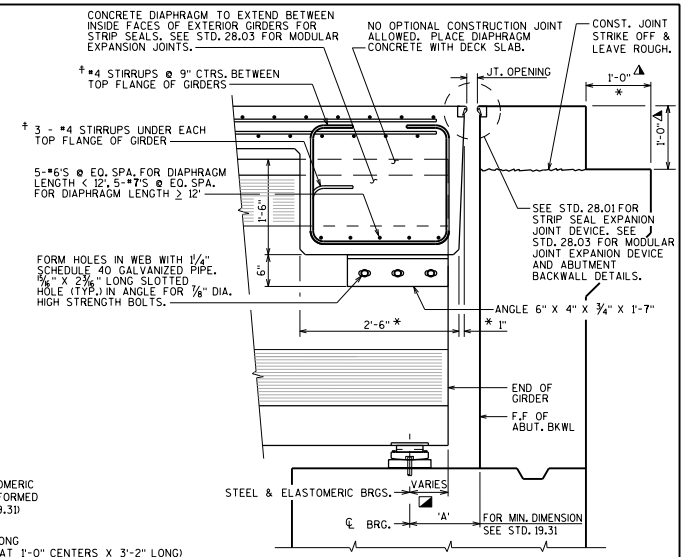

EXPANSION END

0° SKEW SHOWN (NON 0° SKEW SHOWN IN TOP VIEW)

LEGEND

- ◪ DIMENSION IS TAKEN PARALLEL TO ℄ GIRDER.
- * DIMENSION IS TAKEN NORMAL TO ℄ SUBSTRUCTURE UNITS.
- ⚠ PAVING NOTCH IS 1'-0" WIDE BY 1'-4" DEEP IF STRUCTURAL APPROACH SLAB (STD. 12.10) IS USED. SHOW NO. 9 STAINLESS STEEL BAR (STD. 12.12) FOR STRUCTURAL APPROACH SLAB ON THE SECTION THRU ABUT. OR ABUT. DIAPH.
- † BARS PLACED PARALLEL TO GIRDERS. SPACING PERPENDICULAR TO ℄ GIRDERS.

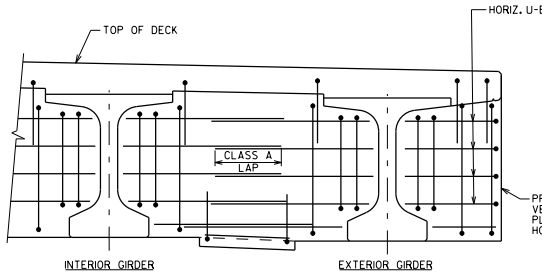

PART TRANSVERSE SECTION AT DIAPHRAGM SEMI EXPANSION END

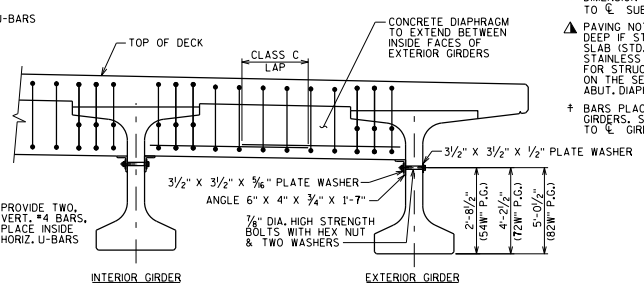

PART TRANSVERSE SECTION AT DIAPHRAGM EXPANSION END

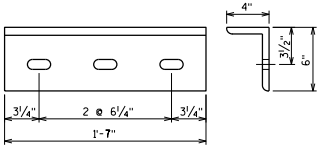

ANGLE

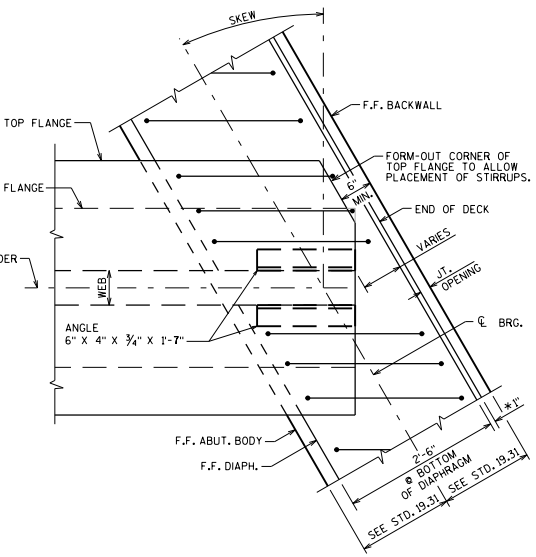

TOP VIEW OF DIAPHRAGM (EXPANSION END)

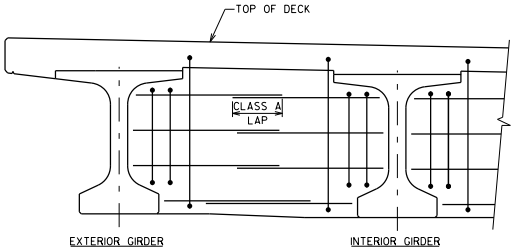

PART TRANSVERSE SECTION AT DIAPHRAGM PIER

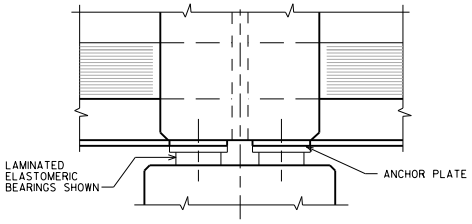

DIAPHRAGM AT STEEL OR ELASTOMERIC BEARINGS SECTION THRU DIAPHRAGM AT PIER

FOR STEEL BEARINGS, FORM DIAPHRAGM APPROXIMATELY ½" ABOVE BEARING KEEPER BARS

NOTES

ALL DIAPHRAGM SUPPORT HARDWARE SHALL BE INCIDENTAL TO "CONCRETE MASONRY BRIDGES".

DIAPHRAGM SUPPORT ANGLES SHALL BE ASTM A709 GRADE 36.

ALL DIAPHRAGM SUPPORT HARDWARE INCLUDING BOLTS, NUTS AND WASHERS SHALL BE GALVANIZED AFTER FABRICATION.

STEEL DIAPHRAGM SUPPORT ANGLE TO CONCRETE WEB CONNECTION SHALL BE SNUG-TIGHT PLUS ¼ TURN. HIGH STRENGTH BOLTS FOR WEB CONNECTION SHALL MEET THE REQUIREMENTS FOR ASTM A325 OR ASTM A449.

DESIGNER NOTES

LAP LENGTHS FOR DIAPHRAGM REINFORCEMENT SHALL BE BASED ON A CLASS "C" TENSION LAP SPLICE, UNLESS OTHERWISE NOTED.

PRESTRESSED 54W", 72W" & 82W" GIRDER SLAB & SUPERSTRUCTURE DETAILS

WISCONSIN DEPARTMENT OF TRANSPORTATION
BUREAU OF STRUCTURES

APPROVED: Bill Oliva

DATE: 1-19

STANDARD 19.35

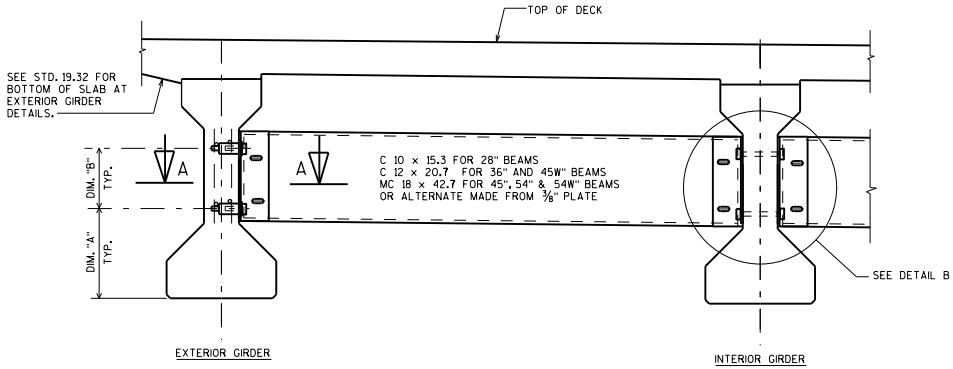

PART TRANSVERSE SECTION AT DIAPHRAGM

TABLE

GIRDER HEIGHT	DIM. "A"	DIM. "B"	DIM. "L"	* DIM. "X"
28"	1'-0 7/8"	5 7/8"	9 1/2"	2 1/4"
36"	1'-2 7/8"	9 7/8"	1'-1 1/2"	3 1/4"
45"	1'-5 3/8"	1'-1 7/8"	1'-5 1/2"	2 1/4"
45W"	1'-9 1/8"	8 7/8"	1'-0 1/2"	2 3/4"
54"	1'-7 7/8"	1'-5 7/8"	1'-9 1/2"	4 1/4"
54W"	1'-9 1/8"	1'-5 7/8"	1'-9 1/2"	4 1/4"

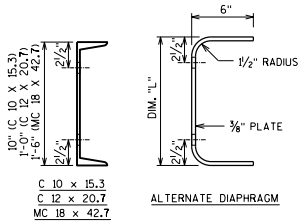

SECTION THRU DIAPHRAGM

NOTES

ALL DIAPHRAGM MATERIAL NOT EMBEDDED IN THE CONCRETE GIRDER SHALL BE PAID FOR AT THE UNIT PRICE BID FOR "STEEL DIAPHRAGMS B-_-_", EACH.

EACH DIAPHRAGM BETWEEN GIRDERS SHALL CONSTITUTE ONE UNIT.

ALL DIAPHRAGM STRUCTURAL STEEL SHALL BE ASTM A709 GRADE 36.

ALL DIAPHRAGM MATERIAL INCLUDING BOLTS, NUTS AND WASHERS SHALL BE GALVANIZED AFTER FABRICATION.

STEEL DIAPHRAGM TO CONCRETE WEB CONNECTION SHALL BE SNUG-TIGHT PLUS 1/4 TURN, UNLESS NOTED OTHERWISE. HIGH STRENGTH BOLTS FOR WEB CONNECTION SHALL MEET THE REQUIREMENTS FOR ASTM A325 OR ASTM A449.

DESIGNER NOTES

FOR SPANS EQUAL TO OR LESS THAN 80'-0", PLACE ONE DIAPHRAGM AT MID-LENGTH OF GIRDER. FOR SPANS OVER 80'-0", PLACE AT 1/3 AND 2/3 POINTS.

ON THE PLANS, SHOW LOCATION OF INSERTS/HOLES FOR DIAPHRAGM TO WEB CONNECTION, NOT ONLY FROM THE BOTTOM OF THE GIRDER (DIM "A" AND "B"), BUT ALSO FROM THE ENDS OF EACH GIRDER.

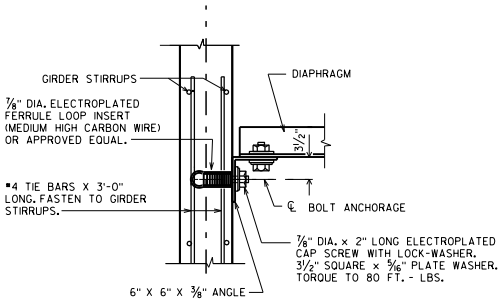

SECT. A-A

(FOR EXTERIOR ATTACHMENT)

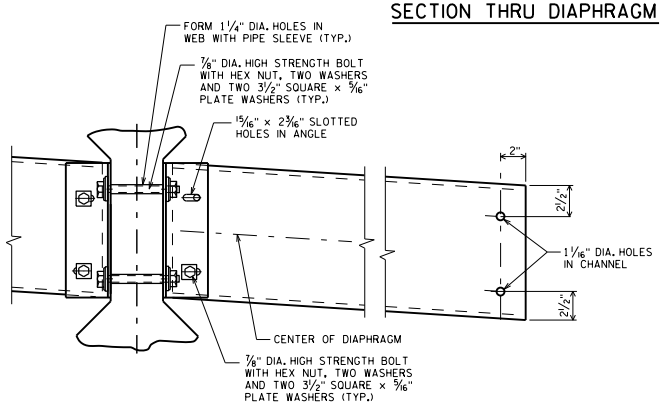

DETAIL B

(FOR CONTINUOUS LINE OF DIAPHRAGMS)

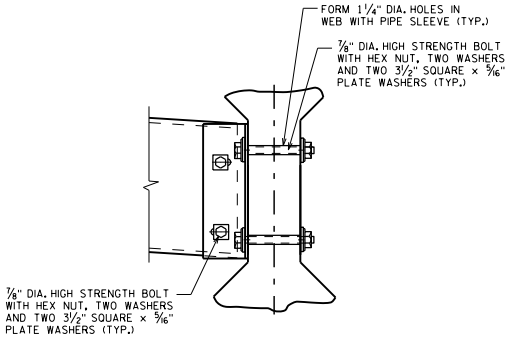

SECTION AT INTERIOR GIRDERS THRU DIAPHRAGM FOR SKEW ANGLES > 10°

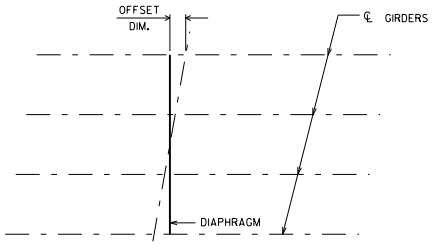

PLAN FOR SKEW ANGLES ≤ 10°

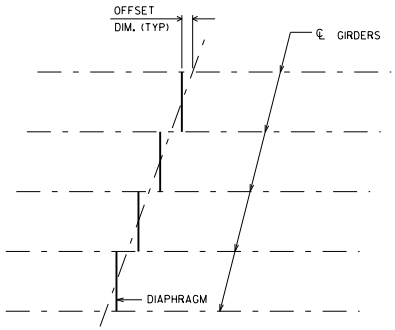

PLAN FOR SKEW ANGLES > 10°

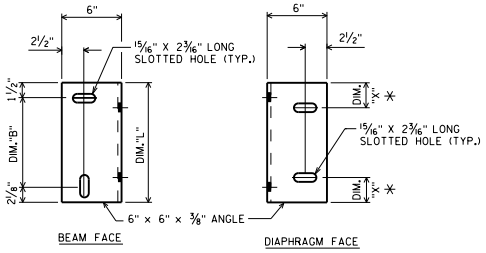

DIAPHRAGM SUPPORT

* 2 1/2" FOR ALTERNATE PLATE DIAPHRAGM

INTERM. STEEL DIAPHS. FOR 28", 36", 45", 45W" 54" & 54W" PRESTRESSED GIRDERS

BUREAU OF STRUCTURES

APPROVED: Bill Oliva

DATE: 7-19

STANDARD 19.36

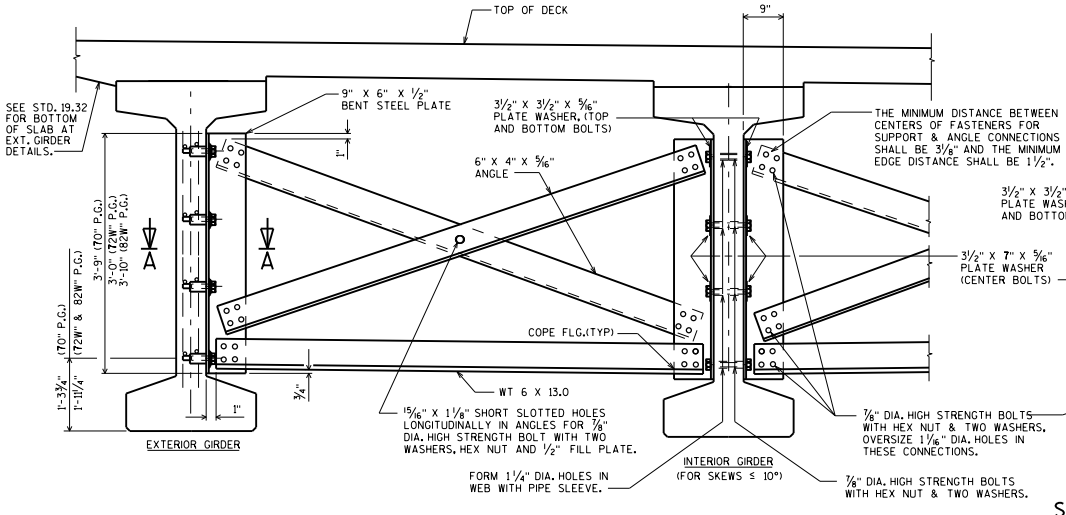

PART TRANSVERSE SECTION AT DIAPHRAGM

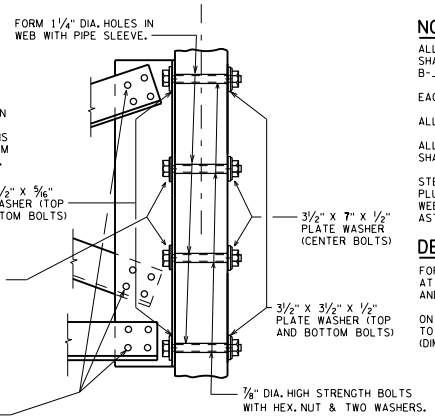

SECTION AT INTERIOR GIRDERS THRU DIAPHRAGM FOR SKEW ANGLES > 10°

NOTES

ALL DIAPHRAGM MATERIAL NOT EMBEDDED IN THE CONCRETE GIRDER SHALL BE PAID FOR AT THE UNIT PRICE BID FOR "STEEL DIAPHRAGMS B-_-_-", EACH.

EACH DIAPHRAGM BETWEEN GIRDERS SHALL CONSTITUTE ONE UNIT.

ALL DIAPHRAGM STRUCTURAL STEEL SHALL BE ASTM A709 GRADE 36.

ALL DIAPHRAGM MATERIAL INCLUDING BOLTS, NUTS AND WASHERS SHALL BE GALVANIZED AFTER FABRICATION.

STEEL DIAPHRAGM TO CONCRETE WEB CONNECTION SHALL BE SNUG-TIGHT PLUS 1/4 TURN, UNLESS NOTED OTHERWISE. HIGH STRENGTH BOLTS FOR WEB CONNECTION SHALL MEET THE REQUIREMENTS FOR ASTM A325 OR ASTM A449.

DESIGNER NOTES

FOR SPANS EQUAL TO OR LESS THAN 80'-0", PLACE ONE DIAPHRAGM AT MID-LENGTH OF GIRDER. FOR SPANS OVER 80'-0", PLACE AT 1/3 AND 2/3 POINTS.

ON THE PLANS, SHOW LOCATION OF INSERTS/HOLES FOR DIAPHRAGM TO WEB CONNECTION, NOT ONLY FROM THE BOTTOM OF THE GIRDER (DIM "A" AND "B"), BUT ALSO FROM THE ENDS OF EACH GIRDER.

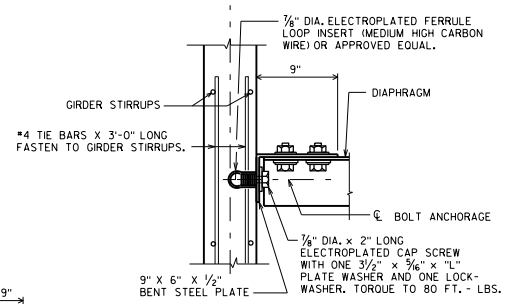

SECT. A-A

(FOR EXTERIOR ATTACHMENT)

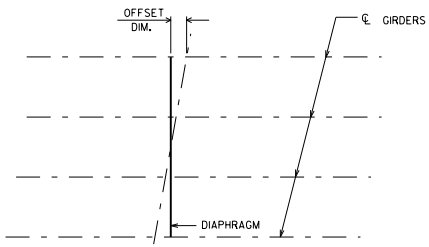

PLAN FOR SKEW ANGLES ≤ 10°

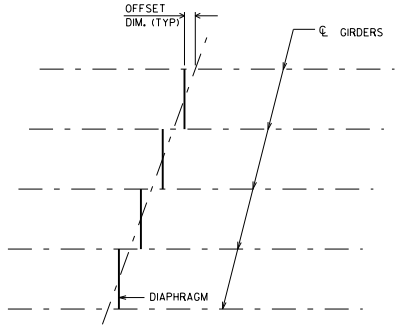

PLAN FOR SKEW ANGLES > 10°

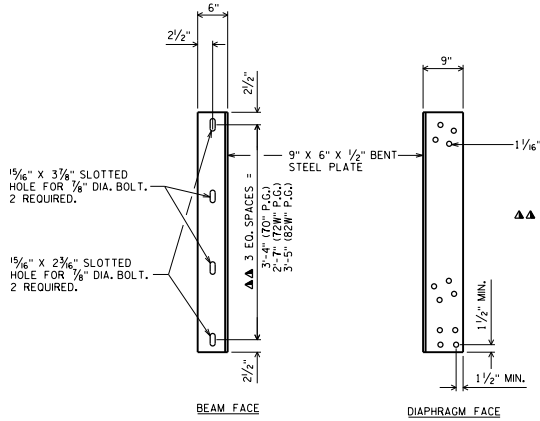

▲▲ BOLT HOLES SHALL BE SPACED SO AS TO MISS PRESTRESSED STRANDS IN CONCRETE BEAMS.

"L" = 3 1/2" ; TOP & BOTTOM BOLTS

"L" = 7" ; CENTER BOLTS

DIAPHRAGM SUPPORT

INTERMEDIATE STEEL DIAPHRAGMS FOR 70", 72W" & 82W" PRESTRESSED GIRDERS

BUREAU OF STRUCTURES

WISCONSIN DEPARTMENT OF TRANSPORTATION

APPROVED: Bill Oliva

DATE: 7-17

STANDARD 19.37

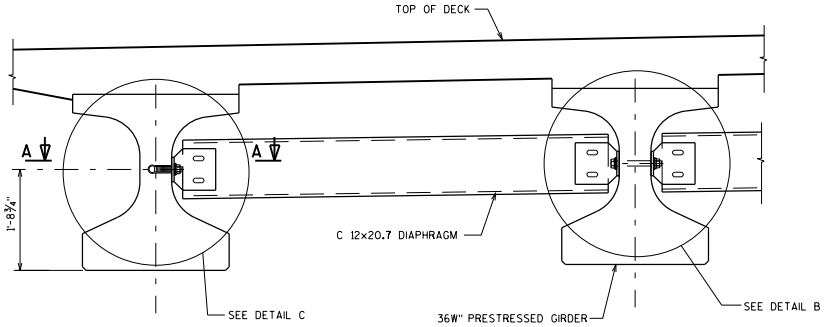

EXTERIOR GIRDER

INTERIOR GIRDER

PART TRANSVERSE SECTION AT DIAPHRAGM

NOTES

ALL DIAPHRAGM MATERIAL NOT EMBEDDED IN THE CONCRETE GIRDER SHALL BE PAID FOR AT THE UNIT PRICE BID FOR "STEEL DIAPHRAGMS B-_-_-_". EACH.

EACH DIAPHRAGM BETWEEN GIRDERS SHALL CONSTITUTE ONE UNIT.

ALL DIAPHRAGM STRUCTURAL STEEL SHALL BE ASTM A709 GRADE 36.

ALL DIAPHRAGM MATERIAL INCLUDING BOLTS, NUTS AND WASHERS SHALL BE GALVANIZED AFTER FABRICATION.

STEEL DIAPHRAGM TO CONCRETE WEB CONNECTION SHALL BE SNUG-TIGHT PLUS ¼ TURN, UNLESS NOTED OTHERWISE. HIGH STRENGTH BOLTS FOR WEB CONNECTION SHALL MEET THE REQUIREMENTS FORASTM A325 OR ASTM A449.

DESIGNER NOTES

FOR SPANS EQUAL TO OR LESS THAN 80'-0", PLACE ONE DIAPHRAGM AT MID-LENGTH OF GIRDER. FOR SPANS OVER 80'-0", PLACE AT 1/3 AND 2/3 POINTS.

ON THE PLANS, SHOW LOCATION OF INSERTS/HOLES FOR DIAPHRAGM TO WEB CONNECTION, NOT ONLY FROM THE BOTTOM OF THE GIRDER (DIM "A" AND "B"), BUT ALSO FROM THE ENDS OF EACH GIRDER.

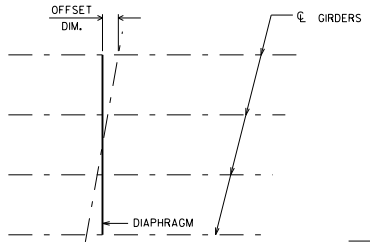

PLAN FOR SKEW ANGLES ≤ 10°

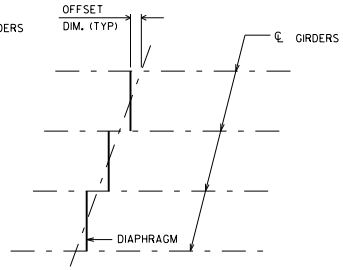

PLAN FOR SKEW ANGLES > 10°

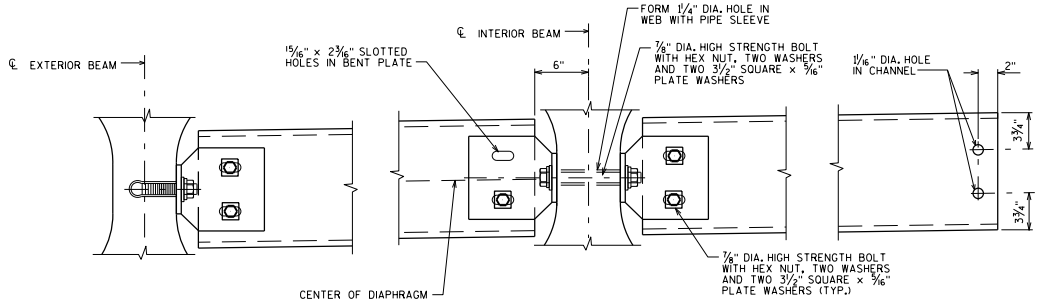

DETAIL C

DETAIL B

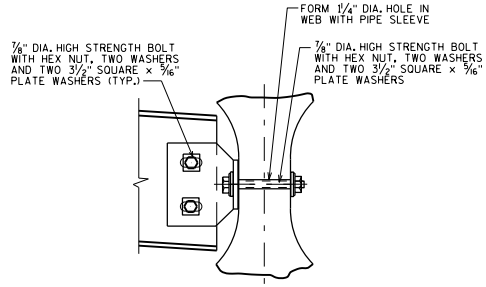

SECTION AT INTERIOR GIRDERS THRU DIAPHRAGM FOR SKEW ANGLES > 10°

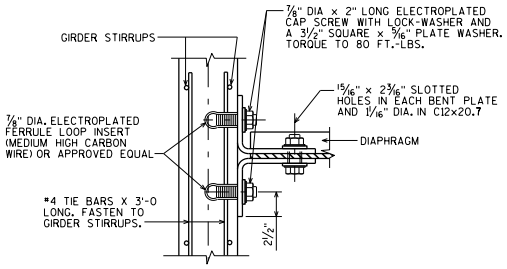

SECTION A-A

(FOR EXTERIOR ATTACHMENT)

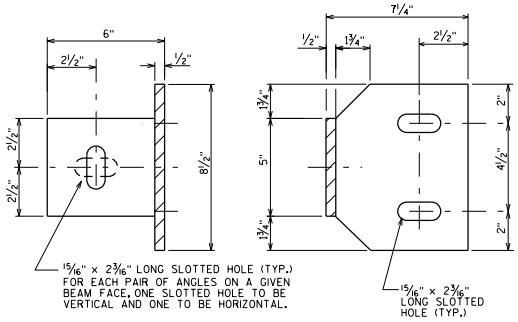

BEAM FACE

DIAPHRAGM FACE

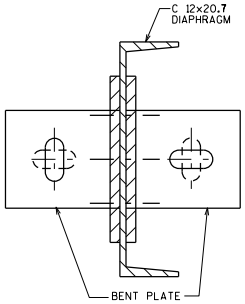

ATTACHMENT TO CHANNEL

INTERM. STEEL DIAPHS. FOR 36W" PRESTRESSED GIRDERS

BUREAU OF STRUCTURES

APPROVED: Bill Oliva

DATE: 7-19

STANDARD 19.38

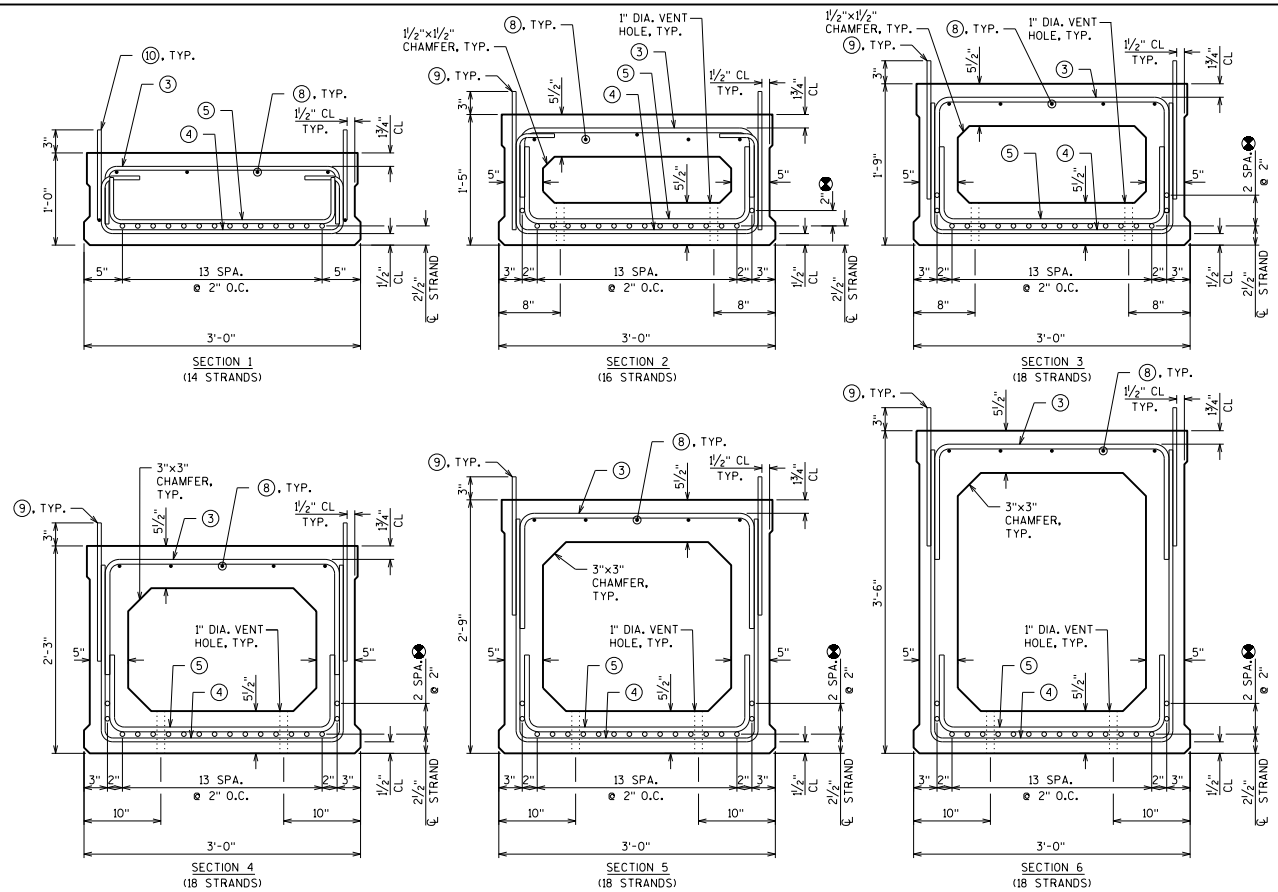

3'-0" SECTIONS

REBAR DIMENSION

SECT. DEPTH	SECT. NO.	"A"	"B"	"C"
1'-0"	1	7½"	7½"	6"
1'-5"	2	9"	1'-1"	10"
1'-9"	3	1'-3"	1'-5"	1'-2"
2'-3"	4	1'-3"	1'-11"	1'-8"
2'-9"	5	1'-3"	2'-5"	2'-2"
3'-6"	6	1'-3"	3'-2"	2'-11"

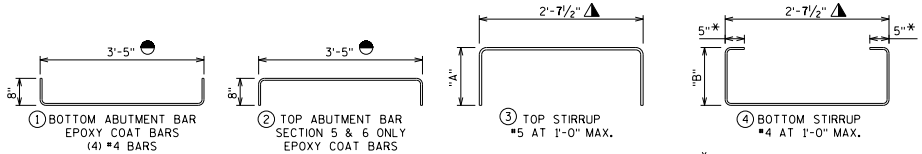

① BOTTOM ABUTMENT BAR
EPOXY COAT BARS
(4) #4 BARS

② TOP ABUTMENT BAR
SECTION 5 & 6 ONLY
EPOXY COAT BARS
(4) #4 BARS

③ TOP STIRRUP
#5 AT 1'-0" MAX.

④ BOTTOM STIRRUP
#4 AT 1'-0" MAX.

*OMIT 90° BEND FOR SECTIONS 3-6

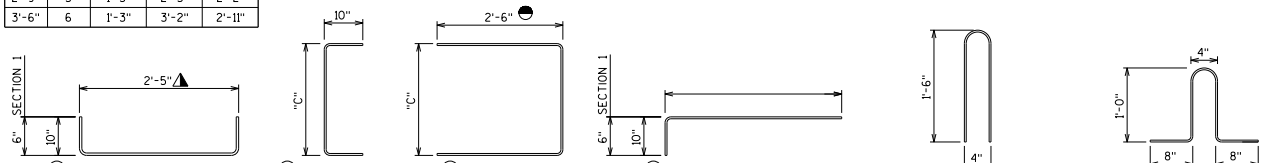

⑤ END BLOCK BOTTOM STIRRUP
#4 AND #5 BARS
SEE ELEVATION FOR SPACING

⑥ DUCT STIRRUP
#4 AT 9" MAX.
(5) EACH GIRDER END
(10) EACH GIRDER DUCT

⑦ DUCT STIRRUP
#4 AT 9" MAX.
(5) EACH GIRDER END

⑧ LONGITUDINAL BAR
(4) #4 BARS MIN. FOR SECTION 1
(5) #4 BARS MIN. FOR SECTIONS 2-6

⑨ SHEAR CONNECTOR
TIE ONE LEG OF BAR TO ③
EPOXY COAT BARS
#4 AT 2'-0" MAX.
(FOR SECTIONS 2-6) ◪

⑩ SHEAR CONNECTOR
TIE ONE LEG OF BAR TO ③
EPOXY COAT BARS
#4 AT 2'-0" MAX.
(FOR SECTION 1) ◪

NOTES

THE CONCRETE MIX FOR THE PRESTRESSED BOX GIRDERS SHALL CONFORM TO SECTION 503.2.2 OF THE STANDARD SPECIFICATIONS.

AN APPROVED CONCRETE SEALER SHALL BE APPLIED TO THE BOTTOM OF THE GIRDERS AND THE EXTERIOR FACE OF EXTERIOR GIRDERS. DO NOT APPLY CONCRETE SEALER OR EPOXY TO THE SHEAR KEY OR THE TOP OF GIRDERS.

STRANDS SHALL BE FLUSH WITH END OF GIRDER. FOR CONCRETE ABUTMENTS, END OF STRANDS SHALL BE COATED WITH NON-BITUMINOUS JOINT SEALER. FOR GRS ABUTMENTS, COAT THE GIRDER ENDS, EXPOSED STRAND ENDS, AND ALL NON-BONDING SURFACES WITHIN 2 FEET OF THE GIRDER ENDS WITH A NON-PIGMENTED EPOXY CONFORMING TO AASHTO M-235 TYPE III, GRADE 2, CLASS B OR C. THE EPOXY SHALL BE APPLIED AT LEAST 3 DAYS AFTER MOIST CURING HAS CEASED AND PRIOR TO THE APPLICATION OF THE SEALER.

VOIDS SHALL BE VENTED AND DRAINED BY CASTING (2)-1" DIA. TUBES AT EACH END OF VOID SEGMENT. LOCATE TUBES AT BOTTOM EDGES OF THE CORNER FILLETS, AVOID STRAND LOCATIONS.

FOUR WAY SLING MUST BE USED TO ENGAGE ALL 4 LIFTING DEVICES ON BOTH ENDS OF UNITS.

POST-TENSIONING OF THE TRANSVERSE TENDONS SHALL NOT BEGIN UNTIL THE GROUT BETWEEN THE PRECAST BOX GIRDERS HAS BEEN ALLOWED TO CURE FOR 48 HOURS AND GROUT HAS REACHED A COMPRESSIVE STRENGTH OF 3,000 PSI.

SEAL WASHER SHALL BE SPONGE NEOPRENE GASKET 3¼" MIN. THICK. STRESS POCKETS SHALL BE FILLED WITH CHLORIDE FREE NON-SHRINK GROUT AFTER POST-TENSIONING.

TRANSITION BETWEEN CHANGING SLOPES OF POST-TENSIONING DUCTS SHALL BE PROVIDED BY EITHER A CIRCULAR OR PARABOLIC CURVE WITH A MINIMUM LENGTH OF 3'-0".

DESIGNER NOTES

USE OF PRESTRESSED BOX GIRDERS IS SUBJECT TO PRIOR-APPROVAL BY THE BUREAU OF STRUCTURES. SEE 19.3.2.3.2 IN THE BRIDGE MANUAL FOR ADDITIONAL GUIDANCE.

THE MAXIMUM RECOMMENDED SKEW ANGLE OF THE STRUCTURE SHALL BE 30°.

BEAM SEATS SHALL BE SLOPED ALONG THE SUBSTRUCTURE UNITS TO ACCOUNT FOR THE CROSS SLOPE OR SUPERELEVATION ON THE DECK.

SLOPE BEAM SEATS PARALLEL TO GRADE LINE IF GRADE AT BRG. >1%. PLACE ELEVATIONS ON PLANS TO MEET THESE REQUIREMENTS.

STRANDS TO BE DESIGNED. MAXIMUM NUMBER OF STRANDS AND STRAND ARRANGEMENTS ARE SHOWN. STRANDS NOT TO BE DRAPED.

MULTI-SPAN STRUCTURES REQUIRE ANCHOR DOWELS AT THE PIERS, WHICH MAY REDUCE THE MAXIMUM NUMBER OF STRANDS AVAILABLE BY 2. (CURRENTLY NOT USED)

CONTACT THE BUREAU OF STRUCTURES FOR THE MOST CURRENT PRESTRESSED BOX GIRDER SPECIAL PROVISION.

SEE STANDARD 19.51 FOR SHEAR KEY RECESS DETAIL.

MATERIAL PROPERTIES

CONCRETE MASONRY BRIDGES	f'c = 4,000 PSI
BAR STEEL REINFORCEMENT, GRADE 60	fy = 60,000 PSI
PRESTRESSED BOX GIRDERS, CONCRETE MASONRY	f'c = 5,000 PSI
STRANDS - 0.5" OR 0.6" DIA. ULTIMATE TENSILE STRENGTH	fy = 270,000 PSI

PRE-TENSION

f'_s = 270,000 P.S.I

f_s = 0.75 x 270,000 = 202,500 P.S.I
for low relaxation strands

Pi PER 0.5" DIA. STRAND = 0.1531 X 202,500 = 31.00 KIPS

Pi PER 0.6" DIA. STRAND = 0.217 X 202,500 = 43.94 KIPS

LEGEND

◓ DIMENSION GIVEN FOR A POST-TENSIONING DUCT 1'-10" FROM END OF PRESTRESSED BOX GIRDER.

◭ DIMENSION GIVEN FOR STIRRUPS PERPENDICULAR TO THE PRESTRESSED BOX GIRDER LENGTH. ADJUST THE DIMENSION FOR STIRRUPS AT SKEWED PRESTRESSED BOX GIRDER ENDS.

⊗ SHOW SPACING FOR THESE STRANDS ONLY IF REQUIRED BY DESIGN.

◪ SUBSTITUTE ⑪ BAR ON EXTERIOR EDGE OF EXTERIOR GIRDERS. SEE STANDARD 19.56.

3'-0" PRESTRESSED BOX GIRDER SECTIONS

BUREAU OF STRUCTURES

APPROVED: Bill Oliva

DATE: 7-18

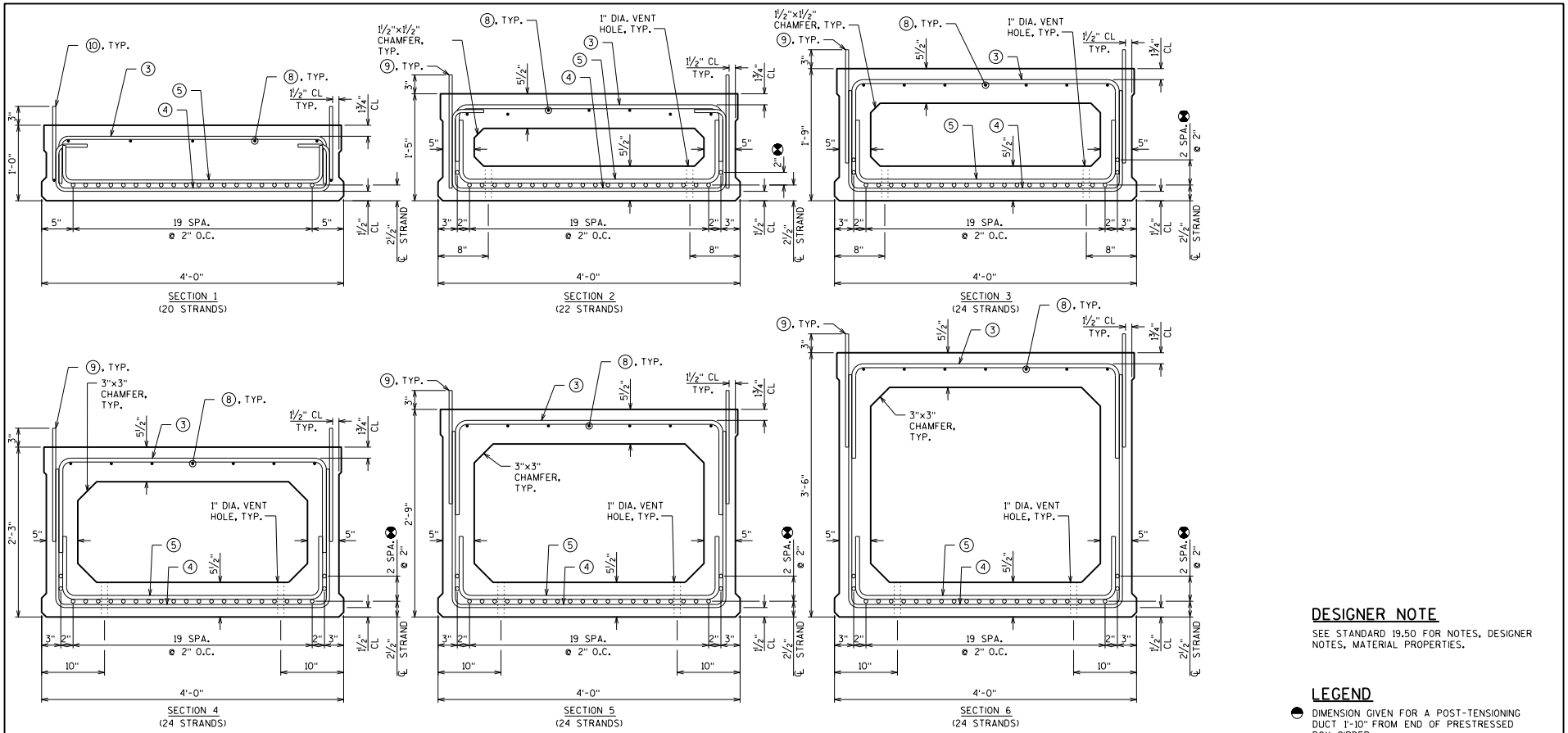

4'-0" SECTIONS

REBAR DIMENSION

SECT. DEPTH	SECT. NO.	"A"	"B"	"C"
1'-0"	1	7½"	7½"	6"
1'-5"	2	9"	1'-1"	10"
1'-9"	3	1'-3"	1'-5"	1'-2"
2'-3"	4	1'-3"	1'-11"	1'-8"
2'-9"	5	1'-3"	2'-5"	2'-2"
3'-6"	6	1'-3"	3'-2"	2'-11"

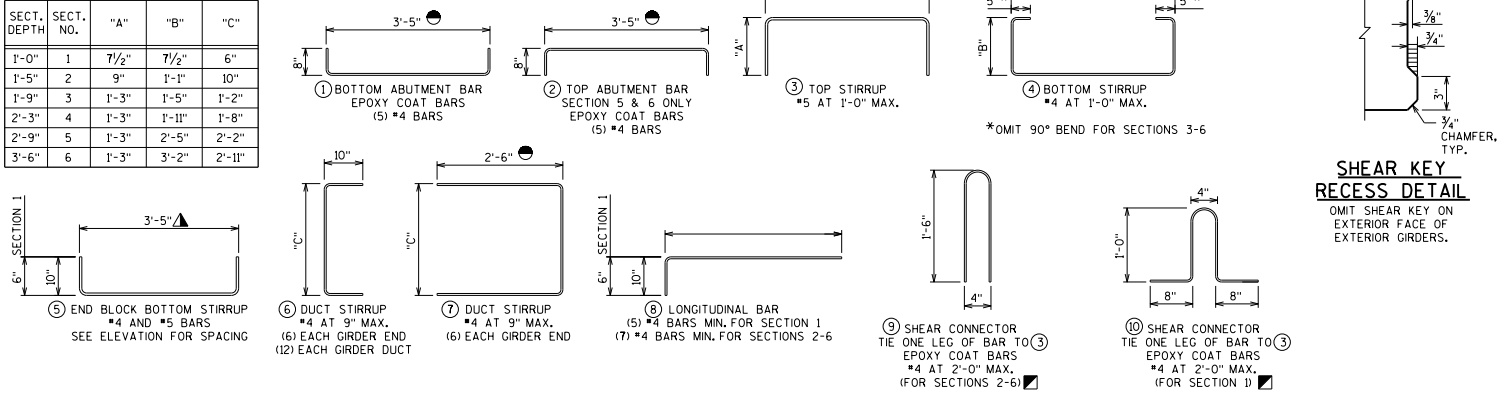

① BOTTOM ABUTMENT BAR
EPOXY COAT BARS
(5) #4 BARS

② TOP ABUTMENT BAR
SECTION 5 & 6 ONLY
EPOXY COAT BARS
(5) #4 BARS

③ TOP STIRRUP
#5 AT 1'-0" MAX.

④ BOTTOM STIRRUP
#4 AT 1'-0" MAX.

⑤ END BLOCK BOTTOM STIRRUP
#4 AND #5 BARS
SEE ELEVATION FOR SPACING

⑥ DUCT STIRRUP
#4 AT 9" MAX.
(6) EACH GIRDER END
(12) EACH GIRDER DUCT

⑦ DUCT STIRRUP
#4 AT 9" MAX.
(6) EACH GIRDER END

⑧ LONGITUDINAL BAR
(5) #4 BARS MIN. FOR SECTION 1
(7) #4 BARS MIN. FOR SECTIONS 2-6

⑨ SHEAR CONNECTOR
TIE ONE LEG OF BAR TO ③
EPOXY COAT BARS
#4 AT 2'-0" MAX.
(FOR SECTIONS 2-6) ◪

⑩ SHEAR CONNECTOR
TIE ONE LEG OF BAR TO ③
EPOXY COAT BARS
#4 AT 2'-0" MAX.
(FOR SECTION 1) ◪

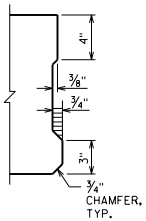

SHEAR KEY RECESS DETAIL

OMIT SHEAR KEY ON EXTERIOR FACE OF EXTERIOR GIRDERS.

DESIGNER NOTE

SEE STANDARD 19.50 FOR NOTES, DESIGNER NOTES, MATERIAL PROPERTIES.

LEGEND

◓ DIMENSION GIVEN FOR A POST-TENSIONING DUCT 1'-10" FROM END OF PRESTRESSED BOX GIRDER.

◭ DIMENSION GIVEN FOR STIRRUPS PERPENDICULAR TO THE PRESTRESSED BOX GIRDER LENGTH. ADJUST THE DIMENSION FOR STIRRUPS AT SKEWED PRESTRESSED BOX GIRDER ENDS.

⊗ SHOW SPACING FOR THESE STRANDS ONLY IF REQUIRED BY DESIGN.

◪ SUBSTITUTE ⑪ BAR ON EXTERIOR EDGE OF EXTERIOR GIRDERS. SEE STANDARD 19.56.

4'-0" PRESTRESSED BOX GIRDER SECTIONS

BUREAU OF STRUCTURES

APPROVED: Bill Oliva

DATE: 1-18

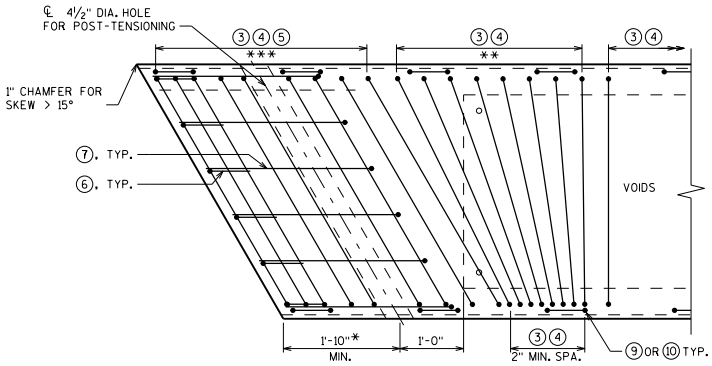

PART GIRDER PLAN WITH SKEW

①,② & #4 TRANSVERSE BARS NOT SHOWN FOR CLARITY

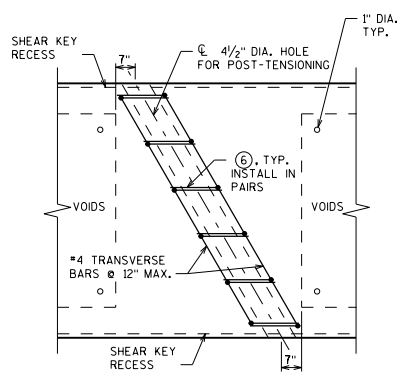

INTERIOR GIRDER DUCT PLAN

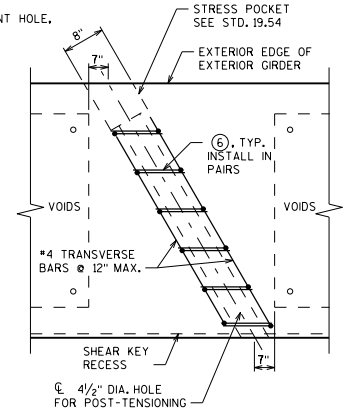

EXTERIOR GIRDER DUCT PLAN

LEGEND

☆ BARS NOT REQUIRED WHEN USED ON GRS ABUTMENTS.

◆ BARS PLACED PARALLEL TO GIRDERS. SPACING IS PERPENDICULAR TO THE ℄ OF THE GIRDERS.

* WHEN WINGS ARE PARALLEL TO ABUTMENT ℄, USE DIMENSIONS TO ALLOW FOR EASE OF POST-TENSIONING OPERATION.

** PLACE AT 5" MAX. SPACING UNTIL PERPENDICULAR TO THE ℄ OF THE GIRDER.

*** PLACE ALONG SKEW FROM END OF PRESTRESSED BOX GIRDER UNTIL ALL END BLOCK BOTTOM STIRRUP BARS, ⑤, ARE PLACED.

DESIGNER NOTES

FOR BAR BEND DETAILS, SEE STANDARD 19.50 AND STANDARD 19.51

FOR SKEWED STRUCTURES CAST END OF PRESTRESSED BOX GIRDER ALONG SKEW.

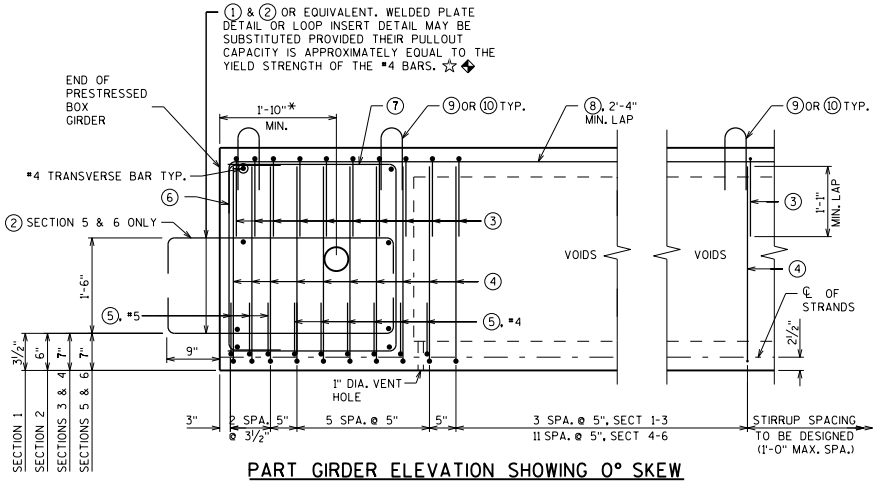

PART GIRDER ELEVATION SHOWING 0° SKEW

PLACE #4 TRANSVERSE BARS AS SHOWN ALONG SKEW

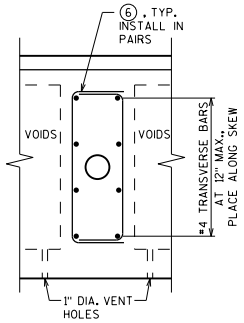

INTERIOR GIRDER DUCT ELEVATION

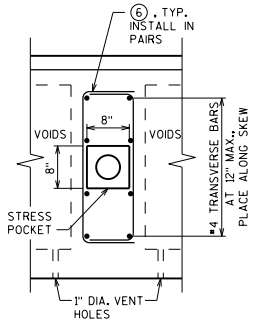

EXTERIOR GIRDER DUCT ELEVATION

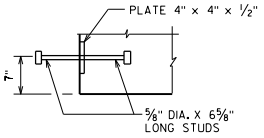

WELDED PLATE DETAIL

(EQUIVALENT TO ONE #4 BAR)

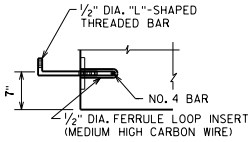

LOOP INSERT DETAIL

PRESTRESSED BOX GIRDER DETAILS 1

BUREAU OF STRUCTURES

APPROVED: Bill Oliva

DATE: 1-17

STANDARD 19.52

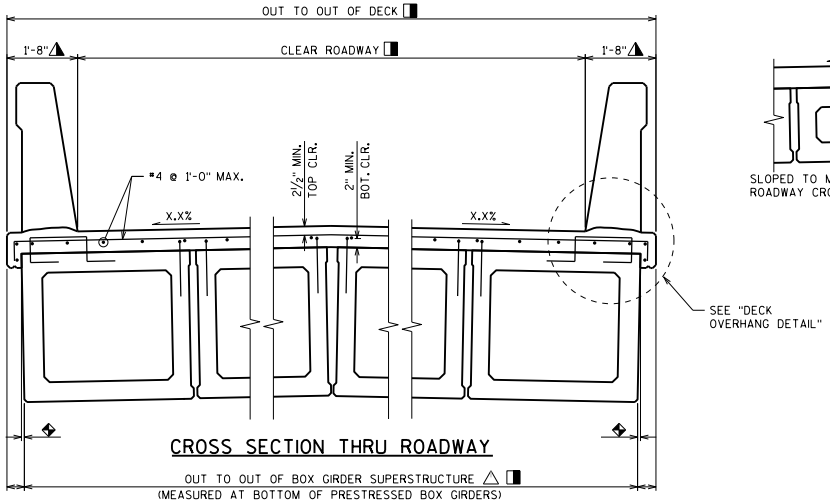

CROSS SECTION THRU ROADWAY

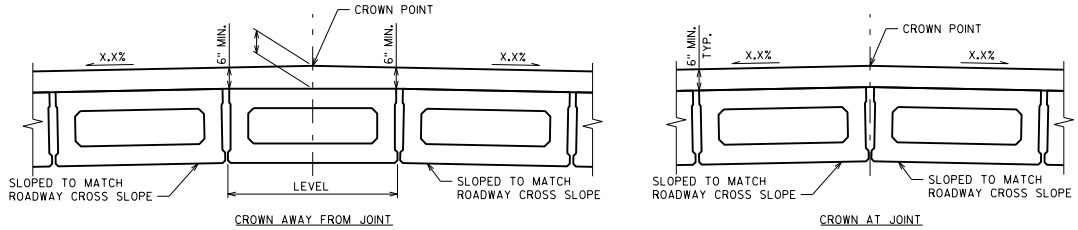

CROWN DETAIL AT LOCATION OF MIN. DECK THICKNESS

NUMBER OF SECTIONS

CLEAR ROADWAY	3'-0" SECTION	4'-0"* SECTION
26'-0"	10	7
30'-0"	11	8
36'-0"	13	10
40'-0"	14	11
44'-0"	16	12

* 4'-0" SECTIONS PREFERRED

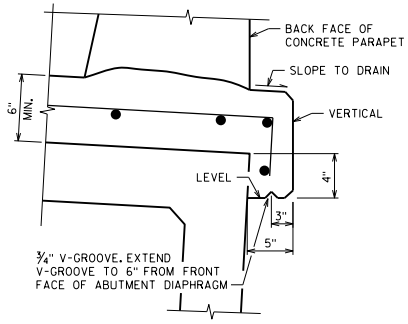

DECK OVERHANG DETAIL

SEE STANDARD 19.56 FOR ADDITIONAL DETAILS

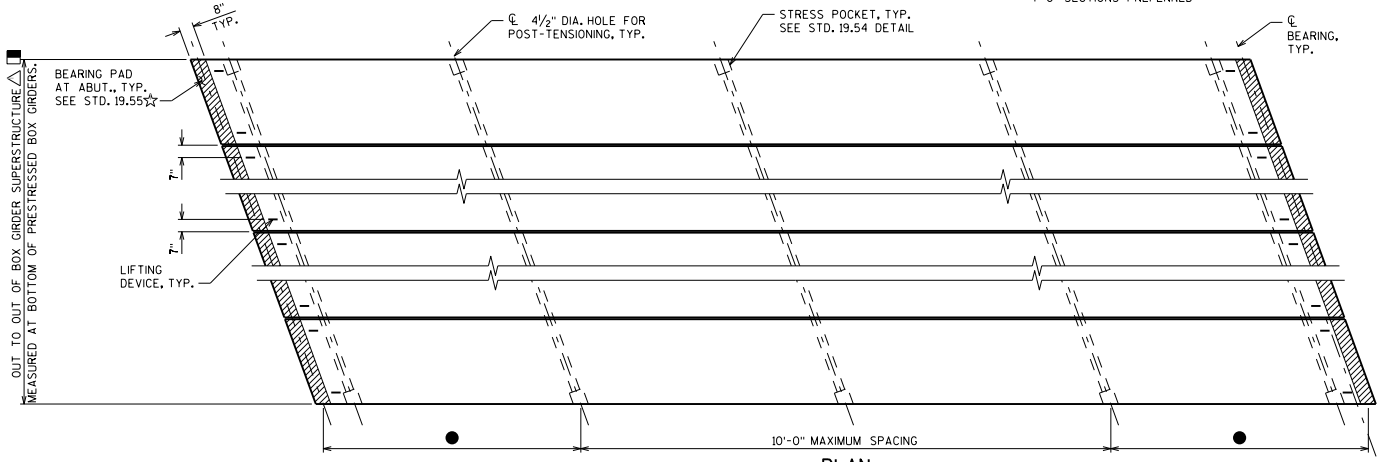

PLAN

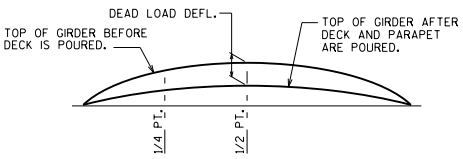

DEAD LOAD DEFLECTION DIAGRAM

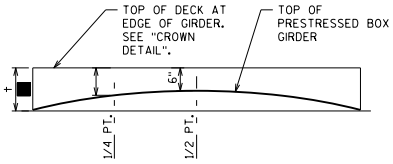

DECK THICKNESS DIAGRAM

DESIGNER NOTES

△ ACCOUNT FOR NUMBER OF PRESTRESSED BOX GIRDERS, NUMBER OF JOINTS (AT 1" NORMAL TO ℄ GIRDER), AND ROADWAY CROSS SLOPE.

◆ DIMENSION IS HORIZONTAL DISTANCE FROM TOP OF PRESTRESSED BOX GIRDER TO BOTTOM OF PRESTRESSED BOX GIRDER.

DECK THICKNESS DETERMINATION PROCEDURE IS BASED ON TANGENT PROFILE GRADE LINE. STRUCTURES WITH VERTICAL CURVE PROFILE GRADE LINES MAY REQUIRE ADDITIONAL INVESTIGATION.

NOTES

NOTE: AN AVERAGE DECK THICKNESS OF _____ WAS USED IN THE QUANTITY "CONCRETE MASONRY BRIDGES".

VARIATIONS TO THE GRADE LINE OVER ¼" MUST BE SUBMITTED BY THE FIELD ENGINEER TO THE STRUCTURES DESIGN SECTION FOR REVIEW.

LEGEND

☆ BEARING PAD NOT REQUIRED FOR GRS ABUTMENTS.

● ¼ SPAN FOR SPANS UP TO 80'-0".
⅕ SPAN FOR SPANS OVER 80'-0".

◨ DIMENSION ASSUMES 1" JOINT WIDTH. JOINT WIDTH DIMENSIONS MAY VARY DUE TO ±¼" JOINT TOLERANCES.

◭ MAY BE REDUCED TO 1'-7" TO MAINTAIN ROADWAY CLEAR WIDTH.

■ TO DETERMINE DECK THICKNESS AT GIRDER ENDS FOLLOW THIS PROCESS:

6" MIN. DECK SLAB THICKNESS
\+ FIELD MEASURED GIRDER CAMBER (AT MID SPAN)
\- DEADLOAD DEFLECTION (AT MIDSPAN)
= DECK THICKNESS, †

NOTE: PLAN DECK THICKNESS BASED ON THEORETICAL INITIAL CAMBER VALUE. ¼ PT. MAY BE INTERPOLATED. USE FIELD MEASURED GIRDER CAMBER FOR ACTUAL DECK THICKNESS. THE ¼ PT. IS INTERPOLATED BETWEEN DECK THICKNESS AT THE END OF DECK AND MIDSPAN.

** THE THEORETICAL INITIAL CAMBER VALUE AT THE TIME OF STRAND RELEASE AT MIDSPAN MULTIPLIED BY A FACTOR OF 1.4 TO ACCOUNT FOR CAMBER GROWTH FROM THE TIME OF STRAND RELEASE TO JOBSITE PLACEMENT.

SPAN	CAMBER (IN.) **
1	

THESE VALUES ARE NOT TO BE USED IN DETERMINING '†', USE FIELD MEASURED GIRDER CAMBER.

THESE VALUES ARE FOR INFORMATIONAL PURPOSES ONLY.

GIRDER DATA

SPAN	GIRDER	GIRDER LENGTH "L"	DEAD LOAD DEFL. (IN.)		CONC. STRGTH, f'c (PSI)	DIA. OF STRAND (IN.)	UNDRAPED PATTERN		
			¼ PT.	½ PT.			TOTAL NO. OF STRANDS	TOTAL INITIAL PRESTRESS FORCE (KIPS)	f'ci (PSI) *
1									

* MINIMUM CYLINDER STRENGTH OF CONCRETE @ TIME OF TRANSFER OF PRESTRESS FORCE.

PRESTRESSED BOX GIRDER DETAILS 2

BUREAU OF STRUCTURES

APPROVED: Bill Oliva

DATE: 7-18

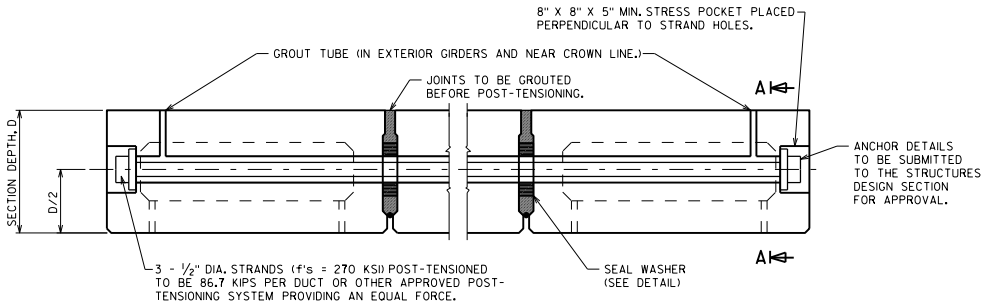

POST-TENSIONING DETAILS - ONE DUCT PER DIAPHRAGM

(SECTIONS 1 THROUGH 4)

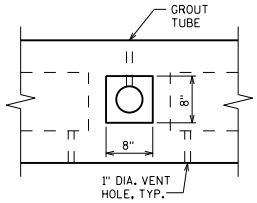

SECTION A-A

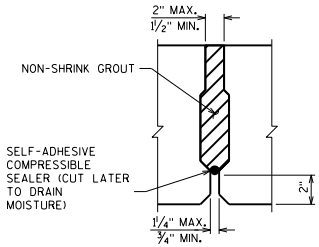

SHEAR KEY DETAIL

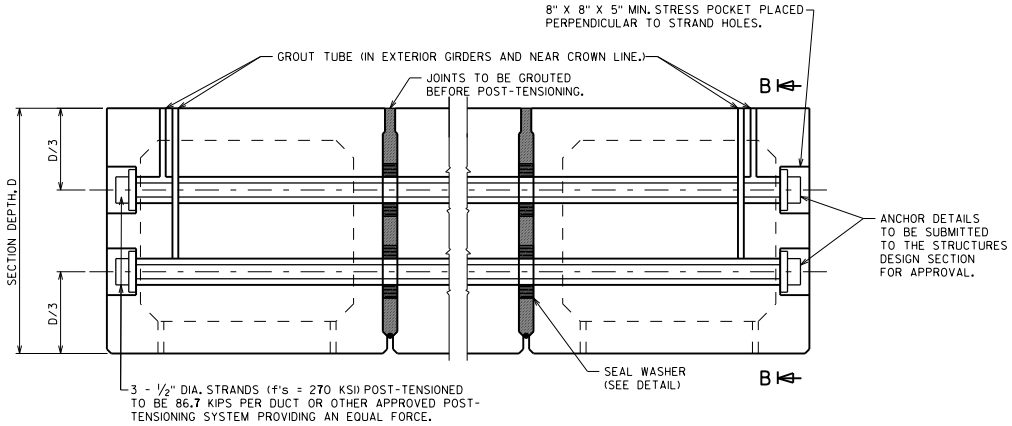

POST-TENSIONING DETAILS - TWO DUCTS PER DIAPHRAGM

(SECTIONS 5 AND 6)

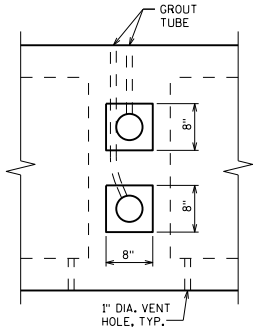

SECTION B-B

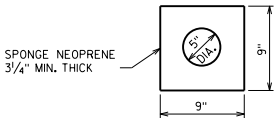

SEAL WASHER

(MAY ALSO BE ROUND)

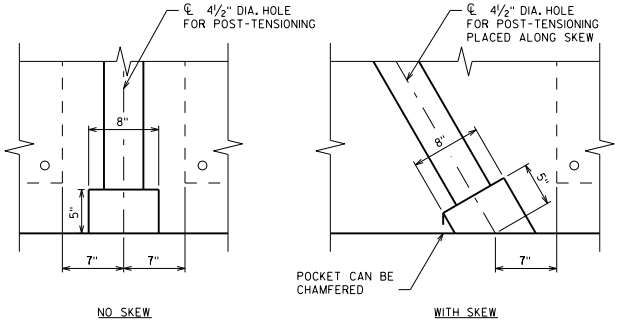

STRESS POCKET DETAIL

PRESTRESSED BOX GIRDER DETAILS 3

BUREAU OF STRUCTURES

APPROVED: Bill Oliva

DATE: 1-18

STANDARD 19.54

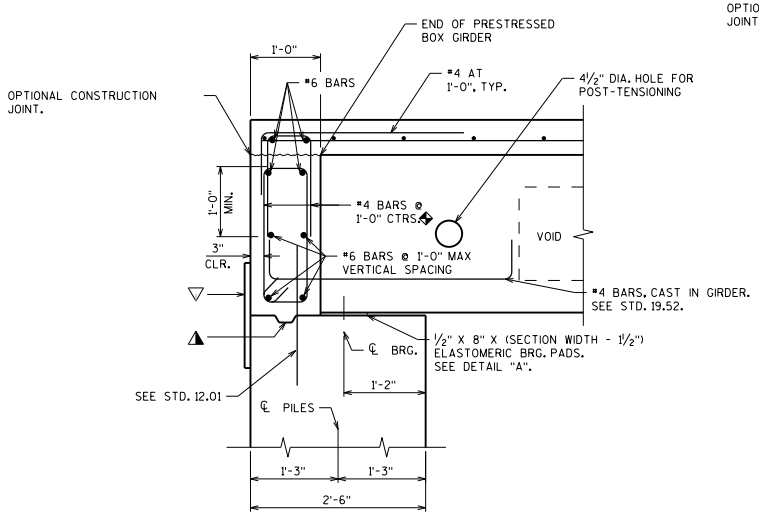

NO PAVING NOTCH - SECTIONS 1 THROUGH 4

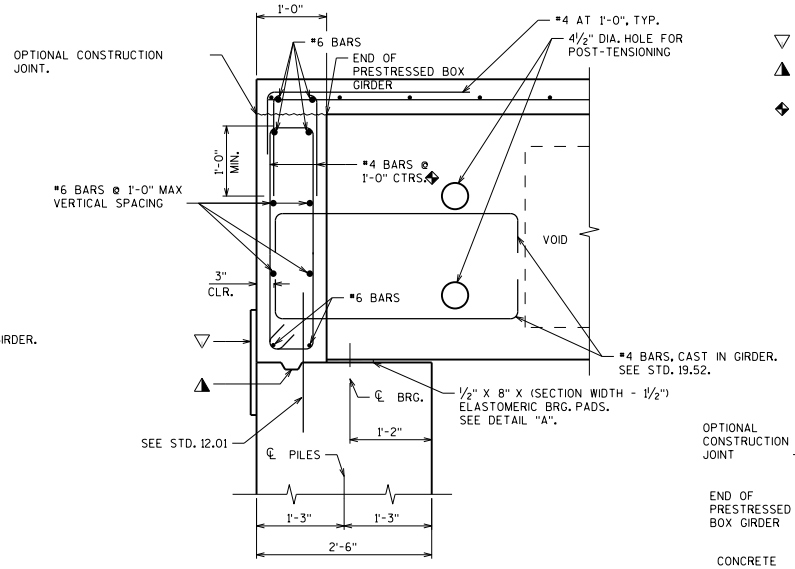

NO PAVING NOTCH - SECTIONS 5 AND 6

LEGEND

- ▽ 1'-6" RUBBERIZED MEMBRANE WATERPROOFING
- ◭ KEYED CONSTRUCTION JOINT FORMED BY BEVELED 2" X 6".
- ◆ BARS PLACED PARALLEL TO GIRDERS. SPACING PERPENDICULAR TO ℄ GIRDERS.

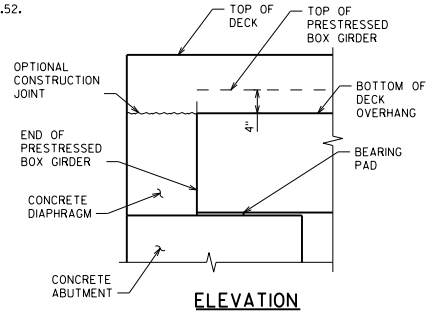

ELEVATION

(SHOWING DECK OVERHANG TERMINATION AT CONCRETE ABUTMENT)

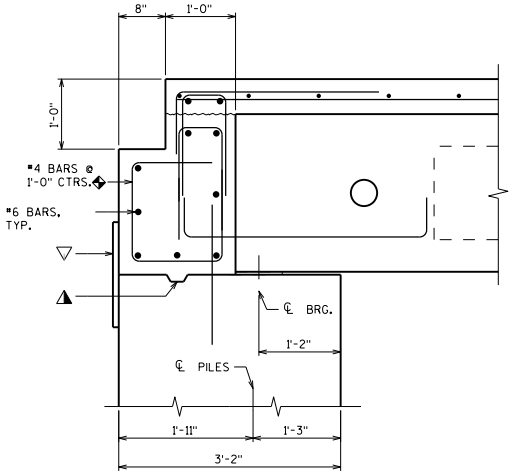

WITH PAVING NOTCH - SECTIONS 1 THROUGH 4

SEE NO PAVING NOTCH - SECTIONS 1 THROUGH 4 DETAIL FOR ADDITIONAL INFORMATION

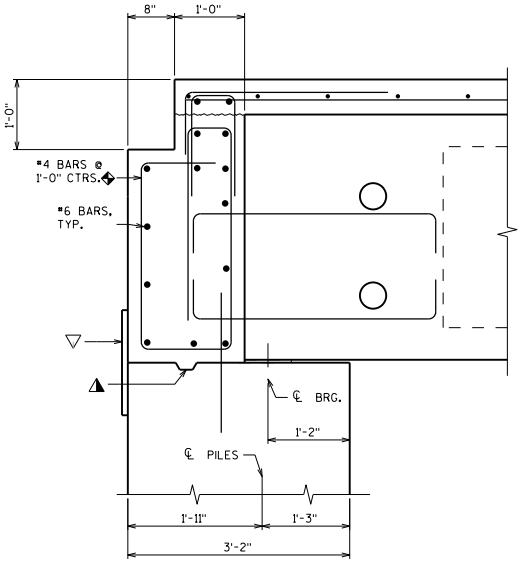

WITH PAVING NOTCH - SECTIONS 5 AND 6

SEE NO PAVING NOTCH - SECTIONS 5 AND 6 DETAIL FOR ADDITIONAL INFORMATION

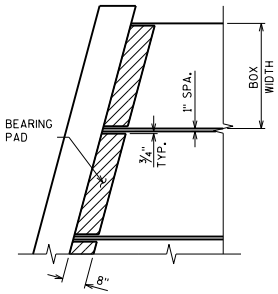

DETAIL "A"

PRESTRESSED BOX GIRDER DETAILS 4

BUREAU OF STRUCTURES

APPROVED: Bill Oliva

DATE: 1-16

STANDARD 19.55

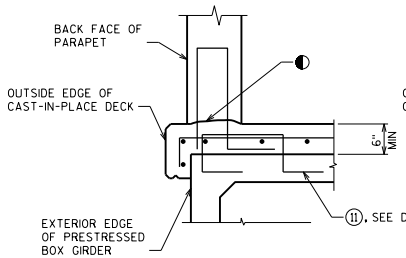

SECTION A-A

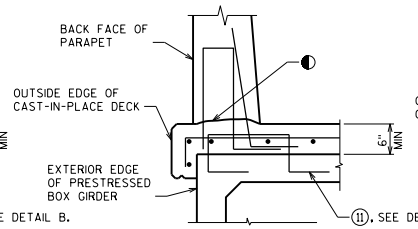

SECTION B-B

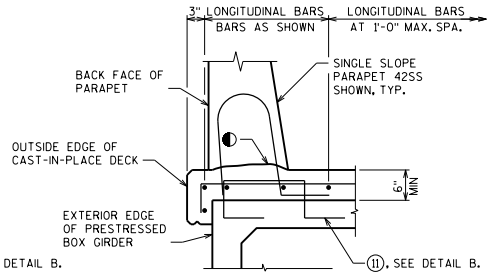

SECTION C-C

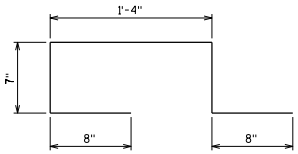

⑪ EXTERIOR EDGE SHEAR CONNECTOR
#4 AT 2'-0" MAX.
EPOXY COAT BARS

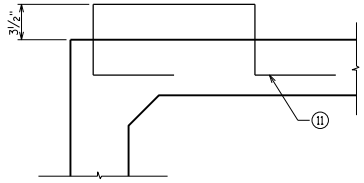

DETAIL B

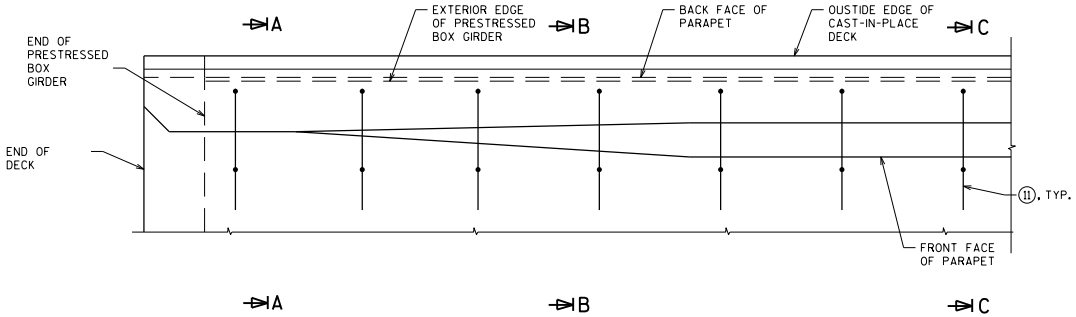

PLAN

SHOWING REINFORCEMENT CAST INTO PRESTRESSED BOX GIRDER
PARAPET AND DECK ARE SHOWN FOR CLARITY

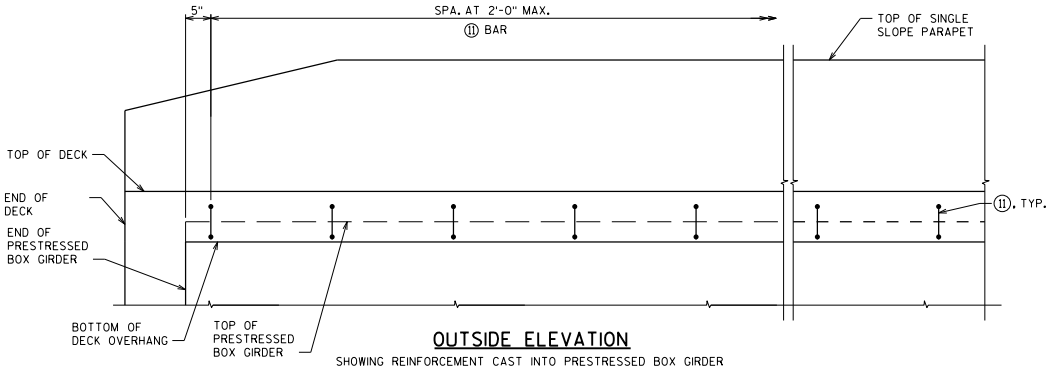

OUTSIDE ELEVATION

SHOWING REINFORCEMENT CAST INTO PRESTRESSED BOX GIRDER
PARAPET AND DECK ARE SHOWN FOR CLARITY

LEGEND

◐ CONST. JOINT - STRIKE OFF AS SHOWN.

NOTE

BAR ⑪ TO BE PAID AS PART OF BID ITEM "PRESTRESSED BOX GIRDER TYPE XX-INCH".

DESIGNER NOTES

SEE CHAPTER 30 STANDARDS FOR SINGLE SLOPE PARAPET DETAILS.

DETAILS SHOWN ARE APPLICABLE FOR CONCRETE ABUTMENTS. DETAILS TO BE MODIFIED FOR GRS ABUTMENTS.

PRESTRESSED BOX GIRDER DETAILS 5

BUREAU OF STRUCTURES

APPROVED: Bill Oliva

DATE: 7-16

STANDARD 19.56