| LENGTH OF PLATE "C" | TOTAL LOAD KIPS | PLATE C | | | PLATE D | | | HEIGHT FEET |
|---|---|---|---|---|---|---|---|---|
| | | X | Y | Z | X | Y | Z | |
| 10" | 215 | 5" | 2 3/8" | 10" | 8" | 1 3/4" | 1'-7" | 0.354 |
| 12" | 260 | 5" | 2 3/8" | 1'-0" | 9" | 1 3/4" | 1'-9" | 0.354 |
| | 280 | 5" | 2 3/8" | 1'-0" | 10" | 2 3/8" | 1'-9" | 0.406 |
| 14" | 280 | 5" | 1 15/16" | 1'-2" | 9" | 1 3/4" | 1'-11" | 0.318 |
| | 335 | 5" | 2 3/8" | 1'-2" | 11" | 2 3/8" | 1'-11" | 0.406 |
| | 385 | 5" | 2 3/8" | 1'-2" | 1'-1" | 2 7/8" | 1'-11" | 0.448 |
| | 410 | 5" | 2 3/8" | 1'-2" | 1'-3" | 2 7/8" | 2'-0" | 0.448 |
| 16" | 275 | 5" | 1 15/16" | 1'-4" | 8" | 1 3/4" | 2'-1" | 0.318 |
| | 330 | 5" | 1 15/16" | 1'-4" | 10" | 2 3/8" | 2'-1" | 0.370 |
| | 390 | 5" | 2 3/8" | 1'-4" | 1'-0" | 2 3/8" | 2'-1" | 0.406 |
| | 465 | 5" | 2 3/8" | 1'-4" | 1'-2" | 2 7/8" | 2'-2" | 0.448 |
| | 490 | 5" | 2 3/8" | 1'-4" | 1'-4" | 3 3/8" | 2'-2" | 0.490 |
| 18" | 325 | 5" | 1 15/16" | 1'-6" | 9" | 1 3/4" | 2'-3" | 0.318 |
| | 390 | 5" | 1 15/16" | 1'-6" | 11" | 2 3/8" | 2'-3" | 0.370 |
| | 465 | 5" | 2 3/8" | 1'-6" | 1'-1" | 2 7/8" | 2'-4" | 0.448 |
| | 495 | 5" | 2 3/8" | 1'-6" | 1'-2" | 2 7/8" | 2'-4" | 0.448 |
| | 560 | 5" | 2 3/8" | 1'-6" | 1'-4" | 3 3/8" | 2'-4" | 0.490 |
| 20" | 350 | 5" | 1 15/16" | 1'-8" | 9" | 1 3/4" | 2'-5" | 0.318 |
| | 380 | 5" | 1 15/16" | 1'-8" | 10" | 2 3/8" | 2'-5" | 0.370 |
| | 460 | 5" | 2 3/8" | 1'-8" | 1'-0" | 2 3/8" | 2'-6" | 0.406 |
| | 530 | 5" | 2 3/8" | 1'-8" | 1'-2" | 2 7/8" | 2'-6" | 0.448 |
| | 600 | 5" | 2 3/8" | 1'-8" | 1'-4" | 3 3/8" | 2'-6" | 0.490 |
| | 640 | 5" | 2 3/8" | 1'-8" | 1'-6" | 3 7/8" | 2'-6" | 0.531 |
| 22" | 405 | 5" | 1 15/16" | 1'-10" | 10" | 2 3/8" | 2'-7" | 0.370 |
| | 490 | 5" | 1 15/16" | 1'-10" | 1'-0" | 2 3/8" | 2'-8" | 0.370 |
| | 565 | 5" | 2 3/8" | 1'-10" | 1'-2" | 2 7/8" | 2'-8" | 0.448 |
| | 635 | 5" | 2 3/8" | 1'-10" | 1'-4" | 3 3/8" | 2'-8" | 0.490 |
| | 705 | 5" | 2 3/8" | 1'-10" | 1'-6" | 3 7/8" | 2'-8" | 0.531 |
| | 720 | 5" | 2 3/8" | 1'-10" | 1'-8" | 3 7/8" | 2'-8" | 0.531 |

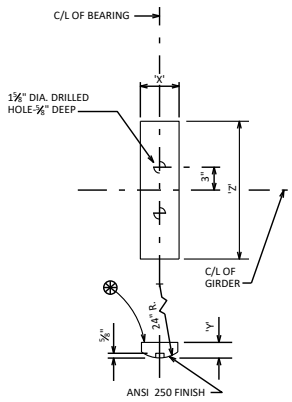


**ROCKER PLATE "C"**

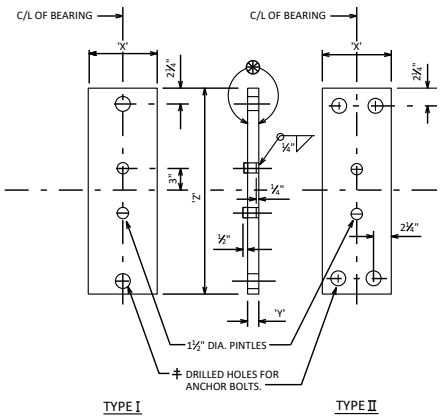


**MASONRY PLATE "D"**

## BEARING NOTES

ALL BEARINGS ARE SYMMETRICAL ABOUT C/L OF GIRDER AND C/L OF BEARING.

IN LIEU OF USING SHIM PLATES, FABRICATOR MAY INCREASE THICKNESS OF MASONRY PLATE "D" BY THE SHIM PLATE THICKNESS.

ALL STRUCTURAL STEEL BEARING PLATES SHALL BE FLAT ROLLED STEEL PLATES WITH ALL SURFACES SMOOTH AND FREE FROM WARP AND ALL EDGES SMOOTH, STRAIGHT AND VERTICAL.

ALL PLATE CUTS SHALL BE MACHINE OR MACHINE FLAME CUTS.

ALL FINISHED SURFACES SHALL BE MACHINE FINISHED BY AN AUTOMATIC PROCESS.

ANCHOR BOLTS SHALL BE THREADED 3". PROVIDE ONE STANDARD WROUGHT WASHER AND ONE HEX NUT PER BOLT. PROJECT ANCHOR BOLTS, MASONRY PLATE "D" THICKNESS + 2 1/4", ABOVE TOP OF CONCRETE.

ALL MATERIAL IN BEARINGS, INCLUDING SHIM PLATES, BUT EXCLUDING PINTLES, ANCHOR BOLTS, NUTS AND WASHERS SHALL CONFORM TO ASTM A709 GRADE 50W.

STEEL PINTLES SHALL CONFORM TO ASTM A449 OR ASTM A572 GRADE 50.

ALL MATERIAL IN TYPE "A" BEARINGS, INCLUDING SHIM PLATES AND BEARING PADS, SHALL BE PAID FOR AT THE UNIT PRICE BID FOR "BEARING ASSEMBLIES FIXED B-_-_-", EACH.

CHAMFER TOP OF PINTLES 1/8". DRILL HOLES FOR ALL PINTLES IN MASONRY PLATE "D" FOR A DRIVING FIT.

PROVIDE 1/2" THICK BEARING PAD THE SAME SIZE AS MASONRY PLATE "D" FOR EACH BEARING.

CHAMFER ANCHOR BOLTS PRIOR TO THREADING.

ANCHOR BOLTS, NUTS AND WASHERS SHALL CONFORM TO ASTM F1554 GRADE 55, OR MATERIAL OF EQUIVALENT YIELD STRENGTH AND ELONGATION.

ANCHOR BOLTS, NUTS AND WASHERS SHALL BE GALVANIZED IN ACCORDANCE WITH ASTM A153, CLASS C.

ROCKER PLATE "C" SHALL BE SHOP PAINTED WITH A WELDABLE PRIMER.

MASONRY PLATE "D" SHALL BE GALVANIZED.

PLACE SHIM PLATES BETWEEN BEARING PAD AND MASONRY PLATE "D". PLATES SHALL HAVE 'X' AND 'Z' DIMENSIONS THAT MATCH MASONRY PLATE "D".

‡ DRILLED HOLES FOR ANCHOR BOLTS IN MASONRY PLATE "D" SHALL HAVE A DIAMETER 3/8" LARGER THAN ANCHOR BOLT.

⊛ FINISH THESE SURFACES TO ANSI 250 IF 'Y' DIMENSION IS GREATER THAN 2".

## ANCHOR BOLT NOTES

FOR SPAN LENGTHS UP TO 100'-0":
USE A TYPE I MASONRY PLATE "D" WITH
(2) - 1 1/4" DIA. x 1'-5" LONG ANCHORS BOLTS.

FOR SPAN LENGTHS FROM 100'-0" UP TO 150'-0":
USE A TYPE I MASONRY PLATE "D" WITH
(2) - 1 1/2" DIA. x 1'-10" LONG ANCHORS BOLTS.

FOR SPAN LENGTHS GREATER THAN 150'-0":
USE A TYPE II MASONRY PLATE "D" WITH
(4) - 1 1/2" DIA. x 1'-10" LONG ANCHORS BOLTS.

CHECK THAT ANCHOR BOLTS PROVIDE ADEQUATE HORIZONTAL CAPACITY.

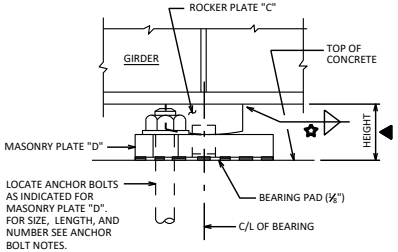


**FIXED BEARING ASSEMBLY**

(SEE "DESIGNER NOTES" FOR BEARING REPLACEMENTS)

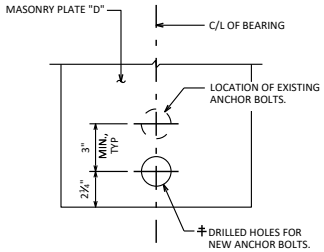


**MASONRY PLATE "D"**

BEARING REPLACEMENTS

## DESIGNER NOTES

HEIGHT OF BEARINGS GIVEN IN TABLE INCLUDES 1/2" BEARING PAD.

DETAIL SHIM PLATES AS DESCRIBED IN NOTES ON STANDARD 24.02.

REFER TO THE DETAILS BELOW FOR THE USE OF BEVELED ROCKER PLATE "C" ON GRADES GREATER THAN 3% AND ALSO CLEARANCE REQUIREMENTS.

✿ FOR WELD SIZE, REFER TO STANDARD 24.02

▲ ADJUST HEIGHT IF BEVELED ROCKER PLATE "C" IS USED.

FOR BEARING REPLACEMENTS, DESIGNER SHALL UTILIZE A WIDER BEARING THAN THE EXISTING GIRDER BOTTOM FLANGE WIDTH TO ALLOW FOR FIELD WELDING OF THE EDGE OF THE BOTTOM FLANGE TO THE TOP OF PLATE "C". SEE STANDARD 40.08 FOR DETAILS.

CALCULATE THE REACTION AT THE BEARINGS DUE TO "TOTAL LOADS". USE THE AASHTO LRFD SERVICE I LOAD COMBINATION. CONSIDER ONLY DEAD LOAD (DC + DW) AND HL-93 LIVE LOADS (LL), INCLUDING A 33% DYNAMIC LOAD ALLOWANCE (IM).

THE VALUES IN THE TABLES ARE THE BEARING CAPACITIES FOR "TOTAL LOAD" (DC + DW + (LL + IM)).

SELECT A BEARING THAT HAS A CAPACITY GREATER THAN OR EQUAL TO THE CALCULATED REACTION FOR "TOTAL LOADS".

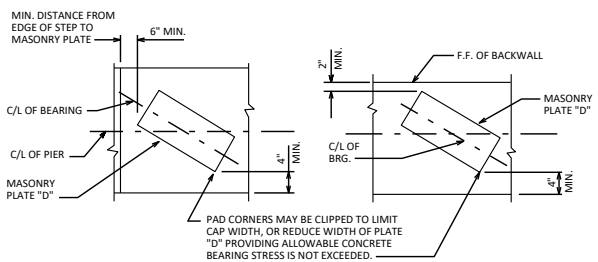


**AT SKEWED PIER** **AT SKEWED ABUTMENTS**

**CLEARANCE DIAGRAM**

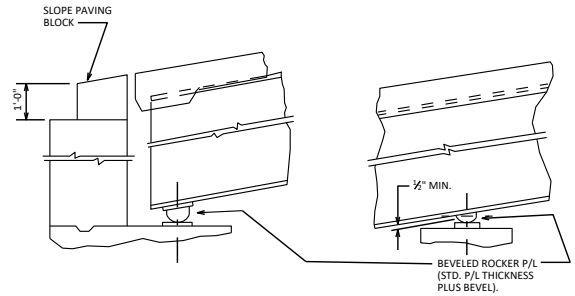


**AT EXPANSION BRG.** **AT FIXED BRG.**

**BEVELED ROCKERS WITH GRADES GREATER THAN 3%**

**FIXED BEARING DETAILS**
**TYPE 'A' - STEEL GIRDERS**

BUREAU OF STRUCTURES

APPROVED: *Laura Shadewald*

DATE: 7-24

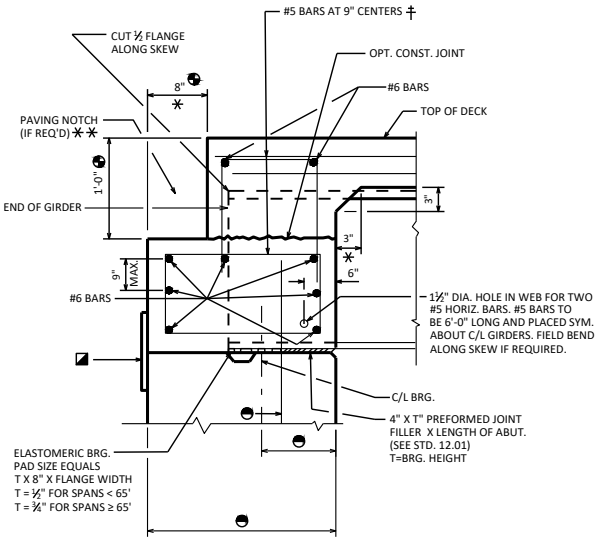


STEEL GIRDER WITH FIXED SEAT

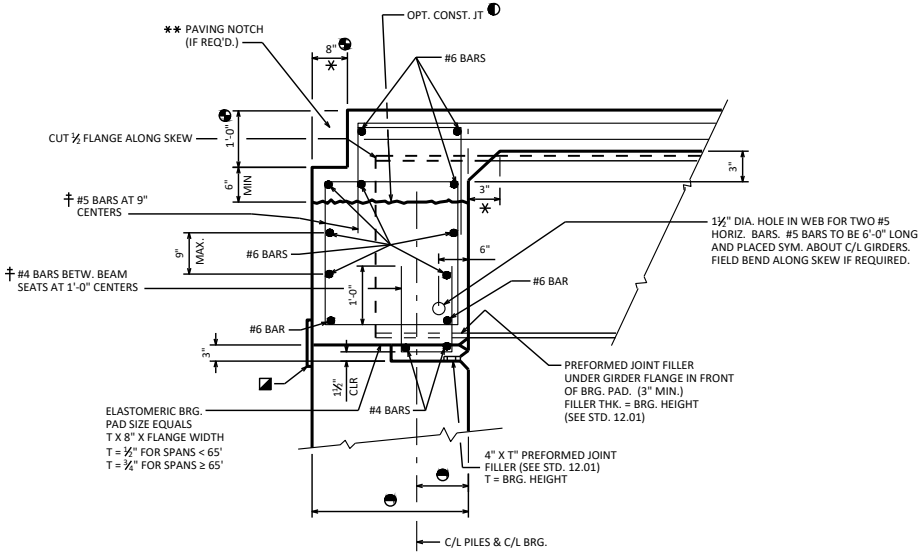


STEEL GIRDER WITH SEMI-EXPANSION SEAT

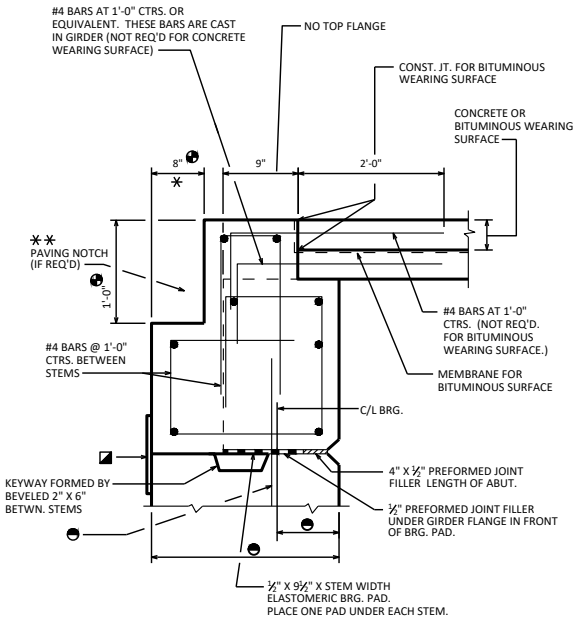


PRECAST DOUBLE TEE OR MULTI-STEM SECTION

## NOTES

FOR SKEWED STRUCTURES CAST END OF PRECAST TEE ALONG SKEW.

✳ DIMENSION IS TAKEN NORMAL TO C/L SUBSTRUCTURE UNITS.

◪ 1'-6" RUBBERIZED MEMBRANE WATERPROOFING

‡ BARS PARALLEL TO GIRDERS. SPACING PERPENDICULAR TO C/L GIRDERS.

## DESIGNER NOTES

SEE STANDARD 19.55 FOR PRESTRESSED BOX GIRDER BEARING DETAILS.

◑ THE USE OF THIS OPT. CONST. JOINT IS NOT RECOMMENDED FOR SKEWS OVER 15° WHEN LARGE DEADLOAD END ROTATION IS ANTICIPATED.

✳✳ USE PAVING NOTCH ON ALL U.S.H. BRIDGES, S.T.H. BRIDGES, I.H. BRIDGES & ON C.T.H. BRIDGES WITH CONCRETE APPROACHES.

◓ PAVING NOTCH IS 1'-0" WIDE BY 1'-4" DEEP IF STRUCTURAL APPROACH SLAB (STD. 12.10) IS USED.

◒ SEE STD. 12.01

**BRG. DETAILS FOR STEEL GDRS. AND PRECAST UNITS ON A1 ABUTMENTS**

WISCONSIN DEPARTMENT OF TRANSPORTATION — BUREAU OF STRUCTURES

APPROVED: *Laura Shadewald*

DATE: 7-18

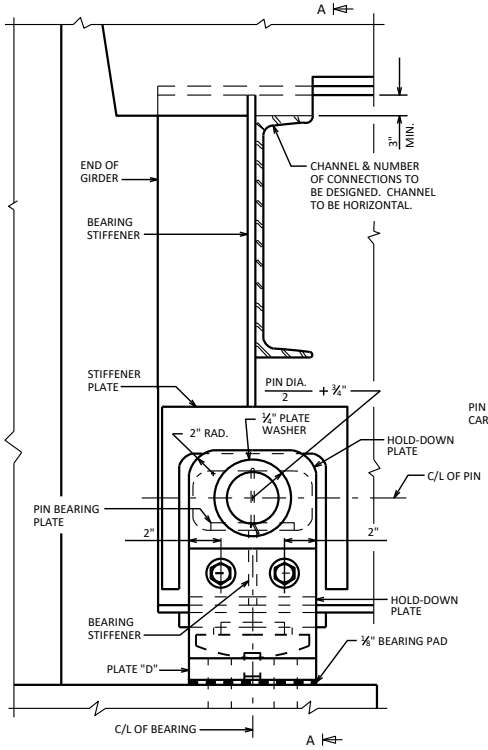


**ELEVATION**

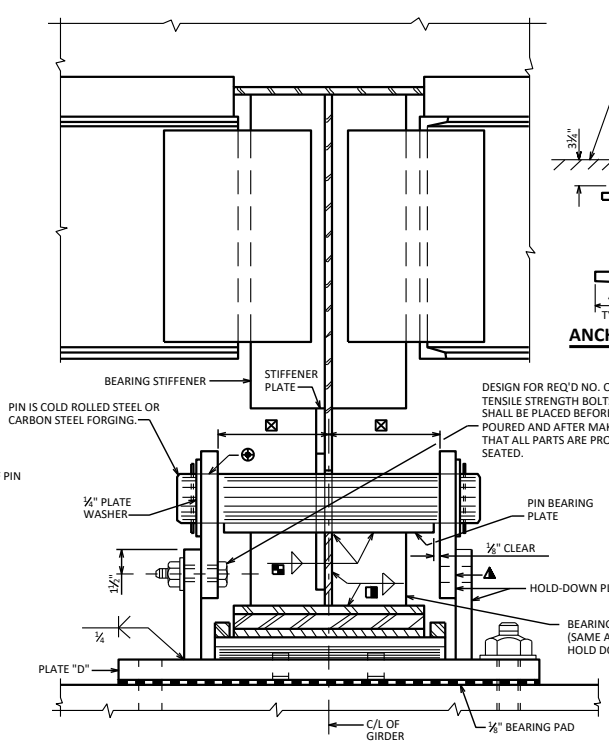


**SECTION A-A**

⊠ DIM. DEPENDS ON BRG. SIZE.

**PERMANENT HOLD DOWN DEVICE**

WHEN REQUIRED, HOLD DOWN DEVICES SHALL BE PLACED SYMMETRICALLY ABOUT LONGITUDINAL C/L OF FRAMING PLAN. MAXIMUM SPACING OF HOLD DOWNS SHALL BE AT ALTERNATE GIRDERS. HOLD DOWN DEVICE TO BE DESIGNED FOR MINIMUM UPLIFT CAPACITY OF 20 KIPS.

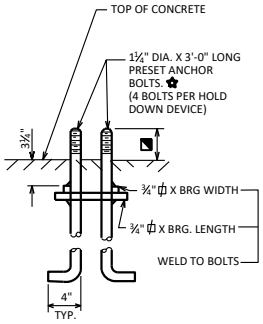


**ANCHOR BOLT DETAIL**

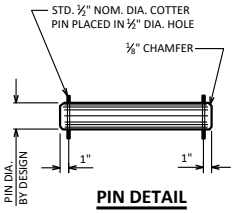


**PIN DETAIL**

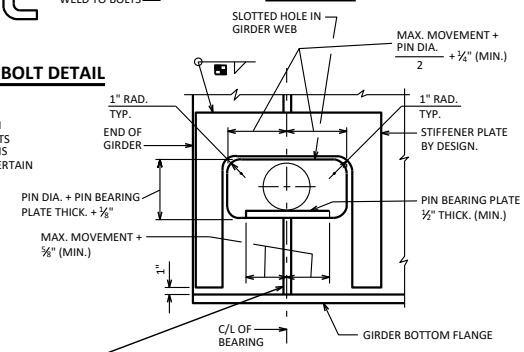


**GIRDER DETAIL**

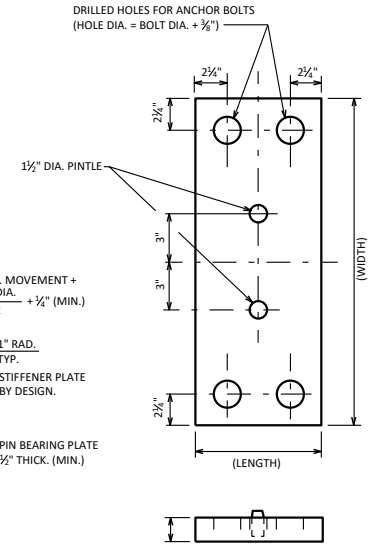


**PLATE "D"**

## NOTES (PERMANENT HOLD DOWN DEVICE)

ALL STRUCTURAL STEEL PLATES SHALL BE FLAT ROLLED STEEL PLATES WITH ALL SURFACES SMOOTH AND FREE FROM WARP AND ALL EDGES SMOOTH, STRAIGHT AND VERTICAL.

ALL PLATE CUTS SHALL BE MACHINE OR MACHINE FLAME CUTS

ANCHOR BOLTS SHALL BE THREADED 3". PROVIDE ONE STANDARD WROUGHT WASHER AND ONE HEX NUT PER BOLT. CHAMFER TOP OF ANCHOR BOLTS PRIOR TO THREADING.

ANCHOR BOLTS, NUTS AND WASHERS SHALL BE GALVANIZED IN ACCORDANCE WITH ASTM A153, CLASS C.

THE MATERIAL FOR THE HOLD-DOWN PLATES SHALL CONFORM TO ASTM A709 GRADE 50W.

ALL MATERIAL WELDED TO THE GIRDERS, WHICH INCLUDES BEARING STIFFENERS, STIFFENER PLATE, AND PIN BEARING PLATE, SHALL MATCH THE STEEL REQUIREMENTS OF THE WEB AT THAT LOCATION.

ANCHOR BOLTS, NUTS AND WASHERS SHALL CONFORM TO ASTM F1554 GRADE 55 OR MATERIAL OF EQUIVALENT YIELD STRENGTH AND ELONGATION.

ALL MATERIAL IN HOLD DOWN DEVICES, WHICH INCLUDES HOLD-DOWN PLATES, HIGH TENSILE STRENGTH BOLTS, PINS AND ANCHOR BOLTS, SHALL BE INCLUDED IN THE UNIT PRICE BID FOR "BEARING ASSEMBLIES EXPANSION B-_-_".

ALL MATERIAL WELDED TO THE GIRDERS, WHICH INCLUDES BEARING STIFFENERS, STIFFENER PLATE, AND PIN BEARING PLATE, SHALL BE INCLUDED IN THE BID ITEM USED FOR THE STEEL GIRDER QUANTITIES.

✿ FOR REPLACEMENT BEARINGS, ANCHOR BOLTS SHALL BE 1¼" DIAMETER X 3'-0" LONG AND FULLY THREADED ADHESIVE ANCHORS. ANCHOR BOLTS SHALL BE PAID FOR AS "ADHESIVE ANCHORS 1 1/2-INCH". EMBED IN CONCRETE AS DETAILED.

▲ SHOP DRILL HOLES IN HOLD-DOWN PLATE ATTACHED TO PLATE "D". FIELD DRILL HOLES IN UPPER HOLD-DOWN PLATE AFTER ALIGNING IN THE FIELD.

SEE STANDARD 24.02 FOR TABLE OF FILLET WELD SIZES.

SEE STANDARD 24.02 FOR WELD DETAILS SHOWING BEARING STIFFENER CONNECTION TO WEB AND FLANGE.

PROJECT ANCHOR BOLTS, PLATE "D" THICKNESS + 2¼", ABOVE TOP OF CONCRETE.

⊕ HOLES FOR PIN IN HOLD-DOWN PLATES AND PLATE WASHERS SHALL BE AS STATED IN STANDARD SPECIFICATION 506.3.17.

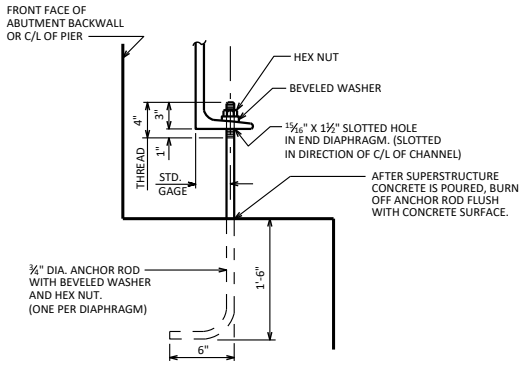


**ELEVATION - NEW CONSTRUCTION**

TEMPORARY HOLD DOWN DEVICES SHALL BE PLACED AT THAT END OF ALL CONTINUOUS STEEL GIRDER UNITS WHERE THE SLAB POUR TERMINATES, EXCEPT WHERE PERMANENT HOLD DOWN DEVICES ARE PLACED AT THIS LOCATION. LOCATE 1'-6" (NORMAL) OFF C/L OF GIRDER. TO BE PAID FOR AS "STRUCTURAL CARBON STEEL".

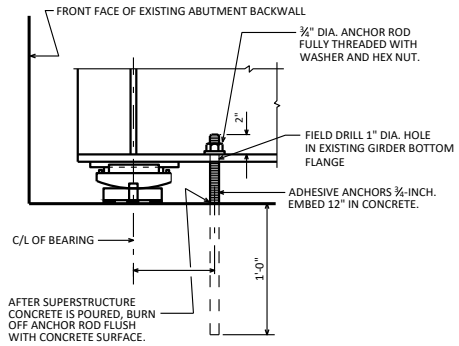


**ELEVATION - DECK REPLACEMENT**

PLACE ONE ANCHOR ROD PER GIRDER AT ABUTMENT WHERE SLAB POUR TERMINATES. LOCATE 4" (NORMAL) OFF C/L OF GIRDER. ANCHOR ROD, NUT, WASHER, AND DRILLED HOLE IN GIRDER FLANGE SHALL BE PAID FOR AS "ADHESIVE ANCHORS ¾-INCH".

**TEMPORARY HOLD DOWN DEVICE**

**HOLD DOWN DEVICES**

BUREAU OF STRUCTURES

APPROVED: *Laura Shadewald*

DATE: 7-23

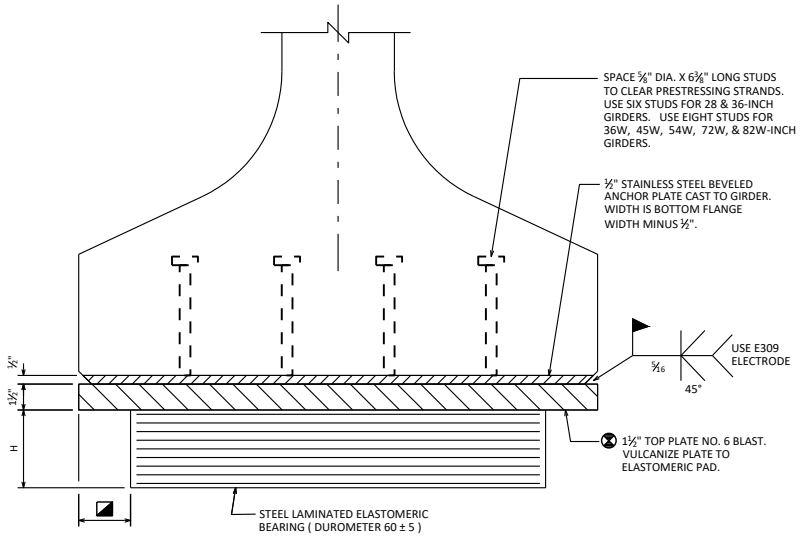


## END VIEW

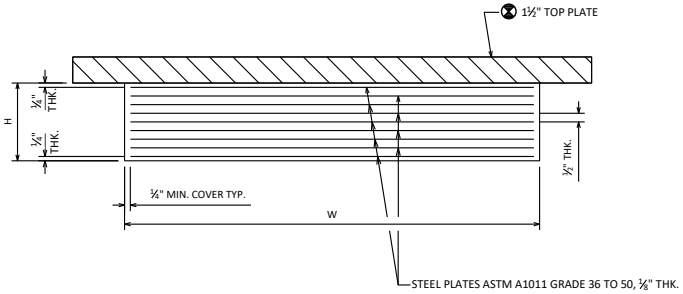


## SECTION THRU ELASTOMERIC BEARING

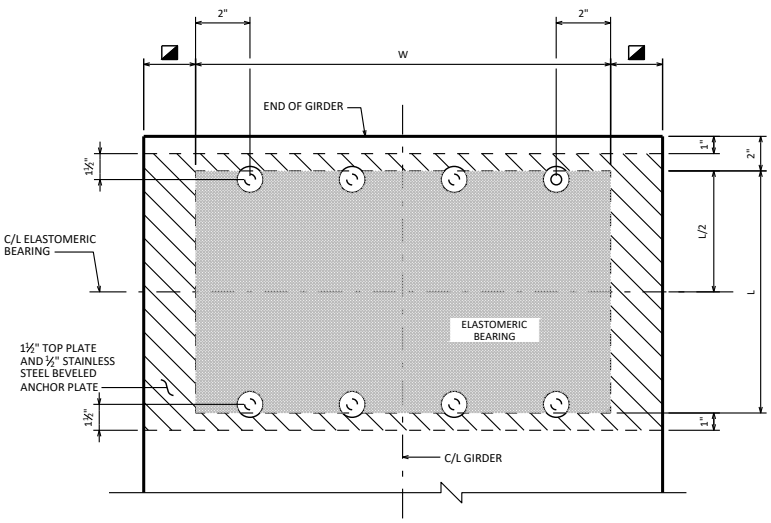


## PLAN VIEW

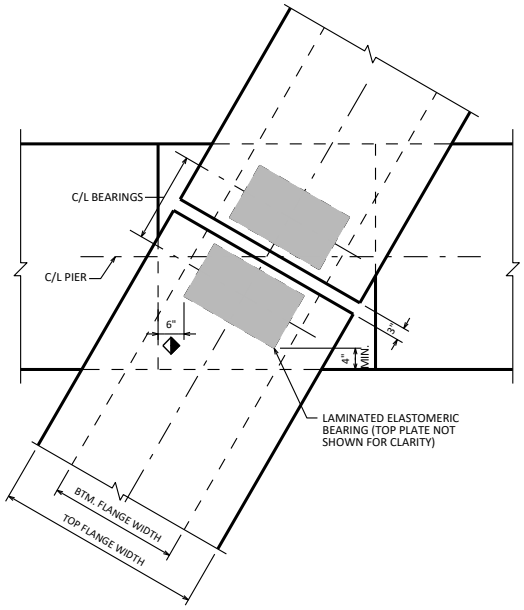


## AT SKEWED PIER

DETAIL SHOWN IS FOR A CONTINUOUS DECK AT AN EXPANSION PIER.
IF PIER CAP WIDTH BECOMES EXCESSIVE, CONSIDER USING STEEL BEARINGS.

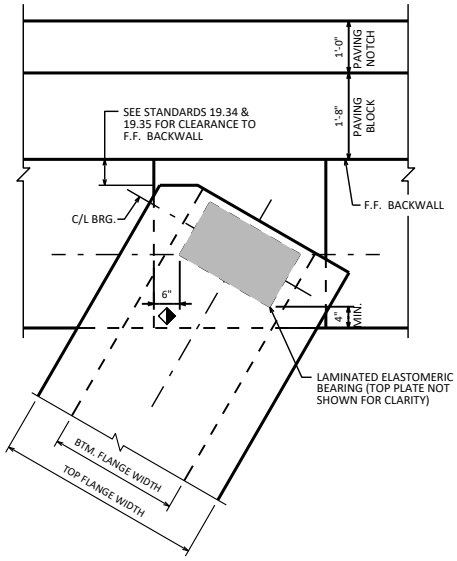


## AT SKEWED ABUTMENTS

## CLEARANCE DIAGRAM

## DESIGNER NOTES

SEE CHAPTER 40 STANDARDS FOR USE OF ELASTOMERIC BEARINGS ON NEW AND REHABILITATED STEEL GIRDER BRIDGES.

FOR ALL NEW BRIDGES, THE STEEL TOP PLATE SHALL HAVE A MINIMUM THICKNESS OF 1½".

FOR BEARINGS USED IN BEARING REPLACEMENT PROJECTS, THE STEEL TOP PLATE THICKNESS MAY BE REDUCED (TO A MINIMUM OF ¾") TO MATCH THE OVERALL EXISTING BEARING HEIGHT. WHEN THE THICKNESS IS REDUCED, THE FOLLOWING NOTE SHALL BE LOCATED ON THE PLANS:

"WELDING PROCEDURES SHALL BE ESTABLISHED BY THE CONTRACTOR TO RESTRICT THE MAXIMUM TEMPERATURE REACHED BY SURFACES IN CONTACT WITH ELASTOMER TO 200°F (93°C). TEMPERATURES SHALL BE CONTROLLED BY TEMPERATURE INDICATING WAX PENCILS OR OTHER SUITABLE MEANS APPROVED BY THE ENGINEER."

DO NOT INCLUDE PRESTRESSED GIRDER SHRINKAGE WHEN DESIGNING BEARINGS FOR BRIDGE REHABILITATION PROJECTS.

◪ 3" FOR 36W", 45W", 54W", 72W" & 82W"
1" FOR 28" & 36"

◧ MIN. DISTANCE FROM EDGE OF PIER/ABUTMENT. STEP TO LAMINATED ELASTOMERIC BEARING.

⊗ TAPER THE TOP PLATE IF THE GIRDER ANGLE RELATIVE TO HORIZONTAL IS GREATER THAN 0.01 RADIANS OR IF THIS ANGLE MULTIPLIED BY THE TOP PLATE LENGTH IS 1/8" OR MORE. TO DETERMINE THIS ANGLE, ADD THESE TWO VALUES:
- LONGITUDINAL GRADE OF GIRDER
- CAMBER EFFECT = 4(RC)/L, WHERE:
  RC = RESIDUAL CAMBER (INCHES)
  L = GIRDER LENGTH (INCHES)

## NOTES

BEARINGS SHALL NOT BE PLACED AT A TEMPERATURE GREATER THAN 85° F.

ANCHOR PLATE SHALL CONFORM TO ASTM A240 TYPE 304.

TOP PLATE SHALL CONFORM TO ASTM A709 GRADE 50W OR A588 AND SHALL BE PAINTED IN ACCORDANCE WITH SECTION 506.2.8.1 OF THE STANDARD SPECIFICATION.

ALL STRUCTURAL STEEL PLATES SHALL BE FLAT ROLLED WITH ALL SURFACES SMOOTH AND FREE FROM WARP AND ALL EDGES SMOOTH, STRAIGHT, AND VERTICAL.

ALL PLATE CUTS SHALL BE MACHINE OR MACHINE FLAME CUTS.

REMOVE THE PAINT FROM TOP PLATE SURFACES THAT REQUIRE FIELD WELDING. AFTER WELDING, PROVIDE ONE COAT OF ORGANIC ZINC-RICH PRIMER AND ONE COAT OF HIGH-BUILD BROWN EPOXY PAINT IN ACCORDANCE WITH SECTION 517.3.1.8.2 OF THE STANDARD SPECIFICATIONS. FIELD APPLIED PAINT SHALL EXTEND BEYOND THE DAMAGED PAINTED SURFACES.

ALL MATERIAL USED FOR BEARINGS SHALL BE PAID FOR AT THE UNIT PRICE BID FOR "BEARING PADS ELASTOMERIC LAMINATED" EACH.

BEARINGS DESIGNED PER METHOD A IN THE CURRENT AASHTO LRFD BRIDGE DESIGN SPECIFICATIONS.

# ELASTOMERIC BEARINGS FOR PRESTRESSED CONCRETE GIRDERS

BUREAU OF STRUCTURES

APPROVED: *Laura Shadewald*

DATE: 7-23

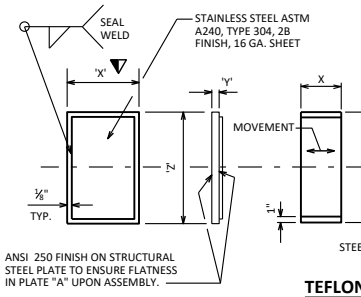


**TOP PLATE "A"**

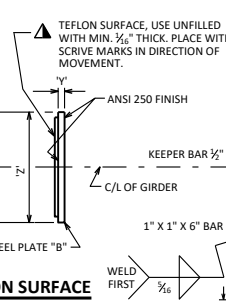


**TEFLON SURFACE ON PLATE "B"**

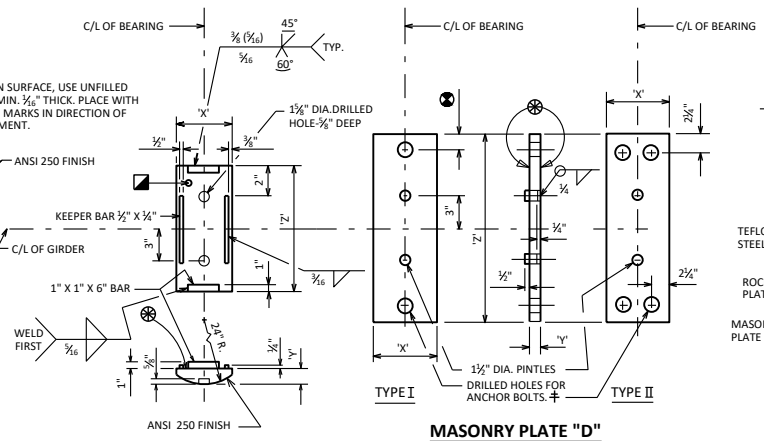


**ROCKER PLATE "C"**

**MASONRY PLATE "D"**

**EXPANSION BEARING**

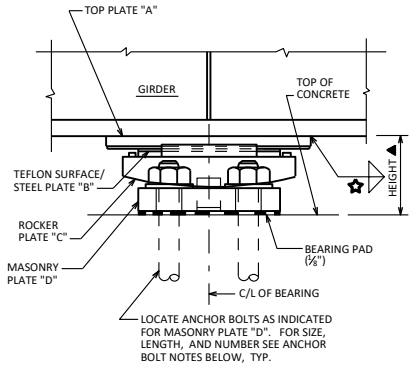


**EXPANSION BEARING ASSEMBLY**

(SEE "DESIGNER NOTES" FOR BEARING REPLACEMENTS)

## 10" BEARING

| TOTAL LOAD (KIPS) | PLATE A | | | PLATE B | | | PLATE C | | | PLATE D | | | HEIGHT FEET |
|---|---|---|---|---|---|---|---|---|---|---|---|---|---|
| | X | Y | Z | X | Y | Z | X | Y | Z | X | Y | Z | |
| 100 | 9" | ⅝" | 10" | 5" | ½" | 10" | 7" | 1 7/16" | 1'-0¼" | 8" | 1½" | 1'-8" | 0.360 |
| 180 | 1'-1" | ⅝" | 10" | 9" | ½" | 10" | 11" | 2⅜" | 1'-0¼" | 8" | 1½" | 1'-8" | 0.438 |
| 260 | 1'-5" | ⅝" | 10" | 1'-1" | ½" | 10" | 1'-3" | 3⅜" | 1'-0¼" | 11" | 2" | 1'-8" | 0.604 |

## 12" BEARING

| TOTAL LOAD (KIPS) | PLATE A | | | PLATE B | | | PLATE C | | | PLATE D | | | HEIGHT FEET |
|---|---|---|---|---|---|---|---|---|---|---|---|---|---|
| | X | Y | Z | X | Y | Z | X | Y | Z | X | Y | Z | |
| 125 | 9" | ⅝" | 1'-0" | 5" | ½" | 1'-0" | 7" | 1 7/16" | 1'-2¼" | 8" | 1½" | 1'-10" | 0.360 |
| 175 | 11" | ⅝" | 1'-0" | 7" | ½" | 1'-0" | 9" | 1 15/16" | 1'-2¼" | 8" | 1½" | 1'-10" | 0.401 |
| 275 | 1'-3" | ⅝" | 1'-0" | 11" | ½" | 1'-0" | 1'-1" | 2⅞" | 1'-2¼" | 11" | 2" | 1'-10" | 0.521 |

## 14" BEARING

| TOTAL LOAD (KIPS) | PLATE A | | | PLATE B | | | PLATE C | | | PLATE D | | | HEIGHT FEET |
|---|---|---|---|---|---|---|---|---|---|---|---|---|---|
| | X | Y | Z | X | Y | Z | X | Y | Z | X | Y | Z | |
| 210 | 11" | ⅝" | 1'-2" | 7" | ½" | 1'-2" | 9" | 1 15/16" | 1'-4¼" | 8" | 1½" | 2'-0" | 0.401 |
| 375 | 1'-5" | ⅝" | 1'-2" | 1'-1" | ½" | 1'-2" | 1'-3" | 3⅞" | 1'-4¼" | 1'-2" | 2⅞" | 2'-0" | 0.677 |
| 500 | 1'-9" | ⅝" | 1'-2" | 1'-5" | ½" | 1'-2" | 1'-7" | 4⅞" | 1'-4¼" | 1'-5" | 3⅜" | 2'-1" | 0.802 |

## 16" BEARING

| TOTAL LOAD (KIPS) | PLATE A | | | PLATE B | | | PLATE C | | | PLATE D | | | HEIGHT FEET |
|---|---|---|---|---|---|---|---|---|---|---|---|---|---|
| | X | Y | Z | X | Y | Z | X | Y | Z | X | Y | Z | |
| 245 | 11" | ⅝" | 1'-4" | 7" | ½" | 1'-4" | 9" | 1 15/16" | 1'-6¼" | 8" | 1½" | 2'-2" | 0.401 |
| 370 | 1'-3" | ⅝" | 1'-4" | 11" | ½" | 1'-4" | 1'-1" | 2⅞" | 1'-6¼" | 1'-0" | 2⅜" | 2'-3" | 0.552 |
| 525 | 1'-7" | ⅝" | 1'-4" | 1'-3" | ½" | 1'-4" | 1'-5" | 3⅞" | 1'-6¼" | 1'-4" | 3⅜" | 2'-3" | 0.719 |
| 575 | 1'-9" | ⅝" | 1'-4" | 1'-5" | ½" | 1'-4" | 1'-7" | 4⅞" | 1'-6¼" | 1'-6" | 3⅞" | 2'-3" | 0.844 |

## 18" BEARING

| TOTAL LOAD (KIPS) | PLATE A | | | PLATE B | | | PLATE C | | | PLATE D | | | HEIGHT FEET |
|---|---|---|---|---|---|---|---|---|---|---|---|---|---|
| | X | Y | Z | X | Y | Z | X | Y | Z | X | Y | Z | |
| 280 | 11" | ⅝" | 1'-6" | 7" | ½" | 1'-6" | 9" | 1 15/16" | 1'-8¼" | 9" | 2" | 2'-4" | 0.443 |
| 360 | 1'-1" | ⅝" | 1'-6" | 9" | ½" | 1'-6" | 11" | 2⅜" | 1'-8¼" | 11" | 2" | 2'-4" | 0.479 |
| 600 | 1'-7" | ⅝" | 1'-6" | 1'-3" | ½" | 1'-6" | 1'-5" | 3⅞" | 1'-8¼" | 1'-5" | 3⅜" | 2'-5" | 0.719 |
| 650 | 1'-11" | ⅝" | 1'-6" | 1'-7" | ½" | 1'-6" | 1'-9" | 4⅞" | 1'-8¼" | 1'-10" | 3⅞" | 2'-5" | 0.844 |

## 20" BEARING

| TOTAL LOAD (KIPS) | PLATE A | | | PLATE B | | | PLATE C | | | PLATE D | | | HEIGHT FEET |
|---|---|---|---|---|---|---|---|---|---|---|---|---|---|
| | X | Y | Z | X | Y | Z | X | Y | Z | X | Y | Z | |
| 225 | 9" | ⅝" | 1'-8" | 5" | ½" | 1'-8" | 7" | 1 7/16" | 1'-10¼" | 8" | 1½" | 2'-6" | 0.360 |
| 315 | 11" | ⅝" | 1'-8" | 7" | ½" | 1'-8" | 9" | 1 15/16" | 1'-10¼" | 9" | 2" | 2'-6" | 0.443 |
| 495 | 1'-3" | ⅝" | 1'-8" | 11" | ½" | 1'-8" | 1'-1" | 2⅞" | 1'-10¼" | 1'-1" | 2⅞" | 2'-7" | 0.594 |
| 675 | 1'-7" | ⅝" | 1'-8" | 1'-3" | ½" | 1'-8" | 1'-5" | 3⅞" | 1'-10¼" | 1'-6" | 3⅞" | 2'-7" | 0.760 |
| 705 | 1'-11" | ⅝" | 1'-8" | 1'-7" | ½" | 1'-8" | 1'-9" | 4⅞" | 1'-10¼" | 1'-11" | 3⅞" | 2'-7" | 0.844 |

## DESIGNER NOTES

HEIGHT OF BEARINGS GIVEN IN TABLES INCLUDES ⅛" BEARING PAD, 16 GAGE STAINLESS STEEL SHEET AND 1/16" TEFLON SURFACE.

DETAIL SHIM PLATES AS DESCRIBED IN NOTES ON STANDARD 24.02.

SEE STANDARD 27.02 FOR THE USE OF BEVELED ROCKER PLATE "C" ON GRADES GREATER THAN 3% AND ALSO CLEARANCE REQUIREMENTS.

AT ABUTMENTS, WHEN THE 'X' DIMENSION OF PLATE "A" EXCEEDS 11", INCREASE STANDARD DISTANCE FROM C/L OF BEARING TO END OF GIRDER.

✿ FOR WELD SIZE, REFER TO STANDARD 24.02.

▲ ADJUST HEIGHT IF BEVELED ROCKER PLATE "C" IS USED.

FOR BEARING REPLACEMENTS, DESIGNER SHALL UTILIZE A WIDER BEARING THAN THE EXISTING GIRDER BOTTOM FLANGE WIDTH TO ALLOW FOR FIELD WELDING OF THE EDGE OF THE BOTTOM FLANGE TO THE TOP OF PLATE "A". SEE STANDARD 40.08 FOR DETAILS.

FOR BEARING REPLACEMENTS, SEE STD. 27.02 FOR MINIMUM ANCHOR BOLT CLEARANCE INFORMATION.

▼ DIMENSION 'X' SHOWN FOR TOP PLATE 'A' IS A MINIMUM. PROVIDE ADEQUATE LENGTH TO ENSURE PLATE 'B' IS ALWAYS COVERED FOR ALL EXPECTED MOVEMENTS. SEE STD. 27.10 FOR ADDITIONAL GUIDANCE.

CALCULATE THE REACTIONS AT THE BEARINGS DUE TO "TOTAL LOADS" AND ALSO "DEAD LOADS" ONLY. USE THE AASHTO LRFD SERVICE I LOAD COMBINATION. CONSIDER ONLY DEAD LOAD (DC + DW) AND HL-93 LIVE LOADS (LL), INCLUDING A 33% DYNAMIC LOAD ALLOWANCE (IM).

THE VALUES IN THE TABLES ARE THE BEARING CAPACITIES FOR "TOTAL LOAD" (DC + DW + (LL + IM)). TAKE 60% OF THE VALUES IN THE TABLES TO DETERMINE THE BEARING CAPACITIES FOR "DEAD LOAD" ONLY (DC + DW).

SELECT A BEARING THAT HAS A "TOTAL LOAD" CAPACITY GREATER THAN OR EQUAL TO THE CALCULATED "TOTAL LOAD" REACTION AND ALSO A "DEAD LOAD" CAPACITY GREATER THAN OR EQUAL TO THE CALCULATED "DEAD LOAD" REACTION.

## ANCHOR BOLT NOTES

FOR SPAN LENGTHS UP TO 100'-0":
USE A TYPE I MASONRY PLATE "D" WITH (2) - 1½" DIA. x 1'-5" LONG ANCHOR BOLTS.

FOR SPAN LENGTHS FROM 100'-0" UP TO 150'-0":
USE A TYPE I MASONRY PLATE "D" WITH (2) - 1½ DIA. X 1'-0" LONG ANCHOR BOLTS.

FOR SPAN LENGTHS GREATER THAN 150'-0":
USE A TYPE II MASONRY PLATE "D" WITH (4) - 1½" DIA. X 1'-10" LONG ANCHOR BOLTS.

CHECK THAT ANCHOR BOLTS PROVIDE ADEQUATE HORIZONTAL CAPACITY.

## BEARING NOTES

ALL BEARINGS ARE SYMMETRICAL ABOUT C/L OF GIRDER AND C/L OF BEARING.

⊛ FINISH THESE SURFACES TO ANSI 250 IF 'Y' DIMENSION IS GREATER THAN 2".

ANCHOR BOLTS, NUTS AND WASHERS SHALL BE GALVANIZED IN ACCORDANCE WITH ASTM A153, CLASS C.

ROCKER PLATE "C" AND MASONRY PLATE "D" SHALL BE GALVANIZED. TOP PLATE "A" AND STEEL PLATE "B" SHALL BE SHOP PAINTED. USE A WELDABLE PRIMER ON TOP PLATE "A". DO NOT PAINT STAINLESS STEEL OR TEFLON SURFACES.

ALL MATERIAL IN BEARINGS, INCLUDING SHIM PLATES, BUT EXCLUDING STAINLESS STEEL SHEET, TEFLON SURFACE, PINTLES, ANCHOR BOLTS, NUTS AND WASHERS SHALL CONFORM TO ASTM A709 GRADE 50W.

IN LIEU OF USING SHIM PLATES, FABRICATOR MAY INCREASE THICKNESS OF TOP PLATE "A" OR MASONRY PLATE "D" BY THE SHIM PLATE THICKNESS.

⊗ DIMENSION IS 2" WHEN 1¼" DIA. ANCHOR BOLTS ARE USED AND 2¼" WHEN 1½" DIA.ANCHOR BOLTS ARE USED.

ALL MATERIAL IN TYPE "A-T" BEARINGS, INCLUDING SHIM PLATES AND BEARING PADS, SHALL BE PAID FOR AT THE UNIT PRICE BID FOR "BEARING ASSEMBLIES EXPANSION B-_-_" , EACH.

CHAMFER ANCHOR BOLTS PRIOR TO THREADING.

ALL FINISHED SURFACES SHALL BE MACHINE FINISHED BY AN AUTOMATIC PROCESS.

ALL PLATE CUTS SHALL BE MACHINE OR MACHINE FLAME CUTS.

ALL STRUCTURAL STEEL BEARING PLATES SHALL BE FLAT ROLLED STEEL PLATES WITH ALL SURFACES SMOOTH AND FREE FROM WARP AND ALL EDGES SMOOTH, STRAIGHT AND VERTICAL.

PROVIDE ⅛" THICK BEARING PAD THE SAME SIZE AS MASONRY PLATE "D" FOR EACH BEARING.

ANCHOR BOLTS SHALL BE THREADED 3". PROVIDE ONE STANDARD WROUGHT WASHER AND ONE HEX NUT PER BOLT. PROJECT ANCHOR BOLTS, MASONRY PLATE "D" THICKNESS + 2¼", ABOVE TOP OF CONCRETE.

CHAMFER TOP OF PINTLES ⅛". DRILL HOLES FOR ALL PINTLES IN MASONRY PLATE "D" FOR A DRIVING FIT.

STEEL PINTLES SHALL CONFORM TO ASTM A449 OR ASTM A572 GRADE 50.

ANCHOR BOLTS, NUTS AND WASHERS SHALL CONFORM TO ASTM F1554 GRADE 55, OR MATERIAL OF EQUIVALENT YIELD STRENGTH AND ELONGATION.

PLACE SHIM PLATES BETWEEN BEARING PAD AND MASONRY PLATE "D". PLATES SHALL HAVE 'X' AND 'Z' DIMENSIONS THAT MATCH MASONRY PLATE "D".

◪ PROVIDE A METHOD FOR HANDLING ROCKER PLATE "C" DURING GALVANIZING.

◭ BOND STEEL PLATE "B" AND TEFLON WITH ADHESIVE MATERIAL MEETING THE REQUIREMENTS FOUND IN THE STANDARD SPECIFICATION.

‡ DRILLED HOLES FOR ANCHOR BOLTS IN MASONRY PLATE "D" SHALL HAVE A DIAMETER ⅜" LARGER THAN ANCHOR BOLT.

AT INSTALLATION, ENSURE STAINLESS STEEL SLIDING FACE OF THE UPPER ELEMENT AND THE TFE SLIDING FACE OF THE LOWER ELEMENT HAVE THE SURFACE FINISH SPECIFIED AND ARE CLEAN AND FREE OF ALL DUST, MOISTURE, OR ANY OTHER FOREIGN MATTER.

**STAINLESS STEEL - TFE EXPANSION BEARING DETAILS TYPE 'A-T'**

BUREAU OF STRUCTURES

APPROVED: *Laura Shadewald*

DATE: 7-23

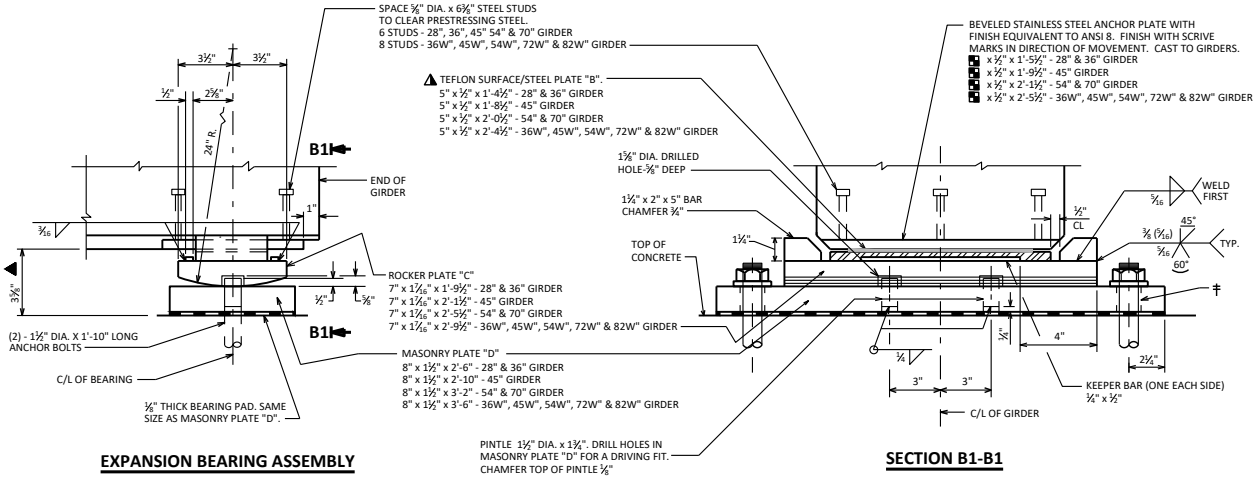


## EXPANSION BEARING ASSEMBLY

## SECTION B1-B1

## BEARING NOTES

ALL BEARINGS ARE SYMMETRICAL ABOUT C/L OF GIRDER AND C/L OF BEARING.

ALL MATERIAL IN BEARINGS, BUT EXCLUDING STAINLESS STEEL PLATE, TEFLON SURFACE, PINTLES, ANCHOR BOLTS, NUTS AND WASHERS SHALL CONFORM TO ASTM A709 GRADE 50W.

STAINLESS STEEL PLATE SHALL CONFORM TO ASTM A240, TYPE 304.

STEEL PINTLES SHALL CONFORM TO ASTM A449 OR ASTM A572 GRADE 50.

ANCHOR BOLTS, NUTS AND WASHERS SHALL CONFORM TO ASTM F1554 GRADE 55, OR MATERIAL OF EQUIVALENT YIELD STRENGTH AND ELONGATION.

ALL STRUCTURAL STEEL BEARING PLATES SHALL BE FLAT ROLLED STEEL PLATES WITH ALL SURFACES SMOOTH AND FREE FROM WARP AND ALL EDGES SMOOTH, STRAIGHT, AND VERTICAL.

ALL PLATE CUTS SHALL BE MACHINE OR MACHINE FLAME CUTS.

ALL FINISHED SURFACES SHALL BE MACHINE FINISHED BY AN AUTOMATIC PROCESS.

ANCHOR BOLTS SHALL BE THREADED 3". PROVIDE ONE STANDARD WROUGHT WASHER AND ONE HEX NUT PER BOLT. PROJECT ANCHOR BOLTS, MASONRY PLATE "D" THICKNESS + 2¼", ABOVE TOP OF CONCRETE.

CHAMFER ANCHOR BOLTS PRIOR TO THREADING.

MASONRY PLATE "D", ROCKER PLATE "C", ANCHOR BOLTS, NUTS AND WASHERS SHALL BE GALVANIZED IN ACCORDANCE WITH ASTM A153, CLASS "C". STEEL PLATE "B" SHALL BE SHOP PAINTED. DO NOT PAINT TEFLON SURFACE.

ALL MATERIAL IN "STEEL BEARINGS FOR PRESTRESSED CONCRETE GIRDERS". INCLUDING BEARING PADS, SHALL BE PAID FOR AT THE UNIT PRICE BID FOR "BEARING ASSEMBLES EXPANSION B-_-_", EACH.

‡ DRILLED HOLES FOR ANCHOR BOLTS IN MASONRY PLATE "D" SHALL HAVE A DIAMETER ⅜" LARGER THAN ANCHOR BOLT.

▲ TEFLON SURFACE, USE UNFILLED WITH MINIMUM 1/16" THICKNESS. PLACE WITH SCRIVE MARKS IN DIRECTION OF MOVEMENT. BOND STEEL PLATE "B" AND TEFLON WITH ADHESIVE MATERIAL MEETING THE REQUIREMENTS FOUND IN THE STANDARD SPECIFICATION.

◪ PROVIDE A METHOD FOR HANDLING ROCKER PLATE "C" DURING GALVANIZING.

AT INSTALLATION, ENSURE STAINLESS STEEL SLIDING FACE OF THE UPPER ELEMENT AND THE TFE SLIDING FACE OF THE LOWER ELEMENT HAVE THE SURFACE FINISH SPECIFIED AND ARE CLEAN AND FREE OF ALL DUST, MOISTURE, AND ANY OTHER FOREIGN MATTER.

## DESIGNER NOTES

IF ALL BEARINGS AT A GIVEN SUBSTRUCTURE UNIT ARE FIXED, UTILIZE ½" THICK ELASTOMERIC BEARING PADS AND FULL-DEPTH CONCRETE DIAPHRAGMS.

FOR EXPANSION BEARINGS, USE LAMINATED ELASTOMERIC BEARINGS WHENEVER POSSIBLE.

SEE STANDARD 27.02 AND 19.31 FOR CLEARANCE REQUIREMENTS AND STANDARD 27.02 FOR THE USE OF BEVELED ROCKER PLATE "C" ON GRADES GREATER THAN 3%.

HEIGHT OF BEARING SHOWN IN "EXPANSION BEARING ASSEMBLY" INCLUDES ⅛" BEARING PAD AND 1/16" TEFLON SURFACE.

▲ ADJUST HEIGHT IF BEVELED ROCKER PLATE "C" IS USED.

◪ ANCHOR PLATE LENGTH TO BE DESIGNED. MINIMUM LENGTH IS 10". SEE STD. 27.10 FOR ADDITIONAL GUIDANCE.

CALCULATE THE REACTIONS AT THE BEARINGS DUE TO "TOTAL LOADS" AND ALSO "DEAD LOADS" ONLY. USE THE AASHTO LRFD SERVICE I LOAD COMBINATION AND CHECK TO SEE IF THE REACTIONS EXCEED THE BEARING CAPACITIES IN THE TABLE BELOW. CONSIDER ONLY DEAD LOAD (DC + DW) AND HL-93 LIVE LOADS (LL), INCLUDING A 33% DYNAMIC LOAD ALLOWANCE (IM).

IF EITHER REACTION EXCEEDS ITS CORRESPONDING BEARING CAPACITY, THE BEARING DETAILS AS SHOWN ON THIS STANDARD MUST BE MODIFIED TO INCREASE THE BEARING CAPACITY. IF BEARING DETAILS ARE CHANGED AND ANY PLATE HAS A THICKNESS GREATER THAN 2", THEN PROVIDE AN ANSI 250 FINISH TO TOP AND BOTTOM SURFACE OF THESE PLATES.

| | GIRDER SIZE | 28" & 36" | 45" | 54" & 70" | 36W", 45W", 54W", 72W" & 82W" |
|---|---|---|---|---|---|
| BEARING CAPACITY (KIPS) | TOTAL LOAD (DC+DW+(LL+IM)) | 180 | 230 | 280 | 330 |
| | DEAD LOAD (DC + DW) | 110 | 140 | 170 | 200 |

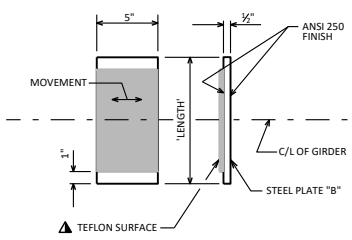


## TEFLON SURFACE ON PLATE "B"

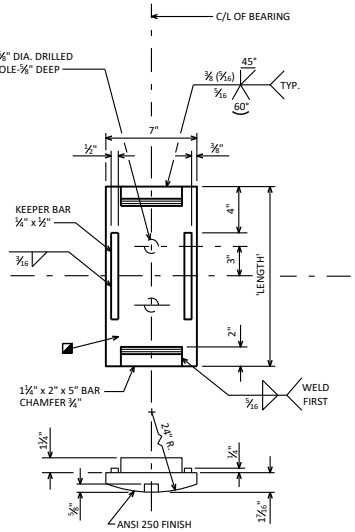


## ROCKER PLATE "C"

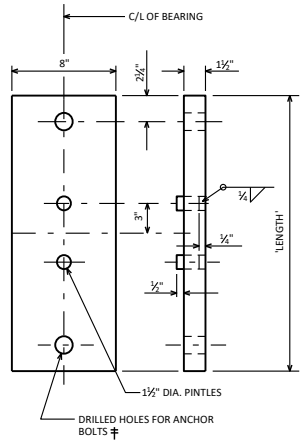


## MASONRY PLATE "D"

## EXPANSION BEARING

# STEEL BEARINGS FOR PRESTRESSED CONCRETE GIRDERS

BUREAU OF STRUCTURES

APPROVED: *Laura Shadewald*

DATE: 7-23

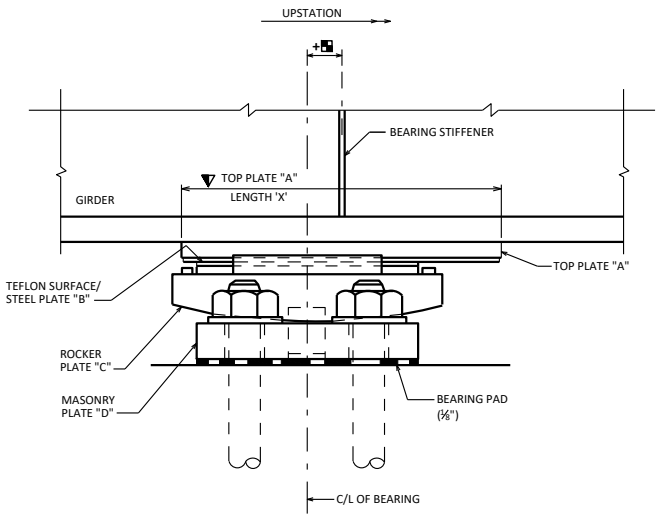


## EXPANSION BEARING ASSEMBLY

FOR STEEL GIRDER

(SHOW ON PLANS)

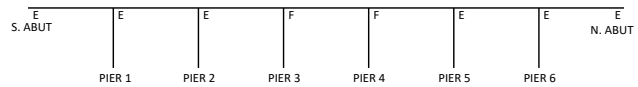


BELOW SHOWS AN EXAMPLE BEARING OFFSET TABLE BASED ON THE SAMPLE BRIDGE SHOWN ABOVE. SUCH A TABLE SHOULD BE PROVIDED FOR STEEL GIRDER BRIDGES. THE OFFSET TABLE MAY BE OMITTED AT THE DISCRETION OF THE DESIGN ENGINEER IF THE VALUES ARE NEGLIGIBLE.
(THE BRIDGE SCHEMATIC SHOULD NOT BE SHOWN ON THE PLANS)

| °F | S. ABUT | PIER 1 | PIER 2 | PIER 5 | PIER 6 | N. ABUT |
|---|---|---|---|---|---|---|
| 30 | 0.7 | 0.5 | 0.3 | -0.3 | -0.5 | -0.7 |
| 45 | 0 | 0 | 0 | 0 | 0 | 0 |
| 60 | -0.7 | -0.5 | -0.3 | 0.3 | 0.5 | 0.7 |
| 75 | -1.6 | -1.1 | -0.7 | 0.7 | 1.1 | 1.6 |
| 90 | -2.4 | -1.7 | -1.0 | 1.0 | 1.7 | 2.4 |

## BEARING OFFSET TABLE

ALL DIMENSIONS IN INCHES
AMBIENT TEMPERATURE DURING GIRDER INSTALLATION

## NOTES

FOR STEEL GIRDER BEARINGS:
USE TEMPERATURE SETTING TABLE, RATHER THAN CENTERING BEARINGS BENEATH BEARING STIFFENERS FOR ALL TEMPERATURES.

FOR PRESTRESSED GIRDER BEARINGS:
PLACE BEARINGS AS SHOWN ON THE SUBSTRUCTURE PLAN, PROVIDING ADJUSTMENT FOR SUBSTRUCTURE LOCATION DISCREPANCIES. PLACE EACH GIRDER CENTERED BETWEEN ITS GIVEN BEARINGS.

## DESIGNER NOTES

THIS STANDARD SHOULD ONLY BE USED FOR STEEL BEARINGS.

▼ TOP PLATE "A" FOR STEEL GIRDER BEARINGS TO BE DESIGNED TO ACCOUNT FOR THERMAL MOVEMENT AND CONSTRUCTION TOLERANCE. (USE GREATER OF VALUE FROM PROCEDURE BELOW OR SIZE FROM STANDARD 27.08).

PROCEDURE FOR SIZING TOP PLATE "A":

½ TEFLON PLATE "B" LENGTH 'X'
+ THERMAL MOVEMENT (USE 60-(-30)=90 DEGREES)
+ 1" CONSTRUCTION TOLERANCE
= ½ TOP PLATE "A" LENGTH (DOUBLE THIS FOR PLATE "A" LENGTH)

◭ ANCHOR PLATES IN PRESTRESSED GIRDERS TO BE DESIGNED TO ACCOUNT FOR THERMAL MOVEMENT, GIRDER SHRINKAGE AND CONSTRUCTION TOLERANCE.

PROCEDURE FOR SIZING ANCHOR PLATE:

2½ INCHES = ½ TEFLON PLATE LENGTH
+ THERMAL MOVEMENT (USE 60-5=55 DEGREES)
+ SHRINKAGE = 0.0003'/'
+ 1" CONSTRUCTION TOLEARNCE
= ½ ANCHOR PLATE LENGTH (DOUBLE THIS FOR PLATE LENGTH)

ACCORDING TO AASHTO, THE LOAD FACTOR FOR TU IS 1.20 FOR DEFORMATIONS. THE PROCEDURE OUTLINED ABOVE SHOULD BE USED WITH A LOAD FACTOR OF 1.0, WITH THE 1" CONSTRUCTION TOLERANCE BEING USED IN LIEU OF THE HIGHER LOAD FACTOR.

THE 90 DEGREE TEMPERATURE RANGE FOR STEEL BEARINGS, BASED ON A 60 DEGREE SETTING TEMPERATURE, IS SLIGHTLY CONSERVATIVE IF THE BEARING OFFSET TABLE IS UTILIZED, SINCE AT 45 DEGREES THE OFFSET WOULD BE ZERO.

SHOWING OFFSET DUE TO EXPANSION

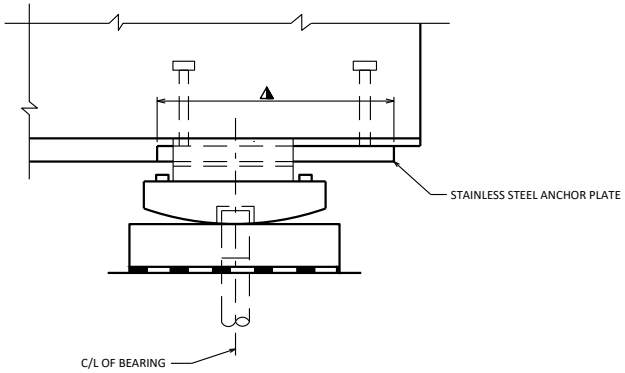


## EXPANSION BEARING AT ABUTMENT

PRESTRESSED CONCRETE GIRDER

FOR DESIGNER INFORMATION, ONLY
(DO NOT PUT ON THE PLANS)

SHOWING OFFSET DUE TO EXPANSION OR CONTRACTION

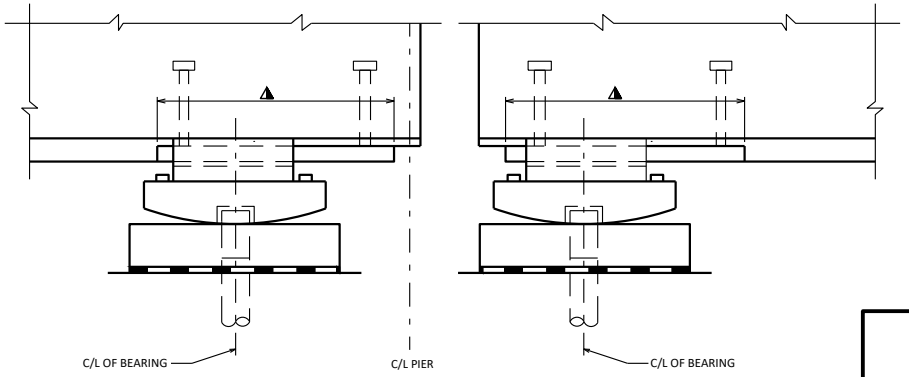


## EXPANSION BEARINGS AT PIER

PRESTRESSED GIRDER (CONC. DIAPHS. NOT SHOWN FOR CLARITY)

FOR DESIGNER INFORMATION, ONLY
(DO NOT PUT ON THE PLANS)

**STEEL EXPANSION BEARING DETAILS**

BUREAU OF STRUCTURES

APPROVED: *Laura Shadewald*

DATE: 1-23