* 6" MAX. SPA.

** 1'-0" MAX. SPA.

*** 2 SPA. (1'-8" PARA. HEIGHT)
4 SPA. (2'-8" PARA. HEIGHT)

◐ PERPENDICULAR TO FACE OF CURB

(15) SEE DETAIL ON STANDARD 28.05

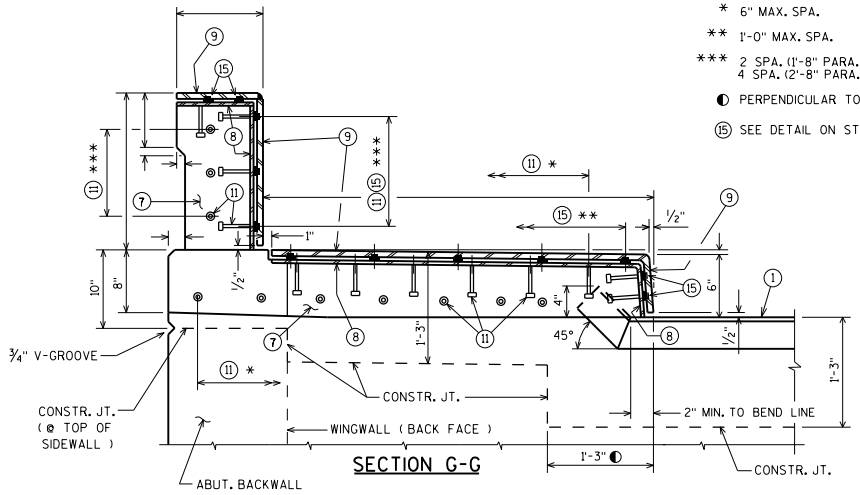

SECTION G-G

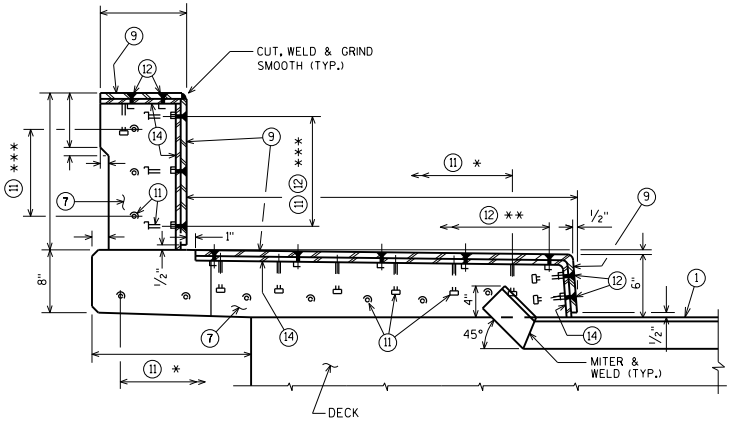

SECTION K-K

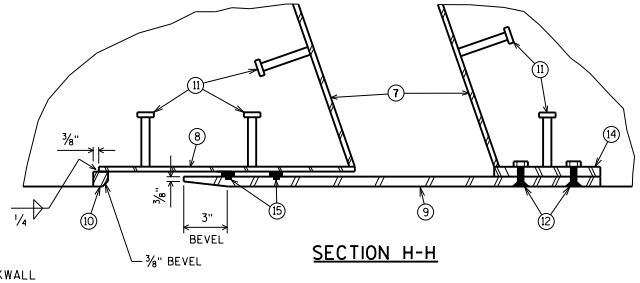

SECTION H-H

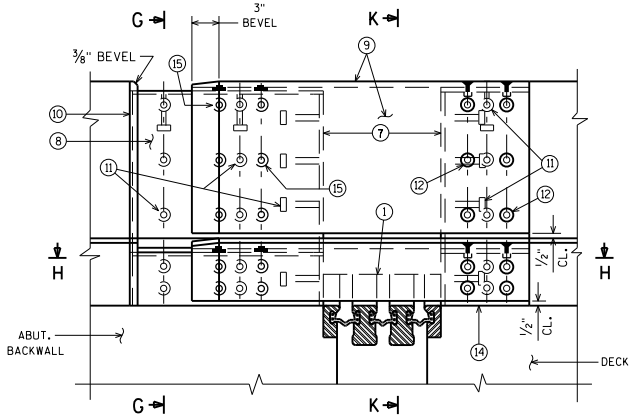

ELEVATION OF SIDEWALK W/ PARAPET

DIRECTION OF TRAFFIC
DETERMINES THE ORIENTATION OF PLATES (9) & (10)

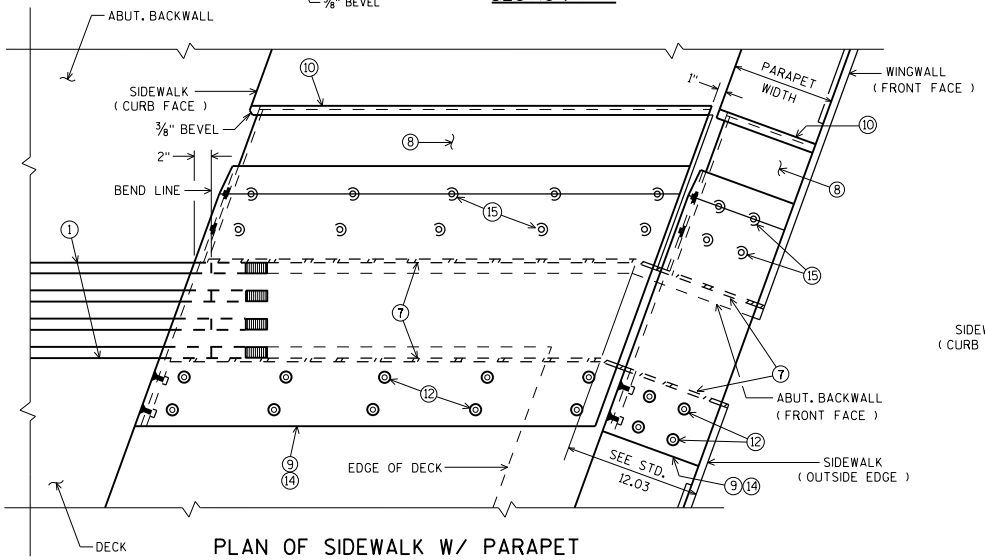

PLAN OF SIDEWALK W/ PARAPET

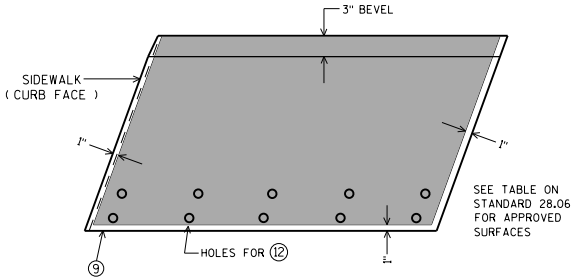

SEE TABLE ON STANDARD 28.06 FOR APPROVED SURFACES

PLAN OF SIDEWALK COVER PLATE WITH SLIP-RESISTANT SURFACE ◥

◥ PLACE SLIP-RESISTANT SURFACE ON TOP WALKING SURFACE IN SHADED AREA ONLY (NOT ON CURB FACE). GALVANIZE PLATE AFTER SLIP-RESISTANT SURFACE IS APPLIED.

COVER PLATES FOR SIDEWALK W/ CONC. PARA.

BUREAU OF STRUCTURES

APPROVED: Scot Becker

DATE: 7-11

STANDARD 28.04