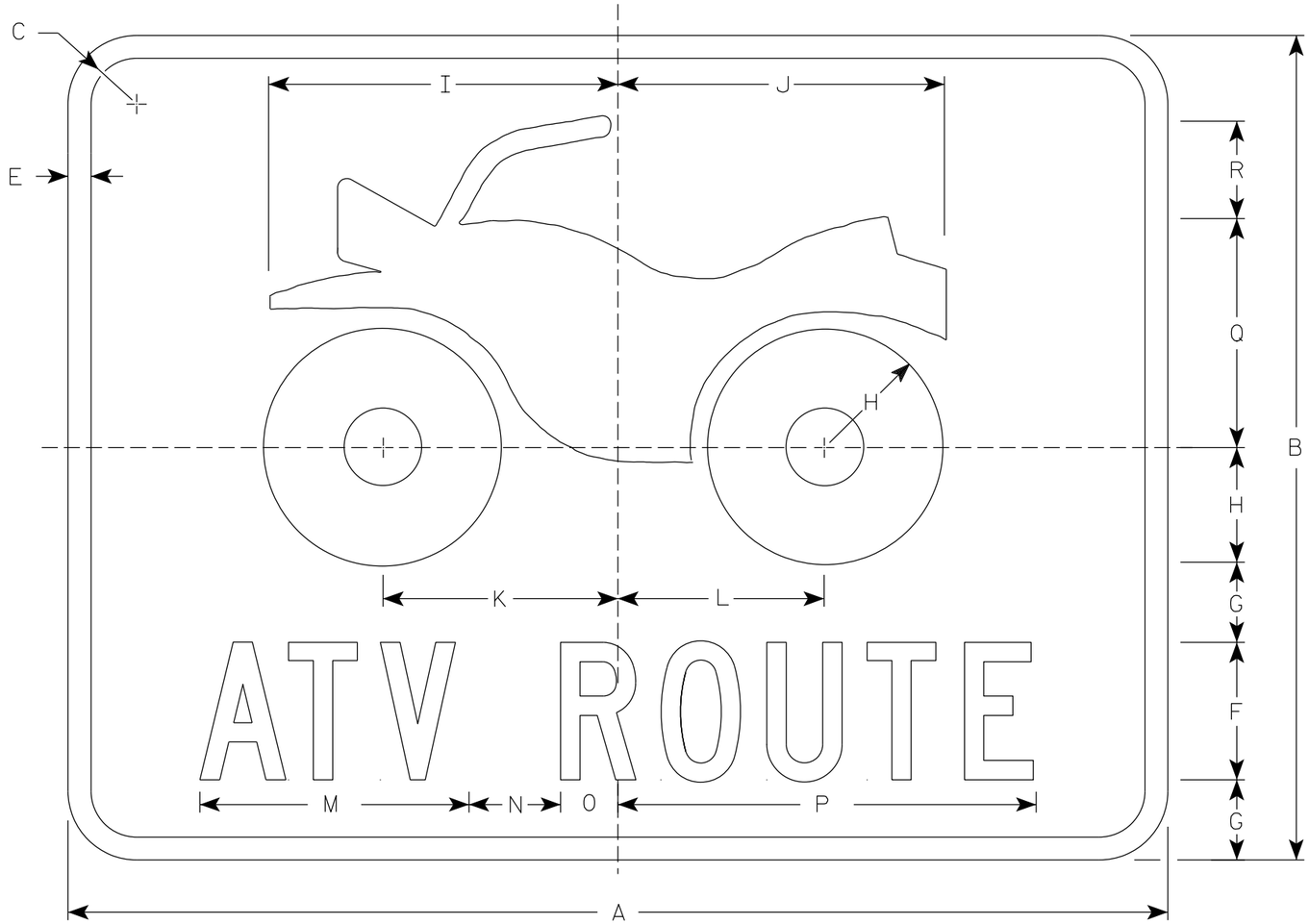

D11-10

NOTES

1. Sign is Type II - Type H Reflective
2. Color:
   Background - Green
   Message - White
3. Message Series - C

SIZE	A	B	C	D	E	F	G	H	I	J	K	L	M	N	O	P	Q	R	S	T	U	V	W	X	Y	Z	Area sq. ft.
1																											
2	24	18	1 1/8		1/2	3	1 3/4	2 1/2	7 5/8	7 1/8	5 1/8	5 1/2	5 7/8	2	1 1/4	9 1/8	5	2 1/8									3.0
3																											
4																											
5																											

STANDARD SIGN
D11-10

WISCONSIN DEPT OF TRANSPORTATION

APPROVED Matthew R Rauch
for State Traffic Engineer

DATE 3/25/19 PLATE NO. D11-10.5

PROJECT NO:

SHEET NO: E