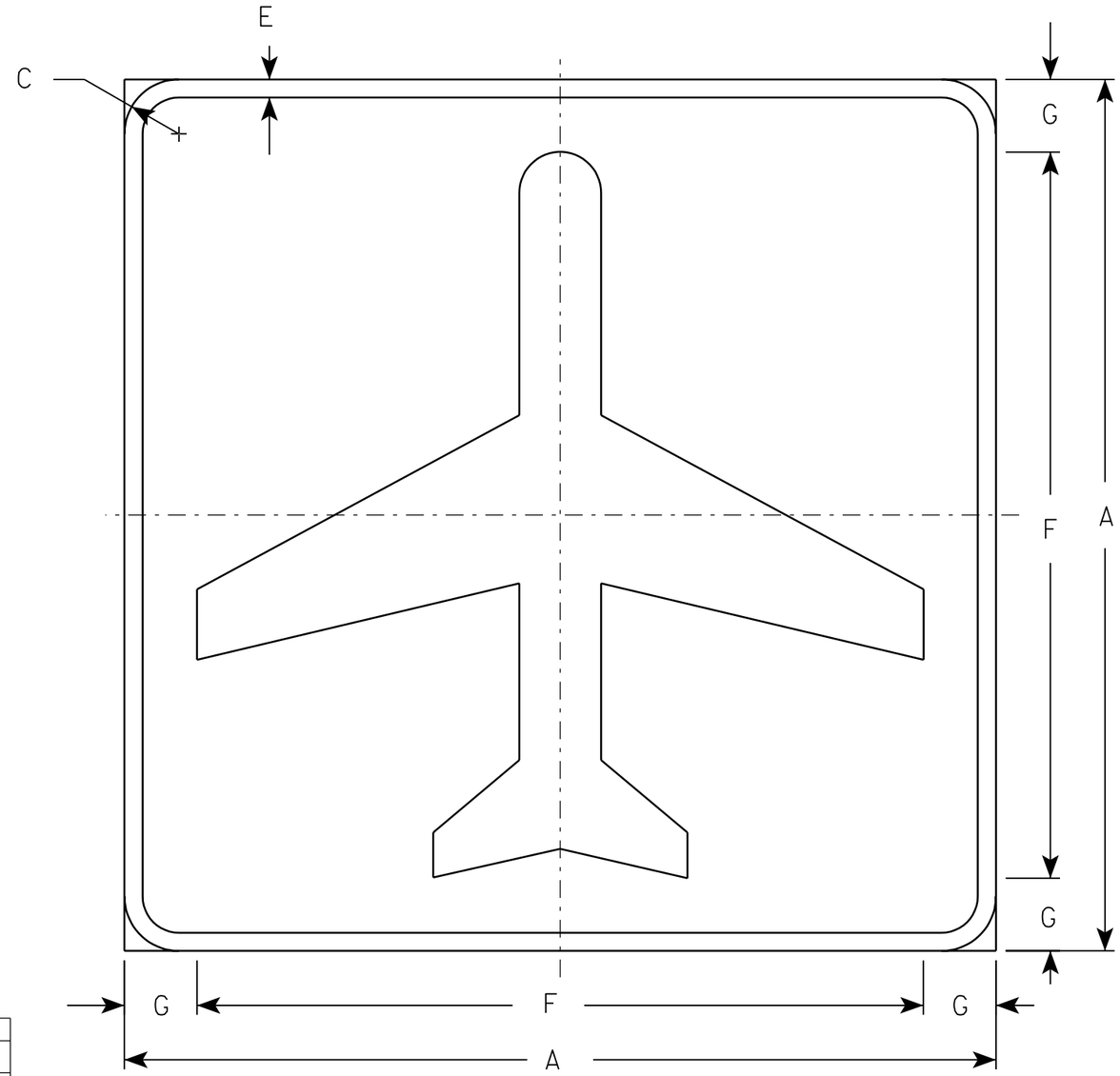

I5 - 1

NOTES

1. Sign is Type II - Type H Reflective - reference WIS DOT Standard Specification for HIGHWAY and STRUCTURE CONSTRUCTION latest edition.
2. Color:
   Background - Green
   Message - White - Type H Reflective
3. Corners may be square or rounded when base material is plywood but borders shall be rounded as shown. When base material is metal, the corners and borders shall be rounded.

Metric equivalent for this sign is:

SIZE	
1	450 mm X 450 mm
2	600 mm X 600 mm
3	750 mm X 750 mm
4	
5	

SIZE	A	B	C	D	E	F	G	H	I	J	K	L	M	N	O	P	Q	R	S	T	U	V	W	X	Y	Z	Area sq. ft.	Area m2
1	18		1 1/8		3/8	15	1 1/2																				2.25	0.20
2	24		1 1/2		1/2	20	2																				4.0	0.37
3	30		2 1/4		3/4	25	2 1/2																				6.25	0.58
4																												
5																												

STANDARD SIGN
I5-1

WISCONSIN DEPT OF TRANSPORTATION

APPROVED Chester J Spang
for State Traffic Engineer

DATE 1/25/02 PLATE NO. I5-1.3

PROJECT NO:	HWY:	COUNTY:		SHEET NO:	E