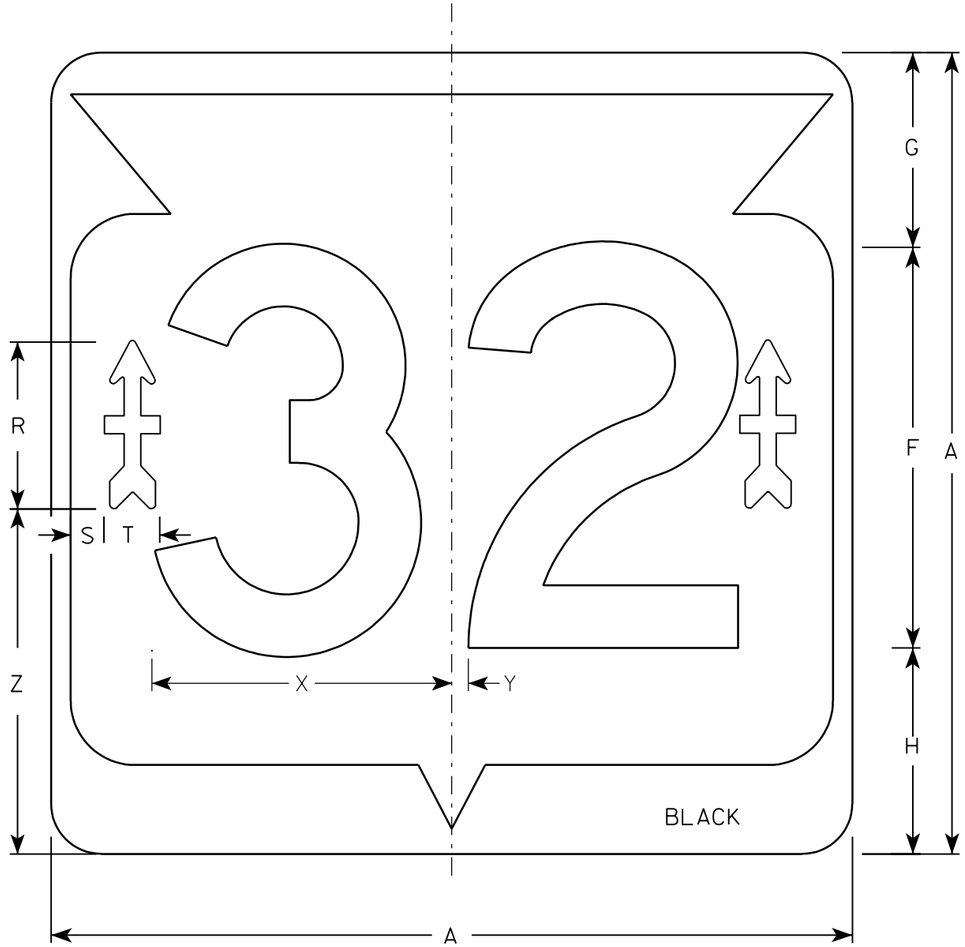

M1-6B

NOTES

1. Sign is Type II - Type H - reference WIS DOT Standard Specification for HIGHWAY and STRUCTURE CONSTRUCTION latest edition.
2. Color:
   Background - White & Black
   Message - Black
   Arrow - Type H Reflective Red
3. Message Series - D
4. Corners may be square or rounded when base material is plywood but borders shall be rounded as shown. When base material is metal, the corners and borders shall be rounded.

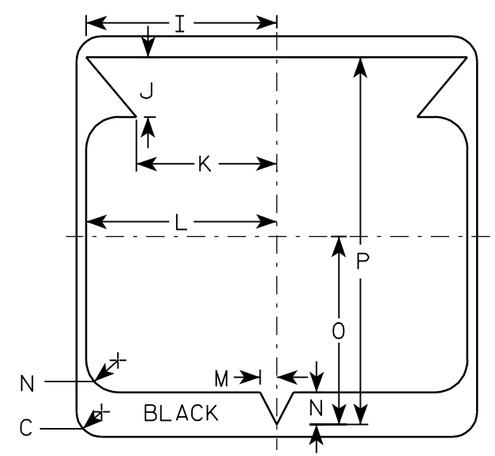

32nd DIVISION ARROW
ACTUAL SIZE

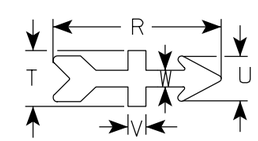

Metric equivalent for this sign is:

SIZE	
1	
2	600 mm X 600 mm
3	900 mm X 900 mm
4	900 mm X 900 mm
5	900 mm X 900 mm

SIZE	A	B	C	D	E	F	G	H	I	J	K	L	M	N	O	P	Q	R	S	T	U	V	W	X	Y	Z	Area sq. ft.	Area m2
1																												
2	24		1 1/2			12	5 1/2	6 1/2	10 1/4	2 1/2	8 7/8	11 1/2	1	1 7/8	11 1/4	21 7/8		5 1/8	3/4	1 7/8	1 1/2	5/8	5/8	9	1/2	10 1/2	4.0	.36
3	36		2 1/4			18	8 3/4	9 1/4	15 3/8	5 3/8	12 5/8	17 1/8	1 1/2	2 7/8	16 7/8	33		7 1/2	1 1/2	2 1/2	2	7/8	3/4	13 1/2	3/4	15 1/2	9.0	.81
4	36		2 1/4			18	8 3/4	9 1/4	15 3/8	5 3/8	12 5/8	17 1/8	1 1/2	2 7/8	16 7/8	33		7 1/2	1 1/2	2 1/2	2	7/8	3/4	13 1/2	3/4	15 1/2	9.0	.81
5	36		2 1/4			18	8 3/4	9 1/4	15 3/8	5 3/8	12 5/8	17 1/8	1 1/2	2 7/8	16 7/8	33		7 1/2	1 1/2	2 1/2	2	7/8	3/4	13 1/2	3/4	15 1/2	9.0	.81

STATE ROUTE MARKER "32"
M1-6B FOR ASSEMBLIES

WISCONSIN DEPT OF TRANSPORTATION

APPROVED Matthew R Rauch
for State Traffic Engineer

DATE 12/5/05 PLATE NO. M1-6B.2

PROJECT NO:	HWY:	COUNTY:		SHEET NO:	E