NOTES

1. Signs are Type II - Type H except as Shown
2. Color:
   Background - See Note 4
   Message - See note 4
3. M5-52 Background - White
   Message - Black

   MB5-52 Background - Blue
   Message - White

   MK5-52 Background - Green
   Message - White

   MM5-52 Background - White
   Message - Green

   MN5-52 Background - Brown
   Message - White

   MO5-52 Background - Orange - Type F Reflective
   Message - Black

   MP5-52 Background - White
   Message - Blue

   MR5-52 Background - Brown
   Message - Yellow

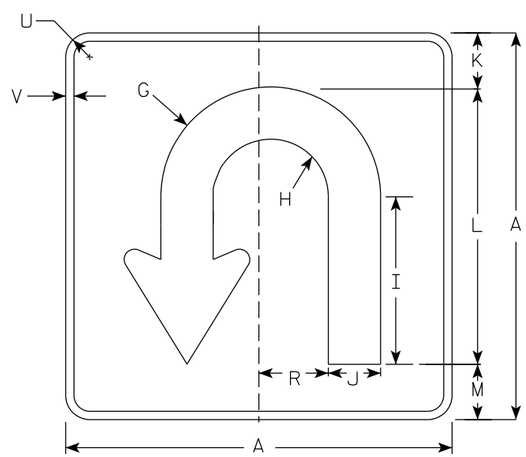

M5-52

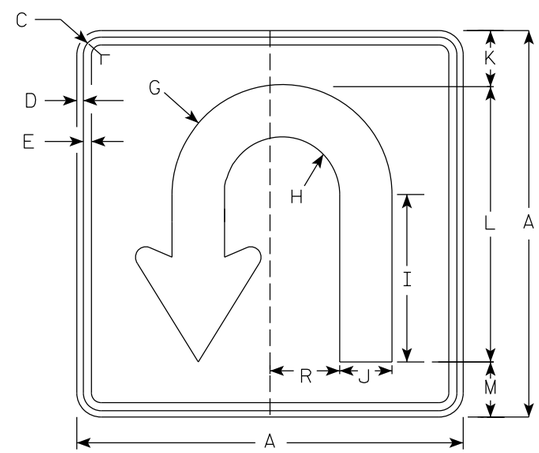

M5-52

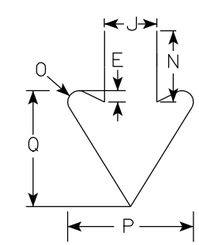

Arrow Detail

SIZE	A	B	C	D	E	F	G	H	I	J	K	L	M	N	O	P	Q	R	S	T	U	V	W	X	Y	Z	Area sq. ft.
1																											
2	21		1 1/8	3/8	3/8		6	3 1/8	9 1/8	2 7/8	3	15	3	3 7/8	5/8	6 7/8	6 3/4	3 3/4			1 1/2	1/2					3.06
3	30		1 3/8	1/2	5/8		8 1/2	4 1/2	13	4 1/8	4 3/8	21 3/8	4 1/4	5 1/2	7/8	9 3/4	8 1/8	5 1/4			2 1/2	5/8					6.25
4																											
5																											

STANDARD SIGN
M5-52
SERIES

WISCONSIN DEPT OF TRANSPORTATION

APPROVED Matthew R Rauch
For State Traffic Engineer

DATE 5/21/19 PLATE NO. M5-52.1

PROJECT NO:	HWY:	COUNTY:		SHEET NO:	E