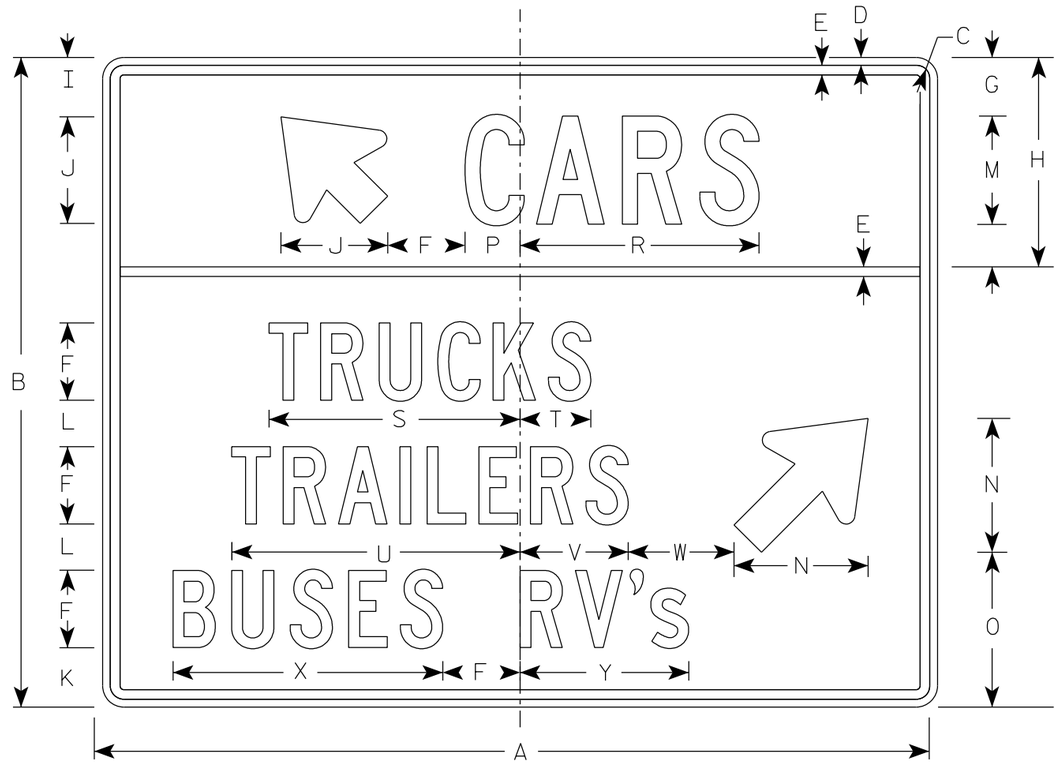

R8-74

NOTES

1. Sign is Type II - Type H Reflective
2. Color:
   Background - White
   Message - Black
3. Message Series - C

Arrow Details

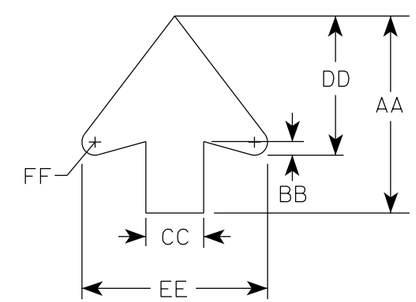

Top Arrow

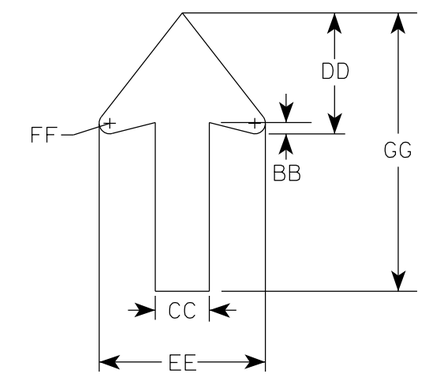

Bottom Arrow

SIZE	A	B	C	D	E	F	G	H	I	J	K	L	M	N	O	P	Q	R	S	T	U	V	W	X	Y	Z	Area sq. ft.
1																											
2S	54	42	1 3/8	1/2	5/8	5	3 3/4	13 1/2	3 7/8	7	3 7/8	3	7	8 5/8	10	3 1/2		15 1/2	16 1/4	4 5/8	18 5/8	7	6 7/8	7 1/2	10 7/8		15.75
2M	54	42	1 3/8	1/2	5/8	5	3 3/4	13 1/2	3 7/8	7	3 7/8	3	7	8 5/8	10	3 1/2		15 1/2	16 1/4	4 5/8	18 5/8	7	6 7/8	7 1/2	10 7/8		15.75
3	72	54	2 1/4	3/4	1	7	4 3/8	16 3/4	4 3/8	9 7/8	4 3/4	3 5/8	9	14	11 7/8	4 1/2		20 1/8	22 1/2	6 5/8	26	10	6 7/8	24 3/4	17 7/8		27.00
4	72	54	2 1/4	3/4	1	7	4 3/8	16 3/4	4 3/8	9 7/8	4 3/4	3 5/8	9	14	11 7/8	4 1/2		20 1/8	22 1/2	6 5/8	26	10	6 7/8	24 3/4	17 7/8		27.00
5	72	54	2 1/4	3/4	1	7	4 3/8	16 3/4	4 3/8	9 7/8	4 3/4	3 5/8	9	14	11 7/8	4 1/2		20 1/8	22 1/2	6 5/8	26	10	6 7/8	24 3/4	17 7/8		27.00

SIZE	AA	BB	CC	DD	EE	FF	GG
1							
2S	8 1/2	3/8	2 5/8	5 1/2	8	3/8	11
2M	8 1/2	3/8	2 5/8	5 1/2	8	3/8	11
3	12	1/2	3 1/2	7 3/8	10 3/4	1/2	18
4	12	1/2	3 1/2	7 3/8	10 3/4	1/2	18
5	12	1/2	3 1/2	7 3/8	10 3/4	1/2	18

STANDARD SIGN
R8-74

WISCONSIN DEPT OF TRANSPORTATION

APPROVED Matthew R Rauch
For State Traffic Engineer

DATE 3/10/2021 PLATE NO. R8-74.9

PROJECT NO:	HWY:	COUNTY:		SHEET NO:	E