WKE JUNE 2022

PROJECT ID: 1310-04-70

WITH: N/A

COUNTY: KENOSHA

ORDER OF SHEETS

Section No.	1	Title
Section No.	2	Typical Sections and Details
Section No.	3	Estimate of Quantities
Section No.	3	Miscellaneous Quantities
Section No.	4	Right of Way Plat
Section No.	5	Plan and Profile
Section No.	6	Standard Detail Drawings
Section No.	7	Sign Plates
Section No.	8	Structure Plans
Section No.	9	Computer Earthwork Data
Section No.	9	Cross Sections

TOTAL SHEETS = 974



N

DESIGN DESIGNATION

A.A.D.T.	2022	=	22,800
A.A.D.T.	2042	=	25,900
D.H.V.		=	2,620
D.D.		=	64/36
T.		=	18.5%
DESIGN SPEED		=	40
ESALS		=	11,000,000

CONVENTIONAL SYMBOLS

PLAN
- CORPORATE LIMITS
- PROPERTY LINE
- LOT LINE
- LIMITED HIGHWAY EASEMENT
- EXISTING RIGHT OF WAY
- PROPOSED OR NEW R/W LINE
- SLOPE INTERCEPT
- REFERENCE LINE (300'EB')
- EXISTING CULVERT
- PROPOSED CULVERT (Box or Pipe)
- COMBUSTIBLE FLUIDS (CAUTION)
- MARSH AREA
- WOODED OR SHRUB AREA

PROFILE
- GRADE LINE
- ORIGINAL GROUND
- MARSH OR ROCK PROFILE (To be noted as such) (ROCK)
- SPECIAL DITCH (LABEL)
- GRADE ELEVATION (95.36)
- CULVERT (Profile View)

UTILITIES
- ELECTRIC (E)
- FIBER OPTIC (FO)
- GAS (G)
- SANITARY SEWER (SAN)
- STORM SEWER (SS)
- TELEPHONE (T)
- WATER (W)
- UTILITY PEDESTAL
- POWER POLE
- TELEPHONE POLE

STATE OF WISCONSIN
DEPARTMENT OF TRANSPORTATION

PLAN OF PROPOSED IMPROVEMENT

75TH ST, VILLAGE OF PADDOCK LAKE

256TH AVE TO 236TH AVE

STH 50

KENOSHA COUNTY

STATE PROJECT	FEDERAL PROJECT	
	PROJECT	CONTRACT
1310-04-70	WISC 2022422	1

STATE PROJECT NUMBER
1310-04-70

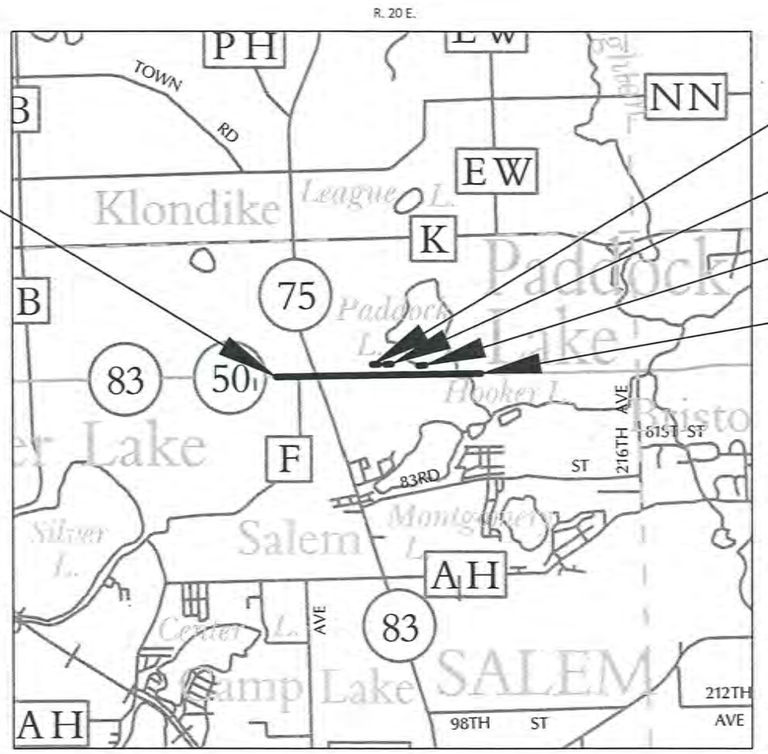

BEGIN PROJECT
STA 994+20.00
Y= 128,208.04
X= 549,040.12

STRUCTURE R-30-71
STA 1028+25 LT

STRUTURE R-30-70
STA 1030+00 LT

STRUTURE R-30-73
STA 1044+00 LT

END PROJECT
STA 1068+21.00

LAYOUT
SCALE 0 1 MI

TOTAL NET LENGTH OF CENTERLINE = 1.402

HORIZONTAL POSITIONS SHOWN ON THIS PLAN ARE WISCONSIN COORDINATE REFERENCE SYSTEM (WISCRS), KENOSHA COUNTY, NAD83 (2007), IN U.S. SURVEY FEET. POSITIONS SHOWN ARE GRID COORDINATES, GRID BEARINGS, AND GRID DISTANCES. GRID DISTANCES ARE THE SAME AS GROUND DISTANCES.

ELEVATIONS ARE REFERENCED TO NAVD88 (2007). GPS DERIVED ELEVATIONS ARE BASED ON GEOID 12A.

STATE OF WISCONSIN
DEPARTMENT OF TRANSPORTATION

PREPARED BY

Surveyor	AYRES
Designer	NENG YANG
Project Manager	BRIAN PLUEMER
Regional Examiner	STEVE CHOJNACKI
Regional Supervisor	REEM SHAHIN

APPROVED FOR THE DEPARTMENT
DATE: 2/1/22 Brian Pluemer (Signature)

E

FILE NAME : T:\1182708.06\CIVIL3D\13100400\13100400\SHEETSPLAN\010101_TI.DWG PLOT DATE : 11/4/2021 8:27 AM PLOT BY : BLACKWOOD, JIM PLOT NAME :

GENERAL NOTES

- THE LOCATIONS OF EXISTING AND PROPOSED UTILITY INSTALLATIONS AS SHOWN ON THE PLANS ARE APPROXIMATE. THERE MAY BE OTHER UTILITY INSTALLATIONS WITHIN THE PROJECT AREA THAT ARE NOT SHOWN. COORDINATE CONSTRUCTION ACTIVITIES WITH A CALL TO DIGGERS HOTLINE AND/OR A DIRECT CALL TO THE UTILITIES THAT HAVE FACILITIES IN THE AREA. NOT ALL UTILITIES ARE MEMBERS OF DIGGERS HOTLINE.
- ANY REINFORCEMENT LOCATED IN EXISTING CONCRETE PAVEMENT SHALL BE CONSIDERED INCIDENTAL TO THE REMOVING PAVEMENT ITEM, AND NO ADDITIONAL COMPENSATION WILL BE GRANTED.
- CURB AND GUTTER GRADES ARE GIVEN TO THE FLANGE OF CURB AND GUTTER OR THEORETICAL FLANGE POINT OF INTEGRAL CURB AND GUTTER. CURB AND GUTTER RADII ARE MEASURED TO THE FLANGE OF CURB AND GUTTER OR THEORETICAL FLANGE POINT OF INTEGRAL CURB AND GUTTER.
- CONTACT THE PROJECT ENGINEER AND SEWRPC AT LEAST TWO WEEKS BEFORE WORKING NEAR ANY SECTION CORNER MONUMENT.
- VERIFY EXISTING PAVEMENT ELEVATIONS AT ALL TIE-INS TO EXISTING PAVEMENT PRIOR TO CONSTRUCTION. NOTIFY ENGINEER IF A DISCREPANCY IS FOUND BETWEEN PROPOSED PLAN ELEVATIONS AND EXISTING PAVEMENT ELEVATIONS.
- CONSTRUCT PAVEMENT CONSISTENT WITH THE PLAN TYPICAL SECTIONS. LOCATE LONGITUDINAL JOINTS IN ASPHALT PAVEMENT OUTSIDE OF DRIVING, TURNING, BIKE, OR PARKING LANE UNLESS DIRECTED OTHERWISE BY THE ENGINEER PREVENT HMA LONGITUDINAL JOINTS FROM BEING LOCATED WITHIN A DRIVING, TURNING, BIKE, OR PARKING LANE.
- SAWCUT EXISTING ASPHALT AND CONCRETE PAVEMENT AT THE MATCHLINE AS INDICATED ON THE PLAN OR AS DIRECTED BY THE ENGINEER.
- CONSTRUCT INSIDE EDGE OF SIDEWALK 1/2 INCH HIGHER THAN TOP OF CURB WHEN THEY ARE ADJACENT TO EACH OTHER.
- RESHAPE, RESTORE AND FINISH ALL PREVIOUSLY GRASSED AREAS DISTURBED BY OPERATIONS OUTSIDE OF THE NORMAL CONSTRUCTION LIMITS AT NO EXPENSE TO THE DEPARTMENT.
- PLACE TOPSOIL 1 INCH BELOW THE TOP OF ADJACENT CONCRETE CURBS OR SIDEWALKS IN SOD AREAS.
- DISTURBED AREAS WITHIN THE RIGHT OF WAY ARE TO BE TOPSOILED, FERTILIZED, SEEDED, AND SODDED AS DIRECTED BY THE ENGINEER.
- WHEN DEFINING THE PAVEMENT STRUCTURE, THE BOTTOM OF THE BASE AGGREGATE DENSE LAYER IS CONSIDERED THE SUBGRADE LINE. THE SELECT CRUSHED MATERIAL LAYER IS A SUBGRADE IMPROVEMENT.
- DO NOT REMOVE ANY TREES OR SHRUBS WITHOUT APPROVAL OF THE ENGINEER.
- ALL SIGN LOCATIONS SHALL BE REVIEWED BY THE ENGINEER PRIOR TO INSTALLATION.
- EXISTING DRIVEWAYS AND FIELD ENTRANCES SHALL BE RESTORED IN KIND AS DIRECTED BY THE ENGINEER IN THE FIELD AND AT THE LOCATION DETERMINED BY THE ENGINEER.
- CROSS SECTIONS SHOWN INCLUDE THE THICKNESS OF TOPSOIL WHERE REQUIRED. TOPSOIL SHALL BE REPLACED WITH 6-INCH TYPICAL DEPTH.

ORDER OF SECTION 2 SHEETS:

- PROJECT OVERVIEW
- TYPICAL SECTIONS
- CONSTRUCTION DETAILS
- REMOVAL PLAN
- PLAN DETAILS
- PAVING GRADES
- PARCEL DETAILS
- CURB RAMP DETAILS
- EROSION CONTROL
- STORM SEWER
- UTILITY PLAN
- UTILITY ADJUSTMENTS
- SIGN REMOVALS
- PERMANENT SIGNING
- TRAFFIC SIGNALS
- PAVEMENT MARKING
- TRAFFIC CONTROL/STAGING
- ALTERNATE ROUTE
- DETOURS

ALIGNMENT PLANS

HMA PAVEMENT LOCATION	ASPHALT MIX	LOWER LAYER	UPPER LAYER
STH 83	4 MT 58-28 S	1 3/4-INCH	X
MILL & OVERLAY	4 MT 58-28 S	X	1 3/4-INCH
STH 83 SHOULDER 3-INCH	4 MT 58-28 S	X	3-INCH
STH 83	3 MT 58-28 S	3-INCH	X
RECONSTRUCTION	4 MT 58-28 S	X	1 3/4-INCH
6 1/2-INCH	4 MT 58-28 S	X	1 3/4-INCH
SIDE ROADS	3 MT 58-28 S	3 1/2 INCH	X
5 1/2-INCH	4 MT 58-28 S	X	2-INCH
STH 75	3 MT 58-28 S	3-INCH	X
RECONSTRUCTION	4 MT 58-28 S	X	1 3/4-INCH
6 1/2-INCH	4 MT 58-28 S	X	1 3/4-INCH

2

UTILITY CONTACTS:

MIKE VANBOVEN
AT&T WISCONSIN-COMMUNICATION LINE
411 7TH STREET
RACINE, WI 53403
(262) 676-7894
MV3658@ATT.COM

RUSS RYAN
FRONTIER COMMUNICATIONS OF WI LLC-COMMUNICATION LINE
118 division street
PLYMOUTN, WI 53073
(920) 583-3275
RUSSELL.W.RYAN@FTR.COM

CORY SCHMUKI
MIDWEST FIBER NETWORKDS LLC - COMMUNICATION LINE
6070 NORTH FLINT RD
GLENDALE, WI 53209
(414) 459-3561
CSCHMUKI@MIDWESTFIBERNETWORKS.COM

TIMOTHY POPANDA
VILLAGE OF PADDOCK LAKE - WATER
6969 236TH AVE
SALEM, WI 53168
(262) 843-2713
TPOPANDA@PADDOCKLAKE.NET

JARRETT GATES
WISCONSIN DEPT OF TRANSPORTATION-WISCONSIN SIGNAL
141 NW BARSTOW STREET
WAUKESHA, WI 53188
(262) 521-5894
JARRETT.GATES@DOT.WI.GOV

FULYA KICIKOGLU
WE ENERGIES - GAS/PETROLEUM
500 S 116TH STREET
WEST ALLIS, WI 53214
(414) 751-7287
FULYA.KICIKOGLU@WE-ENERGIES.COM

TRANS 220 MAILBOX
ATC MANAGEMENT, INC - ELECTRICITY-TRANSMISSION
801 O'KEEFE RD
DE PERE, WI 54115-6113
(920) 338-6582
dl-ATCDOTNotifications@atcllc.com

BEAU ABUYA
SPECTRUM - COMMUNICATION LINE
1320 N DR MARTIN LUTHER KING DR
MILWAUKEE, WI 53212
(414) 758-9241
BEAU.ABUYA@CHARTER.COM

TIMOTHY POPANDA
VILLAGE OF PADDOCK LAKE - SEWER
6969 236TH AVE
SALEM, WI 53168
(262) 843-2713
TPOPANDA@PADDOCKLAKE.NET

ERIC PEREA
WISCONSIN DEPT OF TRANSPORATION-STREET LIGHTING
141 NB BARSTOW STREET
WAUKESHA, WI 53187-0798
(262) 574-5422
ERIC.PEREA@DOT.WI.GOV

ANDY DOERFLINGER
WE ENERGIES - ELECTRICITY
500 S 116TH STREET
WEST ALLIS, WI 53214
(414) 944-5695
ANDY.DOERFLINGER@WE-ENERGIES.COM

DIGGERS HOTLINE
Dial 811 or (800) 242-8511
www.DiggersHotline.com

2

OTHER CONTACTS:

BRIAN PLUEMER
WISCONSIN DEPT OF TRANSPORTATION-PDS
141 NW BARSTOW STREET
WAUKESHA, WI 53188
(262) 521-6721
BRIAN.PLUEMER@DOT.WI.GOV

CRAIG WEBSTER
WISCONSIN DEPT OF NATURAL RESOURCE
141 NW BARSTOW STREET, ROOM 180
WAUKESHA, WI 53188
(262) 574-2141
CRAIG.WEBSTER@WISCONSIN.GOV

CHRISTOPHER HIEBERT
CHIEF TRANSPORTATION ENGINEER
SE WE REGIONAL PLANNING COMMISSION
W239 N1812 ROCKWOOD DRIVE
PO BOX 1607
WAUKESHA, WI 53187-1607
CHIEBERT@SEWRPC.ORG

MARK HINRICHS
TRANSPORTATION MANAGER
KENOSHA ACHIEVEMENT CENTER, INC.
1218 79TH STREET
KENOSHA, WI 53143
(262) 658-9561

WESTERN KENOSHA COUNTY TRANSIT
GENERAL PHONE: 888-203-3498

LAUREN COFFMAN
MOBILITY MANAGER
KENOSHA COUNTY AGING & DISABILITY
RESOURCE CENTER
8600 SHERIDAN RD
KENOSHA, WI 53143
(262) 605-6649

CLEMENT ABONGWA
KENOSHA CO DEPT OF PUBLIC WORKS
DIVISION OF HIGHWAYS
19600 75TH STREET
PO BOX 609
BRISTOL, WI 53104
(262) 857-1872

TIM POPANDA
VILLAGE OF PADDOCK LAKE
6969 236TH AVE
SALEM, WI 53168
(262) 843-2713
TPOPANDA@PADDOCKLAKE.NET

DAVID G BETH
KENOSHA COUNTY SHERIFF'S DEPT
1000 55TH STREET
KENOSHA, WI 53140
(262) 653-5100

SEWRPC CONTACTS:
ROB MERRY
W239 N1812 ROCKWOOD DR
PO BOX 1607
WAUKESHA, WI 53187-1607
PHONE: (262) 953-4289
CELL: (920) 912-1036
FAX: (262) 547-1103
E-MAIL: RMERRY@SEWRPC.ORG

CAROLYN FELDT
ELDER & DISABILITY SERVICE MANAGER
KENOSHA COUTY AGING & DISABILITY
RESOURCE CENTER
8600 SHERIDAN RD
KENOSHA, WI 53143
(262) 605-6611

BRADLY ZAUTCKE
VILLAGE OF SALEM LAKES
P.O. BOX 443
SALEM, WI 53168
(262) 862-2371

DIGGERS HOTLINE
Dial 811 or (800) 242-8511
www.DiggersHotline.com

2

2

N

VILLAGE OF PADDOCK LAKE

PADDOCK LAKE

TOWN OF SALEM

BEGIN PROJECT
STA 994+20

END CONSTRUCTION
STA 51+42
MATCH EXISTING
SAW CUT REQ'D

SIGNALIZED INTERSECTION (S30-0042)
REPLACE WITH MONOTUBES

WETLAND

MEDIAN CLOSURE
(TBD)

ADDITIONAL LEFT
TURN STORAGE

STOP CONTROL
ON SIDEROAD

RETAINING WALL
R-30-45

RETAINING WALL
R-30-44

SIGNALIZED INTERSECTION (S30-0527)
REPLACE WITH MONOTUBES

STOP CONTROL
ON SIDEROAD

STOP CONTROL
ON SIDEROAD

STOP CONTROL
ON SIDEROAD

KENOSHA COUNTY
OLD SETTLERS PARK

END PROJECT
STA 1068+21

995 1000 1005 1010 1015 1020 1025 1030 1035 1040 1045 1050 1055 1060 1065 1070

STH 75

55

250TH AVE

248TH AVE

246TH AVE

243RD AVE

74TH PL

236TH AVE

STH 50 (75TH ST)

CTH F

WETLAND

DRY DETENTION POND

RAISED MEDIAN EXTENSION

WESTOSHA CENTRAL
HIGH SCHOOL

HIGH SCHOOL
DWY ENTRANCE

244TH AVE

242ND AVE

KENOSHA COUNTY
PARK

WETLAND

LEFT TURN LANE

SIDEWALK EXTENSION

RIGHT TURN LANE

MEDIAN CLOSURE
(TBD)

RIGHT TURN LANE

STH 83

45

EXISTING SHARED USE PATH TO REMAIN

STOP CONTROL
ON SIDEROAD

BEGIN CONSTRUCTION
STA 44+69
MATCH EXISTING
SAW CUT REQ'D

STOP CONTROL
ON SIDEROAD

STOP CONTROL
ON SIDEROAD

RAISED MEDIAN EXTENSION

SIDEWALK EXTENSION

KENOSHA COUNTY

LEGEND

WETLAND BOUNDARY

R/W

HOOKER LAKE

PROJECT NO: 1310-04-70	HWY: STH 50	COUNTY: KENOSHA	PROJECT OVERVIEW	SHEET E

FILE NAME : T:\1182708.06\CIVIL3D\13100400\13100400\SHEETSPLAN\020201_PO.DWG
LAYOUT NAME - 020201_po

PLOT DATE : 11/4/2021 8:39 AM PLOT BY : BLACKWOOD, JIM PLOT NAME : PLOT SCALE : 1 IN:500 FT

2

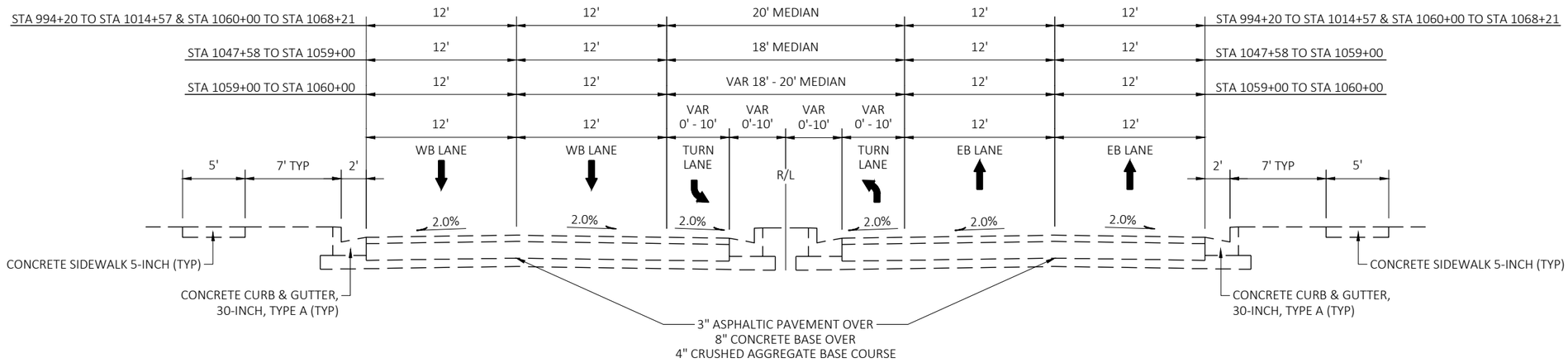

EXISTING TYPICAL SECTION - STH 50

STA 994+20 TO STA 1014+57
STA 1047+58 TO STA 1068+21

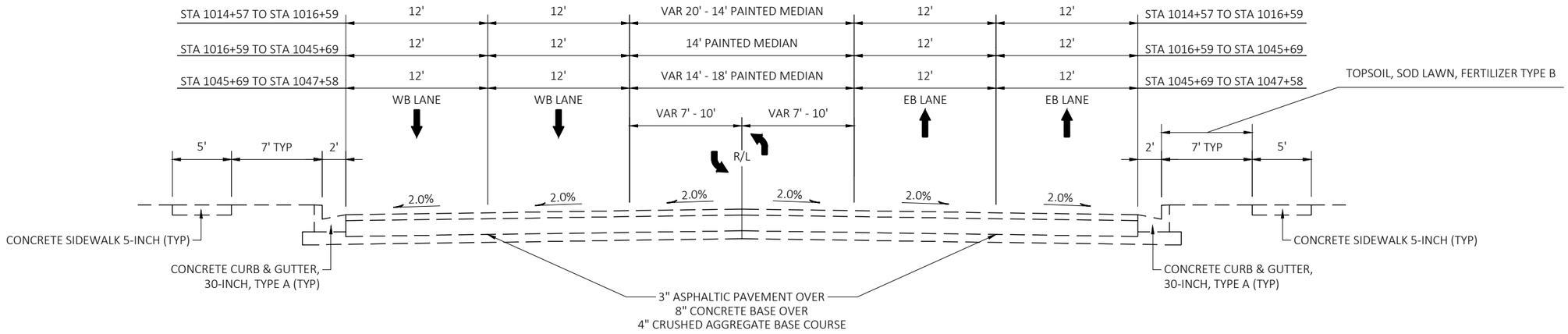

EXISTING TYPICAL SECTION - STH 50

STA 1014+57 TO STA 1047+58

PROJECT NO: 1310-04-70	HWY: STH 50	COUNTY: KENOSHA	TYPICAL SECTIONS	SHEET 6	E

FILE NAME : T:\1182708.06\CIVIL3D\13100400\13100400\SHEETSPLAN\020301_TS.DWG
LAYOUT NAME - 020301_ts
PLOT DATE : 11/4/2021 9:05 AM
PLOT BY : BLACKWOOD, JIM
PLOT NAME :
PLOT SCALE : ##########
WISDOT/CADDS SHEET 42

2

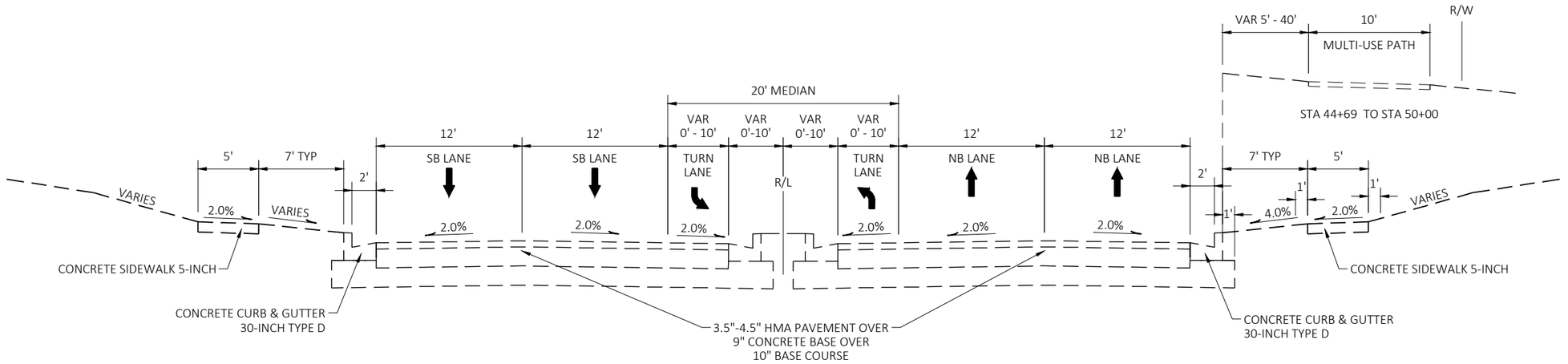

EXISTING TYPICAL SECTION - STH 75/STH 83

STA 44+69 TO STA 53+32

PROJECT NO: 1310-04-70	HWY: STH 50	COUNTY: KENOSHA	TYPICAL SECTIONS	SHEET 7	E

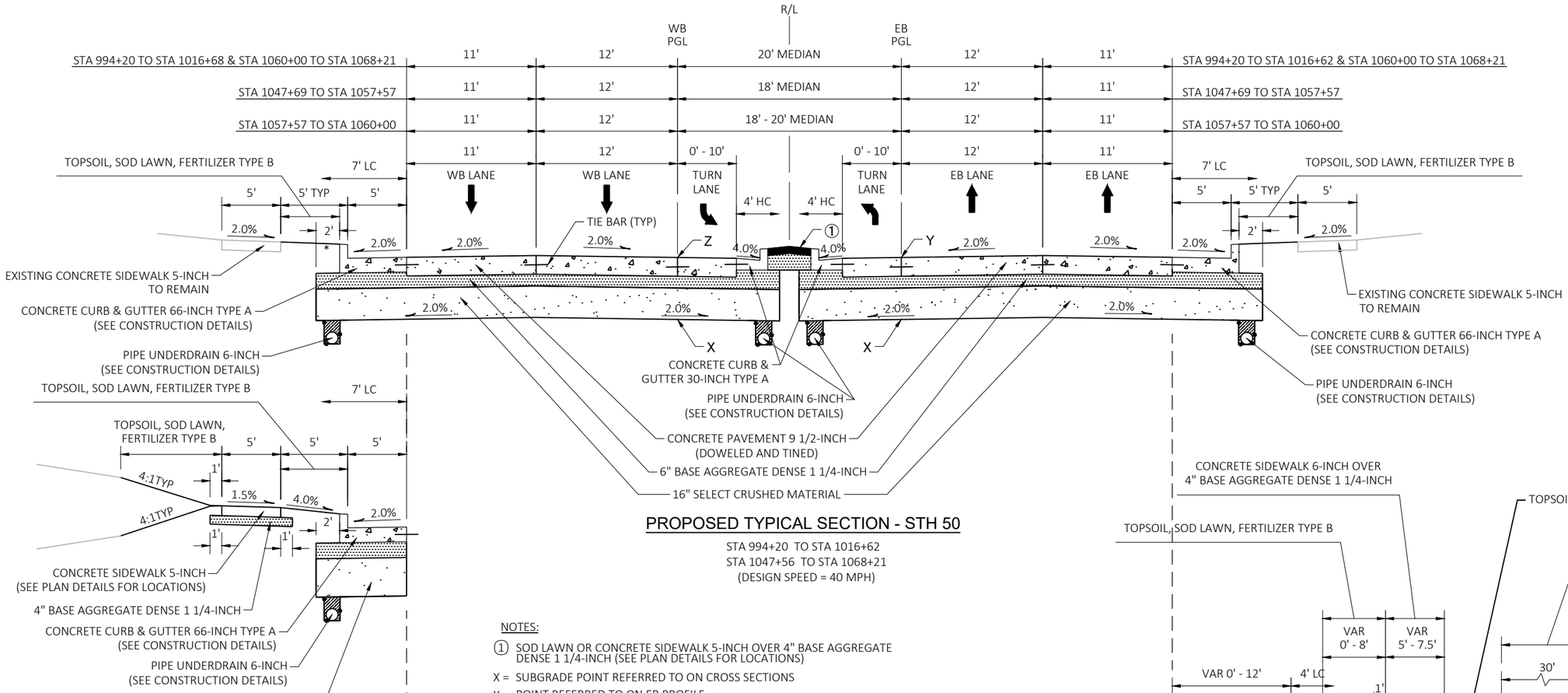

PROPOSED TYPICAL SECTION - STH 50

STA 994+20 TO STA 1016+62
STA 1047+56 TO STA 1068+21
(DESIGN SPEED = 40 MPH)

NOTES:

① SOD LAWN OR CONCRETE SIDEWALK 5-INCH OVER 4" BASE AGGREGATE DENSE 1 1/4-INCH (SEE PLAN DETAILS FOR LOCATIONS)

X = SUBGRADE POINT REFERRED TO ON CROSS SECTIONS

Y = POINT REFERRED TO ON EB PROFILE

Z = POINT REFERRED TO ON WB PROFILE

HC = HORIZONTAL CLEARANCE

LC = LATERAL CLEARANCE

PAVEMENT STRUCTURE EXTENDS TO SIDEROAD CURB AND GUTTER RADIUS RETURN (TYP)
(SEE PLAN DETAILS SHEETS)

PROPOSED CONCRETE SIDEWALK

STH 50 LT & RT (SEE PLAN DETAILS FOR LOCATIONS)

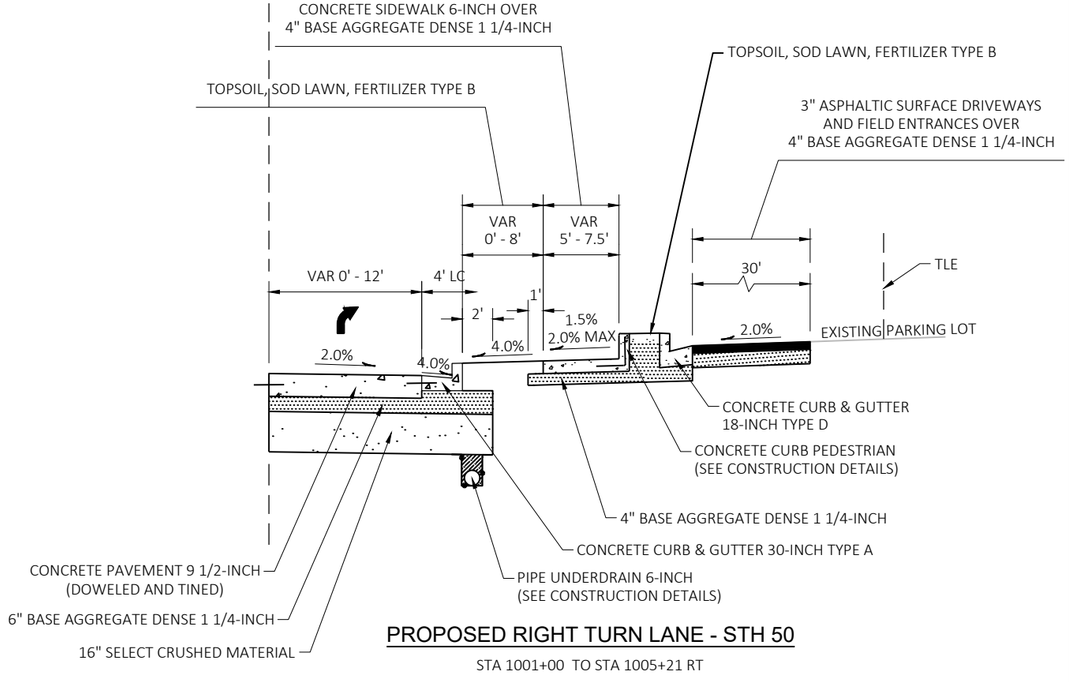

PROPOSED RIGHT TURN LANE - STH 50

STA 1001+00 TO STA 1005+21 RT

PROJECT NO: 1310-04-70	HWY: STH 50	COUNTY: KENOSHA	TYPICAL SECTIONS	SHEET 8	E

2

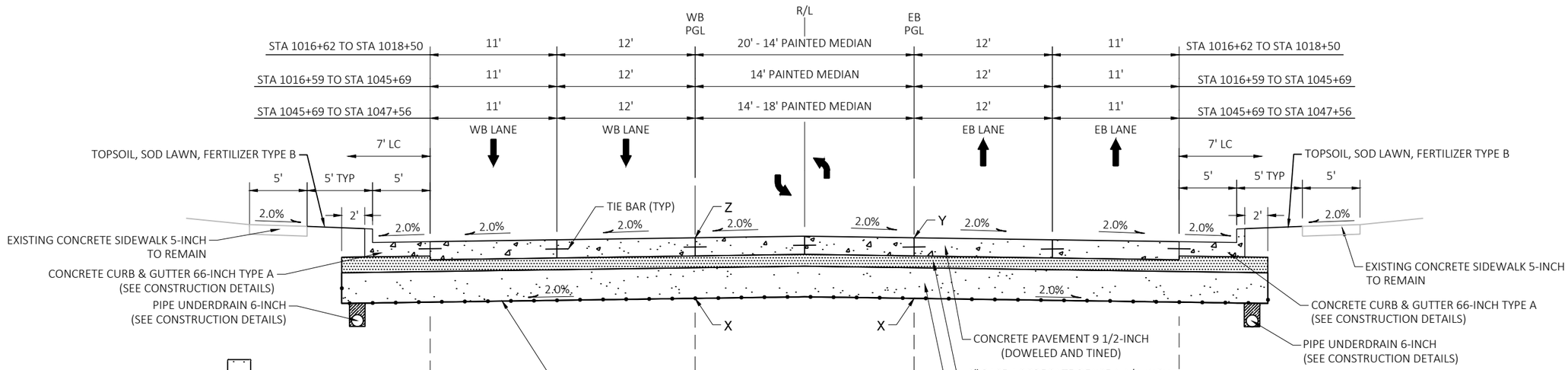

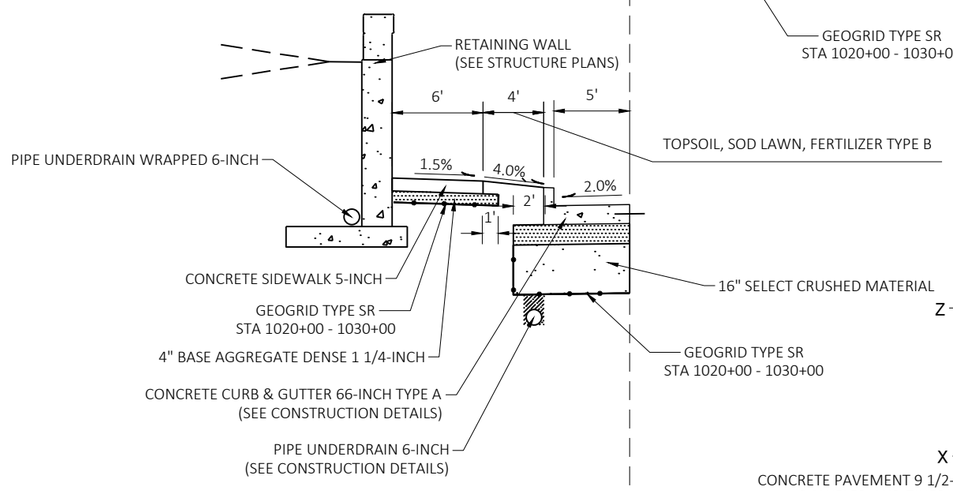

PROPOSED RETAINING WALL

STA 1027+62 - STA 1028+96 LT
STA 1029+38 - STA 1030+51 LT

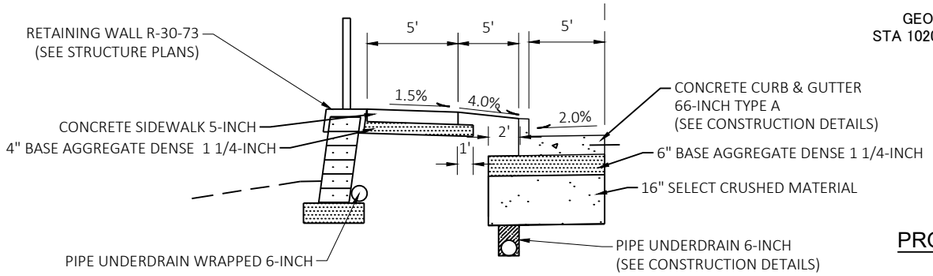

PROPOSED RETAINING WALL

STA 1043+52 - STA 1044+40 LT

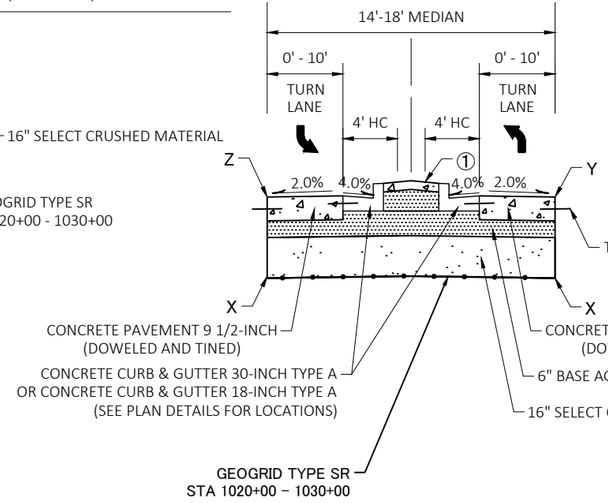

PROPOSED RAISED MEDIAN

STA 1025+87 TO STA 1027+50
STA 1031+36 TO STA 1039+00

PROPOSED TYPICAL SECTION - STH 50

STA 1016+62 TO STA 1047+56
(DESIGN SPEED = 40 MPH)

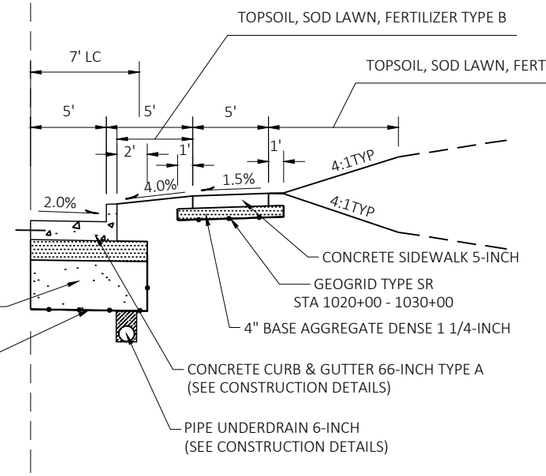

PROPOSED CONCRETE SIDEWALKS

STH 50 LT & RT (SEE PLAN DETAILS FOR LOCATIONS)

NOTES:

① SOD LAWN OR CONCRETE SIDEWALK 5-INCH OVER 4" BASE AGGREGATE DENSE 1 1/4-INCH (SEE PLAN DETAILS FOR LOCATIONS)

X = SUBGRADE POINT REFERRED TO ON CROSS SECTIONS

Y = POINT REFERRED TO ON EB PROFILE

Z = POINT REFERRED TO ON WB PROFILE

HC = HORIZONTAL CLEARANCE

LC = LATERAL CLEARANCE

PAVEMENT STRUCTURE EXTENDS TO SIDEROAD CURB AND GUTTER RADIUS RETURN (TYP)
(SEE PLAN DETAILS SHEETS)

PROJECT NO: 1310-04-70	HWY: STH 50	COUNTY: KENOSHA	TYPICAL SECTIONS	SHEET 9	E

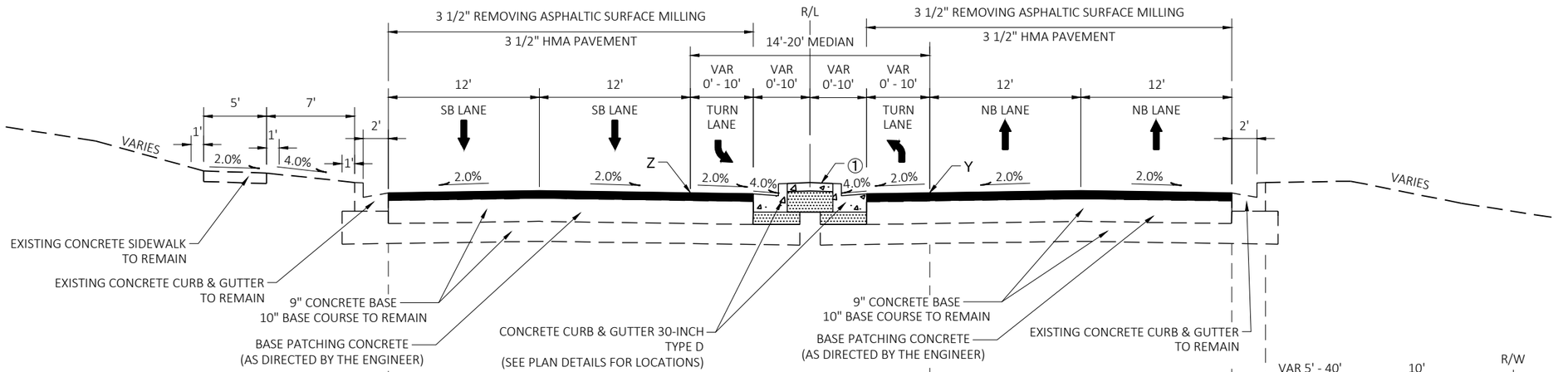

STA 44+69 TO STA 50+00

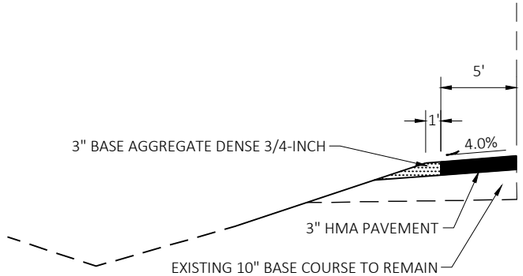

PROPOSED ASPHALTIC SHOULDER

STH 83 LT (SEE PLAN DETAILS FOR LOCATIONS)
STA 44+69 TO STA 46+00 LT

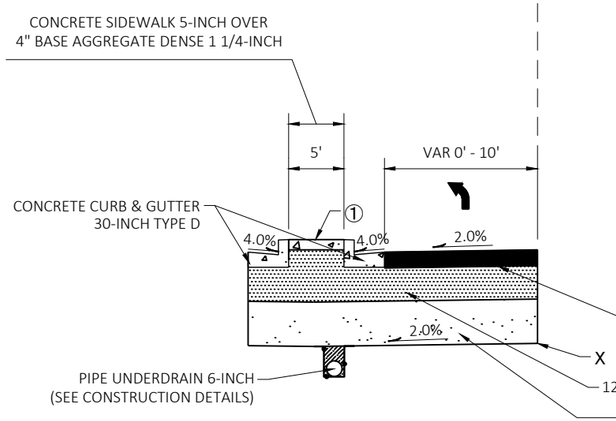

PROPOSED LEFT TURN LANE - STH 83

STA 44+69 TO STA 47+69

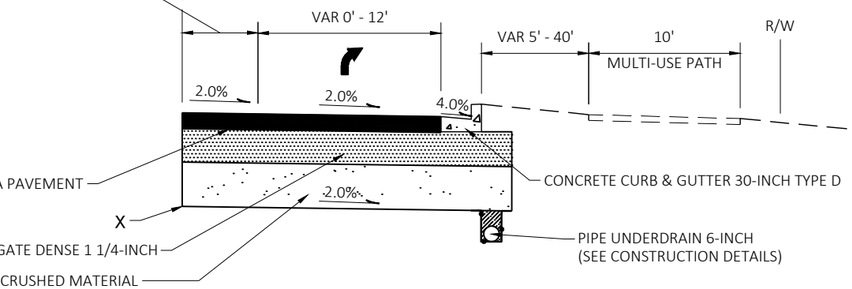

PROPOSED RIGHT TURN LANE - STH 83

STA 45+02 TO STA 47+69

PROPOSED TYPICAL SECTION - STH 75/STH 83

STA 44+69 TO STA 48+08 LT
STA 44+69 TO STA 47+69 RT

NOTES:

① SOD LAWN OR CONCRETE SIDEWALK 5-INCH OVER 4" BASE AGGREGATE DENSE 1 1/4-INCH (SEE PLAN DETAILS FOR LOCATIONS)

X = SUBGRADE POINT REFERRED TO ON CROSS SECTIONS

Y = POINT REFERRED TO ON NB PROFILE

Z = POINT REFERRED TO ON SB PROFILE

PROJECT NO: 1310-04-70	HWY: STH 50	COUNTY: KENOSHA	TYPICAL SECTIONS	SHEET 10	E

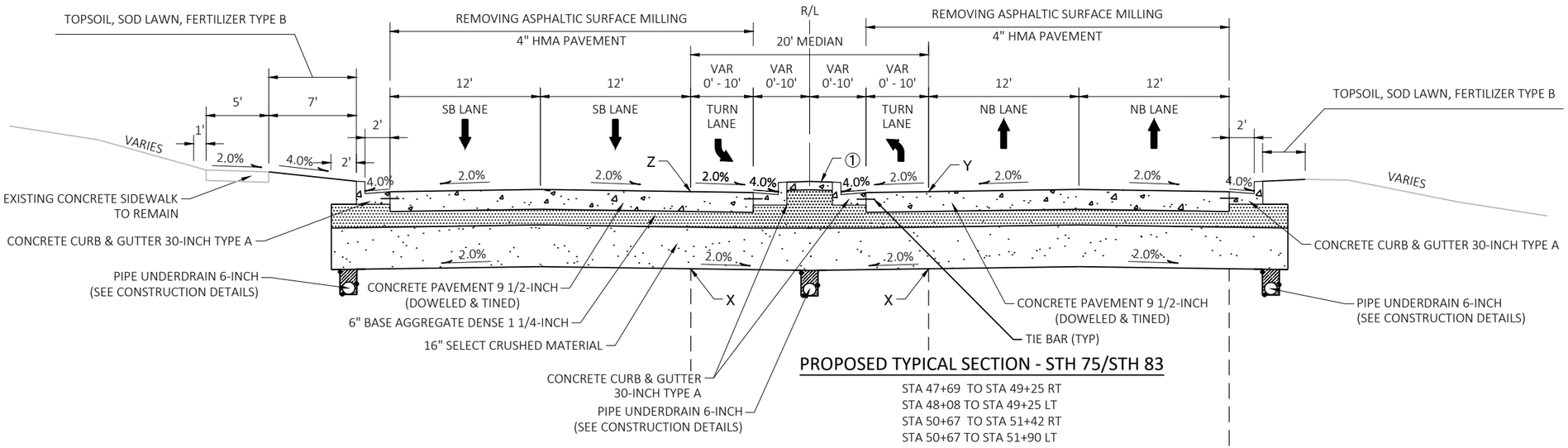

PROPOSED TYPICAL SECTION - STH 75/STH 83

STA 47+69 TO STA 49+25 RT
STA 48+08 TO STA 49+25 LT
STA 50+67 TO STA 51+42 RT
STA 50+67 TO STA 51+90 LT

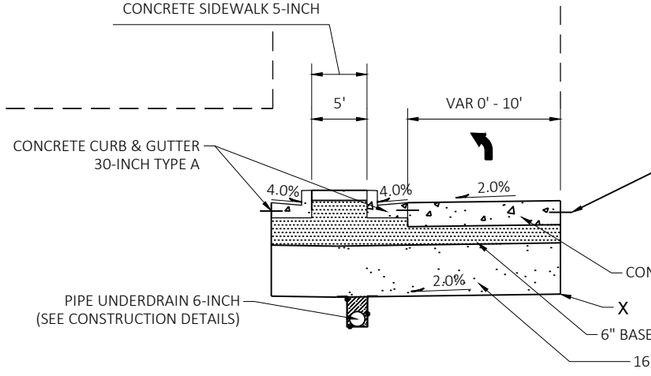

PROPOSED LEFT TURN LANE - STH 83 NB

STA 47+69 TO STA 49+25

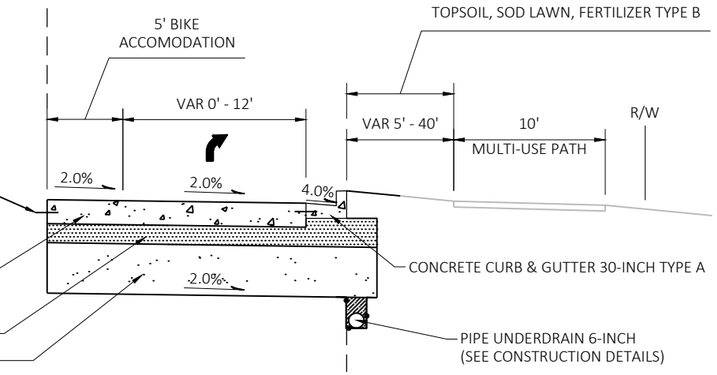

PROPOSED RIGHT TURN LANE - STH 83 NB

STA 47+69 TO STA 48+56

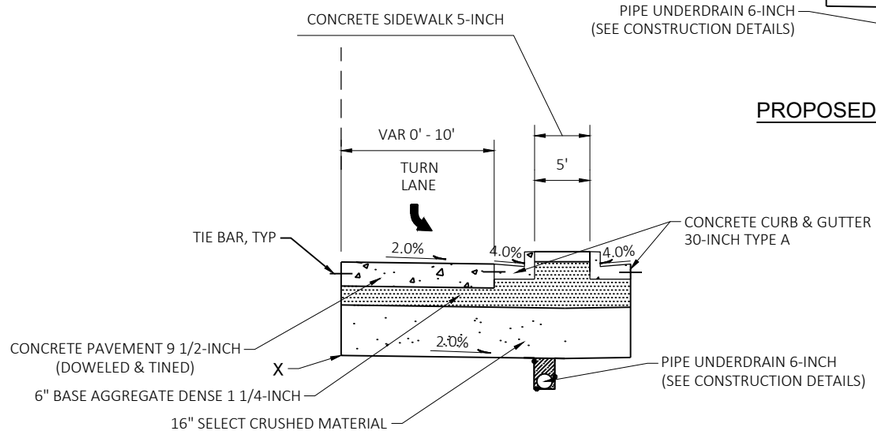

PROPOSED LEFT TURN LANE - STH 75 SB

STA 50+72 TO STA 51+90 LT

NOTES:

① SOD LAWN OR CONCRETE SIDEWALK 5-INCH OVER 4" BASE AGGREGATE DENSE 1 1/4-INCH (SEE PLAN DETAILS FOR LOCATIONS)

X = SUBGRADE POINT REFERRED TO ON CROSS SECTIONS

Y = POINT REFERRED TO ON NB PROFILE

Z = POINT REFERRED TO ON SB PROFILE

2

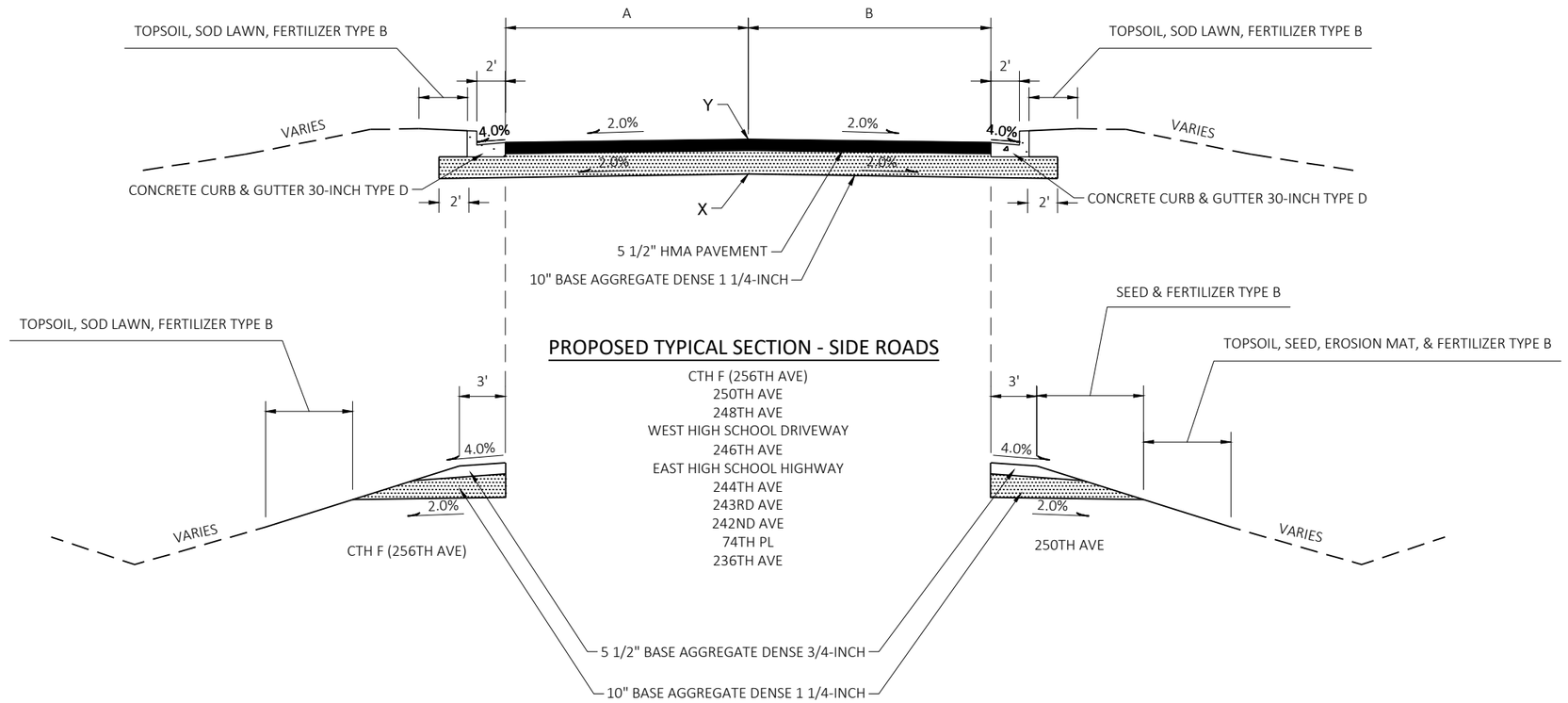

PROPOSED TYPICAL SECTION - SIDE ROADS

CTH F (256TH AVE)
250TH AVE
248TH AVE
WEST HIGH SCHOOL DRIVEWAY
246TH AVE
EAST HIGH SCHOOL HIGHWAY
244TH AVE
243RD AVE
242ND AVE
74TH PL
236TH AVE

ROADWAY	TYPICAL WIDTH A	TYPICAL WIDTH B
CTH F (256TH AVE)	12'	22'
250TH AVE	23'	16'
248TH AVE	26'	26'
WEST HIGH SCHOOL DRIVEWAY	12'	12'
EAST HIGH SCHOOL DRIVEWAY	18'	20'
246TH AVE	17'	18'
244TH AVE	19'	21.5'
243RD AVE	17'	18.5'
242ND AVE	18.5'	20'
74TH PL	12.5'	11.5'
236TH AVE	20'	21'

NOTES:
X = SUBGRADE POINT REFERRED TO ON CROSS SECTIONS
Y = POINT REFERRED TO ON PROFILE

2

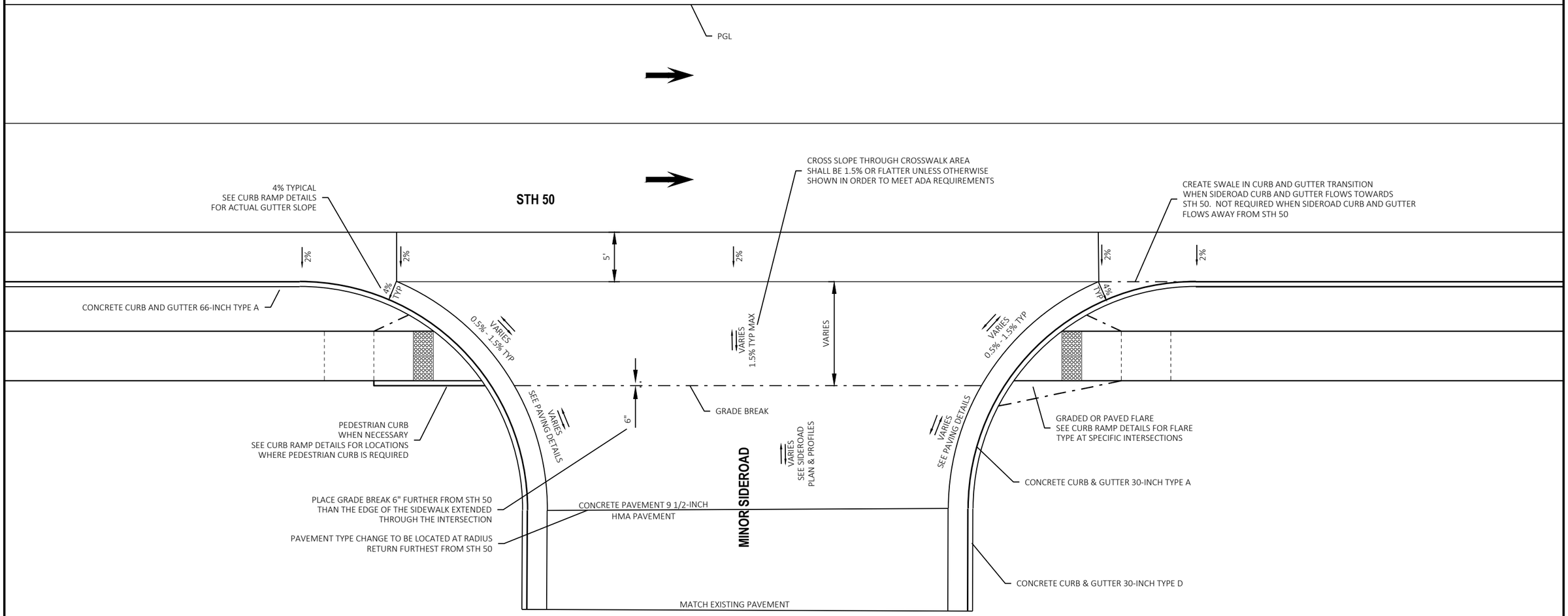

TYPICAL MINOR SIDEROAD DETAIL

CTH F
250TH AVENUE
248TH AVENUE
HIGH SCHOOL WEST DRIVEWAY
246TH AVENUE
244TH AVENUE
243RD AVENUE
242ND AVENUE
74TH PLACE
236TH AVENUE

NOTE:
SEE PAVING DETAILS, PAVEMENT GRADES, AND CURB RAMP DETAILS
FOR RADII, DIMENSIONS, AND SLOPES AT A SPECIFIC LOCATION

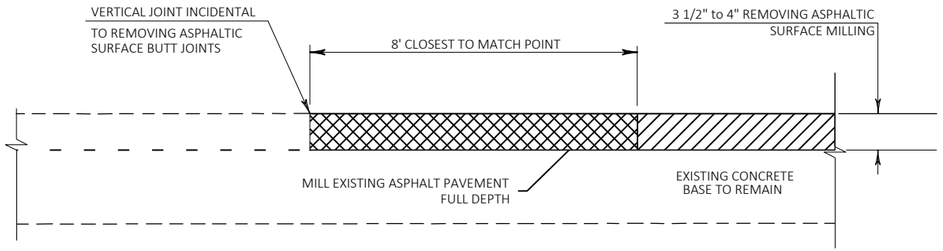

MILLING DETAIL

SEE PLAN DETAILS FOR LOCATIONS

LEGEND

REMOVING ASPHALTIC SURFACE MILLING

REMOVING ASPHALTIC SURFACE BUTT JOINTS

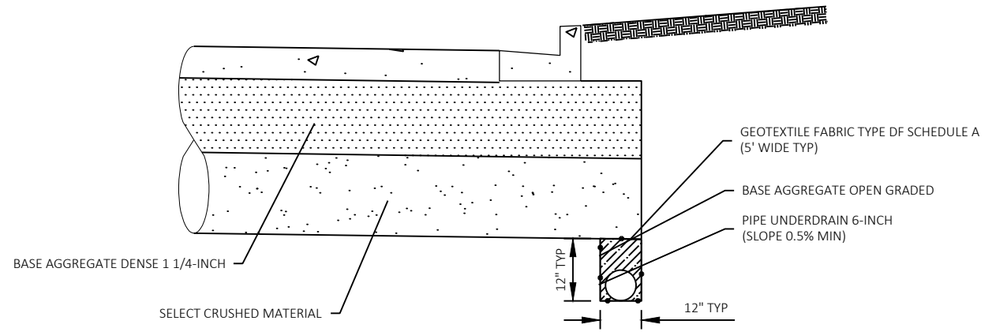

PIPE UNDERDRAIN 6-INCH

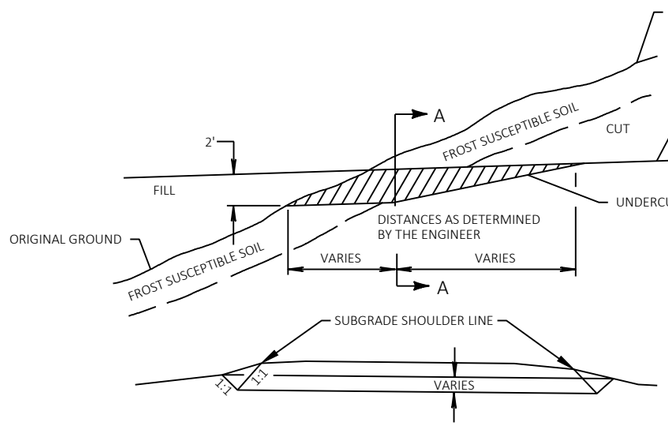

SECTION A-A

CROSS SECTION SHOWING UNDERCUT

CUT TO FILL TRANSITION

NOTE: EXACT LOCATIONS AND EXTENT OF EBS SECTIONS SHALL BE DETERMINED BY THE ENGINEER IN THE FIELD

EBS AREA TO BE BACKFILLED WITH SELECT CRUSHED MATERIAL

BACKFILL MUST BE HOMOGENEOUS WITH ADJOINING FILL MATERIAL

THE FILL SECTION WITHIN 100' OF THE MOUTH OF THE CUT MUST BE KEPT 2' BELOW SUBGRADE UNTIL EBS IS COMPLETED

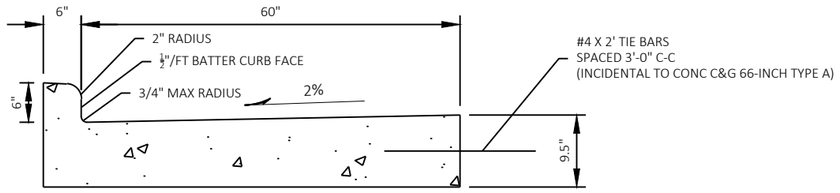

CONCRETE CURB & GUTTER 66-INCH TYPE A

SEE PLAN DETAILS FOR LOCATIONS

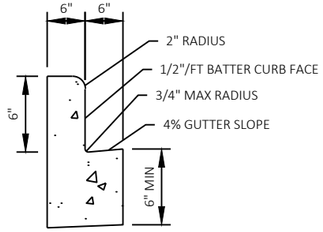

CONCRETE CURB & GUTTER 12-INCH TYPE D

SEE PLAN DETAILS FOR LOCATIONS

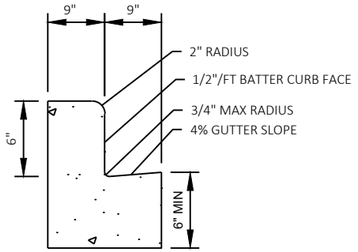

CONCRETE CURB & GUTTER 9-INCH PAN 18-INCH TYPE D

SEE PLAN DETAILS FOR LOCATIONS

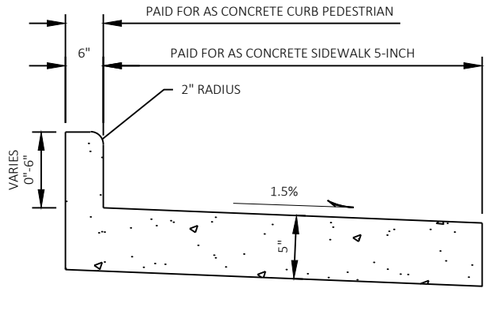

CONCRETE CURB PEDESTRIAN 0-INCH TO 6-INCH HEIGHT

PAID FOR AS CONCRETE CURB PEDESTRIAN

SEE PLAN DETAILS FOR LOCATIONS

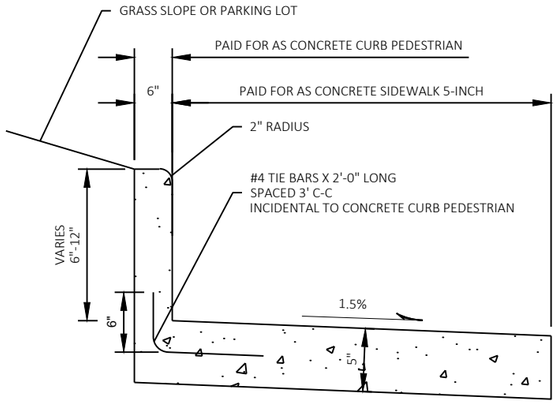

GROUND BEHIND CURB HIGHER THAN SIDEWALK

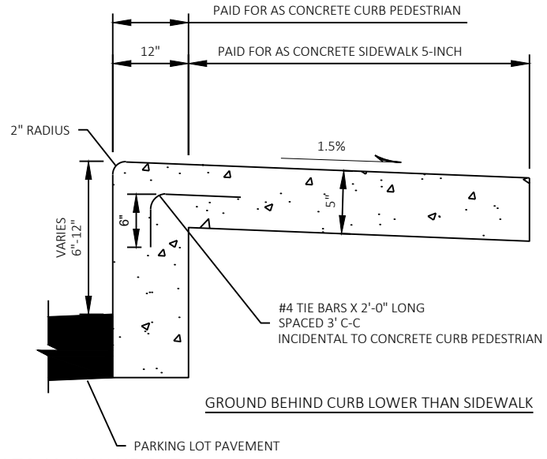

GROUND BEHIND CURB LOWER THAN SIDEWALK

CONCRETE CURB PEDESTRIAN 6-INCH TO 12-INCH HEIGHT

PAID FOR AS CONCRETE CURB PEDESTRIAN

SEE PLAN DETAILS FOR LOCATIONS

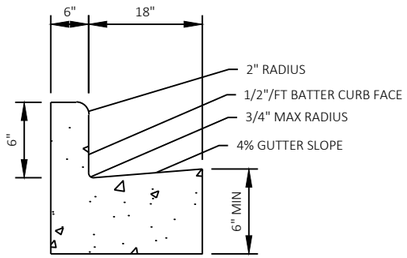

CONCRETE CURB & GUTTER 18-INCH PAN 24-INCH TYPE D

SEE PLAN DETAILS FOR LOCATIONS

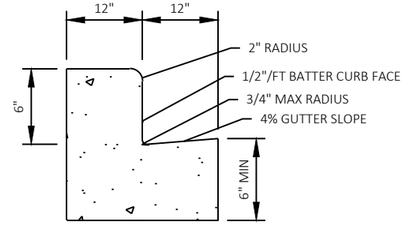

CONCRETE CURB & GUTTER 12-INCH PAN 24-INCH TYPE D

SEE PLAN DETAILS FOR LOCATIONS

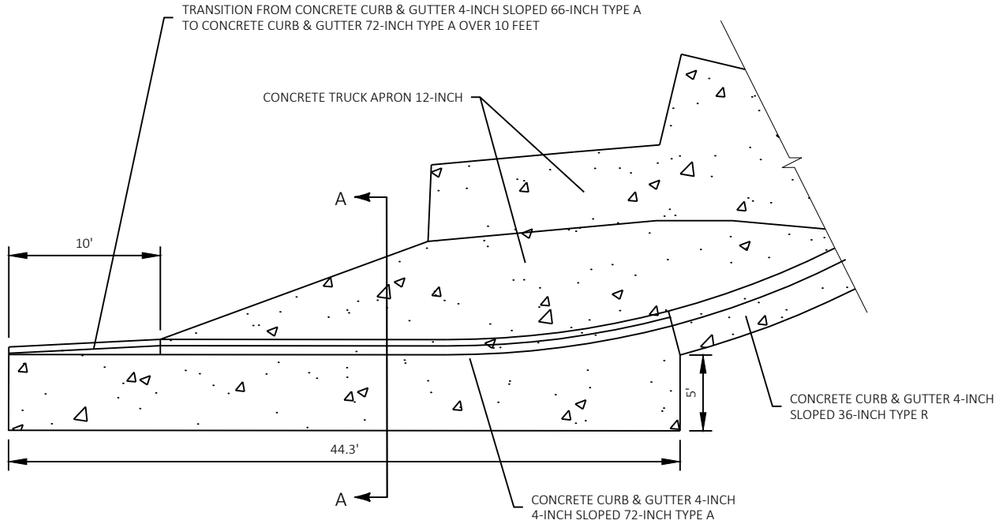

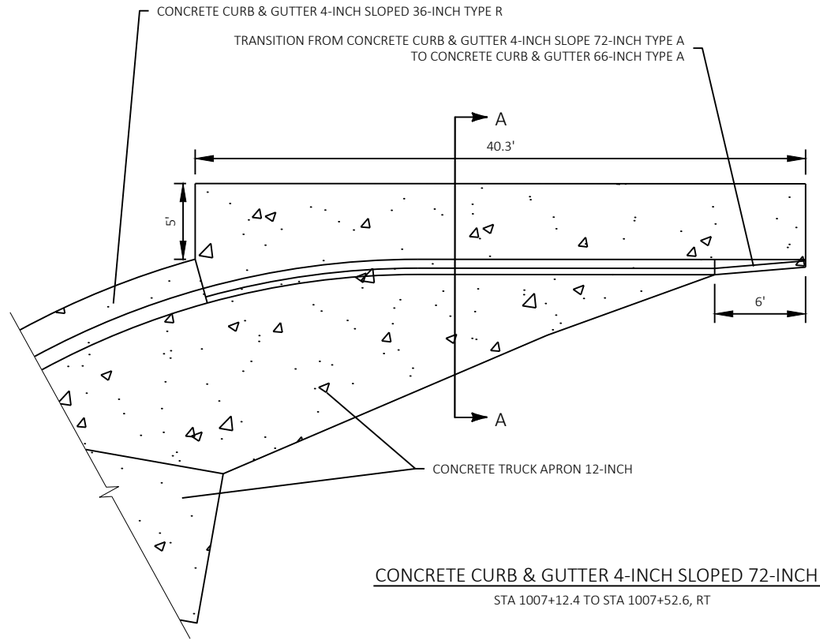

CONCRETE CURB & GUTTER 4-INCH SLOPED 72-INCH TYPE A

STA 1007+12.4 TO STA 1007+52.6, RT

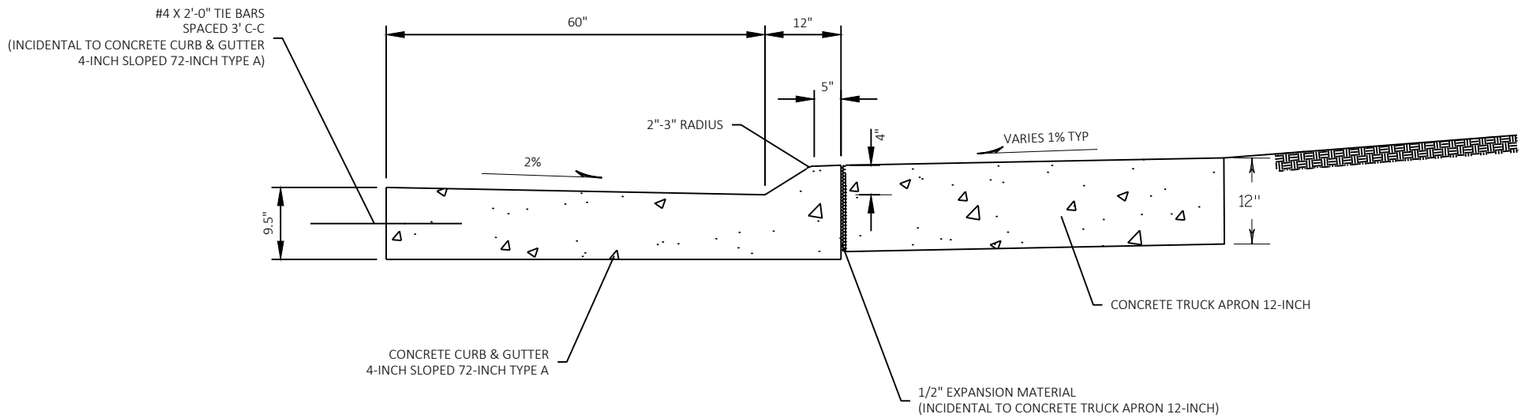

SECTION A-A

2

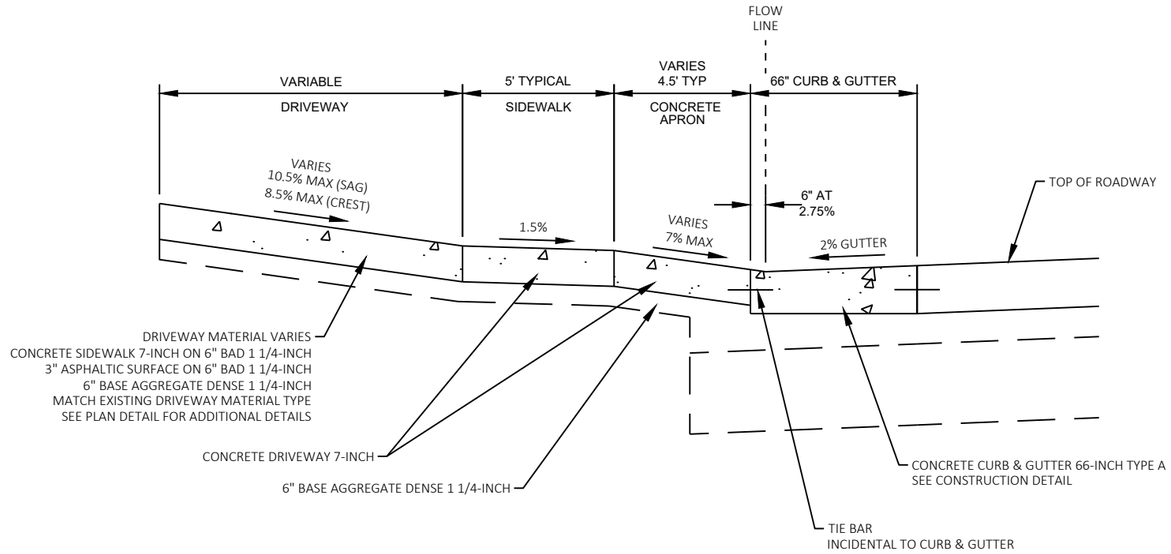

TYPE Y DRIVEWAY ADJACENT TO CONCRETE CURB & GUTTER 66-INCH TYPE A

SEE PLAN DETAILS FOR LOCATIONS

NOTES:
1. SEE SDD "DRIVEWAY AND SIDEWALK RAMPS TYPES X AND Y" FOR ADDITIONAL DETAILS AND REQUIREMENTS
2. SEE SDD "DRIVEWAY AND SIDEWALK RAMPS TYPES X AND Y" FOR ISOMETRIC VIEW OF TYPE Y DRIVEWAY
3. MAXIMUM GRADE BREAK BETWEEN GUTTER AND DRIVEWAY APRON IS 9%
4. MAXIMUM GRADE BREAK BETWEEN SIDEWALK AND DRIVEWAY BEHIND SIDEWALK IS 9% IN SAG AND 10% IN CREST

2

NOTE:
ALL ANCHORS REQUIRED FOR MOUNTING PIPE RAILING TO TOP OF CURB SHALL BE INSTALLED INTO WET CONCRETE UNLESS OTHERWISE APPROVED BY ENGINEER

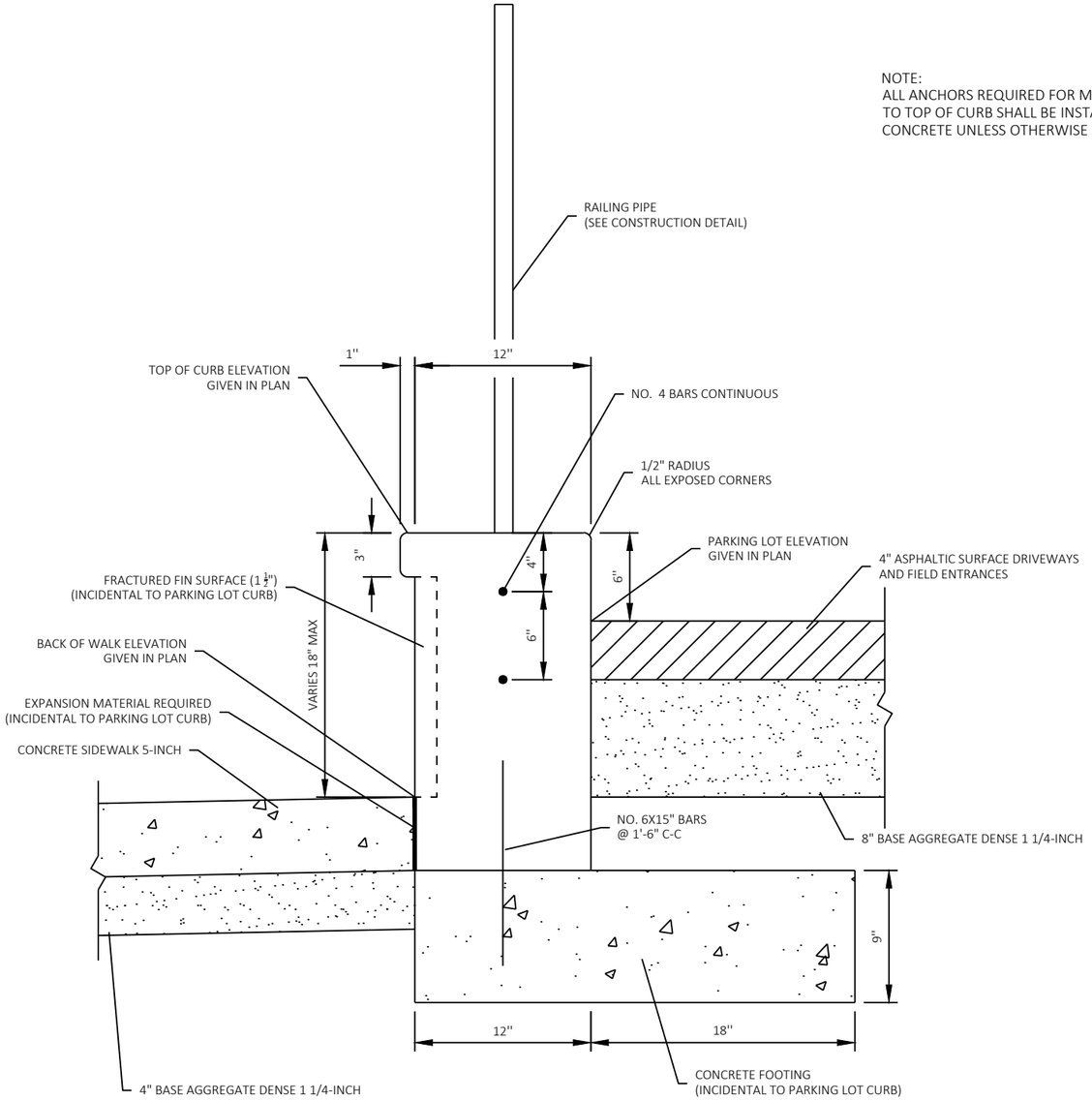

PARKING LOT HIGHER THAN SIDEWALK

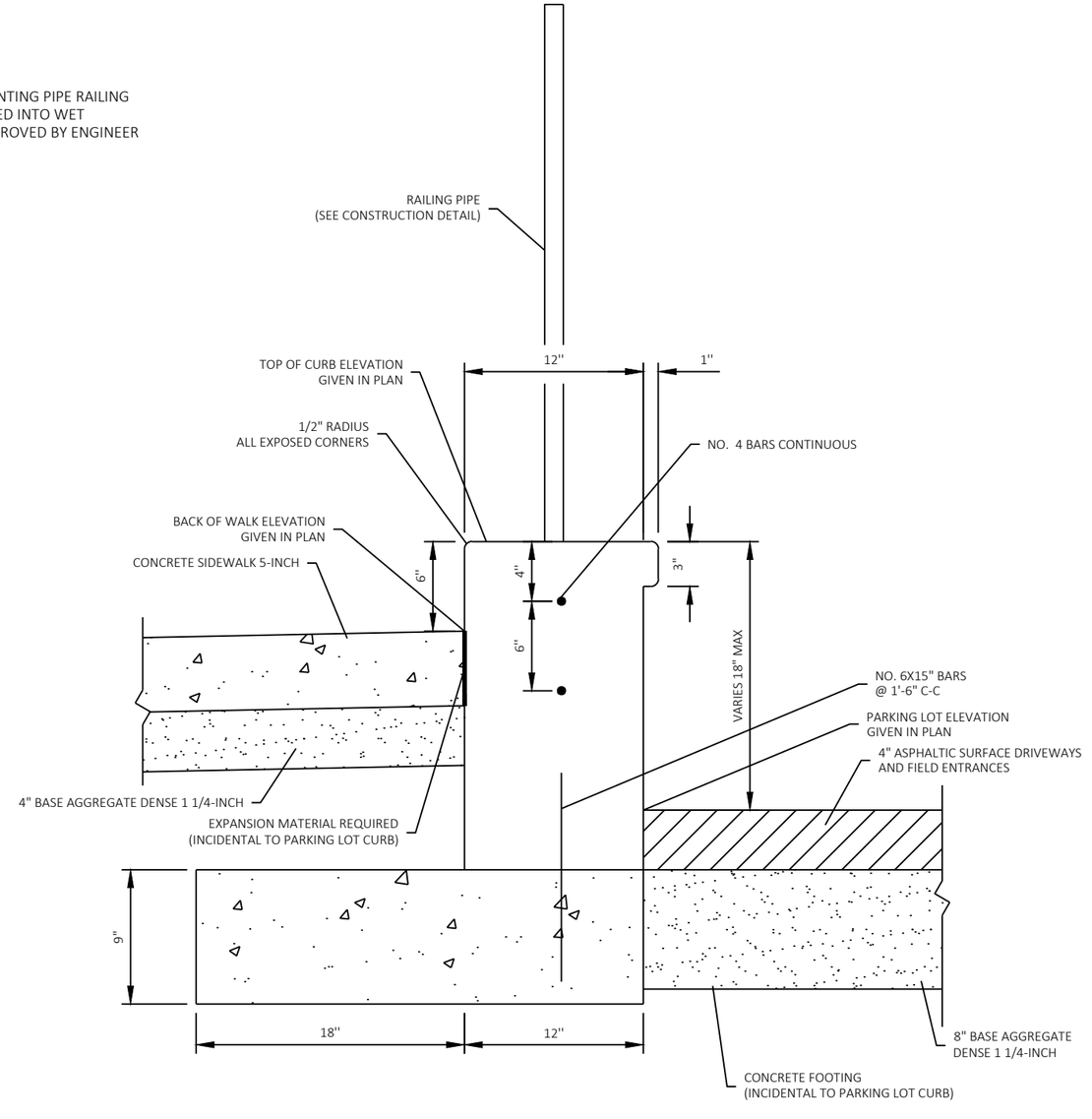

SIDEWALK HIGHER THAN PARKING LOT

PARKING LOT CURB

SEE PLAN DETAILS FOR LOCATIONS

2

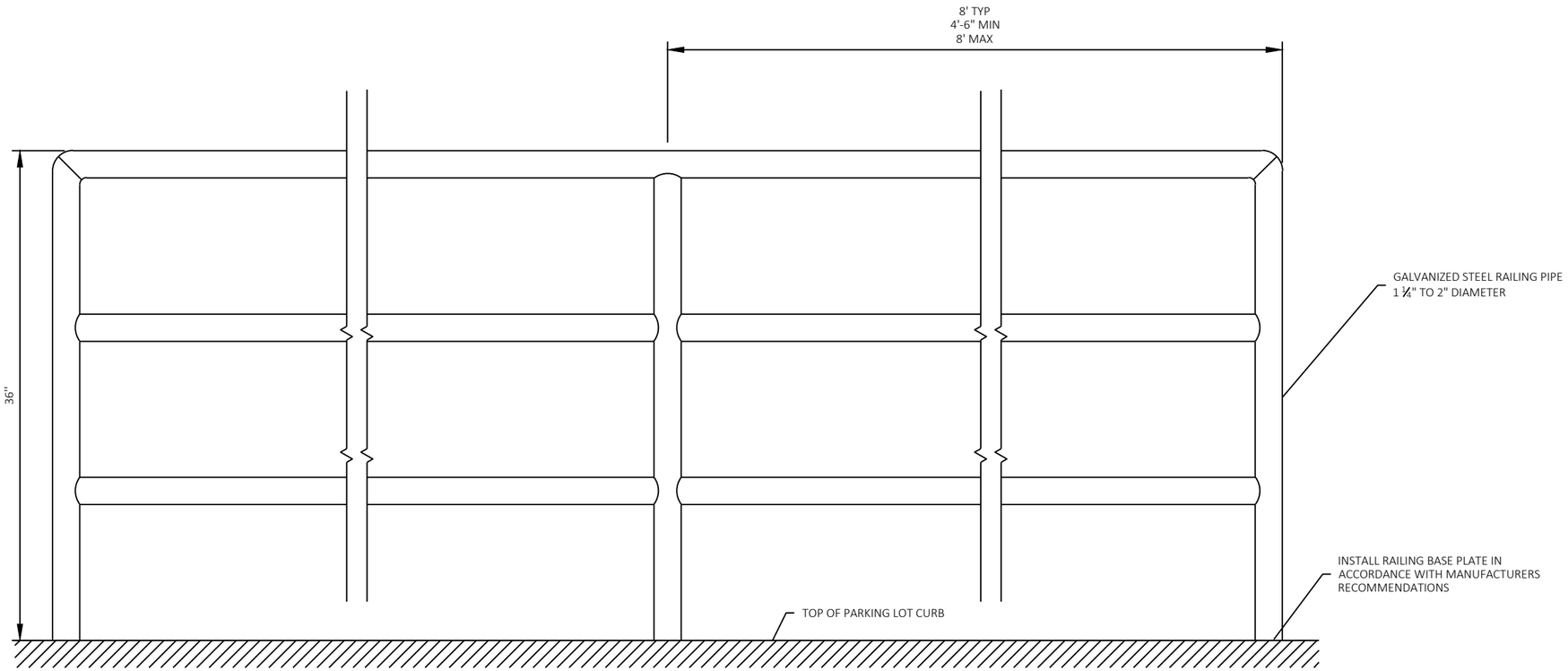

ELEVATION VIEW

NOTES:

1. SEE CONSTRUCTION DETAILS FOR DIMENSIONS AND AT EACH LOCATION.
2. PROVIDE SHOP DRAWINGS FOR ALL RAILING COMPONENTS TO THE ENGINEER FOR REVIEW AND APPROVAL PRIOR TO ORDERING OR FABRICATING RAILING COMPONENTS.
3. ALL RAILINGS SHALL BE GALVANIZED STEEL.
4. RAILINGS SHALL BE MOUNTED TO THE TOP OF THE CONCRETE PARKING LOT CURB.
5. RAILINGS SHALL BE MOUNTED TO CONCRETE USING ANCHOR BOLTS AND A BASE PLATE. VERTICAL MEMBER OF RAILING SHALL NOT BE EMBEDDED DIRECTLY INTO CONCRETE.
6. PLACE ANCHOR BOLTS FOR RAILING INTO CONCRETE IN ACCORDANCE WITH SECTION 513. PLACE ANCHOR BOLTS DURING CONCRETE PLACEMENT UNLESS OTHERWISE APPROVED BY THE ENGINEER.
7. GRIND AND SMOOTH ALL CONNECTIONS OF SECTIONS OF PIPE.
8. A MINIMUM OF A 1/8" RADIUS IS REQUIRED AT ALL ANGLES OR CORNERS IN THE PIPE. THE ACTUAL RADIUS USED SHALL BE DETERMINED BY THE MANUFACTURER.

RAILING PIPE DETAIL

SEE PLAN DETAILS FOR LOCATIONS

2

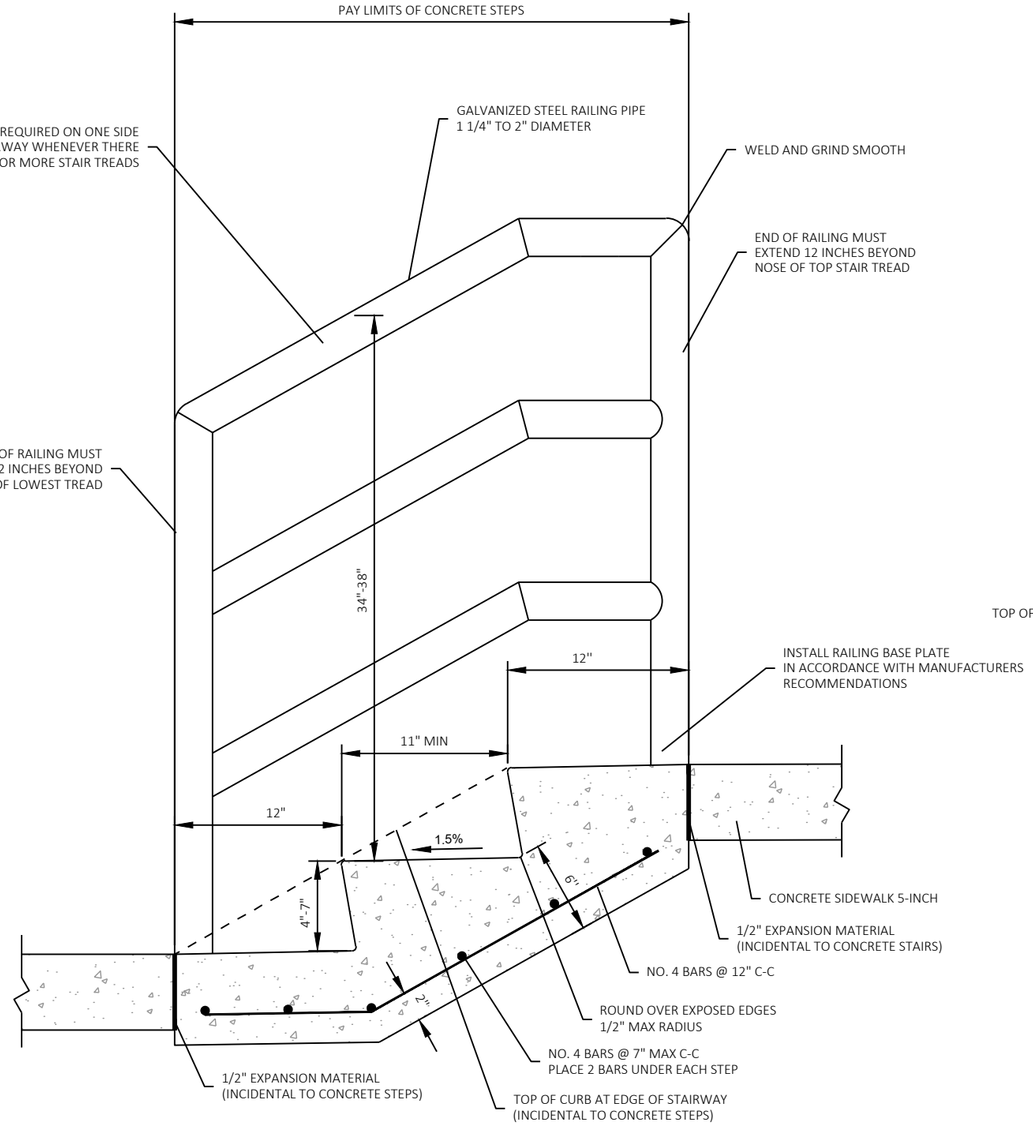

PROFILE VIEW

NOTES:

1. ALL STAIRWAY AND RAILING CONSTRUCTION SHALL MEET AMERICANS WITH DISABILITIES ACT REQUIREMENTS AND ALL LOCAL BUILDING CODES.
2. SEE CONSTRUCTION DETAILS FOR DIMENSIONS AND ELEVATIONS AT EACH STAIRWAY LOCATION.
3. PROVIDE SHOP DRAWINGS FOR ALL RAILING COMPONENTS TO THE ENGINEER FOR REVIEW AND APPROVAL PRIOR TO ORDERING OR FABRICATING RAILING COMPONENTS.
4. ALL RAILINGS SHALL BE GALVANIZED STEEL.
5. RAILINGS SHALL BE MOUNTED TO THE STAIR TREAD AND NOT THE CURB ADJACENT TO THE STAIRWAY.
6. A RAILING IS REQUIRED ON BOTH SIDES OF OF A STAIRWAY.
7. RAILING HEIGHT SHALL BE MEASURED FROM THE NOSE OF EACH STAIR TREAD. THE HEIGHT SHALL BE CONSISTENT AT EACH STAIR TREAD.
8. THE HEIGHT OF STAIR RISERS FOR A STAIRWAY SHALL BE THE SAME HEIGHT FOR ALL RISER
9. A 1/2"EXPANSION JOINT IS REQUIRED BETWEEN ALL COLD JOINTS. EXPANSION MATERIAL IS INCIDENTAL TO CONCRETE STEPS.
10. ALL STEEL REINFORCEMENT IS INCIDENTAL TO CONCRETE STEPS.
11. RAILINGS SHALL BE MOUNTED TO STAIRWAY USING ANCHOR BOLTS AND A BASE PLATE. VERTICAL MEMBER OF RAILING SHALL NOT BE EMBEDDED DIRECTLY INTO CONCRETE STEPS.
12. PLACE ANCHOR BOLTS FOR RAILING INTO CONCRETE IN ACCORDANCE WITH SECTION 513. PLACE ANCHOR BOLTS DURING CONCRETE PLACEMENT UNLESS OTHERWISE APPROVED BY THE ENGINEER.
13. GRIND AND SMOOTH ALL CONNECTIONS OF SECTIONS OF PIPE.
14. A MINIMUM OF A 1/8" RADIUS IS REQUIRED AT ALL ANGLES OR CORNERS IN THE PIPE. THE ACTUAL RADIUS USED SHALL BE DETERMINED BY THE MANUFACTURER.

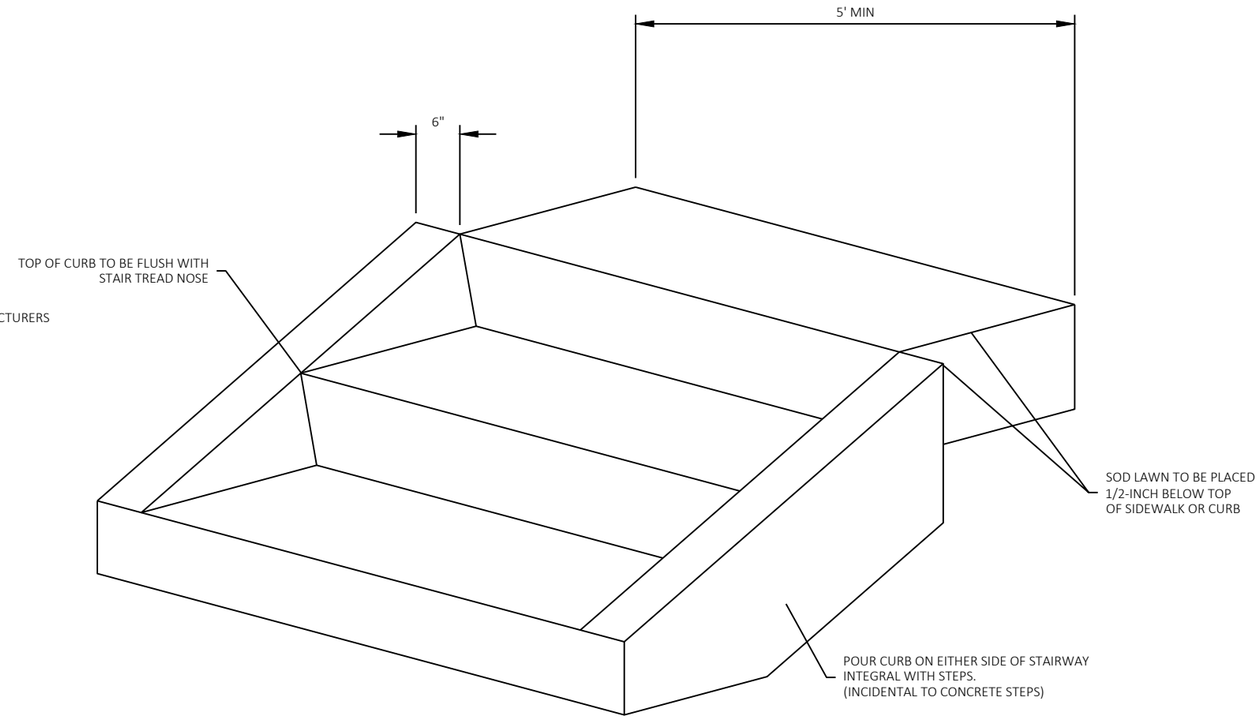

STAIRWAY CURB DETAIL

CONCRETE STEPS

SEE PLAN DETAILS FOR LOCATIONS

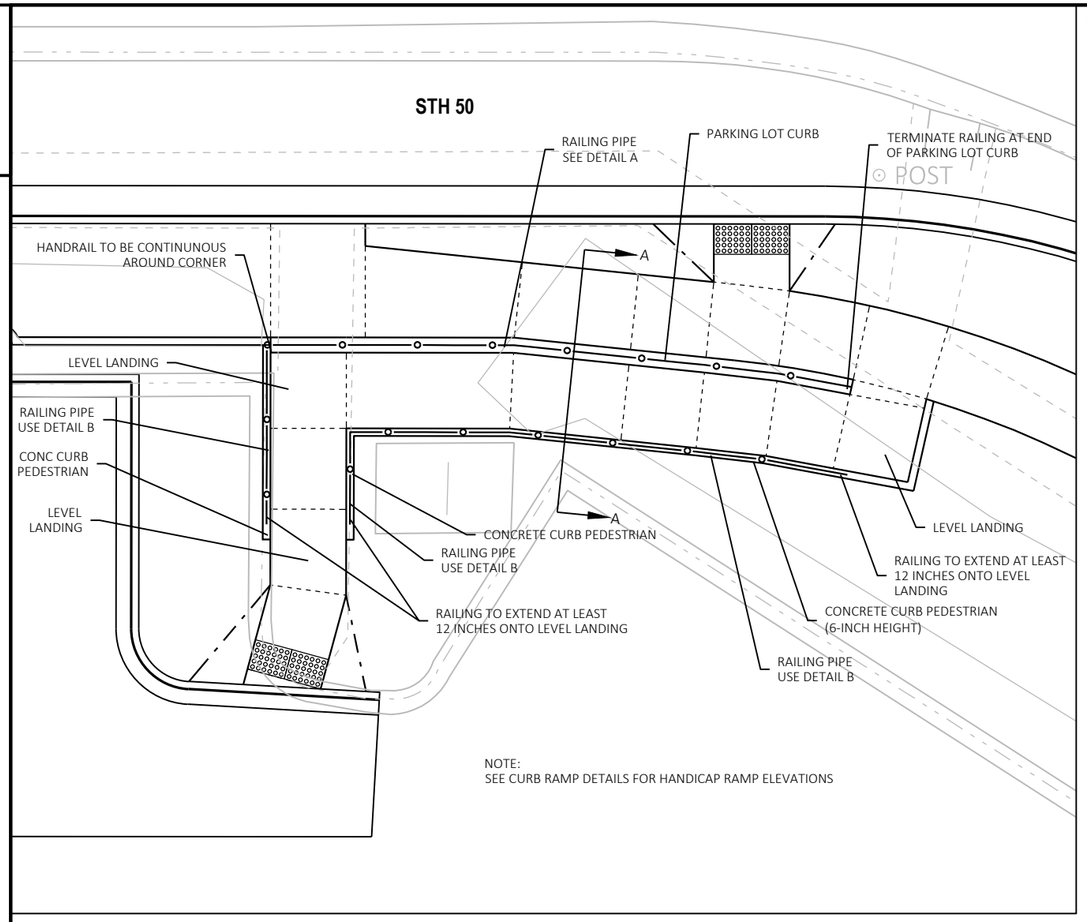

NOTE:
SEE CURB RAMP DETAILS FOR HANDICAP RAMP ELEVATIONS

NOTES:
1. USE RAILING DETAIL A FOR RAILING ATTACHED TO TOP OF PARKING LOT CURB. USE RAILING DETAIL B FOR RAILING ATTACHED TO TOP OF PEDESTRIAN CURB.
2. PROVIDE SHOP DRAWINGS FOR ALL RAILING COMPONENTS TO THE ENGINEER FOR REVIEW AND APPROVAL PRIOR TO ORDERING OR FABRICATING RAILING COMPONENTS.
3. ALL RAILING SHALL BE GALVANIZED STEEL.
4. RAILINGS SHALL BE MOUNTED TO CONCRETE USING ANCHOR BOLTS AND A BASE PLATE. VERTICAL MEMBER OF RAILING SHALL NOT BE EMBEDDED DIRECTLY INTO CONCRETE. PLACE ANCHOR BOLTS FOR RAILING INTO CONCRETE IN ACCORDANCE WITH SECTION 513 OF THE STANDARD SPECS. PLACE ANCHOR BOLTS DURING CONCRETE PLACEMENT UNLESS OTHERWISE APPROVED BY THE ENGINEER.
5. GRIND AND SMOOTH ALL CONNECTIONS OF SECTIONS OF PIPE.
6. A MINIMUM OF A ¼" RADIUS IS REQUIRED AT ALL ANGLES OR CORNERS IN THE PIPE. THE ACTUAL RADIUS USED SHALL BE DETERMINED BY THE MANUFACTURER.
7. RAILING AND CONCRETE CURB PEDESTRIAN SHALL EXTEND AT LEAST 12 INCHES ONTO LEVEL LANDING.
8. RAILING AND HANDRAIL HEIGHTS SHALL BE CONSTANT ALONG RAMPS AND LEVEL LANDINGS.

N

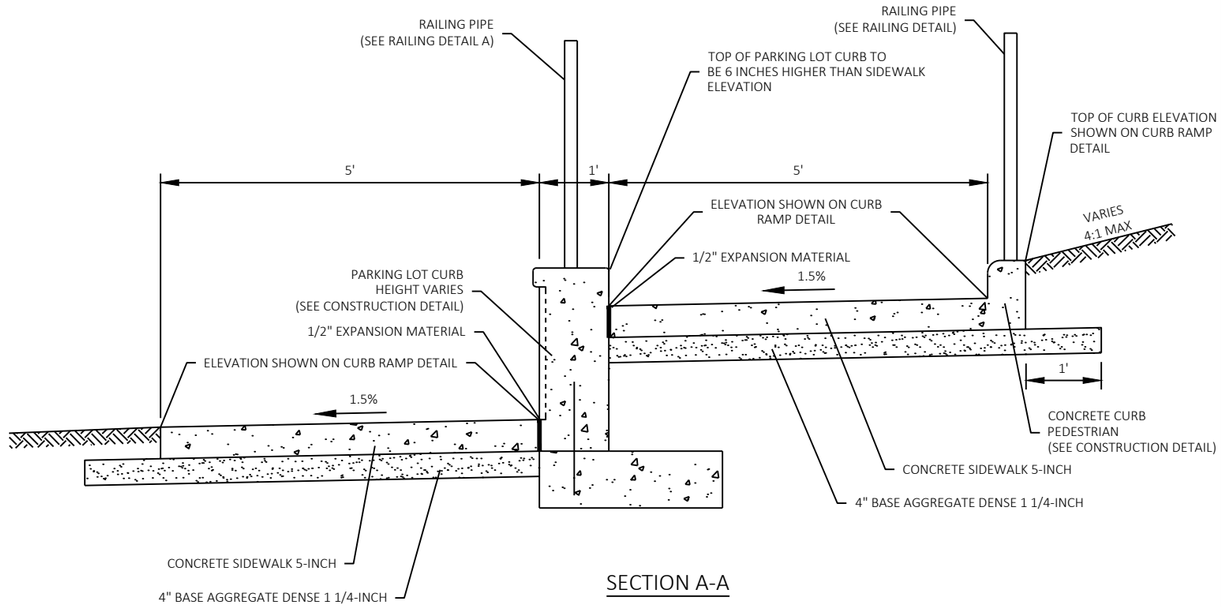

SECTION A-A

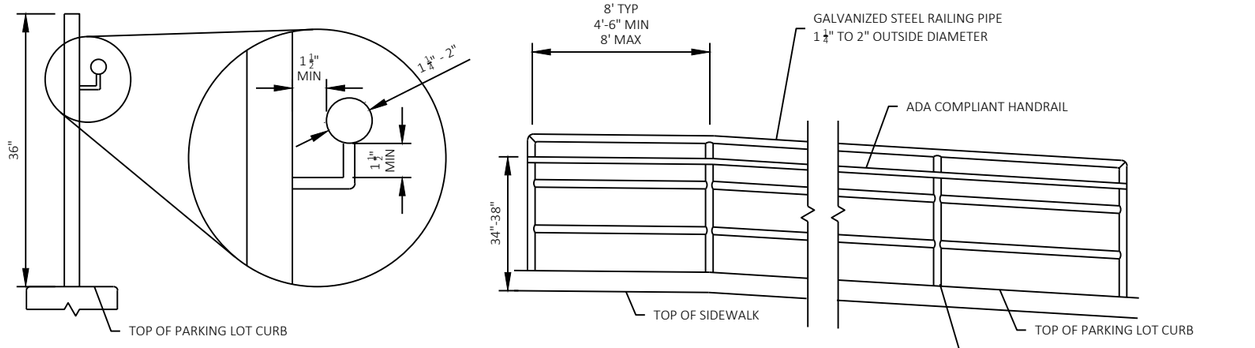

RAILING DETAIL A

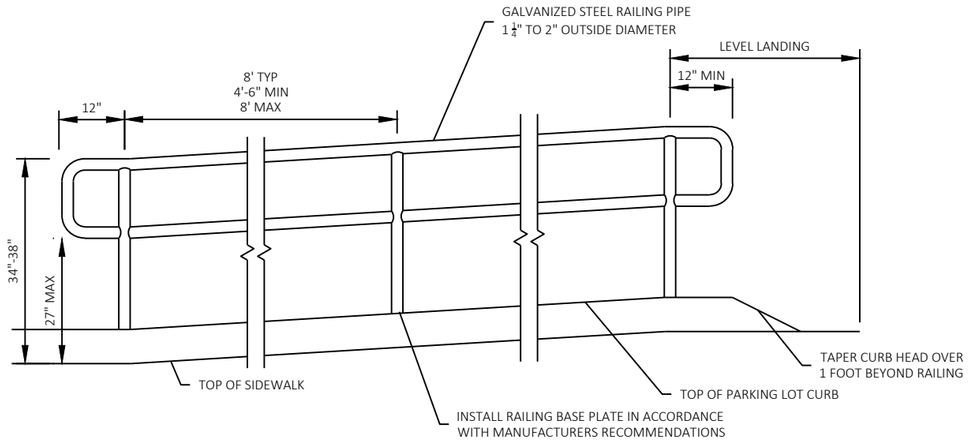

RAILING DETAIL B

HANDICAP RAMP DETAIL

STA 1005+00 RT

PROJECT NO: 1310-04-70	HWY: STH 50	COUNTY: KENOSHA	CONSTRUCTION DETAILS	SHEET 21	E

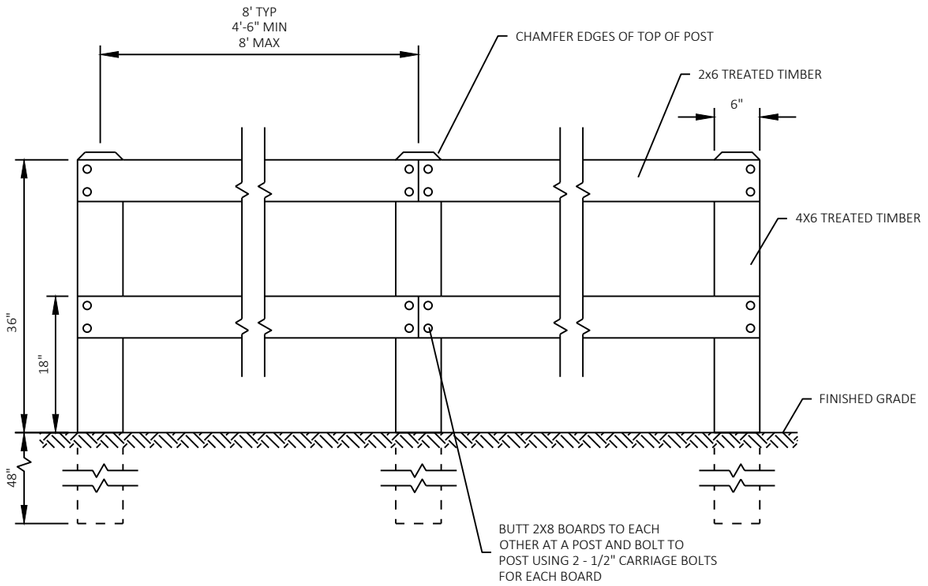

ELEVATION VIEW

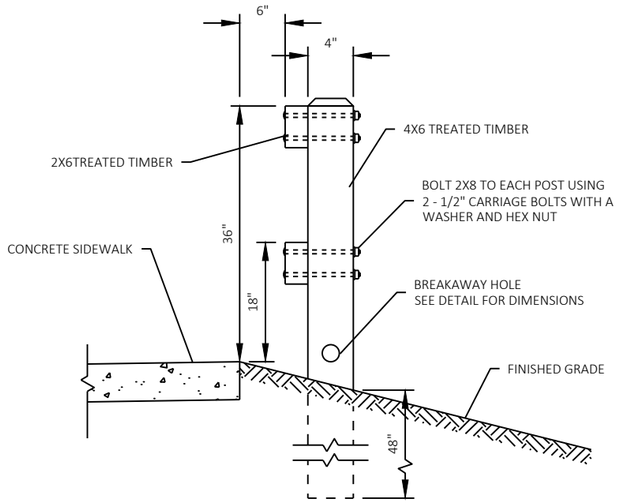

SECTION VIEW

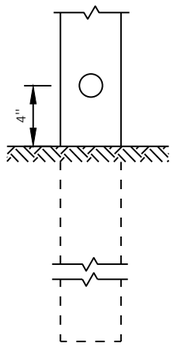

BREAKAWAY HOLE DETAIL

NOTES:
1. ALL TIMBERS AND BOARDS SHALL BE TREATED LUMBER MEETING THE SPECIFICATIONS OF SECTION 634.2.1 OF THE STANDARD SPECS.
2. POSTS SHALL BE SET IN GROUND AT THE DEPTH SHOWN, FILLED, AND COMPACTED EVERY 6 INCHES WITH ORIGINAL SUBSOIL.
3. ALL SAW CUTS AND HOLES DRILLED IN TIMBERS SHALL BE TREATED IN ACCORDANCE WITH SECTION 507.2.2.6 AND WOOD PRESERVATIVE SHALL MEET SECTION 507.2.3 OF THE STANDARD SPECS.
4. ALL BOLTS, WASHERS, AND HEX NUTS SHALL MEET THE REQUIREMENTS OF SECTION 637.2.4.2.1.
5. THE HEIGHT OF THE TOP RAIL SHALL BE MEASURED FROM THE BACK EDGE OF THE SIDEWALK.

WOOD PEDESTRIAN FENCE

STA 1000+20 TO STA 1001+72

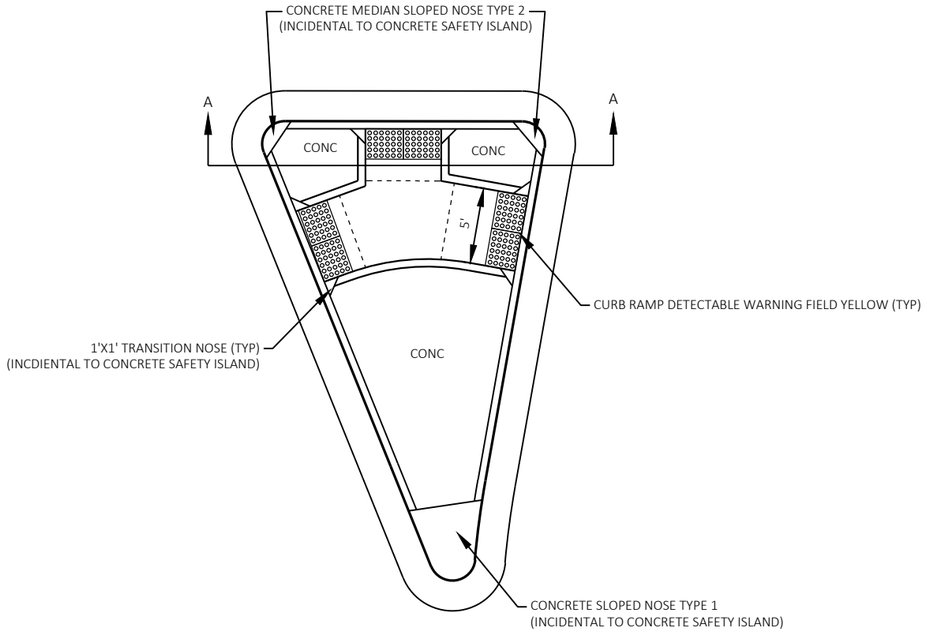

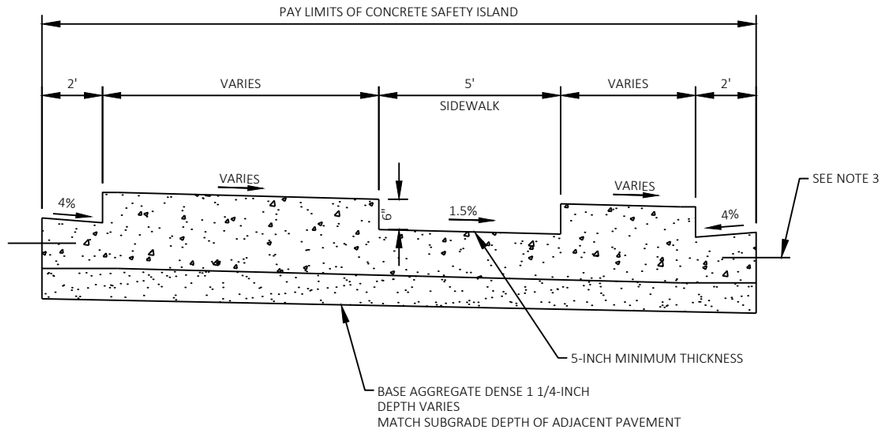

SECTION A-A

NOTES:

1. ENTIRE ISLAND INCLUDING WALKING PATH IS PAID FOR AS CONCRETE SAFETY ISLAND.
2. SIZE AND SHAPE OF INDIVIDUAL ISLANDS VARIES, SEE PLAN FOR DIMENSIONS OF EACH ISLAND.
3. #4X2' TIE BARS SPACE AT 3' CENTER TO CENTER. TIE BARS INCIDENTAL TO CONCRETE SAFETY ISLAND.
4. CONCRETE SAFETY ISLAND MAY BE CONSTRUCTED AS ONE MONOLITHIC SLAB OR INDIVIDUAL SECTIONS OF CURB & GUTTER, SIDEWALK, AND PEDESTRIAN CURB. PAYMENT SHALL BE THE SAME FOR BOTH METHODS OF CONSTRUCTION.
5. WALKING PATH SHALL MEET ADA REQUIREMENTS

CONCRETE SAFETY ISLAND DETAIL

SEE PLAN FOR LOCATIONS

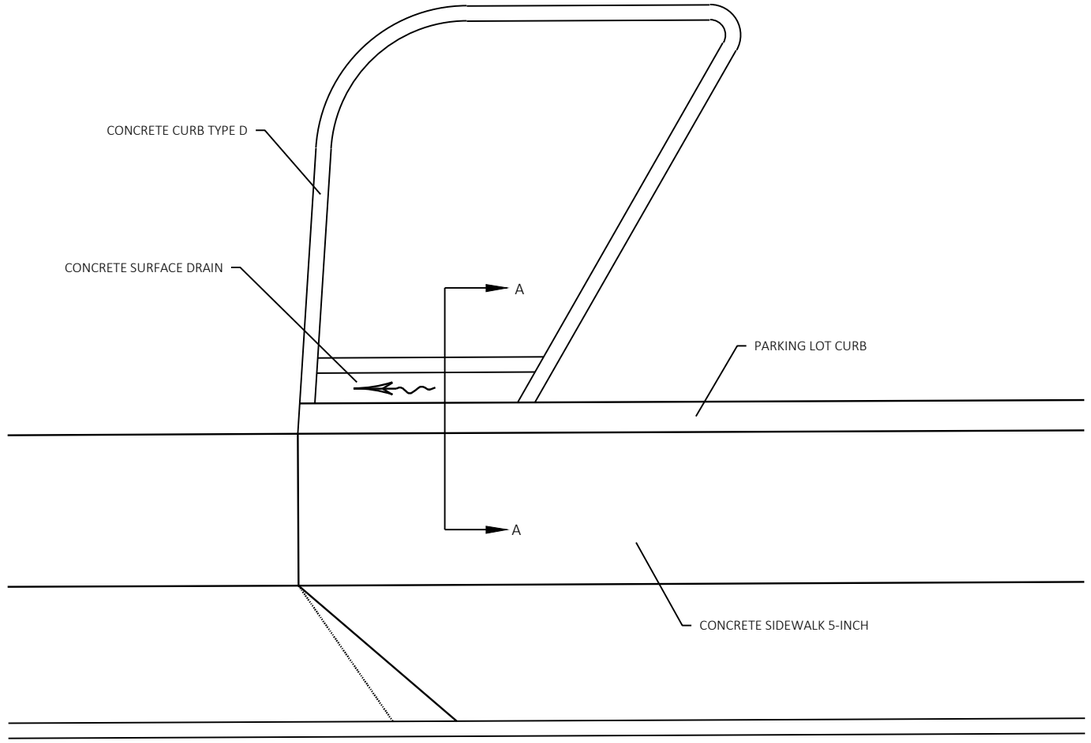

PLAN VIEW

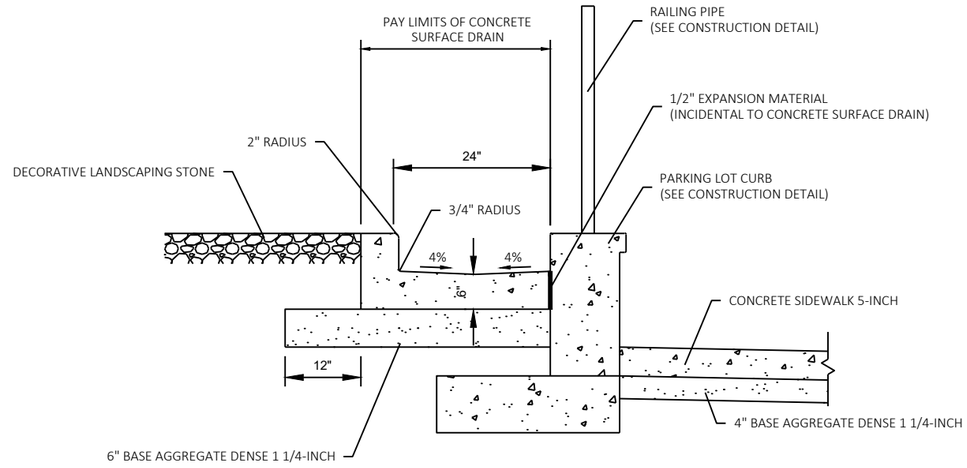

SECTION A-A

CONCRETE SURFACE DRAIN DETAIL

STA 1031+30 LT

PROJECT NO: 1310-04-70	HWY: STH 50	COUNTY: KENOSHA	CONSTRUCTION DETAILS	SHEET 24	E

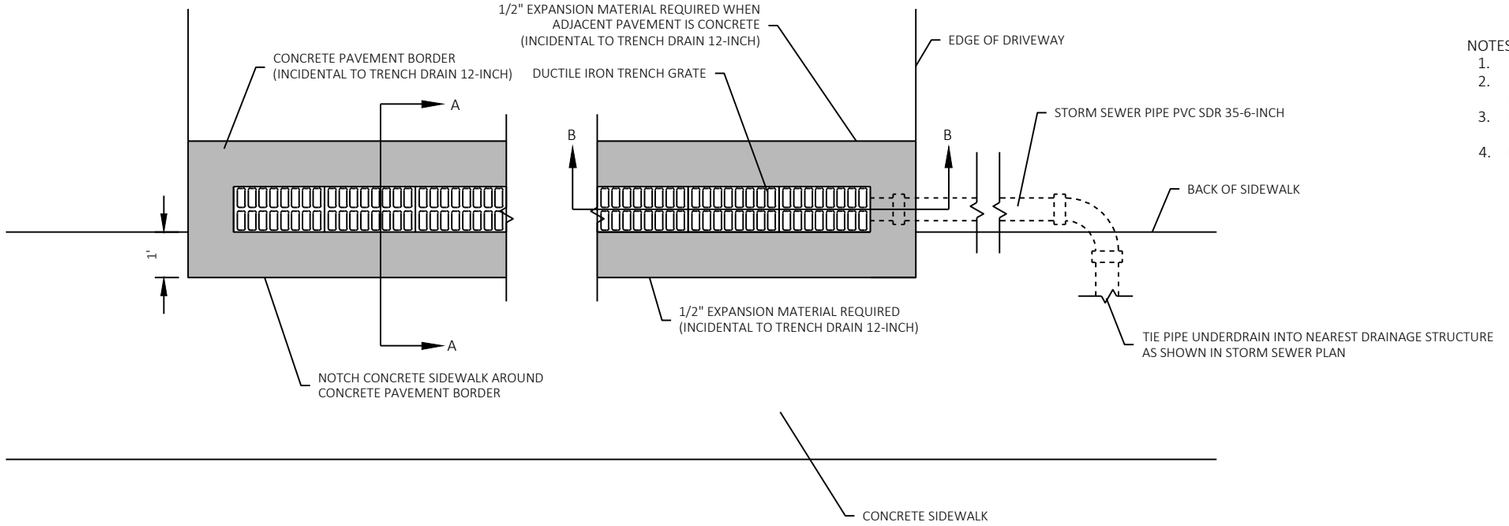

PLAN VIEW

NOTES:

1. TRENCH DRAIN FRAME SECTIONS MAY BE UNIFORM DEPTH OR SLOPED.
2. SUBMIT SHOP DRAWINGS FOR TRENCH DRAIN FRAME AND TRENCH DRAIN GRATE SECTIONS PRIOR TO ORDERING MATERIALS. SHOP DRAWINGS SHALL SHOW OUTLET CONNECTION DETAILS.
3. CONCRETE PAVEMENT BORDER SHALL MEET REQUIREMENTS OF SECTION 416.2.2 OF THE STANDARD SPECIFICATIONS.
4. POSITION TRENCH DRAIN SO THAT DRAIN WILL ABUT THE BACK OF SIDEWALK. NOTCH SIDEWALK AT TRENCH DRAIN LOCATIONS TO ALLOW FOR 12" WIDE CONCRETE BORDER AROUND TRENCH DRAINS.

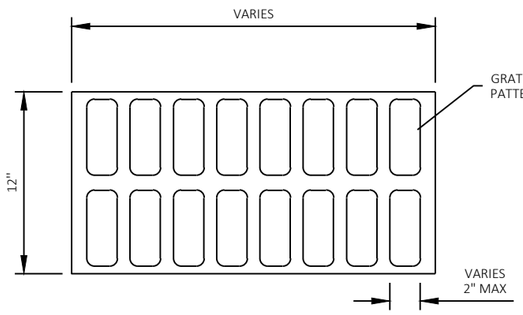

GRATE DETAIL

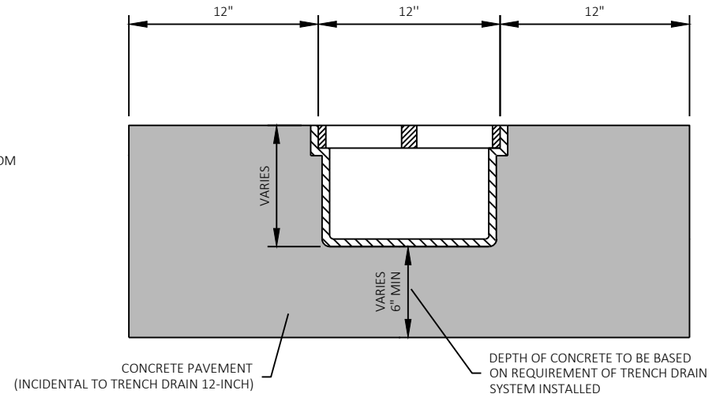

SECTION A-A

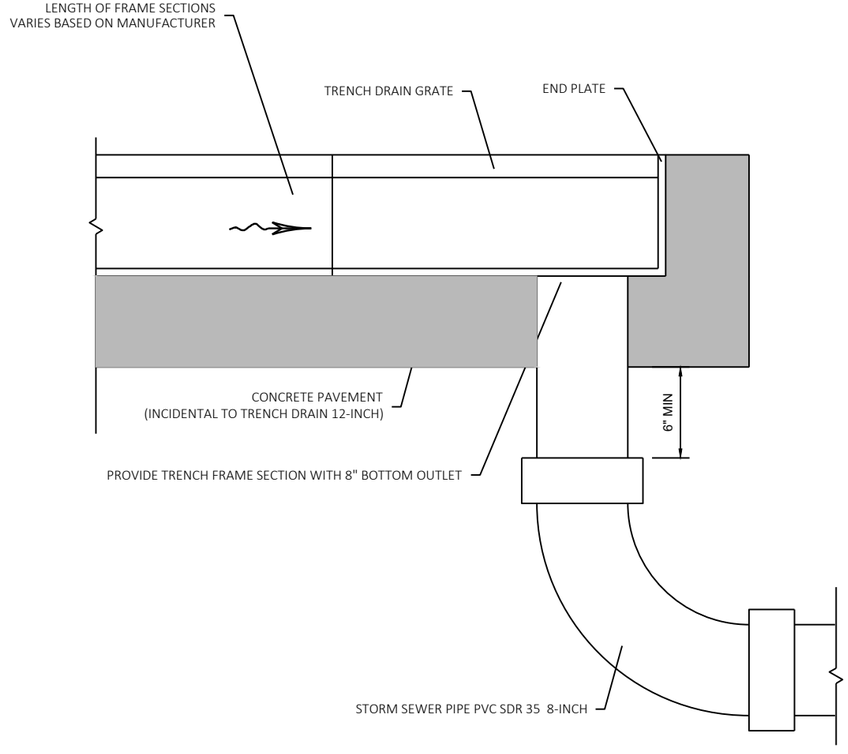

TRENCH DRAIN 12-INCH

SEE PLAN DETAILS FOR LOCATIONS

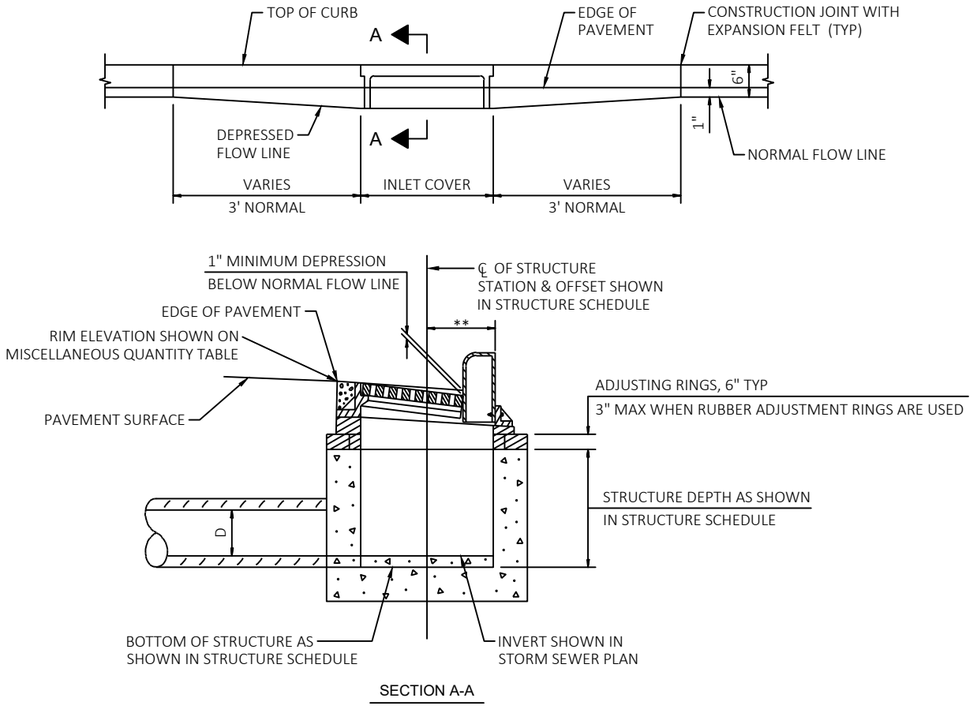

DETAIL OF CURB AND GUTTER AT INLETS

** OFFSET TO CENTER OF STRUCTURE TO BACK OF CURB:

CASTING TYPE	OFFSET
S	18"
H	12"
Z	9"

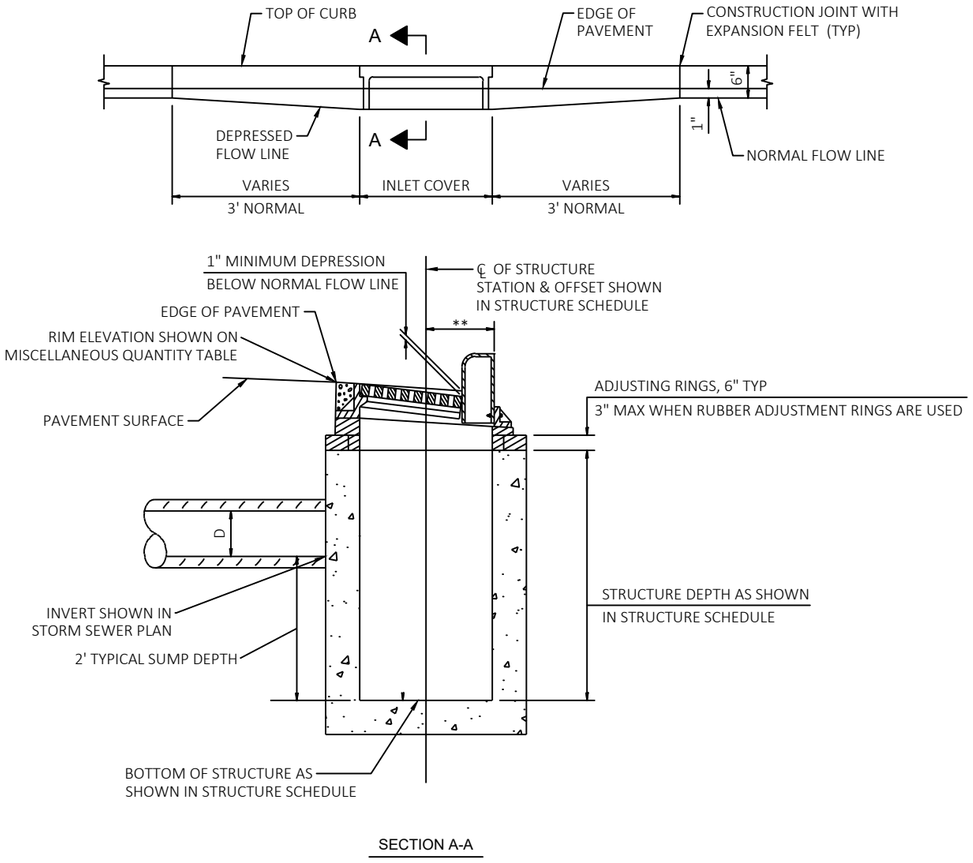

DETAIL OF CURB AND GUTTER AT CATCH BASINS

** OFFSET TO CENTER OF STRUCTURE TO BACK OF CURB:

CASTING TYPE	OFFSET
S	18"
H	12"
Z	9"

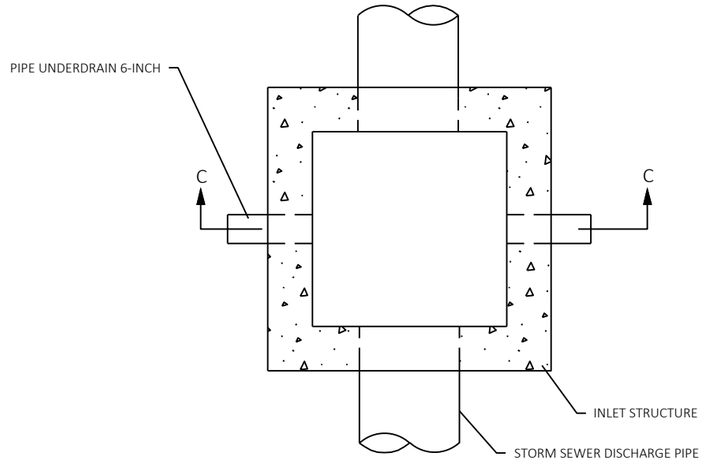

PLAN VIEW

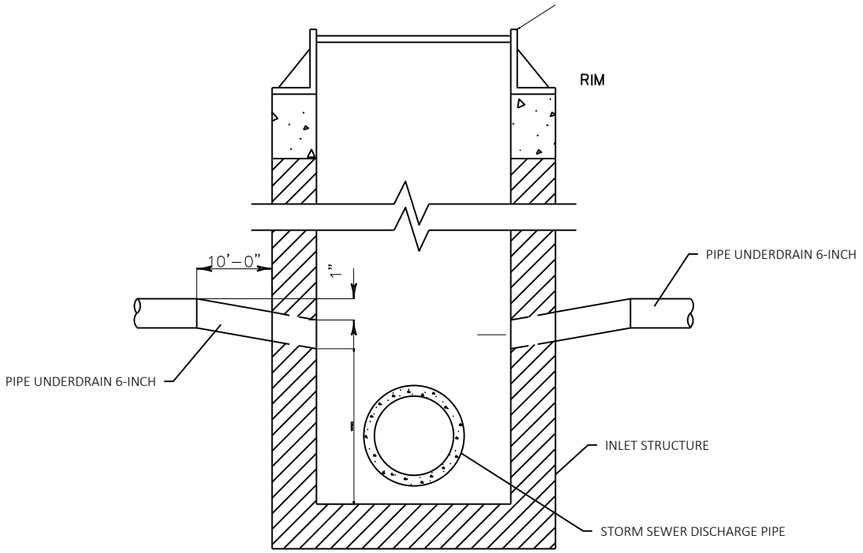

SECTION C-C

NOTE

SEE TYPICAL SECTIONS, STORM SEWER, AND UNDERDRAIN PLANS
FOR PIPE UNDERDRAIN LOCATIONS.

UNDERDRAIN OUTFALL AT DRAINAGE STRUCTURE

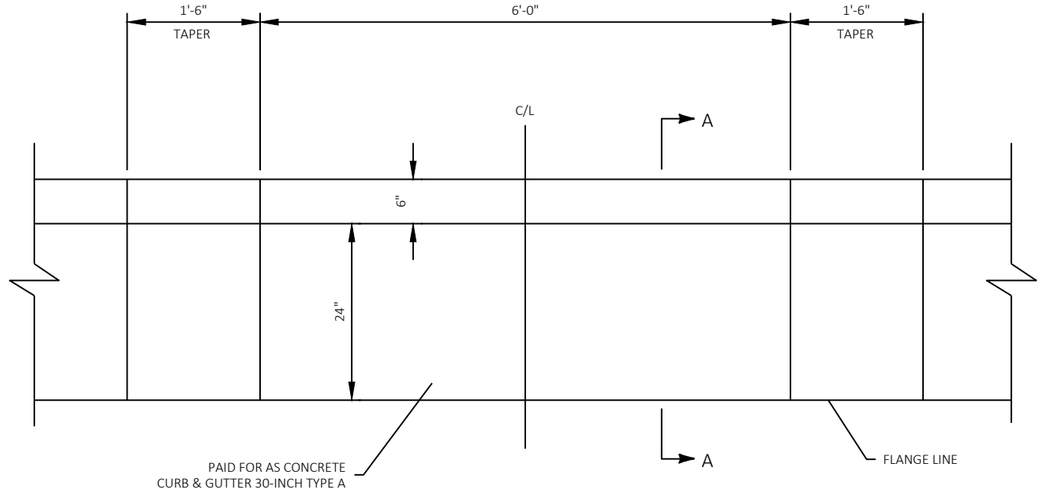

PLAN VIEW

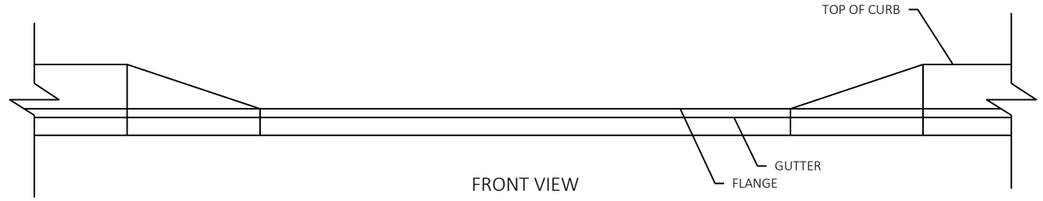

FRONT VIEW

MAINTENANCE OPENING

SEE PAVING DETAILS FOR LOCATIONS

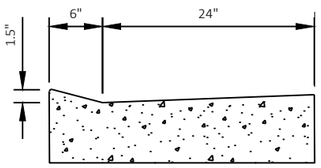

SECTION A-A

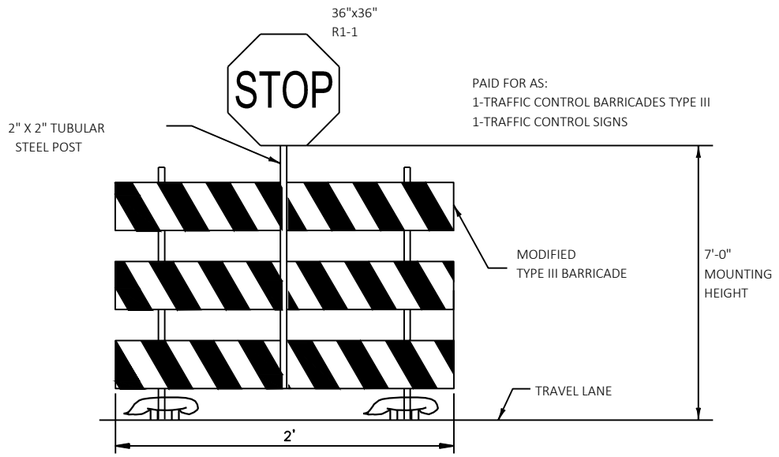

TEMPORARY STOP SIGN

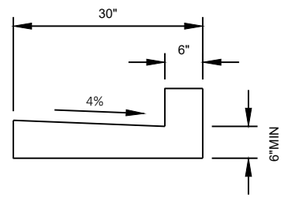

ASPHALTIC CURB DETAIL

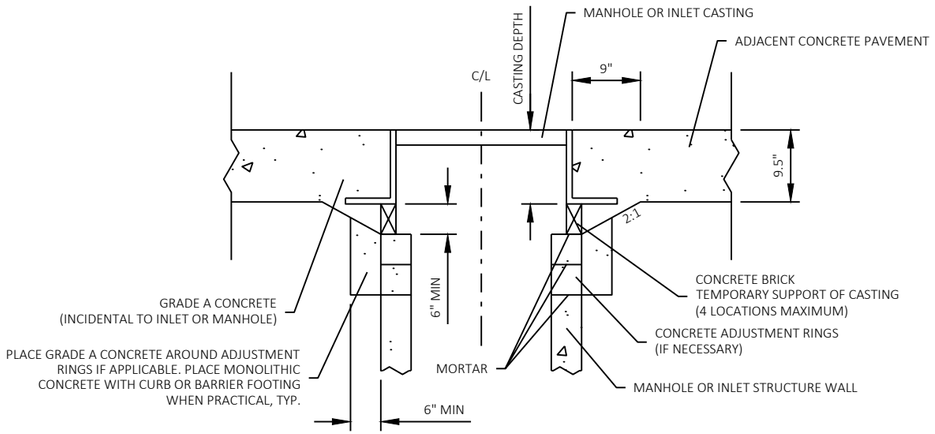

MONOLITHIC CONCRETE SHIMMING DETAIL

NOTES:
1. MONOLITHIC CONCRETE SHIMMING TO BE PROVIDED FOR ALL PROPOSED COVERS LOCATED IN CONCRETE PAVEMENT, CONCRETE CURB & GUTTER, AND CONCRETE BARRIER.
2. COST OF MONOLITHIC SHIM AND CONCRETE BRICKS TO BE INCIDENTAL TO MANHOLE OR INLET STRUCTURE BID ITEM.

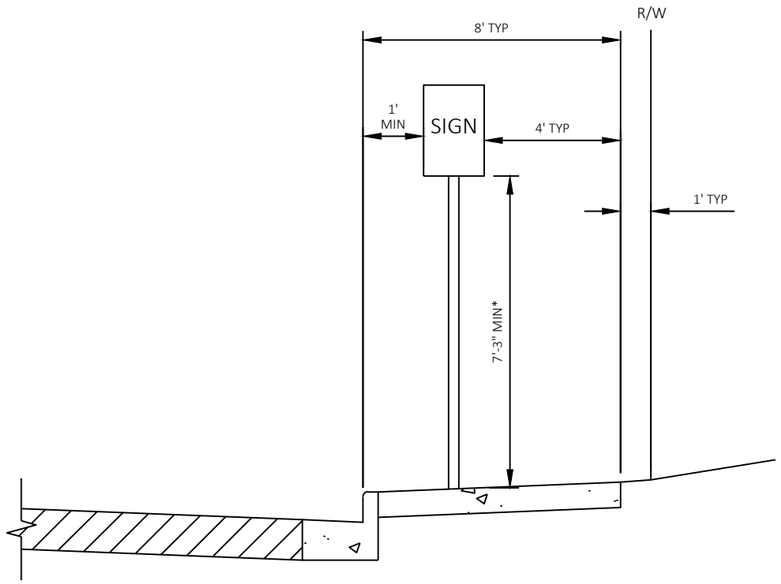

* 8'-0" MOUNTING HEIGHT IF DISTANCE FROM EDGE OF SIGN TO BACK OF SIDEWALK IS LESS THAN 4'-0"

SIGN PLACEMENT ALONG COMMERCIAL WALK

SEE SIGNING PLAN FOR LOCATIONS

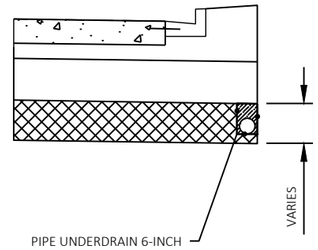

EXCAVATION BELOW SUBGRADE - STH 50

EXCAVATION BELOW SUBGRADE (EBS)
TO BE DETERMINED BY THE ENGINEER

NOTES:

EXACT EBS LOCATIONS TO BE DETERMINED BY THE FIELD ENGINEER

GEOGRID TO BE PLACED ON SUBGRADE FROM STA 1020+00 - STA 1030+00 WITH NO EBS

EXCAVATION REQUIRED FOR EBS OR SELECT SUBGRADE IMPROVEMENT SHALL BE PAID FOR AS EXCAVATION COMMON FILL EBS AND SELECT SUBRADE IMPROVEMENT VOID WITH SELECT CRUSHED MATERIAL.

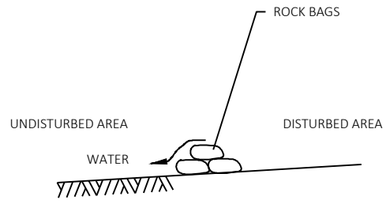

SECTION A-A

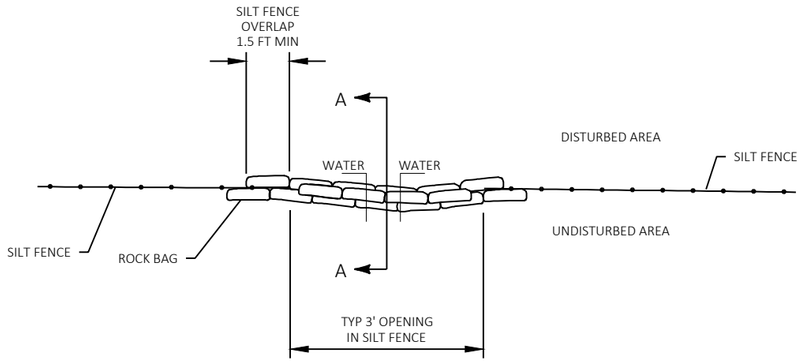

PLAN VIEW

ROCK BAGS USED FOR SILT FENCE RELIEF POINT

SEE EROSION CONTROL PLANS FOR LOCATIONS

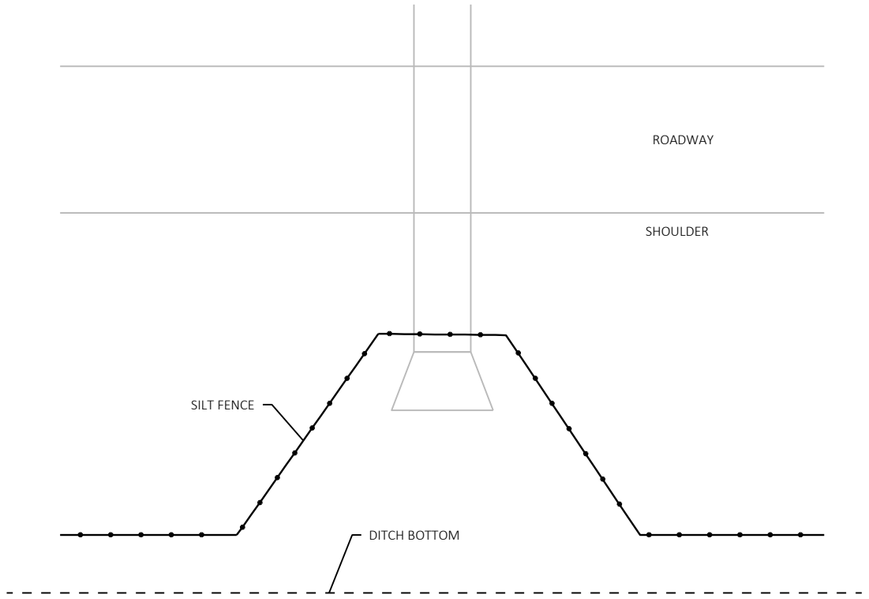

TYPICAL SILT FENCE DETAIL AT PIPE INLET

NOTE

SEE SILT FENCE SDD FOR ADDITIONAL INFORMATION.

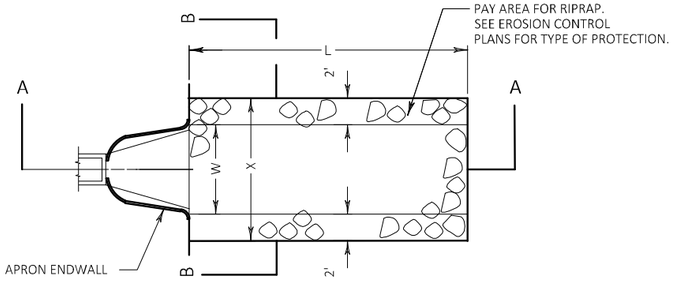

PLAN VIEW

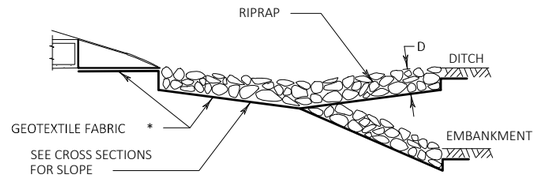

SECTION A-A

L = 3 x W (NOR) OR 10' MIN
OR AS INDICATED IN THE PLANS
OR AS DIRECTED BY THE ENGINEER

D = 12" FOR RIPRAP LIGHT
18" FOR RIPRAP MEDIUM
24" FOR RIPRAP HEAVY

X = W+4' FOR TYPICAL CULVERT
DISCHARGE INTO DITCH
W+6' FOR CULVERT DISCHARGE
DOWN EMBANKMENT SLOPE

Y = 0' FOR TYPICAL CULVERT
DISCHARGE INTO DITCH
6" FOR CULVERT DISCHARGE
DOWN EMBANKMENT SLOPE

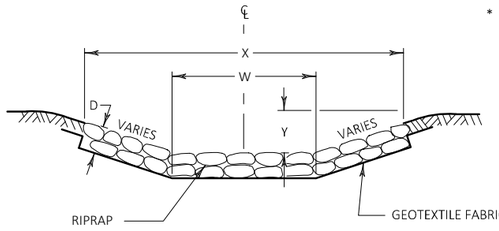

SECTION B-B

* TYPE R (FOR RIPRAP LIGHT ONLY)
TYPE HR (FOR RIPRAP HEAVY AND MEDIUM ONLY)

CONSTRUCTION NOTES:

1. GEOTEXTILE FABRIC SHALL EXTEND BENEATH THE ENTIRE LENGTH OF THE APRON ENDWALL SECTION. INSTALL ON PREPAVED FOUNDATION. GRADE PRIOR TO END WALL INSTALLATION.
2. COMPLETE GEOTEXTILE FABRIC AND RIPRAP SECTION INSTALLATION PRIOR TO STORM WATER FLOW.

RIPRAP AND GEOTEXTILE FABRIC DETAIL AT APRON ENDWALLS

SEE EROSION CONTROL PLAN FOR LOCATIONS

RUNOFF COEFFICIENT TABLE

	HYDROLOGIC SOIL GROUP											
	A			B			C			D		
	SLOPE RANGE (PERCENT)			SLOPE RANGE (PERCENT)			SLOPE RANGE (PERCENT)			SLOPE RANGE (PERCENT)		
LAND USE:	0-2	2-6	6 & OVER	0-2	2-6	6 & OVER	0-2	2-6	6 & OVER	0-2	2-6	6 & OVER
ROW CROPS	.08 .22	.16 .30	.22 .38	.12 .26	.20 .34	.27 .44	.15 .30	.24 .37	.33 .50	.19 .34	.28 .41	.38 .56
MEDIAN STRIP- TURF	.19 .24	.20 .26	.24 .30	.19 .25	.22 .28	.26 .33	.20 .26	.23 .30	.30 .37	.20 .27	.25 .32	.30 .40
SIDE SLOPE: TURF			.25 .32			.27 .34			.28 .36			.30 .38
PAVEMENT:												
ASPHALT	.70 - .95											
CONCRETE	.80 - .95											
BRICK	.70 - .80											
DRIVES, WALKS	.75 - .85											
ROOFS	.75 - .95											
GRAVEL ROADS, SHOULDERS	.40 - .60											

TOTAL PROJECT AREA = 28.61 ACRES
TOTAL AREA EXPECTED TO BE DISTURBED BY CONSTRUCTION ACTIVITIES = 22.39 ACRES

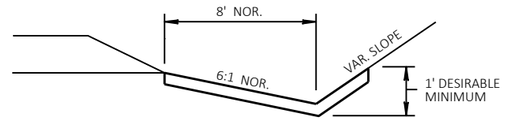

SOD DETAIL FOR DITCHES

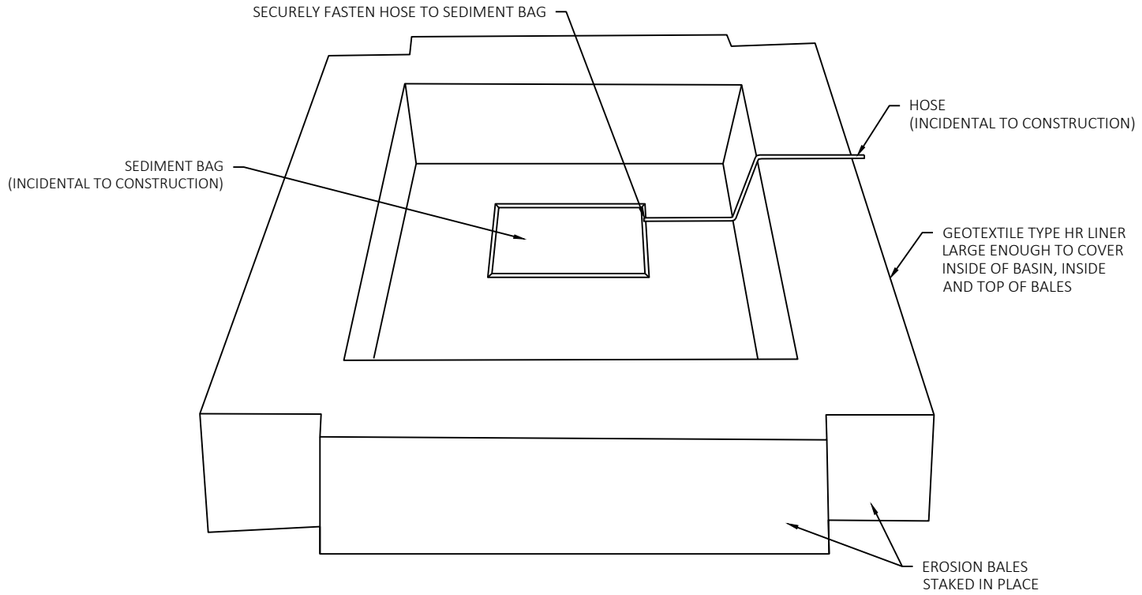

TEMPORARY SETTLING BASIN DETAIL

NOTES

1. CONTRACTOR SHALL PUMP TURBID WATER FROM EXCAVATION TO SEDIMENT BAG PLACED INSIDE FABRIC LINED STAKED BALE ENCLOSURE PRIOR TO DISCHARGING TO DITCHES/INLETS/WETLANDS OR WATERWAYS.
2. SEDIMENT BAG TO BE PLACED IN AN UPLAND VEGETATED AREA OR EQUIVALENT LOCATION APPROVED BY THE ENGINEER.
3. BASIN TO BE KEPT LESS THAN 10% FULL OF SEDIMENT. GEOTEXTILE FABRIC AND SEDIMENTS TO BE DISPOSED BY THE CONTRACTOR OFF OF THE PROJECT SITE.
4. TEMPORARY SETTLING BASIN AND SEDIMENT BAG TO BE INCIDENTAL TO CONTRACT.
5. SEDIMENT BAG, BALES AND FABRIC TO BE REPLACED AS NECESSARY AND IS INCIDENTAL TO CONTRACT.
6. SIZE TO BE DETERMINED BY THE CONTRACTOR AS PART OF THE ECIP SUBMITTAL.

ESTIMATED BAG SIZE = 18" X 12" X 6"	
PIPE SIZE	ESTIMATED NUMBER OF BAGS
12"	1
15"	2
18"	2
24"	3
30"	5
36"	7
42"	7
48"	10
54"	10
60"	13
66"	14
72"	16
17"X13"	2
30"X19"	5
38"X24"	7
45"X29"	10
53"X34"	10
60"X38"	13
76"X48"	18

CULVERT PIPE CHECKS

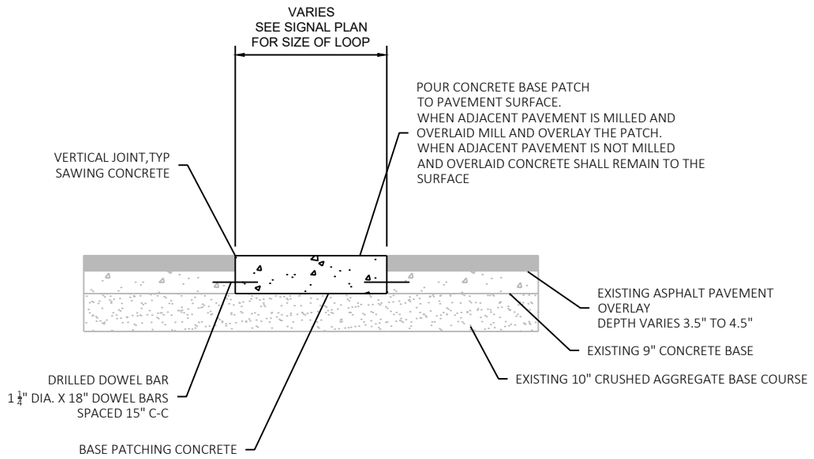

NOTE:
1. CONSTRUCT IN ACCORDANCE WITH SDD "BASE PATCHING CONCRETE"
2. PROVIDE NO. 6 X 12" TIE BARS SPACED 30" C-C INSTALLED PERPENDICULAR TO THE LONGITUDINAL JOINT.

BASE PATCHING CONCRETE FOR TRAFFIC SIGNAL LOOPS

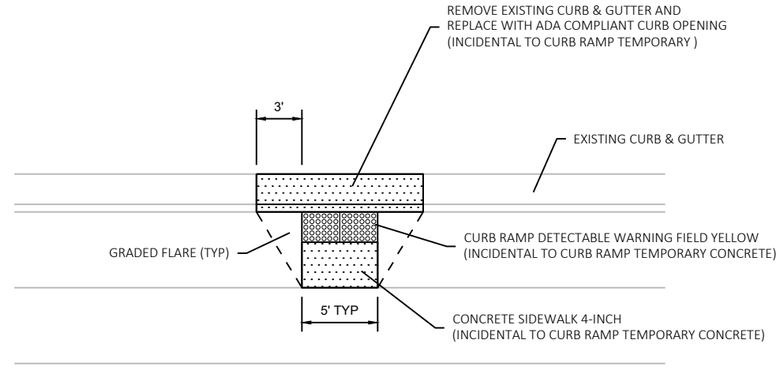

CURB RAMP TEMPORARY CONCRETE

SEE TRAFFIC CONTROL PLANS FOR LOCATIONS
PAID FOR AS TEMPORARY PEDESTRIAN CURB RAMP

NOTES:
1. CURB RAMP TEMPORARY ASPHALTIC SHALL MEET THE FOLLOWING ADA REQUIREMENTS:
   - 8.33% MAXIMUM RUNNING SLOPE
   - 2% MAXIMUM CROSS SLOPE
   - 11% MAX GRADE BREAK BETWEEN CURB RAMP SLOPE AND GUTTER PLAN SLOPE

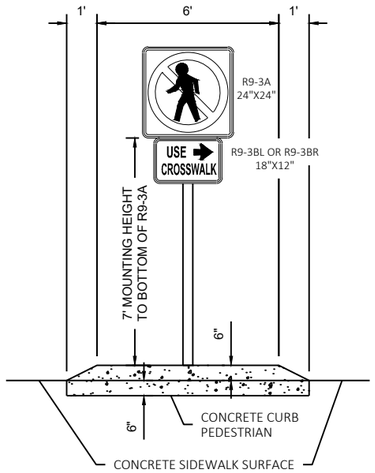

ELEVATION VIEW

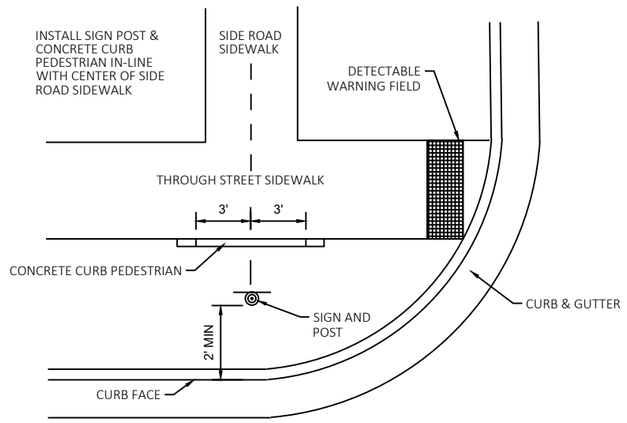

PLAN VIEW

PEDESTRIAN BARRIER DETAIL

STH 50 & 248TH AVE - SE QUADRANT
STH 50 & 236TH AVE - NW QUADRANT
STH 50 & 236TH AVE - NE QUADRANT

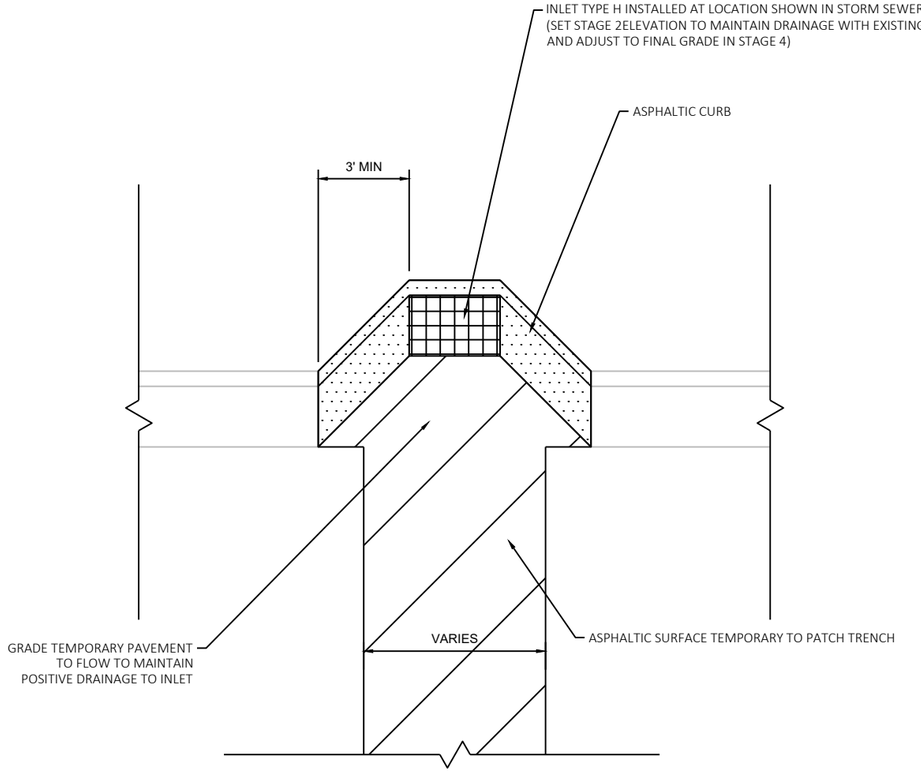

NOTE:
TEMPORARY CURB BUMPOUT TO BE PAID FOR USING ASPHALTIC CURB
AND ASPHALTIC SURFACE TEMPORARY BID ITEMS.

TEMPORARY CURB BUMPOUT

SEE STAGE 2 STAGING PLANS FOR LOCATIONS

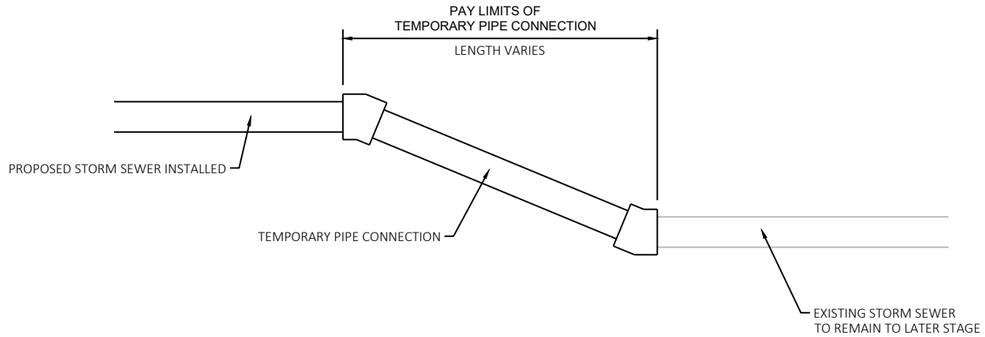

PLAN VIEW

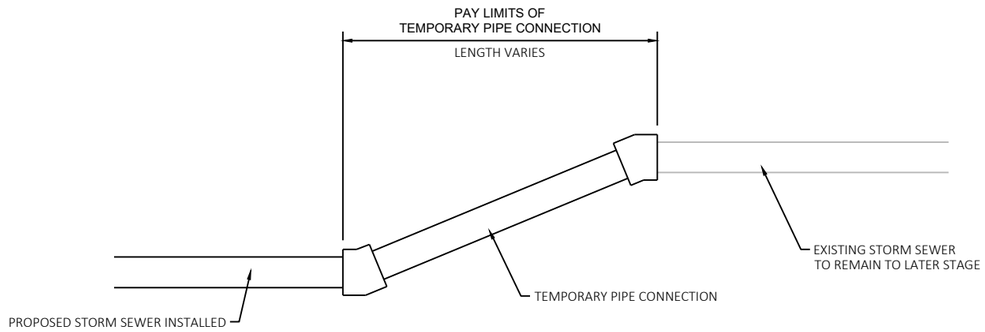

PROFILE VIEW

TEMPORARY PIPE CONNECTION

TO CONNECT EXISTING AND PROPOSED STORM SEWER
DURING STAGING

NOTES:
1. WHEN THE EXISTING AND PROPOSED PIPE SIZES ARE DIFFERENT THE TEMPORARY PIPE CONNECTION SHOULD BE THE LARGER OF THE TWO PIPE SIZES.
2. TEMPORARY PIPE CONNECTION PIPE MATERIAL SHALL MEET THE REQUIREMENTS OF SECTION 612 OF THE STANDARD SPECS. FOR PIPE SIZES 21 INCHES AND LESS THE PIPE MATERIAL SHALL BE UNPERFORATED POLYVINYL CHLORIDE (PVC) OR ACRYLONITRILE-BUTADIENE-STYRENE (ABS) DRAINAGE PIPE. FOR PIPE SIZES GREATER THAN 21-INCHES CORRUGATED STEEL OR CORRUGATED POLYETHYLENE DRAINAGE PIPE SHALL BE USED.
3. FOR PVC AND ABS PIPE ELBOWS SHOULD BE USED TO CORRECT ANY HORIZONTAL AND VERTICAL OFFSETS BETWEEN EXISTING AND PROPOSED STORM SEWER. ALL FITTINGS ARE INCIDENTAL TO THE TEMPORARY PIPE CONNECTION. FOR CORRUGATED STEEL OR CORRUGATED POLYETHYLENE PIPES CONCRETE COLLARS, MECHANICAL BANDS, OR OTHER ENGINEER APPROVED DEVICES SHALL BE USED TO CORRECT ANY HORIZONTAL OR VERTICAL OFFSET BETWEEN EXISTING AND PROPOSED STORM SEWER. ELBOWS, CONCRETE COLLARS, MECHANICAL BANDS, OR OTHER ENGINEER APPROVED DEVICES SHALL BE INCIDENTAL TO THE TEMPORARY PIPE CONNECTION.
4. CONNECT THE TEMPORARY PIPE CONNECTION TO THE PROPOSED STORM SEWER IN SUCH A MANNER THAT IT DOES NOT DAMAGE THE PROPOSED STORM SEWER.
5. REMOVE THE TEMPORARY PIPE CONNECTION WHEN THE REMAINDER OF THE STORM SEWER CAN BE INSTALLED IN A LATER STAGE.

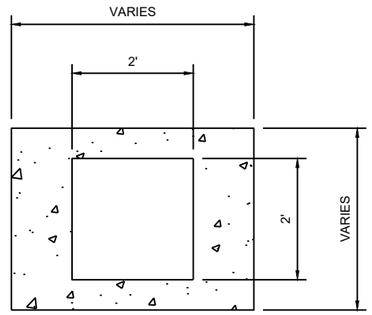

INLET COVERS TYPE S ADJUSTMENT RINGS

TO BE USED WHEN A TYPE S INLET COVER IS
PLACED ON A DIFFERENT SIZED STRUCTURE DURING STAGING

ADJUSTMENT RINGS ARE INCIDENTAL TO INLET COVERS TYPE S

PROVIDE ADJUSTMENT RINGS WITH A 2'X2' RECTANGULAR OPENING

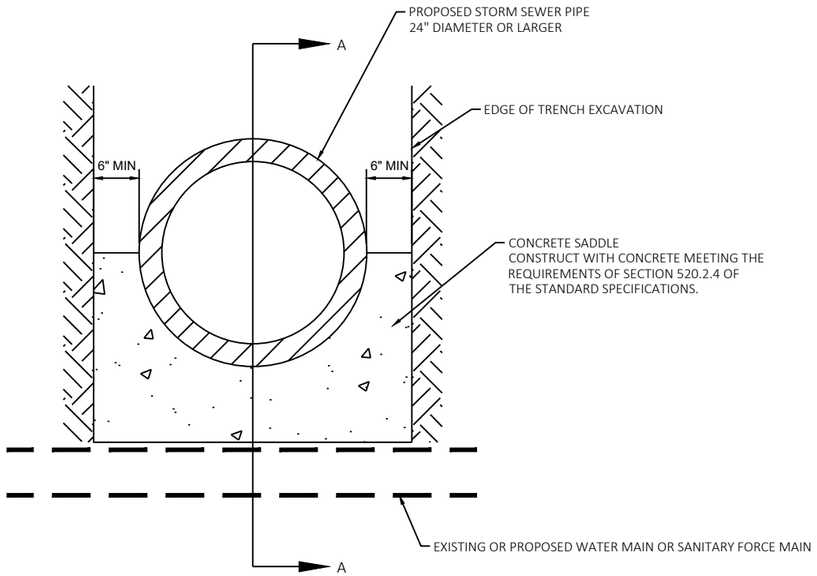

SECTION VIEW

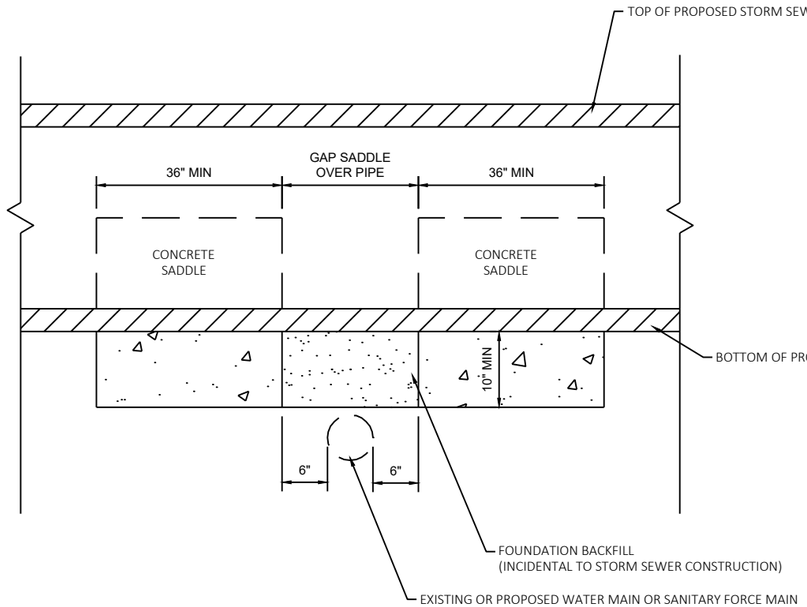

SECTION A-A

CONCRETE SADDLE

TO BE USED WHENEVER A STORM SEWER PIPE 24-INCHES OR LARGER CROSSES A WATER MAIN OR SANITARY FORCE MAIN WITH LESS THAN 18 INCHES OF CLEARANCE
SEE MISCELLANEOUS QUANTITIES FOR LOCATIONS

2

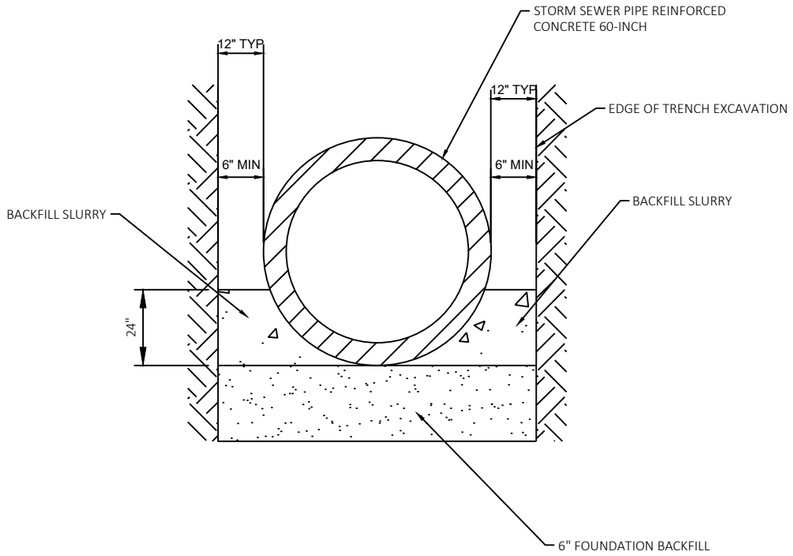

SECTION A-A

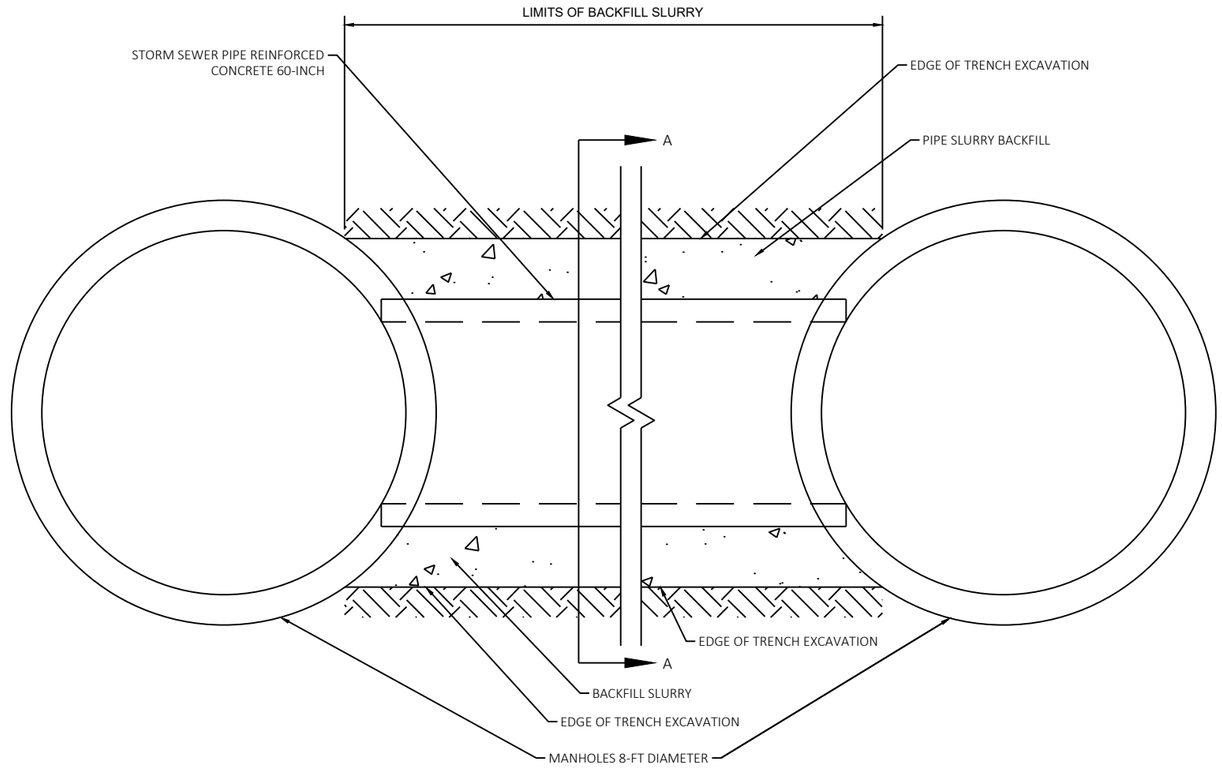

PLAN VIEW

BACKFILL SLURRY AROUND PIPE

STA 1024+04 - 1024+84, 14.5' RT
STA 1025+29 - 1026+00, 13'-14.5' RT

2

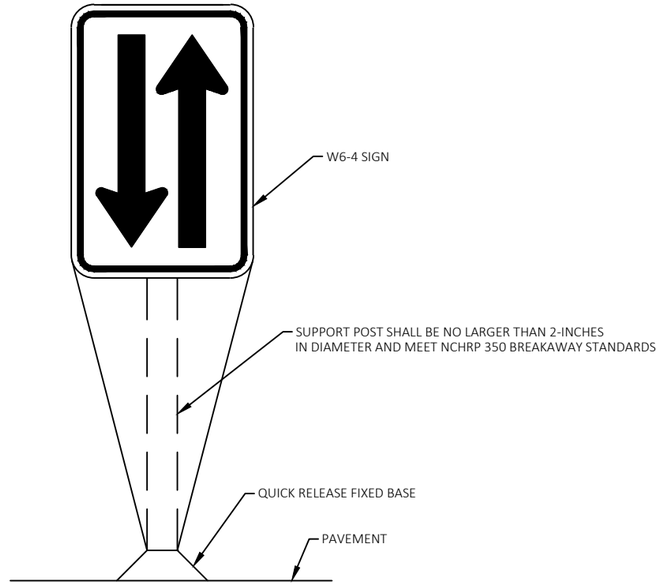

W6-4 SIGN MOUNTED ON PAVEMENT

TO BE USED AT INTERSECTIONS WHERE TRAFFIC IS
SEPARATED BY FLEXIBLE TUBULAR MARKERS

TO BE PAID FOR AS TRAFFIC CONTROL SIGNS

SEE TRAFFIC CONTROL PLANS FOR LOCATIONS

NOTES:
1. TRAFFIC CONTROL SIGN, POST AND BASE SHALL MEET NCHRP 350 BREAKAWAY STANDARDS.
2. SIGN AND POST SHALL BE MOUNTED TO THE PAVEMENT WITH A QUICK RELEASE FIXED BASE.

2

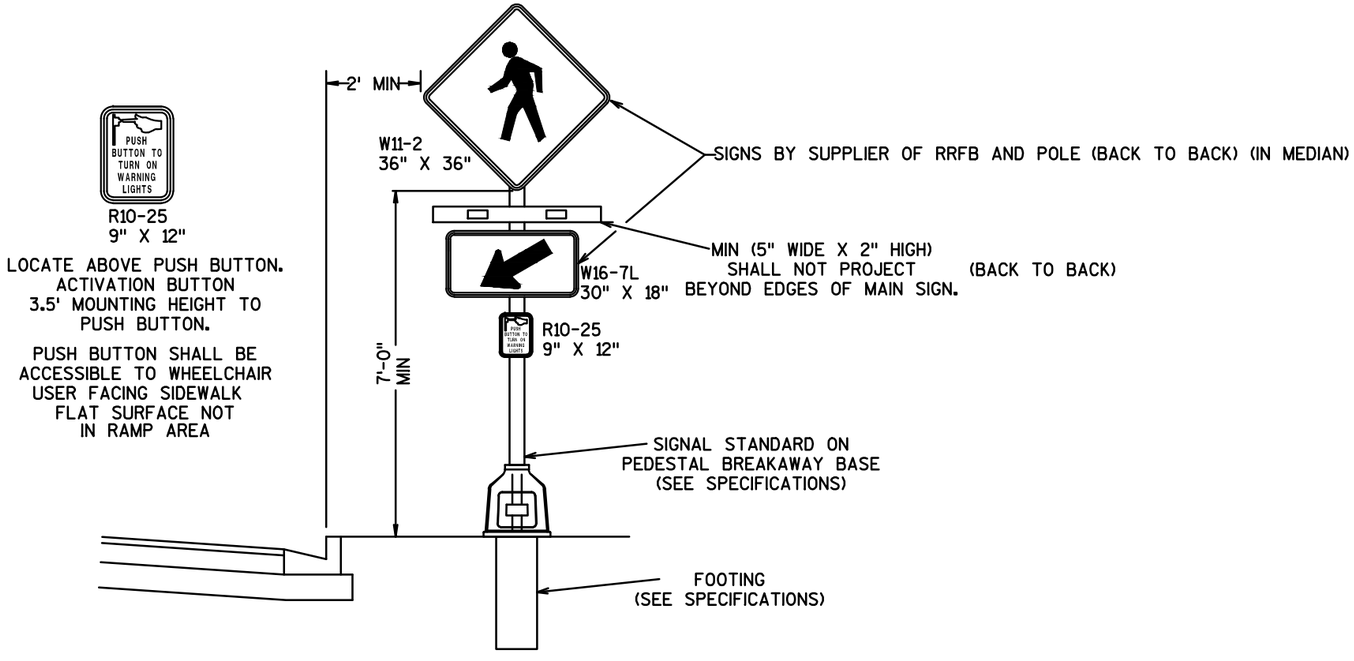

RAPID RECTANGULAR
FLASHING BEACON

2

N

NOTE:
SAWCUT LOCATIONS SHOWN ARE APPROXIMATE.
CONTRACTOR TO DETERMINE ACTUAL LOCATIONS BASED ON THE CONTRACTOR'S CONSTRUCTION OPERATIONS AND OFFSET REQUIRED FOR CONCRETE PAVER.

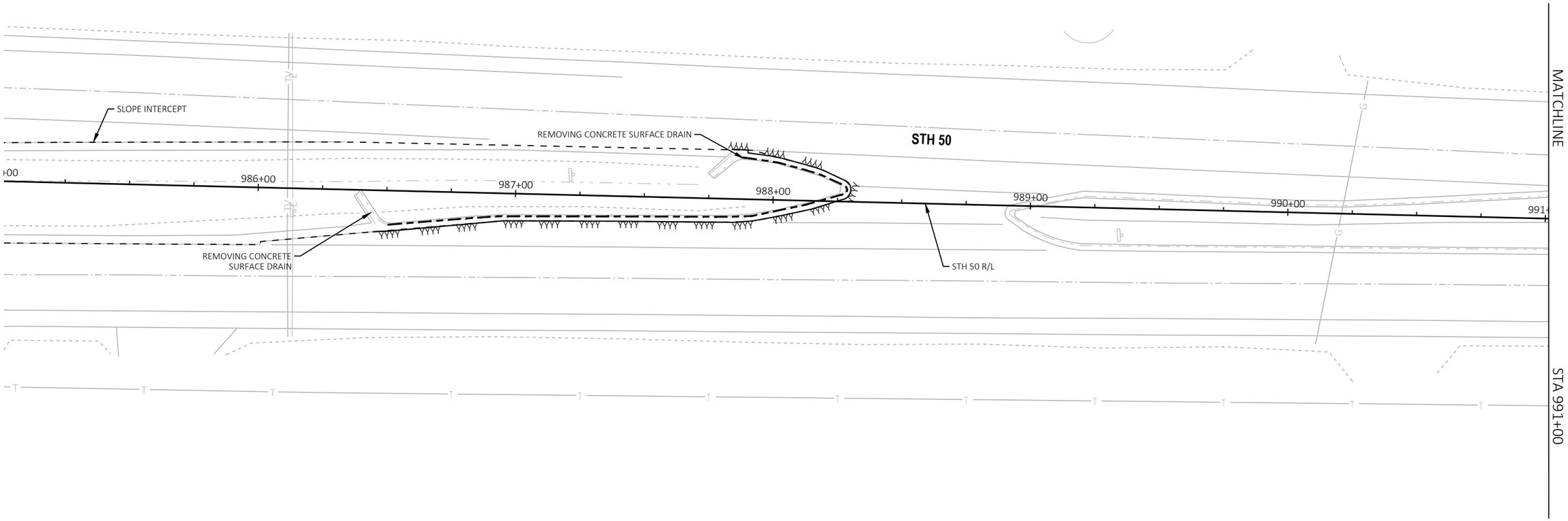

LEGEND

- X — CLEARING & GRUBBING
- REMOVING CONCRETE PAVEMENT
- REMOVING CURB OR REMOVING CURB & GUTTER
- REMOVING CONCRETE SIDEWALK
- SAWING CONCRETE (YYYY)
- SAWING ASPHALT (XXXX)
- REMOVING ASPHALTIC SURFACE MILLING
- REMOVING ASPHALTIC SURFACE BUTT JONTS
- BASE PATCHING CONCRETE
- REMOVING STORM SEWER
- RI — REMOVING INLETS
- RM — REMOVING MANHOLES

SHEET 1 OF 16

PROJECT NO: 1310-04-70	HWY: STH 50	COUNTY: KENOSHA	REMOVAL PLANS	SHEET 40	E

FILE NAME : T:\1182708.06\CIVIL3D\13100400\13100400\SHEETSPLAN\021101_RP.DWG
LAYOUT NAME - 01
PLOT DATE : 1/13/2022 12:01 PM
PLOT BY : BLACKWOOD, JIM
PLOT NAME :
PLOT SCALE : 1 IN:40 FT

2

N

NOTE:
SAWCUT LOCATIONS SHOWN ARE APPROXIMATE.
CONTRACTOR TO DETERMINE ACTUAL LOCATIONS BASED ON THE CONTRACTOR'S CONSTRUCTION OPERATIONS AND OFFSET REQUIRED FOR CONCRETE PAVER.

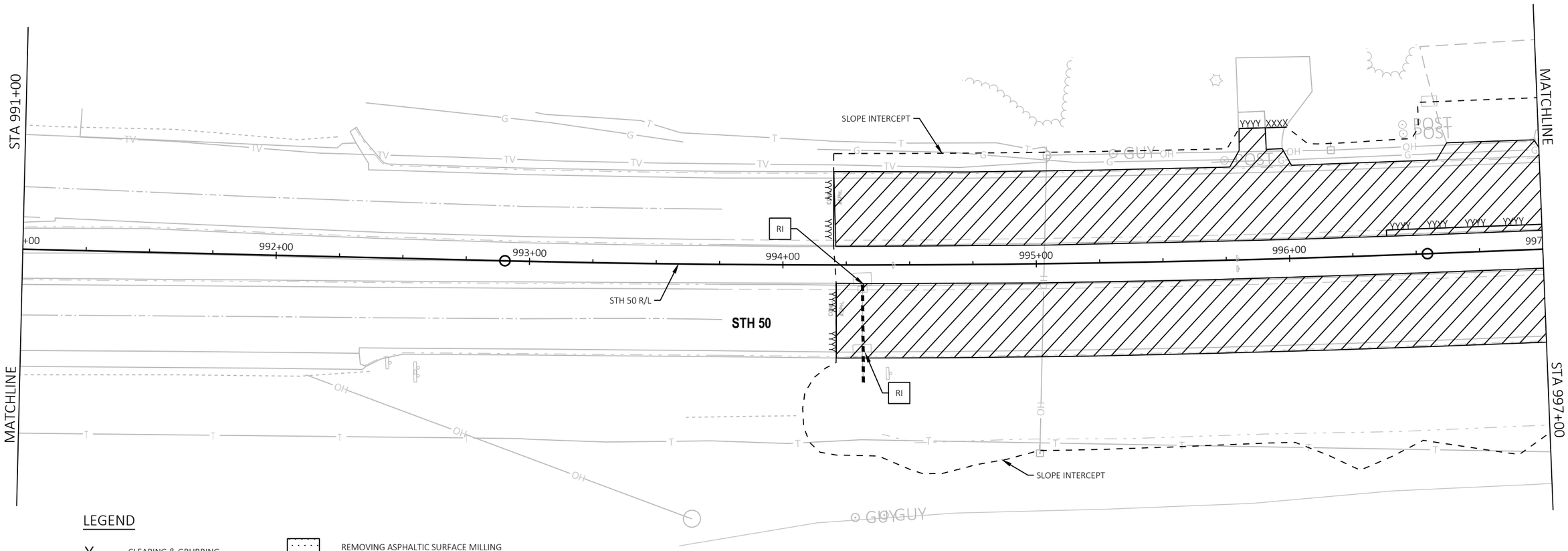

LEGEND

- X — CLEARING & GRUBBING
- REMOVING CONCRETE PAVEMENT
- REMOVING CURB OR REMOVING CURB & GUTTER
- REMOVING CONCRETE SIDEWALK
- YYYY — SAWING CONCRETE
- XXXX — SAWING ASPHALT
- REMOVING ASPHALTIC SURFACE MILLING
- REMOVING ASPHALTIC SURFACE BUTT JONTS
- BASE PATCHING CONCRETE
- REMOVING STORM SEWER
- RI — REMOVING INLETS
- RM — REMOVING MANHOLES

SHEET 2 OF 16

PROJECT NO: 1310-04-70	HWY: STH 50	COUNTY: KENOSHA	REMOVAL PLANS	SHEET 41	E

FILE NAME : T:\1182708.06\CIVIL3D\13100400\13100400\SHEETSPLAN\021101_RP.DWG
LAYOUT NAME - 02
PLOT DATE : 1/13/2022 12:02 PM
PLOT BY : BLACKWOOD, JIM
PLOT NAME :
PLOT SCALE : 1 IN:40 FT
WISDOT/CADDS SHEET 42

2

LEGEND

- X — CLEARING & GRUBBING
- REMOVING CONCRETE PAVEMENT
- REMOVING CURB OR REMOVING CURB & GUTTER
- REMOVING CONCRETE SIDEWALK
- SAWING CONCRETE
- SAWING ASPHALT
- REMOVING ASPHALTIC SURFACE MILLING
- REMOVING ASPHALTIC SURFACE BUTT JONTS
- BASE PATCHING CONCRETE
- REMOVING STORM SEWER
- RI — REMOVING INLETS
- RM — REMOVING MANHOLES

NOTE:
SAWCUT LOCATIONS SHOWN ARE APPROXIMATE.
CONTRACTOR TO DETERMINE ACTUAL LOCATIONS BASED ON THE CONTRACTOR'S CONSTRUCTION OPERATIONS AND OFFSET REQUIRED FOR CONCRETE PAVER.

N

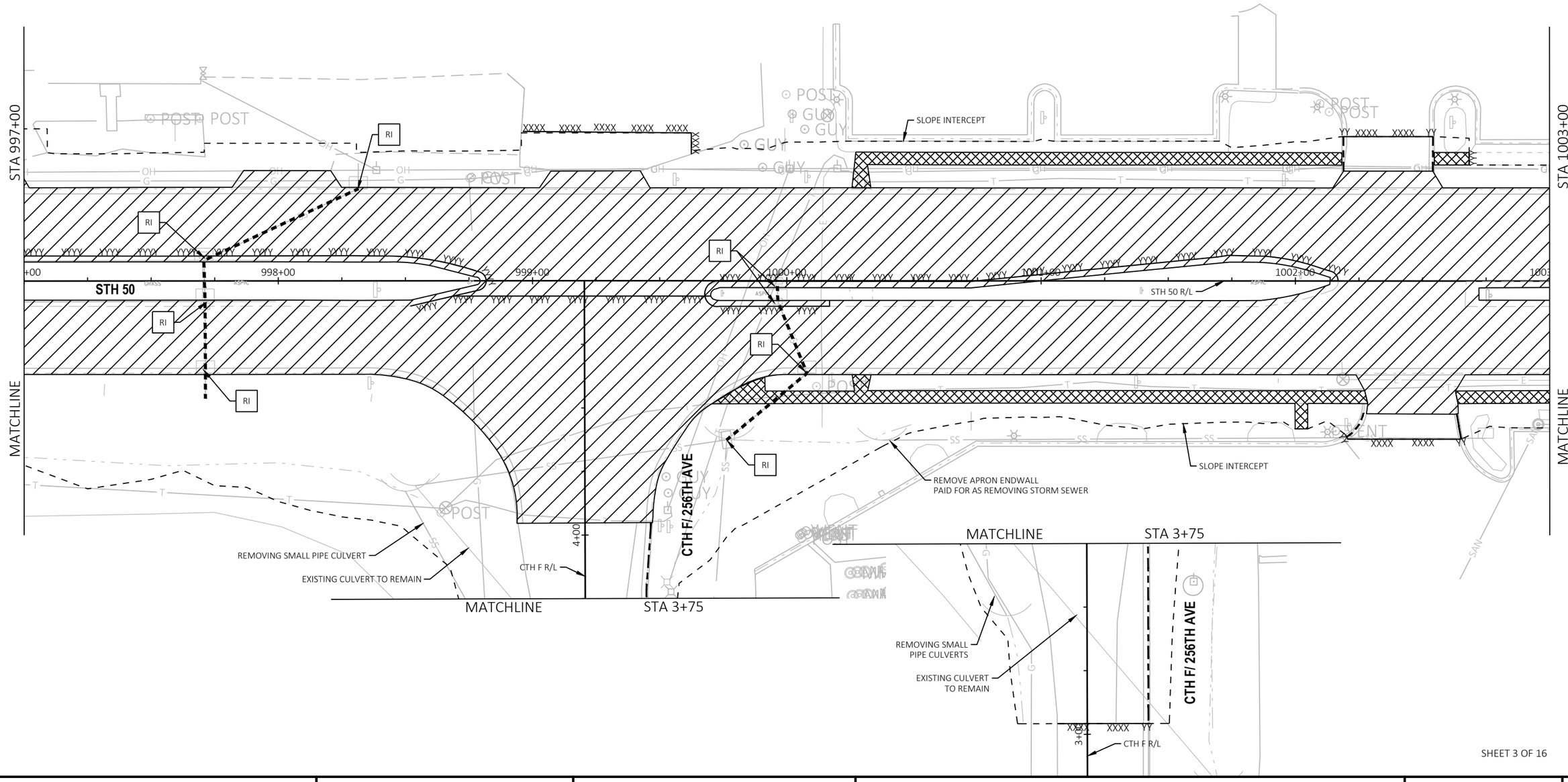

SHEET 3 OF 16

PROJECT NO: 1310-04-70	HWY: STH 50	COUNTY: KENOSHA	REMOVAL PLANS	SHEET 42	E

FILE NAME : T:\1182708.06\CIVIL3D\13100400\13100400\SHEETSPLAN\021101_RP.DWG
LAYOUT NAME - 03
PLOT DATE : 1/13/2022 12:02 PM
PLOT BY : BLACKWOOD, JIM
PLOT NAME :
PLOT SCALE : 1 IN:40 FT

2

N

LEGEND

- X — CLEARING & GRUBBING
- REMOVING CONCRETE PAVEMENT
- REMOVING CURB OR REMOVING CURB & GUTTER
- REMOVING CONCRETE SIDEWALK
- SAWING CONCRETE (YYYY)
- SAWING ASPHALT (XXXX)
- REMOVING ASPHALTIC SURFACE MILLING
- REMOVING ASPHALTIC SURFACE BUTT JONTS
- BASE PATCHING CONCRETE
- REMOVING STORM SEWER
- RI — REMOVING INLETS
- RM — REMOVING MANHOLES

MATCHLINE STA 52+00

STH 75 R/L

STH 75

REMOVING RETAINING WALL (PARTIAL REMOVAL) SEE CONSTRUCTION DETAIL

PROPERTY OWNER TO REMOVE ENCROACHING LANDSCAPING AND LIGHTING

SLOPE INTERCEPT

STA 1003+00

STA 1009+00

1004+00

1005+00

1006+00

1007+00

1008+00

STH 50

STH 50 R/L

MATCHLINE

SLOPE INTERCEPT

STH 75/83

STH 75/83 R/L

REMOVE INVASIVE SPECIES WITHIN WISDOT RIGHT OF WAY

MATCHLINE STA 48+00

NOTE:
SAWCUT LOCATIONS SHOWN ARE APPROXIMATE.
CONTRACTOR TO DETERMINE ACTUAL LOCATIONS BASED ON THE CONTRACTOR'S CONSTRUCTION OPERATIONS AND OFFSET REQUIRED FOR CONCRETE PAVER.

SHEET 4 OF 16

PROJECT NO: 1310-04-70	HWY: STH 50	COUNTY: KENOSHA	REMOVAL PLANS	SHEET 43	E

FILE NAME : T:\1182708.06\CIVIL3D\13100400\13100400\SHEETSPLAN\021101_RP.DWG
LAYOUT NAME - 04
PLOT DATE : 4/14/2022 8:20 AM
PLOT BY : BLACKWOOD, JIM
PLOT NAME :
PLOT SCALE : 1 IN:40 FT
WISDOT/CADDS SHEET 42

2

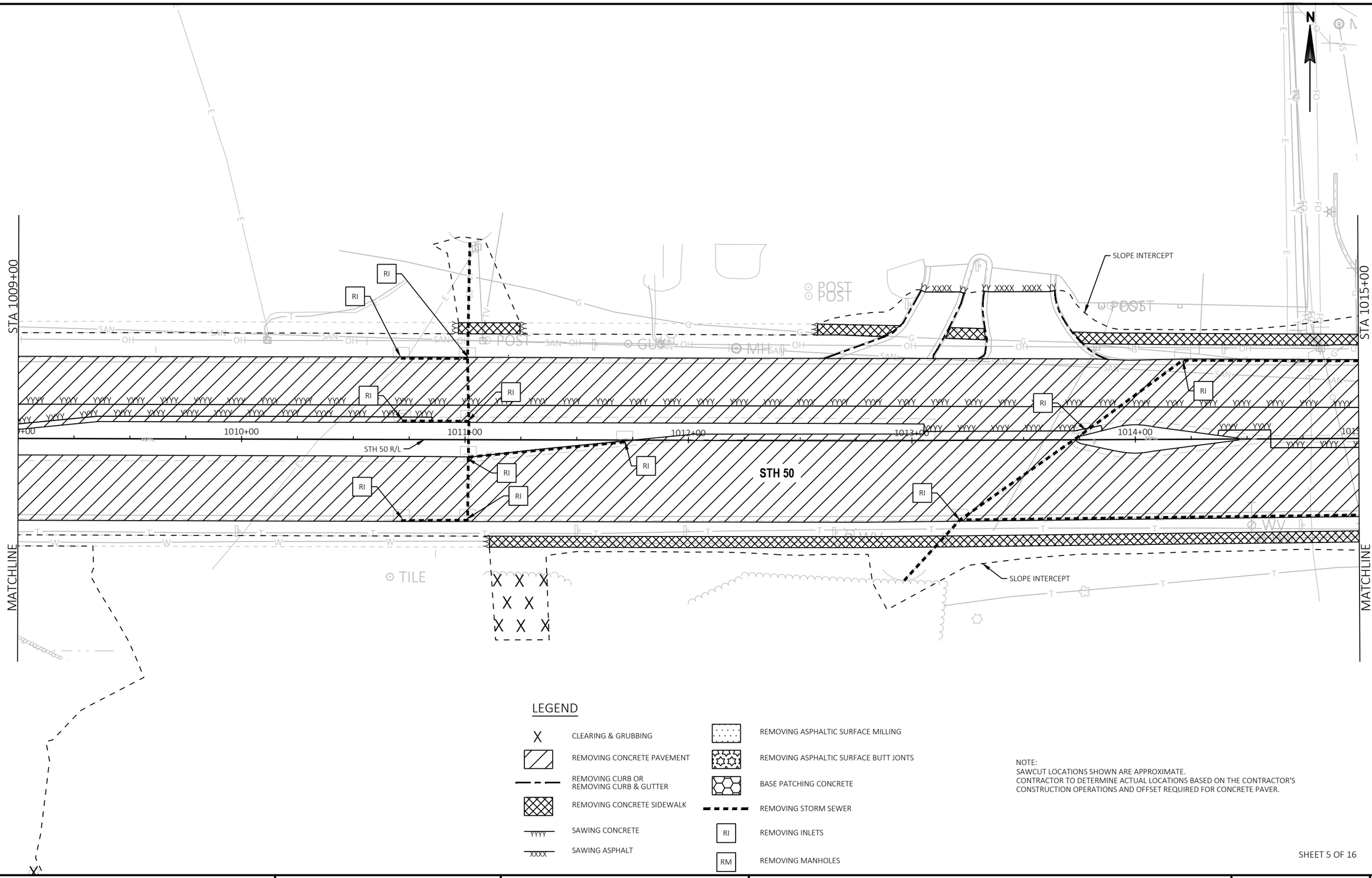

LEGEND

- X — CLEARING & GRUBBING
- REMOVING CONCRETE PAVEMENT
- REMOVING CURB OR REMOVING CURB & GUTTER
- REMOVING CONCRETE SIDEWALK
- YYYY — SAWING CONCRETE
- XXXX — SAWING ASPHALT
- REMOVING ASPHALTIC SURFACE MILLING
- REMOVING ASPHALTIC SURFACE BUTT JONTS
- BASE PATCHING CONCRETE
- REMOVING STORM SEWER
- RI — REMOVING INLETS
- RM — REMOVING MANHOLES

NOTE:
SAWCUT LOCATIONS SHOWN ARE APPROXIMATE.
CONTRACTOR TO DETERMINE ACTUAL LOCATIONS BASED ON THE CONTRACTOR'S CONSTRUCTION OPERATIONS AND OFFSET REQUIRED FOR CONCRETE PAVER.

SHEET 5 OF 16

PROJECT NO: 1310-04-70	HWY: STH 50	COUNTY: KENOSHA	REMOVAL PLANS	SHEET 44	E

FILE NAME : T:\1182708.06\CIVIL3D\13100400\13100400\SHEETSPLAN\021101_RP.DWG
LAYOUT NAME - 05
PLOT DATE : 1/13/2022 12:02 PM
PLOT BY : BLACKWOOD, JIM
PLOT NAME :
PLOT SCALE : 1 IN:40 FT
WISDOT/CADDS SHEET 42

2

2

LEGEND

- CLEARING & GRUBBING
- REMOVING CONCRETE PAVEMENT
- REMOVING CURB OR REMOVING CURB & GUTTER
- REMOVING CONCRETE SIDEWALK
- SAWING CONCRETE
- SAWING ASPHALT
- REMOVING ASPHALTIC SURFACE MILLING
- REMOVING ASPHALTIC SURFACE BUTT JONTS
- BASE PATCHING CONCRETE
- REMOVING STORM SEWER
- RI — REMOVING INLETS
- RM — REMOVING MANHOLES

N

STA 1015+00

STA 1021+00

250TH AVE R/L

250TH AVE

11+00

SLOPE INTERCEPT

STH 50

STH 50 R/L

1016+00

1017+00

1018+00

1019+00

1020+00

SLOPE INTERCEPT

MATCHLINE

MATCHLINE

NOTE:
SAWCUT LOCATIONS SHOWN ARE APPROXIMATE.
CONTRACTOR TO DETERMINE ACTUAL LOCATIONS BASED ON THE CONTRACTOR'S CONSTRUCTION OPERATIONS AND OFFSET REQUIRED FOR CONCRETE PAVER.

SHEET 6 OF 16

PROJECT NO: 1310-04-70	HWY: STH 50	COUNTY: KENOSHA	REMOVAL PLANS	SHEET 45	E

FILE NAME : T:\1182708.06\CIVIL3D\13100400\13100400\SHEETSPLAN\021101_RP.DWG
LAYOUT NAME - 06

PLOT DATE : 1/13/2022 12:02 PM PLOT BY : BLACKWOOD, JIM PLOT NAME : PLOT SCALE : 1 IN:40 FT

WISDOT/CADDS SHEET 42

NOTE:
SAWCUT LOCATIONS SHOWN ARE APPROXIMATE.
CONTRACTOR TO DETERMINE ACTUAL LOCATIONS BASED ON THE CONTRACTOR'S CONSTRUCTION OPERATIONS AND OFFSET REQUIRED FOR CONCRETE PAVER.

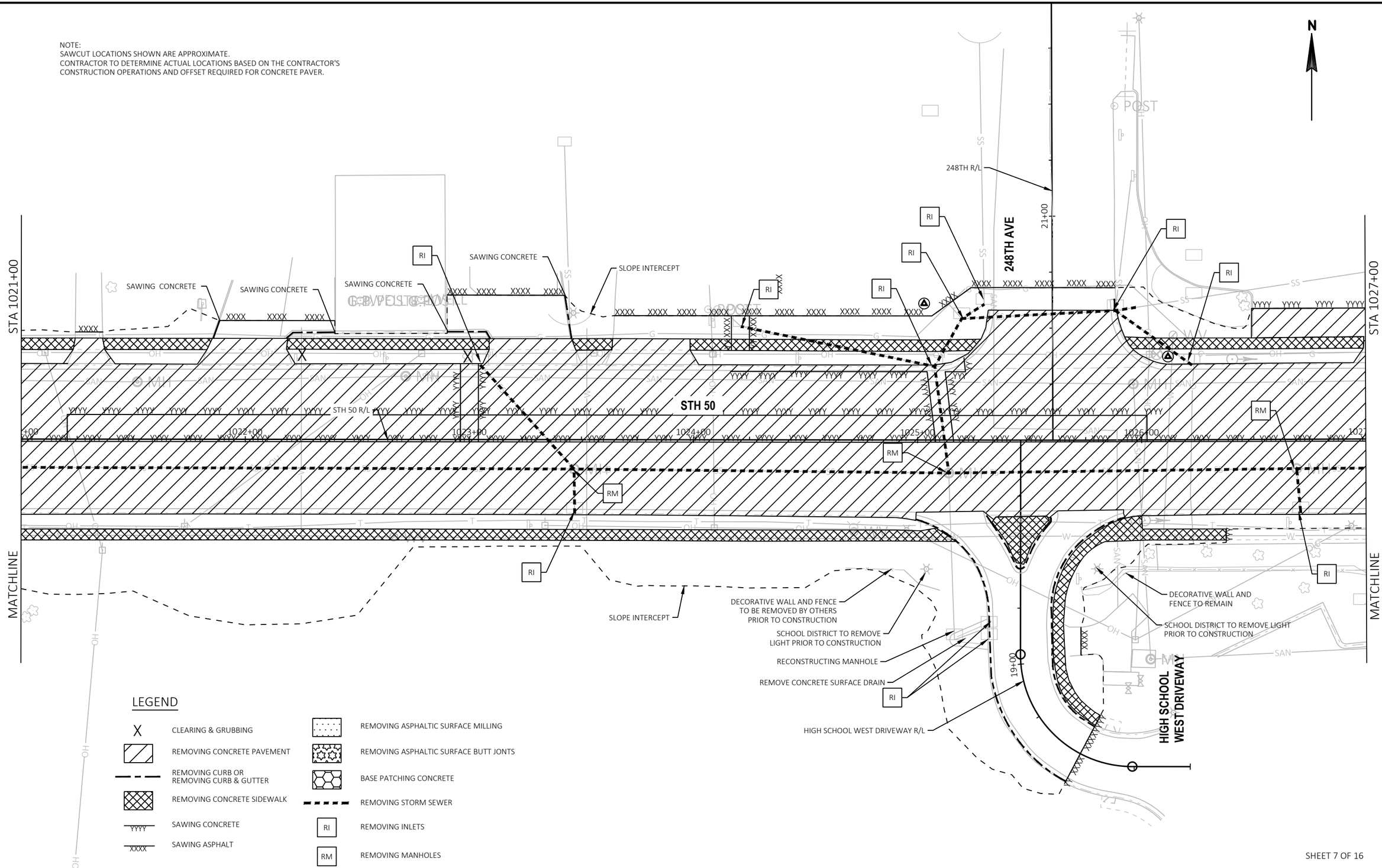

SHEET 7 OF 16

PROJECT NO: 1310-04-70	HWY: STH 50	COUNTY: KENOSHA	REMOVAL PLANS	SHEET 46	E

FILE NAME : T:\1182708.06\CIVIL3D\13100400\13100400\SHEETSPLAN\021101_RP.DWG
LAYOUT NAME - 07
PLOT DATE : 1/13/2022 12:02 PM PLOT BY : BLACKWOOD, JIM PLOT NAME : PLOT SCALE : 1 IN:40 FT

2

N

STA 1027+00

STA 1033+00

REMOVE EXISTING RETAINING WALL AND FENCE ON TOP OF WALL (INCIDENTAL TO EXCAVATION FOR STRUCTURES)

PROPERTY OWNER TO REMOVE SIGN PRIOR TO CONSTRUCTION

SLOPE INTERCEPT

SAWING CONCRETE

REMOVE EXISTING RETAINING WALL AND FENCE ON TOP OF WALL (INCIDENTAL TO EXCAVATION FOR STRUCTURES)

PROPERTY OWNER TO REMOVE SIGN PRIOR TO CONSTRUCTION

SAWING CONCRETE

SAWING CONCRETE

BUSINESS SIGN TO REMAIN

STH 50

STH 50 R/L

1028+00

1029+00

1030+00

1031+00

1032+00

RI

RM

SLOPE INTERCEPT

MATCHLINE

MATCHLINE

LEGEND

- X — CLEARING & GRUBBING
- REMOVING CONCRETE PAVEMENT
- REMOVING CURB OR REMOVING CURB & GUTTER
- REMOVING CONCRETE SIDEWALK
- YYYY — SAWING CONCRETE
- XXXX — SAWING ASPHALT
- REMOVING ASPHALTIC SURFACE MILLING
- REMOVING ASPHALTIC SURFACE BUTT JONTS
- BASE PATCHING CONCRETE
- REMOVING STORM SEWER
- RI — REMOVING INLETS
- RM — REMOVING MANHOLES

NOTE:
SAWCUT LOCATIONS SHOWN ARE APPROXIMATE.
CONTRACTOR TO DETERMINE ACTUAL LOCATIONS BASED ON THE CONTRACTOR'S CONSTRUCTION OPERATIONS AND OFFSET REQUIRED FOR CONCRETE PAVER.

PROJECT NO: 1310-04-70	HWY: STH 50	COUNTY: KENOSHA	REMOVAL PLANS	SHEET 47	E

FILE NAME : T:\1182708.06\CIVIL3D\13100400\13100400\SHEETSPLAN\021101_RP.DWG
LAYOUT NAME - 08

PLOT DATE : 4/14/2022 8:45 AM PLOT BY : BLACKWOOD, JIM PLOT NAME : PLOT SCALE : 1 IN:40 FT

WISDOT/CADDS SHEET 42

2

2

NOTE:
SAWCUT LOCATIONS SHOWN ARE APPROXIMATE.
CONTRACTOR TO DETERMINE ACTUAL LOCATIONS BASED ON THE CONTRACTOR'S CONSTRUCTION OPERATIONS AND OFFSET REQUIRED FOR CONCRETE PAVER.

N

246TH AVE R/L

246TH AVE

41+00

PAY PHONE TO BE REMOVED BY OTHERS
PRIOR TO CONSTRUCTION

REMOVE PRIVATELY OWNED LIGHT POLE
TERMINATE ELECTRICAL CABLES AT RIGHT OF WAY LINE

RI

SLOPE INTERCEPT

STA 1033+00

STA 1039+00

1034+00

1035+00

1036+00

STH 50 R/L

1037+00

1038+00

RM

STH 50

MATCHLINE

MATCHLINE

WOOD RAILING TO REMAIN

REMOVE DRIVEWAY TO NEAREST JOINT

SLOPE INTERCEPT

REMOVING RETAINING WALL

EAST HIGH SCHOOL DRIVEWAY R/L

39+00

EAST HIGH SCHOOL DRIVEWAY

RI

LEGEND

X	CLEARING & GRUBBING
	REMOVING CONCRETE PAVEMENT
	REMOVING CURB OR REMOVING CURB & GUTTER
	REMOVING CONCRETE SIDEWALK
YYYY	SAWING CONCRETE
XXXX	SAWING ASPHALT
	REMOVING ASPHALTIC SURFACE MILLING
	REMOVING ASPHALTIC SURFACE BUTT JONTS
	BASE PATCHING CONCRETE
	REMOVING STORM SEWER
RI	REMOVING INLETS
RM	REMOVING MANHOLES

PROJECT NO: 1310-04-70	HWY: STH 50	COUNTY: KENOSHA	REMOVAL PLANS	SHEET 48	E

FILE NAME : T:\1182708.06\CIVIL3D\13100400\13100400\SHEETSPLAN\021101_RP.DWG
LAYOUT NAME - 09
PLOT DATE : 4/14/2022 8:21 AM
PLOT BY : BLACKWOOD, JIM
PLOT NAME :
PLOT SCALE : 1 IN:40 FT
WISDOT/CADDS SHEET 42

NOTE:
SAWCUT LOCATIONS SHOWN ARE APPROXIMATE.
CONTRACTOR TO DETERMINE ACTUAL LOCATIONS BASED ON THE CONTRACTOR'S CONSTRUCTION OPERATIONS AND OFFSET REQUIRED FOR CONCRETE PAVER.

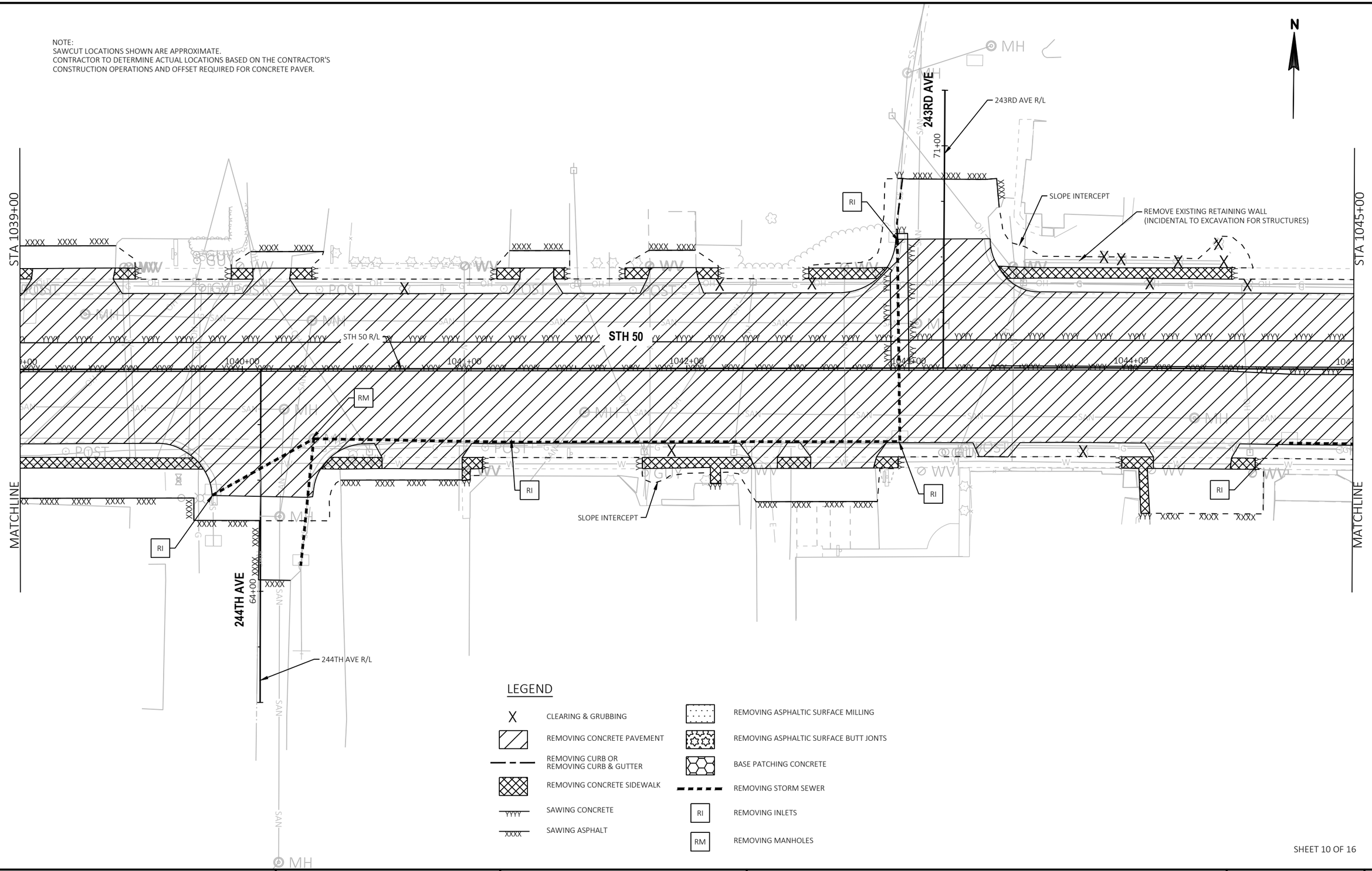

SHEET 10 OF 16

PROJECT NO: 1310-04-70	HWY: STH 50	COUNTY: KENOSHA	REMOVAL PLANS	SHEET 49	E

FILE NAME : T:\1182708.06\CIVIL3D\13100400\13100400\SHEETSPLAN\021101_RP.DWG
LAYOUT NAME - 10
PLOT DATE : 4/14/2022 8:47 AM PLOT BY : BLACKWOOD, JIM PLOT NAME : PLOT SCALE : 1 IN:40 FT

NOTE:
SAWCUT LOCATIONS SHOWN ARE APPROXIMATE.
CONTRACTOR TO DETERMINE ACTUAL LOCATIONS BASED ON THE CONTRACTOR'S CONSTRUCTION OPERATIONS AND OFFSET REQUIRED FOR CONCRETE PAVER.

N

74TH PLACE R/L

74TH PLACE

91+00

STA 1045+00

STA 1051+00

MATCHLINE

MATCHLINE

SLOPE INTERCEPT

STH 50

STH 50 R/L

1046+00

1047+00

1048+00

1049+00

1050+00

RI

RAISED PLANTER REMAIN

79+00

242ND AVE

242ND AVE R/L

SLOPE INTERCEPT

LEGEND

X CLEARING & GRUBBING	REMOVING ASPHALTIC SURFACE MILLING
REMOVING CONCRETE PAVEMENT	REMOVING ASPHALTIC SURFACE BUTT JONTS
REMOVING CURB OR REMOVING CURB & GUTTER	BASE PATCHING CONCRETE
REMOVING CONCRETE SIDEWALK	REMOVING STORM SEWER
SAWING CONCRETE (YYYY)	RI REMOVING INLETS
SAWING ASPHALT (XXXX)	RM REMOVING MANHOLES

SHEET 11 OF 16

PROJECT NO: 1310-04-70	HWY: STH 50	COUNTY: KENOSHA	REMOVAL PLANS	SHEET 50	E

FILE NAME : T:\1182708.06\CIVIL3D\13100400\13100400\SHEETSPLAN\021101_RP.DWG
LAYOUT NAME - 11

PLOT DATE : 1/13/2022 12:02 PM PLOT BY : BLACKWOOD, JIM PLOT NAME : PLOT SCALE : 1 IN:40 FT

WISDOT/CADDS SHEET 42

2

LEGEND

- CLEARING & GRUBBING
- REMOVING CONCRETE PAVEMENT
- REMOVING CURB OR REMOVING CURB & GUTTER
- REMOVING CONCRETE SIDEWALK
- SAWING CONCRETE
- SAWING ASPHALT
- REMOVING ASPHALTIC SURFACE MILLING
- REMOVING ASPHALTIC SURFACE BUTT JONTS
- BASE PATCHING CONCRETE
- REMOVING STORM SEWER
- RI — REMOVING INLETS
- RM — REMOVING MANHOLES

N

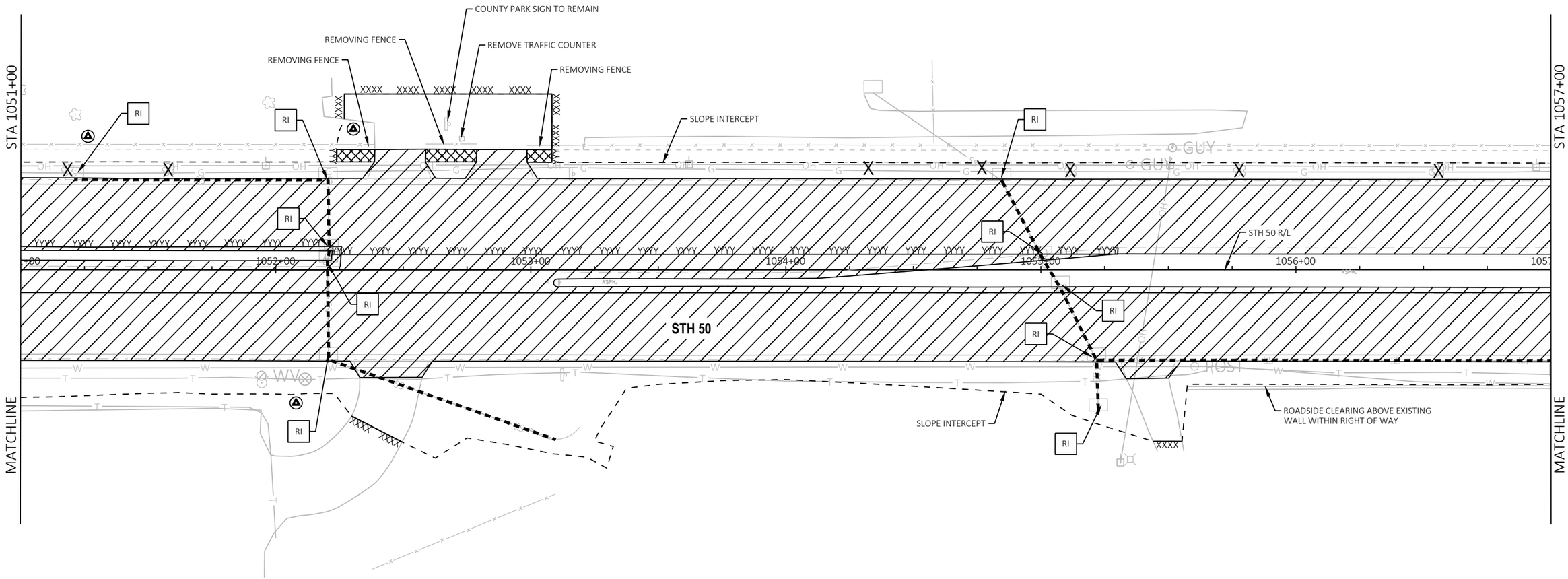

NOTE:
SAWCUT LOCATIONS SHOWN ARE APPROXIMATE.
CONTRACTOR TO DETERMINE ACTUAL LOCATIONS BASED ON THE CONTRACTOR'S CONSTRUCTION OPERATIONS AND OFFSET REQUIRED FOR CONCRETE PAVER.

SHEET 12 OF 16

PROJECT NO: 1310-04-70	HWY: STH 50	COUNTY: KENOSHA	REMOVAL PLANS	SHEET 51	E

FILE NAME : T:\1182708.06\CIVIL3D\13100400\13100400\SHEETSPLAN\021101_RP.DWG
LAYOUT NAME - 12
PLOT DATE : 1/13/2022 12:02 PM
PLOT BY : BLACKWOOD, JIM
PLOT NAME :
PLOT SCALE : 1 IN:40 FT

2

N

MATCHLINE STA 1057+00

STA 1063+00 MATCHLINE

236TH AVE R/L

236TH AVE

STH 50

STH 50 R/L

1058+00

1059+00

1060+00

1061+00

1062+00

96+00

REMOVE AND REINSTALL LAST THREE SECTIONS OF PIPE WITH JOINT TIES

REMOVE FENCE

SLOPE INTERCEPT

SLOPE INTERCEPT

EXISTING CULVERT TO REMAIN

RI

RM

GUY

LEGEND

X	CLEARING & GRUBBING
	REMOVING CONCRETE PAVEMENT
	REMOVING CURB OR REMOVING CURB & GUTTER
	REMOVING CONCRETE SIDEWALK
YYYY	SAWING CONCRETE
XXXX	SAWING ASPHALT
	REMOVING ASPHALTIC SURFACE MILLING
	REMOVING ASPHALTIC SURFACE BUTT JONTS
	BASE PATCHING CONCRETE
	REMOVING STORM SEWER
RI	REMOVING INLETS
RM	REMOVING MANHOLES

NOTE:
SAWCUT LOCATIONS SHOWN ARE APPROXIMATE.
CONTRACTOR TO DETERMINE ACTUAL LOCATIONS BASED ON THE CONTRACTOR'S CONSTRUCTION OPERATIONS AND OFFSET REQUIRED FOR CONCRETE PAVER.

PROJECT NO: 1310-04-70	HWY: STH 50	COUNTY: KENOSHA	REMOVAL PLANS	SHEET 52	E

FILE NAME : T:\1182708.06\CIVIL3D\13100400\13100400\SHEETSPLAN\021101_RP.DWG
LAYOUT NAME - 13
PLOT DATE : 1/13/2022 12:03 PM
PLOT BY : BLACKWOOD, JIM
PLOT NAME :
PLOT SCALE : 1 IN:40 FT
WISDOT/CADDS SHEET 42

2

N

STA 1063+00

RI

RI

SLOPE INTERCEPT

REMOVING SMALL PIPE CULVERT

REMOVING SMALL PIPE CULVERT

RI

RI

RI

STH 50

1064+00

1065+00

1066+00

1067+00

1068+00

1069+00

STH 50 R/L

RM

RI

RI

SLOPE INTERCEPT

MATCHLINE

NOTE:
SAWCUT LOCATIONS SHOWN ARE APPROXIMATE.
CONTRACTOR TO DETERMINE ACTUAL LOCATIONS BASED ON THE CONTRACTOR'S CONSTRUCTION OPERATIONS AND OFFSET REQUIRED FOR CONCRETE PAVER.

LEGEND

X	CLEARING & GRUBBING
	REMOVING CONCRETE PAVEMENT
	REMOVING CURB OR REMOVING CURB & GUTTER
	REMOVING CONCRETE SIDEWALK
YYYY	SAWING CONCRETE
XXXX	SAWING ASPHALT
	REMOVING ASPHALTIC SURFACE MILLING
	REMOVING ASPHALTIC SURFACE BUTT JONTS
	BASE PATCHING CONCRETE
	REMOVING STORM SEWER
RI	REMOVING INLETS
RM	REMOVING MANHOLES

SHEET 14 OF 16

PROJECT NO: 1310-04-70	HWY: STH 50	COUNTY: KENOSHA	REMOVAL PLANS	SHEET 53	E

FILE NAME : T:\1182708.06\CIVIL3D\13100400\13100400\SHEETSPLAN\021101_RP.DWG
LAYOUT NAME - 14

PLOT DATE : 1/13/2022 12:03 PM PLOT BY : BLACKWOOD, JIM PLOT NAME : PLOT SCALE : 1 IN:40 FT

NOTE:
SAWCUT LOCATIONS SHOWN ARE APPROXIMATE.
CONTRACTOR TO DETERMINE ACTUAL LOCATIONS BASED ON THE CONTRACTOR'S CONSTRUCTION OPERATIONS AND OFFSET REQUIRED FOR CONCRETE PAVER.

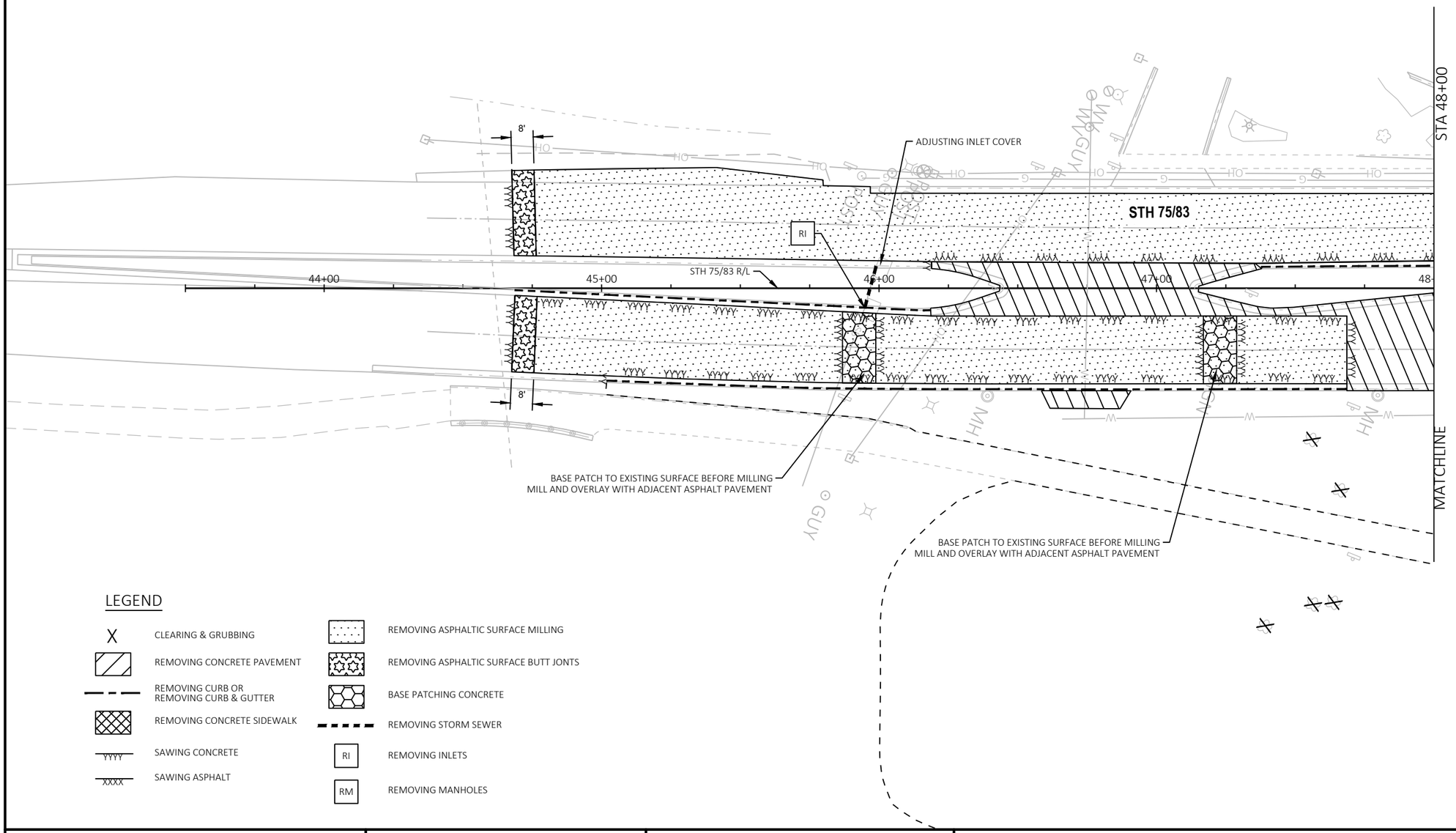

LEGEND

- X — CLEARING & GRUBBING
- REMOVING CONCRETE PAVEMENT
- REMOVING CURB OR REMOVING CURB & GUTTER
- REMOVING CONCRETE SIDEWALK
- YYYY — SAWING CONCRETE
- XXXX — SAWING ASPHALT
- REMOVING ASPHALTIC SURFACE MILLING
- REMOVING ASPHALTIC SURFACE BUTT JONTS
- BASE PATCHING CONCRETE
- REMOVING STORM SEWER
- RI — REMOVING INLETS
- RM — REMOVING MANHOLES

SHEET 15 OF 16

PROJECT NO: 1310-04-70	HWY: STH 50	COUNTY: KENOSHA	REMOVAL PLANS	SHEET 54	E

FILE NAME : T:\1182708.06\CIVIL3D\13100400\13100400\SHEETSPLAN\021101_RP.DWG
LAYOUT NAME - 15
PLOT DATE : 1/13/2022 12:03 PM PLOT BY : BLACKWOOD, JIM PLOT NAME : PLOT SCALE : 1 IN:40 FT

2

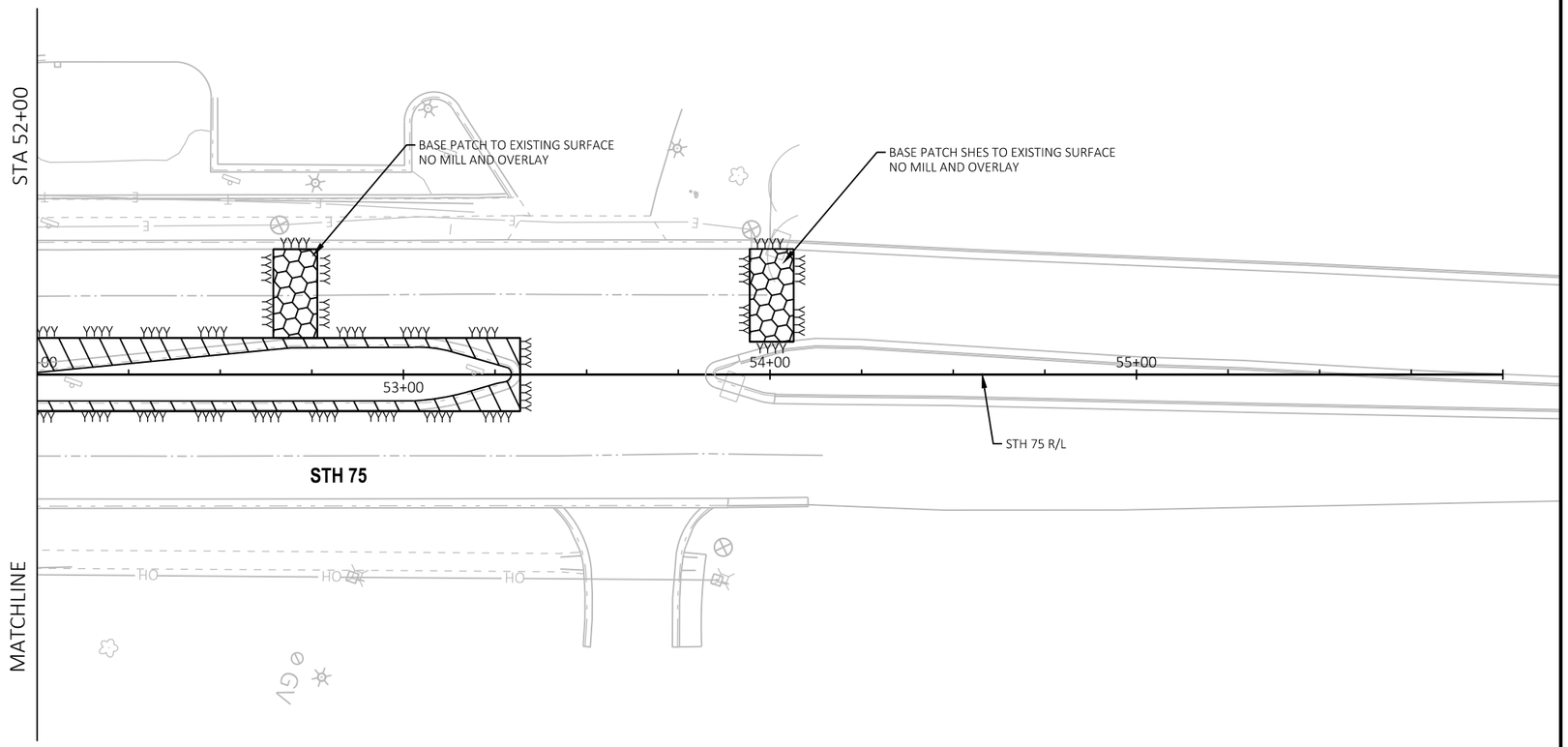

LEGEND

- X — CLEARING & GRUBBING
- REMOVING CONCRETE PAVEMENT
- REMOVING CURB OR REMOVING CURB & GUTTER
- REMOVING CONCRETE SIDEWALK
- YYYY — SAWING CONCRETE
- XXXX — SAWING ASPHALT
- REMOVING ASPHALTIC SURFACE MILLING
- REMOVING ASPHALTIC SURFACE BUTT JONTS
- BASE PATCHING CONCRETE
- REMOVING STORM SEWER
- RI — REMOVING INLETS
- RM — REMOVING MANHOLES

NOTE:
SAWCUT LOCATIONS SHOWN ARE APPROXIMATE.
CONTRACTOR TO DETERMINE ACTUAL LOCATIONS BASED ON THE CONTRACTOR'S CONSTRUCTION OPERATIONS AND OFFSET REQUIRED FOR CONCRETE PAVER.

SHEET 16 OF 16

PROJECT NO: 1310-04-70	HWY: STH 50	COUNTY: KENOSHA	REMOVAL PLANS	SHEET 55	E

FILE NAME : T:\1182708.06\CIVIL3D\13100400\13100400\SHEETSPLAN\021101_RP.DWG
LAYOUT NAME - 16
PLOT DATE : 1/13/2022 12:03 PM
PLOT BY : BLACKWOOD, JIM
PLOT NAME :
PLOT SCALE : 1 IN:40 FT
WISDOT/CADDS SHEET 42

2

2

N

LEGEND

ASD	4" ASPHALTIC SURFACE DRIVEWAYS AND FIELD ENTRANCES
AP35	HMA PAVEMENT 3 1/2-INCH
AP55	HMA PAVEMENT 5 1/2-INCH
AP65	HMA PAVEMENT 6 1/2-INCH
BAD	BASE AGGREGATE DENSE 3/4-INCH
CCR	COLORING CONCRETE WISDOT RED
CP95	CONCRETE PAVEMENT 9.5-INCH
CSD	CONCRETE SURFACE DRAIN
CSI	CONCRETE SAFETY ISLAND
DWY	CONCRETE DRIVEWAY 7-INCH
12D	CONCRETE CURB & GUTTER 12-INCH TYPE D
18A	CONCRETE CURB & GUTTER 18-INCH TYPE A
18D	CONCRETE CURB & GUTTER 18-INCH TYPE D
24D12	CONCRETE CURB & GUTTER 12-INCH PAN 24-INCH TYPE D
24D18	CONCRETE CURB & GUTTER 18-INCH PAN 24-INCH TYPE D
30A	CONCRETE CURB & GUTTER 30-INCH TYPE A
30D	CONCRETE CURB & GUTTER 30-INCH TYPE D
36R	CONCRETE CURB & GUTTER 4-INCH SLOPED 36-INCH TYPE R
66A	CONCRETE CURB & GUTTER 66-INCH TYPE A
72A	CONCRETE CURB & GUTTER 4-INCH SLOPED 72-INCH TYPE A
MO	MAINTENANCE OPENING
P6	CONCRETE CURB PEDESTRAIN (0-INCH TO 6-INCH HEIGHT)
P12	CONCRETE CURB PEDESTRAIN (6-INCH TO 12-INCH HEIGHT)
PL	PARKING LOT CURB
RP	RAILING PIPE
SN1	CONCRETE MEDIAN SLOPED NOSE TYPE 1
SN2	CONCRETE MEDIAN SLOPED NOSE TYPE 2
SOD	SOD LAWN
SW5	CONCRETE SIDEWALK 5-INCH
TA12	CONCRETE TRUCK APRON 12-INCH
XX'	SIDEWALK TRANSITION LENGTH AT DRIVEWAY (FT)
X	DRIVEWAY TYPE

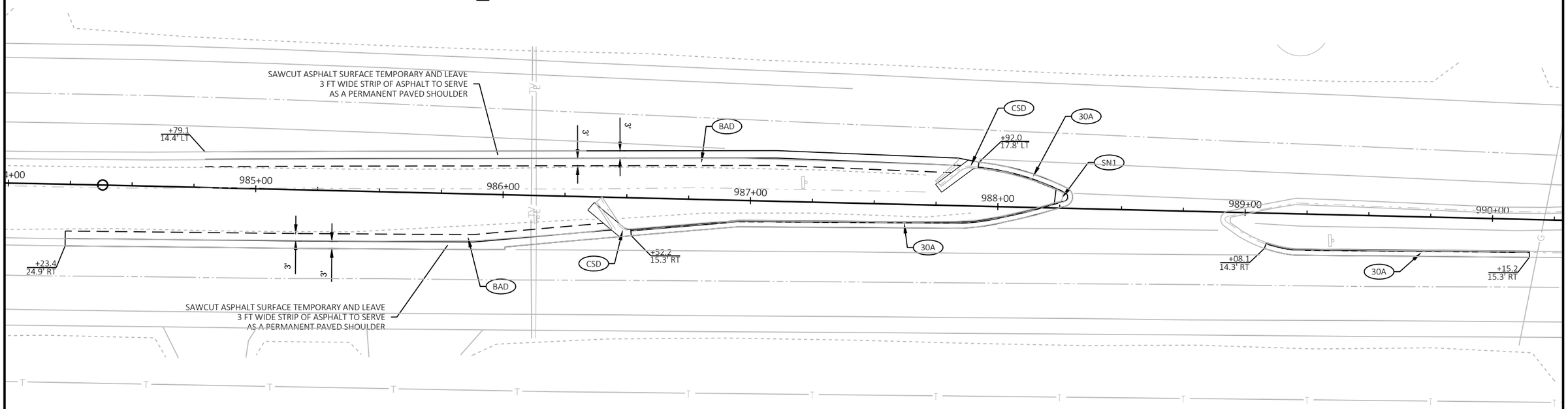

SHEET 1 OF 19

PROJECT NO: 1310-04-70	HWY: STH 50	COUNTY: KENOSHA	PLAN DETAILS	SHEET 56	E

FILE NAME : T:\1182708.06\CIVIL3D\13100400\13100400\SHEETSPLAN\021201_PD.DWG
LAYOUT NAME - 00

PLOT DATE : 1/13/2022 11:56 AM PLOT BY : BLACKWOOD, JIM PLOT NAME : PLOT SCALE : 1 IN:40 FT

WISDOT/CADDS SHEET 42

2

N

LEGEND

ASD	4" ASPHALTIC SURFACE DRIVEWAYS AND FIELD ENTRANCES
AP35	HMA PAVEMENT 3 1/2-INCH
AP55	HMA PAVEMENT 5 1/2-INCH
AP65	HMA PAVEMENT 6 1/2-INCH
BAD	BASE AGGREGATE DENSE 3/4-INCH
CCR	COLORING CONCRETE WISDOT RED
CP95	CONCRETE PAVEMENT 9.5-INCH
CSD	CONCRETE SURFACE DRAIN
CSI	CONCRETE SAFETY ISLAND
DWY	CONCRETE DRIVEWAY 7-INCH
12D	CONCRETE CURB & GUTTER 12-INCH TYPE D
18A	CONCRETE CURB & GUTTER 18-INCH TYPE A
18D	CONCRETE CURB & GUTTER 18-INCH TYPE D
24D12	CONCRETE CURB & GUTTER 12-INCH PAN 24-INCH TYPE D
24D18	CONCRETE CURB & GUTTER 18-INCH PAN 24-INCH TYPE D
30A	CONCRETE CURB & GUTTER 30-INCH TYPE A
30D	CONCRETE CURB & GUTTER 30-INCH TYPE D
36R	CONCRETE CURB & GUTTER 4-INCH SLOPED 36-INCH TYPE R
66A	CONCRETE CURB & GUTTER 66-INCH TYPE A
72A	CONCRETE CURB & GUTTER 4-INCH SLOPED 72-INCH TYPE A
MO	MAINTENANCE OPENING
P6	CONCRETE CURB PEDESTRAIN (0-INCH TO 6-INCH HEIGHT)
P12	CONCRETE CURB PEDESTRAIN (6-INCH TO 12-INCH HEIGHT)
PL	PARKING LOT CURB
RP	RAILING PIPE
SN1	CONCRETE MEDIAN SLOPED NOSE TYPE 1
SN2	CONCRETE MEDIAN SLOPED NOSE TYPE 2
SOD	SOD LAWN
SW5	CONCRETE SIDEWALK 5-INCH
TA12	CONCRETE TRUCK APRON 12-INCH
XX'	SIDEWALK TRANSITION LENGTH AT DRIVEWAY (FT)
X	DRIVEWAY TYPE

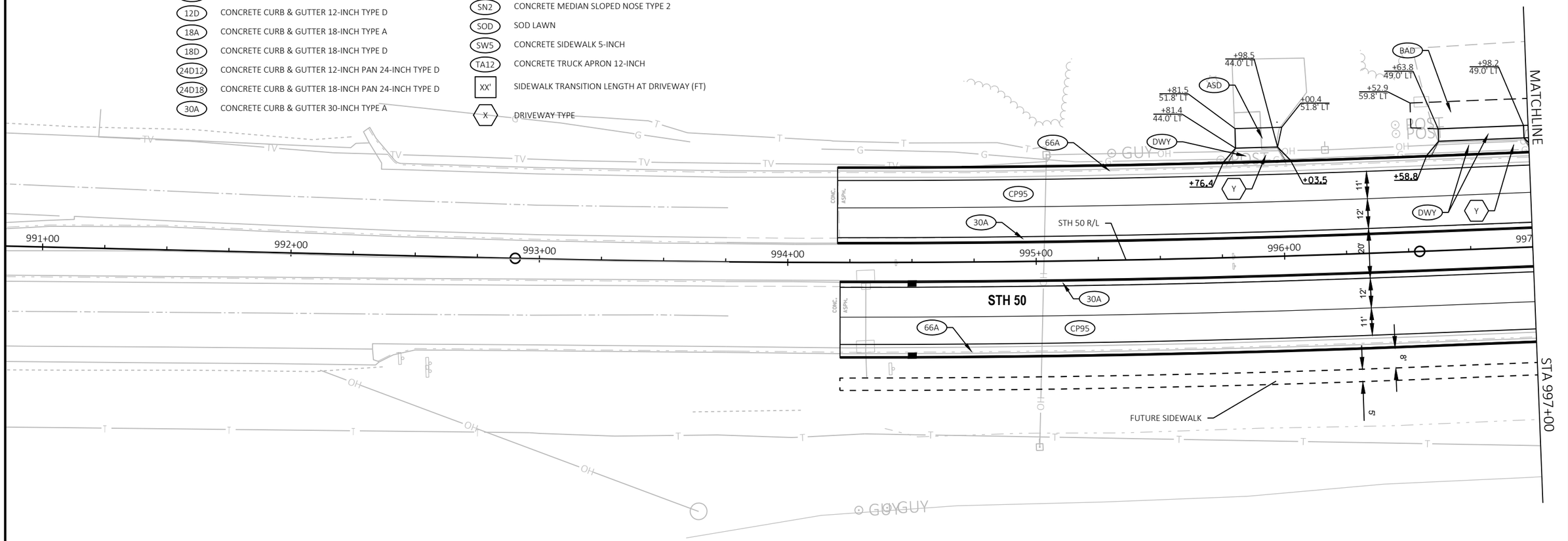

SHEET 2 OF 19

PROJECT NO: 1310-04-70	HWY: STH 50	COUNTY: KENOSHA	PLAN DETAILS	SHEET 57	E

FILE NAME : T:\1182708.06\CIVIL3D\13100400\13100400\SHEETSPLAN\021201_PD.DWG
LAYOUT NAME - 01

PLOT DATE : 1/13/2022 11:56 AM PLOT BY : BLACKWOOD, JIM PLOT NAME : PLOT SCALE : 1 IN:40 FT

WISDOT/CADDS SHEET 42

RADIUS TABLE					
POINT NUMBER	STATION	OFFSET	Y	X	RADIUS
A	998+45.55	65.00' RT	128,138.32	549,465.62	75'
B	998+75.78	0.35' LT	128,203.67	549,495.83	3'
C	998+44.09	65.00' LT	128,268.32	549,464.13	75'
D	999+80.59	60.00' RT	128,143.29	549,600.60	60'
E	999+72.46	5.30' RT	128,198.00	549,592.51	4.7'
F	998+36.62	96.00' RT	128,107.32	549,456.70	60'
G	1000+04.70	96.00' RT	128,107.28	549,624.70	60'
H	1002+13.93	49.24' RT	128,153.91	549,833.95	14.6'
I	1003+19.44	46.63' RT	128,156.44	549,939.47	57.2'

LEGEND

ASD	4" ASPHALTIC SURFACE DRIVEWAYS AND FIELD ENTRANCES
AP35	HMA PAVEMENT 3 1/2-INCH
AP55	HMA PAVEMENT 5 1/2-INCH
AP65	HMA PAVEMENT 6 1/2-INCH
BAD	BASE AGGREGATE DENSE 3/4-INCH
CCR	COLORING CONCRETE WISDOT RED
CP95	CONCRETE PAVEMENT 9.5-INCH
CSD	CONCRETE SURFACE DRAIN
CSI	CONCRETE SAFETY ISLAND
DWY	CONCRETE DRIVEWAY 7-INCH
12D	CONCRETE CURB & GUTTER 12-INCH TYPE D
18A	CONCRETE CURB & GUTTER 18-INCH TYPE A
18D	CONCRETE CURB & GUTTER 18-INCH TYPE D
24D12	CONCRETE CURB & GUTTER 12-INCH PAN 24-INCH TYPE D
24D18	CONCRETE CURB & GUTTER 18-INCH PAN 24-INCH TYPE D
30A	CONCRETE CURB & GUTTER 30-INCH TYPE A
30D	CONCRETE CURB & GUTTER 30-INCH TYPE D
36R	CONCRETE CURB & GUTTER 4-INCH SLOPED 36-INCH TYPE R
66A	CONCRETE CURB & GUTTER 66-INCH TYPE A
72A	CONCRETE CURB & GUTTER 4-INCH SLOPED 72-INCH TYPE A
MO	MAINTENANCE OPENING
P6	CONCRETE CURB PEDESTRAIN (0-INCH TO 6-INCH HEIGHT)
P12	CONCRETE CURB PEDESTRAIN (6-INCH TO 12-INCH HEIGHT)
PL	PARKING LOT CURB
RP	RAILING PIPE
SN1	CONCRETE MEDIAN SLOPED NOSE TYPE 1
SN2	CONCRETE MEDIAN SLOPED NOSE TYPE 2
SOD	SOD LAWN
SW5	CONCRETE SIDEWALK 5-INCH
TA12	CONCRETE TRUCK APRON 12-INCH
XX'	SIDEWALK TRANSITION LENGTH AT DRIVEWAY (FT)
X	DRIVEWAY TYPE

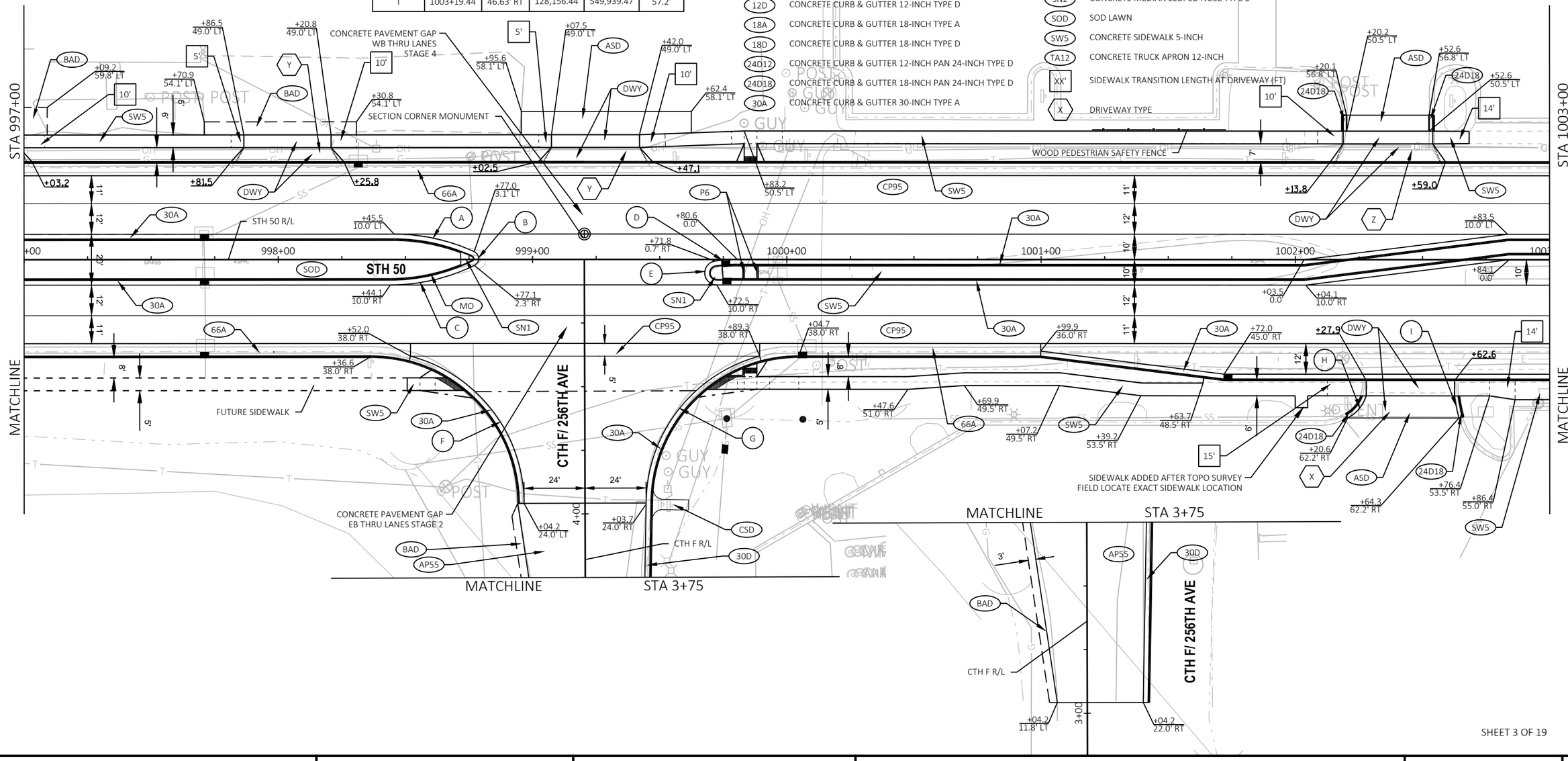

SHEET 3 OF 19

PROJECT NO: 1310-04-70	HWY: STH 50	COUNTY: KENOSHA	PLAN DETAILS	SHEET 58	E

2

N

MATCHLINE STA 52+00

STA 1003+00

MATCHLINE

STA 1009+00

MATCHLINE

STA 48+00

STH 75

STH 83

STH 50

STH 50 R/L

STH 75/STH 83 R/L

WALL MODULAR BLOCK GRAVITY
SEE PLAN DETAIL FOR PARCEL

TRANSITION OVER 6 FEET
SEE CONSTRUCTION DETAIL

CONCRETE SIDEWALK 12-INCH

TRANSITION OVER 10 FEET
SEE CONSTRUCTION DETAIL

CONCRETE PAVEMENT
91/2-INCH HES

CONCRETE PAVEMENT GAP
WB THRU LANES STAGE 4A

CONCRETE PAVEMENT GAP
EB THRU LANES STAGE 2B

TRANSITION PEDESTRIAN CURB HEIGHT FROM
6-INCHES TO 12-INCHES FROM STA 1003+87.5
TO STA 1004+25

SEE PARCEL 7 PLAN DETAIL
FOR PARKING LOT GRADES
AND LAYOUT INFORMATION

SEE CURB RAMP DETAILS AND HANDICAP RAMP DETAIL
FOR HANDICAP RAMP ELEVATIONS AND LAYOUT INFORMATION

CONCRETE PAVEMENT
9 1/2-INCH HES

TRANSITION OVER 10 FEET
SEE CONSTRUCTION DETAIL

TRANSITION OVER 6 FEET
SEE CONSTRUCTION DETAIL

CONCRETE SIDEWALK 12-INCH

LEGEND

ASD	4" ASPHALTIC SURFACE DRIVEWAYS AND FIELD ENTRANCES	30D	CONCRETE CURB & GUTTER 30-INCH TYPE D
AP35	HMA PAVEMENT 3 1/2-INCH	36R	CONCRETE CURB & GUTTER 4-INCH SLOPED 36-INCH TYPE R
AP55	HMA PAVEMENT 5 1/2-INCH	66A	CONCRETE CURB & GUTTER 66-INCH TYPE A
AP65	HMA PAVEMENT 6 1/2-INCH	72A	CONCRETE CURB & GUTTER 4-INCH SLOPED 72-INCH TYPE A
BAD	BASE AGGREGATE DENSE 3/4-INCH	MO	MAINTENANCE OPENING
CCR	COLORING CONCRETE WISDOT RED	P6	CONCRETE CURB PEDESTRAIN (0-INCH TO 6-INCH HEIGHT)
CP95	CONCRETE PAVEMENT 9.5-INCH	P12	CONCRETE CURB PEDESTRAIN (6-INCH TO 12-INCH HEIGHT)
CSD	CONCRETE SURFACE DRAIN	PL	PARKING LOT CURB
CSI	CONCRETE SAFETY ISLAND	RP	RAILING PIPE
DWY	CONCRETE DRIVEWAY 7-INCH	SN1	CONCRETE MEDIAN SLOPED NOSE TYPE 1
12D	CONCRETE CURB & GUTTER 12-INCH TYPE D	SN2	CONCRETE MEDIAN SLOPED NOSE TYPE 2
18A	CONCRETE CURB & GUTTER 18-INCH TYPE A	SOD	SOD LAWN
18D	CONCRETE CURB & GUTTER 18-INCH TYPE D	SW5	CONCRETE SIDEWALK 5-INCH
24D12	CONCRETE CURB & GUTTER 12-INCH PAN 24-INCH TYPE D	TA12	CONCRETE TRUCK APRON 12-INCH
24D18	CONCRETE CURB & GUTTER 18-INCH PAN 24-INCH TYPE D	XX'	SIDEWALK TRANSITION LENGTH AT DRIVEWAY (FT)
30A	CONCRETE CURB & GUTTER 30-INCH TYPE A	X	DRIVEWAY TYPE

SHEET 4 OF 19

PROJECT NO: 1310-04-70	HWY: STH 50	COUNTY: KENOSHA	PLAN DETAILS	SHEET 59	E

FILE NAME : T:\1182708.06\CIVIL3D\13100400\13100400\SHEETSPLAN\021201_PD.DWG
LAYOUT NAME - 03
PLOT DATE : 1/13/2022 11:57 AM
PLOT BY : BLACKWOOD, JIM
PLOT NAME :
PLOT SCALE : 1 IN:40 FT
WISDOT/CADDS SHEET 42

RADIUS TABLE					
POINT NUMBER	STATION	OFFSET	Y	X	RADIUS
AA	1006+54.65	68.94' RT	128,133.92	550,274.67	3.5'
BB	1006+59.24	41.63' RT	128,161.23	550,279.27	3.5'
CC	1007+37.09	66.39' RT	128,136.41	550,357.11	35'
DD	1007+56.44	84.53' RT	128,118.26	550,376.44	80'
EE	1007+16.68	80.16' RT	128,122.66	550,336.69	40'
FF	1007+27.05	91.00' RT	128,111.81	550,347.05	55'
GG	1006+52.99	64.20' RT	128,138.66	550,273.01	15'
J	1004+42.69	96.00' LT	128,299.00	550,062.81	60'
K	1004+60.91	78.88' LT	128,281.86	550,081.02	35'
L	1003+48.10	108.88' LT	128,311.93	549,968.22	150'
M	1004+65.53	120.32' LT	128,323.30	550,085.66	26.5'
N	1005+11.17	39.50' LT	128,242.45	550,131.25	3.5'

RADIUS TABLE					
POINT NUMBER	STATION	OFFSET	Y	X	RADIUS
O	1005+25.10	39.50' LT	128,242.44	550,145.18	3.5'
P	1005+13.71	68.48' LT	128,271.43	550,133.81	3.5'
Q	1005+61.97	69.51' LT	128,272.43	550,182.07	5'
R	1006+54.09	106.00' LT	128,308.86	550,274.22	70'
S	1006+18.04	71.75' LT	128,274.63	550,238.14	12'
T	1006+43.92	66.50' LT	128,269.37	550,264.02	20'
U	1005+09.08	5.00' LT	128,207.95	550,129.13	5'
V	1006+46.41	5.00' RT	128,197.87	550,266.46	5'
W	1005+21.99	105.00' RT	128,097.95	550,141.98	60'
X	1005+09.46	122.22' RT	128,080.73	550,129.44	71'
Y	1006+05.30	73.60' RT	128,129.29	550,225.31	5'
Z	1006+43.60	41.63' RT	128,161.24	550,263.63	3.5'

2

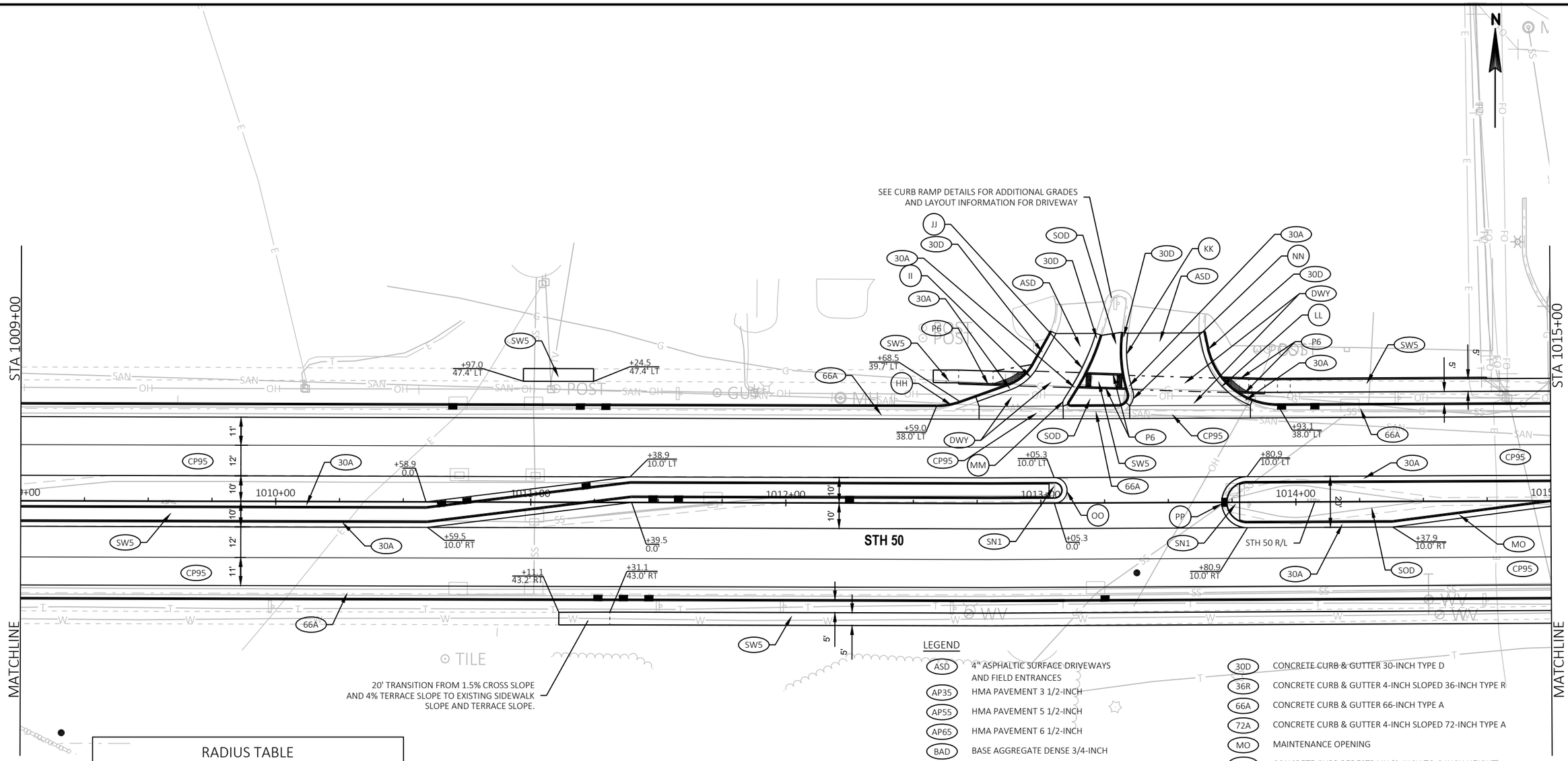

RADIUS TABLE					
POINT NUMBER	STATION	OFFSET	Y	X	RADIUS
HH	1012+59.01	66.00' LT	128,268.47	550,879.11	28'*
II	1012+81.57	63.33' LT	128,265.80	550,901.19	20'
JJ	1012+35.20	92.74' LT	128,295.23	550,855.32	90'
KK	1013+85.65	59.28' LT	128,262.46	551,005.30	51.8'
LL	1013+93.10	66.00' LT	128,269.23	551,012.70	30'
MM	1013+11.76	39.00' LT	128,241.67	550,931.55	3'
NN	1013+30.51	42.00' LT	128,244.80	550,950.28	6'
OO	1013+05.27	5.00' LT	128,207.63	550,925.29	5'
PP	1013+80.94	0.00'	128,203.15	551,001.00	10'

* RADIUS MEASURED TO FACE OF CURB

LEGEND

ASD	4" ASPHALTIC SURFACE DRIVEWAYS AND FIELD ENTRANCES
AP35	HMA PAVEMENT 3 1/2-INCH
AP55	HMA PAVEMENT 5 1/2-INCH
AP65	HMA PAVEMENT 6 1/2-INCH
BAD	BASE AGGREGATE DENSE 3/4-INCH
CCR	COLORING CONCRETE WISDOT RED
CP95	CONCRETE PAVEMENT 9.5-INCH
CSD	CONCRETE SURFACE DRAIN
CSI	CONCRETE SAFETY ISLAND
DWY	CONCRETE DRIVEWAY 7-INCH
12D	CONCRETE CURB & GUTTER 12-INCH TYPE D
18A	CONCRETE CURB & GUTTER 18-INCH TYPE A
18D	CONCRETE CURB & GUTTER 18-INCH TYPE D
24D12	CONCRETE CURB & GUTTER 12-INCH PAN 24-INCH TYPE D
24D18	CONCRETE CURB & GUTTER 18-INCH PAN 24-INCH TYPE D
30A	CONCRETE CURB & GUTTER 30-INCH TYPE A
30D	CONCRETE CURB & GUTTER 30-INCH TYPE D
36R	CONCRETE CURB & GUTTER 4-INCH SLOPED 36-INCH TYPE R
66A	CONCRETE CURB & GUTTER 66-INCH TYPE A
72A	CONCRETE CURB & GUTTER 4-INCH SLOPED 72-INCH TYPE A
MO	MAINTENANCE OPENING
P6	CONCRETE CURB PEDESTRAIN (0-INCH TO 6-INCH HEIGHT)
P12	CONCRETE CURB PEDESTRAIN (6-INCH TO 12-INCH HEIGHT)
PL	PARKING LOT CURB
RP	RAILING PIPE
SN1	CONCRETE MEDIAN SLOPED NOSE TYPE 1
SN2	CONCRETE MEDIAN SLOPED NOSE TYPE 2
SOD	SOD LAWN
SW5	CONCRETE SIDEWALK 5-INCH
TA12	CONCRETE TRUCK APRON 12-INCH
XX'	SIDEWALK TRANSITION LENGTH AT DRIVEWAY (FT)
X	DRIVEWAY TYPE

PROJECT NO: 1310-04-70	HWY: STH 50	COUNTY: KENOSHA	PLAN DETAILS	SHEET 61	E

FILE NAME : T:\1182708.06\CIVIL3D\13100400\13100400\SHEETSPLAN\021201_PD.DWG
LAYOUT NAME - 04
PLOT DATE : 1/13/2022 11:57 AM
PLOT BY : BLACKWOOD, JIM
PLOT NAME :
PLOT SCALE : 1 IN:40 FT
WISDOT/CADDS SHEET 42

2

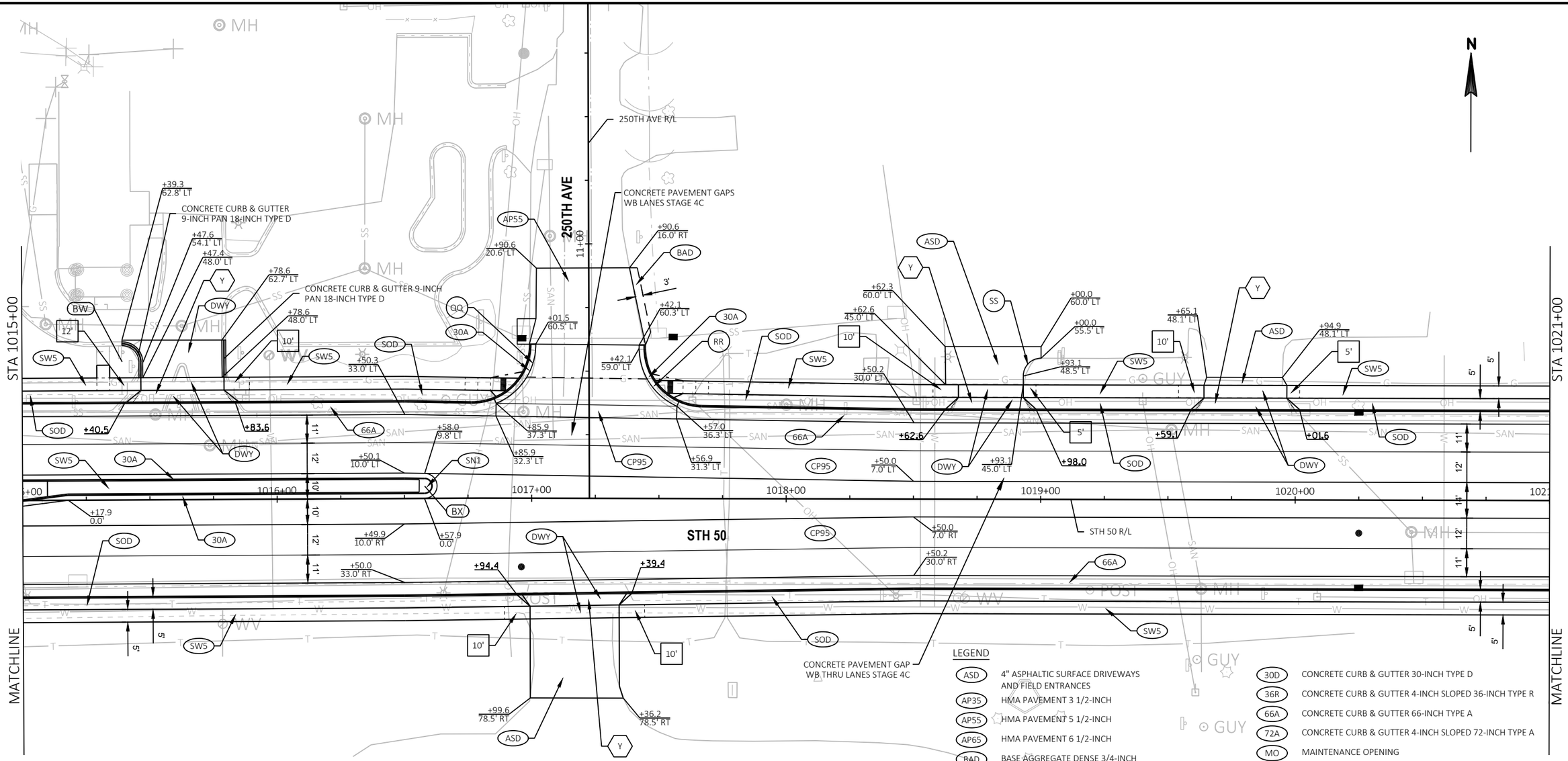

RADIUS TABLE					
POINT NUMBER	STATION	OFFSET	Y	X	RADIUS
BW	1015+39.44	54.13' LT	128,258.36	551,159.12	8'
BX	1016+57.91	4.92' LT	128,209.96	551,277.92	4.9'
QQ	1016+76.91	60.44' LT	128,265.62	551,296.55	25'
RR	1017+67.08	59.15' LT	128,264.30	551,387.17	25'
SS	1019+00.05	48.46' LT	128,253.52	551,520.13	7'

LEGEND

ASD	4" ASPHALTIC SURFACE DRIVEWAYS AND FIELD ENTRANCES
AP35	HMA PAVEMENT 3 1/2-INCH
AP55	HMA PAVEMENT 5 1/2-INCH
AP65	HMA PAVEMENT 6 1/2-INCH
BAD	BASE AGGREGATE DENSE 3/4-INCH
CCR	COLORING CONCRETE WISDOT RED
CP95	CONCRETE PAVEMENT 9.5-INCH
CSD	CONCRETE SURFACE DRAIN
CSI	CONCRETE SAFETY ISLAND
DWY	CONCRETE DRIVEWAY 7-INCH
12D	CONCRETE CURB & GUTTER 12-INCH TYPE D
18A	CONCRETE CURB & GUTTER 18-INCH TYPE A
18D	CONCRETE CURB & GUTTER 18-INCH TYPE D
24D12	CONCRETE CURB & GUTTER 12-INCH PAN 24-INCH TYPE D
24D18	CONCRETE CURB & GUTTER 18-INCH PAN 24-INCH TYPE D
30A	CONCRETE CURB & GUTTER 30-INCH TYPE A
30D	CONCRETE CURB & GUTTER 30-INCH TYPE D
36R	CONCRETE CURB & GUTTER 4-INCH SLOPED 36-INCH TYPE R
66A	CONCRETE CURB & GUTTER 66-INCH TYPE A
72A	CONCRETE CURB & GUTTER 4-INCH SLOPED 72-INCH TYPE A
MO	MAINTENANCE OPENING
P6	CONCRETE CURB PEDESTRAIN (0-INCH TO 6-INCH HEIGHT)
P12	CONCRETE CURB PEDESTRAIN (6-INCH TO 12-INCH HEIGHT)
PL	PARKING LOT CURB
RP	RAILING PIPE
SN1	CONCRETE MEDIAN SLOPED NOSE TYPE 1
SN2	CONCRETE MEDIAN SLOPED NOSE TYPE 2
SOD	SOD LAWN
SW5	CONCRETE SIDEWALK 5-INCH
TA12	CONCRETE TRUCK APRON 12-INCH
XX'	SIDEWALK TRANSITION LENGTH AT DRIVEWAY (FT)
X	DRIVEWAY TYPE

PROJECT NO: 1310-04-70	HWY: STH 50	COUNTY: KENOSHA	PLAN DETAILS	SHEET 62	E

FILE NAME : T:\1182708.06\CIVIL3D\13100400\13100400\SHEETSPLAN\021201_PD.DWG
LAYOUT NAME - 05
PLOT DATE : 1/13/2022 11:57 AM
PLOT BY : BLACKWOOD, JIM
PLOT NAME :
PLOT SCALE : 1 IN:40 FT
WISDOT/CADDS SHEET 42

RADIUS TABLE					
POINT NUMBER	STATION	OFFSET	Y	X	RADIUS
AB	1025+58.42	36.00' RT	128,168.64	552,178.44	3'
AC	1025+98.57	73.85' RT	128,130.90	552,218.96	52.4'
AD	1025+46.00	54.42' RT	128,150.22	552,166.01	4'
AE	1024+84.21	79.35' RT	128,125.34	552,104.21	62.6'
TT	1025+09.23	58.00' LT	128,262.67	552,129.31	25'
UU	1026+11.21	58.00' LT	128,262.81	552,230.98	25'

RADIUS TABLE					
POINT NUMBER	STATION	OFFSET	Y	X	RADIUS
VV	1025+91.84	2.00' LT	128,206.72	552,211.88	5'
WW	1026+10.39	43.00' LT	128,247.80	552,230.24	50'
XX	1024+89.00	78.00' RT	128,126.68	552,108.99	45'
YY	1026+02.59	78.00' RT	128,126.77	552,222.99	45'
ZZ	1025+33.48	36.00' RT	128,168.66	552,153.50	3'

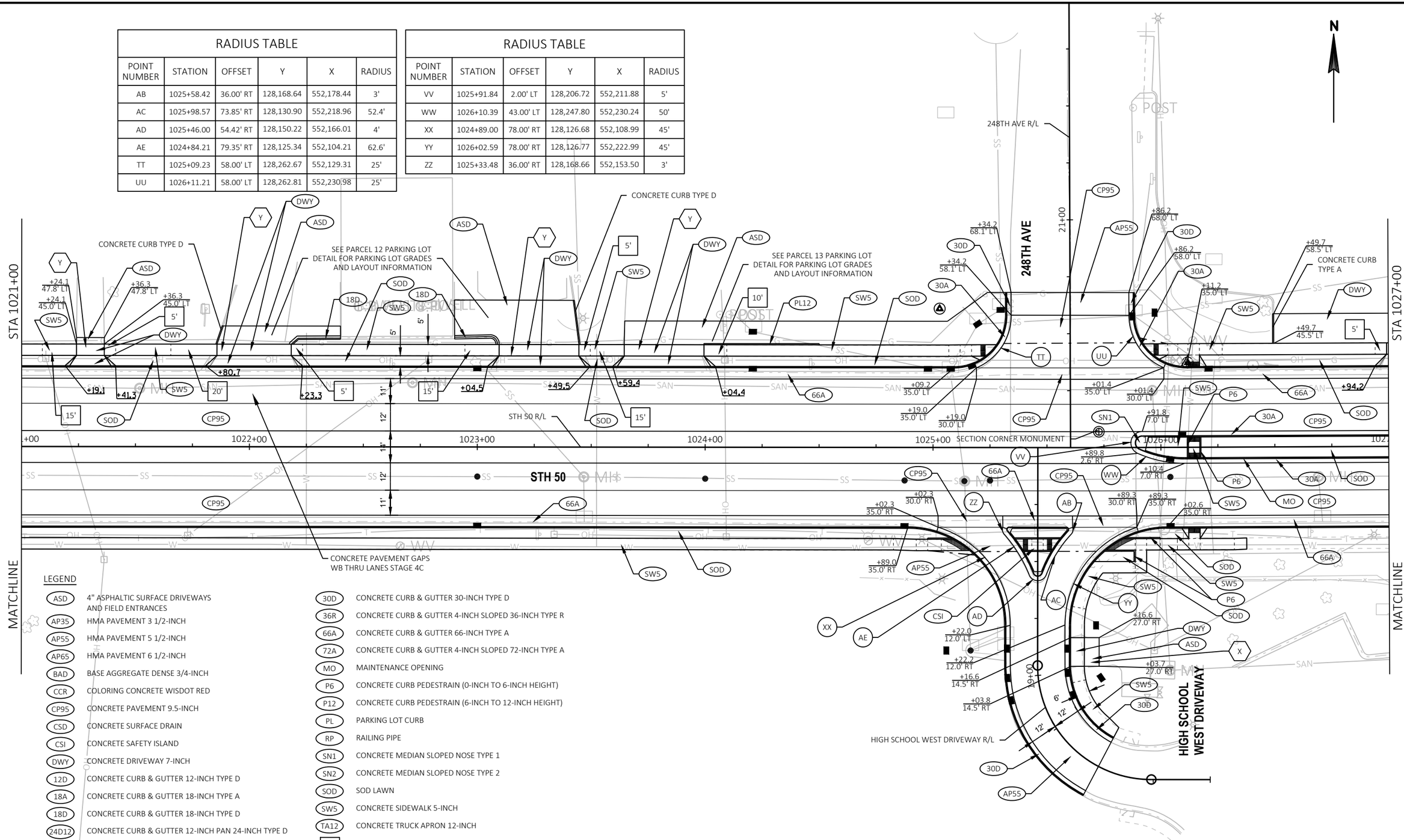

LEGEND

ASD	4" ASPHALTIC SURFACE DRIVEWAYS AND FIELD ENTRANCES
AP35	HMA PAVEMENT 3 1/2-INCH
AP55	HMA PAVEMENT 5 1/2-INCH
AP65	HMA PAVEMENT 6 1/2-INCH
BAD	BASE AGGREGATE DENSE 3/4-INCH
CCR	COLORING CONCRETE WISDOT RED
CP95	CONCRETE PAVEMENT 9.5-INCH
CSD	CONCRETE SURFACE DRAIN
CSI	CONCRETE SAFETY ISLAND
DWY	CONCRETE DRIVEWAY 7-INCH
12D	CONCRETE CURB & GUTTER 12-INCH TYPE D
18A	CONCRETE CURB & GUTTER 18-INCH TYPE A
18D	CONCRETE CURB & GUTTER 18-INCH TYPE D
24D12	CONCRETE CURB & GUTTER 12-INCH PAN 24-INCH TYPE D
24D18	CONCRETE CURB & GUTTER 18-INCH PAN 24-INCH TYPE D
30A	CONCRETE CURB & GUTTER 30-INCH TYPE A
30D	CONCRETE CURB & GUTTER 30-INCH TYPE D
36R	CONCRETE CURB & GUTTER 4-INCH SLOPED 36-INCH TYPE R
66A	CONCRETE CURB & GUTTER 66-INCH TYPE A
72A	CONCRETE CURB & GUTTER 4-INCH SLOPED 72-INCH TYPE A
MO	MAINTENANCE OPENING
P6	CONCRETE CURB PEDESTRAIN (0-INCH TO 6-INCH HEIGHT)
P12	CONCRETE CURB PEDESTRAIN (6-INCH TO 12-INCH HEIGHT)
PL	PARKING LOT CURB
RP	RAILING PIPE
SN1	CONCRETE MEDIAN SLOPED NOSE TYPE 1
SN2	CONCRETE MEDIAN SLOPED NOSE TYPE 2
SOD	SOD LAWN
SW5	CONCRETE SIDEWALK 5-INCH
TA12	CONCRETE TRUCK APRON 12-INCH
XX'	SIDEWALK TRANSITION LENGTH AT DRIVEWAY (FT)
X	DRIVEWAY TYPE

SHEET 8 OF 19

PROJECT NO: 1310-04-70	HWY: STH 50	COUNTY: KENOSHA	PLAN DETAILS	SHEET 63	E

RADIUS TABLE					
POINT NUMBER	STATION	OFFSET	Y	X	RADIUS
AF	1027+43.00	0.00'	128,205.41	552,363.04	7'
AG	1031+43.88	0.00'	128,207.26	552,763.92	7.9'

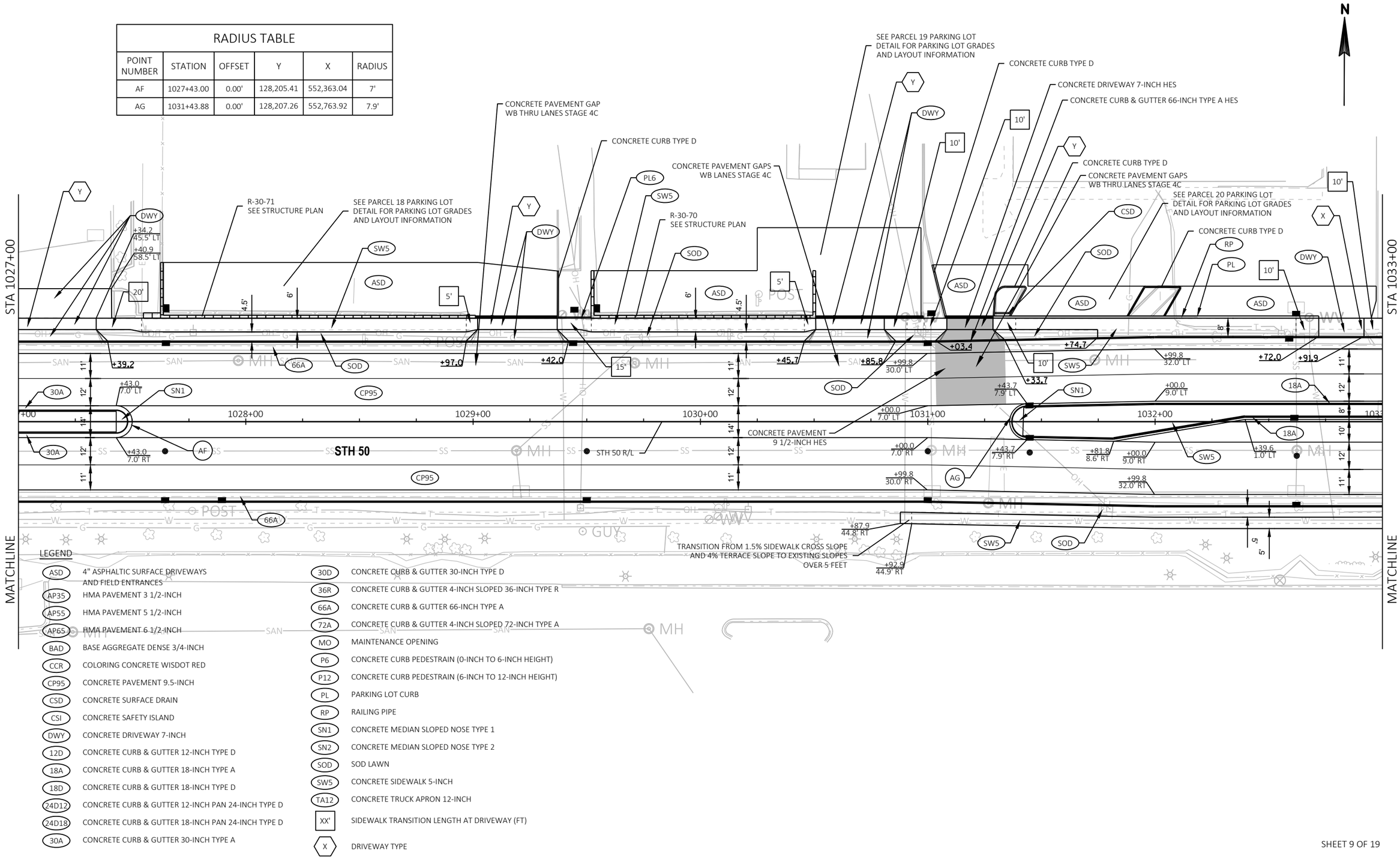

LEGEND

ASD	4" ASPHALTIC SURFACE DRIVEWAYS AND FIELD ENTRANCES
AP35	HMA PAVEMENT 3 1/2-INCH
AP55	HMA PAVEMENT 5 1/2-INCH
AP65	HMA PAVEMENT 6 1/2-INCH
BAD	BASE AGGREGATE DENSE 3/4-INCH
CCR	COLORING CONCRETE WISDOT RED
CP95	CONCRETE PAVEMENT 9.5-INCH
CSD	CONCRETE SURFACE DRAIN
CSI	CONCRETE SAFETY ISLAND
DWY	CONCRETE DRIVEWAY 7-INCH
12D	CONCRETE CURB & GUTTER 12-INCH TYPE D
18A	CONCRETE CURB & GUTTER 18-INCH TYPE A
18D	CONCRETE CURB & GUTTER 18-INCH TYPE D
24D12	CONCRETE CURB & GUTTER 12-INCH PAN 24-INCH TYPE D
24D18	CONCRETE CURB & GUTTER 18-INCH PAN 24-INCH TYPE D
30A	CONCRETE CURB & GUTTER 30-INCH TYPE A
30D	CONCRETE CURB & GUTTER 30-INCH TYPE D
36R	CONCRETE CURB & GUTTER 4-INCH SLOPED 36-INCH TYPE R
66A	CONCRETE CURB & GUTTER 66-INCH TYPE A
72A	CONCRETE CURB & GUTTER 4-INCH SLOPED 72-INCH TYPE A
MO	MAINTENANCE OPENING
P6	CONCRETE CURB PEDESTRAIN (0-INCH TO 6-INCH HEIGHT)
P12	CONCRETE CURB PEDESTRAIN (6-INCH TO 12-INCH HEIGHT)
PL	PARKING LOT CURB
RP	RAILING PIPE
SN1	CONCRETE MEDIAN SLOPED NOSE TYPE 1
SN2	CONCRETE MEDIAN SLOPED NOSE TYPE 2
SOD	SOD LAWN
SW5	CONCRETE SIDEWALK 5-INCH
TA12	CONCRETE TRUCK APRON 12-INCH
XX'	SIDEWALK TRANSITION LENGTH AT DRIVEWAY (FT)
X	DRIVEWAY TYPE

SHEET 9 OF 19

PROJECT NO: 1310-04-70	HWY: STH 50	COUNTY: KENOSHA	PLAN DETAILS	SHEET 64	E

FILE NAME : T:\1182708.06\CIVIL3D\13100400\13100400\SHEETSPLAN\021201_PD.DWG
LAYOUT NAME - 07
PLOT DATE : 1/13/2022 11:57 AM
PLOT BY : BLACKWOOD, JIM
PLOT NAME :
PLOT SCALE : 1 IN:40 FT

2

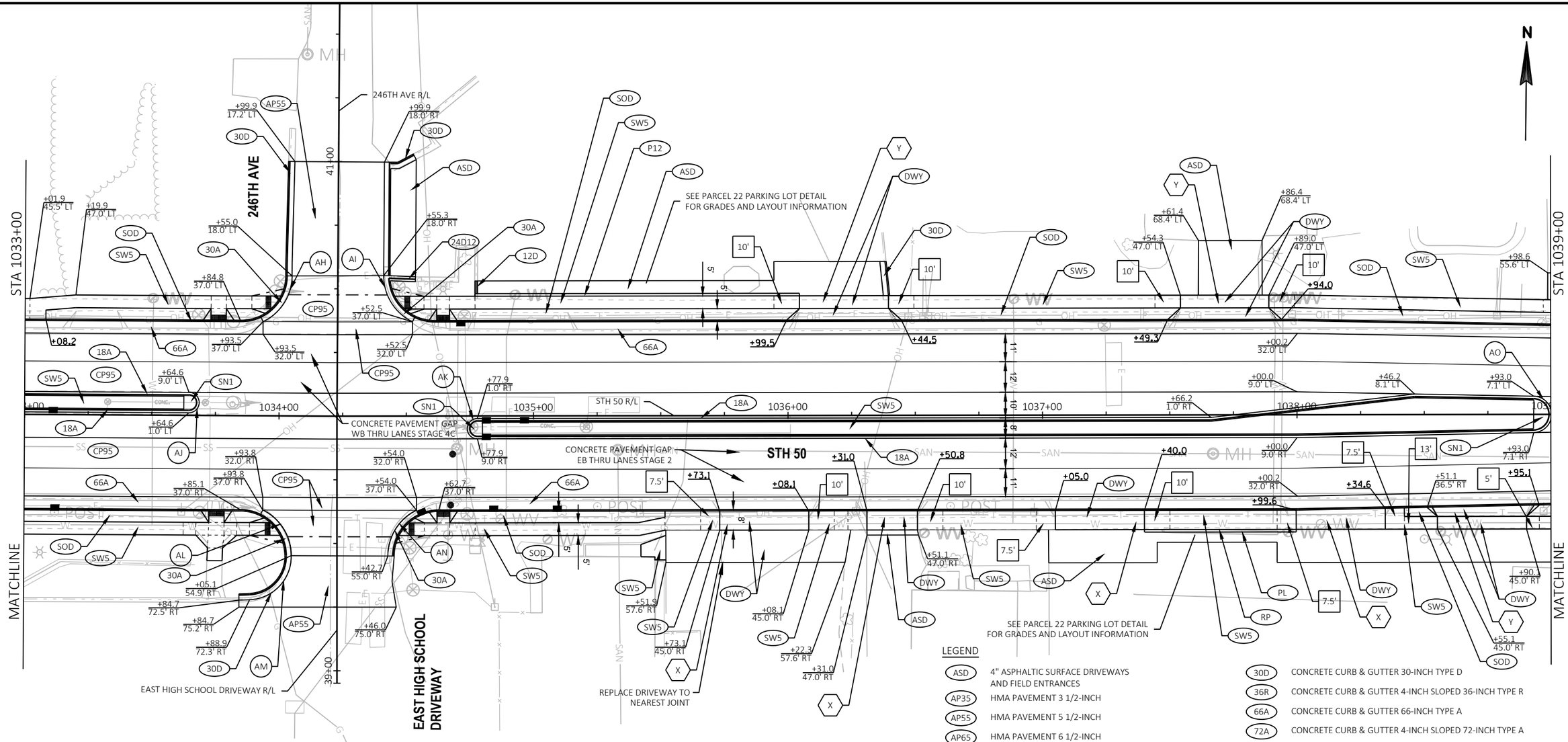

RADIUS TABLE					
POINT NUMBER	STATION	OFFSET	Y	X	RADIUS
AH	1033+84.81	55.00' LT	128,263.37	553,004.60	20'
AI	1034+61.22	55.00' LT	128,264.02	553,080.60	20'
AJ	1033+64.57	5.00' LT	128,213.28	552,984.59	4'
AK	1034+77.94	5.00' RT	128,204.22	553,098.04	4'
AL	1033+85.10	55.00' RT	128,153.37	553,005.39	20'
AM	1033+88.10	55.30' RT	128,153.09	553,008.40	17'
AN	1034+62.70	55.00' RT	128,154.04	553,083.39	20'
AO	1038+92.86	0.00'	128,214.16	553,512.86	7.1'

LEGEND

ASD	4" ASPHALTIC SURFACE DRIVEWAYS AND FIELD ENTRANCES
AP35	HMA PAVEMENT 3 1/2-INCH
AP55	HMA PAVEMENT 5 1/2-INCH
AP65	HMA PAVEMENT 6 1/2-INCH
BAD	BASE AGGREGATE DENSE 3/4-INCH
CCR	COLORING CONCRETE WISDOT RED
CP95	CONCRETE PAVEMENT 9.5-INCH
CSD	CONCRETE SURFACE DRAIN
CSI	CONCRETE SAFETY ISLAND
DWY	CONCRETE DRIVEWAY 7-INCH
12D	CONCRETE CURB & GUTTER 12-INCH TYPE D
18A	CONCRETE CURB & GUTTER 18-INCH TYPE A
18D	CONCRETE CURB & GUTTER 18-INCH TYPE D
24D12	CONCRETE CURB & GUTTER 12-INCH PAN 24-INCH TYPE D
24D18	CONCRETE CURB & GUTTER 18-INCH PAN 24-INCH TYPE D
30A	CONCRETE CURB & GUTTER 30-INCH TYPE A
30D	CONCRETE CURB & GUTTER 30-INCH TYPE D
36R	CONCRETE CURB & GUTTER 4-INCH SLOPED 36-INCH TYPE R
66A	CONCRETE CURB & GUTTER 66-INCH TYPE A
72A	CONCRETE CURB & GUTTER 4-INCH SLOPED 72-INCH TYPE A
MO	MAINTENANCE OPENING
P6	CONCRETE CURB PEDESTRAIN (0-INCH TO 6-INCH HEIGHT)
P12	CONCRETE CURB PEDESTRAIN (6-INCH TO 12-INCH HEIGHT)
PL	PARKING LOT CURB
RP	RAILING PIPE
SN1	CONCRETE MEDIAN SLOPED NOSE TYPE 1
SN2	CONCRETE MEDIAN SLOPED NOSE TYPE 2
SOD	SOD LAWN
SW5	CONCRETE SIDEWALK 5-INCH
TA12	CONCRETE TRUCK APRON 12-INCH
XX'	SIDEWALK TRANSITION LENGTH AT DRIVEWAY (FT)
X	DRIVEWAY TYPE

PROJECT NO: 1310-04-70	HWY: STH 50	COUNTY: KENOSHA	PLAN DETAILS	SHEET 65	E

FILE NAME : T:\1182708.06\CIVIL3D\13100400\13100400\SHEETSPLAN\021201_PD.DWG
LAYOUT NAME - 08
PLOT DATE : 1/13/2022 11:57 AM
PLOT BY : BLACKWOOD, JIM
PLOT NAME :
PLOT SCALE : 1 IN:40 FT
WISDOT/CADDS SHEET 42

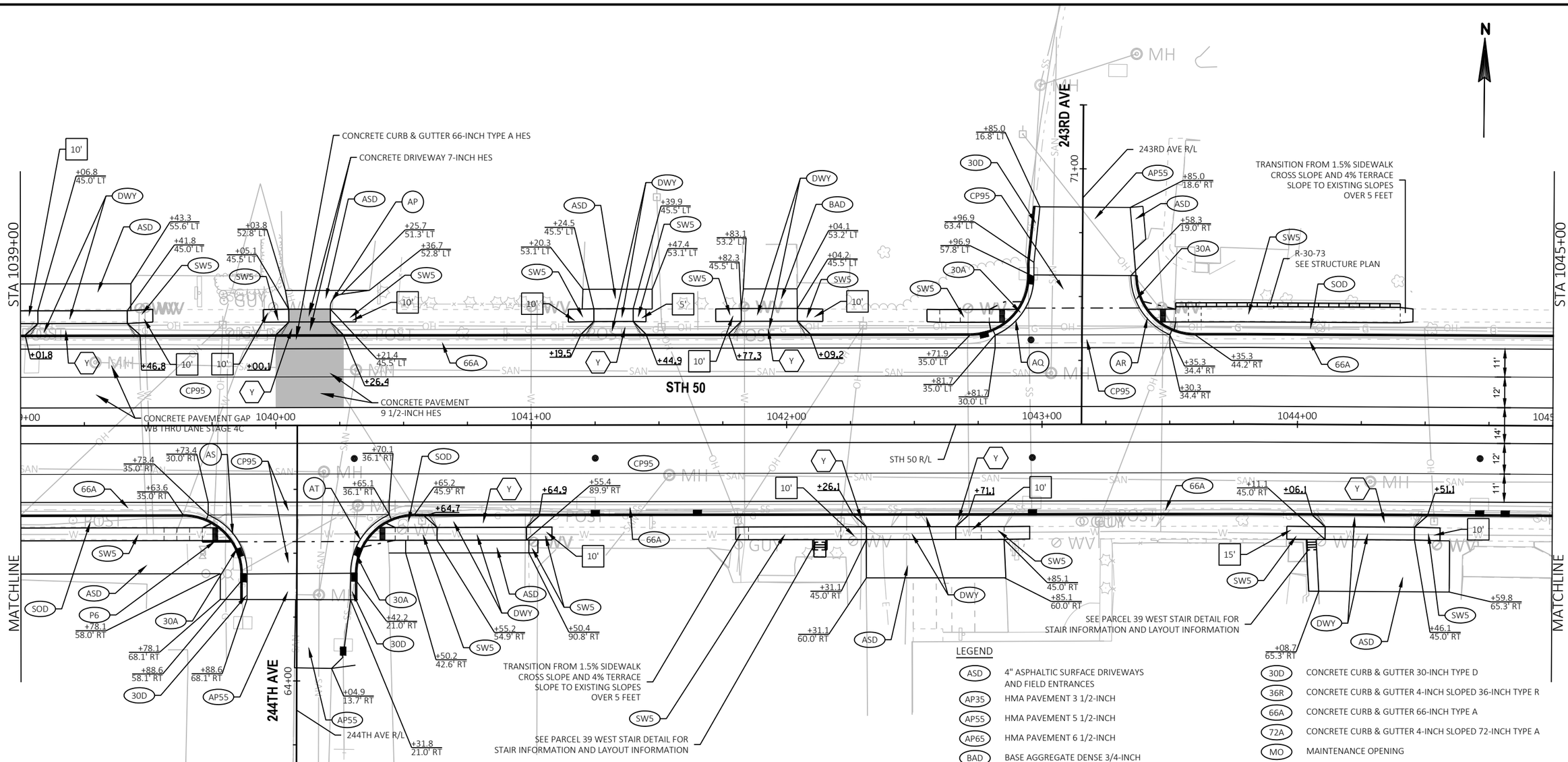

RADIUS TABLE					
POINT NUMBER	STATION	OFFSET	Y	X	RADIUS
AP	1040+26.37	46.34' LT	128,262.08	553,645.81	5'
AQ	1042+71.88	58.00' LT	128,276.67	553,891.17	25'
AR	1043+59.88	58.00' LT	128,277.71	553,979.16	25'
AS	1039+63.63	58.00' RT	128,157.01	553,584.32	25'
AT	1040+54.13	58.00' RT	128,158.08	553,674.81	25'

LEGEND

ASD	4" ASPHALTIC SURFACE DRIVEWAYS AND FIELD ENTRANCES
AP35	HMA PAVEMENT 3 1/2-INCH
AP55	HMA PAVEMENT 5 1/2-INCH
AP65	HMA PAVEMENT 6 1/2-INCH
BAD	BASE AGGREGATE DENSE 3/4-INCH
CCR	COLORING CONCRETE WISDOT RED
CP95	CONCRETE PAVEMENT 9.5-INCH
CSD	CONCRETE SURFACE DRAIN
CSI	CONCRETE SAFETY ISLAND
DWY	CONCRETE DRIVEWAY 7-INCH
12D	CONCRETE CURB & GUTTER 12-INCH TYPE D
18A	CONCRETE CURB & GUTTER 18-INCH TYPE A
18D	CONCRETE CURB & GUTTER 18-INCH TYPE D
24D12	CONCRETE CURB & GUTTER 12-INCH PAN 24-INCH TYPE D
24D18	CONCRETE CURB & GUTTER 18-INCH PAN 24-INCH TYPE D
30A	CONCRETE CURB & GUTTER 30-INCH TYPE A
30D	CONCRETE CURB & GUTTER 30-INCH TYPE D
36R	CONCRETE CURB & GUTTER 4-INCH SLOPED 36-INCH TYPE R
66A	CONCRETE CURB & GUTTER 66-INCH TYPE A
72A	CONCRETE CURB & GUTTER 4-INCH SLOPED 72-INCH TYPE A
MO	MAINTENANCE OPENING
P6	CONCRETE CURB PEDESTRAIN (0-INCH TO 6-INCH HEIGHT)
P12	CONCRETE CURB PEDESTRAIN (6-INCH TO 12-INCH HEIGHT)
PL	PARKING LOT CURB
RP	RAILING PIPE
SN1	CONCRETE MEDIAN SLOPED NOSE TYPE 1
SN2	CONCRETE MEDIAN SLOPED NOSE TYPE 2
SOD	SOD LAWN
SW5	CONCRETE SIDEWALK 5-INCH
TA12	CONCRETE TRUCK APRON 12-INCH
XX'	SIDEWALK TRANSITION LENGTH AT DRIVEWAY (FT)
X	DRIVEWAY TYPE

PROJECT NO: 1310-04-70	HWY: STH 50	COUNTY: KENOSHA	PLAN DETAILS	SHEET 66	E

FILE NAME : T:\1182708.06\CIVIL3D\13100400\13100400\SHEETSPLAN\021201_PD.DWG
LAYOUT NAME - 09
PLOT DATE : 1/13/2022 11:57 AM
PLOT BY : BLACKWOOD, JIM
PLOT NAME :
PLOT SCALE : 1 IN:40 FT
WISDOT/CADDS SHEET 42

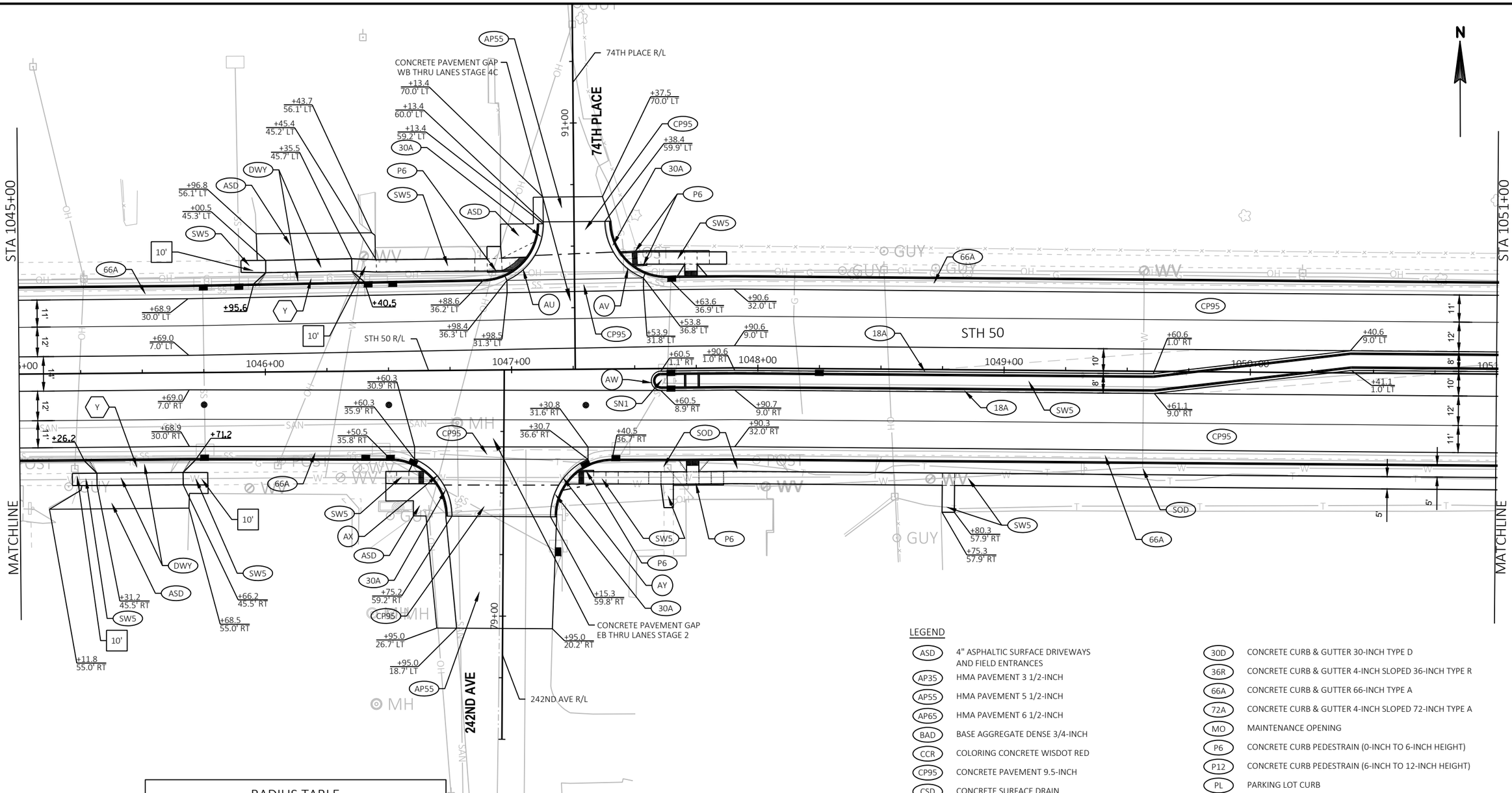

RADIUS TABLE					
POINT NUMBER	STATION	OFFSET	Y	X	RADIUS
AU	1046+88.38	59.20' LT	128,280.58	554,308.07	25'
AV	1047+63.38	59.95' LT	128,281.67	554,383.07	25'
AW	1047+60.59	5.00' RT	128,216.71	554,380.57	3.9'
AX	1046+50.25	58.82' RT	128,162.39	554,270.48	25'
AY	1047+40.28	59.72' RT	128,161.91	554,360.52	25'

LEGEND

ASD	4" ASPHALTIC SURFACE DRIVEWAYS AND FIELD ENTRANCES
AP35	HMA PAVEMENT 3 1/2-INCH
AP55	HMA PAVEMENT 5 1/2-INCH
AP65	HMA PAVEMENT 6 1/2-INCH
BAD	BASE AGGREGATE DENSE 3/4-INCH
CCR	COLORING CONCRETE WISDOT RED
CP95	CONCRETE PAVEMENT 9.5-INCH
CSD	CONCRETE SURFACE DRAIN
CSI	CONCRETE SAFETY ISLAND
DWY	CONCRETE DRIVEWAY 7-INCH
12D	CONCRETE CURB & GUTTER 12-INCH TYPE D
18A	CONCRETE CURB & GUTTER 18-INCH TYPE A
18D	CONCRETE CURB & GUTTER 18-INCH TYPE D
24D12	CONCRETE CURB & GUTTER 12-INCH PAN 24-INCH TYPE D
24D18	CONCRETE CURB & GUTTER 18-INCH PAN 24-INCH TYPE D
30A	CONCRETE CURB & GUTTER 30-INCH TYPE A
30D	CONCRETE CURB & GUTTER 30-INCH TYPE D
36R	CONCRETE CURB & GUTTER 4-INCH SLOPED 36-INCH TYPE R
66A	CONCRETE CURB & GUTTER 66-INCH TYPE A
72A	CONCRETE CURB & GUTTER 4-INCH SLOPED 72-INCH TYPE A
MO	MAINTENANCE OPENING
P6	CONCRETE CURB PEDESTRAIN (0-INCH TO 6-INCH HEIGHT)
P12	CONCRETE CURB PEDESTRAIN (6-INCH TO 12-INCH HEIGHT)
PL	PARKING LOT CURB
RP	RAILING PIPE
SN1	CONCRETE MEDIAN SLOPED NOSE TYPE 1
SN2	CONCRETE MEDIAN SLOPED NOSE TYPE 2
SOD	SOD LAWN
SW5	CONCRETE SIDEWALK 5-INCH
TA12	CONCRETE TRUCK APRON 12-INCH
XX'	SIDEWALK TRANSITION LENGTH AT DRIVEWAY (FT)
X	DRIVEWAY TYPE

PROJECT NO: 1310-04-70	HWY: STH 50	COUNTY: KENOSHA	PLAN DETAILS	SHEET 67	E

FILE NAME : T:\1182708.06\CIVIL3D\13100400\13100400\SHEETSPLAN\021201_PD.DWG
LAYOUT NAME - 10
PLOT DATE : 1/13/2022 11:58 AM
PLOT BY : BLACKWOOD, JIM
PLOT NAME :
PLOT SCALE : 1 IN:40 FT
WISDOT/CADDS SHEET 42

2

LEGEND

ASD	4" ASPHALTIC SURFACE DRIVEWAYS AND FIELD ENTRANCES
AP35	HMA PAVEMENT 3 1/2-INCH
AP55	HMA PAVEMENT 5 1/2-INCH
AP65	HMA PAVEMENT 6 1/2-INCH
BAD	BASE AGGREGATE DENSE 3/4-INCH
CCR	COLORING CONCRETE WISDOT RED
CP95	CONCRETE PAVEMENT 9.5-INCH
CSD	CONCRETE SURFACE DRAIN
CSI	CONCRETE SAFETY ISLAND
DWY	CONCRETE DRIVEWAY 7-INCH
12D	CONCRETE CURB & GUTTER 12-INCH TYPE D
18A	CONCRETE CURB & GUTTER 18-INCH TYPE A
18D	CONCRETE CURB & GUTTER 18-INCH TYPE D
24D12	CONCRETE CURB & GUTTER 12-INCH PAN 24-INCH TYPE D
24D18	CONCRETE CURB & GUTTER 18-INCH PAN 24-INCH TYPE D
30A	CONCRETE CURB & GUTTER 30-INCH TYPE A
30D	CONCRETE CURB & GUTTER 30-INCH TYPE D
36R	CONCRETE CURB & GUTTER 4-INCH SLOPED 36-INCH TYPE R
66A	CONCRETE CURB & GUTTER 66-INCH TYPE A
72A	CONCRETE CURB & GUTTER 4-INCH SLOPED 72-INCH TYPE A
MO	MAINTENANCE OPENING
P6	CONCRETE CURB PEDESTRAIN (0-INCH TO 6-INCH HEIGHT)
P12	CONCRETE CURB PEDESTRAIN (6-INCH TO 12-INCH HEIGHT)
PL	PARKING LOT CURB
RP	RAILING PIPE
SN1	CONCRETE MEDIAN SLOPED NOSE TYPE 1
SN2	CONCRETE MEDIAN SLOPED NOSE TYPE 2
SOD	SOD LAWN
SW5	CONCRETE SIDEWALK 5-INCH
TA12	CONCRETE TRUCK APRON 12-INCH
XX'	SIDEWALK TRANSITION LENGTH AT DRIVEWAY (FT)
X	DRIVEWAY TYPE

N

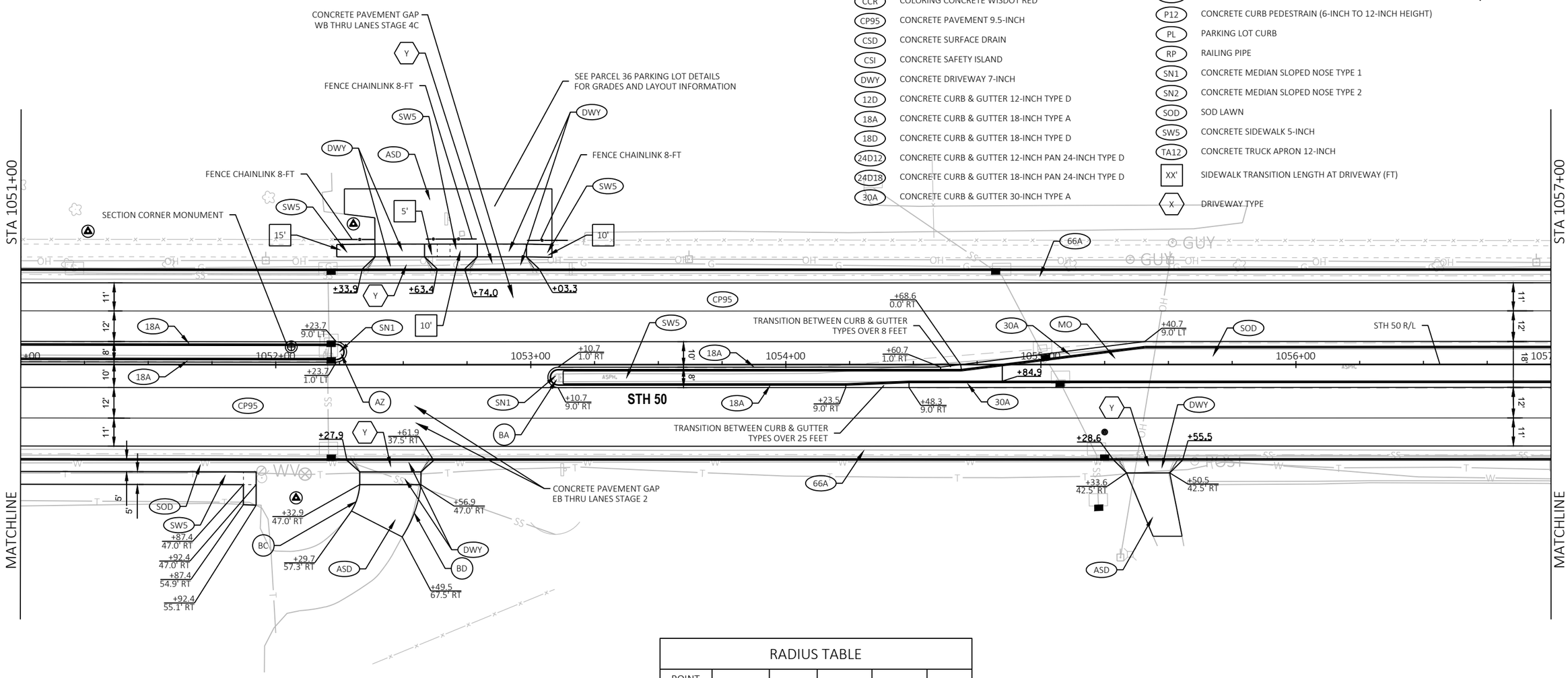

RADIUS TABLE

POINT NUMBER	STATION	OFFSET	Y	X	RADIUS
AZ	1052+23.75	5.00' LT	128,221.58	554,843.73	4'
BA	1053+10.71	5.00' RT	128,210.68	554,930.58	4'
BC	1052+11.40	45.93' RT	128,170.78	554,830.85	21.6'
BD	1052+10.84	41.97' RT	128,174.75	554,830.33	46.4'

SHEET 13 OF 19

PROJECT NO: 1310-04-70	HWY: STH 50	COUNTY: KENOSHA	PLAN DETAILS	SHEET 68	E

FILE NAME : T:\1182708.06\CIVIL3D\13100400\13100400\SHEETSPLAN\021201_PD.DWG
LAYOUT NAME - 11

PLOT DATE : 1/13/2022 11:58 AM PLOT BY : BLACKWOOD, JIM PLOT NAME : PLOT SCALE : 1 IN:40 FT

2

N

RADIUS TABLE					
POINT NUMBER	STATION	OFFSET	Y	X	RADIUS
BE	1061+60.95	81.00' LT	128,286.50	555,783.35	45'
BF	1062+97.87	81.00' LT	128,280.61	555,921.60	45'
BG	1061+86.25	5.00' LT	128,209.69	555,806.27	5'
BH	1062+57.60	0.32' RT	128,201.37	555,877.36	4'
BI	1062+88.98	75.00' RT	128,125.24	555,905.02	85'
BJ	1062+87.38	75.00' LT	128,275.13	555,910.83	85'

RADIUS TABLE					
POINT NUMBER	STATION	OFFSET	Y	X	RADIUS
BK	1061+75.15	49.38' LT	128,254.42	555,796.67	10'
BL	1061+76.42	66.28' LT	128,271.28	555,798.53	5'
BM	1061+68.73	90.81' LT	128,296.05	555,791.56	25'
BN	1062+83.33	91.32' LT	128,291.63	555,907.60	20'
BO	1062+77.77	68.21' LT	128,268.83	555,900.90	5'
BP	1062+84.95	49.53' LT	128,249.81	555,907.15	10'

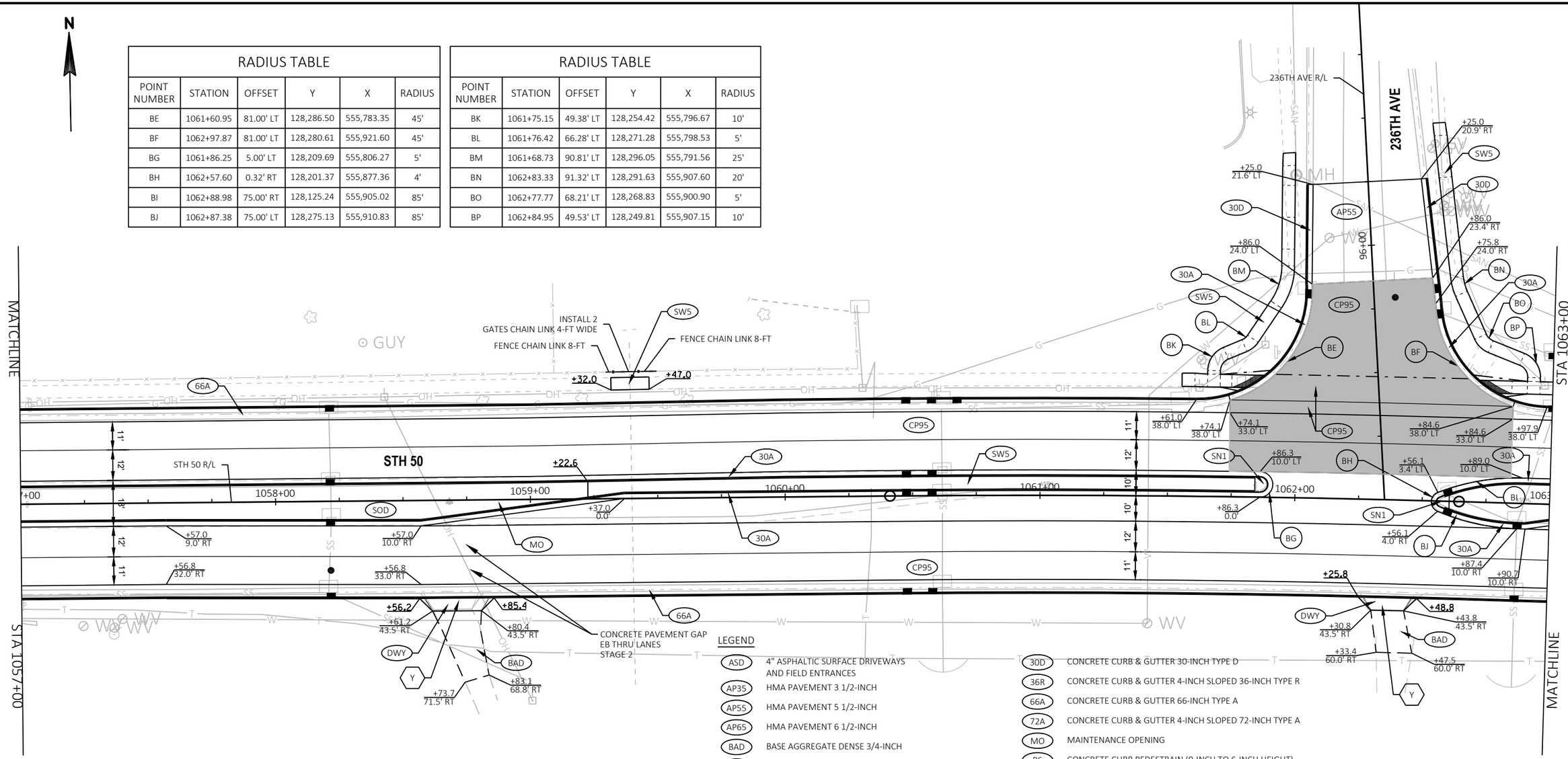

LEGEND

ASD	4" ASPHALTIC SURFACE DRIVEWAYS AND FIELD ENTRANCES
AP35	HMA PAVEMENT 3 1/2-INCH
AP55	HMA PAVEMENT 5 1/2-INCH
AP65	HMA PAVEMENT 6 1/2-INCH
BAD	BASE AGGREGATE DENSE 3/4-INCH
CCR	COLORING CONCRETE WISDOT RED
CP95	CONCRETE PAVEMENT 9.5-INCH
CSD	CONCRETE SURFACE DRAIN
CSI	CONCRETE SAFETY ISLAND
DWY	CONCRETE DRIVEWAY 7-INCH
12D	CONCRETE CURB & GUTTER 12-INCH TYPE D
18A	CONCRETE CURB & GUTTER 18-INCH TYPE A
18D	CONCRETE CURB & GUTTER 18-INCH TYPE D
24D12	CONCRETE CURB & GUTTER 12-INCH PAN 24-INCH TYPE D
24D18	CONCRETE CURB & GUTTER 18-INCH PAN 24-INCH TYPE D
30A	CONCRETE CURB & GUTTER 30-INCH TYPE A
30D	CONCRETE CURB & GUTTER 30-INCH TYPE D
36R	CONCRETE CURB & GUTTER 4-INCH SLOPED 36-INCH TYPE R
66A	CONCRETE CURB & GUTTER 66-INCH TYPE A
72A	CONCRETE CURB & GUTTER 4-INCH SLOPED 72-INCH TYPE A
MO	MAINTENANCE OPENING
P6	CONCRETE CURB PEDESTRAIN (0-INCH TO 6-INCH HEIGHT)
P12	CONCRETE CURB PEDESTRAIN (6-INCH TO 12-INCH HEIGHT)
PL	PARKING LOT CURB
RP	RAILING PIPE
SN1	CONCRETE MEDIAN SLOPED NOSE TYPE 1
SN2	CONCRETE MEDIAN SLOPED NOSE TYPE 2
SOD	SOD LAWN
SW5	CONCRETE SIDEWALK 5-INCH
TA12	CONCRETE TRUCK APRON 12-INCH
XX'	SIDEWALK TRANSITION LENGTH AT DRIVEWAY (FT)
X	DRIVEWAY TYPE

SHEET 14 OF 19

PROJECT NO: 1310-04-70	HWY: STH 50	COUNTY: KENOSHA	PLAN DETAILS	SHEET 69	E

FILE NAME : T:\1182708.06\CIVIL3D\13100400\13100400\SHEETSPLAN\021201_PD.DWG
LAYOUT NAME - 12
PLOT DATE : 1/13/2022 11:58 AM
PLOT BY : BLACKWOOD, JIM
PLOT NAME :
PLOT SCALE : 1 IN:40 FT
WISDOT/CADDS SHEET 42

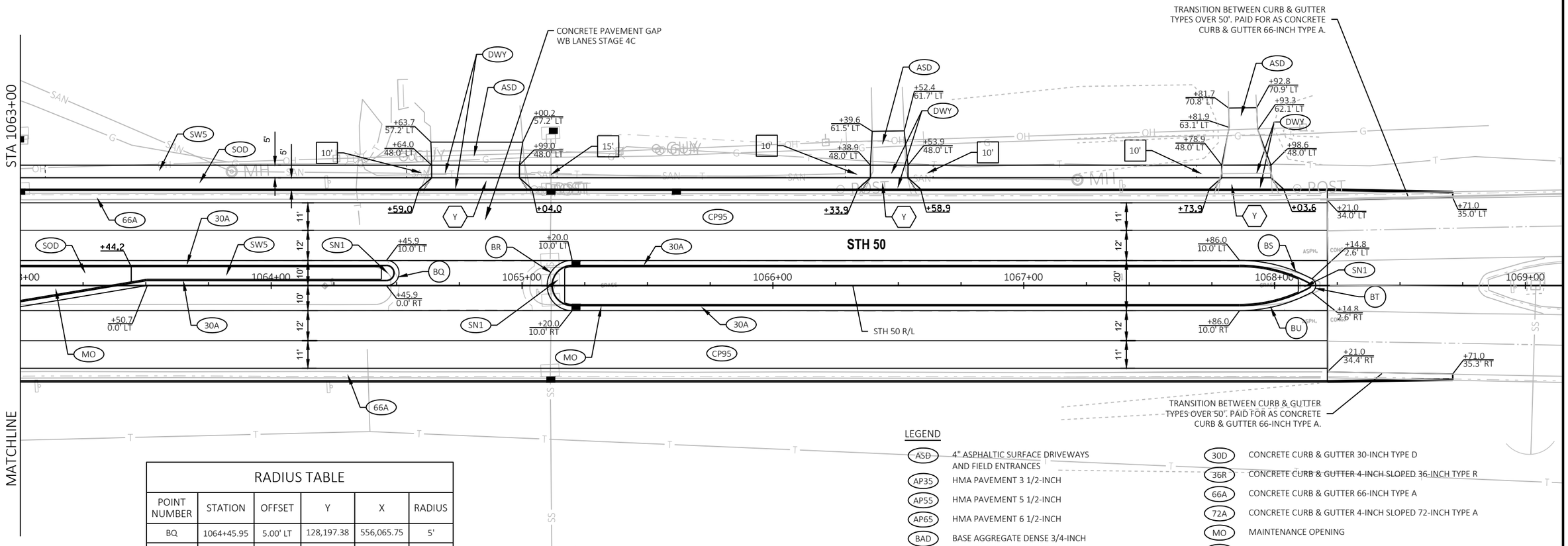

RADIUS TABLE					
POINT NUMBER	STATION	OFFSET	Y	X	RADIUS
BQ	1064+45.95	5.00' LT	128,197.38	556,065.75	5'
BR	1065+20.00	0.00'	128,188.73	556,139.47	10'
BS	1067+86.03	50.00' RT	128,125.65	556,402.69	60'
BT	1068+13.40	0.00'	128,174.23	556,432.50	3'
BU	1067+86.03	50.00' LT	128,225.53	556,407.63	60'

LEGEND

ASD	4" ASPHALTIC SURFACE DRIVEWAYS AND FIELD ENTRANCES
AP35	HMA PAVEMENT 3 1/2-INCH
AP55	HMA PAVEMENT 5 1/2-INCH
AP65	HMA PAVEMENT 6 1/2-INCH
BAD	BASE AGGREGATE DENSE 3/4-INCH
CCR	COLORING CONCRETE WISDOT RED
CP95	CONCRETE PAVEMENT 9.5-INCH
CSD	CONCRETE SURFACE DRAIN
CSI	CONCRETE SAFETY ISLAND
DWY	CONCRETE DRIVEWAY 7-INCH
12D	CONCRETE CURB & GUTTER 12-INCH TYPE D
18A	CONCRETE CURB & GUTTER 18-INCH TYPE A
18D	CONCRETE CURB & GUTTER 18-INCH TYPE D
24D12	CONCRETE CURB & GUTTER 12-INCH PAN 24-INCH TYPE D
24D18	CONCRETE CURB & GUTTER 18-INCH PAN 24-INCH TYPE D
30A	CONCRETE CURB & GUTTER 30-INCH TYPE A
30D	CONCRETE CURB & GUTTER 30-INCH TYPE D
36R	CONCRETE CURB & GUTTER 4-INCH SLOPED 36-INCH TYPE R
66A	CONCRETE CURB & GUTTER 66-INCH TYPE A
72A	CONCRETE CURB & GUTTER 4-INCH SLOPED 72-INCH TYPE A
MO	MAINTENANCE OPENING
P6	CONCRETE CURB PEDESTRAIN (0-INCH TO 6-INCH HEIGHT)
P12	CONCRETE CURB PEDESTRAIN (6-INCH TO 12-INCH HEIGHT)
PL	PARKING LOT CURB
RP	RAILING PIPE
SN1	CONCRETE MEDIAN SLOPED NOSE TYPE 1
SN2	CONCRETE MEDIAN SLOPED NOSE TYPE 2
SOD	SOD LAWN
SW5	CONCRETE SIDEWALK 5-INCH
TA12	CONCRETE TRUCK APRON 12-INCH
XX'	SIDEWALK TRANSITION LENGTH AT DRIVEWAY (FT)
X	DRIVEWAY TYPE

PROJECT NO: 1310-04-70	HWY: STH 50	COUNTY: KENOSHA	PLAN DETAILS	SHEET 70	E

FILE NAME : T:\1182708.06\CIVIL3D\13100400\13100400\SHEETSPLAN\021201_PD.DWG
LAYOUT NAME - 13
PLOT DATE : 1/13/2022 11:58 AM
PLOT BY : BLACKWOOD, JIM
PLOT NAME :
PLOT SCALE : 1 IN:40 FT
WISDOT/CADDS SHEET 42

2

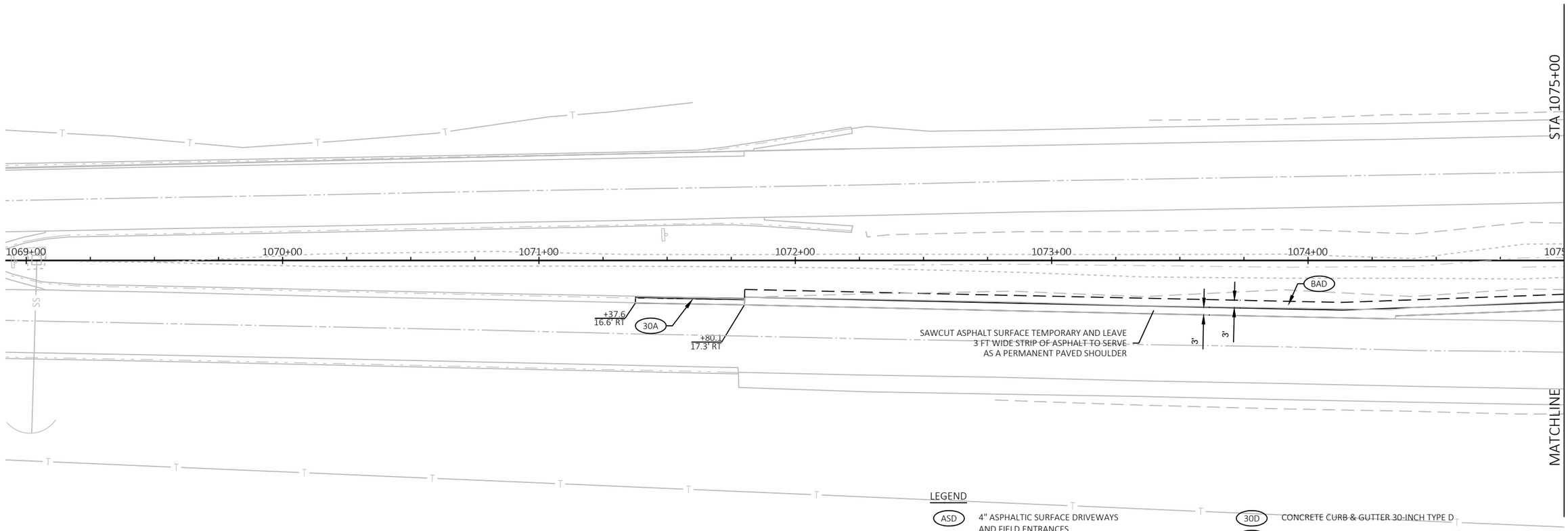

LEGEND

ASD	4" ASPHALTIC SURFACE DRIVEWAYS AND FIELD ENTRANCES
AP35	HMA PAVEMENT 3 1/2-INCH
AP55	HMA PAVEMENT 5 1/2-INCH
AP65	HMA PAVEMENT 6 1/2-INCH
BAD	BASE AGGREGATE DENSE 3/4-INCH
CCR	COLORING CONCRETE WISDOT RED
CP95	CONCRETE PAVEMENT 9.5-INCH
CSD	CONCRETE SURFACE DRAIN
CSI	CONCRETE SAFETY ISLAND
DWY	CONCRETE DRIVEWAY 7-INCH
12D	CONCRETE CURB & GUTTER 12-INCH TYPE D
18A	CONCRETE CURB & GUTTER 18-INCH TYPE A
18D	CONCRETE CURB & GUTTER 18-INCH TYPE D
24D12	CONCRETE CURB & GUTTER 12-INCH PAN 24-INCH TYPE D
24D18	CONCRETE CURB & GUTTER 18-INCH PAN 24-INCH TYPE D
30A	CONCRETE CURB & GUTTER 30-INCH TYPE A
30D	CONCRETE CURB & GUTTER 30-INCH TYPE D
36R	CONCRETE CURB & GUTTER 4-INCH SLOPED 36-INCH TYPE R
66A	CONCRETE CURB & GUTTER 66-INCH TYPE A
72A	CONCRETE CURB & GUTTER 4-INCH SLOPED 72-INCH TYPE A
MO	MAINTENANCE OPENING
P6	CONCRETE CURB PEDESTRAIN (0-INCH TO 6-INCH HEIGHT)
P12	CONCRETE CURB PEDESTRAIN (6-INCH TO 12-INCH HEIGHT)
PL	PARKING LOT CURB
RP	RAILING PIPE
SN1	CONCRETE MEDIAN SLOPED NOSE TYPE 1
SN2	CONCRETE MEDIAN SLOPED NOSE TYPE 2
SOD	SOD LAWN
SW5	CONCRETE SIDEWALK 5-INCH
TA12	CONCRETE TRUCK APRON 12-INCH
XX'	SIDEWALK TRANSITION LENGTH AT DRIVEWAY (FT)
X	DRIVEWAY TYPE

SHEET 16 OF 19

PROJECT NO: 1310-04-70	HWY: STH 50	COUNTY: KENOSHA	PLAN DETAILS	SHEET 71	E

FILE NAME : T:\1182708.06\CIVIL3D\13100400\13100400\SHEETSPLAN\021201_PD.DWG
LAYOUT NAME - 14
PLOT DATE : 1/13/2022 11:58 AM PLOT BY : BLACKWOOD, JIM PLOT NAME : PLOT SCALE : 1 IN:40 FT
WISDOT/CADDS SHEET 42

2

N

STA 1063+00

+60.0
22.7' LT

1076+00

1077+00

1078+00

3

3

BAD

SAWCUT ASPHALT SURFACE TEMPORARY AND LEAVE
3 FT WIDE STRIP OF ASPHALT TO SERVE
AS A PERMANENT PAVED SHOULDER

MATCHLINE

LEGEND

ASD	4" ASPHALTIC SURFACE DRIVEWAYS AND FIELD ENTRANCES
AP35	HMA PAVEMENT 3 1/2-INCH
AP55	HMA PAVEMENT 5 1/2-INCH
AP65	HMA PAVEMENT 6 1/2-INCH
BAD	BASE AGGREGATE DENSE 3/4-INCH
CCR	COLORING CONCRETE WISDOT RED
CP95	CONCRETE PAVEMENT 9.5-INCH
CSD	CONCRETE SURFACE DRAIN
CSI	CONCRETE SAFETY ISLAND
DWY	CONCRETE DRIVEWAY 7-INCH
12D	CONCRETE CURB & GUTTER 12-INCH TYPE D
18A	CONCRETE CURB & GUTTER 18-INCH TYPE A
18D	CONCRETE CURB & GUTTER 18-INCH TYPE D
24D12	CONCRETE CURB & GUTTER 12-INCH PAN 24-INCH TYPE D
24D18	CONCRETE CURB & GUTTER 18-INCH PAN 24-INCH TYPE D
30A	CONCRETE CURB & GUTTER 30-INCH TYPE A
30D	CONCRETE CURB & GUTTER 30-INCH TYPE D
36R	CONCRETE CURB & GUTTER 4-INCH SLOPED 36-INCH TYPE R
66A	CONCRETE CURB & GUTTER 66-INCH TYPE A
72A	CONCRETE CURB & GUTTER 4-INCH SLOPED 72-INCH TYPE A
MO	MAINTENANCE OPENING
P6	CONCRETE CURB PEDESTRAIN (0-INCH TO 6-INCH HEIGHT)
P12	CONCRETE CURB PEDESTRAIN (6-INCH TO 12-INCH HEIGHT)
PL	PARKING LOT CURB
RP	RAILING PIPE
SN1	CONCRETE MEDIAN SLOPED NOSE TYPE 1
SN2	CONCRETE MEDIAN SLOPED NOSE TYPE 2
SOD	SOD LAWN
SW5	CONCRETE SIDEWALK 5-INCH
TA12	CONCRETE TRUCK APRON 12-INCH
XX'	SIDEWALK TRANSITION LENGTH AT DRIVEWAY (FT)
X	DRIVEWAY TYPE

SHEET 17 OF 19

PROJECT NO: 1310-04-70	HWY: STH 50	COUNTY: KENOSHA	PLAN DETAILS	SHEET 72	E

FILE NAME : T:\1182708.06\CIVIL3D\13100400\13100400\SHEETSPLAN\021201_PD.DWG
LAYOUT NAME - 15
PLOT DATE : 1/13/2022 11:58 AM
PLOT BY : BLACKWOOD, JIM
PLOT NAME :
PLOT SCALE : 1 IN:40 FT
WISDOT/CADDS SHEET 42

2

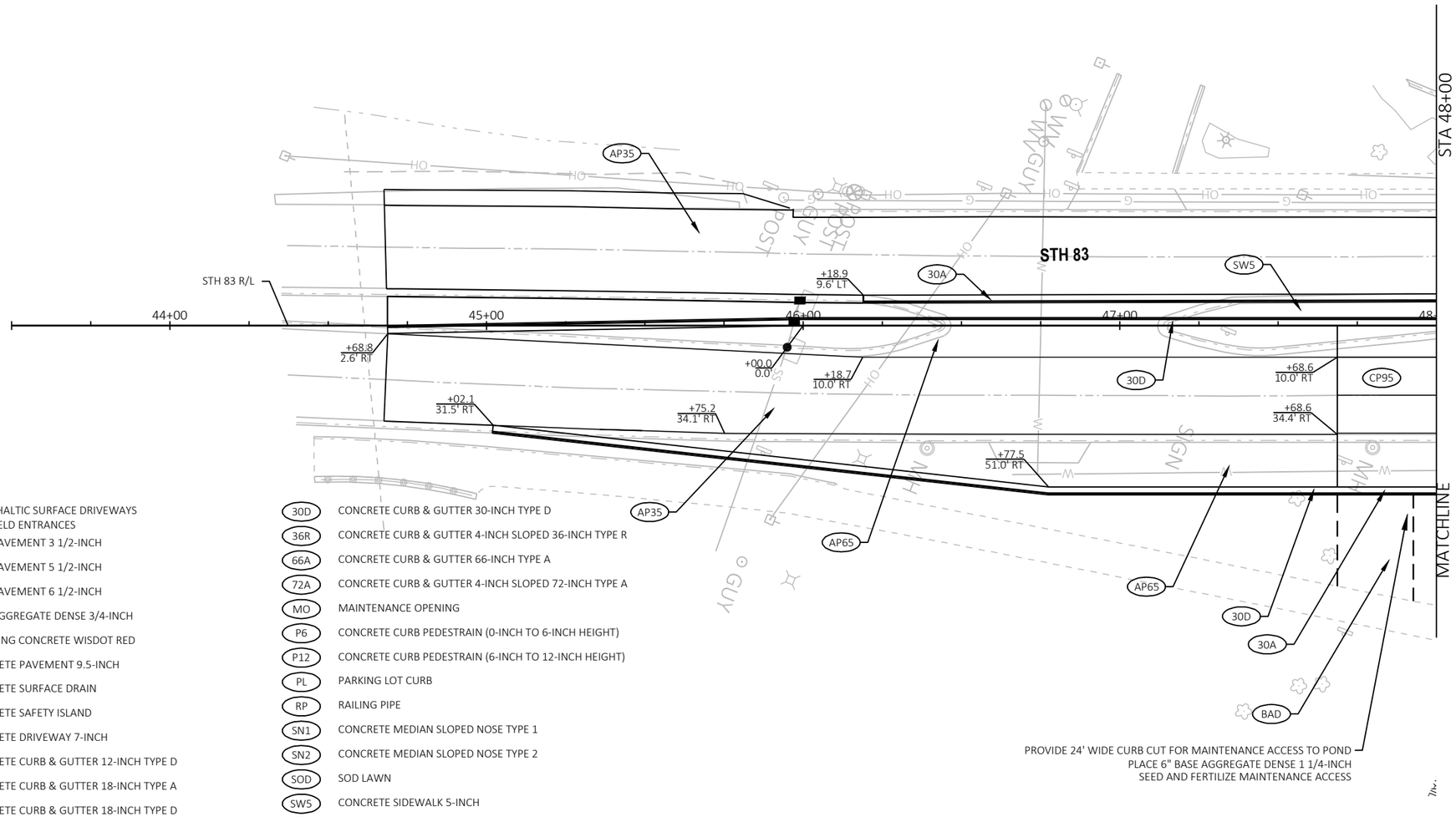

LEGEND

ASD	4" ASPHALTIC SURFACE DRIVEWAYS AND FIELD ENTRANCES
AP35	HMA PAVEMENT 3 1/2-INCH
AP55	HMA PAVEMENT 5 1/2-INCH
AP65	HMA PAVEMENT 6 1/2-INCH
BAD	BASE AGGREGATE DENSE 3/4-INCH
CCR	COLORING CONCRETE WISDOT RED
CP95	CONCRETE PAVEMENT 9.5-INCH
CSD	CONCRETE SURFACE DRAIN
CSI	CONCRETE SAFETY ISLAND
DWY	CONCRETE DRIVEWAY 7-INCH
12D	CONCRETE CURB & GUTTER 12-INCH TYPE D
18A	CONCRETE CURB & GUTTER 18-INCH TYPE A
18D	CONCRETE CURB & GUTTER 18-INCH TYPE D
24D12	CONCRETE CURB & GUTTER 12-INCH PAN 24-INCH TYPE D
24D18	CONCRETE CURB & GUTTER 18-INCH PAN 24-INCH TYPE D
30A	CONCRETE CURB & GUTTER 30-INCH TYPE A
30D	CONCRETE CURB & GUTTER 30-INCH TYPE D
36R	CONCRETE CURB & GUTTER 4-INCH SLOPED 36-INCH TYPE R
66A	CONCRETE CURB & GUTTER 66-INCH TYPE A
72A	CONCRETE CURB & GUTTER 4-INCH SLOPED 72-INCH TYPE A
MO	MAINTENANCE OPENING
P6	CONCRETE CURB PEDESTRAIN (0-INCH TO 6-INCH HEIGHT)
P12	CONCRETE CURB PEDESTRAIN (6-INCH TO 12-INCH HEIGHT)
PL	PARKING LOT CURB
RP	RAILING PIPE
SN1	CONCRETE MEDIAN SLOPED NOSE TYPE 1
SN2	CONCRETE MEDIAN SLOPED NOSE TYPE 2
SOD	SOD LAWN
SW5	CONCRETE SIDEWALK 5-INCH
TA12	CONCRETE TRUCK APRON 12-INCH
XX'	SIDEWALK TRANSITION LENGTH AT DRIVEWAY (FT)
X	DRIVEWAY TYPE

SHEET 18 OF 19

PROJECT NO: 1310-04-70	HWY: STH 50	COUNTY: KENOSHA	PLAN DETAILS	SHEET 73	E

FILE NAME : T:\1182708.06\CIVIL3D\13100400\13100400\SHEETSPLAN\021201_PD.DWG
LAYOUT NAME - 16

PLOT DATE : 1/28/2022 9:58 AM PLOT BY : BLACKWOOD, JIM PLOT NAME : PLOT SCALE : 1 IN:40 FT

2

RADIUS TABLE					
POINT NUMBER	STATION	OFFSET	Y	X	RADIUS
BV	52+97.34	5.00' LT	128,482.09	550,098.55	3'*

* RADIUS MEASURED TO THE FACE OF CURB

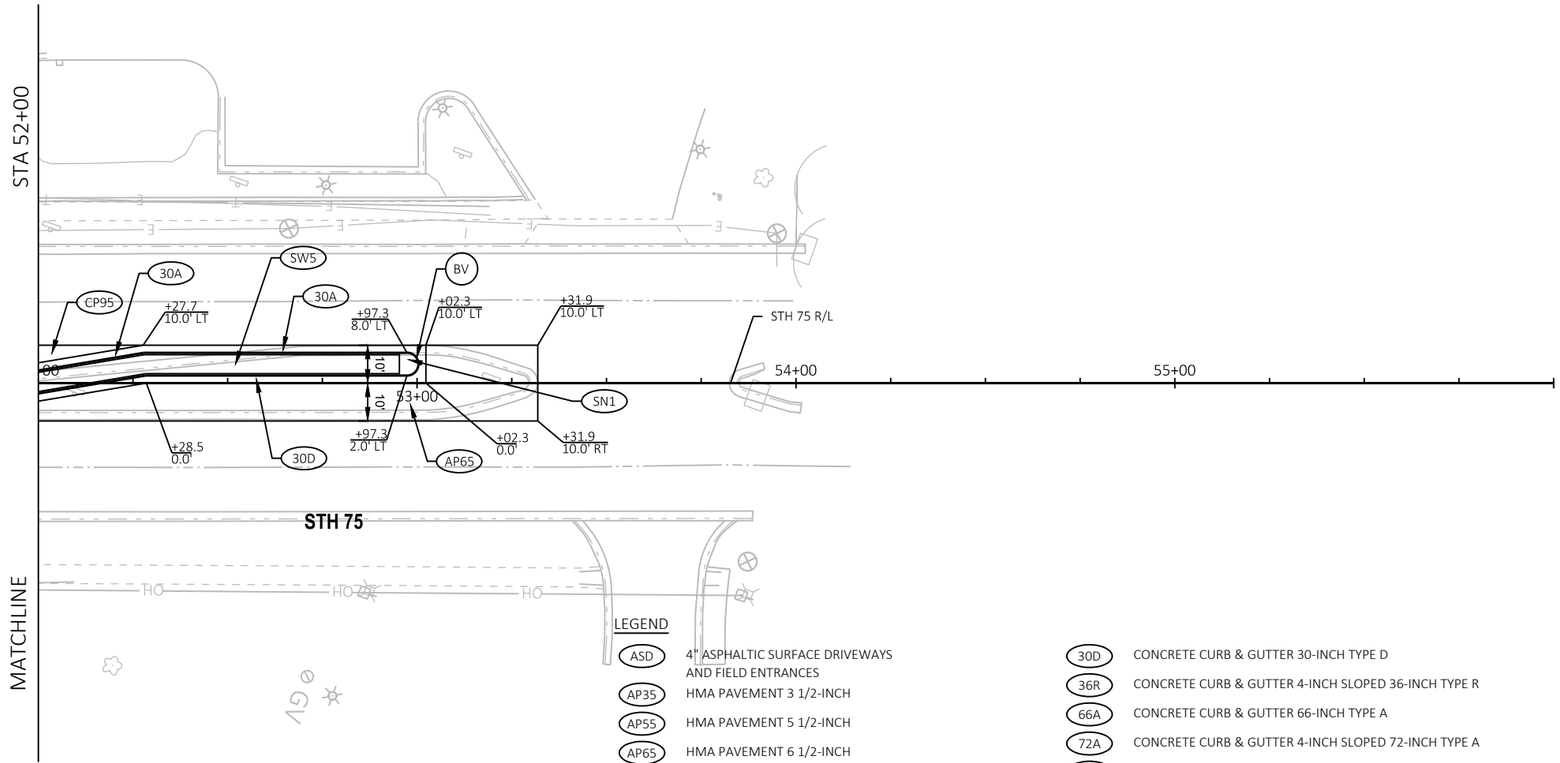

LEGEND

ASD	4" ASPHALTIC SURFACE DRIVEWAYS AND FIELD ENTRANCES
AP35	HMA PAVEMENT 3 1/2-INCH
AP55	HMA PAVEMENT 5 1/2-INCH
AP65	HMA PAVEMENT 6 1/2-INCH
BAD	BASE AGGREGATE DENSE 3/4-INCH
CCR	COLORING CONCRETE WISDOT RED
CP95	CONCRETE PAVEMENT 9.5-INCH
CSD	CONCRETE SURFACE DRAIN
CSI	CONCRETE SAFETY ISLAND
DWY	CONCRETE DRIVEWAY 7-INCH
12D	CONCRETE CURB & GUTTER 12-INCH TYPE D
18A	CONCRETE CURB & GUTTER 18-INCH TYPE A
18D	CONCRETE CURB & GUTTER 18-INCH TYPE D
24D12	CONCRETE CURB & GUTTER 12-INCH PAN 24-INCH TYPE D
24D18	CONCRETE CURB & GUTTER 18-INCH PAN 24-INCH TYPE D
30A	CONCRETE CURB & GUTTER 30-INCH TYPE A
30D	CONCRETE CURB & GUTTER 30-INCH TYPE D
36R	CONCRETE CURB & GUTTER 4-INCH SLOPED 36-INCH TYPE R
66A	CONCRETE CURB & GUTTER 66-INCH TYPE A
72A	CONCRETE CURB & GUTTER 4-INCH SLOPED 72-INCH TYPE A
MO	MAINTENANCE OPENING
P6	CONCRETE CURB PEDESTRAIN (0-INCH TO 6-INCH HEIGHT)
P12	CONCRETE CURB PEDESTRAIN (6-INCH TO 12-INCH HEIGHT)
PL	PARKING LOT CURB
RP	RAILING PIPE
SN1	CONCRETE MEDIAN SLOPED NOSE TYPE 1
SN2	CONCRETE MEDIAN SLOPED NOSE TYPE 2
SOD	SOD LAWN
SW5	CONCRETE SIDEWALK 5-INCH
TA12	CONCRETE TRUCK APRON 12-INCH
XX'	SIDEWALK TRANSITION LENGTH AT DRIVEWAY (FT)
X	DRIVEWAY TYPE

PROJECT NO: 1310-04-70	HWY: STH 50	COUNTY: KENOSHA	PLAN DETAILS	SHEET 74	E

FILE NAME : T:\1182708.06\CIVIL3D\13100400\13100400\SHEETSPLAN\021201_PD.DWG
LAYOUT NAME - 17
PLOT DATE : 1/13/2022 11:58 AM
PLOT BY : BLACKWOOD, JIM
PLOT NAME :
PLOT SCALE : 1 IN:40 FT
WISDOT/CADDS SHEET 42

2

N

LEGEND

XXX.XX	ELEVATION ON PAVEMENT OR ALONG GUTTER FLANGE
XXX.XX(E)	EXISTING ELEVATION
XXX.XX(G)	ELEVATION ALONG GUTTER FLOWLINE
HP	HIGH POINT
LP	LOW POINT

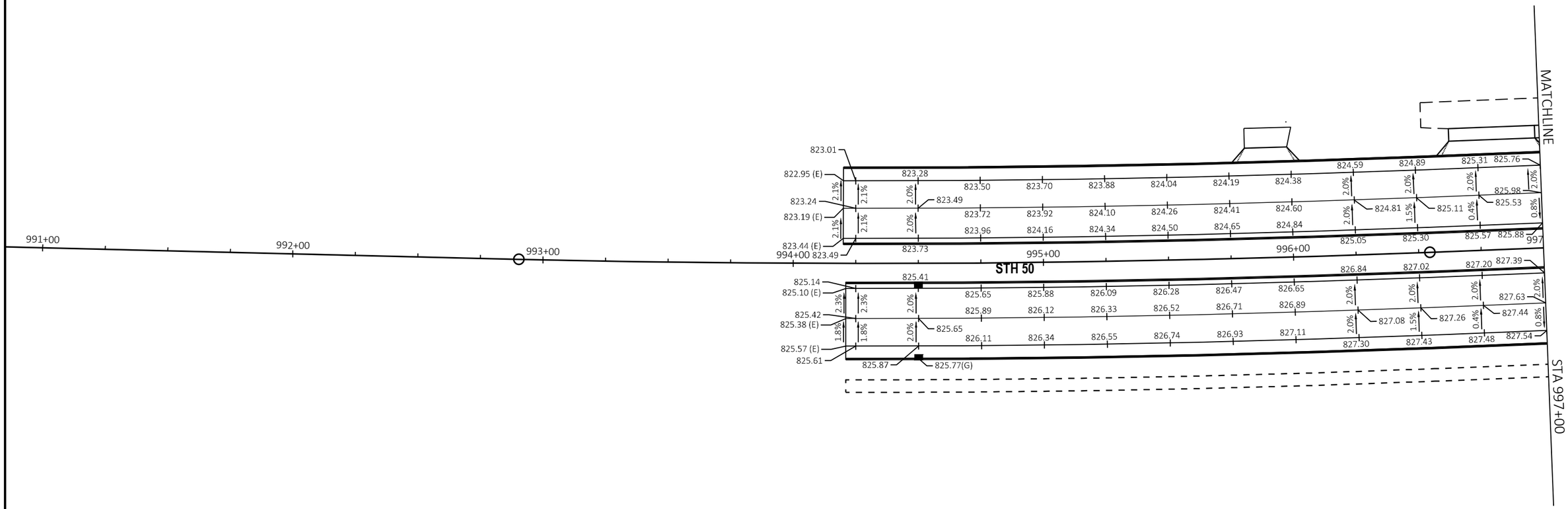

SHEET 1 OF 15

PROJECT NO: 1310-04-70	HWY: STH 50	COUNTY: KENOSHA	PAVING GRADES	SHEET 75	E

FILE NAME : T:\1182708.06\CIVIL3D\13100400\13100400\SHEETSPLAN\021202_PD.DWG
LAYOUT NAME - 021202-pd-01

PLOT DATE : 1/18/2022 8:27 AM PLOT BY : BLACKWOOD, JIM PLOT NAME : PLOT SCALE : 1 IN:40 FT

LEGEND

XXX.XX	ELEVATION ON PAVEMENT OR ALONG GUTTER FLANGE
XXX.XX(E)	EXISTING ELEVATION
XXX.XX(G)	ELEVATION ALONG GUTTER FLOWLINE
HP	HIGH POINT
LP	LOW POINT

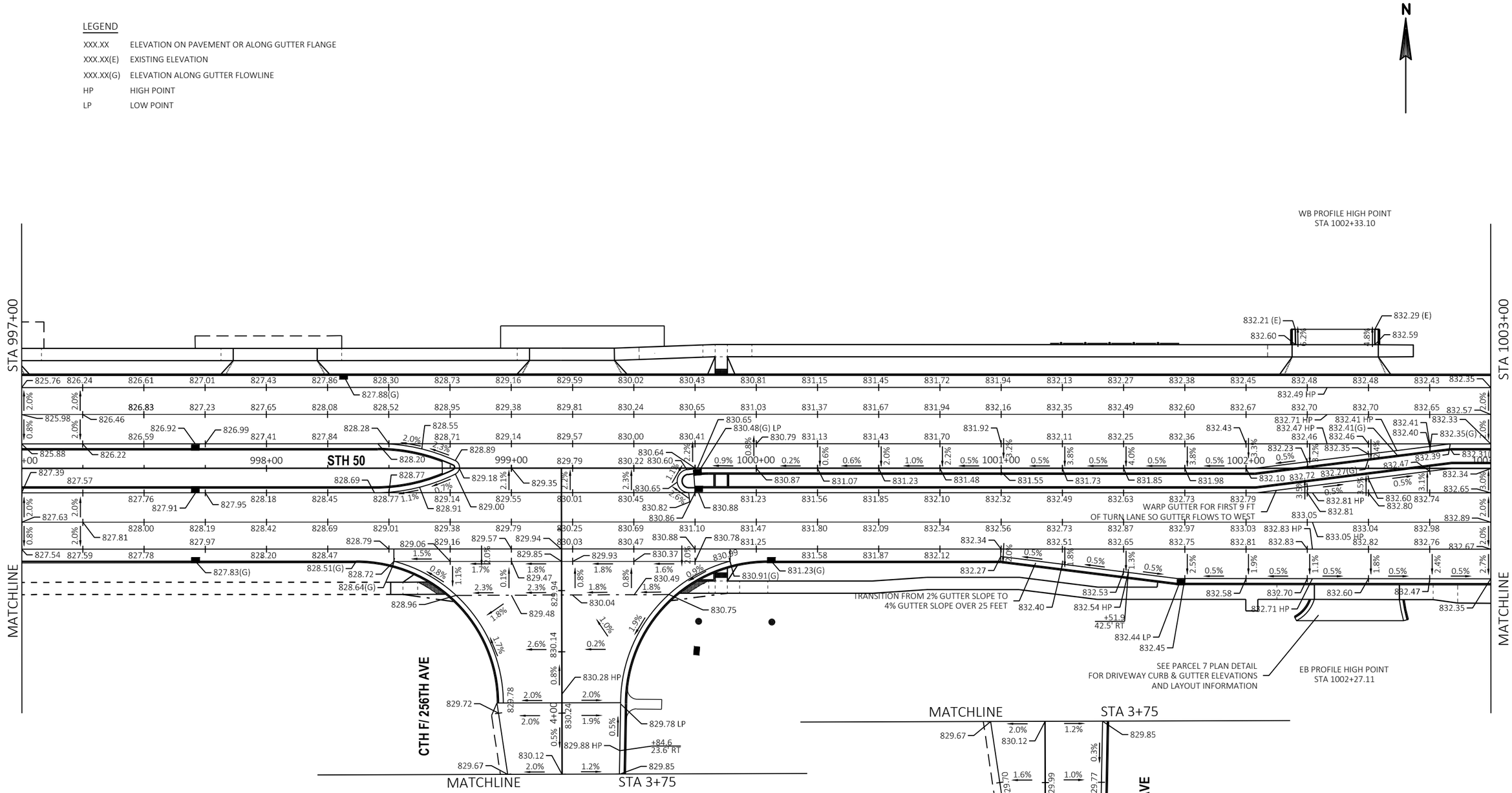

SHEET 2 OF 15

PROJECT NO: 1310-04-70	HWY: STH 50	COUNTY: KENOSHA	PAVING GRADES	SHEET 76	E

FILE NAME : T:\1182708.06\CIVIL3D\13100400\13100400\SHEETSPLAN\021202_PD.DWG
LAYOUT NAME - 021202-pd-02

PLOT DATE : 1/18/2022 8:28 AM PLOT BY : BLACKWOOD, JIM PLOT NAME : PLOT SCALE : 1 IN:40 FT

WISDOT/CADDS SHEET 42

2

N

MATCHLINE STA 52+00

STA 1003+00

STA 1009+00

STH 75

STH 50

STH 83

SEE CURB RAMP DETAILS FOR PORK CHOP ISLAND GRADES

WARP GUTTER TO MAINTAIN 0.5% ALONG FLOWLINE

REJECT GUTTER

SEE PARCEL 7 PLAN DETAIL FOR PARKING LOT GRADES AND LAYOUT INFORMATION

SEE CURB RAMP DETAILS AND HANDICAP RAMP DETAIL FOR HANDICAP RAMP ELEVATIONS AND LAYOUT INFORMATION

OUTFLOW 828.43 LP

STA 48+00

MATCHLINE

MATCHLINE

LEGEND

XXX.XX	ELEVATION ON PAVEMENT OR ALONG GUTTER FLANGE
XXX.XX(E)	EXISTING ELEVATION
XXX.XX(G)	ELEVATION ALONG GUTTER FLOWLINE
HP	HIGH POINT
LP	LOW POINT

SHEET 3 OF 15

PROJECT NO: 1310-04-70	HWY: STH 50	COUNTY: KENOSHA	PAVING GRADES	SHEET 77	E

FILE NAME : T:\1182708.06\CIVIL3D\13100400\13100400\SHEETSPLAN\021202_PD.DWG
LAYOUT NAME - 021202-pd-03

PLOT DATE : 1/18/2022 8:28 AM PLOT BY : BLACKWOOD, JIM PLOT NAME : PLOT SCALE : 1 IN:40 FT

2

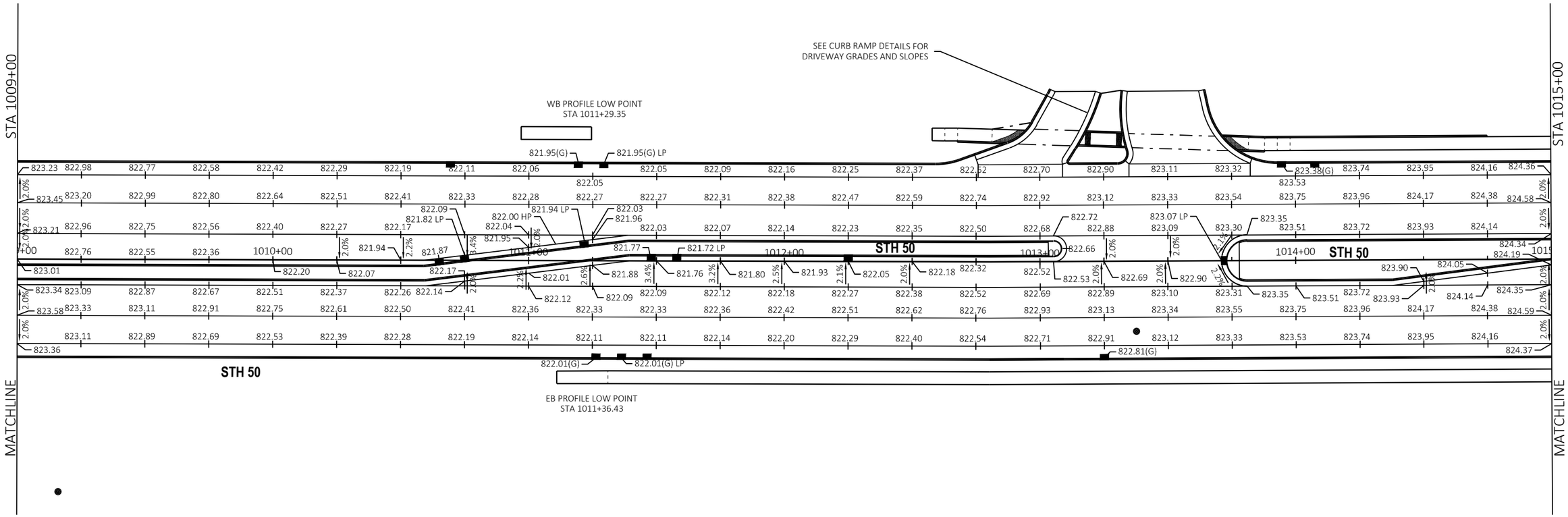

LEGEND

XXX.XX	ELEVATION ON PAVEMENT OR ALONG GUTTER FLANGE
XXX.XX(E)	EXISTING ELEVATION
XXX.XX(G)	ELEVATION ALONG GUTTER FLOWLINE
HP	HIGH POINT
LP	LOW POINT

SHEET 4 OF 15

PROJECT NO: 1310-04-70	HWY: STH 50	COUNTY: KENOSHA	PAVING GRADES	SHEET 78	E

FILE NAME : T:\1182708.06\CIVIL3D\13100400\13100400\SHEETSPLAN\021202_PD.DWG
LAYOUT NAME - 021202-pd-04

PLOT DATE : 1/18/2022 8:28 AM PLOT BY : BLACKWOOD, JIM PLOT NAME : PLOT SCALE : 1 IN:40 FT

2

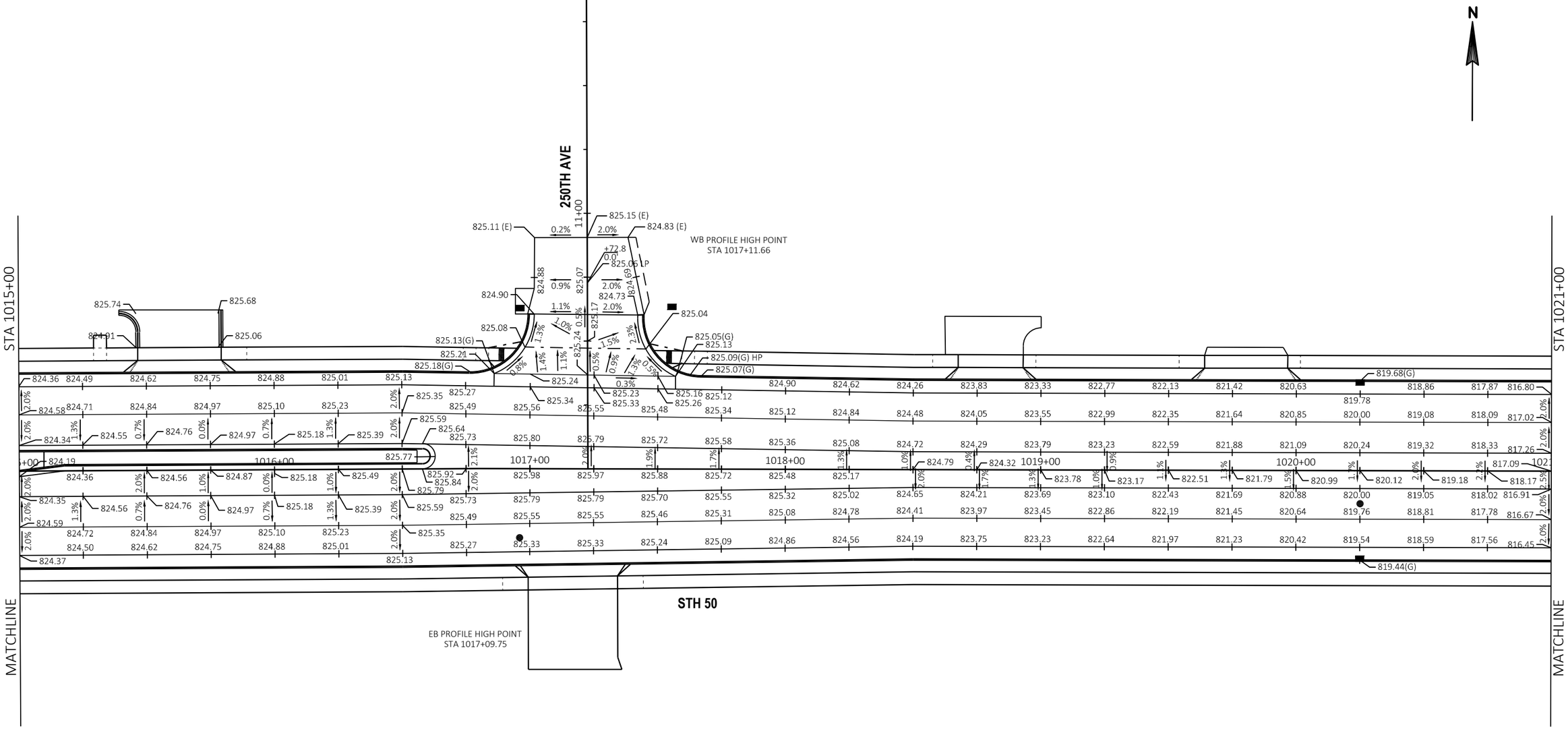

LEGEND

XXX.XX	ELEVATION ON PAVEMENT OR ALONG GUTTER FLANGE
XXX.XX(E)	EXISTING ELEVATION
XXX.XX(G)	ELEVATION ALONG GUTTER FLOWLINE
HP	HIGH POINT
LP	LOW POINT

SHEET 5 OF 15

PROJECT NO: 1310-04-70	HWY: STH 50	COUNTY: KENOSHA	PAVING GRADES	SHEET 79	E

FILE NAME : T:\1182708.06\CIVIL3D\13100400\13100400\SHEETSPLAN\021202_PD.DWG
LAYOUT NAME - 021202-pd-05

PLOT DATE : 1/18/2022 8:28 AM PLOT BY : BLACKWOOD, JIM PLOT NAME : PLOT SCALE : 1 IN:40 FT

2

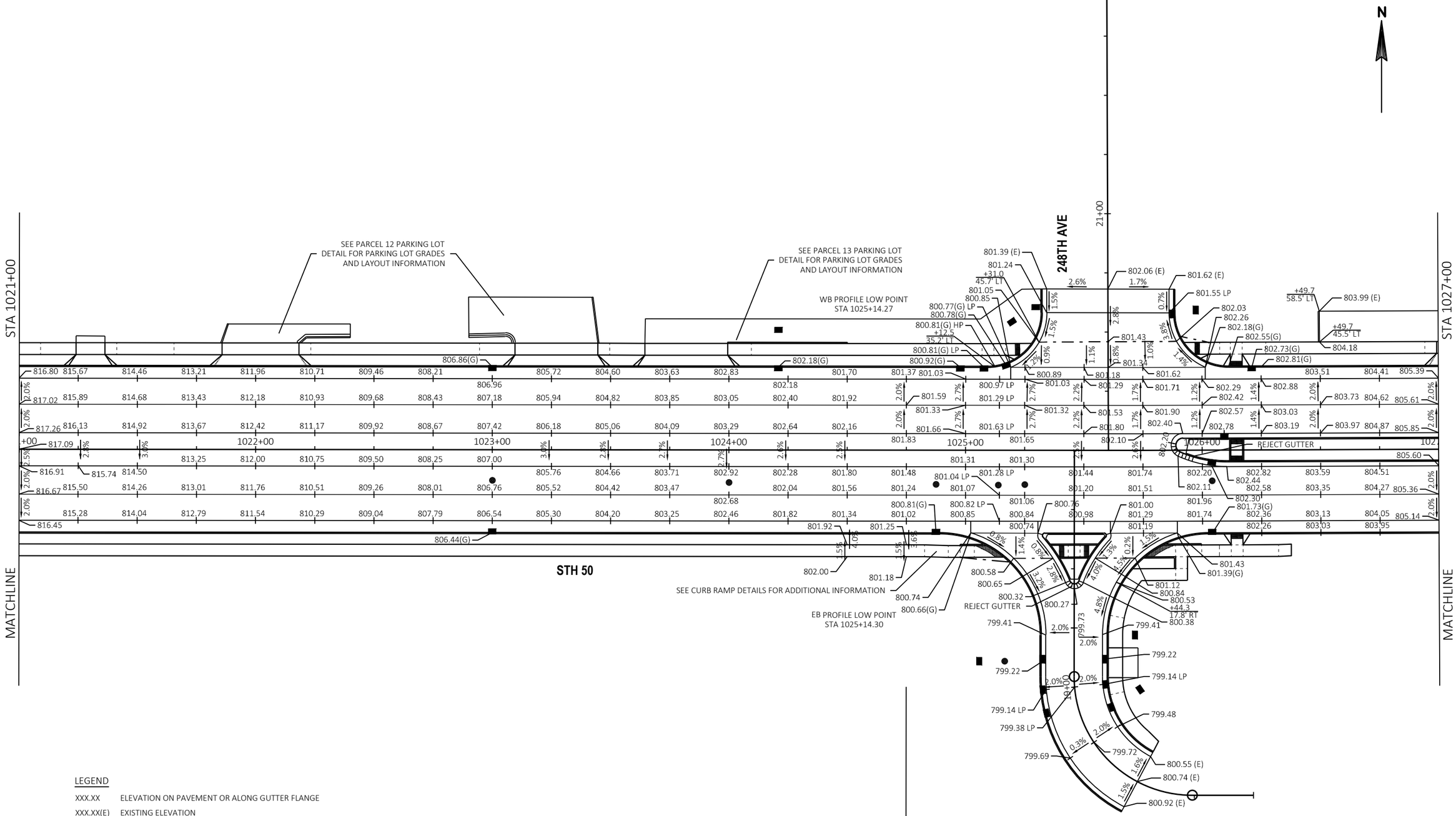

LEGEND

XXX.XX	ELEVATION ON PAVEMENT OR ALONG GUTTER FLANGE
XXX.XX(E)	EXISTING ELEVATION
XXX.XX(G)	ELEVATION ALONG GUTTER FLOWLINE
HP	HIGH POINT
LP	LOW POINT

SHEET 6 OF 15

PROJECT NO: 1310-04-70	HWY: STH 50	COUNTY: KENOSHA	PAVING GRADES	SHEET 80	E

2

N

STA 1027+00

STA 1033+00

SEE PARCEL 18 PARKING LOT DETAIL FOR PARKING LOT GRADES AND LAYOUT INFORMATION

SEE PARCEL 19 PARKING LOT DETAIL FOR PARKING LOT GRADES AND LAYOUT INFORMATION

SEE PARCEL 20 PARKING LOT DETAIL FOR PARKING LOT GRADES AND LAYOUT INFORMATION

808.26(G)

816.64(G)

820.85(G)

822.19(G)

822.01

822.00 LP

822.07 HP

822.06

822.37

822.41

816.87(G)

820.85(G)

822.21(G)

STH 50

MATCHLINE

MATCHLINE

LEGEND

XXX.XX	ELEVATION ON PAVEMENT OR ALONG GUTTER FLANGE
XXX.XX(E)	EXISTING ELEVATION
XXX.XX(G)	ELEVATION ALONG GUTTER FLOWLINE
HP	HIGH POINT
LP	LOW POINT

SHEET 7 OF 15

PROJECT NO: 1310-04-70	HWY: STH 50	COUNTY: KENOSHA	PAVING GRADES	SHEET 81	E

FILE NAME : T:\1182708.06\CIVIL3D\13100400\13100400\SHEETSPLAN\021202_PD.DWG
LAYOUT NAME - 021202-pd-07

PLOT DATE : 1/18/2022 8:28 AM PLOT BY : BLACKWOOD, JIM PLOT NAME : PLOT SCALE : 1 IN:40 FT

2

N

STA 1033+00

STA 1039+00

246TH AVE

411+00

821.69 (E)

822.34 (E)

821.80 (E)

822.48

822.83

822.66

823.40

823.61

823.14

823.39

823.53

823.45(G)

823.49(G) HP

+90.4

37.91 LT

823.46(G)

823.35

823.84

823.97(G)

824.25(G)

824.34

SEE PARCEL 22 PARKING LOT
DETAIL FOR PARKING LOT GRADES
AND LAYOUT INFORMATION

WARP GUTTER TO DRAIN TO INLET

WB PROFILE HIGH POINT
STA 1038+49.59

822.53 822.80 823.06 823.45 823.77 823.79 824.62 824.86 825.08 825.26 825.42 825.57 825.72 825.87 826.02 826.17 826.32 826.47 826.62 826.63 826.55 826.39 826.13

822.75 823.02 823.28 823.34 823.56 823.63 823.74 823.84 823.95 824.07 824.05 824.18 824.45 824.84 825.08 825.30 825.48 825.64 825.79 825.94 826.09 826.24 826.39 826.54 826.69 826.84 826.85 826.77 826.61 826.35

822.99 823.14 823.28 823.37 HP 823.44 823.62 823.83 824.06 824.33 824.26 824.84 825.06 825.24 825.40 825.55 825.70 825.85 826.00 826.15 826.30 826.45 826.60 826.73 826.77 826.59

822.83 822.96 823.15 823.34 1034+00 823.98 824.29 824.60 1035+00 824.86 825.04 1036+00 825.35 825.50 825.65 1037+00 825.95 826.10 826.27 1038+00 826.48 826.67 826.64 826.77

823.27 823.52 823.74 824.25 824.28 824.40 824.64 825.20 825.80 827.09 827.06 826.98 826.83 826.63

822.99 823.14 823.28 823.44 823.62 823.83 824.06 824.33 824.61 824.40 824.89 825.17 825.46 825.74 826.01 826.26 826.48 826.67 826.84 826.98 827.06 826.69

822.75 823.02 823.28 823.56 823.74 823.95 824.18 824.45 824.36 824.85 825.13 825.41 825.70 825.98 826.25 826.50 826.72 826.91 827.08 827.22 827.30 827.33 827.18 826.98 826.71 826.39

822.53 822.80 823.06 823.45 823.47(G) 823.63 823.84 824.07 824.34 824.91 825.19 825.48 825.76 826.03 826.28 826.50 826.69 826.86 827.00 827.08 827.11 826.96 826.76 826.49 826.17

823.58 823.77 823.79 824.02 824.63

823.51(G) 824.16(G)

823.53 823.71 823.79 824.03(G) 824.07 824.12 824.38 824.68

823.91

824.18 824.28 (E) 824.78 (E) 824.95 (E)

MATCHLINE

MATCHLINE

39+00

STH 50

EB PROFILE HIGH POINT
STA 1038+00.18

SEE PARCEL 25 PARKING LOT
DETAIL FOR PARKING LOT GRADES
AND LAYOUT INFORMATION

LEGEND

XXX.XX	ELEVATION ON PAVEMENT OR ALONG GUTTER FLANGE
XXX.XX(E)	EXISTING ELEVATION
XXX.XX(G)	ELEVATION ALONG GUTTER FLOWLINE
HP	HIGH POINT
LP	LOW POINT

PROJECT NO: 1310-04-70	HWY: STH 50	COUNTY: KENOSHA	PAVING GRADES	SHEET 82	E

FILE NAME : T:\1182708.06\CIVIL3D\13100400\13100400\SHEETSPLAN\021202_PD.DWG
LAYOUT NAME - 021202-pd-08
PLOT DATE : 1/18/2022 8:28 AM PLOT BY : BLACKWOOD, JIM PLOT NAME : PLOT SCALE : 1 IN:40 FT
WISDOT/CADDS SHEET 42

2

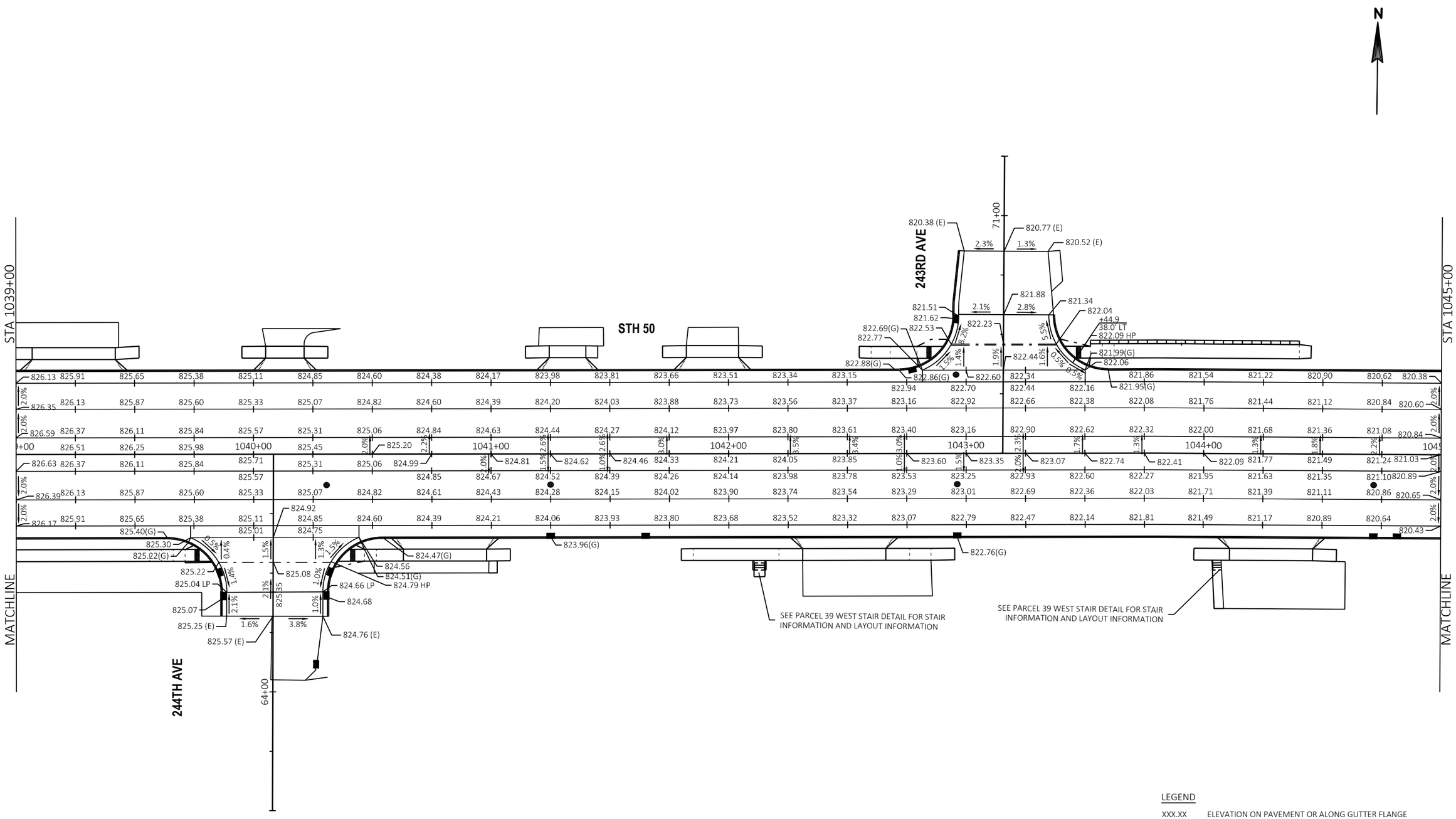

LEGEND

XXX.XX	ELEVATION ON PAVEMENT OR ALONG GUTTER FLANGE
XXX.XX(E)	EXISTING ELEVATION
XXX.XX(G)	ELEVATION ALONG GUTTER FLOWLINE
HP	HIGH POINT
LP	LOW POINT

PROJECT NO: 1310-04-70	HWY: STH 50	COUNTY: KENOSHA	PAVING GRADES	SHEET 83	E

FILE NAME : T:\1182708.06\CIVIL3D\13100400\13100400\SHEETSPLAN\021202_PD.DWG
LAYOUT NAME - 021202-pd-09
PLOT DATE : 1/18/2022 8:28 AM
PLOT BY : BLACKWOOD, JIM
PLOT NAME :
PLOT SCALE : 1 IN:40 FT
WISDOT/CADDS SHEET 42

2

N

STA 1045+00

STA 1051+00

74TH PLACE

242ND AVE

STH 50

WB PROFILE LOW POINT
STA 1046+30.38

WB PROFILE HIGH POINT
STA 1049+55.39

EB PROFILE LOW POINT
STA 1046+34.63

EB PROFILE HIGH POINT
STA 1049+55.39

WARP GUTTER SO
WATER FLOWS TO INLET

MATCHLINE

MATCHLINE

LEGEND

XXX.XX	ELEVATION ON PAVEMENT OR ALONG GUTTER FLANGE
XXX.XX(E)	EXISTING ELEVATION
XXX.XX(G)	ELEVATION ALONG GUTTER FLOWLINE
HP	HIGH POINT
LP	LOW POINT

SHEET 10 OF 15

PROJECT NO: 1310-04-70	HWY: STH 50	COUNTY: KENOSHA	PAVING GRADES	SHEET 84	E

FILE NAME : T:\1182708.06\CIVIL3D\13100400\13100400\SHEETSPLAN\021202_PD.DWG
LAYOUT NAME - 021202-pd-10

PLOT DATE : 1/18/2022 8:28 AM PLOT BY : BLACKWOOD, JIM PLOT NAME : PLOT SCALE : 1 IN:40 FT

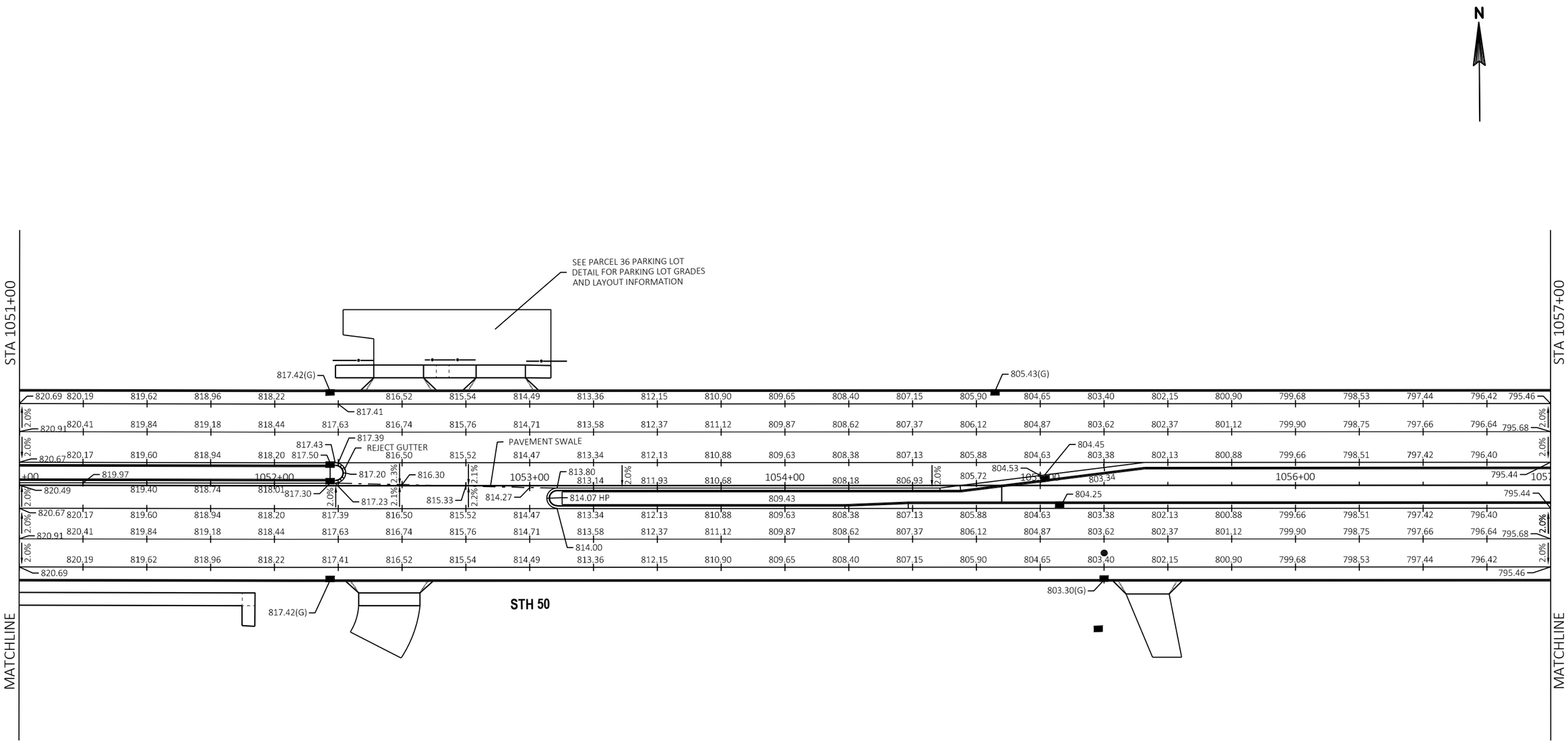

LEGEND

XXX.XX	ELEVATION ON PAVEMENT OR ALONG GUTTER FLANGE
XXX.XX(E)	EXISTING ELEVATION
XXX.XX(G)	ELEVATION ALONG GUTTER FLOWLINE
HP	HIGH POINT
LP	LOW POINT

SHEET 11 OF 15

PROJECT NO: 1310-04-70	HWY: STH 50	COUNTY: KENOSHA	PAVING GRADES	SHEET 85	E

FILE NAME : T:\1182708.06\CIVIL3D\13100400\13100400\SHEETSPLAN\021202_PD.DWG
LAYOUT NAME - 021202-pd-11
PLOT DATE : 1/18/2022 8:28 AM
PLOT BY : BLACKWOOD, JIM
PLOT NAME :
PLOT SCALE : 1 IN:40 FT
WISDOT/CADDS SHEET 42

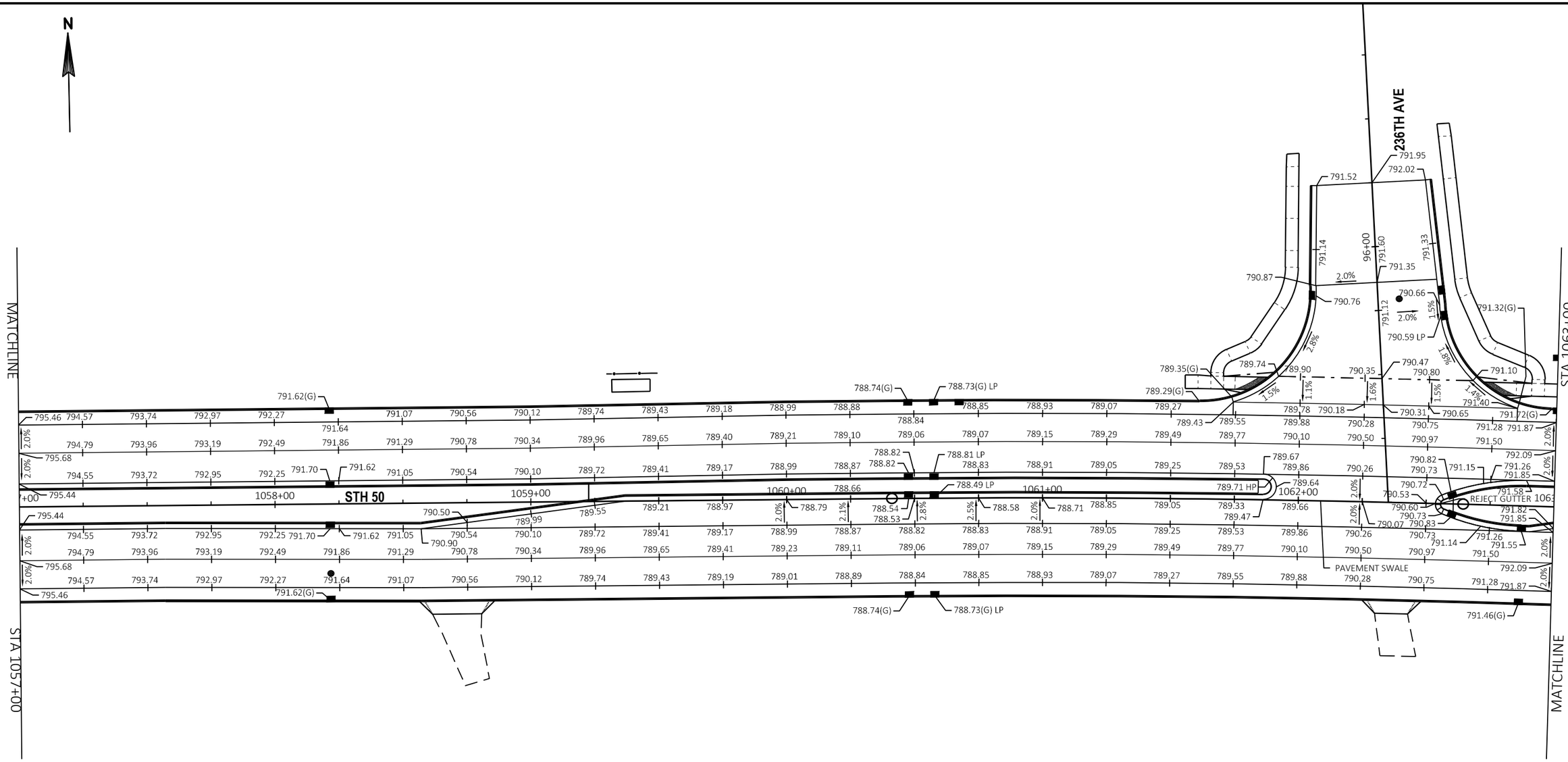

LEGEND

XXX.XX	ELEVATION ON PAVEMENT OR ALONG GUTTER FLANGE
XXX.XX(E)	EXISTING ELEVATION
XXX.XX(G)	ELEVATION ALONG GUTTER FLOWLINE
HP	HIGH POINT
LP	LOW POINT

SHEET 12 OF 15

PROJECT NO: 1310-04-70	HWY: STH 50	COUNTY: KENOSHA	PAVING GRADES	SHEET 86	E

FILE NAME : T:\1182708.06\CIVIL3D\13100400\13100400\SHEETSPLAN\021202_PD.DWG
LAYOUT NAME - 021202-pd-12

PLOT DATE : 1/18/2022 8:28 AM PLOT BY : BLACKWOOD, JIM PLOT NAME : PLOT SCALE : 1 IN:40 FT

WISDOT/CADDS SHEET 42

2

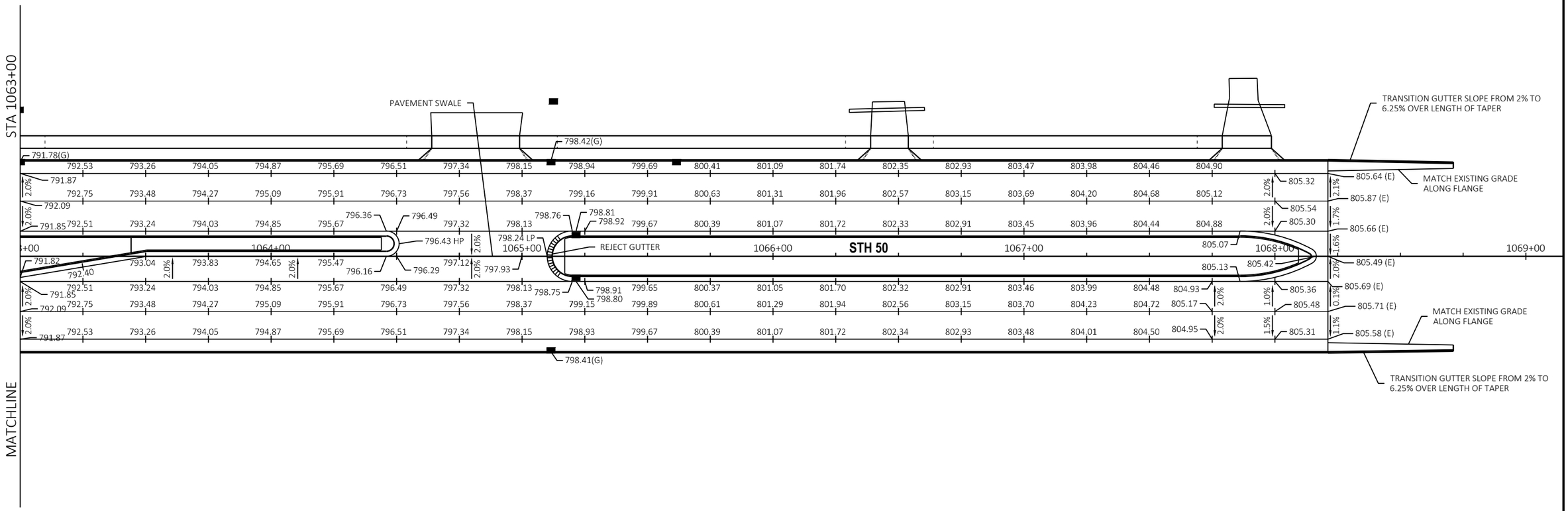

LEGEND

XXX.XX	ELEVATION ON PAVEMENT OR ALONG GUTTER FLANGE
XXX.XX(E)	EXISTING ELEVATION
XXX.XX(G)	ELEVATION ALONG GUTTER FLOWLINE
HP	HIGH POINT
LP	LOW POINT

SHEET 13 OF 15

PROJECT NO: 1310-04-70	HWY: STH 50	COUNTY: KENOSHA	PAVING GRADES	SHEET 87	E

FILE NAME : T:\1182708.06\CIVIL3D\13100400\13100400\SHEETSPLAN\021202_PD.DWG
LAYOUT NAME - 021202-pd-13

PLOT DATE : 1/18/2022 8:29 AM PLOT BY : BLACKWOOD, JIM PLOT NAME : PLOT SCALE : 1 IN:40 FT

2

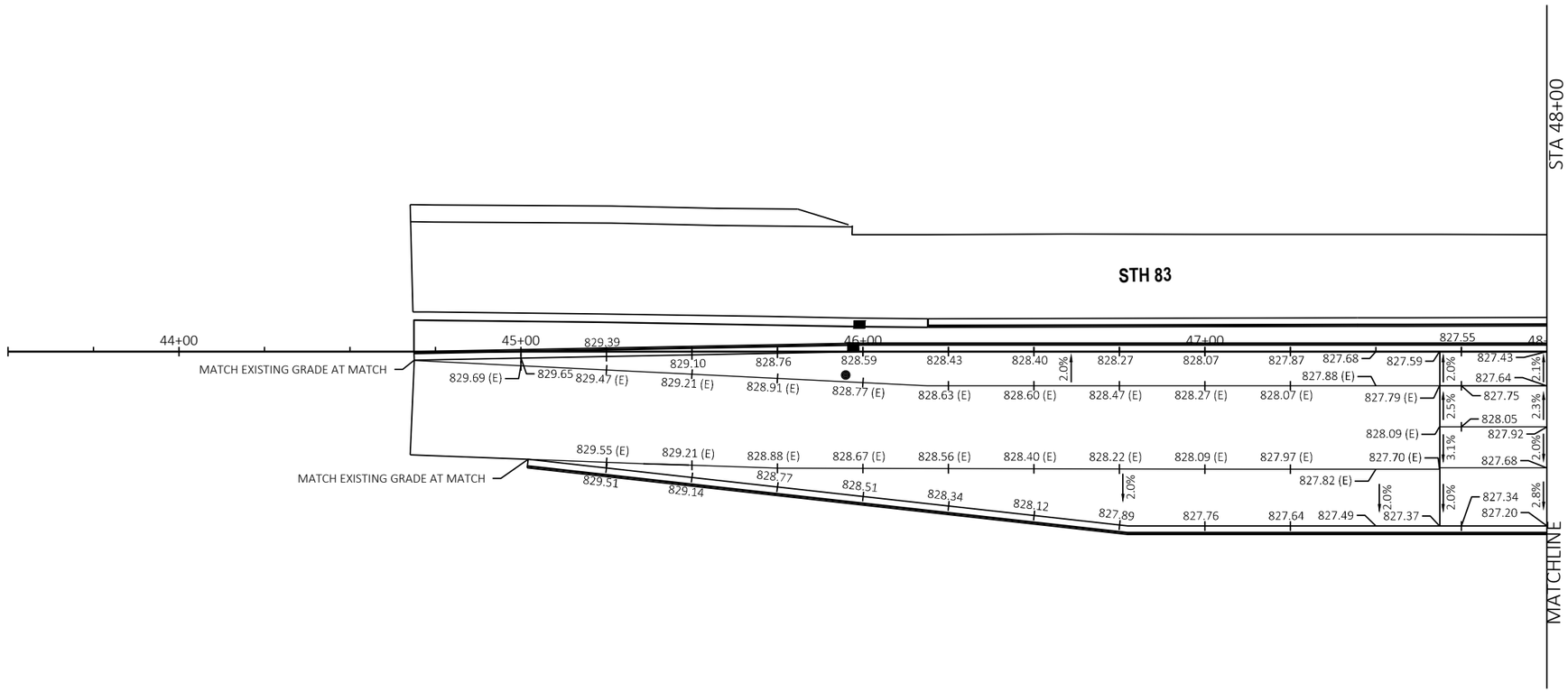

LEGEND

XXX.XX	ELEVATION ON PAVEMENT OR ALONG GUTTER FLANGE
XXX.XX(E)	EXISTING ELEVATION
XXX.XX(G)	ELEVATION ALONG GUTTER FLOWLINE
HP	HIGH POINT
LP	LOW POINT

PROJECT NO: 1310-04-70	HWY: STH 50	COUNTY: KENOSHA	PAVING GRADES	SHEET 88	E

FILE NAME : T:\1182708.06\CIVIL3D\13100400\13100400\SHEETSPLAN\021202_PD.DWG
LAYOUT NAME - 021202-pd-14
PLOT DATE : 1/18/2022 8:29 AM
PLOT BY : BLACKWOOD, JIM
PLOT NAME :
PLOT SCALE : 1 IN:40 FT
WISDOT/CADDS SHEET 42

2

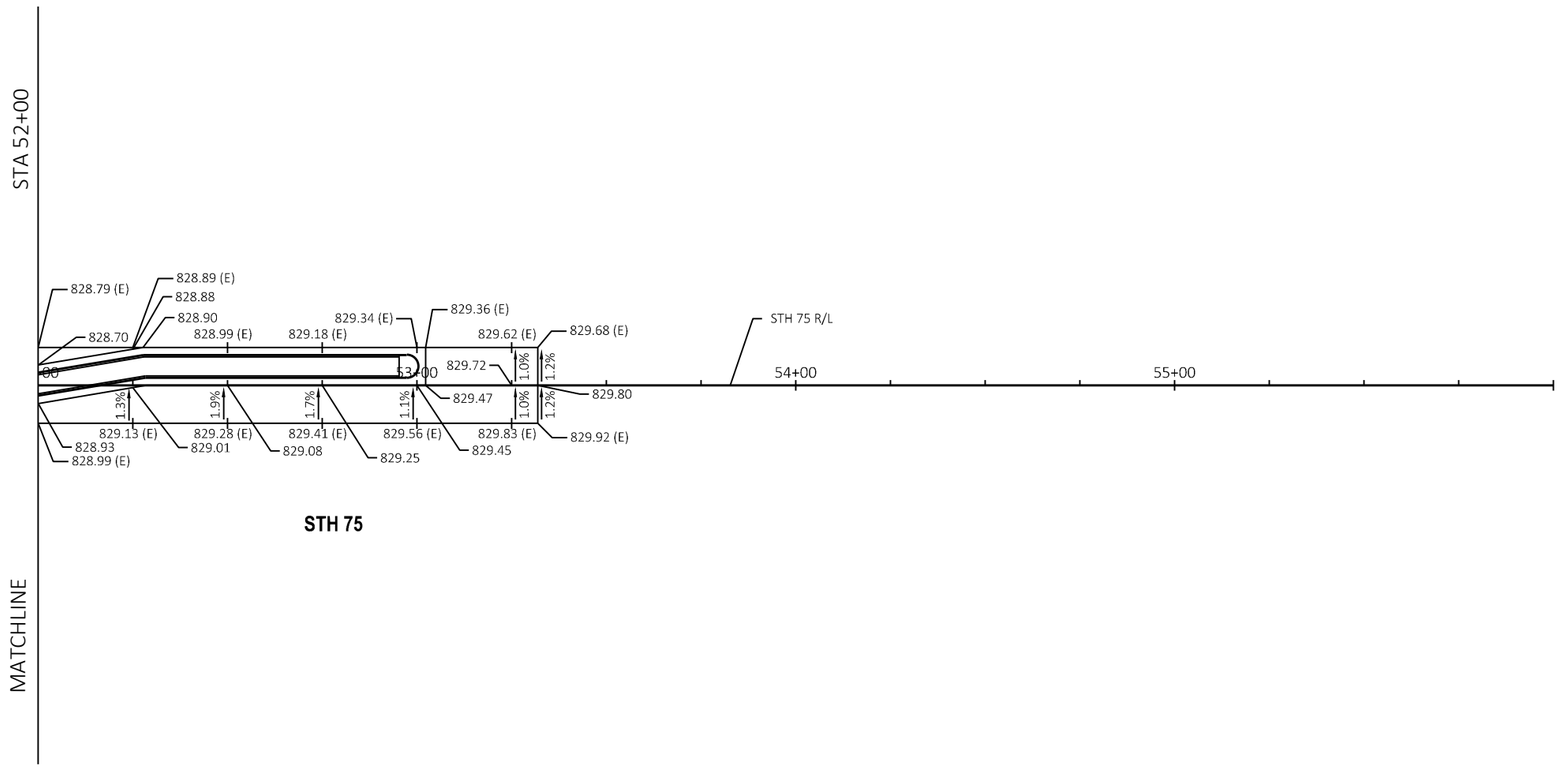

LEGEND

XXX.XX	ELEVATION ON PAVEMENT OR ALONG GUTTER FLANGE
XXX.XX(E)	EXISTING ELEVATION
XXX.XX(G)	ELEVATION ALONG GUTTER FLOWLINE
HP	HIGH POINT
LP	LOW POINT

SHEET 15 OF 15

PROJECT NO: 1310-04-70	HWY: STH 50	COUNTY: KENOSHA	PAVING GRADES	SHEET 89	E

FILE NAME : T:\1182708.06\CIVIL3D\13100400\13100400\SHEETSPLAN\021202_PD.DWG
LAYOUT NAME - 021202-pd-15

PLOT DATE : 1/18/2022 8:29 AM PLOT BY : BLACKWOOD, JIM PLOT NAME : PLOT SCALE : 1 IN:40 FT

2

2

STH 50

N

CONNECT TO EXISTING STORM SEWER

CONCRETE SIDEWALK

CONCRETE CURB & GUTTER
30-INCH TYPE A

CTH F

CONNECT TO EXISTING CULVERT

SLOPE INTERCEPT

EXISTING R/W

TLE

LANDSCAPING TO REMAIN

PADDOCK LAKE BP LLC
PARCEL 8

ASPHALTIC FLUME

EXISTING STORM SEWER TO REMAIN

EXISTING BERM BETWEEN PRIVATE STORMWATER SWALE
AND PUBLIC DRAINAGE AREA TO REMAIN

GRADING DETAIL - SOUTHEAST QUADRANT STH 50 & CTH F

SCALE: 1"=10'

SHEET 1 OF 14

PROJECT NO: 1310-04-70	HWY: STH 50	COUNTY: KENOSHA	PARCEL DETAILS	SHEET 90	E

FILE NAME : T:\1182708.06\CIVIL3D\13100400\13100400\SHEETSPLAN\021203_PD.DWG
LAYOUT NAME - 01

PLOT DATE : 1/18/2022 8:51 AM PLOT BY : BLACKWOOD, JIM PLOT NAME : PLOT SCALE : 1 IN:10 FT

2

2

N

O'REILLY AUTOMOTIVE
PARCEL 4

GRADE TO BACK OF CURB & GUTTER

EXISTING CURB & GUTTER TO REMAIN

SLOPE INTERCEPT

TLE

EXISTING CURB & GUTTER TO REMAIN

WOOD PEDESTRIAN FENCE
SEE CONSTRUCTION DETAIL

BACK EDGE OF SIDEWALK

+20.0
51.0' LT

RIGHT OF WAY LINE

+72.7
51.0' LT

CONCRETE SIDEWALK 5-INCH

5"

GRASS TERRACE

7'

FRONT EDGE OF SIDEWALK

CONCRETE CURB & GUTTER 66-INCH TYPE A

STH 50

PLAN DETAIL - PARCEL 4

STA 1000+00 TO STA 1002+00 LT
SCALE: 1"=10'

1001+00

SHEET 2 OF 14

PROJECT NO: 1310-04-70	HWY: STH 50	COUNTY: KENOSHA	PARCEL DETAILS	SHEET 91	E

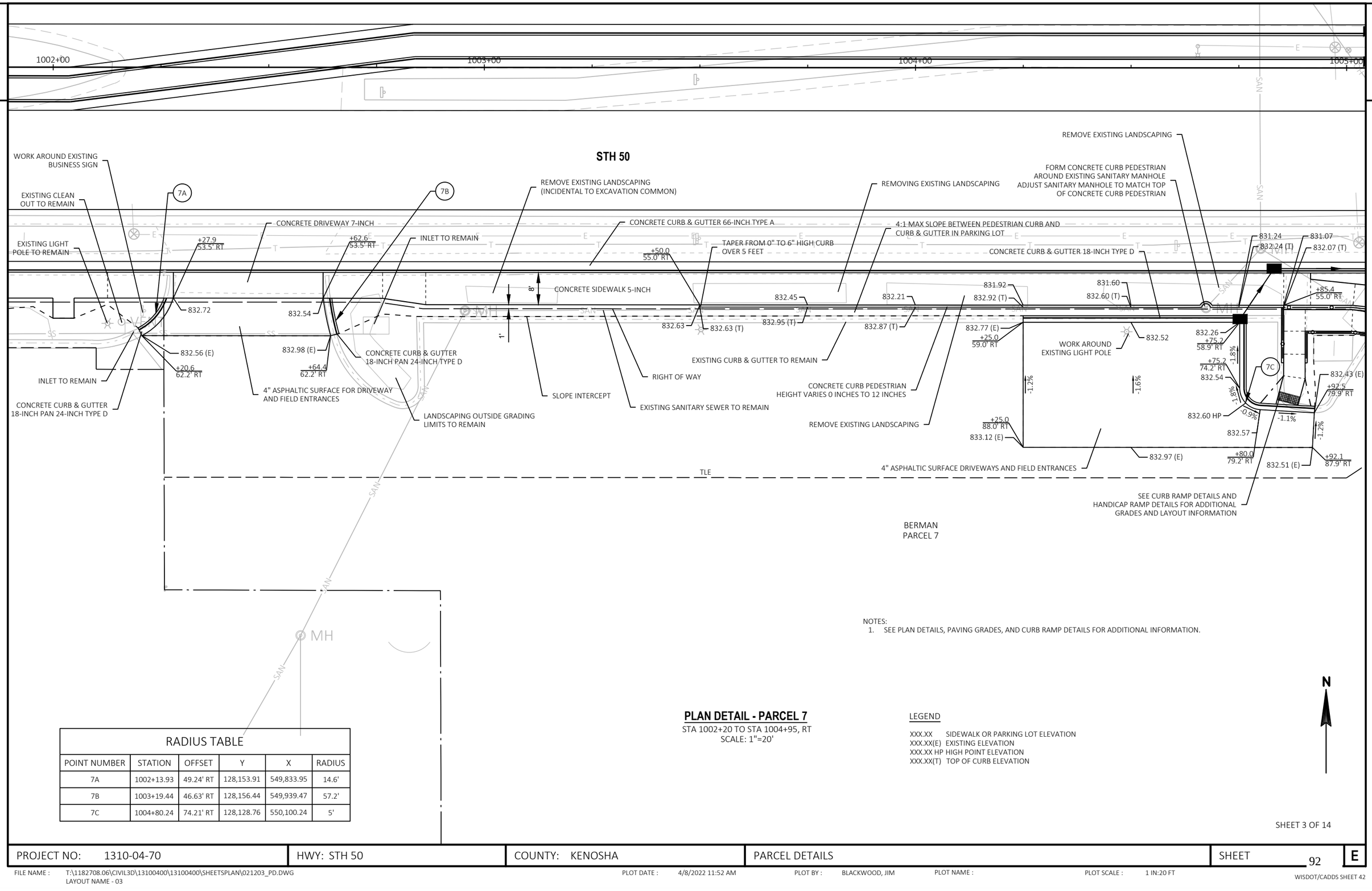

RADIUS TABLE					
POINT NUMBER	STATION	OFFSET	Y	X	RADIUS
7A	1002+13.93	49.24' RT	128,153.91	549,833.95	14.6'
7B	1003+19.44	46.63' RT	128,156.44	549,939.47	57.2'
7C	1004+80.24	74.21' RT	128,128.76	550,100.24	5'

NOTES:
1. SEE PLAN DETAILS, PAVING GRADES, AND CURB RAMP DETAILS FOR ADDITIONAL INFORMATION.

PLAN DETAIL - PARCEL 7
STA 1002+20 TO STA 1004+95, RT
SCALE: 1"=20'

LEGEND

XXX.XX SIDEWALK OR PARKING LOT ELEVATION
XXX.XX(E) EXISTING ELEVATION
XXX.XX HP HIGH POINT ELEVATION
XXX.XX(T) TOP OF CURB ELEVATION

SHEET 3 OF 14

PROJECT NO: 1310-04-70	HWY: STH 50	COUNTY: KENOSHA	PARCEL DETAILS	SHEET 92	E

FILE NAME : T:\1182708.06\CIVIL3D\13100400\13100400\SHEETSPLAN\021203_PD.DWG
LAYOUT NAME - 03
PLOT DATE : 4/8/2022 11:52 AM
PLOT BY : BLACKWOOD, JIM
PLOT NAME :
PLOT SCALE : 1 IN:20 FT

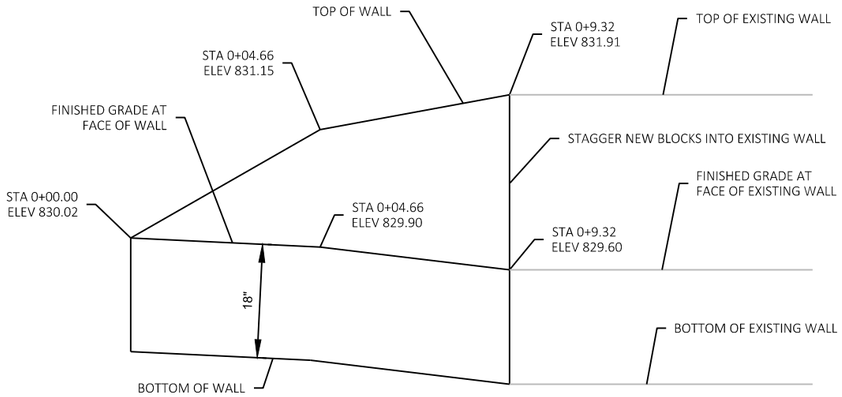

WALL PROFILE VIEW

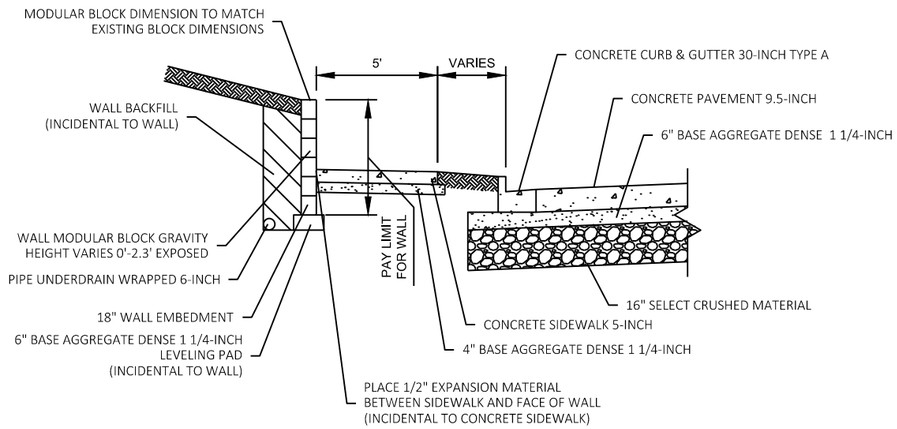

WALL SECTION VIEW

(LOOKING NORTH)

SOIL PARAMETERS

SOIL DESCRIPTION	MOIST UNIT WEIGHT (PCF)	FRICTION ANGLE (DEGREES)	COHESION Cu	FACTORED BEARING RESISTANCE
GRANULAR BACKFILL	130 PCF	30	0 PSF	1500 PSF
RETAINED SOIL	130 PCF	30	0 PSF	1500 PSF

NOTES:
1. REMOVAL OF EXISTING WALL TO BE PAID FOR AS REMOVING RETAINING WALL.
2. RELOCATED WALL TO BE PAID FOR AS WALL MODULAR BLOCK GRAVITY.
3. NEW BLOCKS TO MATCH THE DIMENSIONS, COLOR, AND FACE STYLE OF EXISTING WALL.
4. CONTRACTOR MAY USE EXISTING BLOCKS IN GOOD CONDITION WHEN APPROVED BY THE ENGINEER.
5. PIPE UNDERDRAIN WRAPPED 6-INCH TO BE SLOPED AT 0.5% TO NEAREST INLET. CONNECT TO ANY EXISTING UNDERDRAIN BEHIND EXISTING WALL.

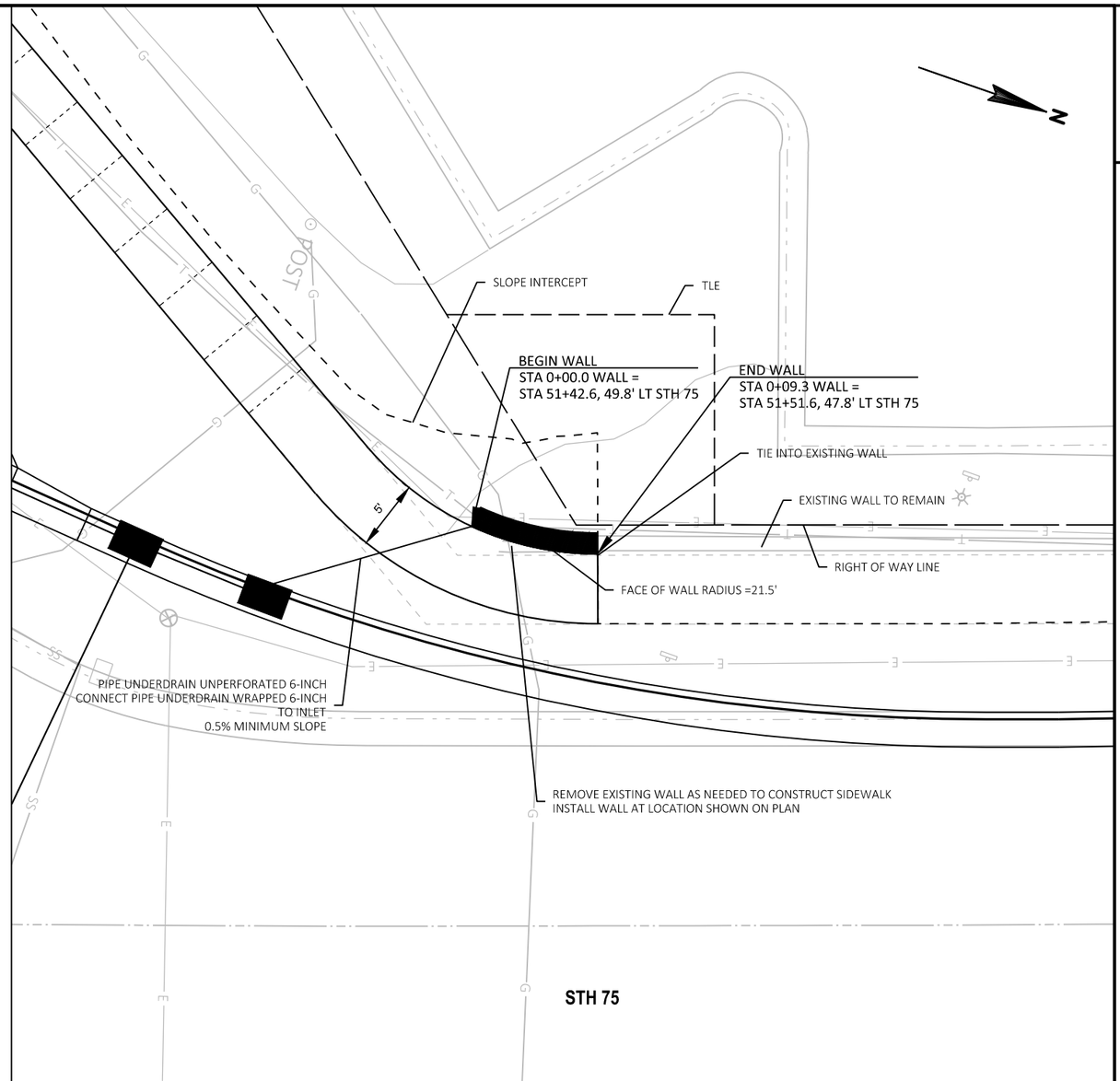

REMOVE AND REPLACE WALL MODULAR BLOCK GRAVITY - PARCEL 5

STA 51+40 TO STA 51+52 LT
STH 75
SCALE: 1"=10'

RADIUS TABLE					
POINT NUMBER	STATION	OFFSET	Y	X	RADIUS
12A	1023+05.55	45.25' LT	128,250.05	551,925.62	4'

LEGEND

XXX.XX SIDEWALK OR PARKING LOT ELEVATION
XXX.XX(E) EXISTING ELEVATION
XXX.XX HP HIGH POINT ELEVATION
XXX.XX(T) TOP OF CURB ELEVATION

N

SCALE: 1"=20'

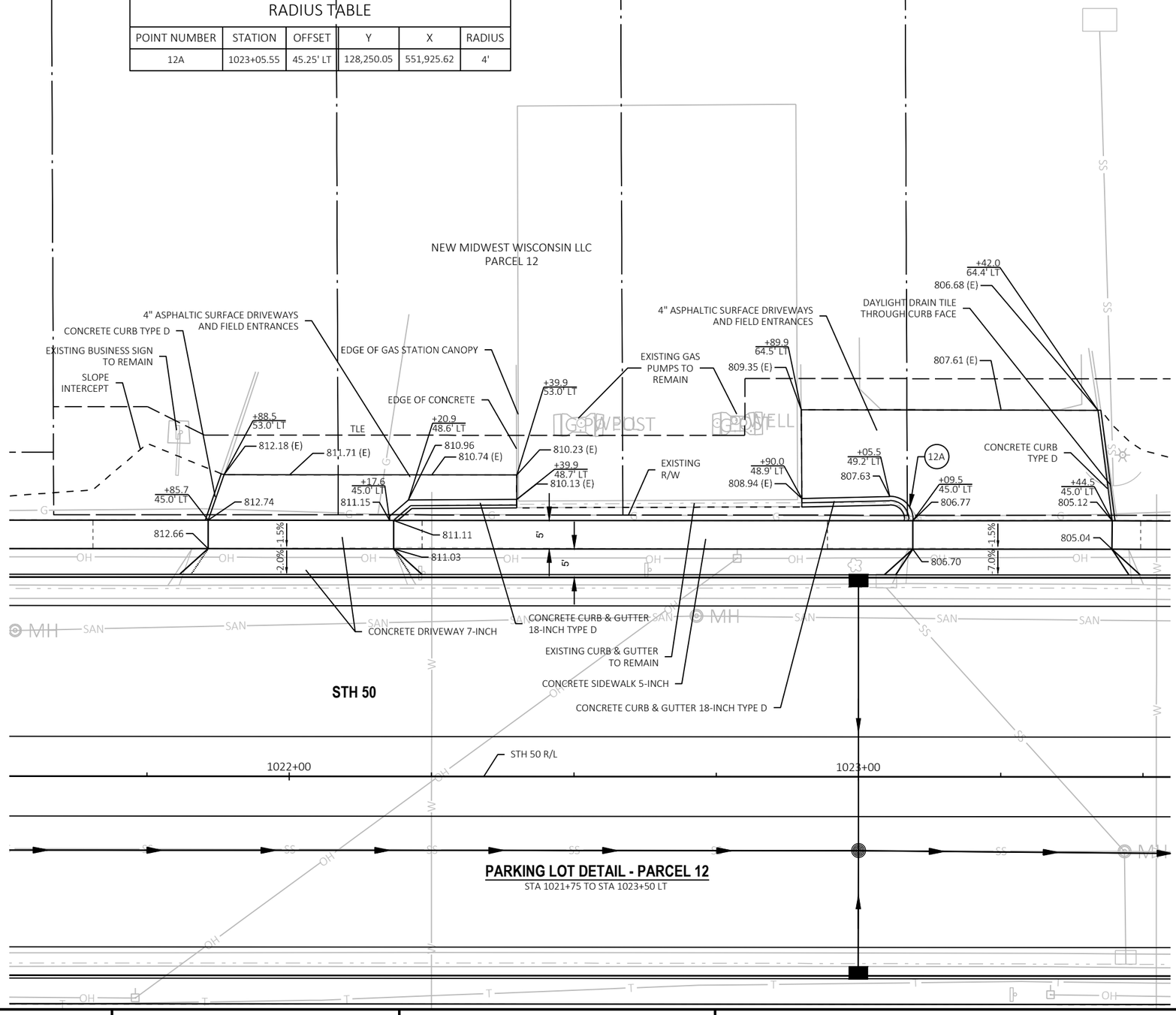

SHEET 5 OF 14

PROJECT NO: 1310-04-70	HWY: STH 50	COUNTY: KENOSHA	PARCEL DETAILS	SHEET 94	E

FILE NAME : T:\1182708.06\CIVIL3D\13100400\13100400\SHEETSPLAN\021203_PD.DWG
LAYOUT NAME - 05
PLOT DATE : 1/18/2022 8:51 AM
PLOT BY : BLACKWOOD, JIM
PLOT NAME :
PLOT SCALE : 1 IN:20 FT

LEGEND

XXX.XX SIDEWALK OR PARKING LOT ELEVATION
XXX.XX(E) EXISTING ELEVATION
XXX.XX HP HIGH POINT ELEVATION
XXX.XX(T) TOP OF CURB ELEVATION

N

SCALE: 1"=20'

LANGENSTROER
PARCEL 13

PAVEMENT SWALE ALONG MATCH POINT

4" ASPHALTIC SURFACE DRIVEWAYS AND FIELD ENTRANCES

CONNECT EXISTING STORM SEWER FROM NORTHWEST TO INLET

RIGHT OF WAY LINE

CONCRETE CURB PEDESTRIAN

+64.7
55.4' LT

804.43 (E)

804.07 (E)

803.13 (E)

801.94 (E)

801.92 (E)

801.69 (E)

+23.7
68.1' LT

801.18 (E)

801.28 (E)

RIM ELEV =800.84

PAVEMENT SWALE

801.03 (E)

+06.3
55.4' LT

801.16 (E)

-1.2%
-1.4%
803.92
803.16
803.16 (T)
0.2%
-4.0%
802.34
803.34 (T)
-4.0%
802.32
802.32 (T)
-3.3%
-4.7%
-3.0%
-2.3%
-8.3%
-6.4%
-2.5%
-6.4%
800.94

804.31
-1.5%
-7.0%
803.14
803.22
802.84
+50.0
45.0' LT
802.35
802.02
801.65

803.85
803.06
803.15
802.76
802.28
801.95
801.57

804.24
+64.4
45.0' LT
+99.4
45.0' LT

CONCRETE DRIVEWAY 7-INCH

CONCRETE SIDEWALK 5-INCH

SEE CURB RAMP DETAILS FOR ADDITIONAL INFORMATION

1024+00

1025+00

STH 50

PARKING LOT DETAIL - PARCEL 13
STA 1023+50 TO STA 1025+35 LT

SHEET 6 OF 14

PROJECT NO: 1310-04-70	HWY: STH 50	COUNTY: KENOSHA	PARCEL DETAILS	SHEET 95	E

FILE NAME : T:\1182708.06\CIVIL3D\13100400\13100400\SHEETSPLAN\021203_PD.DWG
LAYOUT NAME - 06

PLOT DATE : 1/18/2022 8:51 AM PLOT BY : BLACKWOOD, JIM PLOT NAME : PLOT SCALE : 1 IN:20 FT

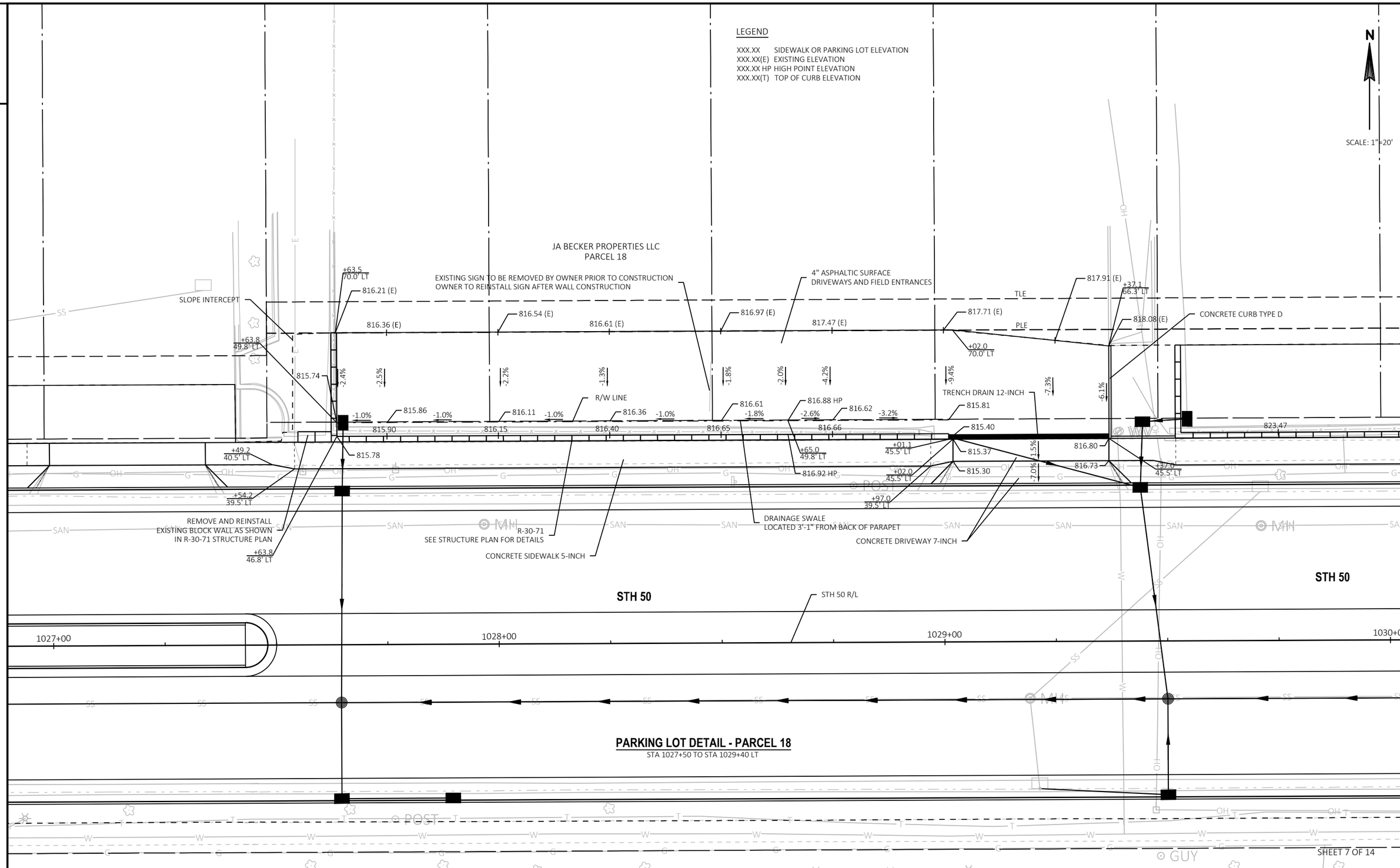

PROJECT NO: 1310-04-70	HWY: STH 50	COUNTY: KENOSHA	PARCEL DETAILS	SHEET 96	E

FILE NAME : T:\1182708.06\CIVIL3D\13100400\13100400\SHEETSPLAN\021203_PD.DWG
LAYOUT NAME - 07
PLOT DATE : 1/18/2022 8:52 AM
PLOT BY : BLACKWOOD, JIM
PLOT NAME :
PLOT SCALE : 1 IN:20 FT
WISDOT/CADDS SHEET 42

NOTE:
CONTOURS ONLY SHOWN FOR GRADING WEST OF R-30-71

LEGEND

XXX.XX SIDEWALK OR PARKING LOT ELEVATION
XXX.XX(E) EXISTING ELEVATION
XXX.XX HP HIGH POINT ELEVATION
XXX.XX(T) TOP OF CURB ELEVATION

N

SCALE: 1"=20'

4" ASPHALTIC SURFACE DRIVEWAYS AND FIELD ENTRANCES

JA BECKER PROPERTIES LLC
PARCEL 19

EXISTING CONCRETE WALL TO REMAIN

EXISTING SIGN TO BE REMOVED BY OWNER PRIOR TO CONSTRUCTION

TRENCH DRAIN 12-INCH

CONCRETE CURB TYPE D

CONCRETE CURB PEDESTRIAN 6-INCH HEIGHT

CONCRETE SIDEWALK 5-INCH

R-30-70 SEE STRUCTURE PLAN FOR ADDITIONAL DETAILS

CONCRETE DRIVEWAY 7-INCH

PAVEMENT SWALE LOCATED 3'-1" FROM BACK OF PARAPET

R/W LINE

TLE

PLE

STH 50

STH 50 R/L

1029+00

1030+00

1031+00

PARKING LOT DETAIL - PARCEL 19
STA 1029+40 TO STA 1031+00 LT

SHEET 8 OF 14

PROJECT NO: 1310-04-70	HWY: STH 50	COUNTY: KENOSHA	PARCEL DETAILS	SHEET 97	E

FILE NAME : T:\1182708.06\CIVIL3D\13100400\13100400\SHEETSPLAN\021203_PD.DWG
LAYOUT NAME - 08

PLOT DATE : 1/18/2022 8:52 AM PLOT BY : BLACKWOOD, JIM PLOT NAME : PLOT SCALE : 1 IN:20 FT

WISDOT/CADDS SHEET 42

RADIUS TABLE					
POINT NUMBER	STATION	OFFSET	Y	X	RADIUS
20A	1031+34.32	54.59' LT	128,261.81	552,754.11	5'*
20B	1031+42.34	58.59' LT	128,265.84	552,762.11	1'*
20C	1031+95.75	58.59' LT	128,266.09	552,815.52	1'*
20D	1032+10.24	58.59' LT	128,266.16	552,830.01	1'*

LEGEND

XXX.XX SIDEWALK OR PARKING LOT ELEVATION
XXX.XX(E) EXISTING ELEVATION
XXX.XX HP HIGH POINT ELEVATION
XXX.XX(T) TOP OF CURB ELEVATION

N

SCALE: 1"=20'

NOTE:
DECORATIVE ROCKS IN PARKING LOT RAISED ISLANDS TO BE INSTALLED BY PROPERTY OWNER. DO NOT RESTORE RAISED ISLAND AREAS.

* ALL RADII ON THIS SHEET MEASURED TO FACE OF CURB

REALTY INCOME PROPERTIES 6 LLC
PARCEL 20

CONCRETE CURB TYPE D
CONCRETE SURFACE DRAIN SEE CONSTRUCTION DETAIL
CONCRETE SIDEWALK 5-INCH
TRENCH DRAIN 12-INCH
CONCRETE DRIVEWAY 7-INCH
PARKING LOT CURB
R/W LINE
TLE
PLF
20A
20B
20C
20D
STH 50
1031+00
1032+00
1033+00

PARKING LOT DETAIL - PARCEL 20
STA 1031+00 TO STA 1033+00 LT

SHEET 9 OF 14

PROJECT NO: 1310-04-70	HWY: STH 50	COUNTY: KENOSHA	PARCEL DETAILS	SHEET 98	E

FILE NAME : T:\1182708.06\CIVIL3D\13100400\13100400\SHEETSPLAN\021203_PD.DWG
LAYOUT NAME - 09
PLOT DATE : 1/18/2022 8:52 AM PLOT BY : BLACKWOOD, JIM PLOT NAME : PLOT SCALE : 1 IN:20 FT

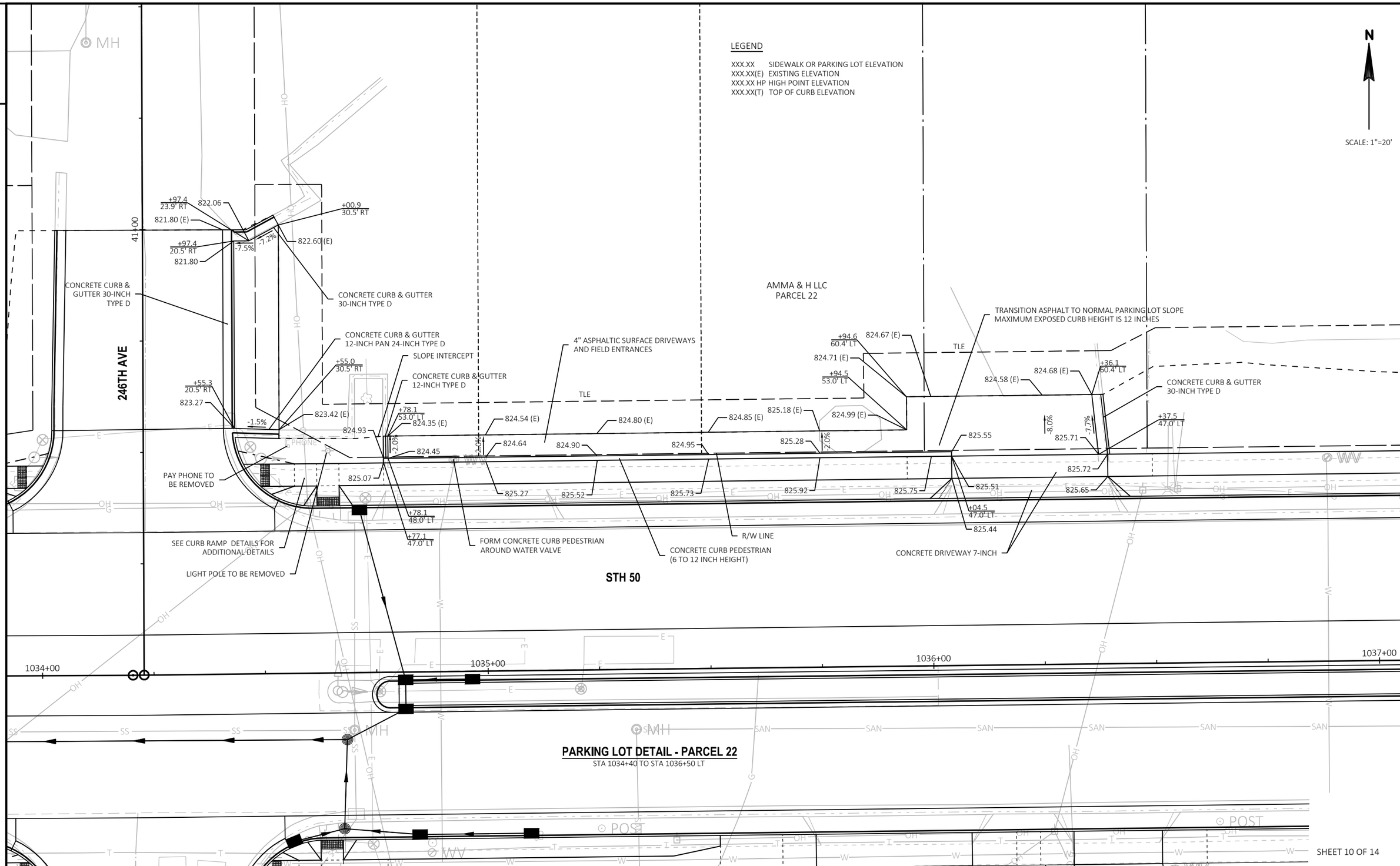

PARKING LOT DETAIL - PARCEL 22
STA 1034+40 TO STA 1036+50 LT

SHEET 10 OF 14

PROJECT NO: 1310-04-70	HWY: STH 50	COUNTY: KENOSHA	PARCEL DETAILS	SHEET 99	E

FILE NAME : T:\1182708.06\CIVIL3D\13100400\13100400\SHEETSPLAN\021203_PD.DWG
LAYOUT NAME - 10
PLOT DATE : 4/8/2022 1:20 PM
PLOT BY : BLACKWOOD, JIM
PLOT NAME :
PLOT SCALE : 1 IN:20 FT
WISDOT/CADDS SHEET 42

2

2

1037+00

1038+00

N

SCALE: 1"=10'

STH 50

SAN SAN SAN SAN SAN SAN SAN MH SAN SAN SAN SAN SAN SAN SAN

CONCRETE DRIVEWAY 7-INCH

PARKING LOT CURB

CONCRETE SIDEWALK 5-INCH

CONCRETE DRIVEWAY 7-INCH

GRASS TERRACE

827.07 826.63 826.76 826.85 827.40 827.51 827.01 826.86 826.80 827.23

-6.0% -1.5% -1.5% -1.5% -5.5% -1.5% -6.6% -1.5% -1.5% -5.7% -1.5%

+40.0 45.0' RT

+99.6 45.0' RT

827.19 826.74 826.96 827.56 (T) 827.51 827.60 827.61 827.62 827.13 826.98 826.92 827.35

-6.0% -5.5% -1.5% -6.6% -5.8%

+85.0 45.0' RT

+02.3 45.0' RT

826.90 826.87 827.06 828.40 (T) 827.90 828.65 (T) 828.15 828.75 (T) 828.25 HP 827.73 (T) 827.23

R/W R/W

-2.1% -5.1% -10.0% -8.4% -3.8% -1.0% -1.9% -1.0% -7.0% -10.4% -8.4% -3.7%

828.05 (E) 827.56 (E) 828.22 (E) 828.29 (E) 828.08 (E)

+45.0 50.0' RT

+92.1 50.0' RT

+92.1 58.0' RT

827.17 (E) 827.53 (E) +45.0 58.0' RT 828.45 (E) 828.58 (E) 828.47 (E) 828.08 (E) 827.84 (E)

+02.4 58.0' RT

4" ASPHALTIC SURFACE DRIVEWAYS AND FIELD ENTRANCES

4" ASPHALTIC SURFACE DRIVEWAYS AND FIELD ENTRANCES

TLE

SLOPE INTERCEPT

LEGEND

XXX.XX SIDEWALK OR PARKING LOT ELEVATION
XXX.XX(E) EXISTING ELEVATION
XXX.XX HP HIGH POINT ELEVATION
XXX.XX(T) TOP OF CURB ELEVATION

PARKING LOT DETAIL - PARCEL 25

STA 1036+95 TO STA 1038+35 RT

SHEET 11 OF 14

PROJECT NO: 1310-04-70	HWY: STH 50	COUNTY: KENOSHA	PARCEL DETAILS	SHEET 100	E

FILE NAME : T:\1182708.06\CIVIL3D\13100400\13100400\SHEETSPLAN\021203_PD.DWG
LAYOUT NAME - 11

PLOT DATE : 1/18/2022 8:52 AM PLOT BY : BLACKWOOD, JIM PLOT NAME : PLOT SCALE : 1 IN:10 FT

WISDOT/CADDS SHEET 42

2

STH 50

N

SCALE: 1"=5'

CONCRETE SIDEWALK 5-INCH

BOTTOM CONCRETE STEP PAY LIMITS

+10.6
45.0' RT

824.27

RAILING PIPE

+15.3
45.0' RT

824.24

CURB ADJACENT TO STAIRS
SEE CONCRETE STEPS
CONSTRUCTION DETAIL

-0.6%

824.27 (B)
824.80 (T)

-0.2%

-1.5%

R/W

-0.1%

-1.5%

824.27 (B)
824.79 (T)

824.81 (B)
825.34 (T)

824.81 (B)
825.33 (T)

SLOPE INTERCEPT

TOP CONCRETE STEP PAY LIMITS

-0.3%

-1.5%

-0.9%

825.35 (E)

825.39 (E)

+10.6
51.8' RT

+15.2
51.8' RT

CONCRETE STEPS

NOTES:
1. FIELD VERIFY ELEVATIONS AFTER STH 50 SIDEWALK IS CONSTRUCTED TO DETERMINE CONSTRUCTED STAIR RISER HEIGHTS
2. STAIR RISERS HEIGHTS SHALL BE EQUAL FOR AN ENTIRE RUN OF STAIRS.

TLE

LEGEND

XXX.XX SIDEWALK ELEVATION
XXX.XX(B) BOTTOM OF STAIR RISER ELEVATION
XXX.XX(E) EXISTING ELEVATION
XXX.XX(T) TOP OF STAIR RISER ELEVATION

PARKING LOT DETAIL - PARCEL 39 WEST

STA 1041+80 TO STA 1042+30 RT

PROJECT NO: 1310-04-70	HWY: STH 50	COUNTY: KENOSHA	PARCEL DETAILS	SHEET 101	E

FILE NAME : T:\1182708.06\CIVIL3D\13100400\13100400\SHEETSPLAN\021203_PD.DWG
LAYOUT NAME - 12
PLOT DATE : 1/18/2022 8:52 AM
PLOT BY : BLACKWOOD, JIM
PLOT NAME :
PLOT SCALE : 1 IN:5 FT
WISDOT/CADDS SHEET 42

2

STH 50

2

N

SCALE: 1"=5'

CONCRETE SIDEWALK 5-INCH

BOTTOM OF STAIR PAY LIMITS

+03.8
45.0' RT

822.02

-5.4%

+07.6
45.0' RT

821.82

EXISTING WALL TO REMAIN

-0.5%

-5.1%(B)

-1.5%

-1.5%(T)

R/W

822.30 (T)
822.03 (B)

822.72 (T)
822.31 (B)

-1.5%

822.24 (T)
821.84 (B)
821.89 (P)

822.67 (T)
822.26 (B)
821.95 (P)

823.14 (T)
822.74 (B)

RAILING PIPE

823.08 (T)
822.68 (B)
822.02 (P)

-1.5%

-1.5%

TOP OF STAIR PAY LIMITS

823.21

-1.5%

823.16 (P)

822.36 (T)

CONCRETE DRIVEWAY 7-INCH

MATCH EXISTING ELEVATION
AT DOORWAY

CONCRETE SIDEWALK 5-INCH

-1.9%

-1.6% (T)

-6.7%(P)

+04.8
65.3' RT

-2.4%

823.44 (E)

823.18 (E)

823.35 (E)

+08.7
65.3' RT

4" ASPHALTIC SURFACE DRIVEWAYS
AND FIELD ENTRANCES

TLE

NOTES:
1. FIELD VERIFY ELEVATIONS AFTER STH 50 SIDEWALK IS CONSTRUCTED TO DETERMINE CONSTRUCTED STAIR RISER HEIGHTS
2. STAIR RISERS HEIGHTS SHALL BE EQUAL FOR AN ENTIRE RUN OF STAIRS.

LEGEND

XXX.XX SIDEWALK ELEVATION
XXX.XX(B) BOTTOM OF STAIR RISER ELEVATION
XXX.XX(P) PARKING LOT ELEVATION
XXX.XX(T) TOP OF STAIR RISER ELEVATION

PARKING LOT DETAIL - PARCEL 39 EAST

STA 1044+05 RT

PROJECT NO: 1310-04-70	HWY: STH 50	COUNTY: KENOSHA	PARCEL DETAILS	SHEET 102	E

FILE NAME : T:\1182708.06\CIVIL3D\13100400\13100400\SHEETSPLAN\021203_PD.DWG
LAYOUT NAME - 13
PLOT DATE : 1/18/2022 8:52 AM
PLOT BY : BLACKWOOD, JIM
PLOT NAME :
PLOT SCALE : 1 IN:5 FT
WISDOT/CADDS SHEET 42

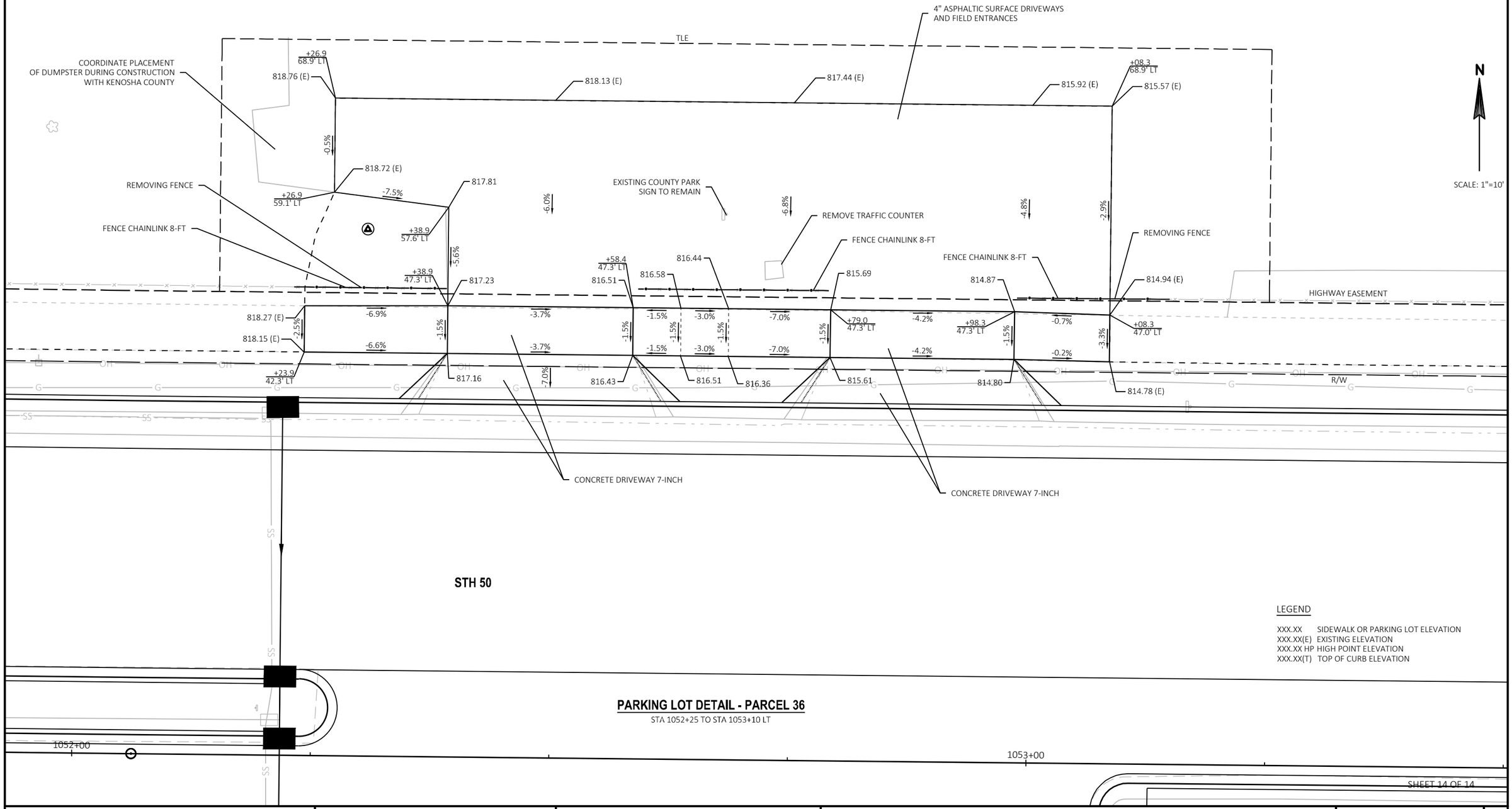

PARKING LOT DETAIL - PARCEL 36

STA 1052+25 TO STA 1053+10 LT

PROJECT NO: 1310-04-70	HWY: STH 50	COUNTY: KENOSHA	PARCEL DETAILS	SHEET 103	E

FILE NAME : T:\1182708.06\CIVIL3D\13100400\13100400\SHEETSPLAN\021203_PD.DWG
LAYOUT NAME - 14
PLOT DATE : 1/18/2022 8:52 AM
PLOT BY : BLACKWOOD, JIM
PLOT NAME :
PLOT SCALE : 1 IN:10 FT
WISDOT/CADDS SHEET 42

2

N

INSTALL SLOTTED CORRUGATED
METAL PIPE SURFACE DRAIN 8-INCH AT JOINT
DAYLIGHT OUTLET INTO MEDIAN SHOULDER FORESLOPE

PT1
12" CPRC CL IV @ 0.5%
UPSTREAM INVERT: 816.59
DOWNSTREAM INVERT: 815.78

T1 STA 986+74.1, 17.6' LT
INLETS 2X2-S
RIM: 818.93
INV: 816.59

BASE AGGREGATE DENSE 1 1/4-INCH

ASPHALTIC FLUME
ASPHALTIC CURB

T2 STA 985+12.5, 8.8' LT
INLETS 2X2-S
RIM: 818.22
INV: 815.78

STH 50

T3 STA 985+12.5, 4.8' LT
APRON ENDWALLS FOR CPRC 12-INCH

2047' R

2050' R

5" BASE AGGREGATE DENSE 3/4-INCH

5" ASPHALTIC SURFACE TEMPORARY

984+00 985+00 986+00 987+00 988+00 989+00

+79.1 14.4' LT
+63.7 5.4' LT
+95.2 17.5' LT
+73.1 14.6' LT 4' R
+87.7 15.0' LT 4' R
+19.6 11.8' LT
+23.4 24.6' RT
+61.3 7.0' RT
+31.7 10.6' RT
+26.8 3.8' LT
+26.8 0.7' LT

818.08 (E) 818.27 (E) 818.42 (E) 818.58 (E) 818.73 (E) 818.87 (E) 818.94 (E) 819.01 (E) 819.10 (E) 819.26 (E) 819.44 (E) 819.60 (E) 819.64 (E) 819.67 (E) 819.84 (E)
818.13 818.38 818.61 818.74 818.84 818.98 819.21 819.30 819.53 819.42 819.36 819.56 819.72 819.84 819.85 819.79 819.80
819.06 819.36 819.50 819.60 819.63 819.70 819.78 819.90 819.95 (E)
818.59 818.75 818.89 819.03 819.17 819.26 819.36 819.50 819.64 (E) 819.74 (E) 819.83 (E) 819.91 (E) 820.00 (E) 820.06 (E) 820.09 (E) 820.12 (E)
818.60 (E) 818.77 (E) 818.93 (E) 819.09 (E) 819.26 (E) 819.38 (E) 819.52 (E)

-2.0% -2.2% -2.0% -3.3% -2.0% -2.2% -2.0% -1.2% -1.6% -2.0% -1.8% -1.2%

5' 5'

WEST CROSSOVER DETAIL

PROJECT NO: 1310-04-70	HWY: STH 50	COUNTY: KENOSHA	PARCEL DETAILS	SHEET 104	E

FILE NAME : T:\1182708.06\CIVIL3D\13100400\13100400\SHEETSPLAN\021204_PD WEST CROSSOVER.DWG
LAYOUT NAME - Markings
PLOT DATE : 1/18/2022 8:53 AM PLOT BY : BLACKWOOD, JIM PLOT NAME : PLOT SCALE : 1 IN:40 FT

2

N

1017+00 1018+00 1019+00 1020+00 1021+00 1022+00

823.65
824.00 (E)
+85.4
7.0' RT
823.69 (E)
823.01
+39.7
0.8' RT
823.10 (E)
822.59
822.28
822.43 (E)
+72.2
4.1' LT
821.56
821.78 (E)
+72.2
7.0' RT
820.78 (E)
+93.5
7.3' LT
820.54 (E)
-3.0%
-3.0%
820.75
821.01
819.63 (E)
819.75
818.76 (E)
+66.5
7.3' LT
818.81
818.20 (E)
2.0%

ASPHALTIC SURFACE TEMPORARY

STH 50

STAGE 3 MIDDLE CROSSOVER DETAIL

PROJECT NO: 1310-04-70	HWY: STH 50	COUNTY: KENOSHA	PARCEL DETAILS	SHEET 105	E

FILE NAME : T:\1182708.06\CIVIL3D\13100400\13100400\SHEETSPLAN\021205_PD MIDDDLE CROSSOVER.DWG
LAYOUT NAME - 01

PLOT DATE : 1/18/2022 8:53 AM PLOT BY : BLACKWOOD, JIM PLOT NAME : PLOT SCALE : 1 IN:40 FT

2

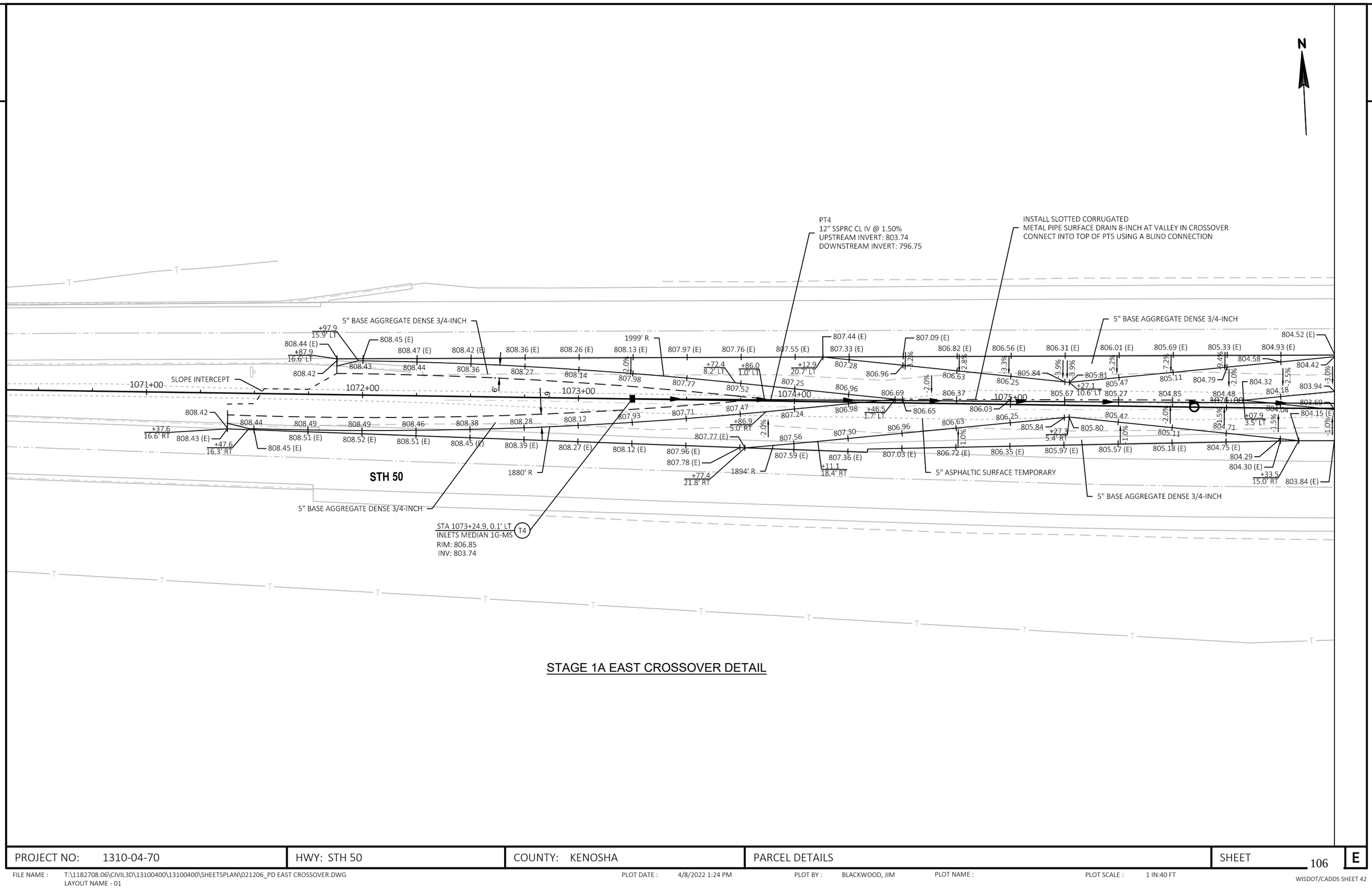

STAGE 1A EAST CROSSOVER DETAIL

PROJECT NO: 1310-04-70	HWY: STH 50	COUNTY: KENOSHA	PARCEL DETAILS	SHEET 106	E

FILE NAME : T:\1182708.06\CIVIL3D\13100400\13100400\SHEETSPLAN\021206_PD EAST CROSSOVER.DWG
LAYOUT NAME - 01

PLOT DATE : 4/8/2022 1:24 PM PLOT BY : BLACKWOOD, JIM PLOT NAME : PLOT SCALE : 1 IN:40 FT

2

N

PT4
12" SSPRC CL IV @ 1.50%
UPSTREAM INVERT: 803.74
DOWNSTREAM INVERT: 796.75

5" ASPHALTIC SURFACE TEMPORARY

5" BASE AGGREGATE DENSE 3/4-INCH

804.52 (E)
+58.1
24.7' LT
804.37 (E)
804.09 (E)
803.64 (E)
803.16 (E)
802.62 (E)
801.99 (E)
+79.4
19.3' LT
801.88 (E)
804.42
803.94
803.69
803.24
803.26
803.64
802.85
802.41
801.96
1077+00
1078+00
802.76
802.19
801.63
801.09
801.11 (E)
800.86 (E)
803.36 (E)
802.85 (E)
802.28 (E)
803.84 (E)
801.70 (E)
1879' R
+85.5
14.8' RT
+28.2
8.9' RT
3.0%
-1.0%
-1.5%
-2.0%

T5 STA 1077+90.7, 0.1' LT
INLETS MEDIAN 1G-MS
RIM: 799.26
INV: 796.75

CONNECT TO EXISTING CMCP
FIELD VERIFY ELEVATION OF EXISTING CMCP
PRIOR TO ORDERING STRUCTURE

STH 50

5" BASE AGGREGATE DENSE 3/4-INCH

5" ASPHALTIC SURFACE TEMPORARY

STAGE 1A EAST CROSSOVER DETAIL

PROJECT NO: 1310-04-70	HWY: STH 50	COUNTY: KENOSHA	PARCEL DETAILS	SHEET 107	E

FILE NAME : T:\1182708.06\CIVIL3D\13100400\13100400\SHEETSPLAN\021206_PD EAST CROSSOVER.DWG
LAYOUT NAME - 02
PLOT DATE : 4/8/2022 1:24 PM
PLOT BY : BLACKWOOD, JIM
PLOT NAME :
PLOT SCALE : 1 IN:40 FT
WISDOT/CADDS SHEET 42

POINT TABLE					
POINT NUMBER	STATION	OFFSET	ELEVATION	y	X
100	999+78.23	50.32' LT	831.23	128,253.61	549598.32
101	999+78.23	45.31' LT	831.16	128,248.61	549598.32
102	999+83.23	50.50' LT	830.89	128,253.79	549603.32
103	999+83.23	45.50' LT	830.81	128,248.79	549603.32
104	999+88.23	50.50' LT	830.96	128,253.79	549608.32
105	999+88.23	45.50' LT	830.89	128,248.79	549608.32
106	999+98.23	50.50' LT	831.54	128,253.78	549618.32
107	999+98.23	45.50' LT	831.47	128,248.78	549618.32
108	999+83.25	38.50' LT	830.46	128,241.79	549603.33
109	999+88.25	38.51' LT	830.54	128,241.80	549608.33
114	999+83.25	2.50' RT	831.14	128,200.79	549603.30
115	999+88.25	2.50' RT	831.19	128,200.79	549608.30
116	999+88.25	7.50' RT	831.48	128,195.79	549608.30
117	999+83.25	7.50' RT	831.40	128,195.79	549603.30

NOTES:
1. CONTRACTOR TO FIELD VERIFY ELEVATIONS, GRADES, SLOPES, LENGTHS, AND MATCHPOINTS PRIOR TO CURB RAMP CONSTRUCTION.
2. THE ENGINEER MAY ADJUST ELEVATIONS TO FIT FIELD CONDITIONS WITHIN THE CONDITIONS OF THE STANDARD DETAIL DRAWINGS.
3. DASHED LINES SHOWN FOR PROPOSED SIDEWALK ARE FOR INFORMATION ONLY AND DO NOT INDICATE EXACT JOINT LOCATIONS.
4. THE CROSS SLOPE OF THE GUTTER SHALL BE 4% UNLESS OTHERWISE SHOWN.
5. THE MAXIMUM GRADE BREAK BETWEEN THE GUTTER PAN AND CURB RAMP SHALL BE 11%.
6. SIDEWALK AND CURB RAMP CROSS SLOPE SHALL NOT EXCEED 2%.
7. SIDEWALK AND CURB RAMP RUNNING SLOPE SHALL NOT EXCEED 8.33% (12H:1V).

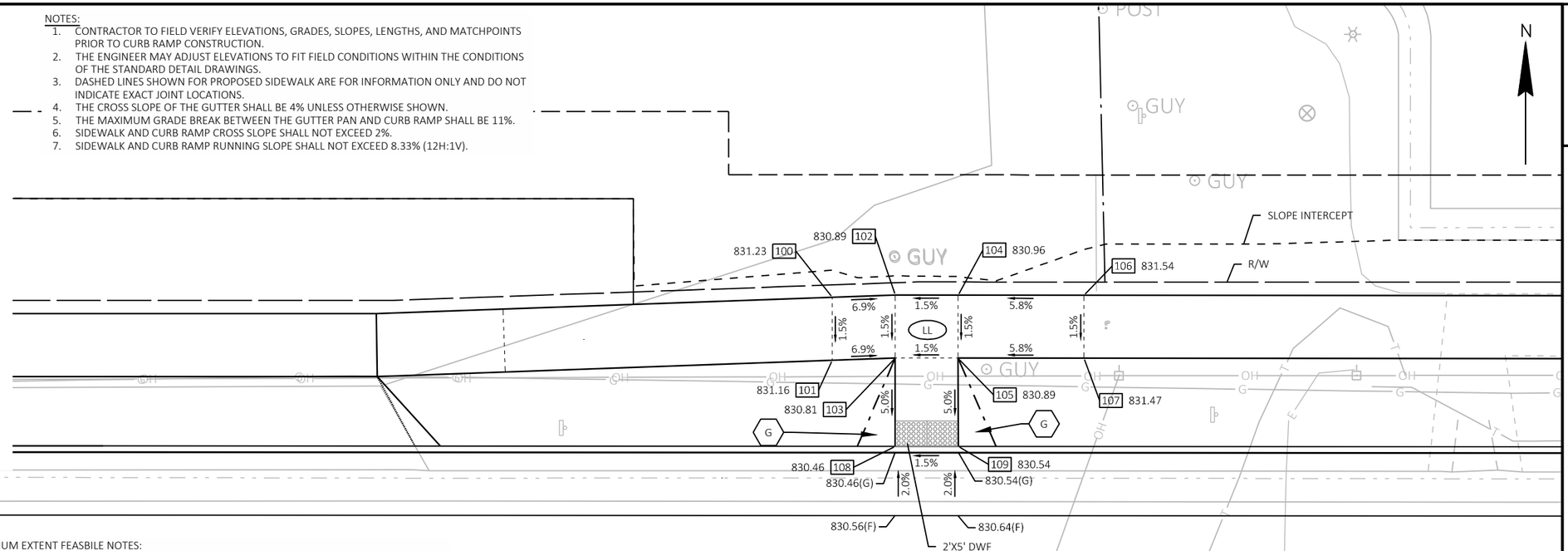

MAXIMUM EXTENT FEASBILE NOTES:
1. DETECTABLE WARNING FIELDS CANNOT BE PLACED IN THE STH 50 & CTH F EAST MEDIAN BECAUSE THE DISTANCE BETWEEN THE TWO BACK OF CURBS IS LESS THAN 6 FEET. A MINIMUM OF TWO FEET IS REQUIRED BETWEEN DECTABLE WARNING FIELD INSTALLATIONS.

LEGEND

XXX.XX	SIDEWALK ELEVATION
XXX.XX(F)	C&G FLANGE ELEVATION
XXX.XX(G)	C&G FLOWLINE ELEVATION
XXX.XX(T)	TOP OF CURB ELEVATION
LL	LEVEL LANDING
100	POINT NUMBER
	SLOPE INTERCEPTS
	DETECTABLE WARNING FIELD
MEF	MAXIMUM EXTENT FEASIBLE TECHNICAL INFEASIBILITY PRESENT
G	GRADED FLARE (6:1 MAX SLOPE)
P	PAVED FLARE (10:1 MAX SLOPE)

STH 50 & CTH F - NORTHEAST QUADRANT

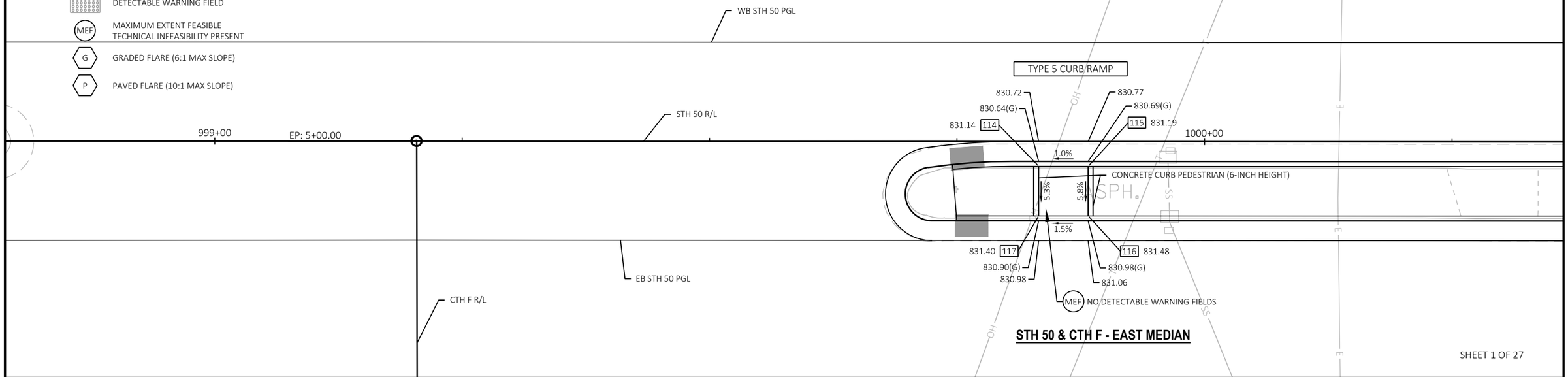

STH 50 & CTH F - EAST MEDIAN

SHEET 1 OF 27

PROJECT NO: 1310-04-70	HWY: STH 50	COUNTY: KENOSHA	CURB RAMP DETAILS	SHEET 108	E

FILE NAME : T:\1182708.06\CIVIL3D\13100400\13100400\SHEETSPLAN\021301_CR.DWG
LAYOUT NAME - 01-F-NE
PLOT DATE : 1/18/2022 10:03 AM
PLOT BY : BLACKWOOD, JIM
PLOT NAME :
PLOT SCALE : 1 IN:10 FT
WISDOT/CADDS SHEET 42

2

LEGEND

XXX.XX	SIDEWALK ELEVATION
XXX.XX(F)	C&G FLANGE ELEVATION
XXX.XX(G)	C&G FLOWLINE ELEVATION
XXX.XX(T)	TOP OF CURB ELEVATION
LL	LEVEL LANDING
100	POINT NUMBER
	SLOPE INTERCEPTS
	DETECTABLE WARNING FIELD
MEF	MAXIMUM EXTENT FEASIBLE TECHNICAL INFEASIBILITY PRESENT
G	GRADED FLARE (6:1 MAX SLOPE)
P	PAVED FLARE (10:1 MAX SLOPE)

NOTES:
1. CONTRACTOR TO FIELD VERIFY ELEVATIONS, GRADES, SLOPES, LENGTHS, AND MATCHPOINTS PRIOR TO CURB RAMP CONSTRUCTION.
2. THE ENGINEER MAY ADJUST ELEVATIONS TO FIT FIELD CONDITIONS WITHIN THE CONDITIONS OF THE STANDARD DETAIL DRAWINGS.
3. DASHED LINES SHOWN FOR PROPOSED SIDEWALK ARE FOR INFORMATION ONLY AND DO NOT INDICATE EXACT JOINT LOCATIONS.
4. THE CROSS SLOPE OF THE GUTTER SHALL BE 4% UNLESS OTHERWISE SHOWN.
5. THE MAXIMUM GRADE BREAK BETWEEN THE GUTTER PAN AND CURB RAMP SHALL BE 11%.
6. SIDEWALK AND CURB RAMP CROSS SLOPE SHALL NOT EXCEED 2%.
7. SIDEWALK AND CURB RAMP RUNNING SLOPE SHALL NOT EXCEED 8.33% (12H:1V).

MAXIMUM EXTENT FEASBILE NOTES:
1. LOWER LANDING OF SOUTHWEST RADIUS CANNOT BE A LEVEL LANDING DUE TO THE SLOPE OF THE C&G AND THE GEOMETRY OF THE LOWER LANDING.

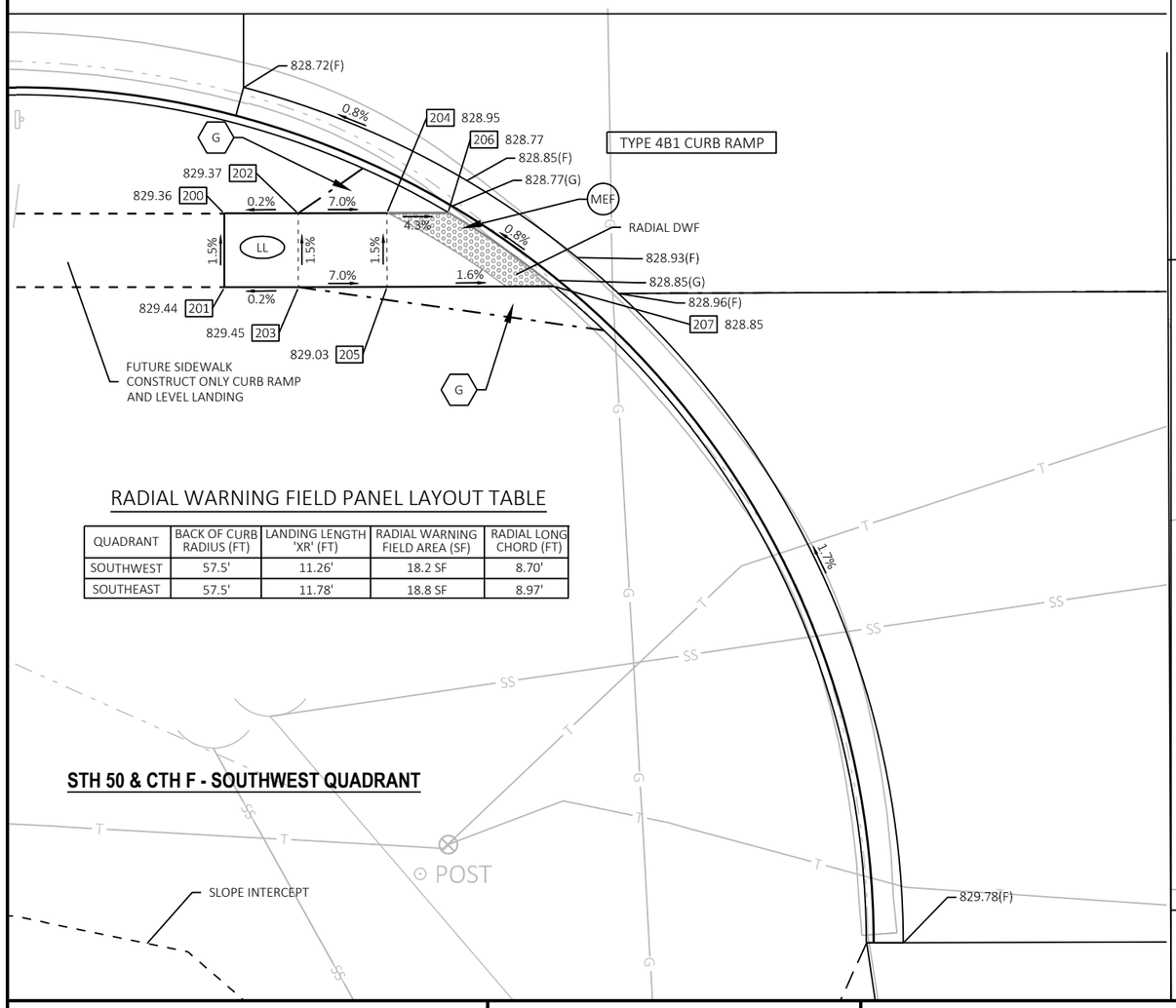

RADIAL WARNING FIELD PANEL LAYOUT TABLE

QUADRANT	BACK OF CURB RADIUS (FT)	LANDING LENGTH 'XR' (FT)	RADIAL WARNING FIELD AREA (SF)	RADIAL LONG CHORD (FT)
SOUTHWEST	57.5'	11.26'	18.2 SF	8.70'
SOUTHEAST	57.5'	11.78'	18.8 SF	8.97'

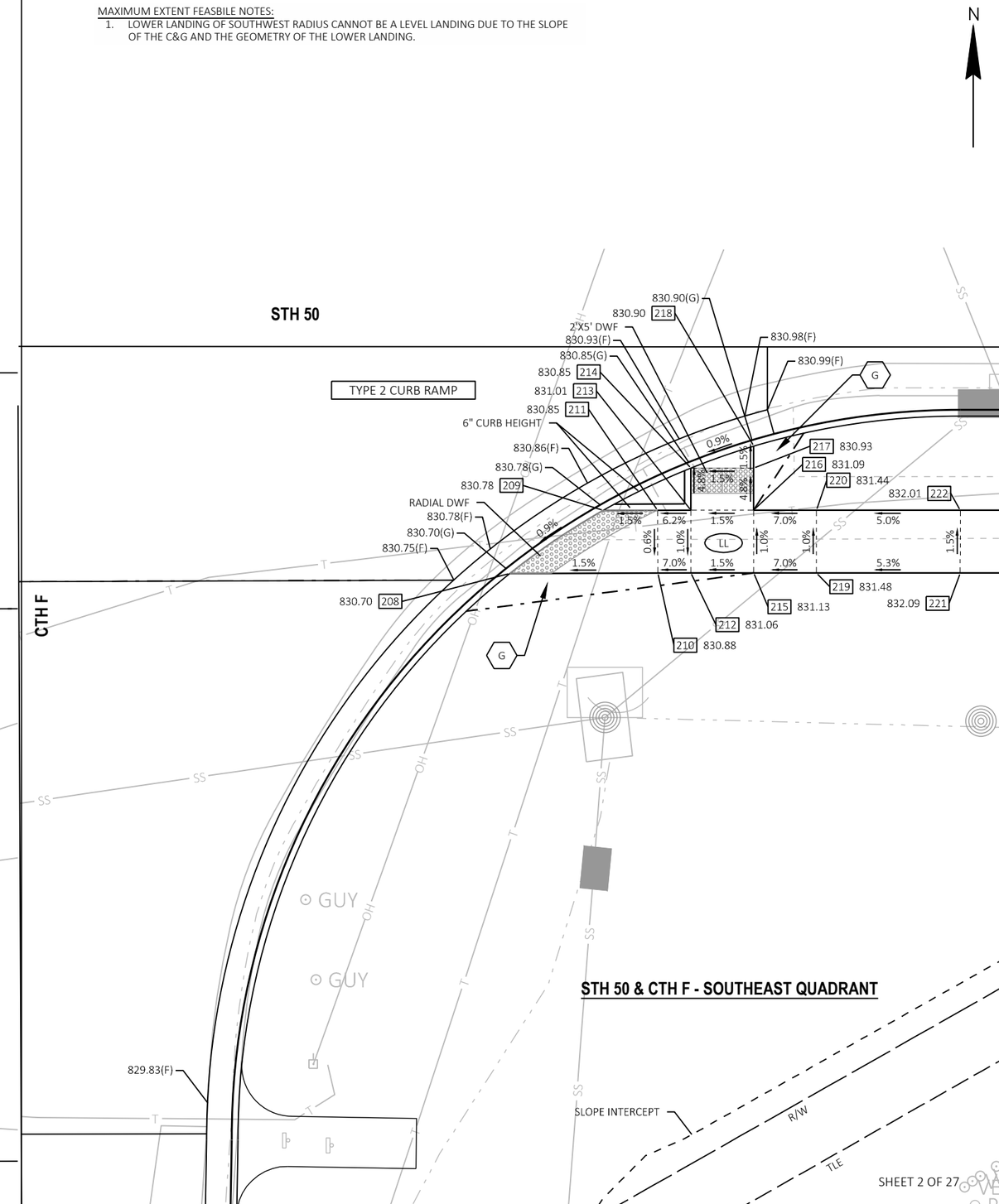

SHEET 2 OF 27

PROJECT NO: 1310-04-70	HWY: STH 50	COUNTY: KENOSHA	CURB RAMP DETAILS	SHEET 109	E

FILE NAME : T:\1182708.06\CIVIL3D\13100400\13100400\SHEETSPLAN\021301_CR.DWG
LAYOUT NAME - 02-F-S
PLOT DATE : 1/18/2022 10:04 AM
PLOT BY : BLACKWOOD, JIM
PLOT NAME :
PLOT SCALE : 1 IN:10 FT
WISDOT/CADDS SHEET 42

POINT TABLE					
POINT NUMBER	STATION	OFFSET	ELEVATION	y	X
200	998+50.68	46.52' RT	829.36	128,156.80	549470.75
201	998+50.70	51.52' RT	829.44	128,151.80	549470.77
202	998+55.68	46.50' RT	829.37	128,156.82	549475.75
203	998+55.70	51.50' RT	829.45	128,151.82	549475.77
204	998+61.68	46.48' RT	828.95	128,156.84	549481.75
205	998+61.70	51.48' RT	829.03	128,151.84	549481.77
206	998+65.82	46.46' RT	828.77	128,156.86	549485.89
207	998+72.96	51.44' RT	828.85	128,151.88	549493.03
208	999+68.83	51.06' RT	830.70	128,152.24	549588.85
209	999+76.26	46.03' RT	830.78	128,157.26	549596.28
210	999+80.61	51.01' RT	830.88	128,152.28	549600.64
211	999+80.59	46.01' RT	830.85	128,157.28	549600.62

POINT TABLE					
POINT NUMBER	STATION	OFFSET	ELEVATION	y	X
212	999+83.25	51.00' RT	831.06	128,152.29	549603.27
213	999+83.25	46.00' RT	831.01	128,157.29	549603.27
214	999+83.25	42.65' RT	830.85	128,160.64	549603.28
215	999+88.25	51.00' RT	831.13	128,152.29	549608.27
216	999+88.25	46.00' RT	831.09	128,157.29	549608.27
217	999+88.25	42.65' RT	830.93	128,160.64	549608.28
218	999+88.25	40.89' RT	830.90	128,162.40	549608.28
219	999+93.25	51.00' RT	831.48	128,152.28	549613.27
220	999+93.25	46.00' RT	831.44	128,157.28	549613.27
221	1000+04.70	51.00' RT	832.09	128,152.28	549624.73
222	1000+04.70	46.00' RT	832.01	128,157.28	549624.73

CURB RAMP POINTS - STH 50 & CTH F - SOUTHWEST AND SOUTHESAT QUADRANT

2

LEGEND

XXX.XX	SIDEWALK ELEVATION
XXX.XX(F)	C&G FLANGE ELEVATION
XXX.XX(G)	C&G FLOWLINE ELEVATION
XXX.XX(T)	TOP OF CURB ELEVATION
LL	LEVEL LANDING
100	POINT NUMBER
	SLOPE INTERCEPTS
	DETECTABLE WARNING FIELD
MEF	MAXIMUM EXTENT FEASIBLE TECHNICAL INFEASIBILITY PRESENT
G	GRADED FLARE (6:1 MAX SLOPE)
P	PAVED FLARE (10:1 MAX SLOPE)

N

NOTES:
1. CONTRACTOR TO FIELD VERIFY ELEVATIONS, GRADES, SLOPES, LENGTHS, AND MATCHPOINTS PRIOR TO CURB RAMP CONSTRUCTION.
2. THE ENGINEER MAY ADJUST ELEVATIONS TO FIT FIELD CONDITIONS WITHIN THE CONDITIONS OF THE STANDARD DETAIL DRAWINGS.
3. DASHED LINES SHOWN FOR PROPOSED SIDEWALK ARE FOR INFORMATION ONLY AND DO NOT INDICATE EXACT JOINT LOCATIONS.
4. THE CROSS SLOPE OF THE GUTTER SHALL BE 4% UNLESS OTHERWISE SHOWN.
5. THE MAXIMUM GRADE BREAK BETWEEN THE GUTTER PAN AND CURB RAMP SHALL BE 11%.
6. SIDEWALK AND CURB RAMP CROSS SLOPE SHALL NOT EXCEED 2%.
7. SIDEWALK AND CURB RAMP RUNNING SLOPE SHALL NOT EXCEED 8.33% (12H:1V).

RADIAL WARNING FIELD PANEL LAYOUT TABLE

QUADRANT	BACK OF CURB RADIUS (FT)	LANDING LENGTH 'XR' (FT)	RADIAL WARNING FIELD AREA (SF)	RADIAL LONG CHORD (FT)
NORTHWEST	57.0'	10.07'	16.9 SF	8.13'

TYPE 4B1 CURB RAMP

TYPE 6 CURB RAMPS

STH 50

STH 75

STH 75 R/L

R/W

STH 50 & STH 75- NORTHWEST QUADRANT

SHEET 4 OF 27

PROJECT NO: 1310-04-70	HWY: STH 50	COUNTY: KENOSHA	CURB RAMP DETAILS	SHEET 111	E

FILE NAME : T:\1182708.06\CIVIL3D\13100400\13100400\SHEETSPLAN\021301_CR.DWG
LAYOUT NAME - 03-75-NW
PLOT DATE : 1/18/2022 10:04 AM
PLOT BY : BLACKWOOD, JIM
PLOT NAME :
PLOT SCALE : ##########

WISDOT/CADDS SHEET 42

2

POINT TABLE					
POINT NUMBER	STATION	OFFSET	ELEVATION	y	X
300	1004+36.62	50.39' LT	831.70	128,253.39	550056.71
301	1004+36.41	45.48' LT	831.56	128,248.48	550056.49
302	1004+41.63	50.53' LT	831.52	128,253.52	550061.72
303	1004+41.41	45.49' LT	831.45	128,248.48	550061.50
304	1004+51.05	51.38' LT	830.96	128,254.37	550071.14
305	1004+51.50	46.40' LT	830.89	128,249.40	550071.59
306	1004+56.70	51.86' LT	830.57	128,254.85	550076.79
307	1004+56.48	46.86' LT	830.64	128,249.85	550076.57
308	1004+61.71	51.86' LT	830.51	128,254.84	550081.80
309	1004+61.49	46.86' LT	830.57	128,249.84	550081.57
310	1004+58.12	57.85' LT	830.63	128,260.83	550078.21
311	1004+62.86	56.72' LT	830.56	128,259.71	550082.95
312	1004+67.02	51.39' LT	830.13	128,254.37	550087.10
313	1004+66.58	46.41' LT	830.21	128,249.39	550086.67
314	1004+70.23	46.09' LT	830.14	128,249.07	550090.32
315	1004+77.05	50.52' LT	829.98	128,253.49	550097.14
316	1004+61.86	42.32' LT	830.86	128,245.30	550081.94
317	1004+84.77	57.56' LT	829.85	128,260.53	550104.86
318	1004+59.69	64.49' LT	830.70	128,267.48	550079.79
319	1004+64.51	63.35' LT	830.63	128,266.33	550084.61
320	1004+61.24	70.99' LT	831.01	128,273.98	550081.34
321	1004+66.09	69.81' LT	830.96	128,272.79	550086.19
322	1004+64.96	77.27' LT	831.15	128,280.25	550085.07
323	1004+69.08	74.79' LT	831.07	128,277.77	550089.18
324	1004+84.09	109.46' LT	830.22	128,312.43	550104.21
325	1004+88.40	106.93' LT	830.13	128,309.90	550108.53

POINT TABLE					
POINT NUMBER	STATION	OFFSET	ELEVATION	y	X
326	1004+23.74	39.00' LT	831.60	128,242.01	550043.83
327	1004+67.17	60.85' LT	830.13	128,263.83	550087.27
328	1004+74.73	68.07' LT	829.99	128,271.04	550094.82
329	1004+81.72	74.75' LT	829.75	128,277.72	550101.82
330	1004+93.67	86.18' LT	829.20	128,289.14	550113.78
331	1004+97.53	95.80' LT	828.74	128,298.76	550117.64
332	1004+98.07	105.89' LT	828.79	128,308.85	550118.19
333	1004+81.38	50.14' LT	830.01	128,253.11	550101.47
334	1004+92.86	64.58' LT	829.38	128,267.55	550112.96
335	1004+67.52	81.57' LT	831.20	128,284.55	550087.62
336	1004+71.66	79.07' LT	831.13	128,282.05	550091.77
337	1004+70.07	85.86' LT	831.17	128,288.84	550090.18
338	1004+74.23	83.37' LT	831.10	128,286.34	550094.34
339	1004+72.62	90.16' LT	831.06	128,293.14	550092.74
340	1004+76.81	87.65' LT	830.99	128,290.62	550096.92
341	1004+75.18	94.46' LT	830.91	128,297.44	550095.29
342	1004+79.39	91.93' LT	830.84	128,294.90	550099.50
343	1004+77.73	98.76' LT	830.74	128,301.73	550097.85
344	1004+81.95	96.22' LT	830.66	128,299.19	550102.07
345	1004+80.29	103.06' LT	830.54	128,306.03	550100.41
346	1004+84.54	100.50' LT	830.47	128,303.47	550104.66
347	1005+10.22	68.78' LT	829.30	128,271.74	550130.32
348	1005+08.38	47.78' LT	829.75	128,250.73	550128.47
349	1005+07.95	42.79' LT	829.83	128,245.75	550128.03
350	1005+07.68	39.81' LT	829.93	128,242.76	550127.77
351	1005+08.59	37.14' LT	830.03	128,240.09	550128.67

POINT TABLE					
POINT NUMBER	STATION	OFFSET	ELEVATION	y	X
352	1005+11.17	36.00' LT	830.00	128,238.95	550131.25
353	1005+14.65	36.00' LT	829.94	128,238.95	550134.73
354	1005+19.65	36.00' LT	829.84	128,238.95	550139.73
355	1005+25.10	36.00' LT	829.75	128,238.94	550145.18
356	1005+28.35	40.78' LT	829.60	128,243.72	550148.44
357	1005+26.59	45.27' LT	829.55	128,248.21	550146.68
358	1005+24.76	49.92' LT	829.49	128,252.87	550144.85
359	1005+16.96	69.76' LT	829.29	128,272.71	550137.06
360	1005+13.21	71.94' LT	829.29	128,274.89	550133.31
361	1005+10.87	47.56' LT	829.67	128,250.51	550130.96
362	1005+10.44	42.58' LT	829.77	128,245.53	550130.52
363	1005+14.09	47.27' LT	829.64	128,250.23	550134.18
364	1005+13.66	42.29' LT	829.71	128,245.24	550133.74
365	1005+14.65	42.21' LT	829.73	128,245.16	550134.74
366	1005+14.65	41.21' LT	829.74	128,244.16	550134.73
367	1005+14.65	38.50' LT	829.86	128,241.45	550134.73
368	1005+19.65	38.50' LT	829.76	128,241.45	550139.73
369	1005+19.65	41.21' LT	829.67	128,244.15	550139.73
370	1005+19.65	42.73' LT	829.64	128,245.67	550139.74
371	1005+16.83	47.04' LT	829.59	128,249.98	550136.92
372	1005+19.88	48.11' LT	829.55	128,251.06	550139.96
373	1005+21.54	43.39' LT	829.61	128,246.34	550141.62
374	1005+22.43	49.01' LT	829.41	128,251.95	550142.52
375	1005+24.26	44.35' LT	829.47	128,247.30	550144.35

CURB RAMP POINTS - STH 50 & STH 75 - NORTHWEST QUADRANT

MAXIMUM EXTENT FEASBILE NOTES:

1. THE SIDEWALK CROSS SLOPE WILL BE GREATER THAN 1.5% FOR THE NORTH-SOUTH CROSSWALK. THE CROSSWALK IS ACROSS THE MAJOR ROADWAY SO A CROSS SLOPE OF GREATER THAN 1.5% IS ALLOWED TO PERMIT A SMOOTH ROADWAY PROFILE ALONG THE MAJOR ROADWAY.

STH 75

TYPE 3 CURB RAMP

TYPE 3 CURB RAMP

STH 75 R/L

STH 50 R/L

STH 50

TLE

R/W

SLOPE INTERCEPT

828.19(F)
828.53 400
401 828.63
828.52 404
405 828.59
828.15(F)
828.06 403
408 828.55
828.06(G)
828.14(F)
828.05 402
2'x5' DWF
828.03(G)
410 828.69
828.11(F)
412 828.63
828.02 406
828.48 407
413 828.51
828.61 409
828.44 414
415 828.18
828.55 411
827.96(F)
417 827.95
419 827.70
422 827.63
425 827.65
828.10 416
827.88 418
426 827.58
423 827.55
827.63 420
827.32(G)
827.40(F)
827.10 421
424 827.01
827.01(G)
827.10(G)
827.48

LEGEND

XXX.XX	SIDEWALK ELEVATION
XXX.XX(F)	C&G FLANGE ELEVATION
XXX.XX(G)	C&G FLOWLINE ELEVATION
XXX.XX(T)	TOP OF CURB ELEVATION
LL	LEVEL LANDING
100	POINT NUMBER
	SLOPE INTERCEPTS
	DETECTABLE WARNING FIELD
MEF	MAXIMUM EXTENT FEASIBLE TECHNICAL INFEASIBILITY PRESENT
G	GRADED FLARE (6:1 MAX SLOPE)
P	PAVED FLARE (10:1 MAX SLOPE)

NOTES:

1. CONTRACTOR TO FIELD VERIFY ELEVATIONS, GRADES, SLOPES, LENGTHS, AND MATCHPOINTS PRIOR TO CURB RAMP CONSTRUCTION.
2. THE ENGINEER MAY ADJUST ELEVATIONS TO FIT FIELD CONDITIONS WITHIN THE CONDITIONS OF THE STANDARD DETAIL DRAWINGS.
3. DASHED LINES SHOWN FOR PROPOSED SIDEWALK ARE FOR INFORMATION ONLY AND DO NOT INDICATE EXACT JOINT LOCATIONS.
4. THE CROSS SLOPE OF THE GUTTER SHALL BE 4% UNLESS OTHERWISE SHOWN.
5. THE MAXIMUM GRADE BREAK BETWEEN THE GUTTER PAN AND CURB RAMP SHALL BE 11%.
6. SIDEWALK AND CURB RAMP CROSS SLOPE SHALL NOT EXCEED 2%.
7. SIDEWALK AND CURB RAMP RUNNING SLOPE SHALL NOT EXCEED 8.33% (12H:1V).

STH 50 & STH 75- NORTHEAST QUADRANT

1006+00

PI: 50+00.00

SHEET 6 OF 27

PROJECT NO: 1310-04-70	HWY: STH 50	COUNTY: KENOSHA	CURB RAMP DETAILS	SHEET 113	E

FILE NAME : T:\1182708.06\CIVIL3D\13100400\13100400\SHEETSPLAN\021301_CR.DWG
LAYOUT NAME - 04-75-NE

PLOT DATE : 1/18/2022 10:04 AM PLOT BY : BLACKWOOD, JIM PLOT NAME : PLOT SCALE : ##########

WISDOT/CADDS SHEET 42

2

POINT TABLE					
POINT NUMBER	STATION	OFFSET	ELEVATION	y	X
400	1006+01.81	82.29' LT	828.53	128,285.18	550221.92
401	1006+06.55	83.89' LT	828.63	128,286.78	550226.66
402	1005+94.45	74.39' LT	828.05	128,277.29	550214.55
403	1005+95.34	74.71' LT	828.06	128,277.61	550215.44
404	1006+03.41	77.55' LT	828.52	128,280.45	550223.52
405	1006+08.15	79.15' LT	828.59	128,282.04	550228.26
406	1005+97.00	69.99' LT	828.02	128,272.89	550217.10
407	1006+05.01	72.82' LT	828.48	128,275.71	550225.11
408	1006+09.75	74.42' LT	828.55	128,277.30	550229.85
409	1006+06.67	67.91' LT	828.61	128,270.80	550226.77
410	1006+11.41	69.51' LT	828.69	128,272.39	550231.51
411	1006+12.20	61.26' LT	828.55	128,264.15	550232.30
412	1006+14.64	65.63' LT	828.63	128,268.51	550234.73
413	1006+25.73	59.45' LT	828.51	128,262.33	550245.82

POINT TABLE					
POINT NUMBER	STATION	OFFSET	ELEVATION	y	X
414	1006+23.30	55.09' LT	828.44	128,257.97	550243.39
415	1006+36.62	53.39' LT	828.18	128,256.26	550256.71
416	1006+34.19	49.02' LT	828.10	128,251.90	550254.28
417	1006+43.92	51.50' LT	827.95	128,254.37	550264.01
418	1006+43.92	46.50' LT	827.88	128,249.37	550264.00
419	1006+48.92	51.50' LT	827.70	128,254.36	550269.01
420	1006+48.91	46.50' LT	827.63	128,249.36	550268.99
421	1006+48.91	38.70' LT	827.10	128,241.56	550268.99
422	1006+53.92	51.50' LT	827.63	128,254.36	550274.01
423	1006+53.91	46.50' LT	827.55	128,249.36	550273.99
424	1006+53.91	38.50' LT	827.01	128,241.36	550273.99
425	1006+58.91	51.50' LT	827.65	128,254.36	550279.00
426	1006+58.91	46.50' LT	827.58	128,249.36	550278.99

CURB RAMP POINTS - STH 50 & STH 75- NORTHEAST QUADRANT

LEGEND

XXX.XX	SIDEWALK ELEVATION
XXX.XX(F)	C&G FLANGE ELEVATION
XXX.XX(G)	C&G FLOWLINE ELEVATION
XXX.XX(T)	TOP OF CURB ELEVATION
LL	LEVEL LANDING
100	POINT NUMBER
– – –	SLOPE INTERCEPTS
	DETECTABLE WARNING FIELD
MEF	MAXIMUM EXTENT FEASIBLE TECHNICAL INFEASIBILITY PRESENT
G	GRADED FLARE (6:1 MAX SLOPE)
P	PAVED FLARE (10:1 MAX SLOPE)

NOTES:

1. CONTRACTOR TO FIELD VERIFY ELEVATIONS, GRADES, SLOPES, LENGTHS, AND MATCHPOINTS PRIOR TO CURB RAMP CONSTRUCTION.
2. THE ENGINEER MAY ADJUST ELEVATIONS TO FIT FIELD CONDITIONS WITHIN THE CONDITIONS OF THE STANDARD DETAIL DRAWINGS.
3. DASHED LINES SHOWN FOR PROPOSED SIDEWALK ARE FOR INFORMATION ONLY AND DO NOT INDICATE EXACT JOINT LOCATIONS.
4. THE CROSS SLOPE OF THE GUTTER SHALL BE 4% UNLESS OTHERWISE SHOWN.
5. THE MAXIMUM GRADE BREAK BETWEEN THE GUTTER PAN AND CURB RAMP SHALL BE 11%.
6. SIDEWALK AND CURB RAMP CROSS SLOPE SHALL NOT EXCEED 2%.
7. SIDEWALK AND CURB RAMP RUNNING SLOPE SHALL NOT EXCEED 8.33% (12H:1V).

MAXIMUM EXTENT FEASBILE NOTES:

1. THE SIDEWALK RUNNING SLOPE WILL BE GREATER THAN 1.5% FOR WESTERNMOST LEVEL LANDING AT THE BACK OF CURB. THIS SLOPE CANNOT BE ADJUSTED TO 1.5% OR FLATTER BECAUSE IT NEEDS TO MATCH THE BACK OF CURB SLOPE,
2. THE SIDEWALK CROSS SLOPE WILL BE GREATER THAN 1.5% FOR THE NORTH-SOUTH CROSSWALK AT THE BACK OF CURB. THE SLOPE IS MATCHING THE ROADWAY CROSS SLOPE WHICH IS ACCEPTABLE BECAUSE THE CROSSWALK IS CROSSING THE MAJOR ROADWAY.

N

STH 83 R/L

TYPE 3 CURB RAMP

829.97 509 | 830.05(F) | 829.97(G) | MEF | 2'X5' DWF | 829.95(F) | 829.87(G) | 512 829.87 | 829.91(F) | G | 513 830.18 | 514 830.26 | 536 830.78 | 829.30(F)

830.23 510 | 830.31 511 | 830.58 507 | 830.66 508 | 831.35 532 | MEF | 830.79 505 | 501 830.86 | 830.96 500 | 502 830.88

515 830.42 | 516 830.49 | 517 830.35 | 538 830.51 | 518 830.42 | 830.42(T) | 540 830.43 | 541 830.51 | 831.01(T) | 539 830.58 | 831.08(T) | 537 830.86 | 831.36(T) | SEE HANDICAP RAMP CURB DETAIL FOR ADDITIONAL INFORMATION | 534 831.06

830.87 506 | 504 830.98 | 831.07 503 | 831.79 530 | 525 832.03 | 831.86 531 | 832.36(T) | 526 832.10 | 831.43 533 | 831.91(T) | 831.13 535 | 831.63(T)

R/W | 832.10 519 | 832.18 520 | 832.55 521 | 832.62 522 | 832.51 523 | 832.49 524 | 2'X5' DWF | 527 832.47 | 528 832.56 | 529 832.43

SLOPE INTERCEPT

TILE

553 829.26 | 545 829.27 | G | 546 828.88 | 828.88(G) | 828.96(F) | 2'X5' DWF | 549 828.95 | 829.31(T) | 550 828.94 | 828.82(G) | 828.90(F) | 829.32(T) | 828.87(F) | 828.84(F) | CONCRETE CURB PEDESTRIAN | 548 829.33 | 829.30(T)

829.55 542 | R/W | 829.63 543 | 829.34 544 | 829.40 547 | 829.31 551 | 552 829.01

TYPE 3 CURB RAMP

STH 50 & STH 83- SOUTHWEST QUADRANT

SHEET 8 OF 27

PROJECT NO: 1310-04-70	HWY: STH 50	COUNTY: KENOSHA	CURB RAMP DETAILS	SHEET 115	E

FILE NAME : T:\1182708.06\CIVIL3D\13100400\13100400\SHEETSPLAN\021301_CR.DWG
LAYOUT NAME - 05-83-SW

PLOT DATE : 1/18/2022 10:04 AM PLOT BY : BLACKWOOD, JIM PLOT NAME : PLOT SCALE : ##########

WISDOT/CADDS SHEET 42

2

POINT TABLE					
POINT NUMBER	STATION	OFFSET	ELEVATION	y	X
500	1004+85.41	47.50' RT	830.96	128,155.47	550105.44
501	1004+91.66	47.50' RT	830.86	128,155.46	550111.69
502	1004+91.66	48.96' RT	830.88	128,154.01	550111.69
503	1004+85.41	55.00' RT	831.07	128,147.97	550105.43
504	1004+91.67	55.00' RT	830.98	128,147.96	550111.69
505	1005+02.02	50.03' RT	830.79	128,152.93	550122.04
506	1005+01.50	55.00' RT	830.87	128,147.96	550121.52
507	1005+09.68	50.82' RT	830.58	128,152.13	550129.70
508	1005+09.16	55.79' RT	830.66	128,147.16	550129.18
509	1005+14.65	47.50' RT	829.97	128,155.45	550134.68
510	1005+14.65	51.33' RT	830.23	128,151.62	550134.68
511	1005+14.14	56.31' RT	830.31	128,146.64	550134.16
512	1005+19.65	47.50' RT	829.87	128,155.45	550139.68
513	1005+19.65	51.91' RT	830.18	128,151.04	550139.67
514	1005+18.94	56.86' RT	830.26	128,146.09	550138.95
515	1005+24.94	52.88' RT	830.42	128,150.06	550144.96
516	1005+23.85	57.76' RT	830.49	128,145.18	550143.87
517	1005+30.15	54.25' RT	830.35	128,148.69	550150.17
518	1005+28.69	59.04' RT	830.42	128,143.90	550148.71
519	1004+85.41	56.00' RT	832.10	128,146.97	550105.43
520	1004+85.41	61.00' RT	832.18	128,141.97	550105.43
521	1004+85.41	66.34' RT	832.55	128,136.63	550105.42
522	1004+85.41	71.34' RT	832.62	128,131.63	550105.42
523	1004+83.91	76.88' RT	832.51	128,126.09	550103.91
524	1004+83.63	77.90' RT	832.49	128,125.07	550103.64
525	1004+90.41	56.00' RT	832.03	128,146.97	550110.43
526	1004+90.41	61.00' RT	832.10	128,141.97	550110.43

POINT TABLE					
POINT NUMBER	STATION	OFFSET	ELEVATION	y	X
527	1004+90.41	66.34' RT	832.47	128,136.63	550110.42
528	1004+90.41	72.00' RT	832.56	128,130.96	550110.42
529	1004+88.73	78.19' RT	832.43	128,124.78	550108.74
530	1005+01.45	56.00' RT	831.79	128,146.96	550121.47
531	1005+01.19	61.00' RT	831.86	128,141.96	550121.21
532	1005+09.06	56.80' RT	831.35	128,146.15	550129.08
533	1005+08.52	61.78' RT	831.43	128,141.18	550128.54
534	1005+14.04	57.30' RT	831.06	128,145.65	550134.05
535	1005+13.49	62.27' RT	831.13	128,140.68	550133.51
536	1005+18.83	57.85' RT	830.78	128,145.09	550138.85
537	1005+18.11	62.80' RT	830.86	128,140.14	550138.12
538	1005+23.64	58.74' RT	830.51	128,144.21	550143.65
539	1005+22.55	63.62' RT	830.58	128,139.32	550142.56
540	1005+28.56	59.64' RT	830.43	128,143.30	550148.57
541	1005+27.47	64.53' RT	830.51	128,138.41	550147.48
542	1005+58.70	69.89' RT	829.55	128,133.03	550178.72
543	1005+55.86	74.01' RT	829.63	128,128.92	550175.87
544	1005+59.97	76.85' RT	829.34	128,126.07	550179.98
545	1005+64.67	75.14' RT	829.27	128,127.78	550184.68
546	1005+69.92	73.22' RT	828.88	128,129.69	550189.92
547	1005+61.88	81.48' RT	829.40	128,121.44	550181.88
548	1005+66.58	79.76' RT	829.33	128,123.15	550186.58
549	1005+71.63	77.92' RT	828.95	128,124.99	550191.63
550	1005+72.54	77.59' RT	828.94	128,125.32	550192.55
551	1005+63.78	86.10' RT	829.31	128,116.81	550183.79
552	1005+68.36	84.43' RT	829.01	128,118.48	550188.37
553	1005+64.03	73.58' RT	829.26	128,129.34	550184.04

CURB RAMP POINTS - STH 50 & STH 83- SOUTHWEST QUADRANT

LEGEND

XXX.XX	SIDEWALK ELEVATION
XXX.XX(F)	C&G FLANGE ELEVATION
XXX.XX(G)	C&G FLOWLINE ELEVATION
XXX.XX(T)	TOP OF CURB ELEVATION
LL	LEVEL LANDING
100	POINT NUMBER
	SLOPE INTERCEPTS
	DETECTABLE WARNING FIELD
MEF	MAXIMUM EXTENT FEASIBLE TECHNICAL INFEASIBILITY PRESENT
G	GRADED FLARE (6:1 MAX SLOPE)
P	PAVED FLARE (10:1 MAX SLOPE)

MAXIMUM EXTENT FEASBILE NOTES:

1. THE SIDEWALK CROSS SLOPE WILL BE GREATER THAN 1.5% FOR THE NORTH-SOUTH CROSSWALK IN THE PORKCHOP ISLAND. THE SLOPE IS MATCHING THE ROADWAY CROSS SLOPE WHICH IS ACCEPTABLE BECAUSE THE CROSSWALK IS CROSSING THE MAJOR ROADWAY.

N

TYPE 6 CURB RAMPS

TYPE 4B1 CURB RAMP

STH 50

STH 83

STH 83 R/L

49+00

6-INCH TALL CONCRETE CURB PEDESTRIAN ON ALL ISLAND CURBS

SLOPE INTERCEPT

RADIAL WARNING FIELD PANEL LAYOUT TABLE

QUADRANT	BACK OF CURB RADIUS (FT)	LANDING LENGTH 'XR' (FT)	RADIAL WARNING FIELD AREA (SF)	RADIAL LONG CHORD (FT)
NORTHWEST	37.0'	10.21'	25.3 SF	12.43'

NOTES:

1. CONTRACTOR TO FIELD VERIFY ELEVATIONS, GRADES, SLOPES, LENGTHS, AND MATCHPOINTS PRIOR TO CURB RAMP CONSTRUCTION.
2. THE ENGINEER MAY ADJUST ELEVATIONS TO FIT FIELD CONDITIONS WITHIN THE CONDITIONS OF THE STANDARD DETAIL DRAWINGS.
3. DASHED LINES SHOWN FOR PROPOSED SIDEWALK ARE FOR INFORMATION ONLY AND DO NOT INDICATE EXACT JOINT LOCATIONS.
4. THE CROSS SLOPE OF THE GUTTER SHALL BE 4% UNLESS OTHERWISE SHOWN.
5. THE MAXIMUM GRADE BREAK BETWEEN THE GUTTER PAN AND CURB RAMP SHALL BE 11%.
6. SIDEWALK AND CURB RAMP CROSS SLOPE SHALL NOT EXCEED 2%.
7. SIDEWALK AND CURB RAMP RUNNING SLOPE SHALL NOT EXCEED 8.33% (12H:1V).

STH 50 & STH 83- SOUTHEAST QUADRANT

SHEET 10 OF 27

PROJECT NO: 1310-04-70	HWY: STH 50	COUNTY: KENOSHA	CURB RAMP DETAILS	SHEET 117	E

2

POINT TABLE					
POINT NUMBER	STATION	OFFSET	ELEVATION	y	X
600	1006+40.36	42.94' RT	827.63	128,159.93	550260.38
601	1006+51.41	70.25' RT	827.44	128,132.61	550271.42
602	1006+58.14	69.25' RT	827.30	128,133.61	550278.15
603	1006+62.68	42.23' RT	827.07	128,160.62	550282.71
604	1006+59.24	38.13' RT	827.20	128,164.73	550279.27
605	1006+43.60	38.13' RT	827.55	128,164.74	550263.63
606	1006+40.70	39.67' RT	827.65	128,163.20	550260.73
607	1006+58.81	64.19' RT	827.25	128,138.67	550278.83
608	1006+44.32	46.08' RT	827.52	128,156.79	550264.35
609	1006+47.19	45.03' RT	827.41	128,157.83	550267.22
610	1006+48.91	44.41' RT	827.38	128,158.46	550268.93
611	1006+48.91	44.06' RT	827.38	128,158.81	550268.93
612	1006+48.91	40.63' RT	827.35	128,162.24	550268.94
613	1006+53.91	40.63' RT	827.24	128,162.24	550273.94
614	1006+53.91	42.63' RT	827.26	128,160.24	550273.94
615	1006+53.91	44.06' RT	827.31	128,158.80	550273.93
616	1006+54.78	44.21' RT	827.29	128,158.65	550274.80
617	1006+59.65	45.07' RT	827.02	128,157.79	550279.67
618	1006+58.78	49.99' RT	827.06	128,152.86	550278.80
619	1006+57.68	44.72' RT	827.12	128,158.14	550277.70
620	1006+53.89	49.23' RT	827.31	128,153.63	550273.91

POINT TABLE					
POINT NUMBER	STATION	OFFSET	ELEVATION	y	X
621	1006+48.92	49.77' RT	827.38	128,153.10	550268.95
622	1006+46.20	50.72' RT	827.49	128,152.15	550266.22
624	1006+87.38	57.57' RT	826.49	128,145.26	550307.40
625	1006+96.38	49.01' RT	826.31	128,153.83	550316.41
626	1007+02.62	60.32' RT	826.31	128,142.51	550322.64
627	1007+04.37	50.42' RT	826.46	128,152.41	550324.39
628	1006+82.35	66.36' RT	826.98	128,136.48	550302.37
629	1007+04.47	44.16' RT	826.48	128,158.67	550324.50
630	1007+14.22	52.15' RT	826.31	128,150.67	550334.24
631	1007+12.48	62.00' RT	826.16	128,140.82	550332.50
632	1007+18.81	50.17' RT	826.50	128,152.65	550338.83
633	1007+20.79	54.75' RT	826.43	128,148.06	550340.81
634	1007+35.35	43.00' RT	826.11	128,159.81	550355.38
635	1007+36.39	48.00' RT	826.17	128,154.81	550356.41
636	1007+11.76	90.54' RT	826.95	128,112.28	550331.76
637	1007+19.00	83.64' RT	826.76	128,119.18	550339.00
638	1007+13.16	73.62' RT	826.25	128,129.20	550333.17
639	1007+03.59	76.52' RT	826.40	128,126.31	550323.60
640	1006+97.43	59.35' RT	826.40	128,143.49	550317.45
641	1006+99.17	49.50' RT	826.35	128,153.33	550319.19

CURB RAMP POINTS - STH 50 & STH 83- SOUTHEAST QUADRANT

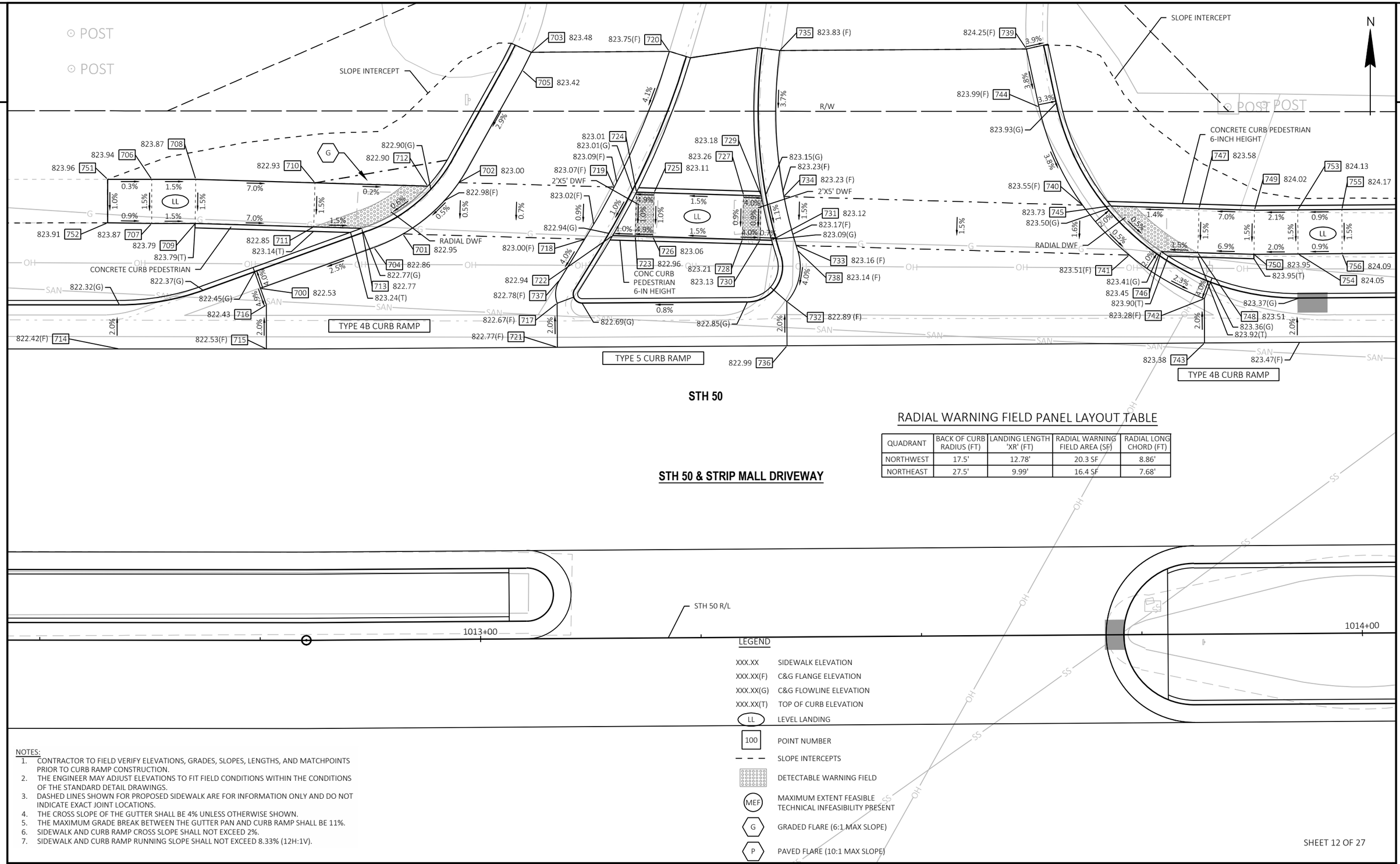

STH 50

STH 50 & STRIP MALL DRIVEWAY

RADIAL WARNING FIELD PANEL LAYOUT TABLE

QUADRANT	BACK OF CURB RADIUS (FT)	LANDING LENGTH 'XR' (FT)	RADIAL WARNING FIELD AREA (SF)	RADIAL LONG CHORD (FT)
NORTHWEST	17.5'	12.78'	20.3 SF	8.86'
NORTHEAST	27.5'	9.99'	16.4 SF	7.68'

LEGEND

XXX.XX	SIDEWALK ELEVATION
XXX.XX(F)	C&G FLANGE ELEVATION
XXX.XX(G)	C&G FLOWLINE ELEVATION
XXX.XX(T)	TOP OF CURB ELEVATION
LL	LEVEL LANDING
100	POINT NUMBER
– – –	SLOPE INTERCEPTS
	DETECTABLE WARNING FIELD
MEF	MAXIMUM EXTENT FEASIBLE TECHNICAL INFEASIBILITY PRESENT
G	GRADED FLARE (6:1 MAX SLOPE)
P	PAVED FLARE (10:1 MAX SLOPE)

NOTES:

1. CONTRACTOR TO FIELD VERIFY ELEVATIONS, GRADES, SLOPES, LENGTHS, AND MATCHPOINTS PRIOR TO CURB RAMP CONSTRUCTION.
2. THE ENGINEER MAY ADJUST ELEVATIONS TO FIT FIELD CONDITIONS WITHIN THE CONDITIONS OF THE STANDARD DETAIL DRAWINGS.
3. DASHED LINES SHOWN FOR PROPOSED SIDEWALK ARE FOR INFORMATION ONLY AND DO NOT INDICATE EXACT JOINT LOCATIONS.
4. THE CROSS SLOPE OF THE GUTTER SHALL BE 4% UNLESS OTHERWISE SHOWN.
5. THE MAXIMUM GRADE BREAK BETWEEN THE GUTTER PAN AND CURB RAMP SHALL BE 11%.
6. SIDEWALK AND CURB RAMP CROSS SLOPE SHALL NOT EXCEED 2%.
7. SIDEWALK AND CURB RAMP RUNNING SLOPE SHALL NOT EXCEED 8.33% (12H:1V).

SHEET 12 OF 27

2

POINT TABLE					
POINT NUMBER	STATION	OFFSET	ELEVATION	y	X
700	1012+75.02	39.88' LT	822.53	128,242.35	550895.10
701	1012+91.50	45.97' LT	822.95	128,248.50	550911.24
702	1012+97.87	51.74' LT	823.00	128,254.32	550917.57
703	1013+06.21	66.45' LT	823.48	128,269.09	550925.81
704	1012+88.22	44.47' LT	822.86	128,246.98	550907.97
705	1013+05.18	64.42' LT	823.42	128,267.05	550924.79
706	1012+62.67	52.22' LT	823.94	128,254.69	550882.76
707	1012+62.67	47.22' LT	823.87	128,249.69	550882.75
708	1012+67.67	52.22' LT	823.87	128,254.69	550887.76
709	1012+67.60	47.22' LT	823.79	128,249.69	550887.68
710	1012+81.57	51.83' LT	822.93	128,254.30	550901.27
711	1012+81.39	46.83' LT	822.85	128,249.30	550901.13
712	1012+94.35	51.37' LT	822.90	128,253.93	550914.05
713	1012+86.85	46.64' LT	822.77	128,249.14	550906.59
714	1012+59.01	33.00' LT	822.42	128,235.47	550879.09
715	1012+75.69	33.00' LT	822.53	128,235.46	550895.77
716	1012+75.69	38.00' LT	822.43	128,240.46	550895.77
717	1013+08.93	38.00' LT	822.67	128,240.65	550928.73
718	1013+12.12	45.23' LT	823.00	128,247.90	550931.87

POINT TABLE					
POINT NUMBER	STATION	OFFSET	ELEVATION	y	X
719	1013+15.51	51.11' LT	823.07	128,253.81	550935.22
720	1013+21.87	66.44' LT	823.75	128,269.19	550941.46
721	1013+08.93	33.00' LT	822.77	128,235.66	550928.76
722	1013+15.29	45.61' LT	822.94	128,248.31	550935.03
723	1013+17.84	45.52' LT	822.96	128,248.24	550937.59
724	1013+18.02	50.52' LT	823.01	128,253.24	550937.73
725	1013+20.02	50.45' LT	823.11	128,253.18	550939.73
726	1013+19.84	45.45' LT	823.06	128,248.18	550939.59
727	1013+30.17	50.08' LT	823.26	128,252.88	550949.88
728	1013+29.99	45.09' LT	823.21	128,247.88	550949.73
729	1013+32.17	50.01' LT	823.18	128,252.82	550951.88
730	1013+31.99	45.01' LT	823.13	128,247.83	550951.73
731	1013+33.29	44.97' LT	823.12	128,247.79	550953.04
732	1013+34.99	38.00' LT	822.89	128,240.83	550954.78
733	1013+36.06	44.37' LT	823.16	128,247.21	550955.81
734	1013+34.72	49.92' LT	823.23	128,252.75	550954.44
735	1013+34.37	66.45' LT	823.83	128,269.28	550953.97
736	1013+34.99	33.00' LT	822.99	128,235.83	550954.81
737	1013+09.22	40.59' LT	822.78	128,243.25	550929.00

POINT TABLE					
POINT NUMBER	STATION	OFFSET	ELEVATION	y	X
738	1013+36.24	43.79' LT	823.14	128,246.64	550955.99
739	1013+62.35	66.45' LT	824.25	128,269.47	550981.95
740	1013+68.59	48.70' LT	823.55	128,251.76	550988.30
741	1013+73.82	43.01' LT	823.51	128,246.11	550993.58
742	1013+82.33	38.00' LT	823.28	128,241.16	551002.12
743	1013+82.33	33.00' LT	823.38	128,236.16	551002.15
744	1013+63.73	59.85' LT	823.99	128,262.88	550983.38
745	1013+71.81	48.59' LT	823.73	128,251.67	550991.53
746	1013+77.46	43.38' LT	823.45	128,246.50	550997.21
747	1013+81.80	48.23' LT	823.58	128,251.38	551001.52
748	1013+81.62	43.23' LT	823.51	128,246.38	551001.37
749	1013+88.08	48.00' LT	824.02	128,251.20	551007.81
750	1013+87.99	43.00' LT	823.95	128,246.20	551007.75
751	1012+57.67	52.22' LT	823.96	128,254.70	550877.76
752	1012+57.67	47.29' LT	823.91	128,249.77	550877.75
753	1013+93.00	48.00' LT	824.13	128,251.23	551012.72
754	1013+93.00	43.00' LT	824.05	128,246.23	551012.75
755	1013+98.00	48.00' LT	824.17	128,251.27	551017.72
756	1013+98.00	43.00' LT	824.09	128,246.27	551017.75

STH 50 & STRIP MALL DRIVEWAY

SHEET 13 OF 27

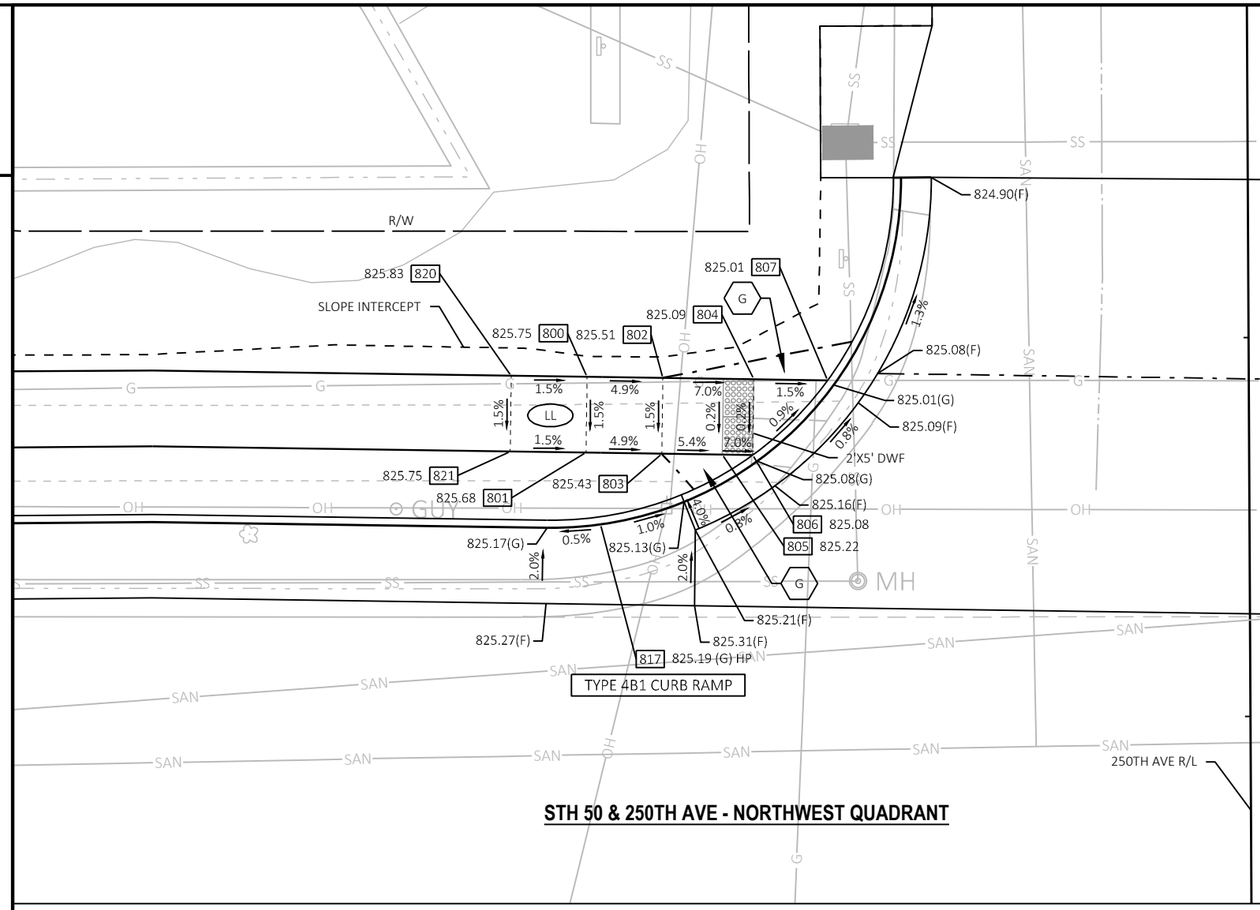

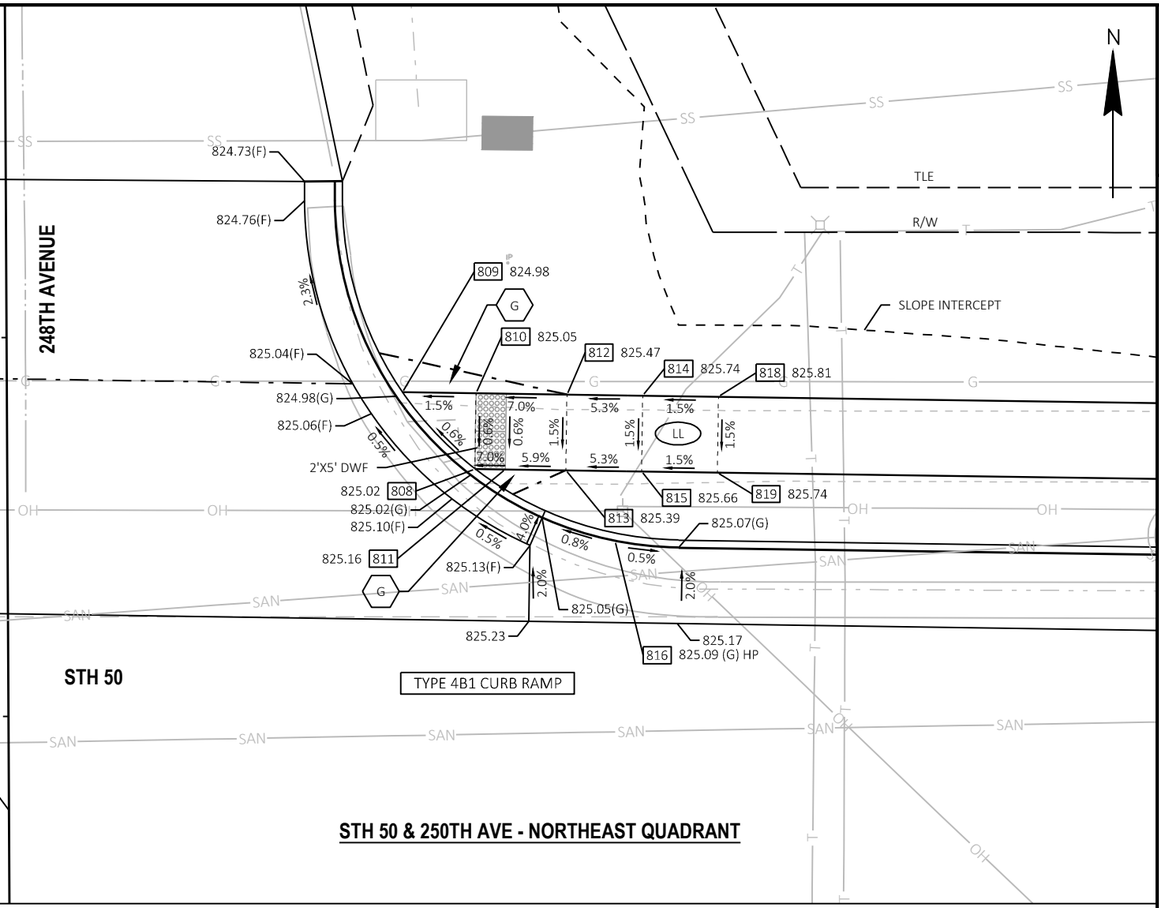

LEGEND

XXX.XX	SIDEWALK ELEVATION
XXX.XX(F)	C&G FLANGE ELEVATION
XXX.XX(G)	C&G FLOWLINE ELEVATION
XXX.XX(T)	TOP OF CURB ELEVATION
LL	LEVEL LANDING
100	POINT NUMBER
	SLOPE INTERCEPTS
	DETECTABLE WARNING FIELD
MEF	MAXIMUM EXTENT FEASIBLE TECHNICAL INFEASIBILITY PRESENT
G	GRADED FLARE (6:1 MAX SLOPE)
P	PAVED FLARE (10:1 MAX SLOPE)

POINT TABLE

POINT NUMBER	STATION	OFFSET	ELEVATION	y	X
800	1016+79.14	47.39' LT	825.75	128,252.58	551298.86
801	1016+79.03	42.39' LT	825.68	128,247.58	551298.78
802	1016+83.78	47.31' LT	825.51	128,252.51	551303.86
803	1016+83.71	42.31' LT	825.43	128,247.51	551303.78
804	1016+89.78	47.23' LT	825.09	128,252.42	551309.86
805	1016+87.71	42.25' LT	825.22	128,247.45	551307.78
806	1016+89.71	42.23' LT	825.08	128,247.42	551309.78
807	1016+94.64	47.16' LT	825.01	128,252.35	551314.72
808	1017+53.33	41.34' LT	825.02	128,246.50	551373.41
809	1017+48.54	46.41' LT	824.98	128,251.57	551368.62
810	1017+53.40	46.34' LT	825.05	128,251.50	551373.48

POINT TABLE

POINT NUMBER	STATION	OFFSET	ELEVATION	y	X
811	1017+55.33	41.32' LT	825.16	128,246.47	551375.41
812	1017+59.40	46.26' LT	825.47	128,251.41	551379.48
813	1017+59.33	41.26' LT	825.39	128,246.41	551379.41
814	1017+64.40	46.19' LT	825.74	128,251.34	551384.48
815	1017+64.33	41.19' LT	825.66	128,246.34	551384.41
816	1017+62.58	36.60' LT	825.09	128,241.75	551382.65
817	1016+79.96	37.64' LT	825.19	128,242.84	551299.75
818	1017+69.40	46.12' LT	825.81	128,251.27	551389.48
819	1017+69.33	41.12' LT	825.74	128,246.27	551389.41
820	1016+74.14	47.49' LT	825.83	128,252.65	551293.86
821	1016+74.03	42.50' LT	825.75	128,247.65	551293.79

NOTES:
1. CONTRACTOR TO FIELD VERIFY ELEVATIONS, GRADES, SLOPES, LENGTHS, AND MATCHPOINTS PRIOR TO CURB RAMP CONSTRUCTION.
2. THE ENGINEER MAY ADJUST ELEVATIONS TO FIT FIELD CONDITIONS WITHIN THE CONDITIONS OF THE STANDARD DETAIL DRAWINGS.
3. DASHED LINES SHOWN FOR PROPOSED SIDEWALK ARE FOR INFORMATION ONLY AND DO NOT INDICATE EXACT JOINT LOCATIONS.
4. THE CROSS SLOPE OF THE GUTTER SHALL BE 4% UNLESS OTHERWISE SHOWN.
5. THE MAXIMUM GRADE BREAK BETWEEN THE GUTTER PAN AND CURB RAMP SHALL BE 11%.
6. SIDEWALK AND CURB RAMP CROSS SLOPE SHALL NOT EXCEED 2%.
7. SIDEWALK AND CURB RAMP RUNNING SLOPE SHALL NOT EXCEED 8.33% (12H:1V).

PROJECT NO: 1310-04-70	HWY: STH 50	COUNTY: KENOSHA	CURB RAMP DETAILS	SHEET 121	E

FILE NAME : T:\1182708.06\CIVIL3D\13100400\13100400\SHEETSPLAN\021301_CR.DWG
LAYOUT NAME - 08-250-N
PLOT DATE : 1/18/2022 10:05 AM PLOT BY : BLACKWOOD, JIM PLOT NAME : PLOT SCALE : ##########
WISDOT/CADDS SHEET 42

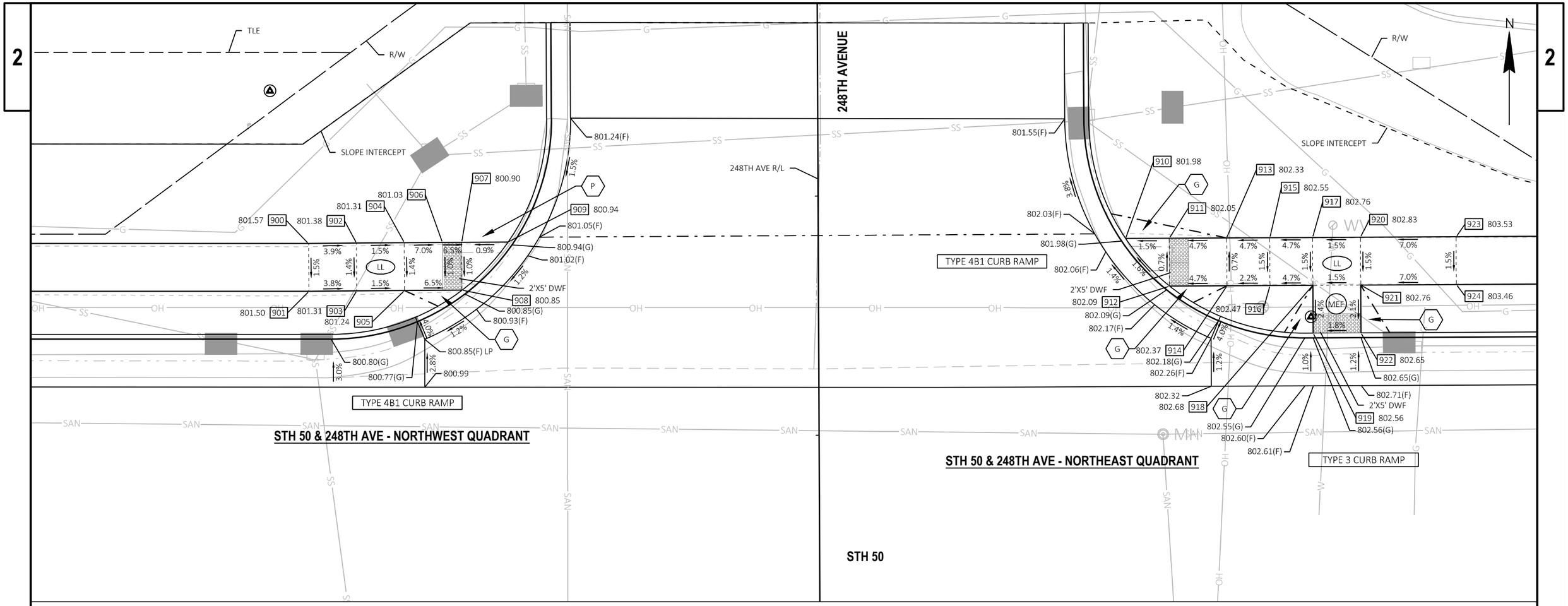

POINT TABLE					
POINT NUMBER	STATION	OFFSET	ELEVATION	y	X
900	1025+06.87	45.00' LT	801.57	128,249.67	552126.95
901	1025+06.90	40.00' LT	801.50	128,244.67	552126.98
902	1025+11.87	45.06' LT	801.38	128,249.73	552131.95
903	1025+11.90	40.06' LT	801.31	128,244.73	552131.98
904	1025+16.87	45.09' LT	801.31	128,249.76	552136.95
905	1025+16.90	40.09' LT	801.24	128,244.76	552136.98
906	1025+20.87	45.12' LT	801.03	128,249.78	552140.95
907	1025+22.87	45.13' LT	800.90	128,249.79	552142.95
908	1025+22.90	40.13' LT	800.85	128,244.79	552142.98
909	1025+27.71	45.16' LT	800.94	128,249.82	552147.78
910	1025+92.51	45.48' LT	801.98	128,250.20	552212.35
911	1025+97.08	45.48' LT	802.05	128,250.22	552216.92
912	1025+97.09	40.48' LT	802.09	128,245.22	552216.95

POINT TABLE					
POINT NUMBER	STATION	OFFSET	ELEVATION	y	X
913	1026+03.08	45.49' LT	802.33	128,250.26	552222.92
914	1026+03.09	40.49' LT	802.37	128,245.26	552222.95
915	1026+07.58	45.49' LT	802.55	128,250.28	552227.42
916	1026+07.59	40.49' LT	802.47	128,245.28	552227.45
917	1026+12.06	45.50' LT	802.76	128,250.31	552231.90
918	1026+12.06	40.50' LT	802.68	128,245.31	552231.92
919	1026+12.06	35.50' LT	802.56	128,240.31	552231.95
920	1026+17.06	45.50' LT	802.83	128,250.33	552236.90
921	1026+17.06	40.50' LT	802.76	128,245.33	552236.92
922	1026+17.06	35.50' LT	802.65	128,240.33	552236.95
923	1026+27.06	45.50' LT	803.53	128,250.38	552246.90
924	1026+27.06	40.50' LT	803.46	128,245.38	552246.92

LEGEND

XXX.XX	SIDEWALK ELEVATION
XXX.XX(F)	C&G FLANGE ELEVATION
XXX.XX(G)	C&G FLOWLINE ELEVATION
XXX.XX(T)	TOP OF CURB ELEVATION
LL	LEVEL LANDING
100	POINT NUMBER
	SLOPE INTERCEPTS
	DETECTABLE WARNING FIELD
MEF	MAXIMUM EXTENT FEASIBLE TECHNICAL INFEASIBILITY PRESENT
G	GRADED FLARE (6:1 MAX SLOPE)
P	PAVED FLARE (10:1 MAX SLOPE)

MAXIMUM EXTENT FEASBILE NOTES:

1. THE SIDEWALK CROSS SLOPE WILL BE GREATER THAN 1.5% FOR THE NORTH-SOUTH CROSSWALK IN THE NORTHEAST QUADRANT. THE CROSS SLOPE IS MATCHING THE ROADWAY LONGITUDINAL SLOPE WHICH IS ACCEPTABLE BECAUSE THE CROSSWALK IS CROSSING THE MAJOR ROADWAY.

NOTES:

1. CONTRACTOR TO FIELD VERIFY ELEVATIONS, GRADES, SLOPES, LENGTHS, AND MATCHPOINTS PRIOR TO CURB RAMP CONSTRUCTION.
2. THE ENGINEER MAY ADJUST ELEVATIONS TO FIT FIELD CONDITIONS WITHIN THE CONDITIONS OF THE STANDARD DETAIL DRAWINGS.
3. DASHED LINES SHOWN FOR PROPOSED SIDEWALK ARE FOR INFORMATION ONLY AND DO NOT INDICATE EXACT JOINT LOCATIONS.
4. THE CROSS SLOPE OF THE GUTTER SHALL BE 4% UNLESS OTHERWISE SHOWN.
5. THE MAXIMUM GRADE BREAK BETWEEN THE GUTTER PAN AND CURB RAMP SHALL BE 11%.
6. SIDEWALK AND CURB RAMP CROSS SLOPE SHALL NOT EXCEED 2%.
7. SIDEWALK AND CURB RAMP RUNNING SLOPE SHALL NOT EXCEED 8.33% (12H:1V).

PROJECT NO: 1310-04-70	HWY: STH 50	COUNTY: KENOSHA	CURB RAMP DETAILS	SHEET 122	E

FILE NAME : T:\1182708.06\CIVIL3D\13100400\13100400\SHEETSPLAN\021301_CR.DWG
LAYOUT NAME - 09-248-N
PLOT DATE : 1/18/2022 10:05 AM PLOT BY : BLACKWOOD, JIM PLOT NAME : PLOT SCALE : ##########
WISDOT/CADDS SHEET 42

2

LEGEND

XXX.XX	SIDEWALK ELEVATION
XXX.XX(F)	C&G FLANGE ELEVATION
XXX.XX(G)	C&G FLOWLINE ELEVATION
XXX.XX(T)	TOP OF CURB ELEVATION
LL	LEVEL LANDING
100	POINT NUMBER
- - -	SLOPE INTERCEPTS
	DETECTABLE WARNING FIELD
MEF	MAXIMUM EXTENT FEASIBLE TECHNICAL INFEASIBILITY PRESENT
G	GRADED FLARE (6:1 MAX SLOPE)
P	PAVED FLARE (10:1 MAX SLOPE)

MAXIMUM EXTENT FEASBILE NOTES:

1. THE SIDEWALK CROSS SLOPE WILL BE GREATER THAN 1.5% FOR THE NORTH-SOUTH CROSSWALK IN THE SOUTHEAST QUADRANT. THE CROSS SLOPE IS MATCHING THE ROADWAY LONGITUDINAL SLOPE WHICH IS ACCEPTABLE BECAUSE THE CROSSWALK IS CROSSING THE MAJOR ROADWAY.
2. THE SIDEWALK CROSS SLOPE WILL BE GREATER THAN 1.5% FOR THE NORTH-SOUTH CROSSWALK IN THE STH 50 MEDIAN. THE CROSS SLOPE IS MATCHING THE ROADWAY LONGITUDINAL SLOPE WHICH IS ACCEPTABLE BECAUSE THE CROSSWALK IS CROSSING THE MAJOR ROADWAY.
3. THE LOWER LANDING SLOPES IN THE RADIAL WARNING FIELD IN THE SOUTHEAST QUADRANT WILL BE GREATER THAN 1.5% BUT LESS THAN 2%. SLOPES CANNOT BE REDUCED TO 1.5% OR LESS WITHOUT HAVING SLOPES STEEPER THAN 7% IN OTHER LOCATIONS IN THE QUADRANT.

RADIAL WARNING FIELD PANEL LAYOUT TABLE

QUADRANT	BACK OF CURB RADIUS (FT)	LANDING LENGTH 'XR' (FT)	RADIAL WARNING FIELD AREA (SF)	RADIAL LONG CHORD (FT)
SOUTHWEST	42.5'	12.33'	19.3 SF	9.03'
SOUTHEAST	42.5'	12.73'	19.8 SF	9.20'

N

STH 50

1025+00 EP: 20+00.00 BP: 20+00.00 1026+00

STH 50 R/L

HIGH SCHOOL WEST DRIVEWAY R/L

TYPE 5 CURB RAMP

CONC CURB PEDESTRIAN 6-INCH HEIGHT

802.98(F) 802.90(G) 802.93 1055 802.85(F) 802.77(G) 802.80 1054 MEF

802.43 1057 802.40(G) 802.48(F) 802.56 1056 802.53(G) 802.61(F)

STH 50 & HIGH SCHOOL WEST DRIVEWAY MEDIAN

TYPE 4B CURB RAMP

800.71 1006 CONCRETE CURB PEDESTRIAN 800.90(F) 800.84(F) 1027 1028 800.74 (F) 800.66(G) 801.21(T) 801.11(T) 800.68(F) 800.60(G) 1008 800.69 RADIAL DWF 800.80(G) 800.91(T) 1004 801.14 1000 800.99 1002 800.91 1003 801.06 1001 800.84 1005 800.75 1007 800.52 1009 800.60(F) 800.52(G) 800.58(F) G

SLOPE INTERCEPT

STH 50 & HIGH SCHOOL WEST DRIVEWAY SOUTHWEST QUADRANT

800.86(F) CONCRETE CURB PEDESTRIAN 6-INCH HEIGHT 1018 800.78 1023 800.97 1024 801.05 1020 800.99 800.97(G) 800.76(F) 1010 800.77(G) 1016 801.00 (F) 1015 800.96 (F) 1022 800.94 800.73(F) 1011 800.73(G) 800.69(F) 800.73 1017 800.94(G) 800.90(F) 2'X5' DWF 2'X5' DWF 800.65(F) 800.62(F) 800.66(G) 800.75 1019 800.84(F) 800.80(F) 800.84(G) 1021 800.96 800.94 1025 1026 801.02 CONCRETE CURB PEDESTRIAN 6-IN HEIGHT 800.32(F) 1012 REJECT GUTTER 800.27(F) 1013 1014 800.38 (F)

HIGH SCHOOL WEST DRIVEWAY

799.41(F) R/W 799.41(F)

TYPE 4B CURB RAMP

801.74 1043 CONCRETE CURB PEDESTRIAN 801.93(T) 801.39 1042 801.53(F) 1030 801.43(F) 1029 801.39(G) 801.81(T) 801.31 1033 801.76(T) 801.32(F) 801.24(G) 801.24 1031 RADIAL DWF 801.17(F) 801.09(G) 801.09 1032 801.12 1053 801.58(T) CONC CURB PEDESTRIAN 801.36 1036 801.82(T) 801.32 1034 801.59(T) 801.60 1035 1037 801.37

TYPE 3 CURB RAMP

801.92 1047 802.24 1048 802.02(F) 801.92(G) 2'X5' DWF 802.14(F) 801.80(F) 801.70(G) 802.04(G) 1050 802.04 802.16 1045 801.79(T) 1051 802.31 1052 802.39 1049 802.31 1044 801.82 1046 802.24 1041 801.40 1040 801.65 1039 801.57 1038 801.52

SLOPE INTERCEPT

STH 50 & HIGH SCHOOL WEST DRIVEWAY SOUTHEAST QUADRANT

NOTES:

1. CONTRACTOR TO FIELD VERIFY ELEVATIONS, GRADES, SLOPES, LENGTHS, AND MATCHPOINTS PRIOR TO CURB RAMP CONSTRUCTION.
2. THE ENGINEER MAY ADJUST ELEVATIONS TO FIT FIELD CONDITIONS WITHIN THE CONDITIONS OF THE STANDARD DETAIL DRAWINGS.
3. DASHED LINES SHOWN FOR PROPOSED SIDEWALK ARE FOR INFORMATION ONLY AND DO NOT INDICATE EXACT JOINT LOCATIONS.
4. THE CROSS SLOPE OF THE GUTTER SHALL BE 4% UNLESS OTHERWISE SHOWN.
5. THE MAXIMUM GRADE BREAK BETWEEN THE GUTTER PAN AND CURB RAMP SHALL BE 11%.
6. SIDEWALK AND CURB RAMP CROSS SLOPE SHALL NOT EXCEED 2%.
7. SIDEWALK AND CURB RAMP RUNNING SLOPE SHALL NOT EXCEED 8.33% (12H:1V).

SHEET 16 OF 27

PROJECT NO: 1310-04-70	HWY: STH 50	COUNTY: KENOSHA	CURB RAMP DETAILS	SHEET 123	E

2

POINT TABLE					
POINT NUMBER	STATION	OFFSET	ELEVATION	y	X
1000	1024+82.68	40.00' RT	801.14	128,164.69	552102.70
1001	1024+82.70	45.00' RT	801.06	128,159.69	552102.71
1002	1024+92.68	40.30' RT	800.99	128,164.38	552112.70
1003	1024+92.70	45.30' RT	800.91	128,159.38	552112.72
1004	1024+97.68	40.28' RT	800.91	128,164.40	552117.70
1005	1024+97.70	45.28' RT	800.84	128,159.40	552117.71
1006	1025+03.68	40.26' RT	800.71	128,164.42	552123.70
1007	1025+03.70	45.26' RT	800.75	128,159.42	552123.71
1008	1025+08.49	40.24' RT	800.69	128,164.43	552128.51
1009	1025+16.03	45.21' RT	800.52	128,159.46	552136.05
1010	1025+30.65	35.00' RT	800.76	128,169.66	552150.68
1011	1025+31.10	37.84' RT	800.73	128,166.82	552151.12
1012	1025+42.29	55.92' RT	800.32	128,148.73	552162.30
1013	1025+46.07	58.42' RT	800.27	128,146.22	552166.07
1014	1025+49.76	55.79' RT	800.38	128,148.85	552169.77
1015	1025+60.62	38.04' RT	800.96	128,166.59	552180.64
1016	1025+61.25	35.00' RT	801.00	128,169.64	552181.27
1017	1025+36.20	40.13' RT	800.73	128,164.52	552156.22
1018	1025+39.59	40.12' RT	800.78	128,164.53	552159.61
1019	1025+39.61	45.12' RT	800.75	128,159.53	552159.63

POINT TABLE					
POINT NUMBER	STATION	OFFSET	ELEVATION	y	X
1020	1025+52.14	40.07' RT	800.99	128,164.57	552172.16
1021	1025+52.16	45.07' RT	800.96	128,159.58	552172.18
1022	1025+55.63	40.05' RT	800.94	128,164.59	552175.65
1023	1025+43.42	40.10' RT	800.97	128,164.55	552163.44
1024	1025+48.42	40.08' RT	801.05	128,164.56	552168.44
1025	1025+43.39	45.10' RT	800.94	128,159.55	552163.41
1026	1025+48.39	45.08' RT	801.02	128,159.56	552168.41
1027	1025+02.26	30.00' RT	800.84	128,174.68	552122.29
1028	1025+02.26	35.00' RT	800.74	128,169.68	552122.29
1029	1025+89.32	35.00' RT	801.43	128,169.71	552209.53
1030	1025+89.32	30.00' RT	801.53	128,174.71	552209.51
1031	1025+83.55	40.00' RT	801.24	128,164.68	552203.78
1032	1025+75.81	44.99' RT	801.09	128,159.65	552196.07
1033	1025+88.55	40.01' RT	801.31	128,164.69	552208.78
1034	1025+88.54	45.01' RT	801.32	128,159.69	552208.80
1035	1025+88.54	50.01' RT	801.60	128,154.69	552208.81
1036	1025+70.89	50.00' RT	801.36	128,154.64	552190.90
1037	1025+74.25	54.99' RT	801.37	128,149.65	552194.55
1038	1025+88.53	55.01' RT	801.52	128,149.69	552208.83
1039	1025+93.53	55.02' RT	801.57	128,149.71	552213.83

POINT TABLE					
POINT NUMBER	STATION	OFFSET	ELEVATION	y	X
1040	1025+93.54	50.02' RT	801.65	128,154.71	552213.81
1041	1025+93.54	45.02' RT	801.40	128,159.71	552213.80
1042	1025+93.55	40.02' RT	801.39	128,164.71	552213.78
1043	1025+99.55	40.03' RT	801.74	128,164.73	552219.78
1044	1025+99.54	45.03' RT	801.82	128,159.73	552219.80
1045	1026+07.06	40.04' RT	802.16	128,164.75	552227.29
1046	1026+07.06	45.04' RT	802.24	128,159.75	552227.32
1047	1026+12.06	35.50' RT	801.92	128,169.31	552232.27
1048	1026+12.06	40.04' RT	802.24	128,164.77	552232.29
1049	1026+12.06	45.04' RT	802.31	128,159.77	552232.32
1050	1026+17.06	35.50' RT	802.04	128,169.33	552237.27
1051	1026+17.06	40.05' RT	802.31	128,164.78	552237.29
1052	1026+17.06	45.05' RT	802.39	128,159.78	552237.32
1053	1025+71.71	45.49' RT	801.12	128,159.14	552191.73
1054	1026+12.06	4.50' LT	802.80	128,209.31	552232.09
1055	1026+17.06	4.50' LT	802.93	128,209.33	552237.09
1056	1026+17.06	4.50' RT	802.56	128,200.33	552237.13
1057	1026+12.06	4.50' RT	802.43	128,200.31	552232.13

CURB RAMP POINTS - STH 50 & HIGH SCHOOL WEST DRIVEWAY

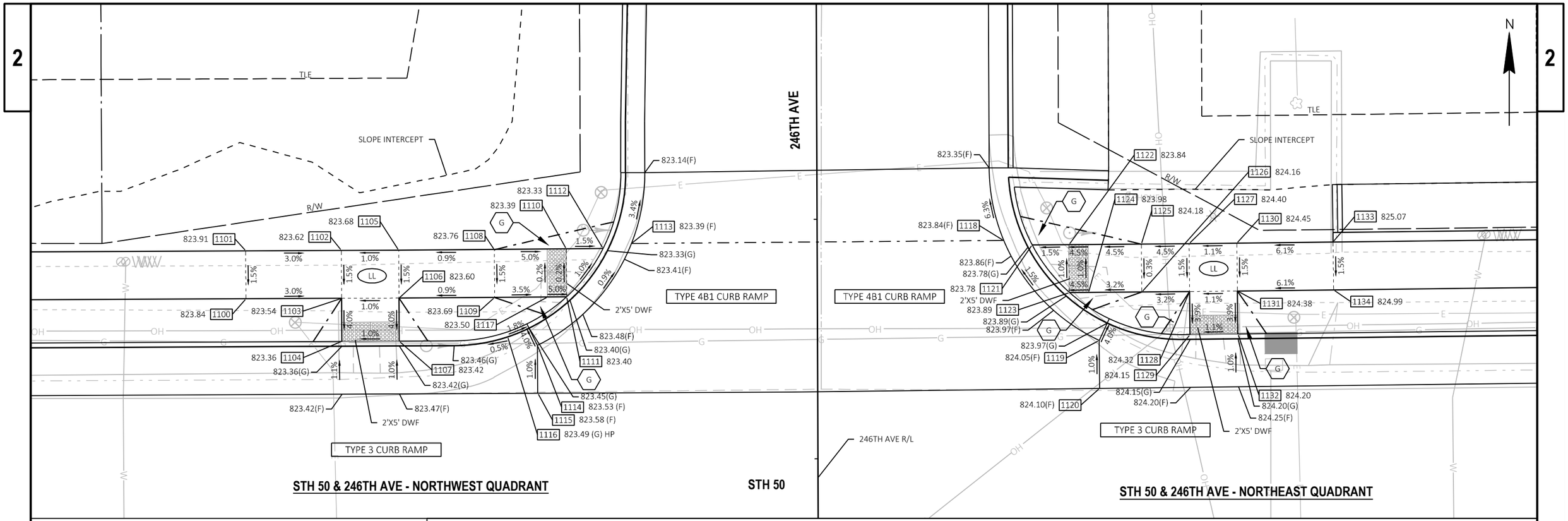

LEGEND

XXX.XX	SIDEWALK ELEVATION
XXX.XX(F)	C&G FLANGE ELEVATION
XXX.XX(G)	C&G FLOWLINE ELEVATION
XXX.XX(T)	TOP OF CURB ELEVATION
(LL)	LEVEL LANDING
[100]	POINT NUMBER
– – –	SLOPE INTERCEPTS
	DETECTABLE WARNING FIELD
(MEF)	MAXIMUM EXTENT FEASIBLE TECHNICAL INFEASIBILITY PRESENT
G	GRADED FLARE (6:1 MAX SLOPE)
P	PAVED FLARE (10:1 MAX SLOPE)

NOTES:

1. CONTRACTOR TO FIELD VERIFY ELEVATIONS, GRADES, SLOPES, LENGTHS, AND MATCHPOINTS PRIOR TO CURB RAMP CONSTRUCTION.
2. THE ENGINEER MAY ADJUST ELEVATIONS TO FIT FIELD CONDITIONS WITHIN THE CONDITIONS OF THE STANDARD DETAIL DRAWINGS.
3. DASHED LINES SHOWN FOR PROPOSED SIDEWALK ARE FOR INFORMATION ONLY AND DO NOT INDICATE EXACT JOINT LOCATIONS.
4. THE CROSS SLOPE OF THE GUTTER SHALL BE 4% UNLESS OTHERWISE SHOWN.
5. THE MAXIMUM GRADE BREAK BETWEEN THE GUTTER PAN AND CURB RAMP SHALL BE 11%.
6. SIDEWALK AND CURB RAMP CROSS SLOPE SHALL NOT EXCEED 2%.
7. SIDEWALK AND CURB RAMP RUNNING SLOPE SHALL NOT EXCEED 8.33% (12H:1V).

POINT TABLE

POINT NUMBER	STATION	OFFSET	ELEVATION	y	X
1100	1033+63.07	42.00' LT	823.84	128,250.27	552982.91
1101	1033+63.07	47.00' LT	823.91	128,255.27	552982.89
1102	1033+73.07	47.00' LT	823.62	128,255.32	552992.89
1103	1033+73.07	42.00' LT	823.54	128,250.32	552992.91
1104	1033+73.07	37.50' LT	823.36	128,245.82	552992.93
1105	1033+79.06	47.00' LT	823.68	128,255.35	552998.88
1106	1033+79.07	42.00' LT	823.60	128,250.35	552998.91
1107	1033+79.07	37.50' LT	823.42	128,245.85	552998.93
1108	1033+89.06	47.02' LT	823.76	128,255.41	553008.88
1109	1033+89.07	42.02' LT	823.69	128,250.41	553008.91
1110	1033+96.58	47.06' LT	823.39	128,255.49	553016.40
1111	1033+96.60	42.06' LT	823.40	128,250.49	553016.44

POINT TABLE

POINT NUMBER	STATION	OFFSET	ELEVATION	y	X
1112	1034+00.42	47.08' LT	823.33	128,255.52	553020.24
1113	1034+03.39	47.59' LT	823.39	128,256.05	553023.21
1114	1033+93.53	37.00' LT	823.53	128,245.41	553013.40
1115	1033+93.53	32.00' LT	823.58	128,240.41	553013.42
1116	1033+90.42	37.89' LT	823.49	128,246.29	553010.28
1117	1033+94.60	42.06' LT	823.50	128,250.47	553014.44
1118	1034+42.65	47.57' LT	823.84	128,256.37	553062.12
1119	1034+52.50	37.00' LT	824.05	128,245.92	553072.09
1120	1034+52.50	32.00' LT	824.10	128,240.92	553072.15
1121	1034+45.62	47.06' LT	823.78	128,255.89	553065.10
1122	1034+49.47	47.05' LT	823.84	128,255.93	553068.94
1123	1034+49.45	42.05' LT	823.89	128,250.93	553068.98

POINT TABLE

POINT NUMBER	STATION	OFFSET	ELEVATION	y	X
1124	1034+51.45	42.04' LT	823.98	128,250.94	553070.98
1125	1034+57.04	47.02' LT	824.18	128,255.99	553076.52
1126	1034+57.02	42.02' LT	824.16	128,250.99	553076.56
1127	1034+62.03	47.00' LT	824.40	128,256.03	553081.51
1128	1034+62.02	42.00' LT	824.32	128,251.03	553081.56
1129	1034+62.02	37.50' LT	824.15	128,246.53	553081.61
1130	1034+67.02	47.00' LT	824.45	128,256.09	553086.50
1131	1034+67.02	42.00' LT	824.38	128,251.09	553086.56
1132	1034+67.02	37.50' LT	824.20	128,246.59	553086.61
1133	1034+77.08	47.00' LT	825.07	128,256.21	553096.55
1134	1034+77.08	42.00' LT	824.99	128,251.21	553096.61

PROJECT NO: 1310-04-70	HWY: STH 50	COUNTY: KENOSHA	CURB RAMP DETAILS	SHEET 125	E

FILE NAME : T:\1182708.06\CIVIL3D\13100400\13100400\SHEETSPLAN\021301_CR.DWG
LAYOUT NAME - 11-246-N
PLOT DATE : 1/18/2022 10:05 AM
PLOT BY : BLACKWOOD, JIM
PLOT NAME :
PLOT SCALE : ##########
WISDOT/CADDS SHEET 42

2

LEGEND

XXX.XX	SIDEWALK ELEVATION
XXX.XX(F)	C&G FLANGE ELEVATION
XXX.XX(G)	C&G FLOWLINE ELEVATION
XXX.XX(T)	TOP OF CURB ELEVATION
LL	LEVEL LANDING
100	POINT NUMBER
	SLOPE INTERCEPTS
	DETECTABLE WARNING FIELD
MEF	MAXIMUM EXTENT FEASIBLE TECHNICAL INFEASIBILITY PRESENT
G	GRADED FLARE (6:1 MAX SLOPE)
P	PAVED FLARE (10:1 MAX SLOPE)

NOTES:

1. CONTRACTOR TO FIELD VERIFY ELEVATIONS, GRADES, SLOPES, LENGTHS, AND MATCHPOINTS PRIOR TO CURB RAMP CONSTRUCTION.
2. THE ENGINEER MAY ADJUST ELEVATIONS TO FIT FIELD CONDITIONS WITHIN THE CONDITIONS OF THE STANDARD DETAIL DRAWINGS.
3. DASHED LINES SHOWN FOR PROPOSED SIDEWALK ARE FOR INFORMATION ONLY AND DO NOT INDICATE EXACT JOINT LOCATIONS.
4. THE CROSS SLOPE OF THE GUTTER SHALL BE 4% UNLESS OTHERWISE SHOWN.
5. THE MAXIMUM GRADE BREAK BETWEEN THE GUTTER PAN AND CURB RAMP SHALL BE 11%.
6. SIDEWALK AND CURB RAMP CROSS SLOPE SHALL NOT EXCEED 2%.
7. SIDEWALK AND CURB RAMP RUNNING SLOPE SHALL NOT EXCEED 8.33% (12H:1V).

POINT TABLE

POINT NUMBER	STATION	OFFSET	ELEVATION	y	X
1200	1033+62.56	42.00' RT	823.86	128,166.27	552982.79
1201	1033+62.56	47.00' RT	823.93	128,161.27	552982.81
1202	1033+71.97	57.00' RT	824.23	128,151.32	552992.27
1203	1033+72.21	52.00' RT	824.05	128,156.32	552992.49
1204	1033+72.43	47.00' RT	823.72	128,161.32	552992.68
1205	1033+72.64	42.00' RT	823.64	128,166.32	552992.87
1206	1033+72.66	37.50' RT	823.35	128,170.82	552992.87
1207	1033+72.66	39.50' RT	823.47	128,168.82	552992.88
1208	1033+77.98	57.00' RT	824.28	128,151.34	552998.28
1209	1033+78.12	52.00' RT	824.11	128,156.34	552998.39
1210	1033+78.64	47.00' RT	823.76	128,161.34	552998.90
1211	1033+78.64	42.00' RT	823.69	128,166.35	552998.87
1212	1033+78.66	37.50' RT	823.42	128,170.84	552998.87
1213	1033+83.65	46.98' RT	823.91	128,161.39	553003.91

POINT TABLE

POINT NUMBER	STATION	OFFSET	ELEVATION	y	X
1214	1033+83.64	41.98' RT	823.83	128,166.39	553003.87
1215	1033+88.65	46.96' RT	823.98	128,161.43	553008.91
1216	1033+88.64	41.96' RT	823.91	128,166.43	553008.87
1217	1033+96.76	46.93' RT	823.59	128,161.49	553017.02
1218	1033+96.74	41.93' RT	823.52	128,166.49	553016.97
1219	1034+00.63	46.92' RT	823.61	128,161.53	553020.88
1220	1033+93.82	32.00' RT	823.58	128,176.41	553014.00
1221	1033+93.82	37.00' RT	823.53	128,171.41	553014.03
1222	1034+03.61	47.41' RT	823.71	128,161.05	553023.86
1223	1034+47.16	46.95' RT	824.04	128,161.91	553067.76
1224	1034+51.03	41.96' RT	824.01	128,166.94	553071.56
1225	1034+51.01	46.96' RT	824.08	128,161.94	553071.60
1226	1034+57.02	41.98' RT	824.31	128,166.99	553077.56
1227	1034+57.00	46.98' RT	824.38	128,161.99	553077.60

POINT TABLE

POINT NUMBER	STATION	OFFSET	ELEVATION	y	X
1228	1034+62.02	37.51' RT	824.15	128,171.52	553082.50
1229	1034+62.02	42.00' RT	824.41	128,167.04	553082.56
1230	1034+62.02	47.00' RT	824.49	128,162.03	553082.62
1231	1034+67.02	37.51' RT	824.20	128,171.58	553087.50
1232	1034+67.02	42.00' RT	824.47	128,167.10	553087.56
1233	1034+67.01	47.00' RT	824.54	128,162.09	553087.60
1234	1034+77.01	42.00' RT	824.93	128,167.21	553097.54
1235	1034+77.01	47.00' RT	825.00	128,162.21	553097.60
1236	1034+44.19	47.44' RT	824.12	128,161.39	553064.79
1237	1034+53.98	37.00' RT	824.07	128,171.94	553074.46
1238	1034+53.98	32.00' RT	824.12	128,176.94	553074.40
1239	1033+67.56	42.00' RT	823.75	128,166.29	552987.79
1240	1033+67.56	47.00' RT	823.82	128,161.29	552987.81

N

2

STH 50 & 246TH AVE - SOUTHWEST QUADRANT

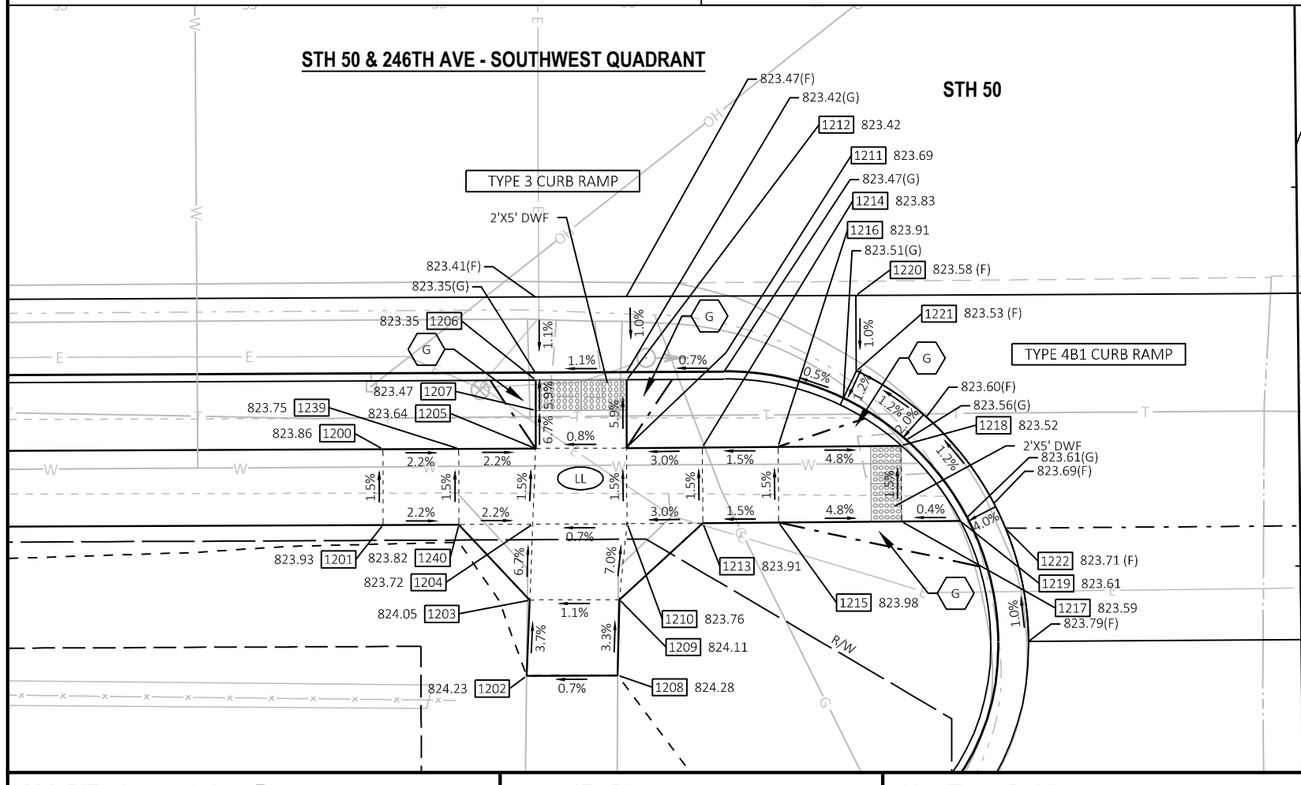

STH 50 & 246TH AVE - SOUTHEAST QUADRANT

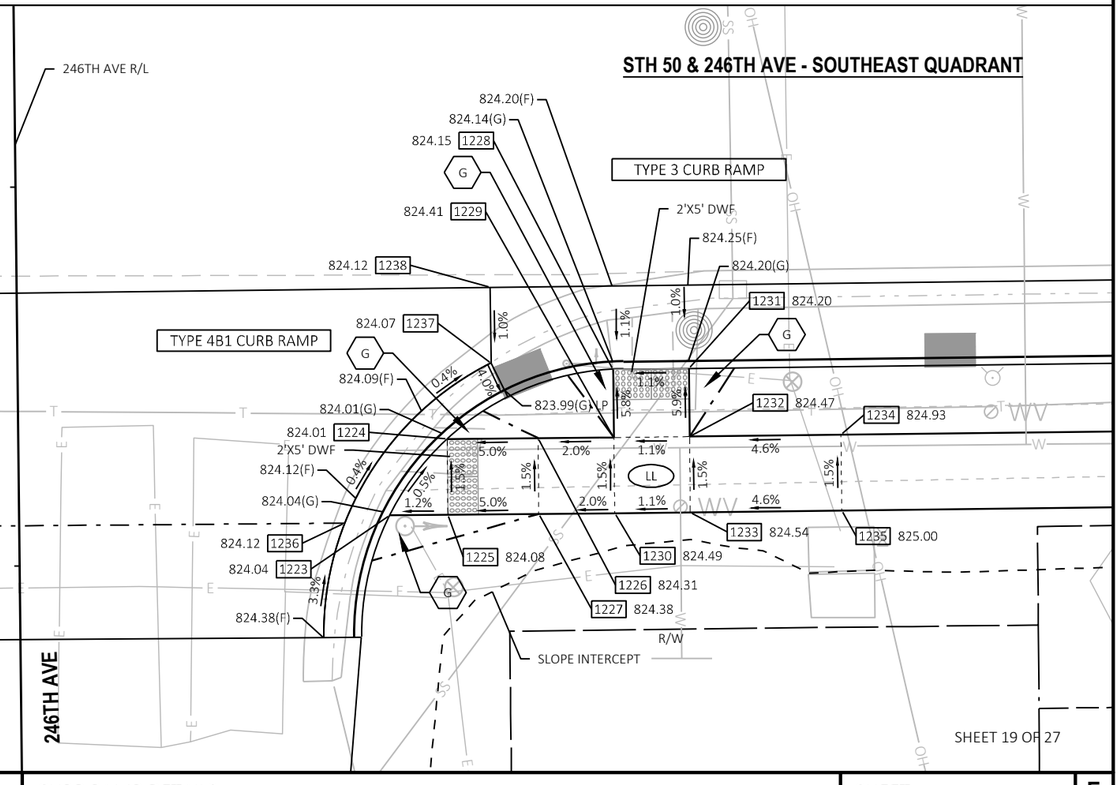

SHEET 19 OF 27

PROJECT NO: 1310-04-70	HWY: STH 50	COUNTY: KENOSHA	CURB RAMP DETAILS	SHEET 126	E

2

LEGEND

XXX.XX	SIDEWALK ELEVATION
XXX.XX(F)	C&G FLANGE ELEVATION
XXX.XX(G)	C&G FLOWLINE ELEVATION
XXX.XX(T)	TOP OF CURB ELEVATION
LL	LEVEL LANDING
100	POINT NUMBER
	SLOPE INTERCEPTS
	DETECTABLE WARNING FIELD
MEF	MAXIMUM EXTENT FEASIBLE TECHNICAL INFEASIBILITY PRESENT
G	GRADED FLARE (6:1 MAX SLOPE)
P	PAVED FLARE (10:1 MAX SLOPE)

NOTES:

1. CONTRACTOR TO FIELD VERIFY ELEVATIONS, GRADES, SLOPES, LENGTHS, AND MATCHPOINTS PRIOR TO CURB RAMP CONSTRUCTION.
2. THE ENGINEER MAY ADJUST ELEVATIONS TO FIT FIELD CONDITIONS WITHIN THE CONDITIONS OF THE STANDARD DETAIL DRAWINGS.
3. DASHED LINES SHOWN FOR PROPOSED SIDEWALK ARE FOR INFORMATION ONLY AND DO NOT INDICATE EXACT JOINT LOCATIONS.
4. THE CROSS SLOPE OF THE GUTTER SHALL BE 4% UNLESS OTHERWISE SHOWN.
5. THE MAXIMUM GRADE BREAK BETWEEN THE GUTTER PAN AND CURB RAMP SHALL BE 11%.
6. SIDEWALK AND CURB RAMP CROSS SLOPE SHALL NOT EXCEED 2%.
7. SIDEWALK AND CURB RAMP RUNNING SLOPE SHALL NOT EXCEED 8.33% (12H:1V).

POINT TABLE

POINT NUMBER	STATION	OFFSET	ELEVATION	y	X
1300	1039+66.13	40.00' RT	825.92	128,175.03	553586.60
1301	1039+66.13	45.00' RT	825.99	128,170.04	553586.66
1302	1039+71.13	40.00' RT	825.58	128,175.09	553591.60
1303	1039+71.13	45.00' RT	825.64	128,170.09	553591.66
1304	1039+77.13	40.00' RT	825.19	128,175.17	553597.60
1305	1039+77.13	45.00' RT	825.22	128,170.17	553597.66
1306	1039+81.99	45.00' RT	825.15	128,170.22	553602.52
1307	1039+73.43	30.00' RT	825.40	128,185.12	553593.78
1308	1039+73.43	35.00' RT	825.30	128,180.12	553593.84
1309	1039+85.28	45.50' RT	825.22	128,169.76	553605.82
1310	1040+44.30	30.00' RT	824.66	128,185.96	553664.65
1311	1040+44.33	35.00' RT	824.56	128,180.97	553664.74
1312	1040+35.76	45.00' RT	824.68	128,170.86	553656.29

POINT TABLE

POINT NUMBER	STATION	OFFSET	ELEVATION	y	X
1313	1040+40.63	40.00' RT	824.57	128,175.92	553661.10
1314	1040+40.63	45.00' RT	824.64	128,170.92	553661.16
1315	1040+46.63	40.00' RT	824.99	128,175.99	553667.10
1316	1040+46.63	45.00' RT	825.06	128,170.99	553667.16
1317	1040+51.63	40.00' RT	824.91	128,176.05	553672.10
1318	1040+51.63	45.00' RT	824.99	128,171.05	553672.16
1319	1040+32.48	45.50' RT	824.79	128,170.32	553653.01
1320	1040+63.04	40.00' RT	824.71	128,176.19	553683.50
1321	1040+63.04	45.00' RT	824.78	128,171.19	553683.56
1322	1039+61.13	40.00' RT	825.99	128,174.98	553581.60
1323	1039+61.13	45.00' RT	826.07	128,169.98	553581.66
1324	1039+56.13	45.00' RT	826.24	128,169.92	553576.66
1325	1039+56.13	40.00' RT	826.16	128,174.92	553576.60

N

2

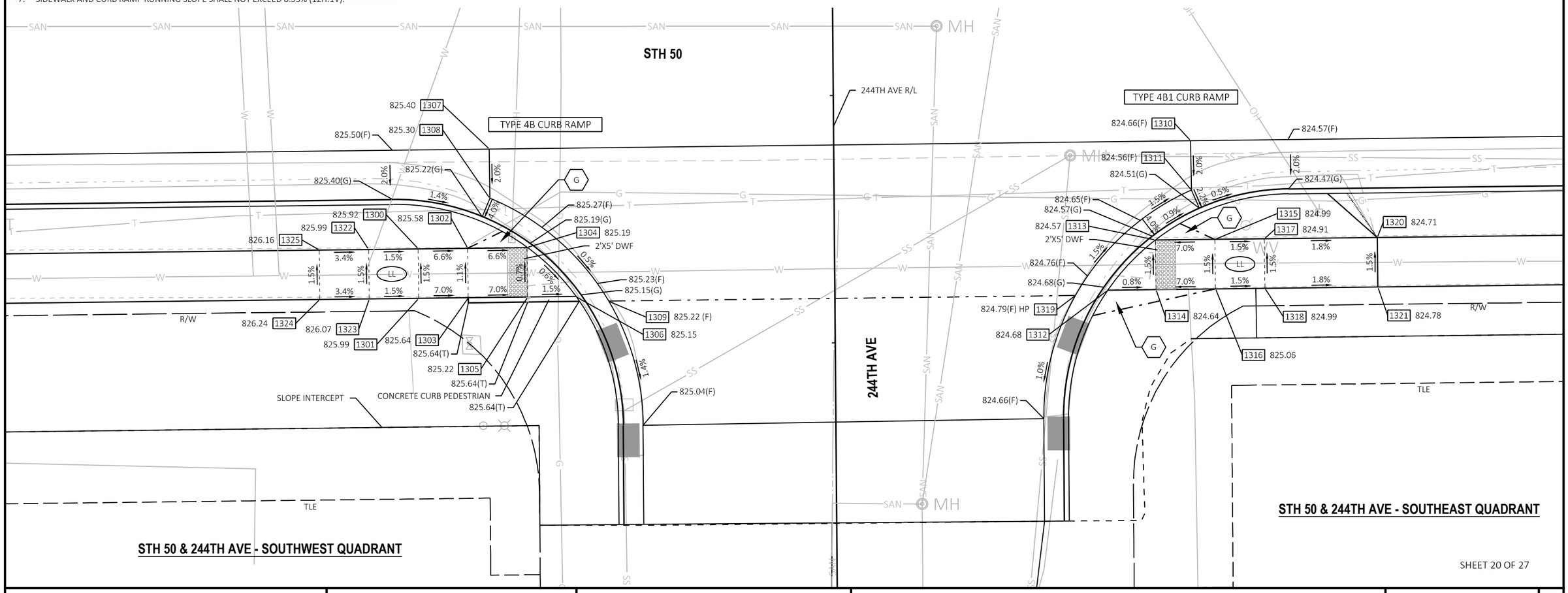

SHEET 20 OF 27

PROJECT NO: 1310-04-70	HWY: STH 50	COUNTY: KENOSHA	CURB RAMP DETAILS	SHEET 127	E

FILE NAME : T:\1182708.06\CIVIL3D\13100400\13100400\SHEETSPLAN\021301_CR.DWG
LAYOUT NAME - 13-244

PLOT DATE : 1/18/2022 10:06 AM PLOT BY : BLACKWOOD, JIM PLOT NAME : PLOT SCALE : ##########

WISDOT/CADDS SHEET 42

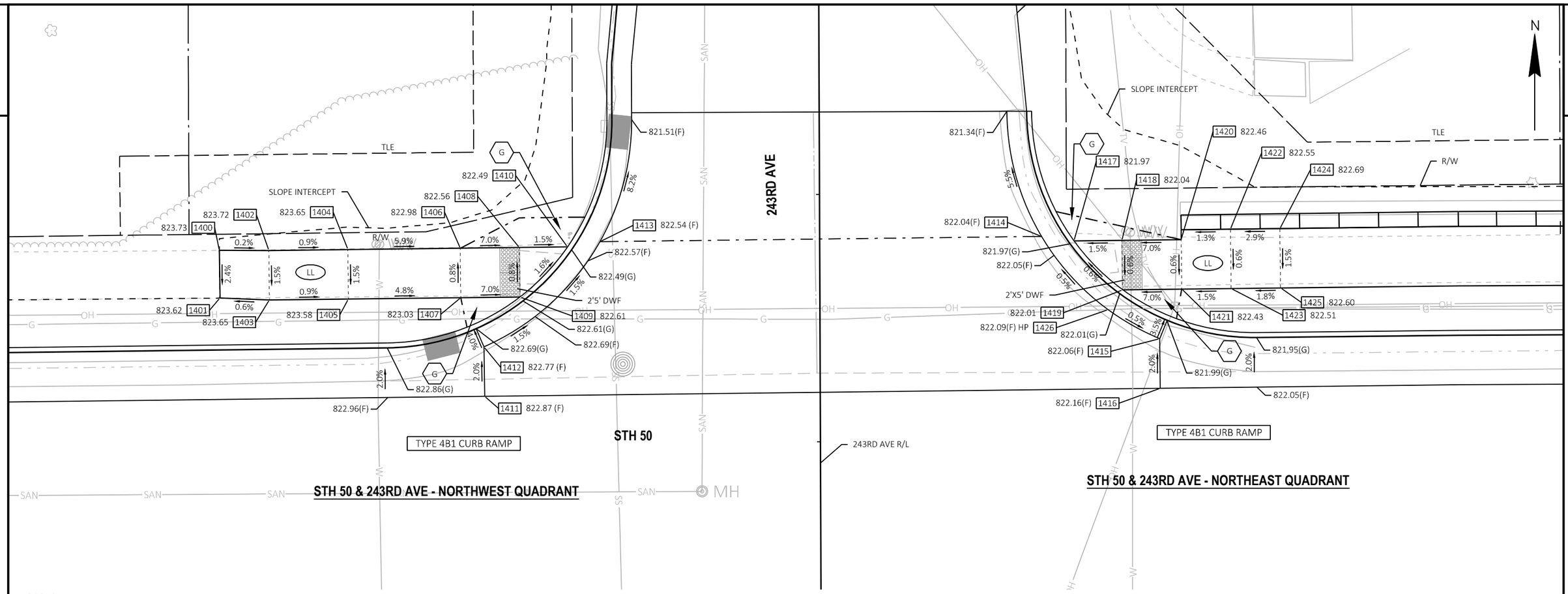

LEGEND

XXX.XX	SIDEWALK ELEVATION
XXX.XX(F)	C&G FLANGE ELEVATION
XXX.XX(G)	C&G FLOWLINE ELEVATION
XXX.XX(T)	TOP OF CURB ELEVATION
(LL)	LEVEL LANDING
[100]	POINT NUMBER
– – –	SLOPE INTERCEPTS
	DETECTABLE WARNING FIELD
(MEF)	MAXIMUM EXTENT FEASIBLE TECHNICAL INFEASIBILITY PRESENT
G	GRADED FLARE (6:1 MAX SLOPE)
P	PAVED FLARE (10:1 MAX SLOPE)

NOTES:

1. CONTRACTOR TO FIELD VERIFY ELEVATIONS, GRADES, SLOPES, LENGTHS, AND MATCHPOINTS PRIOR TO CURB RAMP CONSTRUCTION.
2. THE ENGINEER MAY ADJUST ELEVATIONS TO FIT FIELD CONDITIONS WITHIN THE CONDITIONS OF THE STANDARD DETAIL DRAWINGS.
3. DASHED LINES SHOWN FOR PROPOSED SIDEWALK ARE FOR INFORMATION ONLY AND DO NOT INDICATE EXACT JOINT LOCATIONS.
4. THE CROSS SLOPE OF THE GUTTER SHALL BE 4% UNLESS OTHERWISE SHOWN.
5. THE MAXIMUM GRADE BREAK BETWEEN THE GUTTER PAN AND CURB RAMP SHALL BE 11%.
6. SIDEWALK AND CURB RAMP CROSS SLOPE SHALL NOT EXCEED 2%.
7. SIDEWALK AND CURB RAMP RUNNING SLOPE SHALL NOT EXCEED 8.33% (12H:1V).

POINT TABLE

POINT NUMBER	STATION	OFFSET	ELEVATION	y	X
1400	1042+55.00	45.07' LT	823.73	128,263.54	553874.44
1401	1042+54.99	40.25' LT	823.62	128,258.71	553874.49
1402	1042+60.00	45.00' LT	823.72	128,263.53	553879.44
1403	1042+60.00	40.00' LT	823.65	128,258.53	553879.50
1404	1042+68.00	45.00' LT	823.65	128,263.62	553887.44
1405	1042+68.00	40.00' LT	823.58	128,258.62	553887.50
1406	1042+79.38	45.00' LT	822.98	128,263.76	553898.82
1407	1042+79.38	40.00' LT	823.03	128,258.76	553898.88
1408	1042+85.38	45.00' LT	822.56	128,263.83	553904.82

POINT TABLE

POINT NUMBER	STATION	OFFSET	ELEVATION	y	X
1409	1042+85.38	40.00' LT	822.61	128,258.83	553904.88
1410	1042+90.24	45.00' LT	822.49	128,263.89	553909.68
1411	1042+81.68	30.00' LT	822.87	128,248.78	553901.30
1412	1042+81.68	35.00' LT	822.77	128,253.78	553901.24
1413	1042+93.53	45.50' LT	822.54	128,264.42	553912.96
1414	1043+38.23	45.50' LT	822.04	128,264.96	553957.66
1415	1043+50.08	35.00' LT	822.06	128,254.60	553969.64
1416	1043+50.08	30.00' LT	822.16	128,249.60	553969.70
1417	1043+41.52	45.00' LT	821.97	128,264.50	553960.95

POINT TABLE

POINT NUMBER	STATION	OFFSET	ELEVATION	y	X
1418	1043+46.38	45.00' LT	822.04	128,264.55	553965.82
1419	1043+46.38	40.00' LT	822.01	128,259.55	553965.88
1420	1043+52.38	45.00' LT	822.46	128,264.63	553971.82
1421	1043+52.38	40.00' LT	822.43	128,259.63	553971.88
1422	1043+57.38	46.00' LT	822.55	128,265.68	553976.81
1423	1043+57.38	40.00' LT	822.51	128,259.69	553976.88
1424	1043+62.38	45.99' LT	822.69	128,265.73	553981.81
1425	1043+62.38	40.00' LT	822.60	128,259.74	553981.88
1426	1043+44.88	38.00' LT	822.09	128,257.54	553964.40

2

LEGEND

XXX.XX	SIDEWALK ELEVATION
XXX.XX(F)	C&G FLANGE ELEVATION
XXX.XX(G)	C&G FLOWLINE ELEVATION
XXX.XX(T)	TOP OF CURB ELEVATION
LL	LEVEL LANDING
100	POINT NUMBER
	SLOPE INTERCEPTS
	DETECTABLE WARNING FIELD
MEF	MAXIMUM EXTENT FEASIBLE TECHNICAL INFEASIBILITY PRESENT
G	GRADED FLARE (6:1 MAX SLOPE)
P	PAVED FLARE (10:1 MAX SLOPE)

NOTES:

1. CONTRACTOR TO FIELD VERIFY ELEVATIONS, GRADES, SLOPES, LENGTHS, AND MATCHPOINTS PRIOR TO CURB RAMP CONSTRUCTION.
2. THE ENGINEER MAY ADJUST ELEVATIONS TO FIT FIELD CONDITIONS WITHIN THE CONDITIONS OF THE STANDARD DETAIL DRAWINGS.
3. DASHED LINES SHOWN FOR PROPOSED SIDEWALK ARE FOR INFORMATION ONLY AND DO NOT INDICATE EXACT JOINT LOCATIONS.
4. THE CROSS SLOPE OF THE GUTTER SHALL BE 4% UNLESS OTHERWISE SHOWN.
5. THE MAXIMUM GRADE BREAK BETWEEN THE GUTTER PAN AND CURB RAMP SHALL BE 11%.
6. SIDEWALK AND CURB RAMP CROSS SLOPE SHALL NOT EXCEED 2%.
7. SIDEWALK AND CURB RAMP RUNNING SLOPE SHALL NOT EXCEED 8.33% (12H:1V).

POINT TABLE

POINT NUMBER	STATION	OFFSET	ELEVATION	y	X
1500	1046+60.32	30.91' RT	819.74	128,190.34	554280.43
1501	1046+60.27	35.91' RT	819.64	128,185.34	554280.40
1502	1046+72.02	46.53' RT	819.85	128,174.77	554292.20
1503	1046+48.57	40.84' RT	820.42	128,180.36	554268.72
1504	1046+48.52	45.69' RT	820.47	128,175.51	554268.70
1505	1046+52.93	40.84' RT	820.38	128,180.38	554273.08
1506	1046+52.88	45.84' RT	820.43	128,175.38	554273.05
1507	1046+57.93	40.89' RT	820.19	128,180.35	554278.08
1508	1046+57.88	45.89' RT	820.23	128,175.35	554278.05
1509	1046+63.92	40.95' RT	819.77	128,180.32	554284.08
1510	1046+63.87	45.95' RT	819.81	128,175.32	554284.05
1511	1046+68.74	46.00' RT	819.74	128,175.29	554288.92

POINT TABLE

POINT NUMBER	STATION	OFFSET	ELEVATION	y	X
1512	1047+18.76	47.00' RT	820.16	128,174.52	554338.94
1513	1047+22.05	46.53' RT	820.07	128,175.00	554342.23
1514	1047+26.96	41.58' RT	820.03	128,179.98	554347.12
1515	1047+26.91	46.58' RT	820.10	128,174.98	554347.09
1516	1047+32.96	41.64' RT	820.45	128,179.95	554353.12
1517	1047+32.91	46.64' RT	820.52	128,174.95	554353.09
1518	1047+37.96	41.69' RT	820.75	128,179.92	554358.12
1519	1047+37.91	46.69' RT	820.82	128,174.92	554358.09
1520	1047+42.96	41.74' RT	820.82	128,179.89	554363.12
1521	1047+42.91	46.74' RT	820.90	128,174.89	554363.09
1522	1047+30.77	31.62' RT	820.17	128,189.96	554350.88
1523	1047+30.72	36.62' RT	820.07	128,184.96	554350.85

N

2

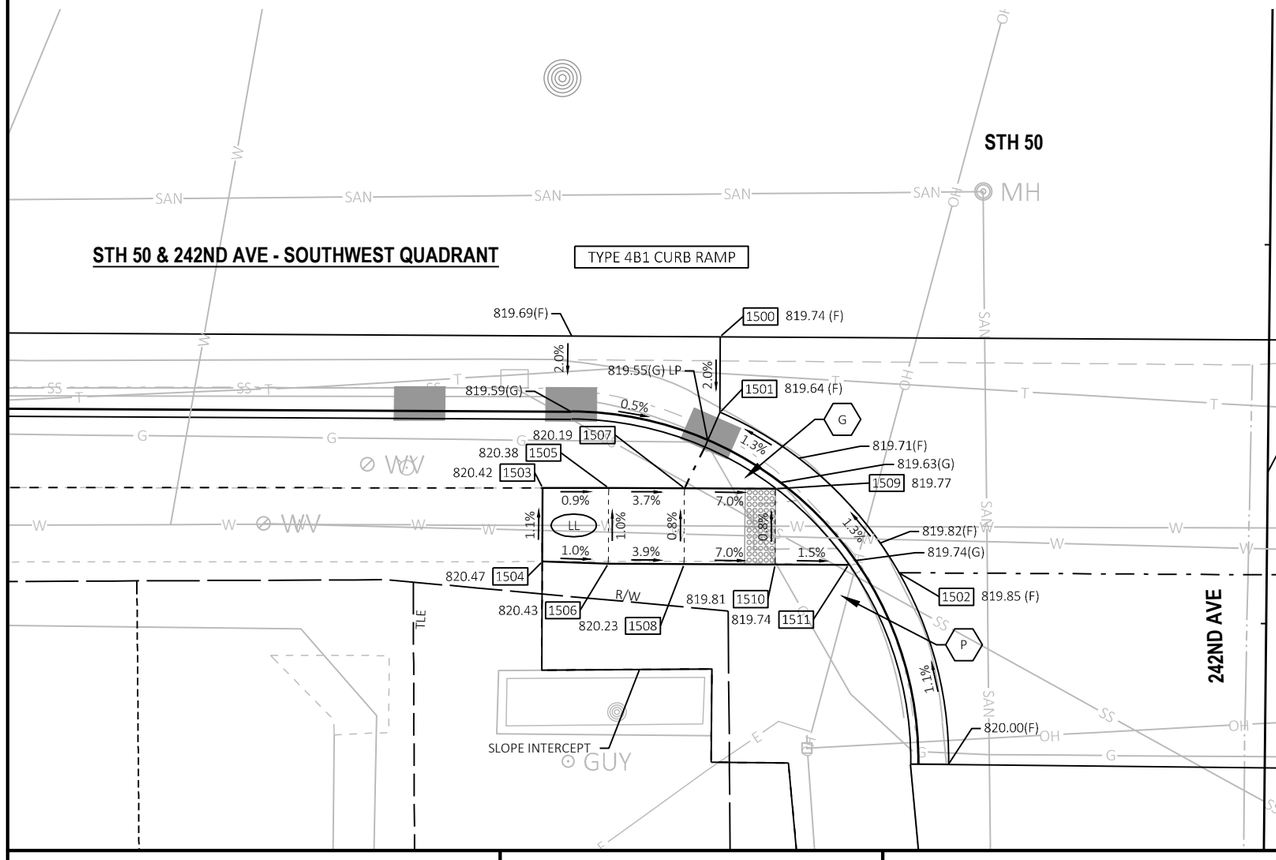

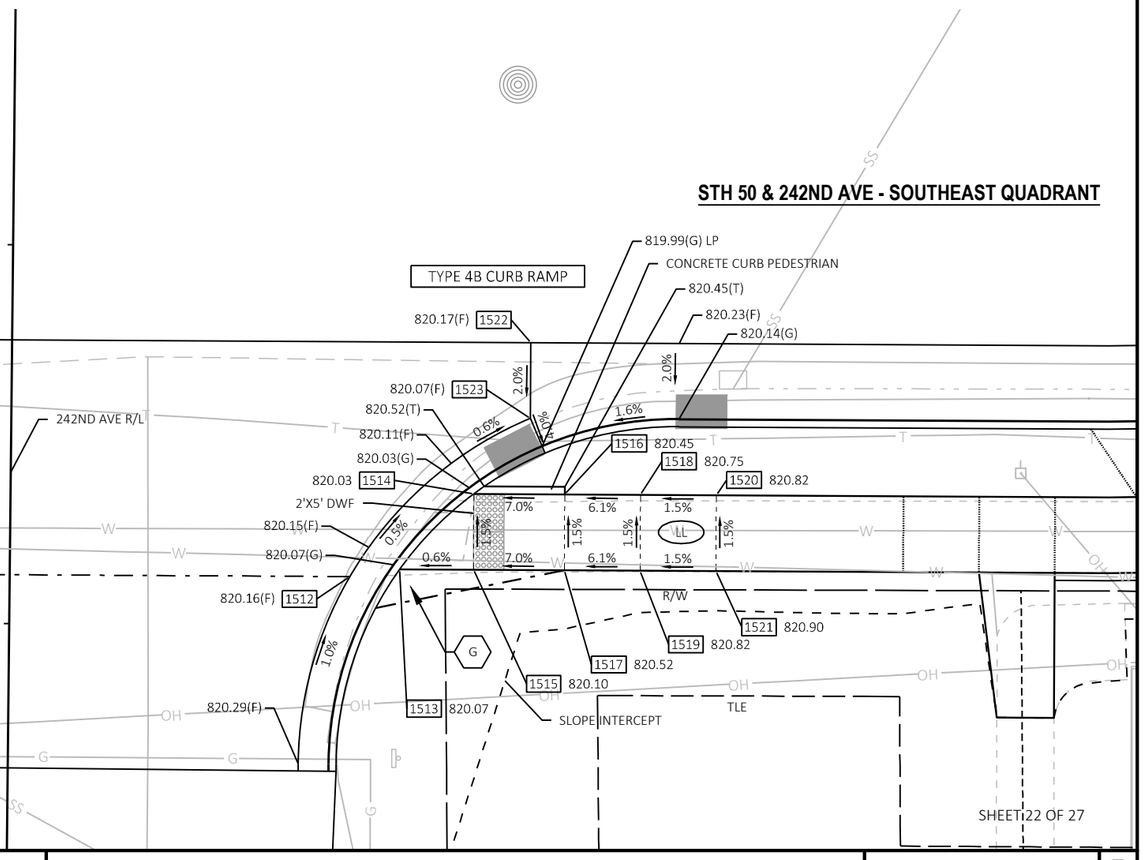

SHEET 22 OF 27

PROJECT NO: 1310-04-70	HWY: STH 50	COUNTY: KENOSHA	CURB RAMP DETAILS	SHEET 129	E

FILE NAME : T:\1182708.06\CIVIL3D\13100400\13100400\SHEETSPLAN\021301_CR.DWG
LAYOUT NAME - 15-242-S

PLOT DATE : 1/18/2022 10:06 AM PLOT BY : BLACKWOOD, JIM PLOT NAME : PLOT SCALE : ##########

WISDOT/CADDS SHEET 42

2

RADIAL WARNING FIELD PANEL LAYOUT TABLE

QUADRANT	BACK OF CURB RADIUS (FT)	LANDING LENGTH 'XR' (FT)	RADIAL WARNING FIELD AREA (SF)	RADIAL LONG CHORD (FT)
NORTHWEST	22.5'	10.09'	16.4 SF	7.54'

NOTE:
FIELD VERIFY EXISTING MATCH POINT ELEVATIONS ADJACENT TO EXISTING BUILDING, AND SIDEWALK. FIELD ADJUST ELEVATIONS AS NECESSARY WHILE STILL MEETING ADA REQUIREMENTS

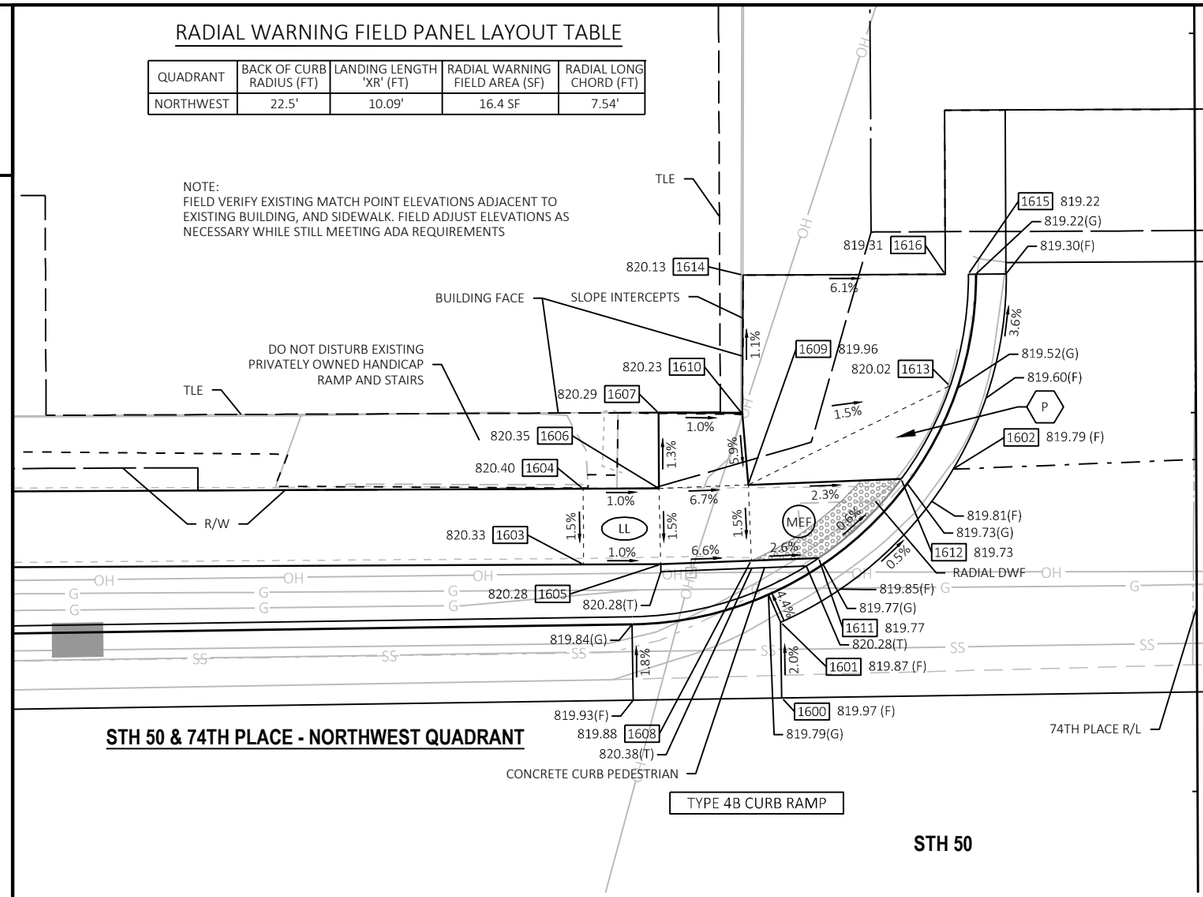

MAXIMUM EXTENT FEASBILE NOTES:
1. THE SIDEWALK LONGITUDINAL SLOPE OF THE RADIAL LOWER LANDING WILL BE GREATER THAN 1.5%. A SLOPE OF 1.5% OR FLATTER WAS NOT ABLE TO BE ACHIEVED BECAUSE THE UPPER LANDING CANNOT BE LOWERED ANY FARTHER WITHOUT IMPACTING THE SIDEWALK IN FRONT OF AN EXISTING PRIVATE STAIRWAY THAT ALREADY HAS A STEP TOO TALL TO MEET CURRENT BUILDING CODES.

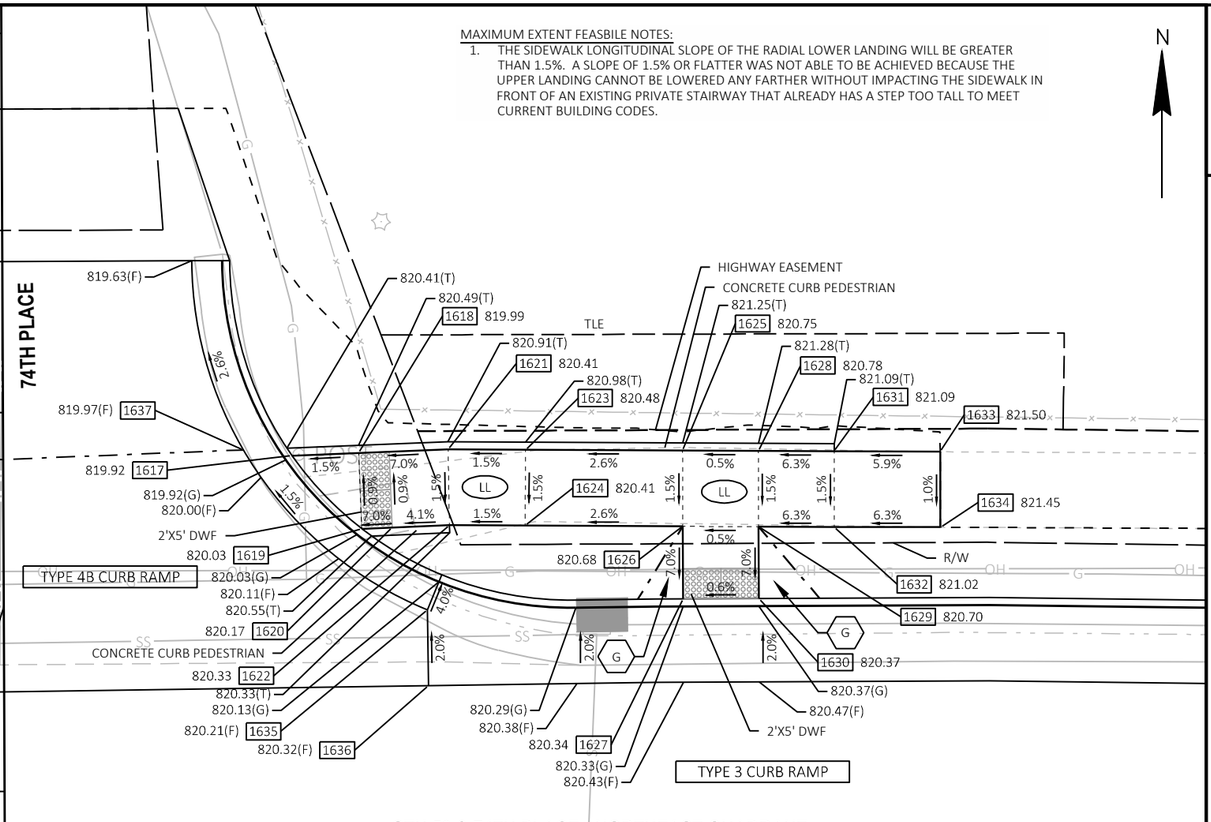

LEGEND

XXX.XX	SIDEWALK ELEVATION
XXX.XX(F)	C&G FLANGE ELEVATION
XXX.XX(G)	C&G FLOWLINE ELEVATION
XXX.XX(T)	TOP OF CURB ELEVATION
LL	LEVEL LANDING
100	POINT NUMBER
	SLOPE INTERCEPTS
	DETECTABLE WARNING FIELD
MEF	MAXIMUM EXTENT FEASIBLE TECHNICAL INFEASIBILITY PRESENT
G	GRADED FLARE (6:1 MAX SLOPE)
P	PAVED FLARE (10:1 MAX SLOPE)

NOTES:
1. CONTRACTOR TO FIELD VERIFY ELEVATIONS, GRADES, SLOPES, LENGTHS, AND MATCHPOINTS PRIOR TO CURB RAMP CONSTRUCTION.
2. THE ENGINEER MAY ADJUST ELEVATIONS TO FIT FIELD CONDITIONS WITHIN THE CONDITIONS OF THE STANDARD DETAIL DRAWINGS.
3. DASHED LINES SHOWN FOR PROPOSED SIDEWALK ARE FOR INFORMATION ONLY AND DO NOT INDICATE EXACT JOINT LOCATIONS.
4. THE CROSS SLOPE OF THE GUTTER SHALL BE 4% UNLESS OTHERWISE SHOWN.
5. THE MAXIMUM GRADE BREAK BETWEEN THE GUTTER PAN AND CURB RAMP SHALL BE 11%.
6. SIDEWALK AND CURB RAMP CROSS SLOPE SHALL NOT EXCEED 2%.
7. SIDEWALK AND CURB RAMP RUNNING SLOPE SHALL NOT EXCEED 8.33% (12H:1V).

POINT TABLE

POINT NUMBER	STATION	OFFSET	ELEVATION	y	X
1600	1046+98.45	31.30' LT	819.97	128,252.72	554318.28
1601	1046+98.40	36.30' LT	819.87	128,257.72	554318.20
1602	1047+09.82	46.34' LT	819.79	128,267.82	554329.57
1603	1046+85.42	40.16' LT	820.33	128,261.53	554305.20
1604	1046+85.42	45.16' LT	820.40	128,266.53	554305.18
1605	1046+90.51	40.16' LT	820.28	128,261.55	554310.29
1606	1046+90.42	45.16' LT	820.35	128,266.55	554310.18
1607	1046+90.42	50.11' LT	820.29	128,271.50	554310.15
1608	1046+96.48	40.37' LT	819.88	128,261.79	554316.26
1609	1046+96.31	45.36' LT	819.96	128,266.78	554316.07
1610	1046+95.97	50.02' LT	820.23	128,271.43	554315.70
1611	1047+00.93	40.52' LT	819.77	128,261.96	554320.71
1612	1047+06.39	45.72' LT	819.73	128,267.18	554326.15

POINT TABLE

POINT NUMBER	STATION	OFFSET	ELEVATION	y	X
1613	1047+09.64	51.84' LT	820.02	128,273.31	554329.37
1614	1046+96.02	59.20' LT	820.13	128,280.61	554315.72
1615	1047+10.88	59.19' LT	819.22	128,280.68	554330.57
1616	1047+09.38	59.19' LT	819.31	128,280.67	554329.07
1617	1047+44.93	47.07' LT	819.92	128,268.71	554364.67
1618	1047+49.33	47.23' LT	819.99	128,268.89	554369.08
1619	1047+49.51	42.23' LT	820.03	128,263.89	554369.28
1620	1047+51.56	42.30' LT	820.17	128,263.97	554371.28
1621	1047+55.23	47.43' LT	820.41	128,269.12	554374.98
1622	1047+55.29	42.43' LT	820.33	128,264.12	554375.06
1623	1047+60.34	47.38' LT	820.48	128,269.10	554380.09
1624	1047+60.29	42.38' LT	820.41	128,264.10	554380.06
1625	1047+70.70	47.29' LT	820.75	128,269.05	554390.44

POINT TABLE

POINT NUMBER	STATION	OFFSET	ELEVATION	y	X
1626	1047+70.70	42.29' LT	820.68	128,264.05	554390.47
1627	1047+70.70	37.50' LT	820.34	128,259.26	554390.49
1628	1047+75.70	47.24' LT	820.78	128,269.02	554395.45
1629	1047+75.70	42.24' LT	820.70	128,264.02	554395.47
1630	1047+75.70	37.50' LT	820.37	128,259.28	554395.49
1631	1047+80.70	47.19' LT	821.09	128,269.00	554400.45
1632	1047+80.70	42.19' LT	821.02	128,264.00	554400.47
1633	1047+87.70	47.13' LT	821.50	128,268.97	554407.44
1634	1047+87.70	42.15' LT	821.45	128,263.99	554407.47
1635	1047+53.81	36.85' LT	820.21	128,258.53	554373.60
1636	1047+53.86	31.85' LT	820.32	128,253.53	554373.68
1637	1047+41.72	47.46' LT	819.97	128,269.08	554361.47

PROJECT NO: 1310-04-70	HWY: STH 50	COUNTY: KENOSHA	CURB RAMP DETAILS	SHEET 130	E

FILE NAME : T:\1182708.06\CIVIL3D\13100400\13100400\SHEETSPLAN\021301_CR.DWG
LAYOUT NAME - 16-74
PLOT DATE : 1/18/2022 10:06 AM
PLOT BY : BLACKWOOD, JIM
PLOT NAME :
PLOT SCALE : ##########
WISDOT/CADDS SHEET 42

NOTES:

1. CONTRACTOR TO FIELD VERIFY ELEVATIONS, GRADES, SLOPES, LENGTHS, AND MATCHPOINTS PRIOR TO CURB RAMP CONSTRUCTION.
2. THE ENGINEER MAY ADJUST ELEVATIONS TO FIT FIELD CONDITIONS WITHIN THE CONDITIONS OF THE STANDARD DETAIL DRAWINGS.
3. DASHED LINES SHOWN FOR PROPOSED SIDEWALK ARE FOR INFORMATION ONLY AND DO NOT INDICATE EXACT JOINT LOCATIONS.
4. THE CROSS SLOPE OF THE GUTTER SHALL BE 4% UNLESS OTHERWISE SHOWN.
5. THE MAXIMUM GRADE BREAK BETWEEN THE GUTTER PAN AND CURB RAMP SHALL BE 11%.
6. SIDEWALK AND CURB RAMP CROSS SLOPE SHALL NOT EXCEED 2%.
7. SIDEWALK AND CURB RAMP RUNNING SLOPE SHALL NOT EXCEED 8.33% (12H:1V).

LEGEND

XXX.XX	SIDEWALK ELEVATION
XXX.XX(F)	C&G FLANGE ELEVATION
XXX.XX(G)	C&G FLOWLINE ELEVATION
XXX.XX(T)	TOP OF CURB ELEVATION
LL	LEVEL LANDING
100	POINT NUMBER
- - -	SLOPE INTERCEPTS
	DETECTABLE WARNING FIELD
MEF	MAXIMUM EXTENT FEASIBLE TECHNICAL INFEASIBILITY PRESENT
G	GRADED FLARE (6:1 MAX SLOPE)
P	PAVED FLARE (10:1 MAX SLOPE)

RADIAL WARNING FIELD PANEL LAYOUT TABLE

QUADRANT	BACK OF CURB RADIUS (FT)	LANDING LENGTH 'XR' (FT)	RADIAL WARNING FIELD AREA (SF)	RADIAL LONG CHORD (FT)
NORTHWEST	42.5'	12.65'	19.7 SF	9.17'

TYPE 4B1 CURB RAMP

STH 50

236TH AVE

236TH AVE R/L

96+00

SLOPE INTERCEPT

TLE

R/W

790.11 1712
790.13 1710
789.29(G)
789.39(F)
789.93 1708
789.85 1706
789.35(G)
789.43(F) 1700
789.53(F) 1701
789.54 1704
789.46 1734
789.46(G)
789.54(F)
RADIAL DWF
789.61 1703
789.69(F)
789.61(G)
789.74(F) 1702
1713 790.41
1711 790.21
1709 790.00
1715 790.03
1707 789.93
1714 789.95
1716 790.21
1717 790.28
1719 790.64
1721 790.83
1705 789.61
790.56 1718
790.82 1720
1723 791.38
791.30 1722
791.62 1724
1725 791.69
1727 791.81
1726 791.74
1735 792.01
792.06 1729
792.05 1731
1733 792.19
791.94 1736
791.98 1728
791.98 1730
1732 792.15
790.87(F)

STH 50 & 236TH AVE - NORTHWEST QUADRANT

SHEET 24 OF 27

PROJECT NO: 1310-04-70	HWY: STH 50	COUNTY: KENOSHA	CURB RAMP DETAILS	SHEET 131	E

FILE NAME : T:\1182708.06\CIVIL3D\13100400\13100400\SHEETSPLAN\021301_CR.DWG
LAYOUT NAME - 17-236-NW
PLOT DATE : 1/18/2022 10:06 AM PLOT BY : BLACKWOOD, JIM PLOT NAME : PLOT SCALE : ##########

2

POINT TABLE					
POINT NUMBER	STATION	OFFSET	ELEVATION	y	X
1700	1061+74.08	38.00' LT	789.43	128,243.09	555795.21
1701	1061+74.08	33.00' LT	789.53	128,238.09	555795.04
1702	1061+91.54	48.31' LT	789.74	128,252.78	555813.15
1703	1061+87.24	47.84' LT	789.61	128,252.46	555808.81
1704	1061+74.66	42.95' LT	789.54	128,248.02	555795.96
1705	1061+74.70	47.94' LT	789.61	128,253.01	555796.17
1706	1061+70.16	43.00' LT	789.85	128,248.21	555791.44
1707	1061+70.19	47.99' LT	789.93	128,253.20	555791.62
1708	1061+65.23	43.00' LT	789.93	128,248.38	555786.47
1709	1061+65.23	48.00' LT	790.00	128,253.38	555786.63
1710	1061+60.27	43.08' LT	790.13	128,248.61	555781.47
1711	1061+60.27	48.34' LT	790.21	128,253.88	555781.64
1712	1061+55.31	43.05' LT	790.11	128,248.74	555776.47

POINT TABLE					
POINT NUMBER	STATION	OFFSET	ELEVATION	y	X
1713	1061+55.31	48.29' LT	790.41	128,253.98	555776.64
1714	1061+70.19	49.40' LT	789.95	128,254.61	555791.68
1715	1061+65.24	49.43' LT	790.03	128,254.80	555786.68
1716	1061+73.18	53.97' LT	790.21	128,259.08	555794.84
1717	1061+71.22	58.56' LT	790.28	128,263.73	555793.01
1718	1061+80.36	57.11' LT	790.56	128,261.97	555802.19
1719	1061+78.39	61.70' LT	790.64	128,266.62	555800.36
1720	1061+84.68	60.78' LT	790.82	128,265.48	555806.68
1721	1061+80.55	63.53' LT	790.83	128,268.38	555802.61
1722	1061+93.46	74.36' LT	791.30	128,278.73	555816.05
1723	1061+89.33	77.09' LT	791.38	128,281.62	555811.97
1724	1061+98.26	90.98' LT	791.62	128,295.16	555821.54
1725	1061+93.34	90.94' LT	791.69	128,295.31	555816.54

POINT TABLE					
POINT NUMBER	STATION	OFFSET	ELEVATION	y	X
1726	1061+98.21	97.55' LT	791.74	128,301.73	555821.74
1727	1061+93.29	97.52' LT	791.81	128,301.88	555816.74
1728	1061+98.01	122.60' LT	791.98	128,326.77	555822.49
1729	1061+93.12	122.56' LT	792.06	128,326.92	555817.49
1730	1061+97.95	130.48' LT	791.98	128,334.64	555822.72
1731	1061+93.06	130.13' LT	792.05	128,334.48	555817.71
1732	1061+97.91	135.49' LT	792.15	128,339.65	555822.87
1733	1061+93.19	135.15' LT	792.19	128,339.49	555818.03
1734	1061+79.58	42.90' LT	789.46	128,247.80	555800.92
1735	1061+93.20	110.04' LT	792.01	128,314.40	555817.11
1736	1061+98.11	110.08' LT	791.94	128,314.25	555822.11

CURB RAMP POINTS - STH 50 & 236TH AVE - NORTHWEST QUADRANT

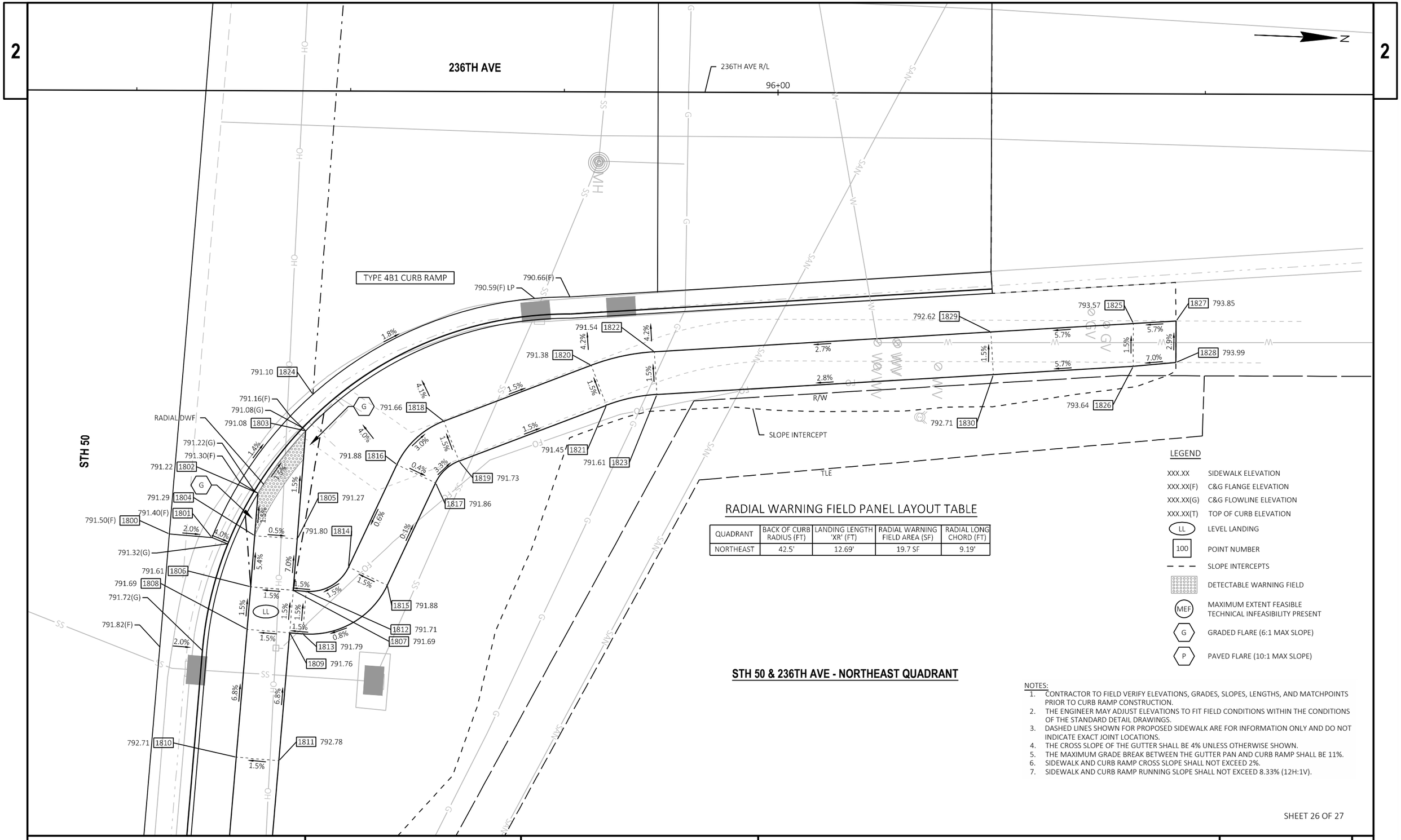

RADIAL WARNING FIELD PANEL LAYOUT TABLE

QUADRANT	BACK OF CURB RADIUS (FT)	LANDING LENGTH 'XR' (FT)	RADIAL WARNING FIELD AREA (SF)	RADIAL LONG CHORD (FT)
NORTHEAST	42.5'	12.69'	19.7 SF	9.19'

LEGEND

- XXX.XX — SIDEWALK ELEVATION
- XXX.XX(F) — C&G FLANGE ELEVATION
- XXX.XX(G) — C&G FLOWLINE ELEVATION
- XXX.XX(T) — TOP OF CURB ELEVATION
- LL — LEVEL LANDING
- 100 — POINT NUMBER
- SLOPE INTERCEPTS
- DETECTABLE WARNING FIELD
- MEF — MAXIMUM EXTENT FEASIBLE TECHNICAL INFEASIBILITY PRESENT
- G — GRADED FLARE (6:1 MAX SLOPE)
- P — PAVED FLARE (10:1 MAX SLOPE)

STH 50 & 236TH AVE - NORTHEAST QUADRANT

NOTES:

1. CONTRACTOR TO FIELD VERIFY ELEVATIONS, GRADES, SLOPES, LENGTHS, AND MATCHPOINTS PRIOR TO CURB RAMP CONSTRUCTION.
2. THE ENGINEER MAY ADJUST ELEVATIONS TO FIT FIELD CONDITIONS WITHIN THE CONDITIONS OF THE STANDARD DETAIL DRAWINGS.
3. DASHED LINES SHOWN FOR PROPOSED SIDEWALK ARE FOR INFORMATION ONLY AND DO NOT INDICATE EXACT JOINT LOCATIONS.
4. THE CROSS SLOPE OF THE GUTTER SHALL BE 4% UNLESS OTHERWISE SHOWN.
5. THE MAXIMUM GRADE BREAK BETWEEN THE GUTTER PAN AND CURB RAMP SHALL BE 11%.
6. SIDEWALK AND CURB RAMP CROSS SLOPE SHALL NOT EXCEED 2%.
7. SIDEWALK AND CURB RAMP RUNNING SLOPE SHALL NOT EXCEED 8.33% (12H:1V).

PROJECT NO: 1310-04-70	HWY: STH 50	COUNTY: KENOSHA	CURB RAMP DETAILS	SHEET 133	E

FILE NAME : T:\1182708.06\CIVIL3D\13100400\13100400\SHEETSPLAN\021301_CR.DWG
LAYOUT NAME - 18-236-NE
PLOT DATE : 1/18/2022 10:07 AM
PLOT BY : BLACKWOOD, JIM
PLOT NAME :
PLOT SCALE : ##########
WISDOT/CADDS SHEET 42

2

POINT TABLE					
POINT NUMBER	STATION	OFFSET	ELEVATION	y	X
1800	1062+84.60	33.00' LT	791.50	128,233.32	555905.98
1801	1062+84.60	38.00' LT	791.40	128,238.32	555906.23
1802	1062+78.98	42.93' LT	791.22	128,243.51	555900.86
1803	1062+71.24	47.88' LT	791.08	128,248.84	555893.37
1804	1062+83.97	42.96' LT	791.29	128,243.30	555905.84
1805	1062+83.94	47.96' LT	791.27	128,248.30	555906.05
1806	1062+89.97	43.00' LT	791.61	128,243.04	555911.83
1807	1062+89.95	47.98' LT	791.69	128,248.02	555912.06
1808	1062+94.97	43.00' LT	791.69	128,242.80	555916.83
1809	1062+94.95	48.00' LT	791.76	128,247.79	555917.06
1810	1063+09.97	43.00' LT	792.71	128,242.06	555931.81

POINT TABLE					
POINT NUMBER	STATION	OFFSET	ELEVATION	y	X
1811	1063+09.97	48.00' LT	792.78	128,247.05	555932.06
1812	1062+89.95	49.53' LT	791.71	128,249.56	555912.14
1813	1062+94.95	49.53' LT	791.79	128,249.32	555917.13
1814	1062+86.70	54.21' LT	791.80	128,254.40	555909.12
1815	1062+88.44	58.90' LT	791.88	128,259.00	555911.10
1816	1062+74.28	58.84' LT	791.88	128,259.64	555896.95
1817	1062+76.02	63.52' LT	791.86	128,264.23	555898.92
1818	1062+68.75	63.89' LT	791.66	128,264.96	555891.68
1819	1062+73.26	66.05' LT	791.73	128,266.89	555896.29
1820	1062+60.84	80.52' LT	791.38	128,281.96	555884.54
1821	1062+65.30	82.68' LT	791.45	128,283.89	555889.15

POINT TABLE					
POINT NUMBER	STATION	OFFSET	ELEVATION	y	X
1822	1062+58.68	87.75' LT	791.54	128,289.29	555882.71
1823	1062+63.55	88.46' LT	791.61	128,289.75	555887.68
1824	1062+66.90	48.35' LT	791.10	128,249.53	555889.06
1825	1062+50.91	143.31' LT	793.57	128,345.16	555877.44
1826	1062+55.78	143.70' LT	793.64	128,345.32	555882.45
1827	1062+50.22	148.27' LT	793.85	128,350.15	555876.97
1828	1062+54.94	148.65' LT	793.99	128,350.30	555881.82
1829	1062+53.20	126.78' LT	792.62	128,328.54	555879.00
1830	1062+58.04	127.49' LT	792.71	128,329.01	555883.98

CURB RAMP POINTS - STH 50 & 236TH AVE - NORTHEAST QUADRANT

2

LEGEND

- SILT FENCE
- INLET PROTECTION
- (A) INLET PROTECTION TYPE
- CULVERT PIPE CHECK
- TEMPORARY DITCH CHECK
- SURFACE WATER FLOW ARROW
- RIPRAP
- EROSION MAT CLASS I TYPE B
- EROSION MAT CLASS II TYPE C

NOTES:

1. EROSION CONTROL DEVICES SHOWN ON THE PLANS ARE AT SUGGESTED LOCATIONS. THE EXACT LOCATIONS WILL BE DETERMINED BY THE CONTRACTOR'S ECIP AND BY THE ENGINEER. EROSION CONTROL DEVICES SHALL BE MAINTAINED UNTIL PERMANENT VEGETATION IS ESTABLISHED OR THE ENGINEER DETERMINES THAT THE DEVICE IS NO LONGER NEEDED.
2. EROSION CONTROL DEVICES SHALL BE PLACED IN SEQUENCE WITH CONSTRUCTION OPERATIONS OR AS DETERMINED BY THE ENGINEER.
3. ALL RESTORATION SHALL BE TOPSOIL, SOD LAWN, AND FERTILIZER TYPE B UNLESS OTHERWISE SHOWN ON THE EROSION CONTROL PLANS. WHEN EROSION MAT IS SHOWN IN THE EROSION CONTROL PLANS RESTORATION SHALL BE TOPSOIL, SEED MIXTURE NO. 30, AND FERTILIZER TYPE B UNLESS ANOTHER SEED MIXTURE IS IDENTIFIED IN THE PLANS.
4. PLACE INLET PROTECTION TYPE A DURING GRADING AND INLET PROTECTION TYPE B, C, OR D AFTER PAVEMENT ADJACENT TO INLET IS PLACED.
5. DO NOT STORE MATERIAL OR OPERATE EQUIPMENT IN WETLANDS OUTSIDE THE SLOPE INTERCEPT.

N

2

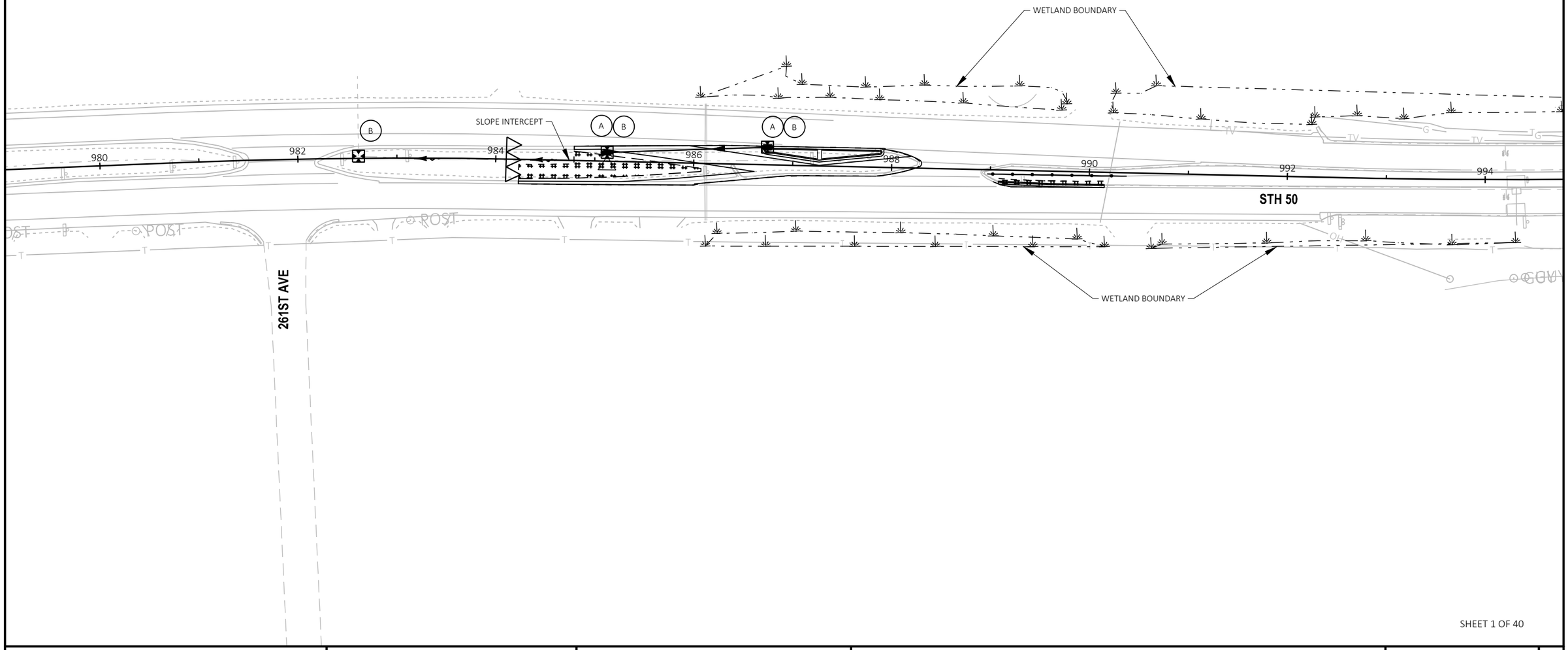

SHEET 1 OF 40

PROJECT NO: 1310-04-70	HWY: STH 50	COUNTY: KENOSHA	EROSION CONTROL - STAGE 1A	SHEET 135	E

FILE NAME : T:\1182708.06\CIVIL3D\13100400\13100400\SHEETSPLAN\022001_EC_S1A.DWG
LAYOUT NAME - 03

PLOT DATE : 1/18/2022 10:23 AM PLOT BY : BLACKWOOD, JIM PLOT NAME : PLOT SCALE : 1 IN:100 FT

2

LEGEND

- SILT FENCE
- INLET PROTECTION
- A — INLET PROTECTION TYPE
- CULVERT PIPE CHECK
- TEMPORARY DITCH CHECK
- SURFACE WATER FLOW ARROW
- RIPRAP
- EROSION MAT CLASS I TYPE B
- EROSION MAT CLASS II TYPE C

NOTES:

1. EROSION CONTROL DEVICES SHOWN ON THE PLANS ARE AT SUGGESTED LOCATIONS. THE EXACT LOCATIONS WILL BE DETERMINED BY THE CONTRACTOR'S ECIP AND BY THE ENGINEER. EROSION CONTROL DEVICES SHALL BE MAINTAINED UNTIL PERMANENT VEGETATION IS ESTABLISHED OR THE ENGINEER DETERMINES THAT THE DEVICE IS NO LONGER NEEDED.
2. EROSION CONTROL DEVICES SHALL BE PLACED IN SEQUENCE WITH CONSTRUCTION OPERATIONS OR AS DETERMINED BY THE ENGINEER.
3. ALL RESTORATION SHALL BE TOPSOIL, SOD LAWN, AND FERTILIZER TYPE B UNLESS OTHERWISE SHOWN ON THE EROSION CONTROL PLANS. WHEN EROSION MAT IS SHOWN IN THE EROSION CONTROL PLANS RESTORATION SHALL BE TOPSOIL, SEED MIXTURE NO. 30, AND FERTILIZER TYPE B UNLESS ANOTHER SEED MIXTURE IS IDENTIFIED IN THE PLANS.
4. PLACE INLET PROTECTION TYPE A DURING GRADING AND INLET PROTECTION TYPE B, C, OR D AFTER PAVEMENT ADJACENT TO INLET IS PLACED.
5. DO NOT STORE MATERIAL OR OPERATE EQUIPMENT IN WETLANDS OUTSIDE THE SLOPE INTERCEPT.

N

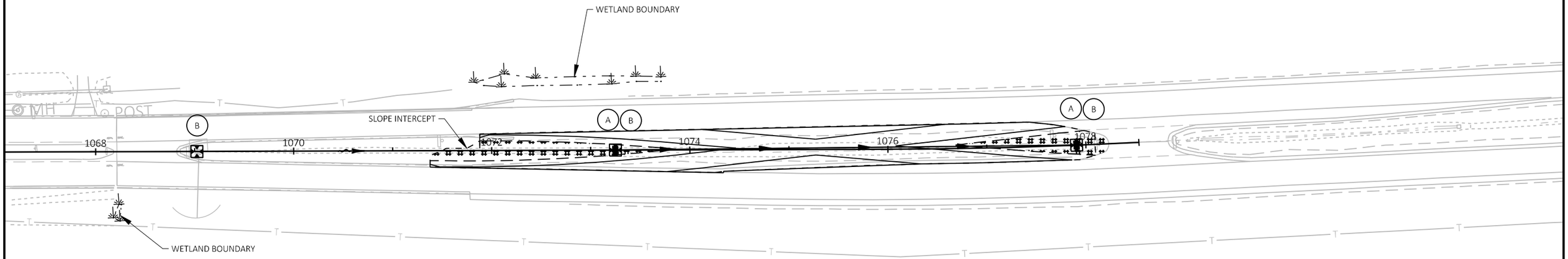

SHEET 2 OF 40

PROJECT NO: 1310-04-70	HWY: STH 50	COUNTY: KENOSHA	EROSION CONTROL - STAGE 1A	SHEET 136	E

FILE NAME : T:\1182708.06\CIVIL3D\13100400\13100400\SHEETSPLAN\022001_EC_S1A.DWG
LAYOUT NAME - 09
PLOT DATE : 1/18/2022 10:24 AM
PLOT BY : BLACKWOOD, JIM
PLOT NAME :
PLOT SCALE : 1 IN:100 FT

2

LEGEND

- SILT FENCE
- INLET PROTECTION
- (A) INLET PROTECTION TYPE
- CULVERT PIPE CHECK
- TEMPORARY DITCH CHECK
- SURFACE WATER FLOW ARROW
- RIPRAP
- EROSION MAT CLASS I TYPE B
- EROSION MAT CLASS II TYPE C

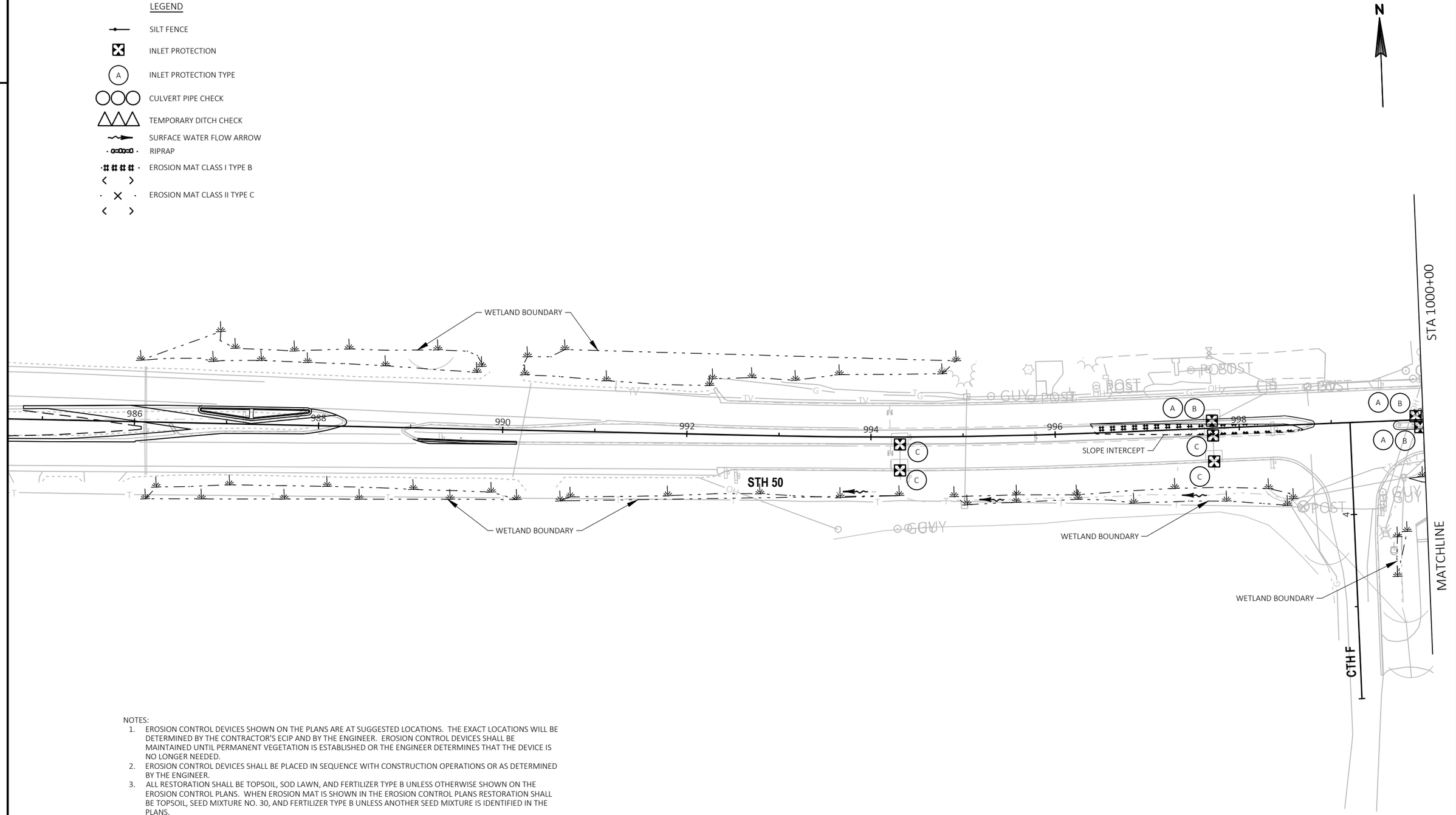

NOTES:

1. EROSION CONTROL DEVICES SHOWN ON THE PLANS ARE AT SUGGESTED LOCATIONS. THE EXACT LOCATIONS WILL BE DETERMINED BY THE CONTRACTOR'S ECIP AND BY THE ENGINEER. EROSION CONTROL DEVICES SHALL BE MAINTAINED UNTIL PERMANENT VEGETATION IS ESTABLISHED OR THE ENGINEER DETERMINES THAT THE DEVICE IS NO LONGER NEEDED.
2. EROSION CONTROL DEVICES SHALL BE PLACED IN SEQUENCE WITH CONSTRUCTION OPERATIONS OR AS DETERMINED BY THE ENGINEER.
3. ALL RESTORATION SHALL BE TOPSOIL, SOD LAWN, AND FERTILIZER TYPE B UNLESS OTHERWISE SHOWN ON THE EROSION CONTROL PLANS. WHEN EROSION MAT IS SHOWN IN THE EROSION CONTROL PLANS RESTORATION SHALL BE TOPSOIL, SEED MIXTURE NO. 30, AND FERTILIZER TYPE B UNLESS ANOTHER SEED MIXTURE IS IDENTIFIED IN THE PLANS.
4. PLACE INLET PROTECTION TYPE A DURING GRADING AND INLET PROTECTION TYPE B, C, OR D AFTER PAVEMENT ADJACENT TO INLET IS PLACED.
5. DO NOT STORE MATERIAL OR OPERATE EQUIPMENT IN WETLANDS OUTSIDE THE SLOPE INTERCEPT.

SHEET 3 OF 40

PROJECT NO: 1310-04-70	HWY: STH 50	COUNTY: KENOSHA	EROSION CONTROL - STAGE 1B	SHEET 137	E

2

2

LEGEND

- SILT FENCE
- INLET PROTECTION
- (A) INLET PROTECTION TYPE
- CULVERT PIPE CHECK
- TEMPORARY DITCH CHECK
- SURFACE WATER FLOW ARROW
- RIPRAP
- EROSION MAT CLASS I TYPE B
- EROSION MAT CLASS II TYPE C

N

STA 1000+00

STA 1015+00

MATCHLINE

MATCHLINE

STH 75

STH 50

STH 83

WETLAND BOUNDARY

SLOPE INTERCEPT

SLOPE INTERCEPT

WETLAND BOUNDARY

SLOPE INTERCEPT

SLOPE INTERCEPT

WETLAND BOUNDARY

NOTES:

1. EROSION CONTROL DEVICES SHOWN ON THE PLANS ARE AT SUGGESTED LOCATIONS. THE EXACT LOCATIONS WILL BE DETERMINED BY THE CONTRACTOR'S ECIP AND BY THE ENGINEER. EROSION CONTROL DEVICES SHALL BE MAINTAINED UNTIL PERMANENT VEGETATION IS ESTABLISHED OR THE ENGINEER DETERMINES THAT THE DEVICE IS NO LONGER NEEDED.
2. EROSION CONTROL DEVICES SHALL BE PLACED IN SEQUENCE WITH CONSTRUCTION OPERATIONS OR AS DETERMINED BY THE ENGINEER.
3. ALL RESTORATION SHALL BE TOPSOIL, SOD LAWN, AND FERTILIZER TYPE B UNLESS OTHERWISE SHOWN ON THE EROSION CONTROL PLANS. WHEN EROSION MAT IS SHOWN IN THE EROSION CONTROL PLANS RESTORATION SHALL BE TOPSOIL, SEED MIXTURE NO. 30, AND FERTILIZER TYPE B UNLESS ANOTHER SEED MIXTURE IS IDENTIFIED IN THE PLANS.
4. PLACE INLET PROTECTION TYPE A DURING GRADING AND INLET PROTECTION TYPE B, C, OR D AFTER PAVEMENT ADJACENT TO INLET IS PLACED.
5. DO NOT STORE MATERIAL OR OPERATE EQUIPMENT IN WETLANDS OUTSIDE THE SLOPE INTERCEPT.

SHEET 4 OF 40

PROJECT NO: 1310-04-70	HWY: STH 50	COUNTY: KENOSHA	EROSION CONTROL - STAGE 1B	SHEET 138	E

FILE NAME : T:\1182708.06\CIVIL3D\13100400\13100400\SHEETSPLAN\022002_EC_S1B.DWG
LAYOUT NAME - 02

PLOT DATE : 1/18/2022 10:24 AM PLOT BY : BLACKWOOD, JIM PLOT NAME : PLOT SCALE : 1 IN:100 FT

NOTES:

1. EROSION CONTROL DEVICES SHOWN ON THE PLANS ARE AT SUGGESTED LOCATIONS. THE EXACT LOCATIONS WILL BE DETERMINED BY THE CONTRACTOR'S ECIP AND BY THE ENGINEER. EROSION CONTROL DEVICES SHALL BE MAINTAINED UNTIL PERMANENT VEGETATION IS ESTABLISHED OR THE ENGINEER DETERMINES THAT THE DEVICE IS NO LONGER NEEDED.
2. EROSION CONTROL DEVICES SHALL BE PLACED IN SEQUENCE WITH CONSTRUCTION OPERATIONS OR AS DETERMINED BY THE ENGINEER.
3. ALL RESTORATION SHALL BE TOPSOIL, SOD LAWN, AND FERTILIZER TYPE B UNLESS OTHERWISE SHOWN ON THE EROSION CONTROL PLANS. WHEN EROSION MAT IS SHOWN IN THE EROSION CONTROL PLANS RESTORATION SHALL BE TOPSOIL, SEED MIXTURE NO. 30, AND FERTILIZER TYPE B UNLESS ANOTHER SEED MIXTURE IS IDENTIFIED IN THE PLANS.
4. PLACE INLET PROTECTION TYPE A DURING GRADING AND INLET PROTECTION TYPE B, C, OR D AFTER PAVEMENT ADJACENT TO INLET IS PLACED.
5. DO NOT STORE MATERIAL OR OPERATE EQUIPMENT IN WETLANDS OUTSIDE THE SLOPE INTERCEPT.

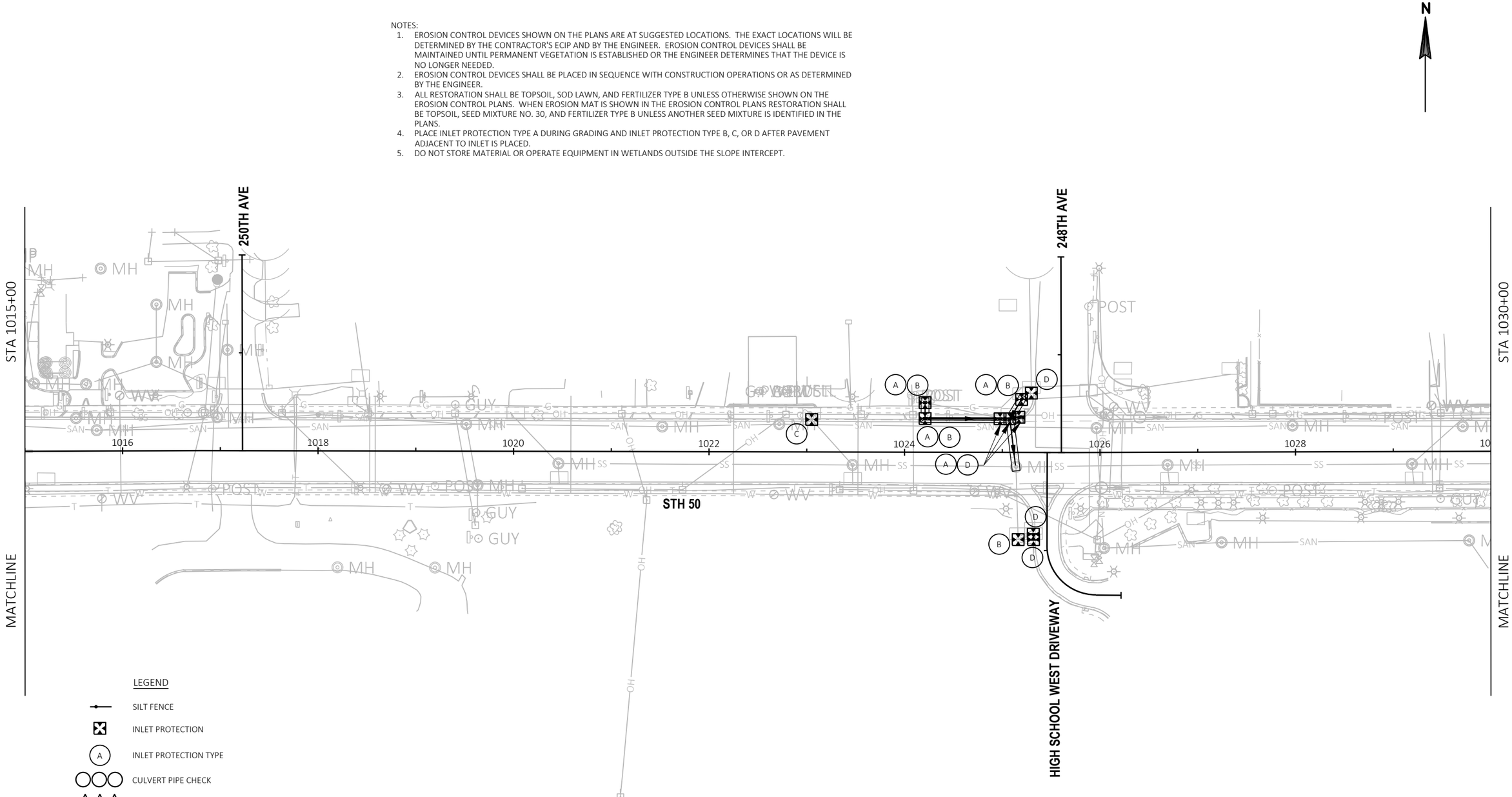

LEGEND

- SILT FENCE
- INLET PROTECTION
- (A) INLET PROTECTION TYPE
- CULVERT PIPE CHECK
- TEMPORARY DITCH CHECK
- SURFACE WATER FLOW ARROW
- RIPRAP
- EROSION MAT CLASS I TYPE B
- EROSION MAT CLASS II TYPE C

SHEET 5 OF 40

PROJECT NO: 1310-04-70	HWY: STH 50	COUNTY: KENOSHA	EROSION CONTROL - STAGE 1B	SHEET 139	E

FILE NAME : T:\1182708.06\CIVIL3D\13100400\13100400\SHEETSPLAN\022002_EC_S1B.DWG
LAYOUT NAME - 03
PLOT DATE : 1/18/2022 10:24 AM
PLOT BY : BLACKWOOD, JIM
PLOT NAME :
PLOT SCALE : 1 IN:100 FT

NOTES:

1. EROSION CONTROL DEVICES SHOWN ON THE PLANS ARE AT SUGGESTED LOCATIONS. THE EXACT LOCATIONS WILL BE DETERMINED BY THE CONTRACTOR'S ECIP AND BY THE ENGINEER. EROSION CONTROL DEVICES SHALL BE MAINTAINED UNTIL PERMANENT VEGETATION IS ESTABLISHED OR THE ENGINEER DETERMINES THAT THE DEVICE IS NO LONGER NEEDED.
2. EROSION CONTROL DEVICES SHALL BE PLACED IN SEQUENCE WITH CONSTRUCTION OPERATIONS OR AS DETERMINED BY THE ENGINEER.
3. ALL RESTORATION SHALL BE TOPSOIL, SOD LAWN, AND FERTILIZER TYPE B UNLESS OTHERWISE SHOWN ON THE EROSION CONTROL PLANS. WHEN EROSION MAT IS SHOWN IN THE EROSION CONTROL PLANS RESTORATION SHALL BE TOPSOIL, SEED MIXTURE NO. 30, AND FERTILIZER TYPE B UNLESS ANOTHER SEED MIXTURE IS IDENTIFIED IN THE PLANS.
4. PLACE INLET PROTECTION TYPE A DURING GRADING AND INLET PROTECTION TYPE B, C, OR D AFTER PAVEMENT ADJACENT TO INLET IS PLACED.
5. DO NOT STORE MATERIAL OR OPERATE EQUIPMENT IN WETLANDS OUTSIDE THE SLOPE INTERCEPT.

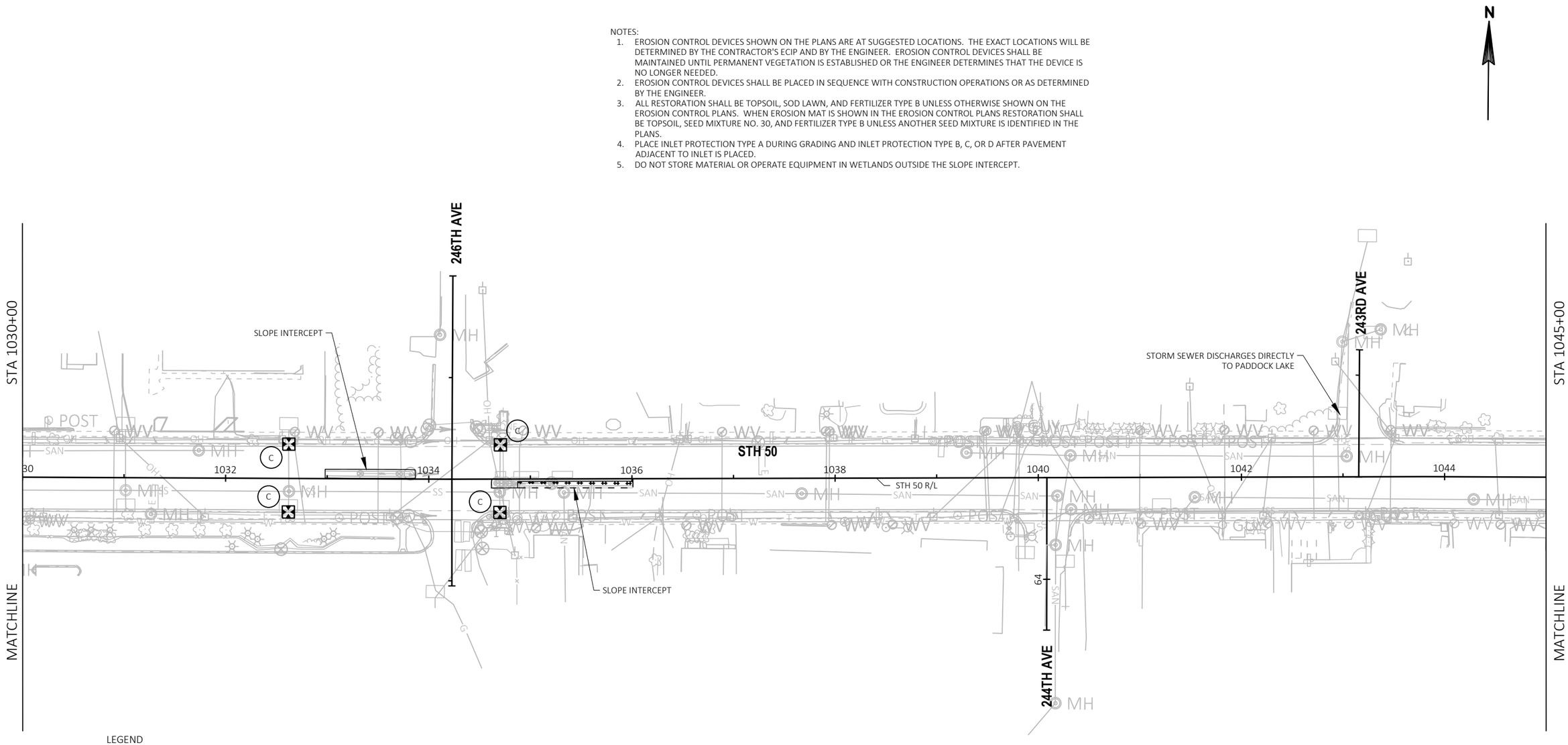

LEGEND

- SILT FENCE
- INLET PROTECTION
- A — INLET PROTECTION TYPE
- CULVERT PIPE CHECK
- TEMPORARY DITCH CHECK
- SURFACE WATER FLOW ARROW
- RIPRAP
- EROSION MAT CLASS I TYPE B
- EROSION MAT CLASS II TYPE C

SHEET 6 OF 40

PROJECT NO: 1310-04-70	HWY: STH 50	COUNTY: KENOSHA	EROSION CONTROL - STAGE 1B	SHEET 140	E

2

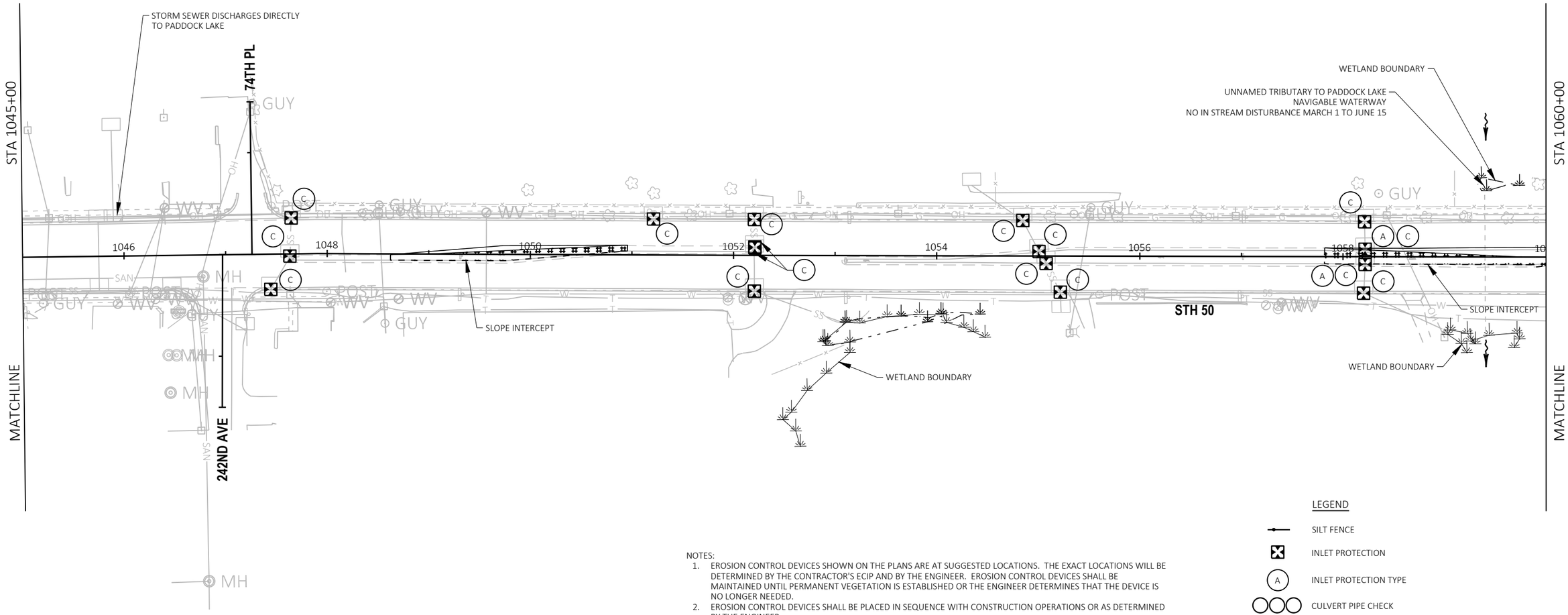

NOTES:

1. EROSION CONTROL DEVICES SHOWN ON THE PLANS ARE AT SUGGESTED LOCATIONS. THE EXACT LOCATIONS WILL BE DETERMINED BY THE CONTRACTOR'S ECIP AND BY THE ENGINEER. EROSION CONTROL DEVICES SHALL BE MAINTAINED UNTIL PERMANENT VEGETATION IS ESTABLISHED OR THE ENGINEER DETERMINES THAT THE DEVICE IS NO LONGER NEEDED.
2. EROSION CONTROL DEVICES SHALL BE PLACED IN SEQUENCE WITH CONSTRUCTION OPERATIONS OR AS DETERMINED BY THE ENGINEER.
3. ALL RESTORATION SHALL BE TOPSOIL, SOD LAWN, AND FERTILIZER TYPE B UNLESS OTHERWISE SHOWN ON THE EROSION CONTROL PLANS. WHEN EROSION MAT IS SHOWN IN THE EROSION CONTROL PLANS RESTORATION SHALL BE TOPSOIL, SEED MIXTURE NO. 30, AND FERTILIZER TYPE B UNLESS ANOTHER SEED MIXTURE IS IDENTIFIED IN THE PLANS.
4. PLACE INLET PROTECTION TYPE A DURING GRADING AND INLET PROTECTION TYPE B, C, OR D AFTER PAVEMENT ADJACENT TO INLET IS PLACED.
5. DO NOT STORE MATERIAL OR OPERATE EQUIPMENT IN WETLANDS OUTSIDE THE SLOPE INTERCEPT.

LEGEND

- SILT FENCE
- INLET PROTECTION
- (A) INLET PROTECTION TYPE
- CULVERT PIPE CHECK
- TEMPORARY DITCH CHECK
- SURFACE WATER FLOW ARROW
- RIPRAP
- EROSION MAT CLASS I TYPE B
- EROSION MAT CLASS II TYPE C

SHEET 7 OF 40

PROJECT NO: 1310-04-70	HWY: STH 50	COUNTY: KENOSHA	EROSION CONTROL - STAGE 1B	SHEET 141	E

FILE NAME : T:\1182708.06\CIVIL3D\13100400\13100400\SHEETSPLAN\022002_EC_S1B.DWG
LAYOUT NAME - 05

PLOT DATE : 1/18/2022 10:24 AM PLOT BY : BLACKWOOD, JIM PLOT NAME : PLOT SCALE : 1 IN:100 FT

2

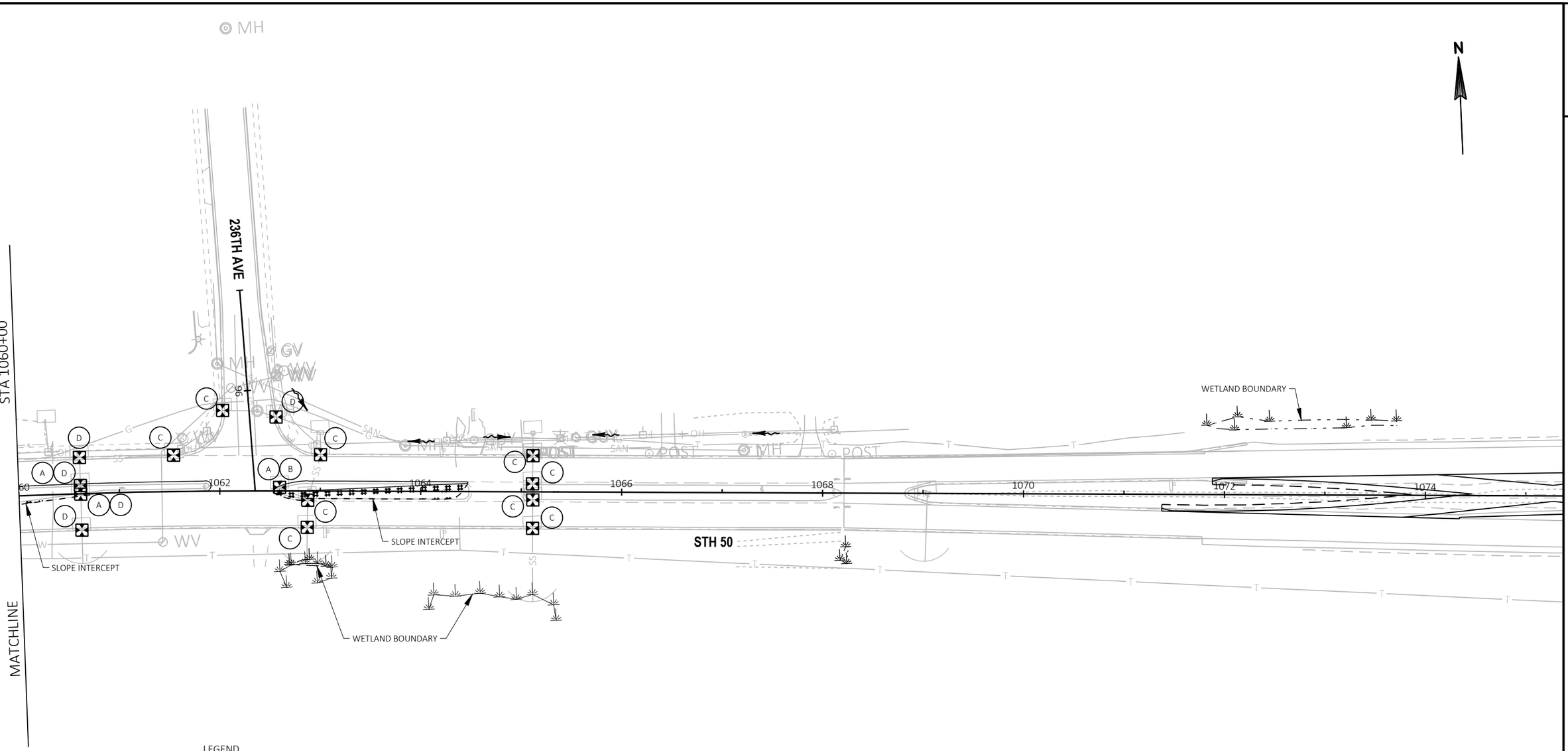

LEGEND

- SILT FENCE
- INLET PROTECTION
- A — INLET PROTECTION TYPE
- CULVERT PIPE CHECK
- TEMPORARY DITCH CHECK
- SURFACE WATER FLOW ARROW
- RIPRAP
- EROSION MAT CLASS I TYPE B
- EROSION MAT CLASS II TYPE C

NOTES:

1. EROSION CONTROL DEVICES SHOWN ON THE PLANS ARE AT SUGGESTED LOCATIONS. THE EXACT LOCATIONS WILL BE DETERMINED BY THE CONTRACTOR'S ECIP AND BY THE ENGINEER. EROSION CONTROL DEVICES SHALL BE MAINTAINED UNTIL PERMANENT VEGETATION IS ESTABLISHED OR THE ENGINEER DETERMINES THAT THE DEVICE IS NO LONGER NEEDED.
2. EROSION CONTROL DEVICES SHALL BE PLACED IN SEQUENCE WITH CONSTRUCTION OPERATIONS OR AS DETERMINED BY THE ENGINEER.
3. ALL RESTORATION SHALL BE TOPSOIL, SOD LAWN, AND FERTILIZER TYPE B UNLESS OTHERWISE SHOWN ON THE EROSION CONTROL PLANS. WHEN EROSION MAT IS SHOWN IN THE EROSION CONTROL PLANS RESTORATION SHALL BE TOPSOIL, SEED MIXTURE NO. 30, AND FERTILIZER TYPE B UNLESS ANOTHER SEED MIXTURE IS IDENTIFIED IN THE PLANS.
4. PLACE INLET PROTECTION TYPE A DURING GRADING AND INLET PROTECTION TYPE B, C, OR D AFTER PAVEMENT ADJACENT TO INLET IS PLACED.
5. DO NOT STORE MATERIAL OR OPERATE EQUIPMENT IN WETLANDS OUTSIDE THE SLOPE INTERCEPT.

SHEET 8 OF 40

PROJECT NO: 1310-04-70	HWY: STH 50	COUNTY: KENOSHA	EROSION CONTROL - STAGE 1B	SHEET 142	E

2

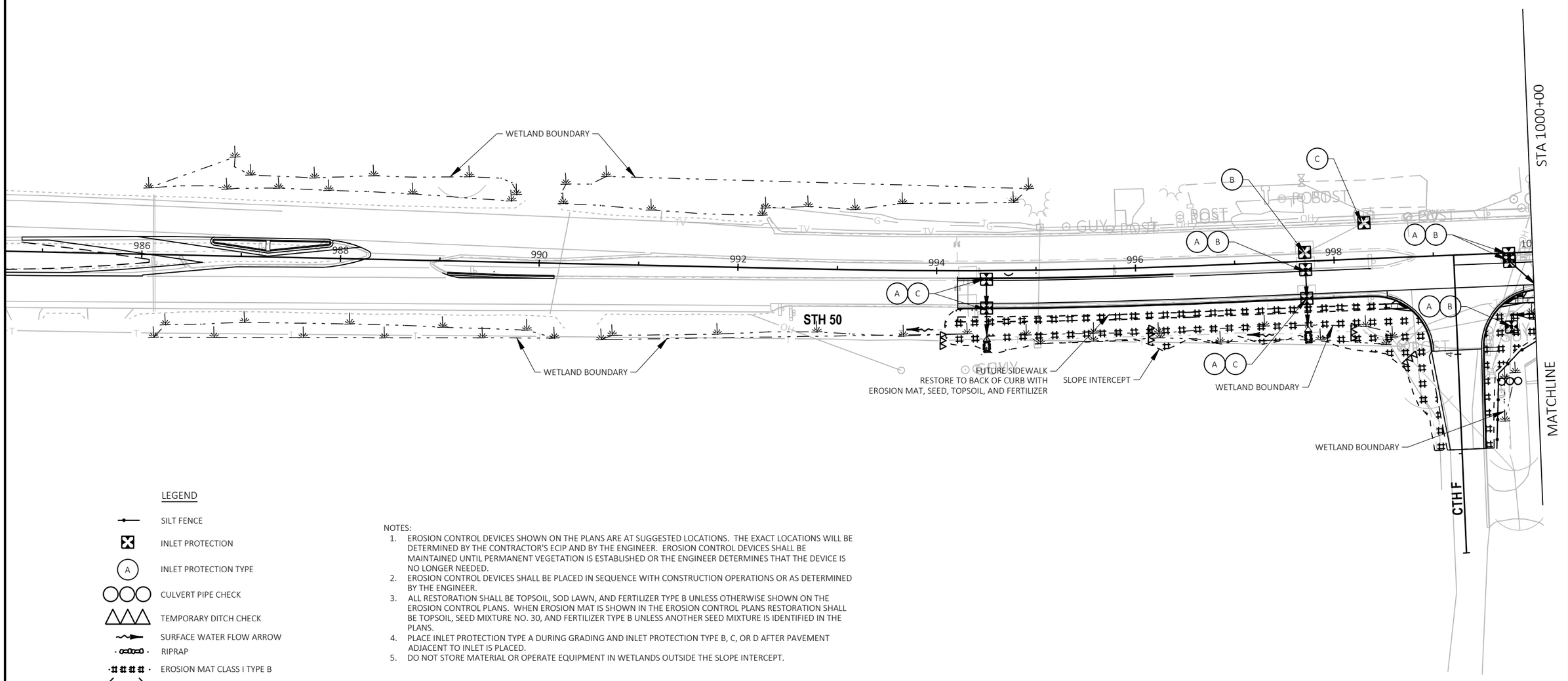

LEGEND

- SILT FENCE
- INLET PROTECTION
- (A) INLET PROTECTION TYPE
- CULVERT PIPE CHECK
- TEMPORARY DITCH CHECK
- SURFACE WATER FLOW ARROW
- RIPRAP
- EROSION MAT CLASS I TYPE B
- EROSION MAT CLASS II TYPE C

NOTES:

1. EROSION CONTROL DEVICES SHOWN ON THE PLANS ARE AT SUGGESTED LOCATIONS. THE EXACT LOCATIONS WILL BE DETERMINED BY THE CONTRACTOR'S ECIP AND BY THE ENGINEER. EROSION CONTROL DEVICES SHALL BE MAINTAINED UNTIL PERMANENT VEGETATION IS ESTABLISHED OR THE ENGINEER DETERMINES THAT THE DEVICE IS NO LONGER NEEDED.
2. EROSION CONTROL DEVICES SHALL BE PLACED IN SEQUENCE WITH CONSTRUCTION OPERATIONS OR AS DETERMINED BY THE ENGINEER.
3. ALL RESTORATION SHALL BE TOPSOIL, SOD LAWN, AND FERTILIZER TYPE B UNLESS OTHERWISE SHOWN ON THE EROSION CONTROL PLANS. WHEN EROSION MAT IS SHOWN IN THE EROSION CONTROL PLANS RESTORATION SHALL BE TOPSOIL, SEED MIXTURE NO. 30, AND FERTILIZER TYPE B UNLESS ANOTHER SEED MIXTURE IS IDENTIFIED IN THE PLANS.
4. PLACE INLET PROTECTION TYPE A DURING GRADING AND INLET PROTECTION TYPE B, C, OR D AFTER PAVEMENT ADJACENT TO INLET IS PLACED.
5. DO NOT STORE MATERIAL OR OPERATE EQUIPMENT IN WETLANDS OUTSIDE THE SLOPE INTERCEPT.

SHEET 9 OF 40

PROJECT NO: 1310-04-70	HWY: STH 50	COUNTY: KENOSHA	EROSION CONTROL - STAGE 2A-2B	SHEET 143	E

2

LEGEND

- SILT FENCE
- INLET PROTECTION
- A — INLET PROTECTION TYPE
- CULVERT PIPE CHECK
- TEMPORARY DITCH CHECK
- SURFACE WATER FLOW ARROW
- RIPRAP
- EROSION MAT CLASS I TYPE B
- EROSION MAT CLASS II TYPE C

NOTES:

1. EROSION CONTROL DEVICES SHOWN ON THE PLANS ARE AT SUGGESTED LOCATIONS. THE EXACT LOCATIONS WILL BE DETERMINED BY THE CONTRACTOR'S ECIP AND BY THE ENGINEER. EROSION CONTROL DEVICES SHALL BE MAINTAINED UNTIL PERMANENT VEGETATION IS ESTABLISHED OR THE ENGINEER DETERMINES THAT THE DEVICE IS NO LONGER NEEDED.
2. EROSION CONTROL DEVICES SHALL BE PLACED IN SEQUENCE WITH CONSTRUCTION OPERATIONS OR AS DETERMINED BY THE ENGINEER.
3. ALL RESTORATION SHALL BE TOPSOIL, SOD LAWN, AND FERTILIZER TYPE B UNLESS OTHERWISE SHOWN ON THE EROSION CONTROL PLANS. WHEN EROSION MAT IS SHOWN IN THE EROSION CONTROL PLANS RESTORATION SHALL BE TOPSOIL, SEED MIXTURE NO. 30, AND FERTILIZER TYPE B UNLESS ANOTHER SEED MIXTURE IS IDENTIFIED IN THE PLANS.
4. PLACE INLET PROTECTION TYPE A DURING GRADING AND INLET PROTECTION TYPE B, C, OR D AFTER PAVEMENT ADJACENT TO INLET IS PLACED.
5. DO NOT STORE MATERIAL OR OPERATE EQUIPMENT IN WETLANDS OUTSIDE THE SLOPE INTERCEPT.

N

STA 1000+00

STA 1015+00

MATCHLINE

MATCHLINE

STH 75

STH 50

STH 50

STH 83

WETLAND BOUNDARY

WETLAND BOUNDARY

WETLAND BOUNDARY

SEE NOTE 1

SLOPE INTERCEPT

USE NO. 10 SEED WITHIN POND AREA

1002 1004 1006 1008 1010 1012 1014

SHEET 10 OF 40

PROJECT NO: 1310-04-70	HWY: STH 50	COUNTY: KENOSHA	EROSION CONTROL - STAGE 2A	SHEET 144	E

FILE NAME : T:\1182708.06\CIVIL3D\13100400\13100400\SHEETSPLAN\022003_EC_S2A.DWG
LAYOUT NAME - 02

PLOT DATE : 1/18/2022 10:25 AM PLOT BY : BLACKWOOD, JIM PLOT NAME : PLOT SCALE : 1 IN:100 FT

2

LEGEND

- SILT FENCE
- INLET PROTECTION
- (A) INLET PROTECTION TYPE
- CULVERT PIPE CHECK
- TEMPORARY DITCH CHECK
- SURFACE WATER FLOW ARROW
- RIPRAP
- EROSION MAT CLASS I TYPE B
- EROSION MAT CLASS II TYPE C

NOTES:

1. EROSION CONTROL DEVICES SHOWN ON THE PLANS ARE AT SUGGESTED LOCATIONS. THE EXACT LOCATIONS WILL BE DETERMINED BY THE CONTRACTOR'S ECIP AND BY THE ENGINEER. EROSION CONTROL DEVICES SHALL BE MAINTAINED UNTIL PERMANENT VEGETATION IS ESTABLISHED OR THE ENGINEER DETERMINES THAT THE DEVICE IS NO LONGER NEEDED.
2. EROSION CONTROL DEVICES SHALL BE PLACED IN SEQUENCE WITH CONSTRUCTION OPERATIONS OR AS DETERMINED BY THE ENGINEER.
3. ALL RESTORATION SHALL BE TOPSOIL, SOD LAWN, AND FERTILIZER TYPE B UNLESS OTHERWISE SHOWN ON THE EROSION CONTROL PLANS. WHEN EROSION MAT IS SHOWN IN THE EROSION CONTROL PLANS RESTORATION SHALL BE TOPSOIL, SEED MIXTURE NO. 30, AND FERTILIZER TYPE B UNLESS ANOTHER SEED MIXTURE IS IDENTIFIED IN THE PLANS.
4. PLACE INLET PROTECTION TYPE A DURING GRADING AND INLET PROTECTION TYPE B, C, OR D AFTER PAVEMENT ADJACENT TO INLET IS PLACED.
5. DO NOT STORE MATERIAL OR OPERATE EQUIPMENT IN WETLANDS OUTSIDE THE SLOPE INTERCEPT.

N

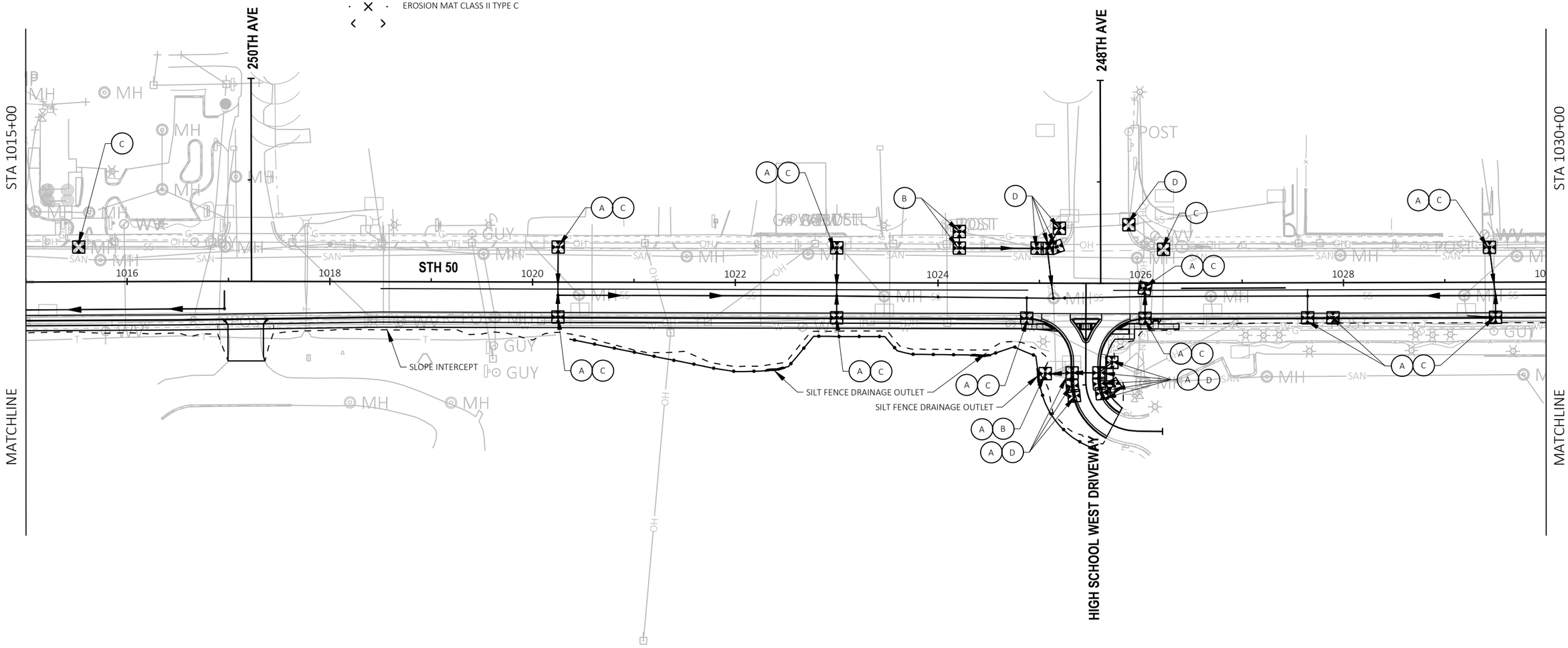

SHEET 11 OF 40

PROJECT NO: 1310-04-70	HWY: STH 50	COUNTY: KENOSHA	EROSION CONTROL - STAGE 2A-2B	SHEET 145	E

FILE NAME : T:\1182708.06\CIVIL3D\13100400\13100400\SHEETSPLAN\022003_EC_S2A.DWG
LAYOUT NAME - 03

PLOT DATE : 1/18/2022 10:25 AM PLOT BY : BLACKWOOD, JIM PLOT NAME : PLOT SCALE : 1 IN:100 FT

WISDOT/CADDS SHEET 42

LEGEND

- SILT FENCE
- INLET PROTECTION
- A — INLET PROTECTION TYPE
- CULVERT PIPE CHECK
- TEMPORARY DITCH CHECK
- SURFACE WATER FLOW ARROW
- RIPRAP
- EROSION MAT CLASS I TYPE B
- EROSION MAT CLASS II TYPE C

NOTES:

1. EROSION CONTROL DEVICES SHOWN ON THE PLANS ARE AT SUGGESTED LOCATIONS. THE EXACT LOCATIONS WILL BE DETERMINED BY THE CONTRACTOR'S ECIP AND BY THE ENGINEER. EROSION CONTROL DEVICES SHALL BE MAINTAINED UNTIL PERMANENT VEGETATION IS ESTABLISHED OR THE ENGINEER DETERMINES THAT THE DEVICE IS NO LONGER NEEDED.
2. EROSION CONTROL DEVICES SHALL BE PLACED IN SEQUENCE WITH CONSTRUCTION OPERATIONS OR AS DETERMINED BY THE ENGINEER.
3. ALL RESTORATION SHALL BE TOPSOIL, SOD LAWN, AND FERTILIZER TYPE B UNLESS OTHERWISE SHOWN ON THE EROSION CONTROL PLANS. WHEN EROSION MAT IS SHOWN IN THE EROSION CONTROL PLANS RESTORATION SHALL BE TOPSOIL, SEED MIXTURE NO. 30, AND FERTILIZER TYPE B UNLESS ANOTHER SEED MIXTURE IS IDENTIFIED IN THE PLANS.
4. PLACE INLET PROTECTION TYPE A DURING GRADING AND INLET PROTECTION TYPE B, C, OR D AFTER PAVEMENT ADJACENT TO INLET IS PLACED.
5. DO NOT STORE MATERIAL OR OPERATE EQUIPMENT IN WETLANDS OUTSIDE THE SLOPE INTERCEPT.

N

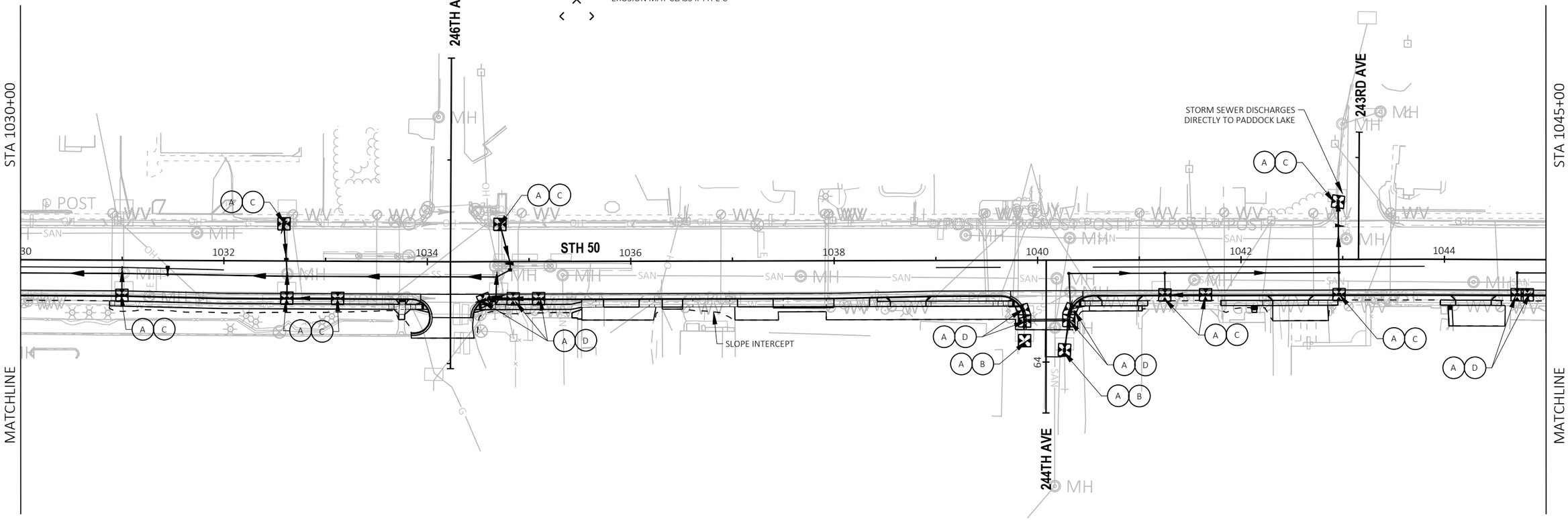

SHEET 12 OF 40

PROJECT NO: 1310-04-70	HWY: STH 50	COUNTY: KENOSHA	EROSION CONTROL - STAGE 2A-2B	SHEET 146 E

FILE NAME : T:\1182708.06\CIVIL3D\13100400\13100400\SHEETSPLAN\022003_EC_S2A.DWG
LAYOUT NAME - 04

PLOT DATE : 1/18/2022 10:25 AM PLOT BY : BLACKWOOD, JIM PLOT NAME : PLOT SCALE : 1 IN:100 FT

LEGEND

- SILT FENCE
- INLET PROTECTION
- (A) INLET PROTECTION TYPE
- CULVERT PIPE CHECK
- TEMPORARY DITCH CHECK
- SURFACE WATER FLOW ARROW
- RIPRAP
- EROSION MAT CLASS I TYPE B
- EROSION MAT CLASS II TYPE C

NOTES:
1. EROSION CONTROL DEVICES SHOWN ON THE PLANS ARE AT SUGGESTED LOCATIONS. THE EXACT LOCATIONS WILL BE DETERMINED BY THE CONTRACTOR'S ECIP AND BY THE ENGINEER. EROSION CONTROL DEVICES SHALL BE MAINTAINED UNTIL PERMANENT VEGETATION IS ESTABLISHED OR THE ENGINEER DETERMINES THAT THE DEVICE IS NO LONGER NEEDED.
2. EROSION CONTROL DEVICES SHALL BE PLACED IN SEQUENCE WITH CONSTRUCTION OPERATIONS OR AS DETERMINED BY THE ENGINEER.
3. ALL RESTORATION SHALL BE TOPSOIL, SOD LAWN, AND FERTILIZER TYPE B UNLESS OTHERWISE SHOWN ON THE EROSION CONTROL PLANS. WHEN EROSION MAT IS SHOWN IN THE EROSION CONTROL PLANS RESTORATION SHALL BE TOPSOIL, SEED MIXTURE NO. 30, AND FERTILIZER TYPE B UNLESS ANOTHER SEED MIXTURE IS IDENTIFIED IN THE PLANS.
4. PLACE INLET PROTECTION TYPE A DURING GRADING AND INLET PROTECTION TYPE B, C, OR D AFTER PAVEMENT ADJACENT TO INLET IS PLACED.
5. DO NOT STORE MATERIAL OR OPERATE EQUIPMENT IN WETLANDS OUTSIDE THE SLOPE INTERCEPT.

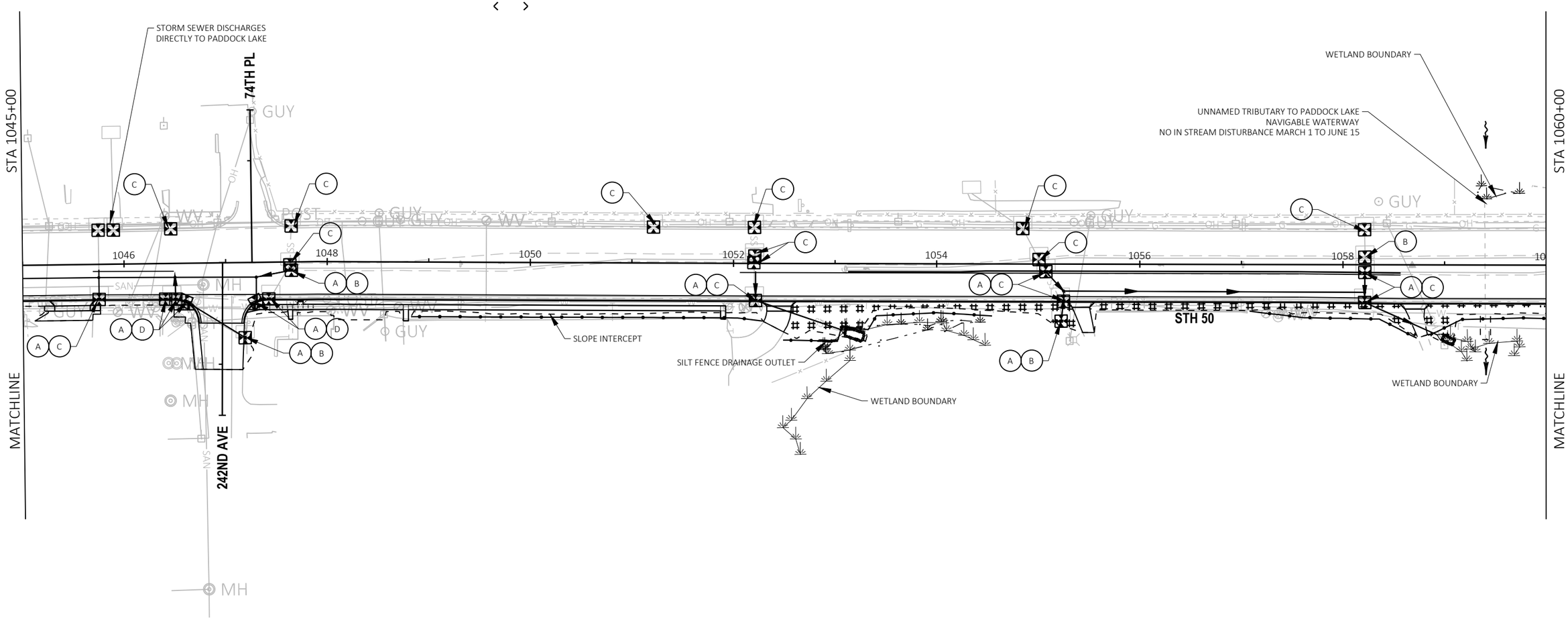

SHEET 13 OF 40

PROJECT NO: 1310-04-70	HWY: STH 50	COUNTY: KENOSHA	EROSION CONTROL - STAGE 2A-2B	SHEET 147	E

FILE NAME : T:\1182708.06\CIVIL3D\13100400\13100400\SHEETSPLAN\022003_EC_S2A.DWG
LAYOUT NAME - 05
PLOT DATE : 1/18/2022 10:25 AM PLOT BY : BLACKWOOD, JIM PLOT NAME : PLOT SCALE : 1 IN:100 FT

2

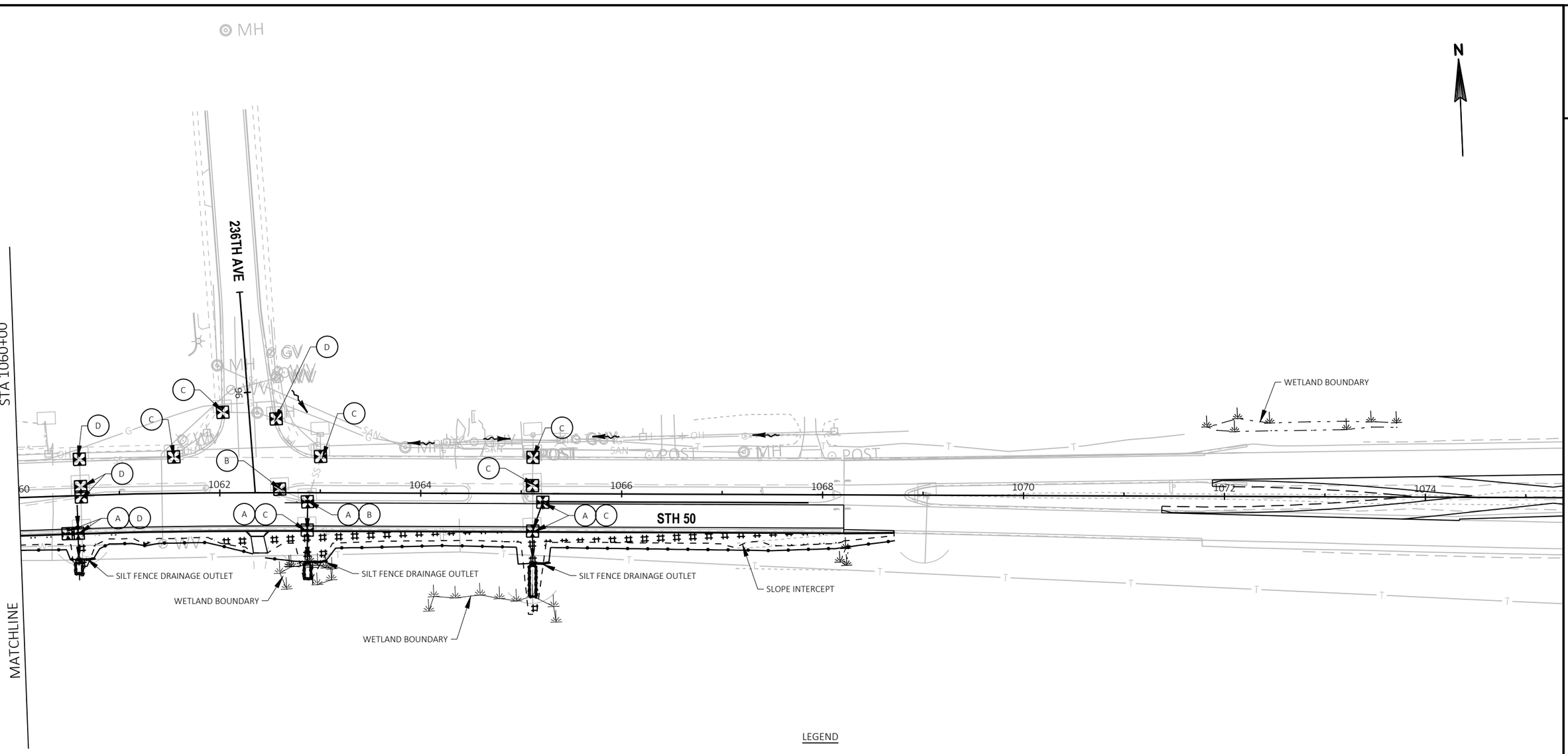

LEGEND

- SILT FENCE
- INLET PROTECTION
- A — INLET PROTECTION TYPE
- CULVERT PIPE CHECK
- TEMPORARY DITCH CHECK
- SURFACE WATER FLOW ARROW
- RIPRAP
- EROSION MAT CLASS I TYPE B
- EROSION MAT CLASS II TYPE C

NOTES:

1. EROSION CONTROL DEVICES SHOWN ON THE PLANS ARE AT SUGGESTED LOCATIONS. THE EXACT LOCATIONS WILL BE DETERMINED BY THE CONTRACTOR'S ECIP AND BY THE ENGINEER. EROSION CONTROL DEVICES SHALL BE MAINTAINED UNTIL PERMANENT VEGETATION IS ESTABLISHED OR THE ENGINEER DETERMINES THAT THE DEVICE IS NO LONGER NEEDED.
2. EROSION CONTROL DEVICES SHALL BE PLACED IN SEQUENCE WITH CONSTRUCTION OPERATIONS OR AS DETERMINED BY THE ENGINEER.
3. ALL RESTORATION SHALL BE TOPSOIL, SOD LAWN, AND FERTILIZER TYPE B UNLESS OTHERWISE SHOWN ON THE EROSION CONTROL PLANS. WHEN EROSION MAT IS SHOWN IN THE EROSION CONTROL PLANS RESTORATION SHALL BE TOPSOIL, SEED MIXTURE NO. 30, AND FERTILIZER TYPE B UNLESS ANOTHER SEED MIXTURE IS IDENTIFIED IN THE PLANS.
4. PLACE INLET PROTECTION TYPE A DURING GRADING AND INLET PROTECTION TYPE B, C, OR D AFTER PAVEMENT ADJACENT TO INLET IS PLACED.
5. DO NOT STORE MATERIAL OR OPERATE EQUIPMENT IN WETLANDS OUTSIDE THE SLOPE INTERCEPT.

SHEET 14 OF 40

2

LEGEND

- SILT FENCE
- INLET PROTECTION
- A — INLET PROTECTION TYPE
- CULVERT PIPE CHECK
- TEMPORARY DITCH CHECK
- SURFACE WATER FLOW ARROW
- RIPRAP
- EROSION MAT CLASS I TYPE B
- EROSION MAT CLASS II TYPE C

NOTES:

1. EROSION CONTROL DEVICES SHOWN ON THE PLANS ARE AT SUGGESTED LOCATIONS. THE EXACT LOCATIONS WILL BE DETERMINED BY THE CONTRACTOR'S ECIP AND BY THE ENGINEER. EROSION CONTROL DEVICES SHALL BE MAINTAINED UNTIL PERMANENT VEGETATION IS ESTABLISHED OR THE ENGINEER DETERMINES THAT THE DEVICE IS NO LONGER NEEDED.
2. EROSION CONTROL DEVICES SHALL BE PLACED IN SEQUENCE WITH CONSTRUCTION OPERATIONS OR AS DETERMINED BY THE ENGINEER.
3. ALL RESTORATION SHALL BE TOPSOIL, SOD LAWN, AND FERTILIZER TYPE B UNLESS OTHERWISE SHOWN ON THE EROSION CONTROL PLANS. WHEN EROSION MAT IS SHOWN IN THE EROSION CONTROL PLANS RESTORATION SHALL BE TOPSOIL, SEED MIXTURE NO. 30, AND FERTILIZER TYPE B UNLESS ANOTHER SEED MIXTURE IS IDENTIFIED IN THE PLANS.
4. PLACE INLET PROTECTION TYPE A DURING GRADING AND INLET PROTECTION TYPE B, C, OR D AFTER PAVEMENT ADJACENT TO INLET IS PLACED.
5. DO NOT STORE MATERIAL OR OPERATE EQUIPMENT IN WETLANDS OUTSIDE THE SLOPE INTERCEPT.

N

STA 1000+00

STA 1015+00

MATCHLINE

MATCHLINE

STH 50

STH 50

STH 75

STH 83

1002

1004

1006

1008

1010

1012

1014

WETLAND BOUNDARY

WETLAND BOUNDARY

SLOPE INTERCEPT

SHEET 15 OF 40

PROJECT NO: 1310-04-70	HWY: STH 50	COUNTY: KENOSHA	EROSION CONTROL - STAGE 2B	SHEET 149	E

FILE NAME : T:\1182708.06\CIVIL3D\13100400\13100400\SHEETSPLAN\022004_EC_S2B.DWG
LAYOUT NAME - 04

PLOT DATE : 1/18/2022 10:26 AM PLOT BY : BLACKWOOD, JIM PLOT NAME : PLOT SCALE : 1 IN:100 FT

2

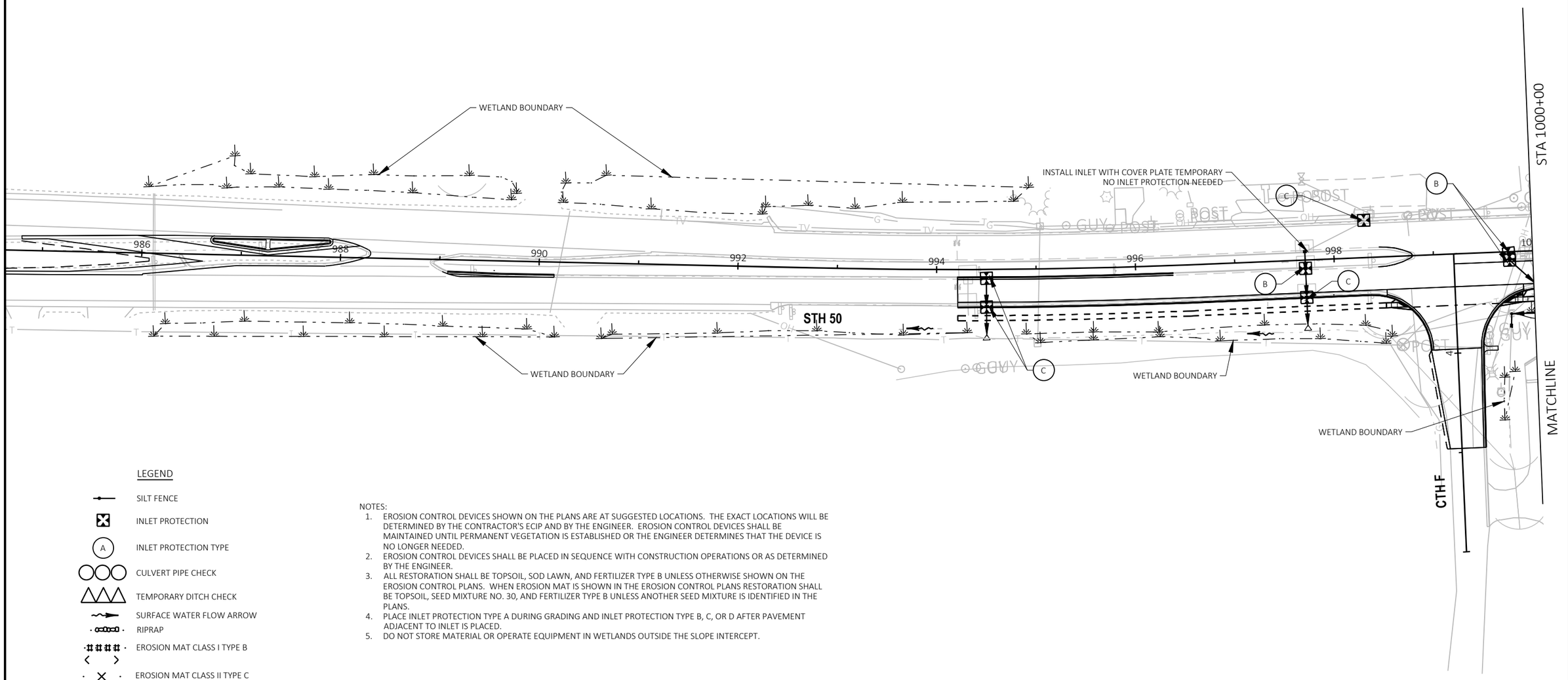

LEGEND

- SILT FENCE
- INLET PROTECTION
- (A) INLET PROTECTION TYPE
- CULVERT PIPE CHECK
- TEMPORARY DITCH CHECK
- SURFACE WATER FLOW ARROW
- RIPRAP
- EROSION MAT CLASS I TYPE B
- EROSION MAT CLASS II TYPE C

NOTES:

1. EROSION CONTROL DEVICES SHOWN ON THE PLANS ARE AT SUGGESTED LOCATIONS. THE EXACT LOCATIONS WILL BE DETERMINED BY THE CONTRACTOR'S ECIP AND BY THE ENGINEER. EROSION CONTROL DEVICES SHALL BE MAINTAINED UNTIL PERMANENT VEGETATION IS ESTABLISHED OR THE ENGINEER DETERMINES THAT THE DEVICE IS NO LONGER NEEDED.
2. EROSION CONTROL DEVICES SHALL BE PLACED IN SEQUENCE WITH CONSTRUCTION OPERATIONS OR AS DETERMINED BY THE ENGINEER.
3. ALL RESTORATION SHALL BE TOPSOIL, SOD LAWN, AND FERTILIZER TYPE B UNLESS OTHERWISE SHOWN ON THE EROSION CONTROL PLANS. WHEN EROSION MAT IS SHOWN IN THE EROSION CONTROL PLANS RESTORATION SHALL BE TOPSOIL, SEED MIXTURE NO. 30, AND FERTILIZER TYPE B UNLESS ANOTHER SEED MIXTURE IS IDENTIFIED IN THE PLANS.
4. PLACE INLET PROTECTION TYPE A DURING GRADING AND INLET PROTECTION TYPE B, C, OR D AFTER PAVEMENT ADJACENT TO INLET IS PLACED.
5. DO NOT STORE MATERIAL OR OPERATE EQUIPMENT IN WETLANDS OUTSIDE THE SLOPE INTERCEPT.

SHEET 16 OF 40

PROJECT NO: 1310-04-70	HWY: STH 50	COUNTY: KENOSHA	EROSION CONTROL - STAGE 3	SHEET 150	E

FILE NAME : T:\1182708.06\CIVIL3D\13100400\13100400\SHEETSPLAN\022004_EC_S3.DWG
LAYOUT NAME - 03

PLOT DATE : 1/18/2022 10:26 AM PLOT BY : BLACKWOOD, JIM PLOT NAME : PLOT SCALE : 1 IN:100 FT

2

LEGEND

- SILT FENCE
- INLET PROTECTION
- (A) INLET PROTECTION TYPE
- CULVERT PIPE CHECK
- TEMPORARY DITCH CHECK
- SURFACE WATER FLOW ARROW
- RIPRAP
- EROSION MAT CLASS I TYPE B
- EROSION MAT CLASS II TYPE C

NOTES:

1. EROSION CONTROL DEVICES SHOWN ON THE PLANS ARE AT SUGGESTED LOCATIONS. THE EXACT LOCATIONS WILL BE DETERMINED BY THE CONTRACTOR'S ECIP AND BY THE ENGINEER. EROSION CONTROL DEVICES SHALL BE MAINTAINED UNTIL PERMANENT VEGETATION IS ESTABLISHED OR THE ENGINEER DETERMINES THAT THE DEVICE IS NO LONGER NEEDED.
2. EROSION CONTROL DEVICES SHALL BE PLACED IN SEQUENCE WITH CONSTRUCTION OPERATIONS OR AS DETERMINED BY THE ENGINEER.
3. ALL RESTORATION SHALL BE TOPSOIL, SOD LAWN, AND FERTILIZER TYPE B UNLESS OTHERWISE SHOWN ON THE EROSION CONTROL PLANS. WHEN EROSION MAT IS SHOWN IN THE EROSION CONTROL PLANS RESTORATION SHALL BE TOPSOIL, SEED MIXTURE NO. 30, AND FERTILIZER TYPE B UNLESS ANOTHER SEED MIXTURE IS IDENTIFIED IN THE PLANS.
4. PLACE INLET PROTECTION TYPE A DURING GRADING AND INLET PROTECTION TYPE B, C, OR D AFTER PAVEMENT ADJACENT TO INLET IS PLACED.
5. DO NOT STORE MATERIAL OR OPERATE EQUIPMENT IN WETLANDS OUTSIDE THE SLOPE INTERCEPT.

N

STA 1000+00

STA 1015+00

MATCHLINE

MATCHLINE

STH 50

STH 50

STH 75

STH 83

WETLAND BOUNDARY

WETLAND BOUNDARY

WETLAND BOUNDARY

1002 1004 1006 1008 1010 1012 1014

SHEET 17 OF 40

PROJECT NO: 1310-04-70	HWY: STH 50	COUNTY: KENOSHA	EROSION CONTROL - STAGE 3	SHEET 151	E

LEGEND

- SILT FENCE
- INLET PROTECTION
- (A) INLET PROTECTION TYPE
- CULVERT PIPE CHECK
- TEMPORARY DITCH CHECK
- SURFACE WATER FLOW ARROW
- RIPRAP
- EROSION MAT CLASS I TYPE B
- EROSION MAT CLASS II TYPE C

NOTES:

1. EROSION CONTROL DEVICES SHOWN ON THE PLANS ARE AT SUGGESTED LOCATIONS. THE EXACT LOCATIONS WILL BE DETERMINED BY THE CONTRACTOR'S ECIP AND BY THE ENGINEER. EROSION CONTROL DEVICES SHALL BE MAINTAINED UNTIL PERMANENT VEGETATION IS ESTABLISHED OR THE ENGINEER DETERMINES THAT THE DEVICE IS NO LONGER NEEDED.
2. EROSION CONTROL DEVICES SHALL BE PLACED IN SEQUENCE WITH CONSTRUCTION OPERATIONS OR AS DETERMINED BY THE ENGINEER.
3. ALL RESTORATION SHALL BE TOPSOIL, SOD LAWN, AND FERTILIZER TYPE B UNLESS OTHERWISE SHOWN ON THE EROSION CONTROL PLANS. WHEN EROSION MAT IS SHOWN IN THE EROSION CONTROL PLANS RESTORATION SHALL BE TOPSOIL, SEED MIXTURE NO. 30, AND FERTILIZER TYPE B UNLESS ANOTHER SEED MIXTURE IS IDENTIFIED IN THE PLANS.
4. PLACE INLET PROTECTION TYPE A DURING GRADING AND INLET PROTECTION TYPE B, C, OR D AFTER PAVEMENT ADJACENT TO INLET IS PLACED.
5. DO NOT STORE MATERIAL OR OPERATE EQUIPMENT IN WETLANDS OUTSIDE THE SLOPE INTERCEPT.

N

STA 1015+00

250TH AVE

248TH AVE

MIDDLE CROSSOVER CONSTRUCTED IN STAGE 3

1016 1018 1020 1022 1024 1026 1028 1030

STH 50

HIGH SCHOOL WEST DRIVEWAY

MATCHLINE

SHEET 18 OF 40

PROJECT NO: 1310-04-70	HWY: STH 50	COUNTY: KENOSHA	EROSION CONTROL - STAGE 3	SHEET 152	E

FILE NAME : T:\1182708.06\CIVIL3D\13100400\13100400\SHEETSPLAN\022004_EC_S3.DWG
LAYOUT NAME - 05

PLOT DATE : 1/18/2022 10:26 AM PLOT BY : BLACKWOOD, JIM PLOT NAME : PLOT SCALE : 1 IN:100 FT

2

2

LEGEND

- SILT FENCE
- INLET PROTECTION
- A — INLET PROTECTION TYPE
- CULVERT PIPE CHECK
- TEMPORARY DITCH CHECK
- SURFACE WATER FLOW ARROW
- RIPRAP
- EROSION MAT CLASS I TYPE B
- EROSION MAT CLASS II TYPE C

NOTES:

1. EROSION CONTROL DEVICES SHOWN ON THE PLANS ARE AT SUGGESTED LOCATIONS. THE EXACT LOCATIONS WILL BE DETERMINED BY THE CONTRACTOR'S ECIP AND BY THE ENGINEER. EROSION CONTROL DEVICES SHALL BE MAINTAINED UNTIL PERMANENT VEGETATION IS ESTABLISHED OR THE ENGINEER DETERMINES THAT THE DEVICE IS NO LONGER NEEDED.
2. EROSION CONTROL DEVICES SHALL BE PLACED IN SEQUENCE WITH CONSTRUCTION OPERATIONS OR AS DETERMINED BY THE ENGINEER.
3. ALL RESTORATION SHALL BE TOPSOIL, SOD LAWN, AND FERTILIZER TYPE B UNLESS OTHERWISE SHOWN ON THE EROSION CONTROL PLANS. WHEN EROSION MAT IS SHOWN IN THE EROSION CONTROL PLANS RESTORATION SHALL BE TOPSOIL, SEED MIXTURE NO. 30, AND FERTILIZER TYPE B UNLESS ANOTHER SEED MIXTURE IS IDENTIFIED IN THE PLANS.
4. PLACE INLET PROTECTION TYPE A DURING GRADING AND INLET PROTECTION TYPE B, C, OR D AFTER PAVEMENT ADJACENT TO INLET IS PLACED.
5. DO NOT STORE MATERIAL OR OPERATE EQUIPMENT IN WETLANDS OUTSIDE THE SLOPE INTERCEPT.

N

STH 75

STH 50

STH 50

STH 83

STH 83 R/L

1000 1002 1004 1006 1008 1010 1012 1014

REPLACE EXISTING RIPRAP ALONG ERODED CHANNEL

WETLAND BOUNDARY

SLOPE INTERCEPT

WETLAND BOUNDARY

SHEET 19 OF 40

PROJECT NO: 1310-04-70	HWY: STH 50	COUNTY: KENOSHA	EROSION CONTROL - STAGE 4A	SHEET 153	E

FILE NAME : T:\1182708.06\CIVIL3D\13100400\13100400\SHEETSPLAN\022005_EC_S4A.DWG
LAYOUT NAME - 04

PLOT DATE : 1/18/2022 10:27 AM PLOT BY : BLACKWOOD, JIM PLOT NAME : PLOT SCALE : 1 IN:100 FT

WISDOT/CADDS SHEET 42

2

LEGEND

- SILT FENCE
- INLET PROTECTION
- A — INLET PROTECTION TYPE
- CULVERT PIPE CHECK
- TEMPORARY DITCH CHECK
- SURFACE WATER FLOW ARROW
- RIPRAP
- EROSION MAT CLASS I TYPE B
- EROSION MAT CLASS II TYPE C

NOTES:

1. EROSION CONTROL DEVICES SHOWN ON THE PLANS ARE AT SUGGESTED LOCATIONS. THE EXACT LOCATIONS WILL BE DETERMINED BY THE CONTRACTOR'S ECIP AND BY THE ENGINEER. EROSION CONTROL DEVICES SHALL BE MAINTAINED UNTIL PERMANENT VEGETATION IS ESTABLISHED OR THE ENGINEER DETERMINES THAT THE DEVICE IS NO LONGER NEEDED.
2. EROSION CONTROL DEVICES SHALL BE PLACED IN SEQUENCE WITH CONSTRUCTION OPERATIONS OR AS DETERMINED BY THE ENGINEER.
3. ALL RESTORATION SHALL BE TOPSOIL, SOD LAWN, AND FERTILIZER TYPE B UNLESS OTHERWISE SHOWN ON THE EROSION CONTROL PLANS. WHEN EROSION MAT IS SHOWN IN THE EROSION CONTROL PLANS RESTORATION SHALL BE TOPSOIL, SEED MIXTURE NO. 30, AND FERTILIZER TYPE B UNLESS ANOTHER SEED MIXTURE IS IDENTIFIED IN THE PLANS.
4. PLACE INLET PROTECTION TYPE A DURING GRADING AND INLET PROTECTION TYPE B, C, OR D AFTER PAVEMENT ADJACENT TO INLET IS PLACED.
5. DO NOT STORE MATERIAL OR OPERATE EQUIPMENT IN WETLANDS OUTSIDE THE SLOPE INTERCEPT.

N

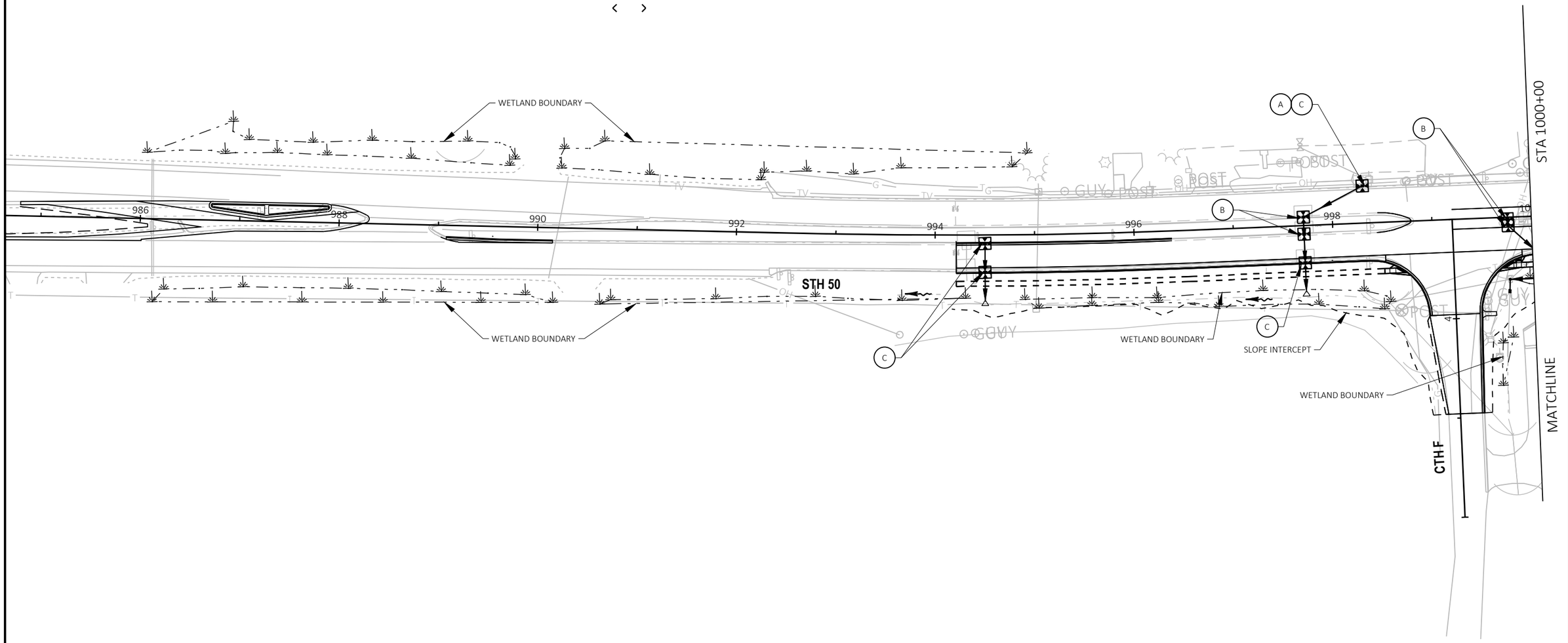

SHEET 20 OF 40

PROJECT NO: 1310-04-70	HWY: STH 50	COUNTY: KENOSHA	EROSION CONTROL - STAGE 4B	SHEET 154	E

FILE NAME : T:\1182708.06\CIVIL3D\13100400\13100400\SHEETSPLAN\022006_EC_S4B.DWG
LAYOUT NAME - 03

PLOT DATE : 1/18/2022 10:27 AM PLOT BY : BLACKWOOD, JIM PLOT NAME : PLOT SCALE : 1 IN:100 FT

WISDOT/CADDS SHEET 42

2

LEGEND

- SILT FENCE
- INLET PROTECTION
- (A) INLET PROTECTION TYPE
- CULVERT PIPE CHECK
- TEMPORARY DITCH CHECK
- SURFACE WATER FLOW ARROW
- RIPRAP
- EROSION MAT CLASS I TYPE B
- EROSION MAT CLASS II TYPE C

NOTES:

1. EROSION CONTROL DEVICES SHOWN ON THE PLANS ARE AT SUGGESTED LOCATIONS. THE EXACT LOCATIONS WILL BE DETERMINED BY THE CONTRACTOR'S ECIP AND BY THE ENGINEER. EROSION CONTROL DEVICES SHALL BE MAINTAINED UNTIL PERMANENT VEGETATION IS ESTABLISHED OR THE ENGINEER DETERMINES THAT THE DEVICE IS NO LONGER NEEDED.
2. EROSION CONTROL DEVICES SHALL BE PLACED IN SEQUENCE WITH CONSTRUCTION OPERATIONS OR AS DETERMINED BY THE ENGINEER.
3. ALL RESTORATION SHALL BE TOPSOIL, SOD LAWN, AND FERTILIZER TYPE B UNLESS OTHERWISE SHOWN ON THE EROSION CONTROL PLANS. WHEN EROSION MAT IS SHOWN IN THE EROSION CONTROL PLANS RESTORATION SHALL BE TOPSOIL, SEED MIXTURE NO. 30, AND FERTILIZER TYPE B UNLESS ANOTHER SEED MIXTURE IS IDENTIFIED IN THE PLANS.
4. PLACE INLET PROTECTION TYPE A DURING GRADING AND INLET PROTECTION TYPE B, C, OR D AFTER PAVEMENT ADJACENT TO INLET IS PLACED.
5. DO NOT STORE MATERIAL OR OPERATE EQUIPMENT IN WETLANDS OUTSIDE THE SLOPE INTERCEPT.

N

STA 1000+00

STA 1015+00

MATCHLINE

MATCHLINE

STH 75

STH 50

STH 50

STH 83

WETLAND BOUNDARY

SLOPE INTERCEPT

WETLAND BOUNDARY

WETLAND BOUNDARY

SLOPE INTERCEPT

1002 1004 1006 1008 1010 1012 1014

SHEET 21 OF 40

PROJECT NO: 1310-04-70	HWY: STH 50	COUNTY: KENOSHA	EROSION CONTROL - STAGE 4B	SHEET 155	E

FILE NAME : T:\1182708.06\CIVIL3D\13100400\13100400\SHEETSPLAN\022006_EC_S4B.DWG
LAYOUT NAME - 04

PLOT DATE : 1/18/2022 10:27 AM PLOT BY : BLACKWOOD, JIM PLOT NAME : PLOT SCALE : 1 IN:100 FT

LEGEND

- SILT FENCE
- INLET PROTECTION
- A — INLET PROTECTION TYPE
- CULVERT PIPE CHECK
- TEMPORARY DITCH CHECK
- SURFACE WATER FLOW ARROW
- RIPRAP
- EROSION MAT CLASS I TYPE B
- EROSION MAT CLASS II TYPE C

NOTES:
1. EROSION CONTROL DEVICES SHOWN ON THE PLANS ARE AT SUGGESTED LOCATIONS. THE EXACT LOCATIONS WILL BE DETERMINED BY THE CONTRACTOR'S ECIP AND BY THE ENGINEER. EROSION CONTROL DEVICES SHALL BE MAINTAINED UNTIL PERMANENT VEGETATION IS ESTABLISHED OR THE ENGINEER DETERMINES THAT THE DEVICE IS NO LONGER NEEDED.
2. EROSION CONTROL DEVICES SHALL BE PLACED IN SEQUENCE WITH CONSTRUCTION OPERATIONS OR AS DETERMINED BY THE ENGINEER.
3. ALL RESTORATION SHALL BE TOPSOIL, SOD LAWN, AND FERTILIZER TYPE B UNLESS OTHERWISE SHOWN ON THE EROSION CONTROL PLANS. WHEN EROSION MAT IS SHOWN IN THE EROSION CONTROL PLANS RESTORATION SHALL BE TOPSOIL, SEED MIXTURE NO. 30, AND FERTILIZER TYPE B UNLESS ANOTHER SEED MIXTURE IS IDENTIFIED IN THE PLANS.
4. PLACE INLET PROTECTION TYPE A DURING GRADING AND INLET PROTECTION TYPE B, C, OR D AFTER PAVEMENT ADJACENT TO INLET IS PLACED.
5. DO NOT STORE MATERIAL OR OPERATE EQUIPMENT IN WETLANDS OUTSIDE THE SLOPE INTERCEPT.

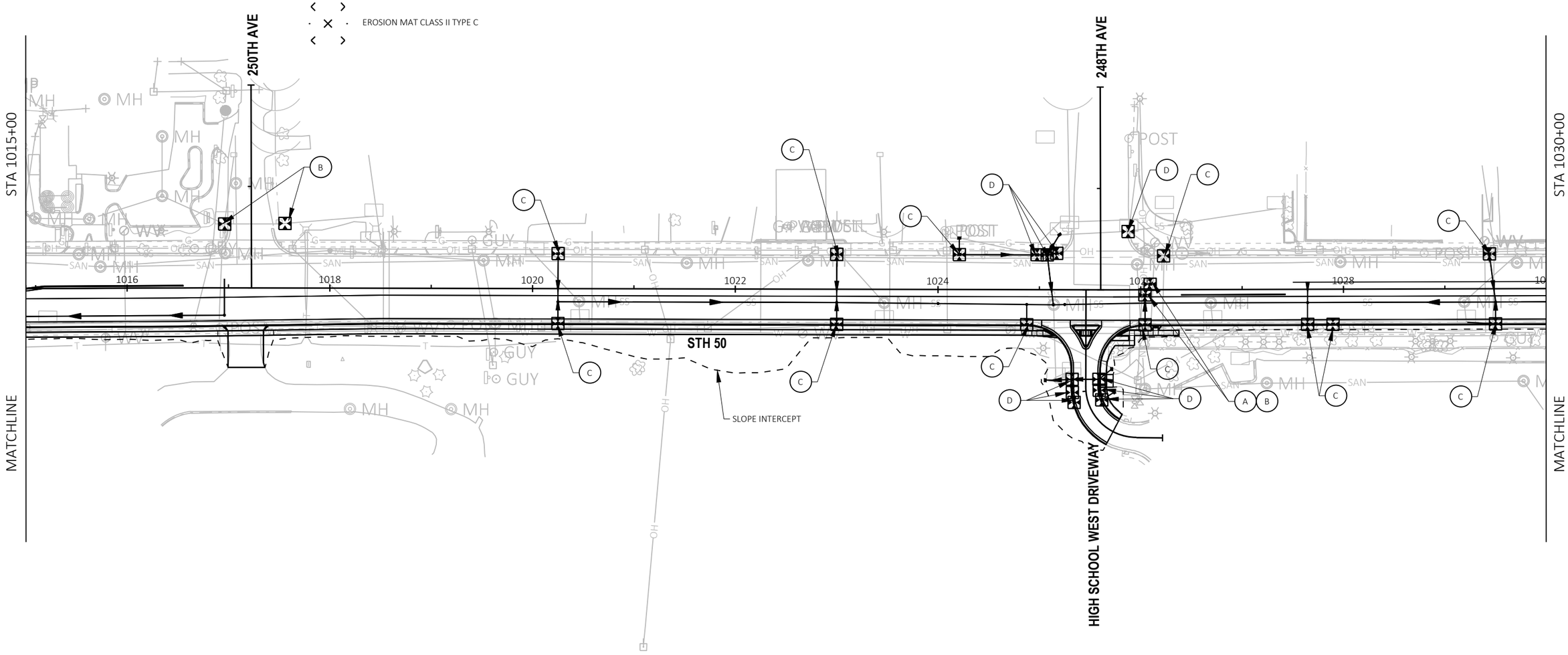

PROJECT NO: 1310-04-70	HWY: STH 50	COUNTY: KENOSHA	EROSION CONTROL - STAGE 4B	SHEET 156 E

FILE NAME : T:\1182708.06\CIVIL3D\13100400\13100400\SHEETSPLAN\022006_EC_S4B.DWG
LAYOUT NAME - 05
PLOT DATE : 1/18/2022 10:27 AM
PLOT BY : BLACKWOOD, JIM
PLOT NAME :
PLOT SCALE : 1 IN:100 FT

2

LEGEND

- SILT FENCE
- INLET PROTECTION
- A — INLET PROTECTION TYPE
- CULVERT PIPE CHECK
- TEMPORARY DITCH CHECK
- SURFACE WATER FLOW ARROW
- RIPRAP
- EROSION MAT CLASS I TYPE B
- EROSION MAT CLASS II TYPE C

NOTES:

1. EROSION CONTROL DEVICES SHOWN ON THE PLANS ARE AT SUGGESTED LOCATIONS. THE EXACT LOCATIONS WILL BE DETERMINED BY THE CONTRACTOR'S ECIP AND BY THE ENGINEER. EROSION CONTROL DEVICES SHALL BE MAINTAINED UNTIL PERMANENT VEGETATION IS ESTABLISHED OR THE ENGINEER DETERMINES THAT THE DEVICE IS NO LONGER NEEDED.
2. EROSION CONTROL DEVICES SHALL BE PLACED IN SEQUENCE WITH CONSTRUCTION OPERATIONS OR AS DETERMINED BY THE ENGINEER.
3. ALL RESTORATION SHALL BE TOPSOIL, SOD LAWN, AND FERTILIZER TYPE B UNLESS OTHERWISE SHOWN ON THE EROSION CONTROL PLANS. WHEN EROSION MAT IS SHOWN IN THE EROSION CONTROL PLANS RESTORATION SHALL BE TOPSOIL, SEED MIXTURE NO. 30, AND FERTILIZER TYPE B UNLESS ANOTHER SEED MIXTURE IS IDENTIFIED IN THE PLANS.
4. PLACE INLET PROTECTION TYPE A DURING GRADING AND INLET PROTECTION TYPE B, C, OR D AFTER PAVEMENT ADJACENT TO INLET IS PLACED.
5. DO NOT STORE MATERIAL OR OPERATE EQUIPMENT IN WETLANDS OUTSIDE THE SLOPE INTERCEPT.

N

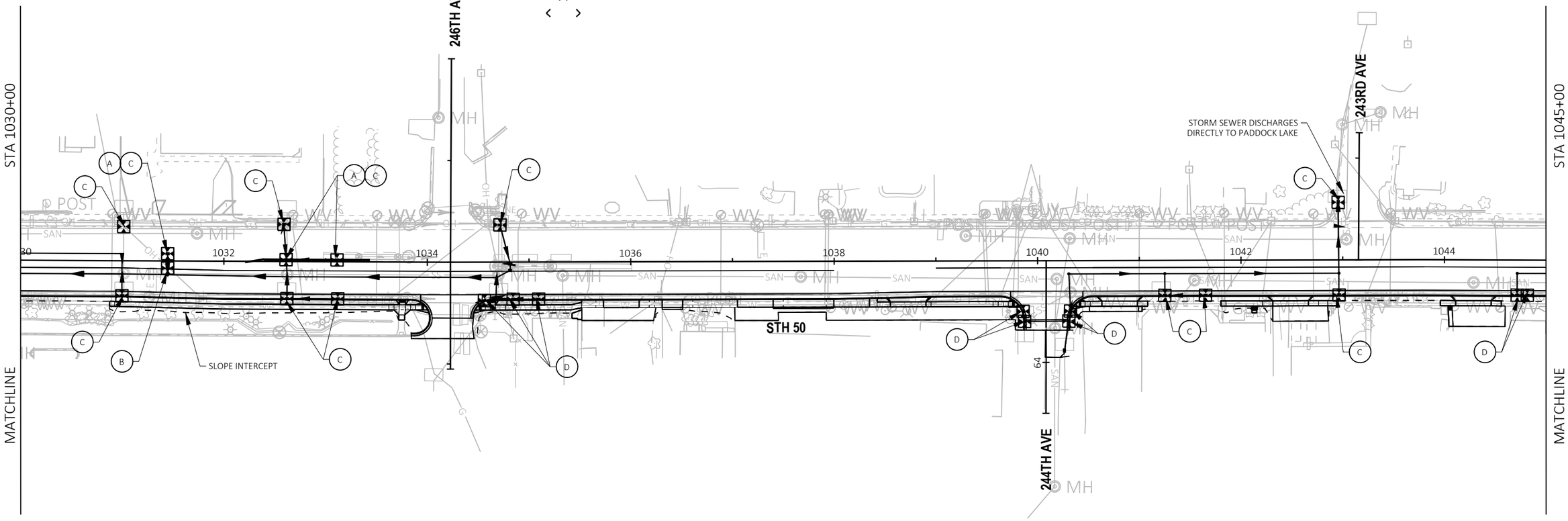

SHEET 23 OF 40

PROJECT NO: 1310-04-70	HWY: STH 50	COUNTY: KENOSHA	EROSION CONTROL - STAGE 4B	SHEET 157	E

FILE NAME : T:\1182708.06\CIVIL3D\13100400\13100400\SHEETSPLAN\022006_EC_S4B.DWG
LAYOUT NAME - 06

PLOT DATE : 1/18/2022 10:28 AM PLOT BY : BLACKWOOD, JIM PLOT NAME : PLOT SCALE : 1 IN:100 FT

WISDOT/CADDS SHEET 42

LEGEND

- SILT FENCE
- INLET PROTECTION
- A — INLET PROTECTION TYPE
- CULVERT PIPE CHECK
- TEMPORARY DITCH CHECK
- SURFACE WATER FLOW ARROW
- RIPRAP
- EROSION MAT CLASS I TYPE B
- EROSION MAT CLASS II TYPE C

NOTES:

1. EROSION CONTROL DEVICES SHOWN ON THE PLANS ARE AT SUGGESTED LOCATIONS. THE EXACT LOCATIONS WILL BE DETERMINED BY THE CONTRACTOR'S ECIP AND BY THE ENGINEER. EROSION CONTROL DEVICES SHALL BE MAINTAINED UNTIL PERMANENT VEGETATION IS ESTABLISHED OR THE ENGINEER DETERMINES THAT THE DEVICE IS NO LONGER NEEDED.
2. EROSION CONTROL DEVICES SHALL BE PLACED IN SEQUENCE WITH CONSTRUCTION OPERATIONS OR AS DETERMINED BY THE ENGINEER.
3. ALL RESTORATION SHALL BE TOPSOIL, SOD LAWN, AND FERTILIZER TYPE B UNLESS OTHERWISE SHOWN ON THE EROSION CONTROL PLANS. WHEN EROSION MAT IS SHOWN IN THE EROSION CONTROL PLANS RESTORATION SHALL BE TOPSOIL, SEED MIXTURE NO. 30, AND FERTILIZER TYPE B UNLESS ANOTHER SEED MIXTURE IS IDENTIFIED IN THE PLANS.
4. PLACE INLET PROTECTION TYPE A DURING GRADING AND INLET PROTECTION TYPE B, C, OR D AFTER PAVEMENT ADJACENT TO INLET IS PLACED.
5. DO NOT STORE MATERIAL OR OPERATE EQUIPMENT IN WETLANDS OUTSIDE THE SLOPE INTERCEPT.

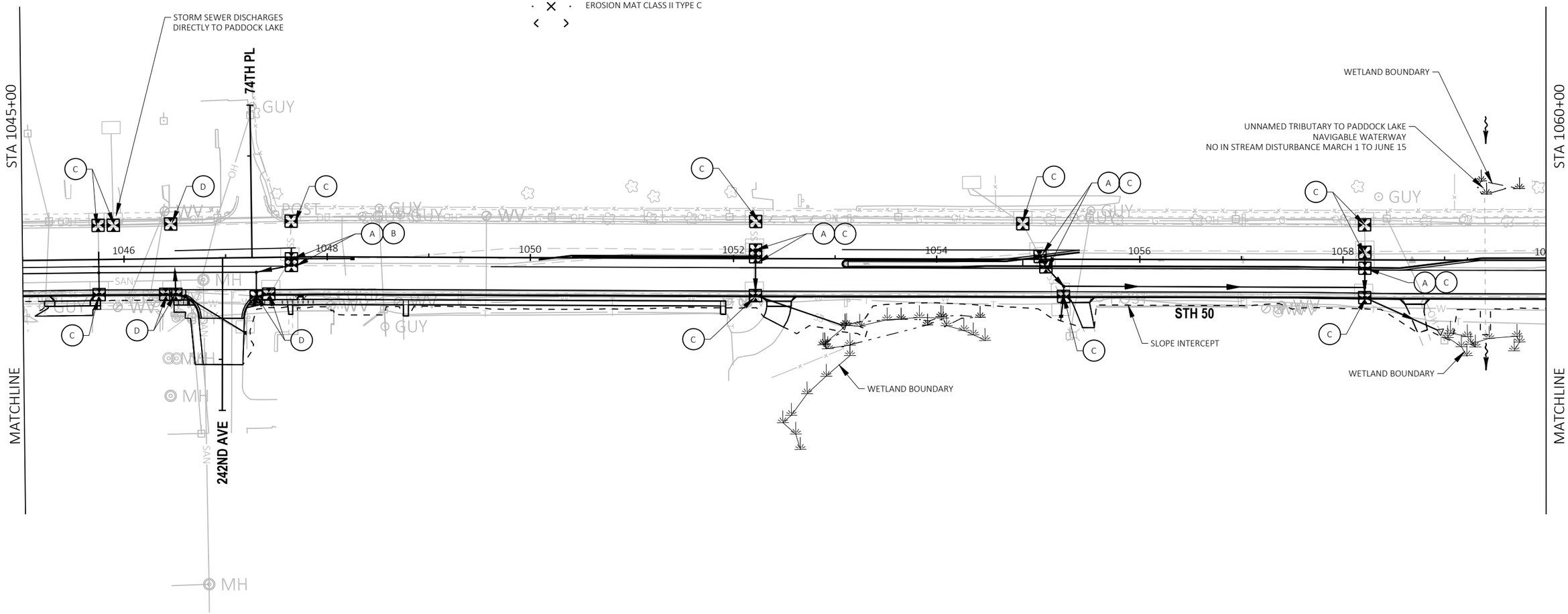

SHEET 24 OF 40

PROJECT NO: 1310-04-70	HWY: STH 50	COUNTY: KENOSHA	EROSION CONTROL - STAGE 4B	SHEET 158	E

FILE NAME : T:\1182708.06\CIVIL3D\13100400\13100400\SHEETSPLAN\022006_EC_S4B.DWG
LAYOUT NAME - 07
PLOT DATE : 1/18/2022 10:28 AM
PLOT BY : BLACKWOOD, JIM
PLOT NAME :
PLOT SCALE : 1 IN:100 FT

2

LEGEND

- SILT FENCE
- INLET PROTECTION
- (A) INLET PROTECTION TYPE
- CULVERT PIPE CHECK
- TEMPORARY DITCH CHECK
- SURFACE WATER FLOW ARROW
- RIPRAP
- EROSION MAT CLASS I TYPE B
- EROSION MAT CLASS II TYPE C

NOTES:

1. EROSION CONTROL DEVICES SHOWN ON THE PLANS ARE AT SUGGESTED LOCATIONS. THE EXACT LOCATIONS WILL BE DETERMINED BY THE CONTRACTOR'S ECIP AND BY THE ENGINEER. EROSION CONTROL DEVICES SHALL BE MAINTAINED UNTIL PERMANENT VEGETATION IS ESTABLISHED OR THE ENGINEER DETERMINES THAT THE DEVICE IS NO LONGER NEEDED.
2. EROSION CONTROL DEVICES SHALL BE PLACED IN SEQUENCE WITH CONSTRUCTION OPERATIONS OR AS DETERMINED BY THE ENGINEER.
3. ALL RESTORATION SHALL BE TOPSOIL, SOD LAWN, AND FERTILIZER TYPE B UNLESS OTHERWISE SHOWN ON THE EROSION CONTROL PLANS. WHEN EROSION MAT IS SHOWN IN THE EROSION CONTROL PLANS RESTORATION SHALL BE TOPSOIL, SEED MIXTURE NO. 30, AND FERTILIZER TYPE B UNLESS ANOTHER SEED MIXTURE IS IDENTIFIED IN THE PLANS.
4. PLACE INLET PROTECTION TYPE A DURING GRADING AND INLET PROTECTION TYPE B, C, OR D AFTER PAVEMENT ADJACENT TO INLET IS PLACED.
5. DO NOT STORE MATERIAL OR OPERATE EQUIPMENT IN WETLANDS OUTSIDE THE SLOPE INTERCEPT.

N

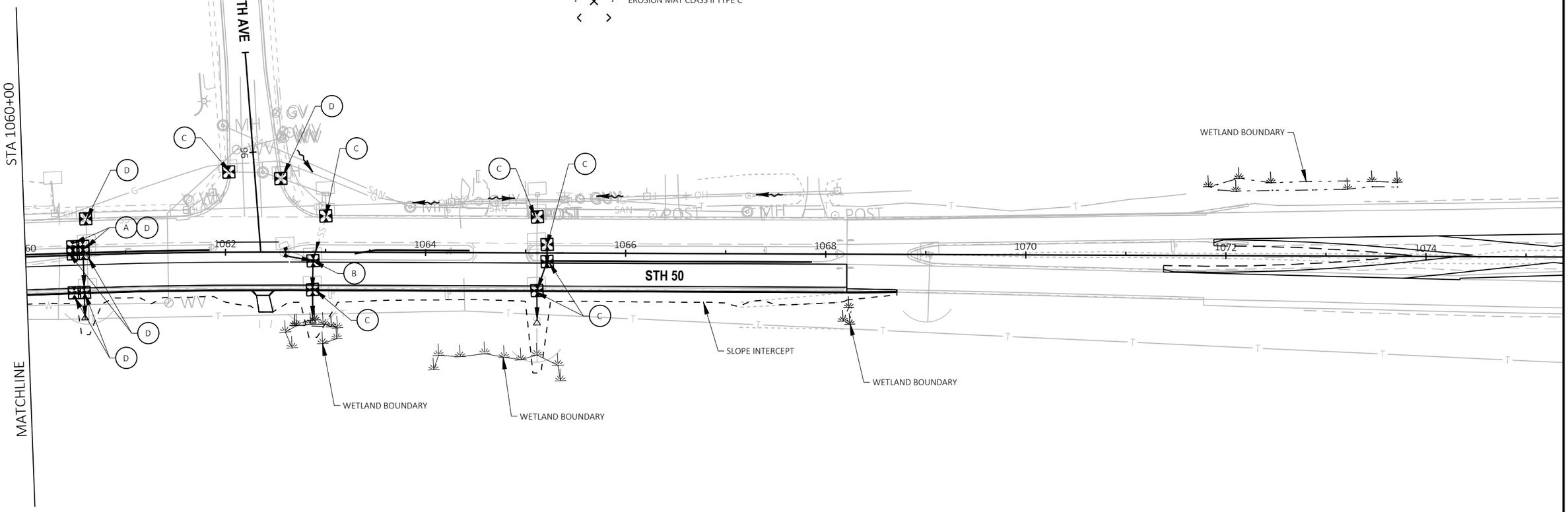

SHEET 25 OF 40

PROJECT NO: 1310-04-70	HWY: STH 50	COUNTY: KENOSHA	EROSION CONTROL - STAGE 4B	SHEET 159	E

FILE NAME : T:\1182708.06\CIVIL3D\13100400\13100400\SHEETSPLAN\022006_EC_S4B.DWG
LAYOUT NAME - 08

PLOT DATE : 1/18/2022 10:28 AM PLOT BY : BLACKWOOD, JIM PLOT NAME : PLOT SCALE : 1 IN:100 FT

2

LEGEND

- SILT FENCE
- INLET PROTECTION
- (A) INLET PROTECTION TYPE
- CULVERT PIPE CHECK
- TEMPORARY DITCH CHECK
- SURFACE WATER FLOW ARROW
- RIPRAP
- EROSION MAT CLASS I TYPE B
- EROSION MAT CLASS II TYPE C

NOTES:

1. EROSION CONTROL DEVICES SHOWN ON THE PLANS ARE AT SUGGESTED LOCATIONS. THE EXACT LOCATIONS WILL BE DETERMINED BY THE CONTRACTOR'S ECIP AND BY THE ENGINEER. EROSION CONTROL DEVICES SHALL BE MAINTAINED UNTIL PERMANENT VEGETATION IS ESTABLISHED OR THE ENGINEER DETERMINES THAT THE DEVICE IS NO LONGER NEEDED.
2. EROSION CONTROL DEVICES SHALL BE PLACED IN SEQUENCE WITH CONSTRUCTION OPERATIONS OR AS DETERMINED BY THE ENGINEER.
3. ALL RESTORATION SHALL BE TOPSOIL, SOD LAWN, AND FERTILIZER TYPE B UNLESS OTHERWISE SHOWN ON THE EROSION CONTROL PLANS. WHEN EROSION MAT IS SHOWN IN THE EROSION CONTROL PLANS RESTORATION SHALL BE TOPSOIL, SEED MIXTURE NO. 30, AND FERTILIZER TYPE B UNLESS ANOTHER SEED MIXTURE IS IDENTIFIED IN THE PLANS.
4. PLACE INLET PROTECTION TYPE A DURING GRADING AND INLET PROTECTION TYPE B, C, OR D AFTER PAVEMENT ADJACENT TO INLET IS PLACED.
5. DO NOT STORE MATERIAL OR OPERATE EQUIPMENT IN WETLANDS OUTSIDE THE SLOPE INTERCEPT.

N

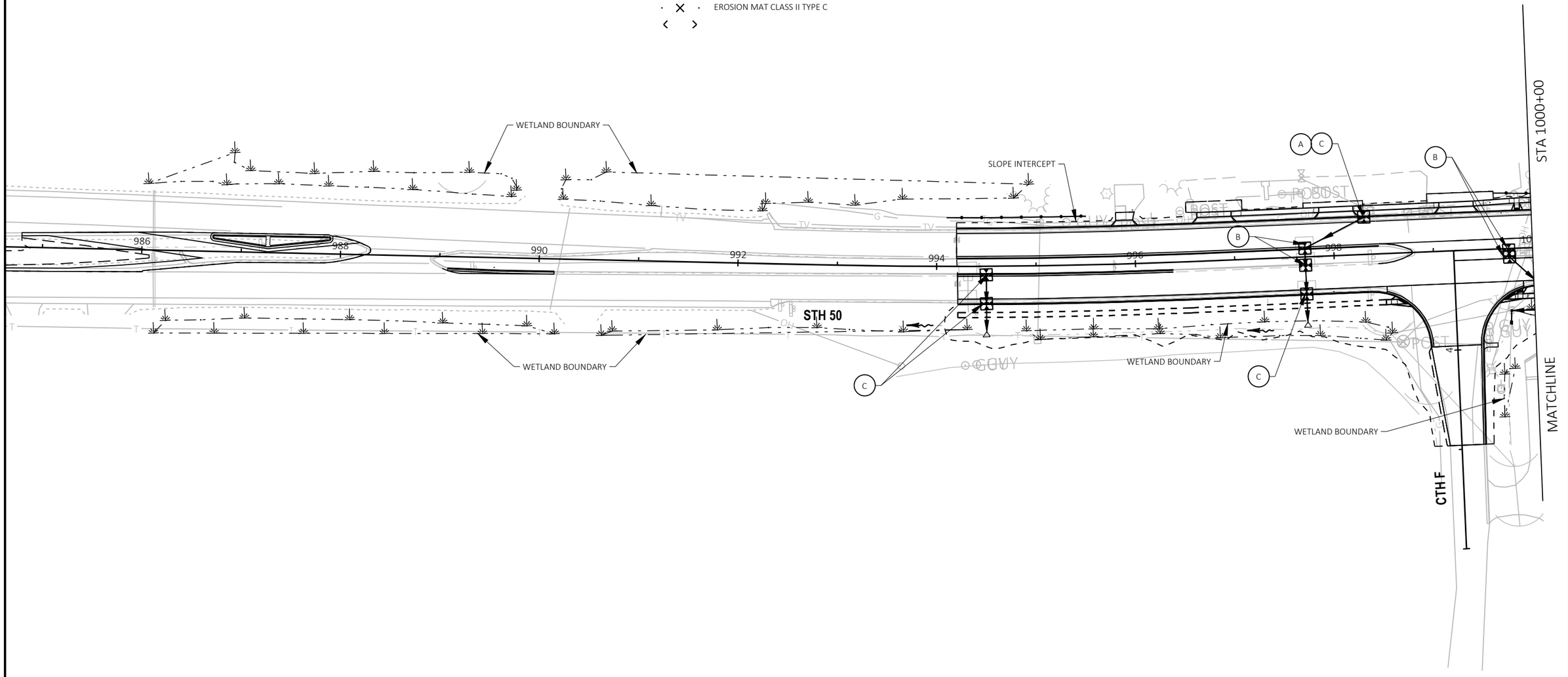

SHEET 26 OF 40

PROJECT NO: 1310-04-70	HWY: STH 50	COUNTY: KENOSHA	EROSION CONTROL - STAGE 4C	SHEET 160	E

FILE NAME : T:\1182708.06\CIVIL3D\13100400\13100400\SHEETSPLAN\022007_EC_S4C.DWG
LAYOUT NAME - 03

PLOT DATE : 1/18/2022 10:28 AM PLOT BY : BLACKWOOD, JIM PLOT NAME : PLOT SCALE : 1 IN:100 FT

WISDOT/CADDS SHEET 42

2

LEGEND

- SILT FENCE
- INLET PROTECTION
- A — INLET PROTECTION TYPE
- CULVERT PIPE CHECK
- TEMPORARY DITCH CHECK
- SURFACE WATER FLOW ARROW
- RIPRAP
- EROSION MAT CLASS I TYPE B
- EROSION MAT CLASS II TYPE C

NOTES:

1. EROSION CONTROL DEVICES SHOWN ON THE PLANS ARE AT SUGGESTED LOCATIONS. THE EXACT LOCATIONS WILL BE DETERMINED BY THE CONTRACTOR'S ECIP AND BY THE ENGINEER. EROSION CONTROL DEVICES SHALL BE MAINTAINED UNTIL PERMANENT VEGETATION IS ESTABLISHED OR THE ENGINEER DETERMINES THAT THE DEVICE IS NO LONGER NEEDED.
2. EROSION CONTROL DEVICES SHALL BE PLACED IN SEQUENCE WITH CONSTRUCTION OPERATIONS OR AS DETERMINED BY THE ENGINEER.
3. ALL RESTORATION SHALL BE TOPSOIL, SOD LAWN, AND FERTILIZER TYPE B UNLESS OTHERWISE SHOWN ON THE EROSION CONTROL PLANS. WHEN EROSION MAT IS SHOWN IN THE EROSION CONTROL PLANS RESTORATION SHALL BE TOPSOIL, SEED MIXTURE NO. 30, AND FERTILIZER TYPE B UNLESS ANOTHER SEED MIXTURE IS IDENTIFIED IN THE PLANS.
4. PLACE INLET PROTECTION TYPE A DURING GRADING AND INLET PROTECTION TYPE B, C, OR D AFTER PAVEMENT ADJACENT TO INLET IS PLACED.
5. DO NOT STORE MATERIAL OR OPERATE EQUIPMENT IN WETLANDS OUTSIDE THE SLOPE INTERCEPT.

N

STA 1000+00

STA 1015+00

MATCHLINE

MATCHLINE

STH 75

STH 50

STH 50

STH 83

SLOPE INTERCEPT

SLOPE INTERCEPT

WETLAND BOUNDARY

WETLAND BOUNDARY

WETLAND BOUNDARY

1002 1004 1006 1008 1010 1012 1014

SHEET 27 OF 40

PROJECT NO: 1310-04-70	HWY: STH 50	COUNTY: KENOSHA	EROSION CONTROL - STAGE 4C	SHEET 161	E

FILE NAME : T:\1182708.06\CIVIL3D\13100400\13100400\SHEETSPLAN\022007_EC_S4C.DWG
LAYOUT NAME - 04

PLOT DATE : 1/18/2022 10:28 AM PLOT BY : BLACKWOOD, JIM PLOT NAME : PLOT SCALE : 1 IN:100 FT

2

N

STA 1015+00

STA 1030+00

250TH AVE

248TH AVE

SLOPE INTERCEPT

SLOPE INTERCEPT

STH 50

HIGH SCHOOL WEST DRIVEWAY

MATCHLINE

MATCHLINE

1016 1018 1020 1022 1024 1026 1028

LEGEND

- SILT FENCE
- INLET PROTECTION
- A — INLET PROTECTION TYPE
- CULVERT PIPE CHECK
- TEMPORARY DITCH CHECK
- SURFACE WATER FLOW ARROW
- RIPRAP
- EROSION MAT CLASS I TYPE B
- EROSION MAT CLASS II TYPE C

NOTES:

1. EROSION CONTROL DEVICES SHOWN ON THE PLANS ARE AT SUGGESTED LOCATIONS. THE EXACT LOCATIONS WILL BE DETERMINED BY THE CONTRACTOR'S ECIP AND BY THE ENGINEER. EROSION CONTROL DEVICES SHALL BE MAINTAINED UNTIL PERMANENT VEGETATION IS ESTABLISHED OR THE ENGINEER DETERMINES THAT THE DEVICE IS NO LONGER NEEDED.
2. EROSION CONTROL DEVICES SHALL BE PLACED IN SEQUENCE WITH CONSTRUCTION OPERATIONS OR AS DETERMINED BY THE ENGINEER.
3. ALL RESTORATION SHALL BE TOPSOIL, SOD LAWN, AND FERTILIZER TYPE B UNLESS OTHERWISE SHOWN ON THE EROSION CONTROL PLANS. WHEN EROSION MAT IS SHOWN IN THE EROSION CONTROL PLANS RESTORATION SHALL BE TOPSOIL, SEED MIXTURE NO. 30, AND FERTILIZER TYPE B UNLESS ANOTHER SEED MIXTURE IS IDENTIFIED IN THE PLANS.
4. PLACE INLET PROTECTION TYPE A DURING GRADING AND INLET PROTECTION TYPE B, C, OR D AFTER PAVEMENT ADJACENT TO INLET IS PLACED.
5. DO NOT STORE MATERIAL OR OPERATE EQUIPMENT IN WETLANDS OUTSIDE THE SLOPE INTERCEPT.

SHEET 28 OF 40

PROJECT NO: 1310-04-70	HWY: STH 50	COUNTY: KENOSHA	EROSION CONTROL - STAGE 4C	SHEET 162	E

2

N

STA 1030+00

STA 1045+00

246TH AVE

243RD AVE

244TH AVE

STH 50

STORM SEWER DISCHARGES DIRECTLY TO PADDOCK LAKE

PLACE ROCK BAGS IN EXISTING ASPHALT DITCH

SLOPE INTERCEPT

SLOPE INTERCEPT

1030 1032 1034 1036 1038 1040 1042 1044

64

MATCHLINE

MATCHLINE

LEGEND

- SILT FENCE
- INLET PROTECTION
- (A) INLET PROTECTION TYPE
- CULVERT PIPE CHECK
- TEMPORARY DITCH CHECK
- SURFACE WATER FLOW ARROW
- RIPRAP
- EROSION MAT CLASS I TYPE B
- EROSION MAT CLASS II TYPE C

NOTES:

1. EROSION CONTROL DEVICES SHOWN ON THE PLANS ARE AT SUGGESTED LOCATIONS. THE EXACT LOCATIONS WILL BE DETERMINED BY THE CONTRACTOR'S ECIP AND BY THE ENGINEER. EROSION CONTROL DEVICES SHALL BE MAINTAINED UNTIL PERMANENT VEGETATION IS ESTABLISHED OR THE ENGINEER DETERMINES THAT THE DEVICE IS NO LONGER NEEDED.
2. EROSION CONTROL DEVICES SHALL BE PLACED IN SEQUENCE WITH CONSTRUCTION OPERATIONS OR AS DETERMINED BY THE ENGINEER.
3. ALL RESTORATION SHALL BE TOPSOIL, SOD LAWN, AND FERTILIZER TYPE B UNLESS OTHERWISE SHOWN ON THE EROSION CONTROL PLANS. WHEN EROSION MAT IS SHOWN IN THE EROSION CONTROL PLANS RESTORATION SHALL BE TOPSOIL, SEED MIXTURE NO. 30, AND FERTILIZER TYPE B UNLESS ANOTHER SEED MIXTURE IS IDENTIFIED IN THE PLANS.
4. PLACE INLET PROTECTION TYPE A DURING GRADING AND INLET PROTECTION TYPE B, C, OR D AFTER PAVEMENT ADJACENT TO INLET IS PLACED.
5. DO NOT STORE MATERIAL OR OPERATE EQUIPMENT IN WETLANDS OUTSIDE THE SLOPE INTERCEPT.

SHEET 29 OF 40

PROJECT NO: 1310-04-70	HWY: STH 50	COUNTY: KENOSHA	EROSION CONTROL - STAGE 4C	SHEET 163	E

FILE NAME : T:\1182708.06\CIVIL3D\13100400\13100400\SHEETSPLAN\022007_EC_S4C.DWG
LAYOUT NAME - 06

PLOT DATE : 1/18/2022 10:28 AM PLOT BY : BLACKWOOD, JIM PLOT NAME : PLOT SCALE : 1 IN:100 FT

2

N

STA 1045+00

STA 1060+00

MATCHLINE

MATCHLINE

STORM SEWER DISCHARGES DIRECTLY TO PADDOCK LAKE

74TH PL

242ND AVE

STH 50

SLOPE INTERCEPT

SLOPE INTERCEPT

WETLAND BOUNDARY

WETLAND BOUNDARY

WETLAND BOUNDARY

UNNAMED TRIBUTARY TO PADDOCK LAKE
NAVIGABLE WATERWAY
NO IN STREAM DISTURBANCE MARCH 1 TO JUNE 15
RESTORE DISTURBED AREAS IMMEDIATELY USING IN STREAM BMP'S
DIVERT OR BYPASS PUMP WATER IN ACCORDANCE WITH EROSION CONTROL
ARTICLE IN SPECIAL PROVISIONS

1046 1048 1050 1052 1054 1056 1058

A D A C A C A C A C A C A C C C C C C C C C C C C D D D B

GUY MH SAN SAN MH MH MH MH

LEGEND

- SILT FENCE
- INLET PROTECTION
- A — INLET PROTECTION TYPE
- CULVERT PIPE CHECK
- TEMPORARY DITCH CHECK
- SURFACE WATER FLOW ARROW
- RIPRAP
- EROSION MAT CLASS I TYPE B
- EROSION MAT CLASS II TYPE C

NOTES:

1. EROSION CONTROL DEVICES SHOWN ON THE PLANS ARE AT SUGGESTED LOCATIONS. THE EXACT LOCATIONS WILL BE DETERMINED BY THE CONTRACTOR'S ECIP AND BY THE ENGINEER. EROSION CONTROL DEVICES SHALL BE MAINTAINED UNTIL PERMANENT VEGETATION IS ESTABLISHED OR THE ENGINEER DETERMINES THAT THE DEVICE IS NO LONGER NEEDED.
2. EROSION CONTROL DEVICES SHALL BE PLACED IN SEQUENCE WITH CONSTRUCTION OPERATIONS OR AS DETERMINED BY THE ENGINEER.
3. ALL RESTORATION SHALL BE TOPSOIL, SOD LAWN, AND FERTILIZER TYPE B UNLESS OTHERWISE SHOWN ON THE EROSION CONTROL PLANS. WHEN EROSION MAT IS SHOWN IN THE EROSION CONTROL PLANS RESTORATION SHALL BE TOPSOIL, SEED MIXTURE NO. 30, AND FERTILIZER TYPE B UNLESS ANOTHER SEED MIXTURE IS IDENTIFIED IN THE PLANS.
4. PLACE INLET PROTECTION TYPE A DURING GRADING AND INLET PROTECTION TYPE B, C, OR D AFTER PAVEMENT ADJACENT TO INLET IS PLACED.
5. DO NOT STORE MATERIAL OR OPERATE EQUIPMENT IN WETLANDS OUTSIDE THE SLOPE INTERCEPT.

SHEET 30 OF 40

PROJECT NO: 1310-04-70	HWY: STH 50	COUNTY: KENOSHA	EROSION CONTROL - STAGE 4C	SHEET 164	E

2

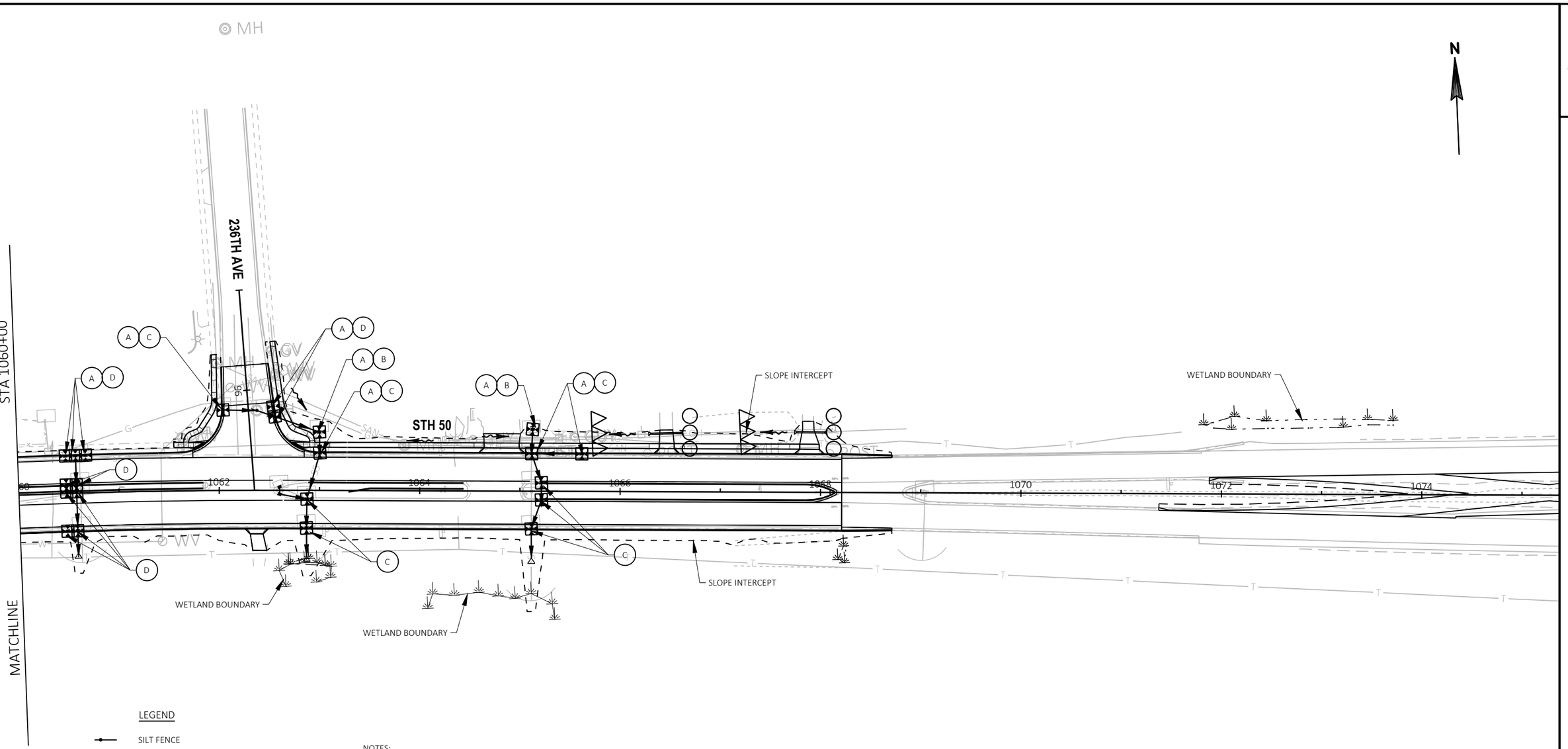

LEGEND

- SILT FENCE
- INLET PROTECTION
- (A) INLET PROTECTION TYPE
- CULVERT PIPE CHECK
- TEMPORARY DITCH CHECK
- SURFACE WATER FLOW ARROW
- RIPRAP
- EROSION MAT CLASS I TYPE B
- EROSION MAT CLASS II TYPE C

NOTES:

1. EROSION CONTROL DEVICES SHOWN ON THE PLANS ARE AT SUGGESTED LOCATIONS. THE EXACT LOCATIONS WILL BE DETERMINED BY THE CONTRACTOR'S ECIP AND BY THE ENGINEER. EROSION CONTROL DEVICES SHALL BE MAINTAINED UNTIL PERMANENT VEGETATION IS ESTABLISHED OR THE ENGINEER DETERMINES THAT THE DEVICE IS NO LONGER NEEDED.
2. EROSION CONTROL DEVICES SHALL BE PLACED IN SEQUENCE WITH CONSTRUCTION OPERATIONS OR AS DETERMINED BY THE ENGINEER.
3. ALL RESTORATION SHALL BE TOPSOIL, SOD LAWN, AND FERTILIZER TYPE B UNLESS OTHERWISE SHOWN ON THE EROSION CONTROL PLANS. WHEN EROSION MAT IS SHOWN IN THE EROSION CONTROL PLANS RESTORATION SHALL BE TOPSOIL, SEED MIXTURE NO. 30, AND FERTILIZER TYPE B UNLESS ANOTHER SEED MIXTURE IS IDENTIFIED IN THE PLANS.
4. PLACE INLET PROTECTION TYPE A DURING GRADING AND INLET PROTECTION TYPE B, C, OR D AFTER PAVEMENT ADJACENT TO INLET IS PLACED.
5. DO NOT STORE MATERIAL OR OPERATE EQUIPMENT IN WETLANDS OUTSIDE THE SLOPE INTERCEPT.

SHEET 31 OF 40

PROJECT NO: 1310-04-70	HWY: STH 50	COUNTY: KENOSHA	EROSION CONTROL - STAGE 4C	SHEET 165	E

FILE NAME : T:\1182708.06\CIVIL3D\13100400\13100400\SHEETSPLAN\022007_EC_S4C.DWG
LAYOUT NAME - 08
PLOT DATE : 1/18/2022 10:29 AM
PLOT BY : BLACKWOOD, JIM
PLOT NAME :
PLOT SCALE : 1 IN:100 FT
WISDOT/CADDS SHEET 42

2

LEGEND

- SILT FENCE
- INLET PROTECTION
- A — INLET PROTECTION TYPE
- CULVERT PIPE CHECK
- TEMPORARY DITCH CHECK
- SURFACE WATER FLOW ARROW
- RIPRAP
- EROSION MAT CLASS I TYPE B
- EROSION MAT CLASS II TYPE C

NOTES:

1. EROSION CONTROL DEVICES SHOWN ON THE PLANS ARE AT SUGGESTED LOCATIONS. THE EXACT LOCATIONS WILL BE DETERMINED BY THE CONTRACTOR'S ECIP AND BY THE ENGINEER. EROSION CONTROL DEVICES SHALL BE MAINTAINED UNTIL PERMANENT VEGETATION IS ESTABLISHED OR THE ENGINEER DETERMINES THAT THE DEVICE IS NO LONGER NEEDED.
2. EROSION CONTROL DEVICES SHALL BE PLACED IN SEQUENCE WITH CONSTRUCTION OPERATIONS OR AS DETERMINED BY THE ENGINEER.
3. ALL RESTORATION SHALL BE TOPSOIL, SOD LAWN, AND FERTILIZER TYPE B UNLESS OTHERWISE SHOWN ON THE EROSION CONTROL PLANS. WHEN EROSION MAT IS SHOWN IN THE EROSION CONTROL PLANS RESTORATION SHALL BE TOPSOIL, SEED MIXTURE NO. 30, AND FERTILIZER TYPE B UNLESS ANOTHER SEED MIXTURE IS IDENTIFIED IN THE PLANS.
4. PLACE INLET PROTECTION TYPE A DURING GRADING AND INLET PROTECTION TYPE B, C, OR D AFTER PAVEMENT ADJACENT TO INLET IS PLACED.
5. DO NOT STORE MATERIAL OR OPERATE EQUIPMENT IN WETLANDS OUTSIDE THE SLOPE INTERCEPT.

N

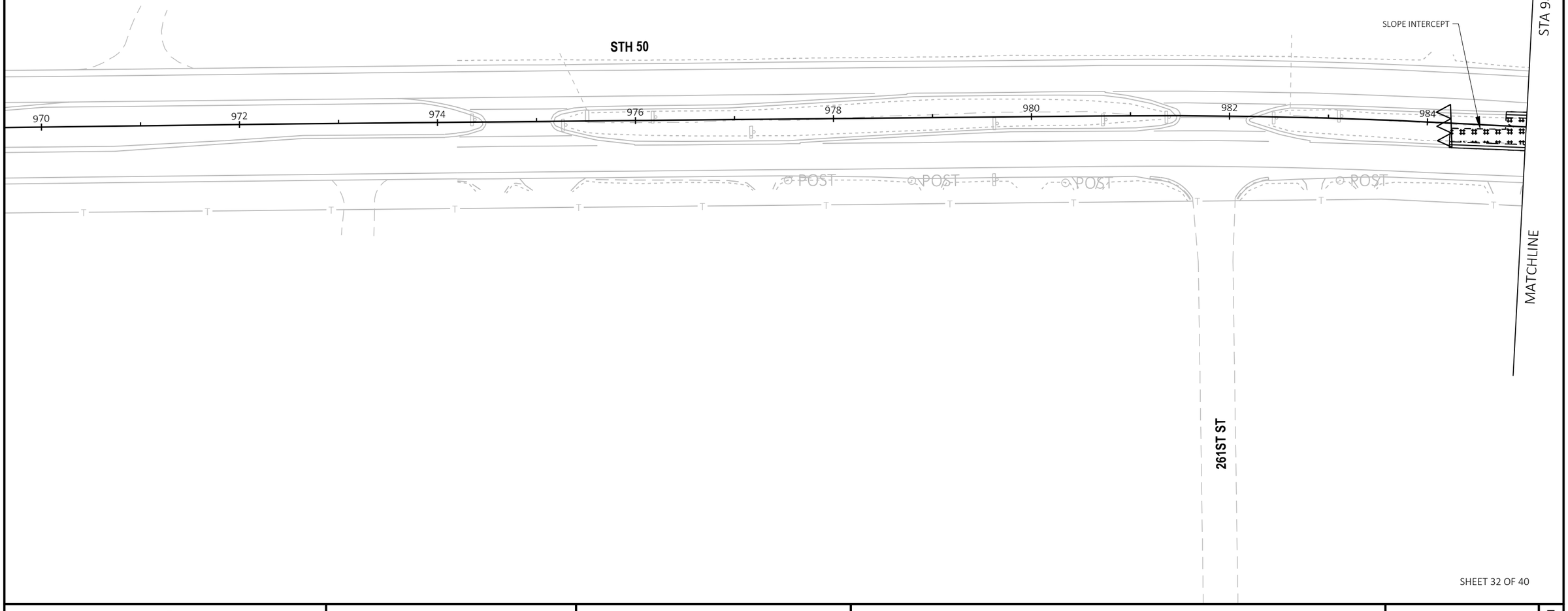

SHEET 32 OF 40

PROJECT NO: 1310-04-70	HWY: STH 50	COUNTY: KENOSHA	EROSION CONTROL - STAGE 5	SHEET 166	E

FILE NAME : T:\1182708.06\CIVIL3D\13100400\13100400\SHEETSPLAN\022008_EC_S5.DWG
LAYOUT NAME - 02

PLOT DATE : 1/18/2022 10:29 AM PLOT BY : BLACKWOOD, JIM PLOT NAME : PLOT SCALE : 1 IN:100 FT

2

N

STA 985+00

STA 1000+00

MATCHLINE

MATCHLINE

WETLAND BOUNDARY

SLOPE INTERCEPT

SLOPE INTERCEPT

WETLAND BOUNDARY

WETLAND BOUNDARY

SLOPE INTERCEPT

WETLAND BOUNDARY

WETLAND BOUNDARY

STH 50

CTH F

986 988 990 992 994 996 998 10

LEGEND

- SILT FENCE
- INLET PROTECTION
- (A) INLET PROTECTION TYPE
- CULVERT PIPE CHECK
- TEMPORARY DITCH CHECK
- SURFACE WATER FLOW ARROW
- RIPRAP
- EROSION MAT CLASS I TYPE B
- EROSION MAT CLASS II TYPE C

NOTES:

1. EROSION CONTROL DEVICES SHOWN ON THE PLANS ARE AT SUGGESTED LOCATIONS. THE EXACT LOCATIONS WILL BE DETERMINED BY THE CONTRACTOR'S ECIP AND BY THE ENGINEER. EROSION CONTROL DEVICES SHALL BE MAINTAINED UNTIL PERMANENT VEGETATION IS ESTABLISHED OR THE ENGINEER DETERMINES THAT THE DEVICE IS NO LONGER NEEDED.
2. EROSION CONTROL DEVICES SHALL BE PLACED IN SEQUENCE WITH CONSTRUCTION OPERATIONS OR AS DETERMINED BY THE ENGINEER.
3. ALL RESTORATION SHALL BE TOPSOIL, SOD LAWN, AND FERTILIZER TYPE B UNLESS OTHERWISE SHOWN ON THE EROSION CONTROL PLANS. WHEN EROSION MAT IS SHOWN IN THE EROSION CONTROL PLANS RESTORATION SHALL BE TOPSOIL, SEED MIXTURE NO. 30, AND FERTILIZER TYPE B UNLESS ANOTHER SEED MIXTURE IS IDENTIFIED IN THE PLANS.
4. PLACE INLET PROTECTION TYPE A DURING GRADING AND INLET PROTECTION TYPE B, C, OR D AFTER PAVEMENT ADJACENT TO INLET IS PLACED.
5. DO NOT STORE MATERIAL OR OPERATE EQUIPMENT IN WETLANDS OUTSIDE THE SLOPE INTERCEPT.

SHEET 33 OF 40

PROJECT NO: 1310-04-70	HWY: STH 50	COUNTY: KENOSHA	EROSION CONTROL - STAGE 5	SHEET 167	E

FILE NAME : T:\1182708.06\CIVIL3D\13100400\13100400\SHEETSPLAN\022008_EC_S5.DWG
LAYOUT NAME - 03

PLOT DATE : 1/18/2022 10:29 AM PLOT BY : BLACKWOOD, JIM PLOT NAME : PLOT SCALE : 1 IN:100 FT

2

LEGEND

- SILT FENCE
- INLET PROTECTION
- (A) INLET PROTECTION TYPE
- CULVERT PIPE CHECK
- TEMPORARY DITCH CHECK
- SURFACE WATER FLOW ARROW
- RIPRAP
- EROSION MAT CLASS I TYPE B
- EROSION MAT CLASS II TYPE C

NOTES:

1. EROSION CONTROL DEVICES SHOWN ON THE PLANS ARE AT SUGGESTED LOCATIONS. THE EXACT LOCATIONS WILL BE DETERMINED BY THE CONTRACTOR'S ECIP AND BY THE ENGINEER. EROSION CONTROL DEVICES SHALL BE MAINTAINED UNTIL PERMANENT VEGETATION IS ESTABLISHED OR THE ENGINEER DETERMINES THAT THE DEVICE IS NO LONGER NEEDED.
2. EROSION CONTROL DEVICES SHALL BE PLACED IN SEQUENCE WITH CONSTRUCTION OPERATIONS OR AS DETERMINED BY THE ENGINEER.
3. ALL RESTORATION SHALL BE TOPSOIL, SOD LAWN, AND FERTILIZER TYPE B UNLESS OTHERWISE SHOWN ON THE EROSION CONTROL PLANS. WHEN EROSION MAT IS SHOWN IN THE EROSION CONTROL PLANS RESTORATION SHALL BE TOPSOIL, SEED MIXTURE NO. 30, AND FERTILIZER TYPE B UNLESS ANOTHER SEED MIXTURE IS IDENTIFIED IN THE PLANS.
4. PLACE INLET PROTECTION TYPE A DURING GRADING AND INLET PROTECTION TYPE B, C, OR D AFTER PAVEMENT ADJACENT TO INLET IS PLACED.
5. DO NOT STORE MATERIAL OR OPERATE EQUIPMENT IN WETLANDS OUTSIDE THE SLOPE INTERCEPT.

N

STA 1000+00

STA 1015+00

MATCHLINE

MATCHLINE

STH 75

STH 50

STH 50

STH 83

WETLAND BOUNDARY

SLOPE INTERCEPT

SLOPE INTERCEPT

SLOPE INTERCEPT

1002 1004 1006 1008 1010 1012 1014

SHEET 34 OF 40

PROJECT NO: 1310-04-70	HWY: STH 50	COUNTY: KENOSHA	EROSION CONTROL - STAGE 5	SHEET 168	E

FILE NAME : T:\1182708.06\CIVIL3D\13100400\13100400\SHEETSPLAN\022008_EC_S5.DWG
LAYOUT NAME - 04

PLOT DATE : 1/18/2022 10:29 AM PLOT BY : BLACKWOOD, JIM PLOT NAME : PLOT SCALE : 1 IN:100 FT

WISDOT/CADDS SHEET 42

LEGEND

- SILT FENCE
- INLET PROTECTION
- (A) INLET PROTECTION TYPE
- CULVERT PIPE CHECK
- TEMPORARY DITCH CHECK
- SURFACE WATER FLOW ARROW
- RIPRAP
- EROSION MAT CLASS I TYPE B
- EROSION MAT CLASS II TYPE C

NOTES:

1. EROSION CONTROL DEVICES SHOWN ON THE PLANS ARE AT SUGGESTED LOCATIONS. THE EXACT LOCATIONS WILL BE DETERMINED BY THE CONTRACTOR'S ECIP AND BY THE ENGINEER. EROSION CONTROL DEVICES SHALL BE MAINTAINED UNTIL PERMANENT VEGETATION IS ESTABLISHED OR THE ENGINEER DETERMINES THAT THE DEVICE IS NO LONGER NEEDED.
2. EROSION CONTROL DEVICES SHALL BE PLACED IN SEQUENCE WITH CONSTRUCTION OPERATIONS OR AS DETERMINED BY THE ENGINEER.
3. ALL RESTORATION SHALL BE TOPSOIL, SOD LAWN, AND FERTILIZER TYPE B UNLESS OTHERWISE SHOWN ON THE EROSION CONTROL PLANS. WHEN EROSION MAT IS SHOWN IN THE EROSION CONTROL PLANS RESTORATION SHALL BE TOPSOIL, SEED MIXTURE NO. 30, AND FERTILIZER TYPE B UNLESS ANOTHER SEED MIXTURE IS IDENTIFIED IN THE PLANS.
4. PLACE INLET PROTECTION TYPE A DURING GRADING AND INLET PROTECTION TYPE B, C, OR D AFTER PAVEMENT ADJACENT TO INLET IS PLACED.
5. DO NOT STORE MATERIAL OR OPERATE EQUIPMENT IN WETLANDS OUTSIDE THE SLOPE INTERCEPT.

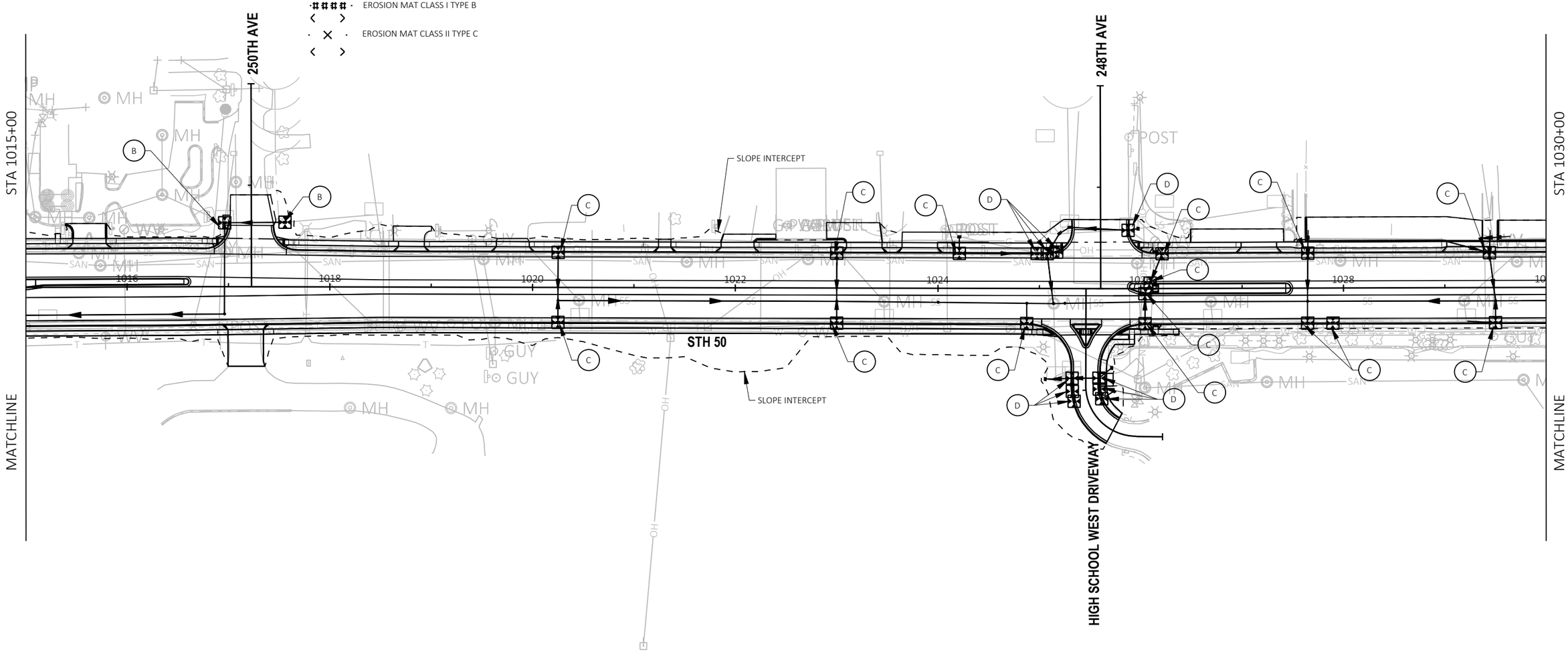

SHEET 35 OF 40

PROJECT NO: 1310-04-70	HWY: STH 50	COUNTY: KENOSHA	EROSION CONTROL - STAGE 5	SHEET 169	E

FILE NAME : T:\1182708.06\CIVIL3D\13100400\13100400\SHEETSPLAN\022008_EC_S5.DWG
LAYOUT NAME - 05
PLOT DATE : 1/18/2022 10:29 AM
PLOT BY : BLACKWOOD, JIM
PLOT NAME :
PLOT SCALE : 1 IN:100 FT

2

N

STA 1030+00

246TH AVE

243RD AVE

STA 1045+00

STORM SEWER DISCHARGES DIRECTLY TO PADDOCK LAKE

SLOPE INTERCEPT

STH 50

SLOPE INTERCEPT

244TH AVE

MATCHLINE

MATCHLINE

1030 1032 1034 1036 1038 1040 1042 1044

LEGEND

- SILT FENCE
- INLET PROTECTION
- A — INLET PROTECTION TYPE
- CULVERT PIPE CHECK
- TEMPORARY DITCH CHECK
- SURFACE WATER FLOW ARROW
- RIPRAP
- EROSION MAT CLASS I TYPE B
- EROSION MAT CLASS II TYPE C

NOTES:

1. EROSION CONTROL DEVICES SHOWN ON THE PLANS ARE AT SUGGESTED LOCATIONS. THE EXACT LOCATIONS WILL BE DETERMINED BY THE CONTRACTOR'S ECIP AND BY THE ENGINEER. EROSION CONTROL DEVICES SHALL BE MAINTAINED UNTIL PERMANENT VEGETATION IS ESTABLISHED OR THE ENGINEER DETERMINES THAT THE DEVICE IS NO LONGER NEEDED.
2. EROSION CONTROL DEVICES SHALL BE PLACED IN SEQUENCE WITH CONSTRUCTION OPERATIONS OR AS DETERMINED BY THE ENGINEER.
3. ALL RESTORATION SHALL BE TOPSOIL, SOD LAWN, AND FERTILIZER TYPE B UNLESS OTHERWISE SHOWN ON THE EROSION CONTROL PLANS. WHEN EROSION MAT IS SHOWN IN THE EROSION CONTROL PLANS RESTORATION SHALL BE TOPSOIL, SEED MIXTURE NO. 30, AND FERTILIZER TYPE B UNLESS ANOTHER SEED MIXTURE IS IDENTIFIED IN THE PLANS.
4. PLACE INLET PROTECTION TYPE A DURING GRADING AND INLET PROTECTION TYPE B, C, OR D AFTER PAVEMENT ADJACENT TO INLET IS PLACED.
5. DO NOT STORE MATERIAL OR OPERATE EQUIPMENT IN WETLANDS OUTSIDE THE SLOPE INTERCEPT.

PROJECT NO: 1310-04-70	HWY: STH 50	COUNTY: KENOSHA	EROSION CONTROL - STAGE 5	SHEET 170	E

FILE NAME : T:\1182708.06\CIVIL3D\13100400\13100400\SHEETSPLAN\022008_EC_S5.DWG
LAYOUT NAME - 06
PLOT DATE : 1/18/2022 10:29 AM
PLOT BY : BLACKWOOD, JIM
PLOT NAME :
PLOT SCALE : 1 IN:100 FT
WISDOT/CADDS SHEET 42

2

N

STA 1045+00

STORM SEWER DISCHARGES
DIRECTLY TO PADDOCK LAKE

74TH PL

WETLAND BOUNDARY

UNNAMED TRIBUTARY TO PADDOCK LAKE
NAVIGABLE WATERWAY
NO IN STREAM DISTURBANCE MARCH 1 TO JUNE 15

STA 1060+00

SLOPE INTERCEPT

1046 1048 1050 1052 1054 1056 1058

STH 50

SLOPE INTERCEPT

WETLAND BOUNDARY

WETLAND BOUNDARY

MATCHLINE

242ND AVE

MATCHLINE

LEGEND

- SILT FENCE
- INLET PROTECTION
- (A) INLET PROTECTION TYPE
- CULVERT PIPE CHECK
- TEMPORARY DITCH CHECK
- SURFACE WATER FLOW ARROW
- RIPRAP
- EROSION MAT CLASS I TYPE B
- EROSION MAT CLASS II TYPE C

NOTES:

1. EROSION CONTROL DEVICES SHOWN ON THE PLANS ARE AT SUGGESTED LOCATIONS. THE EXACT LOCATIONS WILL BE DETERMINED BY THE CONTRACTOR'S ECIP AND BY THE ENGINEER. EROSION CONTROL DEVICES SHALL BE MAINTAINED UNTIL PERMANENT VEGETATION IS ESTABLISHED OR THE ENGINEER DETERMINES THAT THE DEVICE IS NO LONGER NEEDED.
2. EROSION CONTROL DEVICES SHALL BE PLACED IN SEQUENCE WITH CONSTRUCTION OPERATIONS OR AS DETERMINED BY THE ENGINEER.
3. ALL RESTORATION SHALL BE TOPSOIL, SOD LAWN, AND FERTILIZER TYPE B UNLESS OTHERWISE SHOWN ON THE EROSION CONTROL PLANS. WHEN EROSION MAT IS SHOWN IN THE EROSION CONTROL PLANS RESTORATION SHALL BE TOPSOIL, SEED MIXTURE NO. 30, AND FERTILIZER TYPE B UNLESS ANOTHER SEED MIXTURE IS IDENTIFIED IN THE PLANS.
4. PLACE INLET PROTECTION TYPE A DURING GRADING AND INLET PROTECTION TYPE B, C, OR D AFTER PAVEMENT ADJACENT TO INLET IS PLACED.
5. DO NOT STORE MATERIAL OR OPERATE EQUIPMENT IN WETLANDS OUTSIDE THE SLOPE INTERCEPT.

SHEET 37 OF 40

PROJECT NO: 1310-04-70	HWY: STH 50	COUNTY: KENOSHA	EROSION CONTROL - STAGE 5	SHEET 171	E

FILE NAME : T:\1182708.06\CIVIL3D\13100400\13100400\SHEETSPLAN\022008_EC_S5.DWG
LAYOUT NAME - 07
PLOT DATE : 1/18/2022 10:29 AM PLOT BY : BLACKWOOD, JIM PLOT NAME : PLOT SCALE : 1 IN:100 FT
WISDOT/CADDS SHEET 42

2

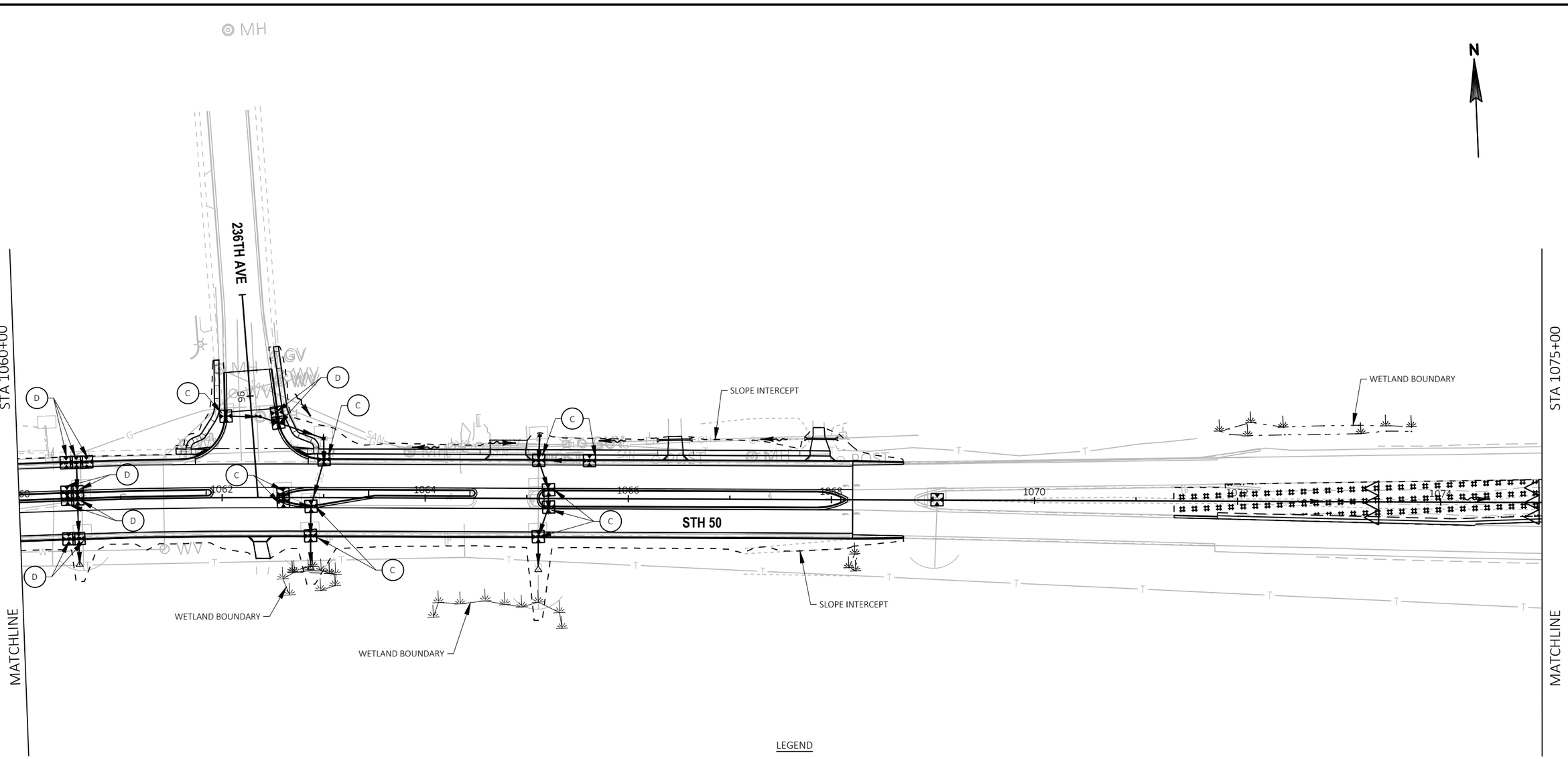

LEGEND

- SILT FENCE
- INLET PROTECTION
- (A) INLET PROTECTION TYPE
- CULVERT PIPE CHECK
- TEMPORARY DITCH CHECK
- SURFACE WATER FLOW ARROW
- RIPRAP
- EROSION MAT CLASS I TYPE B
- EROSION MAT CLASS II TYPE C

NOTES:

1. EROSION CONTROL DEVICES SHOWN ON THE PLANS ARE AT SUGGESTED LOCATIONS. THE EXACT LOCATIONS WILL BE DETERMINED BY THE CONTRACTOR'S ECIP AND BY THE ENGINEER. EROSION CONTROL DEVICES SHALL BE MAINTAINED UNTIL PERMANENT VEGETATION IS ESTABLISHED OR THE ENGINEER DETERMINES THAT THE DEVICE IS NO LONGER NEEDED.
2. EROSION CONTROL DEVICES SHALL BE PLACED IN SEQUENCE WITH CONSTRUCTION OPERATIONS OR AS DETERMINED BY THE ENGINEER.
3. ALL RESTORATION SHALL BE TOPSOIL, SOD LAWN, AND FERTILIZER TYPE B UNLESS OTHERWISE SHOWN ON THE EROSION CONTROL PLANS. WHEN EROSION MAT IS SHOWN IN THE EROSION CONTROL PLANS RESTORATION SHALL BE TOPSOIL, SEED MIXTURE NO. 30, AND FERTILIZER TYPE B UNLESS ANOTHER SEED MIXTURE IS IDENTIFIED IN THE PLANS.
4. PLACE INLET PROTECTION TYPE A DURING GRADING AND INLET PROTECTION TYPE B, C, OR D AFTER PAVEMENT ADJACENT TO INLET IS PLACED.
5. DO NOT STORE MATERIAL OR OPERATE EQUIPMENT IN WETLANDS OUTSIDE THE SLOPE INTERCEPT.

SHEET 38 OF 40

PROJECT NO: 1310-04-70	HWY: STH 50	COUNTY: KENOSHA	EROSION CONTROL - STAGE 5	SHEET 172	E

FILE NAME : T:\1182708.06\CIVIL3D\13100400\13100400\SHEETSPLAN\022008_EC_S5.DWG
LAYOUT NAME - 08
PLOT DATE : 1/18/2022 10:29 AM
PLOT BY : BLACKWOOD, JIM
PLOT NAME :
PLOT SCALE : 1 IN:100 FT
WISDOT/CADDS SHEET 42

2

N

STA 1075+00

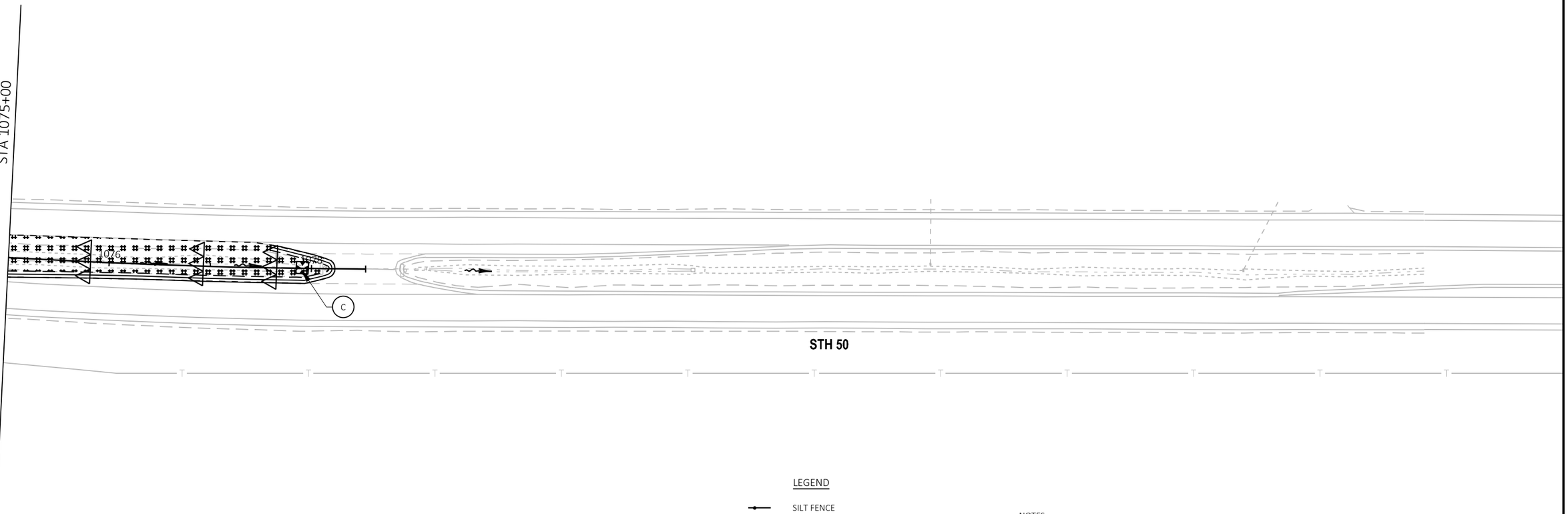

MATCHLINE

LEGEND

- SILT FENCE
- INLET PROTECTION
- A — INLET PROTECTION TYPE
- CULVERT PIPE CHECK
- TEMPORARY DITCH CHECK
- SURFACE WATER FLOW ARROW
- RIPRAP
- EROSION MAT CLASS I TYPE B
- EROSION MAT CLASS II TYPE C

NOTES:

1. EROSION CONTROL DEVICES SHOWN ON THE PLANS ARE AT SUGGESTED LOCATIONS. THE EXACT LOCATIONS WILL BE DETERMINED BY THE CONTRACTOR'S ECIP AND BY THE ENGINEER. EROSION CONTROL DEVICES SHALL BE MAINTAINED UNTIL PERMANENT VEGETATION IS ESTABLISHED OR THE ENGINEER DETERMINES THAT THE DEVICE IS NO LONGER NEEDED.
2. EROSION CONTROL DEVICES SHALL BE PLACED IN SEQUENCE WITH CONSTRUCTION OPERATIONS OR AS DETERMINED BY THE ENGINEER.
3. ALL RESTORATION SHALL BE TOPSOIL, SOD LAWN, AND FERTILIZER TYPE B UNLESS OTHERWISE SHOWN ON THE EROSION CONTROL PLANS. WHEN EROSION MAT IS SHOWN IN THE EROSION CONTROL PLANS RESTORATION SHALL BE TOPSOIL, SEED MIXTURE NO. 30, AND FERTILIZER TYPE B UNLESS ANOTHER SEED MIXTURE IS IDENTIFIED IN THE PLANS.
4. PLACE INLET PROTECTION TYPE A DURING GRADING AND INLET PROTECTION TYPE B, C, OR D AFTER PAVEMENT ADJACENT TO INLET IS PLACED.
5. DO NOT STORE MATERIAL OR OPERATE EQUIPMENT IN WETLANDS OUTSIDE THE SLOPE INTERCEPT.

SHEET 39 OF 40

PROJECT NO: 1310-04-70	HWY: STH 50	COUNTY: KENOSHA	EROSION CONTROL - STAGE 5	SHEET 173	E

FILE NAME : T:\1182708.06\CIVIL3D\13100400\13100400\SHEETSPLAN\022008_EC_S5.DWG
LAYOUT NAME - 09

PLOT DATE : 1/18/2022 10:29 AM PLOT BY : BLACKWOOD, JIM PLOT NAME : PLOT SCALE : 1 IN:100 FT

LEGEND

- SILT FENCE
- INLET PROTECTION
- (A) INLET PROTECTION TYPE
- CULVERT PIPE CHECK
- TEMPORARY DITCH CHECK
- SURFACE WATER FLOW ARROW
- RIPRAP
- EROSION MAT CLASS I TYPE B
- EROSION MAT CLASS II TYPE C

NOTES:

1. EROSION CONTROL DEVICES SHOWN ON THE PLANS ARE AT SUGGESTED LOCATIONS. THE EXACT LOCATIONS WILL BE DETERMINED BY THE CONTRACTOR'S ECIP AND BY THE ENGINEER. EROSION CONTROL DEVICES SHALL BE MAINTAINED UNTIL PERMANENT VEGETATION IS ESTABLISHED OR THE ENGINEER DETERMINES THAT THE DEVICE IS NO LONGER NEEDED.
2. EROSION CONTROL DEVICES SHALL BE PLACED IN SEQUENCE WITH CONSTRUCTION OPERATIONS OR AS DETERMINED BY THE ENGINEER.
3. ALL RESTORATION SHALL BE TOPSOIL, SOD LAWN, AND FERTILIZER TYPE B UNLESS OTHERWISE SHOWN ON THE EROSION CONTROL PLANS. WHEN EROSION MAT IS SHOWN IN THE EROSION CONTROL PLANS RESTORATION SHALL BE TOPSOIL, SEED MIXTURE NO. 30, AND FERTILIZER TYPE B UNLESS ANOTHER SEED MIXTURE IS IDENTIFIED IN THE PLANS.
4. PLACE INLET PROTECTION TYPE A DURING GRADING AND INLET PROTECTION TYPE B, C, OR D AFTER PAVEMENT ADJACENT TO INLET IS PLACED.
5. DO NOT STORE MATERIAL OR OPERATE EQUIPMENT IN WETLANDS OUTSIDE THE SLOPE INTERCEPT.

N

STH 75

STH 50

STH 83

WETLAND BOUNDARY

SLOPE INTERCEPT

SLOPE INTERCEPT

SLOPE INTERCEPT

1000 1002 1004 1006 1008 1010 1012 1014

SHEET 40 OF 40

PROJECT NO: 1310-04-70	HWY: STH 50	COUNTY: KENOSHA	EROSION CONTROL - STAGE 6A-6B	SHEET 174	E

FILE NAME : T:\1182708.06\CIVIL3D\13100400\13100400\SHEETSPLAN\022009_EC_S6.DWG
LAYOUT NAME - 04

PLOT DATE : 1/18/2022 10:30 AM PLOT BY : BLACKWOOD, JIM PLOT NAME : PLOT SCALE : 1 IN:100 FT

GENERAL DRAINAGE NOTES

1. STATION AND OFFSET OF MANHOLES, INLETS, AND FIELD INLETS ARE GIVEN TO THE CENTER OF STRUCTURE.
2. STATION AND OFFSET OF ENDWALLS ARE GIVEN TO THE END OF PIPE.
3. PIPE LENGTHS ARE DIMENSIONED CENTER OF STRUCTURE TO CENTER OF STRUCTURE.
4. STORM SEWER PIPES AT ENDWALLS USING STORM SEWER PIPE CLASS III-A ARE DESIGNED SO THAT THE TOP OF THE PIPE INTERCEPTS THE SLOPE AT THE OUTFALL. IF THE CONTRACTOR ELECTS TO USE STORM SEWER PIPE REINFORCED CONCRETE REDUCE THE PIPE LENGTH BY THE "C" DIMENSION SHOWN ON SDD APRON ENDWALL FOR CULVERT PIPE OR SDD APRON ENDWALLS FOR PIPE ARCH AND ELLIPTICAL PIPE
5. RIM ELEVATIONS ARE GIVEN AT FLANGE LINE OF CURB AND GUTTER FOR CURB INLETS, TO THE CENTER OF COVER FOR MANHOLES, AND TO CENTER OF THE COVER FOR FIELD INLETS.
6. STRUCTURE DEPTH CALCULATIONS FOR MANHOLES AND CATCH BASINS USE A 6-INCH ADJUSTMENT. NO ADJUSTMENT IS USED IN CALCULATING STRUCTURE DEPTH OF INLETS MEDIAN 1 GRATE.
7. STORM SEWER PIPE REINFORCED CONCRETE PIPE CLASS COVER DEPTH FOR DETERMINING PIPE CLASS IS MEASURED FROM THE BOTTOM OF THE BASE AGGREGATE DENSE 1 1/4-INCH LAYER.
8. STORM SEWER PIPE CLASS III-A COVER IS MEASURED FROM THE BOTTOM OF THE SELECT CRUSHED MATERIAL LAYER. STORM SEWER PIPE CLASS III-A SHALL NOT BE USED UNLESS THERE IS A MINIMUM OF TWO FEET OF COVER ABOVE THE TOP OF PIPE.
9. UTILITY INFORMATION SHOWN ON THE PLAN IS APPROXIMATE. DIGGERS HOTLINE SHALL BE CONTACTED PRIOR TO ANY EXCAVATION. ANY UTILITY FACILITIES DAMAGED BY THE CONTRACTOR SHALL BE REPAIRED AT CONTRACTOR'S EXPENSE TO THE COMPLETE SATISFACTION OF THE UTILITY FACILITY OWNER.
10. VERIFY THE LOCATION, SIZE, AND ELEVATION OF ALL CONNECTIONS TO EXISTING DRAINAGE FACILITIES PRIOR TO ORDERING DRAINAGE STRUCTURES AND PIPES. NOTIFY THE ENGINEER OF ANY DEVIATIONS FROM THE INFORMATION SHOWN ON THE PLANS PRIOR TO INSTALLING ANY DRAINAGE PIPES OR STRUCTURES.
11. PROVIDE TEMPORARY POSITIVE DRAINAGE THROUGHOUT THE PROJECT DURING ALL STAGES. PROVIDING TEMPORARY DRAINAGE IS INCIDENTAL TO CONSTRUCTION UNLESS OTHERWISE SHOWN IN THE TRAFFIC CONTROL/STAGING PLANS.
12. SUPPORTING UTILITIES DURING STORM SEWER CONSTRUCTION IS INCIDENTAL TO STORM SEWER PIPE AND/OR STORM SEWER STRUCTURE CONSTRUCTION.
13. PLAN VIEW HIGHLIGHTING ALONG STORM SEWER PIPES REPRESENTS THE STORM SEWER PROFILE SHOWN IN THE PROFILE VIEW BELOW ON THE SAME STORM SEWER SHEET.
14. CONCRETE COLLARS FOR PIPE SHALL ONLY BE PAID FOR WHEN SHOWN IN THE PLANS. ALL OTHER CONNECTIONS BETWEEN PIPES AND STORM SEWER STRUCTURES SHALL BE INCIDENTAL TO THE STORM SEWER PIPE OR STORM SEWER STRUCTURE.

STORM SEWER LEGEND

XX XXX.XX	STORM SEWER STRUCTURE NUMBER IN PROFILE VIEW WITH RIM ELEVATION
PXX	STORM SEWER PIPE NUMBER
CC	CONCRETE COLLARS FOR PIPE
	PIPE RUN SHOWN IN PROFILE VIEW ON CURRENT SHEET

STORM SEWER STRUCTURE ANNOTATION LEGEND

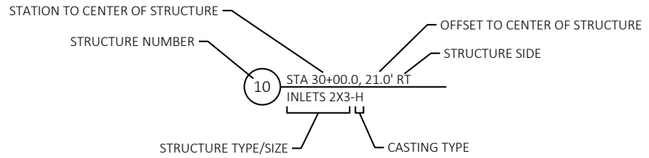

STRUCTURE TYPES

AEWCP	APRON ENDWALLS FOR CULVERT PIPE
AEWCPRC	APRON ENDWALLS FOR CULVERT PIPE REINFORCED CONCRETE
AEWCPRCHE	APRON ENDWALLS FOR CULVERT PIPE REINFORCED CONCRETE HORIZONTAL ELLIPTICAL
CATCH BASINS 3	CATCH BASINS 3-FT DIAMETER
CATCH BASINS 4	CATCH BASINS 4-FT DIAMETER
CATCH BASIN 5	CATCH BASINS 5-FT DIAMETER
CATCH BASINS 6	CATCH BASINS 6-FT DIAMETER
CATCH BASINS 2X3	CATCH BASINS 2X3-FT
INLETS 2X2	INLETS 2X2-FT
INLETS MEDIAN 1G	INLETS MEDIAN 1 GRATE
INLETS MEDIAN 2G	INLETS MEDIAN 2 GRATE
MANHOLE 4	MANHOLE 4-FT DIAMETER
MANHOLE 5	MANHOLE 5-FT DIAMETER
MANHOLE 6	MANHOLE 6-FT DIAMETER
MANHOLE 8	MANHOLE 8-FT DIAMETER

CASTING TYPES

A	INLET COVERS TYPE A
C	INLET COVERS TYPE C
H	INLET COVERS TYPE H
HM	INLET COVERS TYPE HM
J	MANHOLE COVERS TYPE J
MS	INLET COVERS TYPE MS
S	INLET COVERS TYPE S
Z	INLET COVERS TYPE Z

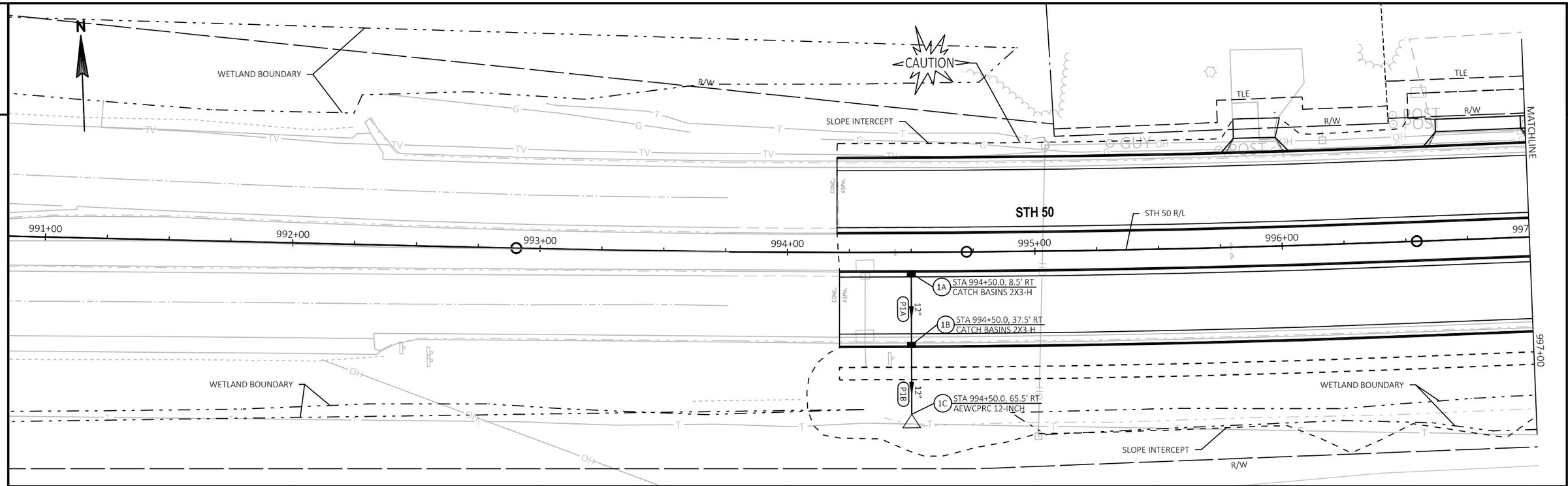

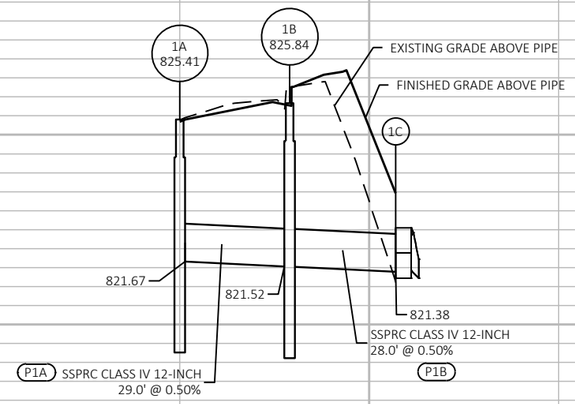

830
825
820
815

SHEET 2 OF 28

PROJECT NO: 1310-04-70	HWY: STH 50	COUNTY: KENOSHA	STORM SEWER	SHEET 176 E

FILE NAME : T:\1182708.06\CIVIL3D\13100400\13100400\SHEETSPLAN\022501_SS.DWG
LAYOUT NAME - SS-01

PLOT DATE : 1/18/2022 10:45 AM PLOT BY : BLACKWOOD, JIM PLOT NAME : PLOT SCALE : 1 IN:40 FT

CAUTION

TLE

R/W

SLOPE INTERCEPT

PROPOSED R/W

997+00

998+00

999+00

1000+00

1001+00

1002+00

1003+00

STH 50

STH 50 R/L

CTH F R/L

CTH F/256TH AVE

MATCHLINE

2A STA 998+31.5, 37.5' LT
CATCH BASINS 4-H

2B STA 997+71.0, 8.5' LT
CATCH BASINS 4-H

2C STA 997+71.0, 8.5' RT
CATCH BASINS 2X3-H

2D STA 997+71.0, 37.5' RT
CATCH BASINS 2X3-H

2E STA 997+71.0, 65.5' RT
AEWCPRC 12-INCH

3A STA 999+76.0, 1.7' RT
CATCH BASINS 2X3-H

3B STA 999+76.5, 8.5' RT
CATCH BASINS 4-H

3C STA 1001+73.5, 46.5' RT
CATCH BASINS 2X3-H

3D STA 1000+06.2, 37.5' RT
CATCH BASINS 4-H

3E STA 1000+37.5, 62.7' RT
CONNECT TO EXIST PIPE

3F STA 1000+06.3, 62.8' RT
MANHOLES 5-J

3G STA 999+75.7, 74.5' RT
INLETS MEDIAN 1G-MS

3H STA 999+76.4, 62.5' RT
MANHOLES 5-J

P2A 12"

P2B 12"

P2C 12"

P2D 12"

P3A 12"

P3B 12"

P3C 12"

P3D 15"

P3E 21"

P3F 24"

P3G 15"

CC CONNECT TO EXISTING 12" PIPE

WETLAND BOUNDARY

GRASS

ASPH.

CONC.

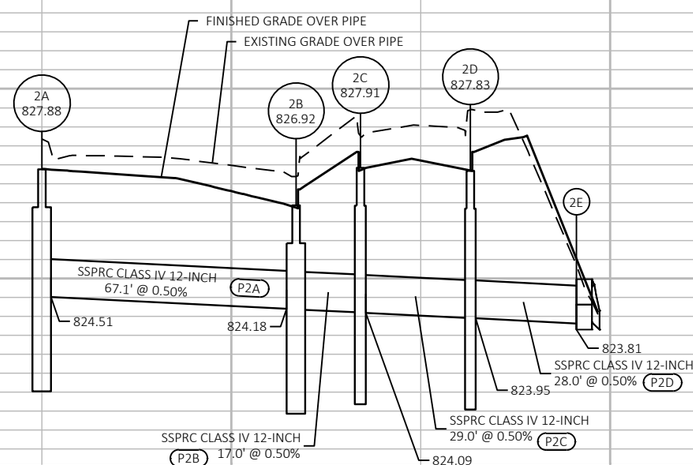

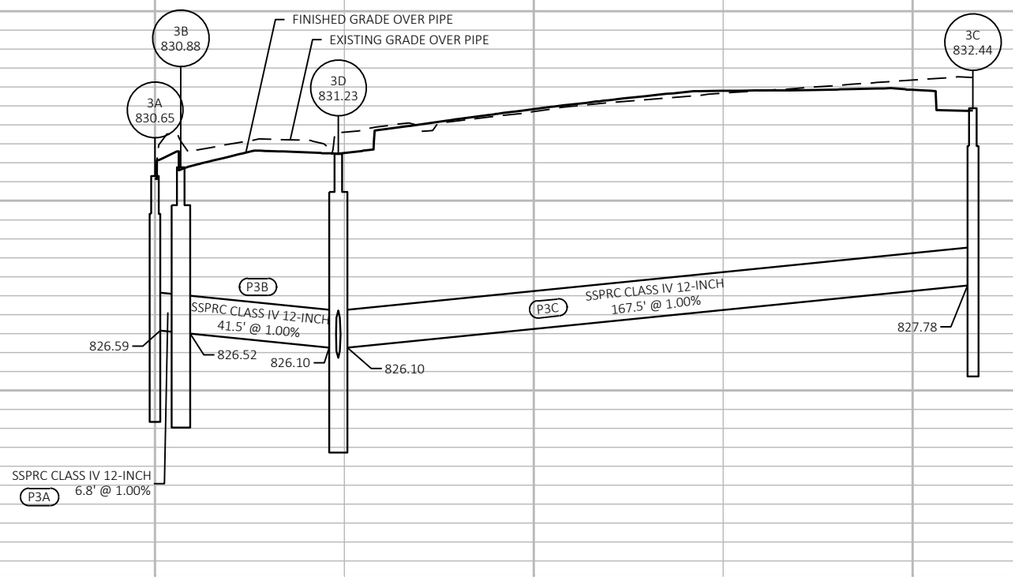

SHEET 3 OF 28

PROJECT NO: 1310-04-70	HWY: STH 50	COUNTY: KENOSHA	STORM SEWER	SHEET 177 E

FILE NAME : T:\1182708.06\CIVIL3D\13100400\13100400\SHEETSPLAN\022501_SS.DWG
LAYOUT NAME - SS-02

PLOT DATE : 1/18/2022 10:46 AM PLOT BY : BLACKWOOD, JIM PLOT NAME : PLOT SCALE : 1 IN:40 FT

WISDOT/CADDS SHEET 41

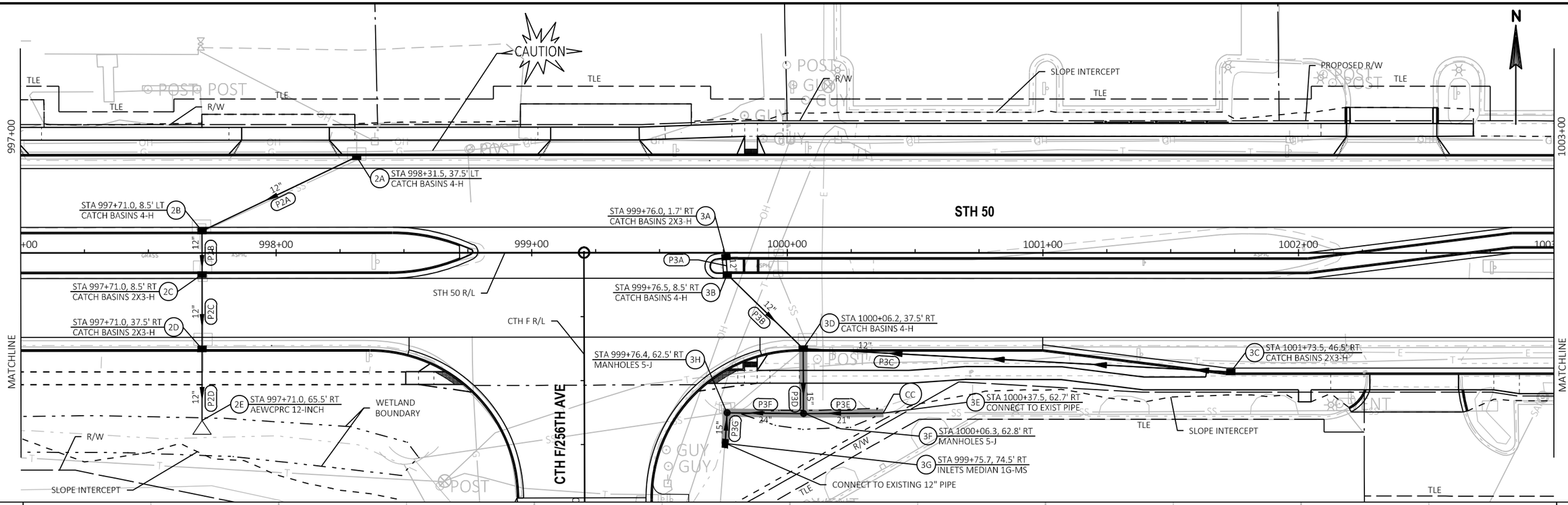

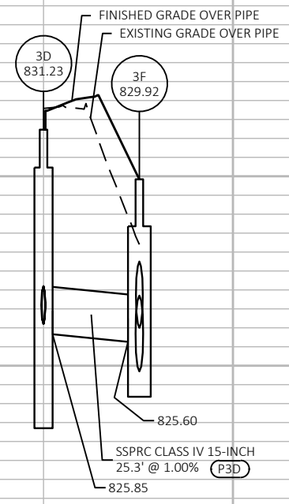

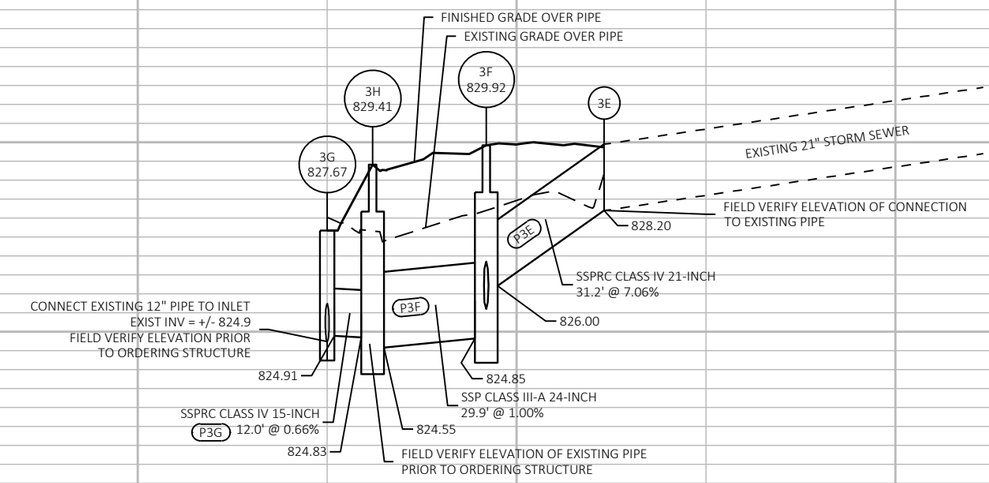

835
830
825
820

SHEET 4 OF 28

PROJECT NO: 1310-04-70	HWY: STH 50	COUNTY: KENOSHA	STORM SEWER	SHEET 178	E

FILE NAME : T:\1182708.06\CIVIL3D\13100400\13100400\SHEETSPLAN\022501_SS.DWG
LAYOUT NAME - SS-02A
PLOT DATE : 1/18/2022 10:46 AM
PLOT BY : BLACKWOOD, JIM
PLOT NAME :
PLOT SCALE : 1 IN:40 FT
WISDOT/CADDS SHEET 41

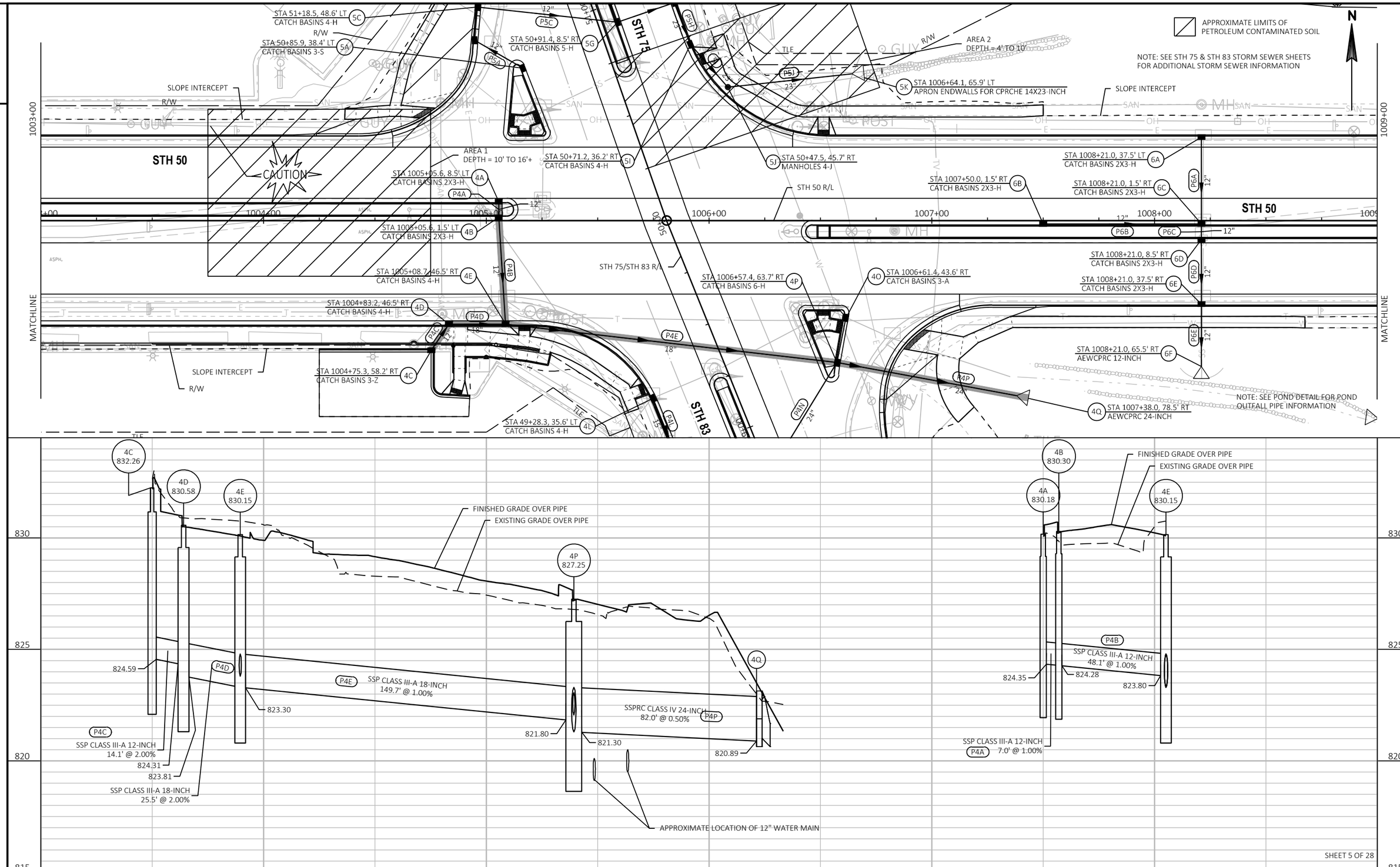

PROJECT NO: 1310-04-70	HWY: STH 50	COUNTY: KENOSHA	STORM SEWER	SHEET 179	E

FILE NAME : T:\1182708.06\CIVIL3D\13100400\13100400\SHEETSPLAN\022501_SS.DWG
LAYOUT NAME - SS-03
PLOT DATE : 1/18/2022 10:46 AM PLOT BY : BLACKWOOD, JIM PLOT NAME : PLOT SCALE : 1 IN:40 FT
WISDOT/CADDS SHEET 41

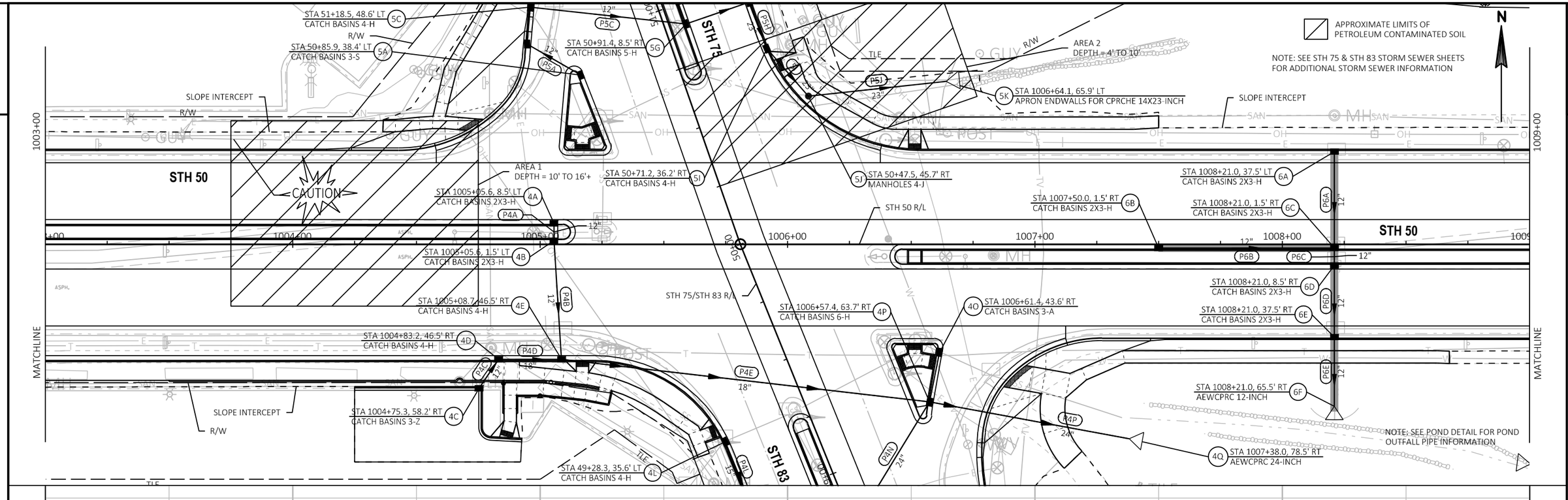

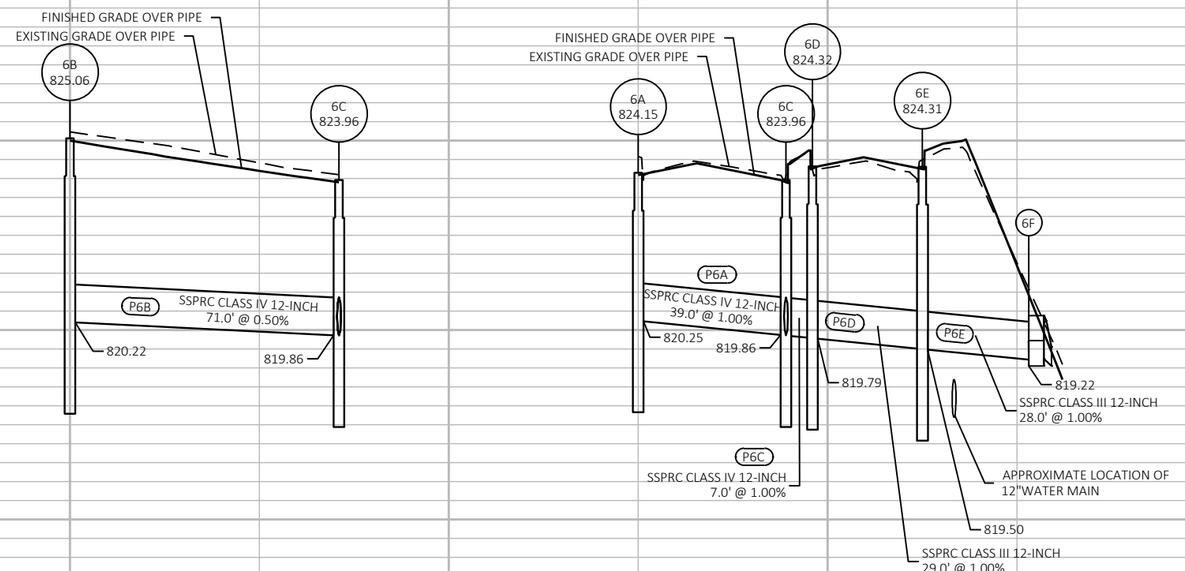

SHEET 6 OF 28

PROJECT NO: 1310-04-70	HWY: STH 50	COUNTY: KENOSHA	STORM SEWER	SHEET 180 E

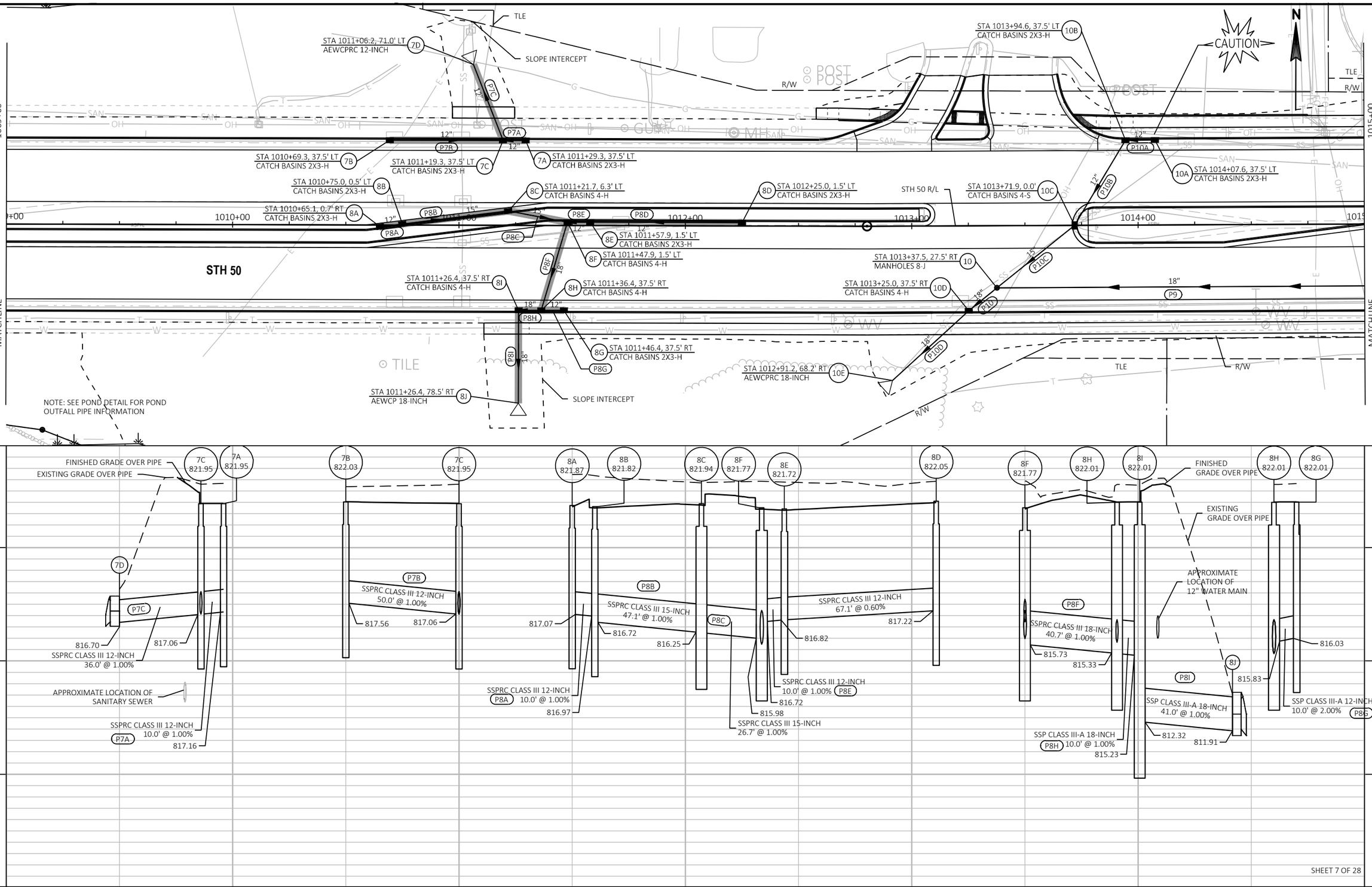

PROJECT NO: 1310-04-70	HWY: STH 50	COUNTY: KENOSHA	STORM SEWER	SHEET 181	E

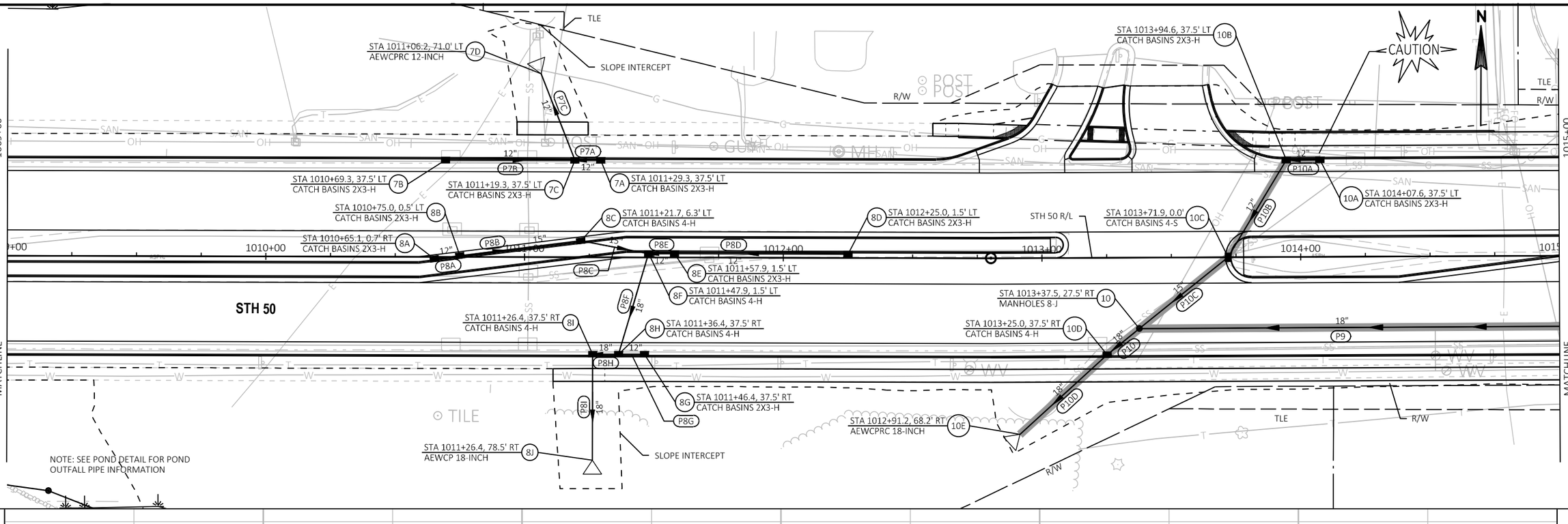

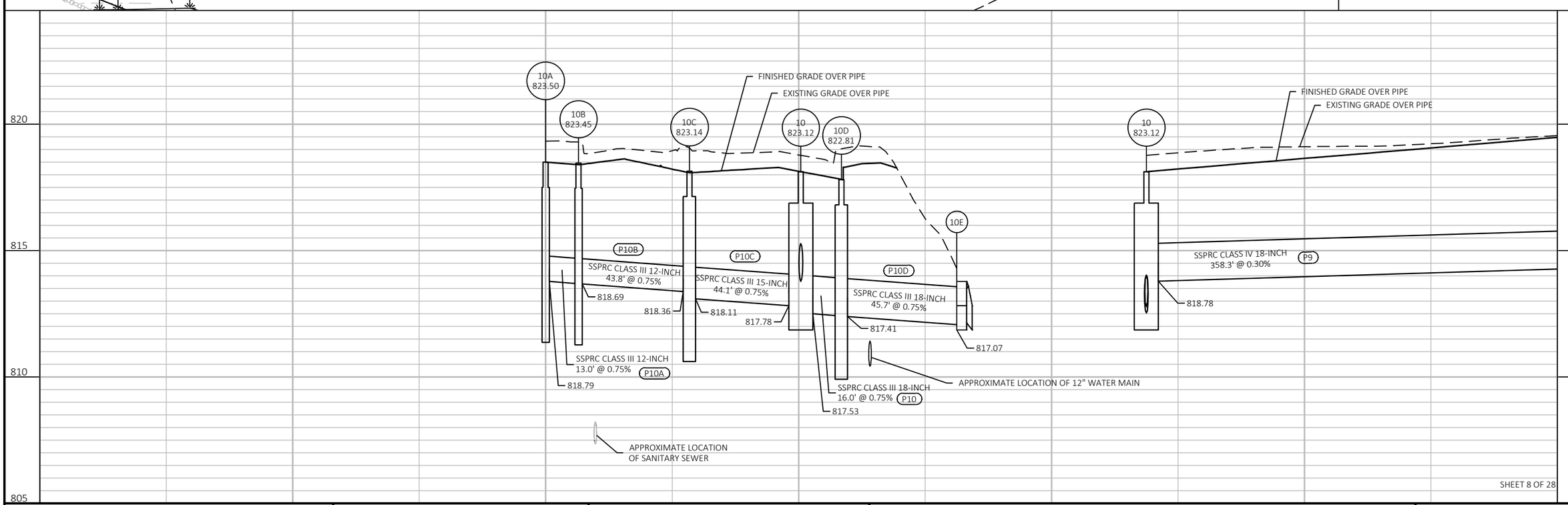

SHEET 8 OF 28

PROJECT NO: 1310-04-70	HWY: STH 50	COUNTY: KENOSHA	STORM SEWER	SHEET 182 E

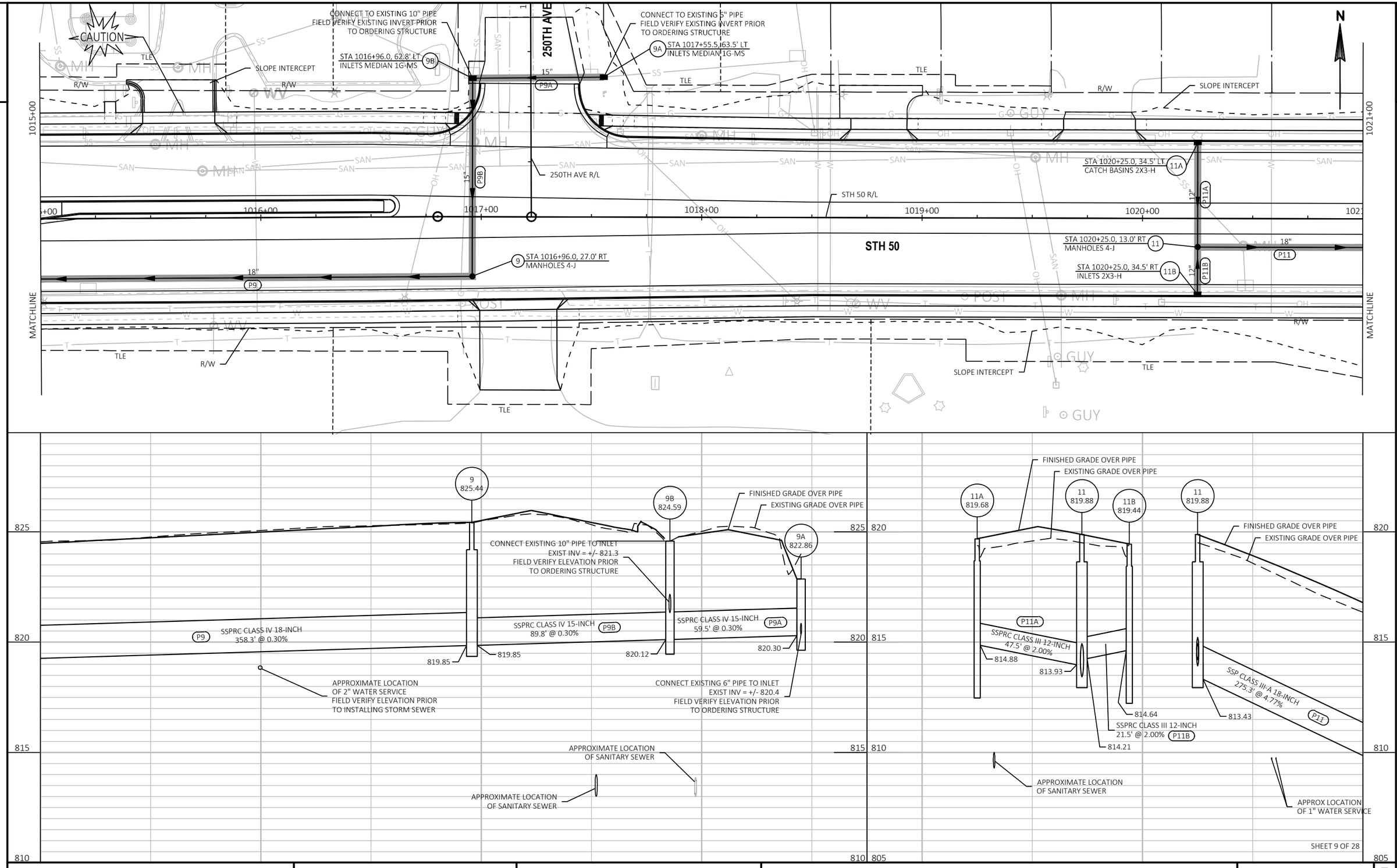

SHEET 9 OF 28

PROJECT NO: 1310-04-70	HWY: STH 50	COUNTY: KENOSHA	STORM SEWER	SHEET 183 E

FILE NAME : T:\1182708.06\CIVIL3D\13100400\13100400\SHEETSPLAN\022501_SS.DWG
LAYOUT NAME - SS-05
PLOT DATE : 1/18/2022 10:47 AM
PLOT BY : BLACKWOOD, JIM
PLOT NAME :
PLOT SCALE : 1 IN:40 FT
WISDOT/CADDS SHEET 41

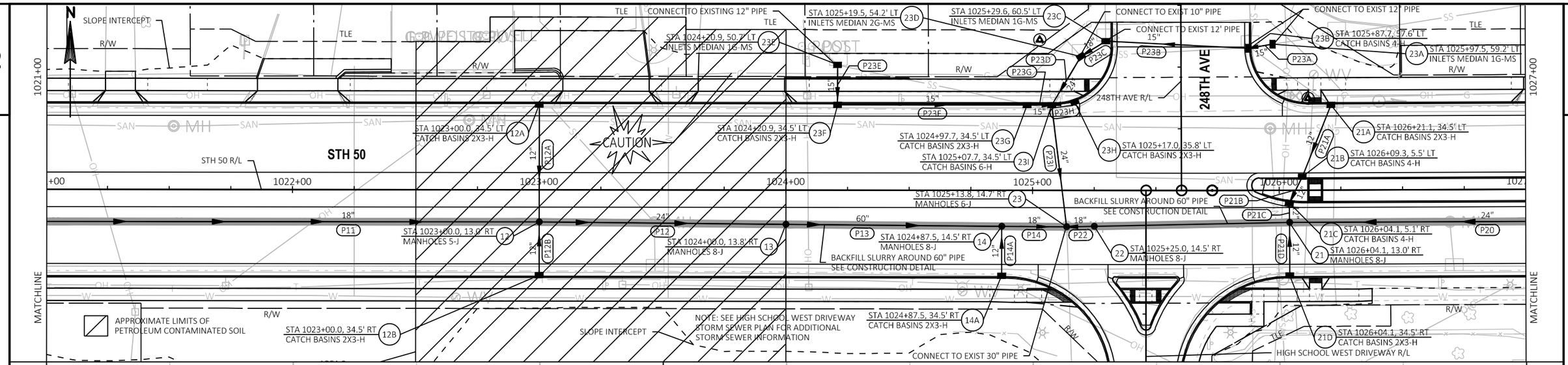

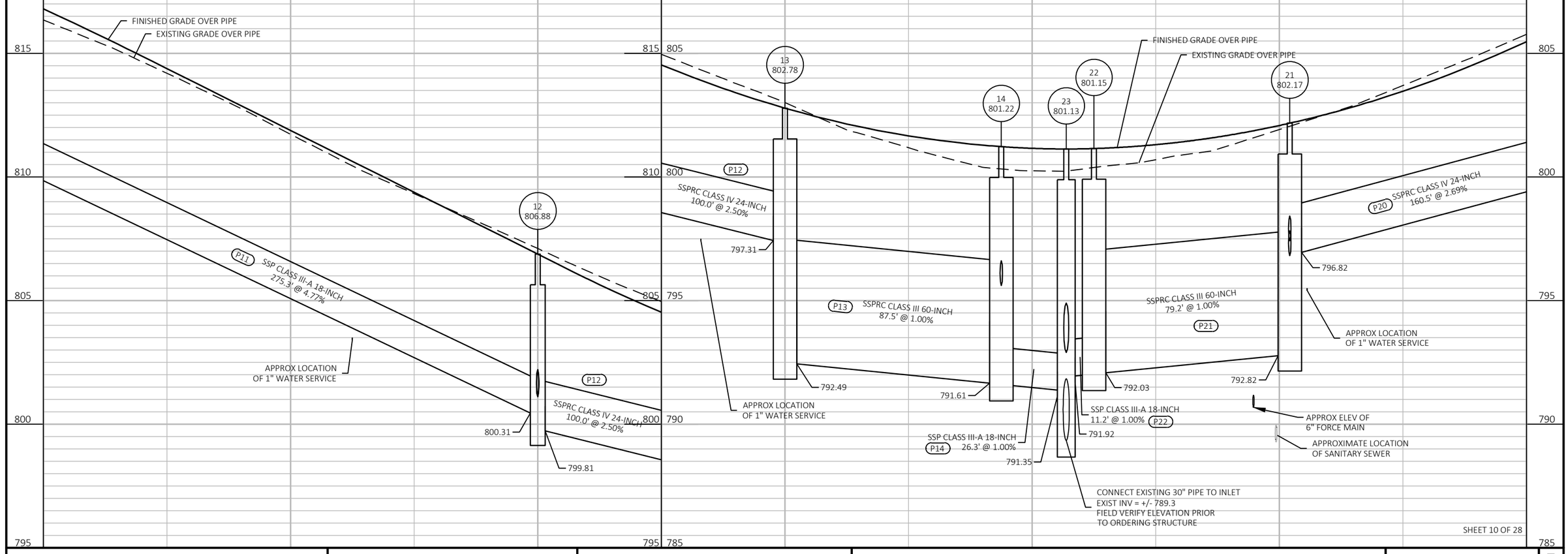

PROJECT NO: 1310-04-70	HWY: STH 50	COUNTY: KENOSHA	STORM SEWER	SHEET 184 E

FILE NAME : T:\1182708.06\CIVIL3D\13100400\13100400\SHEETSPLAN\022501_SS.DWG
LAYOUT NAME - SS-06
PLOT DATE : 1/18/2022 10:47 AM
PLOT BY : BLACKWOOD, JIM
PLOT NAME :
PLOT SCALE : 1 IN:40 FT
WISDOT/CADDS SHEET 41

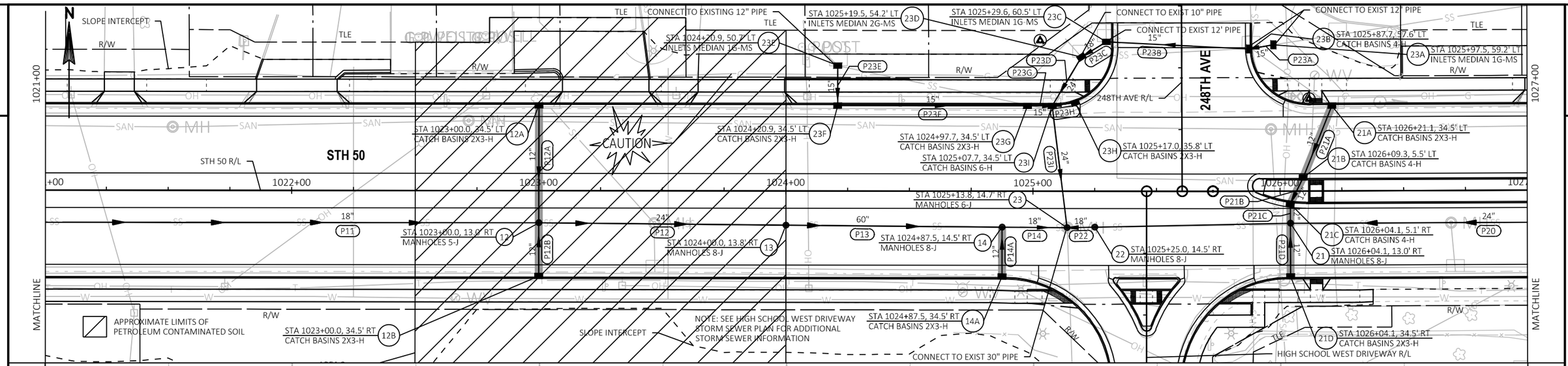

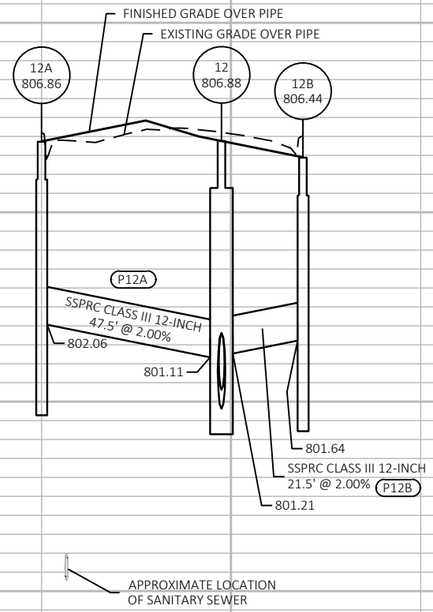

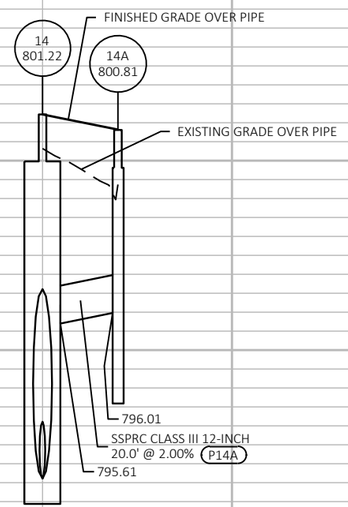

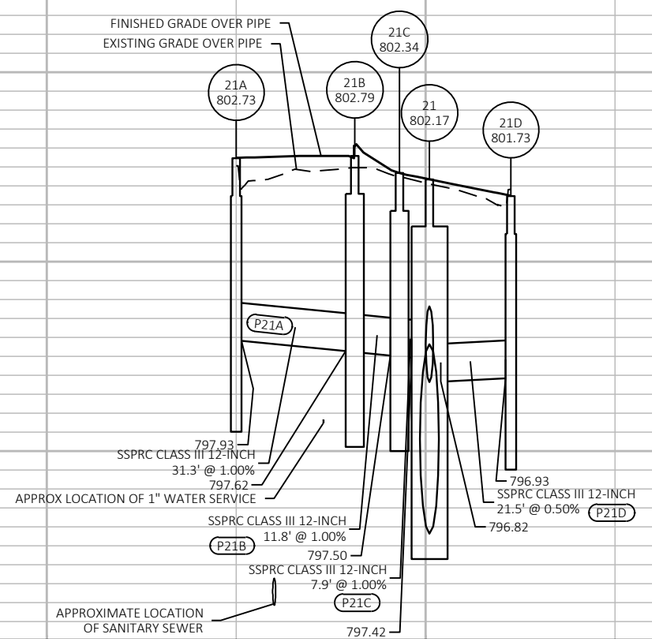

810 805 800 795 790

SHEET 11 OF 28

PROJECT NO: 1310-04-70	HWY: STH 50	COUNTY: KENOSHA	STORM SEWER	SHEET 185	E

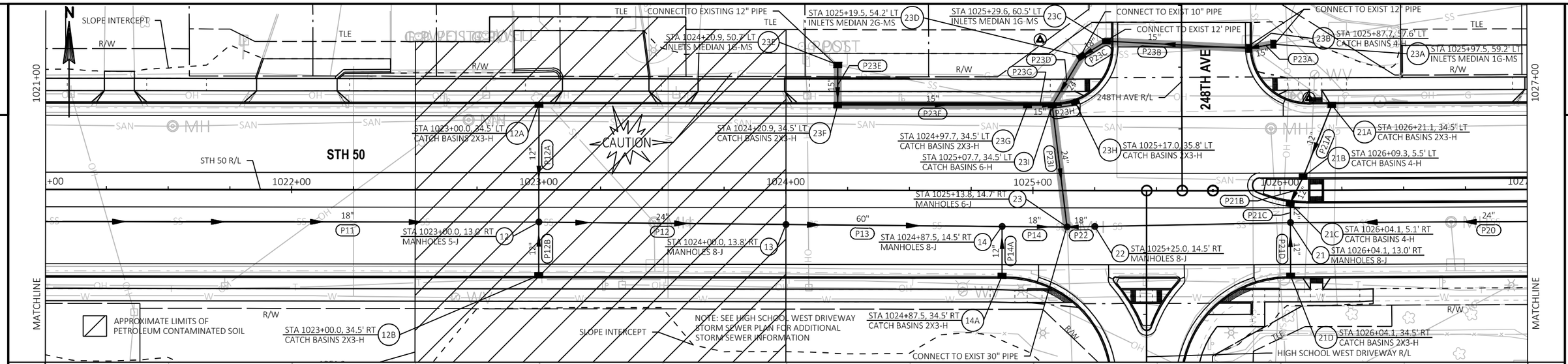

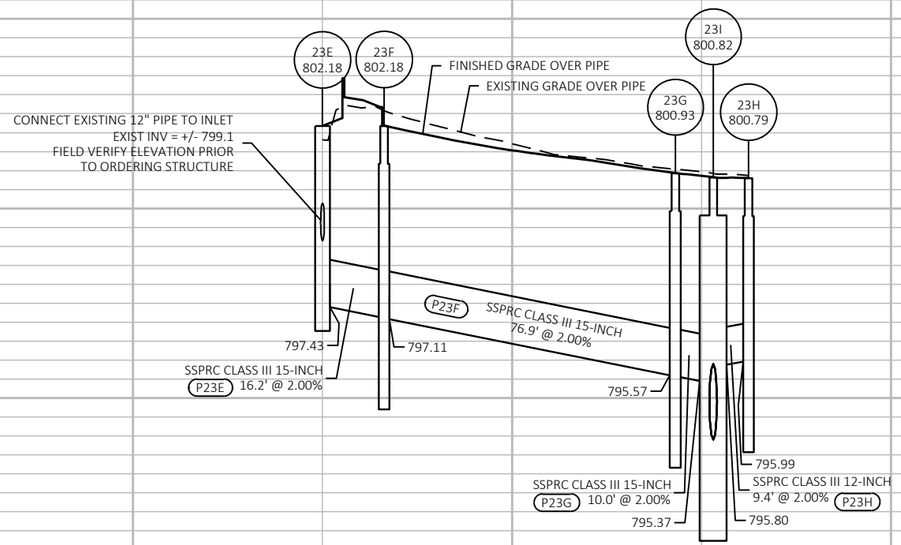

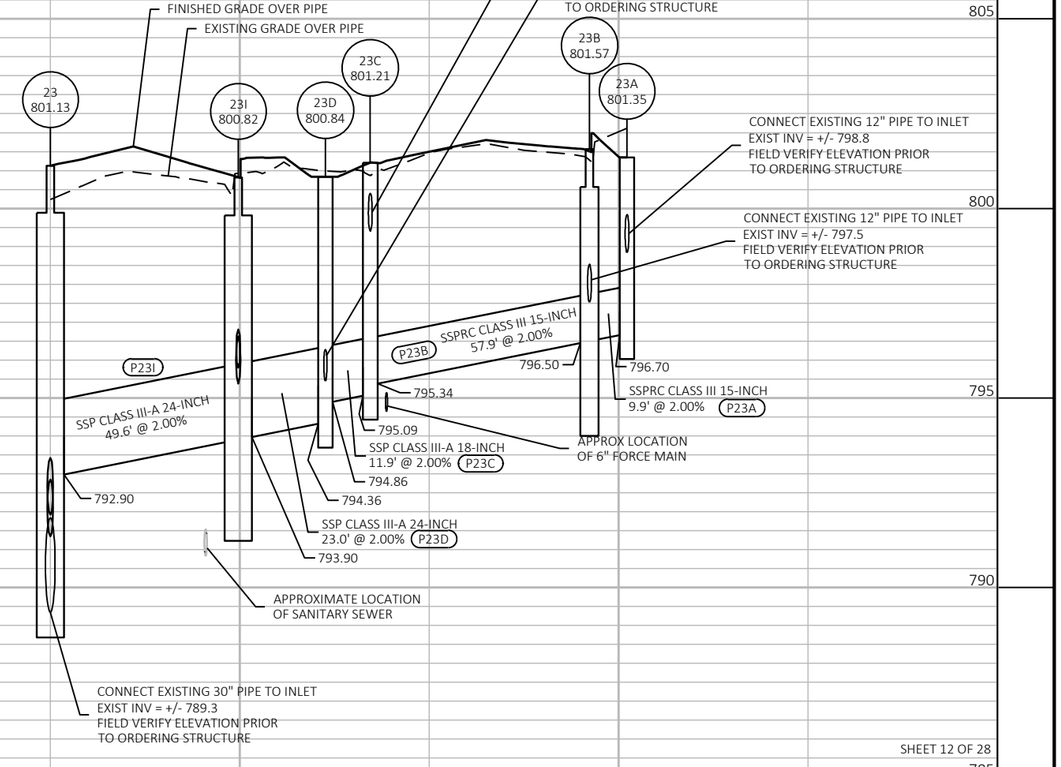

SHEET 12 OF 28

PROJECT NO: 1310-04-70	HWY: STH 50	COUNTY: KENOSHA	STORM SEWER	SHEET 186	E

2

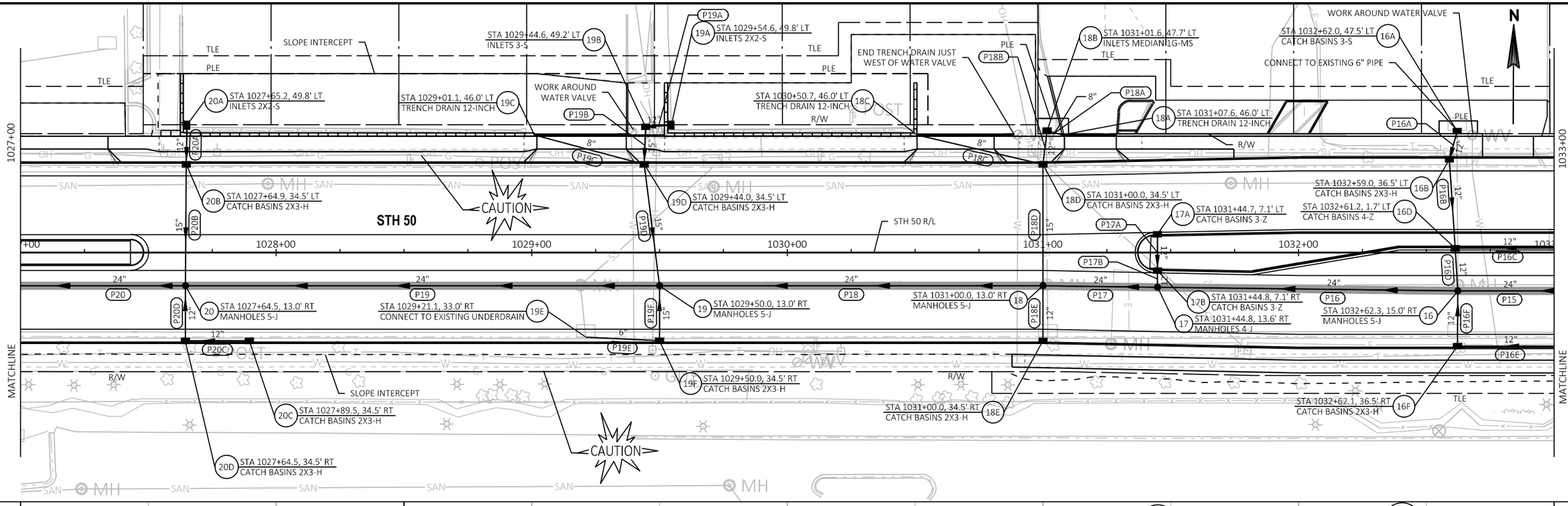

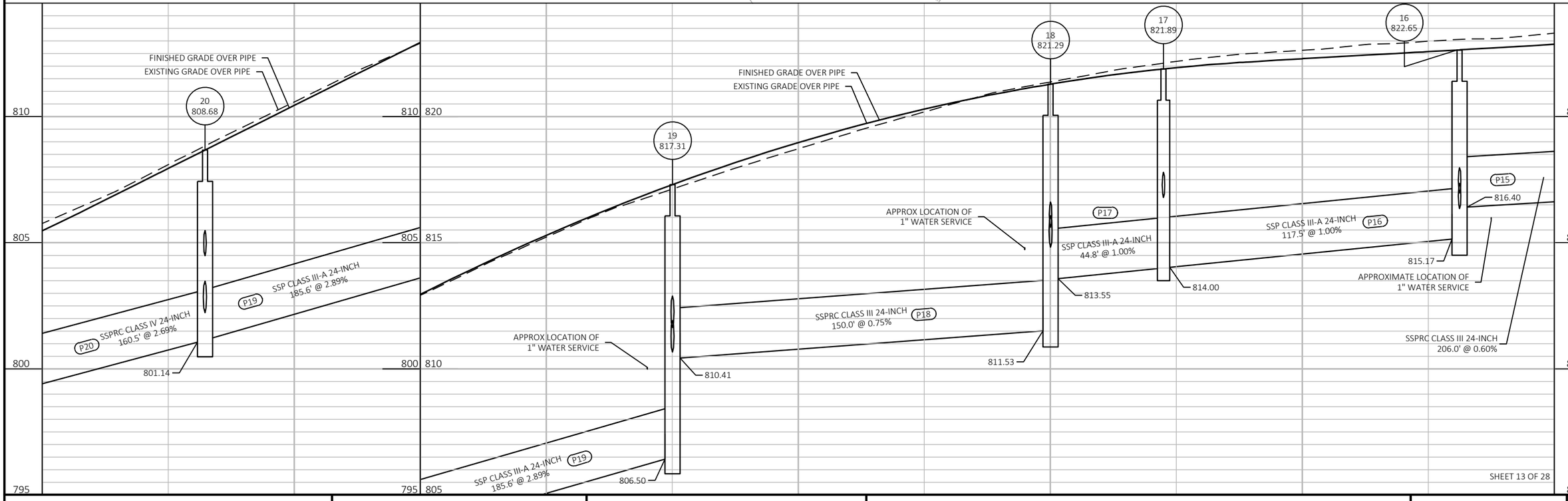

PROJECT NO: 1310-04-70	HWY: STH 50	COUNTY: KENOSHA	STORM SEWER	SHEET 187 E

FILE NAME : T:\1182708.06\CIVIL3D\13100400\13100400\SHEETSPLAN\022501_SS.DWG
LAYOUT NAME - SS-07
PLOT DATE : 1/18/2022 10:47 AM
PLOT BY : BLACKWOOD, JIM
PLOT NAME :
PLOT SCALE : 1 IN:40 FT
WISDOT/CADDS SHEET 41

2

N

1027+00

1028+00

1029+00

1030+00

1031+00

1032+00

1033+00

MATCHLINE

MATCHLINE

STH 50

STH 50 R/L

TLE

PLE

R/W

SLOPE INTERCEPT

CAUTION

20A STA 1027+65.2, 49.8' LT
INLETS 2X2-S

20B STA 1027+64.9, 34.5' LT
CATCH BASINS 2X3-H

20 STA 1027+64.5, 13.0' RT
MANHOLES 5-J

20C STA 1027+89.5, 34.5' RT
CATCH BASINS 2X3-H

20D STA 1027+64.5, 34.5' RT
CATCH BASINS 2X3-H

19A STA 1029+54.6, 49.8' LT
INLETS 2X2-S

STA 1029+44.6, 49.2' LT
INLETS 3-S

19B

19C STA 1029+01.1, 46.0' LT
TRENCH DRAIN 12-INCH

WORK AROUND WATER VALVE

19D STA 1029+44.0, 34.5' LT
CATCH BASINS 2X3-H

19 STA 1029+50.0, 13.0' RT
MANHOLES 5-J

19E STA 1029+21.1, 33.0' RT
CONNECT TO EXISTING UNDERDRAIN

19F STA 1029+50.0, 34.5' RT
CATCH BASINS 2X3-H

18C STA 1030+50.7, 46.0' LT
TRENCH DRAIN 12-INCH

END TRENCH DRAIN JUST
WEST OF WATER VALVE

18 STA 1031+00.0, 13.0' RT
MANHOLES 5-J

18D STA 1031+00.0, 34.5' LT
CATCH BASINS 2X3-H

18E STA 1031+00.0, 34.5' RT
CATCH BASINS 2X3-H

18B STA 1031+01.6, 47.7' LT
INLETS MEDIAN1G-MS

18A STA 1031+07.6, 46.0' LT
TRENCH DRAIN 12-INCH

17A STA 1031+44.7, 7.1' LT
CATCH BASINS 3-Z

17B STA 1031+44.8, 7.1' RT
CATCH BASINS 3-Z

17 STA 1031+44.8, 13.6' RT
MANHOLES 4-J

WORK AROUND WATER VALVE

STA 1032+62.0, 47.5' LT
CATCH BASINS 3-S

16A

CONNECT TO EXISTING 6" PIPE

STA 1032+59.0, 36.5' LT
CATCH BASINS 2X3-H

16B

STA 1032+61.2, 1.7' LT
CATCH BASINS 4-Z

16D

16 STA 1032+62.3, 15.0' RT
MANHOLES 5-J

STA 1032+62.1, 36.5' RT
CATCH BASINS 2X3-H

16F

P20 24" P19 24" P18 24" P17 24" P16 24" P15 24"

P20A 12" P20B 15" P20C 12" P20D 12"

P19A 12" P19B 8" P19C 15" P19D 15" P19E 6" P19F 15"

P18A 8" P18B 8" P18C 8" P18D 15" P18E 12"

P17A 12" P17B 12"

P16A 12" P16B 12" P16C 12" P16D 12" P16E 12" P16F 12"

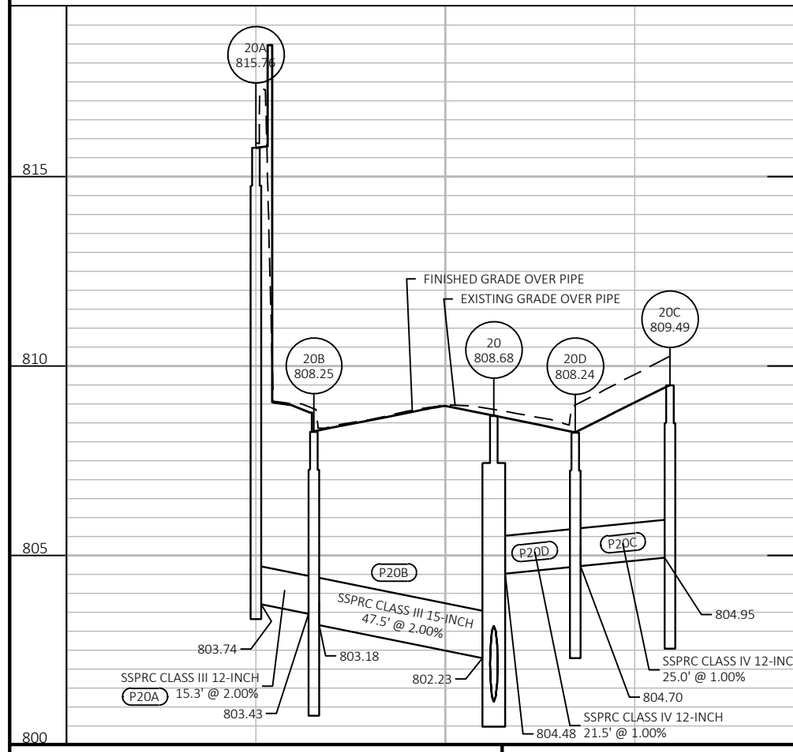

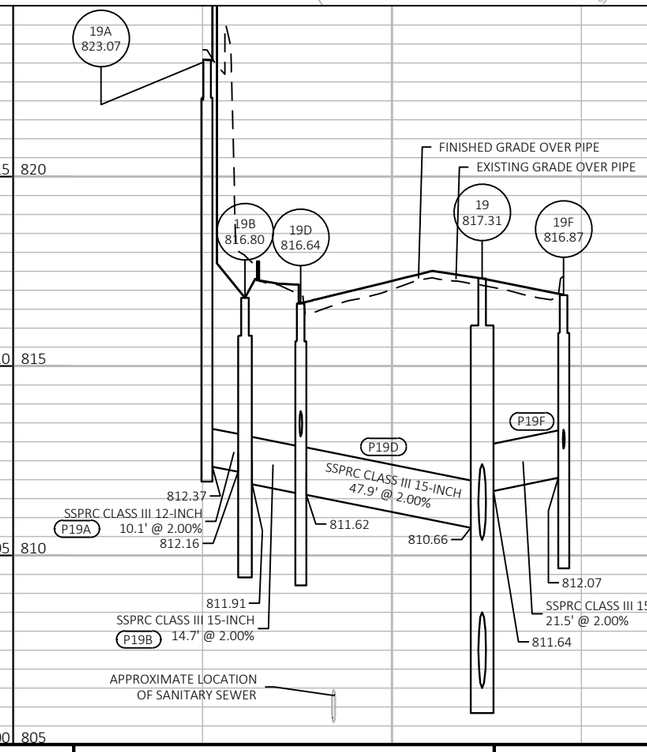

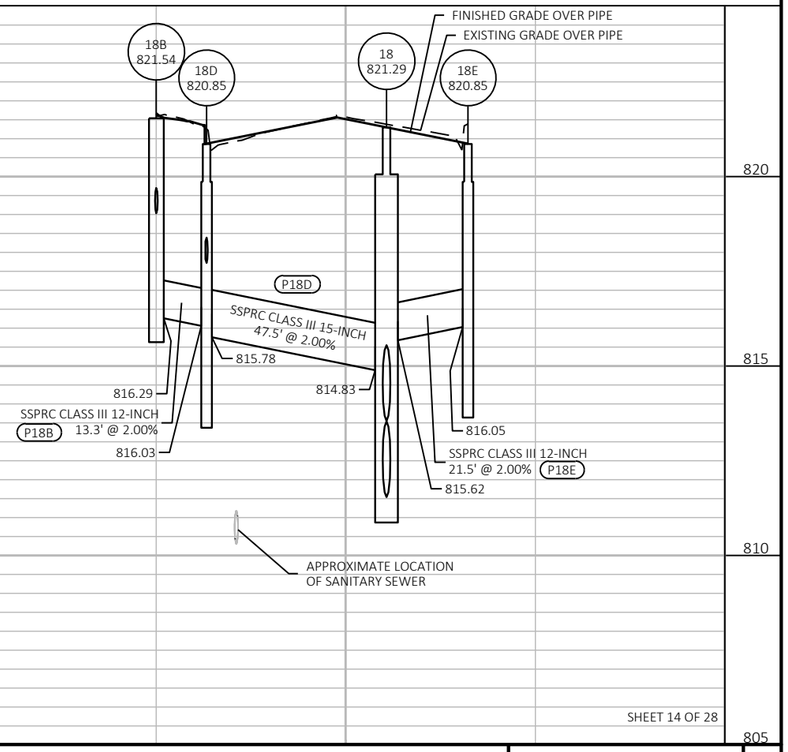

SHEET 14 OF 28

PROJECT NO: 1310-04-70	HWY: STH 50	COUNTY: KENOSHA	STORM SEWER	SHEET 188 E

FILE NAME : T:\1182708.06\CIVIL3D\13100400\13100400\SHEETSPLAN\022501_SS.DWG
LAYOUT NAME - SS-07A

PLOT DATE : 1/18/2022 10:47 AM PLOT BY : BLACKWOOD, JIM PLOT NAME : PLOT SCALE : 1 IN:40 FT

2

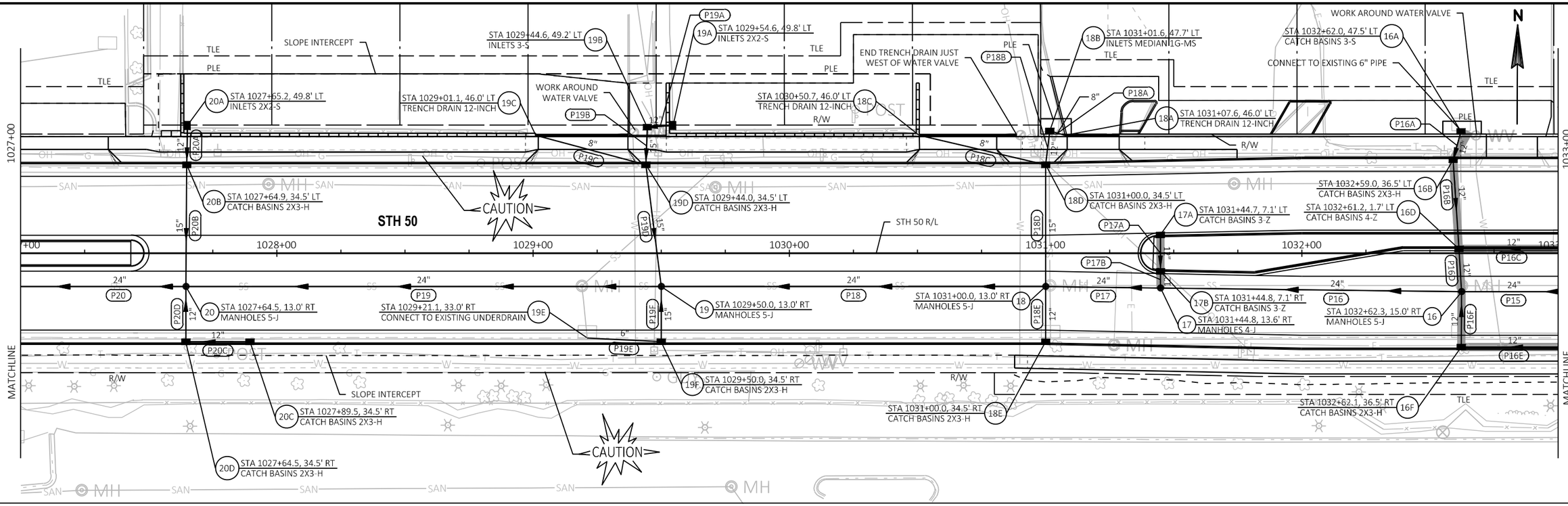

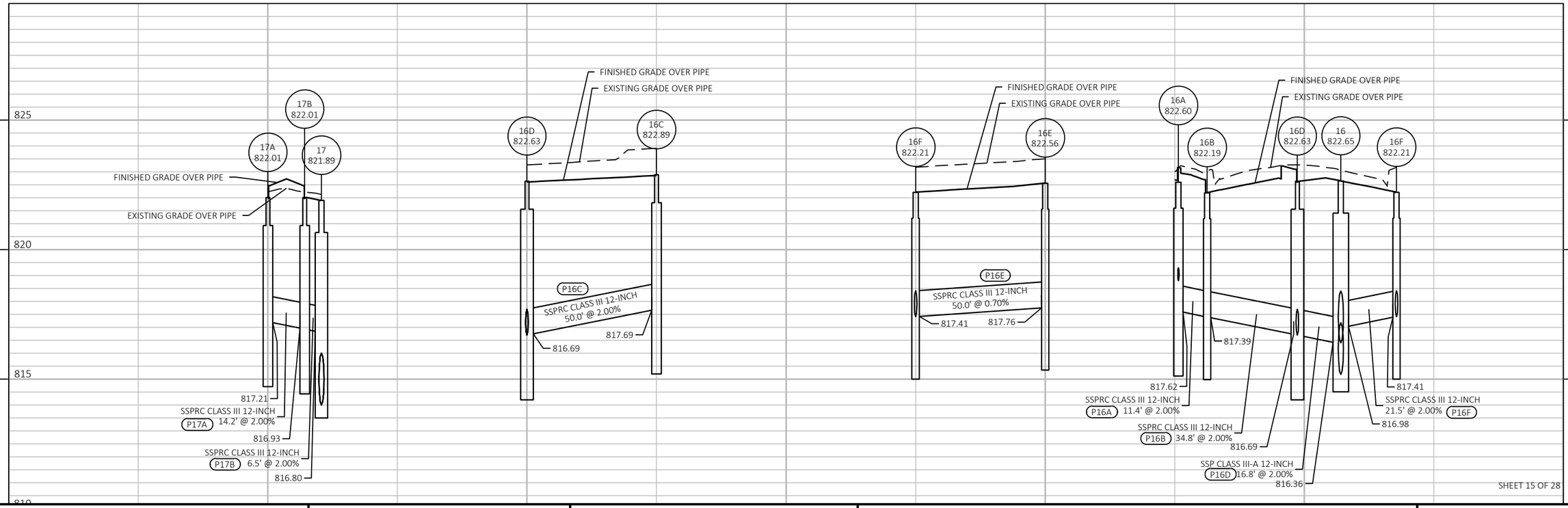

PROJECT NO: 1310-04-70	HWY: STH 50	COUNTY: KENOSHA	STORM SEWER	SHEET 189 E

FILE NAME : T:\1182708.06\CIVIL3D\13100400\13100400\SHEETSPLAN\022501_SS.DWG
LAYOUT NAME - SS-07B
PLOT DATE : 1/18/2022 10:48 AM
PLOT BY : BLACKWOOD, JIM
PLOT NAME :
PLOT SCALE : 1 IN:40 FT
WISDOT/CADDS SHEET 41

2

APPROXIMATE LIMITS OF PETROLEUM CONTAMINATED SOIL

N

246TH AVE

CAUTION

R/W

SLOPE INTERCEPT

TLE

246TH AVE R/L

STH 50 R/L

APPROXIMATE LIMITS OF CONTAMINATED SOIL ENCOUNTERED DURING GAS MAIN RELOCATION

1033+00

1034+00

1035+00

1036+00

1037+00

1038+00

1039+00

16C STA 1033+11.2, 1.7' LT CATCH BASINS 3-Z

15A STA 1034+71.5, 36.5' LT CATCH BASINS 2X3-H

15C STA 1034+81.4, 1.7' RT CATCH BASINS 3-Z

15B STA 1034+96.4, 1.7' RT CATCH BASINS 3-Z

15D STA 1034+81.4, 8.2' RT CATCH BASINS 3-Z

16E STA 1033+12.1, 36.5' RT CATCH BASINS 2X3-H

STA 1034+68.2, 15.0' RT MANHOLES 5-J

15H STA 1034+67.4, 35.0' RT MANHOLES 4-J

15E STA 1035+09.3, 36.5' RT CATCH BASINS 2X3-H

15F STA 1034+84.3, 36.5' RT CATCH BASINS 2X3-H

15G STA 1034+56.1, 37.7' RT CATCH BASINS 4-H

P15 P15A P15B P15C P15D P15E P15F P15G P15H P16C P16E

12" 15" 24"

STH 50

AREA 4
DEPTH = 1' TO 8'

MATCHLINE

HIGH SCHOOL EAST DRIVEWAY

HIGH SCHOOL EAST DRIVEWAY R/L

PROPOSED R/W

CONNECT TO EXISTING 12" PIPE

CONNECT EXISTING 12" PIPE TO INLET
EXIST INV = +/- 819.6
FIELD VERIFY ELEVATION PRIOR TO ORDERING STRUCTURE

APPROXIMATE LOCATION OF 1" WATER SERVICE

825

820

815

810

FINISHED GRADE OVER PIPE

EXISTING GRADE OVER PIPE

15 824.32

SSPRC CLASS III 24-INCH 206.0' @ 0.60% P15

817.64

15A 824.25

15C 824.29

15D 824.40

15 824.32

15H 824.23

P15A 819.45

818.88

818.76

SSPRC CLASS III 15-INCH 20.0' @ 2.00% P15H

818.61

818.36

SSPRC CLASS III 12-INCH 39.5' @ 1.43%

SSPRC CLASS III 12-INCH 6.5' @ 1.30% P15C

SSP CLASS III-A 12-INCH 14.9' @ 1.30% P15D

818.80

P15G 824.04

15H 824.23

15F 824.38

15E 824.64

819.83

SSPRC CLASS III 12-INCH 25.0' @ 1.00% P15E

819.58

819.24

819.01

SSPRC CLASS III 12-INCH 17.0' @ 2.00% P15F

SSPRC CLASS III 12-INCH 11.7' @ 2.00% P15G

819.24

15C 824.29

15B 824.38

819.04

SSPRC CLASS III 12-INCH 15.0' @ 1.00% P15B

818.88

SHEET 16 OF 28

PROJECT NO: 1310-04-70	HWY: STH 50	COUNTY: KENOSHA	STORM SEWER	SHEET 190	E

FILE NAME : T:\1182708.06\CIVIL3D\13100400\13100400\SHEETSPLAN\022501_SS.DWG
LAYOUT NAME - SS-08

PLOT DATE : 1/18/2022 10:48 AM PLOT BY : BLACKWOOD, JIM PLOT NAME : PLOT SCALE : 1 IN:40 FT

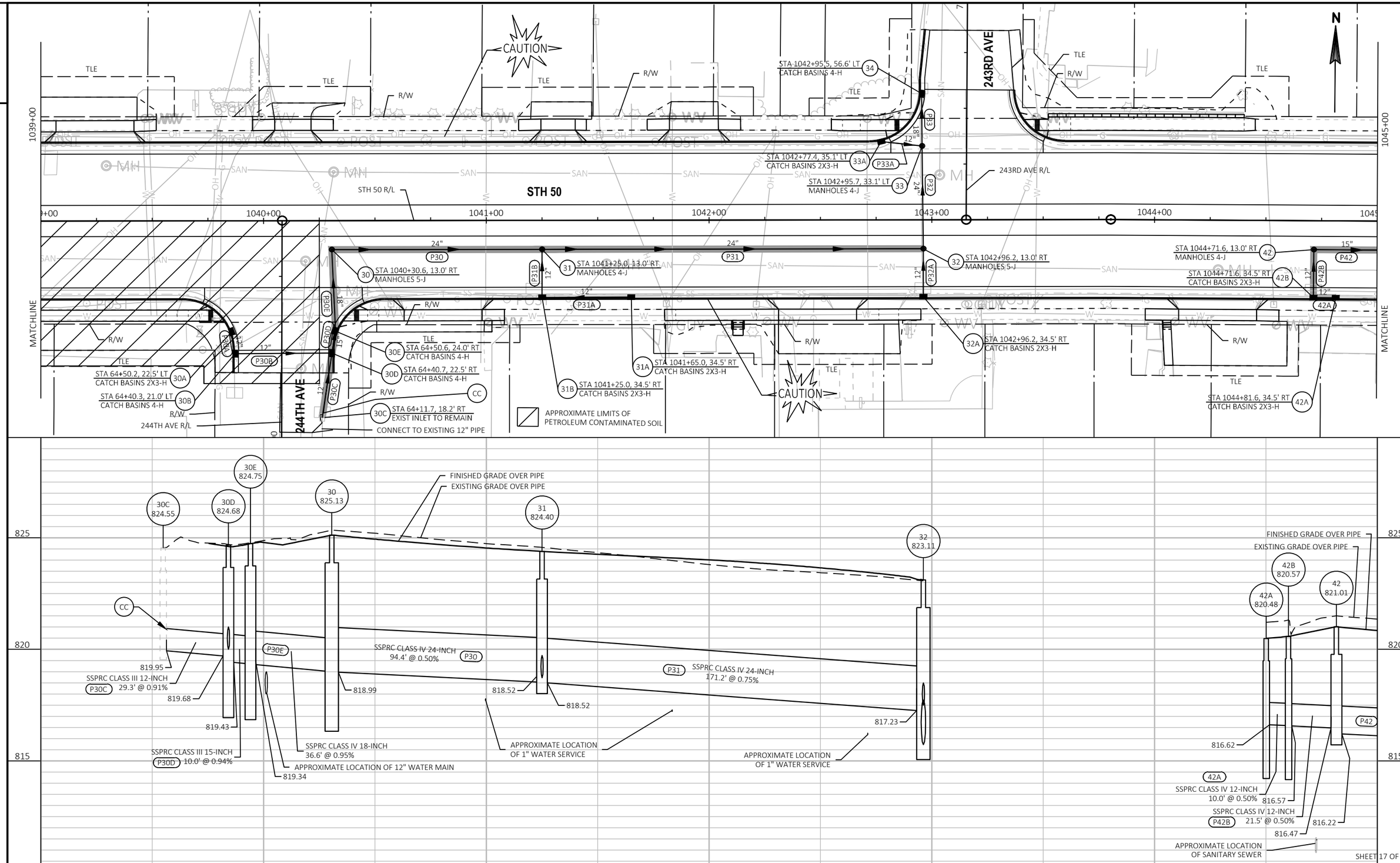

PROJECT NO: 1310-04-70	HWY: STH 50	COUNTY: KENOSHA	STORM SEWER	SHEET 191	E

FILE NAME : T:\1182708.06\CIVIL3D\13100400\13100400\SHEETSPLAN\022501_SS.DWG
LAYOUT NAME - SS-09
PLOT DATE : 1/18/2022 10:48 AM PLOT BY : BLACKWOOD, JIM PLOT NAME : PLOT SCALE : 1 IN:40 FT
WISDOT/CADDS SHEET 41

2

N

CAUTION

TLE

R/W

STH 50

STH 50 R/L

243RD AVE

243RD AVE R/L

244TH AVE

244TH AVE R/L

1039+00

1040+00

1041+00

1042+00

1043+00

1044+00

1045+00

MATCHLINE

STA 1042+95.5, 56.6' LT
CATCH BASINS 4-H
34

STA 1042+77.4, 35.1' LT
CATCH BASINS 2X3-H
33A

STA 1042+95.7, 33.1' LT
MANHOLES 4-J
33

P33 18" 12"

P33A 12"

P32 24"

STA 1040+30.6, 13.0' RT
MANHOLES 5-J
30

P30 24"

P30E 18"

P30D 15"

P30C 12"

P30B 12"

STA 64+50.6, 24.0' RT
CATCH BASINS 4-H
30E

STA 64+40.7, 22.5' RT
CATCH BASINS 4-H
30D

STA 64+11.7, 18.2' RT
EXIST INLET TO REMAIN
30C

CC
CONNECT TO EXISTING 12" PIPE

STA 64+50.2, 22.5' LT
CATCH BASINS 2X3-H
30A

STA 64+40.3, 21.0' LT
CATCH BASINS 4-H
30B

STA 1041+25.0, 13.0' RT
MANHOLES 4-J
31

P31 24"

P31B 12"

P31A 12"

STA 1041+25.0, 34.5' RT
CATCH BASINS 2X3-H
31B

STA 1041+65.0, 34.5' RT
CATCH BASINS 2X3-H
31A

STA 1042+96.2, 13.0' RT
MANHOLES 5-J
32

P32A 12"

STA 1042+96.2, 34.5' RT
CATCH BASINS 2X3-H
32A

STA 1044+71.6, 13.0' RT
MANHOLES 4-J
42

P42 15"

P42B 12"

STA 1044+71.6, 34.5' RT
CATCH BASINS 2X3-H
42B

42A 12"

STA 1044+81.6, 34.5' RT
CATCH BASINS 2X3-H
42A

APPROXIMATE LIMITS OF
PETROLEUM CONTAMINATED SOIL

825
820
815
810

30A
825.16

30B
825.07

30D
824.68

FINISHED GRADE OVER PIPE
EXISTING GRADE OVER PIPE

CONNECT EXISTING
12" PIPE TO INLET
EXIST INV = +/- 821.4
FIELD VERIFY ELEVATION
PRIOR TO ORDERING
STRUCTURE

P30B
SSPRC CLASS III 12-INCH
43.5' @ 1.00%

820.54
820.44
820.00

SSPRC CLASS III 12-INCH
P30A 10.0' @ 1.00%

APPROXIMATE LOCATION
OF SANITARY SEWER

APPROXIMATE LOCTION
OF 6" FORCE MAIN

31
824.40

31B
823.96

31A
823.82

FINISHED GRADE OVER PIPE
EXISTING GRADE OVER PIPE

P31A
SSPRC CLASS IV 12-INCH
40.0' @ 0.50%

819.36

818.73
819.16

SSPRC CLASS III 12-INCH
21.5' @ 2.00% P31B

34
821.63

33
822.68

32
823.11

32A
822.78

FINISHED GRADE OVER PIPE
EXISTING GRADE OVER PIPE

CONNECT EXISTING 21" PIPE TO INLET
EXIST INV = +/- 815.06
FIELD VERIFY ELEVATION PRIOR
TO ORDERING STRUCTURE

P32
SSP CLASS III-A 24-INCH
46.1' @ 0.95%

815.28
815.72
817.93

SSPRC CLASS III 12-INCH
21.5' @ 2.00% P32A

817.50

SSP CLASS III-A 18-INCH
23.5' @ 0.95% P33

815.06

APPROXIMATE LOCATION
OF SANITARY SEWER

APPROXIMATE LOCATION
OF SANITARY SEWER

33A
822.79

33
822.68

FINISHED GRADE OVER PIPE
EXISTING GRADE OVER PIPE

APPROXIMATE LOCATION OF
1" WATER SERVICE

816.65
816.28

SSP CLASS III-A 12-INCH
P33A 18.5' @ 2.00%

SHEET 18 OF 28

PROJECT NO: 1310-04-70	HWY: STH 50	COUNTY: KENOSHA	STORM SEWER	SHEET 192	E

FILE NAME : T:\1182708.06\CIVIL3D\13100400\13100400\SHEETSPLAN\022501_SS.DWG
LAYOUT NAME - SS-09A
PLOT DATE : 1/18/2022 10:48 AM
PLOT BY : BLACKWOOD, JIM
PLOT NAME :
PLOT SCALE : 1 IN:40 FT
WISDOT/CADDS SHEET 41

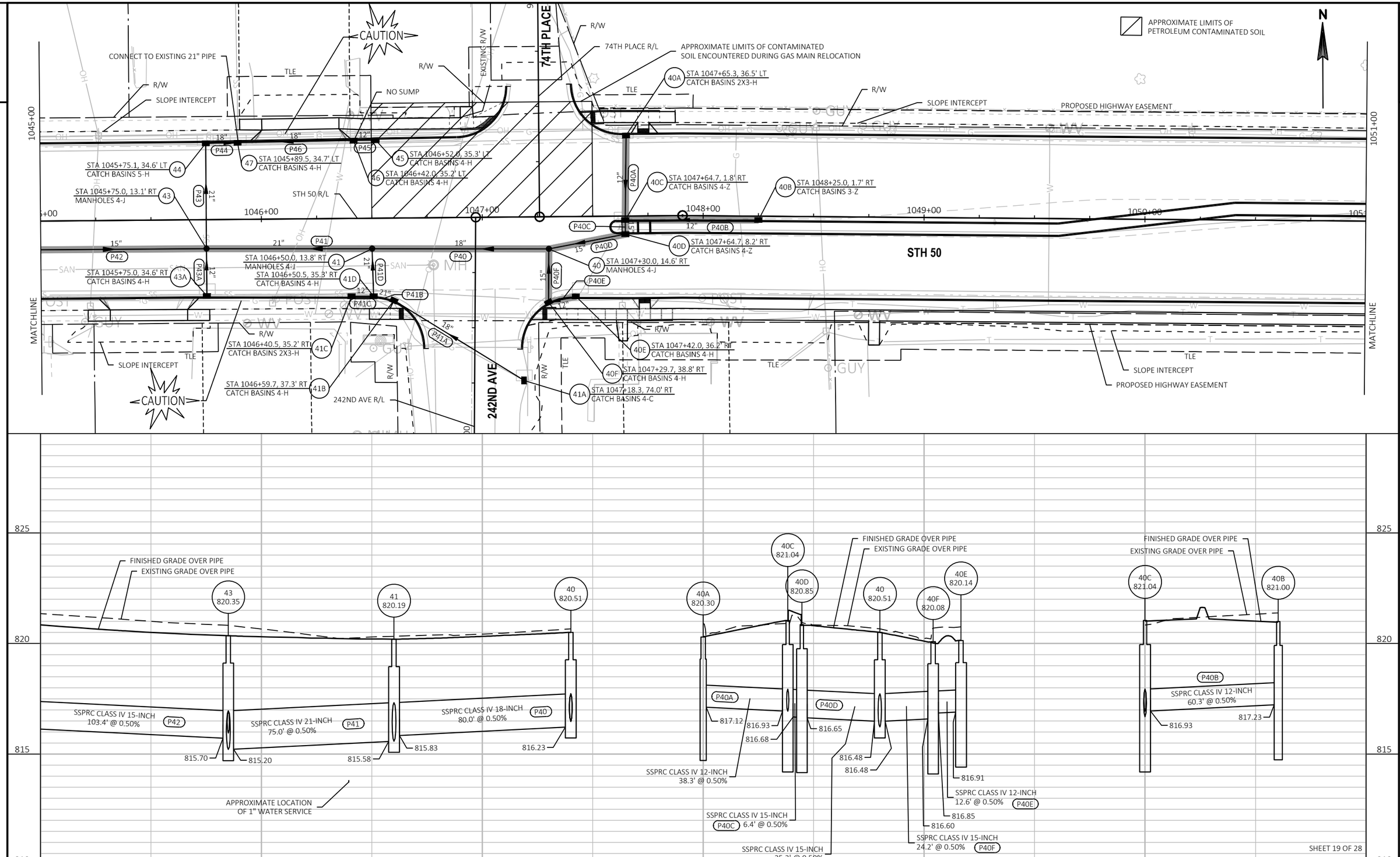

SHEET 19 OF 28

PROJECT NO: 1310-04-70	HWY: STH 50	COUNTY: KENOSHA	STORM SEWER	SHEET 193 E

FILE NAME : T:\1182708.06\CIVIL3D\13100400\13100400\SHEETSPLAN\022501_SS.DWG
LAYOUT NAME - SS-10

PLOT DATE : 1/18/2022 10:48 AM PLOT BY : BLACKWOOD, JIM PLOT NAME : PLOT SCALE : 1 IN:40 FT

2

CAUTION

CONNECT TO EXISTING 21" PIPE

TLE

R/W

SLOPE INTERCEPT

NO SUMP

EXISTING R/W

74TH PLACE

R/W

74TH PLACE R/L

APPROXIMATE LIMITS OF CONTAMINATED SOIL ENCOUNTERED DURING GAS MAIN RELOCATION

APPROXIMATE LIMITS OF PETROLEUM CONTAMINATED SOIL

N

40A STA 1047+65.3, 36.5' LT
CATCH BASINS 2X3-H

TLE

R/W

SLOPE INTERCEPT

PROPOSED HIGHWAY EASEMENT

1045+00

1051+00

18" P44

18" P46

12" P45

44 STA 1045+75.1, 34.6' LT
CATCH BASINS 5-H

47 STA 1045+89.5, 34.7' LT
CATCH BASINS 4-H

45 STA 1046+52.0, 35.3' LT
CATCH BASINS 4-H

46 STA 1046+42.0, 35.2' LT
CATCH BASINS 4-H

12" P40A

40C STA 1047+64.7, 1.8' RT
CATCH BASINS 4-Z

40B STA 1048+25.0, 1.7' RT
CATCH BASINS 3-Z

43 STA 1045+75.0, 13.1' RT
MANHOLES 4-J

P43 21"

STH 50 R/L

1046+00

1047+00

1048+00

1049+00

1050+00

P40C

12" P40B

15" P42

21" P41

18" P40

15" P40D

40D STA 1047+64.7, 8.2' RT
CATCH BASINS 4-Z

STH 50

40 STA 1047+30.0, 14.6' RT
MANHOLES 4-J

43A STA 1045+75.0, 34.6' RT
CATCH BASINS 4-H

P43A 12"

41 STA 1046+50.0, 13.8' RT
MANHOLES 4-J

41D STA 1046+50.5, 35.8' RT
CATCH BASINS 4-H

21" P41D

12" P41C

21" P41B

15" P40F

P40E

12"

MATCHLINE

MATCHLINE

R/W

TLE

SLOPE INTERCEPT

41C STA 1046+40.5, 35.2' RT
CATCH BASINS 2X3-H

41B STA 1046+59.7, 37.3' RT
CATCH BASINS 4-H

CAUTION

R/W

242ND AVE R/L

242ND AVE

R/W

TLE

40E STA 1047+42.0, 36.2' RT
CATCH BASINS 4-H

40F STA 1047+29.7, 38.8' RT
CATCH BASINS 4-H

41A STA 1047+18.3, 74.0' RT
CATCH BASINS 4-C

TLE

TLE

SLOPE INTERCEPT

PROPOSED HIGHWAY EASEMENT

825

820

815

810

FINISHED GRADE OVER PIPE

EXISTING GRADE OVER PIPE

43A 819.91

43 820.35

44 819.82

47 819.77

46 819.72

45 819.73

P43

SSPRC CLASS IV 21-INCH
47.7' @ 0.50%

P46

SSPRC CLASS IV 18-INCH
52.5' @ 0.50%

815.20

814.96

815.14

815.40

816.06

SSPRC CLASS IV 12-INCH
P43A 21.5' @ 0.50%

815.95

CONNECT EXISTING 21"
PIPE TO INLET
EXIST INV = +/- 814.9
FIELD VERIFY ELEVATION
PRIOR TO ORDERING
STRUCTURE

815.95

SSPRC CLASS IV 12-INCH
10.0' @ 0.50% P45

SSPRC CLASS IV 18-INCH
P44 14.4' @ 0.50%

814.89

APPROX LOCATION OF
1" WATER SERVICE

815.90

NO SUMP

APPROXIMATE LOCATION
OF SANITARY SEWER

FINISHED GRADE OVER PIPE

EXISTING GRADE OVER PIPE

41 820.19

41B 819.62

41D 819.59

41A 820.23

P41A SSPRC CLASS IV 18-INCH
69.2' @ 0.50%

815.98

816.33

815.58

SSPRC CLASS IV 21-INCH
P41D 21.5' @ 0.50%

815.68

SSPRC CLASS IV 21-INCH
P41B 9.4' @ 0.50%

815.73

APPROXIMATE LOCATION OF 12"WATER MAIN

APPROXIMATE LOCATION
OF SANITARY SEWER

EXISTING GRADE OVER PIPE

FINISHED GRADE OVER PIPE

41C 819.62

41D 819.59

816.48

SSPRC CLASS IV 12-INCH
P41C 10.0' @ 0.50%

816.43

SHEET 20 OF 28

PROJECT NO: 1310-04-70	HWY: STH 50	COUNTY: KENOSHA	STORM SEWER	SHEET 194 E

FILE NAME : T:\1182708.06\CIVIL3D\13100400\13100400\SHEETSPLAN\022501_SS.DWG
LAYOUT NAME - SS-10A

PLOT DATE : 1/18/2022 10:48 AM PLOT BY : BLACKWOOD, JIM PLOT NAME : PLOT SCALE : 1 IN:40 FT

2

N

TLE

CAUTION

SLOPE INTERCEPT

R/W

CONNECT TO EXISTING 12" PIPE

PROPOSED HIGHWAY EASEMENT

1051+00

1057+00

STA 1052+21.7, 36.5' LT
CATCH BASINS 2X3-H
50A

STA 1052+21.7, 8.3' LT
CATCH BASINS 3-Z
50B

STA 1052+21.7, 1.7' LT
CATCH BASINS 3-Z
50C

STA 1052+21.7, 36.5' RT
CATCH BASINS 4-H
50D

STH 50

STH 50 R/L

STA 1054+82.3, 36.5' LT
CATCH BASINS 4-H
60A

STA 1055+01.9, 2.6' LT
CATCH BASINS 4-H
60B

STA 1055+07.6, 7.5' RT
CATCH BASINS 4-H
60C

STA 1055+25.0, 36.5' RT
CATCH BASINS 4-H
60E

STA 1055+25.0, 26.5' RT
MANHOLES 4-J
60

STA 1055+22.7, 56.2' RT
INLETS MEDIAN 1G-MS
60D

STA 1053+05.5, 64.9' RT
AEWCP 18-INCH
50E

P50A 12" P50B P50C 15" P50D 18"

P60A 15" P60B 15" P60C 15" P60D 15" P60E 15" 24" P60

1052+00 1053+00 1054+00 1055+00 1056+00

MATCHLINE

PROPOSED HIGHWAY EASEMENT

TLE

SLOPE INTERCEPT

NO SUMP

R/W

TLE

R/W

MATCHLINE

820 815 810 805

50A 817.42
50B 817.50
50C 817.30
50D 817.42
50E

812.62
812.34
812.09
812.02
811.64
811.64
810.76

SSPRC CLASS III 12-INCH
28.3' @ 1.00%
P50A

SSPRC CLASS III 15-INCH
6.5' @ 1.00%
P50B

SSPRC CLASS III 15-INCH
38.3' @ 1.00%
P50C

SSPRC CLASS III 18-INCH
88.4' @ 1.00%
P50D

APPROXIMATE LOCATION
OF 12" WATER MAIN

FINISHED GRADE OVER PIPE
EXISTING GRADE OVER PIPE

820 815 810 805 800 795 790

60A 805.43
60B 804.44
60C 804.25
60 803.51
60E 803.30
60D 803.72
60 803.51

CONNECT EXISTING
12" PIPE TO INLET
EXIST INV = +/- 801.7
FIELD VERIFY ELEVATION
PRIOR TO ORDERING
STRUCTURE

800.31
799.34
799.16
798.13
799.20
796.66
799.00
798.23
798.13

SSPRC CLASS III 15-INCH
39.1' @ 2.50%
P60A

SSPRC CLASS III 15-INCH
11.6' @ 1.50%
P60B

SSPRC CLASS III 15-INCH
25.8' @ 4.00%
P60C

SSPRC CLASS IV 15-INCH
19.8' @ 1.00%
P60D

NO SUMP

APPROXIMATE LOCATION OF 12" WATER MAIN

SSPRC CLASS III 15-INCH
10.0' @ 1.00%
P60E

SSPRC CLASS IV 24-INCH
296.7' @ 3.50%
P60

FINISHED GRADE OVER PIPE
EXISTING GRADE OVER PIPE

SHEET 21 OF 28

PROJECT NO: 1310-04-70	HWY: STH 50	COUNTY: KENOSHA	STORM SEWER	SHEET 195	E

FILE NAME : T:\1182708.06\CIVIL3D\13100400\13100400\SHEETSPLAN\022501_SS.DWG
LAYOUT NAME - SS-11

PLOT DATE : 1/18/2022 10:49 AM PLOT BY : BLACKWOOD, JIM PLOT NAME : PLOT SCALE : 1 IN:40 FT

WISDOT/CADDS SHEET 41

N

CAUTION

UNNAMED TRIBUTARY TO PADDOCK LAKE
NAVIGABLE WATERWAY
NO IN STREAM DISTURBANCE MARCH 1 TO JUNE 15

REMOVE AND REINSTALL LAST
3 SECTIONS OF PIPE WITH JOINT TIES.
PAID FOR A CULVERT PIPE SALVAGED 36-INCH
AND AEW FOR CULVERT PIPE SALVAGED 36-INCH.

PROPOSED HIGHWAY EASEMENT
R/W
SLOPE INTERCEPT
PLE
STH 50 R/L
STH 50
236TH AVE
236TH AVE R/L
MATCHLINE
MATCHLINE
1057+00
1058+00
1059+00
1060+00
1061+00
1062+00
1063+00
1063+05

STA 1058+21.5, 36.5' LT
CATCH BASINS 2X3-H
61A

STA 1058+21.5, 7.5' LT
CATCH BASINS 2X3-H
61B

STA 1058+21.5, 8.1' RT
CATCH BASINS 2X3-H
61C

STA 1058+21.5, 27.1' RT
MANHOLES 5-J
61

STA 1058+21.5, 37.1' RT
CATCH BASINS 4-H
62

STA 1058+92.8, 68.7' RT
AEWCPRC 24-INCH
63

STA 1060+67.6, 37.5' LT
CATCH BASINS 2X3-H
70B

STA 1060+47.7, 37.5' LT
CATCH BASINS 2X3-H
70A

STA 1060+57.7, 37.5' LT
CATCH BASINS 2X3-H
70C

STA 1060+47.7, 8.5' LT
CATCH BASINS 2X3-H
70D

STA 1060+57.7, 8.5' LT
CATCH BASINS 2X3-H
70E

STA 1060+47.7, 1.5' LT
CATCH BASINS 2X3-H
70F

STA 1060+57.7, 1.5' LT
CATCH BASINS 2X3-H
70G

STA 1060+47.7, 37.5' RT
CATCH BASINS 2X3-H
70H

STA 1060+57.7, 37.5' RT
CATCH BASINS 2X3-H
70I

STA 1060+57.7, 59.5' RT
AEWCPRCHE 14X23-INCH
71

CONNECT TO EXISTING 21" PIPE

STA 1062+03.8, 80.1' LT
CATCH BASINS 2X3-H
80A

STA 1062+37.5, 79.5' LT
MANHOLES 5-J
80B

STA 1062+53.8, 83.4' LT
CATCH BASINS 2X3-H
80C

STA 1062+55.1, 73.5' LT
CATCH BASINS 6-H
80D

STA 1062+99.7, 58.3' LT
NLETS MEDIAN 2G-MS
80E

STA 1062+60.1, 3.4' LT
CATCH BASINS 2X3-H
81A

STA 1062+60.2, 4.0' RT
CATCH BASINS 4-H
81B

STA 1062+87.5, 8.6' RT
CATCH BASINS 4-H
81

STA 1062+87.2, 37.5' RT
CATCH BASINS 2X3-H
82

STA 1062+87.6, 65.5' RT
AEWCPRC 24-INCH
83

STA 1063+00.2, 37.5' LT
CATCH BASINS 4-H
80

P60 24" SSPRC CLASS IV 24-INCH 296.7' @ 3.50%
P61A 12" SSPRC CLASS IV 12-INCH 29.0' @ 0.75%
P61B 24" SSPRC CLASS IV 15-INCH 15.6' @ 0.75%
P61C 24" SSPRC CLASS IV 15-INCH 19.0' @ 0.75%
P62 24" SSPRC CLASS IV 24-INCH 78.0' @ 0.75%
P61 24" SSPRC CLASS IV 24-INCH 10.0' @ 0.75%
P70A 12" SSPRC CLASS IV 12-INCH 10.1' @ 0.50%
P70B 12" SSPRC CLASS IV 12-INCH 10.0' @ 0.50%
P70C 15" SSPRC CLASS IV 15-INCH 29.0' @ 0.50%
P70D 12" SSPRC CLASS IV 12-INCH 10.0' @ 0.50%
P70E 24" SSPRCHE CLASS HE-IV 14X23-INCH 7.0' @ 0.50%
P70F 14"X23" SSPRCHE CLASS HE-IV 14X23-INCH 39.0' @ 0.50%
P70G 14"X23" SSPRCHE CLASS HE-IV 14X23-INCH 22.0' @ 0.50%
P70H 14"X23" SSPRCHE CLASS HE-IV 14X23-INCH 39.0' @ 0.50%
P70I 14"X23" SSPRCHE CLASS HE-IV 14X23-INCH 22.0' @ 0.50%
P80A 12" SSPRC CLASS IV 12-INCH 10.0' @ 0.50%
P80B 19"X30" SSPRC CLASS IV 19"X30" 10.0' @ 0.50%
P80C 12" SSPRC CLASS IV 12-INCH 10.0' @ 0.50%
P80D 19"X30" SSPRC CLASS IV 19"X30" 10.0' @ 0.50%
P80E 24" SSPRC CLASS IV 24-INCH 10.0' @ 0.50%
P80 24" SSPRC CLASS IV 24-INCH 10.0' @ 0.50%
P81A 12" SSPRC CLASS IV 12-INCH 10.0' @ 0.50%
P81B 15" SSPRC CLASS IV 15-INCH 10.0' @ 0.50%
P81 24" SSPRC CLASS IV 24-INCH 10.0' @ 0.50%
P82 24" SSPRC CLASS IV 24-INCH 10.0' @ 0.50%

APPROXIMATE LOCATION OF 12" WATER MAIN
APPROXIMATE LOCATION OF 12" WATER MAIN

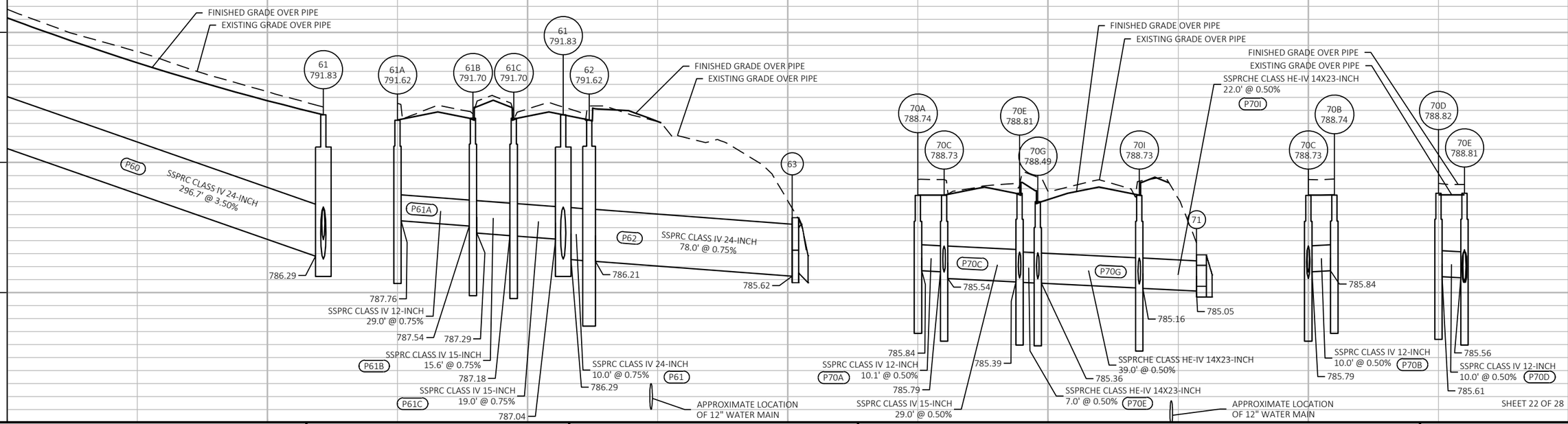

SHEET 22 OF 28

PROJECT NO: 1310-04-70	HWY: STH 50	COUNTY: KENOSHA	STORM SEWER	SHEET 196	E

N

CAUTION

UNNAMED TRIBUTARY TO PADDOCK LAKE
NAVIGABLE WATERWAY
NO IN STREAM DISTURBANCE MARCH 1 TO JUNE 15

REMOVE AND REINSTALL LAST
3 SECTIONS OF PIPE WITH JOINT TIES.
PAID FOR A CULVERT PIPE SALVAGED 36-INCH
AND AEW FOR CULVERT PIPE SALVAGED 36-INCH.

PROPOSED HIGHWAY EASEMENT
R/W
SLOPE INTERCEPT
PLE
STH 50 R/L
STH 50
236TH AVE
236TH AVE R/L
CONNECT TO EXISTING 21" PIPE
MATCHLINE
MATCHLINE
1057+00
1058+00
1059+00
1060+00
1061+00
1062+00
1063+05

STA 1058+21.5, 36.5' LT
CATCH BASINS 2X3-H
61A
P61A
12"

STA 1058+21.5, 7.5' LT
CATCH BASINS 2X3-H
61B
P61B
15"

STA 1058+21.5, 8.1' RT
CATCH BASINS 2X3-H
61C
P61C
15"

61
STA 1058+21.5, 27.1' RT
MANHOLES 5-J
P60
24"
P61
24"

STA 1058+21.5, 37.1' RT
CATCH BASINS 4-H
62
P62
24"

STA 1058+92.8, 68.7' RT
AEWCPRC 24-INCH
63

STA 1060+67.6, 37.5' LT
CATCH BASINS 2X3-H
70B
P70B
12"

P70A

STA 1060+47.7, 37.5' LT
CATCH BASINS 2X3-H
70A
P70A
12"

STA 1060+57.7, 37.5' LT
CATCH BASINS 2X3-H
70C
P70C
15"

STA 1060+47.7, 8.5' LT
CATCH BASINS 2X3-H
70D
P70D
12"

STA 1060+57.7, 8.5' LT
CATCH BASINS 2X3-H
70E
P70E
12"
14"X23"

STA 1060+47.7, 1.5' LT
CATCH BASINS 2X3-H
70F
P70F
14"X23"

STA 1060+57.7, 1.5' LT
CATCH BASINS 2X3-H
70G
P70G
14"X23"

STA 1060+47.7, 37.5' RT
CATCH BASINS 2X3-H
70H
P70H
12"

STA 1060+57.7, 37.5' RT
CATCH BASINS 2X3-H
70I
P70I
14"X23"

STA 1060+57.7, 59.5' RT
AEWCPRCHE 14X23-INCH
71

STA 1062+03.8, 80.1' LT
CATCH BASINS 2X3-H
80A
P80A
12"

STA 1062+53.8, 83.4' LT
CATCH BASINS 2X3-H
80C
P80C
12"

STA 1062+37.5, 79.5' LT
MANHOLES 5-J
80B
P80B
19"X30"

P80D
19"X30"

STA 1062+55.1, 73.5' LT
CATCH BASINS 6-H
80D
24"

STA 1062+99.7, 58.3' LT
NLETS MEDIAN 2G-MS
80E
P80E

STA 1062+60.1, 3.4' LT
CATCH BASINS 2X3-H
81A
P81A
12"

STA 1063+00.2, 37.5' LT
CATCH BASINS 4-H
80
P80
24"

STA 1062+60.2, 4.0' RT
CATCH BASINS 4-H
81B
P81B
15"

STA 1062+87.5, 8.6' RT
CATCH BASINS 4-H
81
P81
24"

STA 1062+87.2, 37.5' RT
CATCH BASINS 2X3-H
82
P82
24"

STA 1062+87.6, 65.5' RT
AEWCPRC 24-INCH
83

SLOPE INTERCEPT

R/W
R/W

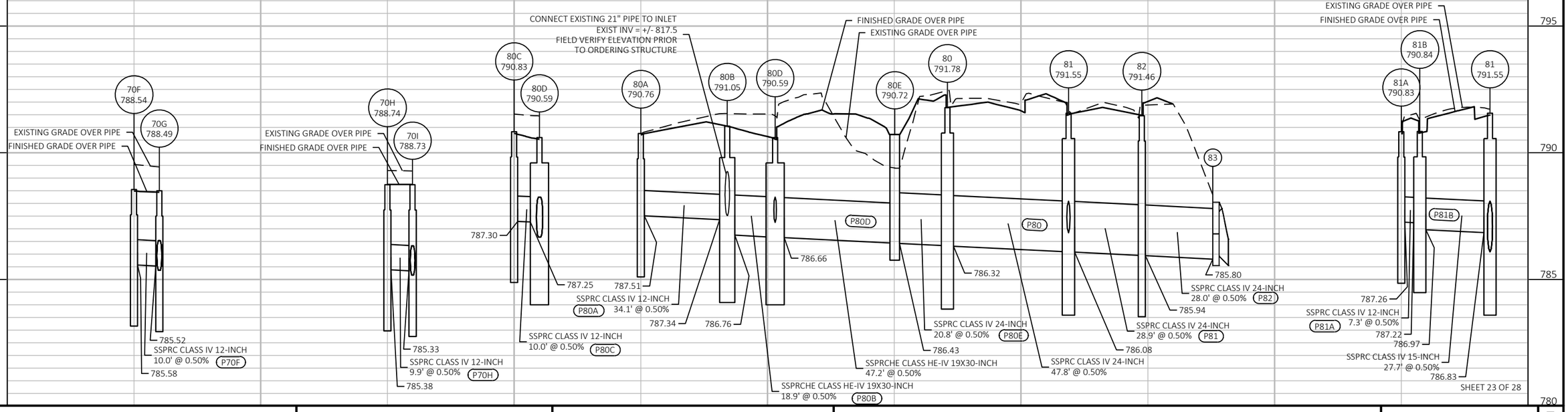

PROJECT NO: 1310-04-70	HWY: STH 50	COUNTY: KENOSHA	STORM SEWER	SHEET 197	E

FILE NAME : T:\1182708.06\CIVIL3D\13100400\13100400\SHEETSPLAN\022501_SS.DWG
LAYOUT NAME - SS-12A
PLOT DATE : 1/18/2022 10:49 AM
PLOT BY : BLACKWOOD, JIM
PLOT NAME :
PLOT SCALE : 1 IN:40 FT
WISDOT/CADDS SHEET 41

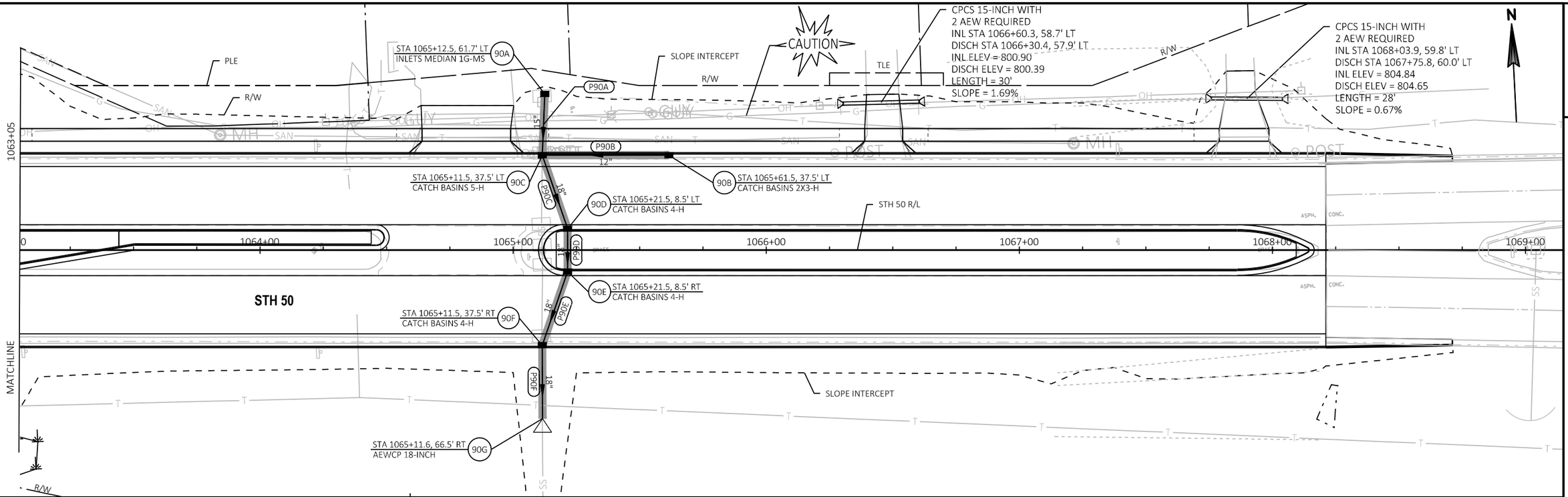

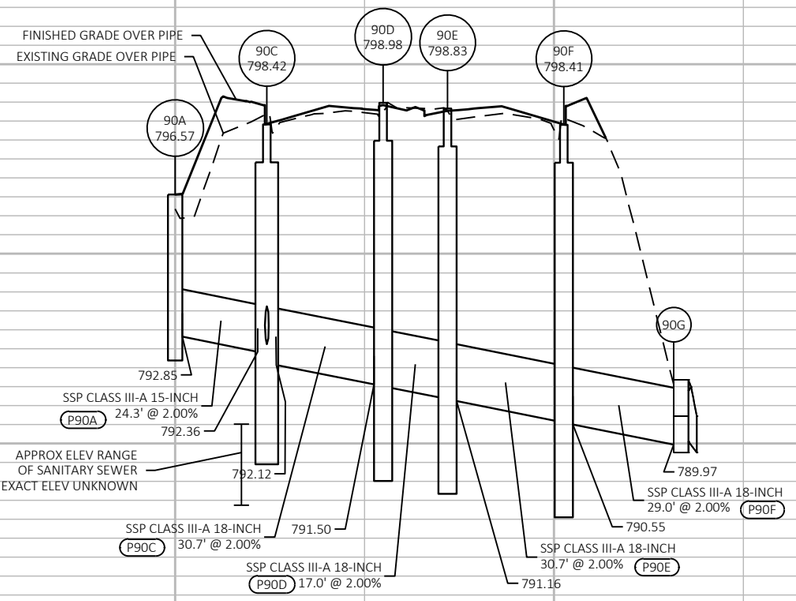

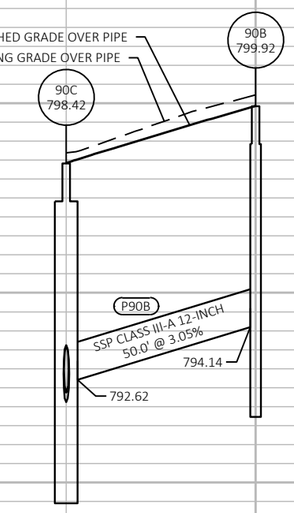

PROJECT NO: 1310-04-70	HWY: STH 50	COUNTY: KENOSHA	STORM SEWER	SHEET 198 E

FILE NAME : T:\1182708.06\CIVIL3D\13100400\13100400\SHEETSPLAN\022501_SS.DWG
LAYOUT NAME - SS-13

PLOT DATE : 1/18/2022 10:49 AM PLOT BY : BLACKWOOD, JIM PLOT NAME : PLOT SCALE : 1 IN:40 FT

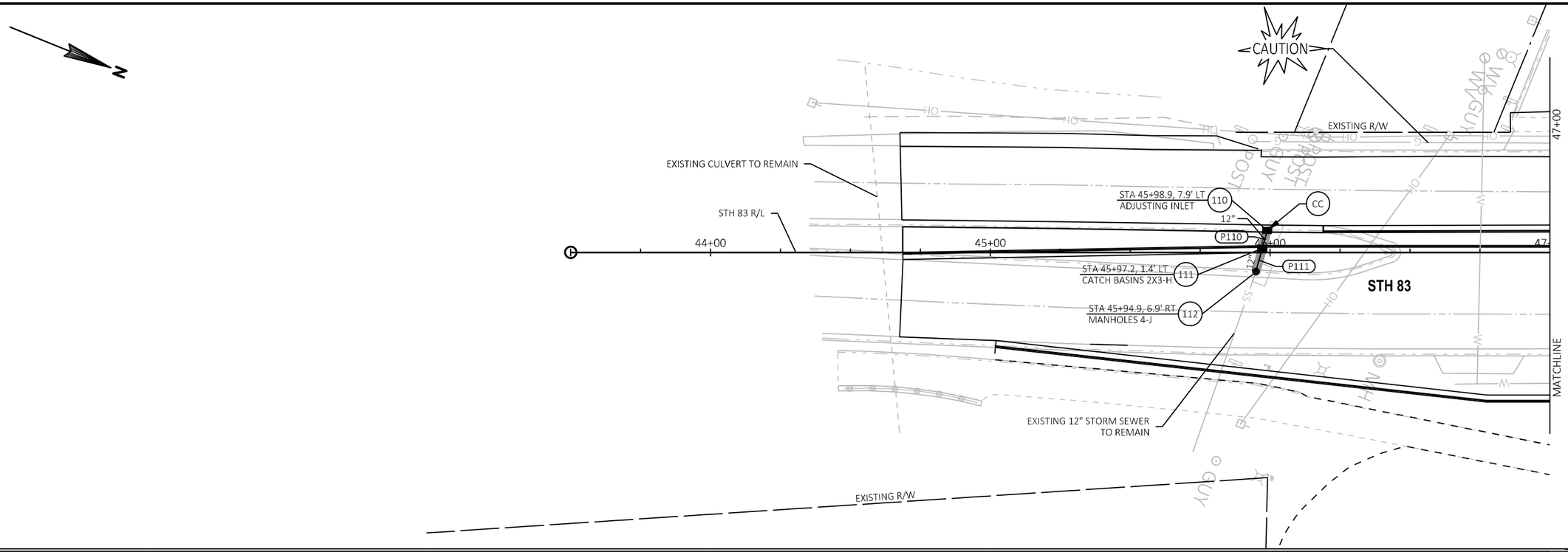

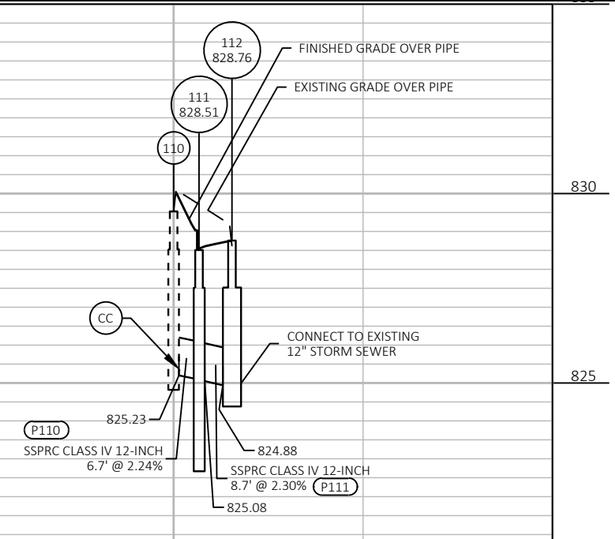

SHEET 25 OF 28

PROJECT NO: 1310-04-70	HWY: STH 50	COUNTY: KENOSHA	STORM SEWER	SHEET 199	E

FILE NAME : T:\1182708.06\CIVIL3D\13100400\13100400\SHEETSPLAN\022502_SS.DWG
LAYOUT NAME - SS-16
PLOT DATE : 1/18/2022 10:50 AM
PLOT BY : BLACKWOOD, JIM
PLOT NAME :
PLOT SCALE : 1 IN:40 FT
WISDOT/CADDS SHEET 41

2

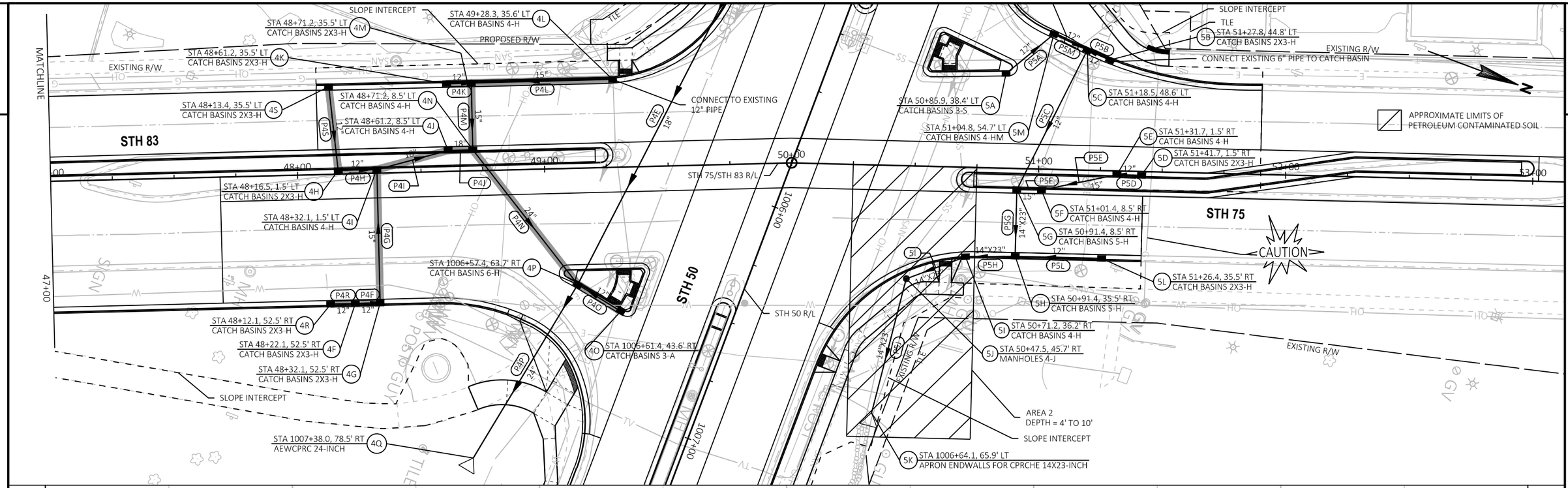

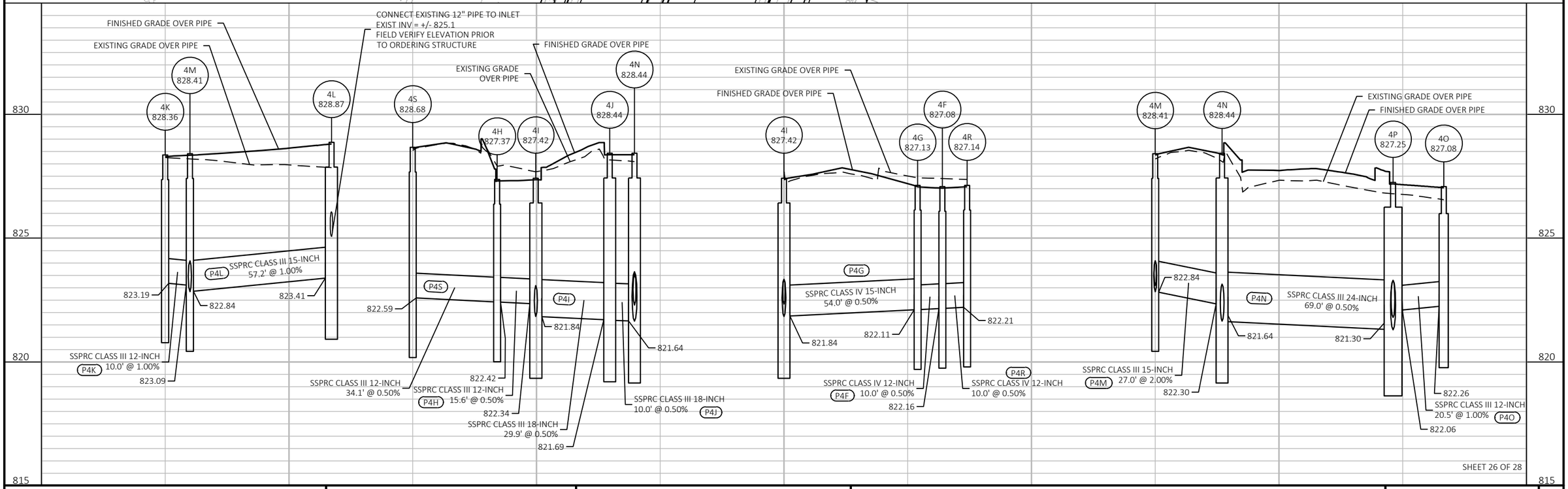

SHEET 26 OF 28

PROJECT NO: 1310-04-70	HWY: STH 50	COUNTY: KENOSHA	STORM SEWER	SHEET 200	E

FILE NAME : T:\1182708.06\CIVIL3D\13100400\13100400\SHEETSPLAN\022502_SS.DWG
LAYOUT NAME - SS-14

PLOT DATE : 1/18/2022 10:50 AM PLOT BY : BLACKWOOD, JIM PLOT NAME : PLOT SCALE : 1 IN:40 FT

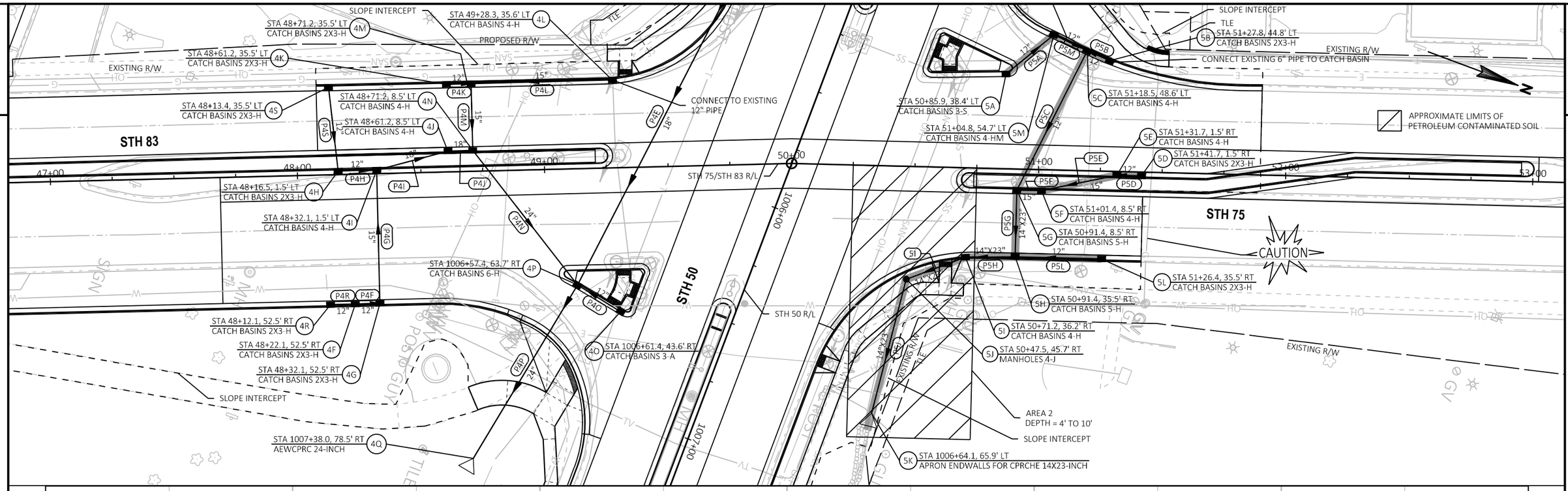

SHEET 27 OF 28

PROJECT NO: 1310-04-70	HWY: STH 50	COUNTY: KENOSHA	STORM SEWER	SHEET 201 E

FILE NAME : T:\1182708.06\CIVIL3D\13100400\13100400\SHEETSPLAN\022502_SS.DWG
LAYOUT NAME - SS-14A

PLOT DATE : 1/18/2022 10:50 AM PLOT BY : BLACKWOOD, JIM PLOT NAME : PLOT SCALE : 1 IN:40 FT

WISDOT/CADDS SHEET 41

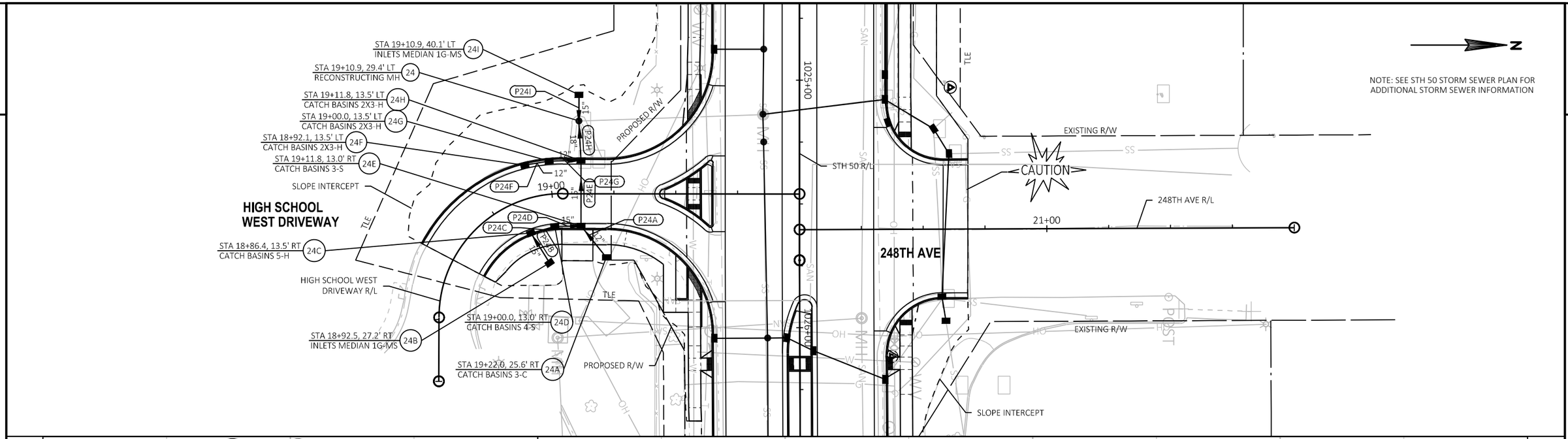

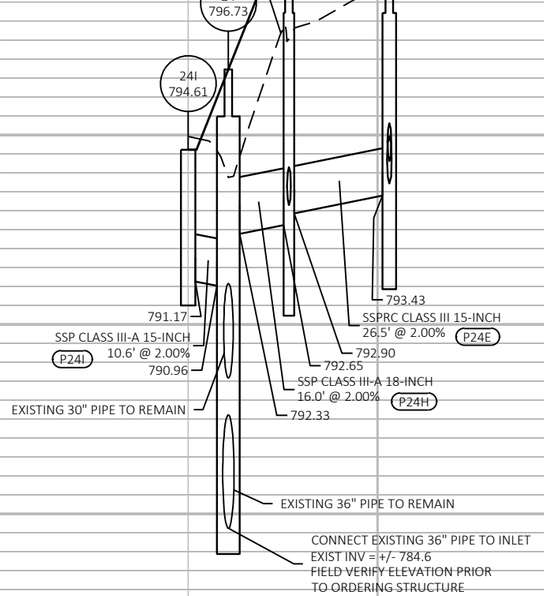

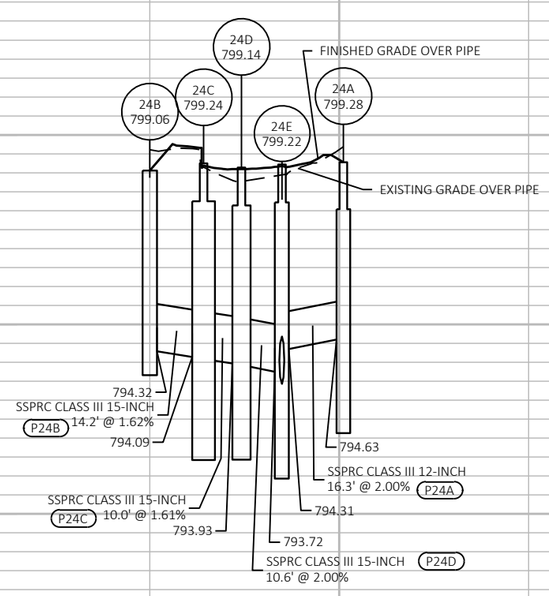

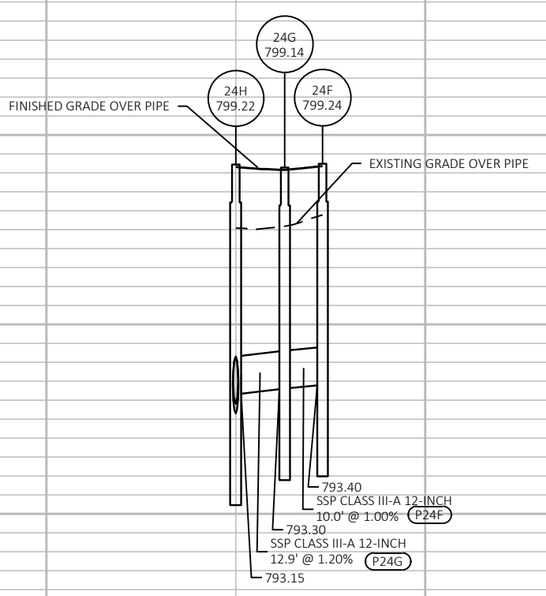

SHEET 28 OF 28

PROJECT NO: 1310-04-70	HWY: STH 50	COUNTY: KENOSHA	STORM SEWER	SHEET 202	E

FILE NAME : T:\1182708.06\CIVIL3D\13100400\13100400\SHEETSPLAN\022502_SS.DWG
LAYOUT NAME - SS-15

PLOT DATE : 1/18/2022 10:50 AM PLOT BY : BLACKWOOD, JIM PLOT NAME : PLOT SCALE : 1 IN:40 FT

WISDOT/CADDS SHEET 41

2

STH 50

STH 83

1006+00 1007+00 1008+00 1009+00 1010+00 1011+00

PI: 50+00.00

EP: 103+00.00

BP: 100+00.00

100 STA 1009+00.3, 88.8' RT
AEWCPRC 18-INCH

101 STA 1009+16.1, 90.9' RT
MANHOLES 4-J

102 STA 1009+49.6, 104.1' RT
AEWCPRC 18-INCH

1 FOOT TALL BERM

SPILLWAY ELEVATION = 819.00

TOP OF BERM ELEVATION = 820.00

SLOPE INTERCEPT

NOTES:
1. SEE STORM SEWER PLAN FOR ADDITIONAL STORM SEWER INFORMATION.
2. EARTHWORK VOLUMES FOR POND ARE DETERMINED USING AVERAGE END AREAS BASED ON POND CROSS SECTIONS.

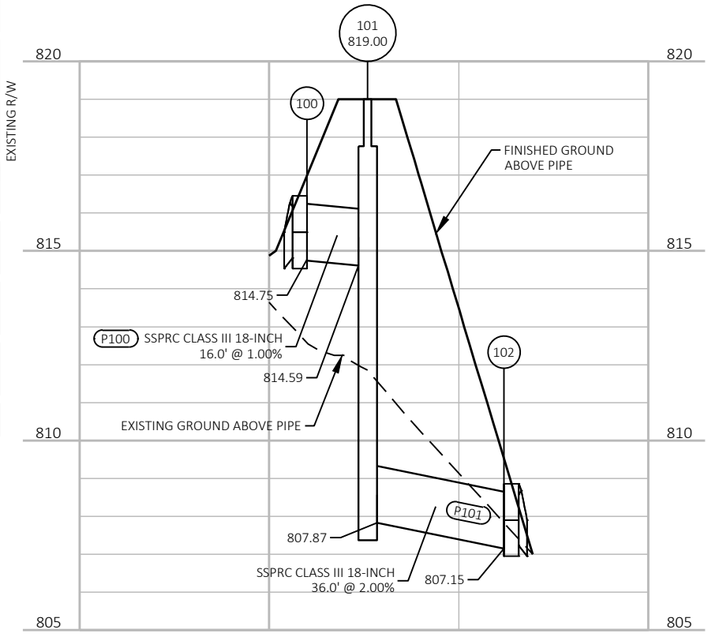

PROJECT NO: 1310-04-70	HWY: STH 50	COUNTY: KENOSHA	DRY POND DETAIL	SHEET 203	E

FILE NAME : T:\1182708.06\CIVIL3D\13100400\13100400\SHEETSPLAN\022503_SS_POND.DWG
LAYOUT NAME - 01

PLOT DATE : 1/18/2022 10:51 AM PLOT BY : BLACKWOOD, JIM PLOT NAME : PLOT SCALE : 1 IN:40 FT

2

POND POINT TABLE					
POINT NUMBER	STATION	OFFSET	ELEVATION	NORTHING	EASTING
200	102+77.04	87.65' LT	819.00	128,119.78	550,382.41
201	102+79.84	80.15' LT	819.00	128,122.58	550,389.90
202	102+81.24	76.40' LT	820.00	128,123.98	550,393.65
203	102+84.76	64.91' LT	819.00	128,127.49	550,405.15
204	102+73.65	48.65' LT	816.00	128,116.39	550,421.41
205	102+24.29	33.59' LT	816.00	128,067.03	550,436.46
206	101+82.23	56.07' LT	818.00	128,024.97	550,413.99
207	101+84.40	48.37' LT	818.00	128,027.13	550,421.69
208	101+85.52	44.53' LT	819.00	128,028.25	550,425.53
209	101+87.65	36.81' LT	819.00	128,030.38	550,433.24
210	100+79.61	15.35' LT	817.10	127,922.35	550,454.70
211	100+82.60	7.85' LT	817.06	127,925.33	550,462.21
212	100+65.15	26.66' LT	818.00	127,907.88	550,443.40
213	100+75.51	4.02' LT	817.00	127,918.25	550,466.04
214	100+85.26	19.54' RT	817.00	127,927.99	550,489.60

POND POINT TABLE					
POINT NUMBER	STATION	OFFSET	ELEVATION	NORTHING	EASTING
215	101+37.28	37.19' RT	817.00	127,980.02	550,507.25
216	101+58.35	33.80' RT	816.00	128,001.09	550,503.86
217	102+57.91	36.40' RT	815.00	128,100.65	550,506.46
218	102+73.84	27.76' RT	815.00	128,116.58	550,497.81
219	102+74.66	43.01' RT	815.00	128,117.40	550,513.06
220	102+96.49	73.11' RT	820.00	128,139.22	550,543.17
221	102+77.80	65.74' RT	820.00	128,120.53	550,535.80
222	102+74.86	73.18' RT	820.00	128,117.60	550,543.24
223	102+62.91	59.87' RT	820.00	128,105.65	550,529.93
224	102+59.98	67.32' RT	820.00	128,102.71	550,537.37
225	102+53.12	106.53' RT	807.00	128,095.85	550,576.59
226	100+75.14	26.61' LT	817.22	127,917.87	550,443.44
227	100+78.12	19.11' LT	817.14	127,920.86	550,450.95
228	100+84.09	4.10' LT	817.06	127,926.82	550,465.96

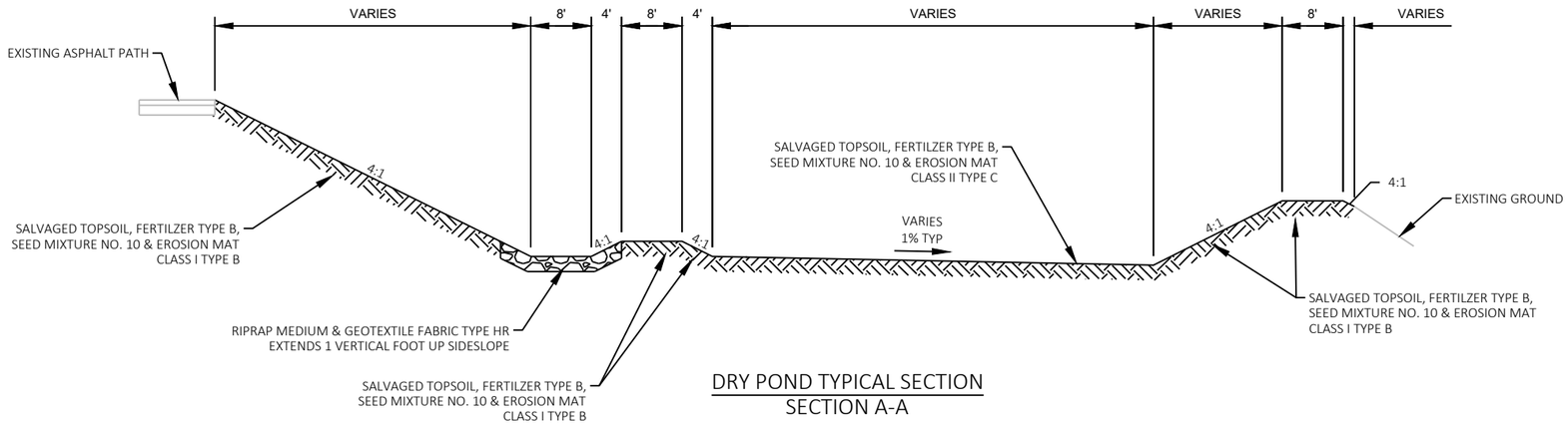

DRY POND TYPICAL SECTION
SECTION A-A

PROJECT NO: 1310-04-70	HWY: STH 50	COUNTY: KENOSHA	DRY POND DETAIL	SHEET 204	E

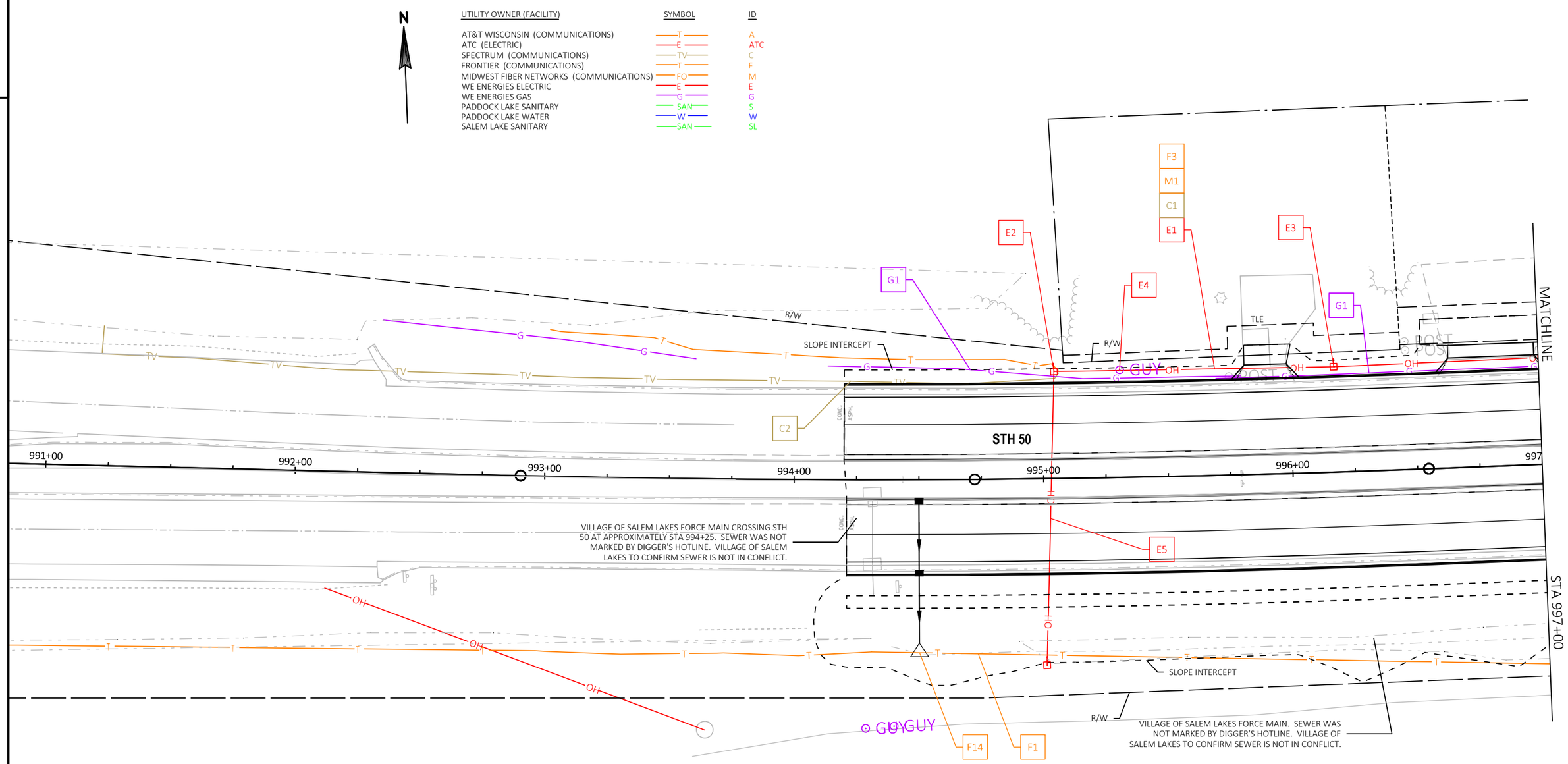

SHEET 1 OF 40

PROJECT NO: 1310-04-70	HWY: STH 50	COUNTY: KENOSHA	UTILITY PLAN	SHEET 205	E

FILE NAME : T:\1182708.06\CIVIL3D\13100400\13100400\SHEETSPLAN\023001_UP.DWG
LAYOUT NAME - 01
PLOT DATE : 1/26/2022 10:43 PM PLOT BY : BLACKWOOD, JIM PLOT NAME : PLOT SCALE : 1 IN:40 FT
WISDOT/CADDS SHEET 42

2

EXISTING UTILITY FACILITIES							RESOLUTION							
UTILITY DETAIL SHEET	CONFLICT ID	FACILITY TYPE	LOCATION	EXISTING FACILITIES (STA)	OFFSET (LT/RT)	IN CONFLICT WITH:	CONFLICT ANTICIPATED (YES/NO)	RELOCATION		DISCONTINUTED		COORDINATE WITH OTHER UTILITIES (YES/NO)	WORKING DAYS TO PERFORM	ADDITIONAL INFORMATION
								PRIOR TO CONSTRUCTION (STA/OFFSET)	DURING CONSTRUCTION (STA/OFFSET)	IN-PLACE (YES/NO)	HAZ MAT (YES/NO)			
1	C1	COMUNICATION LINE	OH	994+20 - 1068+11	38' LT - 63' LT	GRADING	YES	994+20 - 1068+11 39'-63' LT	---	NO	NO	YES	100	
1	C2	COMUNICATION LINE	UG	994+20 - 995+05	38' LT - 43' LT	GRADING	YES	993+95 - 995+03 42' LT - 50' LT	---	YES	NO	NO	100	
1	F1	COMUNICATION LINE	UG	994+11 - 997+27	69' RT - 82' RT	GRADING	YES	994+11 - 999+53 85'-118' RT	---	NO	NO	NO	100	
1	F3	COMUNICATION LINE	OH	994+20 - 1068+11	38' LT - 63' LT	GRADING	YES	994+20 - 1068+11 39'-63' LT	---	NO	NO	YES	100	
1	F14	COMUNICATION LINE	UG	994+50	69' RT	STORM SEWER	YES	994+50, 84' RT	---	YES	NO	NO	100	
1	M1	COMUNICATION LINE	OH	994+20 - 1068+11	38' LT - 63' LT	GRADING	YES	994+20 - 1068+11 39'-63' LT	---	NO	NO	YES	90	
1	E1	ELECTRIC SERVICE	OH	994+20 - 1068+11	38' LT - 63' LT	GRADING	YES	994+20 - 1068+11 39'-63' LT	---	NO	NO	YES	150	
1	E2	POWER POLE	OH	995+05	43' LT	GRADING	YES	995+03, 43' LT	---	NO	NO	YES	150	
1	E3	POWER POLE	OH	996+18	42' LT	GRADING	YES	996+19, 42' LT	---	NO	NO	YES	150	
1	E4	GUY WIRE / ANCHOR	OH	995+31	43' LT	GRADING	YES	REMOVE GUY	---	NO	NO	YES	150	
1	E5	ELECTRIC SERVICE	OH	995+00 - 995+05	43' LT - 74' RT	GRADING	YES	995+01 - 995+03 42' LT - 80' RT	---	NO	NO	YES	150	
1	G1	GAS MAIN 8"	UG	994+70 - 1004+45	39' LT - 54' LT	GRADING	YES	994+20 - 1068+21 15'-44' LT	---	YES	NO	NO	120	PROPOSED MAIN IS 12" STEEL

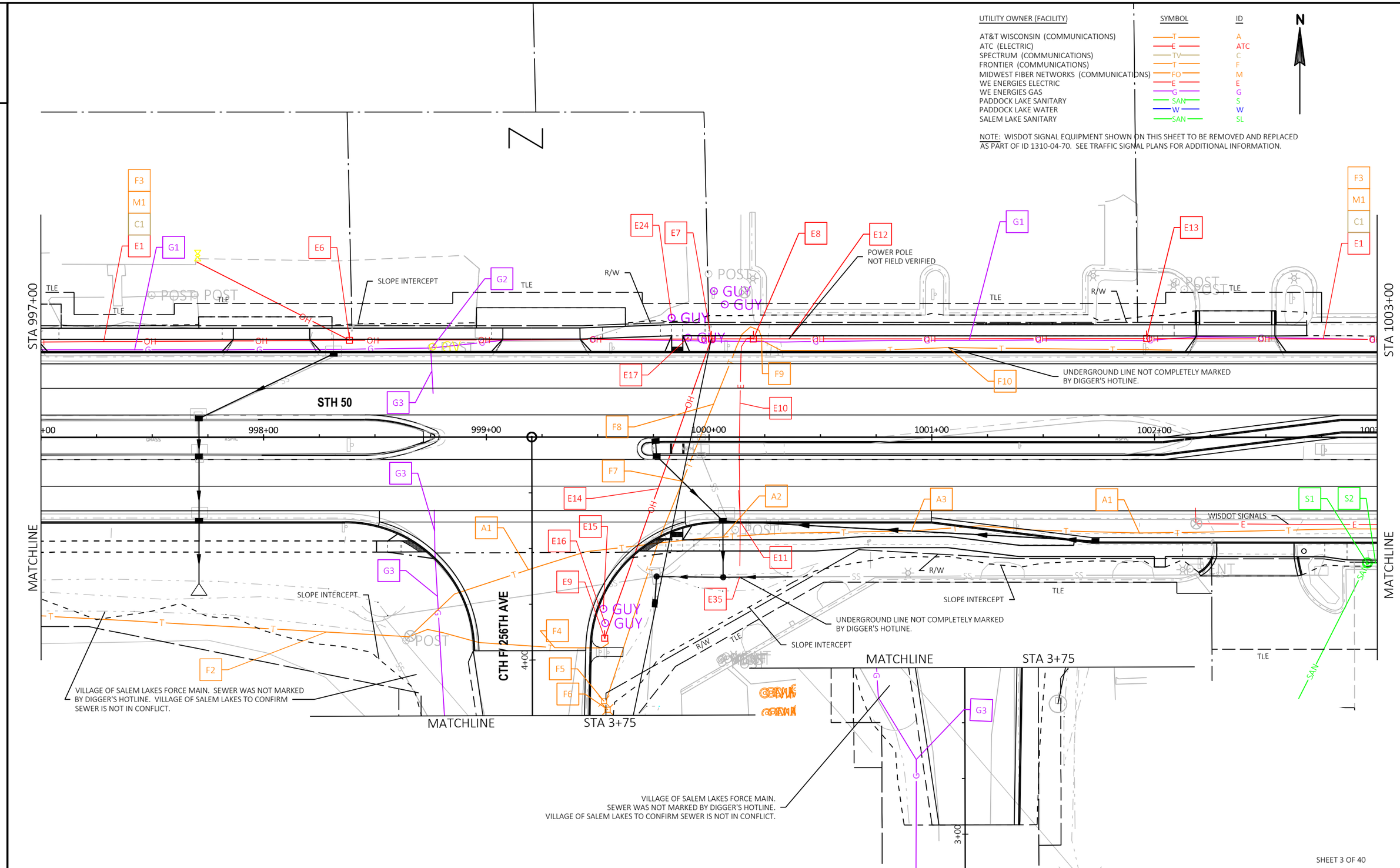

PROJECT NO: 1310-04-70	HWY: STH 50	COUNTY: KENOSHA	UTILITY PLAN	SHEET 207	E

FILE NAME : T:\1182708.06\CIVIL3D\13100400\13100400\SHEETSPLAN\023001_UP.DWG
LAYOUT NAME - 02
PLOT DATE : 1/26/2022 10:43 PM
PLOT BY : BLACKWOOD, JIM
PLOT NAME :
PLOT SCALE : 1 IN:40 FT
WISDOT/CADDS SHEET 42

EXISTING UTILITY FACILITIES							RESOLUTION							
UTILITY DETAIL SHEET	CONFLICT ID	FACILITY TYPE	LOCATION	EXISTING FACILITIES (STA)	OFFSET (LT/RT)	IN CONFLICT WITH:	CONFLICT ANTICIPATED (YES/NO)	RELOCATION		DISCONTINUTED		COORDINATE WITH OTHER UTILITIES (YES/NO)	WORKING DAYS TO PERFORM	ADDITIONAL INFORMATION
								PRIOR TO CONSTRUCTION (STA/OFFSET)	DURING CONSTRUCTION (STA/OFFSET)	IN-PLACE (YES/NO)	HAZ MAT (YES/NO)			
3	A1	COMMUNICATIONS LINE	UG	998+65 - 1059+11	33' RT - 89' RT	GRADING	YES	998+65 - 1060+82 25' -89' RT	---	YES	NO	NO	60	
3	A2	COMMUNICATIONS LINE	UG	1000+06	45' RT	STORM SEWER	YES	998+65 - 1060+82 25' -89' RT	---	YES	NO	NO	60	
3	A3	COMMUNICATIONS LINE	UG	1000+91	42' RT	STORM SEWER	YES	998+65 - 1060+82 25' -89' RT	---	YES	NO	NO	60	
3	C1	COMUNICATION LINE	OH	994+20 - 1068+11	38' LT - 63' LT	GRADING	YES	994+20 - 1068+11 39'-63' LT	---	NO	NO	YES	100	
3	F2	COMMUNICATIONS LINE	UG	997+98 - 998+66	86' RT - 89' RT	GRADING								
3	F3	COMUNICATION LINE	OH	994+20 - 1068+11	38' LT - 63' LT	GRADING	YES	994+20 - 1068+11 39'-63' LT	---	NO	NO	YES	100	
3	F4	COMMUNICATIONS LINE	UG	998+65 - 999+53	86' RT - 94' LT	GRADING	YES	994+11 - 999+53 85'-118' RT	---	NO	NO	NO	100	
3	F5	PEDESTAL	UG	3+82 CTH F	32' RT	GRADING	YES	---	ADJUST PED	NO	NO	NO	100	
3	F6	PEDESTAL	UG	3+78 CTH F	34' RT	GRADING	YES	---	ADJUST PED	NO	NO	NO	100	
3	F7	COMMUNICATIONS LINE	UG	999+88	20' RT	STORM SEWER	YES	---	---	NO	NO	NO	100	PLACE NEW CABLE IN EXISTING LOCATION AT LOWER DEPTH
3	F8	COMMUNICATIONS LINE	UG	999+53 - 1000+24	119' RT - 50' LT	GRADING	YES	---	---	NO	NO	NO	100	PLACE NEW CABLE IN EXISTING LOCATION AT LOWER DEPTH
3	F9	PEDESTAL	UG	1000+24	44' LT	GRADING	YES	---	ADJUST PED	NO	NO	NO	100	
3	F10	COMMUNICATIONS LINE	UG	1000+24 - 1002+08	39' LT - 44' LT	GRADING	YES	1000+24 - 1003+57 44' - 46' LT	---	NO	NO	NO	100	NOT COMPLETELY MARKED BY DIGGER'S HOTLINE
3	M1	COMUNICATION LINE	OH	994+20 - 1068+11	38' LT - 63' LT	GRADING	YES	994+20 - 1068+11 39'-63' LT	---	NO	NO	YES	90	
3	E1	ELECTRIC SERVICE	OH	994+20 - 1068+11	38' LT - 63' LT	GRADING	YES	994+20 - 1068+11 39'-63' LT	---	NO	NO	YES	150	
3	E6	POWER POLE	OH	998+39	44' LT	GRADING	YES	998+37, 43' LT	---	NO	NO	YES	150	
3	E7	POWER POLE	OH	1000+01	44' LT	GRADING	YES	999+99, 44' LT	---	NO	NO	YES	150	
3	E8	POWER POLE	OH	1000+20	44' LT	GRADING	YES	REMOVE POLE	---	NO	NO	YES	150	
3	E9	POWER POLE	OH	4+10 CTH F	33' RT	GRADING	YES	REMOVE POLE	---	NO	NO	YES	150	
3	E10	ELECTRIC SERVICE	UG	1000+13 - 1000+20	44' LT - 77' RT	GRADING	YES	999+82 - 1000+18 97' RT - 55' LT	---	YES	NO	YES	150	
3	E11	ELECTRIC SERVICE	UG	1000+15	38' RT	STORM SEWER	YES	999+82 - 1000+18 97' RT - 55' LT	---	YES	NO	YES	150	
3	E12	POWER POLE	OH	1000+36	44' LT	GRADING	YES	REMOVE POLE	---	NO	NO	YES	150	
3	E13	POWER POLE	OH	1001+96	44' LT	GRADING	YES	1001+94, 44' LT	---	NO	NO	YES	150	
3	E14	ELECTRIC SERVICE	OH	999+53 - 1000+01	90' RT - 44' LT	GRADING	YES	REMOVE SERVICE	---	NO	NO	YES	150	
3	E15	GUY WIRE / ANCHOR	OH	4+23 CTH F	32' RT	GRADING	YES	REMOVE GUY	---	NO	NO	YES	150	
3	E16	GUY WIRE / ANCHOR	OH	4+16 CTH F	33' RT	GRADING	YES	REMOVE GUY	---	NO	NO	YES	150	
3	E17	GUY WIRE / ANCHOR	OH	999+90	45' LT	GRADING	YES	REMOVE GUY	---	NO	NO	YES	150	
3	E24	GUY WIRE / ANCHOR	OH	999+83	53' LT	GRADING	YES	1000+03, 64' LT	---	NO	NO	YES	150	
3	E35	ELECTRIC SERVICE	UG	1000+14	63' RT	STORM SEWER	YES	999+82 - 1000+18 97' RT - 55' LT	---	YES	NO	YES	150	

EXISTING UTILITY FACILITIES							RESOLUTION							
UTILITY DETAIL SHEET	CONFLICT ID	FACILITY TYPE	LOCATION	EXISTING FACILITIES (STA)	OFFSET (LT/RT)	IN CONFLICT WITH:	CONFLICT ANTICIPATED (YES/NO)	RELOCATION		DISCONTINUTED		COORDINATE WITH OTHER UTILITIES (YES/NO)	WORKING DAYS TO PERFORM	ADDITIONAL INFORMATION
								PRIOR TO CONSTRUCTION (STA/OFFSET)	DURING CONSTRUCTION (STA/OFFSET)	IN-PLACE (YES/NO)	HAZ MAT (YES/NO)			
3	G1	GAS MAIN 8"	UG	994+70 - 1004+45	39' LT - 54' LT	GRADING	YES	994+20 - 1068+21 15'-44' LT	---	YES	NO	NO	120	PROPOSED MAIN IS 12" STEEL
3	G2	GAS VALVE	UG	998+76	41' LT	GRADING	YES	994+20 - 1068+21 15'-44' LT	---	YES	NO	NO	120	
3	G3	GAS MAIN 8"	UG	998+76 - 998+82 3+04 - 3+61 (CTH F)	40' LT - 139' RT 22 'LT - 39' LT	GRADING	YES	999+04 30' LT- 196' RT	---	YES	NO	NO	120	
3	S1	SANITARY MANHOLE	UG	1002+96	56' RT	GRADING	YES	---	ADJUST MH	NO	NO	NO	---	WITH PROJECT
3	S2	SANITARY SEWER	UG	1002+95 - 1004+80	42' RT - 58' RT	GRADING	NO	---	---	NO	NO	NO	---	

2

UTILITY OWNER (FACILITY)	SYMBOL	ID
AT&T WISCONSIN (COMMUNICATIONS)	T	A
ATC (ELECTRIC)	E	ATC
SPECTRUM (COMMUNICATIONS)	TV	C
FRONTIER (COMMUNICATIONS)	T	F
MIDWEST FIBER NETWORKS (COMMUNICATIONS)	FO	M
WE ENERGIES ELECTRIC	E	E
WE ENERGIES GAS	G	G
PADDOCK LAKE SANITARY	SAN	S
PADDOCK LAKE WATER	W	W
SALEM LAKE SANITARY	SAN	SL

N

NOTE: WISDOT SIGNAL EQUIPMENT SHOWN ON THIS SHEET TO BE REMOVED AND REPLACED AS PART OF ID 1310-04-70. SEE TRAFFIC SIGNAL PLANS FOR ADDITIONAL INFORMATION.

STA 1003+00

STA 1009+00

STH 50

STH 75

STH 83

1004+00

1005+00

1006+00

1007+00

1008+00

WISDOT SIGNALS

EXISTING R/W

R/W

SLOPE INTERCEPT

TLE

PROPOSED R/W

GAS MAIN NOT COMPLETELY MARKED BY DIGGER'S HOTLINE.

MATCHLINE

STA 48+00

SHEET 6 OF 40

PROJECT NO: 1310-04-70	HWY: STH 50	COUNTY: KENOSHA	UTILITY PLAN	SHEET 210	E

FILE NAME : T:\1182708.06\CIVIL3D\13100400\13100400\SHEETSPLAN\023001_UP.DWG
LAYOUT NAME - 03

PLOT DATE : 1/26/2022 10:44 PM PLOT BY : BLACKWOOD, JIM PLOT NAME : PLOT SCALE : 1 IN:40 FT

WISDOT/CADDS SHEET 42

EXISTING UTILITY FACILITIES							RESOLUTION							
UTILITY DETAIL SHEET	CONFLICT ID	FACILITY TYPE	LOCATION	EXISTING FACILITIES (STA)	OFFSET (LT/RT)	IN CONFLICT WITH:	CONFLICT ANTICIPATED (YES/NO)	RELOCATION		DISCONTINUTED		COORDINATE WITH OTHER UTILITIES (YES/NO)	WORKING DAYS TO PERFORM	ADDITIONAL INFORMATION
								PRIOR TO CONSTRUCTION (STA/OFFSET)	DURING CONSTRUCTION (STA/OFFSET)	IN-PLACE (YES/NO)	HAZ MAT (YES/NO)			
6	A1	COMMUNICATIONS LINE	UG	998+65 - 1059+11	33' RT - 89' RT	GRADING	YES	998+65 - 1060+82 25' -89' RT	---	YES	NO	NO	60	
6	A4	COMMUNICATIONS LINE	UG	1005+08	39' RT	STORM SEWER	YES	998+65 - 1060+82 25' -89' RT	---	YES	NO	NO	60	
6	A5	COMMUNICATIONS LINE	UG	1008+21	43' RT	STORM SEWER	YES	998+65 - 1060+82 25' -89' RT	---	YES	NO	NO	60	
6	A23	COMMUNICATIONS LINE	UG	1006+55	45' RT	SIGNAL BASE	YES	998+65 - 1060+82 25' -89' RT	---	YES	NO	NO	60	
6	C1	COMUNICATION LINE	OH	994+20 - 1068+11	38' LT - 63' LT	GRADING	YES	994+20 - 1068+11 39'-63' LT	---	NO	NO	YES	100	
6	C3	COMMUNICATIONS LINE	OH	1004+71 - 1006+14	45' LT - 193' RT	GRADING	YES	REMOVE LINE	---	NO	NO	YES	100	
6	C4	COMMUNICATIONS LINE	UG	1006+56	65' LT	STORM SEWER	YES	---	1006+56, 65' LT	NO	NO	NO	100	TO BE ADJUSTED AS NEEDED DURING CONSTRUCTION
6	C5	COMMUNICATIONS LINE	UG	1006+62 - 1006+66	46' LT - 68' LT	GRADING	NO	---	---	NO	NO	NO	---	
6	C6	COMMUNICATIONS LINE	UG	1006+62 - 1007+04	43' LT - 117' RT	GRADING	YES	DISCONTINUE	---	YES	NO	NO	100	
6	C7	COMMUNICATIONS LINE	UG	1006+97	71' RT	STORM SEWER	YES	DISCONTINUE	---	YES	NO	NO	100	
6	C8	COMMUNICATIONS LINE	UG	1006+55 - 1006+52	46' LT - 68' LT	GRADING	NO	---	---	NO	NO	NO	---	
6	C11	COMMUNICATIONS LINE	UG	1006+62 - 1006+66	46' LT - 68' LT	STORM SEWER	YES	---	1006+64, 66' LT	NO	NO	NO	100	TO BE ADJUSTED AS NEEDED DURING CONSTRUCTION
6	C20	COMMUNICATIONS LINE	OH	1005+17	45' LT	MONOTUBE ARM	YES	994+20 - 1068+11 39'-63' LT	---	NO	NO	YES	100	
6	C22	COMMUNICATIONS LINE	UG	1007+01	43' LT	TRAFFIC SIGNAL PULLBOX	YES	DISCONTINUE	---	YES	NO	NO	100	
6	C23	COMMUNICATIONS LINE	UG	1006+97	66' RT	TRAFFIC SIGNAL PULLBOX	YES	DISCONTINUE	---	YES	NO	NO	100	
6	C25	COMMUNICATIONS LINE	OH	49+27 STH83	48' LT	MONOTUBE POLE	YES	REMOVE LINE	---	NO	NO	YES		
6	F3	COMUNICATION LINE	OH	994+20 - 1068+11	38' LT - 63' LT	GRADING	YES	994+20 - 1068+11 39'-63' LT	---	NO	NO	YES	100	
6	F11	PEDESTAL	UG	1003+57	45' LT	GRADING	YES	1003+53, 44' LT	---	NO	NO	NO	100	
6	F12	COMMUNICATIONS LINE	UG	1004+42 - 1004+84	52' LT - 127' LT	GRADING	NO	---	---	NO	NO	NO	---	
6	F13	MANHOLE	UG	1006+83	4' RT	GRADING	NO	---	---	NO	NO	NO	---	SIGNAL PULLBOX
6	F15	COMUNICATION LINE	OH	1004+71 - 1006+14	45' LT - 193' RT	GRADING	YES	REMOVE LINE	---	NO	NO	YES	---	
6	F36	COMMUNICATIONS LINE	OH	1005+17	45' LT	MONOTUBE ARM	YES	994+20 - 1068+11 39'-63' LT	---	NO	NO	YES	100	
6	F38	COMMUNICATIONS LINE	OH	49+27 STH83	48' LT	MONOTUBE POLE	YES	REMOVE LINE	---	NO	NO	YES	---	
6	M1	COMUNICATION LINE	OH	994+20 - 1068+11	38' LT - 63' LT	GRADING	YES	994+20 - 1068+11 39'-63' LT	---	NO	NO	YES	90	
6	M3	COMMUNICATIONS LINE	OH	1005+17	45' LT	MONOTUBE ARM	YES	994+20 - 1068+11 39'-63' LT	---	NO	NO	YES	90	
6	E1	ELECTRIC SERVICE	OH	994+20 - 1068+11	38' LT - 63' LT	GRADING	YES	994+20 - 1068+11 39'-63' LT	---	NO	NO	YES	150	
6	E18	GUY WIRE / ANCHOR	OH	1003+40	43' LT	GRADING	YES	REMOVE GUY	---	NO	NO	YES	150	
6	E19	POWER POLE	OH	1003+55	44' LT	GRADING	YES	1003+53, 44' LT	---	NO	NO	YES	150	
6	E20	GUY WIRE / ANCHOR	OH	1004+39	44' LT	GRADING	YES	REMOVE GUY	---	NO	NO	YES	150	
6	E21	POWER POLE	OH	1004+69	45' LT	GRADING	YES	1004+02, 45' LT	---	NO	NO	YES	150	
6	E22	ELECTRIC SERVICE	UG	1004+45 - 1004+84	54' LT - 127' LT	GRADING	YES	DISCONTINUE	---	YES	NO	NO	150	
6	E23	POWER POLE	OH	1004+71	45' LT	GRADING	YES	REMOVE POLE	---	NO	NO	YES	150	
6	E25	ELECTRIC SERVICE	OH	1004+71 - 1006+14	45' LT - 193' RT	GRADING	YES	REMOVE LINE	---	NO	NO	YES	150	
6	E26	POWER POLE	OH	48+99 STH83	42' LT	GRADING	YES	REMOVE POLE	---	NO	NO	YES	150	
6	E28	POWER POLE	OH	1006+62	46' LT	GRADING	YES	1006+60, 46' LT	---	NO	NO	YES	150	

EXISTING UTILITY FACILITIES							RESOLUTION							
UTILITY DETAIL SHEET	CONFLICT ID	FACILITY TYPE	LOCATION	EXISTING FACILITIES (STA)	OFFSET (LT/RT)	IN CONFLICT WITH:	CONFLICT ANTICIPATED (YES/NO)	RELOCATION		DISCONTINUTED		COORDINATE WITH OTHER UTILITIES (YES/NO)	WORKING DAYS TO PERFORM	ADDITIONAL INFORMATION
								PRIOR TO CONSTRUCTION (STA/OFFSET)	DURING CONSTRUCTION (STA/OFFSET)	IN-PLACE (YES/NO)	HAZ MAT (YES/NO)			
6	E29	POWER POLE	OH	48+51 STH75	57' RT	GRADING	YES	48+38, 73' LT (CTH F)	---	NO	NO	YES	150	
6	E30	POWER POLE	OH	1008+37	45' LT	GRADING	YES	1008+39, 45' LT	---	NO	NO	YES	150	
6	E31	ELECTRIC SERVICE	OH	48+51 - 48+99 STH83	42' LT - 57' RT	GRADING	YES	REMOVE LINE	---	NO	NO	YES	150	
6	E61	ELECTRIC SERVICE	OH	48+83 STH83	10' LT	LIGHT POLE	YES	REMOVE LINE	---	NO	NO	YES	150	
6	E107	ELECTRIC SERVICE	OH	1005+17	45' LT	MONOTUBE ARM	YES	994+20 - 1068+11 39'-63' LT	---	NO	NO	YES	90	
6	E174	ELECTRIC SERVICE	OH	49+27 STH83	48' LT	MONOTUBE POLE	YES	REMOVE LINE	---	NO	NO	YES	150	
6	G1	GAS MAIN 8"	UG	994+70 - 1004+45	39' LT - 54' LT	GRADING	YES	994+20 - 1068+21 15'-44' LT	---	YES	NO	NO	120	PROPOSED MAIN IS 12" STEEL
6	G4	GAS MAIN 8"	UG	1004+80 -1005+73 48+08 - 49+28 STH 83	103' LT - 82' RT 39' LT - 38' LT	GRADING	YES	45+52-49+90 53'-141' RT 50+11 - 61+65 58' RT (STH 75/83)	---	YES	NO	NO	120	
6	G5	GAS MAIN 8"	UG	1005+60	52' RT	STORM SEWER	YES	45+52-49+90 53'-141' RT STH 83	---	YES	NO	NO	120	
6	G6	GAS MAIN 8"	UG	51+40 - 51+47 STH 75	57' LT - 10' RT	GRADING	YES	994+20 - 1068+21 15'-44' LT	---	YES	NO	NO	120	
6	G7	GAS MAIN 8"	UG	1005+89 - 1006+76	65' LT - 119' LT	GRADING	YES	50+11 - 51+65 58' RT (STH 75)	---	YES	NO	NO	120	
6	G8	GAS MAIN 8"	UG	1005+98 - 1006+76	65' LT - 71' LT	STORM SEWER	YES	50+11 - 51+65 58' RT (STH 75)	---	YES	NO	NO	120	
6	G51	GAS MAIN	UG	1005+18	50' LT	MONOTUBE BASE	YES	50+11 - 51+65 58' RT (STH 75)	---	YES	NO	NO	120	
6	G52	GAS MAIN 8"	UG	48+61 STH83	38' LT	STORM SEWER	YES	45+52-49+90 53'-141' RT STH 83	---	YES	NO	NO	120	
6	G53	GAS MAIN 8"	UG	48+71 STH83	38' LT	STORM SEWER	YES	45+52-49+90 53'-141' RT STH 83	---	YES	NO	NO	120	
6	G54	GAS MAIN 8"	UG	49+28 STH83	38' LT	STORM SEWER	YES	45+52-49+90 53'-141' RT STH 83	---	YES	NO	NO	120	
6	G55	GAS MAIN 8"	UG	50+86 - 51+21 STH75	44' LT - 55' LT	STORM SEWER	YES	50+11 - 51+65 58' RT (STH 75)	---	YES	NO	NO	120	
6	G65	GAS MAIN	UG	1005+14	60' LT	TRAFFIC SIGNAL PULLBOX	YES	50+11 - 51+65 58' RT (STH 75)	---	YES	NO	NO	120	
6	G66	GAS MAIN	UG	1005+95	87' LT	MONOTUBE BASE	YES	50+11 - 51+65 58' RT (STH 75)	---	YES	NO	NO	120	
6	G67	GAS MAIN	UG	49+12 STH83	38' LT	TRAFFIC SIGNAL PULLBOX	YES	45+52-49+90 53'-141' RT STH 83	---	YES	NO	NO	120	
6	G68	GAS MAIN	UG	49+29 STH83	38' LT	MONOTUBE BASE	YES	45+52-49+90 53'-141' RT STH 83	---	YES	NO	NO	120	
6	S2	SANITARY SEWER	UG	1002+95 - 1004+80	42' RT - 58' RT	GRADING	NO	---	---	NO	NO	NO	---	
6	S3	SANITARY MANHOLE	UG	1004+67	56' RT	GRADING	YES	---	ADJUST MH	NO	NO	NO	---	WITH PROJECT
6	S4	SANITARY MANHOLE	UG	1004+80	42' RT	GRADING	YES	---	ADJUST MH	NO	NO	NO	1	WITH PROJECT
6	S5	SANITARY SEWER	UG	1004+80	72' LT - 42' RT	GRADING	NO	---	---	NO	NO	NO	---	
6	S6	SANITARY MANHOLE	UG	1004+80	53' LT	GRADING	YES	---	RECON MH	NO	NO	NO	1	ROTATE CONE SO COVER IS BEHIND BACK OF CURB
6	S7	SANITARY SEWER	UG	1004+44-1007+50	51' LT-53' RT	GRADING	NO	---	---	NO	NO	NO	---	
6	S8	SANITARY MANHOLE	UG	1006+01	80' LT	GRADING	YES	---	ADJUST MH	NO	NO	NO	1	WITH PROJECT
6	S9	SANITARY SEWER	UG	1006+29	62' RT	STORM SEWER	NO	---	---	NO	NO	NO	---	

EXISTING UTILITY FACILITIES							RESOLUTION							
UTILITY DETAIL SHEET	CONFLICT ID	FACILITY TYPE	LOCATION	EXISTING FACILITIES (STA)	OFFSET (LT/RT)	IN CONFLICT WITH:	CONFLICT ANTICIPATED (YES/NO)	RELOCATION		DISCONTINUTED		COORDINATE WITH OTHER UTILITIES (YES/NO)	WORKING DAYS TO PERFORM	ADDITIONAL INFORMATION
								PRIOR TO CONSTRUCTION (STA/OFFSET)	DURING CONSTRUCTION (STA/OFFSET)	IN-PLACE (YES/NO)	HAZ MAT (YES/NO)			
6	S10	SANITARY MANHOLE	UG	1006+45	51' LT	GRADING	YES	---	ADJUST MH	NO	NO	NO	---	WITH PROJECT
6	S11	SANITARY SEWER	UG	1004+88	46' RT	STORM SEWER	NO	---	---	NO	NO	NO	---	
6	S12	SANITARY SEWER	UG	1004+80 - 1005+20	42' RT - 66' RT	GRADING	NO	---	---	NO	NO	NO	---	
6	S64	SANITARY SEWER	UG	1005+93 - 1006+45	51' LT - 109' LT	GRADING	NO	---	---	NO	NO	NO	---	
6	S67	SANITARY SEWER	UG	1005+17	53' LT	MONOTUBE BASE	NO	---	---	NO	NO	NO	---	HYDROEXCAVATE FOR BASE
6	W1	WATER MAIN	UG	1006+73-1006+80	81' RT-111' RT	GRADING	NO	---	---	NO	NO	NO	---	
6	W2	WATER MAIN	UG	1007+19	76 ' RT	STORM SEWER	NO	---	---	NO	NO	NO	---	ADD INSULATION
6	W3	WATER MAIN	UG	1008+21	46' RT	STORM SEWER	NO	---	---	NO	NO	NO	---	ADD INSULATION
6	W4	WATER VALVE	UG	1006+72	81' RT	GRADING	YES	---	ADJUST VALVE	NO	NO	NO	1	WITH PROJECT
6	W5	WATER VALVE	UG	1006+75	115' RT	GRADING	NO	---	---	NO	NO	NO	---	
6	W6	FIRE HYDRANT	UG	1006+76	115' RT	GRADING	NO	---	---	NO	NO	NO	---	MOVED AFTER SURVEY
6	W7	WATER VALVE	UG	1006+79	80' RT	GRADING	YES	---	ADJUST VALVE	NO	NO	NO	1	WITH PROJECT
6	W8	WATER VALVE	UG	1006+80	111' RT	GRADING	YES	---	ADJUST VALVE	NO	NO	NO	1	WITH PROJECT
6	W9	WATER VALVE	UG	1006+80	113' RT	GRADING	NO	---	---	NO	NO	NO	---	REMOVED IN 2019
6	W10	WATER VALVE	UG	1006+84	113' RT	GRADING	NO	---	---	NO	NO	NO	---	REMOVED IN 2019
6	W11	FIRE HYDRANT	UG	1006+86	113' RT	GRADING / CLEAR ZONE	NO	---	---	NO	NO	NO	---	
6	W12	WATER MAIN	UG	1006+80 -1008+68	46' RT-111' RT	GRADING	NO	---	---	NO	NO	NO	---	
6	W117	WATER MAIN	UG	1006+65	65' RT	STORM SEWER	NO	---	---	NO	NO	NO	---	ADD INSULATION
6	W118	WATER MAIN	UG	1006+16	61' LT	STORM SEWER	NO	---	---	NO	NO	NO	---	ADD INSULATION

UTILITY OWNER (FACILITY)	SYMBOL	ID
AT&T WISCONSIN (COMMUNICATIONS)	T	A
ATC (ELECTRIC)	E	ATC
SPECTRUM (COMMUNICATIONS)	TV	C
FRONTIER (COMMUNICATIONS)	T	F
MIDWEST FIBER NETWORKS (COMMUNICATIONS)	FO	M
WE ENERGIES ELECTRIC	E	E
WE ENERGIES GAS	G	G
PADDOCK LAKE SANITARY	SAN	S
PADDOCK LAKE WATER	W	W
SALEM LAKE SANITARY	SAN	SL

N

STA 1009+00

STA 1015+00

MATCHLINE

MATCHLINE

R/W

TLE

SLOPE INTERCEPT

STH 50

1010+00

1012+00

1013+00

1014+00

TILE

POST

POWER POLE NOT FIELD VERIFIED

SHEET 10 OF 40

2

PROJECT NO: 1310-04-70	HWY: STH 50	COUNTY: KENOSHA	UTILITY PLAN	SHEET 214	E

FILE NAME : T:\1182708.06\CIVIL3D\13100400\13100400\SHEETSPLAN\023001_UP.DWG
LAYOUT NAME - 04
PLOT DATE : 1/26/2022 11:10 PM
PLOT BY : BLACKWOOD, JIM
PLOT NAME :
PLOT SCALE : 1 IN:40 FT
WISDOT/CADDS SHEET 42

EXISTING UTILITY FACILITIES							RESOLUTION							
UTILITY DETAIL SHEET	CONFLICT ID	FACILITY TYPE	LOCATION	EXISTING FACILITIES (STA)	OFFSET (LT/RT)	IN CONFLICT WITH:	CONFLICT ANTICIPATED (YES/NO)	RELOCATION		DISCONTINUTED		COORDINATE WITH OTHER UTILITIES (YES/NO)	WORKING DAYS TO PERFORM	ADDITIONAL INFORMATION
								PRIOR TO CONSTRUCTION (STA/OFFSET)	DURING CONSTRUCTION (STA/OFFSET)	IN-PLACE (YES/NO)	HAZ MAT (YES/NO)			
10	A1	COMMUNICATIONS LINE	UG	998+65 - 1059+11	33' RT - 89' RT	GRADING	YES	998+65 - 1060+82 25' -89' RT	---	YES	NO	NO	60	
10	A6	COMMUNICATIONS LINE	UG	1011+26	42' RT	STORM SEWER	YES	998+65 - 1060+82 25' -89' RT	---	YES	NO	NO	60	
10	A7	COMMUNICATIONS LINE	UG	1013+23	40' RT	STORM SEWER	YES	998+65 - 1060+82 25' -89' RT	---	YES	NO	NO	60	
10	C1	COMUNICATION LINE	OH	994+20 - 1068+11	38' LT - 63' LT	GRADING	YES	994+20 - 1068+11 39'-63' LT	---	NO	NO	YES	100	
10	C9	COMMUNICATIONS LINE	UG	1011+08 - 1011+13,	44' LT - 79' LT	STORM SEWER	NO	---	---	NO	NO	NO	---	CHARTER REQUESTS TO BE PRESENT DURING EXCAVATION WILL ADJUST IF NEDDED
10	C10	COMMUNICATIONS LINE	UG	1014+79 - 1014+82	41' LT - 52' LT	GRADING	NO	---	---	NO	NO	NO	---	
10	F3	COMUNICATION LINE	OH	994+20 - 1068+11	38' LT - 63' LT	GRADING	YES	994+20 - 1068+11 39'-63' LT	---	NO	NO	YES	100	
10	F16	COMUNICATION LINE	UG	1010+11	44' LT - 47' LT	GRADING	YES	1010+11 - 1010+15 44' LT	---	NO	NO	NO	100	
10	F17	COMUNICATION LINE	UG	1011+84 - 1011+88	43' LT - 47' LT	GRADING	YES	1011+84 - 1011+89 44'-48' LT	---	NO	NO	NO	100	
10	F18	COMUNICATION LINE	UG	1014+75 - 1014+83	41' LT - 51' LT	GRADING	YES	1014+79 - 1014+83 40'-41' LT	---	NO	NO	NO	100	
10	M1	COMUNICATION LINE	OH	994+20 - 1068+11	38' LT - 63' LT	GRADING	YES	994+20 - 1068+11 39'-63' LT	---	NO	NO	YES	90	
10	E1	ELECTRIC SERVICE	OH	994+20 - 1068+11	38' LT - 63' LT	GRADING	YES	994+20 - 1068+11 39'-63' LT	---	NO	NO	YES	150	
10	E32	POWER POLE	OH	1010+12	44' LT	GRADING	YES	1010+15, 44' LT	---	NO	NO	YES	150	
10	E33	ELECTRIC SERVICE	UG	1010+12	44' LT - 48' LT	GRADING	YES	1010+12-1010+15 44'-48' LT	---	NO	NO	NO	150	
10	E34	POWER POLE	OH	1011+08	44' LT	GRADING	YES	1011+06, 44' LT	---	NO	NO	YES	150	
10	E37	ELECTRIC SERVICE	UG	1010+00 - 1010+81	43' RT - 47' LT	GRADING	YES	DISCONTINUE	---	NO	NO	NO	150	
10	E38	POWER POLE	OH	1011+88	43' LT	GRADING	YES	1011+89, 45' LT	---	NO	NO	YES	150	
10	E39	ELECTRIC PEDESTAL	UG	1011+92	45' LT	GRADING	YES	---	ADJUST PED	NO	NO	NO	150	
10	E40	ELECTRIC SERVICE	UG	1011+88 - 1011+92	44' LT - 47' LT	GRADING	YES	1011+88 - 1011+92 44' -47' LT	---	NO	NO	NO	150	
10	E41	POWER POLE	OH	1013+83	41' LT	GRADING / CLEAR ZONE	YES	1014+14, 41' LT	---	NO	NO	YES	150	
10	E42	POWER POLE	OH	1014+82	41' LT	GRADING / CLEAR ZONE	YES	1014+79, 41' LT	---	NO	NO	YES	150	
10	E43	ELECTRIC SERVICE	UG	1014+68 - 1014+82	41' LT - 51' LT	GRADING	YES	1014+78 - 1014+82 41' LT-60' RT	---	NO	NO	NO	150	
10	E44	ELECTRIC SERVICE	UG	1014+78 - 1014+82	41' LT - 50' RT	GRADING	YES	1014+78 - 1014+82 41' LT-60' RT	---	NO	NO	NO	150	
10	E45	ELECTRIC SERVICE	UG	1014+78	27' RT	STORM SEWER	YES	1014+78 - 1014+82 41' LT-60' RT	---	NO	NO	NO	150	
10	E46	POWER POLE	OH	1013+36	41' RT	GRADING	YES	1013+42, 42' RT	---	NO	NO	YES	150	
10	E47	ELECTRIC SERVICE	OH	1013+36 - 1013+83	41' LT - 41' RT	GRADING	YES	1013+42 - 1014+14 42' RT-41' LT	---	NO	NO	NO	150	
10	E48	ELECTRIC SERVICE	OH	1014+82 - 1015+01	40' LT - 38' RT	GRADING	YES	1014+80 - 1015+02 41' LT-42' RT	---	NO	NO	NO	150	
10	E121	GUY WIRE / ANCHOR	OH	1011+73	43' LT	GRADING	YES	REMOVE GUY	---	NO	NO	YES	150	

2

EXISTING UTILITY FACILITIES							RESOLUTION							
UTILITY DETAIL SHEET	CONFLICT ID	FACILITY TYPE	LOCATION	EXISTING FACILITIES (STA)	OFFSET (LT/RT)	IN CONFLICT WITH:	CONFLICT ANTICIPATED (YES/NO)	RELOCATION		DISCONTINUTED		COORDINATE WITH OTHER UTILITIES (YES/NO)	WORKING DAYS TO PERFORM	ADDITIONAL INFORMATION
								PRIOR TO CONSTRUCTION (STA/OFFSET)	DURING CONSTRUCTION (STA/OFFSET)	IN-PLACE (YES/NO)	HAZ MAT (YES/NO)			
10	G9	GAS MAIN 8"	UG	1011+06	72' LT	STORM SEWER	YES	994+20 - 1068+21 15'-44' LT	---	YES	NO	NO	120	PROPOSED MAIN IS 12" STEEL
10	G10	GAS MAIN 8"	UG	1012+63 - 1060+50	34' LT - 69' LT	GRADING	YES	994+20 - 1068+21 15'-44' LT	---	YES	NO	NO	120	PROPOSED MAIN IS 12" STEEL
10	G11	GAS LATERAL 2"	UG	1014+29	38' LT - 49' LT	GRADING	YES	1014+30 - 1014+32 18' LT-53' LT	---	YES	NO	NO	120	
10	S13	SANITARY SEWER	UG	1009+88 - 1032+18	21' LT - 48' LT	GRADING	NO	---	---	NO	NO	NO	---	
10	S14	SANITARY SEWER	UG	1011+17	44' LT	STORM SEWER	NO	---	---	NO	NO	NO	---	
10	S15	MANHOLE	UG	1012+22	41' LT	GRADING	YES	---	ADJUST MH	NO	NO	NO	1	WITH PROJECT
10	S65	SANITARY SEWER	UG	1013+91	32' LT	STORM SEWER	NO	---	---	NO	NO	NO	---	
10	W13	WATER MAIN	UG	1011+11 - 1059+63	42' RT - 48' RT	GRADING	NO	---	---	NO	NO	NO	---	
10	W14	WATER MAIN	UG	1011+26	46' RT	STORM SEWER	NO	---	---	NO	NO	NO	---	
10	W15	HYDRANT	UG	1012+72	42' RT	GRADING	NO	---	---	NO	NO	NO	---	
10	W16	WATER MAIN	UG	1013+17	45' Rt	STORM SEWER	NO	---	---	NO	NO	NO	---	
10	W17	WATER VALVE	UG	1014+52	39' RT	GRADING	YES	---	ADJUST VALVE	NO	NO	NO	1	WITH PROJECT
10	W18	WATER VALVE	UG	1014+56	44' RT	GRADING	YES	---	ADJUST VALVE	NO	NO	NO	1	WITH PROJECT
10	W34	WATER VALVE	UG	1012+72	43' LT	GRADING	YES	---	ADJUST VALVE	NO	NO	NO	1	WITH PROJECT

2

UTILITY OWNER (FACILITY)	SYMBOL	ID
AT&T WISCONSIN (COMMUNICATIONS)	T	A
ATC (ELECTRIC)	E	ATC
SPECTRUM (COMMUNICATIONS)	T	C
FRONTIER (COMMUNICATIONS)	T	F
MIDWEST FIBER NETWORKS (COMMUNICATIONS)	FO	M
WE ENERGIES ELECTRIC	E	E
WE ENERGIES GAS	G	G
PADDOCK LAKE SANITARY	SAN	S
PADDOCK LAKE WATER	W	W
SALEM LAKE SANITARY	SAN	SL

N

STA 1015+00

STA 1021+00

MATCHLINE

MATCHLINE

250TH AVE

FRONTIER DRIVEWAY

FRONTIER COMMUNICATIONS SHED

SLOPE INTERCEPT

SLOPE INTERCEPT

R/W

TLE

MH NOT SURVEYED

STH 50

1016+00

1017+00

1018+00

1019+00

1020+00

SHEET 13 OF 40

PROJECT NO: 1310-04-70	HWY: STH 50	COUNTY: KENOSHA	UTILITY PLAN	SHEET 217	E

FILE NAME : T:\1182708.06\CIVIL3D\13100400\13100400\SHEETSPLAN\023001_UP.DWG
LAYOUT NAME - 05

PLOT DATE : 1/26/2022 11:11 PM PLOT BY : BLACKWOOD, JIM PLOT NAME : PLOT SCALE : 1 IN:40 FT

WISDOT/CADDS SHEET 42

2

EXISTING UTILITY FACILITIES							RESOLUTION							
UTILITY DETAIL SHEET	CONFLICT ID	FACILITY TYPE	LOCATION	EXISTING FACILITIES (STA)	OFFSET (LT/RT)	IN CONFLICT WITH:	CONFLICT ANTICIPATED (YES/NO)	RELOCATION		DISCONTINUTED		COORDINATE WITH OTHER UTILITIES (YES/NO)	WORKING DAYS TO PERFORM	ADDITIONAL INFORMATION
								PRIOR TO CONSTRUCTION (STA/OFFSET)	DURING CONSTRUCTION (STA/OFFSET)	IN-PLACE (YES/NO)	HAZ MAT (YES/NO)			
11	A1	COMMUNICATIONS LINE	UG	998+65 - 1059+11	33' RT - 89' RT	GRADING	YES	998+65 - 1060+82 25' -89' RT	---	YES	NO	NO	60	
11	C1	COMUNICATION LINE	OH	994+20 - 1068+11	38' LT - 63' LT	GRADING	YES	994+20 - 1068+11 39'-63' LT	---	NO	NO	YES	100	
11	F3	COMUNICATION LINE	OH	994+20 - 1068+11	38' LT - 63' LT	GRADING	YES	994+20 - 1068+11 39'-63' LT	---	NO	NO	YES	100	
11	F19	COMMUNICATIONS LINE	UG	1017+63 - 1017+72	39' LT - 51' LT	GRADING	YES	1017+72-1017+76 40'-56' LT	---	YES	NO	NO	100	
11	F20	COMMUNICATIONS LINE	UG	1017+75 - 1018+23	51' LT - 56' RT	GRADING	NO	---	---	NO	NO	NO	---	
11	F21	COMMUNICATIONS LINE	UG	1016+90 - 1017+43	55' RT - 56' RT	GRADING	NO	---	---	NO	NO	NO	---	
11	F22	COMMUNICATIONS LINE	UG	1017+75 - 1017+78	51' LT - 49' RT	GRADING	NO	---	---	NO	NO	NO	---	
11	F23	COMMUNICATIONS LINE	UG	1019+90 - 1020+07	53' RT - 55' RT	GRADING	NO	---	---	NO	NO	NO	---	
11	F24	PEDESTAL	UG	1018+45	59' LT	GRADING	YES	---	ADJUST PED	NO	NO	NO	100	
11	F25	COMMUNICATIONS MANHOLE	UG	1018+35	50' LT	GRADING	NO	---	---	NO	NO	NO	100	GRADE ONTO VAULT TOP
11	F27	COMMUNICATIONS LINE	UG	1018+35 - 1018+51	38' LT - 55' LT	GRADING	NO	---	---	NO	NO	NO	---	
11	M1	COMUNICATION LINE	OH	994+20 - 1068+11	38' LT - 63' LT	GRADING	YES	994+20 - 1068+11 39'-63' LT	---	NO	NO	YES	90	
11	E1	ELECTRIC SERVICE	OH	994+20 - 1068+11	38' LT - 63' LT	GRADING	YES	994+20 - 1068+11 39'-63' LT	---	NO	NO	YES	150	
11	E36	ELECTRIC SERVICE	OH	1018+48- 1018+51	38' LT - 61' LT	GRADING	YES	1018+49, 39'-65' LT	---	NO	NO	NO	150	
11	E49	POWER POLE	OH	1015+01	38' RT	GRADING	YES	1015+02, 42' RT	---	NO	NO	NO	150	
11	E50	POWER POLE	OH	1015+88	40' LT	GRADING / CLEAR ZONE	YES	1016+00, 42' LT	---	NO	NO	YES	150	
11	E51	POWER POLE	OH	1016+84	39' LT	GRADING	YES	1016+75, 41' LT	---	NO	NO	YES	150	
11	E52	POWER POLE	OH	1017+63	39' LT	GRADING / CLEAR ZONE	YES	1017+72, 40' LT	---	NO	NO	YES	150	
11	E53	POWER POLE	OH	1018+51	38' LT	GRADING	YES	1018+49, 39' LT	---	NO	NO	YES	150	
11	E54	POWER POLE	OH	1019+40	39' LT	GRADING	YES	1019+38, 39' LT	---	NO	NO	YES	150	
11	E55	POWER POLE	OH	1016+65	37' RT	GRADING	YES	1016+65, 41' RT	---	NO	NO	NO	150	
11	E56	POWER POLE	OH	1018+43	38' RT	GRADING	YES	1018+44, 39' RT	---	NO	NO	NO	150	
11	E57	POWER POLE	OH	1020+09	38' RT	GRADING	YES	1020+08, 39' RT	---	NO	NO	NO	150	
11	E58	ELECTRIC SERVICE	OH	1016+65 - 1016+84	39' LT - 37' RT	GRADING	YES	1016+65 - 1016+75 41' RT-41' LT	---	NO	NO	NO	150	
11	E59	ELECTRIC SERVICE	OH	1017+63 - 1018+43	39' LT - 38' RT	GRADING	YES	1017+72 - 1018+44 40' LT-39' RT	---	NO	NO	NO	150	
11	E60	ELECTRIC SERVICE	OH	1019+40 - 1019+56	39' LT - 50' RT	GRADING	YES	1019+38 - 1019+61 39' LT-76' RT	---	NO	NO	NO	150	
11	E62	ELECTRIC SERVICE	UG	1018+51 - 1018+52	38' LT - 61' LT	GRADING	YES	1018+51 - 1018+52 38' LT-61' LT	---	NO	NO	NO	150	
11	E122	GUY WIRE / ANCHOR	OH	1016+66	39' LT	GRADING / CLEAR ZONE	YES	REMOVE GUY	---	NO	NO	YES	150	
11	E123	GUY WIRE / ANCHOR	OH	1019+40	48' LT	GRADING	YES	1019+35, 52' LT	---	NO	NO	YES	150	

EXISTING UTILITY FACILITIES							RESOLUTION							
UTILITY DETAIL SHEET	CONFLICT ID	FACILITY TYPE	LOCATION	EXISTING FACILITIES (STA)	OFFSET (LT/RT)	IN CONFLICT WITH:	CONFLICT ANTICIPATED (YES/NO)	RELOCATION		DISCONTINUTED		COORDINATE WITH OTHER UTILITIES (YES/NO)	WORKING DAYS TO PERFORM	ADDITIONAL INFORMATION
								PRIOR TO CONSTRUCTION (STA/OFFSET)	DURING CONSTRUCTION (STA/OFFSET)	IN-PLACE (YES/NO)	HAZ MAT (YES/NO)			
11	G10	GAS MAIN 8"	UG	1012+63 - 1060+50	34' LT - 69' LT	GRADING	YES	994+20 - 1068+21 15'-44' LT	---	YES	NO	NO	120	PROPOSED MAIN IS 12" STEEL
11	G12	GAS MAIN	UG	1016+91	27' RT	STORM SEWER	YES	994+20 - 1068+21 15'-44' LT	---	YES	NO	NO	120	PROPOSED MAIN IS 12" STEEL
11	G13	GAS MAIN	UG	1016+90 - 1016+94	47' LT - 58' RT	GRADING	YES	1019+75 15' LT-49' RT	---	YES	NO	NO	120	
11	G56	GAS MAIN	UG	1016+96	47' LT	STORM SEWER	YES	994+20 - 1068+21 15'-44' LT	---	YES	NO	NO	120	PROPOSED MAIN IS 12" STEEL
11	S13	SANITARY SEWER	UG	1009+88 - 1032+18	21' LT - 48' LT	GRADING	NO	---	---	NO	NO	NO	---	
11	S16	SANITARY SEWER	UG	1017+08	63' LT	STORM SEWER	NO	---	---	NO	NO	NO	---	
11	S17	SANITARY MANHOLE	UG	1019+51	28' LT	GRADING	YES	---	RECON MH	NO	NO	NO	1	WITH PROJECT
11	S18	SANITARY SEWER	UG	1019+51 - 1019+63	21' LT - 49' RT	GRADING	NO	---	---	NO	NO	NO	---	
11	S19	SANITARY MANHOLE	UG	1019+63	35' RT	GRADING	NO	---	---	NO	NO	NO	---	
11	S20	SANITARY MANHOLE	UG	1015+74	21' LT	GRADING	YES	---	RECON MH	NO	NO	NO	1	ROTATE CONE SO COVER IN GUTTER
11	S21	SANITARY SEWER	UG	1017+08	23' LT - 63' LT	GRADING	NO	---	---	NO	NO	NO	---	
11	S66	SANITARY SEWER	UG	1020+25	27' LT	STORM SEWER	NO	---	---	NO	NO	NO	---	
11	S68	SANITARY MANHOLE	UG	1018+00	37' LT	GRADING	YES	---	RECON MH	NO	NO	NO	1	ROTATE CONE SO BEHIND PROPOSED CURB
11	W13	WATER MAIN	UG	1011+11 - 1059+63	42' RT - 48' RT	GRADING	NO	---	---	NO	NO	NO	---	
11	W19	WATER VALVE	UG	1015+78	49' RT	GRADING	YES	---	ADJUST	NO	NO	NO	1	WITH PROJECT
11	W20	HYDRANT	UG	1018+68	39' RT	GRADING	NO	---	---	NO	NO	NO	---	
11	W21	WATER VALVE	UG	1018+70	39' RT	GRADING	NO	---	---	NO	NO	NO	---	

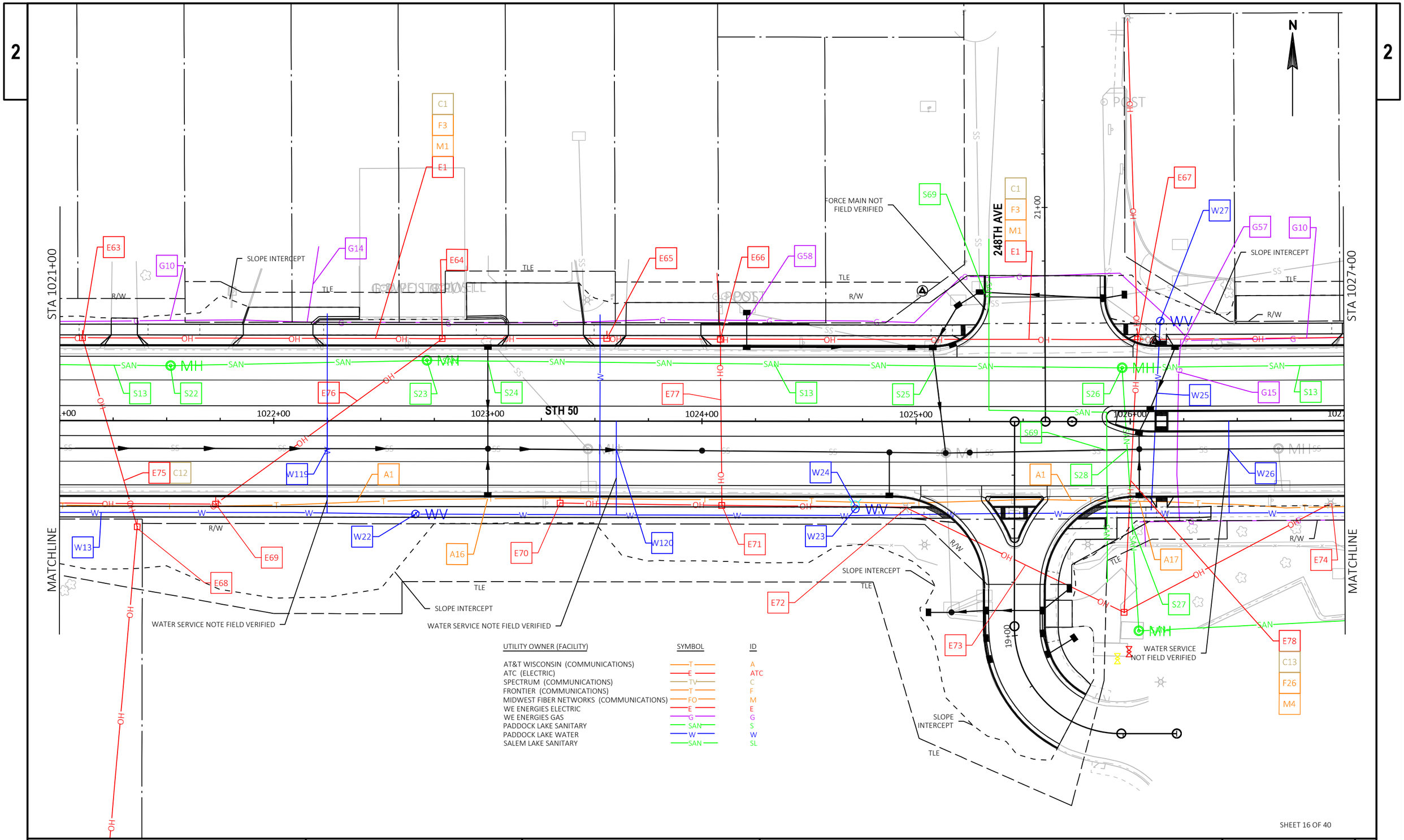

PROJECT NO: 1310-04-70	HWY: STH 50	COUNTY: KENOSHA	UTILITY PLAN	SHEET 220	E

FILE NAME : T:\1182708.06\CIVIL3D\13100400\13100400\SHEETSPLAN\023001_UP.DWG
LAYOUT NAME - 06

PLOT DATE : 1/26/2022 11:11 PM PLOT BY : BLACKWOOD, JIM PLOT NAME : PLOT SCALE : 1 IN:40 FT

WISDOT/CADDS SHEET 42

EXISTING UTILITY FACILITIES							RESOLUTION							
UTILITY DETAIL SHEET	CONFLICT ID	FACILITY TYPE	LOCATION	EXISTING FACILITIES (STA)	OFFSET (LT/RT)	IN CONFLICT WITH:	CONFLICT ANTICIPATED (YES/NO)	RELOCATION		DISCONTINUTED		COORDINATE WITH OTHER UTILITIES (YES/NO)	WORKING DAYS TO PERFORM	ADDITIONAL INFORMATION
								PRIOR TO CONSTRUCTION (STA/OFFSET)	DURING CONSTRUCTION (STA/OFFSET)	IN-PLACE (YES/NO)	HAZ MAT (YES/NO)			
16	A1	COMMUNICATIONS LINE	UG	998+65 - 1059+11	33' RT - 89' RT	GRADING	YES	998+65 - 1060+82 25' -89' RT	---	YES	NO	NO	60	
16	A16	COMMUNICATIONS LINE	UG	1022+00	36' RT	STORM SEWER	YES	998+65 - 1060+82 25' -89' RT	---	YES	NO	NO	60	
16	A17	COMMUNICATIONS LINE	UG	1026+04	37' RT	STORM SEWER	YES	998+65 - 1060+82 25' -89' RT	---	YES	NO	NO	60	
16	C1	COMUNICATION LINE	OH	994+20 - 1068+11	38' LT - 63' LT	GRADING	YES	994+20 - 1068+11 39'-63' LT	---	NO	NO	YES	100	
16	C12	COMMUNICATIONS LINE	OH	1021+11 - 1021+36	39' LT - 69' RT	GRADING	YES	1021+09 - 1021+36 39' LT-50' RT	---	YES	NO	NO	100	
16	C13	COMMUNICATIONS LINE	OH	1025+99 - 1026+04	66' LT - 50' RT	GRADING	YES	1025+97 - 1026+05 89' RT-40' LT	---	NO	NO	YES	100	
16	F3	COMUNICATION LINE	OH	994+20 - 1068+11	38' LT - 63' LT	GRADING	YES	994+20 - 1068+11 39'-63' LT	---	NO	NO	YES	100	
16	F26	COMMUNICATIONS LINE	OH	1025+99 - 1026+04	66' LT - 50' RT	GRADING	YES	1025+97 - 1026+05 89' RT-40' LT	---	NO	NO	YES	100	
16	F92	HANDHOLE	UG	1026+07	38' LT	GRADING	YES	---	ADJUST PED	NO	NO	NO	100	
16	M1	COMUNICATION LINE	OH	994+20 - 1068+11	38' LT - 63' LT	GRADING	YES	994+20 - 1068+11 39'-63' LT	---	NO	NO	YES	90	
16	M4	COMMUNICATIONS LINE	OH	1025+99 - 1026+04	66' LT - 50' RT	GRADING	YES	1025+97 - 1026+05 89' RT-40' LT	---	NO	NO	YES	100	
16	E1	ELECTRIC SERVICE	OH	994+20 - 1068+11	38' LT - 63' LT	GRADING	YES	994+20 - 1068+11 39'-63' LT	---	NO	NO	YES	150	
16	E63	POWER POLE	OH	1021+11	39' LT	GRADING	YES	1021+09, 39' LT	---	NO	NO	YES	150	
16	E64	POWER POLE	OH	1022+79	38' LT	GRADING	YES	1022+39, 39' LT	---	NO	NO	YES	150	
16	E65	POWER POLE	OH	1023+56	39' LT	GRADING	YES	1023+54, 39' LT	---	NO	NO	YES	150	
16	E66	POWER POLE	OH	1024+08	38' LT	GRADING	YES	1024+10, 39' LT	---	NO	NO	YES	150	
16	E67	POWER POLE	OH	1026+04	38' LT	GRADING / CLEAR ZONE	YES	1026+04, 40' LT	---	NO	NO	YES	150	
16	E68	POWER POLE	OH	1021+36	50' RT	GRADING	NO	---	---	NO	NO	YES	---	POLE SOLD TO CHARTER
16	E69	POWER POLE	OH	1021+73	39' RT	GRADING	YES	1021+71, 39' RT	---	NO	NO	NO	150	
16	E70	POWER POLE	OH	1023+34	38' RT	GRADING	YES	1023+36, 39' RT	---	NO	NO	NO	150	
16	E71	POWER POLE	OH	1024+09	39' RT	GRADING	YES	REMOVE POLE	---	NO	NO	YES	150	
16	E72	POWER POLE	OH	1024+95	40' RT	GRADING	YES	1024+93, 40' RT	---	NO	NO	NO	150	
16	E73	ELECTRIC SERVICE	OH	1024+95 - 1025+74	40' RT - 78' RT	GRADING	YES	1024+93 - 1025+74 40' RT-78' RT	---	NO	NO	NO	150	
16	E74	POWER POLE	OH	1026+93	39' RT	GRADING	YES	1026+91, 39' RT	---	NO	NO	NO	150	
16	E75	ELECTRIC SERVICE	OH	1021+11 - 1021+36	39' LT - 69' RT	GRADING	YES	REMOVE LINE	---	NO	NO	YES	150	CHARTER JOINT USE TO REMAIN
16	E76	ELECTRIC SERVICE	OH	1021+73 - 1022+79	38' LT - 39' RT	GRADING	YES	1021+71 - 1022+38 39' LT-39' RT	---	NO	NO	NO	150	
16	E77	ELECTRIC SERVICE	OH	1024+09	38' LT - 39' RT	GRADING	YES	REMOVE LINE	---	NO	NO	YES	150	
16	E78	ELECTRIC SERVICE	OH	1025+99 - 1026+04	66' LT - 50' RT	GRADING	YES	1025+97 - 1026+05 89' RT-40' LT	---	NO	NO	YES	100	
16	G10	GAS MAIN 8"	UG	1012+63 - 1060+50	34' LT - 69' LT	GRADING	YES	994+20 - 1068+21 15'-44' LT	---	YES	NO	NO	120	PROPOSED MAIN IS 12" STEEL
16	G14	GAS LATERAL	UG	1022+16 - 1022+17	46' LT - 53' LT	GRADING	YES	1022+17, 15'-46' LT	---	YES	NO	NO	120	
16	G15	GAS LATERAL	UG	1026+22 - 1026+24	38' LT - 46' RT	GRADING	YES	DISCONTINUE	---	YES	NO	NO	120	
16	G57	GAS LATERAL	UG	1026+24	35' LT	STORM SEWER	YES	994+20 - 1068+21 15'-44' LT	---	YES	NO	NO	120	PROPOSED MAIN IS 12" STEEL
16	G58	GAS MAIN	UG	1024+21	47' LT	STORM SEWER	YES	994+20 - 1068+21 15'-44' LT	---	YES	NO	NO	120	PROPOSED MAIN IS 12" STEEL

2

EXISTING UTILITY FACILITIES							RESOLUTION							
UTILITY DETAIL SHEET	CONFLICT ID	FACILITY TYPE	LOCATION	EXISTING FACILITIES (STA)	OFFSET (LT/RT)	IN CONFLICT WITH:	CONFLICT ANTICIPATED (YES/NO)	RELOCATION		DISCONTINUTED		COORDINATE WITH OTHER UTILITIES (YES/NO)	WORKING DAYS TO PERFORM	ADDITIONAL INFORMATION
								PRIOR TO CONSTRUCTION (STA/OFFSET)	DURING CONSTRUCTION (STA/OFFSET)	IN-PLACE (YES/NO)	HAZ MAT (YES/NO)			
16	S13	SANITARY SEWER	UG	1009+88 - 1032+18	21' LT - 48' LT	GRADING	NO	---	---	NO	NO	NO	---	
16	S22	SANITARY MANHOLE	UG	1021+52	26' LT	GRADING	YES	---	RECON MH	NO	NO	NO	1	WITH PROJECT
16	S23	SANITARY MANHOLE	UG	1022+72	28' LT	GRADING	YES	---	ADJUST MH	NO	NO	NO	1	WITH PROJECT
16	S24	SANITARY SEWER	UG	1023+00	28' LT	STORM SEWER	NO	---	---	NO	NO	NO	---	
16	S25	SANITARY SEWER	UG	1025+09	26' LT	STORM SEWER	NO	---	---	NO	NO	NO	---	
16	S26	SANITARY MANHOLE	UG	1025+96	25' LT	GRADING	YES	---	RECON MH	NO	NO	NO	1	WITH PROJECT
16	S27	SANITARY SEWER	UG	1025+96 - 1026+01	25' LT - 48' RT	GRADING	NO	---	---	NO	NO	NO	---	
16	S28	SANITARY SEWER	UG	1025+99	13' RT	STORM SEWER	NO	---	---	NO	NO	NO	---	
16	S69	SANITARY FORCE MAIN	UG	1025+32	60' LT	STORM SEWER	NO	---	---	NO	NO	NO	---	
16	S70	SANITARY FORCE MAIN	UG	1025+89	13' RT	STORM SEWER	NO	---	---	NO	NO	NO	---	
16	W13	WATER MAIN	UG	1011+11 - 1059+63	42' RT - 48' RT	GRADING	NO	---	---	NO	NO	NO	---	
16	W22	WATER VALVE	UG	1022+66	44' RT	GRADING	YES	---	ADJUST VALVE	NO	NO	NO	---	WITH PROJECT
16	W23	WATER VALVE	UG	1024+72	41' RT	GRADING	YES	---	SAME LOCATION	NO	NO	NO	1	BOX EXTENSION & ADJUST TO FINAL GRADE
16	W24	HYDRANT	UG	1024+71	39' RT	GRADING	YES	---	SAME LOCATION	NO	NO	NO	1	VERTICAL EXTENSION WITH PROJECT
16	W25	WATER SERVICE	UG	1026+12	13' LT	STORM SEWER	NO	---	---	NO	NO	NO	----	
16	W26	WATER SERVICE	UG	1026+10	12' RT	STORM SEWER	NO	---	---	NO	NO	NO	---	ADD INSULATION
16	W27	WATER VALVE	UG	1026+14	47' LT	GRADING	YES	---	ADJUST VALVE	NO	NO	NO	---	WITH PROJECT
16	W119	WATER SERVICE	UG	1022+25	13' RT	STORM SEWER	NO	---	---	NO	NO	NO	---	ADD INSULATION
16	W120	WATER SERVICE	UG	1023+60	13' RT	STORM SEWER	NO	---	---	NO	NO	NO	---	ADD INSULATION

2

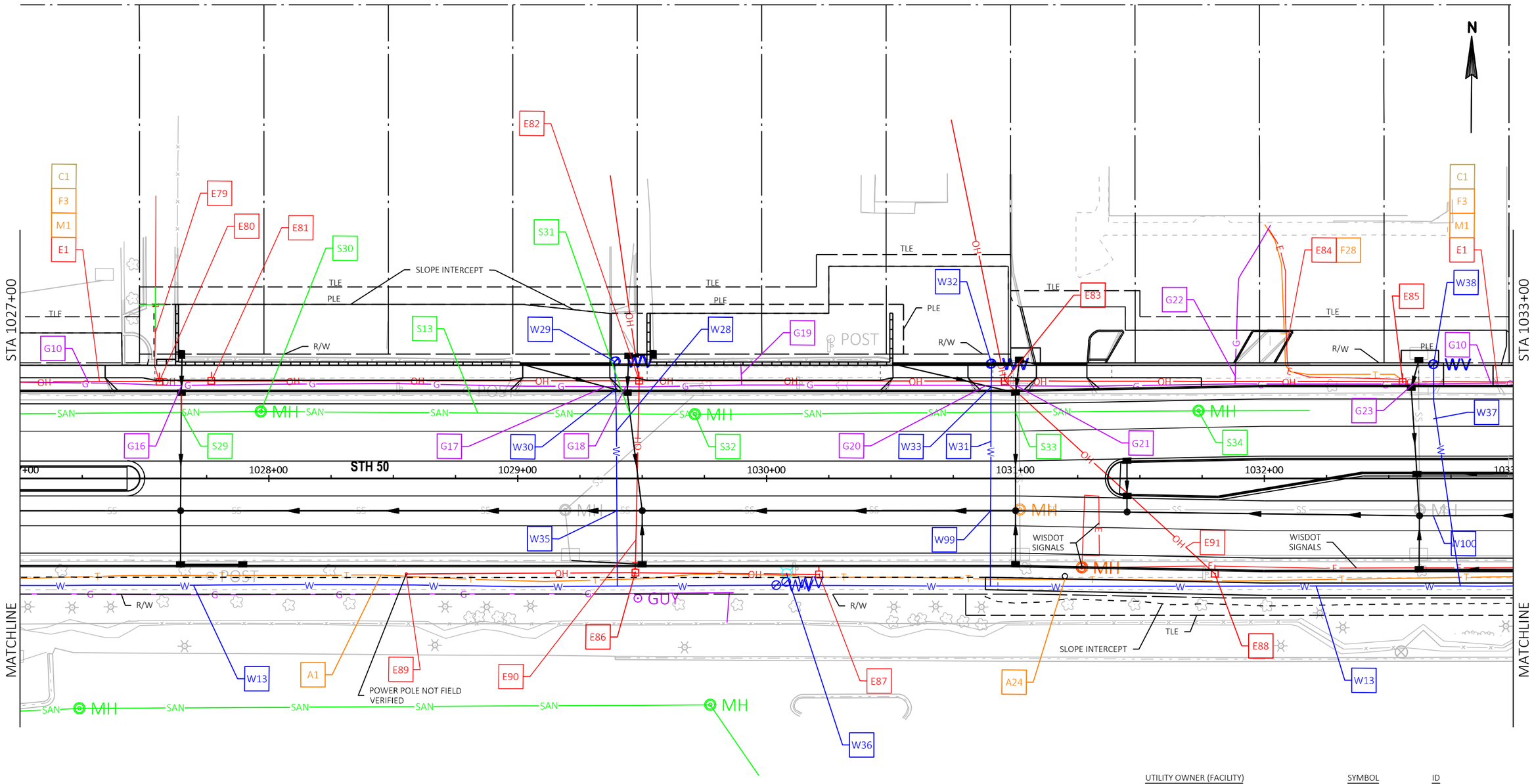

UTILITY OWNER (FACILITY)	SYMBOL	ID
AT&T WISCONSIN (COMMUNICATIONS)	T	A
ATC (ELECTRIC)	E	ATC
SPECTRUM (COMMUNICATIONS)	TV	C
FRONTIER (COMMUNICATIONS)	T	F
MIDWEST FIBER NETWORKS (COMMUNICATIONS)	FO	M
WE ENERGIES ELECTRIC	E	E
WE ENERGIES GAS	G	G
PADDOCK LAKE SANITARY	SAN	S
PADDOCK LAKE WATER	W	W
SALEM LAKE SANITARY	SAN	SL

NOTE: WISDOT SIGNAL EQUIPMENT SHOWN ON THIS SHEET TO BE REMOVED AND REPLACED AS PART OF ID 1310-04-70. SEE TRAFFIC SIGNAL PLANS FOR ADDITIONAL INFORMATION.

PROJECT NO: 1310-04-70	HWY: STH 50	COUNTY: KENOSHA	UTILITY PLAN	SHEET 223	E

FILE NAME : T:\1182708.06\CIVIL3D\13100400\13100400\SHEETSPLAN\023001_UP.DWG
LAYOUT NAME - 07
PLOT DATE : 1/26/2022 11:12 PM
PLOT BY : BLACKWOOD, JIM
PLOT NAME :
PLOT SCALE : 1 IN:40 FT
WISDOT/CADDS SHEET 42

EXISTING UTILITY FACILITIES							RESOLUTION							
UTILITY DETAIL SHEET	CONFLICT ID	FACILITY TYPE	LOCATION	EXISTING FACILITIES (STA)	OFFSET (LT/RT)	IN CONFLICT WITH:	CONFLICT ANTICIPATED (YES/NO)	RELOCATION		DISCONTINUTED		COORDINATE WITH OTHER UTILITIES (YES/NO)	WORKING DAYS TO PERFORM	ADDITIONAL INFORMATION
								PRIOR TO CONSTRUCTION (STA/OFFSET)	DURING CONSTRUCTION (STA/OFFSET)	IN-PLACE (YES/NO)	HAZ MAT (YES/NO)			
19	A1	COMMUNICATIONS LINE	UG	998+65 - 1059+11	33' RT - 89' RT	GRADING	YES	998+65 - 1060+82 25' -89' RT	---	YES	NO	NO	60	
19	A24	COMMUNICATIONS LINE	UG	1031+20	41' RT	TRAFFIC SIGNAL PULLBOX	YES	998+65 - 1060+82 25' -89' RT	---	YES	NO	NO	60	
19	C1	COMUNICATION LINE	OH	994+20 - 1068+11	38' LT - 63' LT	GRADING	YES	994+20 - 1068+11 39'-63' LT	---	NO	NO	YES	100	
19	F3	COMUNICATION LINE	OH	994+20 - 1068+11	38' LT - 63' LT	GRADING	YES	994+20 - 1068+11 39'-63' LT	---	NO	NO	YES	100	
19	F28	COMMUNICATIONS LINE	UG	1032+09 - 1032+56	39' LT - 60' LT	GRADING	NO	---	---	NO	NO	NO	100	
19	M1	COMUNICATION LINE	OH	994+20 - 1068+11	38' LT - 63' LT	GRADING	YES	994+20 - 1068+11 39'-63' LT	---	NO	NO	YES	90	
19	E1	ELECTRIC SERVICE	OH	994+20 - 1068+11	38' LT - 63' LT	GRADING	YES	994+20 - 1068+11 39'-63' LT	---	NO	NO	YES	150	
19	E79	ELECTRIC SERVICE	UG	1027+54 - 1027+56	39' LT - 70' LT	GRADING	YES	1027+54-1027+56 39' LT-70' LT	---	NO	NO	NO	150	LOWER CABLES IN SAME LOCATION
19	E80	POWER POLE	OH	1027+56	39' LT	GRADING	YES	1027+54, 39' LT	---	NO	NO	YES	150	
19	E81	POWER POLE	OH	1027+77	39' LT	GRADING	YES	1027+73, 39' LT	---	NO	NO	YES	150	
19	E82	POWER POLE	OH	1029+49	39' LT	GRADING	YES	1029+56, 39' LT	---	NO	NO	YES	150	
19	E83	POWER POLE	OH	1030+96	39' LT	GRADING	YES	1030+94, 39' LT	---	NO	NO	YES	150	
19	E84	ELECTRIC SERVICE	UG	1032+09 - 1032+56	39' LT - 60' LT	GRADING	YES	DISCONTINUE	---	YES	NO	NO	150	
19	E85	POWER POLE	OH	1032+56	39' LT	GRADING / CLEAR ZONE	YES	1031+73, 40' LT	---	NO	NO	YES	150	
19	E86	POWER POLE	OH	1029+47	38' RT	GRADING	YES	1029+61, 39' RT	---	NO	NO	NO	150	
19	E87	POWER POLE	OH	1030+21	39' RT	GRADING	YES	1030+19, 39' RT	---	NO	NO	NO	150	
19	E88	POWER POLE	OH	1031+80	38' RT	GRADING / CLEAR ZONE	YES	1031+60, 39' RT	---	NO	NO	NO	150	
19	E89	POWER POLE	OH	1028+55	38' RT	GRADING	YES	1028+57, 39' RT	---	NO	NO	NO	150	
19	E90	ELECTRIC SERVICE	OH	1029+47 - 1029+49	39' RT - 39' LT	GRADING	YES	1029+56 - 1029+60 39' LT-39' RT	---	NO	NO	NO	150	
19	E91	ELECTRIC SERVICE	OH	1030+96 - 1031+80	39' LT - 38' RT	GRADING	YES	1030+94 - 1031+60 39' LT-39' RT	---	NO	NO	NO	150	
19	G10	GAS MAIN 8"	UG	1012+63 - 1060+50	34' LT - 69' LT	GRADING	YES	994+20 - 1068+21 15'-44' LT	---	YES	NO	NO	120	PROPOSED MAIN IS 12" STEEL
19	G16	GAS MAIN	UG	1027+65	37' LT	STORM SEWER	YES	994+20 - 1068+21 15'-44' LT	---	YES	NO	NO	120	
19	G17	GAS MAIN	UG	1029+35	37' LT	STORM SEWER	YES	994+20 - 1068+21 15'-44' LT	---	YES	NO	NO	120	
19	G18	GAS MAIN	UG	1029+43	37' LT	STORM SEWER	YES	994+20 - 1068+21 15'-44' LT	---	YES	NO	NO	120	
19	G19	GAS LATERAL	UG	1029+89	38' LT - 66' LT	GRADING / RETAINING WALL	YES	1029+94, 15'-70' LT	---	YES	NO	NO	120	
19	G20	GAS MAIN	UG	1030+88	37' LT	STORM SEWER	YES	994+20 - 1068+21 15'-44' LT	---	YES	NO	NO	120	
19	G21	GAS MAIN	UG	1031+00	37' LT	STORM SEWER	YES	994+20 - 1068+21 15'-44' LT	---	YES	NO	NO	120	
19	G22	GAS LATERAL	UG	1031+88 - 1031+89	38' LT - 60' LT	GRADING	YES	1031+89, 15'-60' LT	---	YES	NO	NO	120	
19	G23	GAS MAIN	UG	1032+60	38' LT	STORM SEWER	YES	994+20 - 1068+21 15'-44' LT	---	YES	NO	NO	120	

2

EXISTING UTILITY FACILITIES							RESOLUTION							
UTILITY DETAIL SHEET	CONFLICT ID	FACILITY TYPE	LOCATION	EXISTING FACILITIES (STA)	OFFSET (LT/RT)	IN CONFLICT WITH:	CONFLICT ANTICIPATED (YES/NO)	RELOCATION		DISCONTINUTED		COORDINATE WITH OTHER UTILITIES (YES/NO)	WORKING DAYS TO PERFORM	ADDITIONAL INFORMATION
								PRIOR TO CONSTRUCTION (STA/OFFSET)	DURING CONSTRUCTION (STA/OFFSET)	IN-PLACE (YES/NO)	HAZ MAT (YES/NO)			
19	S13	SANITARY SEWER	UG	1009+88 - 1032+18	21' LT - 48' LT	GRADING	NO	---	---	NO	NO	NO	---	
19	S29	SANITARY SEWER	UG	1027+65	27' LT	STORM SEWER	NO	---	---	NO	NO	NO	---	
19	S30	SANITARY MANHOLE	UG	1027+97	27' LT	GRADING	YES	---	ADJUST MH	NO	NO	NO	1	WITH PROJECT
19	S31	SANITARY SEWER	UG	1029+45	26' LT	STORM SEWER	NO	---	---	NO	NO	NO	---	
19	S32	SANITARY MANHOLE	UG	1029+71	26' LT	GRADING	YES	---	ADJUST MH	NO	NO	NO	1	WITH PROJECT
19	S33	SANITARY SEWER	UG	1031+00	27' LT	STORM SEWER	NO	---	---	NO	NO	NO	---	
19	S34	SANITARY MANHOLE	UG	1031+73	27' LT	GRADING	YES	---	ADJUST MH	NO	NO	NO	1	WITH PROJECT
19	W13	WATER MAIN	UG	1011+11 - 1059+63	42' RT - 48' RT	GRADING	NO	---	---	NO	NO	NO	---	
19	W28	WATER LATERAL	UG	1029+39-1029+40	47' LT - 43' RT	GRADING	NO	---	---	NO	NO	NO	---	
19	W29	WATER VALVE	UG	1029+39	47' LT	GRADING / STORM SEWER	NO	---	---	NO	NO	NO	---	
19	W30	WATER MAIN	UG	1029+39	36' LT	STORM SEWER	NO	---	---	NO	NO	NO	---	
19	W31	WATER LATERAL	UG	1030+90	46' LT - 43' RT	GRADING	NO	---	---	NO	NO	NO	---	
19	W32	WATER VALVE	UG	1030+90	46' LT	GRADING	YES	---	ADJUST VALVE	NO	NO	NO	1	WITH PROJECT
19	W33	WATER MAIN	UG	1030+90	37' LT	STORM SEWER	NO	---	---	NO	NO	NO	---	
19	W36	HYDRANT	UG	1030+08	38' RT	GRADING	NO	---	---	NO	NO	NO	---	
19	W35	WATER LATERAL	UG	1029+40	13' RT	STORM SEWER	NO	---	---	NO	NO	NO	---	
19	W37	WATER LATERAL	UG	1032+68	46' LT - 43' RT	GRADING	NO	---	---	NO	NO	NO	---	
19	W38	WATER VALVE	UG	1032+68	46' LT	GRADING / STORM SEWER	NO	---	---	NO	NO	NO	---	
19	W99	WATER LATERAL	UG	1030+90	13' RT	STORM SEWER	NO	---	---	NO	NO	NO	---	
19	W100	WATER LATERAL	UG	1032+68	15' RT	STORM SEWER	NO	---	---	NO	NO	NO	---	

UTILITY OWNER (FACILITY)	SYMBOL	ID
AT&T WISCONSIN (COMMUNICATIONS)	T	A
ATC (ELECTRIC)	E	ATC
SPECTRUM (COMMUNICATIONS)	TV	C
FRONTIER (COMMUNICATIONS)	T	F
MIDWEST FIBER NETWORKS (COMMUNICATIONS)	FO	M
WE ENERGIES ELECTRIC	E	E
WE ENERGIES GAS	G	G
PADDOCK LAKE SANITARY	SAN	S
PADDOCK LAKE WATER	W	W
SALEM LAKE SANITARY	SAN	SL

NOTE: WISDOT SIGNAL EQUIPMENT SHOWN ON THIS SHEET TO BE REMOVED AND REPLACED AS PART OF ID 1310-04-70. SEE TRAFFIC SIGNAL PLANS FOR ADDITIONAL INFORMATION.

N

STA 1033+00

STA 1039+00

246TH AVE

STH 50

1034+00

1035+00

1036+00

1037+00

1038+00

41+00

39+00

MATCHLINE

MATCHLINE

R/W

PROPOSED R/W

TLE

SLOPE INTERCEPT

WISDOT SIGNALS

NOTE: GAS LATERAL NOT COMPLETELY MARKED BY DIGGER'S HOTLINE

SHEET 22 OF 40

PROJECT NO: 1310-04-70	HWY: STH 50	COUNTY: KENOSHA	UTILITY PLAN	SHEET 226	E

FILE NAME : T:\1182708.06\CIVIL3D\13100400\13100400\SHEETSPLAN\023001_UP.DWG
LAYOUT NAME - 08

PLOT DATE : 1/26/2022 11:12 PM PLOT BY : BLACKWOOD, JIM PLOT NAME : PLOT SCALE : 1 IN:40 FT

WISDOT/CADDS SHEET 42

EXISTING UTILITY FACILITIES							RESOLUTION							
UTILITY DETAIL SHEET	CONFLICT ID	FACILITY TYPE	LOCATION	EXISTING FACILITIES (STA)	OFFSET (LT/RT)	IN CONFLICT WITH:	CONFLICT ANTICIPATED (YES/NO)	RELOCATION		DISCONTINUTED		COORDINATE WITH OTHER UTILITIES (YES/NO)	WORKING DAYS TO PERFORM	ADDITIONAL INFORMATION
								PRIOR TO CONSTRUCTION (STA/OFFSET)	DURING CONSTRUCTION (STA/OFFSET)	IN-PLACE (YES/NO)	HAZ MAT (YES/NO)			
22	A1	COMMUNICATIONS LINE	UG	998+65 - 1059+11	33' RT - 89' RT	GRADING	YES	998+65 - 1060+82 25' -89' RT	---	YES	NO	NO	60	
22	A25	COMMUNICATIONS LINE	UG	1033+54	40' RT	TRAFFIC SIGNAL PULLBOX	YES	998+65 - 1060+82 25' -89' RT	---	YES	NO	NO	60	
22	A26	COMMUNICATIONS LINE	UG	1033+71	40' RT	SIGNAL BASE	YES	998+65 - 1060+82 25' -89' RT	---	YES	NO	NO	60	
22	A27	COMMUNICATIONS LINE	UG	1034+91	40' RT	TRAFFIC SIGNAL PULLBOX	YES	998+65 - 1060+82 25' -89' RT	---	YES	NO	NO	60	
22	C1	COMUNICATION LINE	OH	994+20 - 1068+11	38' LT - 63' LT	GRADING	YES	994+20 - 1068+11 39'-63' LT	---	NO	NO	YES	100	
22	C15	COMMUNICATIONS LINE	UG	1036+55 - 1036+58	39' LT - 67' LT	GRADING	NO	---	---	NO	NO	NO	---	
22	C16	COMMUNICATIONS LINE	UG	1038+79	39' LT - 49' LT	GRADING	NO	---	---	NO	NO	NO	---	
22	C17	COMMUNICATIONS LINE	OH	1034+60 - 1034+79	38' LT - 51' RT	GRADING	YES	1034+59 - 1034+63 41' LT-58' RT	---	NO	NO	YES	100	
22	C18	COMMUNICATIONS LINE	OH	1036+27 - 1036+47	39' LT - 38' RT	GRADING	YES	1036+28 - 1036+59 47' RT-41' LT	---	NO	NO	YES	100	
22	C26	COMMUNICATIONS LINE	OH	1033+72	39' LT	MONOTUBE ARM	YES	994+20 - 1068+11 39'-63' LT	---	NO	NO	YES	100	
22	C29	COMMUNICATIONS LINE	OH	1034+79	49' RT	MONOTUBE POLE	YES	1034+59 - 1034+63 41' LT-58' RT	---	NO	NO	YES	100	
22	F3	COMUNICATION LINE	OH	994+20 - 1068+11	38' LT - 63' LT	GRADING	YES	994+20 - 1068+11 39'-63' LT	---	NO	NO	YES	100	
22	F29	PEDESTAL	UG	1036+53	39' LT	GRADING / CLEAR ZONE	YES	1036+53, 41' LT	---	NO	NO	NO	100	
22	F30	COMMUNICATIONS LINE	UG	1036+53	39' LT - 67' LT	GRADING	YES	1036+53, 41'-43' LT	---	NO	NO	NO	100	
22	F31	COMMUNICATIONS LINE	UG	1038+79 - 1038+80	39' LT - 49' LT	GRADING	NO	---	---	NO	NO	NO	---	
22	F32	COMMUNICATIONS LINE	OH	1034+60 - 1034+79	38' LT - 51' RT	GRADING	YES	1034+59 - 1034+63 41' LT-58' RT	---	NO	NO	YES	100	
22	F33	COMMUNICATIONS LINE	OH	1036+27 - 1036+47	39' LT - 38' RT	GRADING	YES	1036+28 - 1036+59 47' RT-41' LT	---	NO	NO	YES	100	
22	F39	COMMUNICATIONS LINE	OH	1033+72	39' LT	MONOTUBE ARM	YES	994+20 - 1068+11 39'-63' LT	---	NO	NO	YES	100	
22	F42	COMMUNICATIONS LINE	OH	1034+79	49' RT	MONOTUBE POLE	YES	1034+59 - 1034+63 41' LT-58' RT	---	NO	NO	YES	100	
22														
22	M1	COMUNICATION LINE	OH	994+20 - 1068+11	38' LT - 63' LT	GRADING	YES	994+20 - 1068+11 39'-63' LT	---	NO	NO	YES	90	
22	M6	COMMUNICATIONS LINE	OH	1033+72	39' LT	MONOTUBE ARM	YES	994+20 - 1068+11 39'-63' LT	---	NO	NO	YES	90	
22	E1	ELECTRIC SERVICE	OH	994+20 - 1068+11	38' LT - 63' LT	GRADING	YES	994+20 - 1068+11 39'-63' LT	---	NO	NO	YES	150	
22	E92	POWER POLE	OH	1034+60	38' LT	GRADING / CLEAR ZONE	YES	1034+59, 41' LT	---	NO	NO	YES	150	
22	E93	POWER POLE	OH	1036+47	39' LT	GRADING / CLEAR ZONE	YES	1036+51, 41' LT	---	NO	NO	YES	150	
22	E94	POWER POLE	OH	1036+55	39' LT	GRADING / CLEAR ZONE	YES	1036+59, 41' LT	---	NO	NO	YES	150	
22	E95	POWER POLE	OH	1037+98	40' LT	GRADING / CLEAR ZONE	YES	1038+00, 41' LT	---	NO	NO	YES	150	
22	E96	POWER POLE	OH	1038+79	39' LT	GRADING	YES	1038+83, 40' LT	---	NO	NO	YES	150	
22	E97	ELECTRIC SERVICE	UG	1038+79	39' LT - 49' LT	GRADING	YES	1038+79-1038+83 40'-49' LT	---	NO	NO	NO	150	
22	E98	POWER POLE	OH	1033+62	38' RT	GRADING / CLEAR ZONE	YES	1033+63, 41' RT	---	NO	NO	NO	150	
22	E99	POWER POLE	OH	1035+42	38' RT	GRADING / CLEAR ZONE	YES	1035+41, 41' RT	---	NO	NO	NO	150	

EXISTING UTILITY FACILITIES							RESOLUTION							
UTILITY DETAIL SHEET	CONFLICT ID	FACILITY TYPE	LOCATION	EXISTING FACILITIES (STA)	OFFSET (LT/RT)	IN CONFLICT WITH:	CONFLICT ANTICIPATED (YES/NO)	RELOCATION		DISCONTINUTED		COORDINATE WITH OTHER UTILITIES (YES/NO)	WORKING DAYS TO PERFORM	ADDITIONAL INFORMATION
								PRIOR TO CONSTRUCTION (STA/OFFSET)	DURING CONSTRUCTION (STA/OFFSET)	IN-PLACE (YES/NO)	HAZ MAT (YES/NO)			
22	E100	POWER POLE	OH	1036+27	37' RT	GRADING / CLEAR ZONE	YES	1036+28, 47' RT	---	NO	NO	YES	150	
22	E101	POWER POLE	OH	1036+97	38' RT	GRADING / CLEAR ZONE	YES	1036+97, 46' RT	---	NO	NO	NO	150	
22	E102	POWER POLE	OH	1038+97	38' RT	GRADING	YES	1039+30, 39' RT	---	NO	NO	NO	150	
22	E103	ELECTRIC SERVICE	OH	1033+62 - 1034+60	38' LT - 38' RT	GRADING	YES	1033+63 - 1034+59 41' RT-40' LT	---	NO	NO	NO	150	
22	E104	ELECTRIC SERVICE	OH	1034+60 - 1034+79	38' LT - 51' RT	GRADING	YES	1034+59 - 1034+63 41' LT-58' RT	---	NO	NO	YES	150	
22	E105	ELECTRIC SERVICE	OH	1036+27 - 1036+47	39' LT - 38' RT	GRADING	YES	1036+28 - 1036+59 47' RT-41' LT	---	NO	NO	YES	150	
22	E106	ELECTRIC SERVICE	UG	1036+54	39' LT - 67' LT	GRADING	YES	1036+54 - 1036+59 41' LT	---	NO	NO	NO	150	
22	E185	ELECTRIC SERVICE	OH	1033+72	39' LT	MONOTUBE ARM	YES	994+20 - 1068+11 39'-63' LT	---	NO	NO	YES	150	
22	E186	ELECTRIC SERVICE	OH	1034+59	52' LT	MONOTUBE POLE	YES	994+20 - 1068+11 39'-63' LT	---	NO	NO	YES	150	
22	E188	ELECTRIC SERVICE	OH	1034+79	49' RT	MONOTUBE POLE	YES	1034+59 - 1034+63 41' LT-58' RT	---	NO	NO	YES	100	
22	G10	GAS MAIN 8"	UG	1012+63 - 1060+50	34' LT - 69' LT	GRADING	YES	994+20 - 1068+21 15'-44' LT	---	YES	NO	NO	120	PROPOSED MAIN IS 12" STEEL
22	G24	GAS LATERAL	UG	1033+81-1033+98	33' RT-75' RT	GRADING	YES	1034+04, 16' LT-110' RT	---	YES	NO	NO	120	NOT COMPLETELY MARKED BY DIGGER'S HOTLINE.
22	G25	GAS LATERAL	UG	1035+46-1035+64	37' LT - 55' RT	GRADING	YES	1035+21, 16' LT-50' RT	---	YES	NO	NO	120	NOT COMPLETELY MARKED BY DIGGER'S HOTLINE.
22	G26	GAS LATERAL	UG	1036+28-1036+31	37' LT - 47' RT	GRADING	YES	1036+39 16' LT-60' RT	---	YES	NO	NO	120	NOT COMPLETELY MARKED BY DIGGER'S HOTLINE.
22	G27	GAS LATERAL	UG	1038+88	38' LT - 48' LT	GRADING	YES	1038+87 15' LT-60' LT	---	YES	NO	NO	120	
22	G69	GAS MAIN	UG	1033+55	38' LT	TRAFFIC SIGNAL PULLBOX	YES	994+20 - 1068+21 15'-44' LT	---	YES	NO	NO	120	
22	G70	GAS MAIN	UG	1034+80	38' LT	SIGNAL BASE	YES	994+20 - 1068+21 15'-44' LT	---	YES	NO	NO	120	
22	G71	GAS MAIN	UG	1034+91	38' LT	TRAFFIC SIGNAL PULLBOX	YES	994+20 - 1068+21 15'-44' LT	---	YES	NO	NO	120	
22	G72	GAS LATERAL	UG	1033+87	48' RT	SIGNAL BASE	YES	1034+04, 16' LT-110' RT	---	YES	NO	NO	120	
22	S35	SANITARY MANHOLE	UG	1035+33	13' RT	GRADING	YES	---	ADJUST MH	NO	NO	NO	1	WITH PROJECT
22	S36	SANITARY SEWER	UG	1035+33 - 1035+34	13' RT - 50' RT	GRADING	NO	---	---	NO	NO	NO	---	
22	S37	SANITARY SEWER	UG	1035+33 - 1040+19	13' RT - 95' RT	GRADING	NO	---	---	NO	NO	NO	---	
22	S38	SANITARY MANHOLE	UG	1037+67	15' RT	GRADING	YES	---	RECON MH	NO	NO	NO	1	WITH PROJECT
22	W13	WATER MAIN	UG	1011+11 - 1059+63	42' RT - 48' RT	GRADING	NO	---	---	NO	NO	NO	---	
22	W39	WATER SERVICE	UG	1033+50 - 1033+51	56' LT - 43' RT	GRADING	NO	---	---	NO	NO	NO	---	
22	W40	WATER VALVE	UG	1033+51	46' LT	GRADING	YES	---	ADJUST VALVE	NO	NO	NO	1	WITH PROJECT
22	W41	WATER SERVICE	UG	1033+50	15' RT	STORM SEWER	NO	---	---	NO	NO	NO	---	
22	W42	WATER VALVE	UG	1034+66	47' RT	GRADING	NO	---	---	NO	NO	NO	---	
22	W43	WATER VALVE	UG	1034+87	41' RT	GRADING	YES	---	1034+87, 53' RT	NO	NO	YES	1	RELOCATE VALVE WITH PROJECT
22	W44	HYDRANT	UG	1034+87	38' RT	GRADING / CLEAR ZONE	YES	---	1034+87, 53' RT	NO	NO	YES	1	RELOCATE HYDRANT WITH PROJECT
22	W45	WATER SERVICE	UG	1034+89 -1034+94	53' LT - 43' RT	GRADING	NO	---	---	NO	NO	NO	---	

2

EXISTING UTILITY FACILITIES							RESOLUTION							
UTILITY DETAIL SHEET	CONFLICT ID	FACILITY TYPE	LOCATION	EXISTING FACILITIES (STA)	OFFSET (LT/RT)	IN CONFLICT WITH:	CONFLICT ANTICIPATED (YES/NO)	RELOCATION		DISCONTINUTED		COORDINATE WITH OTHER UTILITIES (YES/NO)	WORKING DAYS TO PERFORM	ADDITIONAL INFORMATION
								PRIOR TO CONSTRUCTION (STA/OFFSET)	DURING CONSTRUCTION (STA/OFFSET)	IN-PLACE (YES/NO)	HAZ MAT (YES/NO)			
22	W46	WATER VALVE	UG	1034+93	48' LT	GRADING	YES	---	ADJUST VALVE	NO	NO	NO	1	WITH PROJECT FORM PED CURB AROUND VALVE
22	W47	WATER VALVE	UG	1035+05	49' RT	GRADING	YES	---	ADJUST VALVE	NO	NO	NO	1	WITH PROJECT
22	W48	WATER VALVE	UG	1036+53	46' RT	GRADING	YES	---	ADJUST VALVE	NO	NO	NO	1	WITH PROJECT
22	W49	WATER SERVICE	UG	1036+88-1036+89	66' LT - 43' RT	GRADING	NO	---	---	NO	NO	NO	---	
22	W50	WATER VALVE	UG	1036+89	46' LT	GRADING	YES	---	ADJUST VALVE	NO	NO	NO	1	WITH PROJECT
22	W51	WATER VALVE	UG	1037+96	46' RT	GRADING	YES	---	ADJUST VALVE	NO	NO	NO	1	WITH PROJECT
22	W52	WATER VALVE	UG	1038+09	43' RT	GRADING	YES	---	ADJUST VALVE	NO	NO	NO	1	WITH PROJECT
22	W53	WATER VALVE	UG	1038+56	46' RT	GRADING	YES	---	ADJUST VALVE	NO	NO	NO	1	WITH PROJECT
22	W54	WATER SERVICE	UG	1037+91	59' LT - 43' RT	GRADING	NO	---	---	NO	NO	NO	---	
22	W55	WATER SERVICE	UG	1037+94	52' LT - 43' RT	GRADING	NO	---	---	NO	NO	NO	---	
22	W56	WATER VALVE	UG	1037+91	46' LT	GRADING	YES	---	ADJUST VALVE	NO	NO	NO	1	WITH PROJECT
22	W57	WATER VALVE	UG	1037+94	46' LT	GRADING	YES	---	ADJUST VALVE	NO	NO	NO	1	WITH PROJECT
22	W102	WATER LATERAL	UG	1034+92	41' LT	TRAFFIC SIGNAL PULLBOX	NO	---	---	NO	NO	NO	---	
22	W115	WATER LATERAL	UG	1034+89	5' RT	TRAFFIC SIGNAL PULLBOX	NO	---	---	NO	NO	NO	---	
22	W116	WATER LATERAL	UG	1034+89	41' RT	TRAFFIC SIGNAL PULLBOX	NO	---	---	NO	NO	NO	---	

2

UTILITY OWNER (FACILITY)	SYMBOL	ID
AT&T WISCONSIN (COMMUNICATIONS)	T	A
ATC (ELECTRIC)	E	ATC
SPECTRUM (COMMUNICATIONS)	TV	C
FRONTIER (COMMUNICATIONS)	T	F
MIDWEST FIBER NETWORKS (COMMUNICATIONS)	FO	M
WE ENERGIES ELECTRIC	E	E
WE ENERGIES GAS	G	G
PADDOCK LAKE SANITARY	SAN	S
PADDOCK LAKE WATER	W	W
SALEM LAKE SANITARY	SAN	SL

N

STA 1039+00

STA 1045+00

MATCHLINE

MATCHLINE

STH 50

STH 50

243RD AVE

244TH AVE

71+00

64+00

1040+00

1041+00

1042+00

1043+00

1044+00

1045

(NO EXISTING POLE; LINES ATTACHED OVERHEAD.)

(NO EXISTING POLE; LINES ATTACHED OVERHEAD.)

SLOPE INTERCEPT

SLOPE INTERCEPT

SLOPE INTERCEPT

R/W

TLE

WISDOT SIGNALS

FORCE MAIN NOT LOCATED BY DIGGER'S HOTLINE. VILLAGE TO DETERMINE IF FORCE MAIN IS IN CONFLICT

SHEET 26 OF 40

PROJECT NO: 1310-04-70	HWY: STH 50	COUNTY: KENOSHA	UTILITY PLAN	SHEET 230	E

FILE NAME : T:\1182708.06\CIVIL3D\13100400\13100400\SHEETSPLAN\023001_UP.DWG
LAYOUT NAME - 09

PLOT DATE : 1/26/2022 11:13 PM PLOT BY : BLACKWOOD, JIM PLOT NAME : PLOT SCALE : 1 IN:40 FT

EXISTING UTILITY FACILITIES							RESOLUTION							
UTILITY DETAIL SHEET	CONFLICT ID	FACILITY TYPE	LOCATION	EXISTING FACILITIES (STA)	OFFSET (LT/RT)	IN CONFLICT WITH:	CONFLICT ANTICIPATED (YES/NO)	RELOCATION		DISCONTINUTED		COORDINATE WITH OTHER UTILITIES (YES/NO)	WORKING DAYS TO PERFORM	ADDITIONAL INFORMATION
								PRIOR TO CONSTRUCTION (STA/OFFSET)	DURING CONSTRUCTION (STA/OFFSET)	IN-PLACE (YES/NO)	HAZ MAT (YES/NO)			
26	A1	COMMUNICATIONS LINE	UG	998+65 - 1059+11	33' RT - 89' RT	GRADING	YES	998+65 - 1060+82 25' -89' RT	---	YES	NO	NO	60	
26	A18	COMMUNICATIONS LINE	UG	1041+25	35' RT	STORM SEWER	YES	998+65 - 1060+82 25' -89' RT	---	YES	NO	NO	60	
26	A19	COMMUNICATIONS LINE	UG	1042+96	34' RT	STORM SEWER	YES	998+65 - 1060+82 25' -89' RT	---	YES	NO	NO	60	
26	A20	COMMUNICATIONS LINE	UG	1044+71	36' RT	STORM SEWER	YES	998+65 - 1060+82 25' -89' RT	---	YES	NO	NO	60	
26	C1	COMUNICATION LINE	OH	994+20 - 1068+11	38' LT - 63' LT	GRADING	YES	994+20 - 1068+11 39'-63' LT	---	NO	NO	YES	100	
26	C49	COMMUNICATIONS LINE	OH	1039+76 - 1039+79	39' LT - 39' RT	GRADING	YES	1039+78 40' LT-53' RT	---	NO	NO	YES	100	
26	C50	COMMUNICATIONS LINE	OH	1041+51 - 1041+81	38' LT - 37' RT	GRADING	YES	1041+56 - 1041+82 40' LT-39' RT	---	NO	NO	YES	100	
26	C51	COMMUNICATIONS LINE	OH	70+39 - 70+85 243RD AVE	1' LT - 36' RT	GRADING	YES	70+39 - 71+13 243RD AVE 42' RT-24' LT	---	NO	NO	YES	100	
26	C52	COMMUNICATIONS LINE	UG	1043+47 - 1043+52	56' LT - 39' LT	GRADING	YES	1043+52 - 1043+58 39' LT-59' LT	---	NO	NO	NO	100	
26	C53	COMMUNICATIONS LINE	OH	1043+22 - 1043+52	38' LT - 38' RT	GRADING	YES	1043+23 - 1043+58 39' RT-39' LT	---	NO	NO	YES	100	
26	F3	COMUNICATION LINE	OH	994+20 - 1068+11	38' LT - 63' LT	GRADING	YES	994+20 - 1068+11 39'-63' LT	---	NO	NO	YES	100	
26	F64	COMMUNICATIONS LINE	UG	1039+76 - 1039+79	39' LT - 39' RT	GRADING	YES	1039+78 40' LT-53' RT	---	NO	NO	YES	100	
26	F65	COMMUNICATIONS LINE	UG	1041+51 - 1041+81	38' LT - 37' RT	GRADING	YES	1041+56 - 1041+82 40' LT-39' RT	---	NO	NO	YES	100	
26	F66	COMMUNICATIONS LINE	UG	1043+22 - 1043+52	38' LT - 38' RT	GRADING	YES	1043+23 - 1043+58 39' RT-39' LT	---	NO	NO	YES	100	
26	F67	COMMUNICATIONS LINE	UG	70+39 - 70+85 243RD AVE	1' LT - 36' RT	GRADING	YES	70+39 - 71+13 243RD AVE 42' RT-24' LT	---	NO	NO	YES	100	
26	M1	COMUNICATION LINE	OH	994+20 - 1068+11	38' LT - 63' LT	GRADING	YES	994+20 - 1068+11 39'-63' LT	---	NO	NO	YES	90	
26	E1	ELECTRIC SERVICE	OH	994+20 - 1068+11	38' LT - 63' LT	GRADING	YES	994+20 - 1068+11 39'-63' LT	---	NO	NO	YES	150	
26	E108	POWER POLE	OH	1039+76	39' RT	GRADING / CLEAR ZONE	YES	1039+77, 53' RT	---	NO	NO	YES	150	
26	E109	POWER POLE	OH	1039+79	39' LT	GRADING	YES	1039+77, 40' LT	---	NO	NO	YES	150	
26	E110	POWER POLE	OH	1040+57	37' RT	GRADING	YES	1040+57, 39' RT	---	NO	NO	NO	150	
26	E111	POWER POLE	OH	1041+81	37' RT	GRADING	YES	1041+82, 39' RT	---	NO	NO	YES	150	
26	E112	POWER POLE	OH	1041+51	38' LT	GRADING	YES	1041+57, 40' LT	---	NO	NO	YES	150	
26	E113	POWER POLE	OH	1042+30	39' LT	GRADING	YES	1042+35, 40' LT	---	NO	NO	YES	150	
26	E114	POWER POLE	OH	1042+21	38' RT	GRADING	YES	1042+22, 39' RT	---	NO	NO	YES	150	
26	E115	POWER POLE	OH	1043+52	38' LT	GRADING / CLEAR ZONE	YES	1043+58, 39' LT	---	NO	NO	YES	150	
26	E116	POWER POLE	OH	1043+22	38' RT	GRADING	YES	1043+23, 39' RT	---	NO	NO	YES	150	
26	E117	POWER POLE	OH	1044+54	38' RT	GRADING	YES	1044+59, 39' RT	---	NO	NO	YES	150	
26	E118	GUY WIRE / ANCHOR	OH	1041+81	47' RT	GRADING	YES	1041+84, 50' RT	---	NO	NO	YES	150	
26	E119	GUY WIRE / ANCHOR	OH	1043+15	38' RT	GRADING	YES	1043+14, 39' RT	---	NO	NO	NO	150	
26	E120	GUY WIRE / ANCHOR	OH	1043+16	38' RT	GRADING	YES	1043+14, 39' RT	---	NO	NO	NO	150	
26	E124	ELECTRIC SERVICE	UG	1042+21 - 1042+38	38' RT - 60' RT	GRADING	YES	1042+22-1042+39 39'-60' RT	---	NO	NO	NO	150	

EXISTING UTILITY FACILITIES							RESOLUTION							
UTILITY DETAIL SHEET	CONFLICT ID	FACILITY TYPE	LOCATION	EXISTING FACILITIES (STA)	OFFSET (LT/RT)	IN CONFLICT WITH:	CONFLICT ANTICIPATED (YES/NO)	RELOCATION		DISCONTINUTED		COORDINATE WITH OTHER UTILITIES (YES/NO)	WORKING DAYS TO PERFORM	ADDITIONAL INFORMATION
								PRIOR TO CONSTRUCTION (STA/OFFSET)	DURING CONSTRUCTION (STA/OFFSET)	IN-PLACE (YES/NO)	HAZ MAT (YES/NO)			
26	E125	ELECTRIC SERVICE	UG	1043+52	39' LT - 54' LT	GRADING	YES	1043+58, 39' LT	---	NO	NO	NO	150	
26	E126	ELECTRIC SERVICE	UG	1041+81	38' RT - 50' RT	GRADING	YES	1041+81 - 1041+83 39'-51' RT	---	NO	NO	NO	150	
26	E127	ELECTRIC SERVICE	UG	1041+81 - 1041+84	38' RT - 51' RT	GRADING	YES	1041+81 - 1041+83 39'-51' RT	---	NO	NO	NO	150	
26	E128	ELECTRIC SERVICE	OH	1039+76 - 1039+79	39' LT - 39' RT	GRADING	YES	1039+78 40' LT-53' RT	---	NO	NO	YES	150	
26	E129	ELECTRIC SERVICE	OH	1038+97 - 1039+79	39' LT - 38' RT	GRADING	YES	1039+30-1039+77 39' RT-40' RT	---	NO	NO	NO	150	
26	E130	ELECTRIC SERVICE	OH	1040+10 - 1040+57	39' LT - 38' RT	GRADING	YES	1039+77 - 1040+57 40' LT-39' RT	---	NO	NO	NO	150	
26	E131	ELECTRIC SERVICE	OH	1041+81 - 1042+30	39' LT - 37' RT	GRADING	YES	REMOVE LINE	---	NO	NO	NO	150	
26	E132	ELECTRIC SERVICE	OH	1041+51 - 1041+81	38' LT - 37' RT	GRADING	YES	1041+56 - 1041+82 40' LT-39' RT	---	NO	NO	YES	150	
26	E133	ELECTRIC SERVICE	OH	1042+21 - 1042+30	39' LT - 38' RT	GRADING	YES	1042+22 - 1042+35 39' RT-40' LT	---	NO	NO	NO	150	
26	E134	ELECTRIC SERVICE	OH	1043+22 - 1043+52	38' LT - 38' RT	GRADING	YES	1043+23 - 1043+58 39' RT-39' LT	---	NO	NO	YES	150	
26	E135	ELECTRIC SERVICE	OH	70+39 - 70+85 243RD AVE	1' LT - 36' RT	GRADING	YES	70+39 - 71+13 243RD AVE 42' RT-24' LT	---	NO	NO	YES	150	
26	E137	ELECTRIC SERVICE	OH	1044+50 - 1044+54	38' LT - 38' RT	GRADING	YES	1044+50 - 1044+60 39' LT-39' RT	---	NO	NO	YES	150	
26	G10	GAS MAIN 8"	UG	1012+63 - 1060+50	34' LT - 69' LT	GRADING	YES	994+20 - 1068+21 15'-44' LT	---	YES	NO	NO	120	PROPOSED MAIN IS 12" STEEL
26	G28	GAS MAIN	UG	1039+80 - 1039+82	68' RT - 37' LT	GRADING	YES	1039+92-1039+93 15' LT-86' RT	---	YES	NO	NO	120	
26	G29	GAS MAIN	UG	1039+71 - 1047+20	34' RT - 99' RT	GRADING	YES	DISCONTINUE	---	YES	NO	NO	120	
26	G30	GAS MAIN	UG	1040+31	36' RT	STORM SEWER	YES	DISCONTINUE	---	YES	NO	NO	120	
26	G31	GAS LATERAL	UG	1040+98	35' RT - 50' RT	GRADING	YES	1040+93 28' LT-48' RT	---	YES	NO	NO	120	
26	G32	GAS LATERAL	UG	1042+29	35' RT - 57' RT	GRADING	YES	1042+34 - 1042+48 56' RT-27' LT	---	YES	NO	NO	120	
26	G33	GAS LATERAL	UG	1042+47	36' RT - 60' RT	GRADING	YES	1042+50 27' LT-100' RT	---	YES	NO	NO	120	
26	G34	GAS VALVE	UG	1039+82	37' LT	GRADING	YES	994+20 - 1068+21 15'-44' LT	---	YES	NO	NO	120	
26	G35	GAS LATERAL	UG	1039+95	37' LT - 48' LT	GRADING	YES	1039+90 15' LT-64' LT	---	YES	NO	NO	120	
26	G36	GAS LATERAL	UG	1041+02	38' LT - 40' LT	GRADING	YES	1041+38 28' LT-50' LT	---	YES	NO	NO	120	
26	G37	GAS LATERAL	UG	1041+65	38' LT - 40' LT	GRADING	YES	1041+60 28' LT-50' LT	---	YES	NO	NO	120	
26	G38	GAS MAIN	UG	1042+96	38' LT	STORM SEWER	YES	994+20 - 1068+21 15'-44' LT	---	YES	NO	NO	120	
26	G59	GAS MAIN	UG	1041+25	35' RT	STORM SEWER	YES	DISCONTINUE	---	YES	NO	NO	120	
26	G60	GAS MAIN	UG	1042+96	36' RT	STORM SEWER	YES	DISCONTINUE	---	YES	NO	NO	120	
26	G61	GAS MAIN	UG	1044+71	36' RT	STORM SEWER	YES	DISCONTINUE	---	YES	NO	NO	120	

2

EXISTING UTILITY FACILITIES							RESOLUTION							
UTILITY DETAIL SHEET	CONFLICT ID	FACILITY TYPE	LOCATION	EXISTING FACILITIES (STA)	OFFSET (LT/RT)	IN CONFLICT WITH:	CONFLICT ANTICIPATED (YES/NO)	RELOCATION		DISCONTINUTED		COORDINATE WITH OTHER UTILITIES (YES/NO)	WORKING DAYS TO PERFORM	ADDITIONAL INFORMATION
								PRIOR TO CONSTRUCTION (STA/OFFSET)	DURING CONSTRUCTION (STA/OFFSET)	IN-PLACE (YES/NO)	HAZ MAT (YES/NO)			
26	S37	SANITARY SEWER	UG	1035+33 - 1040+19	13' RT - 95' RT	GRADING	NO	---	---	NO	NO	NO	---	
26	S38	SANITARY MANHOLE	UG	1040+19	18' RT	GRADING	YES	---	ADJUST MH	NO	NO	NO	1	WITH PROJECT
26	S40	SANITARY MANHOLE	UG	1040+17	66' RT	GRADING	NO	---	---	NO	NO	NO	---	
26	S41	SANITARY MANHOLE	UG	1039+29	25' LT	GRADING	YES	---	ADJUST MH	NO	NO	NO	1	WITH PROJECT
26	S42	SANITARY SEWER	UG	1039+29 - 1043+04	20' LT - 85' LT	GRADING	NO	---	---	NO	NO	NO	---	
26	S43	SANITARY MANHOLE	UG	1040+31	22' LT	GRADING	YES	---	ADJUST MH	NO	NO	NO	1	WITH PROJECT
26	S44	SANITARY SEWER	UG	1042+96	20' LT	STORM SEWER	NO	---	---	NO	NO	NO	---	
26	S45	SANITARY MANHOLE	UG	1043+04	20' LT	GRADING	YES	---	ADJUST MH	NO	NO	NO	---	WITH PROJECT
26	S46	SANITARY SEWER	UG	1040+17	59' RT	STORM SEWER	NO	---	---	NO	NO	NO	---	
26	S47	SANITARY MANHOLE	UG	1041+54	20' RT	GRADING	YES	---	ADJUST MH	NO	NO	NO	1	WITH PROJECT
26	S48	SANITARY SEWER	UG	1041+38 - 1046+78	20' RT - 40' RT	GRADING	NO	---	---	NO	NO	NO	---	
26	S50	SANITARY SEWER	UG	1042+96	21' RT	STORM SEWER	NO	---	---	NO	NO	NO	---	
26	S51	SANITARY MANHOLE	UG	1044+29	22' RT	GRADING	YES	---	ADJUST MH	NO	NO	NO	1	WITH PROJECT
26	S52	SANITARY SEWER	UG	1044+72	22' RT	STORM SEWER	NO	---	---	NO	NO	NO	---	
26	W13	WATER MAIN	UG	1011+11 - 1059+63	42' RT - 48' RT	GRADING	NO	---	---	NO	NO	NO	---	
26	W58	WATER SERVICE	UG	1039+46 - 1039+47	53' LT - 43' RT	GRADING	NO	---	---	NO	NO	NO	---	
26	W59	WATER VALVE	UG	1039+47	46' LT	GRADING	NO	---	---	NO	NO	NO	---	
26	W60	WATER SERVICE	UG	1039+49	52' LT - 43' RT	GRADING	NO	---	---	NO	NO	NO	---	
26	W61	WATER VALVE	UG	1039+49	46' LT	GRADING	NO	---	---	NO	NO	NO	---	
26	W62	WATER SERVICE	UG	1039+87 -1040+03	52' LT - 43' RT	GRADING	NO	---	---	NO	NO	NO	---	
26	W63	WATER VALVE	UG	1039+99	46' LT	GRADING	YES	---	ADJUST VALVE	NO	NO	NO	1	WITH PROJECT
26	W64	WATER SERVICE	UG	1041+00	40' LT - 43' RT	GRADING	NO	---	---	NO	NO	NO	---	
26	W65	WATER VALVE	UG	1040+49	41' RT	GRADING	YES	---	ADJUST VALVE	NO	NO	NO	---	WITH PROJECT
26	W66	HYDRANT	UG	1040+50	39' RT	GRADING / CLEAR ZONE	NO	---	---	NO	NO	NO	---	
26	W67	WATER VALVE	UG	1041+01	46' RT	GRADING	YES	---	ADJUST VALVE	NO	NO	NO	1	WITH PROJECT
26	W68	WATER SERVICE	UG	1041+00	13' RT	STORM SEWER	NO	---	---	NO	NO	NO	---	ADD INSULATION
26	W69	WATER SERVICE	UG	1041+83	13' RT	STORM SEWER	NO	---	---	NO	NO	NO	---	ADD INSULATION
26	W70	WATER SERVICE	UG	1041+83 -1041+84	53' LT - 43' RT	GRADING	NO	---	---	NO	NO	NO	---	
26	W71	WATER VALVE	UG	1041+84	46' LT	GRADING	YES	---	ADJUST VALVE	NO	NO	NO	1	WITH PROJECT
26	W72	WATER SERVICE	UG	1042+71	13' RT	STORM SEWER	NO	---	---	NO	NO	NO	---	ADD INSULATION
26	W73	WATER SERVICE	UG	1042+71	34' LT	STORM SEWER	NO	---	---	NO	NO	NO	---	
26	W74	WATER SERVICE	UG	1041+71	47' LT - 42' RT	GRADING	NO	---	---	NO	NO	NO	---	
26	W75	WATER VALVE	UG	1042+72	45' LT	GRADING	YES	---	ADJUST VALVE	NO	NO	NO	1	WITH PROJECT
26	W76	WATER VALVE	UG	1043+47	46' LT	GRADING	NO	---	---	NO	NO	NO	---	
26	W77	WATER SERVICE	UG	1043+46 -1043+47	46' LT - 42' RT	GRADING	NO	---	---	NO	NO	NO	---	
26	W78	WATER VALVE	UG	1042+26	46' RT	GRADING	NO	---	---	NO	NO	NO	---	
26	W79	WATER MAIN	UG	1040+31	42' RT	STORM SEWER	NO	---	---	NO	NO	NO	---	ADD INSULATION
26	W80	WATER VALVE	UG	1044+10	46' RT	GRADING	YES	---	ADJUST VALVE	NO	NO	NO	1	WITH PROJECT
26	W81	WATER VALVE	UG	1044+55	46' RT	GRADING	YES	---	ADJUST VALVE	NO	NO	NO	1	WITH PROJECT
26	W121	WATER VALVE	UG	1042+25	46' RT	GRADING	YES	---	ADJUST VALVE	NO	NO	NO	1	WITH PROJECT

2

UTILITY OWNER (FACILITY)	SYMBOL	ID
AT&T WISCONSIN (COMMUNICATIONS)	T	A
ATC (ELECTRIC)	E	ATC
SPECTRUM (COMMUNICATIONS)	TV	C
FRONTIER (COMMUNICATIONS)	T	F
MIDWEST FIBER NETWORKS (COMMUNICATIONS)	FO	M
WE ENERGIES ELECTRIC	E	E
WE ENERGIES GAS	G	G
PADDOCK LAKE SANITARY	SAN	S
PADDOCK LAKE WATER	W	W
SALEM LAKE SANITARY	SAN	SL

N

STA 1045+00

STA 1051+00

MATCHLINE

MATCHLINE

74TH PLACE
91+00

242ND AVE
79+00

STH 50

1046+00

1047+00

1048+00

1049+00

1050+00

EXISTING R/W

R/W

TLE

SLOPE INTERCEPT

PROPOSED HIGHWAY EASEMENT

GUY

MH

WV

NOTE EXISTING GAS LATERAL NOT COMPLETELY MARKED BY DIGGER'S HOTLINE. WE ENERGIES TO VERIFY IF LATERAL IS IN CONFLICT.

SHEET 30 OF 40

PROJECT NO: 1310-04-70	HWY: STH 50	COUNTY: KENOSHA	UTILITY PLAN	SHEET 234	E

FILE NAME : T:\1182708.06\CIVIL3D\13100400\13100400\SHEETSPLAN\023001_UP.DWG
LAYOUT NAME - 10

PLOT DATE : 1/26/2022 11:13 PM PLOT BY : BLACKWOOD, JIM PLOT NAME : PLOT SCALE : 1 IN:40 FT

WISDOT/CADDS SHEET 42

EXISTING UTILITY FACILITIES							RESOLUTION							
								RELOCATION		DISCONTINUTED				
UTILITY DETAIL SHEET	CONFLICT ID	FACILITY TYPE	LOCATION	EXISTING FACILITIES (STA)	OFFSET (LT/RT)	IN CONFLICT WITH:	CONFLICT ANTICIPATED (YES/NO)	PRIOR TO CONSTRUCTION (STA/OFFSET)	DURING CONSTRUCTION (STA/OFFSET)	IN-PLACE (YES/NO)	HAZ MAT (YES/NO)	COORDINATE WITH OTHER UTILITIES (YES/NO)	WORKING DAYS TO PERFORM	ADDITIONAL INFORMATION
30	A1	COMMUNICATIONS LINE	UG	998+65 - 1059+11	33' RT - 89' RT	GRADING	YES	998+65 - 1060+82 25'-89' RT	---	YES	NO	NO	60	
30	A8	COMMUNICATIONS LINE	UG	1046+50	33' RT	STORM SEWER	YES	998+65 - 1060+82 25'-89' RT	---	YES	NO	NO	60	
30	A9	COMMUNICATIONS LINE	UG	1047+31	38' RT	STORM SEWER	YES	998+65 - 1060+82 25'-89' RT	---	YES	NO	NO	60	
30	A21	COMMUNICATIONS LINE	UG	1045+75	36' RT	STORM SEWER	YES	998+65 - 1060+82 25'-89' RT	---	YES	NO	NO	60	
30	A22	COMMUNICATIONS LINE	UG	1047+22	38' RT	STORM SEWER	YES	998+65 - 1060+82 25'-89' RT	---	YES	NO	NO	60	
30	C1	COMUNICATION LINE	OH	994+20 - 1068+11	38' LT - 63' LT	GRADING	YES	994+20 - 1068+11 39'-63' LT	---	NO	NO	YES	100	
30	C55	COMMUNICATIONS LINE	OH	1045+22 - 1045+27	38' LT - 39' RT	GRADING	YES	REMOVE LINE	---	NO	NO	YES	100	
30	C56	COMMUNICATIONS LINE	OH	1046+66 - 1046+93	40' LT - 58' RT	GRADING	YES	1046+64 - 1046+91 58' RT- 40' LT	---	NO	NO	YES	150	
30	C58	COMMUNICATIONS LINE	OH	79+42 - 79+45 242ND AVE	30' LT - 32' RT	GRADING	YES	78+89 - 79+42 242ND AVE 27' LT-32' LT	---	NO	NO	YES	150	
30	F3	COMUNICATION LINE	OH	994+20 - 1068+11	38' LT - 63' LT	GRADING	YES	994+20 - 1068+11 39'-63' LT	---	NO	NO	YES	100	
30	F69	COMMUNICATIONS LINE	OH	1045+22 - 1045+27	38' LT - 39' RT	GRADING	YES	1045+20 - 1045+24 39' RT-40' LT	---	NO	NO	YES	100	
30	F70	COMMUNICATIONS LINE	OH	79+42 - 79+45 242ND AVE	30' LT - 32' RT	GRADING	YES	78+89 - 79+42 242ND AVE 27' LT-32' LT	---	NO	NO	YES	100	
30	F72	COMMUNICATIONS LINE	OH	1048+51 - 1048+56	40' LT - 52' RT	GRADING	YES	1048+53 - 1048+56 42' LT-52' LT	---	NO	NO	YES	100	
30	F73	COMMUNICATIONS LINE	UG	1048+50 - 1048+58	52' RT - 57' RT	GRADING	NO	---	---	NO	NO	NO	---	
30	F74	COMMUNICATIONS LINE	UG	1048+75 - 1048+81	56' RT	GRADING	NO	---	---	NO	NO	NO	---	
30	M1	COMUNICATION LINE	OH	994+20 - 1068+11	38' LT - 63' LT	GRADING	YES	994+20 - 1068+11 39'-63' LT	---	NO	NO	YES	90	
30	E1	ELECTRIC SERVICE	OH	994+20 - 1068+11	38' LT - 63' LT	GRADING	YES	994+20 - 1068+11 39'-63' LT	---	NO	NO	YES	150	
30	E138	POWER POLE	OH	1045+27	38' LT	GRADING	YES	1045+24, 40' LT	---	NO	NO	YES	150	
30	E139	POWER POLE	OH	1045+22	39' RT	GRADING	YES	1045+20, 39' RT	---	NO	NO	YES	150	
30	E140	POWER POLE	OH	1046+05	38' RT	GRADING	YES	1046+10, 39' RT	---	NO	NO	YES	150	
30	E141	POWER POLE	OH	1046+93	40' LT	GRADING	YES	1046+91, 40' LT	---	NO	NO	YES	150	
30	E142	POWER POLE	OH	1047+63	40' RT	GRADING	YES	1047+59, 41' RT	---	NO	NO	YES	150	
30	E143	POWER POLE	OH	1050+21	40' LT	GRADING	YES	1050+19, 41' LT	---	NO	NO	YES	150	
30	E144	POWER POLE	OH	1046+66	58' RT	GRADING	YES	1046+64, 58' RT	---	NO	NO	YES	150	
30	E145	POWER POLE	OH	1048+56	52' RT	GRADING	YES	1046+56, 52' RT	---	NO	NO	YES	150	
30	E146	POWER POLE	OH	1048+51	40' LT	GRADING	YES	1048+53, 42' LT	---	NO	NO	YES	150	
30	E147	GUY WIRE/ANCHOR	OH	1048+34	40' LT	GRADING	YES	REMOVE GUY	---	NO	NO	YES	---	
30	E148	GUY WIRE/ANCHOR	OH	1048+51	48' LT	GRADING	YES	1048+52, 49' LT	---	NO	NO	YES	150	
30	E149	GUY WIRE/ANCHOR	OH	1048+72	41' LT	GRADING	YES	1048+74, 42' LT	---	NO	NO	YES	150	

EXISTING UTILITY FACILITIES							RESOLUTION							
								RELOCATION		DISCONTINUTED				
UTILITY DETAIL SHEET	CONFLICT ID	FACILITY TYPE	LOCATION	EXISTING FACILITIES (STA)	OFFSET (LT/RT)	IN CONFLICT WITH:	CONFLICT ANTICIPATED (YES/NO)	PRIOR TO CONSTRUCTION (STA/OFFSET)	DURING CONSTRUCTION (STA/OFFSET)	IN-PLACE (YES/NO)	HAZ MAT (YES/NO)	COORDINATE WITH OTHER UTILITIES (YES/NO)	WORKING DAYS TO PERFORM	ADDITIONAL INFORMATION
30	E150	ELECTRIC SERVICE	UG	1048+48 - 1048+56	52' RT - 57' RT	GRADING	NO	---	---	NO	NO	NO	---	
30	E151	ELECTRIC SERVICE	UG	1045+20 - 1045+24	39' RT - 55' RT	GRADING	YES	1045+19 - 1045+21 39'-52' RT	---	NO	NO	YES	150	
30	E152	GUY WIRE/ANCHOR	OH	1045+20	46' RT	GRADING	YES	1045+20, 46' RT	---	NO	NO	YES	150	
30	E153	GUY WIRE/ANCHOR	OH	1046+50	59' RT	GRADING	YES	1046+49, 59' RT	---	NO	NO	YES	150	
30	E154	ELECTRIC SERVICE	UG	1046+51 - 1046+66	56' RT - 66' RT	GRADING	YES	1046+60 - 1046+64 58' RT	---	NO	NO	YES	150	
30	E155	ELECTRIC SERVICE	OH	79+42 - 79+45 242ND AVE	30' LT - 32' RT	GRADING	YES	78+89 - 79+42 242ND AVE 27' LT-32' LT	---	NO	NO	YES	150	
30	E156	ELECTRIC SERVICE	OH	1045+22 - 1045+27	38' LT - 39' RT	GRADING	YES	1045+20 - 1045+24 39' RT-40' LT	---	YES	NO	NO	150	
30	E157	ELECTRIC SERVICE	OH	1046+05 - 1046+37	39' LT - 38' RT	GRADING	YES	1046+10 - 1046+37 39' LT-39' RT	---	NO	NO	YES	150	
30	E158	ELECTRIC SERVICE	OH	1046+66 - 1046+93	40' LT - 58' RT	GRADING	YES	1046+64 - 1046+91 58' RT- 40' LT	---	NO	NO	YES	150	
30	E159	ELECTRIC SERVICE	OH	1048+51 - 1048+56	40' LT - 52' RT	GRADING	YES	1048+53 - 1048+56 42' LT-52' LT	---	NO	NO	YES	150	
30	G10	GAS MAIN 8"	UG	1012+63 - 1060+50	34' LT - 69' LT	GRADING	YES	994+20 - 1068+21 15'-44' LT	---	YES	NO	NO	120	PROPOSED MAIN IS 12" STEEL
30	G29	GAS MAIN	UG	1039+71 - 1047+20	34' LT - 99' LT	GRADING	YES	DISCONTINUE	---	YES	NO	NO	120	
30	G39	GAS MAIN	UG	1046+56	38' RT	STORM SEWER	YES	DISCONTINUE	---	YES	NO	NO	120	
30	G42	GAS MAIN	UG	1047+44 - 1047+46	39' LT - 60' LT	GRADING	YES	1047+45 - 1047+50 29' LT-62' LT	---	YES	NO	NO	120	
30	G43	GAS LATERAL	UG	1048+14 - 1048+18	39' LT - 19' RT	GRADING	YES	1047+94 29' LT-53' RT	---	YES	NO	NO	120	LATERAL NOT COMPLETELY MARKED BY DIGGERS HOTLINE.
30	G44	GAS LATERAL	UG	1048+17	2' RT	STORM SEWER	YES	1047+94 29' LT-53' RT	---	YES	NO	NO	120	
30	G62	GAS MAIN	UG	1045+75	37' RT	STORM SEWER	YES	DISCONTINUE	---	YES	NO	NO	120	
30	S48	SANITARY SEWER	UG	1041+38 - 1046+78	20' RT - 21' RT	GRADING	NO	---	---	NO	NO	NO	---	
30	S53	SANITARY SEWER	UG	1045+75	22' RT	STORM SEWER	NO	---	---	NO	NO	NO	---	
30	S54	SANITARY SEWER	UG	1046+50	22' RT	STORM SEWER	NO	---	---	NO	NO	NO	---	
30	S55	SANITARY MANHOLE	UG	1046+78	21' RT	GRADING	YES	---	ADJUST MH	NO	NO	NO	1	WITH PROJECT
30	S56	SANITARY SEWER	UG	1046+78	49' RT	GRADING	NO	---	---	NO	NO	NO	---	
30	S57	SANITARY SEWER	UG	1046+78	21' RT - 105' RT	GRADING	NO	---	---	NO	NO	NO	---	
30	W13	WATER MAIN	UG	1011+11 - 1059+63	42' RT - 48' RT	GRADING	NO	---	---	NO	NO	NO	---	
30	W84	WATER VALVE	UG	1046+37	39' RT	GRADING	NO	---	---	NO	NO	NO	---	
30	W85	HYDRANT	UG	1046+40	39' RT	GRADING	NO	---	---	NO	NO	NO	---	
30	W86	WATER MAIN	UG	1046+70	44' RT	STORM SEWER	NO	---	---	NO	NO	NO	---	
30	W87	WATER VALVE	UG	1048+03	48' RT	GRADING	YES	---	ADJUST VALVE	NO	NO	NO	1	WITH PROJECT
30	W88	WATER VALVE	UG	1048+71	44' RT	GRADING	YES	---	ADJUST VALVE	NO	NO	NO	1	WITH PROJECT
30	W89	WATER MAIN	UG	1046+40	46' LT - 43' RT	GRADING	NO	---	---	NO	NO	NO	---	
30	W90	WATER VALVE	UG	1046+40	46' LT	GRADING	YES	---	ADJUST VALVE	NO	NO	NO	---	WITH PROJECT
30	W91	WATER LATERAL	UG	1046+40	14' RT	STORM SEWER	NO	---	---	NO	NO	NO	---	
30	W92	WATER LATERAL	UG	1046+41	35' LT	STORM SEWER	NO	---	---	NO	NO	NO	---	ADD INSULATION
30	W93	WATER MAIN	UG	1049+56 -1049+57	41' LT-44' RT	GRADING	NO	---	---	NO	NO	NO	---	
30	W94	WATER VALVE	UG	1049+56	41' LT	GRADING	NO	---	---	NO	NO	NO	---	

UTILITY OWNER (FACILITY)	SYMBOL	ID
AT&T WISCONSIN (COMMUNICATIONS)	T	A
ATC (ELECTRIC)	E	ATC
SPECTRUM (COMMUNICATIONS)	TV	C
FRONTIER (COMMUNICATIONS)	T	F
MIDWEST FIBER NETWORKS (COMMUNICATIONS)	FO	M
WE ENERGIES ELECTRIC	E	E
WE ENERGIES GAS	G	G
PADDOCK LAKE SANITARY	SAN	S
PADDOCK LAKE WATER	W	W
SALEM LAKE SANITARY	SAN	SL

N

STA 1051+00

STA 1057+00

MATCHLINE

MATCHLINE

C1 F3 M1 E1 G10 E161 G63 G64 E162 E166 E165 E163 E164 C1 F3 M1 E1 G10

TLE

SLOPE INTERCEPT

PROPOSED HIGHWAY EASEMENT

SLOPE INTERCEPT

R/W

PROPOSED HIGHWAY EASEMENT

SLOPE INTERCEPT

R/W

GUY GUY

OH OH OH

EXISTING UTILITY FACILITIES							RESOLUTION							
UTILITY DETAIL SHEET	CONFLICT ID	FACILITY TYPE	LOCATION	EXISTING FACILITIES (STA)	OFFSET (LT/RT)	IN CONFLICT WITH:	CONFLICT ANTICIPATED (YES/NO)	RELOCATION		DISCONTINUTED		COORDINATE WITH OTHER UTILITIES (YES/NO)	WORKING DAYS TO PERFORM	ADDITIONAL INFORMATION
								PRIOR TO CONSTRUCTION (STA/OFFSET)	DURING CONSTRUCTION (STA/OFFSET)	IN-PLACE (YES/NO)	HAZ MAT (YES/NO)			
33	A1	COMMUNICATIONS LINE	UG	998+65 - 1059+11	33' RT - 89' RT	GRADING	YES	998+65 - 1060+82 25' -89' RT	---	YES	NO	NO	60	
33	A10	COMMUNICATIONS LINE	UG	1052+40	43' RT	GRADING	YES	998+65 - 1060+82 25' -89' RT	---	YES	NO	NO	60	
33	A11	COMMUNICATIONS LINE	UG	1055+24	43' RT	GRADING	YES	998+65 - 1060+82 25' -89' RT	---	YES	NO	NO	60	
33	C1	COMUNICATION LINE	OH	994+20 - 1068+11	38' LT - 63' LT	GRADING	YES	994+20 - 1068+11 39'-63' LT	---	NO	NO	YES	100	
33	C59	COMMUNICATIONS LINE	OH	1055+33 - 1055+51	41' LT - 64' RT	GRADING	YES	1055+31 - 1055+49 75' RT-41' LT	---	YES	NO	NO	100	
33	F3	COMUNICATION LINE	OH	994+20 - 1068+11	38' LT - 63' LT	GRADING	YES	994+20 - 1068+11 39'-63' LT	---	NO	NO	YES	100	
33	F75	COMMUNICATIONS LINE	OH	1055+33 - 1055+51	41' LT - 64' LT	GRADING	YES	1055+31 - 1055+49 75' RT-41' LT	---	YES	NO	NO	100	
33														
33	M1	COMUNICATION LINE	OH	994+20 - 1068+11	38' LT - 63' LT	GRADING	YES	994+20 - 1068+11 39'-63' LT	---	NO	NO	YES	90	
33	E1	ELECTRIC SERVICE	OH	994+20 - 1068+11	38' LT - 63' LT	GRADING	YES	994+20 - 1068+11 39'-63' LT	---	NO	NO	YES	150	
33	E161	POWER POLE	OH	1051+96	41' LT	GRADING	YES	1051+98, 41' LT	---	NO	NO	YES	150	
33	E162	POWER POLE	OH	1053+62	41' LT	GRADING	YES	1053+60, 41' LT	---	NO	NO	YES	150	
33	E163	POWER POLE	OH	1055+51	41' LT	GRADING	YES	1055+49, 41' LT	---	NO	NO	YES	150	
33	E164	POWER POLE	OH	1056+94	40' LT	GRADING	YES	1056+96, 41' LT	---	NO	NO	YES	150	
33	E165	GUY WIRE/ANCHOR	OH	1055+35	41' LT	GRADING	YES	REMOVE GUY	---	NO	NO	YES	150	
33	E167	ELECTRIC SERVICE	OH	1055+33 - 1055+51	41' LT - 64' LT	GRADING	YES	1055+31 - 1055+49 75' RT-41' LT	---	YES	NO	NO	150	
33	G10	GAS MAIN 8"	UG	1012+63 - 1060+50	34' LT - 69' LT	GRADING	YES	994+20 - 1068+21 15'-44' LT	---	YES	NO	NO	120	PROPOSED MAIN IS 12" STEEL
33	G63	GAS MAIN	UG	1052+22	39' LT	STORM SEWER	YES	994+20 - 1068+21 15'-44' LT	---	YES	NO	NO	120	
33	G64	GAS MAIN	UG	1054+82	38' LT	STORM SEWER	YES	994+20 - 1068+21 15'-44' LT	---	YES	NO	NO	120	
33	W13	WATER MAIN	UG	1011+11 - 1059+63	42' RT - 48' RT	GRADING	NO	---	---	NO	NO	NO	---	
33	W95	WATER VALVE	UG	1051+94	42' RT	GRADING	NO	---	---	NO	NO	NO	---	
33	W96	HYDRANT	UG	1051+95	44' RT	GRADING	NO	---	---	NO	NO	NO	---	
33	W97	WATER MAIN	UG	1052+44	44' RT	GRADING	NO	---	---	NO	NO	NO	---	
33	W98	WATER MAIN	UG	1055+24	45' RT	GRADING	NO	---	---	NO	NO	NO	---	

UTILITY OWNER (FACILITY)	SYMBOL	ID
AT&T WISCONSIN (COMMUNICATIONS)	T	A
ATC (ELECTRIC)	E	ATC
SPECTRUM (COMMUNICATIONS)	TV	C
FRONTIER (COMMUNICATIONS)	T	F
MIDWEST FIBER NETWORKS (COMMUNICATIONS)	FO	M
WE ENERGIES ELECTRIC	E	E
WE ENERGIES GAS	G	G
PADDOCK LAKE SANITARY	SAN	S
PADDOCK LAKE WATER	W	W
SALEM LAKE SANITARY	SAN	SL

N

NOTE UNDERGROUND COMMUNICATIONS LINE NOT COMPLETELY MARKED BY DIGGER'S HOTLINE. MIDWEST FIBER NETWORKS TO VERIFY IF COMMUNICATIONS LINE IS IN CONFLICT.

NOTE WATER MAIN ON 236TH AVE NOT COMPLETELY MARKED BY DIGGER'S HOTLINE. VILLAGE TO VERIFY IF WATER MAIN IS IN CONFLICT.

MATCHLINE STA 1057+00

STA 1063+00 MATCHLINE

PROPOSED HIGHWAY EASEMENT

SLOPE INTERCEPT

R/W

STH 50

236TH AVE

1057+00 1058+00 1059+00 1060+00 1061+00 1062+00 1063+00

SHEET 35 OF 40

PROJECT NO: 1310-04-70	HWY: STH 50	COUNTY: KENOSHA	UTILITY PLAN	SHEET 239	E

FILE NAME : T:\1182708.06\CIVIL3D\13100400\13100400\SHEETSPLAN\023001_UP.DWG
LAYOUT NAME - 12

PLOT DATE : 1/26/2022 11:14 PM PLOT BY : BLACKWOOD, JIM PLOT NAME : PLOT SCALE : 1 IN:40 FT

WISDOT/CADDS SHEET 42

EXISTING UTILITY FACILITIES							RESOLUTION							
UTILITY DETAIL SHEET	CONFLICT ID	FACILITY TYPE	LOCATION	EXISTING FACILITIES (STA)	OFFSET (LT/RT)	IN CONFLICT WITH:	CONFLICT ANTICIPATED (YES/NO)	RELOCATION		DISCONTINUTED		COORDINATE WITH OTHER UTILITIES (YES/NO)	WORKING DAYS TO PERFORM	ADDITIONAL INFORMATION
								PRIOR TO CONSTRUCTION (STA/OFFSET)	DURING CONSTRUCTION (STA/OFFSET)	IN-PLACE (YES/NO)	HAZ MAT (YES/NO)			
35	A1	COMMUNICATIONS LINE	UG	998+65 - 1059+11	33' RT - 89' RT	GRADING	YES	998+65 - 1060+82 25' -89' RT	---	YES	NO	NO	60	
35	A12	COMMUNICATIONS LINE	UG	1058+65	56' RT	STORM SEWER	YES	998+65 - 1060+82 25' -89' RT	---	YES	NO	NO	60	
35	A13	COMMUNICATIONS LINE	UG	1060+58	64' RT	STORM SEWER	YES	998+65 - 1060+82 25' -89' RT	---	YES	NO	NO	60	
35	A14	COMMUNICATIONS LINE	UG	1062+87	62' RT	STORM SEWER	NO	---	---	NO	NO	NO	---	
35	C1	COMUNICATION LINE	OH	994+20 - 1068+11	38' LT - 63' LT	GRADING	YES	994+20 - 1068+11 39'-63' LT	---	NO	NO	YES	100	
35	F3	COMUNICATION LINE	OH	994+20 - 1068+11	38' LT - 63' LT	GRADING	YES	994+20 - 1068+11 39'-63' LT	---	NO	NO	YES	100	
35	F76	COMMUNICATIONS LINE	OH	1060+31 - 1060+35	43' LT - 48' RT	GRADING	NO	---	---	NO	NO	NO	---	
35	M1	COMUNICATION LINE	OH	994+20 - 1068+11	38' LT - 63' LT	GRADING	YES	994+20 - 1068+11 39'-63' LT	---	NO	NO	YES	90	
35	M9	COMMUNICATIONS LINE	OH	1062+60 - 1062+97	47' LT 116' LT	GRADING	YES	1062+66 - 1064+28 42'-84' LT	---	NO	NO	YES	90	NOT COMPLETELY MARKED BY DIGGER'S HOTLINE
35	E1	ELECTRIC SERVICE	OH	994+20 - 1068+11	38' LT - 63' LT	GRADING	YES	994+20 - 1068+11 39'-63' LT	---	NO	NO	YES	150	
35	E168	POWER POLE	OH	1058+43	41' LT	GRADING	YES	1058+45, 41' LT	---	NO	NO	YES	150	
35	E169	POWER POLE	OH	1060+31	43' LT	GRADING	YES	1060+29, 42' LT	---	NO	NO	YES	150	
35	E170	POWER POLE	OH	1061+62	43' LT	GRADING	YES	1061+58, 42' LT	---	NO	NO	YES	150	
35	E171	POWER POLE	OH	1062+97	47' LT	GRADING	YES	1063+06, 42' LT	---	NO	NO	YES	150	
35	E172	POWER POLE	OH	1061+88	60' LT	GRADING	NO	---	---	NO	NO	YES	150	
35	E173	ELECTRIC SERVICE	OH	1058+43 - 1058+99	41' LT - 76' RT	GRADING	YES	1058+45 - 1059+00 41' LT-79' RT	---	NO	NO	YES	150	
35	G10	GAS MAIN 8"	UG	1012+63 - 1060+50	34' LT - 69' LT	GRADING	YES	994+20 - 1068+21 15'-44' LT	---	YES	NO	NO	120	PROPOSED MAIN IS 12" STEEL
35	G45	GAS MAIN	UG	1061+88 - 1062+66	86' LT - 91' LT	GRADING	YES	994+20 - 1068+21 15'-44' LT	---	YES	NO	NO	120	PROPOSED MAIN IS 12" STEEL
35	G46	GAS VALVE	UG	1062+50	138' LT	GRADING	YES	1062+50 - 1062+70 29'-148' LT	---	YES	NO	NO	120	
35	G47	GAS VALVE	UG	1062+51	140' LT	GRADING	YES	1062+50 - 1062+70 29'-148' LT	---	YES	NO	NO	120	
35	S58	SANITARY MANHOLE	UG	1061+98	127' LT	GRADING	NO	---	---	NO	NO	NO	---	
35	S59	SANITARY SEWER	UG	1061+98 - 1062+64	97' LT - 135' LT	GRADING	NO	---	---	NO	NO	NO	---	
35	W13	WATER MAIN	UG	1011+11 - 1059+63	42' RT - 48' RT	GRADING	NO	---	---	NO	NO	NO	---	
35	W103	WATER MAIN	UG	1058+44	47' RT	STORM SEWER	NO	---	---	NO	NO	NO	---	
35	W104	WATER MAIN	UG	1060+58	50' RT	STORM SEWER	NO	---	---	NO	NO	NO	---	
35	W106	WATER MAIN	UG	1061+44 - 1061+62	50' LT - 45' RT	GRADING	NO	---	---	NO	NO	NO	---	
35	W108	HYDRANT	UG	1061+64	52' LT	GRADING	NO	---	---	NO	NO	NO	---	
35	W109	WATER VALVE	UG	1062+12	102' LT	GRADING	NO	---	---	NO	NO	NO	---	
35	W111	WATER VALVE	UG	1062+58	121' LT	GRADING	YES	---	ADJUST VALVE	NO	NO	NO	1	WITH PROJECT
35	W112	WATER VALVE	UG	1062+55	116' LT	GRADING	YES	---	ADJUST VALVE	NO	NO	NO	1	WITH PROJECT
35	W113	WATER VALVE	UG	1062+55	114' LT	GRADING	YES	---	ADJUST VALVE	NO	NO	NO	1	WITH PROJECT
35	W114	WATER VALVE	UG	1062+58	114' LT	GRADING	YES	---	ADJUST VALVE	NO	NO	NO	1	WITH PROJECT

2

N

STA 1063+00

C1
F3
M1
E1
S60
G48
F79
F78
E175
F82
F83
E176
F86
G49
F87
E177
E178
E179
F88
E180
G50
S61
F84
F80
S62
F85
S63
A15

SLOPE INTERCEPT
R/W
TLE
MH
GUY
POST
SAN
OH
G
T

STH 50

1064+00
1065+00
1066+00
1067+00
1068+00
1069+00

ASPH.
CONC.
SS

MATCHLINE

UTILITY OWNER (FACILITY)	SYMBOL	ID
AT&T WISCONSIN (COMMUNICATIONS)	T	A
ATC (ELECTRIC)	E	ATC
SPECTRUM (COMMUNICATIONS)	TV	C
FRONTIER (COMMUNICATIONS)	T	F
MIDWEST FIBER NETWORKS (COMMUNICATIONS)	FO	M
WE ENERGIES ELECTRIC	E	E
WE ENERGIES GAS	G	G
PADDOCK LAKE SANITARY	SAN	S
PADDOCK LAKE WATER	W	W
SALEM LAKE SANITARY	SAN	SL

SHEET 37 OF 40

PROJECT NO: 1310-04-70	HWY: STH 50	COUNTY: KENOSHA	UTILITY PLAN	SHEET 241	E

FILE NAME : T:\1182708.06\CIVIL3D\13100400\13100400\SHEETSPLAN\023001_UP.DWG
LAYOUT NAME - 13

PLOT DATE : 1/26/2022 11:14 PM PLOT BY : BLACKWOOD, JIM PLOT NAME : PLOT SCALE : 1 IN:40 FT

2

EXISTING UTILITY FACILITIES							RESOLUTION							
UTILITY DETAIL SHEET	CONFLICT ID	FACILITY TYPE	LOCATION	EXISTING FACILITIES (STA)	OFFSET (LT/RT)	IN CONFLICT WITH:	CONFLICT ANTICIPATED (YES/NO)	RELOCATION		DISCONTINUTED		COORDINATE WITH OTHER UTILITIES (YES/NO)	WORKING DAYS TO PERFORM	ADDITIONAL INFORMATION
								PRIOR TO CONSTRUCTION (STA/OFFSET)	DURING CONSTRUCTION (STA/OFFSET)	IN-PLACE (YES/NO)	HAZ MAT (YES/NO)			
37	A15	COMMUNICATIONS LINE	UG	1065+12	61' RT	STORM SEWER	NO	---	---	NO	NO	NO	---	
37	C1	COMUNICATION LINE	OH	994+20 - 1068+11	38' LT - 63' LT	GRADING	YES	994+20 - 1068+11 39'-63' LT	---	NO	NO	YES	100	
37	F3	COMUNICATION LINE	OH	994+20 - 1068+11	38' LT - 63' LT	GRADING	YES	994+20 - 1068+11 39'-63' LT	---	NO	NO	YES	100	
37	F78	PEDESTAL	UG	1064+32	51' LT	GRADING	YES	---	ADJUST PED	NO	NO	NO	100	
37	F79	PEDESTAL	UG	1064+36	51' LT	GRADING	YES	---	ADJUST PED	NO	NO	NO	100	
37	F80	COMMUNICATIONS LINE	UG	1064+34 - 1064+39	53' LT - 47' RT	GRADING	NO	---	---	NO	NO	NO	---	
37	F82	COMMUNICATIONS LINE	UG	1064+36 - 1064+40	49' LT - 52' LT	GRADING	NO	---	---	NO	NO	NO	---	
37	F83	COMMUNICATIONS LINE	UG	1064+36 - 1064+43	50' LT - 52' LT	GRADING	NO	---	---	NO	NO	NO	---	
37	F84	COMMUNICATIONS LINE	UG	1064+36 - 1066+29	44' LT - 51' LT	GRADING	NO	---	---	NO	NO	NO	---	
37	F85	COMMUNICATIONS LINE	UG	1065+12	45' LT	STORM SEWER	NO	---	---	NO	NO	NO	---	
37	F86	COMMUNICATIONS LINE	UG	1065+12	54' LT	STORM SEWER	NO	---	---	NO	NO	NO	---	
37	F87	PEDESTAL	UG	1065+38	53' LT	GRADING	YES	---	ADJUST PED	NO	NO	NO	100	
37	F88	COMMUNICATIONS LINE	UG	1064+36 -1068+27	47' LT - 55' LT	GRADING	NO	---	---	NO	NO	NO	---	
37	M1	COMUNICATION LINE	OH	994+20 - 1068+11	38' LT - 63' LT	GRADING	YES	994+20 - 1068+11 39'-63' LT	---	NO	NO	YES	90	
37	E1	ELECTRIC SERVICE	OH	994+20 - 1068+11	38' LT - 63' LT	GRADING	YES	994+20 - 1068+11 39'-63' LT	---	NO	NO	YES	150	
37	E175	POWER POLE	OH	1064+26	51' LT	GRADING	YES	1064+28, 51' LT	---	NO	NO	YES	150	
37	E176	GUY WIRE/ANCHOR	OH	1064+53	51' LT	GRADING	YES	1064+54, 52' LT	---	NO	NO	YES	150	
37	E177	POWER POLE	OH	1065+39	54' LT	GRADING	YES	REMOVE POLE	---	NO	NO	YES	150	
37	E178	GUY WIRE/ANCHOR	OH	1065+53	55' LT	GRADING	YES	REMOVE GUY	---	NO	NO	YES	150	
37	E179	GUY WIRE/ANCHOR	OH	1065+55	54' LT	GRADING	YES	REMOVE GUY	---	NO	NO	YES	150	
37	E180	POWER POLE	OH	1066+21	57' LT	GRADING	YES	1066+19, 55' LT	---	NO	NO	YES	150	
37	G48	GAS MAIN	UG	1063+59 - 1067+13	49' LT - 58' LT	GRADING	YES	994+20 - 1068+21 15'-44' LT	---	YES	NO	NO	120	PROPOSED MAIN IS 12" STEEL
37	G49	GAS MAIN	UG	1065+12	51' LT	STORM SEWER	YES	994+20 - 1068+21 15'-44' LT	---	YES	NO	NO	120	
37	G50	GAS MAIN	UG	1067+71 - 1068+12	59' LT - 61' LT	GRADING / CULVERT	YES	994+20 - 1068+21 15'-44' LT	---	YES	NO	NO	120	
37	S60	SANITARY SEWER	UG	1063+65 - 1067+13	42' LT - 54' LT	GRADING	NO	---	---	NO	NO	NO	---	
37	S61	SANITARY MANHOLE	UG	1063+84	45' LT	GRADING	YES	---	ADJUST MH	NO	NO	NO	1	
37	S62	SANITARY SEWER	UG	1065+12	44' LT	STORM SEWER	NO	---	---	NO	NO	NO	---	
37	S63	SANITARY MANHOLE	UG	1067+21	42' LT	GRADING	YES	---	ADJUST MH	NO	NO	NO	1	

UTILITY OWNER (FACILITY)	SYMBOL	ID
AT&T WISCONSIN (COMMUNICATIONS)	T	A
ATC (ELECTRIC)	E	ATC
SPECTRUM (COMMUNICATIONS)	TV	C
FRONTIER (COMMUNICATIONS)	T	F
MIDWEST FIBER NETWORKS (COMMUNICATIONS)	FO	M
WE ENERGIES ELECTRIC	E	E
WE ENERGIES GAS	G	G
PADDOCK LAKE SANITARY	SAN	S
PADDOCK LAKE WATER	W	W
SALEM LAKE SANITARY	SAN	SL

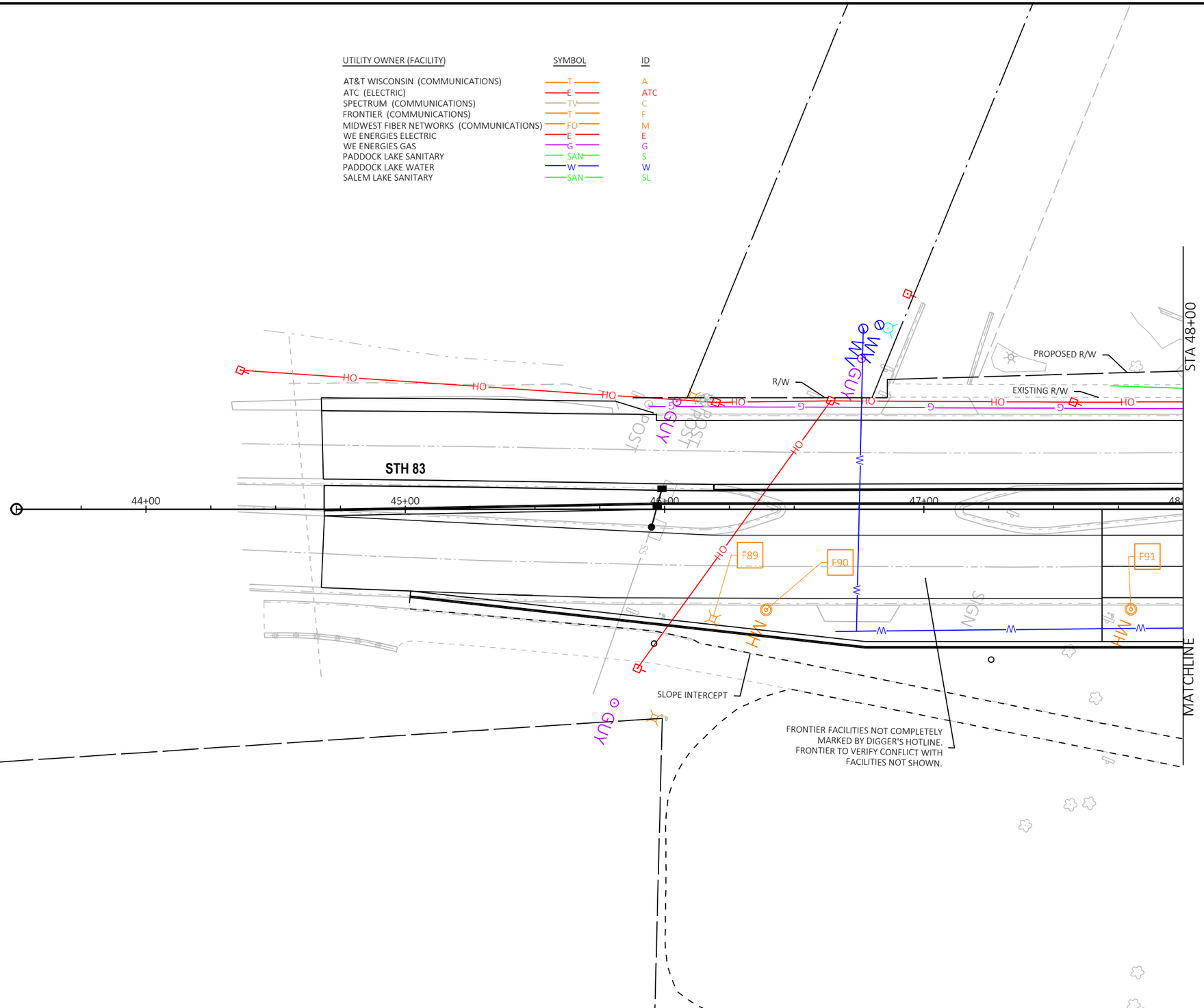

SHEET 39 OF 40

PROJECT NO: 1310-04-70	HWY: STH 50	COUNTY: KENOSHA	UTILITY PLAN	SHEET 243	E

FILE NAME : T:\1182708.06\CIVIL3D\13100400\13100400\SHEETSPLAN\023001_UP.DWG
LAYOUT NAME - 14

PLOT DATE : 1/26/2022 11:15 PM PLOT BY : BLACKWOOD, JIM PLOT NAME : PLOT SCALE : 1 IN:40 FT

EXISTING UTILITY FACILITIES							RESOLUTION							
UTILITY DETAIL SHEET	CONFLICT ID	FACILITY TYPE	LOCATION	EXISTING FACILITIES (STA)	OFFSET (LT/RT)	IN CONFLICT WITH:	CONFLICT ANTICIPATED (YES/NO)	RELOCATION		DISCONTINUTED		COORDINATE WITH OTHER UTILITIES (YES/NO)	WORKING DAYS TO PERFORM	ADDITIONAL INFORMATION
								PRIOR TO CONSTRUCTION (STA/OFFSET)	DURING CONSTRUCTION (STA/OFFSET)	IN-PLACE (YES/NO)	HAZ MAT (YES/NO)			
39	F89	PEDESTAL	UG	46+19 STH83	42' RT	GRADING	YES	REMOVE PED	---	NO	NO	NO	100	
39	F90	MANHOLE	UG	46+39 STH83	39' RT	GRADING	NO	---	---	NO	NO	NO	---	TRAFFIC SIGNAL PULL BOX
39	F91	MANHOLE	UG	47+80 STH83	38' RT	GRADING	YES	REMOVE PED	---	NO	NO	NO	100	

2

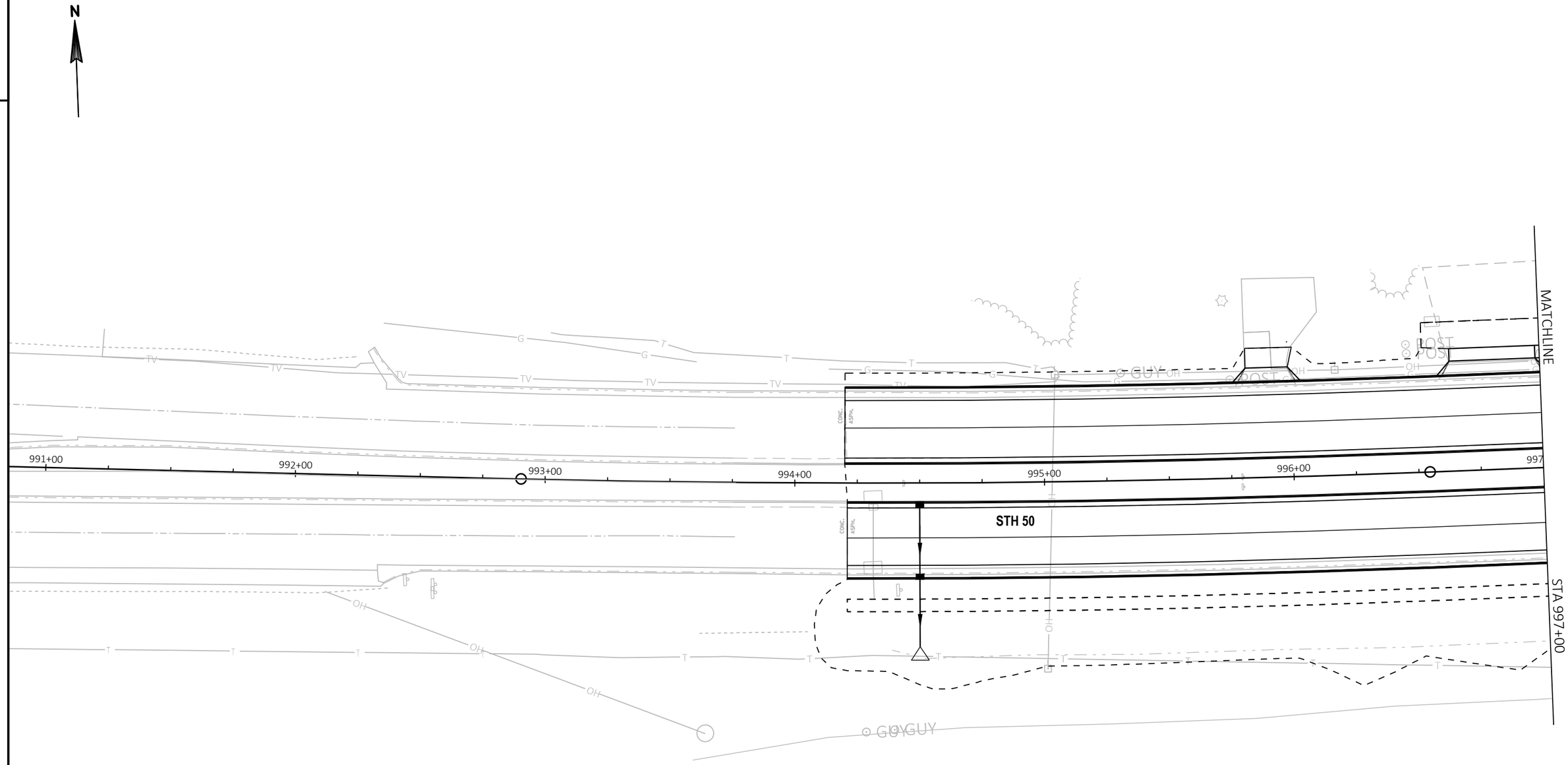

SHEET 1 OF 15

PROJECT NO: 1310-04-70	HWY: STH 50	COUNTY: KENOSHA	UTILITY ADJUSTMENTS	SHEET 245	E

FILE NAME : T:\1182708.06\CIVIL3D\13100400\13100400\SHEETSPLAN\023003A_UP.DWG
LAYOUT NAME - 01

PLOT DATE : 1/20/2022 7:36 AM PLOT BY : BLACKWOOD, JIM PLOT NAME : PLOT SCALE : 1 IN:40 FT

2

N

STA 997+00

STA 1003+00

998+00

999+00

1000+00

1001+00

1002+00

STH 50

CTH F/ 256TH AVE

MATCHLINE

MATCHLINE

STA 3+75

4+00

ADJUST SANITARY MANHOLE COVER
(CATEGORY 0010)

MATCHLINE

STA 3+75

CTH F/ 256TH AVE

3+00

SHEET 2 OF 15

PROJECT NO: 1310-04-70	HWY: STH 50	COUNTY: KENOSHA	UTILITY ADJUSTMENTS	SHEET 246	E

FILE NAME : T:\1182708.06\CIVIL3D\13100400\13100400\SHEETSPLAN\023003A_UP.DWG
LAYOUT NAME - 02

PLOT DATE : 1/20/2022 7:36 AM

PLOT BY : BLACKWOOD, JIM

PLOT NAME :

PLOT SCALE : 1 IN:40 FT

2

2

N

MATCHLINE

STA 52+00

NOTE:
LOCATION AND ELEVATION OF SANITARY SEWER SERVICE LATERALS ARE UNKNOWN FROM APPROXIMATELY STA 1005+00 TO STA 1032+00. RELOCATE SANITARY SERVICE LINES IN CONFLICT WITH PROPOSED STORM SEWER.

STA 1003+00

STA 1009+00

RECONSTRUCT SANITARY MANHOLE COVER (ROTATE TOP SO LID BEHIND BACK OF CURB)

ADJUST SANITARY MANHOLE COVER

INSTALL INSULATION BOARD POLYSTYRENE 2-INCH BETWEEN WATER MAIN AND STORM SEWER

ADJUST SANITARY MANHOLE COVER

STH 75

1004+00

1005+00

1006+00

1007+00

1008+00

STH 50

STH 50

INSTALL INSULATION BOARD POLYSTYRENE 2-INCH BETWEEN WATER MAIN AND STORM SEWER

CONCRETE SADDLE REQUIRED (CATEGORY 0010)

INSTALL INSULATION BOARD POLYSTYRENE 2-INCH BETWEEN WATER MAIN AND STORM SEWER

INSTALL INSULATION BOARD POLYSTYRENE 2-INCH BETWEEN WATER MAIN AND STORM SEWER

ADJUST WATER VALVE BOX

ADJUST SANITARY MANHOLE COVER (CATEGORY 0010)

ADJUST SANITARY MANHOLE COVER

ADJUST WATER VALVE BOX

ADJUST WATER VALVE BOX

MOVE FIRE HYDRANT TO STA 1006+89, 113' RT

WATER VALVE BOX AND FIRE HYDRANT REMOVED PRIOR TO CONSTRUCTION

STH 83

MATCHLINE

STA 48+00

MATCHLINE

SHEET 3 OF 15

PROJECT NO: 1310-04-70	HWY: STH 50	COUNTY: KENOSHA	UTILITY ADJUSTMENTS	SHEET 247	E

FILE NAME : T:\1182708.06\CIVIL3D\13100400\13100400\SHEETSPLAN\023003A_UP.DWG
LAYOUT NAME - 03

PLOT DATE : 4/8/2022 2:01 PM

PLOT BY : BLACKWOOD, JIM

PLOT NAME :

PLOT SCALE : 1 IN:40 FT

WISDOT/CADDS SHEET 42

2

NOTE:
LOCATION AND ELEVATION OF SANITARY SEWER SERVICE LATERALS ARE UNKNOWN FROM APPROXIMATELY STA 1005+00 TO STA 1032+00. RELOCATE SANITARY SERVICE LINES IN CONFLICT WITH PROPOSED STORM SEWER.

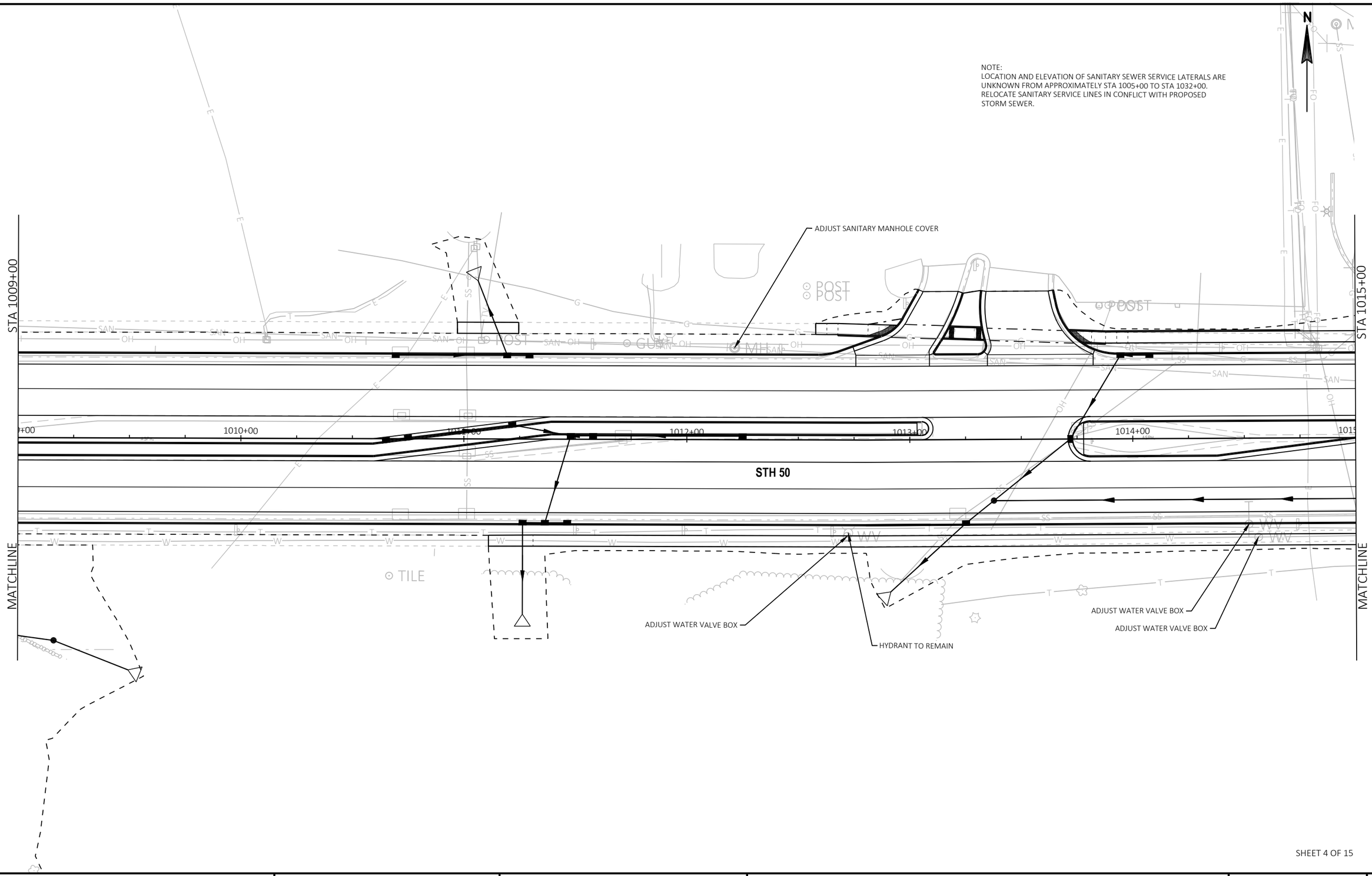

SHEET 4 OF 15

PROJECT NO: 1310-04-70	HWY: STH 50	COUNTY: KENOSHA	UTILITY ADJUSTMENTS	SHEET 248	E

FILE NAME : T:\1182708.06\CIVIL3D\13100400\13100400\SHEETSPLAN\023003A_UP.DWG
LAYOUT NAME - 04
PLOT DATE : 1/20/2022 7:36 AM
PLOT BY : BLACKWOOD, JIM
PLOT NAME :
PLOT SCALE : 1 IN:40 FT

NOTE:
LOCATION AND ELEVATION OF SANITARY SEWER SERVICE LATERALS ARE UNKNOWN FROM APPROXIMATELY STA 1005+00 TO STA 1032+00. RELOCATE SANITARY SERVICE LINES IN CONFLICT WITH PROPOSED STORM SEWER.

N

ADJUST SANITARY MANHOLE COVER

RECONSTRUCT SANITARY MANHOLE COVER

RECONSTRUCT SANITARY MANHOLE COVER
(ROTATE TOP TO FIT LID IN GUTTER PAN)

250TH AVE

STA 1015+00

STA 1021+00

1016+00

1017+00

1018+00

1019+00

1020+00

STH 50

MATCHLINE

MATCHLINE

ADJUST WATER VALVE BOX

WATER VALVE BOX TO REMAIN

HYDRANT TO REMAIN

RECONSTRUCT SANITARY MANHOLE COVER
(ROTATE TOP TO FIT LID IN GUTTER PAN)

SHEET 5 OF 15

PROJECT NO: 1310-04-70	HWY: STH 50	COUNTY: KENOSHA	UTILITY ADJUSTMENTS	SHEET 249	E

FILE NAME : T:\1182708.06\CIVIL3D\13100400\13100400\SHEETSPLAN\023003A_UP.DWG
LAYOUT NAME - 05

PLOT DATE : 1/20/2022 7:36 AM PLOT BY : BLACKWOOD, JIM PLOT NAME : PLOT SCALE : 1 IN:40 FT

NOTE:
LOCATION AND ELEVATION OF SANITARY SEWER SERVICE LATERALS ARE UNKNOWN FROM APPROXIMATELY STA 1005+00 TO STA 1032+00. RELOCATE SANITARY SERVICE LINES IN CONFLICT WITH PROPOSED STORM SEWER.

N

STA 1021+00

STA 1027+00

MATCHLINE

MATCHLINE

248TH AVE

STH 50

HIGH SCHOOL WEST DRIVEWAY

RECONSTRUCT SANITARY MANHOLE COVER

ADJUST SANITARY MANHOLE COVER

RECONSTRUCT SANITARY MANHOLE COVER

ADJUST WATER SERVICE BOX

ADJUST WATER VALVE BOX

INSTALL INSULATION BOARD POLYSTYRENE 2-INCH BETWEEN WATER SERVICE AND STORM SEWER

INSTALL INSULATION BOARD POLYSTYRENE 2-INCH BETWEEN 2 WATER SERVICES AND STORM SEWER

VERTICALLY EXTEND FIRE HYDRANT +/- 2 FT (SEE CONSTRUCTION DETAIL)

RECONSTRUCT WATER VALVE BOX

INSTALL INSULATION BOARD POLYSTYRENE 2-INCH BETWEEN WATER SERVICE AND STORM SEWER

INSTALL CONCRETE SADDLE BETWEEN STORM SEWER AND FORCE MAIN (CATEGORY 0010)

SHEET 6 OF 15

PROJECT NO: 1310-04-70	HWY: STH 50	COUNTY: KENOSHA	UTILITY ADJUSTMENTS	SHEET 250	E

FILE NAME : T:\1182708.06\CIVIL3D\13100400\13100400\SHEETSPLAN\023003A_UP.DWG
LAYOUT NAME - 06

PLOT DATE : 1/20/2022 7:36 AM PLOT BY : BLACKWOOD, JIM PLOT NAME : PLOT SCALE : 1 IN:40 FT

WISDOT/CADDS SHEET 42

NOTE:
LOCATION AND ELEVATION OF SANITARY SEWER SERVICE LATERALS ARE UNKNOWN FROM APPROXIMATELY STA 1005+00 TO STA 1032+00. RELOCATE SANITARY SERVICE LINES IN CONFLICT WITH PROPOSED STORM SEWER.

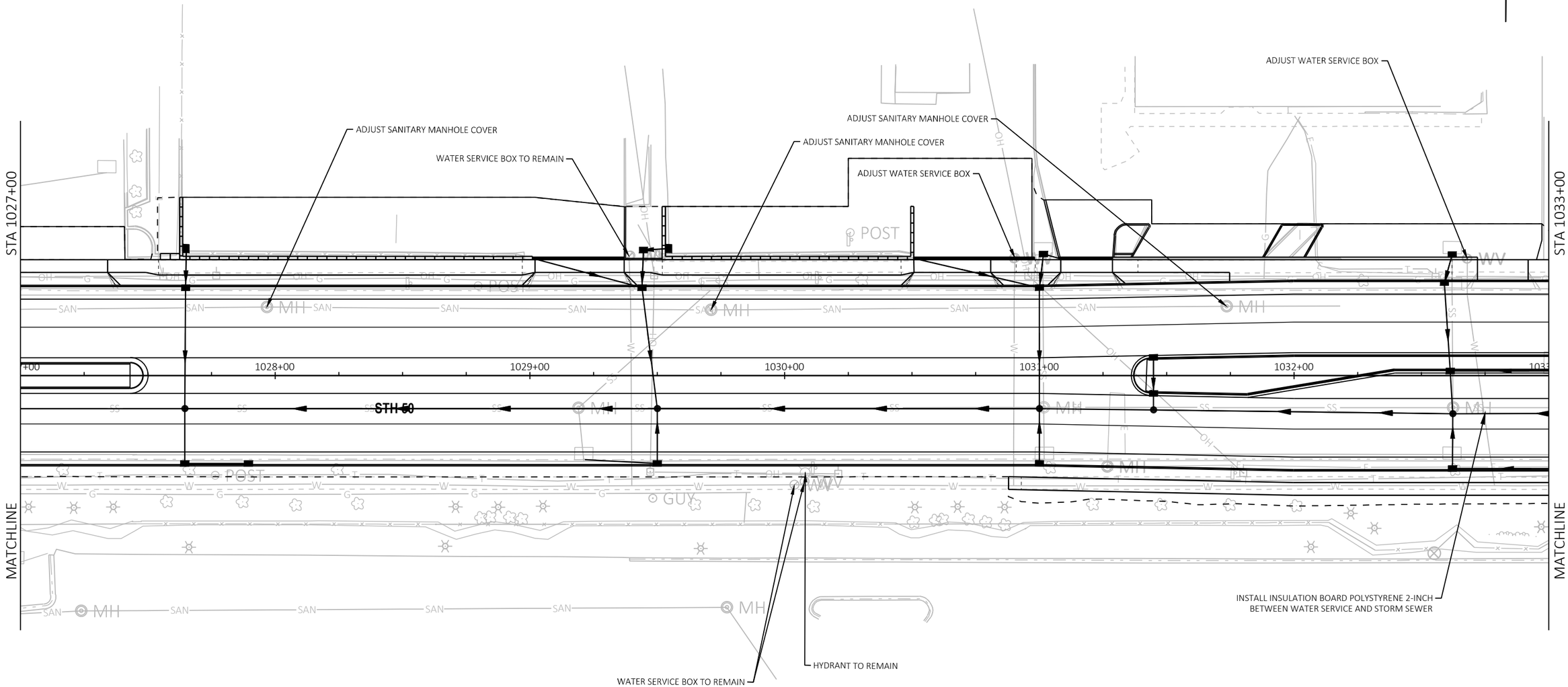

SHEET 7 OF 15

PROJECT NO: 1310-04-70	HWY: STH 50	COUNTY: KENOSHA	UTILITY ADJUSTMENTS	SHEET 251	E

FILE NAME : T:\1182708.06\CIVIL3D\13100400\13100400\SHEETSPLAN\023003A_UP.DWG
LAYOUT NAME - 07
PLOT DATE : 1/20/2022 7:36 AM
PLOT BY : BLACKWOOD, JIM
PLOT NAME :
PLOT SCALE : 1 IN:40 FT

NOTE:
LOCATION AND ELEVATION OF SANITARY SEWER SERVICE LATERALS ARE UNKNOWN FROM APPROXIMATELY STA 1035+00 TO STA 1047+00. RELOCATE SANITARY SERVICE LINES IN CONFLICT WITH PROPOSED STORM SEWER.

N

STA 1033+00

STA 1039+00

246TH AVE

41+00

39+00

EAST HIGH SCHOOL DRIVEWAY

STH 50

1034+00

1035+00

1036+00

1037+00

1038+00

MATCHLINE

MATCHLINE

ADJUST WATER SERVICE BOX

ADJUST WATER SERVICE BOX

ADJUST WATER SERVICE BOX

ADJUST WATER SERVICE BOX

ADJUST SANITARY MANHOLE COVER

ADJUST WATER SERVICE BOX

ADJUST WATER SERVICE BOX

MOVE HYDRANT TO STA 1034+87, 53' RT

ADJUST WATER VALVE BOX
(VALVE TO REMAIN AS SHUT OFF TO RELOCATED HYDRANT)

INSTALL INSULATION BOARD POLYSTYRENE 2-INCH BETWEEN WATER SERVICE AND STORM SEWER

RECONSTRUCT SANITARY MANHOLE COVER

ADJUST WATER SERVICE BOX

ADJUST WATER VALVE BOX

ADJUST WATER SERVICE BOX

PROJECT NO: 1310-04-70	HWY: STH 50	COUNTY: KENOSHA	UTILITY ADJUSTMENTS	SHEET 252	E

FILE NAME : T:\1182708.06\CIVIL3D\13100400\13100400\SHEETSPLAN\023003A_UP.DWG
LAYOUT NAME - 08
PLOT DATE : 4/8/2022 2:04 PM
PLOT BY : BLACKWOOD, JIM
PLOT NAME :
PLOT SCALE : 1 IN:40 FT
WISDOT/CADDS SHEET 42

NOTE:
LOCATION AND ELEVATION OF SANITARY SEWER SERVICE LATERALS ARE UNKNOWN FROM APPROXIMATELY STA 1035+00 TO STA 1047+00. RELOCATE SANITARY SERVICE LINES IN CONFLICT WITH PROPOSED STORM SEWER.

N

STA 1039+00

STA 1045+00

MATCHLINE

MATCHLINE

243RD AVE

71+00

244TH AVE

64+00

STH 50

1040+00

1041+00

1042+00

1043+00

1044+00

ADJUST SANITARY MANHOLE COVER

WATER SERVICE BOX TO REMAIN

ADJUST WATER SERVICE BOX

ADJUST SANITARY MANHOLE COVER

WATER SERVICE BOX TO REMAIN

ADJUST WATER SERVICE BOX

ADJUST SANITARY MANHOLE COVER

WATER SERVICE BOX TO REMAIN
(POSSIBLE ADJUST TO MEET ADA CURB RAMP DESIGN)

ADJUST WATER SERVICE BOX

HYDRANT TO REMAIN

ADJUST WATER SERVICE BOX

ADJUST SANITARY MANHOLE COVER

INSTALL INSULATION BOARD POLYSTYRENE 2-INCH BETWEEN WATER SERVICE AND STORM SEWER

SANITARY MANHOLE COVER TO REMAIN

ADJUST SANITARY MANHOLE COVER

INSTALL INSULATION BOARD POLYSTYRENE 2-INCH BETWEEN WATER SERVICE AND STORM SEWER

ADJUST WATER SERVICE BOX

INSTALL INSULATION BOARD POLYSTYRENE 2-INCH BETWEEN WATER SERVICE AND STORM SEWER

WATER SERVICE BOX TO REMAIN

INSTALL INSULATION BOARD POLYSTYRENE 2-INCH BETWEEN WATER SERVICE AND STORM SEWER

ADJUST WATER SERVICE BOX

ADJUST SANITARY MANHOLE COVER

ADJUST WATER SERVICE BOX

SHEET 9 OF 15

PROJECT NO: 1310-04-70	HWY: STH 50	COUNTY: KENOSHA	UTILITY ADJUSTMENTS	SHEET 253	E

FILE NAME : T:\1182708.06\CIVIL3D\13100400\13100400\SHEETSPLAN\023003A_UP.DWG
LAYOUT NAME - 09

PLOT DATE : 1/20/2022 7:36 AM PLOT BY : BLACKWOOD, JIM PLOT NAME : PLOT SCALE : 1 IN:40 FT

WISDOT/CADDS SHEET 42

2

INSTALL INSULATION BOARD POLYSTYRENE 2-INCH BETWEEN WATER SERVICE AND STORM SEWER

ADJUST WATER SERVICE BOX

NOTE:
LOCATION AND ELEVATION OF SANITARY SEWER SERVICE LATERALS ARE UNKNOWN FROM APPROXIMATELY STA 1035+00 TO STA 1047+00. RELOCATE SANITARY SERVICE LINES IN CONFLICT WITH PROPOSED STORM SEWER.

N

91+00

74TH PLACE

STA 1045+00

STA 1051+00

WATER SERVICE BOX TO REMAIN

STH 50

1046+00

1047+00

1048+00

1049+00

1050+00

MATCHLINE

MATCHLINE

WATER SERVICE BOX TO REMAIN

INSTALL INSULATION BOARD POLYSTYRENE 2-INCH BETWEEN WATER SERVICE AND STORM SEWER

WATER VALVE BOX TO REMAIN

HYDRANT TO REMAIN

ADJUST SANITARY MANHOLE COVER

79+00

242ND AVE

ADJUST WATER SERVICE BOX

ADJUST WATER VALVE BOX

SHEET 10 OF 15

PROJECT NO: 1310-04-70	HWY: STH 50	COUNTY: KENOSHA	UTILITY ADJUSTMENTS	SHEET 254	E

FILE NAME : T:\1182708.06\CIVIL3D\13100400\13100400\SHEETSPLAN\023003A_UP.DWG
LAYOUT NAME - 10

PLOT DATE : 1/20/2022 7:36 AM PLOT BY : BLACKWOOD, JIM PLOT NAME : PLOT SCALE : 1 IN:40 FT

2

N

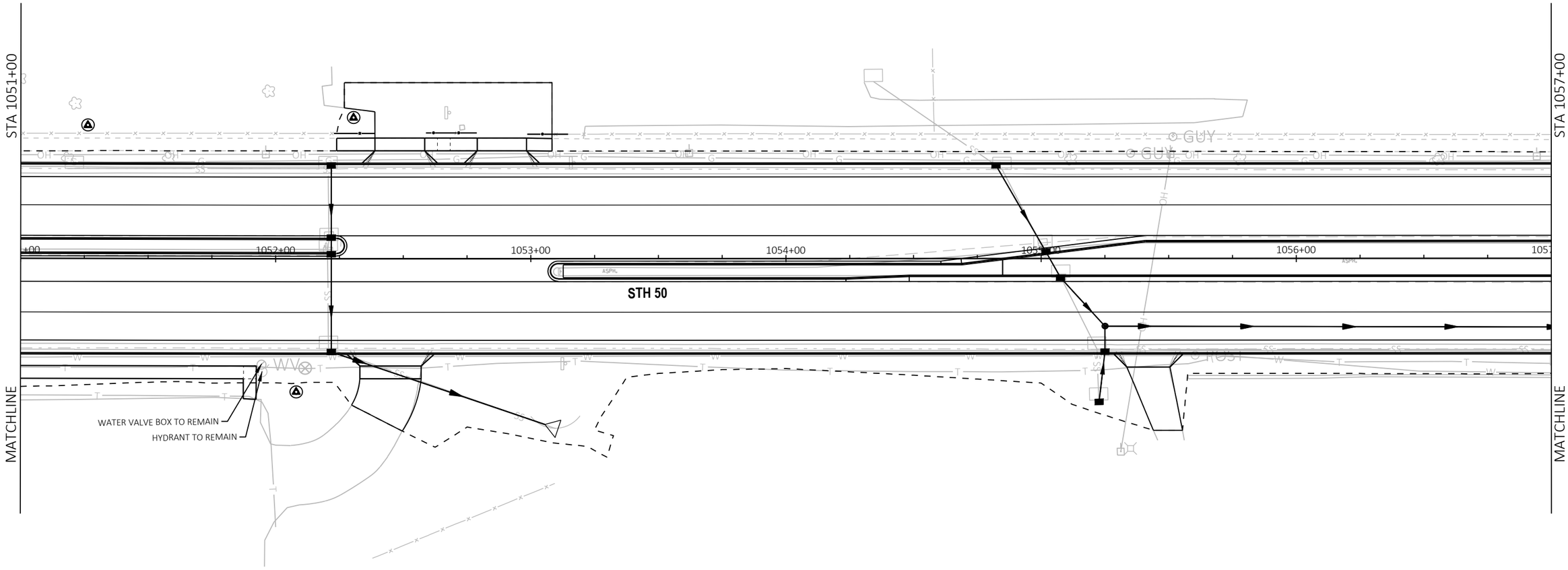

SHEET 11 OF 15

PROJECT NO: 1310-04-70	HWY: STH 50	COUNTY: KENOSHA	UTILITY ADJUSTMENTS	SHEET 255	E

FILE NAME : T:\1182708.06\CIVIL3D\13100400\13100400\SHEETSPLAN\023003A_UP.DWG
LAYOUT NAME - 11

PLOT DATE : 1/20/2022 7:36 AM PLOT BY : BLACKWOOD, JIM PLOT NAME : PLOT SCALE : 1 IN:40 FT

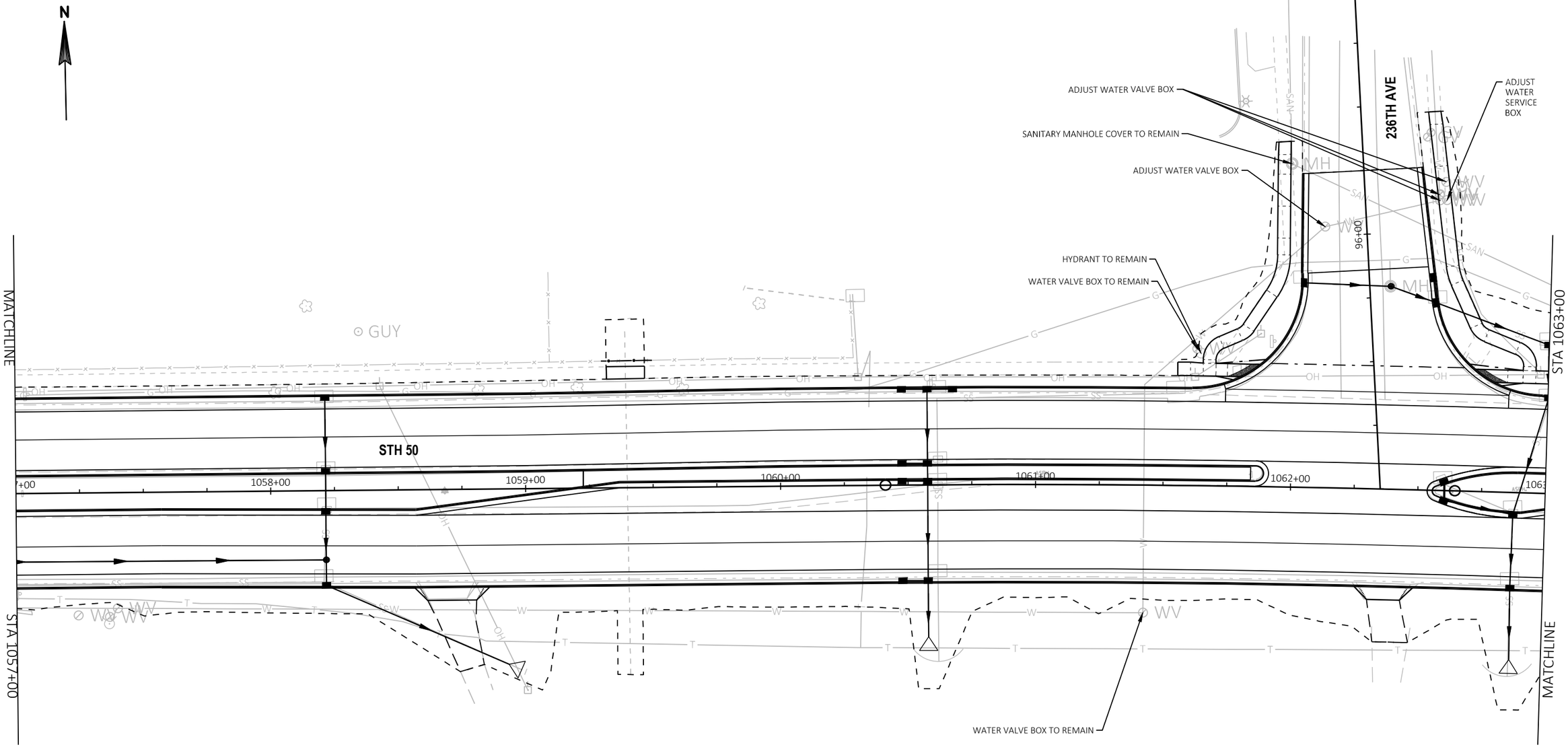

SHEET 12 OF 15

PROJECT NO: 1310-04-70	HWY: STH 50	COUNTY: KENOSHA	UTILITY ADJUSTMENTS	SHEET 256	E

FILE NAME : T:\1182708.06\CIVIL3D\13100400\13100400\SHEETSPLAN\023003A_UP.DWG
LAYOUT NAME - 12

PLOT DATE : 1/20/2022 7:36 AM PLOT BY : BLACKWOOD, JIM PLOT NAME : PLOT SCALE : 1 IN:40 FT

2

2

N

STA 1063+00

ADJUST SANITARY MANHOLE COVER

ADJUST SANITARY MANHOLE COVER

STH 50

1064+00

1065+00

1066+00

1067+00

1068+00

1069+00

MATCHLINE

SHEET 13 OF 15

PROJECT NO: 1310-04-70	HWY: STH 50	COUNTY: KENOSHA	UTILITY ADJUSTMENTS	SHEET 257	E

FILE NAME : T:\1182708.06\CIVIL3D\13100400\13100400\SHEETSPLAN\023003A_UP.DWG
LAYOUT NAME - 13

PLOT DATE : 1/20/2022 7:36 AM PLOT BY : BLACKWOOD, JIM PLOT NAME : PLOT SCALE : 1 IN:40 FT

WISDOT/CADDS SHEET 42

2

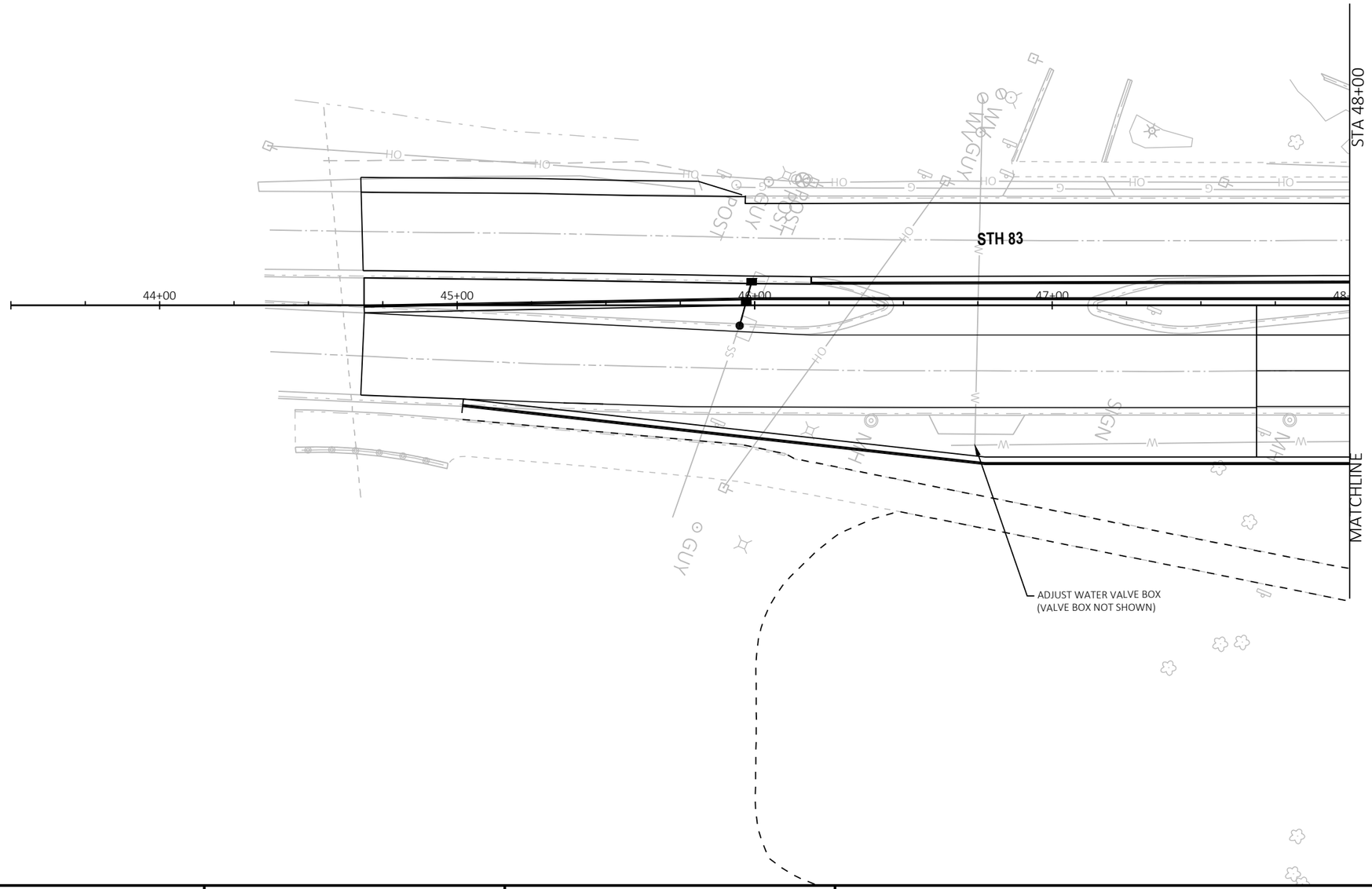

SHEET 14 OF 15

PROJECT NO: 1310-04-70	HWY: STH 50	COUNTY: KENOSHA	UTILITY ADJUSTMENTS	SHEET 258	E

FILE NAME : T:\1182708.06\CIVIL3D\13100400\13100400\SHEETSPLAN\023003A_UP.DWG
LAYOUT NAME - 14

PLOT DATE : 1/20/2022 7:37 AM PLOT BY : BLACKWOOD, JIM PLOT NAME : PLOT SCALE : 1 IN:40 FT

2

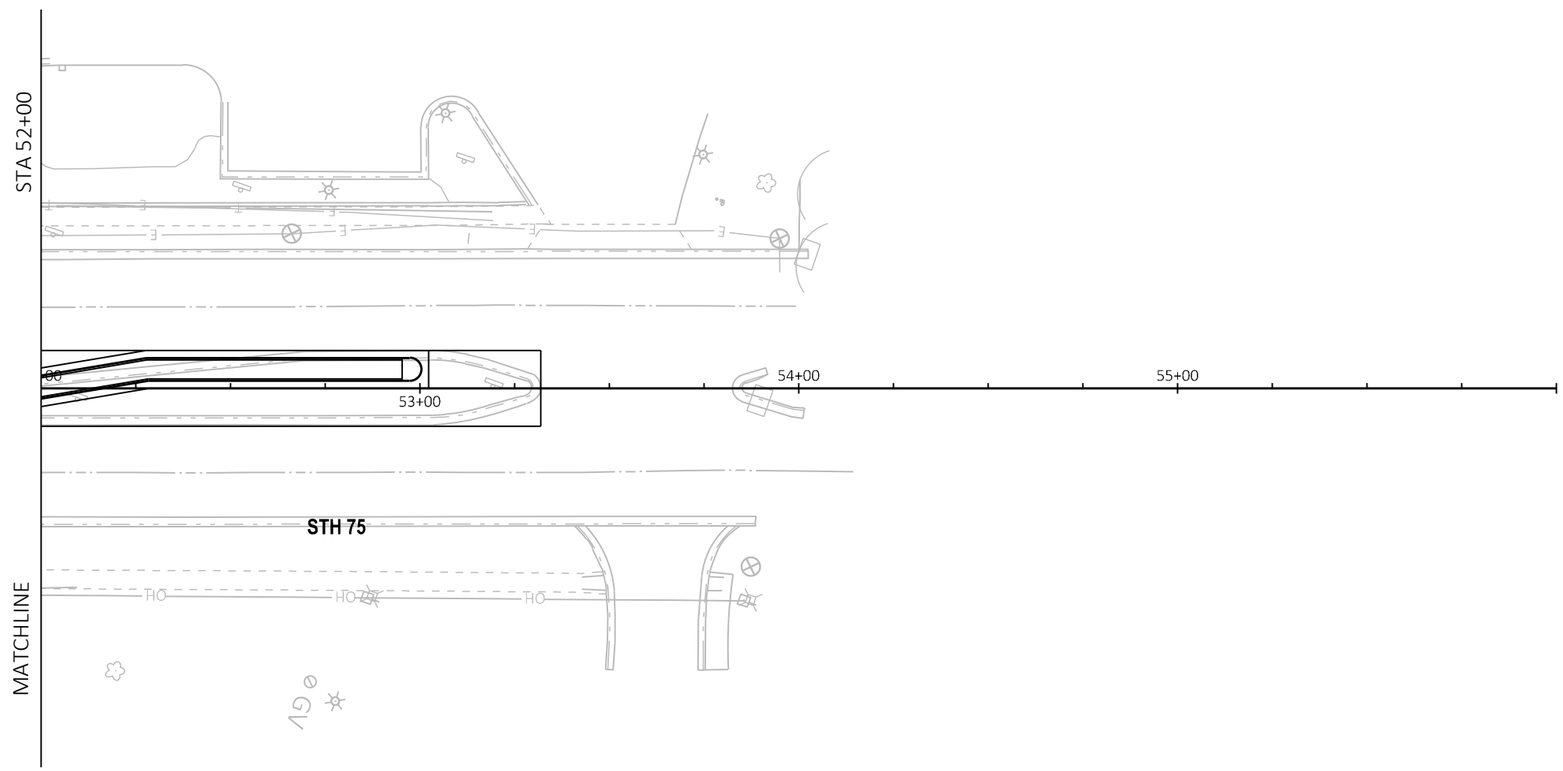

SHEET 15 OF 15

PROJECT NO: 1310-04-70	HWY: STH 50	COUNTY: KENOSHA	UTILITY ADJUSTMENTS	SHEET 259	E

FILE NAME : T:\1182708.06\CIVIL3D\13100400\13100400\SHEETSPLAN\023003A_UP.DWG
LAYOUT NAME - 15

PLOT DATE : 1/20/2022 7:37 AM PLOT BY : BLACKWOOD, JIM PLOT NAME : PLOT SCALE : 1 IN:40 FT

2

LEGEND

- EXISTING SIGN MOUNTED ON POST(S)
- EXISTING SIGN MOUNTED ON BRIDGE OR SIGN BRIDGE
- PROPOSED SIGN MOUNTED ON POST(S)
- PROPOSED SIGN MOUNTED ON BRIDGE OR SIGN BRIDGE
- VMS — VARIABLE MESSAGE SIGN
- EXISTING LIGHT OR SIGNAL POLE
- SIGN BRIDGE
- CANTILEVER SIGN BRIDGE
- XXX — DENOTES SIGN NUMBER
- (X) — INDICATES SIGN SIZE

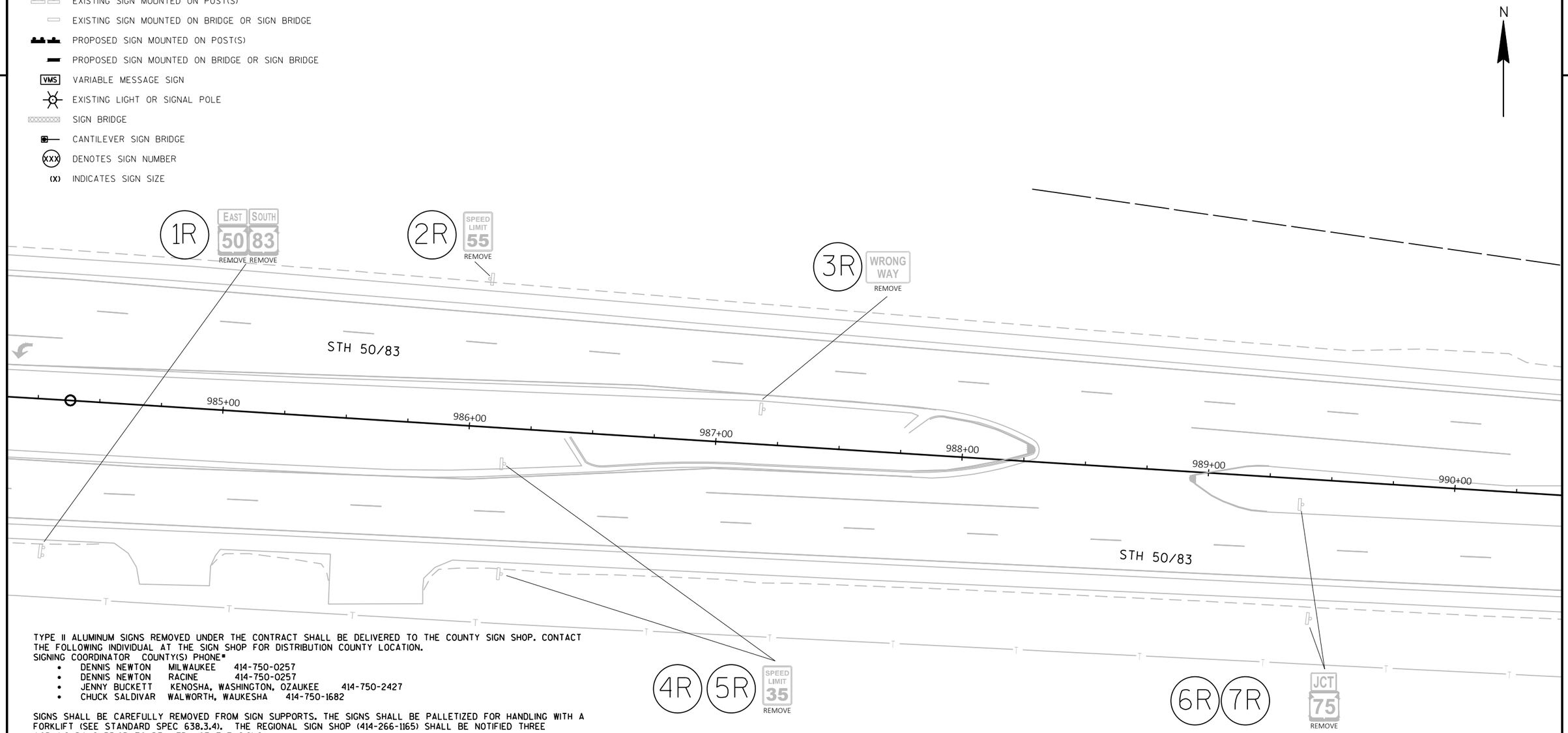

TYPE II ALUMINUM SIGNS REMOVED UNDER THE CONTRACT SHALL BE DELIVERED TO THE COUNTY SIGN SHOP. CONTACT THE FOLLOWING INDIVIDUAL AT THE SIGN SHOP FOR DISTRIBUTION COUNTY LOCATION.
SIGNING COORDINATOR COUNTY(S) PHONE#

- DENNIS NEWTON MILWAUKEE 414-750-0257
- DENNIS NEWTON RACINE 414-750-0257
- JENNY BUCKETT KENOSHA, WASHINGTON, OZAUKEE 414-750-2427
- CHUCK SALDIVAR WALWORTH, WAUKESHA 414-750-1682

SIGNS SHALL BE CAREFULLY REMOVED FROM SIGN SUPPORTS. THE SIGNS SHALL BE PALLETIZED FOR HANDLING WITH A FORKLIFT (SEE STANDARD SPEC 638.3.4). THE REGIONAL SIGN SHOP (414-266-1165) SHALL BE NOTIFIED THREE WORKING DAYS PRIOR TO DELIVERY OF THE SIGNS.

WHEN AN EXISTING STOP SIGN SUPPORT IS TO BE REMOVED AND A NEW STOP SIGN AND SUPPORT ERECTED, THE WORK SHALL BE DONE CONCURRENTLY. FOR OTHER SIGNS AND SUPPORTS THAT ARE TO BE REMOVED AND NEW SIGNS AND SUPPORTS ERECTED, THE REMOVAL OF THE EXISTING SIGN/SUPPORT AND ERECTION OF THE NEW SIGN/SUPPORT SHOULD BE DONE AS CONCURRENTLY AS POSSIBLE. IN NO CASE SHALL A NEW SIGN/SUPPORT BE DOWN FOR MORE THAN 24 HOURS AND THERE SHALL NOT BE MORE THAN ONE SIGN OF THE SAME LEGEND MISSING IN A ROW.

WOOD POST SIZES, FOR TYPE II SIGNS ARE ESTIMATED LENGTHS AND THE ACTUAL LENGTH WILL BE DETERMINED IN THE FIELD.

STREET NAME SIGNS ARE PROPERTY OF THE MUNICIPALITY (CITY, VILLAGE OR TOWN). THE MUNICIPALITY SHALL BE CONTACTED TO REMOVE THEIR STREET NAME SIGNS PRIOR TO CONSTRUCTION AND IT IS THEIR RESPONSIBILITY TO REINSTALL THE OLD SIGNS OR REPLACE THEM FOLLOWING CONSTRUCTION. WISDOT DOES NOT FURNISH OR INSTALL STREET NAME SIGNS. THE STREET NAME SIGNS SHALL NOT BE PLACED ON TOP OF THE STOP SIGNS.

LOCATE NO PASSING PENNANTS BASED ON ESTABLISHING NO PASSING ZONES PAY ITEM. PLACE SIGNS BASED ON WHERE THE PAVEMENT MARKING FOR NO PASSING ZONES BEGIN.

BOX OUT OR CORING OF CONCRETE FOR SIGN POSTS IS INCIDENTAL TO THE POST.

SHEET 1 OF 20

PROJECT NO: 1310-04-70	HWY: STH 50	COUNTY: KENOSHA	SIGNING REMOVAL PLAN	SHEET 260	E

2

LEGEND

- EXISTING SIGN MOUNTED ON POST(S)
- EXISTING SIGN MOUNTED ON BRIDGE OR SIGN BRIDGE
- PROPOSED SIGN MOUNTED ON POST(S)
- PROPOSED SIGN MOUNTED ON BRIDGE OR SIGN BRIDGE
- VMS — VARIABLE MESSAGE SIGN
- EXISTING LIGHT OR SIGNAL POLE
- SIGN BRIDGE
- CANTILEVER SIGN BRIDGE
- XXX — DENOTES SIGN NUMBER
- (X) — INDICATES SIGN SIZE

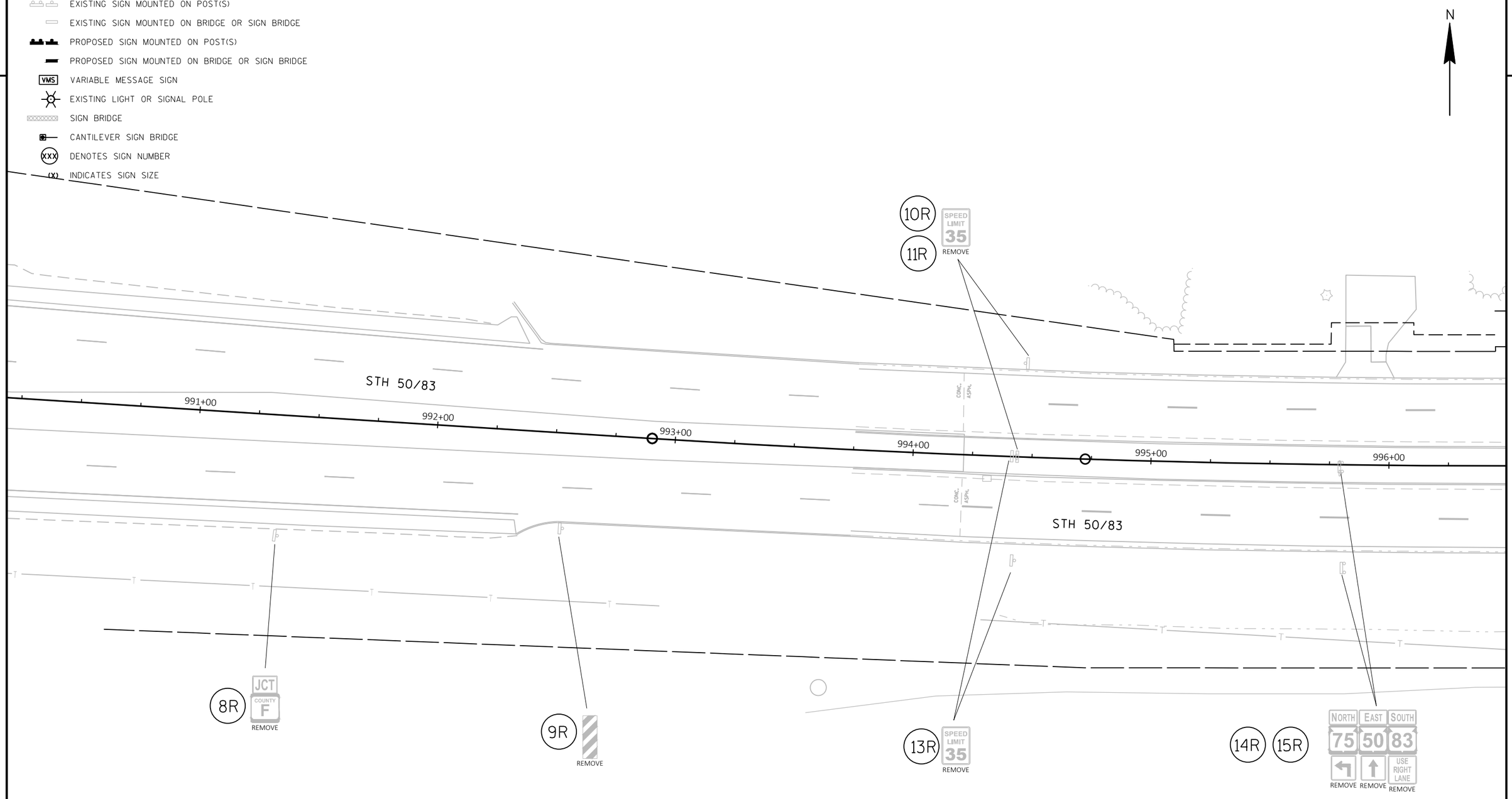

SHEET 2 OF 20

PROJECT NO: 1310-04-70	HWY: STH 50	COUNTY: KENOSHA	SIGNING REMOVAL PLAN	SHEET 261	E

FILE NAME : N:\PDS\C3D\CAD\13100400\SIGN\023101_PS_1310-04-70_16.DWG
LAYOUT NAME - RSht-02

PLOT DATE : 9/21/2021 11:29 AM PLOT BY : ASHENFELTER, DANIEL PLOT NAME : PLOT SCALE : 1 IN:40 FT

WISDOT/CADDS SHEET 42

2

LEGEND

- EXISTING SIGN MOUNTED ON POST(S)
- EXISTING SIGN MOUNTED ON BRIDGE OR SIGN BRIDGE
- PROPOSED SIGN MOUNTED ON POST(S)
- PROPOSED SIGN MOUNTED ON BRIDGE OR SIGN BRIDGE
- VMS — VARIABLE MESSAGE SIGN
- EXISTING LIGHT OR SIGNAL POLE
- SIGN BRIDGE
- CANTILEVER SIGN BRIDGE
- XXX — DENOTES SIGN NUMBER
- (X) — INDICATES SIGN SIZE

N

20R REMOVE

22R REMOVE

COUNTY F REMOVE

NO PARKING ANY TIME REMOVE

24R REMOVE

ADOPT A HIGHWAY I55-56 EDENHOFER LAW OFFICES S.C. I55-56P MOVE SEE PERMANENT SIGN PLAN

26R REMOVE

27R 28R REMOVE

JCT COUNTY F 29R REMOVE

STH 50/83

997+00 998+00 999+00 1000+00 1001+00 1002+00

GRASS ASPH. ASPH. ASPH.

STH 50/83

VENT VENT

16R Paddock Lake POPULATION 2992 REMOVE

17R COUNTY F REMOVE

CTH F (SILVER LAKE RD)

STREET NAME SIGNS MOVE BY VILLAGE

30R NO PARKING ANY TIME REMOVE

33R 50 83 REMOVE

STOP REMOVE

31R

DIVIDED HIGHWAY REMOVE

SHEET 3 OF 20

PROJECT NO: 1310-04-70	HWY: STH 50	COUNTY: KENOSHA	SIGNING REMOVAL PLAN	SHEET 262	E

FILE NAME : N:\PDS\C3D\CAD\13100400\SIGN\023101_PS_1310-04-70_16.DWG
LAYOUT NAME - RSht-03

PLOT DATE : 9/21/2021 11:29 AM PLOT BY : ASHENFELTER, DANIEL PLOT NAME : PLOT SCALE : 1 IN:40 FT

WISDOT/CADDS SHEET 42

2

LEGEND

- EXISTING SIGN MOUNTED ON POST(S)
- EXISTING SIGN MOUNTED ON BRIDGE OR SIGN BRIDGE
- PROPOSED SIGN MOUNTED ON POST(S)
- PROPOSED SIGN MOUNTED ON BRIDGE OR SIGN BRIDGE
- VMS — VARIABLE MESSAGE SIGN
- EXISTING LIGHT OR SIGNAL POLE
- SIGN BRIDGE
- CANTILEVER SIGN BRIDGE
- XXX — DENOTES SIGN NUMBER
- (X) — INDICATES SIGN SIZE

ALSO SEE SHEET NO. 19
FOR SIGNS

N

STH 75

52+00

54+00

37R — SPEED LIMIT 35 — REMOVE; NO PARKING ANY TIME — REMOVE

38R — WEST 50 / NORTH 83 — REMOVE

49R — 50R — STOP — REMOVE

DO NOT ENTER — REMOVE

52R — SOUTH 83 / NORTH 83 / NORTH 75 — REMOVE REMOVE REMOVE

NO PARKING ANY TIME — REMOVE

STH 50/83

1003+00 1004+00 1005+00 1006+00 1007+00 1008+00

50+00

STH 50

35R — REMOVE

39R — NORTH 75 — REMOVE

40R — SOUTH 83 — REMOVE

41R — DO NOT ENTER — REMOVE

42R — 43R — STOP — REMOVE

44R — ONE WAY — REMOVE

SPEED LIMIT 35 — REMOVE; NO PARKING ANY TIME — REMOVE

54R

45R — LEFT TURN YIELD ON FLASHING YELLOW ARROW — REMOVE

47R

46R — REMOVE

48R

TILE

49+00

STH 83

48+00

ALSO SEE SHEET NO. 19
FOR SIGNS

SHEET 4 OF 20

PROJECT NO: 1310-04-70	HWY: STH 50	COUNTY: KENOSHA	SIGNING REMOVAL PLAN	SHEET 263	E

FILE NAME : N:\PDS\C3D\CAD\13100400\SIGN\023101_PS_1310-04-70_16.DWG
LAYOUT NAME - RSht-04

PLOT DATE : 9/21/2021 11:29 AM PLOT BY : ASHENFELTER, DANIEL PLOT NAME : PLOT SCALE : 1 IN:40 FT

WISDOT/CADDS SHEET 42

2

LEGEND

- EXISTING SIGN MOUNTED ON POST(S)
- EXISTING SIGN MOUNTED ON BRIDGE OR SIGN BRIDGE
- PROPOSED SIGN MOUNTED ON POST(S)
- PROPOSED SIGN MOUNTED ON BRIDGE OR SIGN BRIDGE
- VMS — VARIABLE MESSAGE SIGN
- EXISTING LIGHT OR SIGNAL POLE
- SIGN BRIDGE
- CANTILEVER SIGN BRIDGE
- XXX — DENOTES SIGN NUMBER
- (X) — INDICATES SIGN SIZE

N

69R — REMOVE

73R — Lake Geneva / Salem / Burlington — REMOVE

72R — SOUTH 83 / WEST 50 / NORTH 83 / NORTH 75 — REMOVE REMOVE REMOVE REMOVE

56R — NO PARKING ANY TIME — REMOVE

57R — STOP — REMOVE

58R — REMOVE

61R — SPEED LIMIT 35 — REMOVE

VILLAGE SIGN/POST
MOVE BY VILLAGE

STH 50

1009+00 1010+00 1011+00 1012+00 1013+00 1014+00

HAZARD MARKERS

STH 50

HAZARD MARKERS

⊙ TILE

68R — EAST 50 — REMOVE

NO PARKING ON ANY VILLAGE STREET...
VILLAGE SIGN
MOVE BY VILLAGE

63R — NO PARKING ANY TIME — REMOVE

62R — CENTER LANE ONLY — REMOVE

60R — ONE WAY — REMOVE

64R 65R 66R — REMOVE

2

SHEET 5 OF 20

PROJECT NO: 1310-04-70	HWY: STH 50	COUNTY: KENOSHA	SIGNING REMOVAL PLAN	SHEET 264	E

FILE NAME : N:\PDS\C3D\CAD\13100400\SIGN\023101_PS_1310-04-70_16.DWG
LAYOUT NAME - RSht-05

PLOT DATE : 9/21/2021 11:29 AM PLOT BY : ASHENFELTER, DANIEL PLOT NAME : PLOT SCALE : 1 IN:40 FT

WISDOT/CADDS SHEET 42

2

LEGEND

- EXISTING SIGN MOUNTED ON POST(S)
- EXISTING SIGN MOUNTED ON BRIDGE OR SIGN BRIDGE
- PROPOSED SIGN MOUNTED ON POST(S)
- PROPOSED SIGN MOUNTED ON BRIDGE OR SIGN BRIDGE
- VMS — VARIABLE MESSAGE SIGN
- EXISTING LIGHT OR SIGNAL POLE
- SIGN BRIDGE
- CANTILEVER SIGN BRIDGE
- XXX — DENOTES SIGN NUMBER
- (X) — INDICATES SIGN SIZE

N

74R — JCT 75 83 — REMOVE

R3-2 — MOVE SEE PERMANENT SIGN PLAN

75R — STOP — REMOVE

250TH AVE

SPEED LIMIT 25 — R2-1 — VILLAGE OF PADDOCK LAKE PARKING ORDINANCES

ESTR VILLAGE SIGN ESTR

STREET NAME SIGNS MOVE BY VILLAGE

77R — SPEED LIMIT 35 — REMOVE

END SCHOOL ZONE — REMOVE

79R — NO PARKING ANY TIME — REMOVE

81R — POST IN TERRACE REMOVE BY WISDOT PROJECT

ONLY

SAN MH

SAN

STH 50

1015+00 1016+00 1017+00 1018+00 1019+00 1020+00

HAZARD MARKERS

80R — SPEED LIMIT 35 — REMOVE

NO PARKING ANY TIME — REMOVE

MOVE BY WISDOT PROJECT SEE PERMANENT SIGN PLAN

S1-1 — AHEAD — S16-9P — FINES HIGHER — R2-6P — RRFB

86R — SCHOOL SPEED LIMIT 25 WHEN CHILDREN ARE PRESENT — REMOVE

STH 50

SHEET 6 OF 20

PROJECT NO: 1310-04-70	HWY: STH 50	COUNTY: KENOSHA	SIGNING REMOVAL PLAN	SHEET 265	E

FILE NAME : N:\PDS\C3D\CAD\13100400\SIGN\023101_PS_1310-04-70_16.DWG
LAYOUT NAME - RSht-06

PLOT DATE : 9/21/2021 11:29 AM PLOT BY : ASHENFELTER, DANIEL PLOT NAME : PLOT SCALE : 1 IN:40 FT

WISDOT/CADDS SHEET 42

2

LEGEND

- EXISTING SIGN MOUNTED ON POST(S)
- EXISTING SIGN MOUNTED ON BRIDGE OR SIGN BRIDGE
- PROPOSED SIGN MOUNTED ON POST(S)
- PROPOSED SIGN MOUNTED ON BRIDGE OR SIGN BRIDGE
- VMS — VARIABLE MESSAGE SIGN
- EXISTING LIGHT OR SIGNAL POLE
- SIGN BRIDGE
- CANTILEVER SIGN BRIDGE
- XXX — DENOTES SIGN NUMBER
- (X) — INDICATES SIGN SIZE

N

ESTR BIKE LANE R3-17

ESTR AHEAD R3-17AP

MOVE BY WISDOT PROJECT SEE PERMANENT SIGN PLAN

S1-1 S16-7L

S1-1 S16-7R

RRFB

87R SPEED LIMIT 35 REMOVE

90R NO PARKING ANY TIME REMOVE

89R STOP REMOVE

248TH AVE

ONLY

ONLY

21+00

STH 50

1021+00 1022+00 1023+00 1024+00 1025+00 SAN 1026+00

STH 50

92R CENTER LANE ONLY REMOVE

NO PARKING ANY TIME REMOVE

101R REMOVE

REMOVE

DO NOT ENTER REMOVE

100R DO NOT ENTER REMOVE

STOP REMOVE

REMOVE

19+00

PUSH BUTTON MOVE BY WISDOT PROJECT SEE PERMANENT SIGN PLAN

STREET NAME SIGNS MOVE BY VILLAGE

S1-1 S16-7L

S1-1 S16-7R

RRFB

MOVE BY WISDOT PROJECT SEE PERMANENT SIGN PLAN

SHEET 7 OF 20

PROJECT NO: 1310-04-70	HWY: STH 50	COUNTY: KENOSHA	SIGNING REMOVAL PLAN	SHEET 266	E

FILE NAME : N:\PDS\C3D\CAD\13100400\SIGN\023101_PS_1310-04-70_16.DWG
LAYOUT NAME - RSht-07

PLOT DATE : 9/21/2021 11:29 AM PLOT BY : ASHENFELTER, DANIEL PLOT NAME : PLOT SCALE : 1 IN:40 FT

WISDOT/CADDS SHEET 42

2

LEGEND

- EXISTING SIGN MOUNTED ON POST(S)
- EXISTING SIGN MOUNTED ON BRIDGE OR SIGN BRIDGE
- PROPOSED SIGN MOUNTED ON POST(S)
- PROPOSED SIGN MOUNTED ON BRIDGE OR SIGN BRIDGE
- VMS — VARIABLE MESSAGE SIGN
- EXISTING LIGHT OR SIGNAL POLE
- SIGN BRIDGE
- CANTILEVER SIGN BRIDGE
- XXX — DENOTES SIGN NUMBER
- (X) — INDICATES SIGN SIZE

N

109R REMOVE

110R NO PARKING ANY TIME REMOVE

114R CENTER LANE ONLY REMOVE

113R NO PARKING ANY TIME REMOVE

STH 50

1027+00 1028+00 1029+00 1030+00 1031+00 1032+00

STH 50

108R REMOVE

111R REMOVE

NO PARKING ANY TIME REMOVE

115R CENTER LANE ONLY REMOVE

2

SHEET 8 OF 20

PROJECT NO: 1310-04-70	HWY: STH 50	COUNTY: KENOSHA	SIGNING REMOVAL PLAN	SHEET 267	E

FILE NAME : N:\PDS\C3D\CAD\13100400\SIGN\023101_PS_1310-04-70_16.DWG
LAYOUT NAME - RSht-08

PLOT DATE : 9/21/2021 11:29 AM PLOT BY : ASHENFELTER, DANIEL PLOT NAME : PLOT SCALE : 1 IN:40 FT

WISDOT/CADDS SHEET 42

LEGEND

- EXISTING SIGN MOUNTED ON POST(S)
- EXISTING SIGN MOUNTED ON BRIDGE OR SIGN BRIDGE
- PROPOSED SIGN MOUNTED ON POST(S)
- PROPOSED SIGN MOUNTED ON BRIDGE OR SIGN BRIDGE
- VMS — VARIABLE MESSAGE SIGN
- EXISTING LIGHT OR SIGNAL POLE
- SIGN BRIDGE
- CANTILEVER SIGN BRIDGE
- XXX — DENOTES SIGN NUMBER
- (X) — INDICATES SIGN SIZE

N

124R REMOVE

125R REMOVE

119R

120R STOP REMOVE

121R

122R REMOVE

129R SCHOOL SPEED LIMIT 25 WHEN CHILDREN ARE PRESENT REMOVE

128R REMOVE

NO PARKING ANY TIME REMOVE

246TH AVE

41+00

STREET NAME SIGNS MOVE BY VILLAGE

STH 50

1033+00 1034+00 1035+00 1036+00 1037+00 1038+00

CONC.

STH 50

116R

117R STOP REMOVE

118R

123R REMOVE

131R REMOVE

132R REMOVE

126R SPEED LIMIT 35 REMOVE

127R NO PARKING ANY TIME REMOVE

SHEET 9 OF 20

PROJECT NO: 1310-04-70	HWY: STH 50	COUNTY: KENOSHA	SIGNING REMOVAL PLAN	SHEET 268	E

FILE NAME : N:\PDS\C3D\CAD\13100400\SIGN\023101_PS_1310-04-70_16.DWG
LAYOUT NAME - RSht-09

PLOT DATE : 9/21/2021 11:29 AM PLOT BY : ASHENFELTER, DANIEL PLOT NAME : PLOT SCALE : 1 IN:40 FT

WISDOT/CADDS SHEET 42

2

LEGEND

- EXISTING SIGN MOUNTED ON POST(S)
- EXISTING SIGN MOUNTED ON BRIDGE OR SIGN BRIDGE
- PROPOSED SIGN MOUNTED ON POST(S)
- PROPOSED SIGN MOUNTED ON BRIDGE OR SIGN BRIDGE
- VMS — VARIABLE MESSAGE SIGN
- EXISTING LIGHT OR SIGNAL POLE
- SIGN BRIDGE
- CANTILEVER SIGN BRIDGE
- XXX — DENOTES SIGN NUMBER
- (X) — INDICATES SIGN SIZE

N

134R CENTER LANE ONLY — REMOVE

STREET NAME SIGNS MOVE BY VILLAGE

MOVE BY WISDOT PROJECT SEE PERMANENT SIGN PLAN

S1-1

AHEAD S16-9P

FINES HIGHER R2-6P

RRFB

138R SPEED LIMIT 35 — REMOVE

139R NO PARKING ANY TIME — REMOVE

140R STOP — REMOVE

243RD AVE

71+00

LAKE WALK 3.0 MI

VILLAGE SIGN MOVE BY VILLAGE

STREET NAME SIGNS MOVE BY VILLAGE

STH 50

1039+00 1040+00 1041+00 1042+00 1043+00 1044+00

STH 50

244TH AVE

64+00

141R NO PARKING ANY TIME — REMOVE

142R STOP — REMOVE

143R SPEED LIMIT 35 — REMOVE

END SCHOOL ZONE — REMOVE

145R NO PARKING ANY TIME — REMOVE

2

SHEET 10 OF 20

PROJECT NO: 1310-04-70	HWY: STH 50	COUNTY: KENOSHA	SIGNING REMOVAL PLAN	SHEET 269	E

FILE NAME : N:\PDS\C3D\CAD\13100400\SIGN\023101_PS_1310-04-70_16.DWG
LAYOUT NAME - RSht-10

PLOT DATE : 9/21/2021 11:29 AM PLOT BY : ASHENFELTER, DANIEL PLOT NAME : PLOT SCALE : 1 IN:40 FT

WISDOT/CADDS SHEET 42

2

LEGEND

- EXISTING SIGN MOUNTED ON POST(S)
- EXISTING SIGN MOUNTED ON BRIDGE OR SIGN BRIDGE
- PROPOSED SIGN MOUNTED ON POST(S)
- PROPOSED SIGN MOUNTED ON BRIDGE OR SIGN BRIDGE
- VMS — VARIABLE MESSAGE SIGN
- EXISTING LIGHT OR SIGNAL POLE
- SIGN BRIDGE
- CANTILEVER SIGN BRIDGE
- XXX — DENOTES SIGN NUMBER
- (X) — INDICATES SIGN SIZE

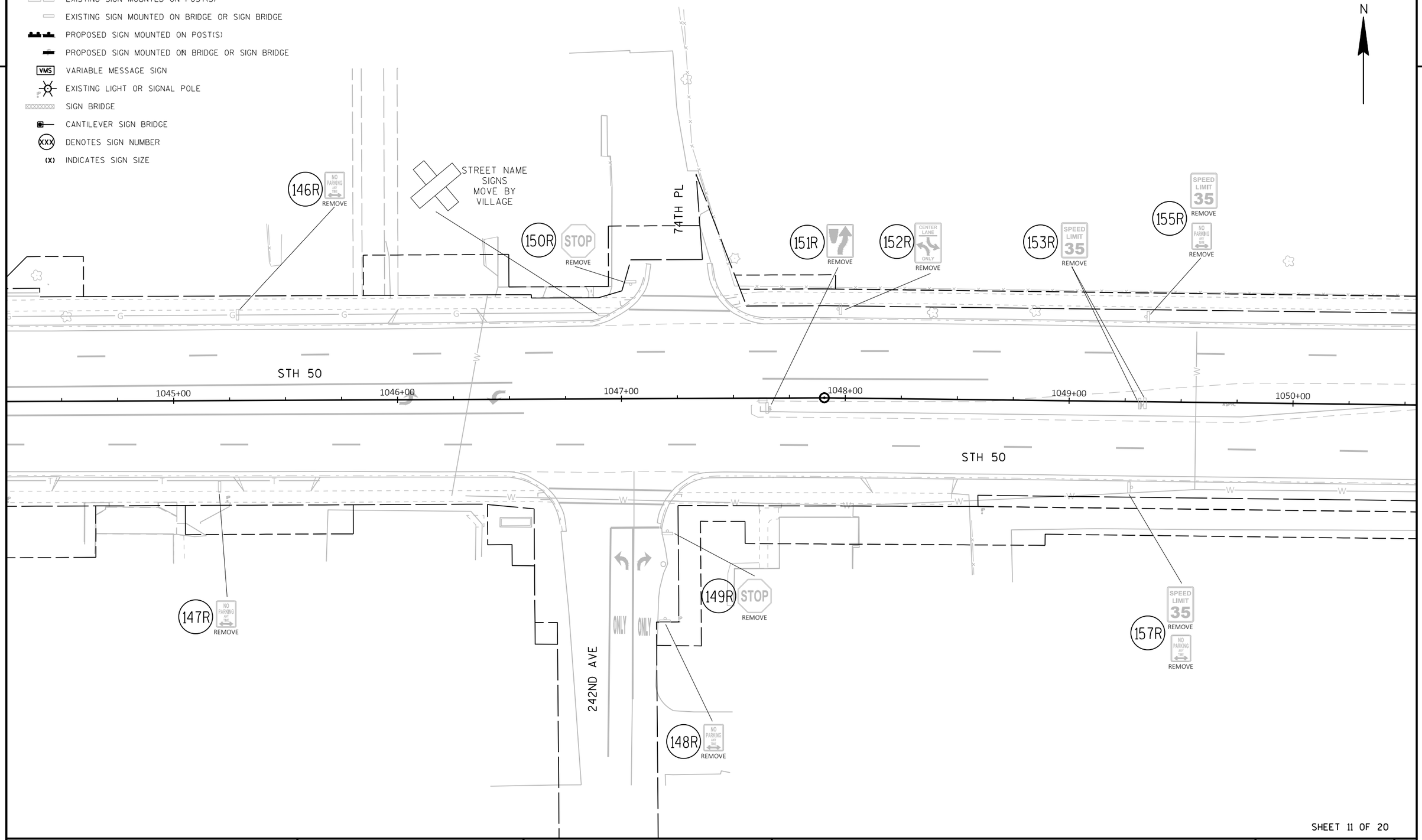

SHEET 11 OF 20

PROJECT NO: 1310-04-70	HWY: STH 50	COUNTY: KENOSHA	SIGNING REMOVAL PLAN	SHEET 270	E

FILE NAME : N:\PDS\C3D\CAD\13100400\SIGN\023101_PS_1310-04-70_16.DWG
LAYOUT NAME - RSht-11

PLOT DATE : 9/21/2021 11:29 AM PLOT BY : ASHENFELTER, DANIEL PLOT NAME : PLOT SCALE : 1 IN:40 FT

WISDOT/CADDS SHEET 42

2

LEGEND

- EXISTING SIGN MOUNTED ON POST(S)
- EXISTING SIGN MOUNTED ON BRIDGE OR SIGN BRIDGE
- PROPOSED SIGN MOUNTED ON POST(S)
- PROPOSED SIGN MOUNTED ON BRIDGE OR SIGN BRIDGE
- VMS — VARIABLE MESSAGE SIGN
- EXISTING LIGHT OR SIGNAL POLE
- SIGN BRIDGE
- CANTILEVER SIGN BRIDGE
- XXX — DENOTES SIGN NUMBER
- (X) — INDICATES SIGN SIZE

N

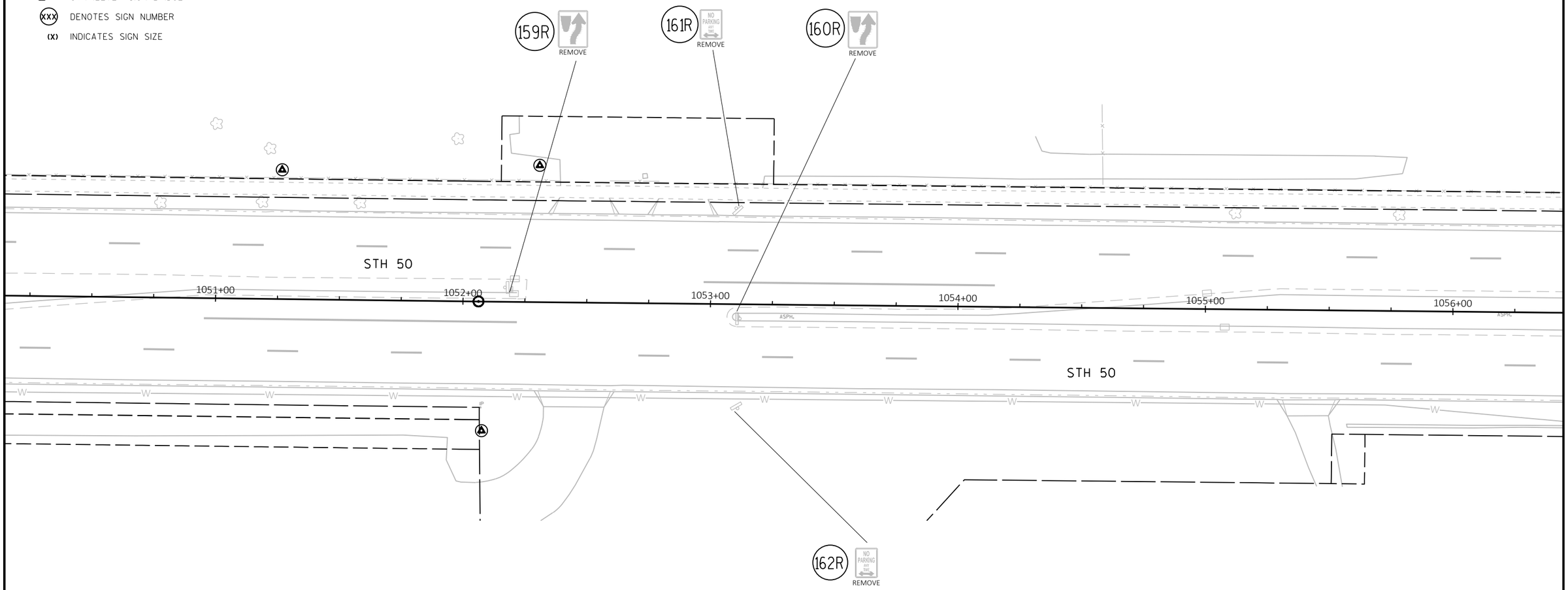

SHEET 12 OF 20

PROJECT NO: 1310-04-70	HWY: STH 50	COUNTY: KENOSHA	SIGNING REMOVAL PLAN	SHEET 271	E

FILE NAME : N:\PDS\C3D\CAD\13100400\SIGN\023101_PS_1310-04-70_16.DWG
LAYOUT NAME - RSht-12

PLOT DATE : 9/21/2021 11:29 AM PLOT BY : ASHENFELTER, DANIEL PLOT NAME : PLOT SCALE : 1 IN:40 FT

WISDOT/CADDS SHEET 42

2

LEGEND

- EXISTING SIGN MOUNTED ON POST(S)
- EXISTING SIGN MOUNTED ON BRIDGE OR SIGN BRIDGE
- PROPOSED SIGN MOUNTED ON POST(S)
- PROPOSED SIGN MOUNTED ON BRIDGE OR SIGN BRIDGE
- VMS — VARIABLE MESSAGE SIGN
- EXISTING LIGHT OR SIGNAL POLE
- SIGN BRIDGE
- CANTILEVER SIGN BRIDGE
- XXX — DENOTES SIGN NUMBER
- (X) — INDICATES SIGN SIZE

N

166R
SPEED LIMIT 35 REMOVE
NO PARKING ANY TIME REMOVE

168R
NO PARKING ANY TIME REMOVE

STH 50

56+00 1057+00 1058+00 1059+00 1060+00 1061+00

STH 50

165R
SPEED LIMIT 35 REMOVE
NO PARKING ANY TIME REMOVE

169R
SPEED LIMIT 35 REMOVE

2

SHEET 13 OF 20

PROJECT NO: 1310-04-70	HWY: STH 50	COUNTY: KENOSHA	SIGNING REMOVAL PLAN	SHEET 272	E

FILE NAME : N:\PDS\C3D\CAD\13100400\SIGN\023101_PS_1310-04-70_16.DWG
LAYOUT NAME - RSht-13

PLOT DATE : 9/21/2021 11:29 AM PLOT BY : ASHENFELTER, DANIEL PLOT NAME : PLOT SCALE : 1 IN:40 FT

WISDOT/CADDS SHEET 42

2

2

N

236TH AVE

STH 50

STREET NAME SIGNS MOVE BY VILLAGE

171R STOP REMOVE

174R SPEED LIMIT 35 REMOVE

NO PARKING ANY TIME REMOVE

179R SPEED LIMIT 35 REMOVE

1061+00 1062+00 1063+00 1064+00 1065+00 1066+00 1067+00

176R REMOVE

177R REMOVE

175R SPEED LIMIT 35 REMOVE

178R REMOVE

I55-56 ADOPT A HIGHWAY

I55-56P ALE STUDENT SOLUTIONS MOVE SEE PERMANENT SIGN PLAN

LEGEND

- EXISTING SIGN MOUNTED ON POST(S)
- EXISTING SIGN MOUNTED ON BRIDGE OR SIGN BRIDGE
- PROPOSED SIGN MOUNTED ON POST(S)
- PROPOSED SIGN MOUNTED ON BRIDGE OR SIGN BRIDGE
- VMS VARIABLE MESSAGE SIGN
- EXISTING LIGHT OR SIGNAL POLE
- SIGN BRIDGE
- CANTILEVER SIGN BRIDGE
- XXX DENOTES SIGN NUMBER
- (X) INDICATES SIGN SIZE

SHEET 14 OF 20

PROJECT NO: 1310-04-70	HWY: STH 50	COUNTY: KENOSHA	SIGNING REMOVAL PLAN	SHEET 273	E

FILE NAME : N:\PDS\C3D\CAD\13100400\SIGN\023101_PS_1310-04-70_16.DWG
LAYOUT NAME - RSht-14

PLOT DATE : 9/21/2021 11:30 AM PLOT BY : ASHENFELTER, DANIEL PLOT NAME : PLOT SCALE : 1 IN:40 FT

WISDOT/CADDS SHEET 42

2

LEGEND

- EXISTING SIGN MOUNTED ON POST(S)
- EXISTING SIGN MOUNTED ON BRIDGE OR SIGN BRIDGE
- PROPOSED SIGN MOUNTED ON POST(S)
- PROPOSED SIGN MOUNTED ON BRIDGE OR SIGN BRIDGE
- VMS — VARIABLE MESSAGE SIGN
- EXISTING LIGHT OR SIGNAL POLE
- SIGN BRIDGE
- CANTILEVER SIGN BRIDGE
- XXX — DENOTES SIGN NUMBER
- (X) — INDICATES SIGN SIZE

N

2

181R — Paddock Lake, POPULATION 2992 — REMOVE

186R 187R — SPEED LIMIT 35 — REMOVE

STH 50

ASPH. CONC.

67+00 1068+00 1069+00 1070+00 1071+00 1072+00 1073+00

182R 184R — SPEED LIMIT 35 — REMOVE

183R — REMOVE

185R — REMOVE

188R — EAST 50 — REMOVE

STH 50

SHEET 15 OF 20

PROJECT NO: 1310-04-70	HWY: STH 50	COUNTY: KENOSHA	SIGNING REMOVAL PLAN	SHEET 274	E

FILE NAME : N:\PDS\C3D\CAD\13100400\SIGN\023101_PS_1310-04-70_16.DWG
LAYOUT NAME - RSht-15

PLOT DATE : 9/21/2021 11:30 AM PLOT BY : ASHENFELTER, DANIEL PLOT NAME : PLOT SCALE : 1 IN:40 FT

WISDOT/CADDS SHEET 42

2

LEGEND

- EXISTING SIGN MOUNTED ON POST(S)
- EXISTING SIGN MOUNTED ON BRIDGE OR SIGN BRIDGE
- PROPOSED SIGN MOUNTED ON POST(S)
- PROPOSED SIGN MOUNTED ON BRIDGE OR SIGN BRIDGE
- VMS — VARIABLE MESSAGE SIGN
- EXISTING LIGHT OR SIGNAL POLE
- SIGN BRIDGE
- CANTILEVER SIGN BRIDGE
- XXX — DENOTES SIGN NUMBER
- (X) — INDICATES SIGN SIZE

N

2

189R 190R

SPEED LIMIT 35
REMOVE

STH 50

1073+00 1074+00 1075+00 1076+00 1077+00 1078+00

STH 50

191R

SPEED LIMIT 55
REMOVE

192R 193R

REMOVE

SHEET 16 OF 20

PROJECT NO: 1310-04-70	HWY: STH 50	COUNTY: KENOSHA	SIGNING REMOVAL PLAN	SHEET 275	E

FILE NAME : N:\PDS\C3D\CAD\13100400\SIGN\023101_PS_1310-04-70_16.DWG
LAYOUT NAME - RSht-16

PLOT DATE : 9/21/2021 11:30 AM PLOT BY : ASHENFELTER, DANIEL PLOT NAME : PLOT SCALE : 1 IN:40 FT

WISDOT/CADDS SHEET 42

2

2

LEGEND

- EXISTING SIGN MOUNTED ON POST(S)
- EXISTING SIGN MOUNTED ON BRIDGE OR SIGN BRIDGE
- PROPOSED SIGN MOUNTED ON POST(S)
- PROPOSED SIGN MOUNTED ON BRIDGE OR SIGN BRIDGE
- VMS — VARIABLE MESSAGE SIGN
- EXISTING LIGHT OR SIGNAL POLE
- SIGN BRIDGE
- CANTILEVER SIGN BRIDGE
- XXX — DENOTES SIGN NUMBER
- (X) — INDICATES SIGN SIZE

N

195R — NO PARKING ANY TIME — REMOVE

NO PASSING ZONE — REMOVE

200R — NO PARKING ANY TIME — REMOVE

202R — REMOVE

STH 83

194R — REMOVE

197R — REMOVE

NO MOTOR VEHICLES R5-3 — VILLAGE SIGN MOVE BY VILLAGE

NO MOTOR VEHICLES R5-3 — VILLAGE SIGN MOVE BY VILLAGE

203R — WEST 50 | NORTH 83 | NORTH 75 | EAST 50 — REMOVE REMOVE REMOVE REMOVE

201R — NO PARKING ANY TIME — REMOVE

SHEET 17 OF 20

PROJECT NO: 1310-04-70	HWY: STH 50	COUNTY: KENOSHA	SIGNING REMOVAL PLAN	SHEET 276	E

FILE NAME : N:\PDS\C3D\CAD\13100400\SIGN\023101_PS_1310-04-70_16.DWG
LAYOUT NAME - RSht-17

PLOT DATE : 9/21/2021 11:30 AM PLOT BY : ASHENFELTER, DANIEL PLOT NAME : PLOT SCALE : 1 IN:40 FT

WISDOT/CADDS SHEET 42

2

LEGEND

- EXISTING SIGN MOUNTED ON POST(S)
- EXISTING SIGN MOUNTED ON BRIDGE OR SIGN BRIDGE
- PROPOSED SIGN MOUNTED ON POST(S)
- PROPOSED SIGN MOUNTED ON BRIDGE OR SIGN BRIDGE
- VMS — VARIABLE MESSAGE SIGN
- EXISTING LIGHT OR SIGNAL POLE
- SIGN BRIDGE
- CANTILEVER SIGN BRIDGE
- XXX — DENOTES SIGN NUMBER
- (X) — INDICATES SIGN SIZE

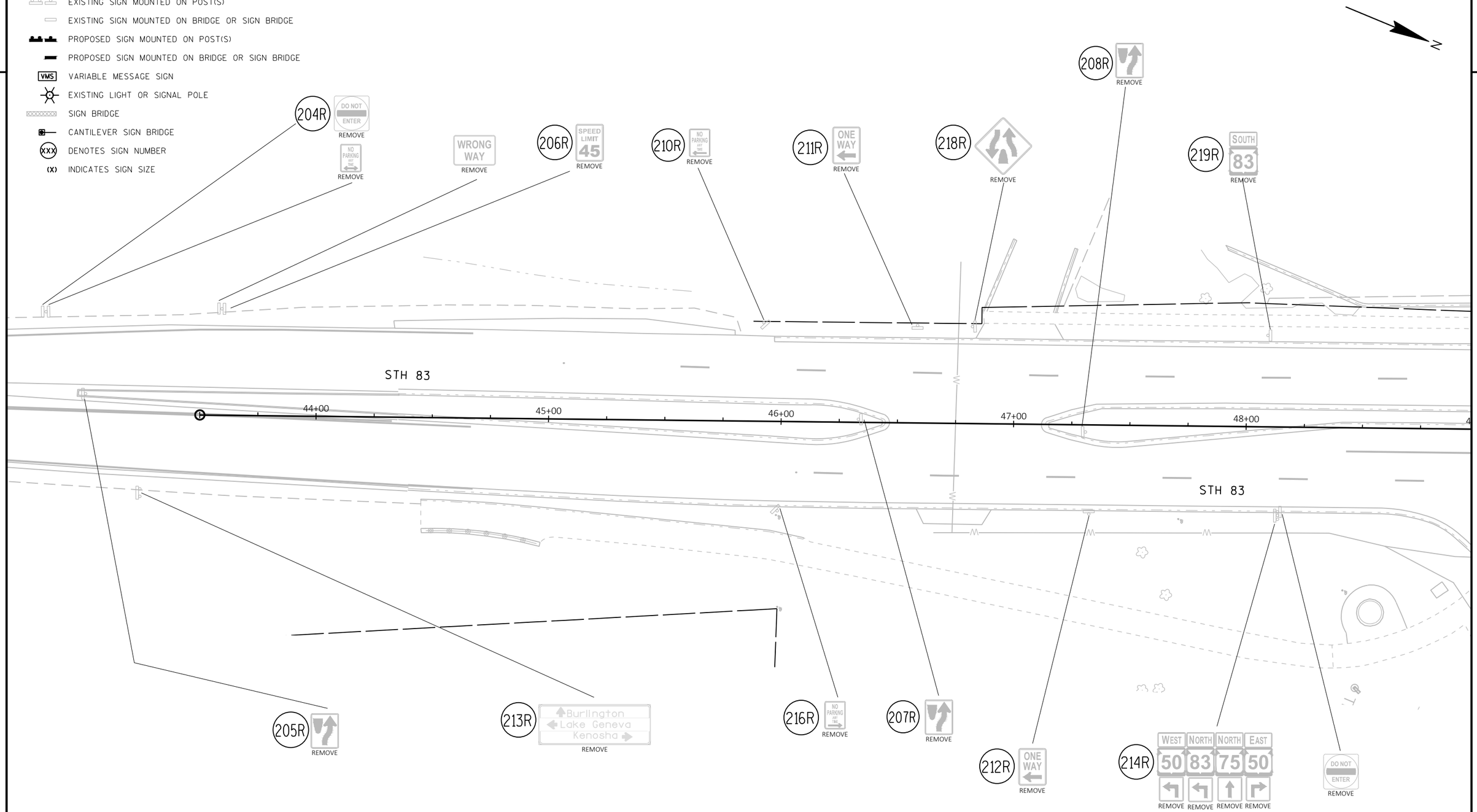

SHEET 18 OF 20

PROJECT NO: 1310-04-70	HWY: STH 50	COUNTY: KENOSHA	SIGNING REMOVAL PLAN	SHEET 277	E

FILE NAME : N:\PDS\C3D\CAD\13100400\SIGN\023101_PS_1310-04-70_16.DWG
LAYOUT NAME - RSht-18

PLOT DATE : 9/21/2021 11:30 AM PLOT BY : ASHENFELTER, DANIEL PLOT NAME : PLOT SCALE : 1 IN:40 FT

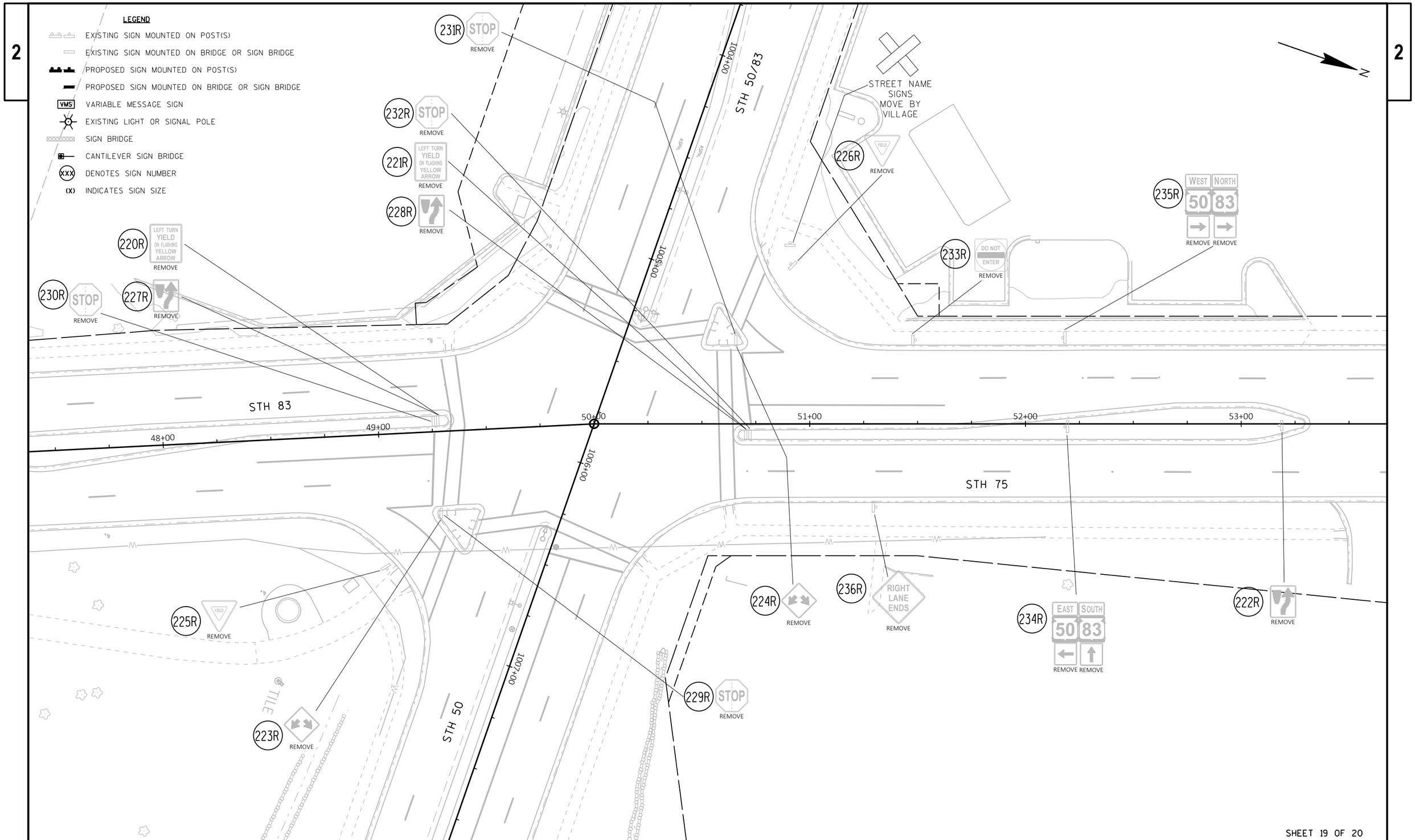

PROJECT NO: 1310-04-70	HWY: STH 50	COUNTY: KENOSHA	SIGNING REMOVAL PLAN	SHEET 278	E

FILE NAME : N:\PDS\C3D\CAD\13100400\SIGN\023101_PS_1310-04-70_16.DWG
LAYOUT NAME - RSht-19
PLOT DATE : 9/21/2021 11:30 AM PLOT BY : ASHENFELTER, DANIEL PLOT NAME : PLOT SCALE : 1 IN:40 FT
WISDOT/CADDS SHEET 42

2

2

LEGEND

- EXISTING SIGN MOUNTED ON POST(S)
- EXISTING SIGN MOUNTED ON BRIDGE OR SIGN BRIDGE
- PROPOSED SIGN MOUNTED ON POST(S)
- PROPOSED SIGN MOUNTED ON BRIDGE OR SIGN BRIDGE
- VMS — VARIABLE MESSAGE SIGN
- EXISTING LIGHT OR SIGNAL POLE
- SIGN BRIDGE
- CANTILEVER SIGN BRIDGE
- XXX — DENOTES SIGN NUMBER
- (X) — INDICATES SIGN SIZE

N

239R — Salem / Kenosha / Lake Geneva — REMOVE

240R — REMOVE

243R — END 75 — REMOVE

HOME OF CENTRAL HIGH SCHOOL...

VILLAGE SIGN
MOVE BY VILLAGE

WRONG WAY — REMOVE

241R — REMOVE

REMOVE

245R — EAST 50 | SOUTH 83 | NORTH 83 | WEST 50 — REMOVE REMOVE REMOVE REMOVE

NEAR STATION 60+05

WOOD POST

54+00

55+00

STH 75

247R — REMOVE

248R — REMOVE

WRONG WAY — REMOVE

WOOD POST

ADOPT A HIGHWAY
I55-56
SIC WIT-IT MC KENOSHA, WI
I55-56P
MOVE
SEE PERMANENT SIGN PLAN

250R — NORTH 75 — REMOVE

DO NOT ENTER — REMOVE

246R — REMOVE

SHEET 20 OF 20

PROJECT NO: 1310-04-70	HWY: STH 50	COUNTY: KENOSHA	SIGNING REMOVAL PLAN	SHEET 279	E

2

LEGEND

- EXISTING SIGN MOUNTED ON POST(S)
- EXISTING SIGN MOUNTED ON BRIDGE OR SIGN BRIDGE
- PROPOSED SIGN MOUNTED ON POST(S)
- PROPOSED SIGN MOUNTED ON BRIDGE OR SIGN BRIDGE
- VMS — VARIABLE MESSAGE SIGN
- EXISTING LIGHT OR SIGNAL POLE
- SIGN BRIDGE
- CANTILEVER SIGN BRIDGE
- XXX — DENOTES SIGN NUMBER
- (X) — INDICATES SIGN SIZE

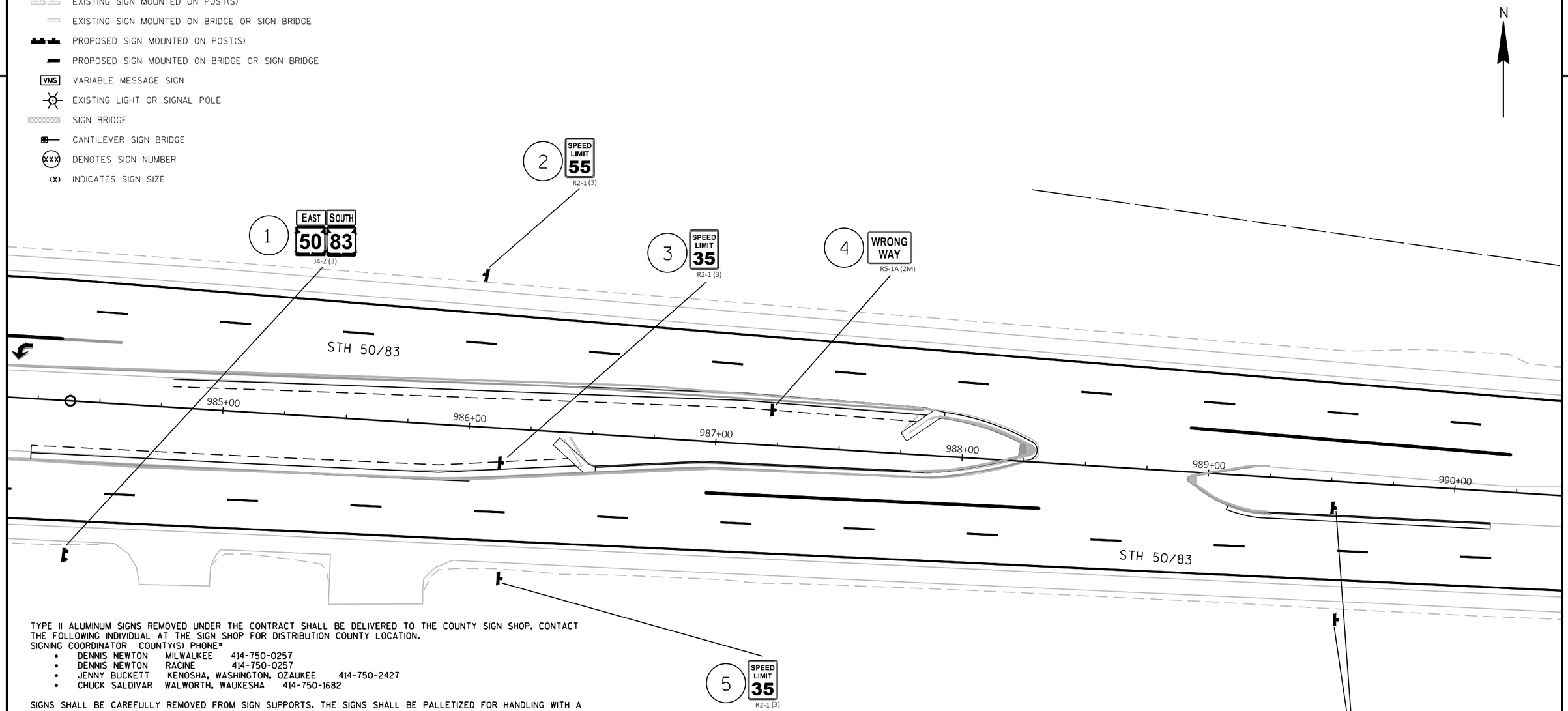

TYPE II ALUMINUM SIGNS REMOVED UNDER THE CONTRACT SHALL BE DELIVERED TO THE COUNTY SIGN SHOP. CONTACT THE FOLLOWING INDIVIDUAL AT THE SIGN SHOP FOR DISTRIBUTION COUNTY LOCATION.
SIGNING COORDINATOR COUNTY(S) PHONE*

- DENNIS NEWTON MILWAUKEE 414-750-0257
- DENNIS NEWTON RACINE 414-750-0257
- JENNY BUCKETT KENOSHA, WASHINGTON, OZAUKEE 414-750-2427
- CHUCK SALDIVAR WALWORTH, WAUKESHA 414-750-1682

SIGNS SHALL BE CAREFULLY REMOVED FROM SIGN SUPPORTS. THE SIGNS SHALL BE PALLETIZED FOR HANDLING WITH A FORKLIFT (SEE STANDARD SPEC 638.3.4). THE REGIONAL SIGN SHOP (414-266-1165) SHALL BE NOTIFIED THREE WORKING DAYS PRIOR TO DELIVERY OF THE SIGNS.

WHEN AN EXISTING STOP SIGN SUPPORT IS TO BE REMOVED AND A NEW STOP SIGN AND SUPPORT ERECTED, THE WORK SHALL BE DONE CONCURRENTLY. FOR OTHER SIGNS AND SUPPORTS THAT ARE TO BE REMOVED AND NEW SIGNS AND SUPPORTS ERECTED, THE REMOVAL OF THE EXISTING SIGN/SUPPORT AND ERECTION OF THE NEW SIGN/SUPPORT SHOULD BE DONE AS CONCURRENTLY AS POSSIBLE. IN NO CASE SHALL A NEW SIGN/SUPPORT BE DOWN FOR MORE THAN 24 HOURS AND THERE SHALL NOT BE MORE THAN ONE SIGN OF THE SAME LEGEND MISSING IN A ROW.

WOOD POST SIZES, FOR TYPE II SIGNS ARE ESTIMATED LENGTHS AND THE ACTUAL LENGTH WILL BE DETERMINED IN THE FIELD.

STREET NAME SIGNS ARE PROPERTY OF THE MUNICIPALITY (CITY, VILLAGE OR TOWN). THE MUNICIPALITY SHALL BE CONTACTED TO REMOVE THEIR STREET NAME SIGNS PRIOR TO CONSTRUCTION AND IT IS THEIR RESPONSIBILITY TO REINSTALL THE OLD SIGNS OR REPLACE THEM FOLLOWING CONSTRUCTION. WISDOT DOES NOT FURNISH OR INSTALL STREET NAME SIGNS. THE STREET NAME SIGNS SHALL NOT BE PLACED ON TOP OF THE STOP SIGNS.

LOCATE NO PASSING PENNANTS BASED ON ESTABLISHING NO PASSING ZONES PAY ITEM. PLACE SIGNS BASED ON WHERE THE PAVEMENT MARKING FOR NO PASSING ZONES BEGIN.

BOX OUT OR CORING OF CONCRETE FOR SIGN POSTS IS INCIDENTAL TO THE POST.

PROJECT NO: 1310-04-70	HWY: STH 50	COUNTY: KENOSHA	PERMANENT SIGNING	SHEET 280	E

FILE NAME : N:\PDS\C3D\CAD\13100400\SIGN\023201_PS_1310-04-70_16.DWG
LAYOUT NAME - PSht-01
PLOT DATE : 9/21/2021 11:06 AM
PLOT BY : ASHENFELTER, DANIEL
PLOT NAME :
PLOT SCALE : 1 IN:40 FT
WISDOT/CADDS SHEET 42

2

LEGEND

- EXISTING SIGN MOUNTED ON POST(S)
- EXISTING SIGN MOUNTED ON BRIDGE OR SIGN BRIDGE
- PROPOSED SIGN MOUNTED ON POST(S)
- PROPOSED SIGN MOUNTED ON BRIDGE OR SIGN BRIDGE
- VMS — VARIABLE MESSAGE SIGN
- EXISTING LIGHT OR SIGNAL POLE
- SIGN BRIDGE
- CANTILEVER SIGN BRIDGE
- XXX — DENOTES SIGN NUMBER
- (X) — INDICATES SIGN SIZE

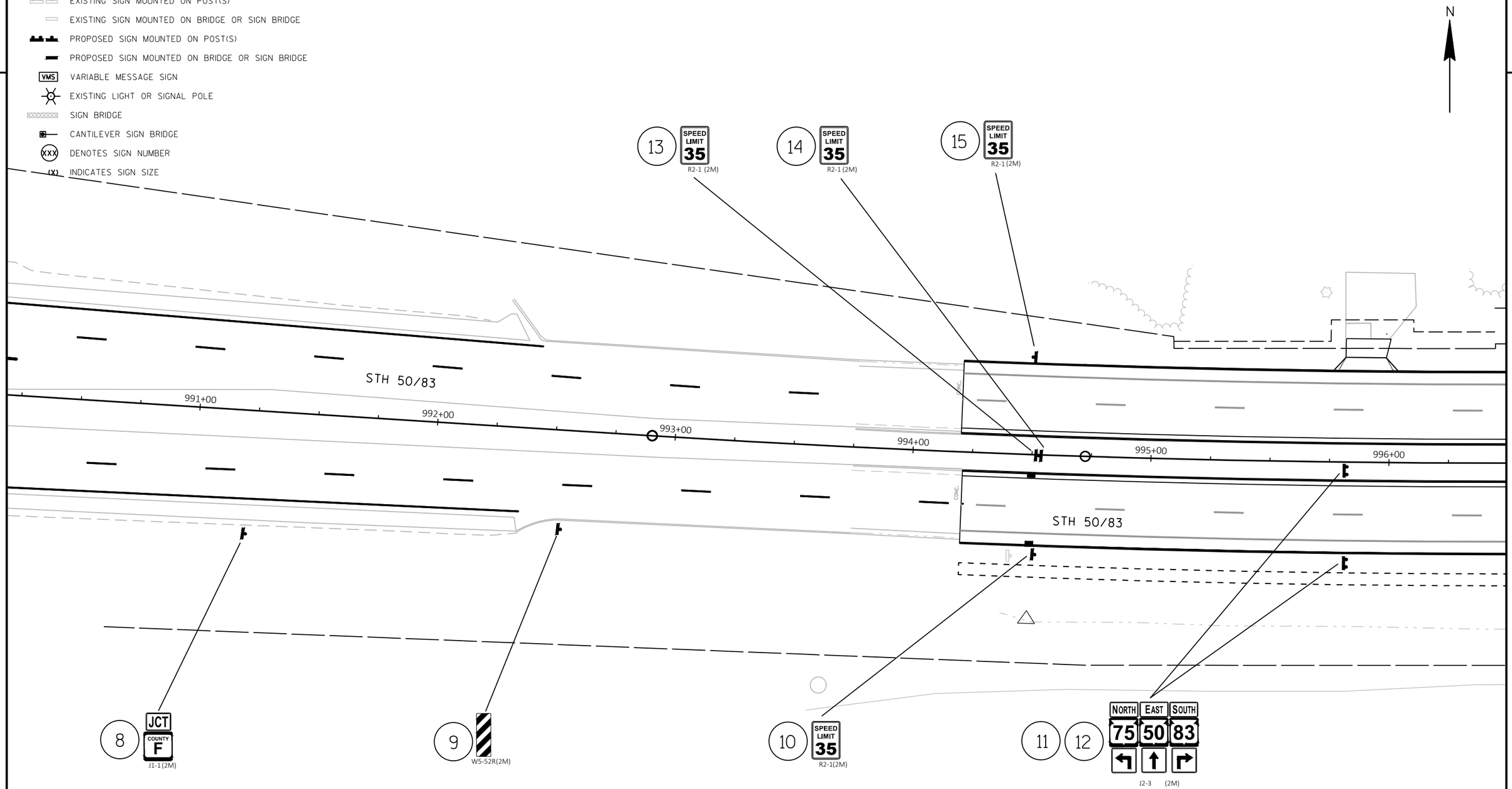

SHEET 2 OF 20

PROJECT NO: 1310-04-70	HWY: STH 50	COUNTY: KENOSHA	PERMANENT SIGNING	SHEET 281	E

FILE NAME : N:\PDS\C3D\CAD\13100400\SIGN\023201_PS_1310-04-70_16.DWG
LAYOUT NAME - PSht-02

PLOT DATE : 9/21/2021 11:06 AM PLOT BY : ASHENFELTER, DANIEL PLOT NAME : PLOT SCALE : 1 IN:40 FT

WISDOT/CADDS SHEET 42

2

LEGEND

- EXISTING SIGN MOUNTED ON POST(S)
- EXISTING SIGN MOUNTED ON BRIDGE OR SIGN BRIDGE
- PROPOSED SIGN MOUNTED ON POST(S)
- PROPOSED SIGN MOUNTED ON BRIDGE OR SIGN BRIDGE
- VMS — VARIABLE MESSAGE SIGN
- EXISTING LIGHT OR SIGNAL POLE
- SIGN BRIDGE
- CANTILEVER SIGN BRIDGE
- XXX — DENOTES SIGN NUMBER
- (X) — INDICATES SIGN SIZE

N

20 NO PARKING ANY TIME R7-1D(2M)

21 R4-7 (2M)

328 ONE WAY R6-2L (2M)

22 R4-7 (2M)

23 DO NOT ENTER R5-1 (2M)

24 ADOPT A HIGHWAY I55-56 EDENHOFER LAW OFFICES S.C. I55-56P MOVE

25 COUNTY F J3-1 (2M)

26 WRONG WAY R5-1A (2M) 26A

27 JCT COUNTY F J1-1 (2M)

329 ONE WAY 330 R6-2R (2S)

POST POST POST POST

STH 50/83

997+00 998+00 999+00 1000+00 1001+00 1002+00

STH 50/83

16 WRONG WAY R5-1A (2M)

17 Paddock Lake POPULATION 2992 I2-3

18 COUNTY F J3-1 (2M)

19 DO NOT ENTER R5-1 (2M)

STREET NAME SIGNS
VILLAGE SIGNS
MOVE BY VILLAGE

POST

CTH F (SILVER LAKE RD)

ONLY ONLY

29 STOP R1-1(2M)

28 DIVIDED HIGHWAY R6-3A(2S)

30 50 83 JV3-1 (2S)

31 NO PARKING ANY TIME R7-1D(2M)

32 33 W3-3 (2M)

34 BEGIN LEFT TURN LANE R3-20L (2M)

SHEET 3 OF 20

PROJECT NO: 1310-04-70	HWY: STH 50	COUNTY: KENOSHA	PERMANENT SIGNING	SHEET 282	E

FILE NAME : N:\PDS\C3D\CAD\13100400\SIGN\023201_PS_1310-04-70_16.DWG
LAYOUT NAME - PSht-03

PLOT DATE : 9/21/2021 11:06 AM PLOT BY : ASHENFELTER, DANIEL PLOT NAME : PLOT SCALE : 1 IN:40 FT

WISDOT/CADDS SHEET 42

2

2

LEGEND

- EXISTING SIGN MOUNTED ON POST(S)
- EXISTING SIGN MOUNTED ON BRIDGE OR SIGN BRIDGE
- PROPOSED SIGN MOUNTED ON POST(S)
- PROPOSED SIGN MOUNTED ON BRIDGE OR SIGN BRIDGE
- VMS VARIABLE MESSAGE SIGN
- EXISTING LIGHT OR SIGNAL POLE
- SIGN BRIDGE
- CANTILEVER SIGN BRIDGE
- XXX DENOTES SIGN NUMBER
- (X) INDICATES SIGN SIZE

N

STH 50/83

STH 75

STH 83

STH 50

SIGNS ALSO SHOWN ON SHEET 19

SIGNS ALSO SHOWN ON SHEET 19

1003+00 1004+00 1006+00 1007+00 1008+00

40' 40' 40' 40' 40'

51+00

OUTFLOW

ONLY

TILE

POST

35 BEGIN LEFT TURN LANE — R3-20L (2M)

36 SPEED LIMIT 35 — R2-1(2M)

331 NO PARKING ANY TIME — R7-1L(2M)

37 WEST 50 NORTH 83 — JV4-1 (2M)

38 SOUTH 83 — J3-1 (2M)

39 NORTH 75 — J3-1 (2M)

332 SPEED LIMIT 35 — R2-1(2M)

40 DO NOT ENTER — R5-1(2M)

42 — R4-7 (2M) MOUNT ON SIGNAL POLE

MOUNT R6-3 ABOVE R1-1F ON SIGNAL POLE

43 DIVIDED HIGHWAY — R6-3 (2S)

44 STOP — R1-1F(2M)

41 ONE WAY — R6-2L (2M)

MOUNT ON SIGNAL POLE

57 STOP — R1-1F(2M)

56 ONE WAY — R6-2L(2M)

50 DIVIDED HIGHWAY — R6-3 (2S)

51 STOP — R1-1F (2M)

MOUNT R6-3 ABOVE R1-1F ON SIGNAL POLE

52 DO NOT ENTER — R5-1 (2M)

53 SOUTH 83 | WEST 50 | NORTH 83 | NORTH 75 — J3-4 (2M)

54 STOP — R1-1F (2M)

MOUNT ON SIGNAL POLE

55 NO PARKING ANY TIME — R7-1D (2M)

49 83 Antioch Rd

M1-94S
MOUNT ON SIGNAL MAST ARM

46 — R4-7 (2M) MOUNT ON SIGNAL POLE

48 NO PARKING ANY TIME — R7-1D (2M)

47 SPEED LIMIT 35 — R2-1 (2M)

45 83 Antioch Rd

M1-94S
MOUNT ON SIGNAL MAST ARM

SHEET 4 OF 20

PROJECT NO: 1310-04-70	HWY: STH 50	COUNTY: KENOSHA	PERMANENT SIGNING	SHEET 283	E

FILE NAME : N:\PDS\C3D\CAD\13100400\SIGN\023201_PS_1310-04-70_16.DWG
LAYOUT NAME - PSht-04

PLOT DATE : 9/21/2021 11:06 AM PLOT BY : ASHENFELTER, DANIEL PLOT NAME : PLOT SCALE : 1 IN:40 FT

WISDOT/CADDS SHEET 42

2

LEGEND

- EXISTING SIGN MOUNTED ON POST(S)
- EXISTING SIGN MOUNTED ON BRIDGE OR SIGN BRIDGE
- PROPOSED SIGN MOUNTED ON POST(S)
- PROPOSED SIGN MOUNTED ON BRIDGE OR SIGN BRIDGE
- VMS — VARIABLE MESSAGE SIGN
- EXISTING LIGHT OR SIGNAL POLE
- SIGN BRIDGE
- CANTILEVER SIGN BRIDGE
- XXX — DENOTES SIGN NUMBER
- (X) — INDICATES SIGN SIZE

N

59 WRONG WAY R5-1A (2M)

60 61 W3-3 (2M)

62 Lake Geneva / Salem / Burlington D1-3

64 BEGIN LEFT TURN LANE R3-20LL (2M)

67 SOUTH 83 | WEST 50 | NORTH 83 | NORTH 75 J2-4 (2M)

66 NO PARKING ANY TIME R7-1D (2M)

68 RIGHT TURN ONLY R3-53R (2M)

69 STOP R1-1 (2M)

79 R4-7(2S)

334 W12-1R (2S) MOUNT HEIGHT 2 FEET

70 DO NOT ENTER R5-1 (2M)

71 86 SPEED LIMIT 35 R2-1 (2M)

STH 50

1009+00 1010+00 1011+00 1012+00 1013+00 1014+00

⊙ POST ⊙ POST ⊙ POST ⊙ POST

⊙ TILE

STH 50

58 EAST 50 J4-1 (2M)

NO PARKING ON ANY VILLAGE STREET...
VILLAGE SIGN MOVE BY VILLAGE

63 BEGIN LEFT TURN LANE R3-20L (2M)

65 NO PARKING ANY TIME R7-1D (2M)

72 ONE WAY R6-2R (2S)

73 74 R4-7 (2M)

83 250th Ave D1-1

SHEET 5 OF 20

PROJECT NO: 1310-04-70	HWY: STH 50	COUNTY: KENOSHA	PERMANENT SIGNING	SHEET 284	E

FILE NAME : N:\PDS\C3D\CAD\13100400\SIGN\023201_PS_1310-04-70_16.DWG
LAYOUT NAME - PSht-05

PLOT DATE : 9/21/2021 11:06 AM PLOT BY : ASHENFELTER, DANIEL PLOT NAME : PLOT SCALE : 1 IN:40 FT

WISDOT/CADDS SHEET 42

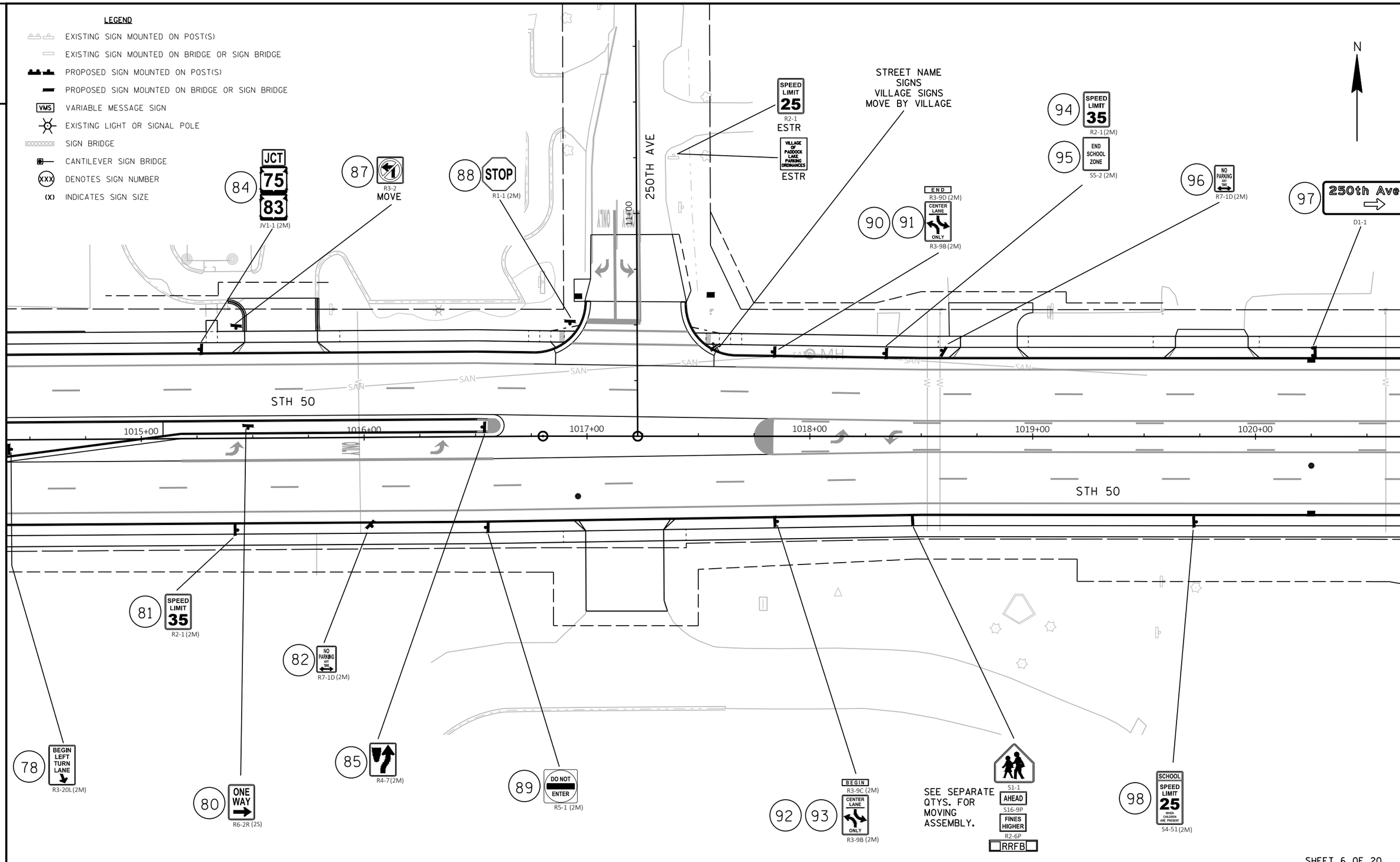

PROJECT NO: 1310-04-70	HWY: STH 50	COUNTY: KENOSHA	PERMANENT SIGNING	SHEET 285	E

FILE NAME : N:\PDS\C3D\CAD\13100400\SIGN\023201_PS_1310-04-70_16.DWG
LAYOUT NAME - PSht-06
PLOT DATE : 9/21/2021 11:07 AM PLOT BY : ASHENFELTER, DANIEL PLOT NAME : PLOT SCALE : 1 IN:40 FT
WISDOT/CADDS SHEET 42

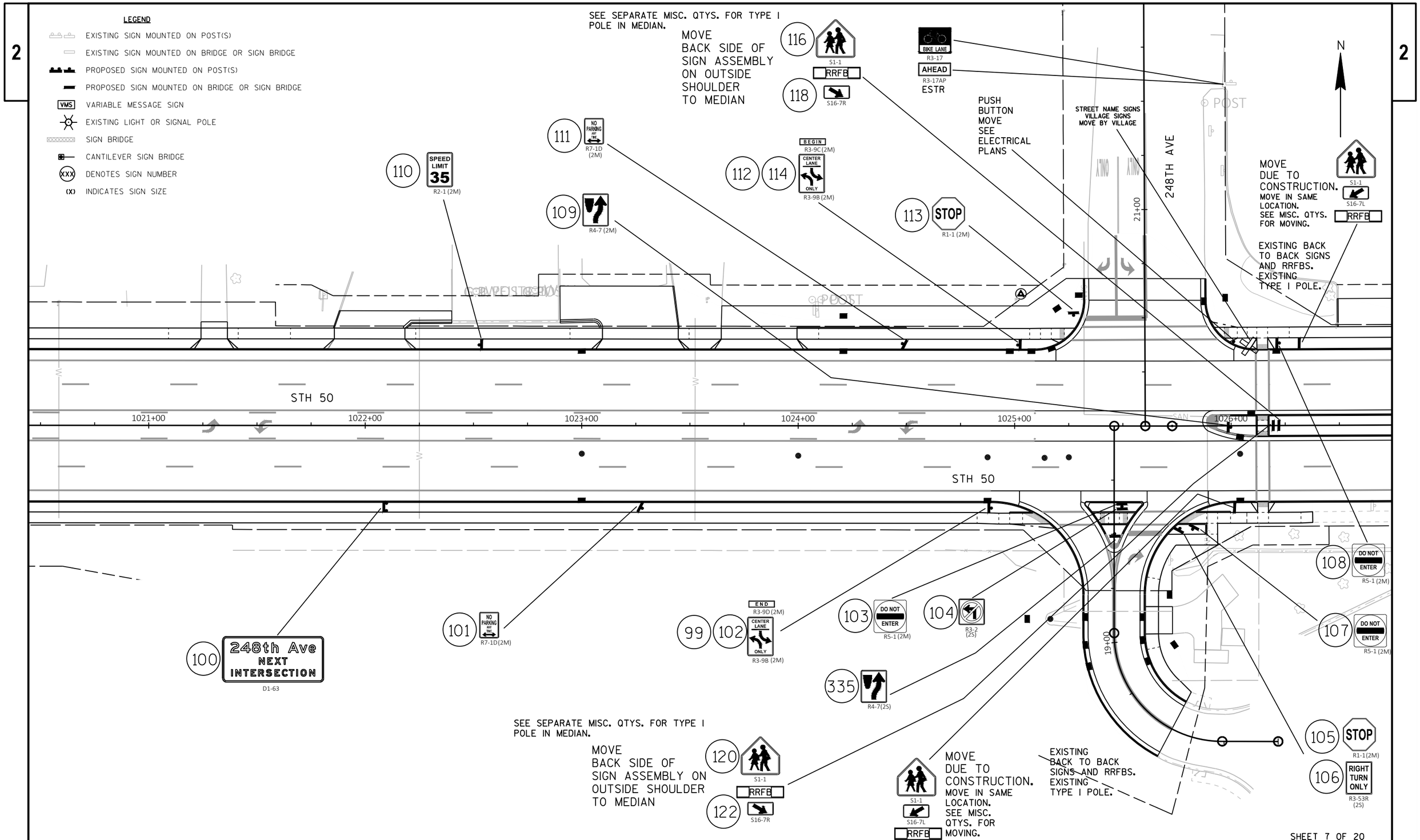

PROJECT NO: 1310-04-70	HWY: STH 50	COUNTY: KENOSHA	PERMANENT SIGNING	SHEET 286	E

FILE NAME : N:\PDS\C3D\CAD\13100400\SIGN\023201_PS_1310-04-70_16.DWG
LAYOUT NAME - PSht-07
PLOT DATE : 9/21/2021 11:07 AM PLOT BY : ASHENFELTER, DANIEL PLOT NAME : PLOT SCALE : 1 IN:40 FT
WISDOT/CADDS SHEET 42

2

LEGEND

- EXISTING SIGN MOUNTED ON POST(S)
- EXISTING SIGN MOUNTED ON BRIDGE OR SIGN BRIDGE
- PROPOSED SIGN MOUNTED ON POST(S)
- PROPOSED SIGN MOUNTED ON BRIDGE OR SIGN BRIDGE
- VMS — VARIABLE MESSAGE SIGN
- EXISTING LIGHT OR SIGNAL POLE
- SIGN BRIDGE
- CANTILEVER SIGN BRIDGE
- XXX — DENOTES SIGN NUMBER
- (X) — INDICATES SIGN SIZE

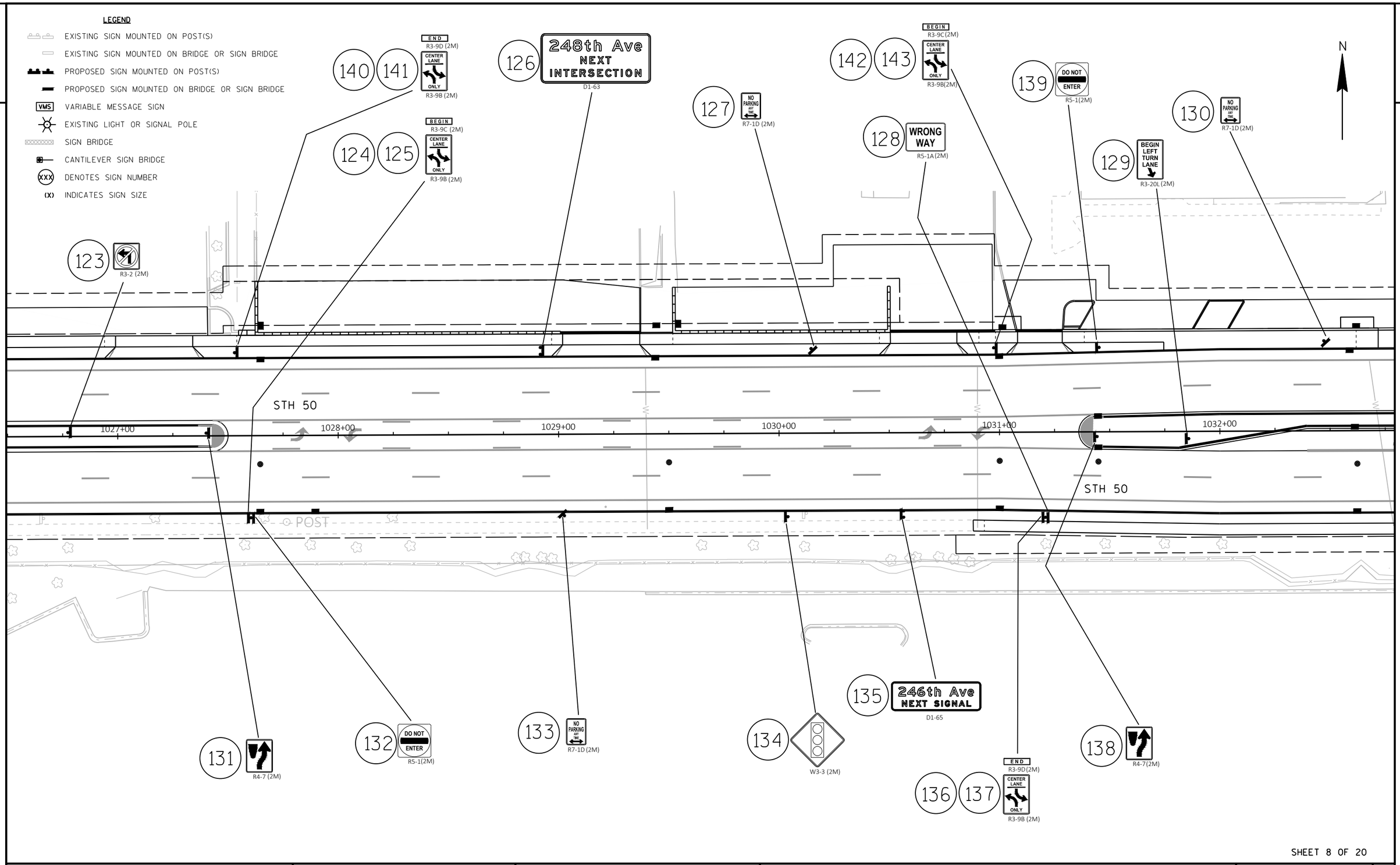

SHEET 8 OF 20

PROJECT NO: 1310-04-70	HWY: STH 50	COUNTY: KENOSHA	PERMANENT SIGNING	SHEET 287	E

FILE NAME : N:\PDS\C3D\CAD\13100400\SIGN\023201_PS_1310-04-70_16.DWG
LAYOUT NAME - PSht-08

PLOT DATE : 9/21/2021 11:07 AM PLOT BY : ASHENFELTER, DANIEL PLOT NAME : PLOT SCALE : 1 IN:40 FT

WISDOT/CADDS SHEET 42

LEGEND

- EXISTING SIGN MOUNTED ON POST(S)
- EXISTING SIGN MOUNTED ON BRIDGE OR SIGN BRIDGE
- PROPOSED SIGN MOUNTED ON POST(S)
- PROPOSED SIGN MOUNTED ON BRIDGE OR SIGN BRIDGE
- VMS — VARIABLE MESSAGE SIGN
- EXISTING LIGHT OR SIGNAL POLE
- SIGN BRIDGE
- CANTILEVER SIGN BRIDGE
- XXX — DENOTES SIGN NUMBER
- (X) — INDICATES SIGN SIZE

N

246TH AVE

41'-00

30'

40'

25'

STH 50

STH 50

1033+00

1034+00

1035+00

1036+00

1037+00

1038+00

152 DIVIDED HIGHWAY R6-3 (2S)

153 STOP R1-1F (2M)

MOUNT R6-3 ABOVE R1-1F ON SIGNAL POLE

170 S1-1 (2M)

171 S16-7L (2M)

154 50 75th St M1-94S MOUNT ON SIGNAL MAST ARM

172 NO PARKING ANY TIME R7-1D (2M)

162 337 W3-3 (2M)

158 ONE WAY R6-2R (2S)

STREET NAME SIGNS VILLAGE SIGNS MOVE BY VILLAGE

160 WRONG WAY R5-1A (2M)

161 SCHOOL SPEED LIMIT 25 WHEN CHILDREN ARE PRESENT S4-51 (2M)

163 BEGIN LEFT TURN LANE R3-20L (2M)

MOUNT ON SIGNAL POLE

166 ONE WAY R6-2L (2M)

164 R4-7 (2M) MOUNT ON SIGNAL POLE

165 246th Ave M1-94H MOUNT ON SIGNAL MAST ARM

MOUNT ON SIGNAL POLE

157 DO NOT ENTER R5-1 (2M)

155 156 STOP R1-1F (2M) MOUNT ON SIGNAL POLE

336 NO PARKING ANY TIME R7-1D (2M)

144 145 STOP R1-1F (2M) MOUNT ON SIGNAL POLE

167 DO NOT ENTER R5-1 (2M) MOUNT ON SIGNAL POLE

146 50 75th St M1-94S MOUNT ON SIGNAL MAST ARM

168 S1-1 (2M)

169 S16-7L (2M)

MOUNT R6-3 ABOVE R1-1F ON SIGNAL POLE

147 DIVIDED HIGHWAY R6-3 (2S)

148 STOP R1-1F (2M)

149 ONE WAY R6-2L (2M) MOUNT ON SIGNAL POLE

151 R4-7 (2M) MOUNT ON SIGNAL POLE

150 246th Ave M1-94H MOUNT ON SIGNAL MAST ARM

159 SPEED LIMIT 35 R2-1 (2M)

338 ONE WAY R6-2R (2S)

SHEET 9 OF 20

PROJECT NO: 1310-04-70	HWY: STH 50	COUNTY: KENOSHA	PERMANENT SIGNING	SHEET 288	E

2

LEGEND

- EXISTING SIGN MOUNTED ON POST(S)
- EXISTING SIGN MOUNTED ON BRIDGE OR SIGN BRIDGE
- PROPOSED SIGN MOUNTED ON POST(S)
- PROPOSED SIGN MOUNTED ON BRIDGE OR SIGN BRIDGE
- VMS — VARIABLE MESSAGE SIGN
- EXISTING LIGHT OR SIGNAL POLE
- SIGN BRIDGE
- CANTILEVER SIGN BRIDGE
- XXX — DENOTES SIGN NUMBER
- (X) — INDICATES SIGN SIZE

N

SEE SEPARATE QTYS. FOR MOVING ASSEMBLY.

S1-1 · AHEAD · S16-9P · FINES HIGHER · R2-6P · RRFB

176 NO PARKING ANY TIME R7-1D (2M)

177 SPEED LIMIT 35 R2-1 (2M)

190 246th Ave NEXT SIGNAL D1-65

184 R4-7 (2M)

185 W5-54 (2M)

MOUNT HEIGHT 4 FEET

186 186A END CENTER LANE ONLY R3-9D (2M) R3-9B (2M)

STREET NAME SIGNS VILLAGE SIGNS MOVE BY VILLAGE

180 STOP R1-1(2M)

71+00

243RD AVE

LAKE WALK 3.0 MI

VILLAGE SIGN MOVE BY VILLAGE

STREET NAME SIGNS VILLAGE SIGNS MOVE BY VILLAGE

STH 50

1039+00 1040+00 1041+00 1042+00 1043+00 1044+00

187 NO PARKING ANY TIME R7-1D(2M)

188A BEGIN R3-9C (2M)

188 CENTER LANE ONLY R3-9B (2M)

339 ONE WAY R6-2R(2S)

340 DO NOT ENTER R5-1 (2M)

244TH AVE

64+00

175 STOP R1-1 (2M)

178 SPEED LIMIT 35 R2-1 (2M)

179 END SCHOOL ZONE S5-2 (2M)

181 NO PARKING ANY TIME R7-1D (2M)

182 W11-2 (2M) · RRFB

183 AHEAD W16-9P (2M)

MOUNTED ON TYPE I POLE
SEE MISC. QTYS. FOR RRFB ASSEMBLY

322 242nd Ave D1-1

*SEE RRFB PLAN FOR INSTALLATION DETAILS.

SHEET 10 OF 20

PROJECT NO: 1310-04-70	HWY: STH 50	COUNTY: KENOSHA	PERMANENT SIGNING	SHEET 289	E

FILE NAME : N:\PDS\C3D\CAD\13100400\SIGN\023201_PS_1310-04-70_16.DWG
LAYOUT NAME - PSht-10

PLOT DATE : 9/21/2021 11:07 AM PLOT BY : ASHENFELTER, DANIEL PLOT NAME : PLOT SCALE : 1 IN:40 FT

WISDOT/CADDS SHEET 42

2

LEGEND

- EXISTING SIGN MOUNTED ON POST(S)
- EXISTING SIGN MOUNTED ON BRIDGE OR SIGN BRIDGE
- PROPOSED SIGN MOUNTED ON POST(S)
- PROPOSED SIGN MOUNTED ON BRIDGE OR SIGN BRIDGE
- VMS — VARIABLE MESSAGE SIGN
- EXISTING LIGHT OR SIGNAL POLE
- SIGN BRIDGE
- CANTILEVER SIGN BRIDGE
- XXX — DENOTES SIGN NUMBER
- (X) — INDICATES SIGN SIZE

201A BEGIN R3-9C (2M)
201 CENTER LANE ONLY R3-9B (2M)
204 NO PARKING ANY TIME R7-1D(2M)
STREET NAME SIGNS
VILLAGE SIGNS
MOVE BY VILLAGE
208 DO NOT ENTER R5-1(2M)
205 STOP R1-1(2M)
74TH PL
MOUNTED ON TYPE I POLE SEE MISC. QTYS. FOR RRFB ASSEMBLY
318 W11-2 (2M)
RRFB
319 W16-7L (2M)
343 W11-2(2M)
MOUNTED ON TYPE I POLE SEE MISC. QTYS. FOR RRFB ASSEMBLY
RRFB
344 W16-7R(2M)
*SEE RRFB PLAN FOR INSTALLATION DETAILS.
N
209 WRONG WAY R5-1A (2M)
193 194 SPEED LIMIT 35 R2-1 (2M)
198 BEGIN LEFT TURN LANE R3-20L(2M)
200 NO PARKING ANY TIME R7-1D (2M)
STH 50
1045+00
1046+00
1047+00
1048+00
1049+00
1050+00
203 NO PARKING ANY TIME R7-1D(2M)
202A END R3-9D(2M)
202 CENTER LANE ONLY R3-9B(2M)
242ND AVE
206 STOP R1-1(2M)
207 NO PARKING ANY TIME R7-1D (2S)
320 W11-2(2M)
RRFB
321 W16-7L (2M)
MOUNTED ON TYPE I POLE SEE MISC. QTYS. FOR RRFB ASSEMBLY
345 W11-2(2M)
RRFB
346 W16-7R(2M)
MOUNTED ON TYPE I POLE SEE MISC. QTYS. FOR RRFB ASSEMBLY
195 196 SPEED LIMIT 35 R2-1 (2M)
199 NO PARKING ANY TIME R7-1D (2M)
197 BEGIN LEFT TURN LANE R3-20L(2M)
STH 50

SHEET 11 OF 20

PROJECT NO: 1310-04-70	HWY: STH 50	COUNTY: KENOSHA	PERMANENT SIGNING	SHEET 290	E

FILE NAME : N:\PDS\C3D\CAD\13100400\SIGN\023201_PS_1310-04-70_16.DWG
LAYOUT NAME - PSht-11
PLOT DATE : 9/21/2021 11:07 AM
PLOT BY : ASHENFELTER, DANIEL
PLOT NAME :
PLOT SCALE : 1 IN:40 FT

2

LEGEND

- EXISTING SIGN MOUNTED ON POST(S)
- EXISTING SIGN MOUNTED ON BRIDGE OR SIGN BRIDGE
- PROPOSED SIGN MOUNTED ON POST(S)
- PROPOSED SIGN MOUNTED ON BRIDGE OR SIGN BRIDGE
- VMS — VARIABLE MESSAGE SIGN
- EXISTING LIGHT OR SIGNAL POLE
- SIGN BRIDGE
- CANTILEVER SIGN BRIDGE
- XXX — DENOTES SIGN NUMBER
- (X) — INDICATES SIGN SIZE

MOUNTED ON TYPE I SIGN SEE MISC. QTYS. FOR RRFB ASSEMBLY

N

2

323 242nd Ave D1-1

210 W11-2(2M)

211 RRFB AHEAD W16-9P(2M)

212 R4-7(2M)

324 DO NOT ENTER R5-1(2M)

213 NO PARKING ANY TIME R7-1D(2M)

216 BEGIN LEFT TURN LANE R3-20L (2M)

STH 50

1051+00 1052+00 1053+00 1054+00 1055+00 1056+00

STH 50

342 DO NOT ENTER R5-1(2M)

214 NO PARKING ANY TIME R7-1D(2M)

215 R4-7(2M)

341 ONE WAY R6-2R (2S)

*SEE RRFB PLAN FOR INSTALLATION DETAILS.

SHEET 12 OF 20

PROJECT NO: 1310-04-70	HWY: STH 50	COUNTY: KENOSHA	PERMANENT SIGNING	SHEET 291	E

FILE NAME : N:\PDS\C3D\CAD\13100400\SIGN\023201_PS_1310-04-70_16.DWG
LAYOUT NAME - PSht-12

PLOT DATE : 9/21/2021 11:07 AM PLOT BY : ASHENFELTER, DANIEL PLOT NAME : PLOT SCALE : 1 IN:40 FT

WISDOT/CADDS SHEET 42

2

LEGEND

- EXISTING SIGN MOUNTED ON POST(S)
- EXISTING SIGN MOUNTED ON BRIDGE OR SIGN BRIDGE
- PROPOSED SIGN MOUNTED ON POST(S)
- PROPOSED SIGN MOUNTED ON BRIDGE OR SIGN BRIDGE
- VMS — VARIABLE MESSAGE SIGN
- EXISTING LIGHT OR SIGNAL POLE
- SIGN BRIDGE
- CANTILEVER SIGN BRIDGE
- XXX — DENOTES SIGN NUMBER
- (X) — INDICATES SIGN SIZE

N

2

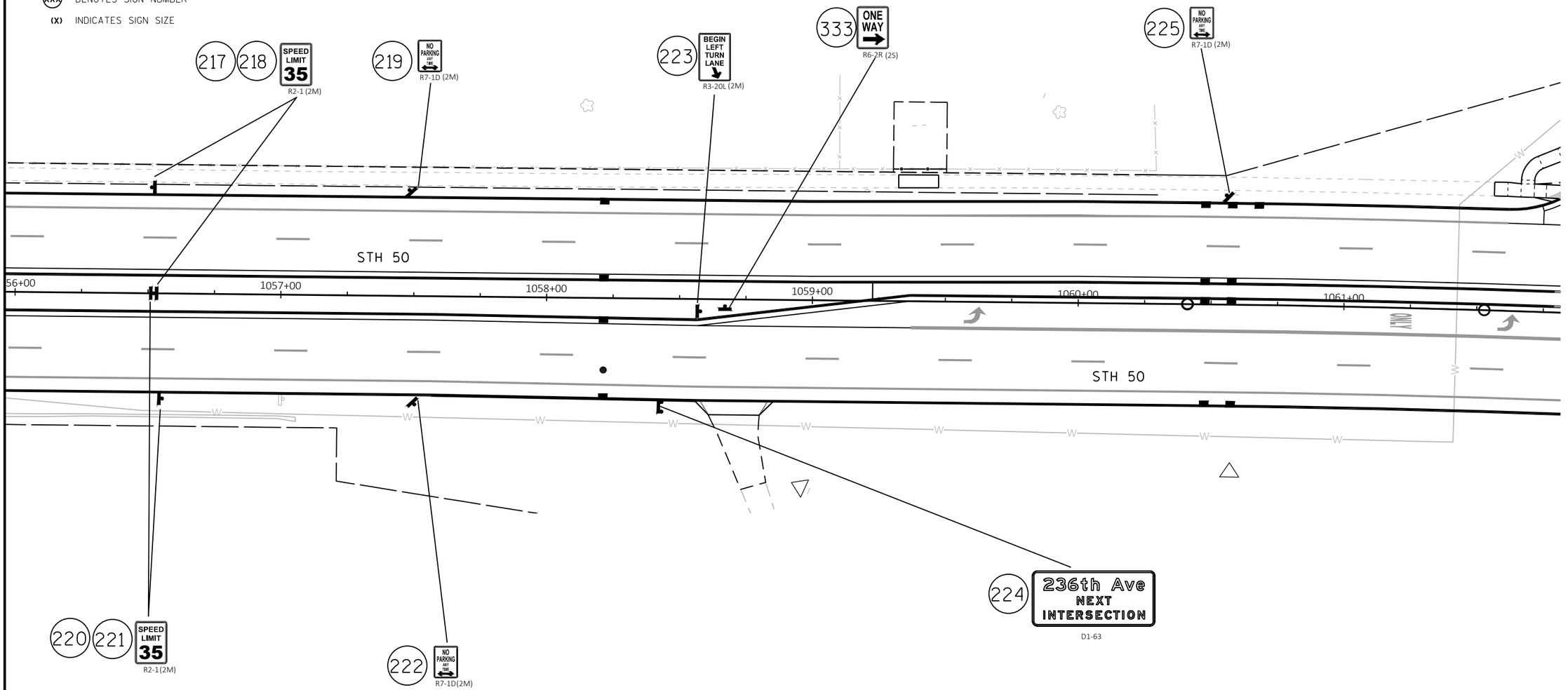

SHEET 13 OF 20

PROJECT NO: 1310-04-70	HWY: STH 50	COUNTY: KENOSHA	PERMANENT SIGNING	SHEET 292	E

FILE NAME : N:\PDS\C3D\CAD\13100400\SIGN\023201_PS_1310-04-70_16.DWG
LAYOUT NAME - PSht-13

PLOT DATE : 9/21/2021 11:07 AM PLOT BY : ASHENFELTER, DANIEL PLOT NAME : PLOT SCALE : 1 IN:40 FT

WISDOT/CADDS SHEET 42

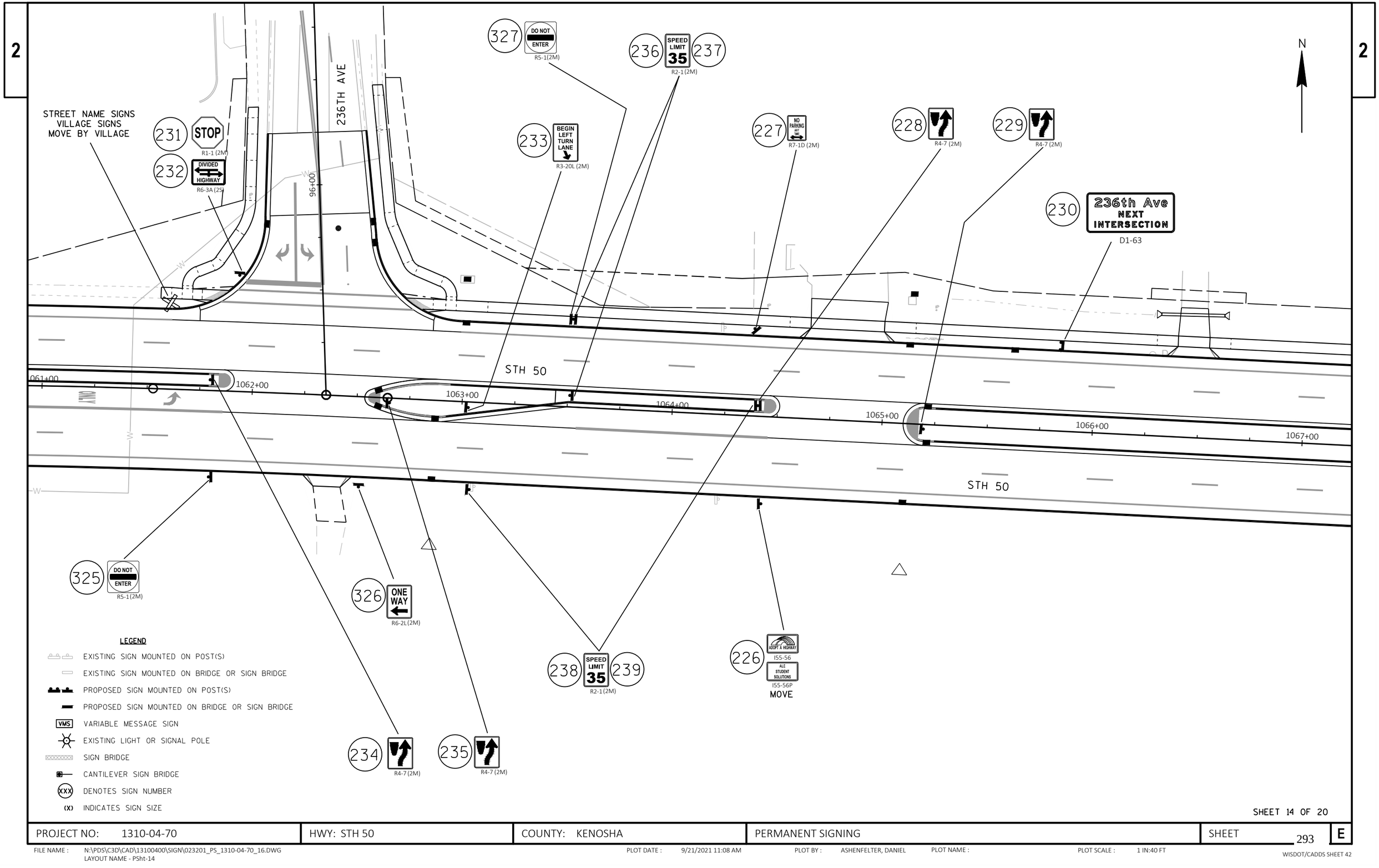

PROJECT NO: 1310-04-70	HWY: STH 50	COUNTY: KENOSHA	PERMANENT SIGNING	SHEET 293	E

FILE NAME : N:\PDS\C3D\CAD\13100400\SIGN\023201_PS_1310-04-70_16.DWG
LAYOUT NAME - PSht-14
PLOT DATE : 9/21/2021 11:08 AM PLOT BY : ASHENFELTER, DANIEL PLOT NAME : PLOT SCALE : 1 IN:40 FT
WISDOT/CADDS SHEET 42

2

LEGEND

- EXISTING SIGN MOUNTED ON POST(S)
- EXISTING SIGN MOUNTED ON BRIDGE OR SIGN BRIDGE
- PROPOSED SIGN MOUNTED ON POST(S)
- PROPOSED SIGN MOUNTED ON BRIDGE OR SIGN BRIDGE
- VMS — VARIABLE MESSAGE SIGN
- EXISTING LIGHT OR SIGNAL POLE
- SIGN BRIDGE
- CANTILEVER SIGN BRIDGE
- XXX — DENOTES SIGN NUMBER
- (X) — INDICATES SIGN SIZE

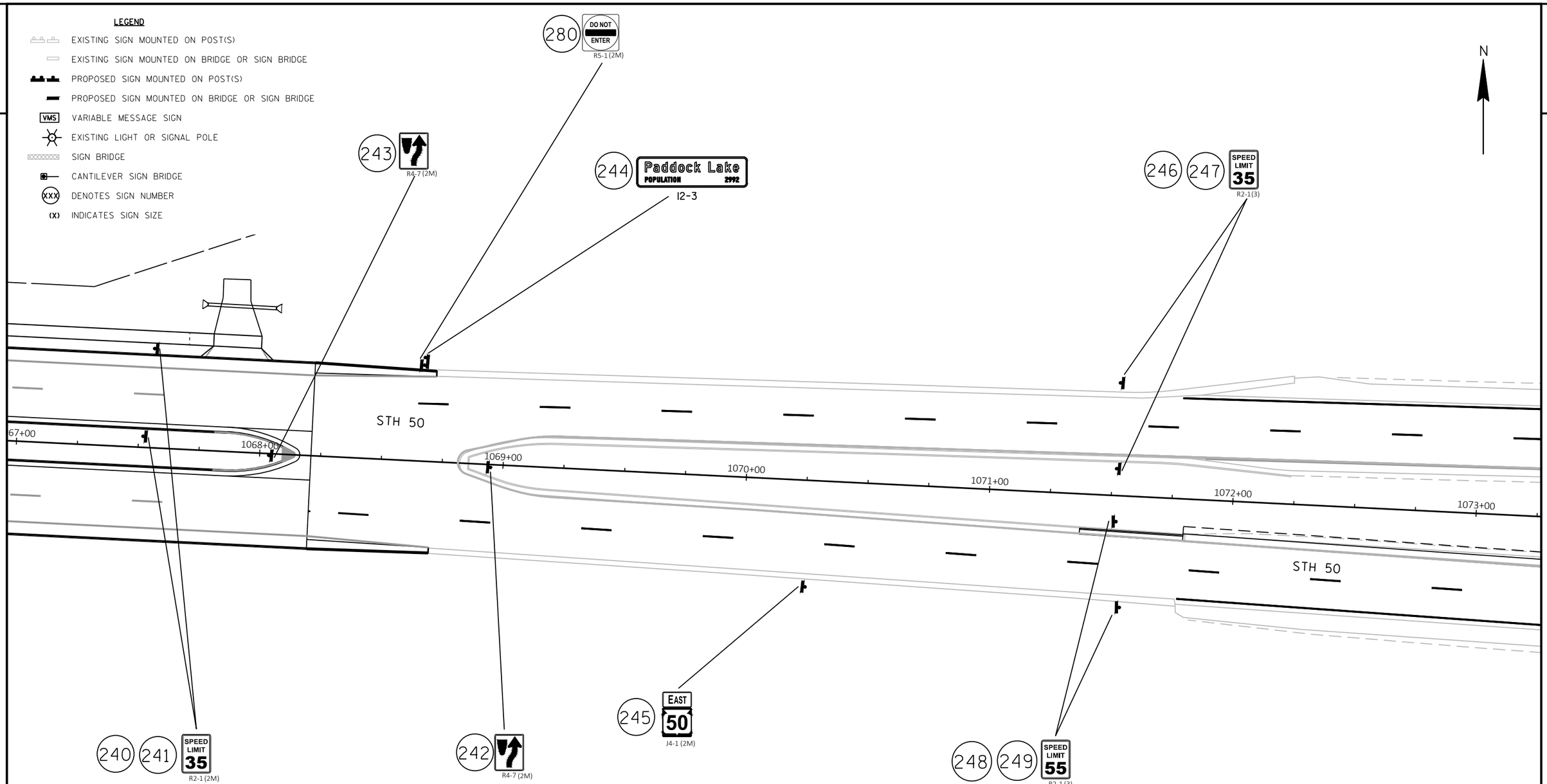

SHEET 15 OF 20

PROJECT NO: 1310-04-70	HWY: STH 50	COUNTY: KENOSHA	PERMANENT SIGNING	SHEET 294	E

FILE NAME : N:\PDS\C3D\CAD\13100400\SIGN\023201_PS_1310-04-70_16.DWG
LAYOUT NAME - PSht-15

PLOT DATE : 9/21/2021 11:08 AM PLOT BY : ASHENFELTER, DANIEL PLOT NAME : PLOT SCALE : 1 IN:40 FT

WISDOT/CADDS SHEET 42

2

LEGEND

- EXISTING SIGN MOUNTED ON POST(S)
- EXISTING SIGN MOUNTED ON BRIDGE OR SIGN BRIDGE
- PROPOSED SIGN MOUNTED ON POST(S)
- PROPOSED SIGN MOUNTED ON BRIDGE OR SIGN BRIDGE
- VMS — VARIABLE MESSAGE SIGN
- EXISTING LIGHT OR SIGNAL POLE
- SIGN BRIDGE
- CANTILEVER SIGN BRIDGE
- XXX — DENOTES SIGN NUMBER
- (X) — INDICATES SIGN SIZE

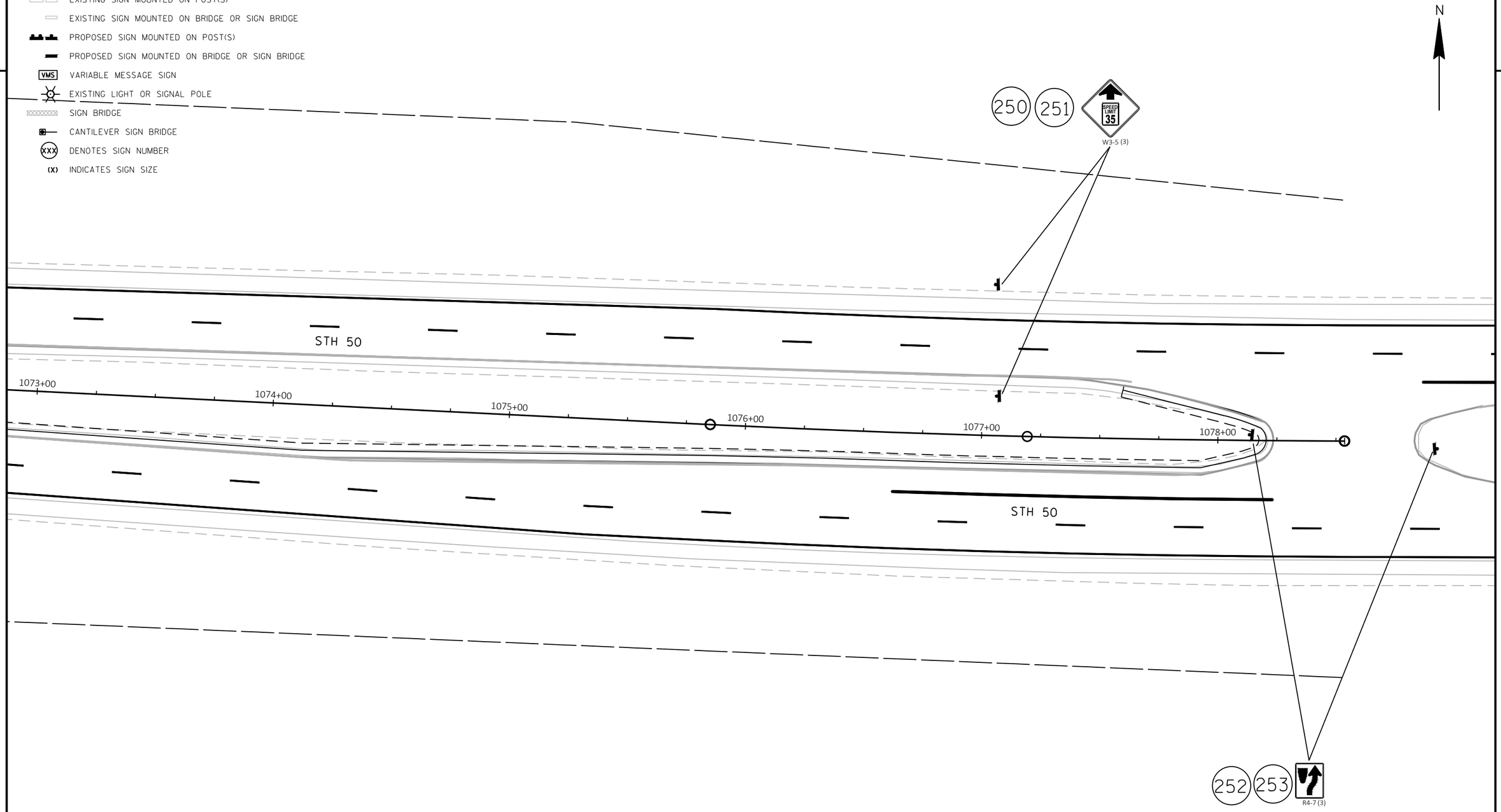

2

SHEET 16 OF 20

PROJECT NO: 1310-04-70	HWY: STH 50	COUNTY: KENOSHA	PERMANENT SIGNING	SHEET 295	E

FILE NAME : N:\PDS\C3D\CAD\13100400\SIGN\023201_PS_1310-04-70_16.DWG
LAYOUT NAME - PSht-16

PLOT DATE : 9/21/2021 11:08 AM PLOT BY : ASHENFELTER, DANIEL PLOT NAME : PLOT SCALE : 1 IN:40 FT

WISDOT/CADDS SHEET 42

2

2

LEGEND

- EXISTING SIGN MOUNTED ON POST(S)
- EXISTING SIGN MOUNTED ON BRIDGE OR SIGN BRIDGE
- PROPOSED SIGN MOUNTED ON POST(S)
- PROPOSED SIGN MOUNTED ON BRIDGE OR SIGN BRIDGE
- VMS — VARIABLE MESSAGE SIGN
- EXISTING LIGHT OR SIGNAL POLE
- SIGN BRIDGE
- CANTILEVER SIGN BRIDGE
- XXX — DENOTES SIGN NUMBER
- (X) — INDICATES SIGN SIZE

N

257 NO PARKING ANY TIME — R7-1D(2S)

258 NO PARKING ANY TIME — R7-1D(2S)

260 — W6-3 (2S)

STH 83

254 — W6-1 (2S)

255 — W3-3 (2S)

256 NO PASSING ZONE — W14-3 (2S)

NO MOTOR VEHICLES — R5-3
VILLAGE SIGN
MOVE BY VILLAGE

NO MOTOR VEHICLES — R5-3
VILLAGE SIGN
MOVE BY VILLAGE

261 NO PARKING ANY TIME — R7-1D (2S)

259 — WEST 50 | NORTH 83 | NORTH 75 | EAST 50 — J2-4 (2S)

SHEET 17 OF 20

PROJECT NO: 1310-04-70	HWY: STH 50	COUNTY: KENOSHA	PERMANENT SIGNING	SHEET 296	E

FILE NAME : N:\PDS\C3D\CAD\13100400\SIGN\023201_PS_1310-04-70_16.DWG
LAYOUT NAME - PSht-17

PLOT DATE : 9/21/2021 11:08 AM PLOT BY : ASHENFELTER, DANIEL PLOT NAME : PLOT SCALE : 1 IN:40 FT

WISDOT/CADDS SHEET 42

2

LEGEND

- EXISTING SIGN MOUNTED ON POST(S)
- EXISTING SIGN MOUNTED ON BRIDGE OR SIGN BRIDGE
- PROPOSED SIGN MOUNTED ON POST(S)
- PROPOSED SIGN MOUNTED ON BRIDGE OR SIGN BRIDGE
- VMS — VARIABLE MESSAGE SIGN
- EXISTING LIGHT OR SIGNAL POLE
- SIGN BRIDGE
- CANTILEVER SIGN BRIDGE
- XXX — DENOTES SIGN NUMBER
- (X) — INDICATES SIGN SIZE

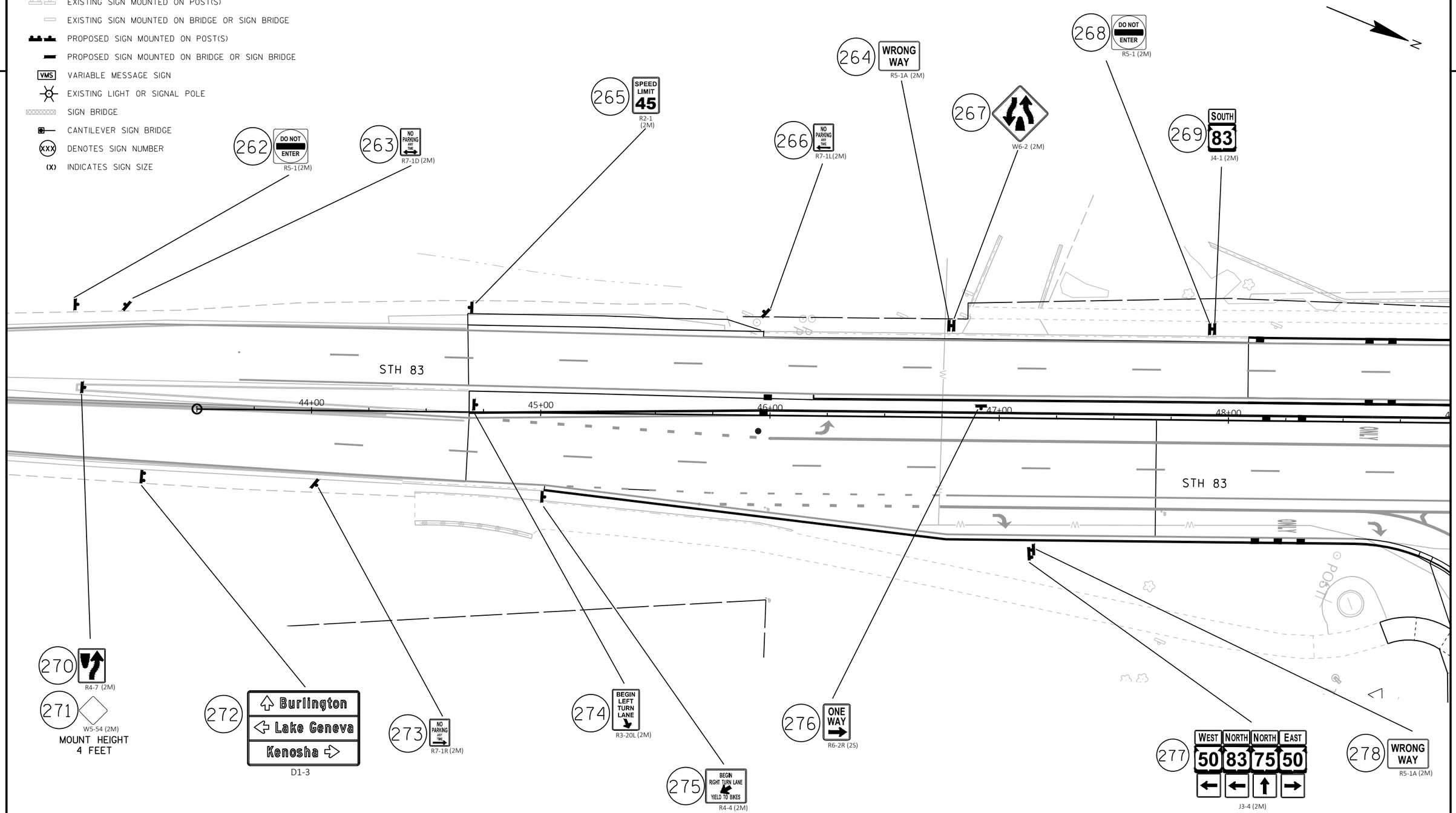

SHEET 18 OF 20

PROJECT NO: 1310-04-70	HWY: STH 50	COUNTY: KENOSHA	PERMANENT SIGNING	SHEET 297	E

FILE NAME : N:\PDS\C3D\CAD\13100400\SIGN\023201_PS_1310-04-70_16.DWG
LAYOUT NAME - PSht-18

PLOT DATE : 9/21/2021 11:08 AM PLOT BY : ASHENFELTER, DANIEL PLOT NAME : PLOT SCALE : 1 IN:40 FT

WISDOT/CADDS SHEET 42

LEGEND

- EXISTING SIGN MOUNTED ON POST(S)
- EXISTING SIGN MOUNTED ON BRIDGE OR SIGN BRIDGE
- PROPOSED SIGN MOUNTED ON POST(S)
- PROPOSED SIGN MOUNTED ON BRIDGE OR SIGN BRIDGE
- VMS — VARIABLE MESSAGE SIGN
- EXISTING LIGHT OR SIGNAL POLE
- SIGN BRIDGE
- CANTILEVER SIGN BRIDGE
- XXX — DENOTES SIGN NUMBER
- (X) — INDICATES SIGN SIZE

279 ONE WAY — R6-2L (2M) — MOUNT ON SIGNAL POLE

303 — 50 83 75th St — M1-94S — MOUNT ON SIGNAL MAST ARM

302 — R4-7 (2M)

300 — W12-1D (2M) — MOUNT HEIGHT 2 FEET

301 STOP — R1-1F (2M)

STREET NAME SIGNS
VILLAGE SIGNS
MOVE BY VILLAGE

281 YIELD — R1-2 (2M)

MOUNT R6-3
ABOVE R1-1F ON
SIGNAL POLE

283 DIVIDED HIGHWAY — R6-3 (2S)

282 STOP — R1-1F (2M)

284 — W12-1D (2M) — MOUNT HEIGHT 2 FEET

291 DO NOT ENTER — R5-1 (2M)

294 WEST NORTH 50 83 — J4-2 (2M)

STH 83 — STH 50/83 — STH 75

296 DO NOT ENTER — R5-1 (2M)

299 DIVIDED HIGHWAY — R6-3 (2S)

298 STOP — R1-1F (2M)

MOUNT R6-3
ABOVE R1-1F ON
SIGNAL POLE

297 YIELD — R1-2 (2M)

285 STOP — R1-1F (2M)

288 RIGHT LANE ENDS — W9-1R (2M)

289 290 BEGIN LEFT TURN LANE — R3-20L (2M)

292 EAST SOUTH 50 83 — J4-2 (2M)

293 — R4-7 (2M)

286 — R4-7 (2M)

287 — 50 83 75th St — M1-94S — MOUNT ON SIGNAL MAST ARM

295 ONE WAY — R6-2L (2M) — MOUNT ON SIGNAL POLE

SHEET 19 OF 20

PROJECT NO: 1310-04-70	HWY: STH 50	COUNTY: KENOSHA	PERMANENT SIGNING	SHEET 298	E

FILE NAME : N:\PDS\C3D\CAD\13100400\SIGN\023201_PS_1310-04-70_16.DWG
LAYOUT NAME - PSht-19

PLOT DATE : 9/21/2021 11:08 AM PLOT BY : ASHENFELTER, DANIEL PLOT NAME : PLOT SCALE : 1 IN:40 FT

WISDOT/CADDS SHEET 42

2

LEGEND

- EXISTING SIGN MOUNTED ON POST(S)
- EXISTING SIGN MOUNTED ON BRIDGE OR SIGN BRIDGE
- PROPOSED SIGN MOUNTED ON POST(S)
- PROPOSED SIGN MOUNTED ON BRIDGE OR SIGN BRIDGE
- VMS — VARIABLE MESSAGE SIGN
- EXISTING LIGHT OR SIGNAL POLE
- SIGN BRIDGE
- CANTILEVER SIGN BRIDGE
- XXX — DENOTES SIGN NUMBER
- (X) — INDICATES SIGN SIZE

N

317 — Salem / Kenosha / Lake Geneva — D1-3

HOME OF CENTRAL HIGH SCHOOL...

VILLAGE SIGN MOVE BY VILLAGE

312 WRONG WAY R5-1A(2M)

311 W3-3(2M)

310 END 75 J1-1 (2S)

305 R4-7 (2M)

306 W5-54(2M) MOUNT HEIGHT 4 FEET

308 EAST 50 SOUTH 83 WEST 50 NORTH 83 J2-4 (2S) NEAR STATION 60+05

54+00 55+00

STH 75

313 W4-2R (2M)

314 R4-7(2M)

315 W6-2 (2M)

304 WRONG WAY R5-1A (2M)

309 NORTH 75 J4-1 (2S)

316 DO NOT ENTER R5-1 (2M)

307 ADOPT A HIGHWAY I55-56 SIC WIT IT NC KENOSHA WI I55-56P MOVE

2

SHEET 20 OF 20

PROJECT NO: 1310-04-70	HWY: STH 50	COUNTY: KENOSHA	PERMANENT SIGNING	SHEET 299	E

FILE NAME : N:\PDS\C3D\CAD\13100400\SIGN\023201_PS_1310-04-70_16.DWG
LAYOUT NAME - PSht-20

PLOT DATE : 9/21/2021 11:08 AM PLOT BY : ASHENFELTER, DANIEL PLOT NAME : PLOT SCALE : 1 IN:40 FT

WISDOT/CADDS SHEET 42

LEGEND

- CONTROL CABINET
- NONMETALLIC CONDUIT 2", UNLESS OTHERWISE NOTED
- LOOP DETECTOR CONDUIT 1" NONMETALLIC
- SIGNAL HEAD, TRAFFIC SIGNAL STANDARD, PEDESTAL BASE
- (XX) SIGNAL HEAD, TRAFFIC SIGNAL POLE, TRANSFORMER BASE
- PEDESTRIAN HEAD WITH PUSH BUTTON
- PUSH BUTTON
- LUMINAIRE UNDER PERMIT TO LOCAL MUNICIPALITY
- LOOP DETECTOR IN 1" NONMETALLIC CONDUIT
- PULL BOX, 24" X 36"
- PULL BOX, 12" X 24"
- XX SIGNAL HEAD NUMBER
- R RED CIRCULAR INDICATOR
- Y YELLOW CIRCULAR INDICATOR
- G GREEN CIRCULAR INDICATOR
- Y YELLOW ARROW
- G GREEN ARROW
- WALK/DON'T WALK INDICATOR 16" (COUNTDOWN TIMER)
- X EVP DESIGNATOR
- EVP DETECTOR HEAD

NOTE: ALL LENSES ARE 12-INCH

CONSTRUCTION NOTES:

1. EXISTING CONDUIT RUNS TO BE ABANDONED IN PLACE. CONTRACTOR TO REMOVE ANY CONDUCTORS REMAINING IN THE CONDUIT.
2. ABANDONED LOOP DETECTOR CONDUIT TO REMAIN IN PLACE. LOOP DETECTOR WIRE AND LEAD-IN CABLE TO BE REMOVED BY THE CONTRACTOR.
3. CABINET AND CONTROLLER SHALL BE REMOVED BY WISDOT ELECTRICAL PERSONNEL.
4. THE LOCATIONS OF EXISTING UTILITY INSTALLATIONS ARE APPROXIMATE. THERE MAY BE OTHER UTILITY INSTALLATIONS WITHIN THE PROJECT WHICH ARE NOT SHOWN.
5. GRAYSHADE REPRESENTS EXISTING. BOLD REPRESENTS ITEMS TO BE REMOVED.

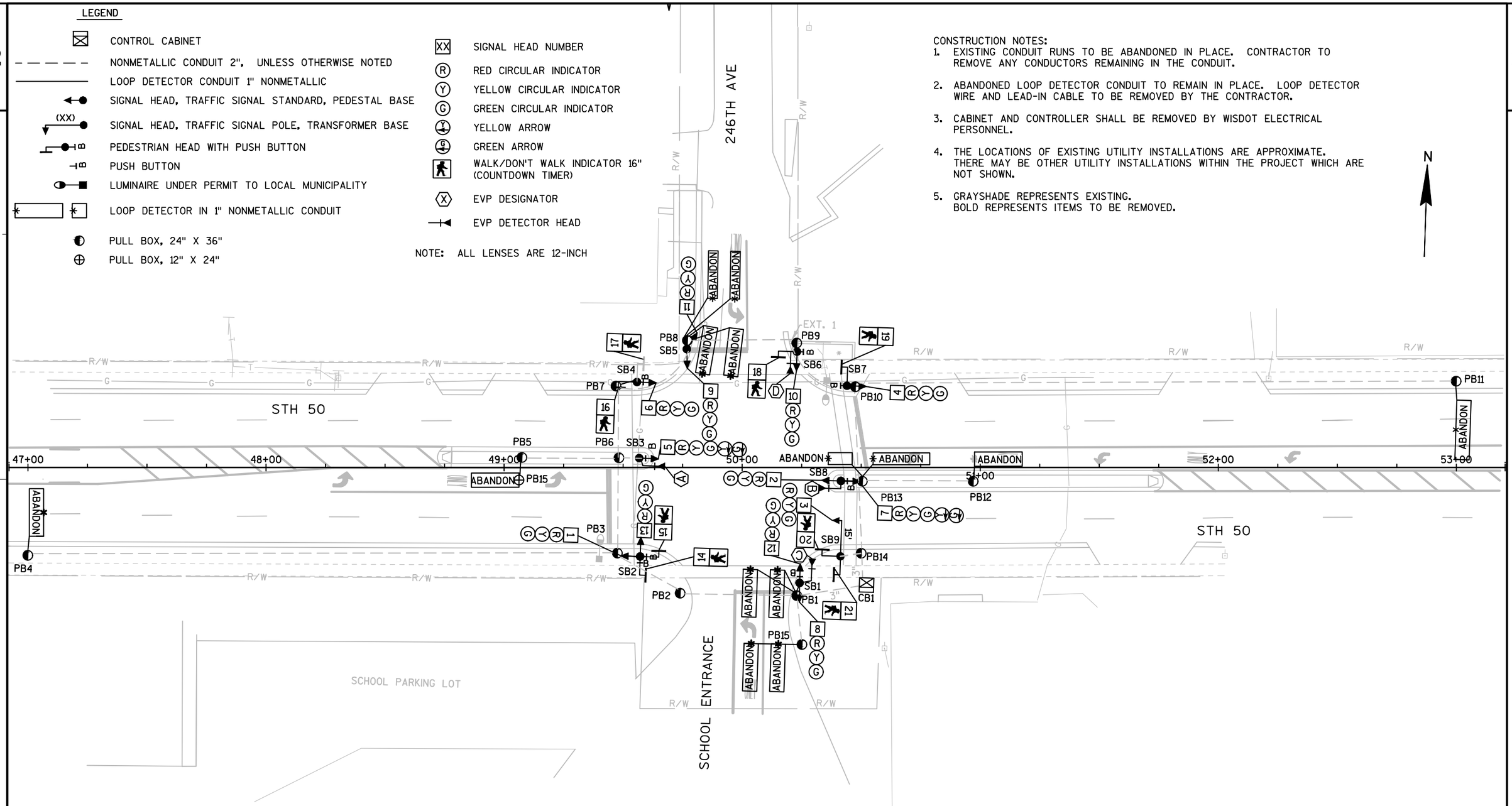

TRAFFIC CONTROL SIGNAL
STH 50 & 246TH AVE
TOWN OF SALEM
KENOSHA COUNTY

SIGNAL NO. S30-0527

REGION CONTACT: J. GATES
DESIGNED BY:
REVISED BY: J. BRUGGEMAN

PAGE 1 OF 1

PROJECT NO: 1310-04-70	HWY: STH 50	COUNTY: KENOSHA	TRAFFIC SIGNAL REMOVAL PLAN	SHEET 300	E

FILE NAME : \\DOTWKEFILE1P\N3PUBLIC\PDS\C3D\CAD\13100400\SIG\S30-0527\S30-0527_REM_16.DWG
LAYOUT NAME - S30-0527_REM_16 - 024001_SP

PLOT DATE : 4/14/2022 8:04 AM PLOT BY : BRUGGEMAN, JOHN PLOT NAME : PLOT SCALE : 1:40_XREF

WISDOT/CADDS SHEET 42

LEGEND

- SPAN WIRE
- WOOD POLE, CLASS 4
- SIGNAL HEAD, OVERHEAD MOUNT
- PEDESTRIAN HEAD WITH PUSH BUTTON ON PORTABLE UNIT/SKID
- WALK/DON'T WALK INDICATOR 16" (COUNTDOWN TIMER)
- XX SIGNAL HEAD NUMBER
- (R) RED CIRCULAR INDICATOR
- (Y) YELLOW CIRCULAR INDICATOR
- (G) GREEN CIRCULAR INDICATOR
- RED ARROW
- YELLOW ARROW
- GREEN ARROW
- (X) EVP DESIGNATOR
- EVP DETECTOR HEAD
- WORK AREA
- TRAFFIC SIGNAL HEAD TO BE COVERED AND DE-ENERGIZED

NOTE: ALL LENSES ARE 12-INCH
GRAYSHADE REPRESENTS EXISTING

CONSTRUCTION NOTES:

1. FINAL LOCATION OF WOOD POLES AND SIGNAL HEADS SHALL BE DIRECTED BY THE ENGINEER.
2. POLES AND POSTS INSTALLED BEHIND CURBS SHALL BE OFFSET A MINIMUM OF 2 FEET FROM THE FACE OF CURB TO THE SIDE OF THE POST OR POLE.
3. GUYING OF POLES IS REQUIRED AND LOCATIONS SHALL BE APPROVED BY THE ENGINEER.
4. CONTRACTOR TO ADJUST TEMPORARY SIGNALS WITHIN EACH CONSTRUCTION STAGE AS DIRECTED BY THE ENGINEER TO MAINTAIN MUTCD SIGNAL REQUIREMENTS.
5. CONTRACTOR SHALL COORDINATE WITH THE WISDOT ELECTRICAL FIELD UNIT, (414) 266-1170, 5 WORKING DAYS PRIOR TO BEGINNING ANY WORK AT THE INTERSECTION.
6. ANY KNOCKDOWNS TO PERMANENT/TEMPORARY SIGNAL EQUIPMENT SHALL BE REPLACED BY THE CONTRACTOR.
7. LOCATIONS OF PEDESTRIAN SIGNAL POLES ARE APPROXIMATE AND SHALL BE ADJUSTED BY THE ENGINEER TO MEET FIELD CONDITIONS. ALL PLACEMENTS SHALL BE IN COMPLIANCE WITH PERTINENT MUTCD AND ADA REQUIREMENTS.
8. NEAR RIGHT TRAFFIC SIGNAL HEADS SHALL BE PLACED BETWEEN THE SPAN WIRE AND TETHER WIRE.
9. THE LOCATIONS OF EXISTING AND PROPOSED UTILITY INSTALLATIONS ARE APPROXIMATE. THERE MAY BE OTHER UTILITY INSTALLATIONS WITHIN THE PROJECT WHICH ARE NOT SHOWN.
10. ALL EXISTING SIGNAL HEADS SHALL BE REMOVED, COVERED OR TURNED AWAY FROM TRAFFIC IMMEDIATELY AFTER TURNING ON TEMPORARY SIGNALS.

N

STH 50
246TH AVE
SPEED LIMIT= 25 MPH
SPEED LIMIT= 35 MPH
R/W
WP1
WP2
WP3
WP4
SCHOOL ENTRANCE
1031+00
1032+00
1033+00
1035+00
1036+00
1037+00

SUMMARY OF SELECTED ITEMS FOR INFORMATION ONLY	
QUANTITY	DESCRIPTION
4 EA	WOOD POLES, CLASS 4
2 EA	MOVEABLE WOOD POSTS
350 LF	SPAN WIRE
38 EA	SIGNAL HEADS
4 EA	EVP DETECTOR HEADS
1	TEMPORARY SIGNAL CABINET AND CONTROLLER

TRAFFIC CONTROL SIGNAL
STH 50 & 246TH AVE
TOWN OF SALEM
KENOSHA COUNTY

SIGNAL NO. S30-0527

REGION CONTACT: JARRETT GATES
DESIGNED BY: JOHN BRUGGEMAN
REVISED BY:

PROJECT NO: 1310-04-70	HWY: STH 50	COUNTY: KENOSHA	TEMPORARY SIGNAL PLAN - STAGE 1A	SHEET 301	E

FILE NAME : \\DOTWKEFILE1P\N3PUBLIC\PDS\C3D\CAD\13100400\SIG\S30-0527\S30-0527_TS1A_16.DWG
LAYOUT NAME - Plan 1 IN 40 FT
PLOT DATE : 10/26/2021 2:37 PM
PLOT BY : BRUGGEMAN, JOHN
PLOT NAME :
PLOT SCALE : 1 IN:40 FT
WISDOT/CADDS SHEET 42

LEGEND

- SPAN WIRE
- WOOD POLE, CLASS 4
- SIGNAL HEAD, OVERHEAD MOUNT
- PEDESTRIAN HEAD WITH PUSH BUTTON ON PORTABLE UNIT/SKID
- WALK/DON'T WALK INDICATOR 16" (COUNTDOWN TIMER)
- XX SIGNAL HEAD NUMBER
- (R) RED CIRCULAR INDICATOR
- (Y) YELLOW CIRCULAR INDICATOR
- (G) GREEN CIRCULAR INDICATOR
- RED ARROW
- YELLOW ARROW
- GREEN ARROW
- (X) EVP DESIGNATOR
- EVP DETECTOR HEAD

- WORK AREA
- TRAFFIC SIGNAL HEAD TO BE COVERED AND DE-ENERGIZED

NOTE: ALL LENSES ARE 12-INCH
GRAYSHADE REPRESENTS EXISTING

N

R/W

SPEED LIMIT= 25 MPH

246TH AVE

SPEED LIMIT= 35 MPH

STH 50

WP1 WP2 WP3 WP4

1031+00 1032+00 1033+00 1034+00 1035+00 1036+00 1037+00

SCHOOL ENTRANCE

TRAFFIC CONTROL SIGNAL
STH 50 & 246TH AVE
TOWN OF SALEM
KENOSHA COUNTY

SIGNAL NO. S30-0527

REGION CONTACT: JARRETT GATES
DESIGNED BY: JOHN BRUGGEMAN
REVISED BY:

PAGE 2 OF 10

PROJECT NO: 1310-04-70	HWY: STH 50	COUNTY: KENOSHA	TEMPORARY SIGNAL PLAN - STAGE 1B	SHEET 302	E

FILE NAME : \\DOTWKEFILE1P\N3PUBLIC\PDS\C3D\CAD\13100400\SIG\S30-0527\S30-0527_TS1B_16.DWG
LAYOUT NAME - TEMPORARY SIGNAL PLAN - STAGE 1B

PLOT DATE : 10/26/2021 2:38 PM PLOT BY : BRUGGEMAN, JOHN PLOT NAME : PLOT SCALE : Custom

WISDOT/CADDS SHEET 42

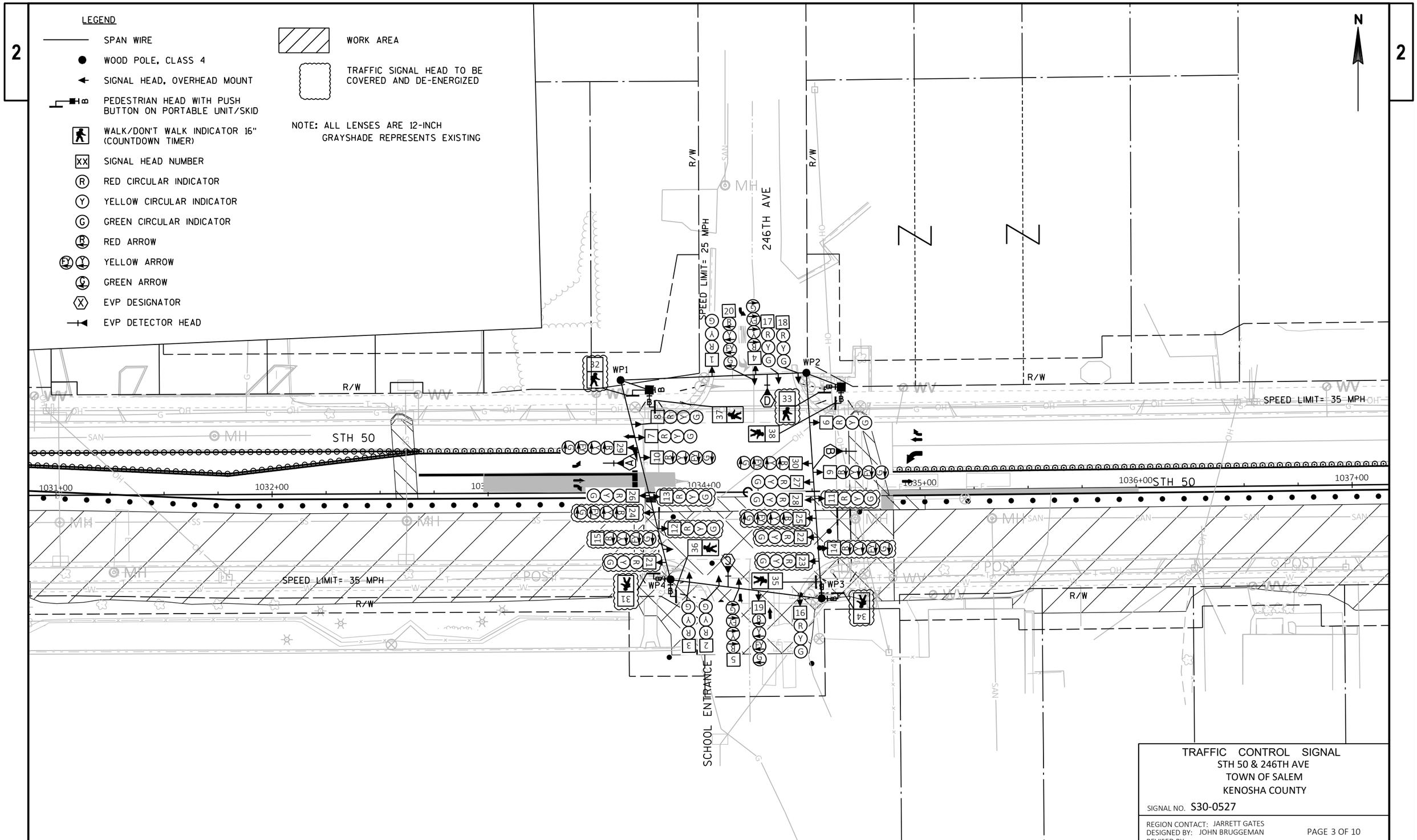

TRAFFIC CONTROL SIGNAL
STH 50 & 246TH AVE
TOWN OF SALEM
KENOSHA COUNTY

SIGNAL NO. S30-0527

REGION CONTACT: JARRETT GATES
DESIGNED BY: JOHN BRUGGEMAN
REVISED BY:

PROJECT NO: 1310-04-70	HWY: STH 50	COUNTY: KENOSHA	TEMPORARY SIGNAL PLAN - STAGE 2A	SHEET 303	E

FILE NAME : \\DOTWKEFILE1P\N3PUBLIC\PDS\C3D\CAD\13100400\SIG\S30-0527\S30-0527_TS2A_16.DWG
LAYOUT NAME - Plan 1 IN 40 FT
PLOT DATE : 10/26/2021 2:40 PM
PLOT BY : BRUGGEMAN, JOHN
PLOT NAME :
PLOT SCALE : Custom
WISDOT/CADDS SHEET 42

2

LEGEND

- SPAN WIRE
- WOOD POLE, CLASS 4
- SIGNAL HEAD, OVERHEAD MOUNT
- PEDESTRIAN HEAD WITH PUSH BUTTON ON PORTABLE UNIT/SKID
- WALK/DON'T WALK INDICATOR 16" (COUNTDOWN TIMER)
- XX SIGNAL HEAD NUMBER
- R RED CIRCULAR INDICATOR
- Y YELLOW CIRCULAR INDICATOR
- G GREEN CIRCULAR INDICATOR
- RA RED ARROW
- EY YELLOW ARROW
- GA GREEN ARROW
- X EVP DESIGNATOR
- EVP DETECTOR HEAD

- WORK AREA
- TRAFFIC SIGNAL HEAD TO BE COVERED AND DE-ENERGIZED

NOTE: ALL LENSES ARE 12-INCH
GRAYSHADE REPRESENTS EXISTING

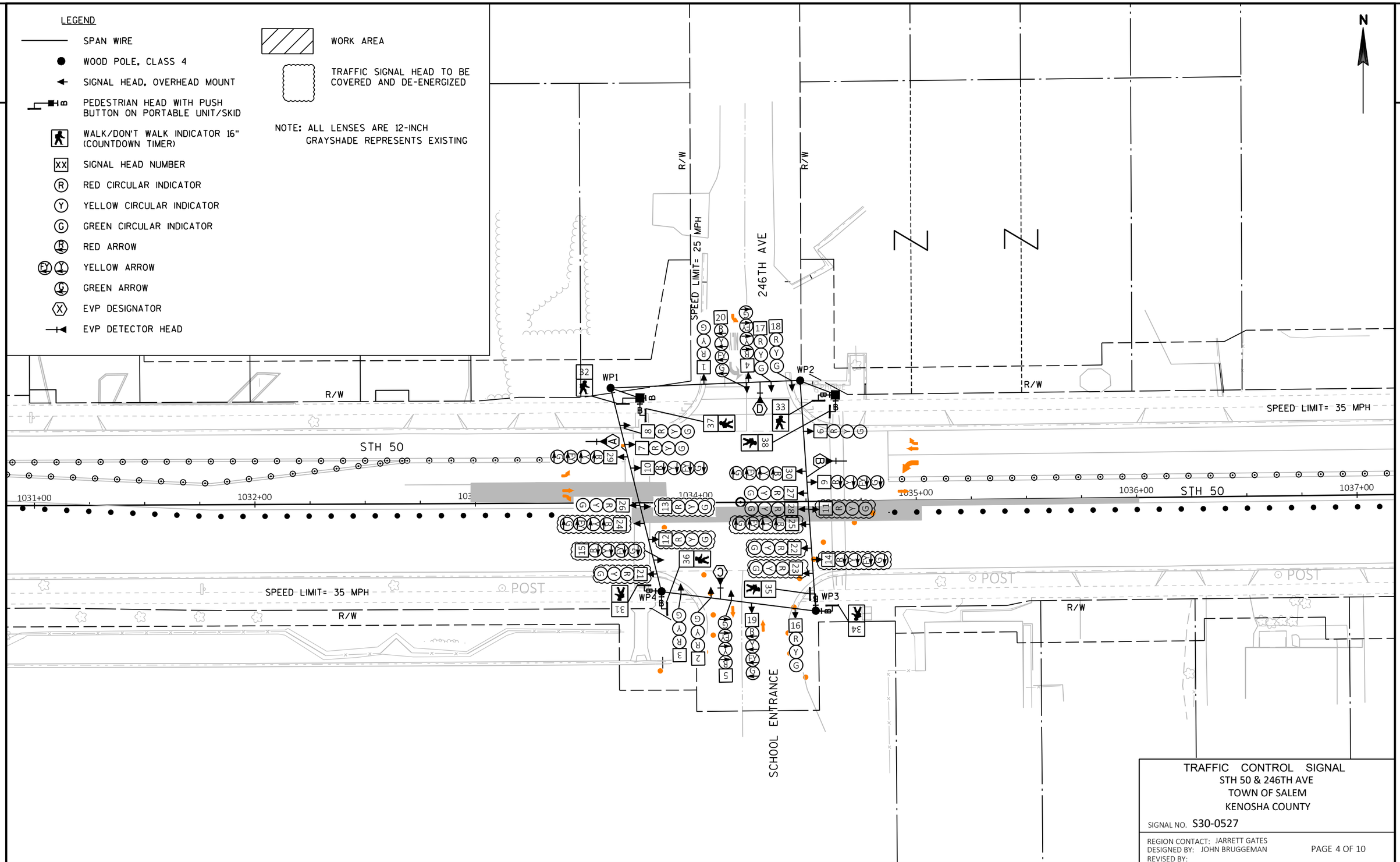

TRAFFIC CONTROL SIGNAL
STH 50 & 246TH AVE
TOWN OF SALEM
KENOSHA COUNTY

SIGNAL NO. S30-0527

REGION CONTACT: JARRETT GATES
DESIGNED BY: JOHN BRUGGEMAN
REVISED BY:

PAGE 4 OF 10

PROJECT NO: 1310-04-70	HWY: STH 50	COUNTY: KENOSHA	TEMPORARY SIGNAL PLAN - STAGE 2B	SHEET 304	E

FILE NAME : \\DOTWKEFILE1P\N3PUBLIC\PDS\C3D\CAD\13100400\SIG\S30-0527\S30-0527_TS2B_16.DWG
LAYOUT NAME - Plan 1 IN 40 FT

PLOT DATE : 10/26/2021 2:41 PM PLOT BY : BRUGGEMAN, JOHN PLOT NAME : PLOT SCALE : Custom

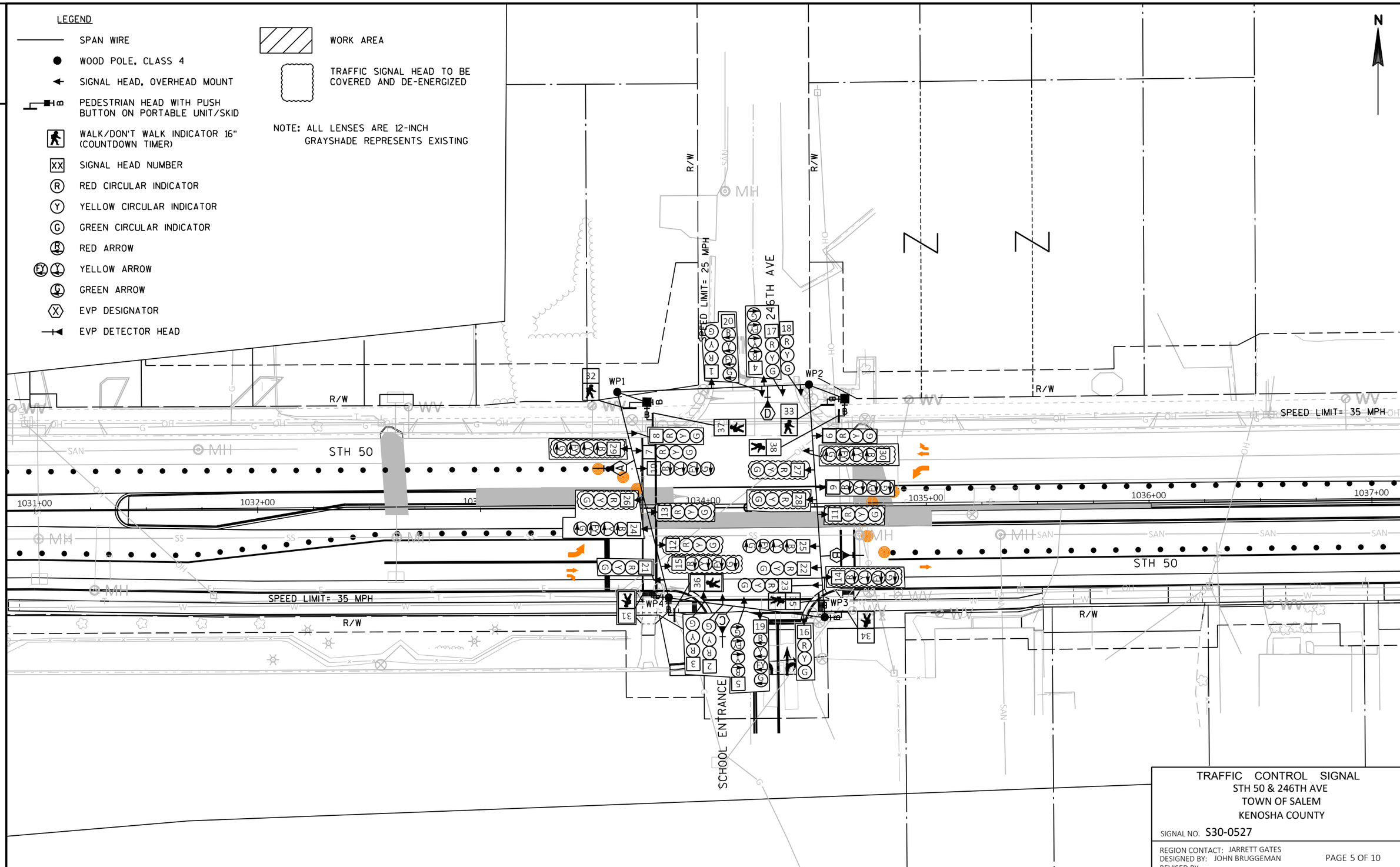

TRAFFIC CONTROL SIGNAL
STH 50 & 246TH AVE
TOWN OF SALEM
KENOSHA COUNTY

SIGNAL NO. S30-0527

REGION CONTACT: JARRETT GATES
DESIGNED BY: JOHN BRUGGEMAN
REVISED BY:

PAGE 5 OF 10

PROJECT NO: 1310-04-70	HWY: STH 50	COUNTY: KENOSHA	TEMPORARY SIGNAL PLAN - STAGE 3	SHEET 305	E

FILE NAME : \\DOTWKEFILE1P\N3PUBLIC\PDS\C3D\CAD\13100400\SIG\S30-0527\S30-0527_TS3_16.DWG
LAYOUT NAME - Plan 1 IN 40 FT
PLOT DATE : 10/26/2021 2:43 PM
PLOT BY : BRUGGEMAN, JOHN
PLOT NAME :
PLOT SCALE : Custom
WISDOT/CADDS SHEET 42

LEGEND

- SPAN WIRE
- WOOD POLE, CLASS 4
- SIGNAL HEAD, OVERHEAD MOUNT
- PEDESTRIAN HEAD WITH PUSH BUTTON ON PORTABLE UNIT/SKID
- WALK/DON'T WALK INDICATOR 16" (COUNTDOWN TIMER)
- XX SIGNAL HEAD NUMBER
- (R) RED CIRCULAR INDICATOR
- (Y) YELLOW CIRCULAR INDICATOR
- (G) GREEN CIRCULAR INDICATOR
- RED ARROW
- YELLOW ARROW
- GREEN ARROW
- (X) EVP DESIGNATOR
- EVP DETECTOR HEAD

WORK AREA

TRAFFIC SIGNAL HEAD TO BE COVERED AND DE-ENERGIZED

NOTE: ALL LENSES ARE 12-INCH
GRAYSHADE REPRESENTS EXISTING

N

2

2

R/W

R/W

R/W

R/W

SPEED LIMIT= 25 MPH

246TH AVE

SPEED LIMIT= 35 MPH

SPEED LIMIT= 35 MPH

STH 50

STH 50

1031+00

1032+00

1034+00

1035+00

1036+00

1037+00

WP1

WP2

WP3

WP4

SCHOOL ENTRANCE

TRAFFIC CONTROL SIGNAL
STH 50 & 246TH AVE
TOWN OF SALEM
KENOSHA COUNTY

SIGNAL NO. S30-0527

REGION CONTACT: JARRETT GATES
DESIGNED BY: JOHN BRUGGEMAN
REVISED BY:

PAGE 6 OF 10

PROJECT NO: 1310-04-70	HWY: STH 50	COUNTY: KENOSHA	TEMPORARY SIGNAL PLAN - STAGE 4A	SHEET 306	E

FILE NAME : \\DOTWKEFILE1P\N3PUBLIC\PDS\C3D\CAD\13100400\SIG\S30-0527\S30-0527_TS4A_16.DWG
LAYOUT NAME - Plan 1 IN 40 FT

PLOT DATE : 10/26/2021 2:45 PM PLOT BY : BRUGGEMAN, JOHN PLOT NAME : PLOT SCALE : Custom

WISDOT/CADDS SHEET 42

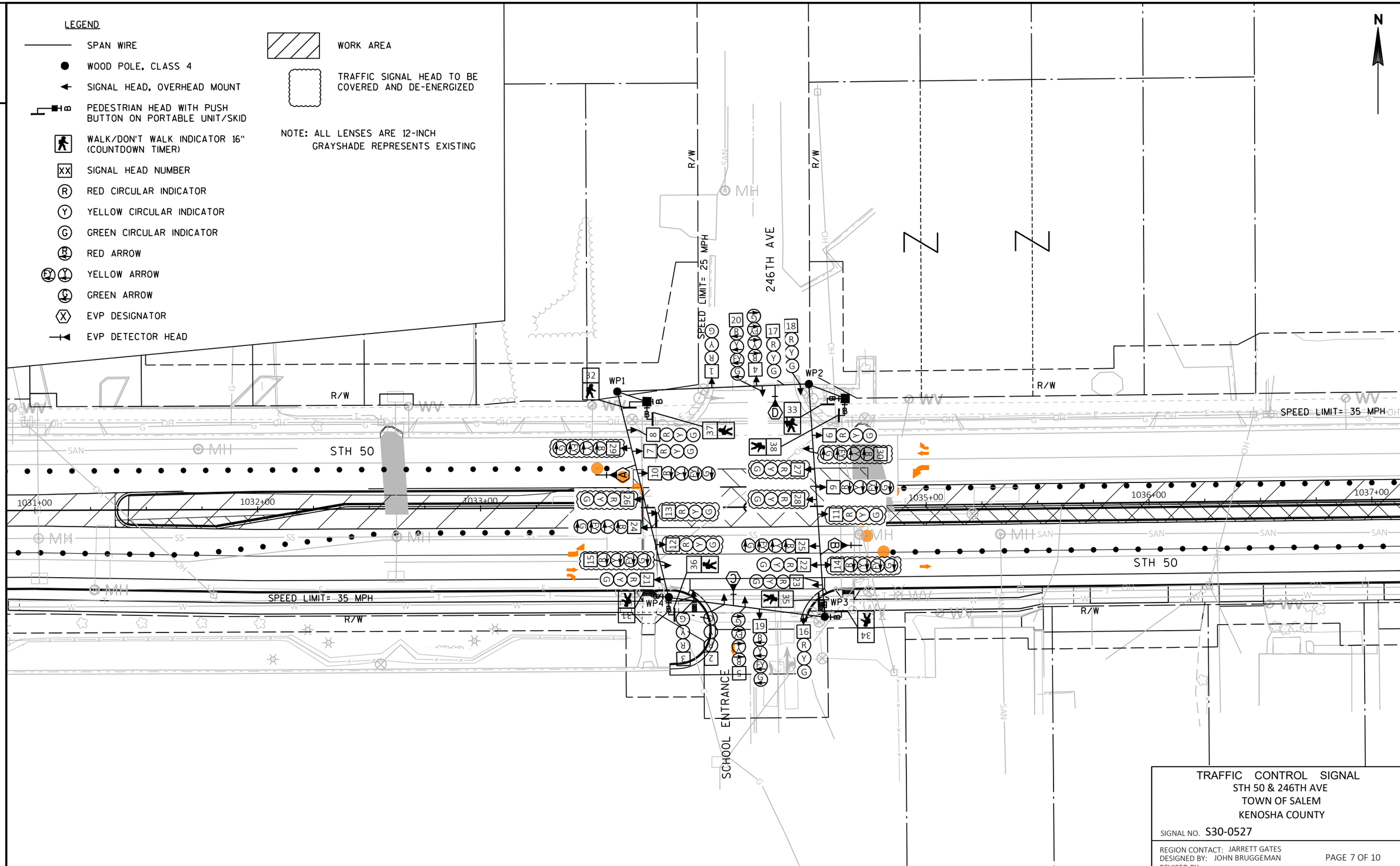

TRAFFIC CONTROL SIGNAL
STH 50 & 246TH AVE
TOWN OF SALEM
KENOSHA COUNTY

SIGNAL NO. S30-0527

REGION CONTACT: JARRETT GATES
DESIGNED BY: JOHN BRUGGEMAN
REVISED BY:

PAGE 7 OF 10

PROJECT NO: 1310-04-70	HWY: STH 50	COUNTY: KENOSHA	TEMPORARY SIGNAL PLAN - STAGE 4B	SHEET 307	E

FILE NAME : \\DOTWKEFILE1P\N3PUBLIC\PDS\C3D\CAD\13100400\SIG\S30-0527\S30-0527_TS4B_16.DWG
LAYOUT NAME - Plan 1 IN 40 FT
PLOT DATE : 10/26/2021 2:46 PM
PLOT BY : BRUGGEMAN, JOHN
PLOT NAME :
PLOT SCALE : Custom
WISDOT/CADDS SHEET 42

LEGEND

- SPAN WIRE
- WOOD POLE, CLASS 4
- SIGNAL HEAD, OVERHEAD MOUNT
- PEDESTRIAN HEAD WITH PUSH BUTTON ON PORTABLE UNIT/SKID
- WALK/DON'T WALK INDICATOR 16" (COUNTDOWN TIMER)
- XX SIGNAL HEAD NUMBER
- (R) RED CIRCULAR INDICATOR
- (Y) YELLOW CIRCULAR INDICATOR
- (G) GREEN CIRCULAR INDICATOR
- RED ARROW
- YELLOW ARROW
- GREEN ARROW
- (X) EVP DESIGNATOR
- EVP DETECTOR HEAD

- WORK AREA
- TRAFFIC SIGNAL HEAD TO BE COVERED AND DE-ENERGIZED

NOTE: ALL LENSES ARE 12-INCH
GRAYSHADE REPRESENTS EXISTING

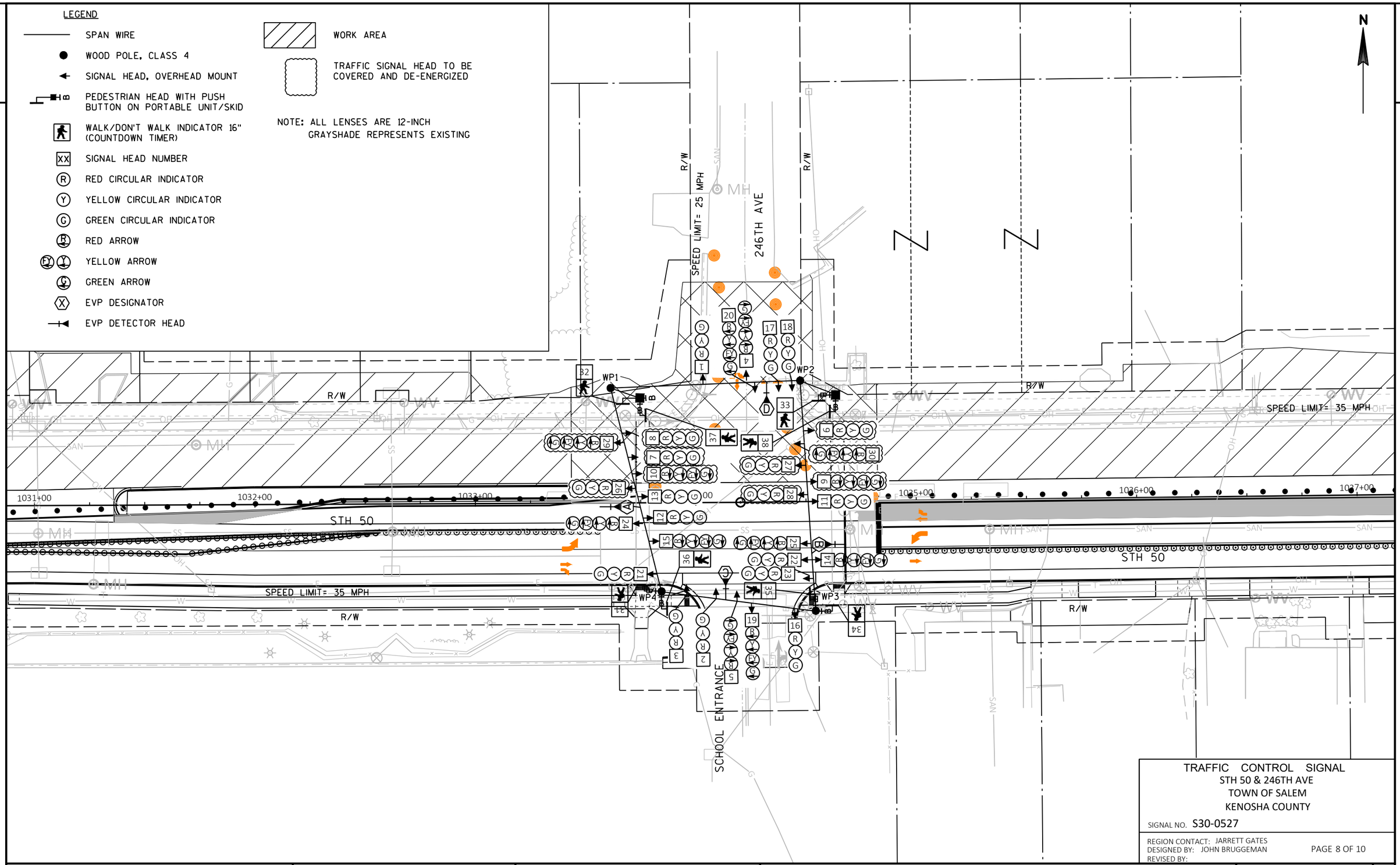

TRAFFIC CONTROL SIGNAL
STH 50 & 246TH AVE
TOWN OF SALEM
KENOSHA COUNTY

SIGNAL NO. S30-0527

REGION CONTACT: JARRETT GATES
DESIGNED BY: JOHN BRUGGEMAN
REVISED BY:

PAGE 8 OF 10

PROJECT NO: 1310-04-70	HWY: STH 50	COUNTY: KENOSHA	TEMPORARY SIGNAL PLAN - STAGE 4C	SHEET 308	E

FILE NAME : \\DOTWKEFILE1P\N3PUBLIC\PDS\C3D\CAD\13100400\SIG\S30-0527\S30-0527_TS4C_16.DWG
LAYOUT NAME - Plan 1 IN 40 FT

PLOT DATE : 10/26/2021 2:48 PM PLOT BY : BRUGGEMAN, JOHN PLOT NAME : PLOT SCALE : Custom

WISDOT/CADDS SHEET 42

LEGEND

- SPAN WIRE
- WOOD POLE, CLASS 4
- SIGNAL HEAD, OVERHEAD MOUNT
- PEDESTRIAN HEAD WITH PUSH BUTTON ON PORTABLE UNIT/SKID
- WALK/DON'T WALK INDICATOR 16" (COUNTDOWN TIMER)
- XX SIGNAL HEAD NUMBER
- R RED CIRCULAR INDICATOR
- Y YELLOW CIRCULAR INDICATOR
- G GREEN CIRCULAR INDICATOR
- RA RED ARROW
- YA YELLOW ARROW
- GA GREEN ARROW
- X EVP DESIGNATOR
- EVP DETECTOR HEAD

WORK AREA

TRAFFIC SIGNAL HEAD TO BE COVERED AND DE-ENERGIZED

NOTE: ALL LENSES ARE 12-INCH
GRAYSHADE REPRESENTS EXISTING

N

2

2

R/W

SPEED LIMIT= 25 MPH

246TH AVE

WP1

WP2

WP3

WP4

SPEED LIMIT= 35 MPH

STH 50

1031+00

1032+00

1033+00

1034+00

1035+00

1036+00

1037+00

SCHOOL ENTRANCE

TRAFFIC CONTROL SIGNAL
STH 50 & 246TH AVE
TOWN OF SALEM
KENOSHA COUNTY

SIGNAL NO. S30-0527

REGION CONTACT: JARRETT GATES
DESIGNED BY: JOHN BRUGGEMAN
REVISED BY:

PAGE 9 OF 10

PROJECT NO: 1310-04-70	HWY: STH 50	COUNTY: KENOSHA	TEMPORARY SIGNAL PLAN - STAGE 5	SHEET 309	E

FILE NAME : \\DOTWKEFILE1P\N3PUBLIC\PDS\C3D\CAD\13100400\SIG\S30-0527\S30-0527_TS5_16.DWG
LAYOUT NAME - Plan 1 IN 40 FT

PLOT DATE : 10/26/2021 2:50 PM PLOT BY : BRUGGEMAN, JOHN PLOT NAME : PLOT SCALE : Custom

WISDOT/CADDS SHEET 42

2

	HEAD NUMBERS	FLASH
Ø1	24,25,29,30	-
Ø2	6,7,8,11,12,13	R
Ø3	19,20	-
Ø4	1,2,3	R
Ø5	9,10,14,15	-
Ø6	21,22,23,26,27,28	R
Ø7	4,5	-
Ø8	16,17,18	R
Ø2P	37,38	
Ø4P	31,32	
Ø6P	35,36	
Ø8P	33,34	
OLA	24,25,29,30	R ←
OLB	19,20	R ←
OLC	9,10,14,15	R ←
OLD	4,5	R ←

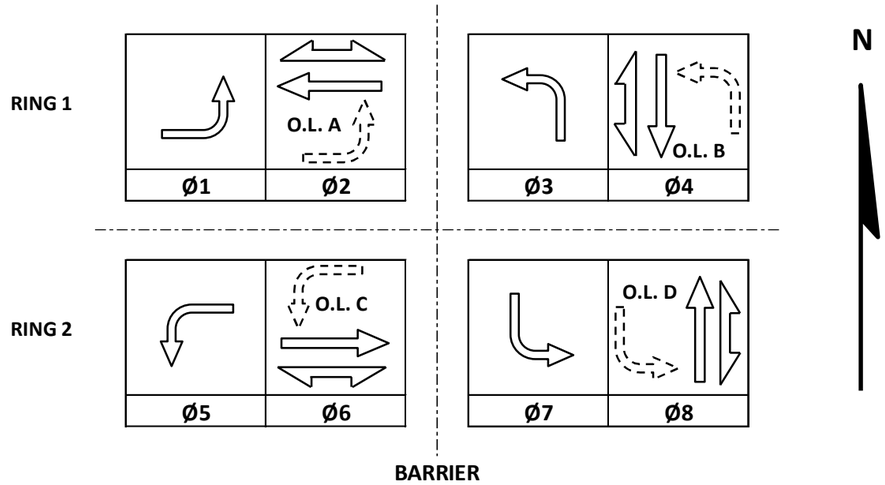

CONTROLLER LOGIC

PHASE NUMBER	PHASE LOCKING	DUAL ENTRY W / Ø	PHASE RECALL	PHASE ACTIVE
1	X	6	MAX	X
2	X	6	MAX	X
3	X	8	MAX	X
4	X	8	MAX	X
5	X	2	MAX	X
6	X	2	MAX	X
7	X	4	MAX	X
8	X	4	MAX	X

TYPE OF INTERCONNECT/COMMUNICATION	
NONE	
CLOSED LOOP	
TWISTED PAIR	
FIBER OPTIC*	
FIBER OPTIC (ETHERNET)	
RADIO	
CELL MODEM	X

TYPE OF COORDINATION	
NONE	
TBC	X
TRAFFIC RESPONSIVE	
ADAPTIVE	
*LOCATION OF MASTER CONTROLLER NO:	S-
SIGNAL SYSTEM NO:	SS-

TYPE OF LIGHTING	
BY OTHER AGENCY	
IN TRAFFIC CABINET	X
IN SEPARATE DOT LIGHTING CABINET	

TYPE OF PRE-EMPT	
NONE	
RAILROAD	
EMERGENCY VEHICLE	X
GTT	X
TOMAR	
HARDWIRE	
OTHER	
CONFIRMATION LIGHTS	
LIFT BRIDGE	
QUEUE DETECTION	

EMERGENCY VEHICLE PREEMPTION SEQUENCE

EMERGENCY VEHICLE PREEMPTOR	A	B	C	D
MOVEMENT				
PHASE	2+5	6+1	4+7	8+3

AFTER PREEMPTION SEQUENCE 2+5 OR 6+1, CONTROLLER SHALL RETURN TO PHASES 2+6.
AFTER PREEMPTION SEQUENCE 4+7 OR 8+3, CONTROLLER SHALL RETURN TO PHASES 4+8.

GENERAL NOTES:

1. USE MODE B FOR FLASHING YELLOW ARROW OPERATION.
2. PHASES 1, 3, 5, & 7 WILL ONLY BE USED DURING PEAK TRAFFIC PERIODS

STH 50 & 246TH AVENUE
VILLAGE OF PADDOCK LAKE
KENOSHA COUNTY

SIGNAL NO:	S30-0527	CABINET TYPE: TEMP
		CONTROLLER TYPE: TEMP
DATE:	OCTOBER 2021	PAGE NUMBER: 10 OF 10

LEGEND

- CONTROL CABINET
- NONMETALLIC CONDUIT 2", UNLESS OTHERWISE NOTED
- LOOP DETECTOR CONDUIT, 1" NONMETALLIC
- SIGNAL HEAD, TRAFFIC SIGNAL STANDARD, PEDESTAL BASE
- (XX) MONOTUBE BASE, POLE, 15'-30' ARM
- (XX) MONOTUBE BASE, POLE, 35'-45' ARM
- PEDESTRIAN HEAD WITH PUSH BUTTON
- PUSH BUTTON
- LOOP DETECTOR IN 1" NONMETALLIC CONDUIT
- PULL BOX, 24" X 36"
- PULL BOX, 24" X 42"

CONSTRUCTION NOTES:

1. * LOCATION IS TO FRONT CENTER OF DETECTOR LOOP.
2. THE CONTRACTOR SHALL HAVE THE PULL BOXES AND CONDUIT RUNS INSPECTED 5 WORKING DAYS PRIOR TO PLACING SIGNAL CABLE INTO SYSTEM. CONTACT THE WISDOT ELECTRICAL FIELD UNIT TO MAKE ARRANGEMENTS. (414) 266-1170.
3. THE LOCATIONS OF EXISTING AND PROPOSED UTILITY INSTALLATIONS ARE APPROXIMATE. THERE MAY BE OTHER UTILITY INSTALLATIONS WITHIN THE PROJECT WHICH ARE NOT SHOWN.
4. INSTALL CABINET BASE 6" ABOVE ROADWAY ELEVATION.
5. ALL LUMINAIRES ARE LED-C UNLESS OTHERWISE NOTED.
6. PROPOSED PAVEMENT MARKINGS AND DETECTABLE WARNING FIELDS SHOWN IN GRAYSHADE FOR PLAN CLARITY.

N

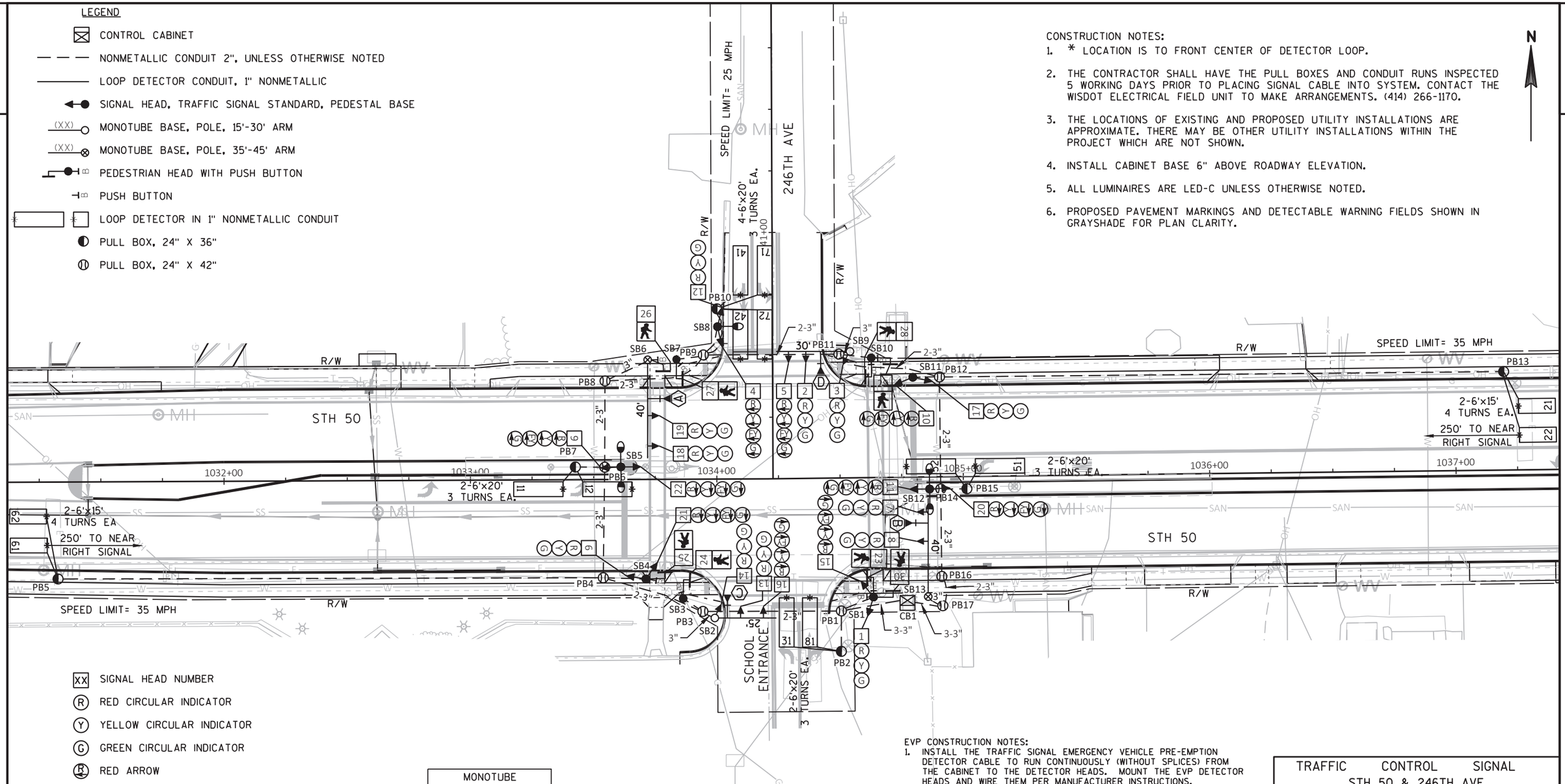

- XX SIGNAL HEAD NUMBER
- R RED CIRCULAR INDICATOR
- Y YELLOW CIRCULAR INDICATOR
- G GREEN CIRCULAR INDICATOR
- R RED ARROW
- FY Y YELLOW ARROW
- G GREEN ARROW
- WALK/DON'T WALK INDICATOR 16" (COUNTDOWN TIMER)
- X EVP DESIGNATOR
- EVP DETECTOR HEAD

NOTE: ALL LENSES ARE 12-INCH
GRAYSHADE REPRESENTS EXISTING

MONOTUBE STRUCTURE NUMBERS
SB2 = S-30-1217-01
SB6 = S-30-1217-02
SB9 = S-30-1217-03
SB13 = S-30-1217-04

EVP CONSTRUCTION NOTES:

1. INSTALL THE TRAFFIC SIGNAL EMERGENCY VEHICLE PRE-EMPTION DETECTOR CABLE TO RUN CONTINUOUSLY (WITHOUT SPLICES) FROM THE CABINET TO THE DETECTOR HEADS. MOUNT THE EVP DETECTOR HEADS AND WIRE THEM PER MANUFACTURER INSTRUCTIONS.
2. THE DEPARTMENT WILL DETERMINE THE EXACT LOCATION OF THE EVP DETECTORS TO ENSURE THAT THE INSTALLATION DOES NOT CREATE A SIGHT OBSTRUCTION.
3. ALL EVP DETECTOR CABLE SHALL BE ROUTED THROUGH EXISTING SIGNAL BASES, PULL BOXES, AND CONDUIT AS INDICATED. PROVIDE ENOUGH CABLE TO ALLOW 10 FEET OF SLACK IN THE CABINET, IN EACH PULL BOX, AND IN THE SIGNAL POLE HANDHOLE.
4. FOR A CABINET THAT IS NOT OPERATING THE SIGNAL, CABINET WIRING WILL BE DONE BY THE CONTRACTOR. IF THE CABINET IS OPERATING THE SIGNAL, THE CABINET WIRING WILL BE DONE BY THE DEPARTMENT. THE CONTRACTOR SHALL INSTALL AND TERMINATE THE EVP CABLE AS DESCRIBED AND SHALL LABEL EACH CABLE AS NOTED ON THE PLAN SHEETS (I.E. EVP A-B-C-D).

TRAFFIC CONTROL SIGNAL
STH 50 & 246TH AVE
VILLAGE OF PADDOCK LAKE
KENOSHA COUNTY

CABINET TYPE: TS2-S
SIGNAL NO. S30-0527 CONTROLLER TYPE: ECONOLITE

WISCONSIN DEPARTMENT OF TRANSPORTATION

APPROVAL RECOMMENDED
DATE 10-28-21
REGION TRAFFIC ENGINEER

APPROVED
DATE 10-29-21
STATE TRAFFIC ENGINEER

REGION CONTACT: J. GATES
DESIGNED BY: J. BRUGGEMAN
REVISED BY:

PAGE 1 OF 2

10-28-21

PROJECT NO: 1310-04-70	HWY: STH 50	COUNTY: KENOSHA	TRAFFIC SIGNAL PLAN	SHEET 311 E

FILE NAME : \\DOTWKEFILE1P\N3PUBLIC\PDS\C3D\CAD\13100400\SIG\S30-0527\S30-0527_16.DWG
LAYOUT NAME - S30-0527_pg1
PLOT DATE : 10/27/2021 8:09 AM PLOT BY : BRUGGEMAN, JOHN PLOT NAME : PLOT SCALE : 1 IN:40 FT
WISDOT/CADDS SHEET 42

	HEAD NUMBERS	FLASH
Ø1	9,10,11	R ←
Ø2	17,18,19	R
Ø3	4,5	R ←
Ø4	12,13,14	R
Ø5	20,21,22	R ←
Ø6	6,7,8	R
Ø7	15,16	R ←
Ø8	1,2,3	R
Ø2P	27,28	
Ø4P	25,26	
Ø6P	23,24	
Ø8P	29,30	
OLE	9,10,11	-
OLF	4,5	-
OLG	20,21,22	-
OLH	15,16	-

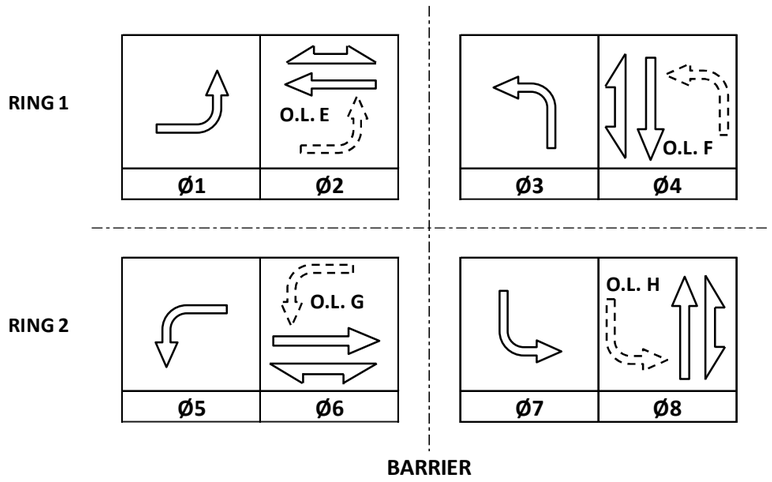



CONTROLLER LOGIC

PHASE NUMBER	PHASE LOCKING	DUAL ENTRY W / Ø	PHASE RECALL	PHASE ACTIVE
1		6		X
2	X	6	MIN	X
3		8		X
4		8		X
5		2		X
6	X	2	MIN	X
7		4		X
8		4		X

EMERGENCY VEHICLE PREEMPTION SEQUENCE

EMERGENCY VEHICLE PREEMPTOR	A	B	C	D
MOVEMENT				
PHASE	2+5	6+1	4+7	8+3

AFTER PREEMPTION SEQUENCE 2+5 OR 6+1, CONTROLLER SHALL RETURN TO PHASES 2+6.
AFTER PREEMPTION SEQUENCE 4+7 OR 8+3, CONTROLLER SHALL RETURN TO PHASES 4+8.

TYPE OF INTERCONNECT/COMMUNICATION	
NONE	
CLOSED LOOP	
TWISTED PAIR	
FIBER OPTIC*	
FIBER OPTIC (ETHERNET)	
RADIO	
CELL MODEM	X

TYPE OF COORDINATION	
NONE	
TBC	X
TRAFFIC RESPONSIVE	
ADAPTIVE	
*LOCATION OF MASTER CONTROLLER NO:	S-
SIGNAL SYSTEM NO:	SS-

TYPE OF LIGHTING	
BY OTHER AGENCY	
IN TRAFFIC CABINET	X
IN SEPARATE DOT LIGHTING CABINET	

TYPE OF PRE-EMPT	
NONE	
RAILROAD	
EMERGENCY VEHICLE	X
GTT	X
TOMAR	
HARDWIRE	
OTHER	
CONFIRMATION LIGHTS	
LIFT BRIDGE	
QUEUE DETECTION	

DETECTOR INPUT	3	1	7	5	11	9	15	13
PLAN LOOP DETECTOR*(S)	11	21	31	41	51	61	71	81
CALLED PHASE	1	2	3	4	5	6	7	8
CALL OPTION	X	X	X	X	X	X	X	X
DELAY TIME				X				X
EXTENTION OPTION	X	X	X	X	X	X	X	X
EXTEND TIME								
USE ADDED INITIAL		X				X		
CROSS SWITCH PHASE	2		4		6		8	

19	17	23	21	27	25	31	29	DETECTOR INPUT
								PLAN LOOP DETECTOR*(S)
								CALLED PHASE
								CALL OPTION
								DELAY TIME
								EXTENTION OPTION
								EXTEND TIME
								USE ADDED INITIAL
								CROSS SWITCH PHASE

DETECTOR INPUT	4	2	8	6	12	10	16	14
PLAN LOOP DETECTOR*(S)	12	22		42	52	62	72	
CALLED PHASE	2	2		4	5	6	7	
CALL OPTION	X	X		X	X	X	X	
DELAY TIME				X				
EXTENTION OPTION	X	X		X	X	X	X	
EXTEND TIME								
USE ADDED INITIAL		X				X		
CROSS SWITCH PHASE	2				6		8	

20	18	24	22	28	26	32	30	DETECTOR INPUT
								PLAN LOOP DETECTOR*(S)
								CALLED PHASE
								CALL OPTION
								DELAY TIME
								EXTENTION OPTION
								EXTEND TIME
								USE ADDED INITIAL
								CROSS SWITCH PHASE

STH 50 & 246TH AVE
VILLAGE OF PADDOCK LAKE
KENOSHA COUNTY

SIGNAL NO: S30-0527 CABINET TYPE: TS2-S
CONTROLLER TYPE: ECONOLITE
DATE: OCTOBER 2021 PAGE NUMBER: 2 OF 2

PROJECT ID:	1310-04-70
INTERSECTION:	STH 50 & 246TH AVE

Signal Wire Color Coding	BLK - black	RED - red	GRN - green
	WHT - white	BLU - blue	ORG - orange

CB1 TO	AWG14 # OF CONDUCTORS	HEAD NO.	SIGNAL INDICATION WIRE COLOR									PED NEUTRAL	PED INPUT
			RED	YELLOW	GREEN	<RED>	<YELLOW>	<GREEN>	<FLASHING YELLOW>	D/WALK	WALK		
SB1	19	1	RED	ORG	GRN								
		15				RED/BLK	ORG/BLK	GRN/BLK	BLK/WHT				
		23								BLK	BLU		
		30								RED/WHT	GRN/WHT		
		BUTTON											WHT/BLK
		BUTTON											BLU/BLK
SB2	12	13	RED	ORG	GRN								
		14	RED	ORG	GRN								
		16				RED/BLK	ORG/BLK	GRN/BLK	BLK/WHT				
SB3	7	24								BLK	BLU		
		BUTTON											WHT/BLK
SB4	12	6	RED	ORG	GRN								
		21				RED/BLK	ORG/BLK	GRN/BLK	BLK/WHT				
		25								BLK	BLU		
		BUTTON											WHT/BLK
SB5	12	9				RED	ORG	GRN	BLU				
		22				RED/BLK	ORG/BLK	GRN/BLK	BLK/WHT				
SB6	12	18	RED	ORG	GRN								
		19	RED	ORG	GRN								
		26								BLK	BLU		
		BUTTON											WHT/BLK
SB7	7	27								BLK	BLU		
		BUTTON											WHT/BLK
SB8	12	4				RED/BLK	ORG/BLK	GRN/BLK	BLK/WHT				
		12	RED	ORG	GRN								
SB9	12	2	RED	ORG	GRN								
		3	RED	ORG	GRN								
		5				RED/BLK	ORG/BLK	GRN/BLK	BLK/WHT				
SB10	12	28								BLK	BLU		
		29								RED	GRN		
		BUTTON											BLU/BLK
		BUTTON											WHT/BLK
SB11	12	10				RED	ORG	GRN	BLK/WHT				
		17	RED/BLK	ORG/BLK	GRN/BLK								
SB12	12	11				RED	ORG	GRN	BLU				
		20				RED/BLK	ORG/BLK	GRN/BLK	BLK/WHT				
SB13	12	7	RED	ORG	GRN								
		8	RED	ORG	GRN								

Equipment grounding conductor 10 AWG Green XLP	
From	TO
CB1	SB1
SB1	SB2
SB2	SB3
SB3	SB4
SB4	SB5
SB5	SB6
SB6	SB7
SB7	SB8
SB8	SB9
SB9	SB10
SB10	SB11
SB11	SB12
SB12	SB13
SB13	CB1

Pull Box Bonding Jumper 10 AWG Green XLP	
From	To
PB1	SB1
PB3	SB2
PB4	SB4
PB6	SB5
PB8	SB6
PB9	SB8
PB11	SB9
PB12	SB11
PB14	SB12
PB16	SB13
PB17	SB13

Lighting UF #10 w/ground	
From	To
CB1	SB5
SB5	SB8
CB1	SB12

EVP CABLE	
From	To
CB1	SB2 (HEAD C)
CB1	SB6 (HEAD A)
CB1	SB9 (HEAD D)
CB1	SB13 (HEAD B)

***Use the white conductor in the cable assembly as the grounded conductor for all traffic signal indications**
***Ensure the grounded conductor in the feeder cable and the pole cables are both 18" longer than the ungrounded conductors.**
***At the signal bases, connect one terminal from the pedestrian push buttons to the color indicated in the chart. Connect the other terminal to the grounded conductor.**
***Reconnect the grounding conductors wherever the circuit has been interrupted to ensure the grounding circuit is complete.**

2

LEGEND

- CONTROL CABINET
- NONMETALLIC CONDUIT 2", UNLESS OTHERWISE NOTED
- LOOP DETECTOR CONDUIT 1" NONMETALLIC
- SIGNAL HEAD, TRAFFIC SIGNAL STANDARD, PEDESTAL BASE
- (XX) SIGNAL HEAD, TRAFFIC SIGNAL POLE, TRANSFORMER BASE
- PEDESTRIAN HEAD WITH PUSH BUTTON
- PUSH BUTTON
- LUMINAIRE, TRAFFIC POLE, TRANSFORMER BASE
- LOOP DETECTOR IN 1" NONMETALLIC CONDUIT
- VX VIDEO DETECTION CAMERA
- PULL BOX, 24" X 36"
- PULL BOX, 12" X 24"
- PULL BOX, 24" X 42"

CONSTRUCTION NOTES:

1. EXISTING CONDUIT RUNS TO BE ABANDONED IN PLACE. CONTRACTOR TO REMOVE ANY CONDUCTORS REMAINING IN THE CONDUIT.
2. ABANDONED LOOP DETECTOR CONDUIT TO REMAIN IN PLACE. LOOP DETECTOR WIRE AND LEAD-IN CABLE TO BE REMOVED BY THE CONTRACTOR.
3. CABINET AND CONTROLLER SHALL BE REMOVED BY WISDOT ELECTRICAL PERSONNEL.
4. THE LOCATIONS OF EXISTING UTILITY INSTALLATIONS ARE APPROXIMATE. THERE MAY BE OTHER UTILITY INSTALLATIONS WITHIN THE PROJECT WHICH ARE NOT SHOWN.
5. GRAYSHADE REPRESENTS EXISTING. BOLD REPRESENTS ITEMS TO BE REMOVED.

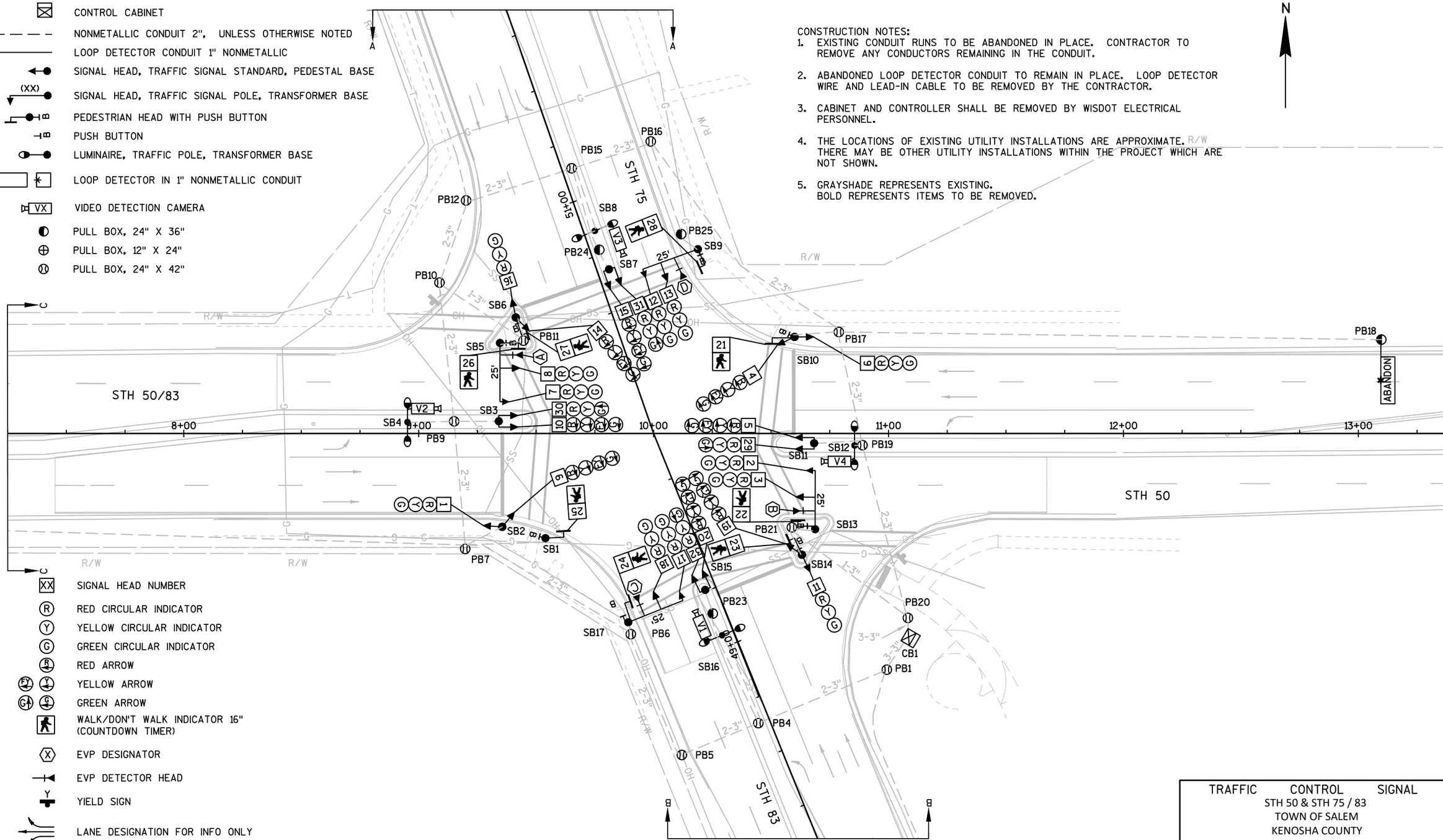

- XX SIGNAL HEAD NUMBER
- R RED CIRCULAR INDICATOR
- Y YELLOW CIRCULAR INDICATOR
- G GREEN CIRCULAR INDICATOR
- R RED ARROW
- FY Y YELLOW ARROW
- G GREEN ARROW
- WALK/DON'T WALK INDICATOR 16" (COUNTDOWN TIMER)
- X EVP DESIGNATOR
- EVP DETECTOR HEAD
- Y YIELD SIGN
- LANE DESIGNATION FOR INFO ONLY

NOTE: ALL LENSES ARE 12-INCH

TRAFFIC CONTROL SIGNAL
STH 50 & STH 75 / 83
TOWN OF SALEM
KENOSHA COUNTY

SIGNAL NO. S30-0042

REGION CONTACT: J. GATES
DESIGNED BY:
REVISED BY: J. BRUGGEMAN

PAGE 1 OF 2

PROJECT NO:1310-04-70	HWY:STH 50	COUNTY:KENOSHA	TRAFFIC SIGNAL REMOVAL PLAN	SHEET 314	E

FILE NAME : \\DOTWKEFILE1P\N3PUBLIC\PDS\C3D\CAD\13100400\SIG\S30-0042\S30-0042_REM_16.DWG
LAYOUT NAME - S30-0042_REM_16 - 024001_SP
PLOT DATE : 10/26/2021 4:31 PM PLOT BY : BRUGGEMAN, JOHN PLOT NAME : PLOT SCALE : 1:40_XREF

WISDOT/CADDS SHEET 42

2

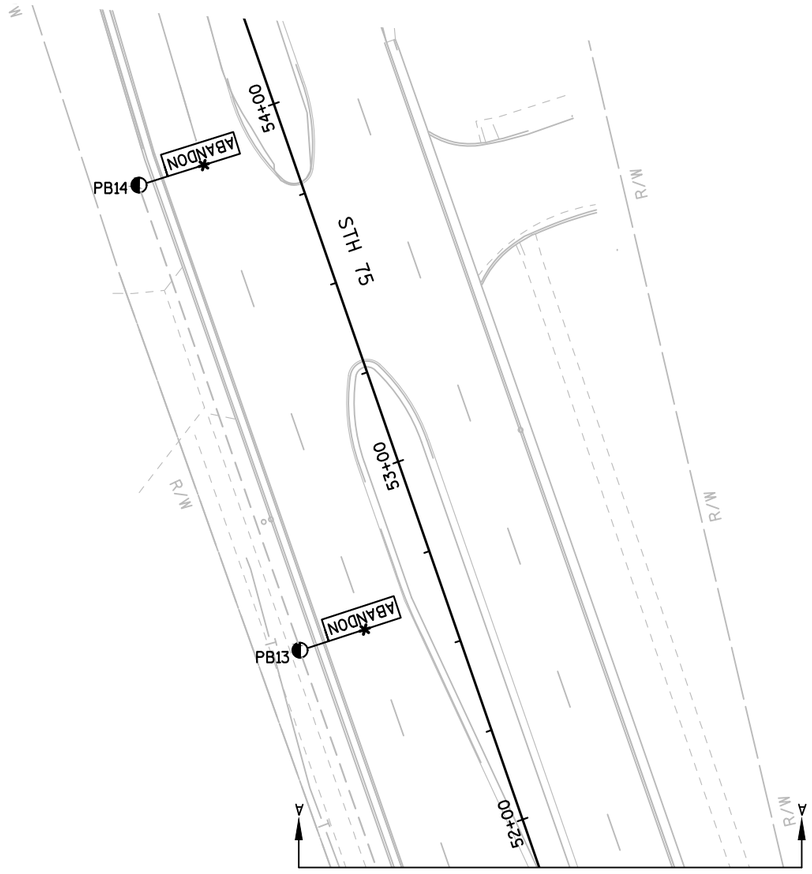

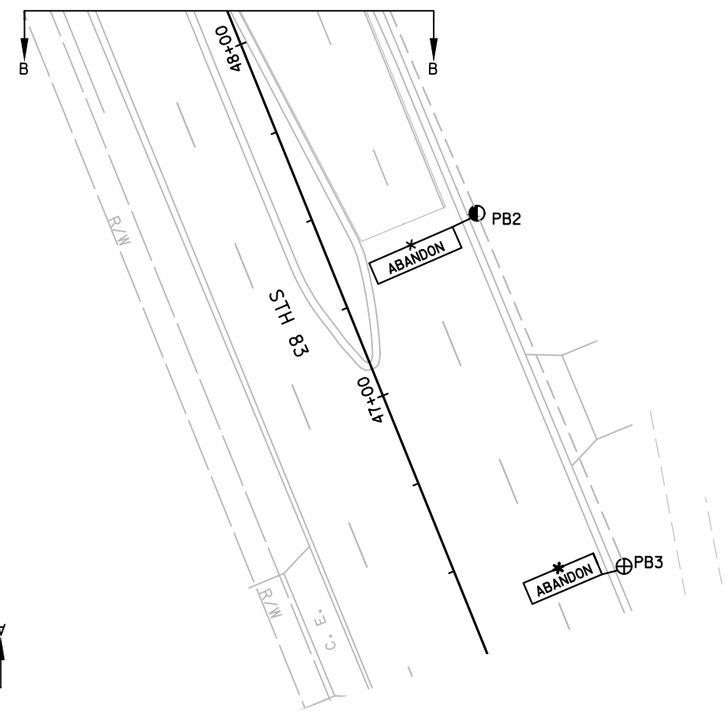

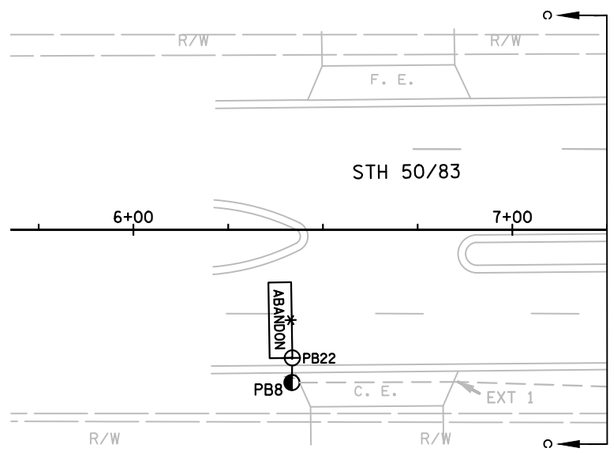

TRAFFIC CONTROL SIGNAL
STH 50 & STH 75 / 83
TOWN OF SALEM
KENOSHA COUNTY

SIGNAL NO. S30-0042

REGION CONTACT: J. GATES
DESIGNED BY:
REVISED BY: J. BRUGGEMAN

PAGE 2 OF 2

PROJECT NO: 1310-04-70	HWY: STH 50	COUNTY: KENOSHA	TRAFFIC SIGNAL REMOVAL PLAN	SHEET 315	E

FILE NAME : \\DOTWKEFILE1P\N3PUBLIC\PDS\C3D\CAD\13100400\SIG\S30-0042\S30-0042_REM_16.DWG
LAYOUT NAME - S30-0042_REM_16 - 024002_SP

PLOT DATE : 10/26/2021 4:31 PM PLOT BY : BRUGGEMAN, JOHN PLOT NAME : PLOT SCALE : 1:40_XREF

LEGEND

- SPAN WIRE
- TEMPORARY LUMINAIRE
- WOOD POLE, CLASS 4
- SIGNAL HEAD, OVERHEAD MOUNT
- PEDESTRIAN HEAD WITH PUSH BUTTON ON PORTABLE UNIT/SKID
- WALK/DON'T WALK INDICATOR 16" (COUNTDOWN TIMER)
- XX SIGNAL HEAD NUMBER
- (R) RED CIRCULAR INDICATOR
- (Y) YELLOW CIRCULAR INDICATOR
- (G) GREEN CIRCULAR INDICATOR
- R RED ARROW
- Y YELLOW ARROW
- G GREEN ARROW
- (X) EVP DESIGNATOR
- EVP DETECTOR HEAD
- WORK AREA
- TRAFFIC SIGNAL HEAD TO BE COVERED AND DE-ENERGIZED

NOTE: ALL LENSES ARE 12-INCH
GRAYSHADE REPRESENTS EXISTING

CONSTRUCTION NOTES:

1. FINAL LOCATION OF WOOD POLES AND SIGNAL HEADS SHALL BE DIRECTED BY THE ENGINEER.
2. POLES AND POSTS INSTALLED BEHIND CURBS SHALL BE OFFSET A MINIMUM OF 2 FEET FROM THE FACE OF CURB TO THE SIDE OF THE POST OR POLE.
3. GUYING OF POLES IS REQUIRED AND LOCATIONS SHALL BE APPROVED BY THE ENGINEER.
4. CONTRACTOR TO ADJUST TEMPORARY SIGNALS WITHIN EACH CONSTRUCTION STAGE AS DIRECTED BY THE ENGINEER TO MAINTAIN MUTCD SIGNAL REQUIREMENTS.
5. CONTRACTOR SHALL COORDINATE WITH THE WISDOT ELECTRICAL FIELD UNIT, (414) 266-1170, 5 WORKING DAYS PRIOR TO BEGINNING ANY WORK AT THE INTERSECTION.
6. ANY KNOCKDOWNS TO PERMANENT/TEMPORARY SIGNAL EQUIPMENT SHALL BE REPLACED BY THE CONTRACTOR.
7. LOCATIONS OF PEDESTRIAN SIGNAL POLES ARE APPROXIMATE AND SHALL BE ADJUSTED BY THE ENGINEER TO MEET FIELD CONDITIONS. ALL PLACEMENTS SHALL BE IN COMPLIANCE WITH PERTINENT MUTCD AND ADA REQUIREMENTS.
8. NEAR RIGHT TRAFFIC SIGNAL HEADS SHALL BE PLACED BETWEEN THE SPAN WIRE AND TETHER WIRE.
9. THE LOCATIONS OF EXISTING AND PROPOSED UTILITY INSTALLATIONS ARE APPROXIMATE. THERE MAY BE OTHER UTILITY INSTALLATIONS WITHIN THE PROJECT WHICH ARE NOT SHOWN.
10. ALL EXISTING SIGNAL HEADS SHALL BE REMOVED, COVERED OR TURNED AWAY FROM TRAFFIC IMMEDIATELY AFTER TURNING ON TEMPORARY SIGNALS.

N

SPEED LIMIT= 45 MPH

STH 75

STH 50

SPEED LIMIT= 35 MPH

STH 83

SPEED LIMIT= 45 MPH

WP1 WP2 WP3 WP4 WP5

1003+00 1004+00 1006+00 1008+00

SUMMARY OF SELECTED ITEMS FOR INFORMATION ONLY

QUANTITY	DESCRIPTION
5 EA	WOOD POLES, CLASS 4
6 EA	MOVEABLE WOOD POSTS
825 LF	SPAN WIRE
38 EA	SIGNAL HEADS
4 EA	LIGHTING LED-C OR 250W HPS
4 EA	EVP DETECTOR HEADS
1	TEMPORARY SIGNAL CABINET AND CONTROLLER

TRAFFIC CONTROL SIGNAL
STH 50 & STH 75/83
TOWN OF SALEM
KENOSHA COUNTY

SIGNAL NO. S30-0042

REGION CONTACT: JARRETT GATES
DESIGNED BY: JOHN BRUGGEMAN
REVISED BY:

PAGE 1 OF 12

PROJECT NO: 1310-04-70	HWY: STH 50	COUNTY: KENOSHA	TEMPORARY SIGNAL PLAN - STAGE 1A	SHEET 316	E

FILE NAME : \\DOTWKEFILE1P\N3PUBLIC\PDS\C3D\CAD\13100400\SIG\S30-0042\S30-0042_TS1A_16.DWG
LAYOUT NAME - TEMPORARY SIGNAL PLAN - STAGE 1A

PLOT DATE : 10/29/2021 6:24 AM PLOT BY : BRUGGEMAN, JOHN PLOT NAME : PLOT SCALE : 1 IN:40 FT

WISDOT/CADDS SHEET 42

LEGEND

- SPAN WIRE
- TEMPORARY LUMINAIRE
- WOOD POLE, CLASS 4
- SIGNAL HEAD, OVERHEAD MOUNT
- PEDESTRIAN HEAD WITH PUSH BUTTON ON PORTABLE UNIT/SKID
- WALK/DON'T WALK INDICATOR 16" (COUNTDOWN TIMER)
- XX SIGNAL HEAD NUMBER
- (R) RED CIRCULAR INDICATOR
- (Y) YELLOW CIRCULAR INDICATOR
- (G) GREEN CIRCULAR INDICATOR
- RED ARROW
- YELLOW ARROW
- GREEN ARROW
- (X) EVP DESIGNATOR
- EVP DETECTOR HEAD
- WORK AREA
- TRAFFIC SIGNAL HEAD TO BE COVERED AND DE-ENERGIZED

NOTE: ALL LENSES ARE 12-INCH
GRAYSHADE REPRESENTS EXISTING

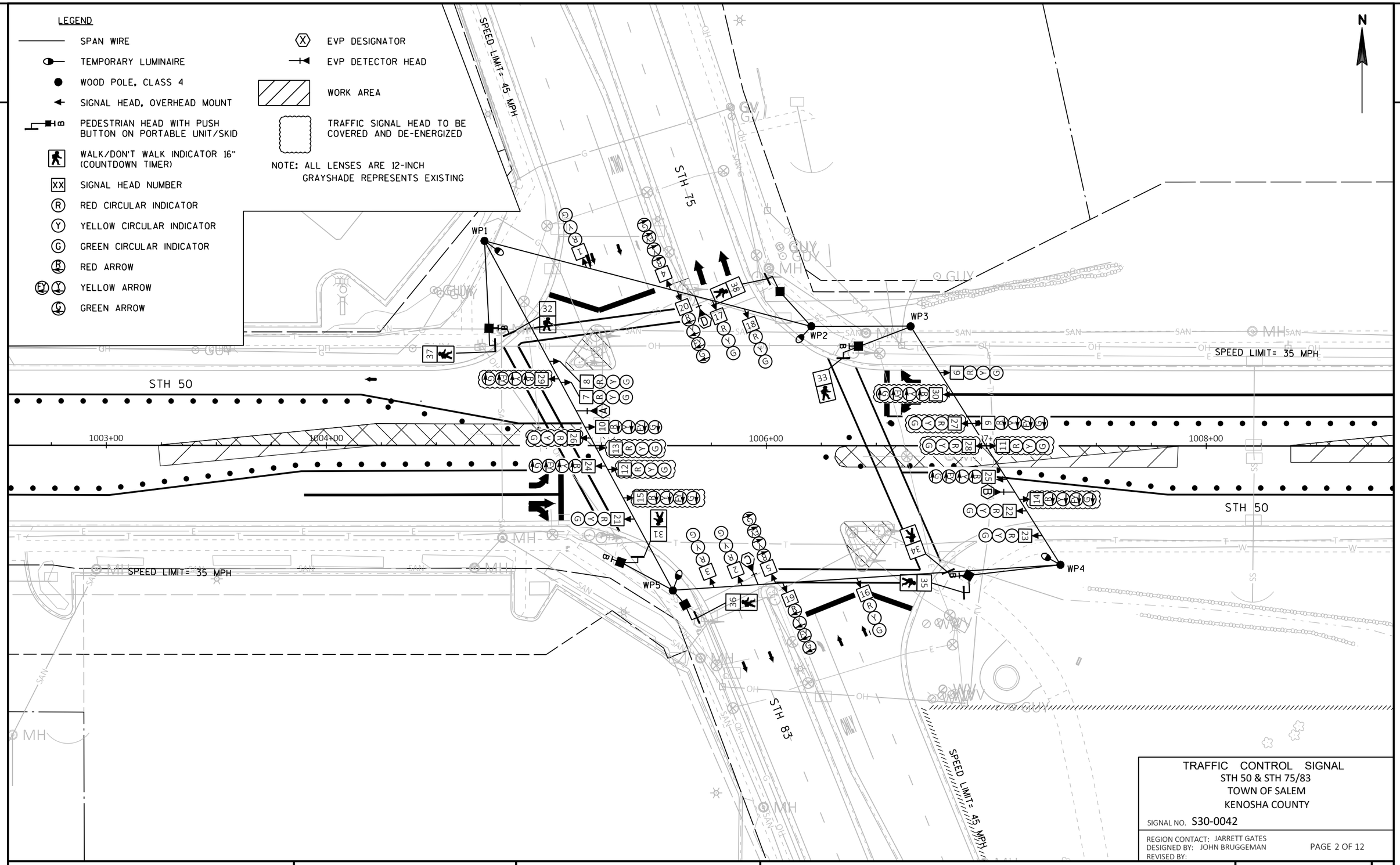

TRAFFIC CONTROL SIGNAL
STH 50 & STH 75/83
TOWN OF SALEM
KENOSHA COUNTY

SIGNAL NO. S30-0042

REGION CONTACT: JARRETT GATES
DESIGNED BY: JOHN BRUGGEMAN
REVISED BY:

PAGE 2 OF 12

PROJECT NO: 1310-04-70	HWY: STH 50	COUNTY: KENOSHA	TEMPORARY SIGNAL PLAN - STAGE 1B	SHEET 317	E

FILE NAME : \\DOTWKEFILE1P\N3PUBLIC\PDS\C3D\CAD\13100400\SIG\S30-0042\S30-0042_TS1B_16.DWG
LAYOUT NAME - Plan 1 IN 40 FT

PLOT DATE : 10/26/2021 4:24 PM PLOT BY : BRUGGEMAN, JOHN PLOT NAME : PLOT SCALE : 1 IN:40 FT

WISDOT/CADDS SHEET 42

LEGEND

- SPAN WIRE
- TEMPORARY LUMINAIRE
- WOOD POLE, CLASS 4
- SIGNAL HEAD, OVERHEAD MOUNT
- PEDESTRIAN HEAD WITH PUSH BUTTON ON PORTABLE UNIT/SKID
- WALK/DON'T WALK INDICATOR 16" (COUNTDOWN TIMER)
- XX SIGNAL HEAD NUMBER
- R RED CIRCULAR INDICATOR
- Y YELLOW CIRCULAR INDICATOR
- G GREEN CIRCULAR INDICATOR
- R RED ARROW
- FY Y YELLOW ARROW
- G GREEN ARROW
- X EVP DESIGNATOR
- EVP DETECTOR HEAD
- WORK AREA
- TRAFFIC SIGNAL HEAD TO BE COVERED AND DE-ENERGIZED

NOTE: ALL LENSES ARE 12-INCH
GRAYSHADE REPRESENTS EXISTING

N

SPEED LIMIT= 45 MPH

STH 75

WP1

WP2

WP3

WP4

WP5

STH 50

SPEED LIMIT= 35 MPH

1003+00

1006+00

1007+00

1008+00

STH 83

SPEED LIMIT= 45 MPH

TRAFFIC CONTROL SIGNAL
STH 50 & STH 75/83
TOWN OF SALEM
KENOSHA COUNTY

SIGNAL NO. S30-0042

REGION CONTACT: JARRETT GATES
DESIGNED BY: JOHN BRUGGEMAN
REVISED BY:

PAGE 3 OF 12

PROJECT NO: 1310-04-70	HWY: STH 50	COUNTY: KENOSHA	TEMPORARY SIGNAL PLAN - STAGE 2A	SHEET 318	E

FILE NAME : \\DOTWKEFILE1P\N3PUBLIC\PDS\C3D\CAD\13100400\SIG\S30-0042\S30-0042_TS2A_16.DWG
LAYOUT NAME - Plan 1 IN 40 FT

PLOT DATE : 10/26/2021 4:25 PM PLOT BY : BRUGGEMAN, JOHN PLOT NAME : PLOT SCALE : 1 IN:40 FT

WISDOT/CADDS SHEET 42

LEGEND

- SPAN WIRE
- TEMPORARY LUMINAIRE
- WOOD POLE, CLASS 4
- SIGNAL HEAD, OVERHEAD MOUNT
- PEDESTRIAN HEAD WITH PUSH BUTTON ON PORTABLE UNIT/SKID
- WALK/DON'T WALK INDICATOR 16" (COUNTDOWN TIMER)
- XX SIGNAL HEAD NUMBER
- R RED CIRCULAR INDICATOR
- Y YELLOW CIRCULAR INDICATOR
- G GREEN CIRCULAR INDICATOR
- RA RED ARROW
- FY YA YELLOW ARROW
- GA GREEN ARROW
- X EVP DESIGNATOR
- EVP DETECTOR HEAD
- WORK AREA
- TRAFFIC SIGNAL HEAD TO BE COVERED AND DE-ENERGIZED

NOTE: ALL LENSES ARE 12-INCH
GRAYSHADE REPRESENTS EXISTING

N

SPEED LIMIT= 45 MPH

STH 75

WP1 WP2 WP3 WP4 WP5

SPEED LIMIT= 35 MPH

STH 50

1003+00 1006+00 1009+00

STH 83

SPEED LIMIT= 45 MPH

TRAFFIC CONTROL SIGNAL
STH 50 & STH 75/83
TOWN OF SALEM
KENOSHA COUNTY

SIGNAL NO. S30-0042

REGION CONTACT: JARRETT GATES
DESIGNED BY: JOHN BRUGGEMAN
REVISED BY:

PAGE 4 OF 12

PROJECT NO: 1310-04-70	HWY: STH 50	COUNTY: KENOSHA	TEMPORARY SIGNAL PLAN - STAGE 2B	SHEET 319	E

FILE NAME : \\DOTWKEFILE1P\N3PUBLIC\PDS\C3D\CAD\13100400\SIG\S30-0042\S30-0042_TS2B_16.DWG
LAYOUT NAME - Plan 1 IN 40 FT

PLOT DATE : 10/26/2021 4:26 PM PLOT BY : BRUGGEMAN, JOHN PLOT NAME : PLOT SCALE : 1 IN:40 FT

WISDOT/CADDS SHEET 42

LEGEND

- SPAN WIRE
- TEMPORARY LUMINAIRE
- WOOD POLE, CLASS 4
- SIGNAL HEAD, OVERHEAD MOUNT
- PEDESTRIAN HEAD WITH PUSH BUTTON ON PORTABLE UNIT/SKID
- WALK/DON'T WALK INDICATOR 16" (COUNTDOWN TIMER)
- XX SIGNAL HEAD NUMBER
- R RED CIRCULAR INDICATOR
- Y YELLOW CIRCULAR INDICATOR
- G GREEN CIRCULAR INDICATOR
- R RED ARROW
- FY Y YELLOW ARROW
- G GREEN ARROW
- X EVP DESIGNATOR
- EVP DETECTOR HEAD
- WORK AREA
- TRAFFIC SIGNAL HEAD TO BE COVERED AND DE-ENERGIZED

NOTE: ALL LENSES ARE 12-INCH
GRAYSHADE REPRESENTS EXISTING

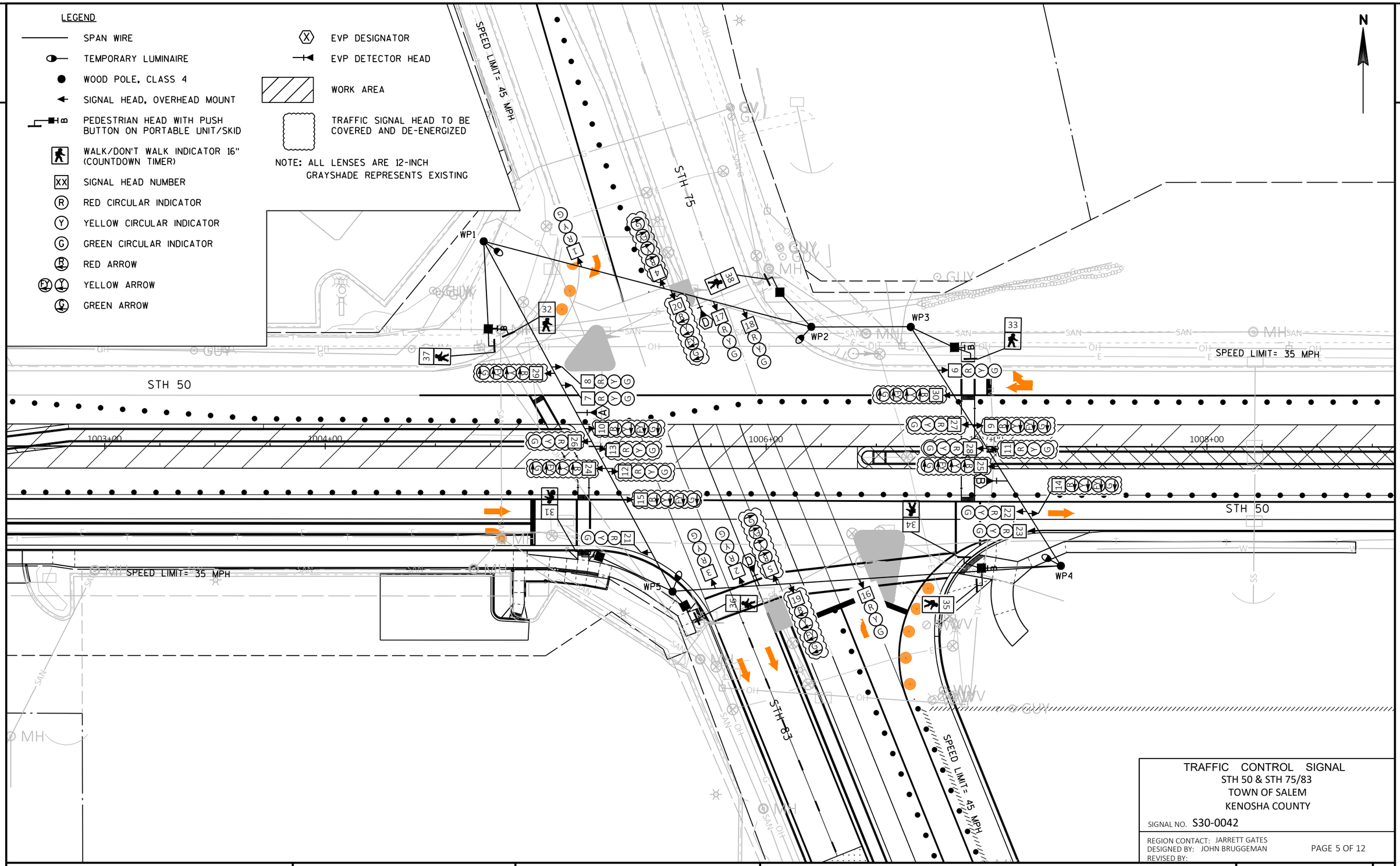

TRAFFIC CONTROL SIGNAL
STH 50 & STH 75/83
TOWN OF SALEM
KENOSHA COUNTY

SIGNAL NO. S30-0042

REGION CONTACT: JARRETT GATES
DESIGNED BY: JOHN BRUGGEMAN
REVISED BY:

PAGE 5 OF 12

PROJECT NO: 1310-04-70	HWY: STH 50	COUNTY: KENOSHA	TEMPORARY SIGNAL PLAN - STAGE 3	SHEET 320	E

FILE NAME : \\DOTWKEFILE1P\N3PUBLIC\PDS\C3D\CAD\13100400\SIG\S30-0042\S30-0042_TS3_16.DWG
LAYOUT NAME - Plan 1 IN 40 FT

PLOT DATE : 10/26/2021 4:27 PM PLOT BY : BRUGGEMAN, JOHN PLOT NAME : PLOT SCALE : 1 IN:40 FT

WISDOT/CADDS SHEET 42

LEGEND

- SPAN WIRE
- TEMPORARY LUMINAIRE
- WOOD POLE, CLASS 4
- SIGNAL HEAD, OVERHEAD MOUNT
- PEDESTRIAN HEAD WITH PUSH BUTTON ON PORTABLE UNIT/SKID
- WALK/DON'T WALK INDICATOR 16" (COUNTDOWN TIMER)
- XX SIGNAL HEAD NUMBER
- R RED CIRCULAR INDICATOR
- Y YELLOW CIRCULAR INDICATOR
- G GREEN CIRCULAR INDICATOR
- R RED ARROW
- FY Y YELLOW ARROW
- G GREEN ARROW
- X EVP DESIGNATOR
- EVP DETECTOR HEAD
- WORK AREA
- TRAFFIC SIGNAL HEAD TO BE COVERED AND DE-ENERGIZED

NOTE: ALL LENSES ARE 12-INCH
GRAYSHADE REPRESENTS EXISTING

N

SPEED LIMIT= 45 MPH

STH 75

STH 50

SPEED LIMIT= 35 MPH

WP1

WP2

WP3

WP4

WP5

1003+00

1004+00

1006+00

1007+00

1008+00

STH 50

SPEED LIMIT= 35 MPH

STH 83

SPEED LIMIT= 45 MPH

TRAFFIC CONTROL SIGNAL
STH 50 & STH 75/83
TOWN OF SALEM
KENOSHA COUNTY

SIGNAL NO. S30-0042

REGION CONTACT: JARRETT GATES
DESIGNED BY: JOHN BRUGGEMAN
REVISED BY:

PAGE 6 OF 12

PROJECT NO: 1310-04-70	HWY: STH 50	COUNTY: KENOSHA	TEMPORARY SIGNAL PLAN - STAGE 4A	SHEET 321	E

FILE NAME : \\DOTWKEFILE1P\N3PUBLIC\PDS\C3D\CAD\13100400\SIG\S30-0042\S30-0042_TS4A_16.DWG
LAYOUT NAME - Plan 1 IN 40 FT

PLOT DATE : 10/26/2021 4:28 PM PLOT BY : BRUGGEMAN, JOHN PLOT NAME : PLOT SCALE : 1 IN:40 FT

WISDOT/CADDS SHEET 42

LEGEND

- SPAN WIRE
- TEMPORARY LUMINAIRE
- WOOD POLE, CLASS 4
- SIGNAL HEAD, OVERHEAD MOUNT
- PEDESTRIAN HEAD WITH PUSH BUTTON ON PORTABLE UNIT/SKID
- WALK/DON'T WALK INDICATOR 16" (COUNTDOWN TIMER)
- XX SIGNAL HEAD NUMBER
- (R) RED CIRCULAR INDICATOR
- (Y) YELLOW CIRCULAR INDICATOR
- (G) GREEN CIRCULAR INDICATOR
- RED ARROW
- YELLOW ARROW
- GREEN ARROW
- (X) EVP DESIGNATOR
- EVP DETECTOR HEAD
- WORK AREA
- TRAFFIC SIGNAL HEAD TO BE COVERED AND DE-ENERGIZED

NOTE: ALL LENSES ARE 12-INCH
GRAYSHADE REPRESENTS EXISTING

N

SPEED LIMIT= 45 MPH

STH 75

WP1

WP2

WP3

WP4

WP5

SPEED LIMIT= 35 MPH

1003+00

1006+00

1007+00

1008+00

STH 50

STH 50

SPEED LIMIT= 35 MPH

STH 83

SPEED LIMIT= 45 MPH

TRAFFIC CONTROL SIGNAL
STH 50 & STH 75/83
TOWN OF SALEM
KENOSHA COUNTY

SIGNAL NO. S30-0042

REGION CONTACT: JARRETT GATES
DESIGNED BY: JOHN BRUGGEMAN
REVISED BY:

PAGE 7 OF 12

PROJECT NO: 1310-04-70	HWY: STH 50	COUNTY: KENOSHA	TEMPORARY SIGNAL PLAN - STAGE 4B	SHEET 322	E

FILE NAME : \\DOTWKEFILE1P\N3PUBLIC\PDS\C3D\CAD\13100400\SIG\S30-0042\S30-0042_TS4B_16.DWG
LAYOUT NAME - Plan 1 IN 40 FT

PLOT DATE : 10/26/2021 4:28 PM PLOT BY : BRUGGEMAN, JOHN PLOT NAME : PLOT SCALE : 1 IN:40 FT

WISDOT/CADDS SHEET 42

LEGEND

- SPAN WIRE
- TEMPORARY LUMINAIRE
- WOOD POLE, CLASS 4
- SIGNAL HEAD, OVERHEAD MOUNT
- PEDESTRIAN HEAD WITH PUSH BUTTON ON PORTABLE UNIT/SKID
- WALK/DON'T WALK INDICATOR 16" (COUNTDOWN TIMER)
- XX SIGNAL HEAD NUMBER
- (R) RED CIRCULAR INDICATOR
- (Y) YELLOW CIRCULAR INDICATOR
- (G) GREEN CIRCULAR INDICATOR
- (R) RED ARROW
- (FY)(Y) YELLOW ARROW
- (G) GREEN ARROW
- (X) EVP DESIGNATOR
- EVP DETECTOR HEAD
- WORK AREA
- TRAFFIC SIGNAL HEAD TO BE COVERED AND DE-ENERGIZED

NOTE: ALL LENSES ARE 12-INCH
GRAYSHADE REPRESENTS EXISTING

N

2

2

SPEED LIMIT= 45 MPH

STH 75

WP1

WP2

WP3

WP4

WP5

SPEED LIMIT= 35 MPH

1003+00

1006+00

1008+00

STH 50

STH 50

SPEED LIMIT= 35 MPH

STH 83

SPEED LIMIT= 45 MPH

TRAFFIC CONTROL SIGNAL
STH 50 & STH 75/83
TOWN OF SALEM
KENOSHA COUNTY

SIGNAL NO. S30-0042

REGION CONTACT: JARRETT GATES
DESIGNED BY: JOHN BRUGGEMAN
REVISED BY:

PROJECT NO: 1310-04-70	HWY: STH 50	COUNTY: KENOSHA	TEMPORARY SIGNAL PLAN - STAGE 4C	SHEET 323	E

FILE NAME : \\DOTWKEFILE1P\N3PUBLIC\PDS\C3D\CAD\13100400\SIG\S30-0042\S30-0042_TS4C_16.DWG
LAYOUT NAME - Plan 1 IN 40 FT
PLOT DATE : 10/26/2021 4:29 PM
PLOT BY : BRUGGEMAN, JOHN
PLOT NAME :
PLOT SCALE : 1 IN:40 FT
WISDOT/CADDS SHEET 42

LEGEND

- SPAN WIRE
- TEMPORARY LUMINAIRE
- WOOD POLE, CLASS 4
- SIGNAL HEAD, OVERHEAD MOUNT
- PEDESTRIAN HEAD WITH PUSH BUTTON ON PORTABLE UNIT/SKID
- WALK/DON'T WALK INDICATOR 16" (COUNTDOWN TIMER)
- XX SIGNAL HEAD NUMBER
- R RED CIRCULAR INDICATOR
- Y YELLOW CIRCULAR INDICATOR
- G GREEN CIRCULAR INDICATOR
- R RED ARROW
- FY Y YELLOW ARROW
- G GREEN ARROW
- X EVP DESIGNATOR
- EVP DETECTOR HEAD
- WORK AREA
- TRAFFIC SIGNAL HEAD TO BE COVERED AND DE-ENERGIZED

NOTE: ALL LENSES ARE 12-INCH
GRAYSHADE REPRESENTS EXISTING

N

SPEED LIMIT= 45 MPH

STH 75

STH 50

SPEED LIMIT= 35 MPH

STH 83

SPEED LIMIT= 45 MPH

WP1 WP2 WP3 WP4 WP5

1003+00 1004+00 1006+00 1007+00 1008+00

TRAFFIC CONTROL SIGNAL
STH 50 & STH 75/83
TOWN OF SALEM
KENOSHA COUNTY

SIGNAL NO. S30-0042

REGION CONTACT: JARRETT GATES
DESIGNED BY: JOHN BRUGGEMAN
REVISED BY:

PAGE 9 OF 12

PROJECT NO: 1310-04-70	HWY: STH 50	COUNTY: KENOSHA	TEMPORARY SIGNAL PLAN - STAGE 5	SHEET 324	E

FILE NAME : \\DOTWKEFILE1P\N3PUBLIC\PDS\C3D\CAD\13100400\SIG\S30-0042\S30-0042_TS5_16.DWG
LAYOUT NAME - Plan 1 IN 40 FT

PLOT DATE : 10/26/2021 4:29 PM PLOT BY : BRUGGEMAN, JOHN PLOT NAME : PLOT SCALE : 1 IN:40 FT

WISDOT/CADDS SHEET 42

LEGEND

- SPAN WIRE
- TEMPORARY LUMINAIRE
- WOOD POLE, CLASS 4
- SIGNAL HEAD, OVERHEAD MOUNT
- PEDESTRIAN HEAD WITH PUSH BUTTON ON PORTABLE UNIT/SKID
- WALK/DON'T WALK INDICATOR 16" (COUNTDOWN TIMER)
- XX SIGNAL HEAD NUMBER
- R RED CIRCULAR INDICATOR
- Y YELLOW CIRCULAR INDICATOR
- G GREEN CIRCULAR INDICATOR
- R RED ARROW
- FY Y YELLOW ARROW
- G GREEN ARROW
- X EVP DESIGNATOR
- EVP DETECTOR HEAD
- WORK AREA
- TRAFFIC SIGNAL HEAD TO BE COVERED AND DE-ENERGIZED

NOTE: ALL LENSES ARE 12-INCH
GRAYSHADE REPRESENTS EXISTING

N

SPEED LIMIT= 45 MPH

STH 75

STH 50

SPEED LIMIT= 35 MPH

WP1

WP2

WP3

WP4

WP5

1003+00

1004+00

1006+00

1007

1008+00

STH 83

SPEED LIMIT= 45 MPH

TRAFFIC CONTROL SIGNAL
STH 50 & STH 75/83
TOWN OF SALEM
KENOSHA COUNTY

SIGNAL NO. S30-0042

REGION CONTACT: JARRETT GATES
DESIGNED BY: JOHN BRUGGEMAN
REVISED BY:

PAGE 10 OF 12

PROJECT NO: 1310-04-70	HWY: STH 50	COUNTY: KENOSHA	TEMPORARY SIGNAL PLAN - STAGE 6A	SHEET 325	E

FILE NAME : \\DOTWKEFILE1P\N3PUBLIC\PDS\C3D\CAD\13100400\SIG\S30-0042\S30-0042_TS6A_16.DWG
LAYOUT NAME - Plan 1 IN 40 FT

PLOT DATE : 10/26/2021 4:29 PM PLOT BY : BRUGGEMAN, JOHN PLOT NAME : PLOT SCALE : 1 IN:40 FT

WISDOT/CADDS SHEET 42

LEGEND

- SPAN WIRE
- TEMPORARY LUMINAIRE
- WOOD POLE, CLASS 4
- SIGNAL HEAD, OVERHEAD MOUNT
- PEDESTRIAN HEAD WITH PUSH BUTTON ON PORTABLE UNIT/SKID
- WALK/DON'T WALK INDICATOR 16" (COUNTDOWN TIMER)
- XX SIGNAL HEAD NUMBER
- (R) RED CIRCULAR INDICATOR
- (Y) YELLOW CIRCULAR INDICATOR
- (G) GREEN CIRCULAR INDICATOR
- R RED ARROW
- FY Y YELLOW ARROW
- G GREEN ARROW
- X EVP DESIGNATOR
- EVP DETECTOR HEAD
- WORK AREA
- TRAFFIC SIGNAL HEAD TO BE COVERED AND DE-ENERGIZED

NOTE: ALL LENSES ARE 12-INCH
GRAYSHADE REPRESENTS EXISTING

N

SPEED LIMIT= 45 MPH

STH 75

STH 50

SPEED LIMIT= 35 MPH

WP1

WP2

WP3

WP4

WP5

1003+00

1004+00

1006+00

1008+00

STH 83

SPEED LIMIT= 45 MPH

TRAFFIC CONTROL SIGNAL
STH 50 & STH 75/83
TOWN OF SALEM
KENOSHA COUNTY

SIGNAL NO. S30-0042

REGION CONTACT: JARRETT GATES
DESIGNED BY: JOHN BRUGGEMAN
REVISED BY:

PAGE 11 OF 12

PROJECT NO: 1310-04-70	HWY: STH 50	COUNTY: KENOSHA	TEMPORARY SIGNAL PLAN - STAGE 6B	SHEET 326	E

FILE NAME : \\DOTWKEFILE1P\N3PUBLIC\PDS\C3D\CAD\13100400\SIG\S30-0042\S30-0042_TS6B_16.DWG
LAYOUT NAME - Plan 1 IN 40 FT

PLOT DATE : 10/26/2021 4:29 PM PLOT BY : BRUGGEMAN, JOHN PLOT NAME : PLOT SCALE : 1 IN:40 FT

WISDOT/CADDS SHEET 42

2

	HEAD NUMBERS	FLASH
Ø1	24,25,29,30	-
Ø2	6,7,8,11,12,13	R
Ø3	19,20	-
Ø4	1,2,3	R
Ø5	9,10,14,15	-
Ø6	21,22,23,26,27,28	R
Ø7	4,5	-
Ø8	16,17,18	R
Ø2P	37,38	
Ø4P	31,32	
Ø6P	35,36	
Ø8P	33,34	
OLA	24,25,29,30	R ←
OLB	19,20	R ←
OLC	9,10,14,15	R ←
OLD	4,5	R ←

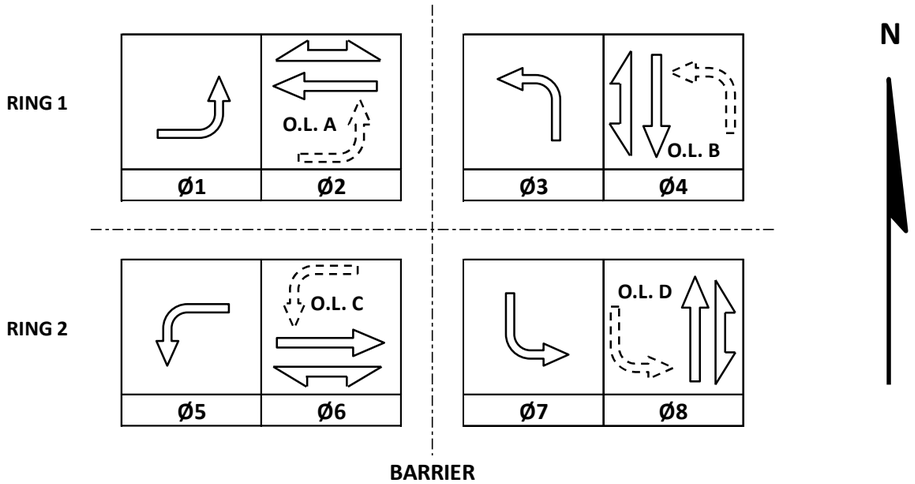

CONTROLLER LOGIC

PHASE NUMBER	PHASE LOCKING	DUAL ENTRY W / Ø	PHASE RECALL	PHASE ACTIVE
1	X	6	MAX	X
2	X	6	MAX	X
3	X	8	MAX	X
4	X	8	MAX	X
5	X	2	MAX	X
6	X	2	MAX	X
7	X	4	MAX	X
8	X	4	MAX	X

TYPE OF INTERCONNECT/COMMUNICATION	
NONE	
CLOSED LOOP	
TWISTED PAIR	
FIBER OPTIC*	
FIBER OPTIC (ETHERNET)	
RADIO	
CELL MODEM	X

TYPE OF COORDINATION	
NONE	
TBC	X
TRAFFIC RESPONSIVE	
ADAPTIVE	
*LOCATION OF MASTER CONTROLLER NO:	S-
SIGNAL SYSTEM NO:	SS-

TYPE OF LIGHTING	
BY OTHER AGENCY	
IN TRAFFIC CABINET	X
IN SEPARATE DOT LIGHTING CABINET	

TYPE OF PRE-EMPT	
NONE	
RAILROAD	
EMERGENCY VEHICLE	X
GTT	X
TOMAR	
HARDWIRE	
OTHER	
CONFIRMATION LIGHTS	
LIFT BRIDGE	
QUEUE DETECTION	

EMERGENCY VEHICLE PREEMPTION SEQUENCE

EMERGENCY VEHICLE PREEMPTOR	A	B	C	D
MOVEMENT				
PHASE	2+5	6+1	4+7	8+3

AFTER PREEMPTION SEQUENCE 2+5 OR 6+1, CONTROLLER SHALL RETURN TO PHASES 2+6.
AFTER PREEMPTION SEQUENCE 4+7 OR 8+3, CONTROLLER SHALL RETURN TO PHASES 4+8.

GENERAL NOTES:

1. USE MODE B FOR FLASHING YELLOW ARROW OPERATION.
2. PHASES 1, 3, 5, & 7 WILL ONLY BE USED DURING PEAK TRAFFIC PERIODS.

STH 50 & STH 75/83
VILLAGE OF PADDOCK LAKE
KENOSHA COUNTY

SIGNAL NO:	S30-0042	CABINET TYPE: TEMP
		CONTROLLER TYPE: TEMP
DATE:	OCTOBER 2021	PAGE NUMBER: 12 OF 12

PROJECT NO: 1310-04-70	HWY: STH 50	COUNTY: KENOSHA	SEQUENCE OF OPERATIONS	SHEET NO:	E

LEGEND

- CONTROL CABINET
- NONMETALLIC CONDUIT 2", UNLESS OTHERWISE NOTED
- LOOP DETECTOR CONDUIT, 1" NONMETALLIC
- SIGNAL HEAD, TRAFFIC SIGNAL STANDARD, PEDESTAL BASE
- (XX) MONOTUBE BASE, POLE, 35'-40' ARM
- PEDESTRIAN HEAD WITH PUSH BUTTON
- PUSH BUTTON
- LUMINAIRE, TRAFFIC POLE, TRANSFORMER BASE
- LOOP DETECTOR IN 1" NONMETALLIC CONDUIT
- PULL BOX, 24" X 36"
- PULL BOX, 24" X 42"

CONSTRUCTION NOTES:

1. * LOCATION IS TO FRONT CENTER OF DETECTOR LOOP.
2. THE CONTRACTOR SHALL HAVE THE PULL BOXES AND CONDUIT RUNS INSPECTED 5 WORKING DAYS PRIOR TO PLACING SIGNAL CABLE INTO SYSTEM. CONTACT THE WISDOT ELECTRICAL FIELD UNIT TO MAKE ARRANGEMENTS. (414) 266-1170.
3. THE LOCATIONS OF EXISTING AND PROPOSED UTILITY INSTALLATIONS ARE APPROXIMATE. THERE MAY BE OTHER UTILITY INSTALLATIONS WITHIN THE PROJECT WHICH ARE NOT SHOWN.
4. INSTALL CABINET BASE 6" ABOVE ROADWAY ELEVATION.
5. ALL LUMINAIRES ARE LED-C UNLESS OTHERWISE NOTED.
6. PROPOSED PAVEMENT MARKINGS AND DETECTABLE WARNING FIELDS SHOWN IN GRAYSHADE FOR PLAN CLARITY.

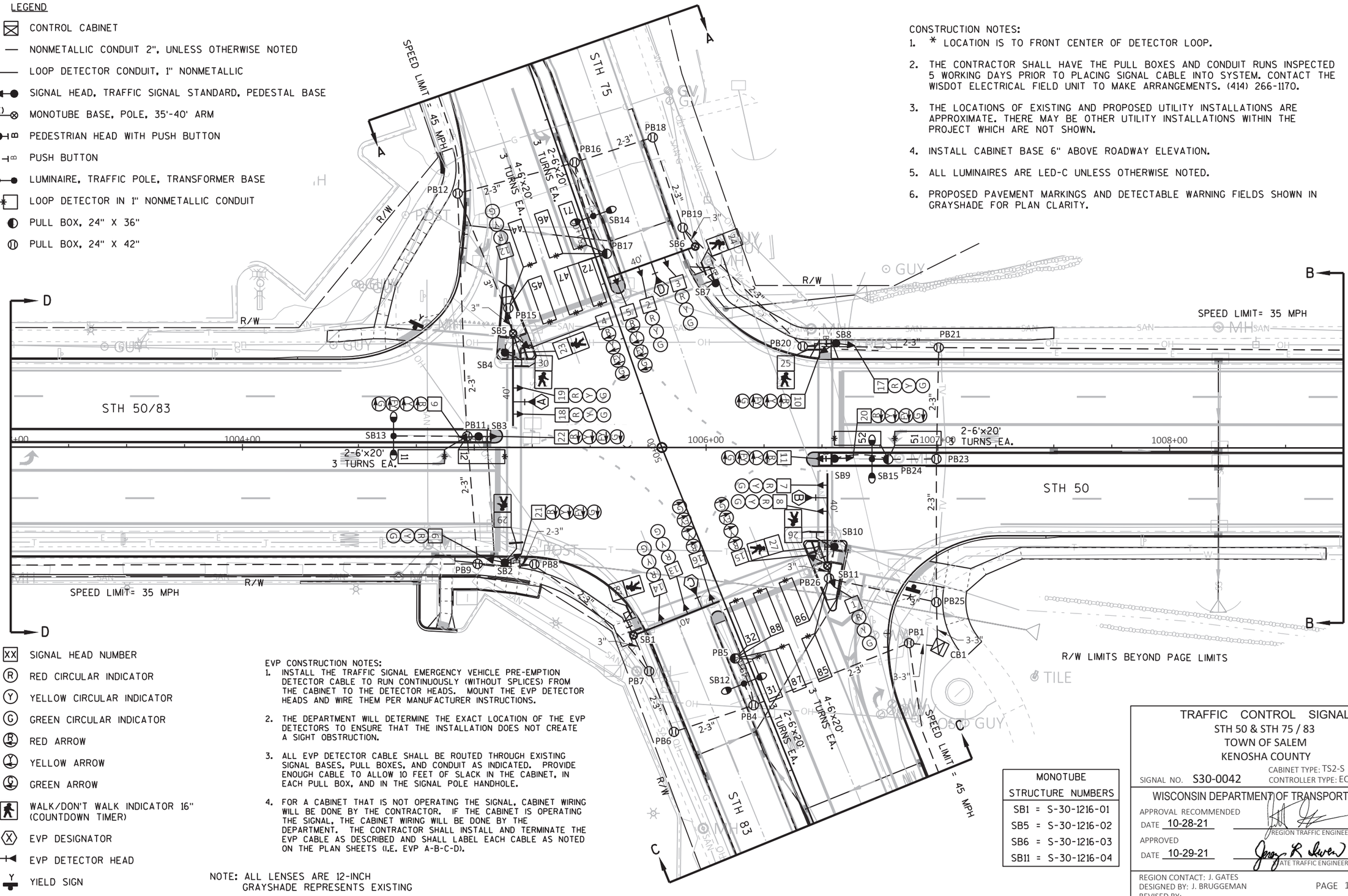

- XX SIGNAL HEAD NUMBER
- (R) RED CIRCULAR INDICATOR
- (Y) YELLOW CIRCULAR INDICATOR
- (G) GREEN CIRCULAR INDICATOR
- RED ARROW
- YELLOW ARROW
- GREEN ARROW
- WALK/DON'T WALK INDICATOR 16" (COUNTDOWN TIMER)
- (X) EVP DESIGNATOR
- EVP DETECTOR HEAD
- Y YIELD SIGN

EVP CONSTRUCTION NOTES:

1. INSTALL THE TRAFFIC SIGNAL EMERGENCY VEHICLE PRE-EMPTION DETECTOR CABLE TO RUN CONTINUOUSLY (WITHOUT SPLICES) FROM THE CABINET TO THE DETECTOR HEADS. MOUNT THE EVP DETECTOR HEADS AND WIRE THEM PER MANUFACTURER INSTRUCTIONS.
2. THE DEPARTMENT WILL DETERMINE THE EXACT LOCATION OF THE EVP DETECTORS TO ENSURE THAT THE INSTALLATION DOES NOT CREATE A SIGHT OBSTRUCTION.
3. ALL EVP DETECTOR CABLE SHALL BE ROUTED THROUGH EXISTING SIGNAL BASES, PULL BOXES, AND CONDUIT AS INDICATED. PROVIDE ENOUGH CABLE TO ALLOW 10 FEET OF SLACK IN THE CABINET, IN EACH PULL BOX, AND IN THE SIGNAL POLE HANDHOLE.
4. FOR A CABINET THAT IS NOT OPERATING THE SIGNAL, CABINET WIRING WILL BE DONE BY THE CONTRACTOR. IF THE CABINET IS OPERATING THE SIGNAL, THE CABINET WIRING WILL BE DONE BY THE DEPARTMENT. THE CONTRACTOR SHALL INSTALL AND TERMINATE THE EVP CABLE AS DESCRIBED AND SHALL LABEL EACH CABLE AS NOTED ON THE PLAN SHEETS (I.E. EVP A-B-C-D).

NOTE: ALL LENSES ARE 12-INCH
GRAYSHADE REPRESENTS EXISTING

MONOTUBE STRUCTURE NUMBERS
SB1 = S-30-1216-01
SB5 = S-30-1216-02
SB6 = S-30-1216-03
SB11 = S-30-1216-04

TRAFFIC CONTROL SIGNAL
STH 50 & STH 75 / 83
TOWN OF SALEM
KENOSHA COUNTY

SIGNAL NO. S30-0042
CABINET TYPE: TS2-S
CONTROLLER TYPE: ECONOLITE

WISCONSIN DEPARTMENT OF TRANSPORTATION

APPROVAL RECOMMENDED
DATE 10-28-21 REGION TRAFFIC ENGINEER

APPROVED
DATE 10-29-21 STATE TRAFFIC ENGINEER

10-28-21

REGION CONTACT: J. GATES
DESIGNED BY: J. BRUGGEMAN
REVISED BY:

PROJECT NO: 1310-04-70	HWY: STH 50	COUNTY: KENOSHA	TRAFFIC SIGNAL PLAN	SHEET 328	E

FILE NAME : \\DOTWKEFILE1P\N3PUBLIC\PDS\C3D\CAD\13100400\SIG\S30-0042\S30-0042_16.DWG
LAYOUT NAME - S30-0042_R10_pg1
PLOT DATE : 10/27/2021 7:31 AM PLOT BY : BRUGGEMAN, JOHN PLOT NAME : PLOT SCALE : 1 IN:40 FT

2

N

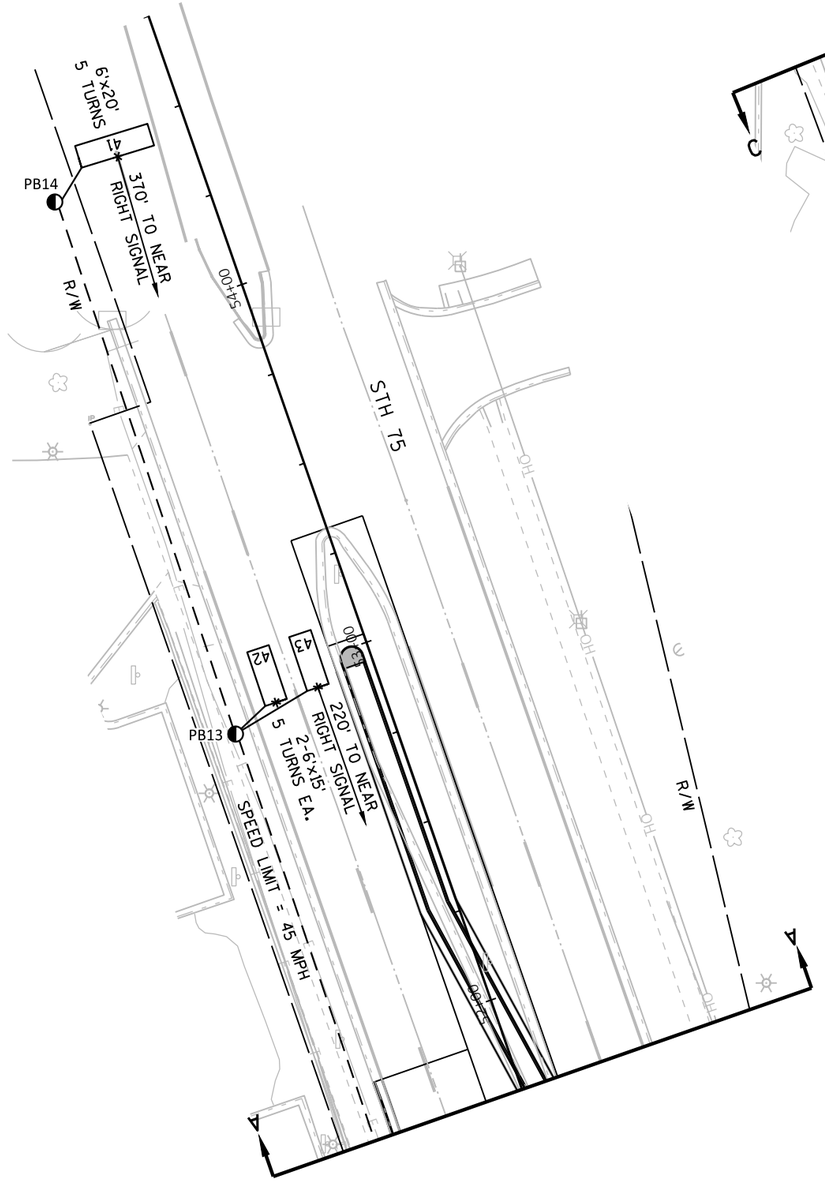

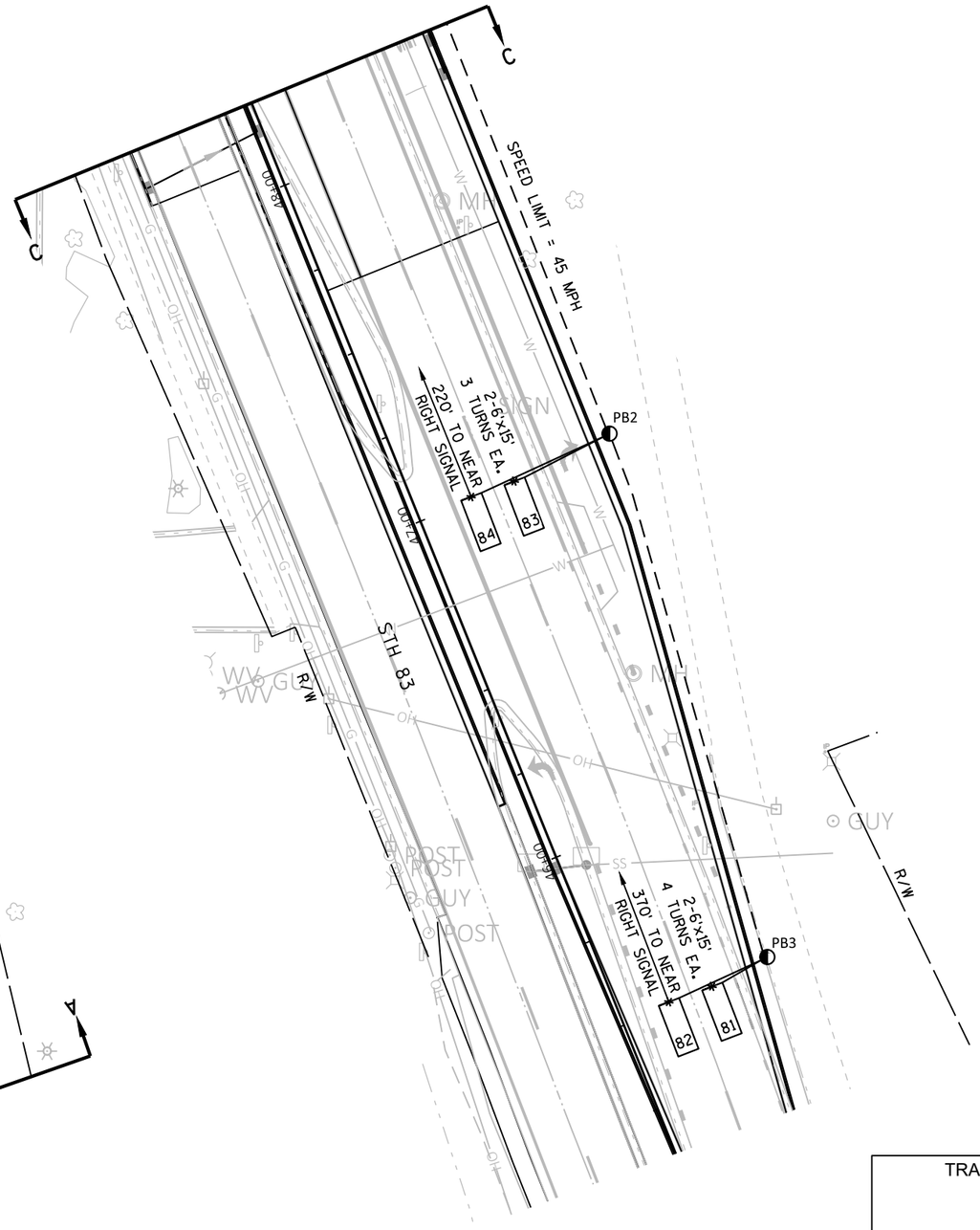

TRAFFIC CONTROL SIGNAL
STH 50 & STH 75/83
TOWN OF SALEM
KENOSHA COUNTY

SIGNAL NO. S30-0042

REGION CONTACT: J. GATES
DESIGNED BY: J. BRUGGEMAN
REVISED BY:

PROJECT NO: 1310-04-70	HWY: STH 50	COUNTY: KENOSHA	TRAFFIC SIGNAL PLAN	SHEET 329	E

FILE NAME : \\DOTWKEFILE1P\N3PUBLIC\PDS\C3D\CAD\13100400\SIG\S30-0042\S30-0042_16.DWG
LAYOUT NAME - S30-0042_R10_pg2

PLOT DATE : 10/26/2021 4:36 PM PLOT BY : BRUGGEMAN, JOHN PLOT NAME : PLOT SCALE : 1 IN:40 FT

N

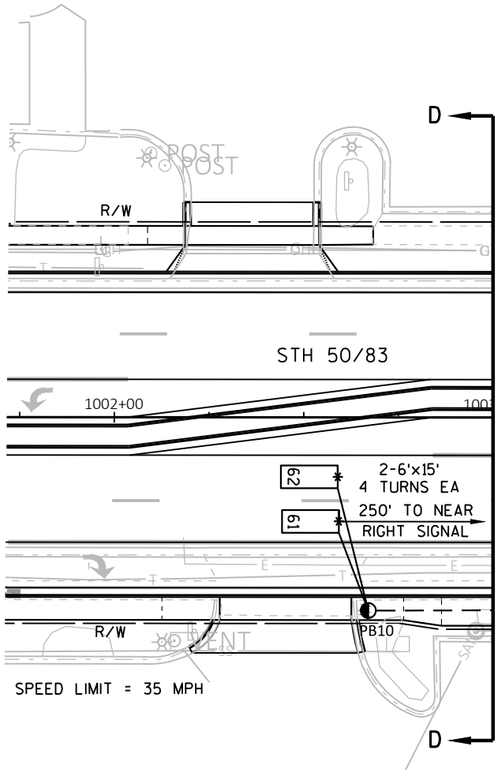

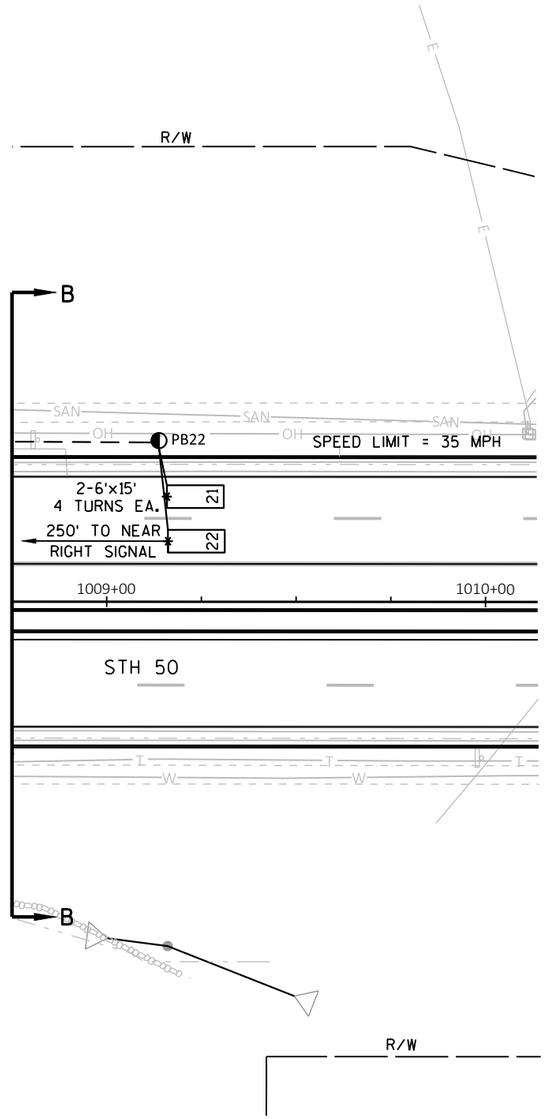

TRAFFIC CONTROL SIGNAL
STH 50 & STH 75/83
TOWN OF SALEM
KENOSHA COUNTY

SIGNAL NO. S30-0042

REGION CONTACT: J. GATES
DESIGNED BY: J. BRUGGEMAN
REVISED BY:

PAGE 3 OF 4

PROJECT NO: 1310-04-70	HWY: STH 50	COUNTY: KENOSHA	TRAFFIC SIGNAL PLAN	SHEET 330	E

	HEAD NUMBERS	FLASH
Ø1	9,10,11	R ←
Ø2	17,18,19	R
Ø3	4,5	R ←
Ø4	12,13,14	R
Ø5	20,21,22	R ←
Ø6	6,7,8	R
Ø7	15,16	R ←
Ø8	1,2,3	R
Ø2P	23,24	
Ø4P	29,30	
Ø6P	27,28	
Ø8P	25,26	
OLE	9,10,11	-
OLF	4,5	-
OLG	20,21,22	-
OLH	15,16	-

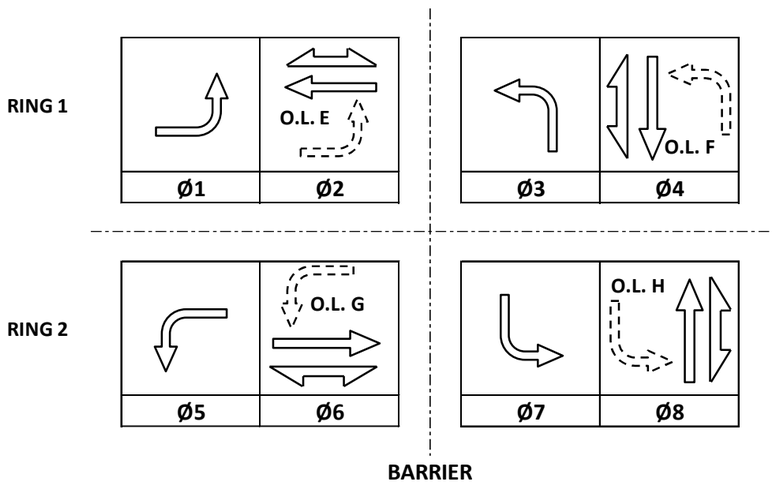

CONTROLLER LOGIC

PHASE NUMBER	PHASE LOCKING	DUAL ENTRY W / Ø	PHASE RECALL	PHASE ACTIVE
1		6		X
2	X	6	MIN	X
3		8		X
4		8		X
5		2		X
6	X	2	MIN	X
7		4		X
8		4		X

EMERGENCY VEHICLE PREEMPTION SEQUENCE

EMERGENCY VEHICLE PREEMPTOR	A	B	C	D
MOVEMENT				
PHASE	2+5	6+1	4+7	8+3

AFTER PREEMPTION SEQUENCE 2+5 OR 6+1, CONTROLLER SHALL RETURN TO PHASES 2+6.
AFTER PREEMPTION SEQUENCE 4+7 OR 8+3, CONTROLLER SHALL RETURN TO PHASES 4+8.

TYPE OF INTERCONNECT/COMMUNICATION	
NONE	
CLOSED LOOP	
TWISTED PAIR	
FIBER OPTIC*	
FIBER OPTIC (ETHERNET)	
RADIO	
CELL MODEM	X

TYPE OF COORDINATION	
NONE	
TBC	X
TRAFFIC RESPONSIVE	
ADAPTIVE	
*LOCATION OF MASTER CONTROLLER NO: S-	
SIGNAL SYSTEM NO: SS-	

TYPE OF LIGHTING	
BY OTHER AGENCY	
IN TRAFFIC CABINET	X
IN SEPARATE DOT LIGHTING CABINET	

TYPE OF PRE-EMPT	
NONE	
RAILROAD	
EMERGENCY VEHICLE	X
GTT	X
TOMAR	
HARDWIRE	
OTHER	
CONFIRMATION LIGHTS	
LIFT BRIDGE	
QUEUE DETECTION	

DETECTOR LOGIC

DETECTOR INPUT	3	1	7	5	11	9	15	13	19	17	23	21	27	25	31	29	DETECTOR INPUT
PLAN LOOP DETECTOR*(S)	11	21	31	41	43	45	47	51	61	71	81	83	85	87			PLAN LOOP DETECTOR*(S)
CALLED PHASE	1	2	3	4	4	4	4	5	6	7	8	8	8	8			CALLED PHASE
CALL OPTION	X	X	X			X	X	X	X	X			X	X			CALL OPTION
DELAY TIME																	DELAY TIME
EXTENTION OPTION	X	X	X	X	X	X	X	X	X	X	X	X	X	X			EXTENTION OPTION
EXTEND TIME				X	X						X	X					EXTEND TIME
USE ADDED INITIAL		X							X								USE ADDED INITIAL
CROSS SWITCH PHASE	2		4					6		8							CROSS SWITCH PHASE

DETECTOR INPUT	4	2	8	6	12	10	16	14	20	18	24	22	28	26	32	30	DETECTOR INPUT
PLAN LOOP DETECTOR*(S)	12	22	32	42	44	46		52	62	72	82	84	86	88			PLAN LOOP DETECTOR*(S)
CALLED PHASE	2	2	3	4	4	4		5	6	7	8	8	8	8			CALLED PHASE
CALL OPTION	X	X	X		X	X		X	X	X			X	X			CALL OPTION
DELAY TIME																	DELAY TIME
EXTENTION OPTION	X	X	X	X	X	X		X	X	X	X	X	X	X			EXTENTION OPTION
EXTEND TIME				X							X	X					EXTEND TIME
USE ADDED INITIAL		X							X								USE ADDED INITIAL
CROSS SWITCH PHASE	2		4					6		8							CROSS SWITCH PHASE

STH 50 & STH 75/83
VILLAGE OF PADDOCK LAKE
KENOSHA COUNTY

SIGNAL NO: S30-0042 CABINET TYPE: TS2-S
CONTROLLER TYPE: ECONOLITE
DATE: OCTOBER 2021 PAGE NUMBER: 4 OF 4

PROJECT ID:	1310-04-70
INTERSECTION:	STH 50 & STH 75/83

Signal Wire Color Coding	BLK - black	RED - red	GRN - green
	WHT - white	BLU - blue	ORG - orange

CB1 TO	AWG14 # OF CONDUCTORS	HEAD NO.	SIGNAL INDICATION WIRE COLOR									PED NEUTRAL	PED INPUT
			RED	YELLOW	GREEN	<RED>	<YELLOW>	<GREEN>	<FLASHING YELLOW>	D/WALK	WALK		
SB1	12	13	RED	ORG	GRN								
		14	RED	ORG	GRN								
		16				RED/BLK	ORG/BLK	GRN/BLK	BLK/WHT				
		28								BLK	BLU		
		BUTTON											WHT/BLK
SB2	12	6	RED	ORG	GRN								
		21				RED/BLK	ORG/BLK	GRN/BLK	BLK/WHT				
		29								BLK	BLU		
		BUTTON											WHT/BLK
SB3	12	9				RED	ORG	GRN	BLU				
		22				RED/BLK	ORG/BLK	GRN/BLK	BLK/WHT				
SB4	7	30								BLK	BLU		
		BUTTON											WHT/BLK
SB5	12	18	RED	ORG	GRN								
		19	RED	ORG	GRN								
		23								BLK	BLU		
		BUTTON											WHT/BLK
SB6	12	2	RED	ORG	GRN								
		3	RED	ORG	GRN								
		5				RED/BLK	ORG/BLK	GRN/BLK	BLK/WHT				
SB7	7	24								BLK	BLU		
		BUTTON											WHT/BLK
SB8	12	10				RED	ORG	GRN	BLK/WHT				
		17	RED/BLK	ORG/BLK	GRN/BLK								
		25								BLK	BLU		
		BUTTON											WHT/BLK
SB9	12	11				RED	ORG	GRN	BLU				
		20				RED/BLK	ORG/BLK	GRN/BLK	BLK/WHT				
		BUTTON											WHT/BLK
SB10	7	26								BLK	BLU		
		BUTTON											WHT/BLK
SB11	12	7	RED	ORG	GRN								
		8	RED	ORG	GRN								
		15				RED/BLK	ORG/BLK	GRN/BLK	BLK/WHT				
		27								BLK	BLU		
		BUTTON											WHT/BLK

Equipment grounding conductor 10 AWG Green XLP	
From	TO
CB1	SB1
SB1	SB2
SB2	SB3
SB3	SB4
SB4	SB5
SB5	SB6
SB6	SB7
SB7	SB8
SB8	SB9
SB9	SB10
SB10	SB11
SB11	CB1

Pull Box Bonding Jumper 10 AWG Green XLP	
From	To
PB1	CB1
PB4	SB1
PB6	SB1
PB7	SB1
PB8	SB2
PB9	SB2
PB11	SB3
PB12	SB5
PB15	SB5
PB16	SB6
PB18	SB6
PB19	SB6
PB20	SB8
PB21	SB8
PB23	SB9
PB24	SB9
PB25	CB1

EVP CABLE	
From	To
CB1	SB1 (HEAD C)
CB1	SB5 (HEAD A)
CB1	SB6 (HEAD D)
CB1	SB11 (HEAD B)

Lighting UF #10 w/ground	
From	To
CB1	SB12
SB12	SB13
CB1	SB15
SB15	SB14

*Use the white conductor in the cable assembly as the grounded conductor for all traffic signal indications
*Ensure the grounded conductor in the feeder cable and the pole cables are both 18" longer than the ungrounded conductors.
*At the signal bases, connect one terminal from the pedestrian push buttons to the color indicated in the chart. Connect the other terminal to the grounded conductor.
*Reconnect the grounding conductors wherever the circuit has been interrupted to ensure the grounding circuit is complete.

2

N

NOTES:
1. GROOVED PAVEMENT MARKINGS ON STH 50 OUTSIDE OF RECONSTRUCTION LIMITS TO REMAIN. WHEN IMPACTED BY TRAFFIC CONTROL GROOVED MARKINGS SHALL BE COVERED WITH MASK OUT MARKINGS. ANY GROOVED MARKINGS DAMAGED DURING CONSTRUCTION TO BE REPLACED IN KIND. SEE TRAFFIC CONTROL PLANS FOR MASK OUT LOCATIONS.
2. REPLACE NON-GROOVED PAVEMENT MARKINGS OUTSIDE RECONSTRUCTION LIMITS DISTURBED BY TRAFFIC CONTROL IN THE PRE-CONSTRUCTION LOCATIONS.

LEGEND

1. MARKING LINE EPOXY 4-INCH, YELLOW
2. MARKING LINE EPOXY 4-INCH, DOUBLE YELLOW
3. MARKING LINE EPOXY 4-INCH, WHITE
4. MARKING LINE WET REFLECTIVE CONTRAST EPOXY 4-INCH, DASHED WHITE (12.5' LINE, 37.5' GAP)
5. MARKING LINE EPOXY 4-INCH, DASHED YELLOW (12.5' LINE, 37.5' GAP)
6. MARKING LINE WET REFLECTIVE CONTRAST EPOXY 8-INCH, WHITE
7. MARKING STOP LINE EPOXY 18-INCH, WHITE
8. MARKING CROSSWALK EPOXY TRANSVERSE LINE 6-INCH, WHITE
9. MARKING ISLAND NOSE EPOXY, YELLOW
10. MARKING CURB EPOXY, YELLOW
11. MARKING ARROW EPOXY, TYPE 2 WHITE
12. MARKING ARROW EPOXY, TYPE 3 WHITE
13. MARKING WORD EPOXY, WHITE
14. MARKING CHEVRON EPOXY 24-INCH, WHITE (25' SPACING)
16. MARKING YIELD LINE EPOXY 18-INCH, WHITE
17. MARKING LINE WET REFLECTIVE CONTRAST EPOXY 4-INCH YELLOW (2' LINE, 6' GAP)
18. MARKING LINE EPOXY 4-INCH, WHITE (3' LINE, 9' GAP)
19. MARKING LINE EPOXY 8-INCH, WHITE (3' LINE, 9' GAP)
20. MARKING LINE EPOXY 8-INCH, WHITE
21. MARKING LINE EPOXY 4-INCH, WHITE (12.5' LINE, 37.5' GAP)
22. MARKING LINE WET REFLECTIVE CONTRAST EPOXY 8-INCH WHITE (3' LINE, 9' GAP)

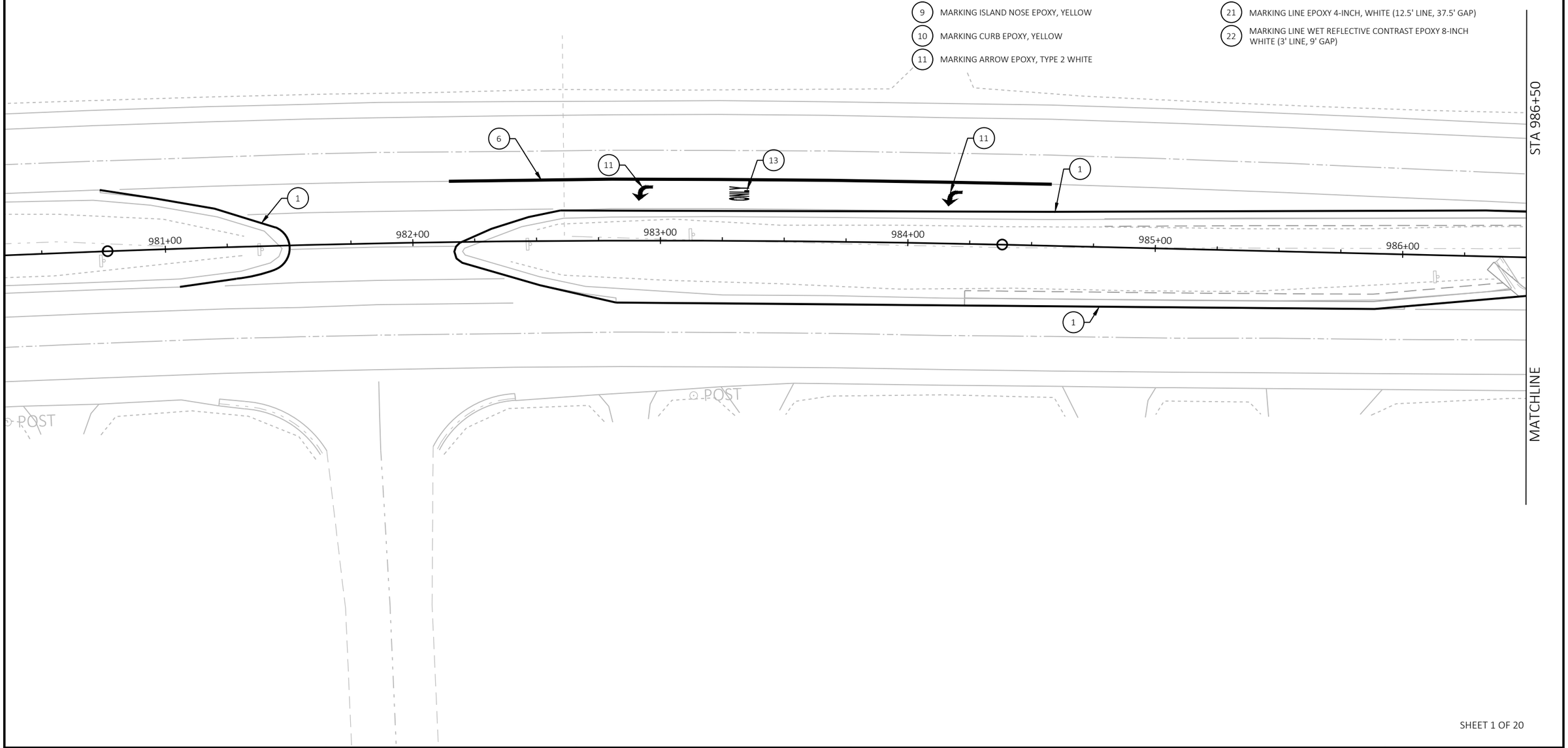

SHEET 1 OF 20

PROJECT NO: 1310-04-70	HWY: STH 50	COUNTY: KENOSHA	PAVEMENT MARKING	SHEET 333	E

2

N

NOTES:
1. GROOVED PAVEMENT MARKINGS ON STH 50 OUTSIDE OF RECONSTRUCTION LIMITS TO REMAIN. WHEN IMPACTED BY TRAFFIC CONTROL GROOVED MARKINGS SHALL BE COVERED WITH MASK OUT MARKINGS. ANY GROOVED MARKINGS DAMAGED DURING CONSTRUCTION TO BE REPLACED IN KIND. SEE TRAFFIC CONTROL PLANS FOR MASK OUT LOCATIONS.
2. REPLACE NON-GROOVED PAVEMENT MARKINGS OUTSIDE RECONSTRUCTION LIMITS DISTURBED BY TRAFFIC CONTROL IN THE PRE-CONSTRUCTION LOCATIONS.

LEGEND

1. MARKING LINE EPOXY 4-INCH, YELLOW
2. MARKING LINE EPOXY 4-INCH, DOUBLE YELLOW
3. MARKING LINE EPOXY 4-INCH, WHITE
4. MARKING LINE WET REFLECTIVE CONTRAST EPOXY 4-INCH, DASHED WHITE (12.5' LINE, 37.5' GAP)
5. MARKING LINE EPOXY 4-INCH, DASHED YELLOW (12.5' LINE, 37.5' GAP)
6. MARKING LINE WET REFLECTIVE CONTRAST EPOXY 8-INCH, WHITE
7. MARKING STOP LINE EPOXY 18-INCH, WHITE
8. MARKING CROSSWALK EPOXY TRANSVERSE LINE 6-INCH, WHITE
9. MARKING ISLAND NOSE EPOXY, YELLOW
10. MARKING CURB EPOXY, YELLOW
11. MARKING ARROW EPOXY, TYPE 2 WHITE
12. MARKING ARROW EPOXY, TYPE 3 WHITE
13. MARKING WORD EPOXY, WHITE
14. MARKING CHEVRON EPOXY 24-INCH, WHITE (25' SPACING)
16. MARKING YIELD LINE EPOXY 18-INCH, WHITE
17. MARKING LINE WET REFLECTIVE CONTRAST EPOXY 4-INCH YELLOW (2' LINE, 6' GAP)
18. MARKING LINE EPOXY 4-INCH, WHITE (3' LINE, 9' GAP)
19. MARKING LINE EPOXY 8-INCH, WHITE (3' LINE, 9' GAP)
20. MARKING LINE EPOXY 8-INCH, WHITE
21. MARKING LINE EPOXY 4-INCH, WHITE (12.5' LINE, 37.5' GAP)
22. MARKING LINE WET REFLECTIVE CONTRAST EPOXY 8-INCH WHITE (3' LINE, 9' GAP)

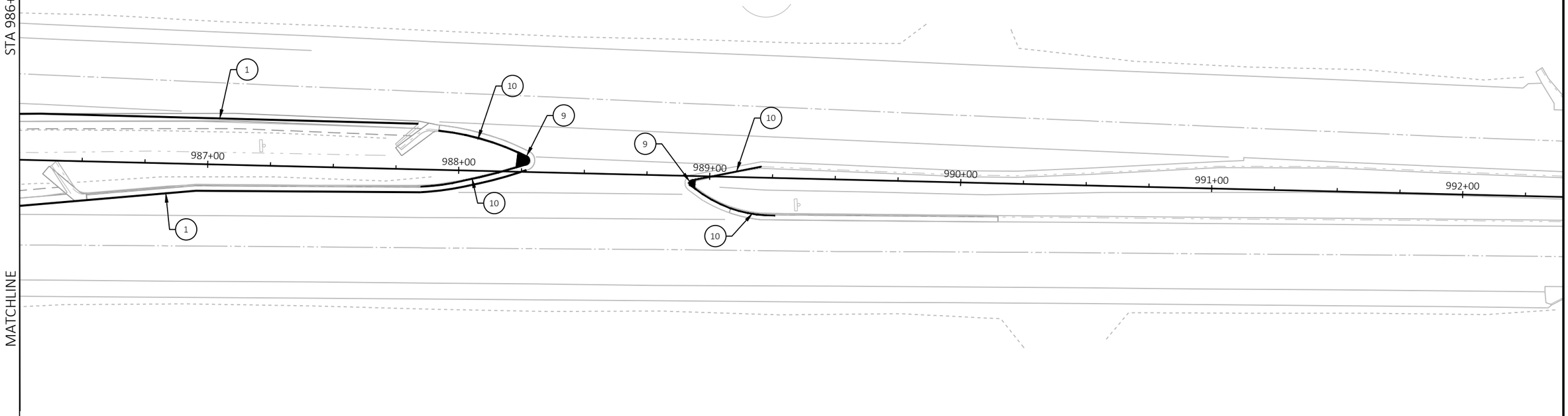

SHEET 2 OF 20

PROJECT NO: 1310-04-70	HWY: STH 50	COUNTY: KENOSHA	PAVEMENT MARKING	SHEET 334	E

FILE NAME : T:\1182708.06\CIVIL3D\13100400\13100400\SHEETSPLAN\024501_PM.DWG
LAYOUT NAME - 00
PLOT DATE : 4/8/2022 2:58 PM
PLOT BY : BLACKWOOD, JIM
PLOT NAME :
PLOT SCALE : 1 IN:40 FT
WISDOT/CADDS SHEET 42

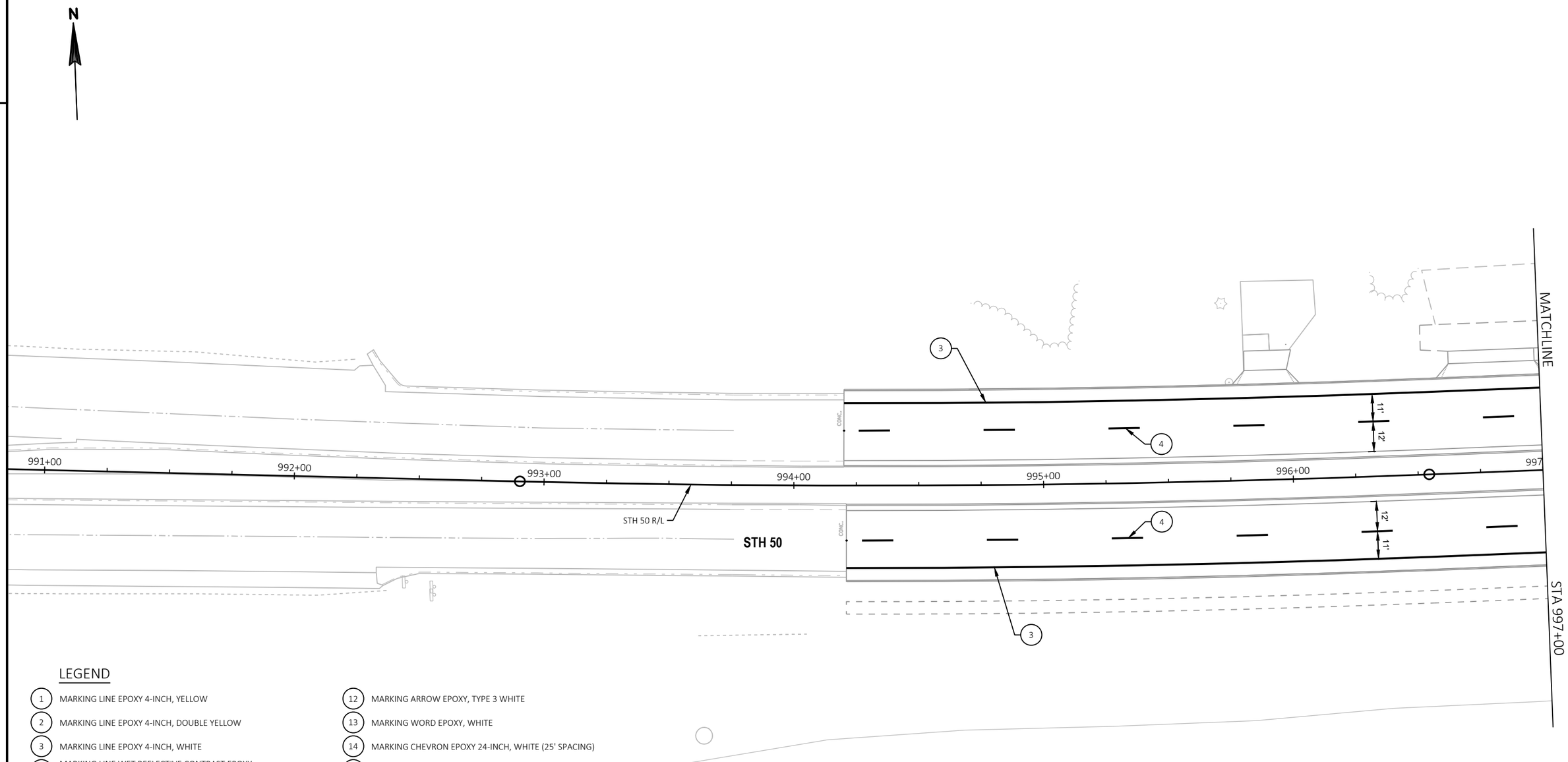

LEGEND

1. MARKING LINE EPOXY 4-INCH, YELLOW
2. MARKING LINE EPOXY 4-INCH, DOUBLE YELLOW
3. MARKING LINE EPOXY 4-INCH, WHITE
4. MARKING LINE WET REFLECTIVE CONTRAST EPOXY 4-INCH, DASHED WHITE (12.5' LINE, 37.5' GAP)
5. MARKING LINE EPOXY 4-INCH, DASHED YELLOW (12.5' LINE, 37.5' GAP)
6. MARKING LINE WET REFLECTIVE CONTRAST EPOXY 8-INCH, WHITE
7. MARKING STOP LINE EPOXY 18-INCH, WHITE
8. MARKING CROSSWALK EPOXY TRANSVERSE LINE 6-INCH, WHITE
9. MARKING ISLAND NOSE EPOXY, YELLOW
10. MARKING CURB EPOXY, YELLOW
11. MARKING ARROW EPOXY, TYPE 2 WHITE
12. MARKING ARROW EPOXY, TYPE 3 WHITE
13. MARKING WORD EPOXY, WHITE
14. MARKING CHEVRON EPOXY 24-INCH, WHITE (25' SPACING)
16. MARKING YIELD LINE EPOXY 18-INCH, WHITE
17. MARKING LINE WET REFLECTIVE CONTRAST EPOXY 4-INCH YELLOW (2' LINE, 6' GAP)
18. MARKING LINE EPOXY 4-INCH, WHITE (3' LINE, 9' GAP)
19. MARKING LINE EPOXY 8-INCH, WHITE (3' LINE, 9' GAP)
20. MARKING LINE EPOXY 8-INCH, WHITE
21. MARKING LINE EPOXY 4-INCH, WHITE (12.5' LINE, 37.5' GAP)
22. MARKING LINE WET REFLECTIVE CONTRAST EPOXY 8-INCH WHITE (3' LINE, 9' GAP)

SHEET 3 OF 20

PROJECT NO: 1310-04-70	HWY: STH 50	COUNTY: KENOSHA	PAVEMENT MARKING	SHEET 335	E

LEGEND

1. MARKING LINE EPOXY 4-INCH, YELLOW
2. MARKING LINE EPOXY 4-INCH, DOUBLE YELLOW
3. MARKING LINE EPOXY 4-INCH, WHITE
4. MARKING LINE WET REFLECTIVE CONTRAST EPOXY 4-INCH, DASHED WHITE (12.5' LINE, 37.5' GAP)
5. MARKING LINE EPOXY 4-INCH, DASHED YELLOW (12.5' LINE, 37.5' GAP)
6. MARKING LINE WET REFLECTIVE CONTRAST EPOXY 8-INCH, WHITE
7. MARKING STOP LINE EPOXY 18-INCH, WHITE
8. MARKING CROSSWALK EPOXY TRANSVERSE LINE 6-INCH, WHITE
9. MARKING ISLAND NOSE EPOXY, YELLOW
10. MARKING CURB EPOXY, YELLOW
11. MARKING ARROW EPOXY, TYPE 2 WHITE
12. MARKING ARROW EPOXY, TYPE 3 WHITE
13. MARKING WORD EPOXY, WHITE
14. MARKING CHEVRON EPOXY 24-INCH, WHITE (25' SPACING)
16. MARKING YIELD LINE EPOXY 18-INCH, WHITE
17. MARKING LINE WET REFLECTIVE CONTRAST EPOXY 4-INCH YELLOW (2' LINE, 6' GAP)
18. MARKING LINE EPOXY 4-INCH, WHITE (3' LINE, 9' GAP)
19. MARKING LINE EPOXY 8-INCH, WHITE (3' LINE, 9' GAP)
20. MARKING LINE EPOXY 8-INCH, WHITE
21. MARKING LINE EPOXY 4-INCH, WHITE (12.5' LINE, 37.5' GAP)
22. MARKING LINE WET REFLECTIVE CONTRAST EPOXY 8-INCH WHITE (3' LINE, 9' GAP)

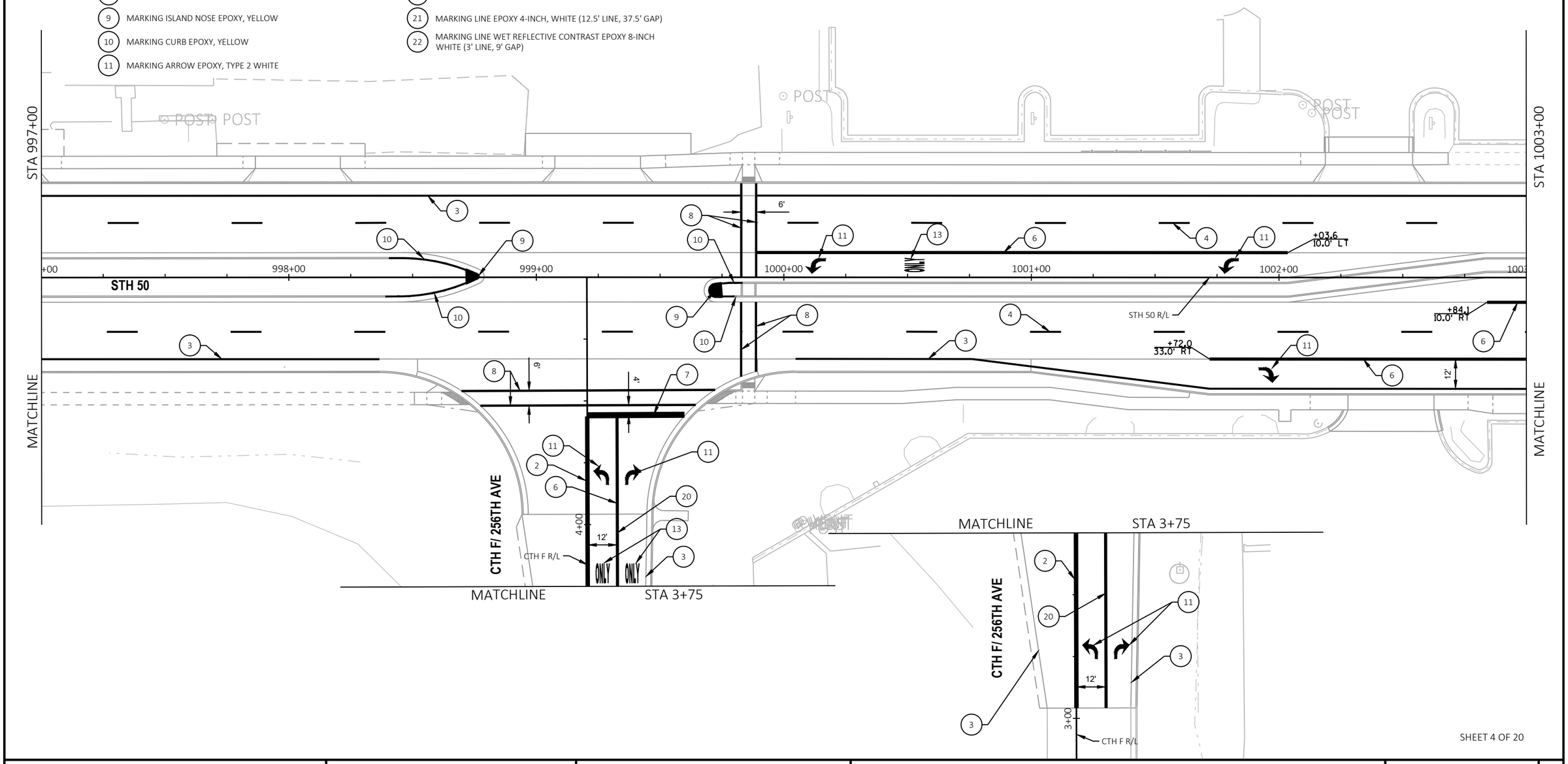

SHEET 4 OF 20

PROJECT NO: 1310-04-70	HWY: STH 50	COUNTY: KENOSHA	PAVEMENT MARKING	SHEET 336	E

2

2

LEGEND

1. MARKING LINE EPOXY 4-INCH, YELLOW
2. MARKING LINE EPOXY 4-INCH, DOUBLE YELLOW
3. MARKING LINE EPOXY 4-INCH, WHITE
4. MARKING LINE WET REFLECTIVE CONTRAST EPOXY 4-INCH, DASHED WHITE (12.5' LINE, 37.5' GAP)
5. MARKING LINE EPOXY 4-INCH, DASHED YELLOW (12.5' LINE, 37.5' GAP)
6. MARKING LINE WET REFLECTIVE CONTRAST EPOXY 8-INCH, WHITE
7. MARKING STOP LINE EPOXY 18-INCH, WHITE
8. MARKING CROSSWALK EPOXY TRANSVERSE LINE 6-INCH, WHITE
9. MARKING ISLAND NOSE EPOXY, YELLOW
10. MARKING CURB EPOXY, YELLOW
11. MARKING ARROW EPOXY, TYPE 2 WHITE
12. MARKING ARROW EPOXY, TYPE 3 WHITE
13. MARKING WORD EPOXY, WHITE
14. MARKING CHEVRON EPOXY 24-INCH, WHITE (25' SPACING)
16. MARKING YIELD LINE EPOXY 18-INCH, WHITE
17. MARKING LINE WET REFLECTIVE CONTRAST EPOXY 4-INCH YELLOW (2' LINE, 6' GAP)
18. MARKING LINE EPOXY 4-INCH, WHITE (3' LINE, 9' GAP)
19. MARKING LINE EPOXY 8-INCH, WHITE (3' LINE, 9' GAP)
20. MARKING LINE EPOXY 8-INCH, WHITE
21. MARKING LINE EPOXY 4-INCH, WHITE (12.5' LINE, 37.5' GAP)
22. MARKING LINE WET REFLECTIVE CONTRAST EPOXY 8-INCH WHITE (3' LINE, 9' GAP)

N

MATCHLINE STA 52+00

STA 1003+00

STA 1009+00

STH 75

STH 75 R/L

STH 50

STH 50 R/L

STH 75/83

STH 75/83 R/L

MATCHLINE

MATCHLINE

STA 48+00

1004+00 1005+00 1006+00 1007+00 1008+00

+67.7 0.0' LT

+13.1 34.0' LT

+17.3 1.1' RT

+45.5 55.7' RT

+99.5 50.1' RT

+55.8 39.0' RT

RADIUS TABLE					
POINT NUMBER	STATION	OFFSET	Y	X	RADIUS
A	1005+11.26	57.00' LT	128,259.95	550,131.36	57'
B	1006+83.18	116.73' LT	128,319.57	550,303.31	135'
C	1006+51.45	60.00' LT	128,262.86	550,271.55	70'
D	1004+99.38	105.00' RT	128,097.96	550,119.37	115'
E	1006+51.71	55.00' RT	128,147.86	550,271.73	55'
F	1007+56.52	84.53' RT	128,118.26	550,376.52	92'

SHEET 5 OF 20

PROJECT NO: 1310-04-70	HWY: STH 50	COUNTY: KENOSHA	PAVEMENT MARKING	SHEET 337	E

FILE NAME : T:\1182708.06\CIVIL3D\13100400\13100400\SHEETSPLAN\024501_PM.DWG
LAYOUT NAME - 03

PLOT DATE : 4/8/2022 2:59 PM PLOT BY : BLACKWOOD, JIM PLOT NAME : PLOT SCALE : 1 IN:40 FT

WISDOT/CADDS SHEET 42

2

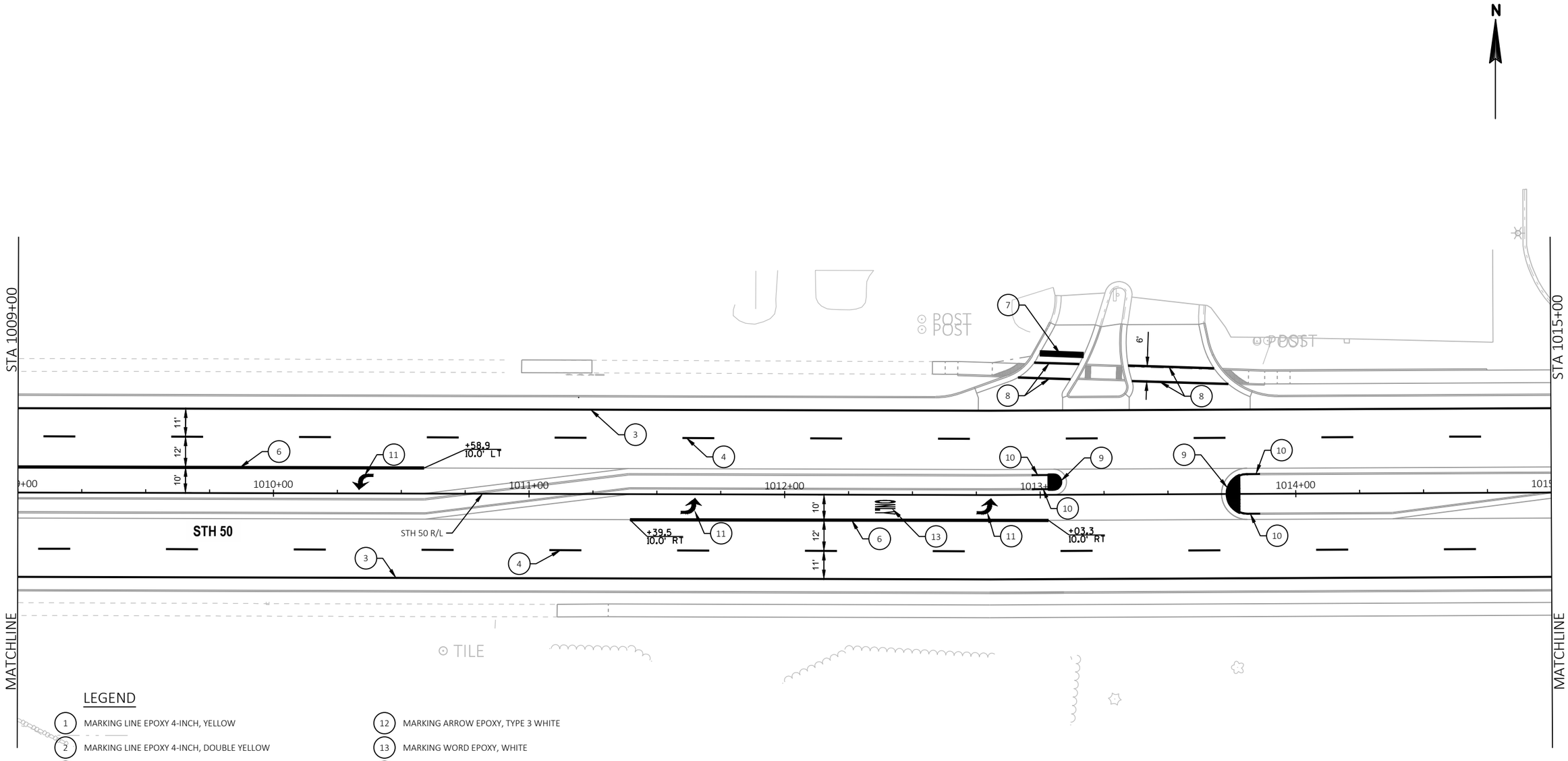

LEGEND

1. MARKING LINE EPOXY 4-INCH, YELLOW
2. MARKING LINE EPOXY 4-INCH, DOUBLE YELLOW
3. MARKING LINE EPOXY 4-INCH, WHITE
4. MARKING LINE WET REFLECTIVE CONTRAST EPOXY 4-INCH, DASHED WHITE (12.5' LINE, 37.5' GAP)
5. MARKING LINE EPOXY 4-INCH, DASHED YELLOW (12.5' LINE, 37.5' GAP)
6. MARKING LINE WET REFLECTIVE CONTRAST EPOXY 8-INCH, WHITE
7. MARKING STOP LINE EPOXY 18-INCH, WHITE
8. MARKING CROSSWALK EPOXY TRANSVERSE LINE 6-INCH, WHITE
9. MARKING ISLAND NOSE EPOXY, YELLOW
10. MARKING CURB EPOXY, YELLOW
11. MARKING ARROW EPOXY, TYPE 2 WHITE
12. MARKING ARROW EPOXY, TYPE 3 WHITE
13. MARKING WORD EPOXY, WHITE
14. MARKING CHEVRON EPOXY 24-INCH, WHITE (25' SPACING)
16. MARKING YIELD LINE EPOXY 18-INCH, WHITE
17. MARKING LINE WET REFLECTIVE CONTRAST EPOXY 4-INCH YELLOW (2' LINE, 6' GAP)
18. MARKING LINE EPOXY 4-INCH, WHITE (3' LINE, 9' GAP)
19. MARKING LINE EPOXY 8-INCH, WHITE (3' LINE, 9' GAP)
20. MARKING LINE EPOXY 8-INCH, WHITE
21. MARKING LINE EPOXY 4-INCH, WHITE (12.5' LINE, 37.5' GAP)
22. MARKING LINE WET REFLECTIVE CONTRAST EPOXY 8-INCH WHITE (3' LINE, 9' GAP)

PROJECT NO: 1310-04-70	HWY: STH 50	COUNTY: KENOSHA	PAVEMENT MARKING	SHEET 338	E

FILE NAME : T:\1182708.06\CIVIL3D\13100400\13100400\SHEETSPLAN\024501_PM.DWG
LAYOUT NAME - 04
PLOT DATE : 4/8/2022 2:59 PM
PLOT BY : BLACKWOOD, JIM
PLOT NAME :
PLOT SCALE : 1 IN:40 FT
WISDOT/CADDS SHEET 42

2

2

LEGEND

1. MARKING LINE EPOXY 4-INCH, YELLOW
2. MARKING LINE EPOXY 4-INCH, DOUBLE YELLOW
3. MARKING LINE EPOXY 4-INCH, WHITE
4. MARKING LINE WET REFLECTIVE CONTRAST EPOXY 4-INCH, DASHED WHITE (12.5' LINE, 37.5' GAP)
5. MARKING LINE EPOXY 4-INCH, DASHED YELLOW (12.5' LINE, 37.5' GAP)
6. MARKING LINE WET REFLECTIVE CONTRAST EPOXY 8-INCH, WHITE
7. MARKING STOP LINE EPOXY 18-INCH, WHITE
8. MARKING CROSSWALK EPOXY TRANSVERSE LINE 6-INCH, WHITE
9. MARKING ISLAND NOSE EPOXY, YELLOW
10. MARKING CURB EPOXY, YELLOW
11. MARKING ARROW EPOXY, TYPE 2 WHITE
12. MARKING ARROW EPOXY, TYPE 3 WHITE
13. MARKING WORD EPOXY, WHITE
14. MARKING CHEVRON EPOXY 24-INCH, WHITE (36' SPACING)
16. MARKING YIELD LINE EPOXY 18-INCH, WHITE
17. MARKING LINE WET REFLECTIVE CONTRAST EPOXY 4-INCH YELLOW (2' LINE, 6' GAP)
18. MARKING LINE EPOXY 4-INCH, WHITE (3' LINE, 9' GAP)
19. MARKING LINE EPOXY 8-INCH, WHITE (3' LINE, 9' GAP)
20. MARKING LINE EPOXY 8-INCH, WHITE
21. MARKING LINE EPOXY 4-INCH, WHITE (12.5' LINE, 37.5' GAP)
22. MARKING LINE WET REFLECTIVE CONTRAST EPOXY 8-INCH WHITE (3' LINE, 9' GAP)

N

STA 1015+00

STA 1021+00

250TH AVE R/L

250TH AVE

11+00

+01.6 9.9' LT

+01.3 0.7' RT

+51.6 9.7' LT

+51.3 1.1' RT

4"

6'

1016+00

1017+00

1018+00

1019+00

1020+00

8' R

+83.4 7.9' LT

+50.0 7.0' LT

+83.2 8.1' RT

+50.0 7.0' RT

STH 50 R/L

+17.9 10.0' RT

+49.9 10.0' RT

+58.0 9.9' RT

STH 50

11'

12'

10'

MATCHLINE

MATCHLINE

SHEET 7 OF 20

PROJECT NO: 1310-04-70	HWY: STH 50	COUNTY: KENOSHA	PAVEMENT MARKING	SHEET 339	E

FILE NAME : T:\1182708.06\CIVIL3D\13100400\13100400\SHEETSPLAN\024501_PM.DWG
LAYOUT NAME - 05

PLOT DATE : 4/8/2022 2:59 PM PLOT BY : BLACKWOOD, JIM PLOT NAME : PLOT SCALE : 1 IN:40 FT

WISDOT/CADDS SHEET 42

2

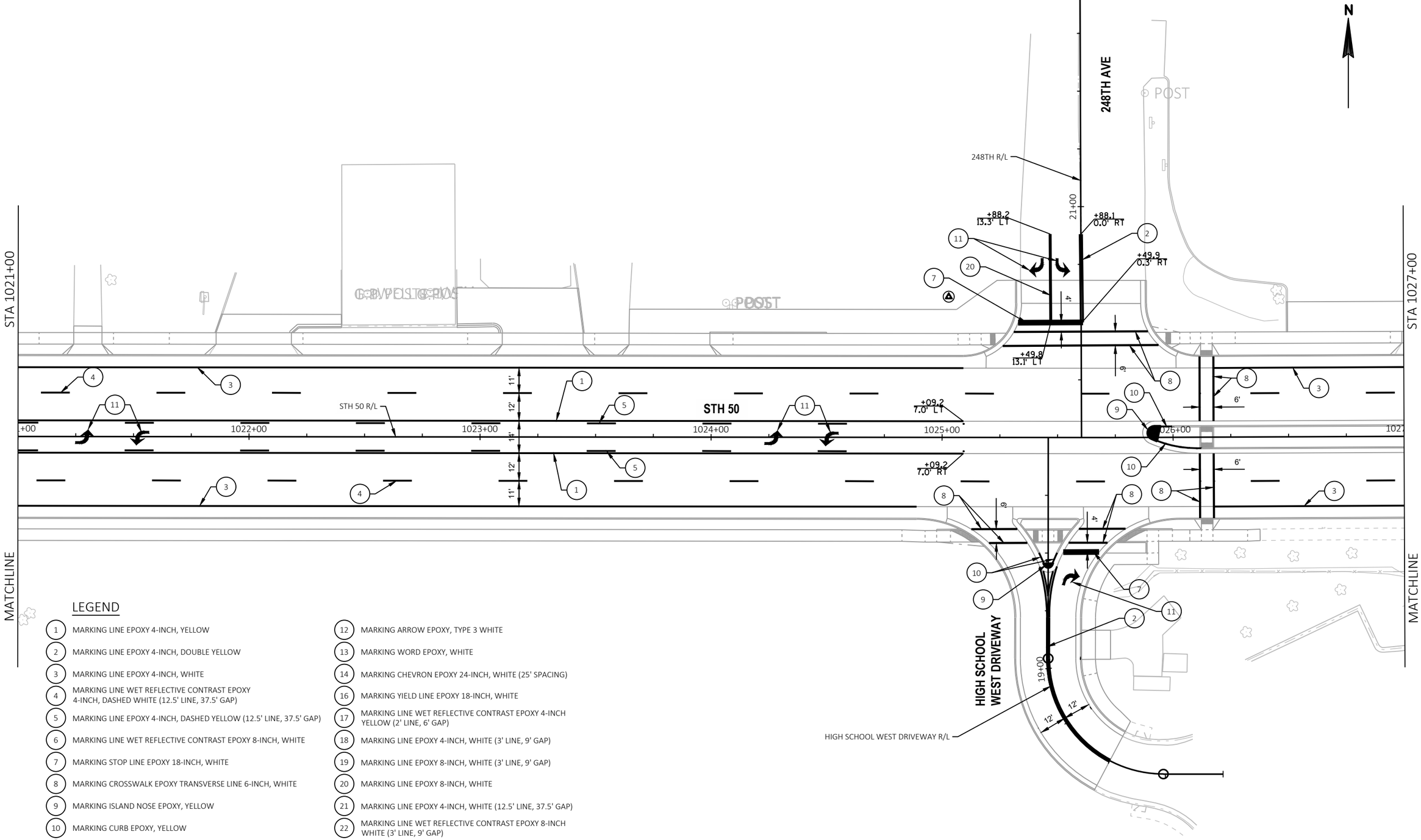

LEGEND

1. MARKING LINE EPOXY 4-INCH, YELLOW
2. MARKING LINE EPOXY 4-INCH, DOUBLE YELLOW
3. MARKING LINE EPOXY 4-INCH, WHITE
4. MARKING LINE WET REFLECTIVE CONTRAST EPOXY 4-INCH, DASHED WHITE (12.5' LINE, 37.5' GAP)
5. MARKING LINE EPOXY 4-INCH, DASHED YELLOW (12.5' LINE, 37.5' GAP)
6. MARKING LINE WET REFLECTIVE CONTRAST EPOXY 8-INCH, WHITE
7. MARKING STOP LINE EPOXY 18-INCH, WHITE
8. MARKING CROSSWALK EPOXY TRANSVERSE LINE 6-INCH, WHITE
9. MARKING ISLAND NOSE EPOXY, YELLOW
10. MARKING CURB EPOXY, YELLOW
11. MARKING ARROW EPOXY, TYPE 2 WHITE
12. MARKING ARROW EPOXY, TYPE 3 WHITE
13. MARKING WORD EPOXY, WHITE
14. MARKING CHEVRON EPOXY 24-INCH, WHITE (25' SPACING)
16. MARKING YIELD LINE EPOXY 18-INCH, WHITE
17. MARKING LINE WET REFLECTIVE CONTRAST EPOXY 4-INCH YELLOW (2' LINE, 6' GAP)
18. MARKING LINE EPOXY 4-INCH, WHITE (3' LINE, 9' GAP)
19. MARKING LINE EPOXY 8-INCH, WHITE (3' LINE, 9' GAP)
20. MARKING LINE EPOXY 8-INCH, WHITE
21. MARKING LINE EPOXY 4-INCH, WHITE (12.5' LINE, 37.5' GAP)
22. MARKING LINE WET REFLECTIVE CONTRAST EPOXY 8-INCH WHITE (3' LINE, 9' GAP)

SHEET 8 OF 20

PROJECT NO: 1310-04-70	HWY: STH 50	COUNTY: KENOSHA	PAVEMENT MARKING	SHEET 340	E

FILE NAME : T:\1182708.06\CIVIL3D\13100400\13100400\SHEETSPLAN\024501_PM.DWG
LAYOUT NAME - 06
PLOT DATE : 4/8/2022 2:59 PM
PLOT BY : BLACKWOOD, JIM
PLOT NAME :
PLOT SCALE : 1 IN:40 FT
WISDOT/CADDS SHEET 42

2

N

STA 1027+00

STA 1033+00

STH 50

STH 50 R/L

1028+00 1029+00 1030+00 1031+00 1032+00

11' 12' 14' 12' 11'

+99.8 30.0' LT

+00.0 7.0' LT

+99.8 32.0' LT

+00.0 7.0' RT

+99.8 30.0' RT

+99.9 21.0' RT

+39.6 9.0' RT

+99.8 32.0' RT

10'

MATCHLINE

MATCHLINE

LEGEND

1. MARKING LINE EPOXY 4-INCH, YELLOW
2. MARKING LINE EPOXY 4-INCH, DOUBLE YELLOW
3. MARKING LINE EPOXY 4-INCH, WHITE
4. MARKING LINE WET REFLECTIVE CONTRAST EPOXY 4-INCH, DASHED WHITE (12.5' LINE, 37.5' GAP)
5. MARKING LINE EPOXY 4-INCH, DASHED YELLOW (12.5' LINE, 37.5' GAP)
6. MARKING LINE WET REFLECTIVE CONTRAST EPOXY 8-INCH, WHITE
7. MARKING STOP LINE EPOXY 18-INCH, WHITE
8. MARKING CROSSWALK EPOXY TRANSVERSE LINE 6-INCH, WHITE
9. MARKING ISLAND NOSE EPOXY, YELLOW
10. MARKING CURB EPOXY, YELLOW
11. MARKING ARROW EPOXY, TYPE 2 WHITE
12. MARKING ARROW EPOXY, TYPE 3 WHITE
13. MARKING WORD EPOXY, WHITE
14. MARKING CHEVRON EPOXY 24-INCH, WHITE (25' SPACING)
16. MARKING YIELD LINE EPOXY 18-INCH, WHITE
17. MARKING LINE WET REFLECTIVE CONTRAST EPOXY 4-INCH YELLOW (2' LINE, 6' GAP)
18. MARKING LINE EPOXY 4-INCH, WHITE (3' LINE, 9' GAP)
19. MARKING LINE EPOXY 8-INCH, WHITE (3' LINE, 9' GAP)
20. MARKING LINE EPOXY 8-INCH, WHITE
21. MARKING LINE EPOXY 4-INCH, WHITE (12.5' LINE, 37.5' GAP)
22. MARKING LINE WET REFLECTIVE CONTRAST EPOXY 8-INCH WHITE (3' LINE, 9' GAP)

PROJECT NO: 1310-04-70	HWY: STH 50	COUNTY: KENOSHA	PAVEMENT MARKING	SHEET 341	E

FILE NAME : T:\1182708.06\CIVIL3D\13100400\13100400\SHEETSPLAN\024501_PM.DWG
LAYOUT NAME - 07
PLOT DATE : 4/8/2022 2:59 PM
PLOT BY : BLACKWOOD, JIM
PLOT NAME :
PLOT SCALE : 1 IN:40 FT
WISDOT/CADDS SHEET 42

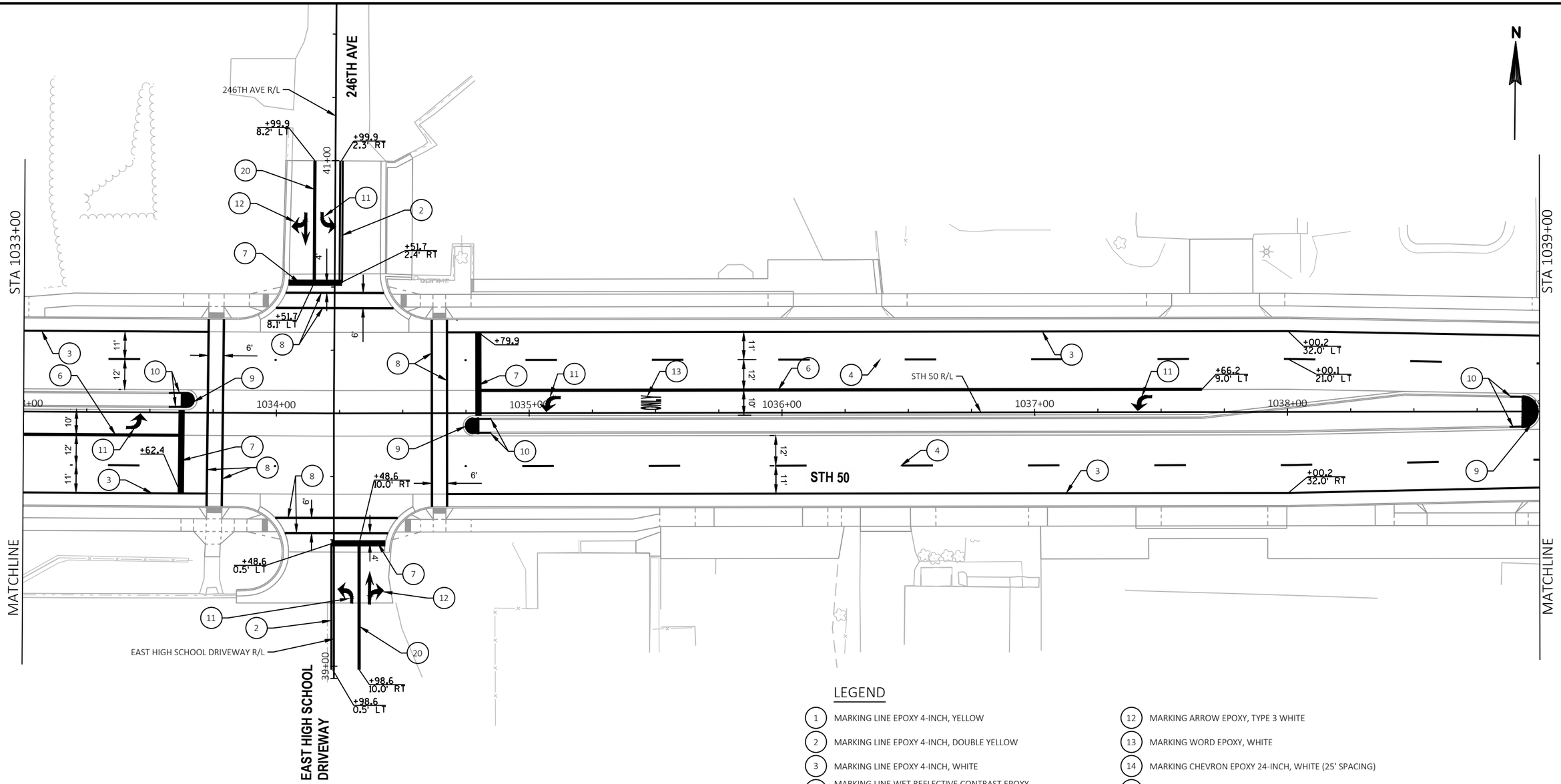

LEGEND

1. MARKING LINE EPOXY 4-INCH, YELLOW
2. MARKING LINE EPOXY 4-INCH, DOUBLE YELLOW
3. MARKING LINE EPOXY 4-INCH, WHITE
4. MARKING LINE WET REFLECTIVE CONTRAST EPOXY 4-INCH, DASHED WHITE (12.5' LINE, 37.5' GAP)
5. MARKING LINE EPOXY 4-INCH, DASHED YELLOW (12.5' LINE, 37.5' GAP)
6. MARKING LINE WET REFLECTIVE CONTRAST EPOXY 8-INCH, WHITE
7. MARKING STOP LINE EPOXY 18-INCH, WHITE
8. MARKING CROSSWALK EPOXY TRANSVERSE LINE 6-INCH, WHITE
9. MARKING ISLAND NOSE EPOXY, YELLOW
10. MARKING CURB EPOXY, YELLOW
11. MARKING ARROW EPOXY, TYPE 2 WHITE
12. MARKING ARROW EPOXY, TYPE 3 WHITE
13. MARKING WORD EPOXY, WHITE
14. MARKING CHEVRON EPOXY 24-INCH, WHITE (25' SPACING)
16. MARKING YIELD LINE EPOXY 18-INCH, WHITE
17. MARKING LINE WET REFLECTIVE CONTRAST EPOXY 4-INCH YELLOW (2' LINE, 6' GAP)
18. MARKING LINE EPOXY 4-INCH, WHITE (3' LINE, 9' GAP)
19. MARKING LINE EPOXY 8-INCH, WHITE (3' LINE, 9' GAP)
20. MARKING LINE EPOXY 8-INCH, WHITE
21. MARKING LINE EPOXY 4-INCH, WHITE (12.5' LINE, 37.5' GAP)
22. MARKING LINE WET REFLECTIVE CONTRAST EPOXY 8-INCH WHITE (3' LINE, 9' GAP)

PROJECT NO: 1310-04-70	HWY: STH 50	COUNTY: KENOSHA	PAVEMENT MARKING	SHEET 342	E

FILE NAME : T:\1182708.06\CIVIL3D\13100400\13100400\SHEETSPLAN\024501_PM.DWG
LAYOUT NAME - 08
PLOT DATE : 4/8/2022 2:59 PM
PLOT BY : BLACKWOOD, JIM
PLOT NAME :
PLOT SCALE : 1 IN:40 FT
WISDOT/CADDS SHEET 42

2

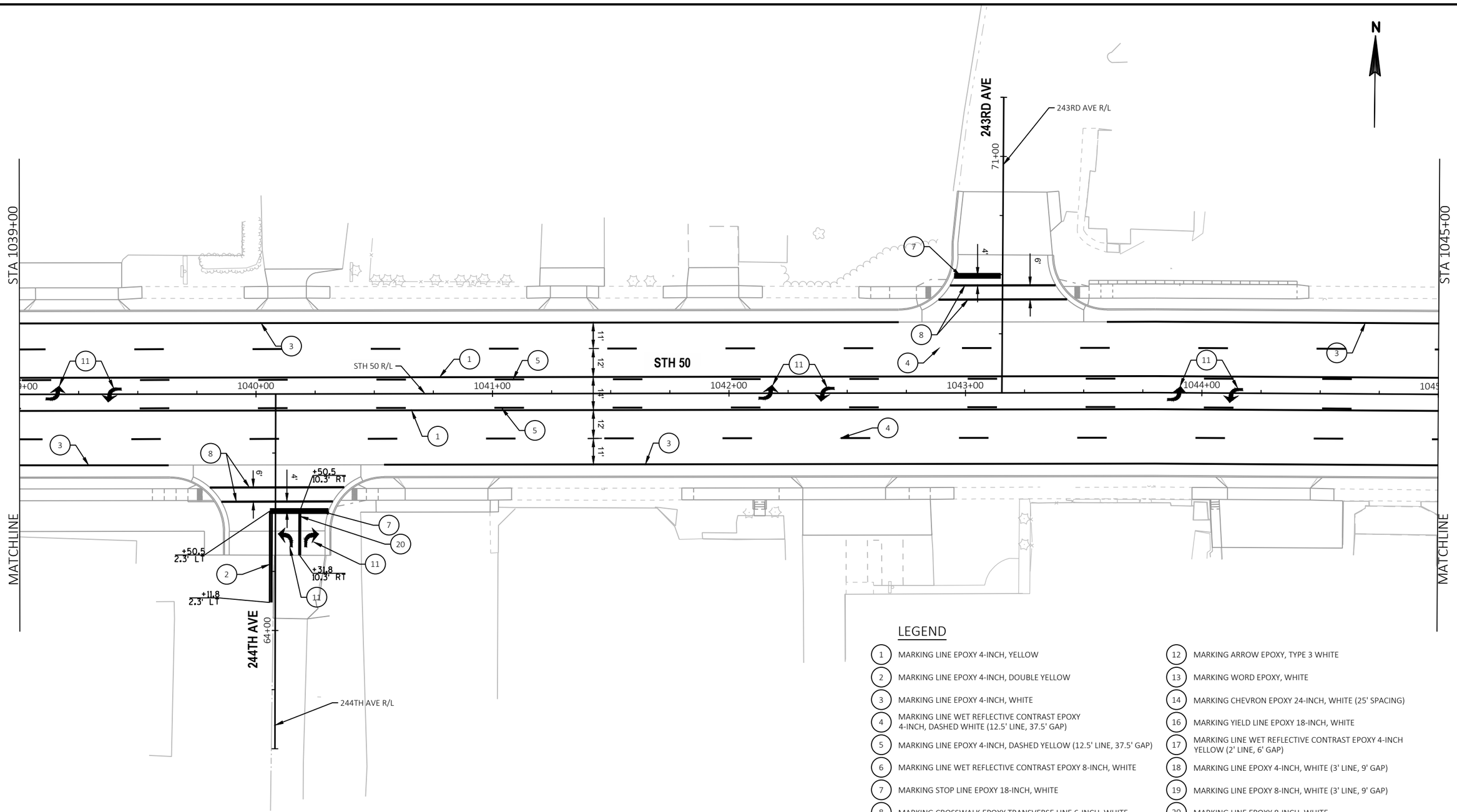

LEGEND

1	MARKING LINE EPOXY 4-INCH, YELLOW
2	MARKING LINE EPOXY 4-INCH, DOUBLE YELLOW
3	MARKING LINE EPOXY 4-INCH, WHITE
4	MARKING LINE WET REFLECTIVE CONTRAST EPOXY 4-INCH, DASHED WHITE (12.5' LINE, 37.5' GAP)
5	MARKING LINE EPOXY 4-INCH, DASHED YELLOW (12.5' LINE, 37.5' GAP)
6	MARKING LINE WET REFLECTIVE CONTRAST EPOXY 8-INCH, WHITE
7	MARKING STOP LINE EPOXY 18-INCH, WHITE
8	MARKING CROSSWALK EPOXY TRANSVERSE LINE 6-INCH, WHITE
9	MARKING ISLAND NOSE EPOXY, YELLOW
10	MARKING CURB EPOXY, YELLOW
11	MARKING ARROW EPOXY, TYPE 2 WHITE
12	MARKING ARROW EPOXY, TYPE 3 WHITE
13	MARKING WORD EPOXY, WHITE
14	MARKING CHEVRON EPOXY 24-INCH, WHITE (25' SPACING)
16	MARKING YIELD LINE EPOXY 18-INCH, WHITE
17	MARKING LINE WET REFLECTIVE CONTRAST EPOXY 4-INCH YELLOW (2' LINE, 6' GAP)
18	MARKING LINE EPOXY 4-INCH, WHITE (3' LINE, 9' GAP)
19	MARKING LINE EPOXY 8-INCH, WHITE (3' LINE, 9' GAP)
20	MARKING LINE EPOXY 8-INCH, WHITE
21	MARKING LINE EPOXY 4-INCH, WHITE (12.5' LINE, 37.5' GAP)
22	MARKING LINE WET REFLECTIVE CONTRAST EPOXY 8-INCH WHITE (3' LINE, 9' GAP)

SHEET 11 OF 20

PROJECT NO: 1310-04-70	HWY: STH 50	COUNTY: KENOSHA	PAVEMENT MARKING	SHEET 343	E

FILE NAME : T:\1182708.06\CIVIL3D\13100400\13100400\SHEETSPLAN\024501_PM.DWG
LAYOUT NAME - 09

PLOT DATE : 4/8/2022 3:00 PM PLOT BY : BLACKWOOD, JIM PLOT NAME : PLOT SCALE : 1 IN:40 FT

2

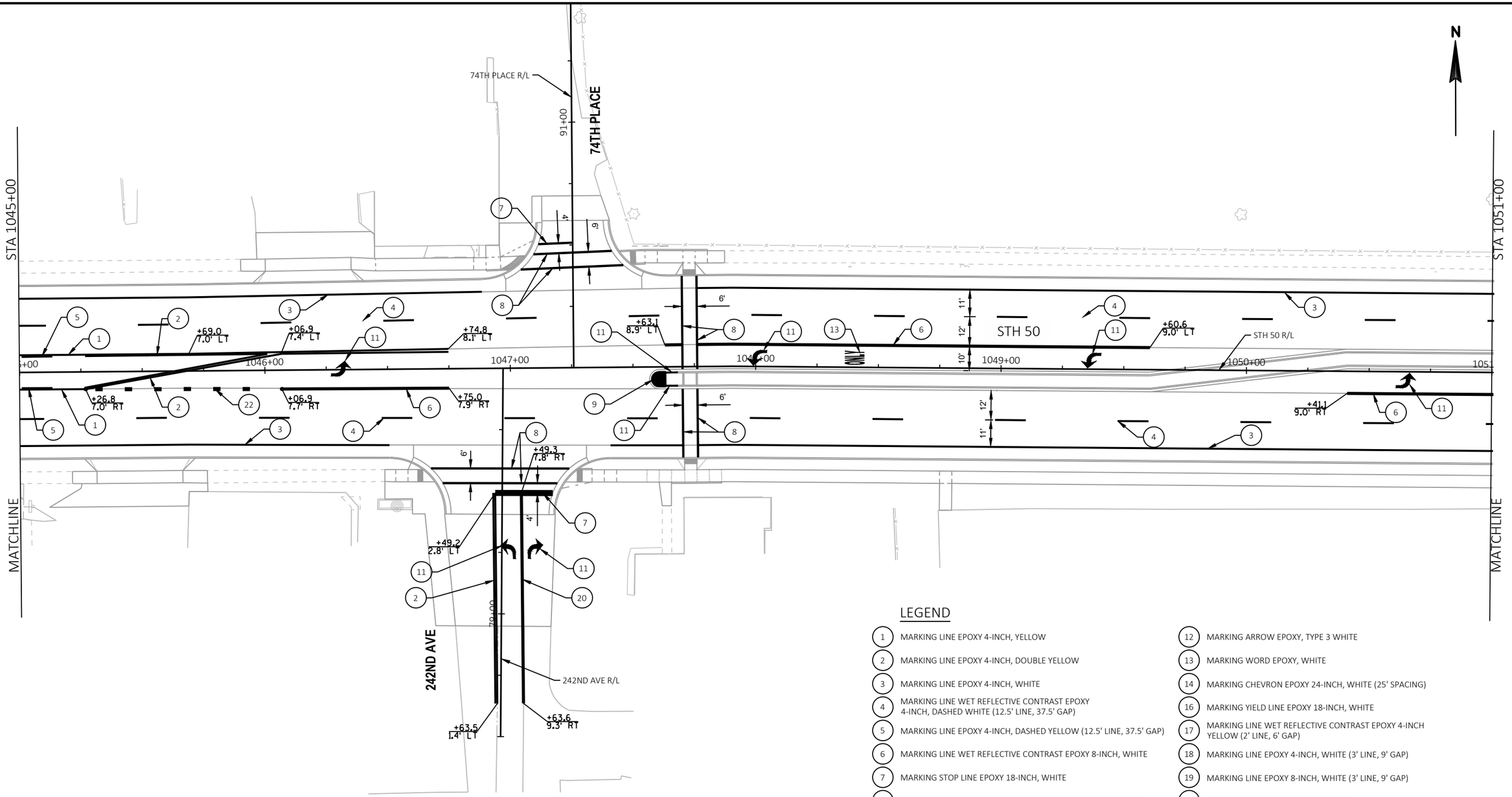

LEGEND

1. MARKING LINE EPOXY 4-INCH, YELLOW
2. MARKING LINE EPOXY 4-INCH, DOUBLE YELLOW
3. MARKING LINE EPOXY 4-INCH, WHITE
4. MARKING LINE WET REFLECTIVE CONTRAST EPOXY 4-INCH, DASHED WHITE (12.5' LINE, 37.5' GAP)
5. MARKING LINE EPOXY 4-INCH, DASHED YELLOW (12.5' LINE, 37.5' GAP)
6. MARKING LINE WET REFLECTIVE CONTRAST EPOXY 8-INCH, WHITE
7. MARKING STOP LINE EPOXY 18-INCH, WHITE
8. MARKING CROSSWALK EPOXY TRANSVERSE LINE 6-INCH, WHITE
9. MARKING ISLAND NOSE EPOXY, YELLOW
10. MARKING CURB EPOXY, YELLOW
11. MARKING ARROW EPOXY, TYPE 2 WHITE
12. MARKING ARROW EPOXY, TYPE 3 WHITE
13. MARKING WORD EPOXY, WHITE
14. MARKING CHEVRON EPOXY 24-INCH, WHITE (25' SPACING)
16. MARKING YIELD LINE EPOXY 18-INCH, WHITE
17. MARKING LINE WET REFLECTIVE CONTRAST EPOXY 4-INCH YELLOW (2' LINE, 6' GAP)
18. MARKING LINE EPOXY 4-INCH, WHITE (3' LINE, 9' GAP)
19. MARKING LINE EPOXY 8-INCH, WHITE (3' LINE, 9' GAP)
20. MARKING LINE EPOXY 8-INCH, WHITE
21. MARKING LINE EPOXY 4-INCH, WHITE (12.5' LINE, 37.5' GAP)
22. MARKING LINE WET REFLECTIVE CONTRAST EPOXY 8-INCH WHITE (3' LINE, 9' GAP)

PROJECT NO: 1310-04-70	HWY: STH 50	COUNTY: KENOSHA	PAVEMENT MARKING	SHEET 344	E

FILE NAME : T:\1182708.06\CIVIL3D\13100400\13100400\SHEETSPLAN\024501_PM.DWG
LAYOUT NAME - 10
PLOT DATE : 4/8/2022 3:00 PM
PLOT BY : BLACKWOOD, JIM
PLOT NAME :
PLOT SCALE : 1 IN:40 FT
WISDOT/CADDS SHEET 42

LEGEND

1. MARKING LINE EPOXY 4-INCH, YELLOW
2. MARKING LINE EPOXY 4-INCH, DOUBLE YELLOW
3. MARKING LINE EPOXY 4-INCH, WHITE
4. MARKING LINE WET REFLECTIVE CONTRAST EPOXY 4-INCH, DASHED WHITE (12.5' LINE, 37.5' GAP)
5. MARKING LINE EPOXY 4-INCH, DASHED YELLOW (12.5' LINE, 37.5' GAP)
6. MARKING LINE WET REFLECTIVE CONTRAST EPOXY 8-INCH, WHITE
7. MARKING STOP LINE EPOXY 18-INCH, WHITE
8. MARKING CROSSWALK EPOXY TRANSVERSE LINE 6-INCH, WHITE
9. MARKING ISLAND NOSE EPOXY, YELLOW
10. MARKING CURB EPOXY, YELLOW
11. MARKING ARROW EPOXY, TYPE 2 WHITE
12. MARKING ARROW EPOXY, TYPE 3 WHITE
13. MARKING WORD EPOXY, WHITE
14. MARKING CHEVRON EPOXY 24-INCH, WHITE (25' SPACING)
16. MARKING YIELD LINE EPOXY 18-INCH, WHITE
17. MARKING LINE WET REFLECTIVE CONTRAST EPOXY 4-INCH YELLOW (2' LINE, 6' GAP)
18. MARKING LINE EPOXY 4-INCH, WHITE (3' LINE, 9' GAP)
19. MARKING LINE EPOXY 8-INCH, WHITE (3' LINE, 9' GAP)
20. MARKING LINE EPOXY 8-INCH, WHITE
21. MARKING LINE EPOXY 4-INCH, WHITE (12.5' LINE, 37.5' GAP)
22. MARKING LINE WET REFLECTIVE CONTRAST EPOXY 8-INCH WHITE (3' LINE, 9' GAP)

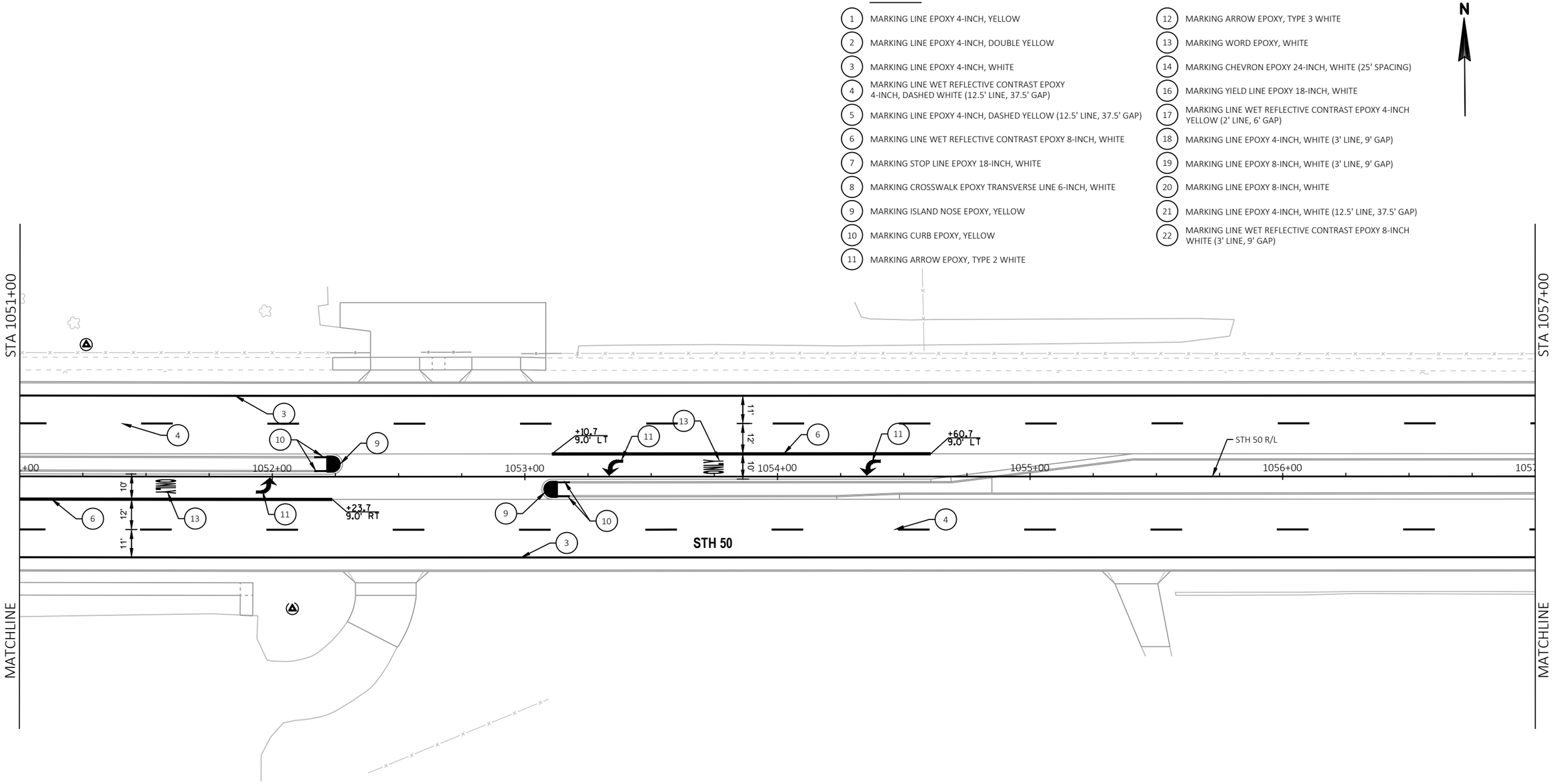

SHEET 13 OF 20

PROJECT NO: 1310-04-70	HWY: STH 50	COUNTY: KENOSHA	PAVEMENT MARKING	SHEET 345	E

FILE NAME : T:\1182708.06\CIVIL3D\13100400\13100400\SHEETSPLAN\024501_PM.DWG
LAYOUT NAME - 11
PLOT DATE : 4/8/2022 3:00 PM
PLOT BY : BLACKWOOD, JIM
PLOT NAME :
PLOT SCALE : 1 IN:40 FT

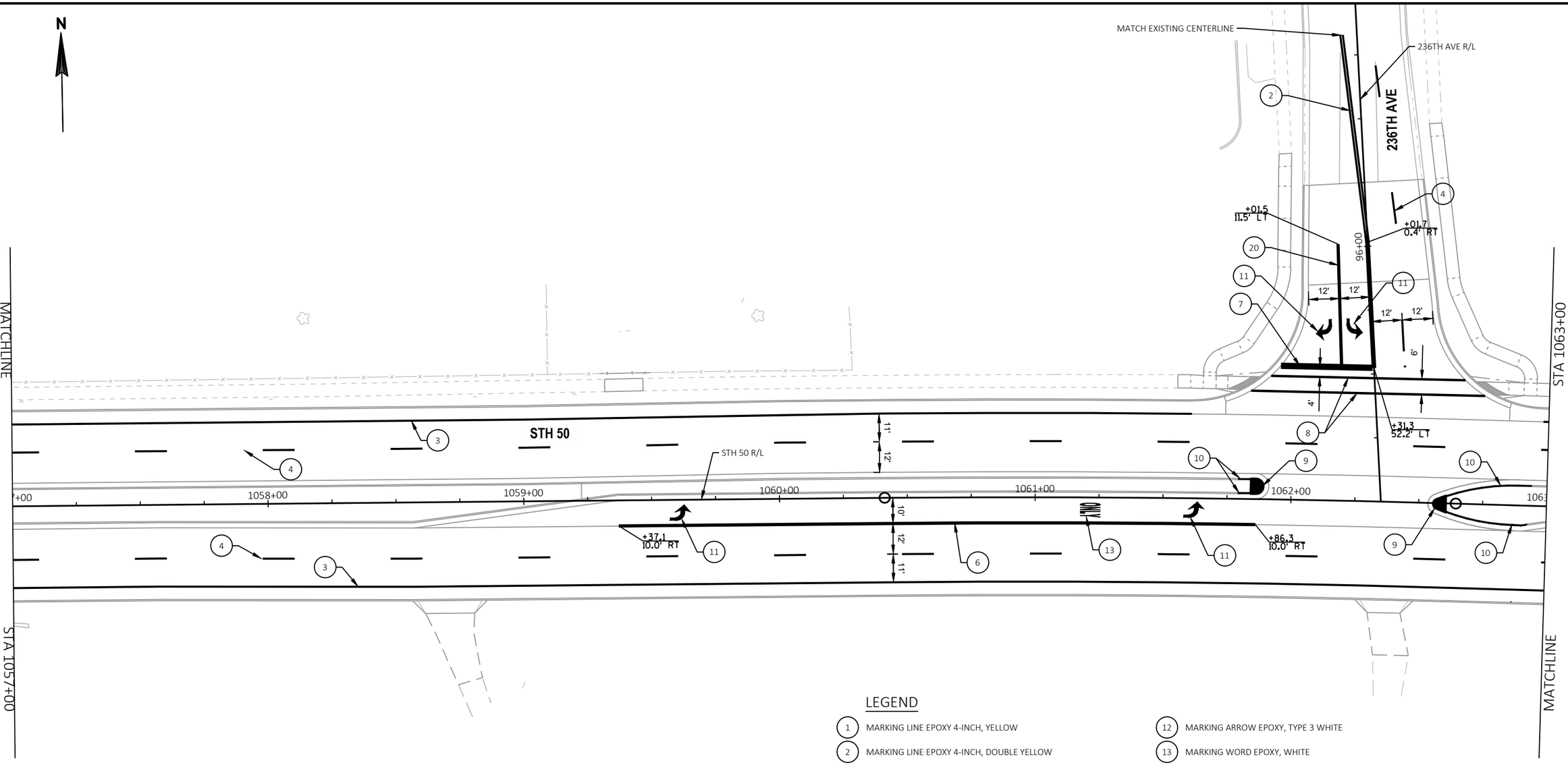

LEGEND

1. MARKING LINE EPOXY 4-INCH, YELLOW
2. MARKING LINE EPOXY 4-INCH, DOUBLE YELLOW
3. MARKING LINE EPOXY 4-INCH, WHITE
4. MARKING LINE WET REFLECTIVE CONTRAST EPOXY 4-INCH, DASHED WHITE (12.5' LINE, 37.5' GAP)
5. MARKING LINE EPOXY 4-INCH, DASHED YELLOW (12.5' LINE, 37.5' GAP)
6. MARKING LINE WET REFLECTIVE CONTRAST EPOXY 8-INCH, WHITE
7. MARKING STOP LINE EPOXY 18-INCH, WHITE
8. MARKING CROSSWALK EPOXY TRANSVERSE LINE 6-INCH, WHITE
9. MARKING ISLAND NOSE EPOXY, YELLOW
10. MARKING CURB EPOXY, YELLOW
11. MARKING ARROW EPOXY, TYPE 2 WHITE
12. MARKING ARROW EPOXY, TYPE 3 WHITE
13. MARKING WORD EPOXY, WHITE
14. MARKING CHEVRON EPOXY 24-INCH, WHITE (25' SPACING)
16. MARKING YIELD LINE EPOXY 18-INCH, WHITE
17. MARKING LINE WET REFLECTIVE CONTRAST EPOXY 4-INCH YELLOW (2' LINE, 6' GAP)
18. MARKING LINE EPOXY 4-INCH, WHITE (3' LINE, 9' GAP)
19. MARKING LINE EPOXY 8-INCH, WHITE (3' LINE, 9' GAP)
20. MARKING LINE EPOXY 8-INCH, WHITE
21. MARKING LINE EPOXY 4-INCH, WHITE (12.5' LINE, 37.5' GAP)
22. MARKING LINE WET REFLECTIVE CONTRAST EPOXY 8-INCH WHITE (3' LINE, 9' GAP)

PROJECT NO: 1310-04-70	HWY: STH 50	COUNTY: KENOSHA	PAVEMENT MARKING	SHEET 346	E

FILE NAME : T:\1182708.06\CIVIL3D\13100400\13100400\SHEETSPLAN\024501_PM.DWG
LAYOUT NAME - 12
PLOT DATE : 4/8/2022 3:00 PM
PLOT BY : BLACKWOOD, JIM
PLOT NAME :
PLOT SCALE : 1 IN:40 FT
WISDOT/CADDS SHEET 42

2

N

STA 1063+00

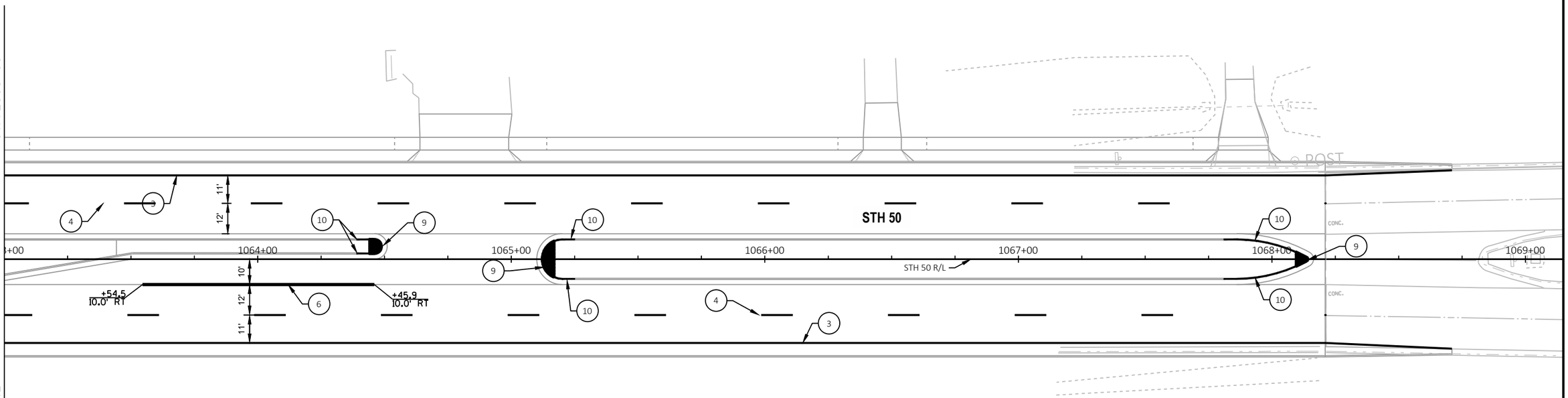

MATCHLINE

LEGEND

1. MARKING LINE EPOXY 4-INCH, YELLOW
2. MARKING LINE EPOXY 4-INCH, DOUBLE YELLOW
3. MARKING LINE EPOXY 4-INCH, WHITE
4. MARKING LINE WET REFLECTIVE CONTRAST EPOXY 4-INCH, DASHED WHITE (12.5' LINE, 37.5' GAP)
5. MARKING LINE EPOXY 4-INCH, DASHED YELLOW (12.5' LINE, 37.5' GAP)
6. MARKING LINE WET REFLECTIVE CONTRAST EPOXY 8-INCH, WHITE
7. MARKING STOP LINE EPOXY 18-INCH, WHITE
8. MARKING CROSSWALK EPOXY TRANSVERSE LINE 6-INCH, WHITE
9. MARKING ISLAND NOSE EPOXY, YELLOW
10. MARKING CURB EPOXY, YELLOW
11. MARKING ARROW EPOXY, TYPE 2 WHITE
12. MARKING ARROW EPOXY, TYPE 3 WHITE
13. MARKING WORD EPOXY, WHITE
14. MARKING CHEVRON EPOXY 24-INCH, WHITE (25' SPACING)
16. MARKING YIELD LINE EPOXY 18-INCH, WHITE
17. MARKING LINE WET REFLECTIVE CONTRAST EPOXY 4-INCH YELLOW (2' LINE, 6' GAP)
18. MARKING LINE EPOXY 4-INCH, WHITE (3' LINE, 9' GAP)
19. MARKING LINE EPOXY 8-INCH, WHITE (3' LINE, 9' GAP)
20. MARKING LINE EPOXY 8-INCH, WHITE
21. MARKING LINE EPOXY 4-INCH, WHITE (12.5' LINE, 37.5' GAP)
22. MARKING LINE WET REFLECTIVE CONTRAST EPOXY 8-INCH WHITE (3' LINE, 9' GAP)

SHEET 15 OF 20

PROJECT NO: 1310-04-70	HWY: STH 50	COUNTY: KENOSHA	PAVEMENT MARKING	SHEET 347	E

FILE NAME : T:\1182708.06\CIVIL3D\13100400\13100400\SHEETSPLAN\024501_PM.DWG
LAYOUT NAME - 13
PLOT DATE : 4/8/2022 3:00 PM
PLOT BY : BLACKWOOD, JIM
PLOT NAME :
PLOT SCALE : 1 IN:40 FT
WISDOT/CADDS SHEET 42

NOTES:

1. GROOVED PAVEMENT MARKINGS ON STH 50 OUTSIDE OF RECONSTRUCTION LIMITS TO REMAIN. WHEN IMPACTED BY TRAFFIC CONTROL GROOVED MARKINGS SHALL BE COVERED WITH MASK OUT MARKINGS. ANY GROOVED MARKINGS DAMAGED DURING CONSTRUCTION TO BE REPLACED IN KIND. SEE TRAFFIC CONTROL PLANS FOR MASK OUT LOCATIONS.
2. REPLACE NON-GROOVED PAVEMENT MARKINGS OUTSIDE RECONSTRUCTION LIMITS DISTURBED BY TRAFFIC CONTROL IN THE PRE-CONSTRUCTION LOCATIONS.

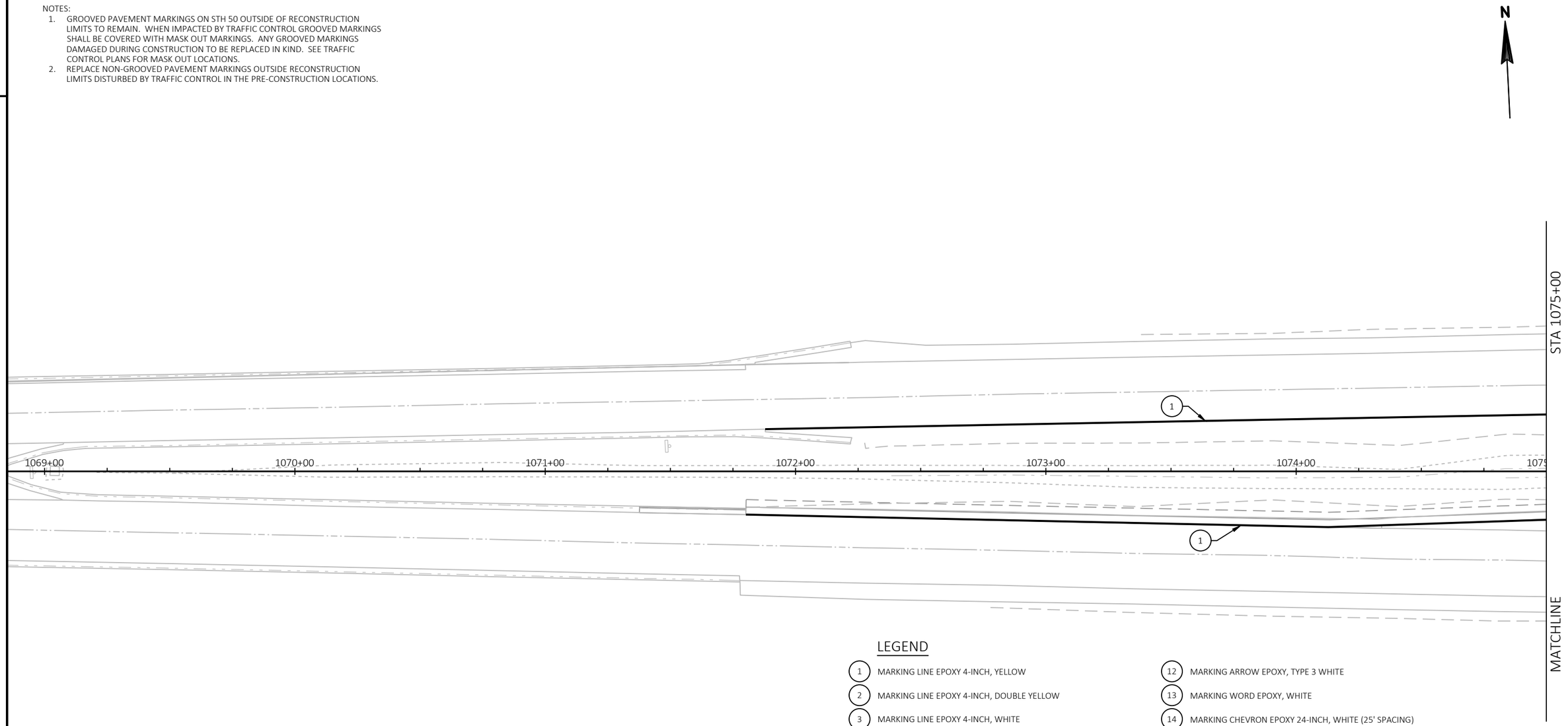

LEGEND

1. MARKING LINE EPOXY 4-INCH, YELLOW
2. MARKING LINE EPOXY 4-INCH, DOUBLE YELLOW
3. MARKING LINE EPOXY 4-INCH, WHITE
4. MARKING LINE WET REFLECTIVE CONTRAST EPOXY 4-INCH, DASHED WHITE (12.5' LINE, 37.5' GAP)
5. MARKING LINE EPOXY 4-INCH, DASHED YELLOW (12.5' LINE, 37.5' GAP)
6. MARKING LINE WET REFLECTIVE CONTRAST EPOXY 8-INCH, WHITE
7. MARKING STOP LINE EPOXY 18-INCH, WHITE
8. MARKING CROSSWALK EPOXY TRANSVERSE LINE 6-INCH, WHITE
9. MARKING ISLAND NOSE EPOXY, YELLOW
10. MARKING CURB EPOXY, YELLOW
11. MARKING ARROW EPOXY, TYPE 2 WHITE
12. MARKING ARROW EPOXY, TYPE 3 WHITE
13. MARKING WORD EPOXY, WHITE
14. MARKING CHEVRON EPOXY 24-INCH, WHITE (25' SPACING)
16. MARKING YIELD LINE EPOXY 18-INCH, WHITE
17. MARKING LINE WET REFLECTIVE CONTRAST EPOXY 4-INCH YELLOW (2' LINE, 6' GAP)
18. MARKING LINE EPOXY 4-INCH, WHITE (3' LINE, 9' GAP)
19. MARKING LINE EPOXY 8-INCH, WHITE (3' LINE, 9' GAP)
20. MARKING LINE EPOXY 8-INCH, WHITE
21. MARKING LINE EPOXY 4-INCH, WHITE (12.5' LINE, 37.5' GAP)
22. MARKING LINE WET REFLECTIVE CONTRAST EPOXY 8-INCH WHITE (3' LINE, 9' GAP)

SHEET 16 OF 20

PROJECT NO: 1310-04-70	HWY: STH 50	COUNTY: KENOSHA	PAVEMENT MARKING	SHEET 348	E

FILE NAME : T:\1182708.06\CIVIL3D\13100400\13100400\SHEETSPLAN\024501_PM.DWG
LAYOUT NAME - 13A
PLOT DATE : 4/8/2022 3:00 PM PLOT BY : BLACKWOOD, JIM PLOT NAME : PLOT SCALE : 1 IN:40 FT
WISDOT/CADDS SHEET 42

NOTES:

1. GROOVED PAVEMENT MARKINGS ON STH 50 OUTSIDE OF RECONSTRUCTION LIMITS TO REMAIN. WHEN IMPACTED BY TRAFFIC CONTROL GROOVED MARKINGS SHALL BE COVERED WITH MASK OUT MARKINGS. ANY GROOVED MARKINGS DAMAGED DURING CONSTRUCTION TO BE REPLACED IN KIND. SEE TRAFFIC CONTROL PLANS FOR MASK OUT LOCATIONS.
2. REPLACE NON-GROOVED PAVEMENT MARKINGS OUTSIDE RECONSTRUCTION LIMITS DISTURBED BY TRAFFIC CONTROL IN THE PRE-CONSTRUCTION LOCATIONS.

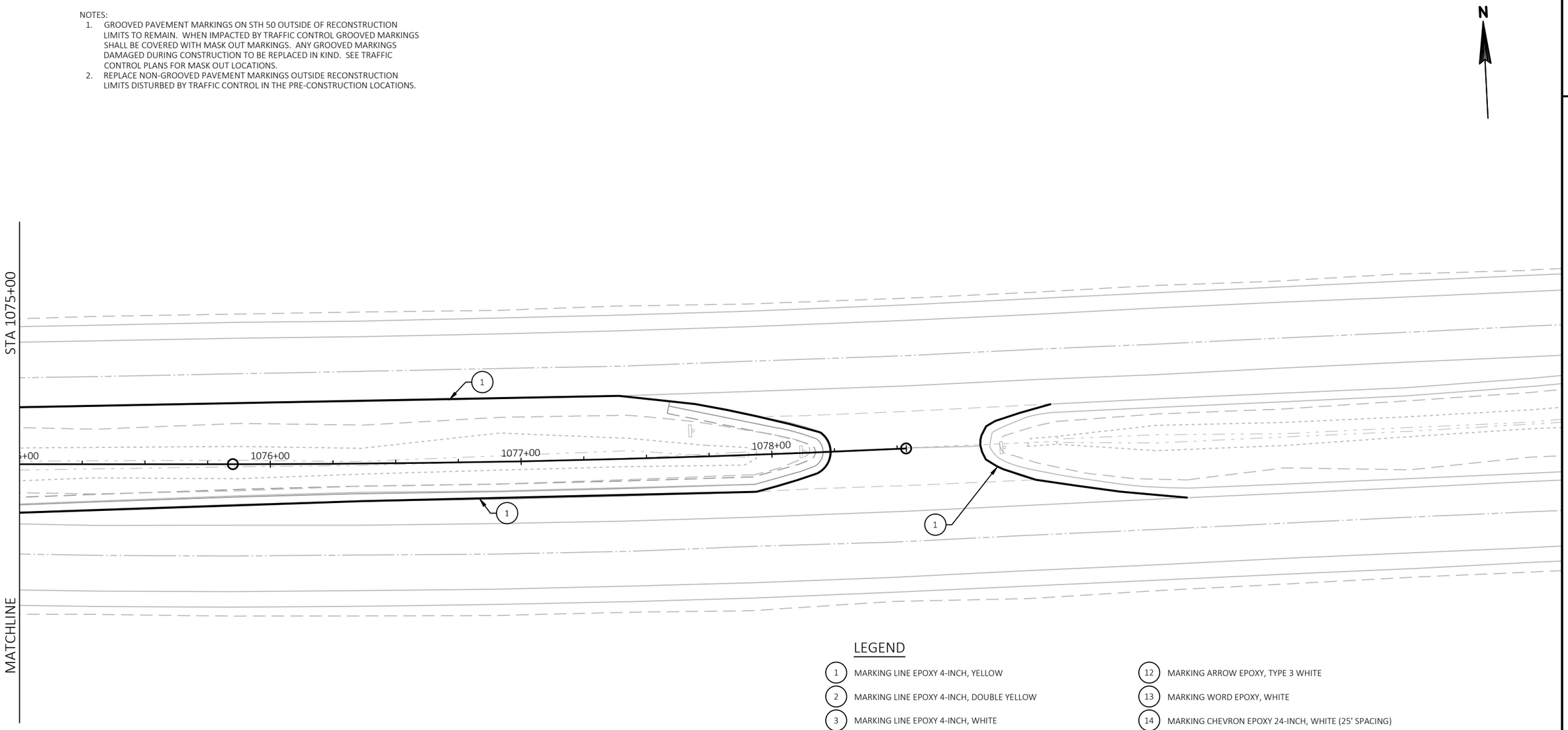

LEGEND

1	MARKING LINE EPOXY 4-INCH, YELLOW
2	MARKING LINE EPOXY 4-INCH, DOUBLE YELLOW
3	MARKING LINE EPOXY 4-INCH, WHITE
4	MARKING LINE WET REFLECTIVE CONTRAST EPOXY 4-INCH, DASHED WHITE (12.5' LINE, 37.5' GAP)
5	MARKING LINE EPOXY 4-INCH, DASHED YELLOW (12.5' LINE, 37.5' GAP)
6	MARKING LINE WET REFLECTIVE CONTRAST EPOXY 8-INCH, WHITE
7	MARKING STOP LINE EPOXY 18-INCH, WHITE
8	MARKING CROSSWALK EPOXY TRANSVERSE LINE 6-INCH, WHITE
9	MARKING ISLAND NOSE EPOXY, YELLOW
10	MARKING CURB EPOXY, YELLOW
11	MARKING ARROW EPOXY, TYPE 2 WHITE
12	MARKING ARROW EPOXY, TYPE 3 WHITE
13	MARKING WORD EPOXY, WHITE
14	MARKING CHEVRON EPOXY 24-INCH, WHITE (25' SPACING)
16	MARKING YIELD LINE EPOXY 18-INCH, WHITE
17	MARKING LINE WET REFLECTIVE CONTRAST EPOXY 4-INCH YELLOW (2' LINE, 6' GAP)
18	MARKING LINE EPOXY 4-INCH, WHITE (3' LINE, 9' GAP)
19	MARKING LINE EPOXY 8-INCH, WHITE (3' LINE, 9' GAP)
20	MARKING LINE EPOXY 8-INCH, WHITE
21	MARKING LINE EPOXY 4-INCH, WHITE (12.5' LINE, 37.5' GAP)
22	MARKING LINE WET REFLECTIVE CONTRAST EPOXY 8-INCH WHITE (3' LINE, 9' GAP)

NOTE:
FOR PAVEMENT MARKINGS BEYOND PROJECT LIMITS DISTURBED BY TRAFFIC CONTROL REPLACE PAVEMENT MARKINGS IN THE PRE-CONSTRUCTION LOCATION.

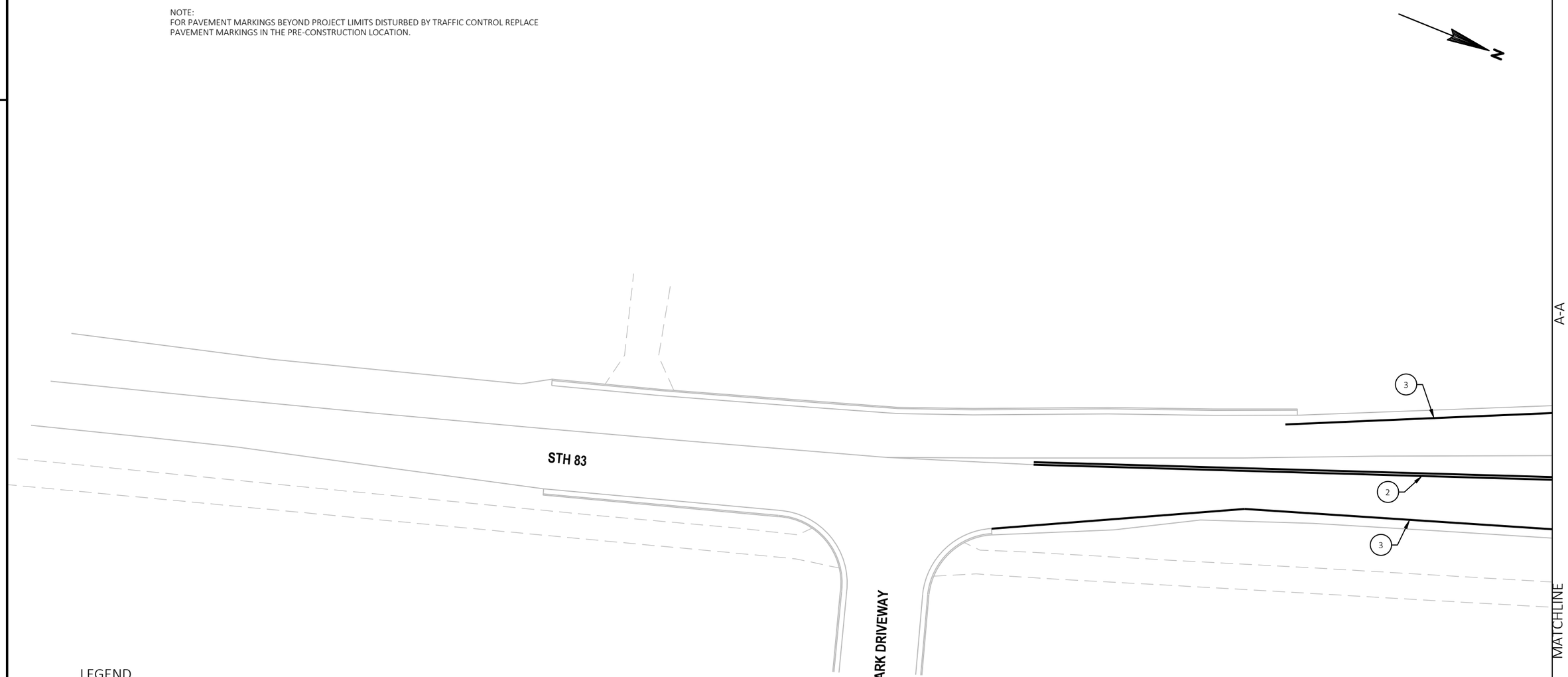

LEGEND

1. MARKING LINE EPOXY 4-INCH, YELLOW
2. MARKING LINE EPOXY 4-INCH, DOUBLE YELLOW
3. MARKING LINE EPOXY 4-INCH, WHITE
4. MARKING LINE WET REFLECTIVE CONTRAST EPOXY 4-INCH, DASHED WHITE (12.5' LINE, 37.5' GAP)
5. MARKING LINE EPOXY 4-INCH, DASHED YELLOW (12.5' LINE, 37.5' GAP)
6. MARKING LINE WET REFLECTIVE CONTRAST EPOXY 8-INCH, WHITE
7. MARKING STOP LINE EPOXY 18-INCH, WHITE
8. MARKING CROSSWALK EPOXY TRANSVERSE LINE 6-INCH, WHITE
9. MARKING ISLAND NOSE EPOXY, YELLOW
10. MARKING CURB EPOXY, YELLOW
11. MARKING ARROW EPOXY, TYPE 2 WHITE
12. MARKING ARROW EPOXY, TYPE 3 WHITE
13. MARKING WORD EPOXY, WHITE
14. MARKING CHEVRON EPOXY 24-INCH, WHITE (25' SPACING)
16. MARKING YIELD LINE EPOXY 18-INCH, WHITE
17. MARKING LINE WET REFLECTIVE CONTRAST EPOXY 4-INCH YELLOW (2' LINE, 6' GAP)
18. MARKING LINE EPOXY 4-INCH, WHITE (3' LINE, 9' GAP)
19. MARKING LINE EPOXY 8-INCH, WHITE (3' LINE, 9' GAP)
20. MARKING LINE EPOXY 8-INCH, WHITE
21. MARKING LINE EPOXY 4-INCH, WHITE (12.5' LINE, 37.5' GAP)
22. MARKING LINE WET REFLECTIVE CONTRAST EPOXY 8-INCH WHITE (3' LINE, 9' GAP)

PROJECT NO: 1310-04-70	HWY: STH 50	COUNTY: KENOSHA	PAVEMENT MARKING	SHEET 350	E

FILE NAME : T:\1182708.06\CIVIL3D\13100400\13100400\SHEETSPLAN\024501_PM.DWG
LAYOUT NAME - 14a
PLOT DATE : 4/8/2022 3:00 PM
PLOT BY : BLACKWOOD, JIM
PLOT NAME :
PLOT SCALE : 1 IN:40 FT
WISDOT/CADDS SHEET 42

NOTE:
FOR PAVEMENT MARKINGS BEYOND PROJECT LIMITS DISTURBED BY TRAFFIC CONTROL REPLACE PAVEMENT MARKINGS IN THE PRE-CONSTRUCTION LOCATION.

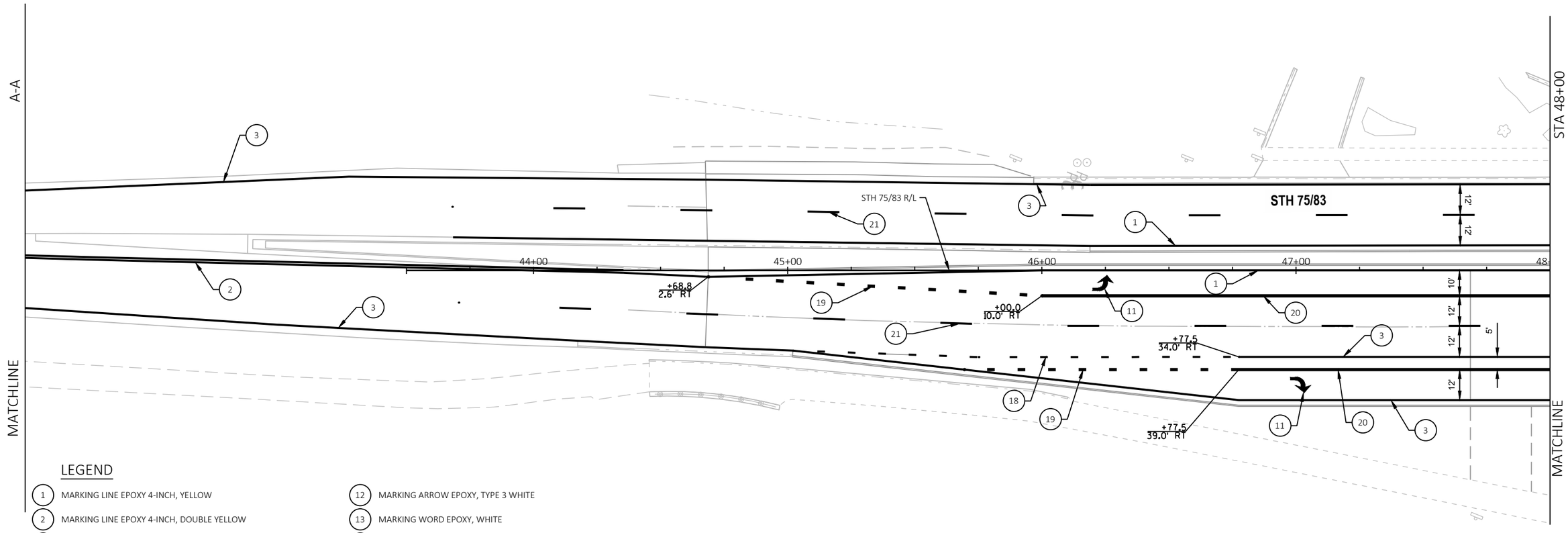

LEGEND

1. MARKING LINE EPOXY 4-INCH, YELLOW
2. MARKING LINE EPOXY 4-INCH, DOUBLE YELLOW
3. MARKING LINE EPOXY 4-INCH, WHITE
4. MARKING LINE WET REFLECTIVE CONTRAST EPOXY 4-INCH, DASHED WHITE (12.5' LINE, 37.5' GAP)
5. MARKING LINE EPOXY 4-INCH, DASHED YELLOW (12.5' LINE, 37.5' GAP)
6. MARKING LINE WET REFLECTIVE CONTRAST EPOXY 8-INCH, WHITE
7. MARKING STOP LINE EPOXY 18-INCH, WHITE
8. MARKING CROSSWALK EPOXY TRANSVERSE LINE 6-INCH, WHITE
9. MARKING ISLAND NOSE EPOXY, YELLOW
10. MARKING CURB EPOXY, YELLOW
11. MARKING ARROW EPOXY, TYPE 2 WHITE
12. MARKING ARROW EPOXY, TYPE 3 WHITE
13. MARKING WORD EPOXY, WHITE
14. MARKING CHEVRON EPOXY 24-INCH, WHITE (25' SPACING)
16. MARKING YIELD LINE EPOXY 18-INCH, WHITE
17. MARKING LINE WET REFLECTIVE CONTRAST EPOXY 4-INCH YELLOW (2' LINE, 6' GAP)
18. MARKING LINE EPOXY 4-INCH, WHITE (3' LINE, 9' GAP)
19. MARKING LINE EPOXY 8-INCH, WHITE (3' LINE, 9' GAP)
20. MARKING LINE EPOXY 8-INCH, WHITE
21. MARKING LINE EPOXY 4-INCH, WHITE (12.5' LINE, 37.5' GAP)
22. MARKING LINE WET REFLECTIVE CONTRAST EPOXY 8-INCH WHITE (3' LINE, 9' GAP)

PROJECT NO: 1310-04-70	HWY: STH 50	COUNTY: KENOSHA	PAVEMENT MARKING	SHEET 351	E

FILE NAME : T:\1182708.06\CIVIL3D\13100400\13100400\SHEETSPLAN\024501_PM.DWG
LAYOUT NAME - 14
PLOT DATE : 4/8/2022 3:01 PM
PLOT BY : BLACKWOOD, JIM
PLOT NAME :
PLOT SCALE : 1 IN:40 FT
WISDOT/CADDS SHEET 42

NOTE:
FOR PAVEMENT MARKINGS BEYOND PROJECT LIMITS DISTURBED BY TRAFFIC CONTROL REPLACE PAVEMENT MARKINGS IN THE PRE-CONSTRUCTION LOCATION.

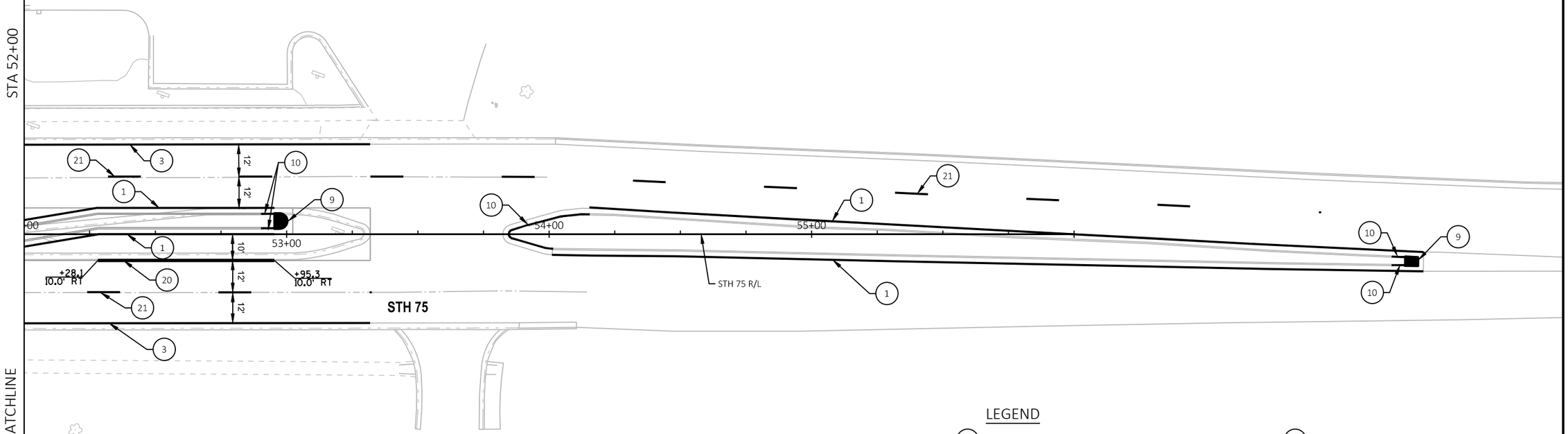

LEGEND

1. MARKING LINE EPOXY 4-INCH, YELLOW
2. MARKING LINE EPOXY 4-INCH, DOUBLE YELLOW
3. MARKING LINE EPOXY 4-INCH, WHITE
4. MARKING LINE WET REFLECTIVE CONTRAST EPOXY 4-INCH, DASHED WHITE (12.5' LINE, 37.5' GAP)
5. MARKING LINE EPOXY 4-INCH, DASHED YELLOW (12.5' LINE, 37.5' GAP)
6. MARKING LINE WET REFLECTIVE CONTRAST EPOXY 8-INCH, WHITE
7. MARKING STOP LINE EPOXY 18-INCH, WHITE
8. MARKING CROSSWALK EPOXY TRANSVERSE LINE 6-INCH, WHITE
9. MARKING ISLAND NOSE EPOXY, YELLOW
10. MARKING CURB EPOXY, YELLOW
11. MARKING ARROW EPOXY, TYPE 2 WHITE
12. MARKING ARROW EPOXY, TYPE 3 WHITE
13. MARKING WORD EPOXY, WHITE
14. MARKING CHEVRON EPOXY 24-INCH, WHITE (25' SPACING)
16. MARKING YIELD LINE EPOXY 18-INCH, WHITE
17. MARKING LINE WET REFLECTIVE CONTRAST EPOXY 4-INCH YELLOW (2' LINE, 6' GAP)
18. MARKING LINE EPOXY 4-INCH, WHITE (3' LINE, 9' GAP)
19. MARKING LINE EPOXY 8-INCH, WHITE (3' LINE, 9' GAP)
20. MARKING LINE EPOXY 8-INCH, WHITE
21. MARKING LINE EPOXY 4-INCH, WHITE (12.5' LINE, 37.5' GAP)
22. MARKING LINE WET REFLECTIVE CONTRAST EPOXY 8-INCH WHITE (3' LINE, 9' GAP)

SHEET 20 OF 20

PROJECT NO: 1310-04-70	HWY: STH 50	COUNTY: KENOSHA	PAVEMENT MARKING	SHEET 352	E

FILE NAME : T:\1182708.06\CIVIL3D\13100400\13100400\SHEETSPLAN\024501_PM.DWG
LAYOUT NAME - 15
PLOT DATE : 4/8/2022 3:01 PM PLOT BY : BLACKWOOD, JIM PLOT NAME : PLOT SCALE : 1 IN:40 FT
WISDOT/CADDS SHEET 42

2

GENERAL NOTES FOR CONSTRUCTION STAGING AND TRAFFIC CONTROL:

1. TRAFFIC CONTROL DRUMS IN TAPERS SHALL BE EQUIPPED WITH WARNING LIGHTS, TYPE "C", ONE WAY LIGHTS, UNLESS OTHERWISE SHOWN.
2. SIGN LOCATIONS ARE APPROXIMATE. THE ACTUAL LOCATION AND SPACING MAY BE ADJUSTED AS DIRECTED BY THE ENGINEER TO MEET FIELD CONDITIONS.
3. SIGNS IN CONFLICT WITH TRAFFIC CONTROL "IN USE" SHALL BE COVERED. THE COVERING OF TYPE II SIGNS IS INCLUDED UNDER THE BID ITEM TRAFFIC CONTROL COVERING SIGNS TYPE II.
4. "WO" SIGNS ARE THE SAME AS "W" SIGNS EXCEPT THE BACKGROUND IS REFLECTIVE ORANGE.
5. ALL TRAFFIC CONTROL SIGNS SHALL BE 48"X48" UNLESS OTHERWISE NOTED IN THE PLANS.
6. A FLAGGER MAY BE REQUIRED WHERE CONSTRUCTION VEHICLES ENTER OF LEAVE "WORK/CLOSED" AREAS IF WARRANTED BY CONDITIONS AND/OR AS DIRECTED BY THE ENGINEER.
7. CONTRACTOR SHALL INSTALL PERMANENT SIGNS AND PERMANENT PAVEMENT MARKING WHEN APPROPRIATE DURING CONSTRUCTION STAGING AS SHOWN IN THE PLANS OR AS DIRECTED BY THE ENGINEER.
8. ADEQUATE TURNING PROVISIONS SHALL BE MAINTAINED FOR ALL VEHICLES, INCLUDING TRUCKS, EXCEPT FOR TURNING MOVEMENTS HAVING A TRUCK DETOUR AS SHOWN IN THE PLANS. DO NOT USE TRUCK DETOURS FOR TURNING MOVEMENTS NOT SHOWN IN THE PLAN WITHOUT THE WRITTEN APPROVAL OF THE ENGINEER.
9. EXISTING PAVEMENT MARKINGS TO BE REMOVED THAT WILL NOT BE REPLACED IN THE SAME LOCATION AFTER CONSTRUCTION SHALL BE REMOVED USING WATER BLASTING. DO NOT GRIND EXISTING PAVEMENT MARKINGS THAT WILL NOT BE REPLACED AFTER CONSTRUCTION.
10. BARRICADE STRIPES SHALL POINT DOWNWARD IN THE DIRECTION OF TRAFFIC FLOW.
11. THE CONTRACTOR SHALL ENSURE ADEQUATE DRAINAGE AND AVOID ANY PONDING OR STANDING WATER DURING THE STAGED CONSTRUCTION.
12. TEMPORARY MARKINGS SHALL BE TEMPORARY TAPE WHEN PLACED ON NEW OR EXISTING PAVEMENT SURFACES THAT ARE TO REMAIN IN PLACE FOLLOWING CONSTRUCTION. PAINT MAY BE USED ON EXISTING PAVEMENT OR BINDER HMA LAYERS THAT ARE TO BE REMOVED OR OVERLAID IN SUBSEQUENT STAGES.

LEGEND

- WORK ZONE
- 6" ASPHALTIC SURFACE TEMPORARY WITH 10" BASE AGGREGATE DENSE 1 1/4-INCH
- ASPHALTIC SURFACE TEMPORARY WEDGING BETWEEN EXISTING AND PROPOSED PAVEMENT
- TRAFFIC CONTROL COVERING SIGNS
- TRAFFIC FLOW
- TRAFFIC CONTROL DRUM
- TRAFFIC CONTROL DRUM WITH TYPE C STEADY BURN LIGHT
- TRAFFIC CONTROL ARROW BOARD
- TRAFFIC CONTROL FLEXIBLE TUBULAR MAKER POST AND BASE
- POST MOUNTED TRAFFIC CONTROL SIGNS
- TRAFFIC CONTROL SIGN MOUNTED ON TEMPORARY SUPPORT
- TRAFFIC CONTROL BARRICADE TYPE III WITH TWO TYPE A WARNING LIGHTS WITH/WITHOUT SIGN
- ETSR — EXISTING SIGN TO REMAIN
- PCMS — TRAFFIC CONTROL SIGNS PCMS
- PAVEMENT MARKING INSTALLED THIS STAGE
- PAVEMENT MARKING INSTALLED IN PREVIOUS STAGE
- TEMPORARY PEDESTRIAN BARRICADE
- TEMPORARY 16"X16" FLAGS (INCIDENTAL TO TRAFFIC CONTROL SIGNS)

TEMPORARY PAVEMENT MARKING LEGEND

P	PERMANENT PAVEMENT MARKINGS (SEE PAVEMENT MARKING PLAN)
SB	TEMPORARY MARKING STOP LINE PAINT 18-INCH (WHITE)
TM6	TEMPORARY MARKING REMOVABLE MASK OUT TAPE 6-INCH (BLACK)
TM10	TEMPORARY MARKING REMOVABLE MASK OUT TAPE 10-INCH (BLACK)
TSB	TEMPORARY MARKING STOP LINE REMOVABLE TAPE 18-INCH (WHITE)
TW4	TEMPORARY MARKING LINE REMOVABLE TABLE 4-INCH (WHITE)
TW8	TEMPORARY MARKING LINE REMOVABLE TAPE 8-INCH (WHITE)
TWS	TEMPORARY MARKING LINE REMOVABLE TAPE 4-INCH (WHITE) (3' SKIP, 9' GAP)
TY4	TEMPORARY MARKING LINE REMOVABLE TAPE 4-INCH (YELLOW)
TYS	TEMPORARY MARKING LINE REMOVABLE TAPE 4-INCH (YELLOW) (2' SKIP, 6' GAP)
W4	TEMPORARY MARKING LINE PAINT 4-INCH (WHITE)
W8	TEMPORARY MARKING LINE PAINT 8-INCH (WHITE)
W12	TEMPORARY MARKING LINE PAINT 12-INCH (WHITE)
Y4	TEMPORARY MARKING LINE PAINT 4-INCH (YELLOW)

2

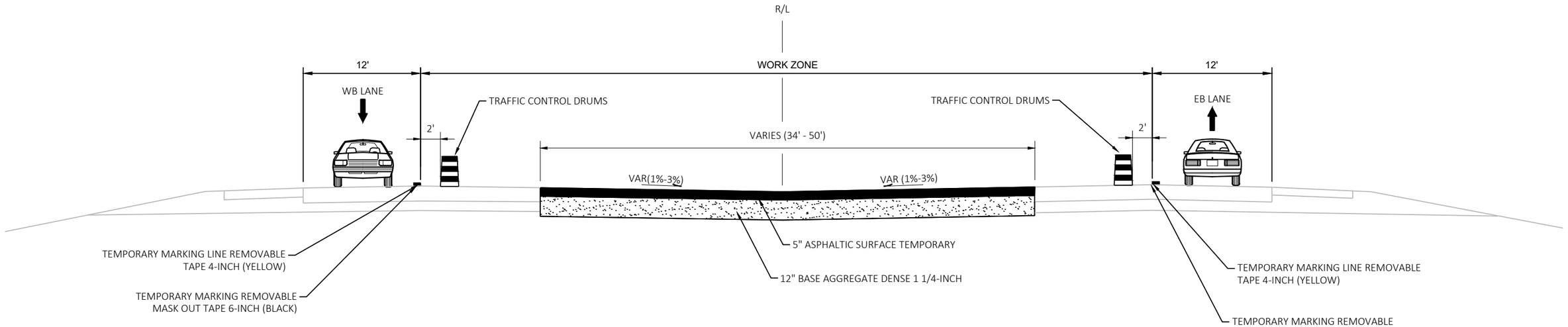

STAGE 1A TYPICAL SECTION - STH 50

CONSTRUCT TEMPORARY CROSS-OVERS
STA 984+23 - STA 990+14
STA 1071+38 - STA 1077+85

PROJECT NO: 1310-04-70	HWY: STH 50	COUNTY: KENOSHA	TRAFFIC CONTROL TYPICAL SECTIONS	SHEET 354	E

FILE NAME : T:\1182708.06\CIVIL3D\13100400\13100400\SHEETSPLAN\026000_TC.DWG
LAYOUT NAME - 026001_ts
PLOT DATE : 1/14/2022 4:23 PM
PLOT BY : BLACKWOOD, JIM
PLOT NAME :
PLOT SCALE : ##########
WISDOT/CADDS SHEET 42

2

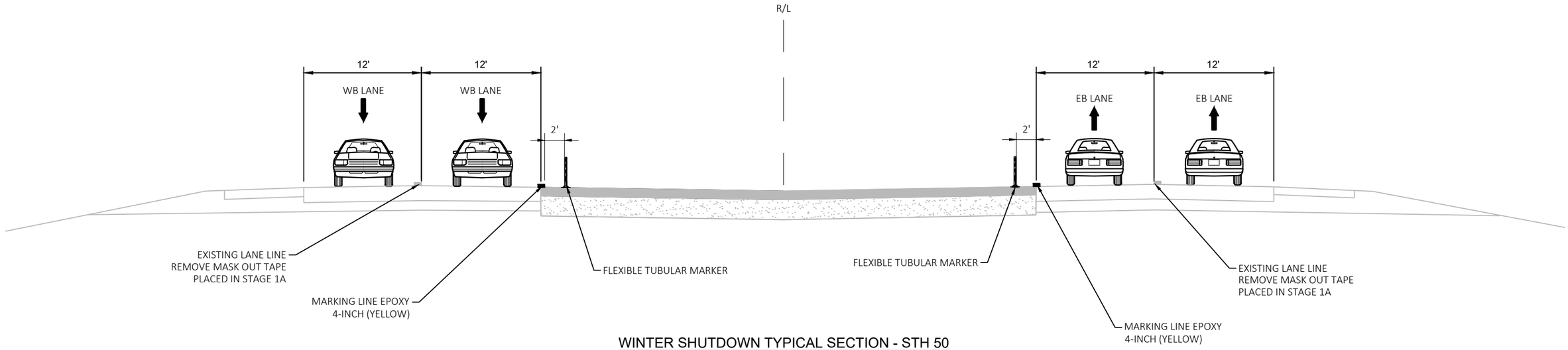

WINTER SHUTDOWN TYPICAL SECTION - STH 50

STA 984+23 - STA 990+14
STA 1071+38 - STA 1077+85

PROJECT NO: 1310-04-70	HWY: STH 50	COUNTY: KENOSHA	TRAFFIC CONTROL TYPICAL SECTIONS	SHEET 355	E

FILE NAME : T:\1182708.06\CIVIL3D\13100400\13100400\SHEETSPLAN\026000_TC.DWG
LAYOUT NAME - 026001a_ts
PLOT DATE : 1/14/2022 4:23 PM
PLOT BY : BLACKWOOD, JIM
PLOT NAME :
PLOT SCALE : ##########
WISDOT/CADDS SHEET 42

2

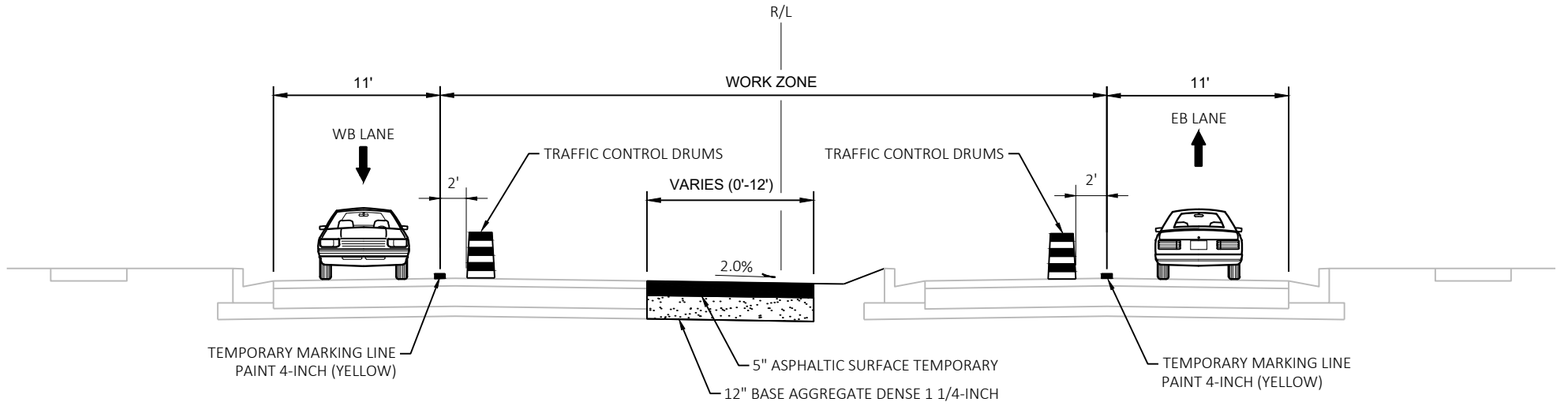

STAGE 1B TYPICAL SECTION - STH 50

REMOVE RAISED MEDIAN PAVE ASPHALTIC TEMPORARY
STA 994+20 - STA 1012+59
STA 1047+69 - STA 1068+21

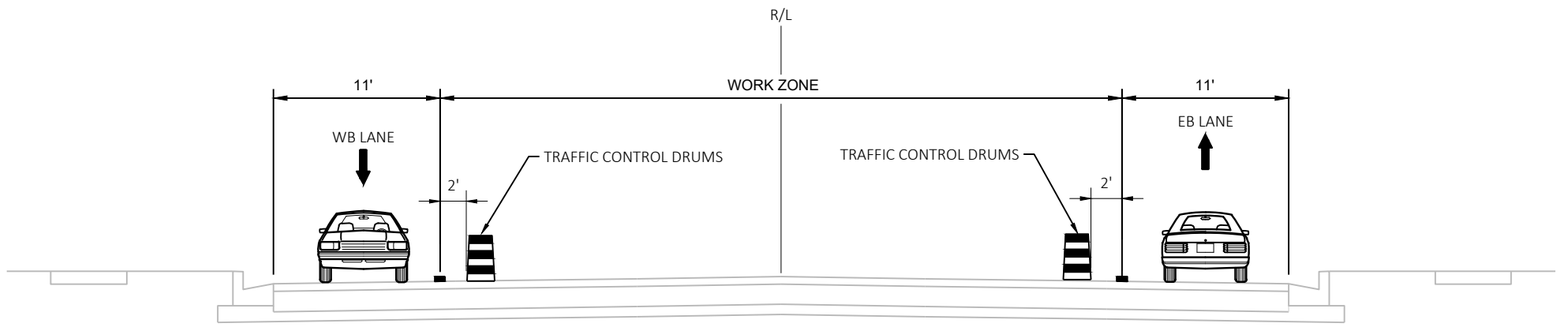

STAGE 1B TYPICAL SECTION - STH 50

STA 1012+59 - STA 1047+69

PROJECT NO: 1310-04-70	HWY: STH 50	COUNTY: KENOSHA	TRAFFIC CONTROL TYPICAL SECTIONS	SHEET 356	E

FILE NAME : T:\1182708.06\CIVIL3D\13100400\13100400\SHEETSPLAN\026000_TC.DWG
LAYOUT NAME - 026002_ts
PLOT DATE : 1/14/2022 4:23 PM
PLOT BY : BLACKWOOD, JIM
PLOT NAME :
PLOT SCALE : ##########
WISDOT/CADDS SHEET 42

2

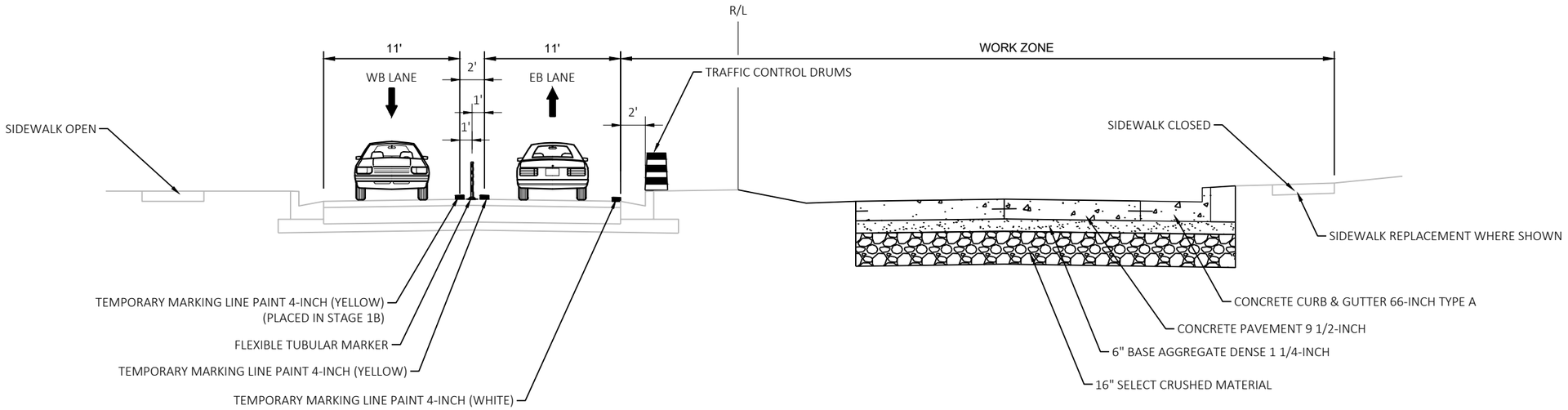

STAGE 2A/2B TYPICAL SECTION - STH 50

CONSTRUCT EASTBOUND LANES
STA 994+20 - STA 1012+59
STA 1047+69 - STA 1068+21

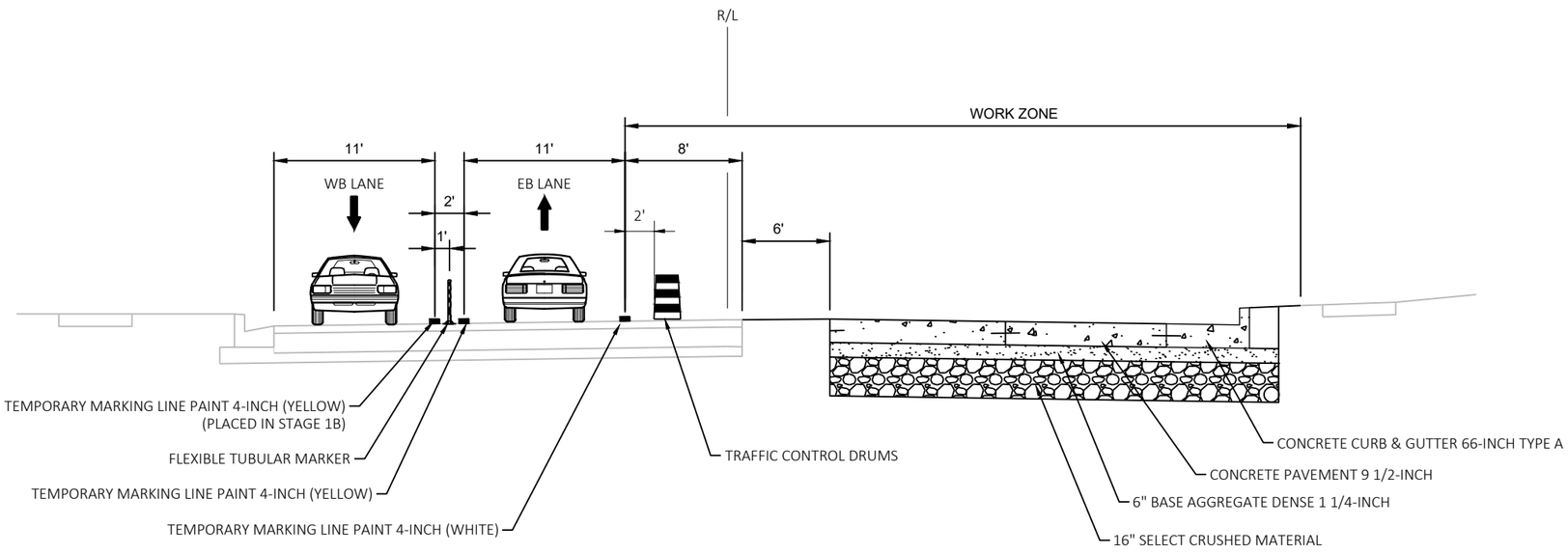

STAGE 2A/2B TYPICAL SECTION - STH 50

CONSTRUCT EASTBOUND LANES
STA 1012+59 - STA 1047+69

PROJECT NO: 1310-04-70	HWY: STH 50	COUNTY: KENOSHA	TRAFFIC CONTROL TYPICAL SECTIONS	SHEET 357	E

FILE NAME : T:\1182708.06\CIVIL3D\13100400\13100400\SHEETSPLAN\026000_TC.DWG
LAYOUT NAME - 026003_ts
PLOT DATE : 1/14/2022 4:23 PM PLOT BY : BLACKWOOD, JIM PLOT NAME : PLOT SCALE : ##########
WISDOT/CADDS SHEET 42

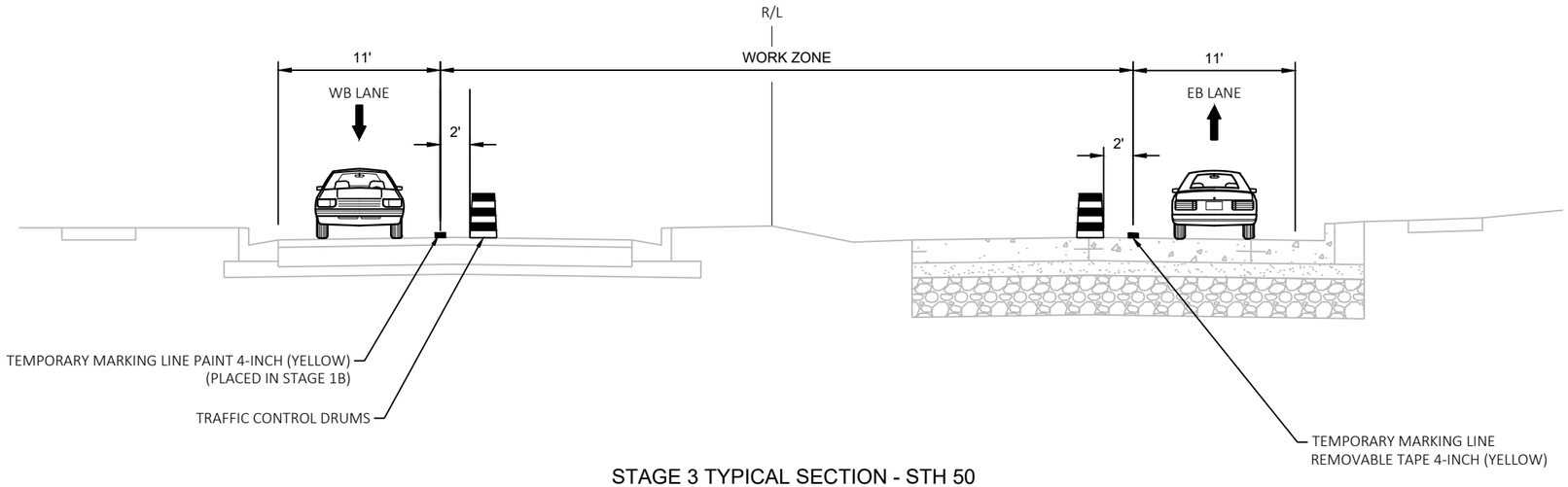

STAGE 3 TYPICAL SECTION - STH 50

STA 994+20 - STA 996+38
STA 1047+69 - STA 1068+21

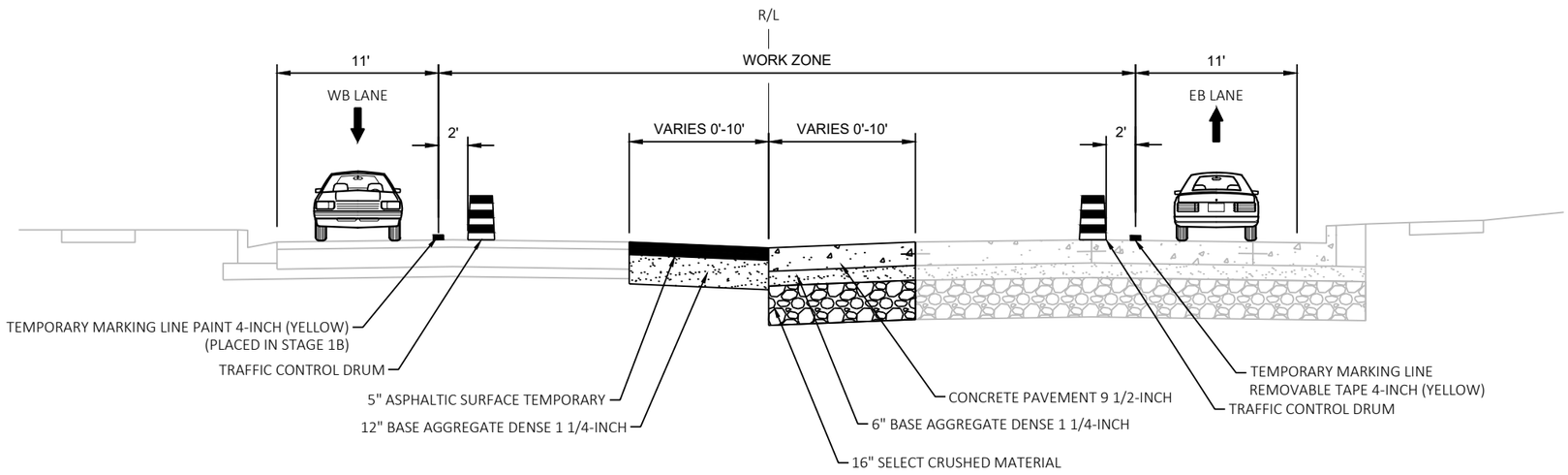

STAGE 3 TYPICAL SECTION - STH 50

CONSTRUCT EASTBOUND LEFT TURN LANES AND STAGE 4 TEMPORARY WIDENING
STA 996+38 - STA 1018+50

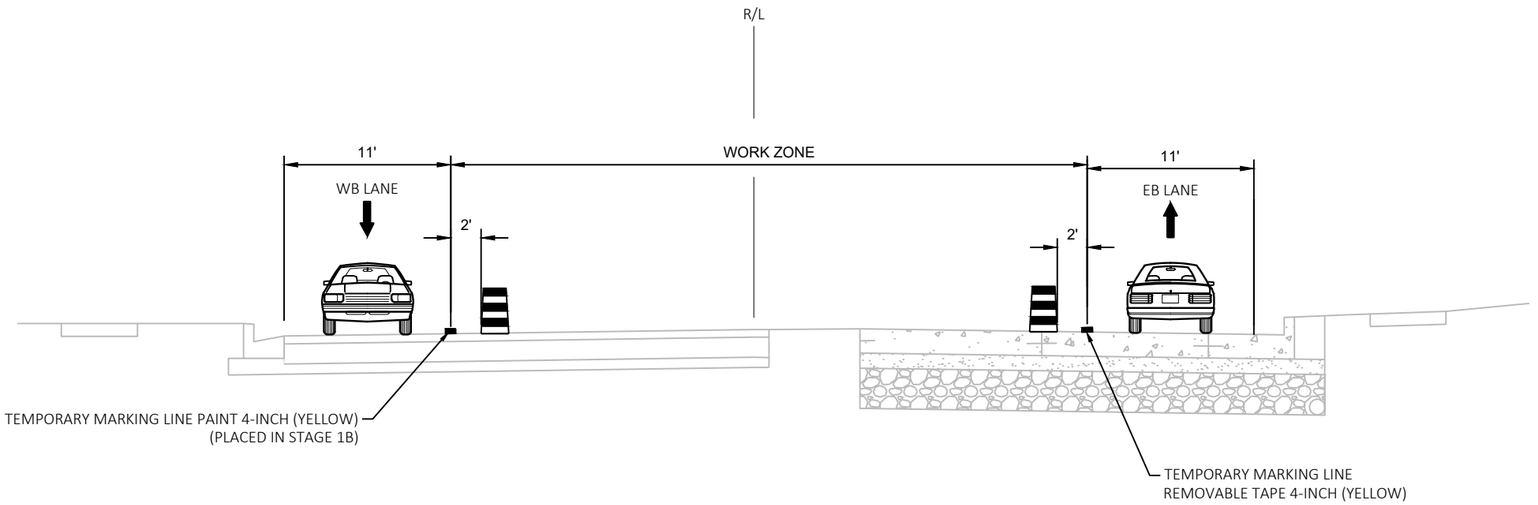

STAGE 3 TYPICAL SECTION - STH 50

STA 1012+59 - STA 1047+69

NOTE: CONSTRUCT WB LANES FROM STA 1003+67 TO STA 1006+65 IN STAGE 4A. EXISTING WB LANES TO REMAIN OUTSIDE OF THIS STATION RANGE UNTIL STAGE 4B.

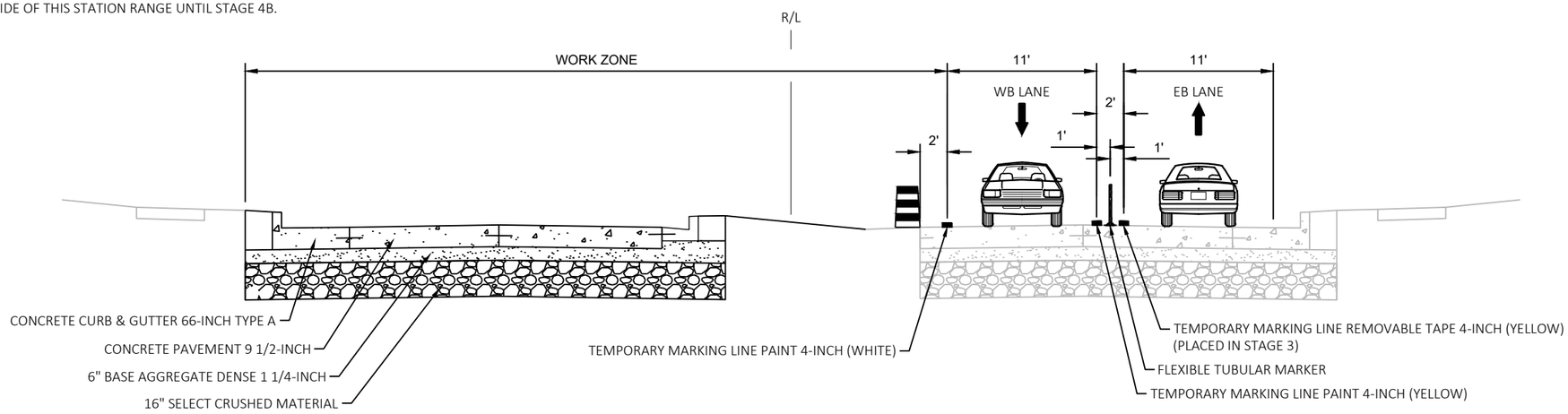

STAGE 4A/4B TYPICAL SECTION - STH 50

CONSTRUCT WB LANES AT STH 75/83 INTERSECTION
STA 994+20 - STA 1018+39

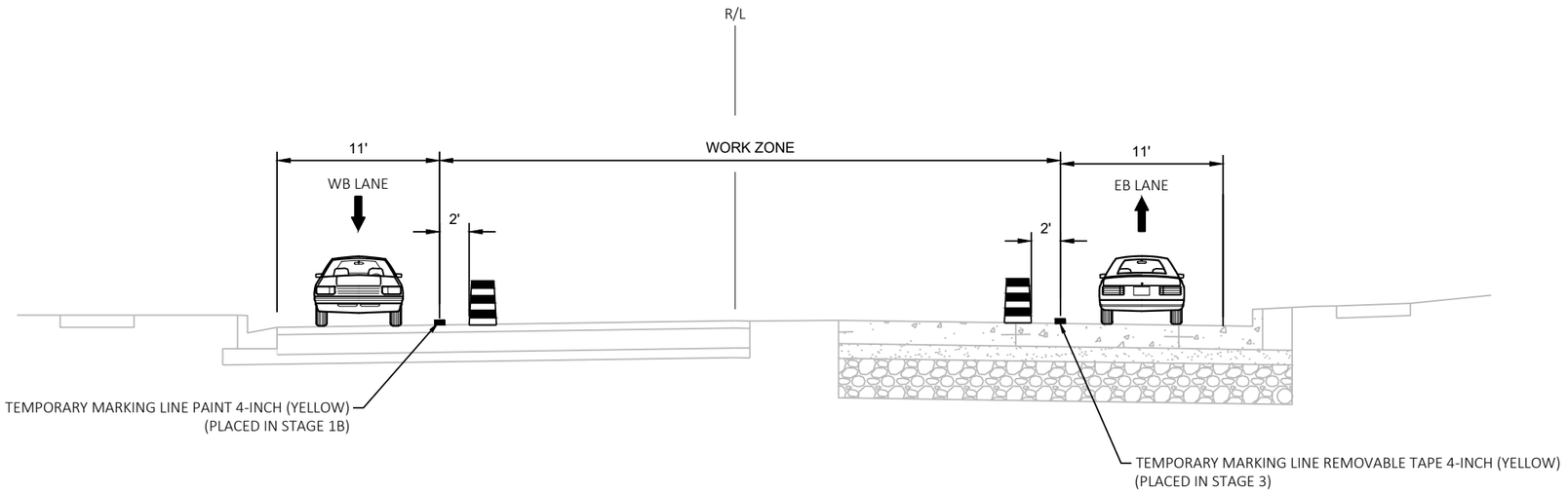

STAGE 4A TYPICAL SECTION - STH 50

STA 1018+39 - STA 1047+69

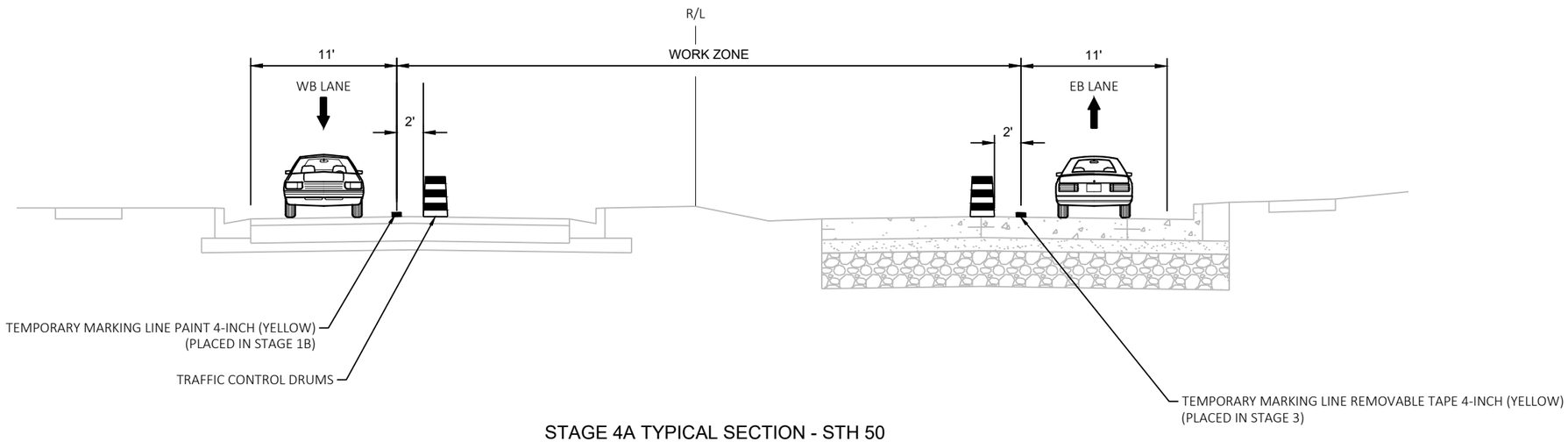

STAGE 4A TYPICAL SECTION - STH 50

STA 1047+69 - STA 1068+21

2

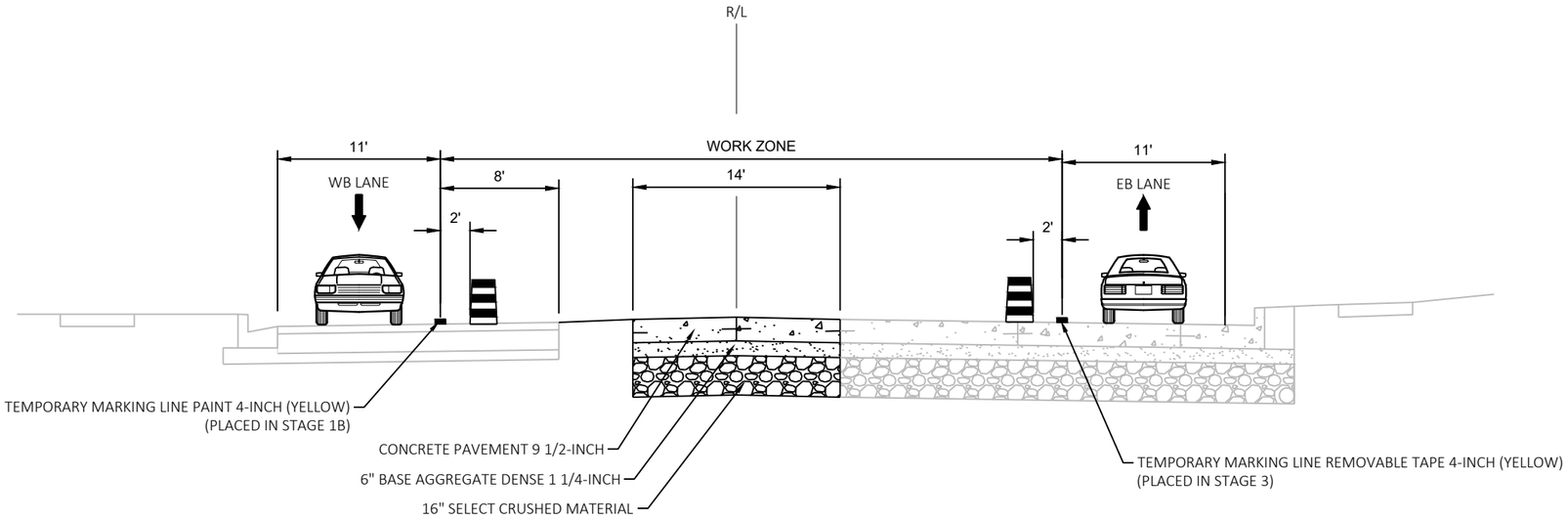

STAGE 4B TYPICAL SECTION - STH 50

STA 1012+59 - STA 1047+69

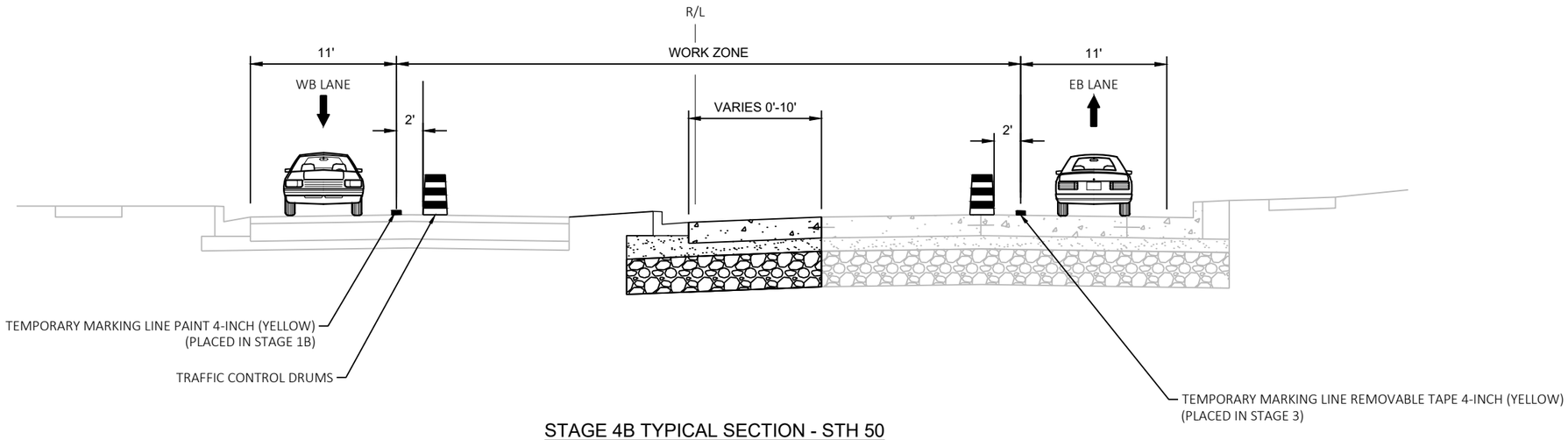

STAGE 4B TYPICAL SECTION - STH 50

STA 1047+69 - STA 1068+21

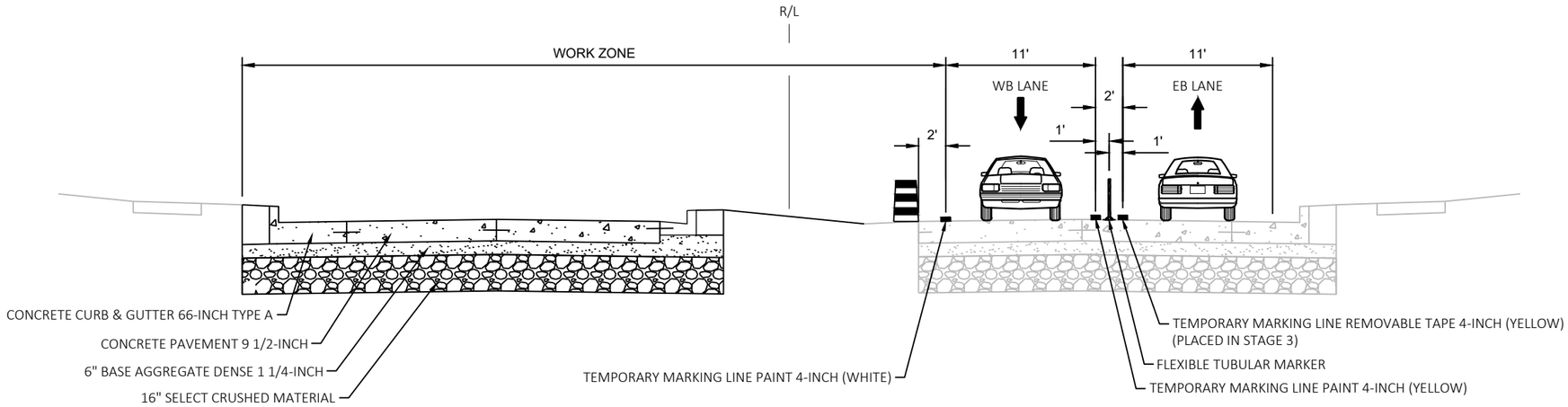

STAGE 4C TYPICAL SECTION - STH 50

CONSTRUCT WB LANES
STA 994+20 - STA 1016+63
STA 1047+69 - STA 1068+21

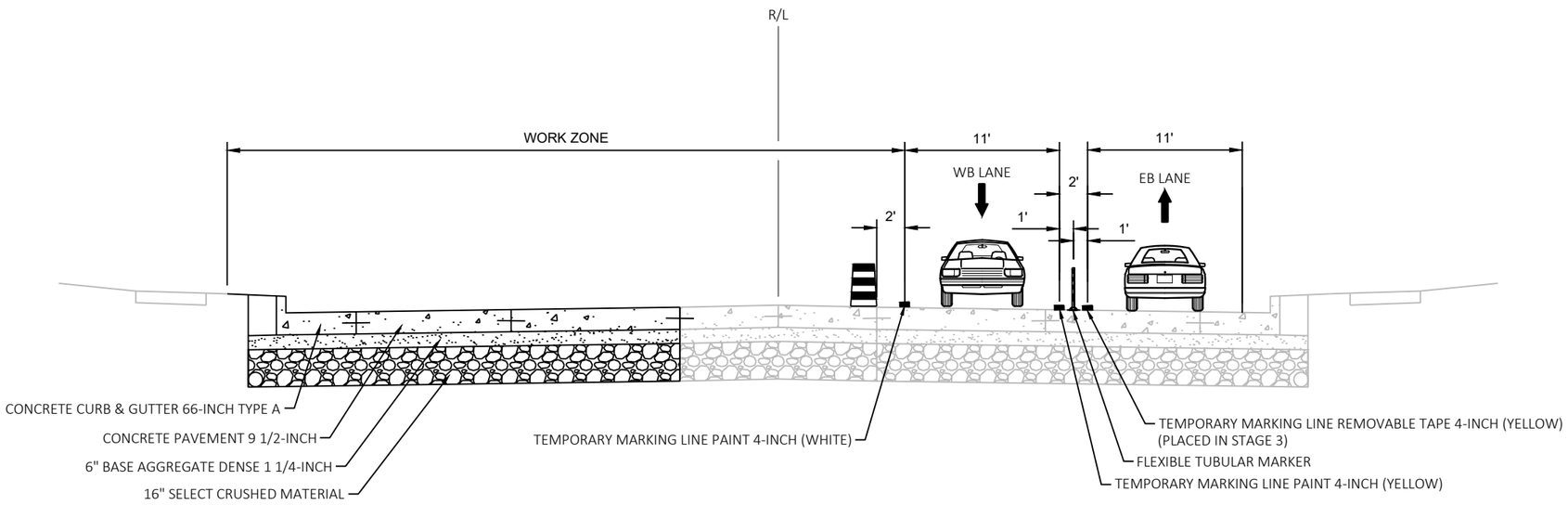

STAGE 4C TYPICAL SECTION - STH 50

STA 1016+63 - STA 1047+69

PROJECT NO: 1310-04-70	HWY: STH 50	COUNTY: KENOSHA	TRAFFIC CONTROL TYPICAL SECTIONS	SHEET 362	E

FILE NAME : T:\1182708.06\CIVIL3D\13100400\13100400\SHEETSPLAN\026000_TC.DWG
LAYOUT NAME - 026008_ts
PLOT DATE : 1/14/2022 4:23 PM
PLOT BY : BLACKWOOD, JIM
PLOT NAME :
PLOT SCALE : ##########
WISDOT/CADDS SHEET 42

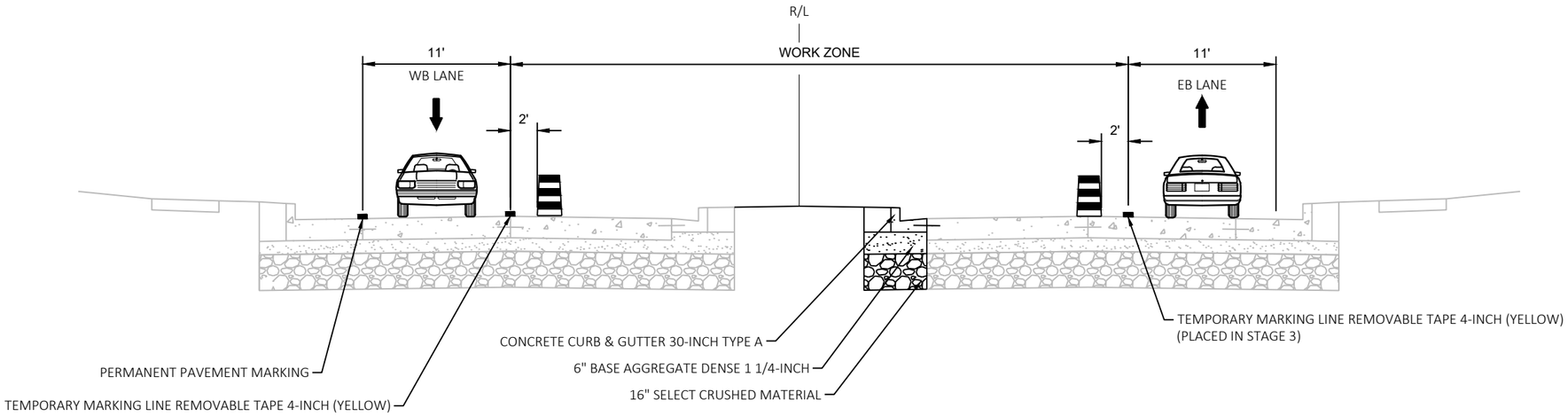

STAGE 5 TYPICAL SECTION - STH 50

CONSTRUCT LEFT TURN LANES AND MEDIAN
STA 994+20 - STA 1016+63
STA 1047+69 - STA 1068+21

NOTE: CONSTRUCT REMAINING LEFT TURN ISLANDS AND PAVEMENT IN MEDIANS DURING STAGE 5

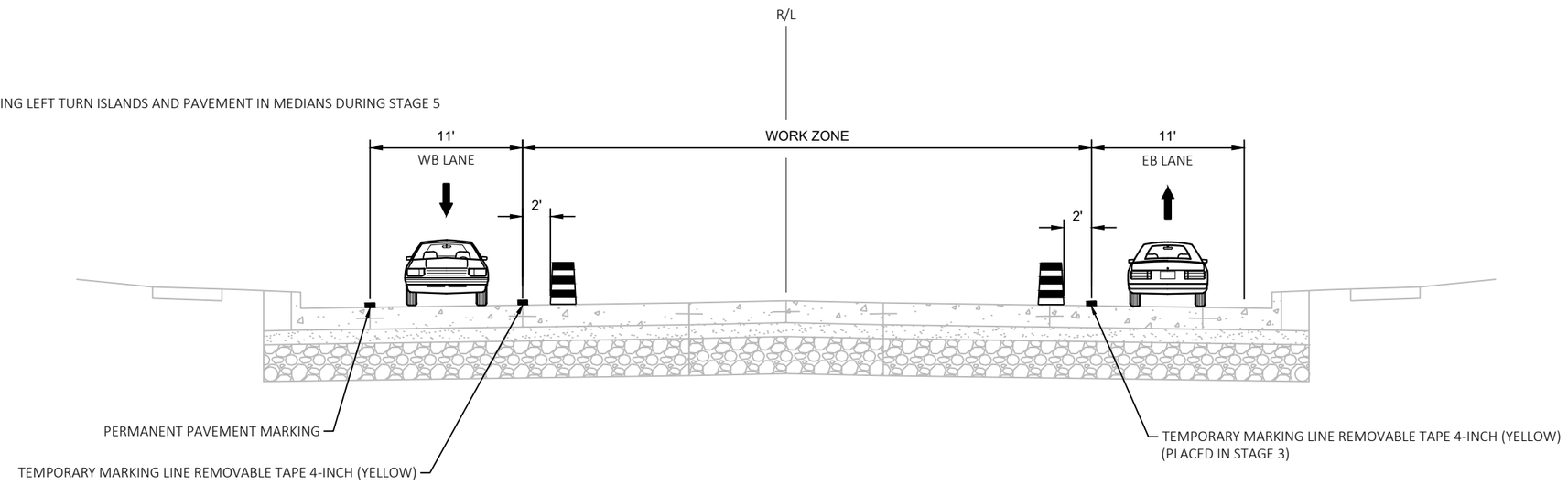

STAGE 5 TYPICAL SECTION - STH 50

STA 1016+63 - STA 1047+69

2

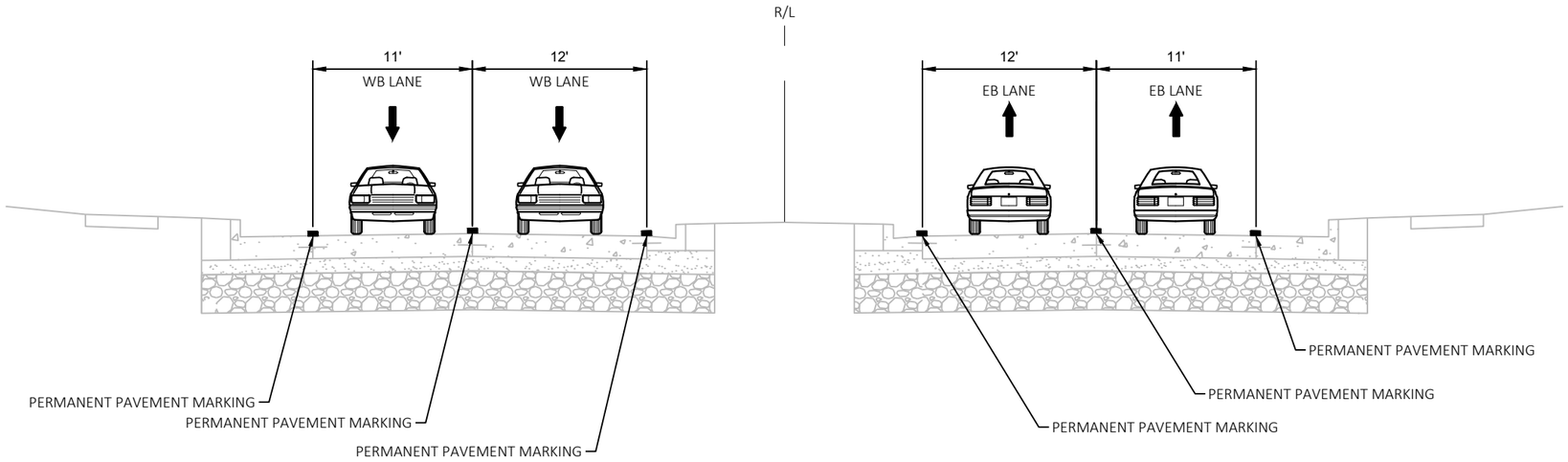

STAGE 6 TYPICAL SECTION - STH 50

CONSTRUCT PORKCHOP ISLANDS
STA 994+20 - STA 1016+63
STA 1047+69 - STA 1068+21

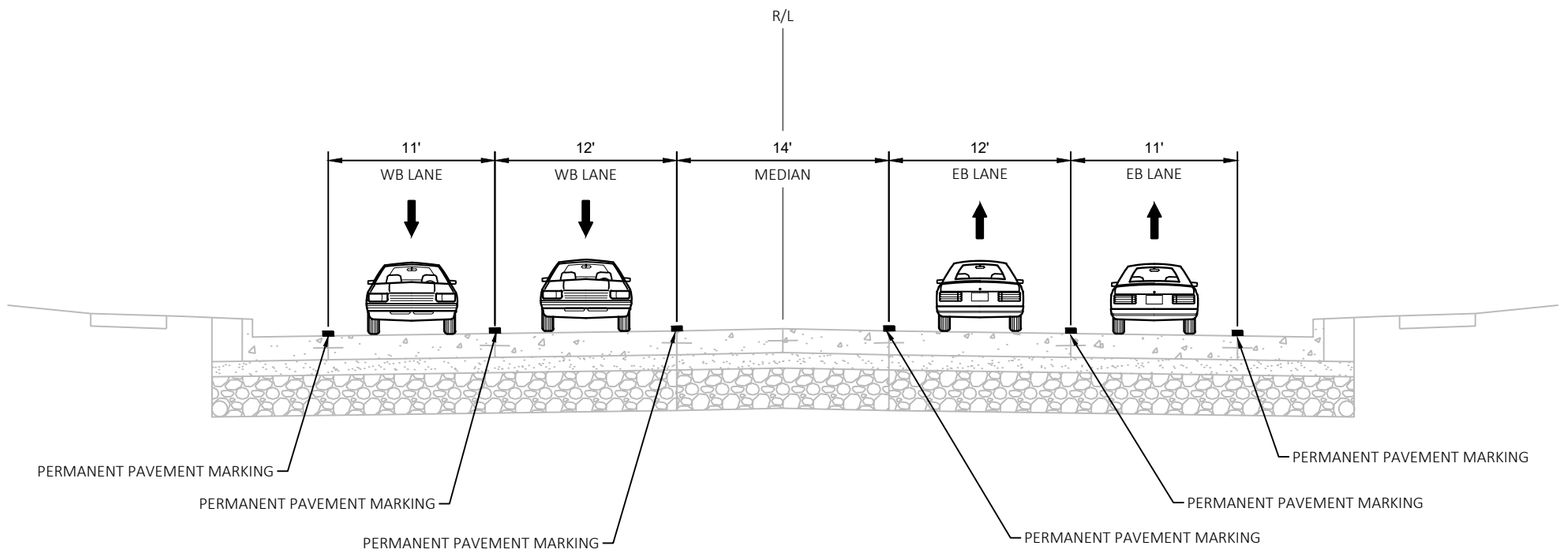

STAGE 6 TYPICAL SECTION - STH 50

STA 1016+63 - STA 1047+69

PROJECT NO: 1310-04-70	HWY: STH 50	COUNTY: KENOSHA	TRAFFIC CONTROL TYPICAL SECTIONS	SHEET 364	E

FILE NAME : T:\1182708.06\CIVIL3D\13100400\13100400\SHEETSPLAN\026000_TC.DWG
LAYOUT NAME - 026010_ts
PLOT DATE : 1/14/2022 4:23 PM
PLOT BY : BLACKWOOD, JIM
PLOT NAME :
PLOT SCALE : ##########
WISDOT/CADDS SHEET 42

2

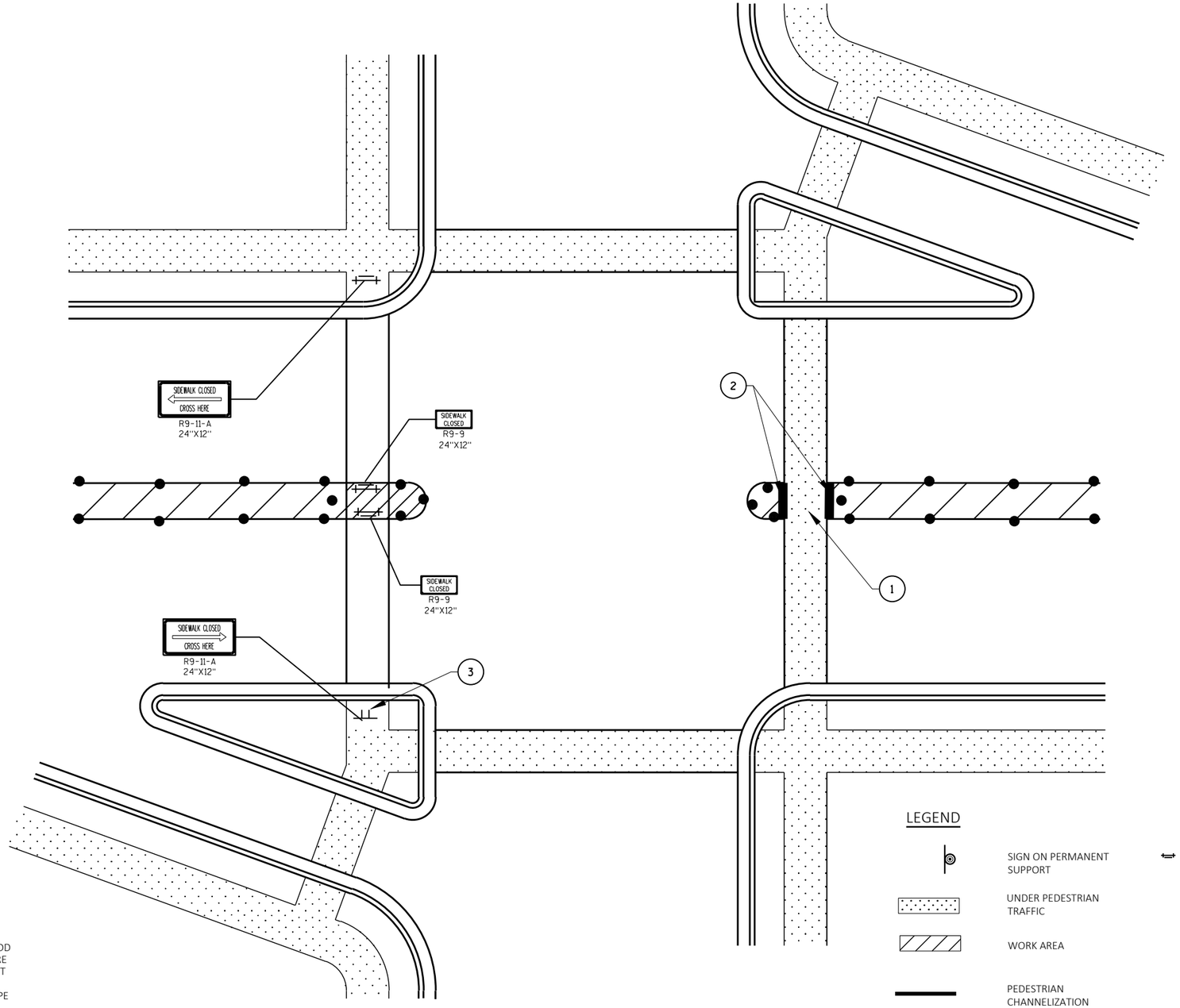

1. PROVIDE ACCESSIBLE FACILITY THROUGH WORK ZONE USING EXISTING PAVEMENT, PROPOSED SIDEWALK, OR TEMPORARY PEDESTRIAN SURFACE.
2. TEMPORARY PEDESTRIAN BARRICADES ARE REQUIRED WHEN CONSTRUCTION ACTIVITIES OR DROP OFFS OCCUR WITHIN 4 FEET OF THE EDGE OF THE PEDESTRIAN ACCESS ROUTE. SEE SDD TRAFFIC CONTROL, PEDESTRIAN ACCOMMODATION FOR MORE DETAILS. CONCRETE BARRIER TEMPORARY PRECAST SHALL NOT BE USED.
3. USE TYPE III BARRICADES FOR SIGNS WHEN POSSIBLE. USE TYPE II BARRICADES WHEN TYPE III BARRICADE WOULD CREATE A SIGHT DISTANCE HAZARD FOR DRIVERS.

MEDIAN SIDEWALK CLOSURE DETAIL

FOR USE ON ALL DIVIDED HIGHWAY CROSSINGS

2

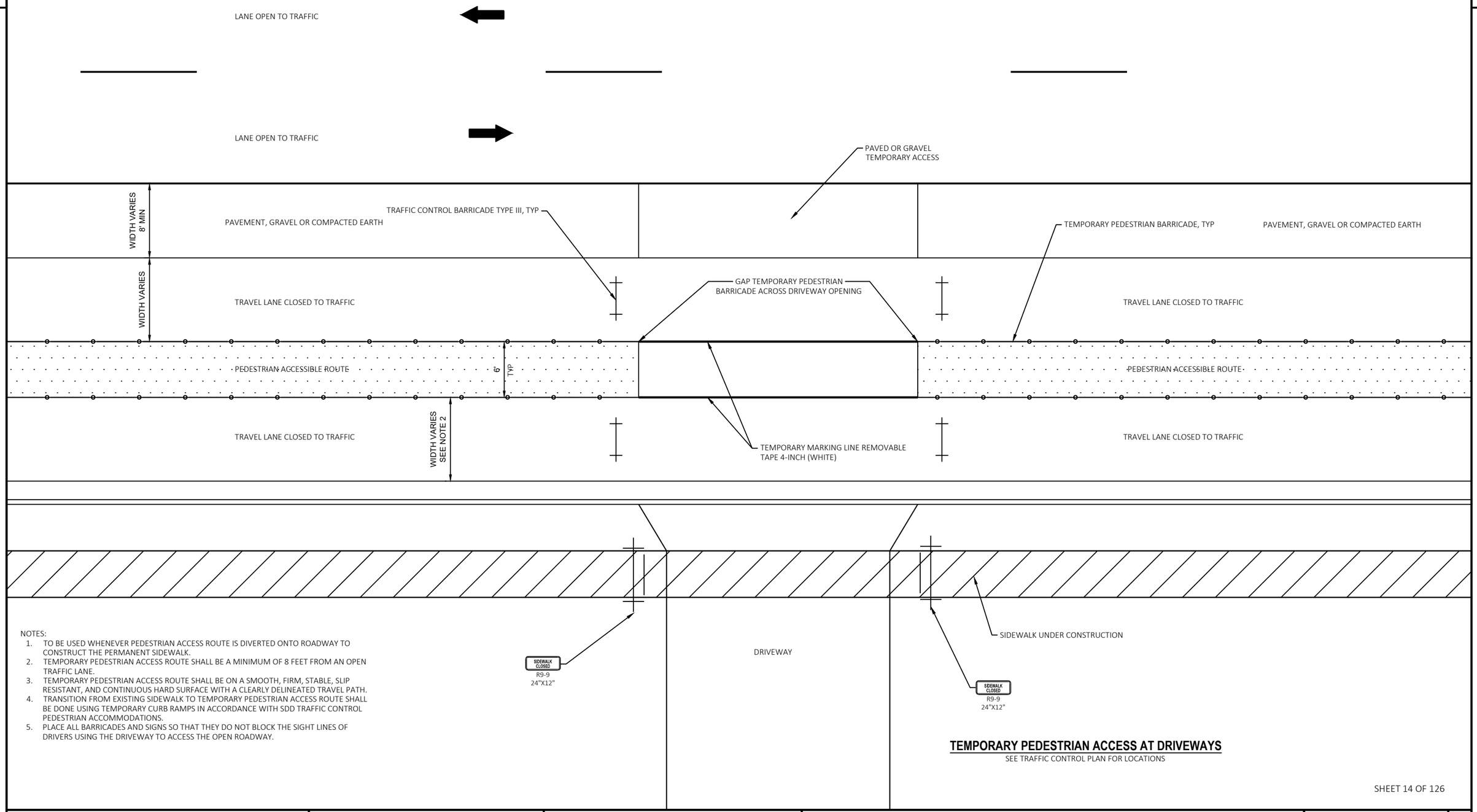

NOTES:

1. TO BE USED WHENEVER PEDESTRIAN ACCESS ROUTE IS DIVERTED ONTO ROADWAY TO CONSTRUCT THE PERMANENT SIDEWALK.
2. TEMPORARY PEDESTRIAN ACCESS ROUTE SHALL BE A MINIMUM OF 8 FEET FROM AN OPEN TRAFFIC LANE.
3. TEMPORARY PEDESTRIAN ACCESS ROUTE SHALL BE ON A SMOOTH, FIRM, STABLE, SLIP RESISTANT, AND CONTINUOUS HARD SURFACE WITH A CLEARLY DELINEATED TRAVEL PATH.
4. TRANSITION FROM EXISTING SIDEWALK TO TEMPORARY PEDESTRIAN ACCESS ROUTE SHALL BE DONE USING TEMPORARY CURB RAMPS IN ACCORDANCE WITH SDD TRAFFIC CONTROL PEDESTRIAN ACCOMMODATIONS.
5. PLACE ALL BARRICADES AND SIGNS SO THAT THEY DO NOT BLOCK THE SIGHT LINES OF DRIVERS USING THE DRIVEWAY TO ACCESS THE OPEN ROADWAY.

TEMPORARY PEDESTRIAN ACCESS AT DRIVEWAYS

SEE TRAFFIC CONTROL PLAN FOR LOCATIONS

PROJECT NO: 1310-04-70	HWY: STH 50	COUNTY: KENOSHA	TRAFFIC CONTROL DETAILS	SHEET 366	E

FILE NAME : T:\1182708.06\CIVIL3D\13100400\13100400\SHEETSPLAN\026100B-TC DETAILS.DWG
LAYOUT NAME - 01
PLOT DATE : 4/8/2022 3:38 PM
PLOT BY : BLACKWOOD, JIM
PLOT NAME :
PLOT SCALE : 1 IN:10 FT
WISDOT/CADDS SHEET 42

NOTES:
1. GAP CONSTRUCTION THROUGH INTERSECTION WHEN INTERSECTION IS OPEN TO TRAFFIC.
2. TRAFFIC SHALL BE ON A PAVED SURFACE AT ALL TIMES UNLESS OTHERWISE APPROVED BY THE ENGINEER.
3. SEE TRAFFIC CONTROL PLANS AND SPECIAL PROVISIONS FOR INTERSECTION CLOSURE RESTRICTIONS.

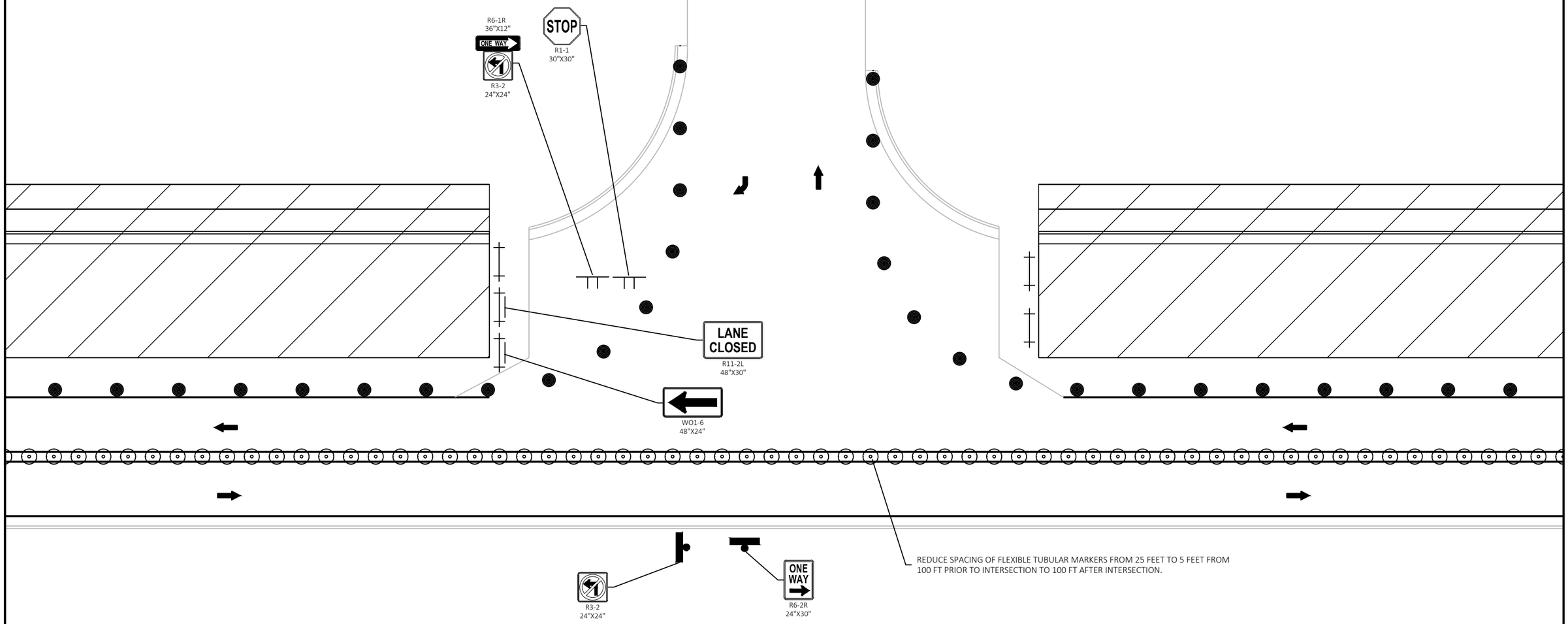

TYPICAL MINOR SIDEROAD INTERSECTION WHILE OPEN TO TRAFFIC

NOTES:
1. SEE TRAFFIC CONTROL PLANS AND SPECIAL PROVISIONS FOR INTERSECTION CLOSURE RESTRICTIONS.

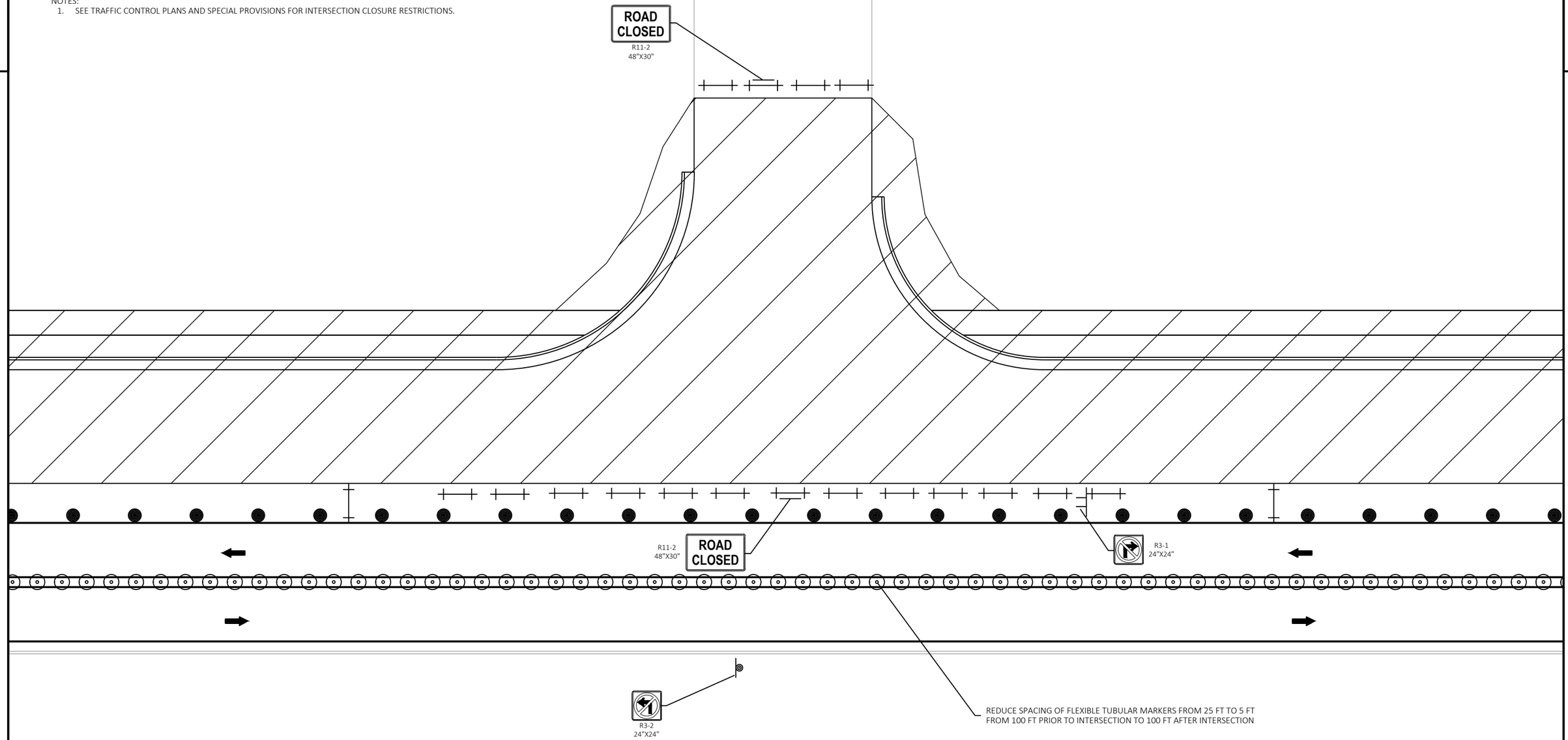

TYPICAL MINOR SIDEROAD INTERSECTION WHILE CLOSED TO TRAFFIC

SHEET 16 OF 126

PROJECT NO: 1310-04-70	HWY: STH 50	COUNTY: KENOSHA	TRAFFIC CONTROL DETAILS	SHEET 368	E

FILE NAME : T:\1182708.06\CIVIL3D\13100400\13100400\SHEETSPLAN\026100C-TC DETAILS.DWG
LAYOUT NAME - 02
PLOT DATE : 1/14/2022 4:23 PM PLOT BY : BLACKWOOD, JIM PLOT NAME : PLOT SCALE : 1 IN:20 FT

2

TRAFFIC CONTROL NOTES - STAGE 1A

CONSTRUCTION:
- TEMPORARY TRAFFIC SIGNALS (PRIOR TO OTHER STAGE 1 WORK)
- STH 50 TEMPORARY CROSSOVERS IN STH 50 MEDIAN

TRAFFIC:
- STH 50 - 1 THRU LANE IN EACH DIRECTION

PEDESTRIANS:
- SIDEWALKS AND CROSSWALKS PARALLEL TO STH 50 OPEN AT ALL TIMES

NOTE:
ALL EXISTING GROOVED MARKINGS OUTSIDE RECONSTRUCTION LIMITS SHALL BE COVERED WITH MASK OUT TAPE SO THAT MARKINGS MAY REMAIN AFTER CONSTRUCTION.

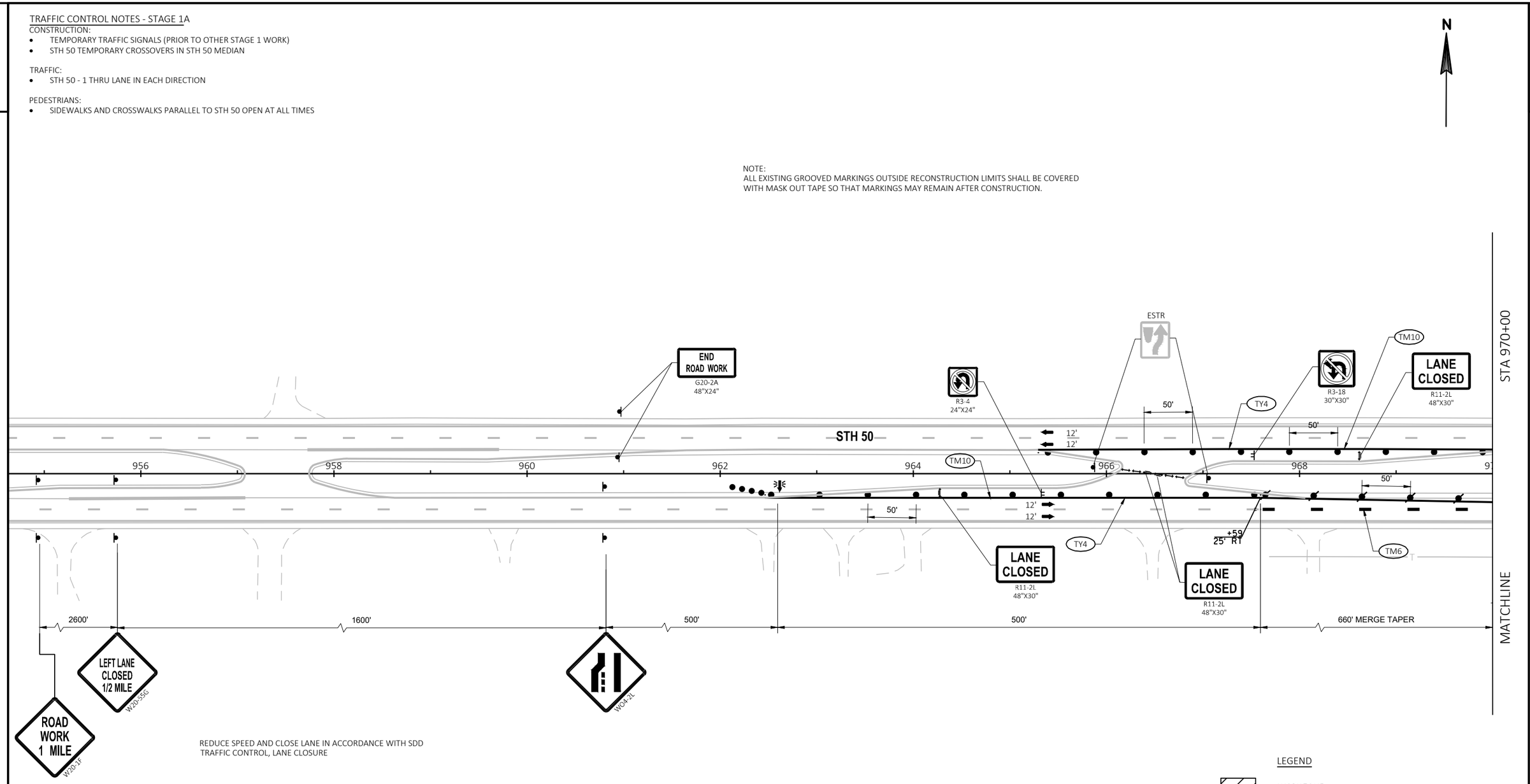

REDUCE SPEED AND CLOSE LANE IN ACCORDANCE WITH SDD TRAFFIC CONTROL, LANE CLOSURE

LEGEND

- WORK ZONE
- TEMPORARY PAVEMENT TO BE USED IN FUTURE STAGES
- WORK CONSTRUCTED UNDER TRAFFIC
- ASPHALTIC SURFACE TEMPORARY PLACED IN PREVIOUS STAGE

SHEET 17 OF 126

PROJECT NO: 1310-04-70	HWY: STH 50	COUNTY: KENOSHA	TRAFFIC CONTROL-STAGING - STAGE 1A	SHEET 369	E

FILE NAME : T:\1182708.06\CIVIL3D\13100400\13100400\SHEETSPLAN\026101_S1A.DWG
LAYOUT NAME - 01
PLOT DATE : 1/14/2022 4:24 PM PLOT BY : BLACKWOOD, JIM PLOT NAME : PLOT SCALE : 1 IN:100 FT

2

N

NOTE:
ALL EXISTING GROOVED MARKINGS OUTSIDE RECONSTRUCTION LIMITS SHALL BE COVERED WITH MASK OUT TAPE SO THAT MARKINGS MAY REMAIN AFTER CONSTRUCTION.

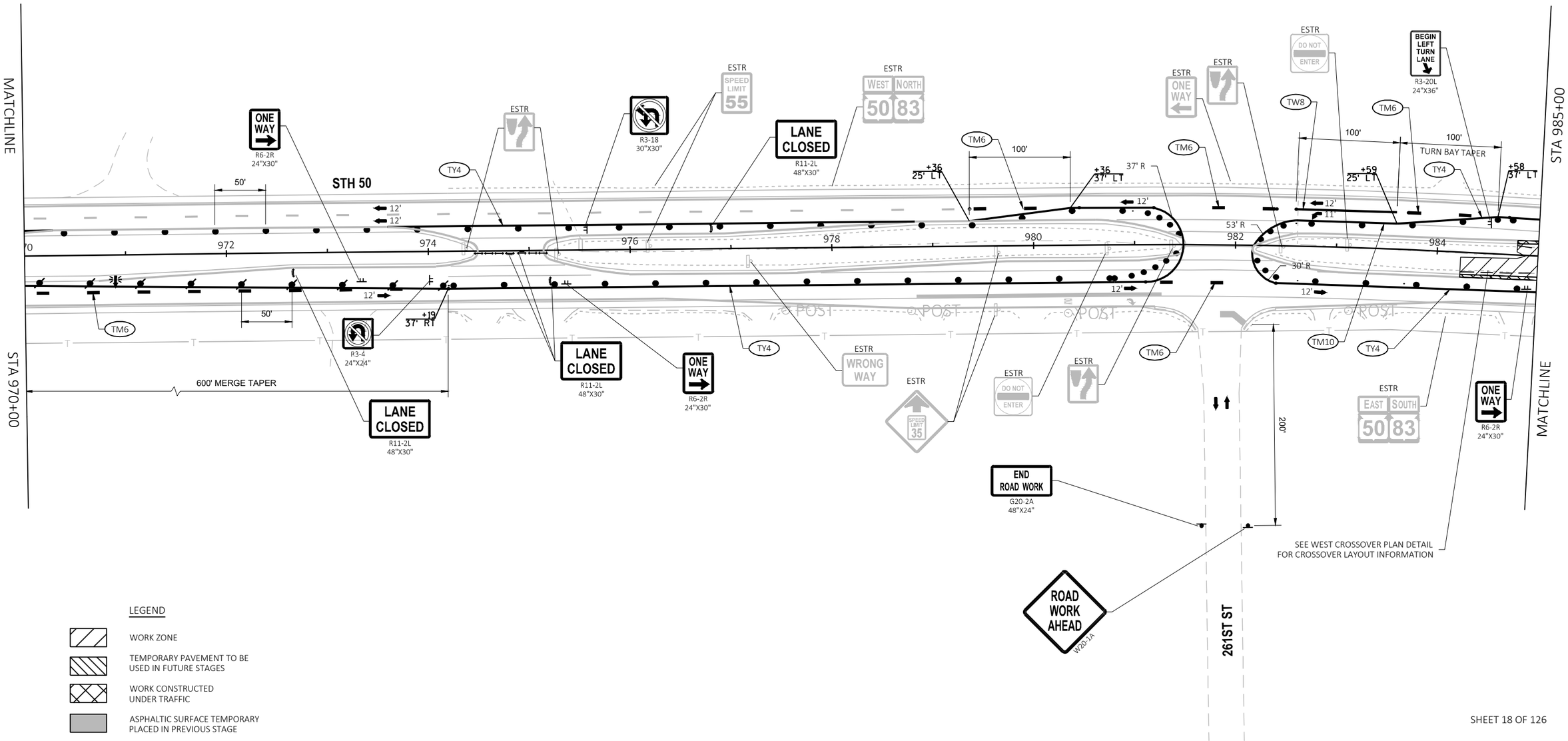

LEGEND

- WORK ZONE
- TEMPORARY PAVEMENT TO BE USED IN FUTURE STAGES
- WORK CONSTRUCTED UNDER TRAFFIC
- ASPHALTIC SURFACE TEMPORARY PLACED IN PREVIOUS STAGE

SHEET 18 OF 126

PROJECT NO: 1310-04-70	HWY: STH 50	COUNTY: KENOSHA	TRAFFIC CONTROL-STAGING - STAGE 1A	SHEET 370 E

FILE NAME : T:\1182708.06\CIVIL3D\13100400\13100400\SHEETSPLAN\026101_S1A.DWG
LAYOUT NAME - 02
PLOT DATE : 1/14/2022 4:24 PM
PLOT BY : BLACKWOOD, JIM
PLOT NAME :
PLOT SCALE : 1 IN:100 FT
WISDOT/CADDS SHEET 42

2

NOTE:
ALL EXISTING GROOVED MARKINGS OUTSIDE RECONSTRUCTION LIMITS SHALL BE COVERED WITH MASK OUT TAPE SO THAT MARKINGS MAY REMAIN AFTER CONSTRUCTION.

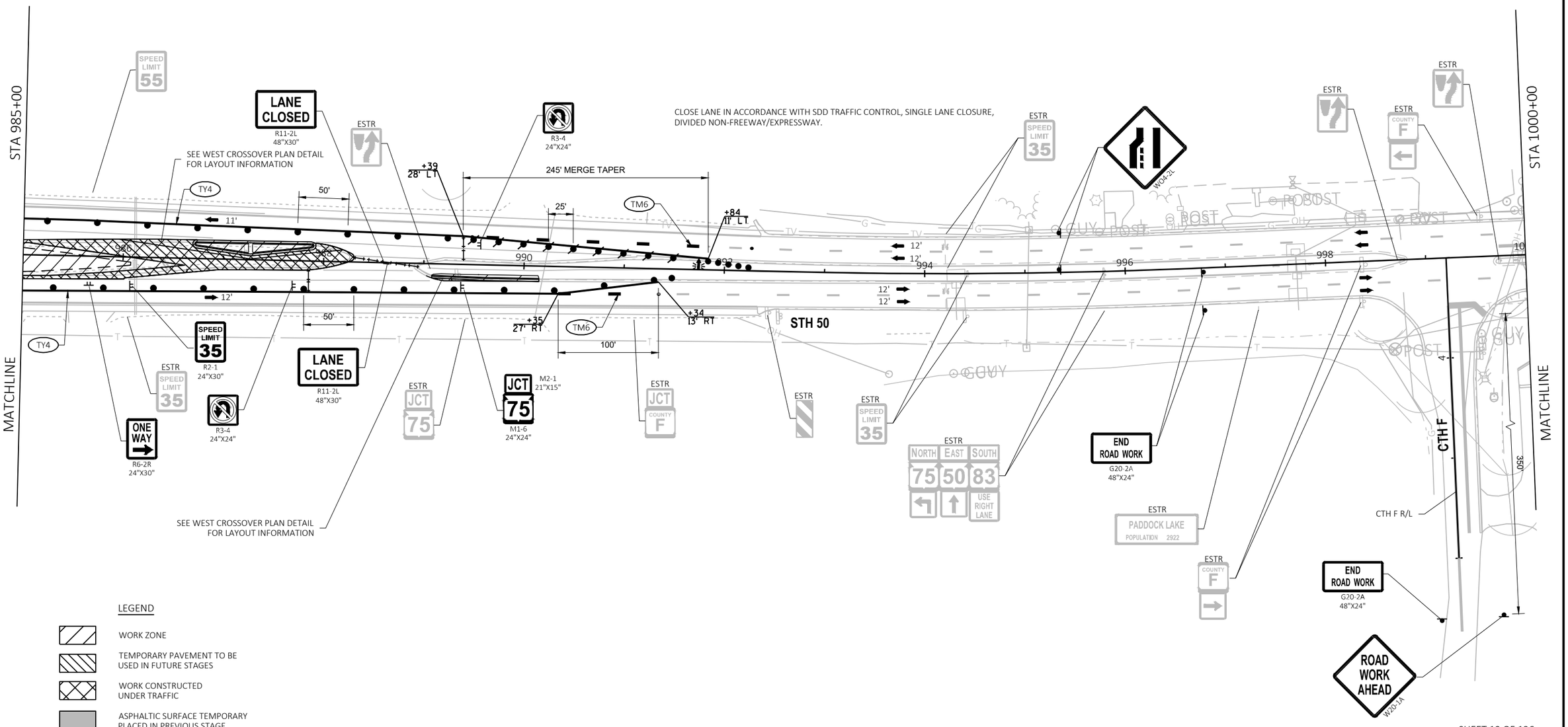

SHEET 19 OF 126

PROJECT NO: 1310-04-70	HWY: STH 50	COUNTY: KENOSHA	TRAFFIC CONTROL-STAGING - STAGE 1A	SHEET 371	E

FILE NAME : T:\1182708.06\CIVIL3D\13100400\13100400\SHEETSPLAN\026101_S1A.DWG
LAYOUT NAME - 03
PLOT DATE : 1/14/2022 4:24 PM
PLOT BY : BLACKWOOD, JIM
PLOT NAME :
PLOT SCALE : 1 IN:100 FT

2

2

LEGEND

WORK ZONE

TEMPORARY PAVEMENT TO BE USED IN FUTURE STAGES

WORK CONSTRUCTED UNDER TRAFFIC

ASPHALTIC SURFACE TEMPORARY PLACED IN PREVIOUS STAGE

N

STA 1000+00

MATCHLINE

STH 75

STH 50

STH 50

STH 83

ALL SIGNS ON STH 75 TO REMAIN DURING STAGE 1A

ALL SIGNS ON STH 50 EAST OF STH 75 TO REMAIN DURING STAGE 1A

ALL SIGNS ON STH 83 TO REMAIN DURING STAGE 1A

ESTR JCT COUNTY F

ESTR WEST 50 NORTH 83

ROAD WORK AHEAD W20-1A

ESTR SPEED LIMIT 35

LEFT LANE CLOSED AHEAD W20-5A

ESTR NO PARKING HERE TO CORNER

ESTR

ESTR DO NOT ENTER

ESTR NORTH 75

ESTR SOUTH 83

SHEET 20 OF 126

PROJECT NO: 1310-04-70	HWY: STH 50	COUNTY: KENOSHA	TRAFFIC CONTROL-STAGING - STAGE 1A	SHEET 372	E

FILE NAME : T:\1182708.06\CIVIL3D\13100400\13100400\SHEETSPLAN\026101_S1A.DWG
LAYOUT NAME - 04

PLOT DATE : 1/14/2022 4:24 PM PLOT BY : BLACKWOOD, JIM PLOT NAME : PLOT SCALE : 1 IN:100 FT

WISDOT/CADDS SHEET 42

2

2

N

74TH PL

242ND AVE

STH 50

SIGNS WEST OF STA 1054+00 NOT SHOWN TO REMAIN IN STAGE 1A

1045+00.00

1046 1048 1050 1052 1054 1056 1058

STA 1060+00

MATCHLINE

ESTR
SPEED LIMIT
35

ROAD WORK AHEAD
W20-1A

ESTR
SPEED LIMIT
35

LEGEND

- WORK ZONE
- TEMPORARY PAVEMENT TO BE USED IN FUTURE STAGES
- WORK CONSTRUCTED UNDER TRAFFIC
- ASPHALTIC SURFACE TEMPORARY PLACED IN PREVIOUS STAGE

SHEET 21 OF 126

PROJECT NO: 1310-04-70	HWY: STH 50	COUNTY: KENOSHA	TRAFFIC CONTROL-STAGING - STAGE 1A	SHEET 373	E

FILE NAME : T:\1182708.06\CIVIL3D\13100400\13100400\SHEETSPLAN\026101_S1A.DWG
LAYOUT NAME - 07

PLOT DATE : 1/14/2022 4:24 PM PLOT BY : BLACKWOOD, JIM PLOT NAME : PLOT SCALE : 1 IN:100 FT

WISDOT/CADDS SHEET 42

2

NOTE:
ALL EXISTING GROOVED MARKINGS OUTSIDE RECONSTRUCTION LIMITS SHALL BE COVERED WITH MASK OUT TAPE SO THAT MARKINGS MAY REMAIN AFTER CONSTRUCTION.

MATCHLINE

STA 1060+00

STA 1075+00

ROAD WORK AHEAD
W20-1A

END ROAD WORK
G20-2A
48"X24"

236TH AVE

200'

ESTR
STOP

END ROAD WORK
G20-2A
48"X24"

ESTR
SPEED LIMIT 35

ESTR

ESTR
SPEED LIMIT 35

ESTR

ESTR
PADDOCK LAKE
POPULATION 2,992

R3-4
24"X24"

100'

TM6

+65
12' LT

+65
26' LT

ESTR
SPEED LIMIT 35

SEE EAST CROSSOVER PLAN DETAIL FOR LAYOUT INFORMATION

50'

TM6

TY4

12'

12'
12'
12'
12'

60

1062

1064

1066

1068

1070

1072

1074

STH 50

+73
10' RT

+17
26' RT

25'

50'

TM6

ESTR

LEFT LANE CLOSED AHEAD
W20-5SA

ESTR
SPEED LIMIT 35

W04-2L

R3-4
24"X24"

LANE CLOSED
R11-2L
48"X30"

TY4

TM6

245' MERGE TAPER

ESTR
EAST
50

LANE CLOSED
R11-2L
48"X30"

CLOSE LANE IN ACCORDANCE WITH SDD TRAFFIC CONTROL, SINGLE LANE CLOSURE, DIVIDED NON-FREEWAY/EXPRESSWAY.

LEGEND

- WORK ZONE
- TEMPORARY PAVEMENT TO BE USED IN FUTURE STAGES
- WORK CONSTRUCTED UNDER TRAFFIC
- ASPHALTIC SURFACE TEMPORARY PLACED IN PREVIOUS STAGE

PROJECT NO: 1310-04-70	HWY: STH 50	COUNTY: KENOSHA	TRAFFIC CONTROL-STAGING - STAGE 1A	SHEET 374	E

FILE NAME : T:\1182708.06\CIVIL3D\13100400\13100400\SHEETSPLAN\026101_S1A.DWG
LAYOUT NAME - 08
PLOT DATE : 1/14/2022 4:24 PM
PLOT BY : BLACKWOOD, JIM
PLOT NAME :
PLOT SCALE : 1 IN:100 FT
WISDOT/CADDS SHEET 42

2

2

NOTE:
ALL EXISTING GROOVED MARKINGS OUTSIDE RECONSTRUCTION LIMITS SHALL BE COVERED WITH MASK OUT TAPE SO THAT MARKINGS MAY REMAIN AFTER CONSTRUCTION.

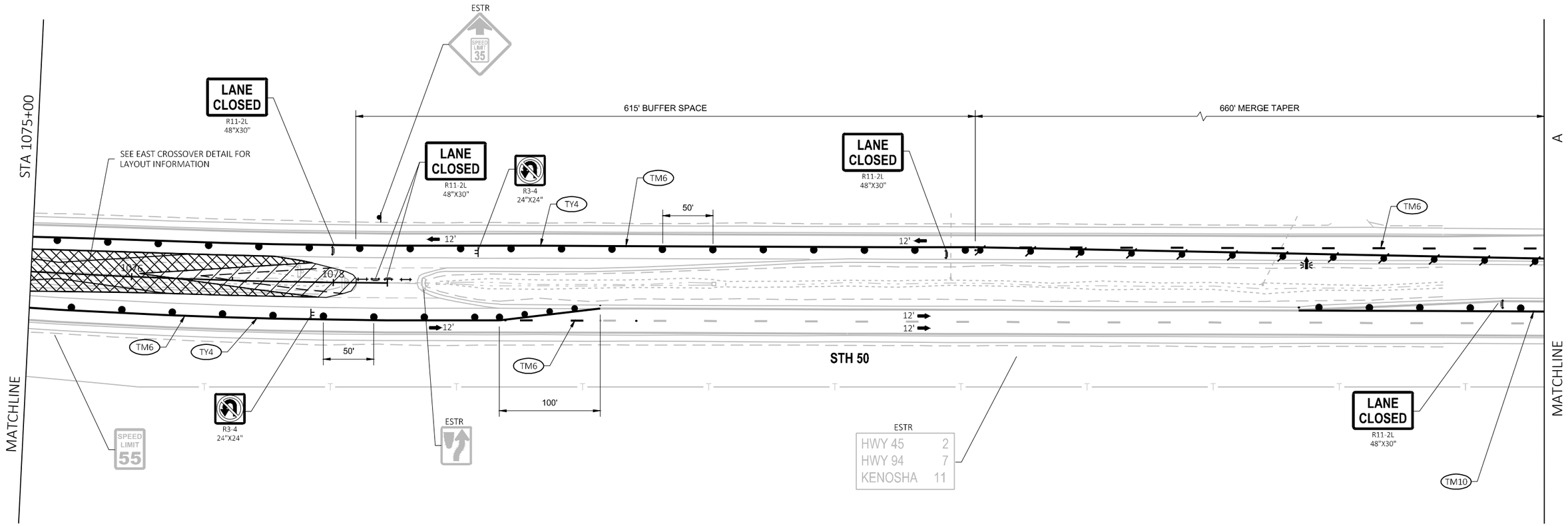

LEGEND

- WORK ZONE
- TEMPORARY PAVEMENT TO BE USED IN FUTURE STAGES
- WORK CONSTRUCTED UNDER TRAFFIC
- ASPHALTIC SURFACE TEMPORARY PLACED IN PREVIOUS STAGE

SHEET 23 OF 126

PROJECT NO: 1310-04-70	HWY: STH 50	COUNTY: KENOSHA	TRAFFIC CONTROL-STAGING - STAGE 1A	SHEET 375	E

FILE NAME : T:\1182708.06\CIVIL3D\13100400\13100400\SHEETSPLAN\026101_S1A.DWG
LAYOUT NAME - 09
PLOT DATE : 1/14/2022 4:24 PM PLOT BY : BLACKWOOD, JIM PLOT NAME : PLOT SCALE : 1 IN:100 FT

2

2

N

NOTE:
ALL EXISTING GROOVED MARKINGS OUTSIDE RECONSTRUCTION LIMITS SHALL BE COVERED WITH MASK OUT TAPE SO THAT MARKINGS MAY REMAIN AFTER CONSTRUCTION.

REDUCE SPEED AND CLOSE LANE IN ACCORDANCE WITH SDD TRAFFIC CONTROL, LANE CLOSURE.

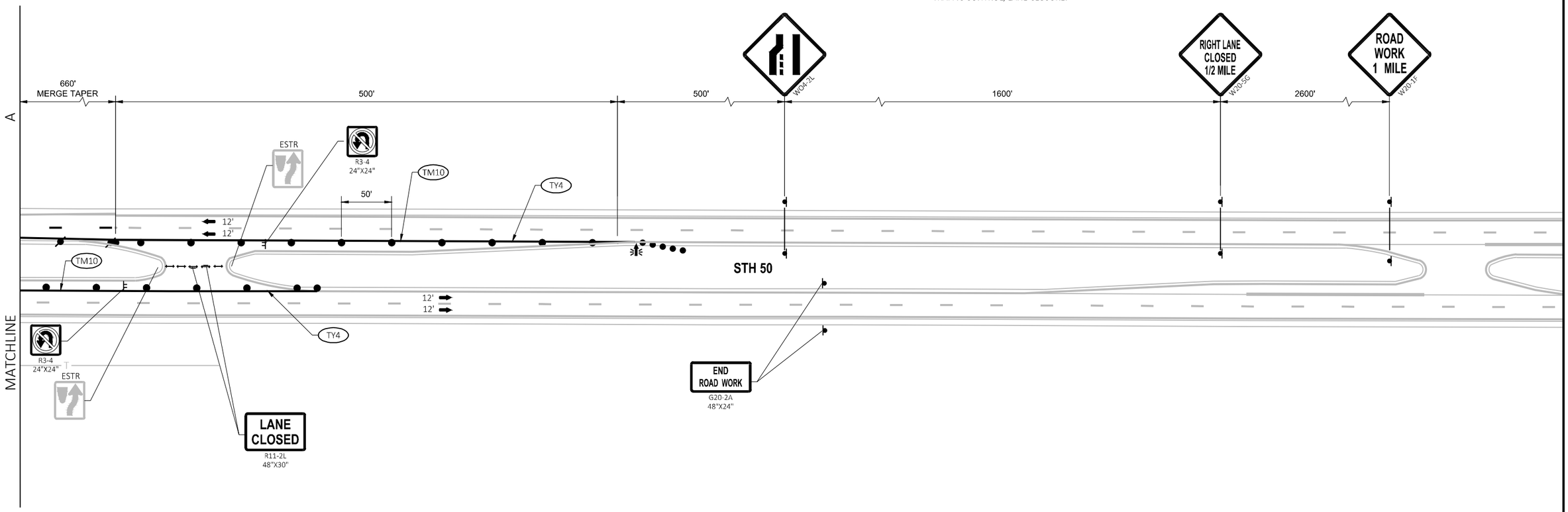

LEGEND

- WORK ZONE
- TEMPORARY PAVEMENT TO BE USED IN FUTURE STAGES
- WORK CONSTRUCTED UNDER TRAFFIC
- ASPHALTIC SURFACE TEMPORARY PLACED IN PREVIOUS STAGE

SHEET 24 OF 126

PROJECT NO: 1310-04-70	HWY: STH 50	COUNTY: KENOSHA	TRAFFIC CONTROL-STAGING - STAGE 1A	SHEET 376	E

FILE NAME : T:\1182708.06\CIVIL3D\13100400\13100400\SHEETSPLAN\026101_S1A.DWG
LAYOUT NAME - 10
PLOT DATE : 1/14/2022 4:24 PM
PLOT BY : BLACKWOOD, JIM
PLOT NAME :
PLOT SCALE : 1 IN:100 FT

2

2

N

NOTE:
REMOVE MASK OUT TAPE FROM ALL GROOVED PAVEMENT MARKINGS AND
UTILITZE GROOVED MARKINGS DURING WINTER SHUTDOWN

STH 50

970 972 974 976 978 980 982 984

ESTR SPEED LIMIT 55

ESTR WEST NORTH 50 83

ESTR ONE WAY

ESTR

ESTR DO NOT ENTER

MARKING LINE EPOXY 4-INCH (YELLOW)

25'

STA 985+00

ESTR WRONG WAY

ESTR SPEED LIMIT 35

ESTR DO NOT ENTER

ESTR

ESTR EAST SOUTH 50 83

MATCHLINE

261ST ST

LEGEND

- WORK ZONE
- TEMPORARY PAVEMENT TO BE USED IN FUTURE STAGES
- WORK CONSTRUCTED UNDER TRAFFIC
- ASPHALTIC SURFACE TEMPORARY PLACED IN PREVIOUS STAGE

SHEET 25 OF 126

PROJECT NO: 1310-04-70	HWY: STH 50	COUNTY: KENOSHA	TRAFFIC CONTROL-STAGING - WINTER SHUTDOWN	SHEET 377	E

FILE NAME : T:\1182708.06\CIVIL3D\13100400\13100400\SHEETSPLAN\026101_S1A WINTER.DWG
LAYOUT NAME - 02

PLOT DATE : 1/14/2022 4:25 PM PLOT BY : BLACKWOOD, JIM PLOT NAME : PLOT SCALE : 1 IN:100 FT

WISDOT/CADDS SHEET 42

2

NOTE:
REMOVE MASK OUT TAPE FROM ALL GROOVED PAVEMENT MARKINGS AND UTILITZE GROOVED MARKINGS DURING WINTER SHUTDOWN

N

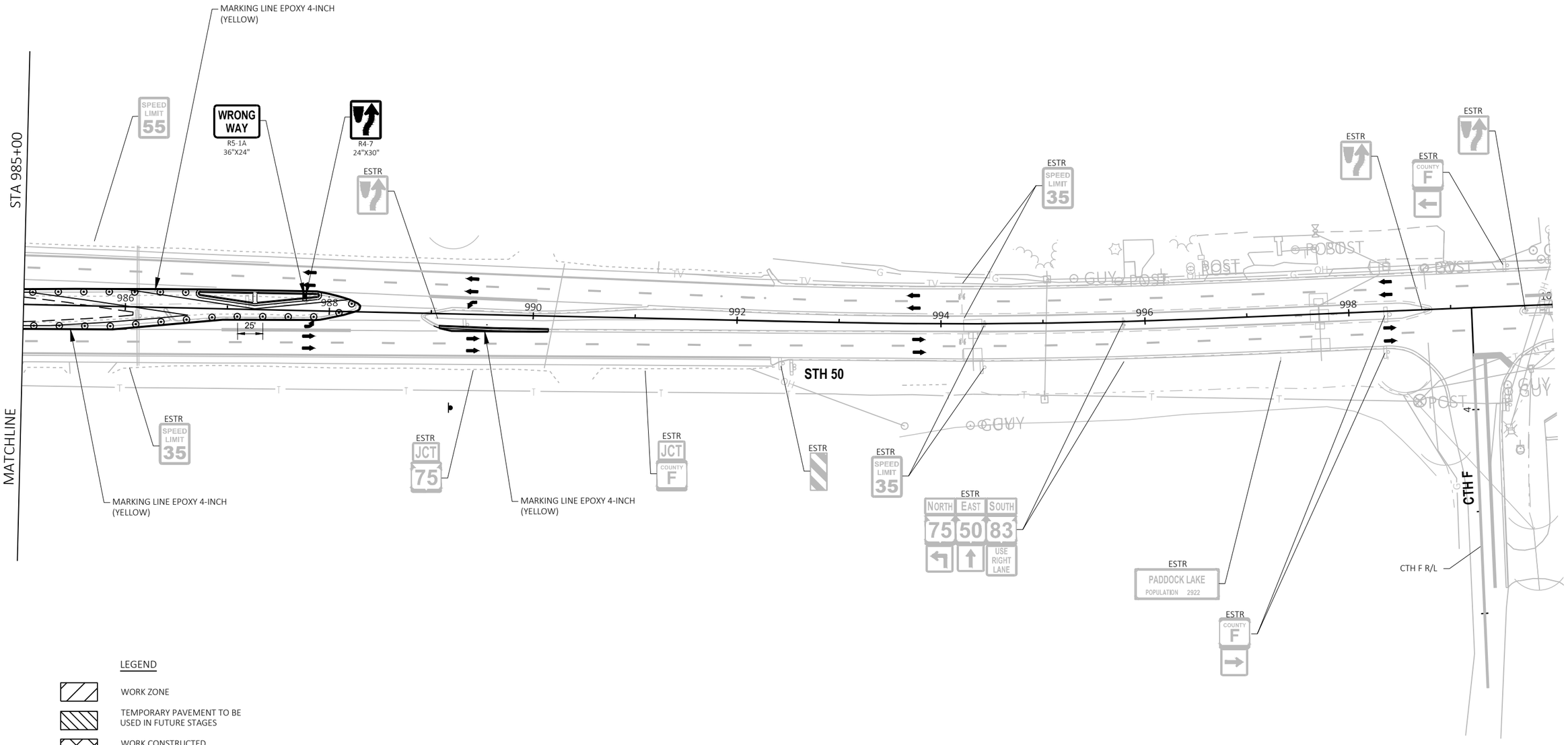

LEGEND

- WORK ZONE
- TEMPORARY PAVEMENT TO BE USED IN FUTURE STAGES
- WORK CONSTRUCTED UNDER TRAFFIC
- ASPHALTIC SURFACE TEMPORARY PLACED IN PREVIOUS STAGE

SHEET 26 OF 126

PROJECT NO: 1310-04-70	HWY: STH 50	COUNTY: KENOSHA	TRAFFIC CONTROL-STAGING - WINTER SHUTDOWN	SHEET 378	E

FILE NAME : T:\1182708.06\CIVIL3D\13100400\13100400\SHEETSPLAN\026101_S1A WINTER.DWG
LAYOUT NAME - 03
PLOT DATE : 1/14/2022 4:25 PM
PLOT BY : BLACKWOOD, JIM
PLOT NAME :
PLOT SCALE : 1 IN:100 FT

2

NOTE:
REMOVE MASK OUT TAPE FROM ALL GROOVED PAVEMENT MARKINGS AND UTILITZE GROOVED MARKINGS DURING WINTER SHUTDOWN

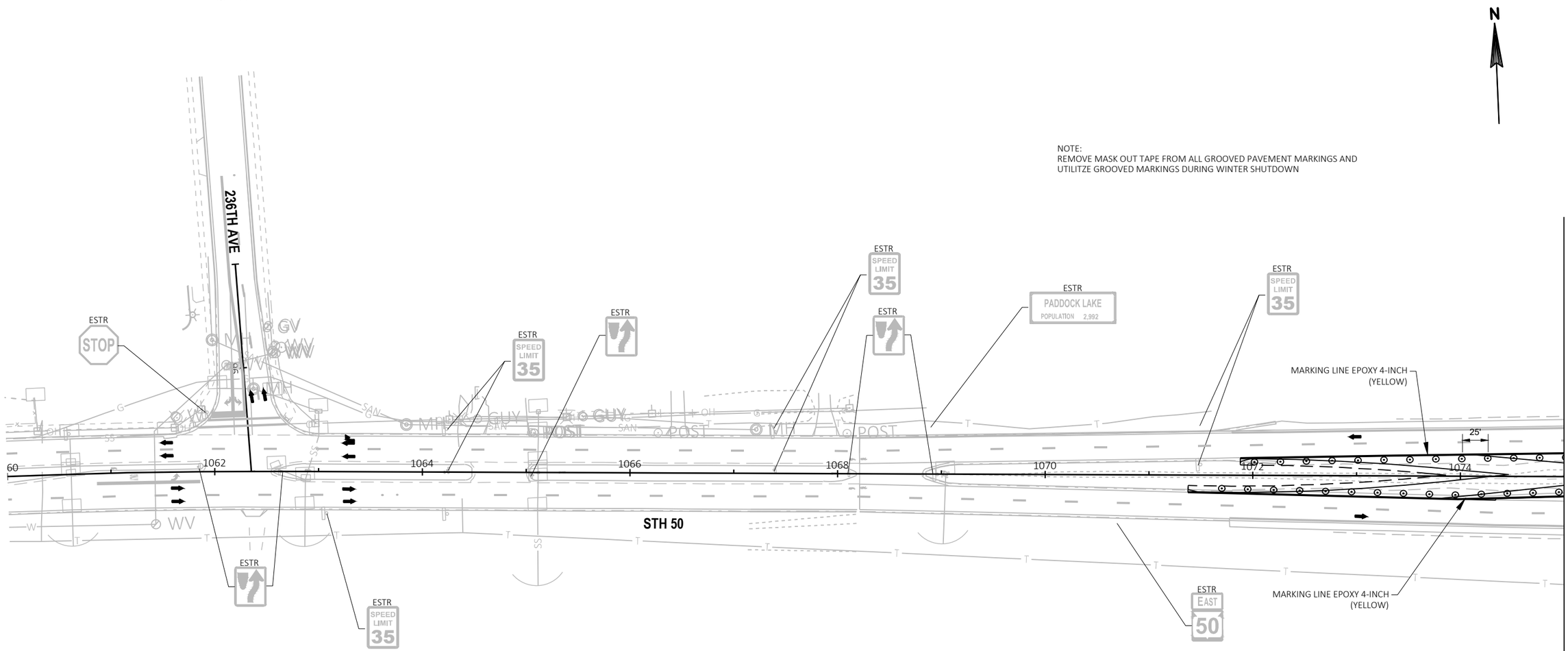

LEGEND

- WORK ZONE
- TEMPORARY PAVEMENT TO BE USED IN FUTURE STAGES
- WORK CONSTRUCTED UNDER TRAFFIC
- ASPHALTIC SURFACE TEMPORARY PLACED IN PREVIOUS STAGE

SHEET 27 OF 126

PROJECT NO: 1310-04-70	HWY: STH 50	COUNTY: KENOSHA	TRAFFIC CONTROL-STAGING - WINTER SHUTDOWN	SHEET 379	E

FILE NAME : T:\1182708.06\CIVIL3D\13100400\13100400\SHEETSPLAN\026101_S1A WINTER.DWG
LAYOUT NAME - 08
PLOT DATE : 1/14/2022 4:25 PM
PLOT BY : BLACKWOOD, JIM
PLOT NAME :
PLOT SCALE : 1 IN:100 FT
WISDOT/CADDS SHEET 42

2

2

N

NOTE:
REMOVE MASK OUT TAPE FROM ALL GROOVED PAVEMENT MARKINGS AND
UTILITZE GROOVED MARKINGS DURING WINTER SHUTDOWN

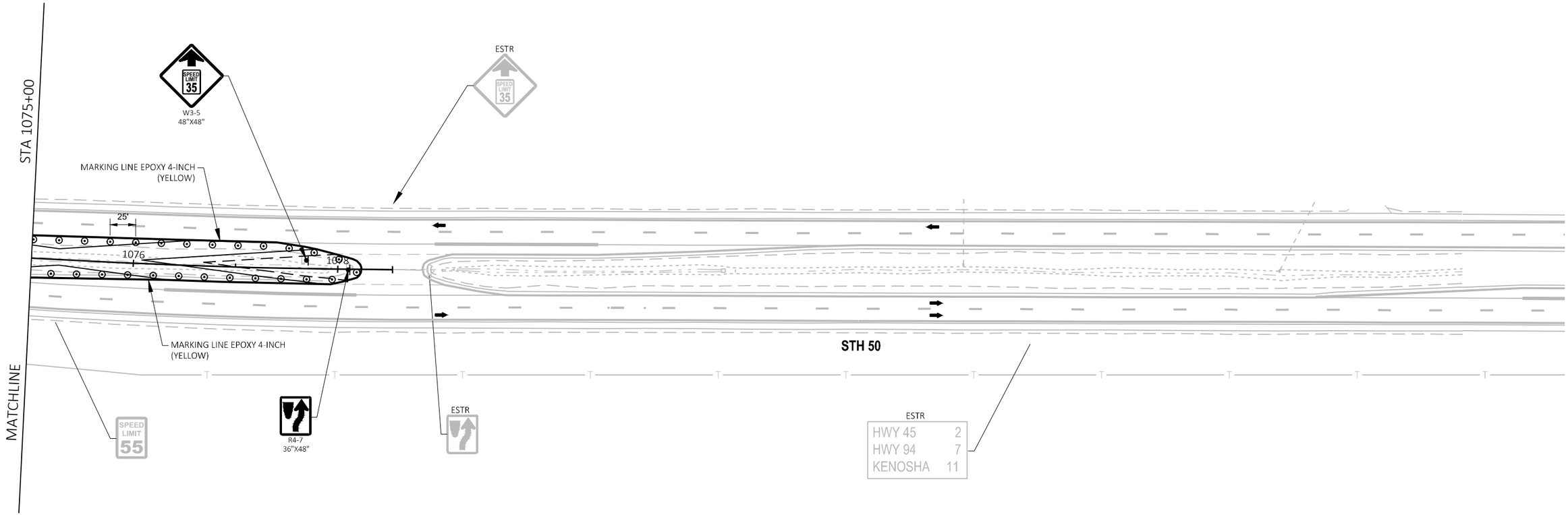

LEGEND

- WORK ZONE
- TEMPORARY PAVEMENT TO BE USED IN FUTURE STAGES
- WORK CONSTRUCTED UNDER TRAFFIC
- ASPHALTIC SURFACE TEMPORARY PLACED IN PREVIOUS STAGE

SHEET 28 OF 126

PROJECT NO: 1310-04-70	HWY: STH 50	COUNTY: KENOSHA	TRAFFIC CONTROL-STAGING - WINTER SHUTDOWN	SHEET 380	E

FILE NAME : T:\1182708.06\CIVIL3D\13100400\13100400\SHEETSPLAN\026101_S1A WINTER.DWG
LAYOUT NAME - 09
PLOT DATE : 1/14/2022 4:25 PM PLOT BY : BLACKWOOD, JIM PLOT NAME : PLOT SCALE : 1 IN:100 FT

TRAFFIC CONTROL NOTES - STAGE 1B

CONSTRUCTION:
- TEMPORARY TRAFFIC SIGNALS (PRIOR TO ALL OTHER STAGE 1B WORK)
- STH 50 TEMPORARY WIDENING IN MEDIAN

TRAFFIC:
- STH 50 - 1 THRU LANE IN EACH DIRECTION

PEDESTRIANS:
- SIDEWALKS AND CROSSWALKS PARALLEL TO STH 50 OPEN AT ALL TIMES

N

NOTE:
ALL EXISTING GROOVED MARKINGS OUTSIDE RECONSTRUCTION LIMITS SHALL BE COVERED WITH MASK OUT TAPE SO THAT MARKINGS MAY REMAIN AFTER CONSTRUCTION.

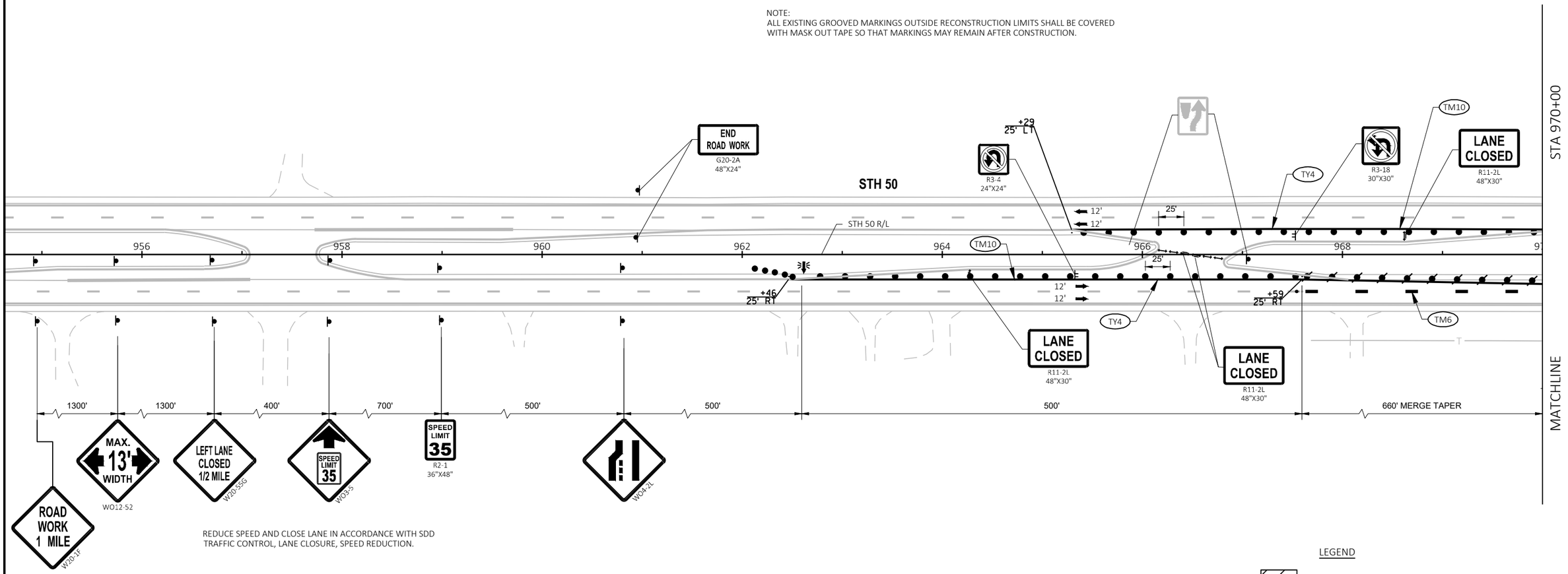

REDUCE SPEED AND CLOSE LANE IN ACCORDANCE WITH SDD TRAFFIC CONTROL, LANE CLOSURE, SPEED REDUCTION.

LEGEND

- WORK ZONE
- TEMPORARY PAVEMENT TO BE USED IN FUTURE STAGES
- WORK CONSTRUCTED UNDER TRAFFIC
- ASPHALTIC SURFACE TEMPORARY PLACED IN PREVIOUS STAGE

SHEET 29 OF 126

PROJECT NO: 1310-04-70	HWY: STH 50	COUNTY: KENOSHA	TRAFFIC CONTROL-STAGING - STAGE 1B	SHEET 381	E

FILE NAME : T:\1182708.06\CIVIL3D\13100400\13100400\SHEETSPLAN\026101_S1B.DWG
LAYOUT NAME - 01
PLOT DATE : 1/14/2022 4:25 PM
PLOT BY : BLACKWOOD, JIM
PLOT NAME :
PLOT SCALE : 1 IN:100 FT

2

N

NOTE:
ALL EXISTING GROOVED MARKINGS OUTSIDE RECONSTRUCTION LIMITS SHALL BE COVERED WITH MASK OUT TAPE SO THAT MARKINGS MAY REMAIN AFTER CONSTRUCTION.

MATCHLINE

STA 985+00

STA 970+00

MATCHLINE

ONE WAY
R6-2R
24"X30"

ESTR

R3-18
30"X30"

COVER SIGN
SPEED LIMIT
55

TM10

ESTR
WEST NORTH
50 83

LANE CLOSED
R11-2L
48"X30"

STH 50

ESTR
ONE WAY

ESTR

ESTR
DO NOT ENTER

12'
12'

25'

TY4

970 972 974 976 978 STH 50 R/L 980 982 984

TY4

TM6

12'

R3-4
24"X24"

+19
37' RT

600' MERGE TAPER

LANE CLOSED
R11-2L
48"X30"

LANE CLOSED
R11-2L
48"X30"

ONE WAY
R6-2R
24"X30"

TY4

TM6

ESTR
WRONG WAY

COVER SIGN
SPEED LIMIT
35

ESTR
DO NOT ENTER

ESTR

+10
37' RT

+39
37' RT

TM6

WO1-6
48"X24"

ESTR
EAST SOUTH
50 83

ONE WAY
R6-2R
24"X30"

END ROAD WORK
G20-2A
48"X24"

ROAD WORK AHEAD
W20-1A

261ST ST

LEGEND

- WORK ZONE
- TEMPORARY PAVEMENT TO BE USED IN FUTURE STAGES
- WORK CONSTRUCTED UNDER TRAFFIC
- ASPHALTIC SURFACE TEMPORARY PLACED IN PREVIOUS STAGE

SHEET 30 OF 126

PROJECT NO: 1310-04-70	HWY: STH 50	COUNTY: KENOSHA	TRAFFIC CONTROL-STAGING - STAGE 1B	SHEET 382	E

FILE NAME : T:\1182708.06\CIVIL3D\13100400\13100400\SHEETSPLAN\026101_S1B.DWG
LAYOUT NAME - 02

PLOT DATE : 1/14/2022 4:25 PM PLOT BY : BLACKWOOD, JIM PLOT NAME : PLOT SCALE : 1 IN:100 FT

2

NOTE:
ALL EXISTING GROOVED MARKINGS OUTSIDE RECONSTRUCTION LIMITS SHALL BE COVERED WITH MASK OUT TAPE SO THAT MARKINGS MAY REMAIN AFTER CONSTRUCTION.

N

STA 985+00

STA 1000+00

MATCHLINE

MATCHLINE

COVER SIGN

SPEED LIMIT 35

BEGIN LEFT TURN LANE
R3-20L
24"X36"

LANE CLOSED
R11-2L
48"X30"

ESTR

R3-18
30"X30"

LANE CLOSED
R11-2L
48"X30"

LANE CLOSED
R11-2L
48"X30"

TY4

TM6

ESTR

SPEED LIMIT 35

ONE WAY
R6-2R
24"X30"

ONE WAY
R6-2R
24"X30"

WO1-6
48"X24"

ONE WAY
R6-2R
24"X30"

ASPHALTIC SURFACE TEMPORARY

BOTH INLETS
REMOVE EXISTING CASTING
ADJUST INLET
INSTALL TYPE S CASTING
WITH 2'X2' ADJUSTMENT RINGS

ASPHALTIC SURFACE TEMPORARY

ESTR

COUNTY F

+71
23' LT

+71
23' LT

+69
6' RT

+74
13' LT

+76
22' RT

+72
22' RT

+46
1' LT

+39
10' LT

+21
23' LT

+20
10' LT

+12
13' LT

100'

48' R

25'

25'

12'

12'

12'

986

988

990

992

994

996

998

STH 50 R/L

STH 50

Y4

TY4

TM6

SPEED LIMIT 35
R2-1
24"X30"

ESTR
SPEED LIMIT 35

R3-18
30"X30"

ESTR
JCT 75

JCT 75
M1-6
24"X24"
M2-1
21"X15"

ESTR
JCT
COUNTY F

ESTR

ESTR
SPEED LIMIT 35

ESTR
NORTH EAST SOUTH
75 50 83
USE RIGHT LANE

ESTR
PADDOCK LAKE
POPULATION 2922

REMOVE EXISTING CASTING
ADJUST INLET
INSTALL TYPE S CASTING USING
ADJUSTMENT RINGS WITH 2'X2' OPENING

ESTR
COUNTY F

WO1-6
48"X24"

CTH F R/L

CTH F

350

END ROAD WORK
G20-2A
48"X24"

ROAD WORK AHEAD
W20-1A

LEGEND

- WORK ZONE
- TEMPORARY PAVEMENT TO BE USED IN FUTURE STAGES
- WORK CONSTRUCTED UNDER TRAFFIC
- ASPHALTIC SURFACE TEMPORARY PLACED IN PREVIOUS STAGE

SHEET 31 OF 126

PROJECT NO: 1310-04-70	HWY: STH 50	COUNTY: KENOSHA	TRAFFIC CONTROL-STAGING - STAGE 1B	SHEET 383	E

FILE NAME : T:\1182708.06\CIVIL3D\13100400\13100400\SHEETSPLAN\026101_S1B.DWG
LAYOUT NAME - 03

PLOT DATE : 1/14/2022 4:25 PM PLOT BY : BLACKWOOD, JIM PLOT NAME : PLOT SCALE : 1 IN:100 FT

2

PLACE 500 FT FROM STOP BAR

ROAD WORK AHEAD
W20-1A

PLACE 500 FT FROM STOP BAR

END ROAD WORK
G20-2A
48"X24"

LEGEND

- WORK ZONE
- TEMPORARY PAVEMENT TO BE USED IN FUTURE STAGES
- WORK CONSTRUCTED UNDER TRAFFIC
- ASPHALTIC SURFACE TEMPORARY PLACED IN PREVIOUS STAGE

N

ALL EXISTING SIGNS ON STH 75 TO REMAIN
EXISTING SIGNS NOT SHOWN

ESTR
SOUTH | NORTH | NORTH
83 | 83 | 75

WO1-6
48"X24"

ESTR
STOP

ONE WAY
R6-2R
24"X30"

ESTR
JCT
COUNTY
F

ESTR
WEST
50
NORTH
83

SEE NOTE 1

BOTH INLETS
REMOVE EXISTING CASTING
ADJUST INLET
INSTALL TYPE S CASTING
WITH 2'X2' ADJUSTMENT RINGS

STH 75 R/L

REMOVE EXISTING CASTING
ADJUST INLET
INSTALL TYPE S CASTING
WITH 2'X2' ADJUTMENT RINGS

ESTR

ESTR
SOUTH | WEST | NORTH | NORTH
83 | 50 | 83 | 75

ESTR
ONE WAY

ESTR
SPEED LIMIT
35

STA 1000+00

STA 1015+00

BEGIN LEFT TURN LANE
R3-20L
24"X36"

SEE NOTES 2 & 3

SEE NOTE 1

ASPHALTIC SURFACE TEMPORARY

SEE NOTES 2 & 3

ESTR
LAKE GENEVA
SALEM
BURLINGTON

STH 50

STH 50

STH 50 R/L

ASPHALTIC SURFACE TEMPORARY

ESTR
EAST
50

BEGIN LEFT TURN LANE
R3-20L
24"X36"

WO1-6
48"X24"

ESTR
SPEED LIMIT
35

MATCHLINE

MATCHLINE

ONE WAY
R6-2R
24"X30"

BEGIN LEFT TURN LANE
R3-20L
24"X36"

ESTR
DO NOT ENTER

ESTR
NORTH
75
M3-1
24"X12"
M1-6
24"X24"
M6-1
21"X21"

ESTR
SOUTH
83

REMOVE EXISTING CASTING
ADJUST INLET
INSTALL TYPE S CASTING
WITH 2'X2' ADJUSTMENT RINGS

SEE NOTE 1

ESTR
SPEED LIMIT
35

BEGIN LEFT TURN LANE
R3-20L
24"X36"

STH 75

STH 83

ALL EXISTING SIGNS ON STH 83 TO REMAIN
EXISTING SIGNS NOT SHOWN

STH 83 R/L

PLACE 500 FT FROM STOP BAR

ROAD WORK AHEAD
W20-1A

PLACE 500 FT FROM STOP BAR

END ROAD WORK
G20-2A
48"X24"

NOTES:

1. REMOVE ISLAND AND PLACE ASPHALTIC SURFACE TEMPORARY DURING ONE NIGHT USING A FULL CLOSURE OF STH 50 AND A SINGLE LANE CLOSURE ON STH 75 & STH 83.
2. ALTERNATE CLOSURE OF CROSSWALK ACROSS STH 50. SEE CONSTRUCTION DETAIL.
3. REMOVE MEDIAN AND MEDIAN CURB & GUTTER AND PLACE ASPHALTIC SURFACE TEMPORARY DURING ONE NIGHT USING A FULL CLOSURE OF STH 50 AND SINGLE LANE CLOSURE ON STH 75 & STH 83.

SHEET 32 OF 126

PROJECT NO: 1310-04-70	HWY: STH 50	COUNTY: KENOSHA	TRAFFIC CONTROL-STAGING - STAGE 1B	SHEET 384	E

FILE NAME : T:\1182708.06\CIVIL3D\13100400\13100400\SHEETSPLAN\026101_S1B.DWG
LAYOUT NAME - 04

PLOT DATE : 1/14/2022 4:25 PM PLOT BY : BLACKWOOD, JIM PLOT NAME : PLOT SCALE : 1 IN:100 FT

2

N

STA 1015+00

STA 1030+00

MATCHLINE

MATCHLINE

ROAD WORK AHEAD W20-1A

250TH AVE

END ROAD WORK G20-2A 48"X24"

250TH AVE R/L

ESTR JCT 75 83

ESTR STOP

ESTR SPEED LIMIT 25

ESTR SPEED LIMIT 35 END SCHOOL ZONE

ONE WAY R6-2R 24"X30"

WO1-6 48"X24"

Y4

+88 21' LT

+73 21' LT

25'

11'

STH 50 R/L

1016

1018

1020

1022

1024

1026

1028

STH 50

10'

11'

+00 20' RT

+88 9' RT

+88 8' RT

+73 19' RT

W8

ONE WAY R6-2R 24"X30"

WO1-6 48"X24"

ESTR AHEAD

ESTR SCHOOL SPEED LIMIT 25 WHEN CHILDREN ARE PRESENT

INSTALL STORM SEWER ACROSS WB LANES AND ALONG CURB LINE USING A OVERNIGHT CLOSURE OF WB STH 50.

ROAD WORK AHEAD W20-1A

ESTR SPEED LIMIT 35

ESTR STOP

+12 20' LT

WO1-6 48"X24"

ONE WAY R6-2R 24"X30"

ASPH SURF TEMP

ASPHALTIC CURB

ASPH SURF TEMP

BEGIN LEFT TURN LANE R3-20L 24"X36"

+15 19' RT

+03 8' RT

W8

+12 9' RT

ESTR

ESTR STOP

HIGH SCHOOL WEST DRIVEWAY R/L

HIGH SCHOOL WEST DRIVEWAY

248TH AVE

END ROAD WORK G20-2A 48"X24"

248TH AVE R/L

ASPHALTIC SURFACE TEMPORARY

+15 20' LT

ESTR

ESTR

ONE WAY R6-2R 24"X30"

Y4

+16 19' RT

ESTR

WO1-6 48"X24"

ESTR R3-2 24"X24"

LEGEND

WORK ZONE

TEMPORARY PAVEMENT TO BE USED IN FUTURE STAGES

WORK CONSTRUCTED UNDER TRAFFIC

ASPHALTIC SURFACE TEMPORARY PLACED IN PREVIOUS STAGE

SHEET 33 OF 126

PROJECT NO: 1310-04-70	HWY: STH 50	COUNTY: KENOSHA	TRAFFIC CONTROL-STAGING - STAGE 1B	SHEET 385	E

FILE NAME : T:\1182708.06\CIVIL3D\13100400\13100400\SHEETSPLAN\026101_S1B.DWG
LAYOUT NAME - 05

PLOT DATE : 1/14/2022 4:26 PM PLOT BY : BLACKWOOD, JIM PLOT NAME : PLOT SCALE : 1 IN:100 FT

WISDOT/CADDS SHEET 42

2

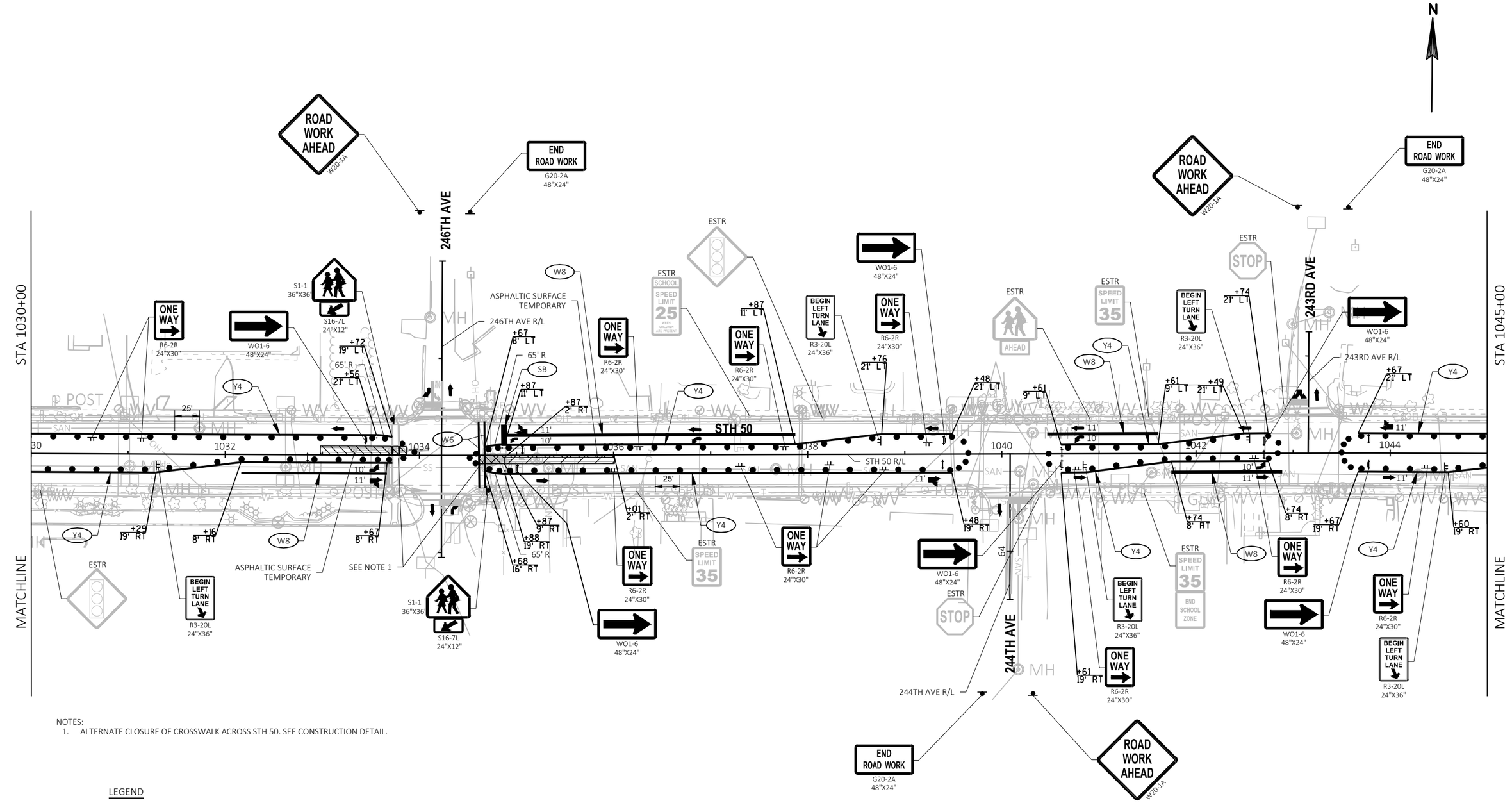

NOTES:
1. ALTERNATE CLOSURE OF CROSSWALK ACROSS STH 50. SEE CONSTRUCTION DETAIL.

LEGEND

- WORK ZONE
- TEMPORARY PAVEMENT TO BE USED IN FUTURE STAGES
- WORK CONSTRUCTED UNDER TRAFFIC
- ASPHALTIC SURFACE TEMPORARY PLACED IN PREVIOUS STAGE

SHEET 34 OF 126

PROJECT NO: 1310-04-70	HWY: STH 50	COUNTY: KENOSHA	TRAFFIC CONTROL-STAGING - STAGE 1B	SHEET 386	E

FILE NAME : T:\1182708.06\CIVIL3D\13100400\13100400\SHEETSPLAN\026101_S1B.DWG
LAYOUT NAME - 06
PLOT DATE : 1/14/2022 4:26 PM
PLOT BY : BLACKWOOD, JIM
PLOT NAME :
PLOT SCALE : 1 IN:100 FT
WISDOT/CADDS SHEET 42

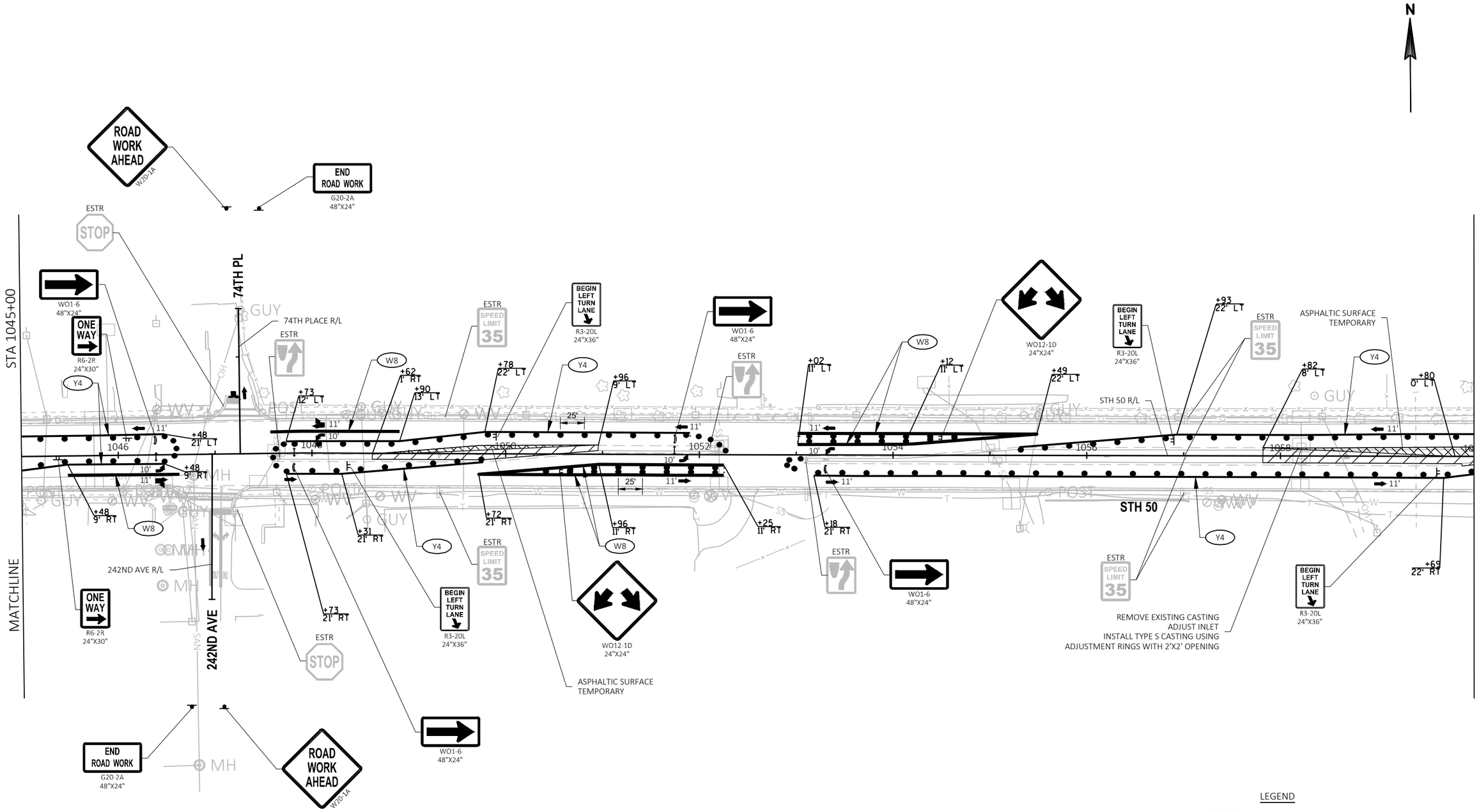

SHEET 35 OF 126

PROJECT NO: 1310-04-70	HWY: STH 50	COUNTY: KENOSHA	TRAFFIC CONTROL-STAGING - STAGE 1B	SHEET 387	E

FILE NAME : T:\1182708.06\CIVIL3D\13100400\13100400\SHEETSPLAN\026101_S1B.DWG
LAYOUT NAME - 07
PLOT DATE : 1/14/2022 4:26 PM
PLOT BY : BLACKWOOD, JIM
PLOT NAME :
PLOT SCALE : 1 IN:100 FT
WISDOT/CADDS SHEET 42

2

NOTE:
ALL EXISTING GROOVED MARKINGS OUTSIDE RECONSTRUCTION LIMITS SHALL BE COVERED WITH MASK OUT TAPE SO THAT MARKINGS MAY REMAIN AFTER CONSTRUCTION.

N

STA 1060+00

STA 1075+00

MATCHLINE

MATCHLINE

ROAD WORK AHEAD
W20-1A

END ROAD WORK
G20-2A
48"X24"

236TH AVE

236TH AVE R/L

REMOVE EXISTING CASTING
ADJUST INLET
INSTALL TYPE S CASTING USING
ADJUSTMENT RINGS WITH 2'X2' OPENING

ASPHALTIC SURFACE
TEMPORARY

ONE WAY
R6-2R
24"X30"

LANE CLOSED
R11-2L
48"X30"

ESTR
STOP

ESTR
SPEED LIMIT 35

ESTR

R3-4
24"X24"

ESTR
PADDOCK LAKE
POPULATION 2,992

TM6

TY4

Y4

W8

WO1-6
48"X24"

+82
23' LT

+70
23' LT

+83
0' LT

+47
8' LT

+84
0' LT

+57
11' RT

+82
11' RT

+69
22' RT

+04
22' RT

+04
10' RT

11'

10'

12'

25'

100'

1062

1064

1066

1068

1070

1072

1074

STH 50 R/L

STH 50

EAST CROSSOVER
CONSTRUCTED IN STAGE 1A

ASPHALTIC SURFACE
TEMPORARY

BOTH INLETS
REMOVE EXISTING CASTING
ADJUST INLET
INSTALL TYPE S CASTING USING
ADJUSTMENT RINGS WITH 2'X2' OPENING

R3-18
30"X30"

ESTR
EAST
50

LEGEND

- WORK ZONE
- TEMPORARY PAVEMENT TO BE USED IN FUTURE STAGES
- WORK CONSTRUCTED UNDER TRAFFIC
- ASPHALTIC SURFACE TEMPORARY PLACED IN PREVIOUS STAGE

SHEET 36 OF 126

PROJECT NO: 1310-04-70	HWY: STH 50	COUNTY: KENOSHA	TRAFFIC CONTROL-STAGING - STAGE 1B	SHEET 388	E

FILE NAME : T:\1182708.06\CIVIL3D\13100400\13100400\SHEETSPLAN\026101_S1B.DWG
LAYOUT NAME - 08

PLOT DATE : 1/14/2022 4:26 PM PLOT BY : BLACKWOOD, JIM PLOT NAME : PLOT SCALE : 1 IN:100 FT

2

N

NOTE:
ALL EXISTING GROOVED MARKINGS OUTSIDE RECONSTRUCTION LIMITS SHALL BE COVERED WITH MASK OUT TAPE SO THAT MARKINGS MAY REMAIN AFTER CONSTRUCTION.

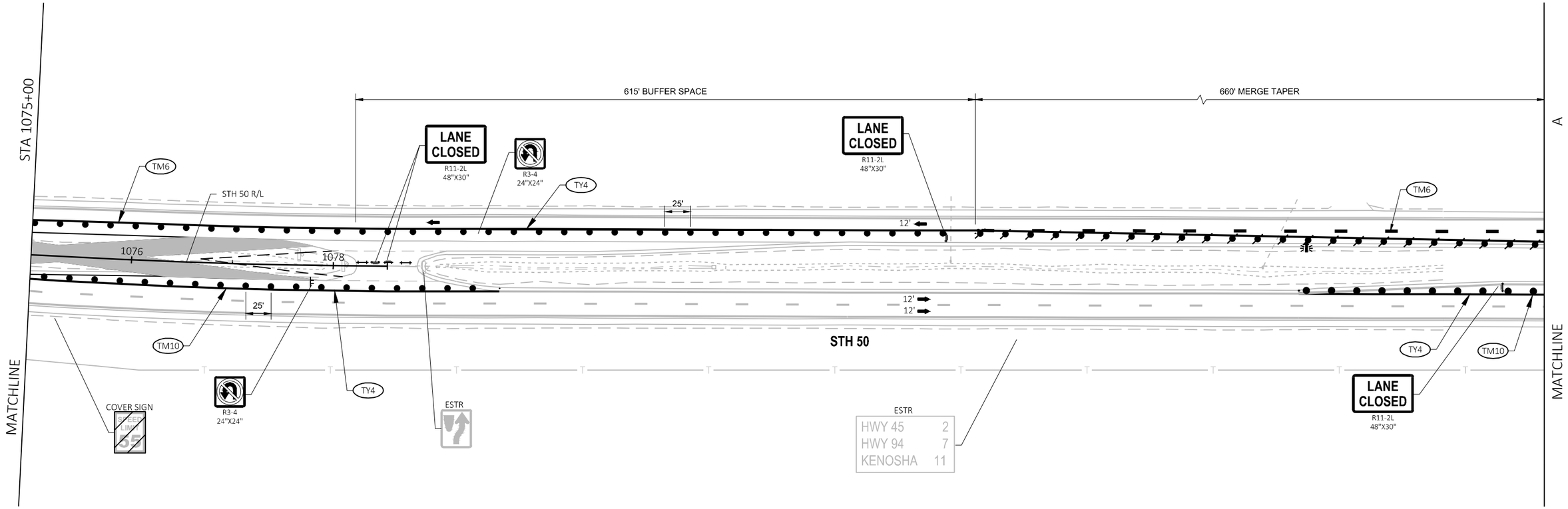

LEGEND

- WORK ZONE
- TEMPORARY PAVEMENT TO BE USED IN FUTURE STAGES
- WORK CONSTRUCTED UNDER TRAFFIC
- ASPHALTIC SURFACE TEMPORARY PLACED IN PREVIOUS STAGE

SHEET 37 OF 126

PROJECT NO: 1310-04-70	HWY: STH 50	COUNTY: KENOSHA	TRAFFIC CONTROL-STAGING - STAGE 1B	SHEET 389	E

2

NOTE:
ALL EXISTING GROOVED MARKINGS OUTSIDE RECONSTRUCTION LIMITS SHALL BE COVERED WITH MASK OUT TAPE SO THAT MARKINGS MAY REMAIN AFTER CONSTRUCTION.

N

REDUCE SPEED AND CLOSE LANE IN ACCORDANCE WITH SDD TRAFFIC CONTROL, LANE CLOSURE, SPEED REDUCTION.

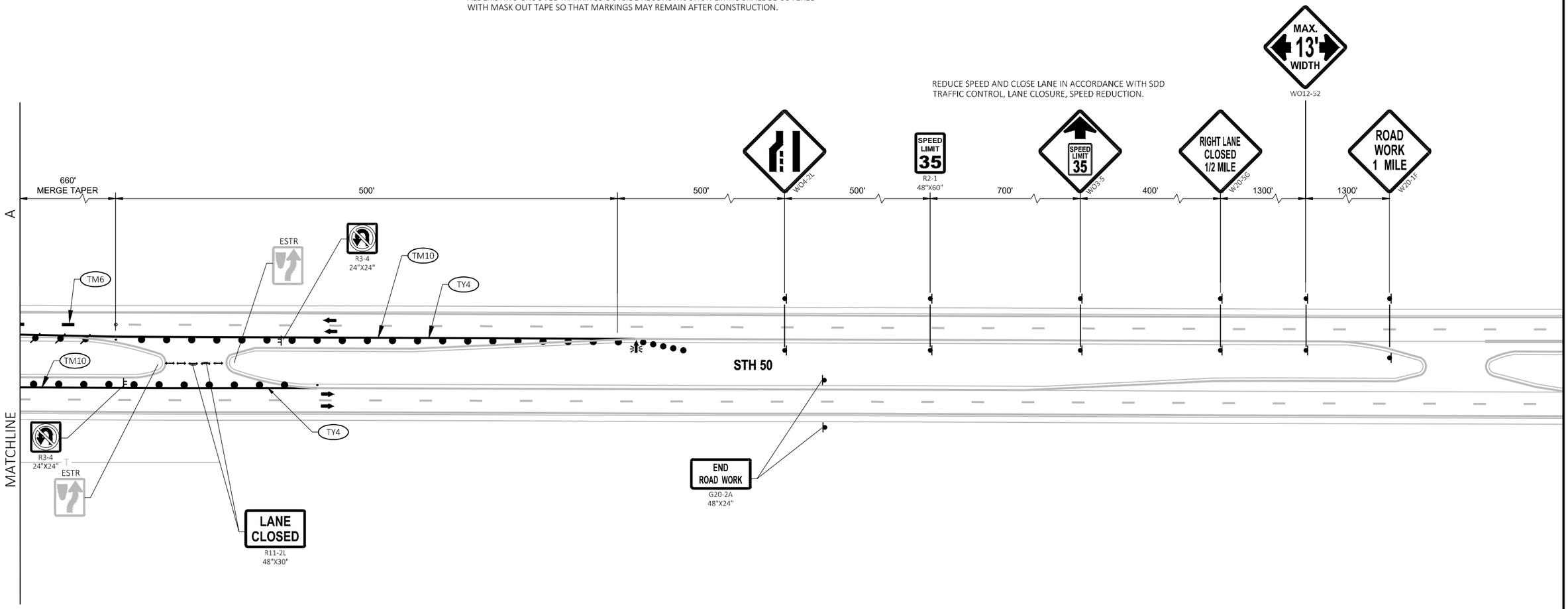

LEGEND

- WORK ZONE
- TEMPORARY PAVEMENT TO BE USED IN FUTURE STAGES
- WORK CONSTRUCTED UNDER TRAFFIC
- ASPHALTIC SURFACE TEMPORARY PLACED IN PREVIOUS STAGE

SHEET 38 OF 126

PROJECT NO: 1310-04-70	HWY: STH 50	COUNTY: KENOSHA	TRAFFIC CONTROL-STAGING - STAGE 1B	SHEET 390	E

FILE NAME : T:\1182708.06\CIVIL3D\13100400\13100400\SHEETSPLAN\026101_S1B.DWG
LAYOUT NAME - 10
PLOT DATE : 1/14/2022 4:26 PM
PLOT BY : BLACKWOOD, JIM
PLOT NAME :
PLOT SCALE : 1 IN:100 FT

TRAFFIC CONTROL NOTES - STAGE 2A/2B

CONSTRUCTION:
- EASTBOUND STH 50
- BEGIN CONSTRUCTION STH 83 SOUTH OF STH 50 IN STAGE 2A
- FINISH CONSTRUCTION OF STH 83 SOUTH OF STH 50 IN STAGE 2B

TRAFFIC:
- STH 50 - 1 THRU LANE IN EACH DIRECTION
- STH 75 - 1 THRU LANE IN EACH DIRECTION
- STH 83 - 1 THRU LANE IN EACH DIRECTION STAGE 2A
- STH 83 - FULL CLOSURES STAGE 2B

PEDESTRIANS:
- SIDEWALKS AND CROSSWALKS ON SOUTH SIDE OF STH 50 PARALLEL TO STH 50 CLOSED AT ALL TIMES
- SIDEWALKS AND CROSSWALKS ON NORTH SIDE OF STH 50 PARALLEL TO STH 50 OPEN AT ALL TIMES
- SIDEWALKS ON BOTH SIDES OF STH 75 & STH 83 OPEN STAGE 2A
- SIDEWALK ON EAST SIDE OF STH 83 OPEN DURING STAGE 2B

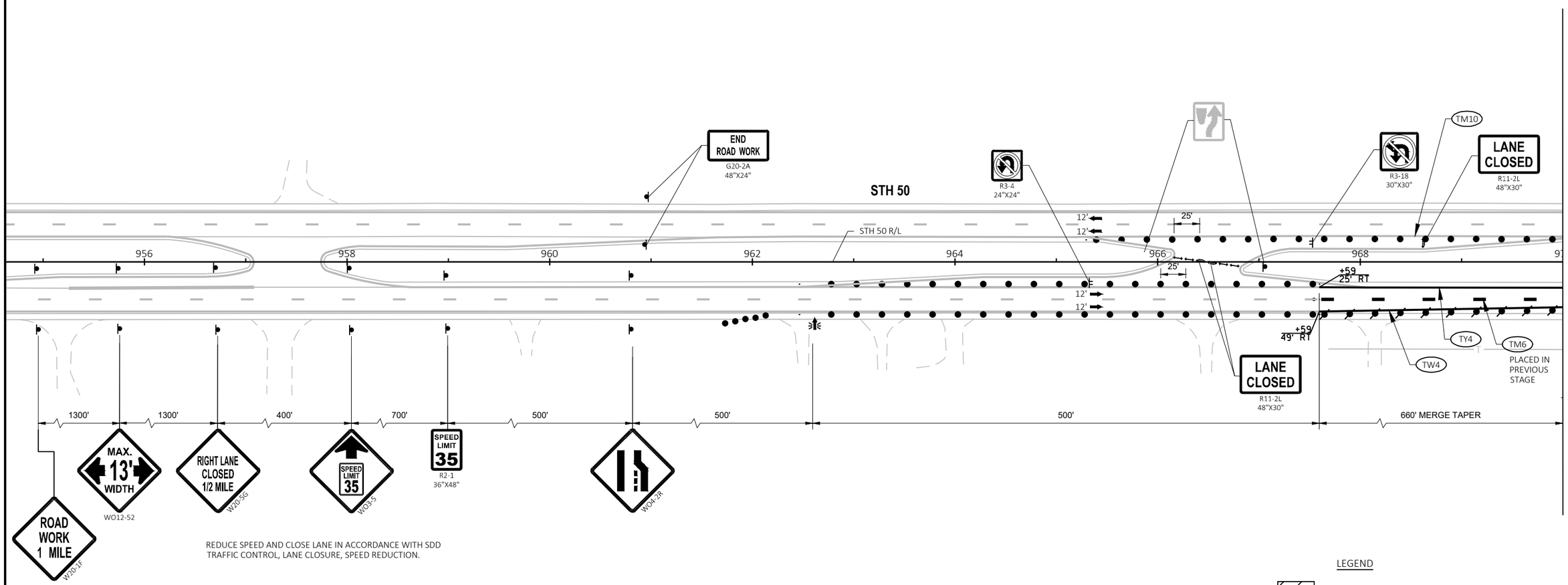

REDUCE SPEED AND CLOSE LANE IN ACCORDANCE WITH SDD TRAFFIC CONTROL, LANE CLOSURE, SPEED REDUCTION.

LEGEND

- WORK ZONE
- TEMPORARY PAVEMENT TO BE USED IN FUTURE STAGES
- WORK CONSTRUCTED UNDER TRAFFIC
- ASPHALTIC SURFACE TEMPORARY PLACED IN PREVIOUS STAGE

SHEET 39 OF 126

PROJECT NO: 1310-04-70	HWY: STH 50	COUNTY: KENOSHA	TRAFFIC CONTROL-STAGING - STAGE 2A-2B	SHEET 391	E

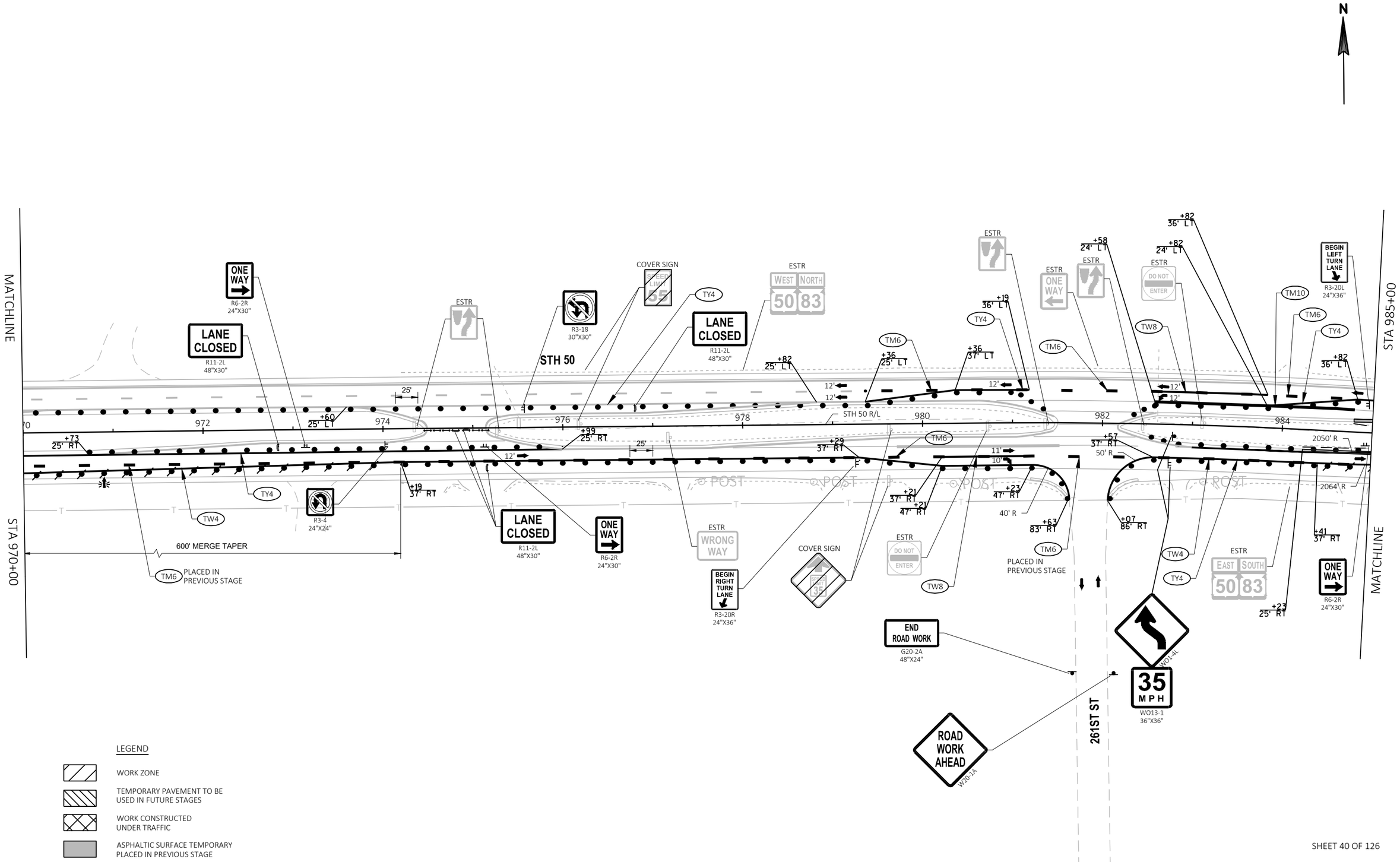

SHEET 40 OF 126

PROJECT NO: 1310-04-70	HWY: STH 50	COUNTY: KENOSHA	TRAFFIC CONTROL-STAGING - STAGE 2A-2B	SHEET 392	E

FILE NAME : T:\1182708.06\CIVIL3D\13100400\13100400\SHEETSPLAN\026102_S2A.DWG
LAYOUT NAME - 02
PLOT DATE : 1/14/2022 4:27 PM
PLOT BY : BLACKWOOD, JIM
PLOT NAME :
PLOT SCALE : 1 IN:100 FT
WISDOT/CADDS SHEET 42

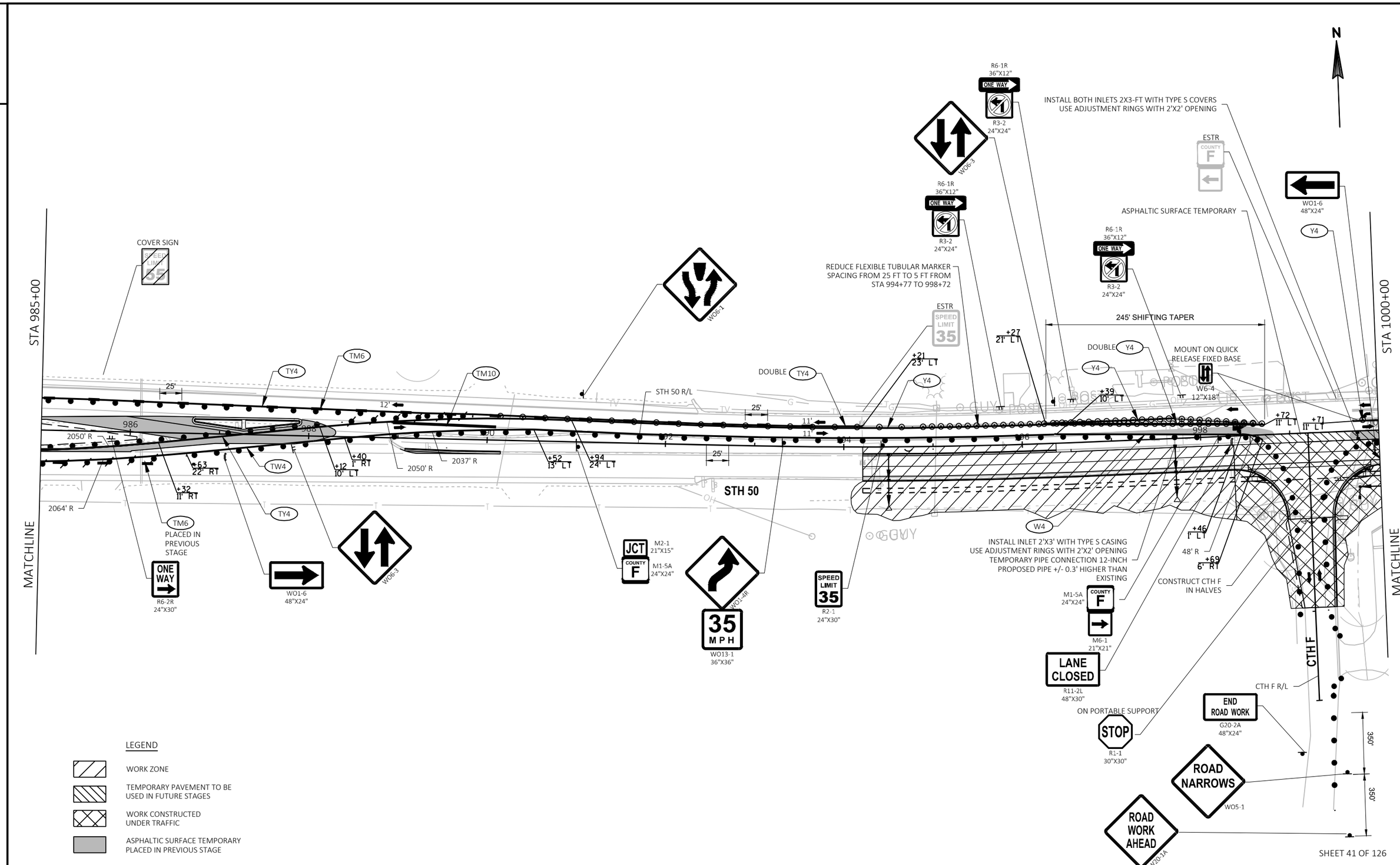

SHEET 41 OF 126

PROJECT NO: 1310-04-70	HWY: STH 50	COUNTY: KENOSHA	TRAFFIC CONTROL-STAGING - STAGE 2A-2B	SHEET 393	E

FILE NAME : T:\1182708.06\CIVIL3D\13100400\13100400\SHEETSPLAN\026102_S2A.DWG
LAYOUT NAME - 03
PLOT DATE : 1/14/2022 4:27 PM
PLOT BY : BLACKWOOD, JIM
PLOT NAME :
PLOT SCALE : 1 IN:100 FT
WISDOT/CADDS SHEET 42

2

2

LEGEND

WORK ZONE

TEMPORARY PAVEMENT TO BE USED IN FUTURE STAGES

WORK CONSTRUCTED UNDER TRAFFIC

ASPHALTIC SURFACE TEMPORARY PLACED IN PREVIOUS STAGE

N

STA 1000+00

STA 1015+00

MATCHLINE

MATCHLINE

STA 54+00

STA 46+00

STH 75

STH 50

STH 83

BEGIN RIGHT TURN LANE
R3-20R
24"X36"

DRIVEWAY TO REMAIN OPEN

STH 75 R/L

MOUNT ON QUICK RELEASE FIXED BASE
W6-4
12"X18"

R6-1R
36"X12"
ONE WAY
R3-2
24"X24"

ESTR
JCT
COUNTY
F

ESTR
WEST
50
NORTH
83

ESTR
SPEED LIMIT
35

ESTR
EAST
SOUTH
50
83

ESTR
WEST
NORTH
50
83

ESTR
SOUTH
NORTH
NORTH
83
83
75

ESTR
RIGHT LANE ENDS

R4-7
24"X30"

BEGIN LEFT TURN LANE
R3-20L
24"X36"

ESTR
SOUTH
WEST
NORTH
NORTH
83
50
83
75

ESTR
Lake Geneva
Salem
Burlington

R3-8A
36"X30"
ONLY

ESTR
STOP

ESTR
SPEED LIMIT
35

DOUBLE Y4

INSTALL INLET WITH TYPE H COVER
TEMPORARY PIPE CONNECTION 18-INCH

REDUCE FLEXIBLE TUBULAR MARKER SPACING FROM 25 FT TO 5 FT FROM STA 1011+57 TO 1033+68

LANE CLOSED
R11-2L
48"X30"

ROAD CLOSED
R11-2
48"X30"

R3-8A
36"X30"
ONLY

CLOSE DRIVEWAY ONLY DURING CONCRETE PAVING AND CONCRETE CURE TIME

REDUCE FLEXIBLE TUBULAR MARKER SPACING FROM 25 FT TO 5 FT FROM STA 1001+12 TO 1003+65

M3-1
24"X12"
M1-6
24"X24"
M6-1
21"X21"

NORTH
SOUTH
75
83

M3-3
24"X12"
M1-6
24"X24"
M6-1
21"X21"

R9-10
48"X24"
SIDEWALK CLOSED USE OTHER SIDE

SEE NOTE 1

SIDEWALK CLOSED
CROSS HERE
R9-11A
24"X12"

WO1-6
48"X24"

DRIVEWAY TO REMAIN OPEN

SPEED LIMIT
35
R2-1
24"X30"

EAST
50
M3-2
24"X12"
M1-6
24"X24"

INSTALL INLET 2X3-FT WITH TYPE S COVER
USE ADJUSTMENT RINGS WITH 2'X2' OPENING
TEMPORARY PIPE CONNECTION 12-INCH

CURB RAMP DETECTABLE WARNING FIELD YELLOW TEMPORARY

INSTALL STORM SEWER ACROSS MULTI-USE TRAIL
BACKFILL TRENCH AND FINISH WITH TEMPORARY PEDESTRIAN SURFACE ASPHALT
PROVIDE TEMPORARY PEDESTRIAN SURFACE ADJACENT TO PATH DURING STORM SEWER INSTALLATION SO THAT PEDESTRIAN ACCESS IS MAINTAINED.

PATH TO REMAIN OPEN
PLACE TEMPORARY PEDESTRIAN BARRICADE ALONG BOTH SIDES OF TRAIL

ESTR
WEST
NORTH
NORTH
EAST
50
83
75
50

ONE WAY
R6-2L
24"X30"

NOTES:
1. BLOCK OPEN END OF STORM SEWER PIPE WITH PLYWOOD OR METAL PLATE UNTIL FUTURE STAGE (INCIDENTAL TO STORM SEWER CONSTRUCTION)

SHEET 42 OF 126

PROJECT NO: 1310-04-70	HWY: STH 50	COUNTY: KENOSHA	TRAFFIC CONTROL-STAGING - STAGE 2A	SHEET 394	E

FILE NAME : T:\1182708.06\CIVIL3D\13100400\13100400\SHEETSPLAN\026102_S2A.DWG
LAYOUT NAME - 04

PLOT DATE : 1/14/2022 4:27 PM PLOT BY : BLACKWOOD, JIM PLOT NAME : PLOT SCALE : 1 IN:100 FT

WISDOT/CADDS SHEET 42

2

N

STA 1015+00

STA 1030+00

MATCHLINE

MATCHLINE

ROAD WORK AHEAD
W20-1A

250TH AVE R/L

250TH AVE

ESTR

STOP

ESTR

JCT

P5

83

R6-1R
36"X12"
ONE WAY

R3-2
24"X24"

REDUCE FLEXIBLE TUBULAR SPACING TO 5 FEET THROUGH INTERSECTION

Y4

DOUBLE

+88
21' LT

+73
21' LT

END ROAD WORK
G20-2A
48"X24"

R3-2
24"X24"

ESTR

SPEED LIMIT
25

ESTR

SPEED LIMIT
35
END SCHOOL ZONE

R6-1R
36"X12"
ONE WAY

R3-2
24"X24"

SEE NOTE 2

TEMPORARY CURB BUMPOUT

STH 50 R/L

W4

REDUCE FLEXIBLE TUBULAR MARKER SPACING FROM 25 FT TO 5 FT FROM STA 1011+57 TO 1033+68

REMOVE CASTING FROM EXISTING INLET COVER PLATE TEMPORARY UNTIL STAGE 4 COVER PLATE WITH ASPHALTIC CURB

R6-1R
36"X12"
ONE WAY

R3-2
24"X24"

TEMPORARY CURB BUMPOUT

SEE NOTE 2

ESTR

SPEED LIMIT
35

W10-3

R6-1R
36"X12"
ONE WAY

R3-2
24"X24"

ROAD WORK AHEAD
W20-1A

R6-1R
36"X12"
ONE WAY

R3-2
24"X24"

W4

ESTR

STOP

REDUCE FLEXIBLE TUBULAR SPACING TO 5 FEET THROUGH INTERSECTION

+12
20' LT

248TH AVE R/L

248TH AVE

WO1-6
48"X24"

DOUBLE

Y4

+16
21' LT

END ROAD WORK
G20-2A
48"X24"

SIDEWALK CLOSED
R9-9
24"X12"

DOUBLE

Y4

REMOVE EXISTING INLET CASTING COVER PLATE TEMPORARY
PLACE ASPHALTIC CURB OVER COVER PLATE

+75
19' LT

SEE NOTE 2
TEMPORARY CURB BUMPOUT

R3-2
24"X24"

ESTR

R6-1R
36"X12"
ONE WAY

R3-2
24"X24"

Y4

ONE WAY
R6-2R
24"X30"

R6-1R
36"X12"
ONE WAY

R3-2
24"X24"

SEE NOTE 1

R6-1R
36"X12"
ONE WAY

R3-2
24"X24"

ONE WAY
R6-2R
24"X30"

PATCH TRENCH WITH ASPHALTIC SURFACE TEMPORARY

CONSTRUCT ENTIRE LATERAL IN STAGE 2 USING A SINGLE NIGHT FULL CLOSURE OF STH 50

STH 50

ONE WAY
R6-2R
24"X30"

R3-2
24"X24"

SIDEWALK CLOSED USE OTHER SIDE
R9-10
48"X24"

SIGN AND BARRICADE ONLY IN USE DURING STAGE 2B2

CONSTRUCT DRIVEWAY CLOSED TO TRAFFIC ALTERNATE CLOSURE WITH EAST DRIVEWAY DO NOT CLOSE BOTH DRIVEWAYS AT SAME TIME SEE CONSTRUCTION DETAIL

HIGH SCHOOL WEST DRIVEWAY R/L

HIGH SCHOOL WEST DRIVEWAY

SEE NOTE 1

SEE NOTE 1

BASE AGGREGATE DENSE 1 1/4-INCH TRANSITION BETWEEN NEW EB LANES AND EXISTING WB LANES

ONE WAY
R6-2R
24"X30"

PATCH TRENCH WITH ASPHALTIC SURFACE TEMPORARY

CONSTRUCT LATERAL TO NORTH CURB LINE IN STAGE 2 USING A SINGLE NIGHT FULL CLOSURE OF STH 50

R6-1R
36"X12"
ONE WAY

R3-2
24"X24"
WHEN DRIVEWAY IS OPEN

LEGEND

- WORK ZONE
- TEMPORARY PAVEMENT TO BE USED IN FUTURE STAGES
- WORK CONSTRUCTED UNDER TRAFFIC
- ASPHALTIC SURFACE TEMPORARY PLACED IN PREVIOUS STAGE

NOTES:

1. BLOCK OPEN END OF STORM SEWER PIPE WITH PLYWOOD OR METAL PLATE UNTIL FUTURE STAGE (INCIDENTAL TO STORM SEWER CONSTRUCTION)
2. INSTALL INLET 2X3-FT WITH TYPE H CASTING. SET INLET ELEVATION TO MATCH EXISTING GUTTER ELEVATION. ADJUST TO FINAL ELEVATION IN LATER STAGE.

SHEET 43 OF 126

PROJECT NO: 1310-04-70	HWY: STH 50	COUNTY: KENOSHA	TRAFFIC CONTROL-STAGING - STAGE 2A-2B	SHEET 395	E

FILE NAME : T:\1182708.06\CIVIL3D\13100400\13100400\SHEETSPLAN\026102_S2A.DWG
LAYOUT NAME - 05

PLOT DATE : 1/14/2022 4:27 PM PLOT BY : BLACKWOOD, JIM PLOT NAME : PLOT SCALE : 1 IN:100 FT

WISDOT/CADDS SHEET 42

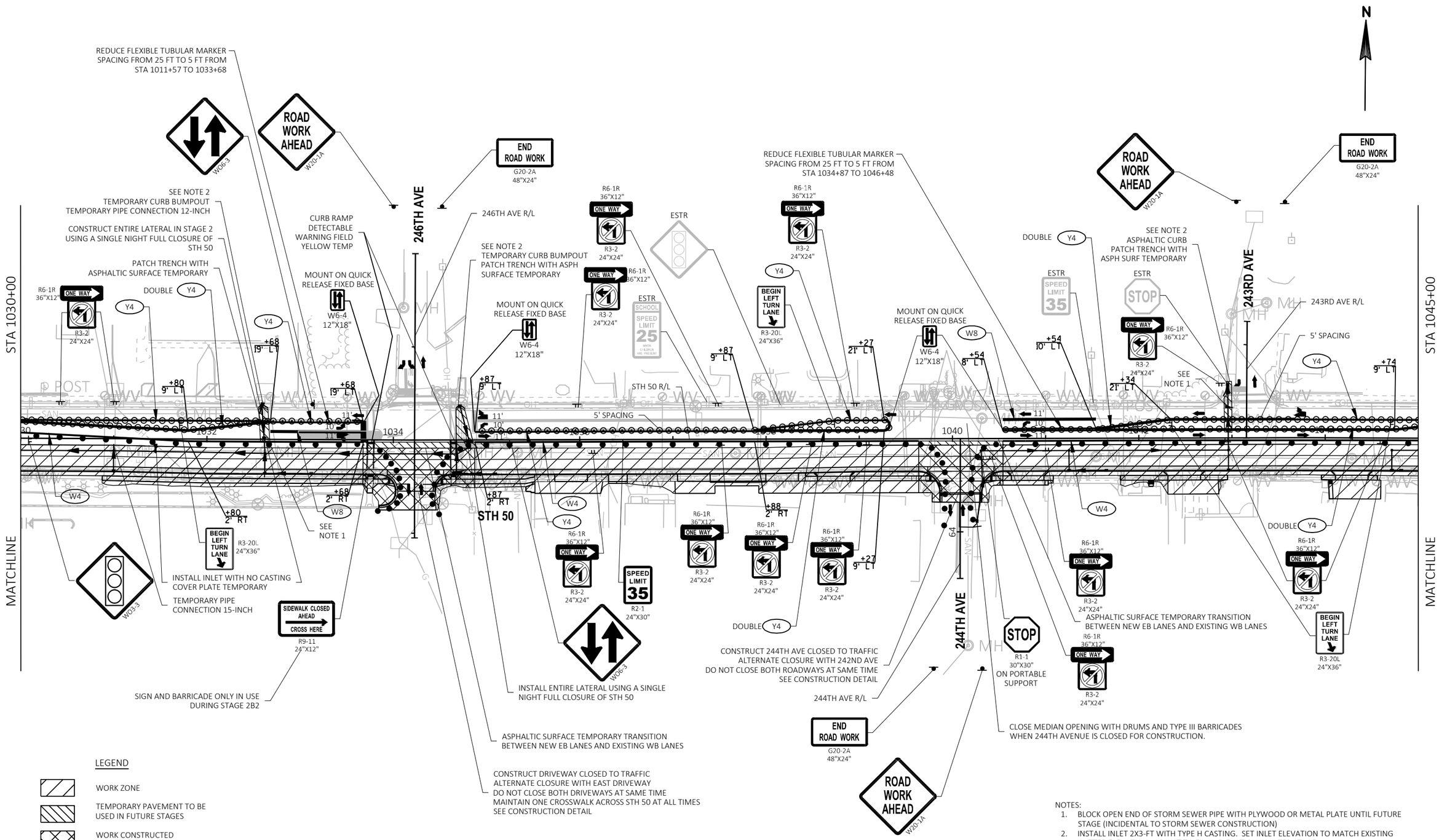

NOTES:
1. BLOCK OPEN END OF STORM SEWER PIPE WITH PLYWOOD OR METAL PLATE UNTIL FUTURE STAGE (INCIDENTAL TO STORM SEWER CONSTRUCTION)
2. INSTALL INLET 2X3-FT WITH TYPE H CASTING. SET INLET ELEVATION TO MATCH EXISTING GUTTER ELEVATION. ADJUST TO FINAL ELEVATION IN LATER STAGE.

SHEET 44 OF 126

PROJECT NO: 1310-04-70	HWY: STH 50	COUNTY: KENOSHA	TRAFFIC CONTROL-STAGING - STAGE 2A-2B	SHEET 396	E

FILE NAME : T:\1182708.06\CIVIL3D\13100400\13100400\SHEETSPLAN\026102_S2A.DWG
LAYOUT NAME - 06
PLOT DATE : 1/14/2022 4:27 PM
PLOT BY : BLACKWOOD, JIM
PLOT NAME :
PLOT SCALE : 1 IN:100 FT
WISDOT/CADDS SHEET 42

2

N

ROAD WORK AHEAD
W20-1A

END ROAD WORK
G20-2A
48"X24"

ESTR
STOP
74TH PLACE R/L

W10-3

74TH PL

STA 1045+00

MOUNT ON QUICK RELEASE FIXED BASE
W6-4
12"X18"

CLOSE WESTBOUND LEFT TURN LANE WITH DRUMS AND TYPE III BARRICADES WHEN 242ND AVENUE IS CLOSED FOR CONSTRUCTION

ESTR
SPEED LIMIT 35

BEGIN LEFT TURN LANE
R3-20L
24"X36"

TEMPORARY PIPE CONNECTION 15-INCH

R3-2
24"X24"

REDUCE FLEXIBLE TUBULAR MARKER SPACING FROM 25 FT TO 5 FT FROM STA 1051+24 TO 1054+02

TEMPORARY PIPE CONNECTION 15-INCH

ESTR
SPEED LIMIT 35

TEMPORARY PIPE CONNECTION 15-INCH

STA 1060+00

W8
Y4
+62 19' LT
+48 19' LT
11'
10'
1048
11'
+64 1' RT
+75 10' LT
+90 11' LT
+95 20' LT
+90 22' LT
25'
11'
11'
+93 22' LT
+76 20' LT
Y4
+81 11' LT
1050
1052
1054
1056
1058
W4
+49 2' RT
+91 0' RT
+96 9' LT
Y4
W4
Y4 DOUBLE
W4
Y4 DOUBLE
STH 50
STH 50 R/L
+75 9' LT
Y4
DOUBLE Y4
+80 0' LT

MATCHLINE

TEMPORARY PIPE CONNECTION 21-INCH

ONE WAY
R6-1R
36"X12"

R3-2
24"X24"

Y4 DOUBLE

242ND AVE R/L

242ND AVE

REDUCE FLEXIBLE TUBULAR MARKER SPACING FROM 25 FT TO 5 FT FROM STA 1034+87 TO 1046+48

END ROAD WORK
G20-2A
48"X24"

STOP
R1-1
30"X30"

Y4

W10-4L

INSTALL 2X3-FT INLET WITH TYPE S CASTING
USE ADJUSTMENT RINGS WITH 2X2-FT OPENING
ADJUST TO FINAL GRADE WITH TYPE H CASTING IN LATER STAGE.
ASPHALTIC SURFACE TEMPORARY TRANSITION BETWEEN NEW EB LANES AND EXISTING WB LANES

CONSTRUCT 242ND AVE CLOSED TO TRAFFIC
ALTERNATE CLOSURE WITH 244TH AVE
DO NOT CLOSE BOTH ROADWAYS AT SAME TIME
SEE CONSTRUCTION DETAIL

ROAD WORK AHEAD
W20-1A

SPEED LIMIT 35
R2-1
24"X30"

ONE WAY
R6-1R
36"X12"

R3-2
24"X24"

REDUCE SPACING OF FLEXIBLE TUBULAR MARKERS TO 5 FEET THROUGH DRIVEWAYS

W10-4R

LEGEND

- WORK ZONE
- TEMPORARY PAVEMENT TO BE USED IN FUTURE STAGES
- WORK CONSTRUCTED UNDER TRAFFIC
- ASPHALTIC SURFACE TEMPORARY PLACED IN PREVIOUS STAGE

SHEET 45 OF 126

PROJECT NO: 1310-04-70	HWY: STH 50	COUNTY: KENOSHA	TRAFFIC CONTROL-STAGING - STAGE 2A-2B	SHEET 397	E

FILE NAME : T:\1182708.06\CIVIL3D\13100400\13100400\SHEETSPLAN\026102_S2A.DWG
LAYOUT NAME - 07

PLOT DATE : 1/14/2022 4:27 PM PLOT BY : BLACKWOOD, JIM PLOT NAME : PLOT SCALE : 1 IN:100 FT

2

N

STA 1060+00

STA 1075+00

MATCHLINE

MATCHLINE

ROAD WORK AHEAD
W20-1A

END ROAD WORK
G20-2A
48"X24"

236TH AVE

236TH AVE R/L

ESTR
STOP

W8-3

MOUNT ON QUICK RELEASE FIXED BASE

W6-4
12"X18"

ESTR
SPEED LIMIT 35

R6-1R
36"X12"
ONE WAY

R3-2
24"X24"

REDUCE FLEXIBLE TUBULAR MARKER SPACING FROM 25 FT TO 5 FT FROM STA 1062+82 TO 1066+05

ESTR
SPEED LIMIT 35

ESTR
PADDOCK LAKE
POPULATION 2,992

PLACED IN PREVIOUS STAGE

W8-3

SPEED LIMIT 35

+68 21' LT

+93 21' LT

+82 23' LT

+87 21' LT

+74 28' LT

+34 18' LT

+35 16' LT

+96 7' LT

+82 11' LT

+83 0' LT

+87 10' LT

11'

10'

6' R

25'

2500' R

2000' R

1062

1064

1066

1068

1070

1072

1074

Y4

TY4

TM6

TW4

W4

W8

STH 50

STH 50 R/L

R3-2
24"X24"

Y4 DOUBLE

SPEED LIMIT 35
R2-1
24"X30"

EAST
50
M3-2
24"X12"
M1-6
24"X24"

W1-6
48"X24"

W6-1

W01-4L

TEMPORARY PIPE CONNECTION 24-INCH

INSTALL 2X3-FT INLET TO FINAL GRADE
TEMPORARY PIPE CONNECTION 18-INCH
CONNECT TO EXISTING INLET IN MIDDLE OF MEDIAN

TEMPORARY PIPE
CONNECTION 18-INCH
PROPOSED PIPE IS +/- 0.3'
HIGHER THAN EXISTING PIPE

INSTALL 2X3-FT INLET WITH TYPE S CASTING
USE ADJUSTMENT RINGS WITH 2X2-FT OPENING
ADJUST TO FINAL ELEVATION WITH TYPE H COVER
IN LATER STAGE

ASPHALTIC SURFACE TEMPORARY TRANSITION
BETWEEN NEW EB LANES AND EXISTING WB LANES

LEGEND

- WORK ZONE
- TEMPORARY PAVEMENT TO BE USED IN FUTURE STAGES
- WORK CONSTRUCTED UNDER TRAFFIC
- ASPHALTIC SURFACE TEMPORARY PLACED IN PREVIOUS STAGE

SHEET 46 OF 126

PROJECT NO: 1310-04-70	HWY: STH 50	COUNTY: KENOSHA	TRAFFIC CONTROL-STAGING - STAGE 2A-2B	SHEET 398	E

FILE NAME : T:\1182708.06\CIVIL3D\13100400\13100400\SHEETSPLAN\026102_S2A.DWG
LAYOUT NAME - 08

PLOT DATE : 1/14/2022 4:27 PM PLOT BY : BLACKWOOD, JIM PLOT NAME : PLOT SCALE : 1 IN:100 FT

2

2

N

STA 1075+00

615' BUFFER SPACE

660' MERGE TAPER

LANE CLOSED
R11-2L
48"X30"

R3-4
24"X24"

TM6 PLACED IN PREVIOUS STAGE

LANE CLOSED
R11-2L
48"X30"

TM6 PLACED IN PREVIOUS STAGE

STH 50 R/L

1076

1078

+65
3' RT

+64
18' RT

12'

25'

12'

12'

TM6

TY4

TW4

100'

STH 50

COVER SIGN
SPEED LIMIT
55

R3-4
24"X24"

ESTR

ESTR
HWY 45 2
HWY 94 7
KENOSHA 11

LANE CLOSED
R11-2L
48"X30"

TM10 PLACED IN PREVIOUS STAGE

MATCHLINE

MATCHLINE

A

LEGEND

- WORK ZONE
- TEMPORARY PAVEMENT TO BE USED IN FUTURE STAGES
- WORK CONSTRUCTED UNDER TRAFFIC
- ASPHALTIC SURFACE TEMPORARY PLACED IN PREVIOUS STAGE

SHEET 47 OF 126

PROJECT NO: 1310-04-70	HWY: STH 50	COUNTY: KENOSHA	TRAFFIC CONTROL-STAGING - STAGE 2A-2B	SHEET 399	E

FILE NAME : T:\1182708.06\CIVIL3D\13100400\13100400\SHEETSPLAN\026102_S2A.DWG
LAYOUT NAME - 09

PLOT DATE : 1/14/2022 4:27 PM PLOT BY : BLACKWOOD, JIM PLOT NAME : PLOT SCALE : 1 IN:100 FT

WISDOT/CADDS SHEET 42

2

N

REDUCE SPEED AND CLOSE LANE IN ACCORDANCE WITH SDD
TRAFFIC CONTROL, LANE CLOSURE, SPEED REDUCTION.

660'
MERGE TAPER

TM6 PLACED IN PREVIOUS STAGE

500'

500'

W04-2L

500'

SPEED LIMIT 35
R2-1
48"X60"

700'

SPEED LIMIT 35
W03-5

400'

RIGHT LANE CLOSED 1/2 MILE
W20-5G

1300'

MAX. 13' WIDTH
W012-52

1300'

ROAD WORK 1 MILE
W20-1F

A

ESTR

R3-4
24"X24"

TM10 PLACED IN PREVIOUS STAGE

TM10 PLACED IN PREVIOUS STAGE

STH 50

MATCHLINE

R3-4
24"X24"

ESTR

LANE CLOSED
R11-2L
48"X30"

END ROAD WORK
G20-2A
48"X24"

LEGEND

- WORK ZONE
- TEMPORARY PAVEMENT TO BE USED IN FUTURE STAGES
- WORK CONSTRUCTED UNDER TRAFFIC
- ASPHALTIC SURFACE TEMPORARY PLACED IN PREVIOUS STAGE

SHEET 48 OF 126

PROJECT NO: 1310-04-70	HWY: STH 50	COUNTY: KENOSHA	TRAFFIC CONTROL-STAGING - STAGE 2A-2B	SHEET 400	E

FILE NAME : T:\1182708.06\CIVIL3D\13100400\13100400\SHEETSPLAN\026102_S2A.DWG
LAYOUT NAME - 10

PLOT DATE : 1/14/2022 4:27 PM PLOT BY : BLACKWOOD, JIM PLOT NAME : PLOT SCALE : 1 IN:100 FT

LEGEND

- WORK ZONE
- TEMPORARY PAVEMENT TO BE USED IN FUTURE STAGES
- WORK CONSTRUCTED UNDER TRAFFIC
- ASPHALTIC SURFACE TEMPORARY PLACED IN PREVIOUS STAGE

N

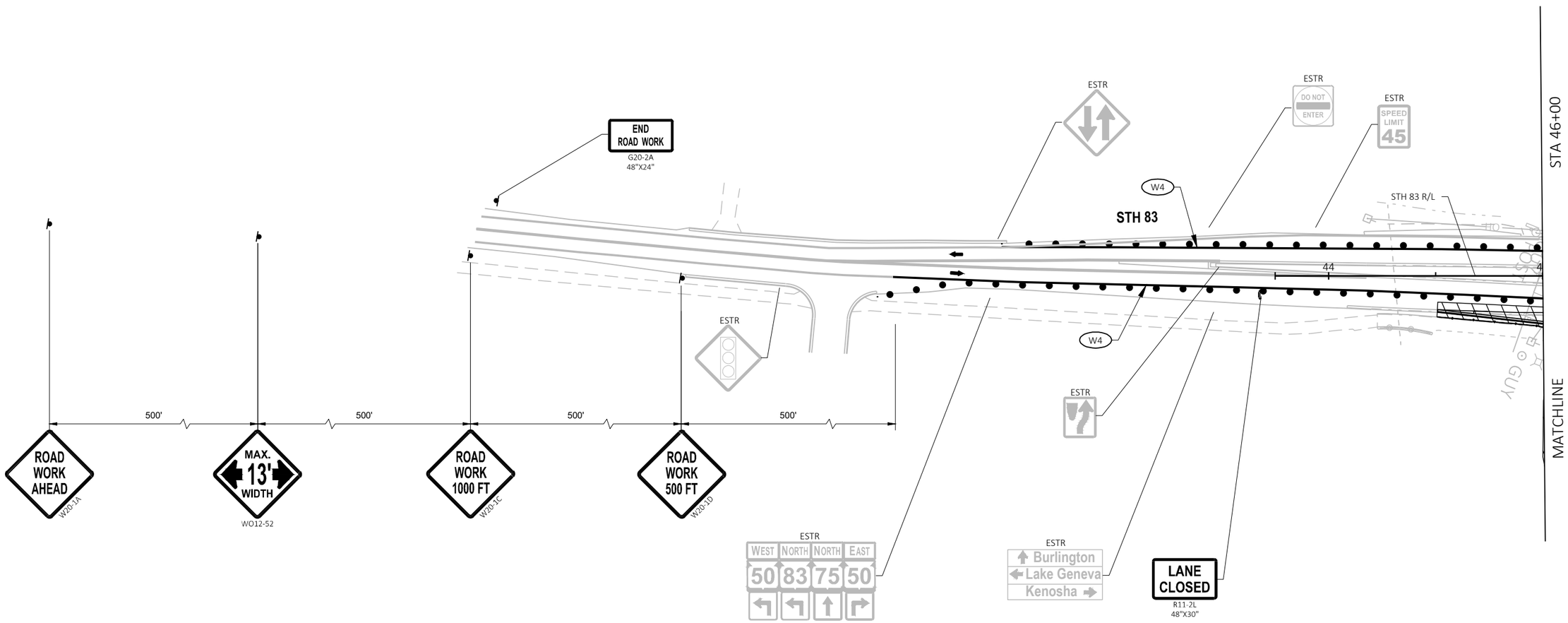

SHEET 49 OF 126

PROJECT NO: 1310-04-70	HWY: STH 50	COUNTY: KENOSHA	TRAFFIC CONTROL-STAGING - STAGE 2A	SHEET 401	E

FILE NAME : T:\1182708.06\CIVIL3D\13100400\13100400\SHEETSPLAN\026102_S2A.DWG
LAYOUT NAME - 11

PLOT DATE : 1/14/2022 4:28 PM PLOT BY : BLACKWOOD, JIM PLOT NAME : PLOT SCALE : 1 IN:100 FT

2

N

ROAD WORK 500 FT W20-1D

ROAD WORK 1000 FT W20-1C

MAX. 12' WIDTH WO12-52

ROAD WORK AHEAD W20-1A

500' 500' 500' 500'

WO1-4L

STA 54+00

ESTR Salem / Kenosha / Lake Geneva

ESTR

ESTR END 75

Y4

W4

4

STH 75

STH 75 R/L

ESTR

ESTR

ESTR

ESTR NORTH 75

ESTR DO NOT ENTER

END ROAD WORK
G20-2A
48"X24"

ESTR EAST SOUTH NORTH WEST 50 83 83 50

ESTR ALTERNATE SOUTH ALTERNATE EAST 41 94

MATCHLINE

LEGEND

- WORK ZONE
- TEMPORARY PAVEMENT TO BE USED IN FUTURE STAGES
- WORK CONSTRUCTED UNDER TRAFFIC
- ASPHALTIC SURFACE TEMPORARY PLACED IN PREVIOUS STAGE

SHEET 50 OF 126

PROJECT NO: 1310-04-70	HWY: STH 50	COUNTY: KENOSHA	TRAFFIC CONTROL-STAGING - STAGE 2A	SHEET 402	E

FILE NAME : T:\1182708.06\CIVIL3D\13100400\13100400\SHEETSPLAN\026102_S2A.DWG
LAYOUT NAME - 12

PLOT DATE : 1/14/2022 4:28 PM PLOT BY : BLACKWOOD, JIM PLOT NAME : PLOT SCALE : 1 IN:100 FT

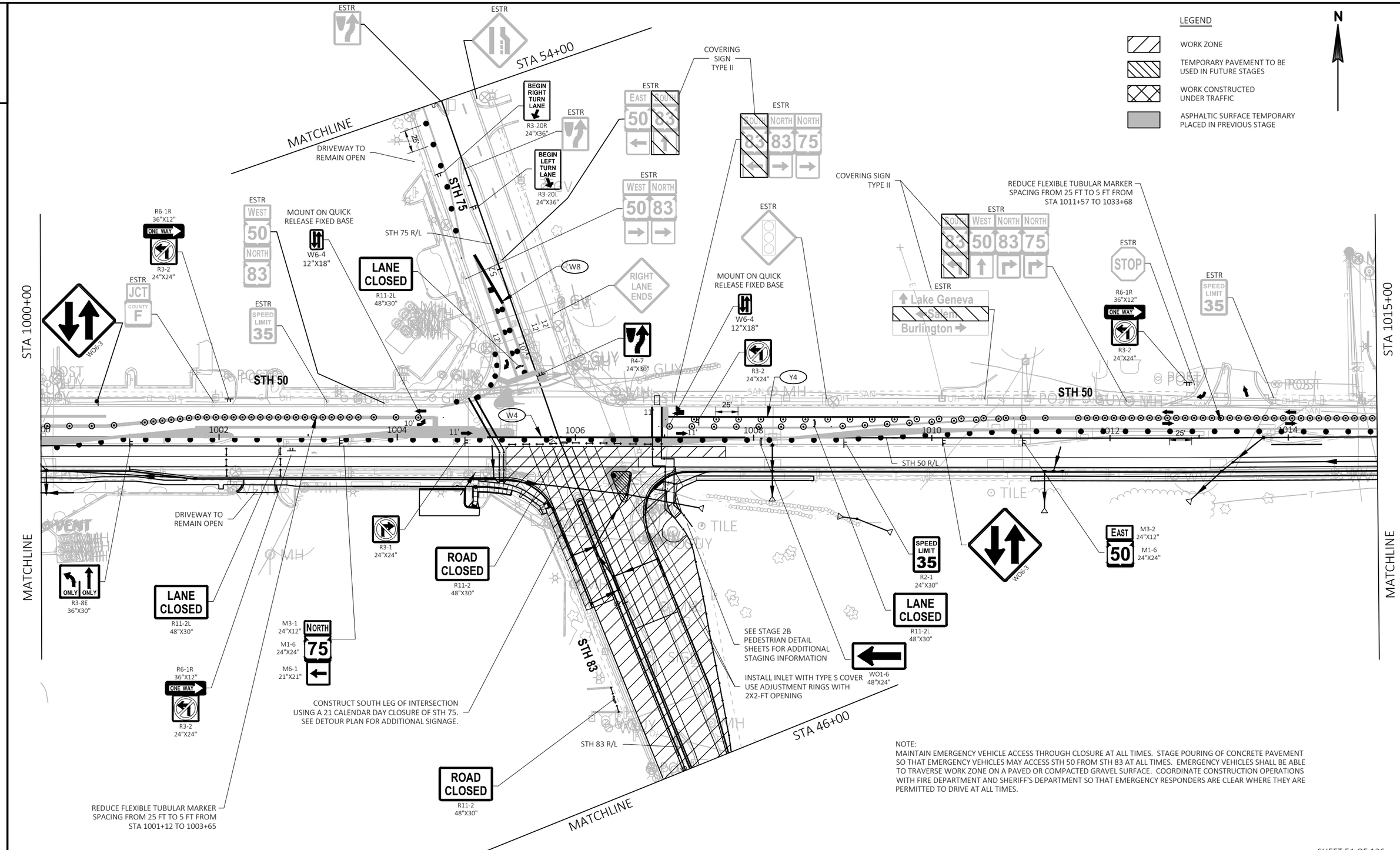

NOTE:
MAINTAIN EMERGENCY VEHICLE ACCESS THROUGH CLOSURE AT ALL TIMES. STAGE POURING OF CONCRETE PAVEMENT SO THAT EMERGENCY VEHICLES MAY ACCESS STH 50 FROM STH 83 AT ALL TIMES. EMERGENCY VEHICLES SHALL BE ABLE TO TRAVERSE WORK ZONE ON A PAVED OR COMPACTED GRAVEL SURFACE. COORDINATE CONSTRUCTION OPERATIONS WITH FIRE DEPARTMENT AND SHERIFF'S DEPARTMENT SO THAT EMERGENCY RESPONDERS ARE CLEAR WHERE THEY ARE PERMITTED TO DRIVE AT ALL TIMES.

SHEET 51 OF 126

PROJECT NO: 1310-04-70	HWY: STH 50	COUNTY: KENOSHA	TRAFFIC CONTROL-STAGING - STAGE 2B	SHEET 403	E

FILE NAME : T:\1182708.06\CIVIL3D\13100400\13100400\SHEETSPLAN\026102_S2B.DWG
LAYOUT NAME - 04
PLOT DATE : 1/14/2022 4:28 PM PLOT BY : BLACKWOOD, JIM PLOT NAME : PLOT SCALE : 1 IN:100 FT
WISDOT/CADDS SHEET 42

LEGEND

- WORK ZONE
- TEMPORARY PAVEMENT TO BE USED IN FUTURE STAGES
- WORK CONSTRUCTED UNDER TRAFFIC
- ASPHALTIC SURFACE TEMPORARY PLACED IN PREVIOUS STAGE

N

NOTE:
MAINTAIN EMERGENCY VEHICLE ACCESS THROUGH CLOSURE AT ALL TIMES. STAGE POURING OF CONCRETE PAVEMENT SO THAT EMERGENCY VEHICLES MAY ACCESS STH 50 FROM STH 83 AT ALL TIMES. EMERGENCY VEHICLES SHALL BE ABLE TO TRAVERSE WORK ZONE ON A PAVED OR COMPACTED GRAVEL SURFACE. COORDINATE CONSTRUCTION OPERATIONS WITH FIRE DEPARTMENT AND SHERIFF'S DEPARTMENT SO THAT EMERGENCY RESPONDERS ARE CLEAR WHERE THEY ARE PERMITTED TO DRIVE AT ALL TIMES.

PLACE ROAD CLOSED ADVANCED SIGNAGE
IN ACCORDANCE WITH SDD BARRICADES AND SIGNS FOR MAINLINE
CLOSURES DETAILS A & C

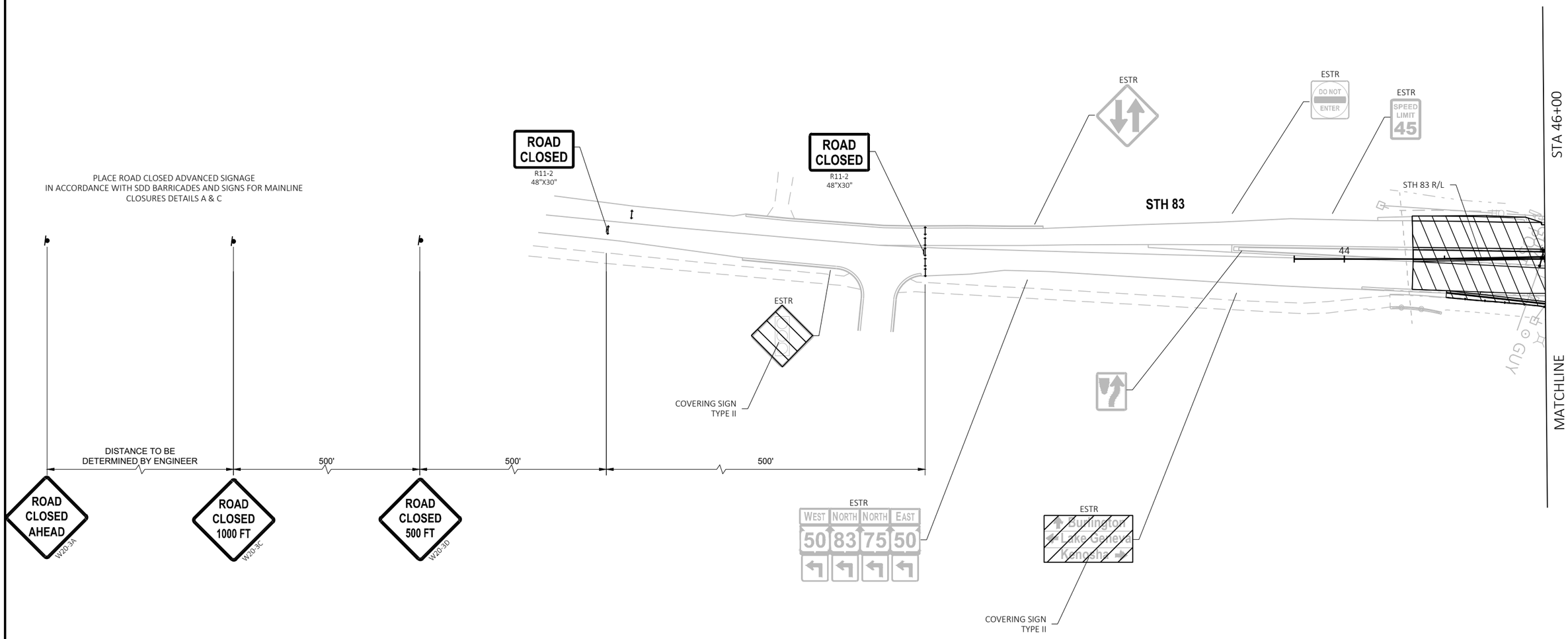

SHEET 52 OF 126

PROJECT NO: 1310-04-70	HWY: STH 50	COUNTY: KENOSHA	TRAFFIC CONTROL-STAGING - STAGE 2B	SHEET 404	E

FILE NAME : T:\1182708.06\CIVIL3D\13100400\13100400\SHEETSPLAN\026102_S2B.DWG
LAYOUT NAME - 11
PLOT DATE : 1/14/2022 4:28 PM
PLOT BY : BLACKWOOD, JIM
PLOT NAME :
PLOT SCALE : 1 IN:100 FT

2

2

LEGEND

WORK ZONE

TEMPORARY PAVEMENT TO BE USED IN FUTURE STAGES

WORK CONSTRUCTED UNDER TRAFFIC

ASPHALTIC SURFACE TEMPORARY PLACED IN PREVIOUS STAGE

N

STA 54+00

MATCHLINE

ROAD WORK 500 FT W20-1D

ROAD WORK 1000 FT W20-1C

MAX. 13' WIDTH WO12-52

ROAD WORK AHEAD W20-1A

500' 500' 500' 500'

COVERING SIGN TYPE II

ESTR

Salem
Kenosha
Lake Geneva

WO1-4L

ESTR

ESTR

END
75

4

STH 75

STH 75 R/L

ESTR

ESTR

ESTR

DO NOT ENTER

ESTR

NORTH
75

END ROAD WORK
G20-2A
48"X24"

COVERING SIGN TYPE II

ESTR

EAST SOUTH NORTH WEST
50 83 83 50

STH 75

SEE DETOUR PLAN FOR ADDITIONAL SIGNAGE

SHEET 53 OF 126

PROJECT NO: 1310-04-70	HWY: STH 50	COUNTY: KENOSHA	TRAFFIC CONTROL-STAGING - STAGE 2B	SHEET 405	E

FILE NAME : T:\1182708.06\CIVIL3D\13100400\13100400\SHEETSPLAN\026102_S2B.DWG
LAYOUT NAME - 12

PLOT DATE : 1/14/2022 4:28 PM PLOT BY : BLACKWOOD, JIM PLOT NAME : PLOT SCALE : 1 IN:100 FT

2

2

LEGEND

WORK ZONE

TEMPORARY PAVEMENT TO BE USED IN FUTURE STAGES

WORK CONSTRUCTED UNDER TRAFFIC

ASPHALTIC SURFACE TEMPORARY PLACED IN PREVIOUS STAGE

N

NOTE:
SEE STAGE 2A/2B SHEETS FOR ADDITIONAL TRAFFIC CONTROL INFORMATION

SIDEWALK CLOSED
R9-9
24"X12"

REMOVE CURB RAMP PAVEMENT AT START OF STAGE ONCE TEMPORARY CURB RAMP IS OPEN. PERFORM WORK AT NIGHT USING FLAGGING OPERATIONS

TEMPORARY CURB RAMP CONCRETE
PLACE AT START OF STAGE FOR USE IN THIS STAGE
SEE CONSTRUCTION DETAIL
PERFORM WORK AT NIGHT BY SHIFTING TRAFFIC INTO WESTBOUND LEFT TURN LANE FOR ONE NIGHT PRIOR TO PLACEMENT OF THE FLEXIBLE TUBULAR MARKERS BETWEEN THE WB THRU LANE AND WB LEFT TURN LANE.

STH 75 R/L

CURB RAMP DETECTABLE WARNING FIELD YELLOW

CURB RAMP DETECTABLE WARNING FIELD YELLOW

W6

1004+00 1005+00 1006+00 1007+00 1008+00 1009+00

STH 50 R/L

TEMPORARY PEDESTRIAN SURFACE ASPHALTIC PLACE AT START OF STAGE FOR USE IN THIS STAGE TO CREATE TRANSITION BETWEEN EB LANES CONSTRUCTED IN STAGE 2A AND TEMPORARY ASPHALTIC SURFACE CONSTRUCTED IN STAGE 1B.

TEMPORARY PEDESTRIAN BARRICADE

TEMPORARY PEDESTRIAN SURFACE ASPHALTIC PLACE AT START OF STAGE FOR USE IN THIS STAGE TO CREATE A TRANSITION BETWEEN EB LANES CONSTRUCTED IN STAGE 2A AND TEMPORARY ASPHALTIC SURFACE CONSTRUCTED IN STAGE 1B

TEMPORARY PEDESTRIAN BARRICADE

PEDESTRIAN RAMP TO BE OPEN

DETOUR
M4-9BL
30"X24"

SIDEWALK CLOSED
R9-9
24"X12"

SIDEWALK CLOSED
CROSS HERE
R9-11A
24"X12"

TEMPORARY PEDESTRIAN SURFACE ASPHALTIC PLACE AT START OF STAGE FOR USE IN THIS STAGE TO CREATE A TRANSITION BETWEEN EXISTING PATH AND EB LANES CONSTRUCTED IN STAGE 2A

TEMPORARY PEDESTRIAN BARRICADE ALONG WEST EDGE OF PATH

PLACE SIGN AT COMMERCIAL DRIVEWAY WHERE SIDEWALK STARTS

SIDEWALK CLOSED
R9-9
24"X12"

SHEET 54 OF 126

PROJECT NO: 1310-04-70	HWY: STH 50	COUNTY: KENOSHA	TRAFFIC CONTROL-STAGING - STAGE 2B1 PEDESTRIAN	SHEET 406	E

FILE NAME : T:\1182708.06\CIVIL3D\13100400\13100400\SHEETSPLAN\026102A_S2B1.DWG
LAYOUT NAME - 01

PLOT DATE : 1/14/2022 4:29 PM PLOT BY : BLACKWOOD, JIM PLOT NAME : PLOT SCALE : 1 IN:40 FT

WISDOT/CADDS SHEET 42

2

2

LEGEND

WORK ZONE

TEMPORARY PAVEMENT TO BE USED IN FUTURE STAGES

WORK CONSTRUCTED UNDER TRAFFIC

ASPHALTIC SURFACE TEMPORARY PLACED IN PREVIOUS STAGE

N

NOTE:
SEE STAGE 2A/2B SHEETS FOR ADDITIONAL TRAFFIC CONTROL INFORMATION

SIDEWALK CLOSED
CROSS HERE
R9-11A
24"X12"

STH 75 R/L

1006

1008

STH 50 R/L

TEMPORARY PEDESTRIAN SURFACE ASPHALTIC PLACED IN PREVIOUS STAGE

TEMPORARY PEDESTRIAN BARRICADE

PEDESTRIAN RAMP TO BE OPEN

SEE STAGE 2A/2B SHEETS FOR ADDITIONAL SIDEWALK CLOSED SIGNS AT 248TH AVE AND 246TH AVE

SIDEWALK CLOSED
R9-9
24"X12"

SIDEWALK CLOSED
CROSS HERE
R9-11A
24"X12"

TEMPORARY PEDESTRIAN SURFACE PLYWOOD INSTALL AT START OF STAGE

TEMPORARY CURB RAMP PERPENDICULAR INSTALL AT START OF STAGE

TEMPORARY PEDESTRIAN BARRICADE

SHEET 55 OF 126

PROJECT NO: 1310-04-70	HWY: STH 50	COUNTY: KENOSHA	TRAFFIC CONTROL-STAGING - STAGE 2B2 PEDESTRIAN	SHEET 407	E

FILE NAME : T:\1182708.06\CIVIL3D\13100400\13100400\SHEETSPLAN\026102B_S2B2.DWG
LAYOUT NAME - 01

PLOT DATE : 1/14/2022 4:30 PM PLOT BY : BLACKWOOD, JIM PLOT NAME : PLOT SCALE : 1 IN:40 FT

WISDOT/CADDS SHEET 42

2

TRAFFIC CONTROL NOTES - STAGE 3

CONSTRUCTION:
STH 50 MEDIAN AT STH 75/STH 83

TRAFFIC:
- STH 50 - 1 THRU LANE IN EACH DIRECTION
- STH 75/ STH 83 RIGHT IN/RIGHT OUT AT STH 50

PEDESTRIANS:
- SIDEWALKS AND CROSSWALKS PARALLEL TO STH 50 OPEN AT ALL TIMES

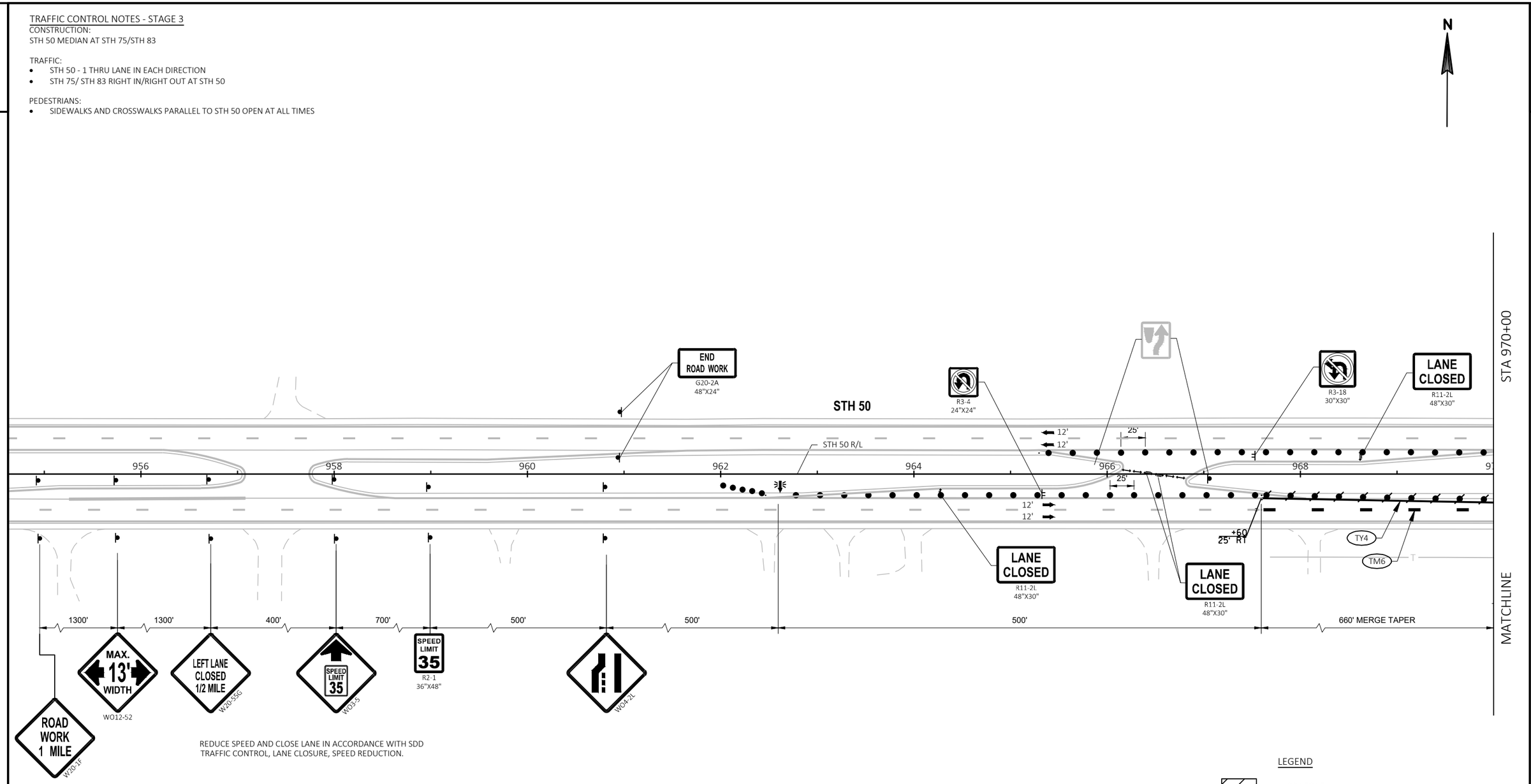

REDUCE SPEED AND CLOSE LANE IN ACCORDANCE WITH SDD TRAFFIC CONTROL, LANE CLOSURE, SPEED REDUCTION.

LEGEND

- WORK ZONE
- TEMPORARY PAVEMENT TO BE USED IN FUTURE STAGES
- WORK CONSTRUCTED UNDER TRAFFIC
- ASPHALTIC SURFACE TEMPORARY PLACED IN PREVIOUS STAGE

PROJECT NO: 1310-04-70	HWY: STH 50	COUNTY: KENOSHA	TRAFFIC CONTROL-STAGING - STAGE 3	SHEET 408	E

FILE NAME : T:\1182708.06\CIVIL3D\13100400\13100400\SHEETSPLAN\026103_S3.DWG
LAYOUT NAME - 01
PLOT DATE : 1/14/2022 4:30 PM
PLOT BY : BLACKWOOD, JIM
PLOT NAME :
PLOT SCALE : 1 IN:100 FT
WISDOT/CADDS SHEET 42

2

N

MATCHLINE

STA 970+00

STA 985+00

MATCHLINE

ONE WAY
R6-2R
24"X30"

LANE CLOSED
R11-2L
48"X30"

ESTR

R3-18
30"X30"

COVER SIGN
SPEED LIMIT
55

STH 50

LANE CLOSED
R11-2L
48"X30"

ESTR
WEST NORTH
50 83

ESTR

ESTR
ONE WAY

ESTR

ESTR
DO NOT ENTER

BEGIN LEFT TURN LANE
R3-20L
24"X36"

TM6

970 972 974 976 978 STH 50 R/L 980 982 984

25' 12' 12' 25' 12' 37' +10 RT 11' 39' +39 RT

TM6

600' MERGE TAPER

R3-4
24"X24"
37' +19 RT

LANE CLOSED
R11-2L
48"X30"

ONE WAY
R6-2R
24"X30"

ESTR
WRONG WAY

TY4

COVER SIGN
SPEED LIMIT
35

ESTR
DO NOT ENTER

TM6

TY4

WO1-6
48"X24"

ESTR
EAST SOUTH
50 83

ONE WAY
R6-2R
24"X30"

END ROAD WORK
G20-2A
48"X24"

ROAD WORK AHEAD
W20-1A

261ST ST

LEGEND

- WORK ZONE
- TEMPORARY PAVEMENT TO BE USED IN FUTURE STAGES
- WORK CONSTRUCTED UNDER TRAFFIC
- ASPHALTIC SURFACE TEMPORARY PLACED IN PREVIOUS STAGE

SHEET 57 OF 126

PROJECT NO: 1310-04-70	HWY: STH 50	COUNTY: KENOSHA	TRAFFIC CONTROL-STAGING - STAGE 3	SHEET 409 E

FILE NAME : T:\1182708.06\CIVIL3D\13100400\13100400\SHEETSPLAN\026103_S3.DWG
LAYOUT NAME - 02

PLOT DATE : 1/14/2022 4:30 PM PLOT BY : BLACKWOOD, JIM PLOT NAME : PLOT SCALE : 1 IN:100 FT

WISDOT/CADDS SHEET 42

2

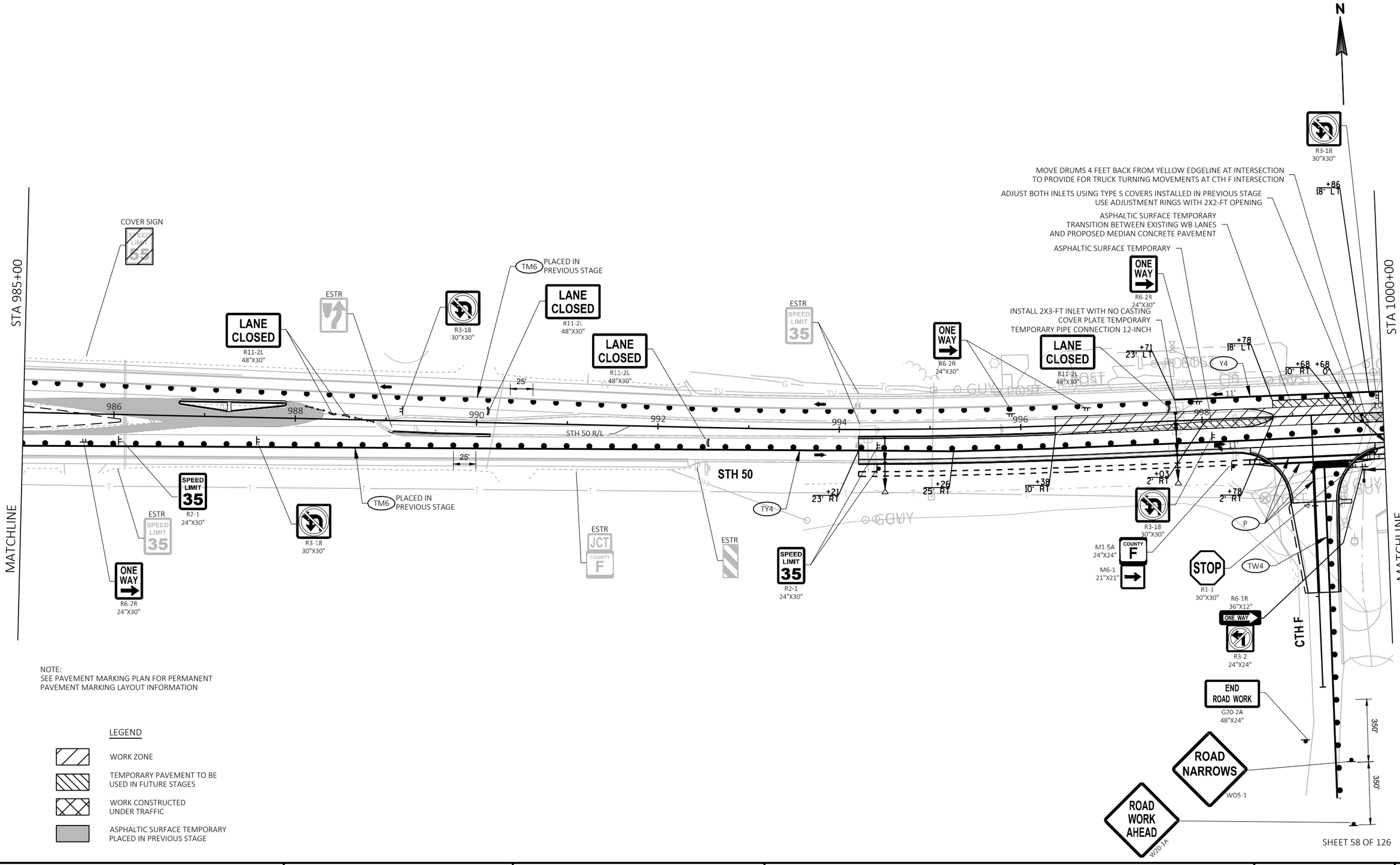

NOTE:
SEE PAVEMENT MARKING PLAN FOR PERMANENT
PAVEMENT MARKING LAYOUT INFORMATION

LEGEND

- WORK ZONE
- TEMPORARY PAVEMENT TO BE USED IN FUTURE STAGES
- WORK CONSTRUCTED UNDER TRAFFIC
- ASPHALTIC SURFACE TEMPORARY PLACED IN PREVIOUS STAGE

PROJECT NO: 1310-04-70	HWY: STH 50	COUNTY: KENOSHA	TRAFFIC CONTROL-STAGING - STAGE 3	SHEET 410	E

FILE NAME : T:\1182708.06\CIVIL3D\13100400\13100400\SHEETSPLAN\026103_S3.DWG
LAYOUT NAME - 03
PLOT DATE : 1/14/2022 4:30 PM
PLOT BY : BLACKWOOD, JIM
PLOT NAME :
PLOT SCALE : 1 IN:100 FT
WISDOT/CADDS SHEET 42

2

NOTES:
1. SEE PAVEMENT MARKING PLAN FOR PERMANENT PAVEMENT MARKING LAYOUT INFORMATION
2. SEE DETOUR PLAN FOR ADDITIONAL SIGNAGE

LEGEND
- WORK ZONE
- TEMPORARY PAVEMENT TO BE USED IN FUTURE STAGES
- WORK CONSTRUCTED UNDER TRAFFIC
- ASPHALTIC SURFACE TEMPORARY PLACED IN PREVIOUS STAGE
- TWF — CURB RAMP DETECTABLE WARNING FIELD YELLOW TEMPORARY

N

STA 1000+00

STA 1015+00

STA 54+00

STA 46+00

MATCHLINE

MATCHLINE

MATCHLINE

ESTR

BEGIN RIGHT TURN LANE
R3-20R
24"X36"

RIGHT LANE ENDS

PULL DRUMS BACK FROM YELLOW EDGELINE TO ALLOW ROOM FOR TRUCK TURNING MOVEMENTS

STH 75

STH 75 R/L

LANE CLOSED
R11-2L
48"X30"

PULL DRUMS BACK FROM YELLOW EDGELINE TO ALLOW ROOM FOR TRUCK TURNING MOVEMENTS

WEST 50 NORTH 83

SOUTH 83 NORTH 83 75

COVERING SIGN TYPE II

SOUTH 83 WEST 50 NORTH 83 75

Lake Geneva
Salem
Burlington

ONE WAY
R6-2R
24"X30"

JCT COUNTY F

SPEED LIMIT 35
R2-1
24"X30"

STOP

R4-7
24"X30"

WO1-6
48"X24"

ROAD CLOSED
R11-2
48"X30"

R3-2
24"X24"

DO NOT CONSTRUCT WB LEFT TURN LANE PAVEMENT UNTIL STAGE 5

STH 50

SEE NOTE 1

STH 50 R/L

SOUTH 83
M3-3 24"X12"
M1-6 24"X24"

M5-1R
21"X21"

M6-1
21"X21"

R3-18
30"X30"

EAST 50
M3-2 24"X12"
M1-6 24"X24"

STH 83

STH 83 R/L

ASPHALTIC SURFACE TEMPORARY

CONSTRUCT WB LEFT TURN PAVEMENT IN STAGE 3 MEDIAN CURB & GUTTER TO BE CONSTRUCTED IN STAGE 5.

TEMPORARY PIPE CONNECTION 12-INCH

TEMPORARY PIPE CONNECTION 18-INCH

INSTALL 2X3-FT INLET WITH TYPE S COVER
USED ADJUSTMENT RINGS WITH 2X2-FT OPENING

INSTALL INLET WITHOUT COVER
COVER PLATE TEMPORARY
PAVE OVER COVER PLATE WITH ASPHALTIC SURFACE TEMPORARY

NOTES:
1. BLOCK OPEN END OF STORM SEWER PIPE WITH PLYWOOD OR METAL PLATE UNTIL FUTURE STAGE (INCIDENTAL TO STORM SEWER CONSTRUCTION)

SHEET 59 OF 126

PROJECT NO: 1310-04-70	HWY: STH 50	COUNTY: KENOSHA	TRAFFIC CONTROL-STAGING - STAGE 3	SHEET 411	E

FILE NAME : T:\1182708.06\CIVIL3D\13100400\13100400\SHEETSPLAN\026103_S3.DWG
LAYOUT NAME - 04
PLOT DATE : 1/14/2022 4:30 PM
PLOT BY : BLACKWOOD, JIM
PLOT NAME :
PLOT SCALE : 1 IN:100 FT
WISDOT/CADDS SHEET 42

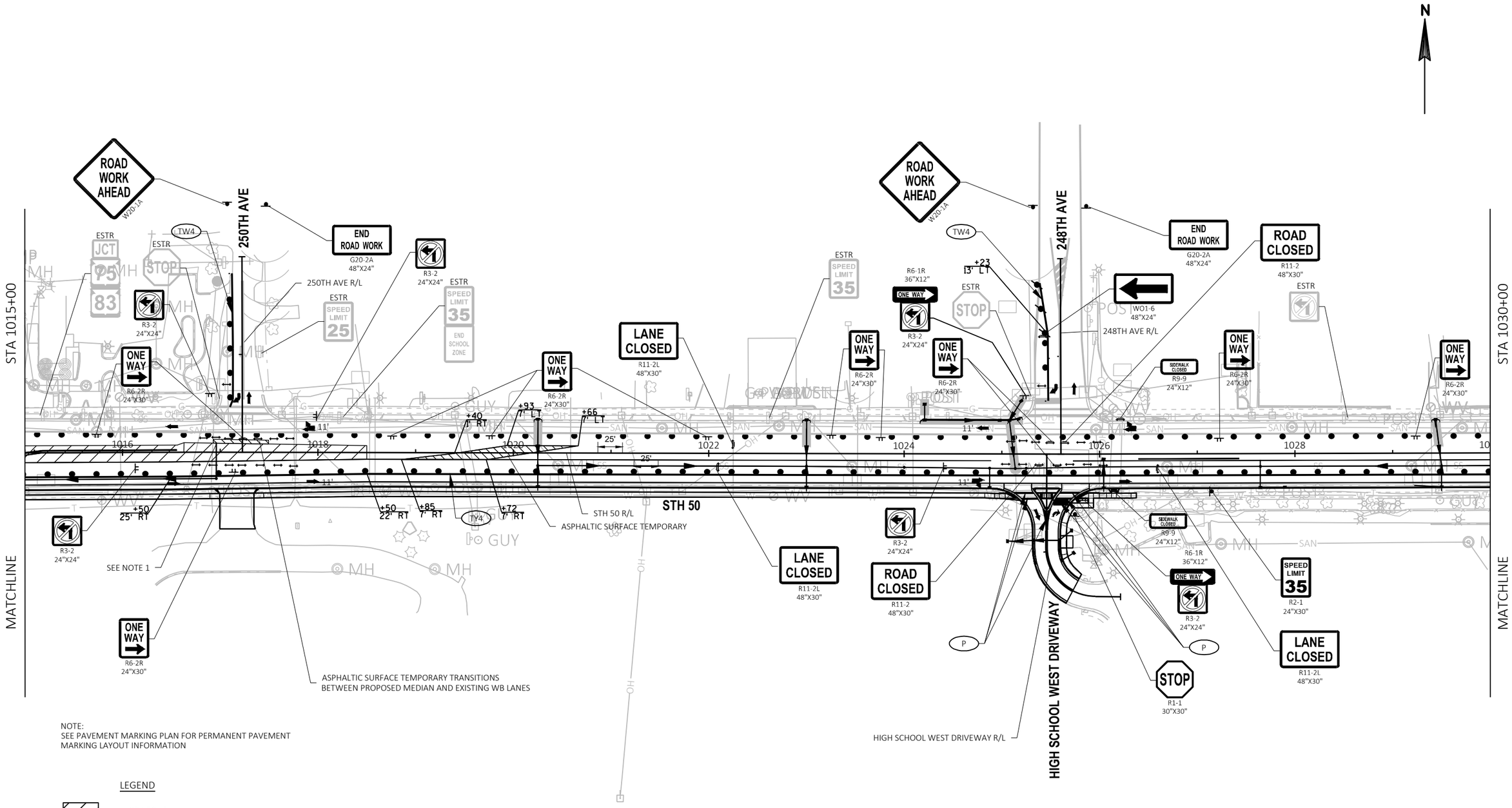

NOTE:
SEE PAVEMENT MARKING PLAN FOR PERMANENT PAVEMENT MARKING LAYOUT INFORMATION

LEGEND

- WORK ZONE
- TEMPORARY PAVEMENT TO BE USED IN FUTURE STAGES
- WORK CONSTRUCTED UNDER TRAFFIC
- ASPHALTIC SURFACE TEMPORARY PLACED IN PREVIOUS STAGE

NOTES:
1. BLOCK OPEN END OF STORM SEWER PIPE WITH PLYWOOD OR METAL PLATE UNTIL FUTURE STAGE (INCIDENTAL TO STORM SEWER CONSTRUCTION)

SHEET 60 OF 126

PROJECT NO: 1310-04-70	HWY: STH 50	COUNTY: KENOSHA	TRAFFIC CONTROL-STAGING - STAGE 3	SHEET 412	E

FILE NAME : T:\1182708.06\CIVIL3D\13100400\13100400\SHEETSPLAN\026103_S3.DWG
LAYOUT NAME - 05
PLOT DATE : 1/14/2022 4:31 PM
PLOT BY : BLACKWOOD, JIM
PLOT NAME :
PLOT SCALE : 1 IN:100 FT
WISDOT/CADDS SHEET 42

2

N

STA 1030+00

STA 1045+00

MATCHLINE

MATCHLINE

246TH AVE

246TH AVE R/L

243RD AVE

243RD AVE R/L

244TH AVE

244TH AVE R/L

STH 50

STH 50 R/L

ROAD WORK AHEAD
W20-1A

END ROAD WORK
G20-2A
48"X24"

ONE WAY
R6-2R
24"X30"

WO1-6
48"X24"

BEGIN LEFT TURN LANE
R3-20L
24"X36"

ESTR

SCHOOL SPEED LIMIT 25
WHEN CHILDREN ARE PRESENT

SPEED LIMIT 35

STOP
R1-1
30"X30"

R6-1R
36"X12"

R3-2
24"X24"

LANE CLOSED
R11-2L
48"X30"

W03-3

SPEED LIMIT 35
R2-1
24"X30"

TY4

P

TW8

+69 23' RT

+57 14' RT

+57 24' RT

+83 24' RT

+00 22' RT

+00 24' RT

+64 22' RT

+62 22' RT

11'

10'

25'

1030

1032

1034

1036

1038

1040

1042

1044

NOTE:
SEE PAVEMENT MARKING PLAN FOR PERMANENT PAVEMENT MARKING LAYOUT INFORMATION

LEGEND

- WORK ZONE
- TEMPORARY PAVEMENT TO BE USED IN FUTURE STAGES
- WORK CONSTRUCTED UNDER TRAFFIC
- ASPHALTIC SURFACE TEMPORARY PLACED IN PREVIOUS STAGE

SHEET 61 OF 126

PROJECT NO: 1310-04-70	HWY: STH 50	COUNTY: KENOSHA	TRAFFIC CONTROL-STAGING - STAGE 3	SHEET 413	E

FILE NAME : T:\1182708.06\CIVIL3D\13100400\13100400\SHEETSPLAN\026103_S3.DWG
LAYOUT NAME - 06

PLOT DATE : 1/14/2022 4:31 PM PLOT BY : BLACKWOOD, JIM PLOT NAME : PLOT SCALE : 1 IN:100 FT

2

N

ROAD WORK AHEAD
W20-1A

END ROAD WORK
G20-2A
48"X24"

ESTR
STOP

WO1-6
48"X24"

ONE WAY
R6-2R
24"X30"

74TH PL

74TH PLACE R/L

STA 1045+00

ESTR
SPEED LIMIT 35

BEGIN LEFT TURN LANE
R3-20L
24"X36"

LANE CLOSED
R11-2L
48"X30"

ONE WAY
R6-2R
24"X30"

R3-2
24"X24"

ESTR
SPEED LIMIT 35

STA 1060+00

1046 1048 1050 1052 1054 1056 1058

11' 10' 11' 10' 11' 11' 25' 25'

STH 50 R/L

STH 50

TW8

TY4

+50 12' RT
+50 22' RT
+50 13' RT
+64 24' RT
+56 25' RT

242ND AVE R/L

242ND AVE

STOP
R1-1
30"X30"

P

WO1-6
48"X24"

ONE WAY
R6-2R
24"X30"

R3-2
24"X24"

SPEED LIMIT 35
R2-1
24"X30"

ONE WAY
R6-2R
24"X30"

LANE CLOSED
R11-2L
48"X30"

BEGIN LEFT TURN LANE
R3-20L
24"X36"

TY4

MATCHLINE

MATCHLINE

END ROAD WORK
G20-2A
48"X24"

ROAD WORK AHEAD
W20-1A

NOTE:
SEE PAVEMENT MARKING PLAN FOR PERMANENT PAVEMENT MARKING LAYOUT INFORMATION

LEGEND

- WORK ZONE
- TEMPORARY PAVEMENT TO BE USED IN FUTURE STAGES
- WORK CONSTRUCTED UNDER TRAFFIC
- ASPHALTIC SURFACE TEMPORARY PLACED IN PREVIOUS STAGE

SHEET 62 OF 126

PROJECT NO: 1310-04-70	HWY: STH 50	COUNTY: KENOSHA	TRAFFIC CONTROL-STAGING - STAGE 3	SHEET 414	E

FILE NAME : T:\1182708.06\CIVIL3D\13100400\13100400\SHEETSPLAN\026103_S3.DWG
LAYOUT NAME - 07

PLOT DATE : 1/14/2022 4:31 PM PLOT BY : BLACKWOOD, JIM PLOT NAME : PLOT SCALE : 1 IN:100 FT

2

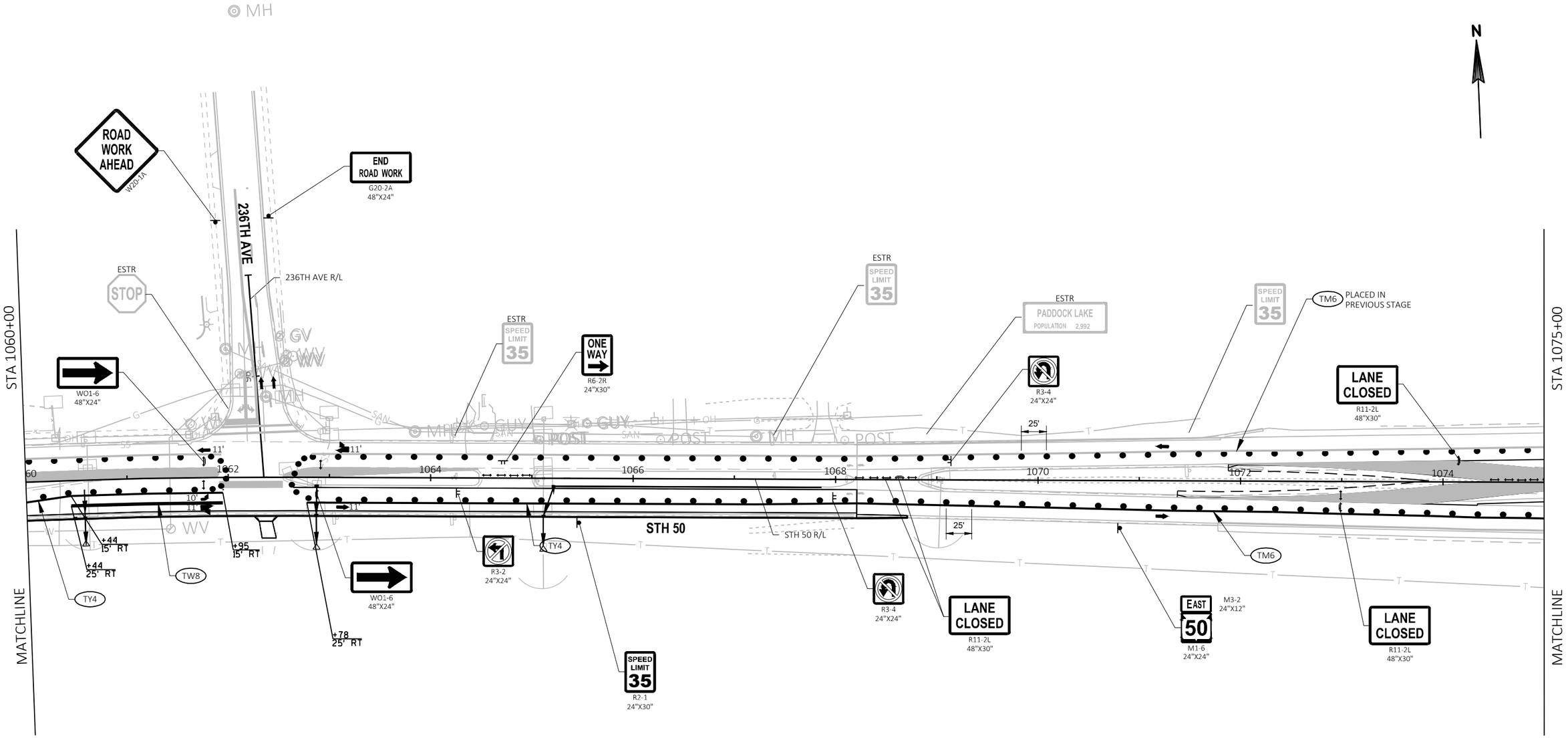

LEGEND

- WORK ZONE
- TEMPORARY PAVEMENT TO BE USED IN FUTURE STAGES
- WORK CONSTRUCTED UNDER TRAFFIC
- ASPHALTIC SURFACE TEMPORARY PLACED IN PREVIOUS STAGE

PROJECT NO: 1310-04-70	HWY: STH 50	COUNTY: KENOSHA	TRAFFIC CONTROL-STAGING - STAGE 3	SHEET 415 E

FILE NAME : T:\1182708.06\CIVIL3D\13100400\13100400\SHEETSPLAN\026103_S3.DWG
LAYOUT NAME - 08
PLOT DATE : 1/14/2022 4:31 PM
PLOT BY : BLACKWOOD, JIM
PLOT NAME :
PLOT SCALE : 1 IN:100 FT
WISDOT/CADDS SHEET 42

2

N

STA 1075+00

615' BUFFER SPACE

660' MERGE TAPER

A

LANE CLOSED
R11-2L
48"X30"

R3-4
24"X24"

LANE CLOSED
R11-2L
48"X30"

TM6 PLACED IN PREVIOUS STAGE

TM6 PLACED IN PREVIOUS STAGE

25'

12'

1076

1078

12'
12'

STH 50

25'

+90
37' R1

+89
25' R1

100'

TY4

TM6

COVER SIGN
SPEED LIMIT
55

R3-4
24"X24"

STH 50 R/L

TM6

ESTR

ESTR

HWY 45	2
HWY 94	7
KENOSHA	11

LANE CLOSED
R11-2L
48"X30"

TM10 PLACED IN PREVIOUS STAGE

MATCHLINE

MATCHLINE

LEGEND

- WORK ZONE
- TEMPORARY PAVEMENT TO BE USED IN FUTURE STAGES
- WORK CONSTRUCTED UNDER TRAFFIC
- ASPHALTIC SURFACE TEMPORARY PLACED IN PREVIOUS STAGE

SHEET 64 OF 126

PROJECT NO: 1310-04-70	HWY: STH 50	COUNTY: KENOSHA	TRAFFIC CONTROL-STAGING - STAGE 3	SHEET 416	E

FILE NAME : T:\1182708.06\CIVIL3D\13100400\13100400\SHEETSPLAN\026103_S3.DWG
LAYOUT NAME - 09

PLOT DATE : 1/14/2022 4:31 PM PLOT BY : BLACKWOOD, JIM PLOT NAME : PLOT SCALE : 1 IN:100 FT

2

N

REDUCE SPEED AND CLOSE LANE IN ACCORDANCE WITH SDD
TRAFFIC CONTROL, LANE CLOSURE, SPEED REDUCTION.

A

660'
MERGE TAPER

500'

500'

W04-2L

500'

SPEED LIMIT 35
R2-1
48"X60"

700'

SPEED LIMIT 35
W03-5

400'

LEFT LANE CLOSED 1/2 MILE
W20-5SG

1300'

MAX. 13' WIDTH
W012-52

1300'

ROAD WORK 1 MILE
W20-1F

ESTR

R3-4
24"X24"

TM10 PLACED IN PREVIOUS STAGE

TM10 PLACED IN PREVIOUS STAGE

STH 50

MATCHLINE

R3-4
24"X24"

ESTR

LANE CLOSED
R11-2L
48"X30"

END ROAD WORK
G20-2A
48"X24"

LEGEND

- WORK ZONE
- TEMPORARY PAVEMENT TO BE USED IN FUTURE STAGES
- WORK CONSTRUCTED UNDER TRAFFIC
- ASPHALTIC SURFACE TEMPORARY PLACED IN PREVIOUS STAGE

SHEET 65 OF 126

PROJECT NO: 1310-04-70	HWY: STH 50	COUNTY: KENOSHA	TRAFFIC CONTROL-STAGING - STAGE 3	SHEET 417	E

FILE NAME : T:\1182708.06\CIVIL3D\13100400\13100400\SHEETSPLAN\026103_S3.DWG
LAYOUT NAME - 10

PLOT DATE : 1/14/2022 4:31 PM PLOT BY : BLACKWOOD, JIM PLOT NAME : PLOT SCALE : 1 IN:100 FT

2

LEGEND

WORK ZONE

TEMPORARY PAVEMENT TO BE USED IN FUTURE STAGES

WORK CONSTRUCTED UNDER TRAFFIC

ASPHALTIC SURFACE TEMPORARY PLACED IN PREVIOUS STAGE

N

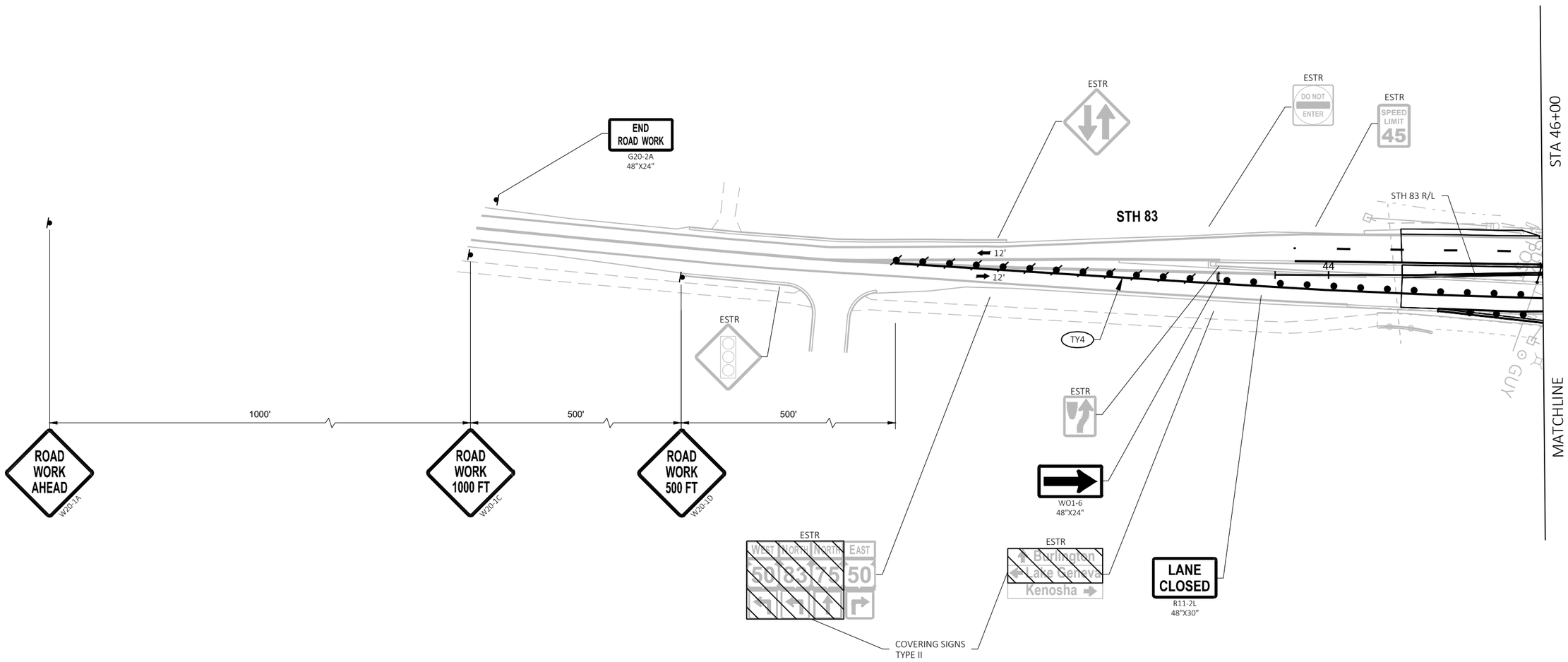

SHEET 66 OF 126

PROJECT NO: 1310-04-70	HWY: STH 50	COUNTY: KENOSHA	TRAFFIC CONTROL-STAGING - STAGE 3	SHEET 418	E

FILE NAME : T:\1182708.06\CIVIL3D\13100400\13100400\SHEETSPLAN\026103_S3.DWG
LAYOUT NAME - 11

PLOT DATE : 1/14/2022 4:31 PM PLOT BY : BLACKWOOD, JIM PLOT NAME : PLOT SCALE : 1 IN:100 FT

2

N

ROAD WORK 500 FT
W20-1D

ROAD WORK 1000 FT
W20-1C

ROAD WORK AHEAD
W20-1A

500'

500'

1000'

WO1-4L

COVERING SIGNS TYPE II

ESTR
Salem
Kenosha
Lake Geneva

ESTR

ESTR
END
75

STA 54+00

4

STH 75

STH 75

STH 75 R/L

ESTR

ESTR

ESTR
DO NOT ENTER

ESTR
NORTH
75

END
ROAD WORK
G20-2A
48"X24"

MATCHLINE

ESTR
EAST | SOUTH | NORTH | WEST
50 | 83 | 83 | 50

COVERING SIGNS TYPE II

LEGEND

- WORK ZONE
- TEMPORARY PAVEMENT TO BE USED IN FUTURE STAGES
- WORK CONSTRUCTED UNDER TRAFFIC
- ASPHALTIC SURFACE TEMPORARY PLACED IN PREVIOUS STAGE

SHEET 67 OF 126

PROJECT NO: 1310-04-70	HWY: STH 50	COUNTY: KENOSHA	TRAFFIC CONTROL-STAGING - STAGE 3	SHEET 419	E

FILE NAME : T:\1182708.06\CIVIL3D\13100400\13100400\SHEETSPLAN\026103_S3.DWG
LAYOUT NAME - 12

PLOT DATE : 1/14/2022 4:31 PM PLOT BY : BLACKWOOD, JIM PLOT NAME : PLOT SCALE : 1 IN:100 FT

TRAFFIC CONTROL NOTES - STAGE 4A

CONSTRUCTION:
- STH 50 WB LANES AT STH 75/STH 83

TRAFFIC:
- STH 50 - 1 THRU LANE IN EACH DIRECTION
- STH 83 RIGHT IN/RIGHT OUT AT STH 50
- STH 75 CLOSED TO THRU TRAFFIC AND DETOURED

PEDESTRIANS:
- SIDEWALKS AND CROSSWALKS PARALLEL TO STH 50 OPEN AT ALL TIMES ON SOUTH SIDE OF STH 50

2

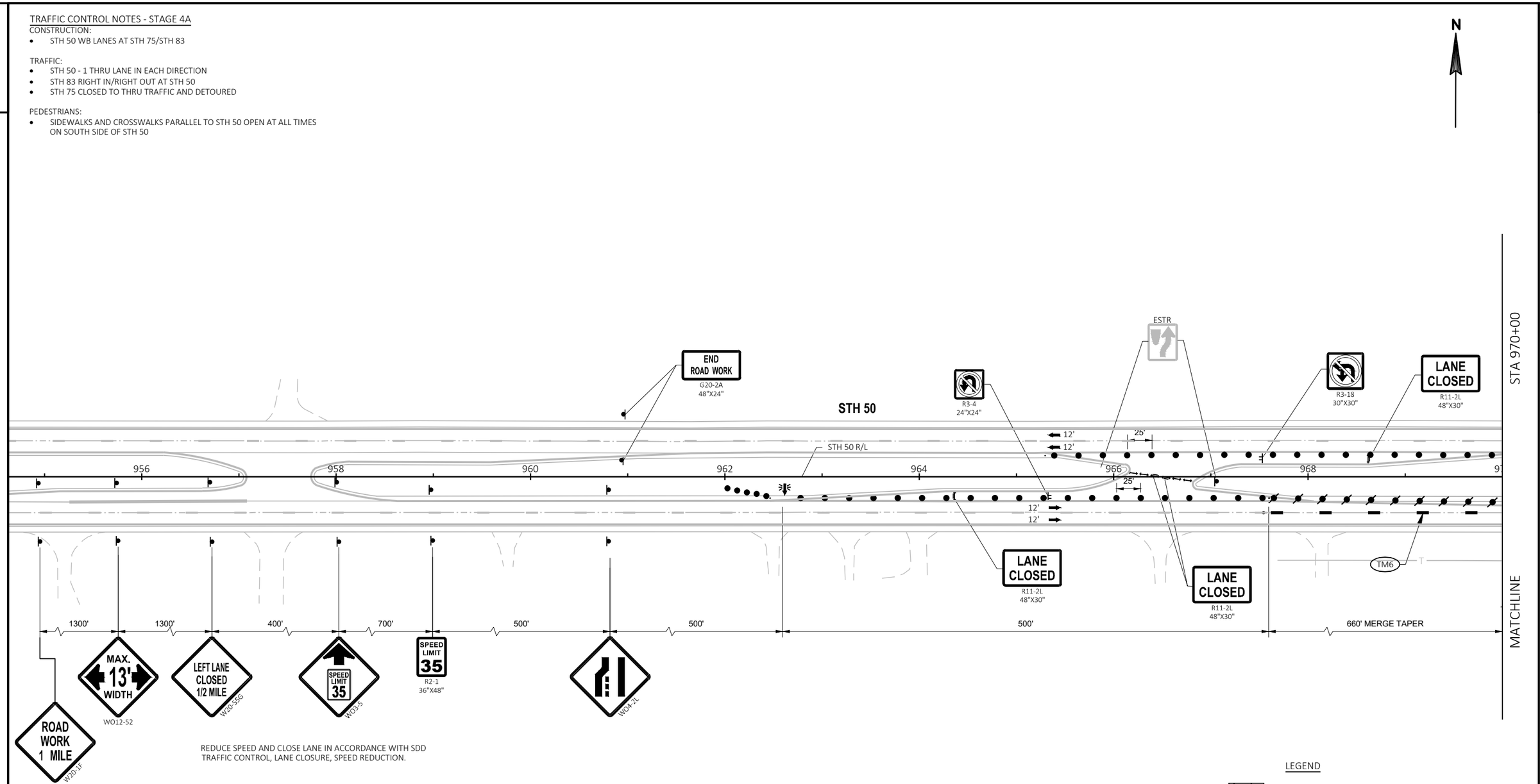

REDUCE SPEED AND CLOSE LANE IN ACCORDANCE WITH SDD TRAFFIC CONTROL, LANE CLOSURE, SPEED REDUCTION.

LEGEND

- WORK ZONE
- TEMPORARY PAVEMENT TO BE USED IN FUTURE STAGES
- WORK CONSTRUCTED UNDER TRAFFIC
- ASPHALTIC SURFACE TEMPORARY PLACED IN PREVIOUS STAGE

SHEET 68 OF 126

PROJECT NO: 1310-04-70	HWY: STH 50	COUNTY: KENOSHA	TRAFFIC CONTROL-STAGING - STAGE 4A	SHEET 420	E

FILE NAME : T:\1182708.06\CIVIL3D\13100400\13100400\SHEETSPLAN\026104_S4A.DWG
LAYOUT NAME - 01
PLOT DATE : 1/14/2022 4:32 PM
PLOT BY : BLACKWOOD, JIM
PLOT NAME :
PLOT SCALE : 1 IN:100 FT
WISDOT/CADDS SHEET 42

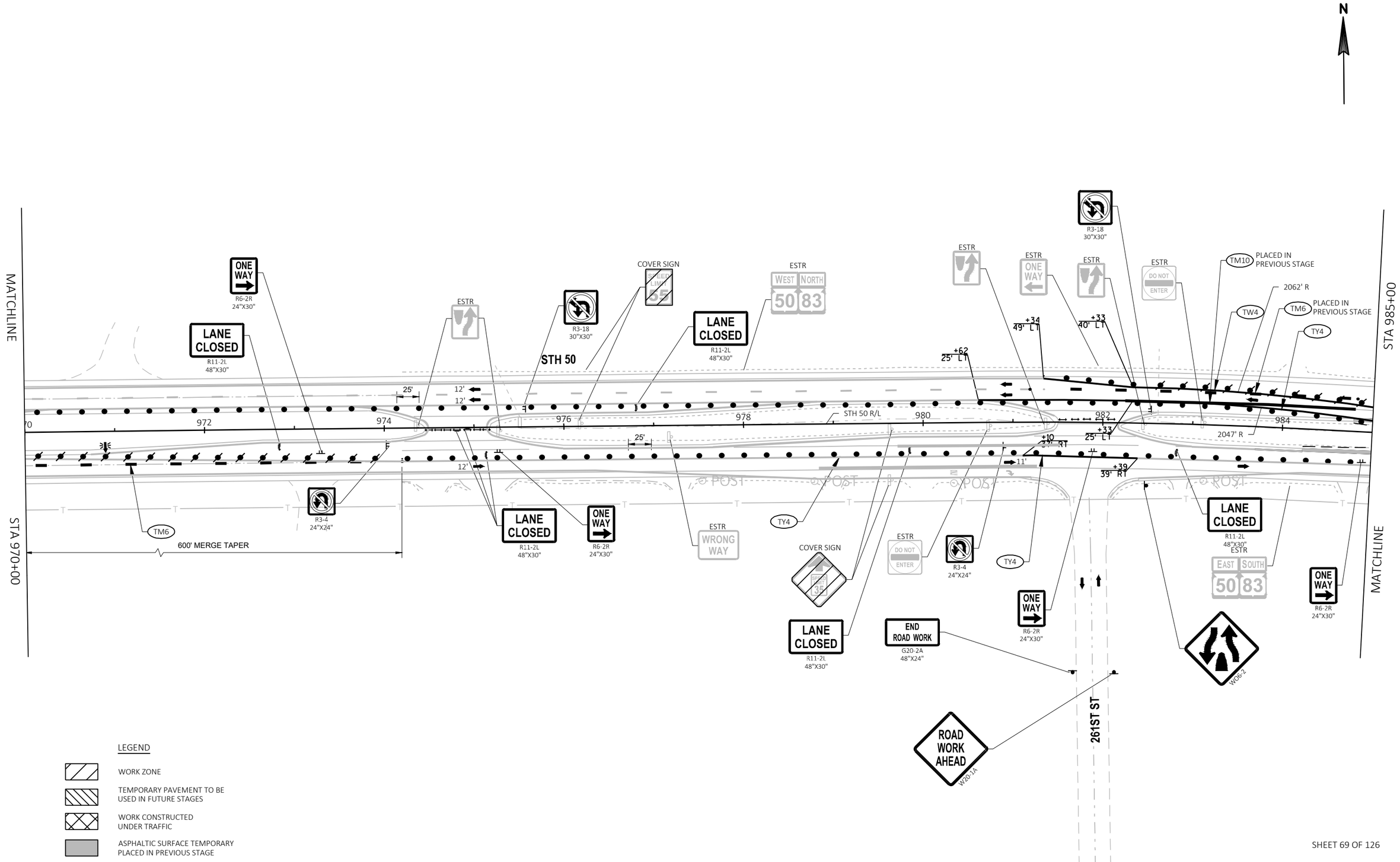

SHEET 69 OF 126

PROJECT NO: 1310-04-70	HWY: STH 50	COUNTY: KENOSHA	TRAFFIC CONTROL-STAGING - STAGE 4A	SHEET 421	E

FILE NAME : T:\1182708.06\CIVIL3D\13100400\13100400\SHEETSPLAN\026104_S4A.DWG
LAYOUT NAME - 02
PLOT DATE : 1/14/2022 4:32 PM
PLOT BY : BLACKWOOD, JIM
PLOT NAME :
PLOT SCALE : 1 IN:100 FT
WISDOT/CADDS SHEET 42

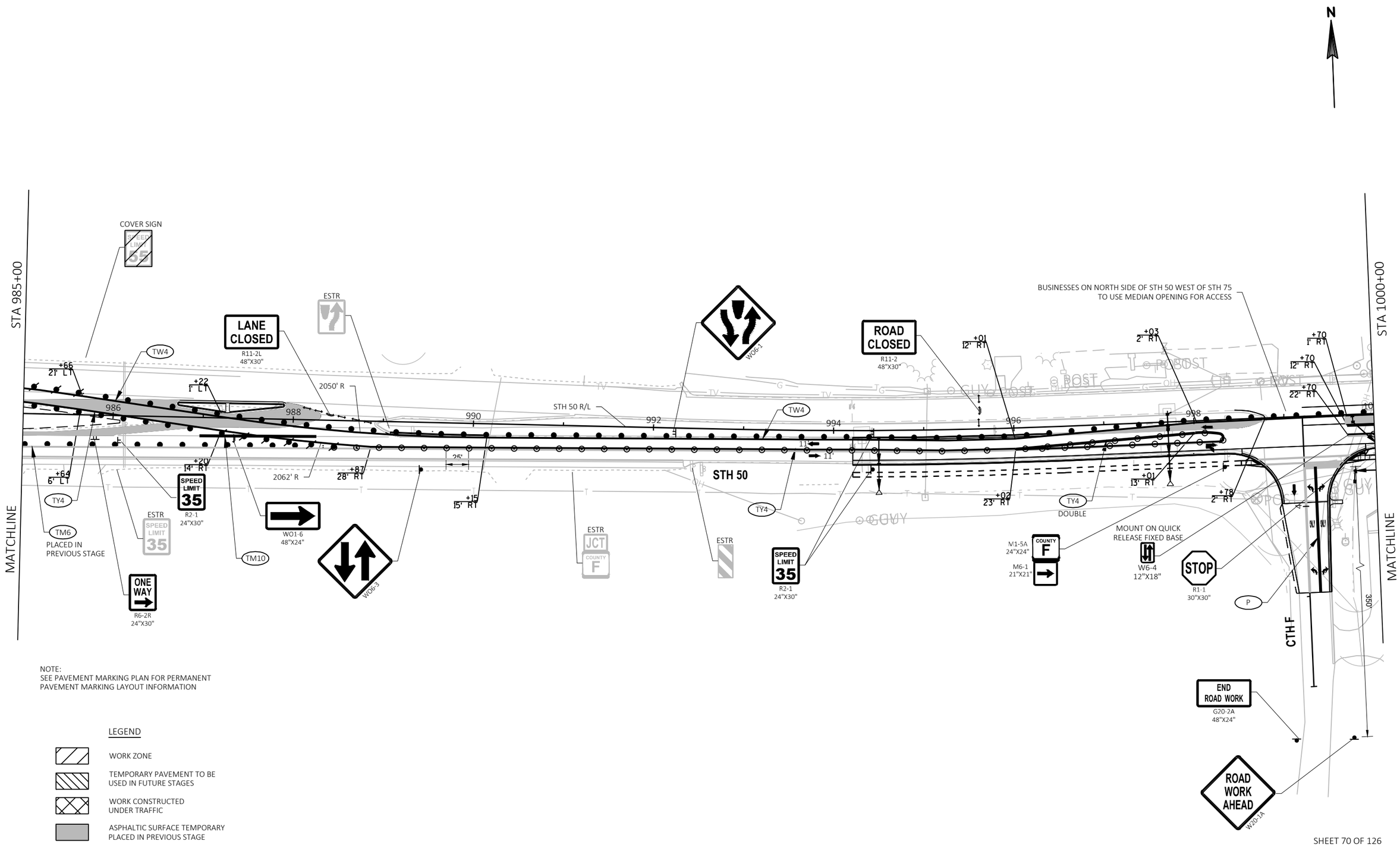

NOTE:
SEE PAVEMENT MARKING PLAN FOR PERMANENT PAVEMENT MARKING LAYOUT INFORMATION

LEGEND

- WORK ZONE
- TEMPORARY PAVEMENT TO BE USED IN FUTURE STAGES
- WORK CONSTRUCTED UNDER TRAFFIC
- ASPHALTIC SURFACE TEMPORARY PLACED IN PREVIOUS STAGE

SHEET 70 OF 126

PROJECT NO: 1310-04-70	HWY: STH 50	COUNTY: KENOSHA	TRAFFIC CONTROL-STAGING - STAGE 4A	SHEET 422	E

FILE NAME : T:\1182708.06\CIVIL3D\13100400\13100400\SHEETSPLAN\026104_S4A.DWG
LAYOUT NAME - 03
PLOT DATE : 1/14/2022 4:32 PM
PLOT BY : BLACKWOOD, JIM
PLOT NAME :
PLOT SCALE : 1 IN:100 FT
WISDOT/CADDS SHEET 42

PEDESTRIAN STAGING NOTES:
STAGE 4A1: SIDEWALK ON EAST SIDE OF STH 75 CLOSED.
SIDEWALK ON WEST SIDE OF STH 75 OPEN. BOTH CROSSWALKS ACROSS STH 50 OPEN

STAGE 4A2: SIDEWALK ON WEST SIDE OF STH 75 CLOSED.
SIDEWALK ON EAST SIDE OF STH 75 OPEN. BOTH CROSSWALKS ACROSS STH 50 OPEN.

LEGEND

- WORK ZONE
- TEMPORARY PAVEMENT TO BE USED IN FUTURE STAGES
- WORK CONSTRUCTED UNDER TRAFFIC
- ASPHALTIC SURFACE TEMPORARY PLACED IN PREVIOUS STAGE
- TWF — CURB RAMP DETECTABLE WARNING FIELD YELLOW TEMPORARY

N

NOTE: SEE DETOUR PLAN FOR ADDITIONAL SIGNAGE

STA 1000+00 — STA 1015+00

MATCHLINE — MATCHLINE

STH 50 — STH 50 R/L — STH 83 — STH 83 R/L

STA 54+00 — STA 46+00

ROAD CLOSED (R11-2, 48"X30")
DRIVEWAY TO REMAIN OPEN
TEMPORARY CURB RAMP PARALLEL
TEMPORARY PEDSTRIAN SURFACE PLYWOOD
TEMPORARY PEDESTRIAN SURFACE PLYWOOD
TEMPORARY CURB RAMP PARALLEL
TEMPORARY PEDESTRIAN BARRICADE
INSTALL INLET WITH TYPE S COVER USE ADJUSTMENT RINGS WITH 2X2-FT OPENING
STAGE 4A2 PEDESTRIAN ROUTE
STAGE 4A1 ONLY — SIDEWALK CLOSED CROSS HERE (R9-11A, 24"X12")
STAGE 4A2 ONLY — SIDEWALK CLOSED CROSS HERE (R9-11A, 24"X12")
ROAD CLOSED (R11-2, 48"X30")
WO1-7, 48"X24"
TEMPORARY PEDESTRIAN SURFACE PLYWOOD
TEMPORARY CURB RAMP PARALLEL
M3-4, 24"X12" — WEST 50 NORTH 83 — M1-6, 24"X24" — M3-1, 24"X12"
M6-1, 21"X21" — MB6-1, 21"X21" — M6-1, 21"X21"
M3-3, 24"X12" — M1-6, 24"X24" — M3-1, 24"X12" — M5-1L, 21"X21" — MB6-1, 21"X21" — M6-1, 21"X21"
R6-1R, 36"X12" — ONE WAY — R3-2, 24"X24"
BEGIN LEFT TURN LANE — R3-20L, 24"X36"
SPEED LIMIT 35 — R2-1, 24"X30"
PROVIDE 2-WAY ACCESS IN DRIVEWAY DURING STAGE 4A
ROAD CLOSED (R11-2, 48"X30")
LANE CLOSED — R11-2L, 48"X30"
BEGIN RIGHT TURN LANE — R3-20R, 24"X36"
LANE CLOSED — R11-2L, 48"X30"
ONE WAY — R6-2R, 24"X30"
R3-18, 30"X30"
SOUTH 83 — M3-3, 24"X12" — M1-6, 24"X24" — M6-1, 21"X21"
REDUCE FLEXIBLE TUBULAR MARKER SPACING FROM 25 FT TO 5 FT FROM STA 1001+58 TO 1003+65
MOUNT ON QUICK RELEASE FIXED BASE — W6-4, 12"X18"
INSTALL BOTH INLETS 2X3-FT WITH TYPE S CASTING USE ADJUSTMENT RINGS WITH 2X2-FT OPENING
SOUTH 83 — M3-3, 24"X12" — M1-6, 24"X24" — M5-1R, 21"X21"
R4-7, 24"X30"
M3-3, 24"X12" — SOUTH 83 — M1-6, 24"X24"
ESTR
W6-4, 12"X18" — MOUNT ON QUICK RELEASE FIXED BASE
WEST 50 NORTH 83 EAST 50 — M3-4, 24"X12" — M3-1, 24"X12" — M3-2, 24"X12" — M1-6, 24"X24" — MB6-1, 21"X21" — MB6-1, 21"X21" — MB6-1, 21"X21"
ONE WAY — R6-2R, 24"X30"
LANE CLOSED — R11-2L, 48"X30"
SPEED LIMIT 35 — R2-1, 24"X30"
EAST 50 — M3-2, 24"X12" — M1-6, 24"X24"
W06-3
REDUCE FLEXIBLE TUBULAR MARKER SPACING FROM 25 FT TO 5 FT FROM STA 1012+08 TO 1019+08
TY4 DOUBLE
TW4, TW8, TY4, TSB, TWF

SHEET 71 OF 126

PROJECT NO: 1310-04-70	HWY: STH 50	COUNTY: KENOSHA	TRAFFIC CONTROL-STAGING - STAGE 4A	SHEET 423 E

FILE NAME : T:\1182708.06\CIVIL3D\13100400\13100400\SHEETSPLAN\026104_S4A.DWG
LAYOUT NAME - 04
PLOT DATE : 1/14/2022 4:32 PM
PLOT BY : BLACKWOOD, JIM
PLOT NAME :
PLOT SCALE : 1 IN:100 FT

2

N

STA 1015+00

STA 1030+00

MATCHLINE

MATCHLINE

ROAD WORK AHEAD
W20-1A

TACO BELL ACCESS FROM EITHER 250TH AVE OR STRIP MALL MEDIAN OPENING

250TH AVE

END ROAD WORK
G20-2A
48"X24"

LEAVE GAP IN DRUMS FOR BUSINESS ACCESS

250TH AVE R/L

ESTR
SPEED LIMIT
25

R3-2
24"X24"

+08
40' LT

+67
8' RT

+96
9' LT

WO1-6
48"X24"

35' R

+36
36' LT

TW4

+29
12" RT

1016

ONE WAY
R6-2R
24"X30"

45' R

+82
10' RT

1018

754' R

ONE WAY
R6-2R
24"X30"

+40
1' RT

1020

+39
9' RT

761' R

+95
23' LT

TY4

LANE CLOSED
R11-2L
48"X30"

+09
31' LT

+09
20' LT

1022

750' R

ESTR
SPEED LIMIT
35

WO6-2

ONE WAY
R6-2R
24"X30"

R6-1R
36"X12"
ONE WAY

R3-2
24"X24"

ESTR
STOP

ONE WAY
R6-2R
24"X30"

1024

11'

ROAD WORK AHEAD
W20-1A

248TH AVE

END ROAD WORK
G20-2A
48"X24"

ROAD CLOSED
R11-2
48"X30"

ESTR

WO1-6
48"X24"

248TH AVE R/L

SIDEWALK CLOSED
R9-9
24"X12"

ONE WAY
R6-2R
24"X30"

1026

1028

ONE WAY
R6-2R
24"X30"

TY4

R3-2
24"X24"

+39
20' RT

765' R

+41
12' RT

+97
12' LT

STH 50

STH 50 R/L

R3-2
24"X24"

SIDEWALK CLOSED
R9-9
24"X12"

R6-1R
36"X12"
ONE WAY

R3-2
24"X24"

WO6-1

R6-1R
36"X12"
ONE WAY

R3-2
24"X24"

ONE WAY
R6-2R
24"X30"

LANE CLOSED
R11-2L
48"X30"

ROAD CLOSED
R11-2
48"X30"

HIGH SCHOOL WEST DRIVEWAY R/L

HIGH SCHOOL WEST DRIVEWAY

STOP
R1-1
30"X30"

REDUCE FLEXIBLE TUBULAR MARKER SPACING FROM 25 FT TO 5 FT FROM STA 1012+08 TO 1019+08

LEGEND

- WORK ZONE
- TEMPORARY PAVEMENT TO BE USED IN FUTURE STAGES
- WORK CONSTRUCTED UNDER TRAFFIC
- ASPHALTIC SURFACE TEMPORARY PLACED IN PREVIOUS STAGE

SHEET 72 OF 126

PROJECT NO: 1310-04-70	HWY: STH 50	COUNTY: KENOSHA	TRAFFIC CONTROL-STAGING - STAGE 4A	SHEET 424	E

FILE NAME : T:\1182708.06\CIVIL3D\13100400\13100400\SHEETSPLAN\026104_S4A.DWG
LAYOUT NAME - 05

PLOT DATE : 1/14/2022 4:32 PM PLOT BY : BLACKWOOD, JIM PLOT NAME : PLOT SCALE : 1 IN:100 FT

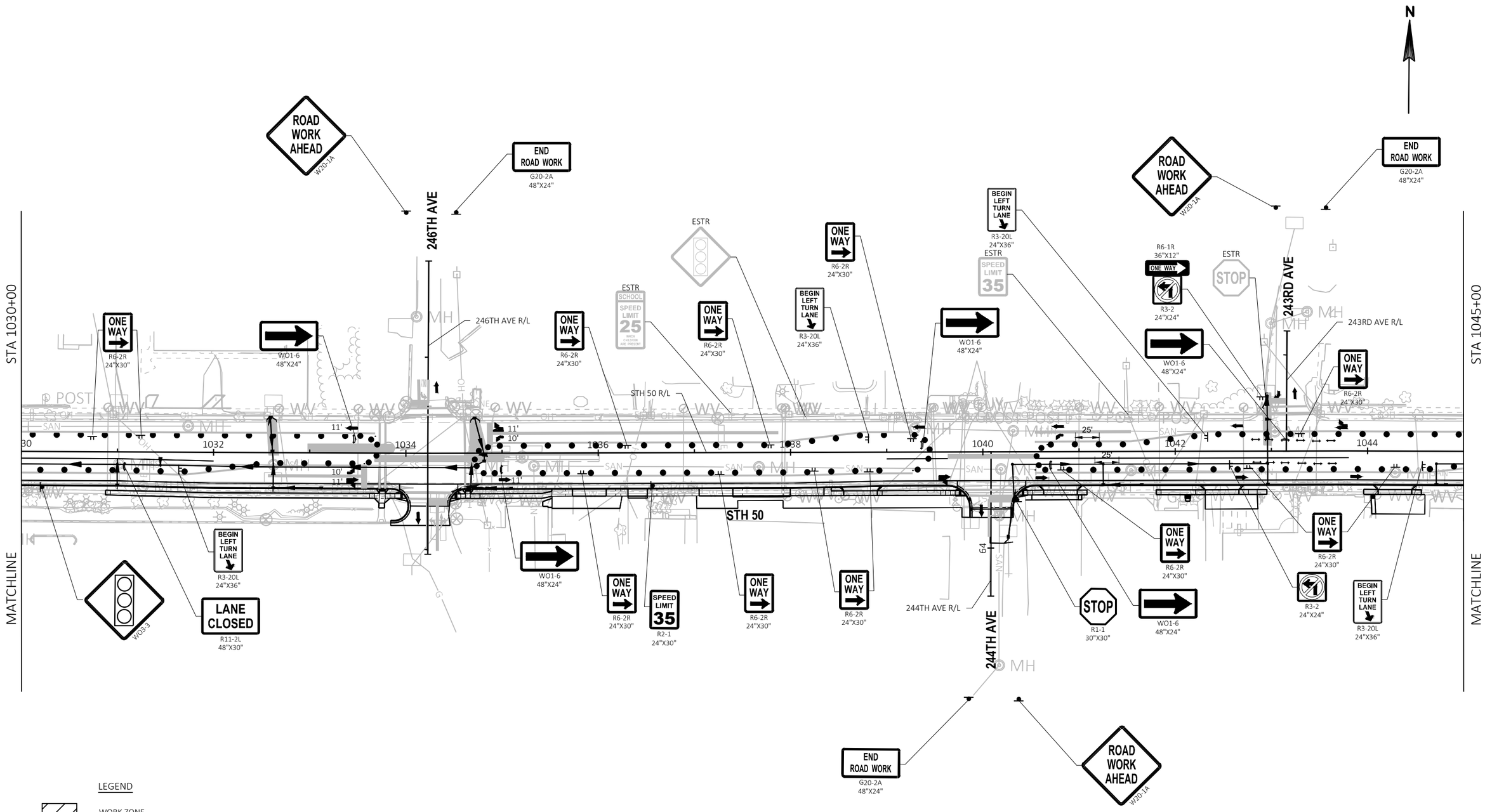

LEGEND

- WORK ZONE
- TEMPORARY PAVEMENT TO BE USED IN FUTURE STAGES
- WORK CONSTRUCTED UNDER TRAFFIC
- ASPHALTIC SURFACE TEMPORARY PLACED IN PREVIOUS STAGE

SHEET 73 OF 126

PROJECT NO: 1310-04-70	HWY: STH 50	COUNTY: KENOSHA	TRAFFIC CONTROL-STAGING - STAGE 4A	SHEET 425	E

FILE NAME : T:\1182708.06\CIVIL3D\13100400\13100400\SHEETSPLAN\026104_S4A.DWG
LAYOUT NAME - 06
PLOT DATE : 1/14/2022 4:32 PM
PLOT BY : BLACKWOOD, JIM
PLOT NAME :
PLOT SCALE : 1 IN:100 FT
WISDOT/CADDS SHEET 42

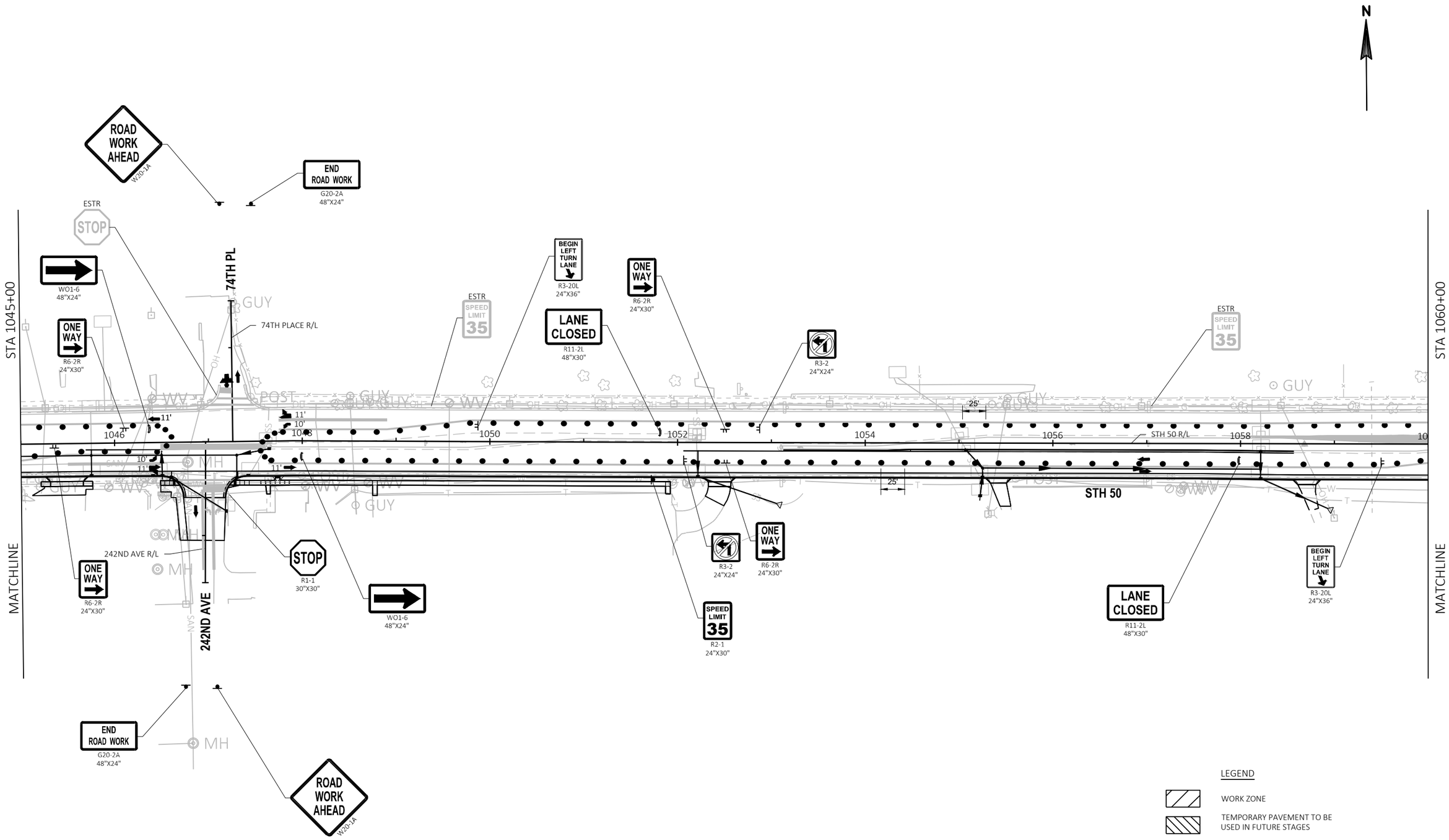

SHEET 74 OF 126

PROJECT NO: 1310-04-70	HWY: STH 50	COUNTY: KENOSHA	TRAFFIC CONTROL-STAGING - STAGE 4A	SHEET 426	E

FILE NAME : T:\1182708.06\CIVIL3D\13100400\13100400\SHEETSPLAN\026104_S4A.DWG
LAYOUT NAME - 07
PLOT DATE : 1/14/2022 4:32 PM
PLOT BY : BLACKWOOD, JIM
PLOT NAME :
PLOT SCALE : 1 IN:100 FT
WISDOT/CADDS SHEET 42

2

N

STA 1060+00

STA 1075+00

ROAD WORK AHEAD
W20-1A

END ROAD WORK
G20-2A
48"X24"

236TH AVE

236TH AVE R/L

ESTR
STOP

WO1-6
48"X24"

ESTR
SPEED LIMIT 35

ONE WAY
R6-2R
24"X30"

ESTR
SPEED LIMIT 35

ESTR
PADDOCK LAKE
POPULATION 2,992

SPEED LIMIT 35

R3-4
24"X24"

TM6 PLACED IN PREVIOUS STAGE

LANE CLOSED
R11-2L
48"X30"

25'

11'

10'

1060
1062
1064
1066
1068
1070
1072
1074

STH 50

STH 50 R/L

WO1-6
48"X24"

R3-2
24"X24"

R3-4
24"X24"

LANE CLOSED
R11-2L
48"X30"

TM6 PLACED IN PREVIOUS STAGE

EAST
50
M1-6
24"X24"

M3-2
24"X12"

LANE CLOSED
R11-2L
48"X30"

SPEED LIMIT 35
R2-1
24"X30"

MATCHLINE

MATCHLINE

LEGEND

- WORK ZONE
- TEMPORARY PAVEMENT TO BE USED IN FUTURE STAGES
- WORK CONSTRUCTED UNDER TRAFFIC
- ASPHALTIC SURFACE TEMPORARY PLACED IN PREVIOUS STAGE

SHEET 75 OF 126

PROJECT NO: 1310-04-70	HWY: STH 50	COUNTY: KENOSHA	TRAFFIC CONTROL-STAGING - STAGE 4A	SHEET 427	E

FILE NAME : T:\1182708.06\CIVIL3D\13100400\13100400\SHEETSPLAN\026104_S4A.DWG
LAYOUT NAME - 08

PLOT DATE : 1/14/2022 4:33 PM PLOT BY : BLACKWOOD, JIM PLOT NAME : PLOT SCALE : 1 IN:100 FT

2

N

STA 1075+00

615' BUFFER SPACE

660' MERGE TAPER

A

LANE CLOSED
R11-2L
48"X30"

R3-4
24"X24"

LANE CLOSED
R11-2L
48"X30"

TM6 PLACED IN PREVIOUS STAGE

25'

12'

1076

1078

12'
12'

STH 50

TM6 PLACED IN PREVIOUS STAGE

MATCHLINE

25'

TM6 PLACED IN PREVIOUS STAGE

100'

COVER SIGN

SPEED LIMIT 55

R3-4
24"X24"

STH 50 R/L

TM6 PLACED IN PREVIOUS STAGE

ESTR

ESTR

HWY 45	2
HWY 94	7
KENOSHA	11

LANE CLOSED
R11-2L
48"X30"

TM10 PLACED IN PREVIOUS STAGE

MATCHLINE

LEGEND

- WORK ZONE
- TEMPORARY PAVEMENT TO BE USED IN FUTURE STAGES
- WORK CONSTRUCTED UNDER TRAFFIC
- ASPHALTIC SURFACE TEMPORARY PLACED IN PREVIOUS STAGE

SHEET 76 OF 126

PROJECT NO: 1310-04-70	HWY: STH 50	COUNTY: KENOSHA	TRAFFIC CONTROL-STAGING - STAGE 4A	SHEET 428	E

FILE NAME : T:\1182708.06\CIVIL3D\13100400\13100400\SHEETSPLAN\026104_S4A.DWG
LAYOUT NAME - 09

PLOT DATE : 1/14/2022 4:33 PM PLOT BY : BLACKWOOD, JIM PLOT NAME : PLOT SCALE : 1 IN:100 FT

2

N

REDUCE SPEED AND CLOSE LANE IN ACCORDANCE WITH SDD
TRAFFIC CONTROL, LANE CLOSURE, SPEED REDUCTION.

660'
MERGE TAPER

500'

500'

W04-2L

500'

SPEED LIMIT 35
R2-1
48"X60"

700'

SPEED LIMIT 35
W03-5

400'

LEFT LANE CLOSED 1/2 MILE
W20-5SG

1300'

MAX. 13' WIDTH
WO12-52

1300'

ROAD WORK 1 MILE
W20-1F

A

ESTR

R3-4
24"X24"

TM10 PLACED IN PREVIOUS STAGE

TM10 PLACED IN PREVIOUS STAGE

STH 50

MATCHLINE

R3-4
24"X24"

ESTR

LANE CLOSED
R11-2L
48"X30"

END ROAD WORK
G20-2A
48"X24"

LEGEND

- WORK ZONE
- TEMPORARY PAVEMENT TO BE USED IN FUTURE STAGES
- WORK CONSTRUCTED UNDER TRAFFIC
- ASPHALTIC SURFACE TEMPORARY PLACED IN PREVIOUS STAGE

SHEET 77 OF 126

PROJECT NO: 1310-04-70	HWY: STH 50	COUNTY: KENOSHA	TRAFFIC CONTROL-STAGING - STAGE 4A	SHEET 429	E

FILE NAME : T:\1182708.06\CIVIL3D\13100400\13100400\SHEETSPLAN\026104_S4A.DWG
LAYOUT NAME - 10

PLOT DATE : 1/14/2022 4:33 PM PLOT BY : BLACKWOOD, JIM PLOT NAME : PLOT SCALE : 1 IN:100 FT

2

LEGEND

- WORK ZONE
- TEMPORARY PAVEMENT TO BE USED IN FUTURE STAGES
- WORK CONSTRUCTED UNDER TRAFFIC
- ASPHALTIC SURFACE TEMPORARY PLACED IN PREVIOUS STAGE

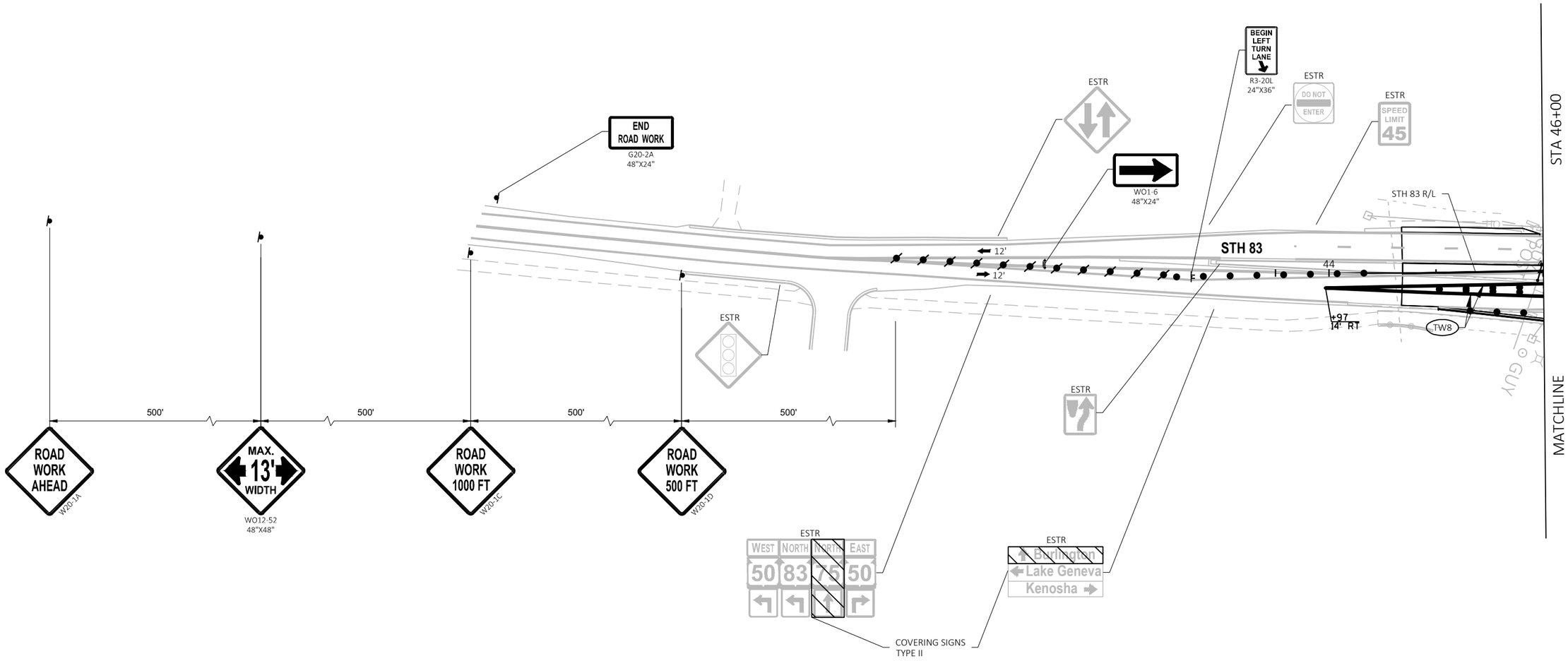

PROJECT NO: 1310-04-70	HWY: STH 50	COUNTY: KENOSHA	TRAFFIC CONTROL-STAGING - STAGE 4A	SHEET 430	E

FILE NAME : T:\1182708.06\CIVIL3D\13100400\13100400\SHEETSPLAN\026104_S4A.DWG
LAYOUT NAME - 11
PLOT DATE : 1/14/2022 4:33 PM
PLOT BY : BLACKWOOD, JIM
PLOT NAME :
PLOT SCALE : 1 IN:100 FT
WISDOT/CADDS SHEET 42

NOTE: SEE DETOUR PLAN FOR ADDITIONAL SIGNAGE

LEGEND

- WORK ZONE
- TEMPORARY PAVEMENT TO BE USED IN FUTURE STAGES
- WORK CONSTRUCTED UNDER TRAFFIC
- ASPHALTIC SURFACE TEMPORARY PLACED IN PREVIOUS STAGE

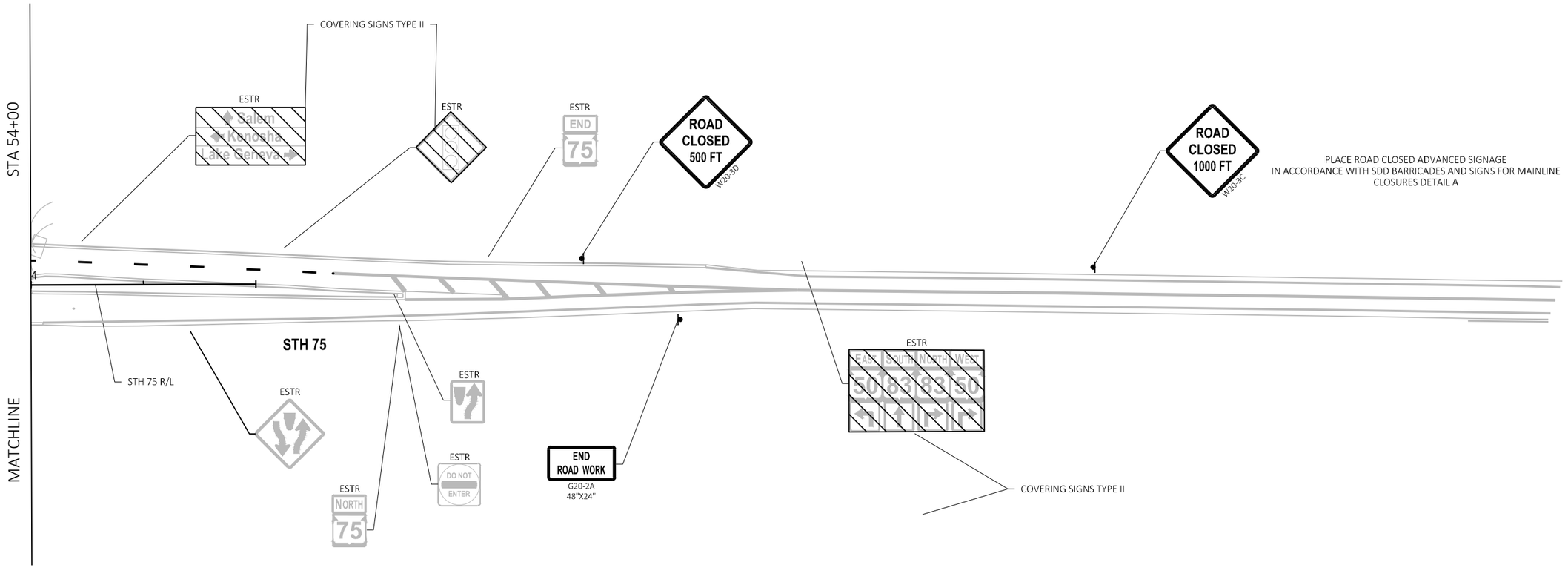

SHEET 79 OF 126

PROJECT NO: 1310-04-70	HWY: STH 50	COUNTY: KENOSHA	TRAFFIC CONTROL-STAGING - STAGE 4A	SHEET 431	E

FILE NAME : T:\1182708.06\CIVIL3D\13100400\13100400\SHEETSPLAN\026104_S4A.DWG
LAYOUT NAME - 12

PLOT DATE : 1/14/2022 4:33 PM PLOT BY : BLACKWOOD, JIM PLOT NAME : PLOT SCALE : 1 IN:100 FT

2

TRAFFIC CONTROL NOTES - STAGE 4B

CONSTRUCTION:
- STH 50 WB LANES WEST OF STH 75
- STH 50 TEMPORARY WIDENING IN MEDIAN EAST OF STH 75

TRAFFIC:
- STH 50 - 1 THRU LANE IN EACH DIRECTION
- STH 83 TWO THROUGH LANES AT STH 50 INTERSECTION
- STH 75 TWO THROUGH LANES AT STH 50 INTERSECTION

PEDESTRIANS:
- SIDEWALKS AND CROSSWALKS PARALLEL TO STH 50 OPEN AT ALL TIMES EXCEPT NORTH SIDE OF STH 50 WEST OF STH 75

STAGE 4B WORK MAY BEGIN BEFORE THE END OF STAGE 4A WORK AS LONG AS THE STH 50/STH 75/STH 83 INTERSECTION IS IN THE STAGE 4B CONFIGURATION BEFORE THE END OF THE STAGE 4A 21 CALENDAR DAY CLOSURE.

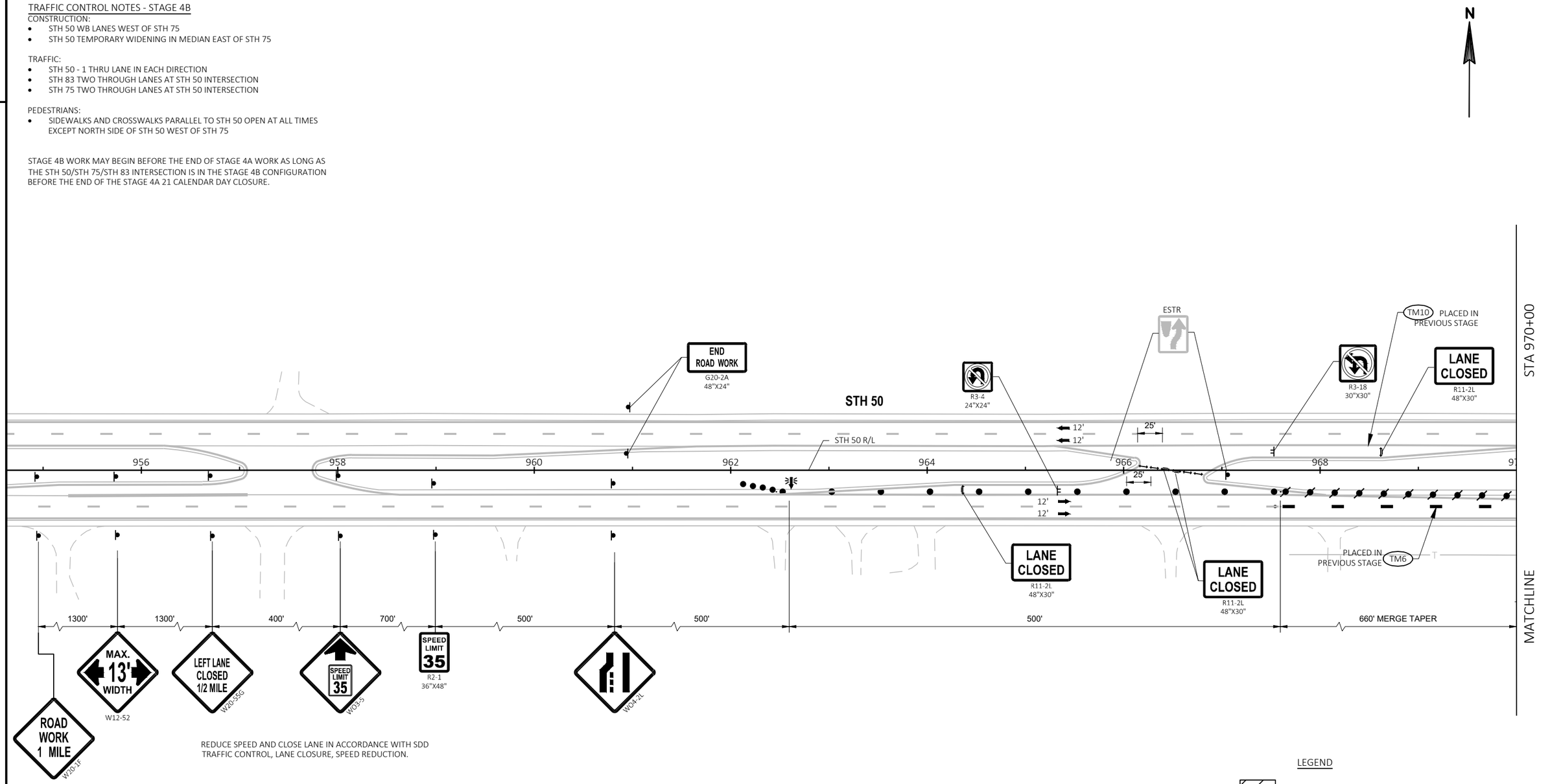

REDUCE SPEED AND CLOSE LANE IN ACCORDANCE WITH SDD TRAFFIC CONTROL, LANE CLOSURE, SPEED REDUCTION.

LEGEND

- WORK ZONE
- TEMPORARY PAVEMENT TO BE USED IN FUTURE STAGES
- WORK CONSTRUCTED UNDER TRAFFIC
- ASPHALTIC SURFACE TEMPORARY PLACED IN PREVIOUS STAGE

SHEET 80 OF 126

PROJECT NO: 1310-04-70	HWY: STH 50	COUNTY: KENOSHA	TRAFFIC CONTROL-STAGING - STAGE 4B	SHEET 432	E

FILE NAME : T:\1182708.06\CIVIL3D\13100400\13100400\SHEETSPLAN\026104_S4B.DWG
LAYOUT NAME - 01
PLOT DATE : 1/14/2022 4:33 PM PLOT BY : BLACKWOOD, JIM PLOT NAME : PLOT SCALE : 1 IN:100 FT

2

N

MATCHLINE

STA 970+00

STA 985+00

MATCHLINE

ONE WAY
R6-2R
24"X30"

LANE CLOSED
R11-2L
48"X30"

ESTR

R3-18
30"X30"

COVER SIGN
SPEED LIMIT
55

STH 50

ESTR
WEST NORTH
50 83

LANE CLOSED
R11-2L
48"X30"

ESTR

ESTR
ONE WAY

ESTR

R3-18
30"X30"

ESTR
DO NOT ENTER

TM6 PLACED IN PREVIOUS STAGE

TM10 PLACED IN PREVIOUS STAGE

970 972 974 976 978 STH 50 R/L 980 982 984

12'
12'
12'
25'
11'

POST POST POST POST

R3-4
24"X24"

600' MERGE TAPER

TM6 PLACED IN PREVIOUS STAGE

LANE CLOSED
R11-2L
48"X30"

ONE WAY
R6-2R
24"X30"

ESTR
WRONG WAY

COVER SIGN
SPEED LIMIT
35

LANE CLOSED
R11-2L
48"X30"

ESTR
DO NOT ENTER

R3-4
24"X24"

END ROAD WORK
G20-2A
48"X24"

ONE WAY
R6-2R
24"X30"

LANE CLOSED
R11-2L
48"X30"
ESTR

EAST SOUTH
50 83

ONE WAY
R6-2R
24"X30"

W06-2

ROAD WORK AHEAD
W20-1A

261ST ST

LEGEND

- WORK ZONE
- TEMPORARY PAVEMENT TO BE USED IN FUTURE STAGES
- WORK CONSTRUCTED UNDER TRAFFIC
- ASPHALTIC SURFACE TEMPORARY PLACED IN PREVIOUS STAGE

SHEET 81 OF 126

PROJECT NO: 1310-04-70	HWY: STH 50	COUNTY: KENOSHA	TRAFFIC CONTROL-STAGING - STAGE 4B	SHEET 433 E

FILE NAME : T:\1182708.06\CIVIL3D\13100400\13100400\SHEETSPLAN\026104_S4B.DWG
LAYOUT NAME - 02

PLOT DATE : 1/14/2022 4:34 PM PLOT BY : BLACKWOOD, JIM PLOT NAME : PLOT SCALE : 1 IN:100 FT

WISDOT/CADDS SHEET 42

2

N

STA 985+00

STA 1000+00

MATCHLINE

MATCHLINE

COVER SIGN
SPEED LIMIT 35

ESTR

LANE CLOSED
R11-2L
48"X30"

2050' R

STH 50 R/L

986 988 990 992 994 996 998

25'

11' 11'

STH 50

ROAD CLOSED
R11-2
48"X30"

W06-1

MOUNT ON QUICK RELEASE FIXED BASE
W6-4
12"X18"

BUSINESSES ON NORTH SIDE OF STH 50 WEST OF STH 75
TO USE MEDIAN OPENING FOR ACCESS

ADJUST INLET AND INSTALL TYPE H
COVER TO FINAL GRADE IN STAGE 4B
OR STAGE 4C.

SPEED LIMIT 35
R2-1
24"X30"

ESTR
SPEED LIMIT 35

WO1-6
48"X24"

W06-3

ESTR
JCT
COUNTY F

ESTR

SPEED LIMIT 35
R2-1
24"X30"

ONE WAY
R6-2R
24"X30"

TM6
PLACED IN PREVIOUS STAGE

M1-5A
24"X24"
COUNTY F

M6-1
21"X21"

STOP
R1-1
30"X30"

SIDEWALK CLOSED
CROSS HERE
R9-11A
24"X12"

CTH F

360

END
ROAD WORK
G20-2A
48"X24"

ROAD WORK AHEAD
W20-1A

NOTE:
SEE PAVEMENT MARKING PLAN FOR PERMANENT
PAVEMENT MARKING LAYOUT INFORMATION

LEGEND

- WORK ZONE
- TEMPORARY PAVEMENT TO BE USED IN FUTURE STAGES
- WORK CONSTRUCTED UNDER TRAFFIC
- ASPHALTIC SURFACE TEMPORARY PLACED IN PREVIOUS STAGE

SHEET 82 OF 126

PROJECT NO: 1310-04-70	HWY: STH 50	COUNTY: KENOSHA	TRAFFIC CONTROL-STAGING - STAGE 4B	SHEET 434	E

FILE NAME : T:\1182708.06\CIVIL3D\13100400\13100400\SHEETSPLAN\026104_S4B.DWG
LAYOUT NAME - 03

PLOT DATE : 1/14/2022 4:34 PM PLOT BY : BLACKWOOD, JIM PLOT NAME : PLOT SCALE : 1 IN:100 FT

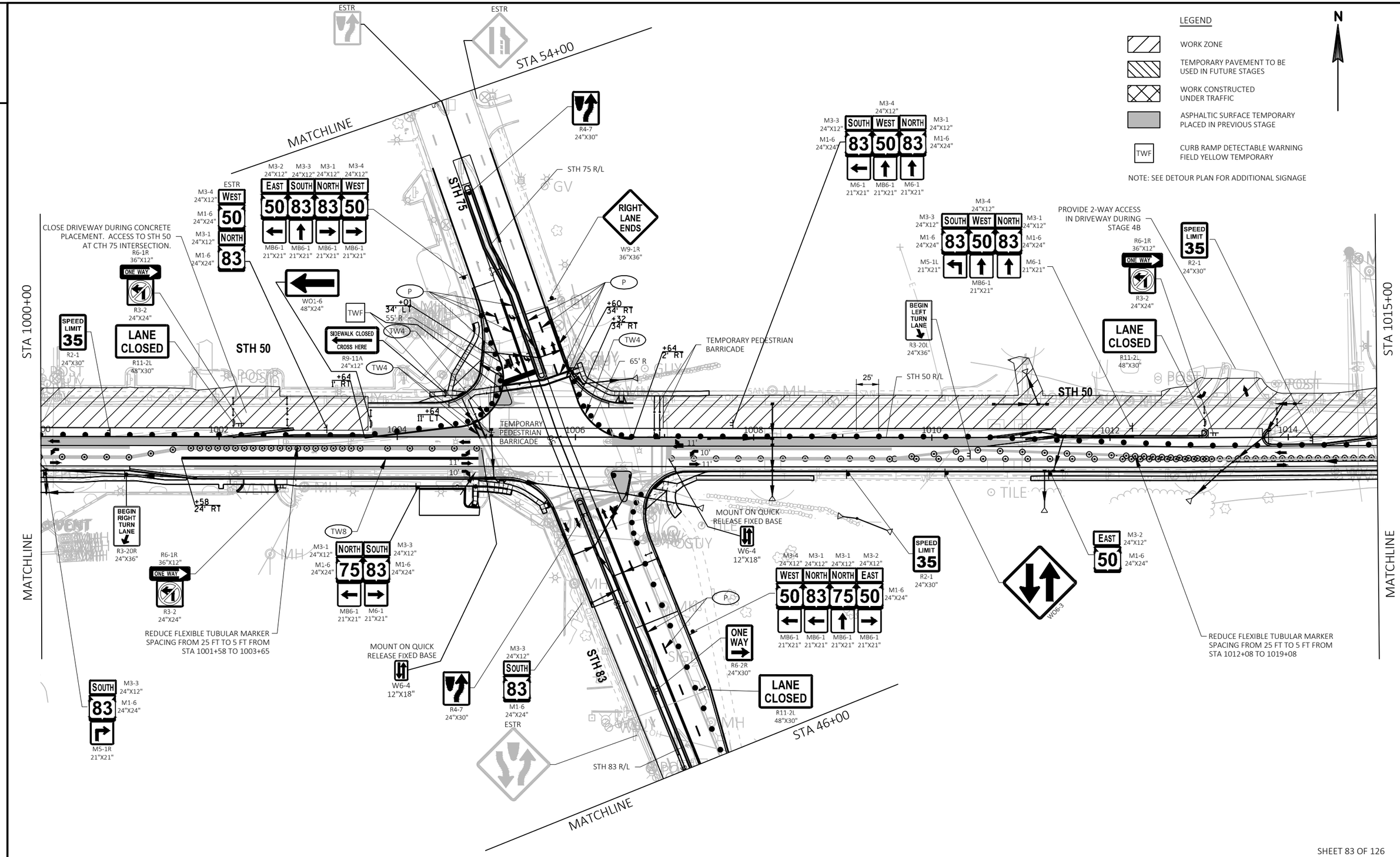

PROJECT NO: 1310-04-70	HWY: STH 50	COUNTY: KENOSHA	TRAFFIC CONTROL-STAGING - STAGE 4B	SHEET 435	E

FILE NAME : T:\1182708.06\CIVIL3D\13100400\13100400\SHEETSPLAN\026104_S4B.DWG
LAYOUT NAME - 04
PLOT DATE : 1/14/2022 4:34 PM
PLOT BY : BLACKWOOD, JIM
PLOT NAME :
PLOT SCALE : 1 IN:100 FT
WISDOT/CADDS SHEET 42

2

N

STA 1015+00

STA 1030+00

ROAD WORK AHEAD
W20-1A

TACO BELL ACCESS
FROM EITHER 250TH AVE
OR STRIP MALL MEDIAN
OPENING

250TH AVE

ESTR
STOP

END ROAD WORK
G20-2A
48"X24"

LEAVE GAP IN DRUMS FOR BUSINESS ACCESS

250TH AVE R/L

ESTR
SPEED LIMIT
25

R3-2
24"X24"

WO1-6
48"X24"

ONE WAY
R6-2R
24"X30"

ONE WAY
R6-2R
24"X30"

ESTR
SPEED LIMIT
35

ONE WAY
R6-2R
24"X30"

LANE CLOSED
R11-2L
48"X30"

WO6-2

ROAD WORK AHEAD
W20-1A

WEDGE ASPHALT TRANSITION BETWEEN
CONCRETE PAVEMENT AND WB THROUGH LANE

R6-1R
36"X12"
ONE WAY

R3-2
24"X24"

ESTR
STOP

ONE WAY
R6-2R
24"X30"

248TH AVE

END ROAD WORK
G20-2A
48"X24"

ROAD CLOSED
R11-2
48"X30"

WO1-6
48"X24"

248TH AVE R/L

ESTR

SIDEWALK CLOSED
R9-9
24"X12"

ONE WAY
R6-2R
24"X30"

ONE WAY
R6-2R
24"X30"

1016 1018 1020 1022 1024 1026 1028

11'

11'

STH 50

STH 50 R/L

R3-2
24"X24"

LANE CLOSED
R11-2L
48"X30"

ROAD CLOSED
R11-2
48"X30"

SIDEWALK CLOSED
R9-9
24"X12"

ASPHALTIC SURFACE TEMPORARY

SEE NOTE 1

R6-1R
36"X12"
ONE WAY

R3-2
24"X24"

STOP
R1-1
30"X30"

HIGH SCHOOL WEST DRIVEWAY

HIGH SCHOOL WEST DRIVEWAY R/L

MATCHLINE

MATCHLINE

R3-2
24"X24"

WO6-1

R6-1R
36"X12"
ONE WAY

R3-2
24"X24"

REDUCE FLEXIBLE TUBULAR MARKER
SPACING FROM 25 FT TO 5 FT FROM
STA 1012+08 TO 1019+08

LEGEND

- WORK ZONE
- TEMPORARY PAVEMENT TO BE USED IN FUTURE STAGES
- WORK CONSTRUCTED UNDER TRAFFIC
- ASPHALTIC SURFACE TEMPORARY PLACED IN PREVIOUS STAGE

NOTES:
1. BLOCK OPEN END OF STORM SEWER PIPE WITH PLYWOOD OR METAL PLATE UNTIL FUTURE STAGE (INCIDENTAL TO STORM SEWER CONSTRUCTION)

SHEET 84 OF 126

PROJECT NO: 1310-04-70	HWY: STH 50	COUNTY: KENOSHA	TRAFFIC CONTROL-STAGING - STAGE 4B	SHEET 436	E

FILE NAME : T:\1182708.06\CIVIL3D\13100400\13100400\SHEETSPLAN\026104_S4B.DWG
LAYOUT NAME - 05

PLOT DATE : 1/14/2022 4:34 PM PLOT BY : BLACKWOOD, JIM PLOT NAME : PLOT SCALE : 1 IN:100 FT

2

2

N

STA 1030+00

STA 1045+00

MATCHLINE

MATCHLINE

246TH AVE

243RD AVE

244TH AVE

246TH AVE R/L

243RD AVE R/L

244TH AVE R/L

STH 50

STH 50 R/L

ROAD WORK AHEAD W20-1A

END ROAD WORK G20-2A 48"X24"

CONSTRUCT WB LEFT TURN LANE PAVEMENT IN STAGE 5

ESTR

ONE WAY R6-2R 24"X30"

BEGIN LEFT TURN LANE R3-20L 24"X36"

WO1-6 48"X24"

SCHOOL SPEED LIMIT 25 WHEN CHILDREN ARE PRESENT

SPEED LIMIT 35

R6-1R 36"X12" ONE WAY

R3-2 24"X24"

STOP R1-1 30"X30"

SPEED LIMIT R2-1 24"X30"

LANE CLOSED R11-2L 48"X30"

WO3-3

TEMPORARY PIPE CONNECTION 15-INCH

CONSTRUCT USING A 14 CALENDAR DAY CLOSURE OF STH 50 MEDIAN.
MAINTAIN ONE CROSSWALK ACROSS STH 50 AT ALL TIMES.

CONSTRUCT MEDIAN CLOSED TO TRAFFIC WITH A 14 CALENDAR DAY CLOSURE
ALTERNATE CLOSURE WITH 242ND AVENE
CLOSE MEDIAN WITH DRUMS AND TYPE III BARRICADES

11' 10' 11' 10' 11' 10'

2

N

STA 1045+00

STA 1060+00

MATCHLINE

MATCHLINE

ROAD WORK AHEAD
W20-1A

END ROAD WORK
G20-2A
48"X24"

ESTR
STOP

INSTALL INLET WITH NO COVER
COVER PLATE TEMPORARY

CONSTRUCT WB LEFT TURN
LANE PAVEMENT IN STAGE 5

WO1-6
48"X24"

ONE WAY
R6-2R
24"X30"

74TH PL

74TH PLACE R/L

TEMP PIPE
CONNECTION
21-INCH

SEE NOTE 1

ESTR
SPEED LIMIT 35

BEGIN LEFT TURN LANE
R3-20L
24"X36"

LANE CLOSED
R11-2L
48"X30"

ONE WAY
R6-2R
24"X30"

R3-2
24"X24"

TEMPORARY PIPE
CONNECTION 15-INCH

25'

ESTR
SPEED LIMIT 35

TEMPORARY PIPE
CONNECTION 15-INCH

11'
10'
11'
10'
11'

1046
1048
1050
1052
1054
1056
1058

STH 50 R/L

STH 50

TEMPORARY PIPE
CONNECTION 12-INCH

25'

R3-2
24"X24"

ONE WAY
R6-2R
24"X30"

SPEED LIMIT 35
R2-1
24"X30"

242ND AVE R/L

242ND AVE

ONE WAY
R6-2R
24"X30"

WO1-6
48"X24"

INSTALL BOTH INLET WITH TYPE S COVERS
USE ADJUSTMENT RINGS WITH 2X2-FT OPENING

STOP
R1-1
30"X30"

CONSTRUCT USING A 14 CALENDAR DAY
CLOSURE OF STH 50 MEDIAN.
MAINTAIN ONE CROSSWALK ACROSS STH 50 AT ALL TIMES.
ALTERNATE CLOSURE WITH 244TH AVENUE MEDIAN OPENING.
CLOSE MEDIAN WITH DRUMS AND TYPE III BARRICADES

END ROAD WORK
G20-2A
48"X24"

ROAD WORK AHEAD
W20-1A

LANE CLOSED
R11-2L
48"X30"

BEGIN LEFT TURN LANE
R3-20L
24"X36"

LEGEND

- WORK ZONE
- TEMPORARY PAVEMENT TO BE USED IN FUTURE STAGES
- WORK CONSTRUCTED UNDER TRAFFIC
- ASPHALTIC SURFACE TEMPORARY PLACED IN PREVIOUS STAGE

NOTES:
1. BLOCK OPEN END OF STORM SEWER PIPE WITH PLYWOOD OR METAL PLATE UNTIL FUTURE STAGE (INCIDENTAL TO STORM SEWER CONSTRUCTION)

PROJECT NO: 1310-04-70	HWY: STH 50	COUNTY: KENOSHA	TRAFFIC CONTROL-STAGING - STAGE 4B	SHEET 438	E

FILE NAME : T:\1182708.06\CIVIL3D\13100400\13100400\SHEETSPLAN\026104_S4B.DWG
LAYOUT NAME - 07
PLOT DATE : 1/14/2022 4:34 PM
PLOT BY : BLACKWOOD, JIM
PLOT NAME :
PLOT SCALE : 1 IN:100 FT
WISDOT/CADDS SHEET 42

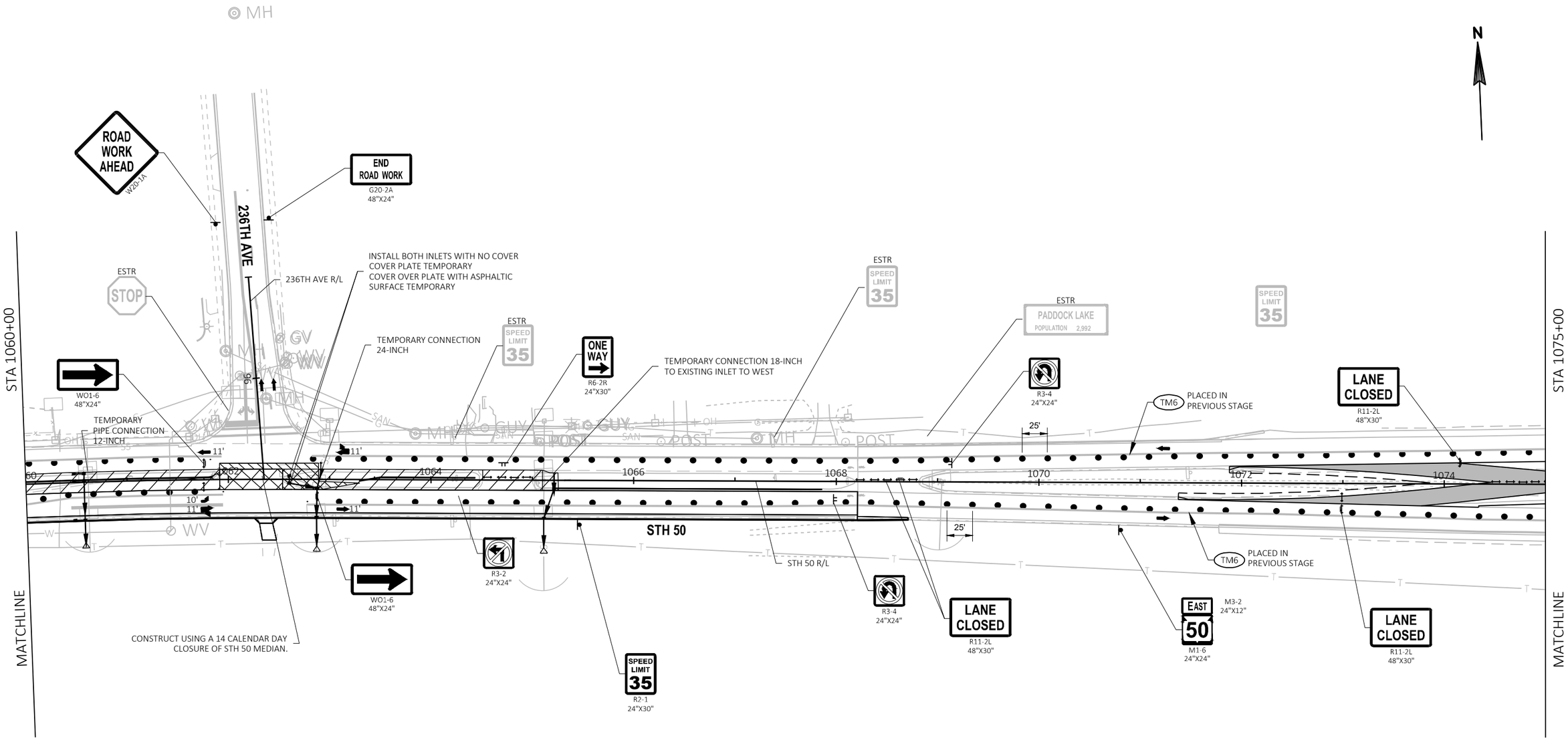

LEGEND

- WORK ZONE
- TEMPORARY PAVEMENT TO BE USED IN FUTURE STAGES
- WORK CONSTRUCTED UNDER TRAFFIC
- ASPHALTIC SURFACE TEMPORARY PLACED IN PREVIOUS STAGE

SHEET 87 OF 126

PROJECT NO: 1310-04-70	HWY: STH 50	COUNTY: KENOSHA	TRAFFIC CONTROL-STAGING - STAGE 4B	SHEET 439	E

FILE NAME : T:\1182708.06\CIVIL3D\13100400\13100400\SHEETSPLAN\026104_S4B.DWG
LAYOUT NAME - 08
PLOT DATE : 1/14/2022 4:34 PM
PLOT BY : BLACKWOOD, JIM
PLOT NAME :
PLOT SCALE : 1 IN:100 FT
WISDOT/CADDS SHEET 42

2

N

STA 1075+00

615' BUFFER SPACE

660' MERGE TAPER

A

LANE CLOSED
R11-2L
48"X30"

R3-4
24"X24"

LANE CLOSED
R11-2L
48"X30"

TM6 PLACED IN PREVIOUS STAGE

25'

12'

1076

1078

12'
12'

STH 50

TM6 PLACED IN PREVIOUS STAGE

MATCHLINE

25'

TM6 PLACED IN PREVIOUS STAGE

100'

COVER SIGN
SPEED LIMIT
55

R3-4
24"X24"

STH 50 R/L

TM6 PLACED IN PREVIOUS STAGE

ESTR

ESTR

HWY 45	2
HWY 94	7
KENOSHA	11

LANE CLOSED
R11-2L
48"X30"

TM10 PLACED IN PREVIOUS STAGE

MATCHLINE

LEGEND

- WORK ZONE
- TEMPORARY PAVEMENT TO BE USED IN FUTURE STAGES
- WORK CONSTRUCTED UNDER TRAFFIC
- ASPHALTIC SURFACE TEMPORARY PLACED IN PREVIOUS STAGE

SHEET 88 OF 126

PROJECT NO: 1310-04-70	HWY: STH 50	COUNTY: KENOSHA	TRAFFIC CONTROL-STAGING - STAGE 4B	SHEET 440	E

FILE NAME : T:\1182708.06\CIVIL3D\13100400\13100400\SHEETSPLAN\026104_S4B.DWG
LAYOUT NAME - 09

PLOT DATE : 1/14/2022 4:34 PM PLOT BY : BLACKWOOD, JIM PLOT NAME : PLOT SCALE : 1 IN:100 FT

2

N

REDUCE SPEED AND CLOSE LANE IN ACCORDANCE WITH SDD
TRAFFIC CONTROL, LANE CLOSURE, SPEED REDUCTION.

660'
MERGE TAPER

500'

500'

W04-2L

500'

SPEED LIMIT 35
R2-1
48"X60"

700'

SPEED LIMIT 35
W03-5

400'

LEFT LANE CLOSED 1/2 MILE
W20-5SG

1300'

MAX. 12' WIDTH
W12-52

1300'

ROAD WORK 1 MILE
W20-1F

A

ESTR

R3-4
24"X24"

TM10 PLACED IN PREVIOUS STAGE

STH 50

TM10 PLACED IN PREVIOUS STAGE

MATCHLINE

R3-4
24"X24"

ESTR

LANE CLOSED
R11-2L
48"X30"

END ROAD WORK
G20-2A
48"X24"

LEGEND

- WORK ZONE
- TEMPORARY PAVEMENT TO BE USED IN FUTURE STAGES
- WORK CONSTRUCTED UNDER TRAFFIC
- ASPHALTIC SURFACE TEMPORARY PLACED IN PREVIOUS STAGE

SHEET 89 OF 126

PROJECT NO: 1310-04-70	HWY: STH 50	COUNTY: KENOSHA	TRAFFIC CONTROL-STAGING - STAGE 4B	SHEET 441	E

FILE NAME : T:\1182708.06\CIVIL3D\13100400\13100400\SHEETSPLAN\026104_S4B.DWG
LAYOUT NAME - 10

PLOT DATE : 1/14/2022 4:34 PM PLOT BY : BLACKWOOD, JIM PLOT NAME : PLOT SCALE : 1 IN:100 FT

LEGEND

- WORK ZONE
- TEMPORARY PAVEMENT TO BE USED IN FUTURE STAGES
- WORK CONSTRUCTED UNDER TRAFFIC
- ASPHALTIC SURFACE TEMPORARY PLACED IN PREVIOUS STAGE

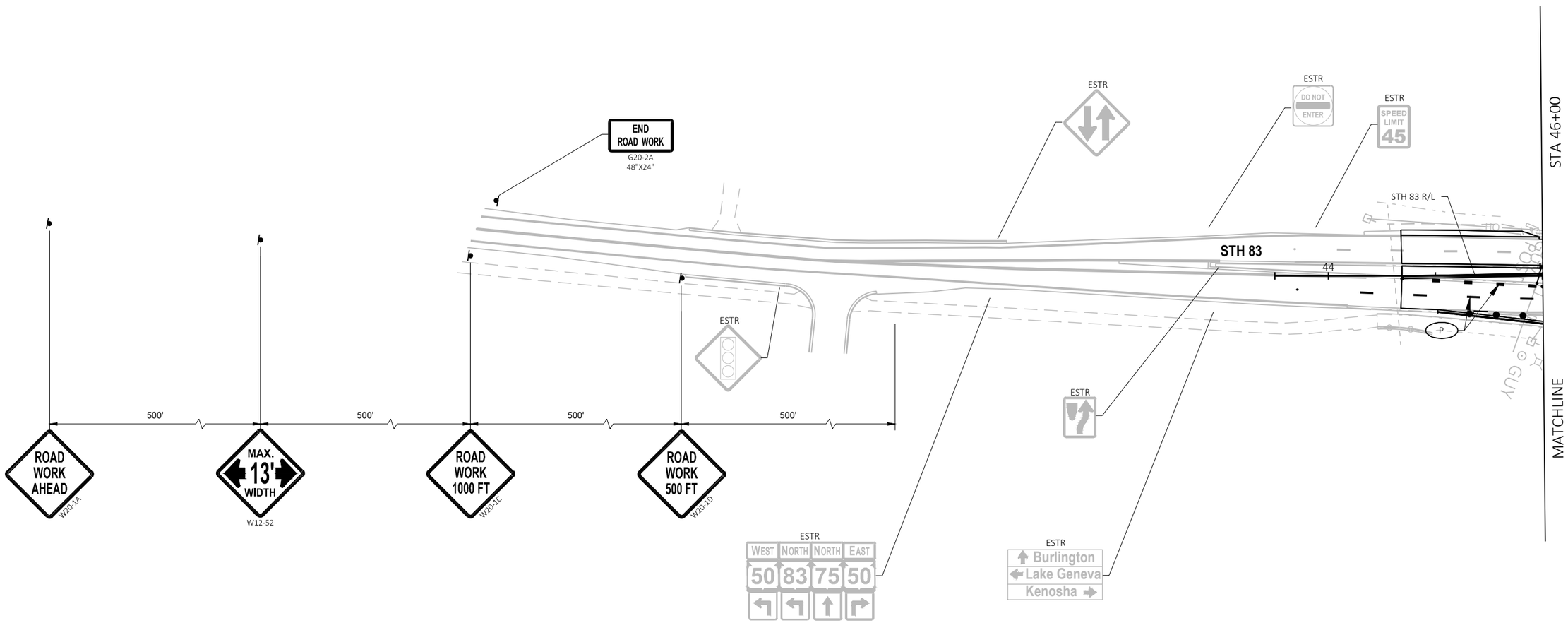

SHEET 90 OF 126

PROJECT NO: 1310-04-70	HWY: STH 50	COUNTY: KENOSHA	TRAFFIC CONTROL-STAGING - STAGE 4B	SHEET 442	E

FILE NAME : T:\1182708.06\CIVIL3D\13100400\13100400\SHEETSPLAN\026104_S4B.DWG
LAYOUT NAME - 11
PLOT DATE : 1/14/2022 4:35 PM
PLOT BY : BLACKWOOD, JIM
PLOT NAME :
PLOT SCALE : 1 IN:100 FT

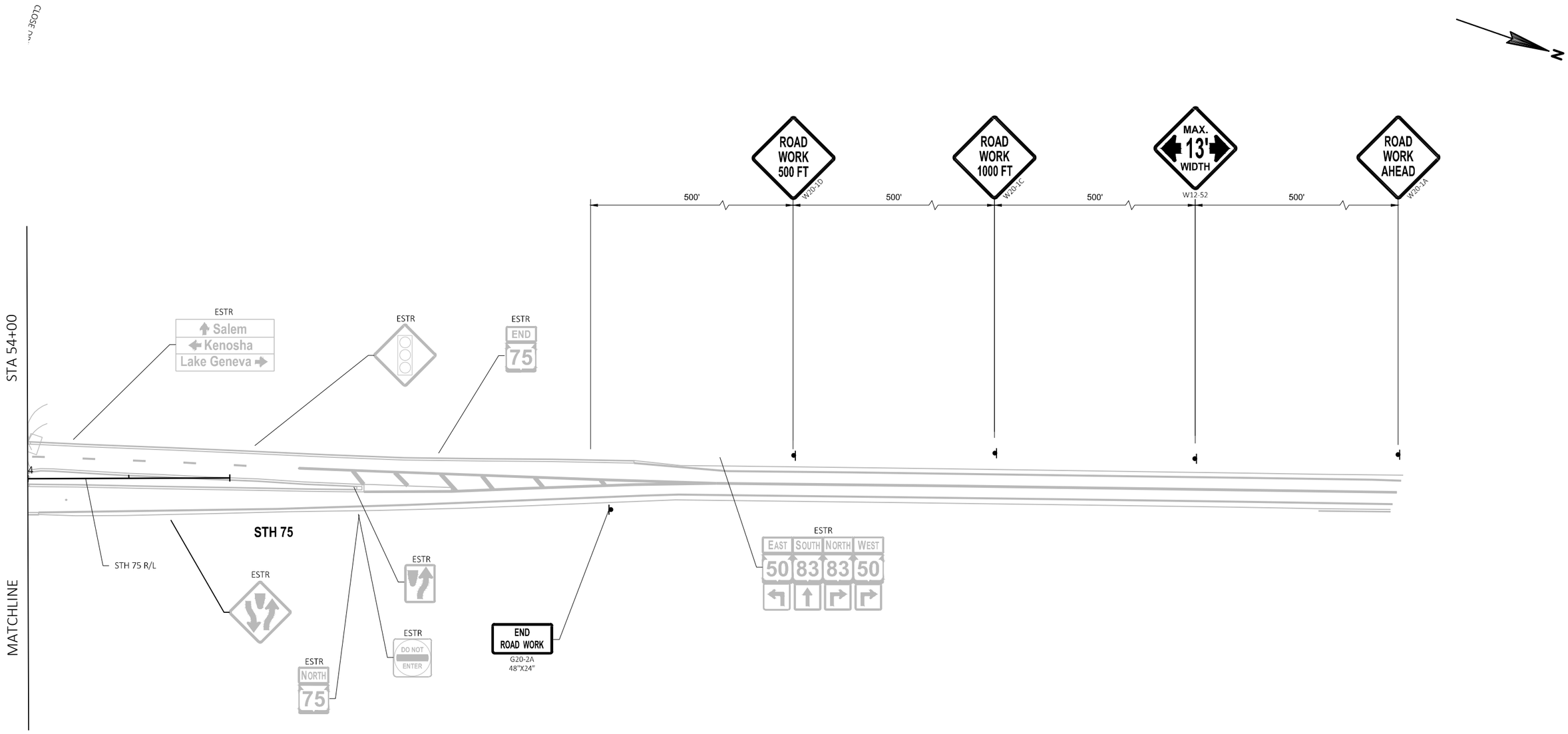

LEGEND

- WORK ZONE
- TEMPORARY PAVEMENT TO BE USED IN FUTURE STAGES
- WORK CONSTRUCTED UNDER TRAFFIC
- ASPHALTIC SURFACE TEMPORARY PLACED IN PREVIOUS STAGE

SHEET 91 OF 126

PROJECT NO: 1310-04-70	HWY: STH 50	COUNTY: KENOSHA	TRAFFIC CONTROL-STAGING - STAGE 4B	SHEET 443	E

FILE NAME : T:\1182708.06\CIVIL3D\13100400\13100400\SHEETSPLAN\026104_S4B.DWG
LAYOUT NAME - 12
PLOT DATE : 1/14/2022 4:35 PM
PLOT BY : BLACKWOOD, JIM
PLOT NAME :
PLOT SCALE : 1 IN:100 FT
WISDOT/CADDS SHEET 42

TRAFFIC CONTROL NOTES - STAGE 4C

CONSTRUCTION:
- STH 50 WB LANES

TRAFFIC:
- STH 50 - 1 THRU LANE IN EACH DIRECTION
- STH 83 TWO THROUGH LANES AT STH 50
- STH 75 TWO THROUGH LANES AT STH 50

PEDESTRIANS:
- SIDEWALKS AND CROSSWALKS PARALLEL TO STH 50 OPEN AT ALL TIMES ON SOUTH SIDE OF STH 50.
- SEE STAGE 4C PEDESTRIAN STAGING SHEETS FOR PEDESTRIAN STAGING EAST OF 246TH AVENUE

2

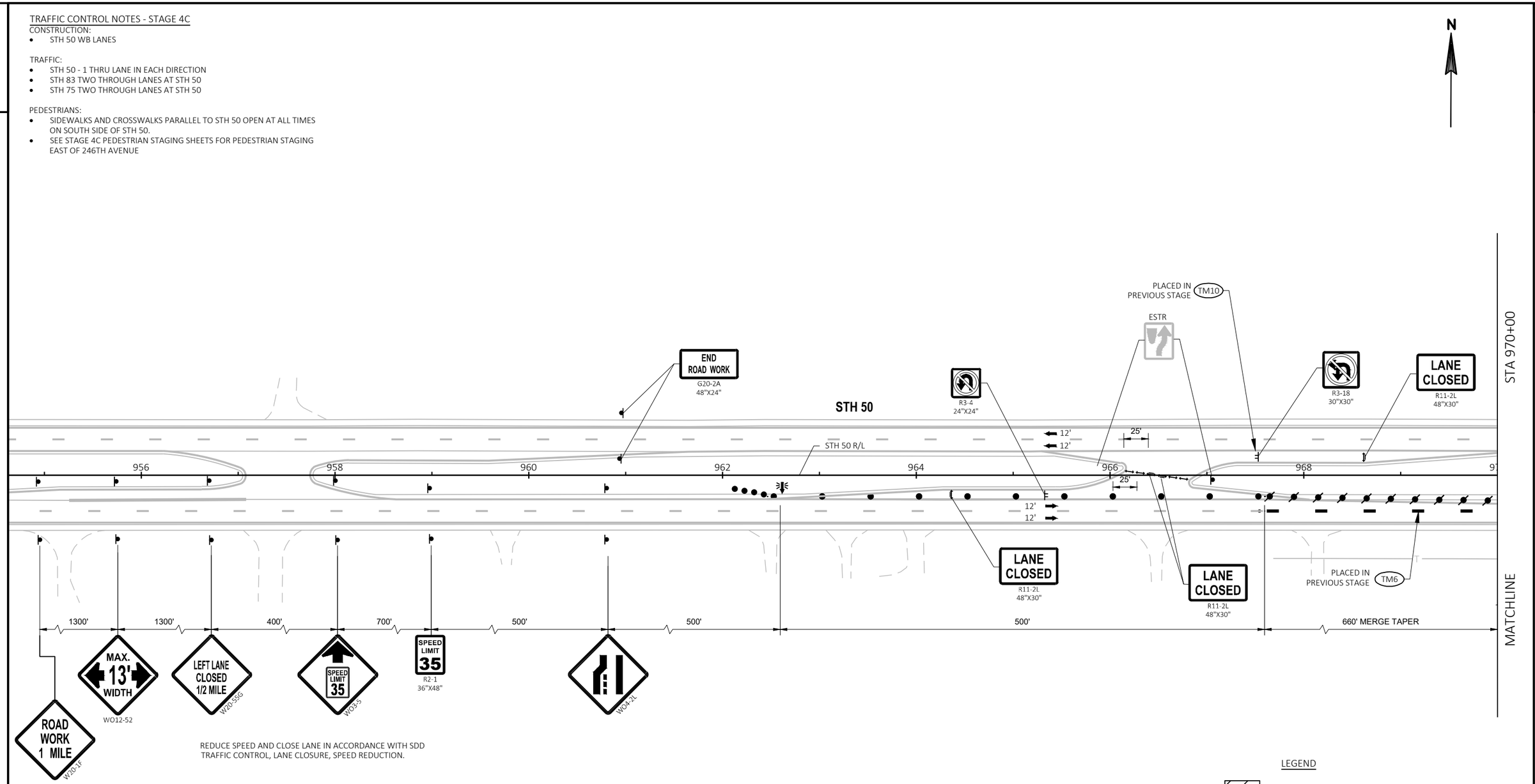

REDUCE SPEED AND CLOSE LANE IN ACCORDANCE WITH SDD TRAFFIC CONTROL, LANE CLOSURE, SPEED REDUCTION.

LEGEND

- WORK ZONE
- TEMPORARY PAVEMENT TO BE USED IN FUTURE STAGES
- WORK CONSTRUCTED UNDER TRAFFIC
- ASPHALTIC SURFACE TEMPORARY PLACED IN PREVIOUS STAGE

PROJECT NO: 1310-04-70	HWY: STH 50	COUNTY: KENOSHA	TRAFFIC CONTROL-STAGING - STAGE 4C	SHEET 444	E

FILE NAME : T:\1182708.06\CIVIL3D\13100400\13100400\SHEETSPLAN\026104_S4C.DWG
LAYOUT NAME - 01
PLOT DATE : 1/14/2022 4:35 PM
PLOT BY : BLACKWOOD, JIM
PLOT NAME :
PLOT SCALE : 1 IN:100 FT
WISDOT/CADDS SHEET 42

2

N

MATCHLINE

STA 970+00

STA 985+00

MATCHLINE

STH 50

STH 50 R/L

970 972 974 976 978 980 982 984

25' 12' 12' 25' 11'

ONE WAY
R6-2R
24"X30"

LANE CLOSED
R11-2L
48"X30"

ESTR

R3-18
30"X30"

COVER SIGN
SPEED LIMIT
55

TM10 PLACED IN PREVIOUS STAGE

LANE CLOSED
R11-2L
48"X30"

ESTR
WEST NORTH
50 83

ESTR

ESTR
ONE WAY

ESTR

R3-18
30"X30"

ESTR
DO NOT ENTER

TM6 PLACED IN PREVIOUS STAGE

TM10 PLACED IN PREVIOUS STAGE

R3-4
24"X24"

600' MERGE TAPER

TM6 PLACED IN PREVIOUS STAGE

LANE CLOSED
R11-2L
48"X30"

ONE WAY
R6-2R
24"X30"

ESTR
WRONG WAY

COVER SIGN
SPEED LIMIT
35

LANE CLOSED
R11-2L
48"X30"

ESTR
DO NOT ENTER

R3-4
24"X24"

END ROAD WORK
G20-2A
48"X24"

ONE WAY
R6-2R
24"X30"

261ST ST

ROAD WORK AHEAD
W20-1A

LANE CLOSED
R11-2L
48"X30"
ESTR
EAST SOUTH
50 83

W06-2

ONE WAY
R6-2R
24"X30"

LEGEND

- WORK ZONE
- TEMPORARY PAVEMENT TO BE USED IN FUTURE STAGES
- WORK CONSTRUCTED UNDER TRAFFIC
- ASPHALTIC SURFACE TEMPORARY PLACED IN PREVIOUS STAGE

SHEET 93 OF 126

PROJECT NO: 1310-04-70	HWY: STH 50	COUNTY: KENOSHA	TRAFFIC CONTROL-STAGING - STAGE 4C	SHEET 445	E

FILE NAME : T:\1182708.06\CIVIL3D\13100400\13100400\SHEETSPLAN\026104_S4C.DWG
LAYOUT NAME - 02

PLOT DATE : 1/14/2022 4:35 PM PLOT BY : BLACKWOOD, JIM PLOT NAME : PLOT SCALE : 1 IN:100 FT

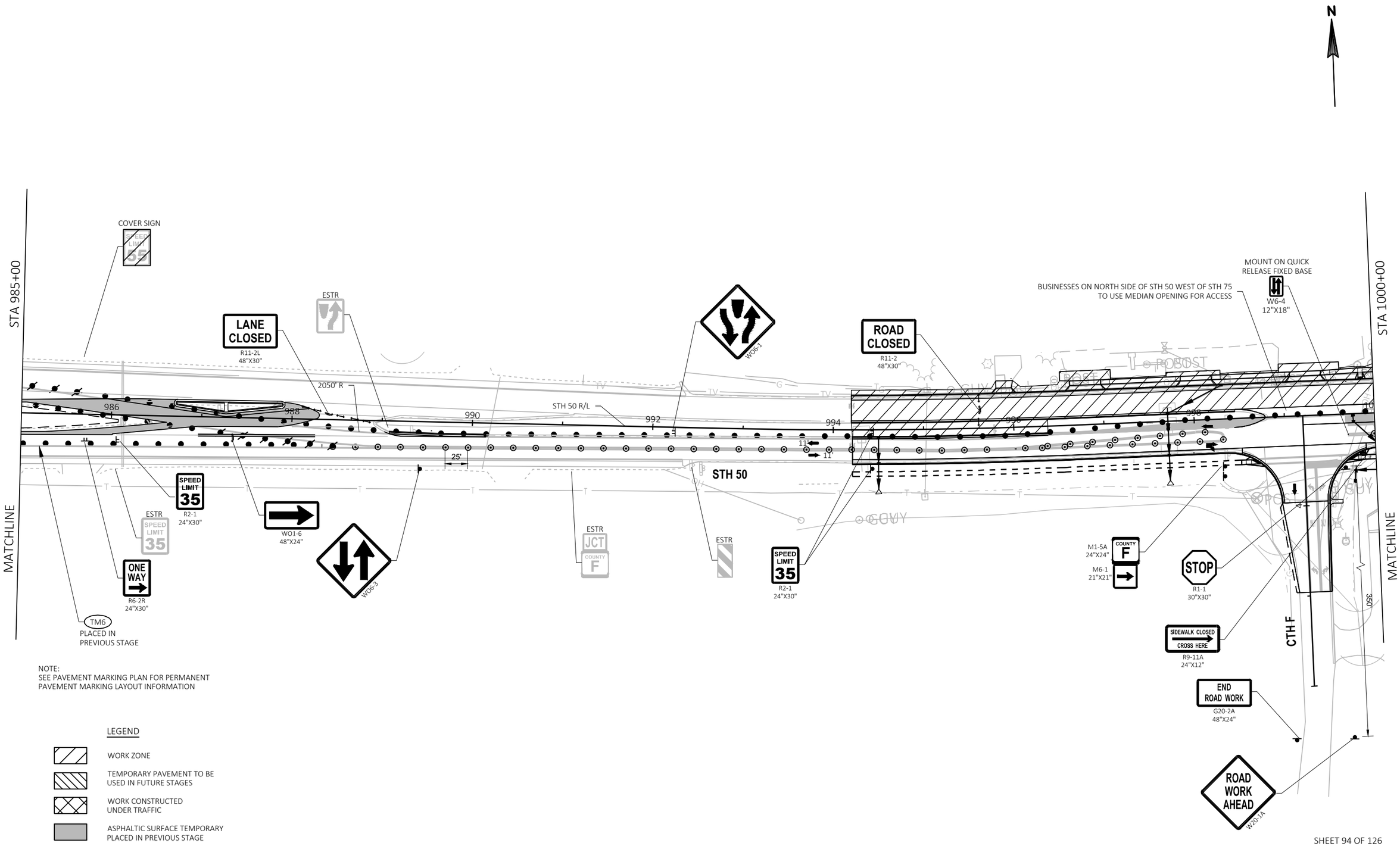

NOTE:
SEE PAVEMENT MARKING PLAN FOR PERMANENT PAVEMENT MARKING LAYOUT INFORMATION

LEGEND

- WORK ZONE
- TEMPORARY PAVEMENT TO BE USED IN FUTURE STAGES
- WORK CONSTRUCTED UNDER TRAFFIC
- ASPHALTIC SURFACE TEMPORARY PLACED IN PREVIOUS STAGE

SHEET 94 OF 126

PROJECT NO: 1310-04-70	HWY: STH 50	COUNTY: KENOSHA	TRAFFIC CONTROL-STAGING - STAGE 4C	SHEET 446	E

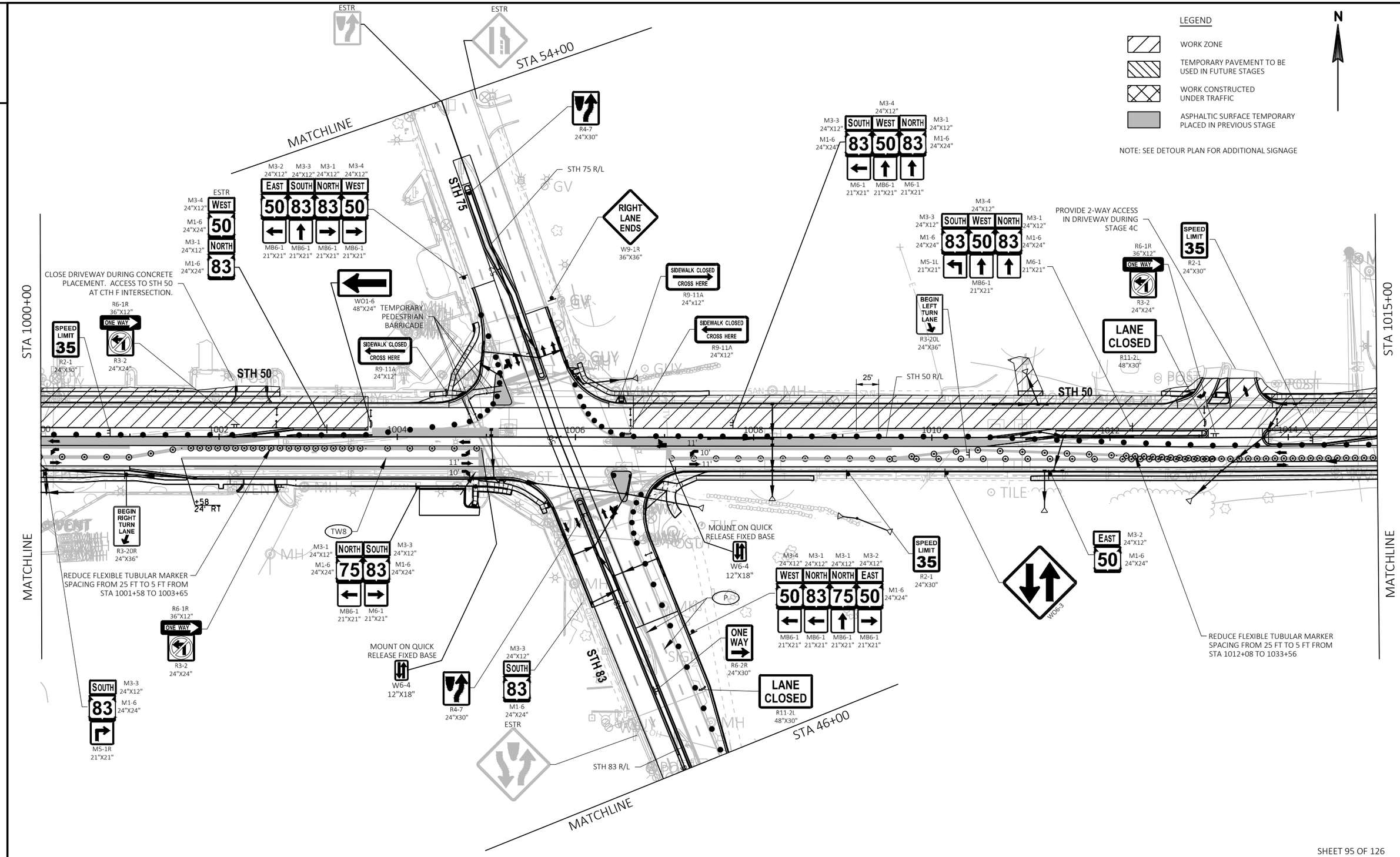

SHEET 95 OF 126

PROJECT NO: 1310-04-70	HWY: STH 50	COUNTY: KENOSHA	TRAFFIC CONTROL-STAGING - STAGE 4C	SHEET 447	E

FILE NAME : T:\1182708.06\CIVIL3D\13100400\13100400\SHEETSPLAN\026104_S4C.DWG
LAYOUT NAME - 04
PLOT DATE : 1/14/2022 4:36 PM
PLOT BY : BLACKWOOD, JIM
PLOT NAME :
PLOT SCALE : 1 IN:100 FT
WISDOT/CADDS SHEET 42

2

2

N

STA 1015+00

STA 1030+00

MATCHLINE

MATCHLINE

ROAD WORK AHEAD
W20-1A

TACO BELL ACCESS
FROM EITHER 250TH AVE
OR STRIP MALL MEDIAN
OPENING

ESTR

250TH AVE

END ROAD WORK
G20-2A
48"X24"

LEAVE GAP IN DRUMS FOR BUSINESS ACCESS

W06-3

SPEED LIMIT 35
R2-1
24"X30"

R6-1R
36"X12"
ONE WAY
R3-2
24"X24"

ROAD WORK AHEAD
W20-1A

ON PORTABLE
SUPPORT

STOP
R1-1
30"X30"

END ROAD WORK
G20-2A
48"X24"

248TH AVE

CONSTRUCT INTERSECTION CLOSED TO TRAFFIC
ALTERNATE CLOSURE WITH 250TH AVE, 246TH AVE AND 243RD AVE.
DO NOT CLOSE MORE THAN TWO INTERSECTIONS AT SAME TIME.
SEE CONSTRUCTION DETAIL

ROAD CLOSED
R11-2
48"X30"

250TH AVE R/L

248TH AVE R/L

WO1-6
48"X24"

ESTR
SPEED LIMIT
25

WO1-6
48"X24"

ROAD CLOSED
R11-2
48"X30"

1016 1018 1020 1022 1024 1026 1028

11' 11'

+39
9' RT

+39
20' RT

+90
5' RT

+90
20' RT

TW4

TY4

STH 50

STH 50 R/L

SIDEWALK CLOSED
R9-9
24"X12"

STOP
R1-1
30"X30"

HIGH SCHOOL WEST DRIVEWAY R/L

HIGH SCHOOL WEST DRIVEWAY

CONSTRUCT INTERSECTION CLOSED TO TRAFFIC
ALTERNATE CLOSURE WITH 248TH AVE, 246TH AVE AND 243RD AVE.
DO NOT CLOSE MORE THAN TWO INTERSECTIONS AT SAME TIME.
SEE CONSTRUCTION DETAIL

REDUCE FLEXIBLE TUBULAR MARKER
SPACING FROM 25 FT TO 5 FT FROM
STA 1012+08 TO 1033+56

LEGEND

- WORK ZONE
- TEMPORARY PAVEMENT TO BE USED IN FUTURE STAGES
- WORK CONSTRUCTED UNDER TRAFFIC
- ASPHALTIC SURFACE TEMPORARY PLACED IN PREVIOUS STAGE

SHEET 96 OF 126

PROJECT NO: 1310-04-70	HWY: STH 50	COUNTY: KENOSHA	TRAFFIC CONTROL-STAGING - STAGE 4C	SHEET 448	E

FILE NAME : T:\1182708.06\CIVIL3D\13100400\13100400\SHEETSPLAN\026104_S4C.DWG
LAYOUT NAME - 05

PLOT DATE : 1/14/2022 4:36 PM PLOT BY : BLACKWOOD, JIM PLOT NAME : PLOT SCALE : 1 IN:100 FT

WISDOT/CADDS SHEET 42

2

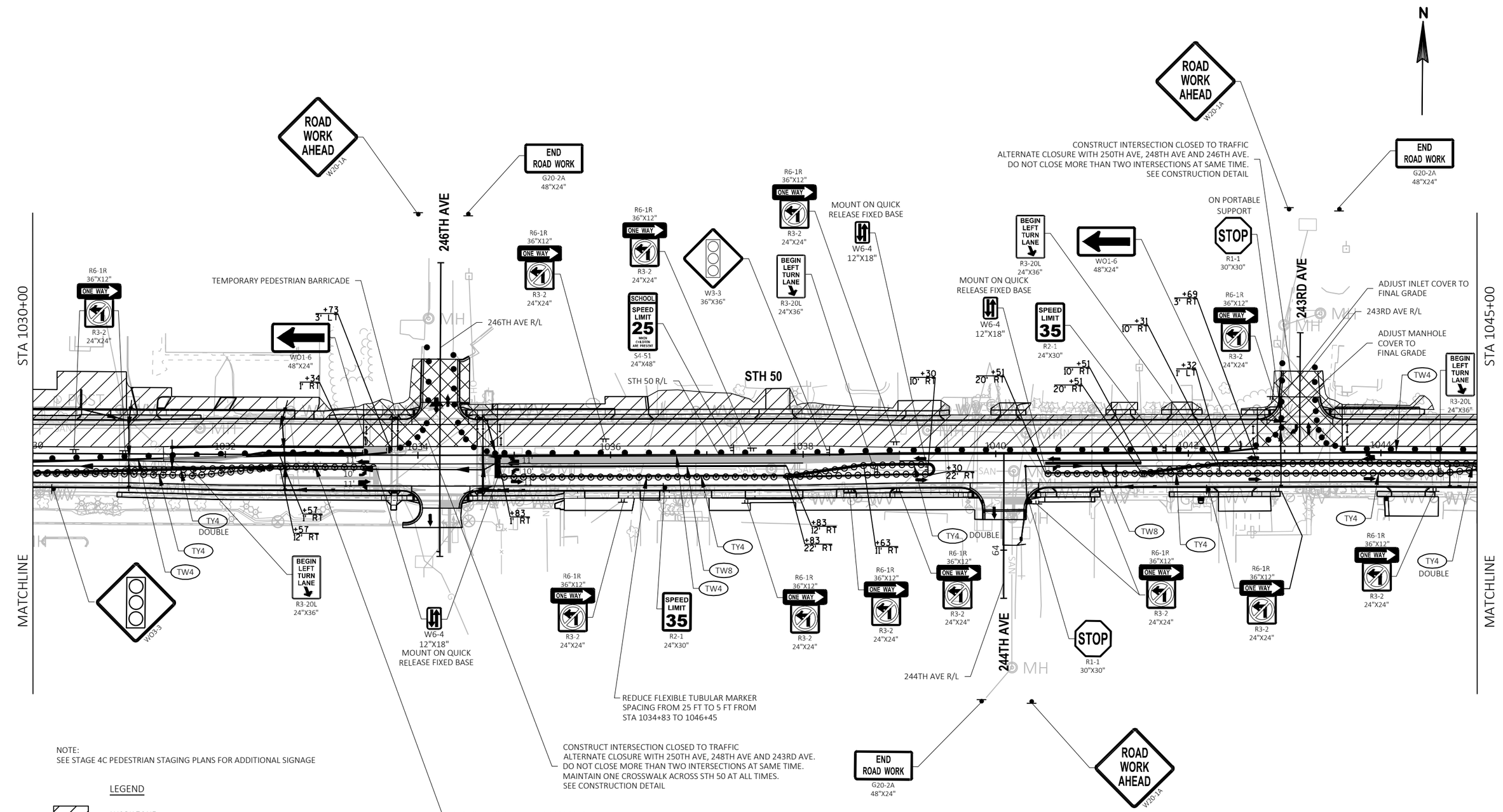

NOTE:
SEE STAGE 4C PEDESTRIAN STAGING PLANS FOR ADDITIONAL SIGNAGE

LEGEND

- WORK ZONE
- TEMPORARY PAVEMENT TO BE USED IN FUTURE STAGES
- WORK CONSTRUCTED UNDER TRAFFIC
- ASPHALTIC SURFACE TEMPORARY PLACED IN PREVIOUS STAGE

SHEET 97 OF 126

PROJECT NO: 1310-04-70	HWY: STH 50	COUNTY: KENOSHA	TRAFFIC CONTROL-STAGING - STAGE 4C	SHEET 449 E

FILE NAME : T:\1182708.06\CIVIL3D\13100400\13100400\SHEETSPLAN\026104_S4C.DWG
LAYOUT NAME - 06
PLOT DATE : 1/14/2022 4:36 PM
PLOT BY : BLACKWOOD, JIM
PLOT NAME :
PLOT SCALE : 1 IN:100 FT

2

N

STA 1045+00

STA 1060+00

MATCHLINE

MATCHLINE

ROAD WORK AHEAD
W20-1A

ON PORTABLE SUPPORT

END ROAD WORK
G20-2A
48"X24"

STOP
R1-1
30"X30"

CONSTRUCT INTERSECTION IN HALVES

74TH PLACE R/L

74TH PL

LANE CLOSED
R11-2L
48"X30"

WO1-6
48"X24"

TY4

TW4

TW8

+43
0' LT

TY4 DOUBLE

+64
12' RT

+75
1' RT

+64
22' RT

+52
1' RT

+52
12' RT

LANE CLOSED
R11-2L
48"X30"

R3-2
24"X24"

R3-2
24"X24"

SPEED LIMIT
35
R2-1
24"X30"

STH 50 R/L

STH 50

1046

1048

1050

1052

1054

1056

1058

11'

10'

4' MEDIAN

+85

25'

+19
11' RT

+19
22' RT

+77
12' RT

+77
23' RT

R6-1R
36"X12"
ONE WAY

R3-2
24"X24"

+50
10' RT

REDUCE FLEXIBLE TUBULAR MARKER SPACING FROM 25 FT TO 5 FT FROM STA 1034+83 TO 1046+45

242ND AVE R/L

242ND AVE

W6-4
12"X18"
MOUNT ON QUICK RELEASE FIXED BASE

STOP
R1-1
30"X30"

BEGIN LEFT TURN LANE
R3-20L
24"X36"

SPEED LIMIT
35
R2-1
24"X30"

REDUCE FLEXIBLE TUBULAR MARKER SPACING FROM 25 FT TO 5 FT FROM STA 1047+64 TO 1048+64

REDUCE FLEXIBLE TUBULAR MARKER SPACING FROM 25 FT TO 5 FT FROM STA 1051+27 TO 1054+09

BEGIN LEFT TURN LANE
R3-20L
24"X36"

CONSTRUCT USING A 14 CALENDAR DAY CLOSURE OF 74TH PLACE.

END ROAD WORK
G20-2A
48"X24"

ROAD WORK AHEAD
W20-1A

NOTE:
SEE STAGE 4C PEDESTRIAN STAGING PLANS FOR ADDITIONAL SIGNAGE

LEGEND

- WORK ZONE
- TEMPORARY PAVEMENT TO BE USED IN FUTURE STAGES
- WORK CONSTRUCTED UNDER TRAFFIC
- ASPHALTIC SURFACE TEMPORARY PLACED IN PREVIOUS STAGE

SHEET 98 OF 126

PROJECT NO: 1310-04-70	HWY: STH 50	COUNTY: KENOSHA	TRAFFIC CONTROL-STAGING - STAGE 4C	SHEET 450	E

FILE NAME : T:\1182708.06\CIVIL3D\13100400\13100400\SHEETSPLAN\026104_S4C.DWG
LAYOUT NAME - 07

PLOT DATE : 1/14/2022 4:36 PM PLOT BY : BLACKWOOD, JIM PLOT NAME : PLOT SCALE : 1 IN:100 FT

WISDOT/CADDS SHEET 42

2

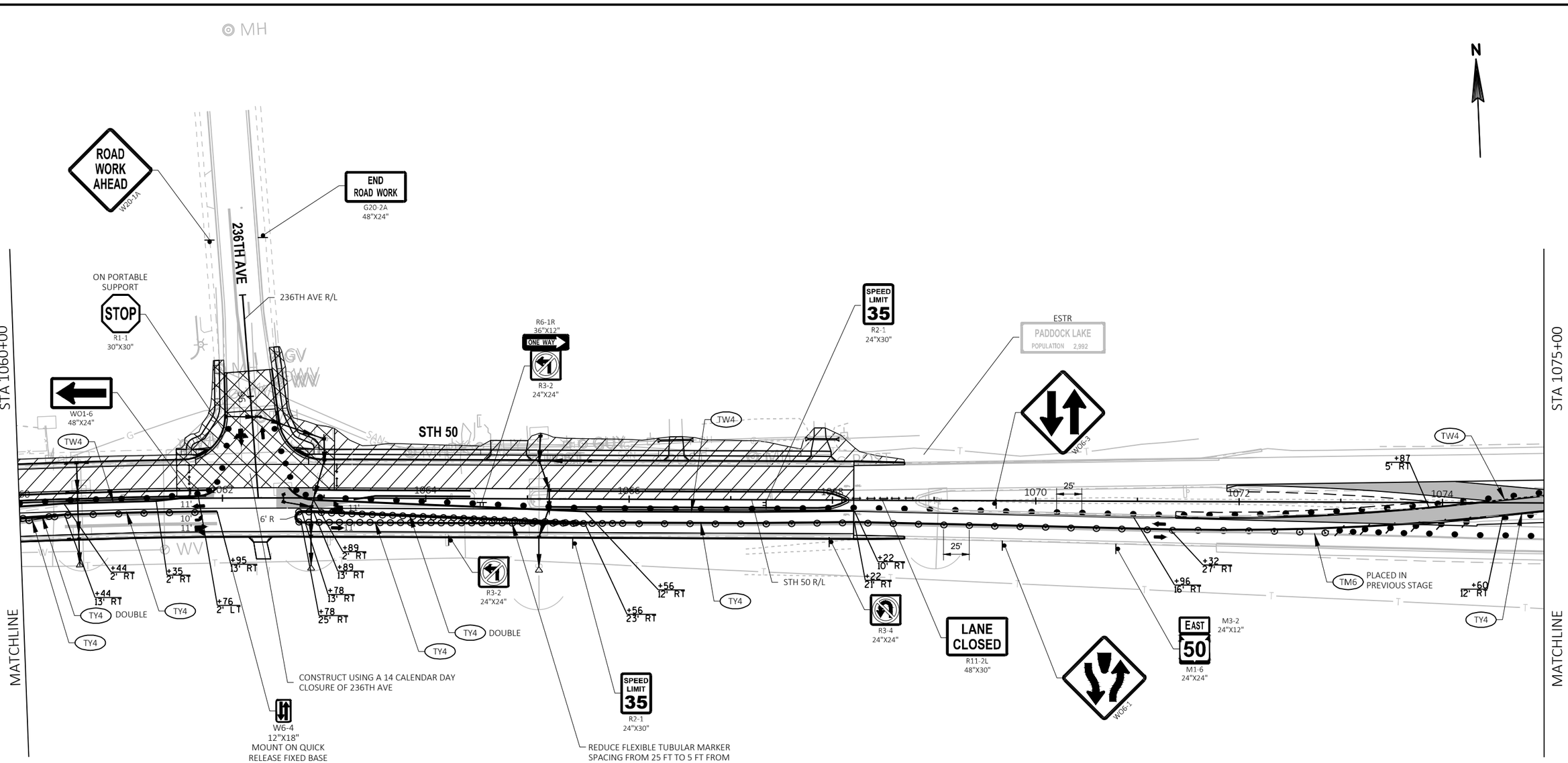

NOTE:
SEE STAGE 4C PEDESTRIAN STAGING PLANS FOR ADDITIONAL SIGNAGE

LEGEND

- WORK ZONE
- TEMPORARY PAVEMENT TO BE USED IN FUTURE STAGES
- WORK CONSTRUCTED UNDER TRAFFIC
- ASPHALTIC SURFACE TEMPORARY PLACED IN PREVIOUS STAGE

SHEET 99 OF 126

PROJECT NO: 1310-04-70	HWY: STH 50	COUNTY: KENOSHA	TRAFFIC CONTROL-STAGING - STAGE 4C	SHEET 451	E

FILE NAME : T:\1182708.06\CIVIL3D\13100400\13100400\SHEETSPLAN\026104_S4C.DWG
LAYOUT NAME - 08
PLOT DATE : 1/14/2022 4:36 PM
PLOT BY : BLACKWOOD, JIM
PLOT NAME :
PLOT SCALE : 1 IN:100 FT
WISDOT/CADDS SHEET 42

2

N

STA 1075+00

4050' R

4037' R

+76
26' LT

+78
11' LT

1076

1078

25'

LANE CLOSED
R11-2L
48"X30"

R3-4
24"X24"

LANE CLOSED
R11-2L
48"X30"

25'

W06-2

LANE CLOSED
R11-2L
48"X30"

660' MERGE TAPER

TM6 PLACED IN PREVIOUS STAGE

TW4

12'

12'

TM10

TY4

PLACED IN PREVIOUS STAGE

TM6

12'

12'

STH 50

MATCHLINE

TM6 PLACED IN PREVIOUS STAGE

COVER SIGN

SPEED LIMIT 55

R3-4
24"X24"

STH 50 R/L

ESTR

ESTR

HWY 45	2
HWY 94	7
KENOSHA	11

LANE CLOSED
R11-2L
48"X30"

PLACED IN PREVIOUS STAGE TM10

MATCHLINE

A

LEGEND

- WORK ZONE
- TEMPORARY PAVEMENT TO BE USED IN FUTURE STAGES
- WORK CONSTRUCTED UNDER TRAFFIC
- ASPHALTIC SURFACE TEMPORARY PLACED IN PREVIOUS STAGE

SHEET 100 OF 126

PROJECT NO: 1310-04-70	HWY: STH 50	COUNTY: KENOSHA	TRAFFIC CONTROL-STAGING - STAGE 4C	SHEET 452	E

FILE NAME : T:\1182708.06\CIVIL3D\13100400\13100400\SHEETSPLAN\026104_S4C.DWG
LAYOUT NAME - 09

PLOT DATE : 1/14/2022 4:36 PM PLOT BY : BLACKWOOD, JIM PLOT NAME : PLOT SCALE : 1 IN:100 FT

2

N

REDUCE SPEED AND CLOSE LANE IN ACCORDANCE WITH SDD
TRAFFIC CONTROL, LANE CLOSURE, SPEED REDUCTION.

660'
MERGE TAPER

500'

500'

500'

700'

400'

1300'

1300'

W04-2R

R2-1
48"X60"

W03-5

W20-5G

W12-52

W20-1F

A

TM6 PLACED IN PREVIOUS STAGE

TW4

ESTR

R3-4
24"X24"

LANE CLOSED
R11-2L
48"X30"

TM10 PLACED IN PREVIOUS STAGE

STH 50

TM10 PLACED IN PREVIOUS STAGE

MATCHLINE

R3-4
24"X24"

ESTR

LANE CLOSED
R11-2L
48"X30"

END ROAD WORK
G20-2A
48"X24"

LEGEND

- WORK ZONE
- TEMPORARY PAVEMENT TO BE USED IN FUTURE STAGES
- WORK CONSTRUCTED UNDER TRAFFIC
- ASPHALTIC SURFACE TEMPORARY PLACED IN PREVIOUS STAGE

SHEET 101 OF 126

PROJECT NO: 1310-04-70	HWY: STH 50	COUNTY: KENOSHA	TRAFFIC CONTROL-STAGING - STAGE 4C	SHEET 453	E

FILE NAME : T:\1182708.06\CIVIL3D\13100400\13100400\SHEETSPLAN\026104_S4C.DWG
LAYOUT NAME - 10

PLOT DATE : 1/14/2022 4:36 PM PLOT BY : BLACKWOOD, JIM PLOT NAME : PLOT SCALE : 1 IN:100 FT

2

LEGEND

WORK ZONE

TEMPORARY PAVEMENT TO BE USED IN FUTURE STAGES

WORK CONSTRUCTED UNDER TRAFFIC

ASPHALTIC SURFACE TEMPORARY PLACED IN PREVIOUS STAGE

N

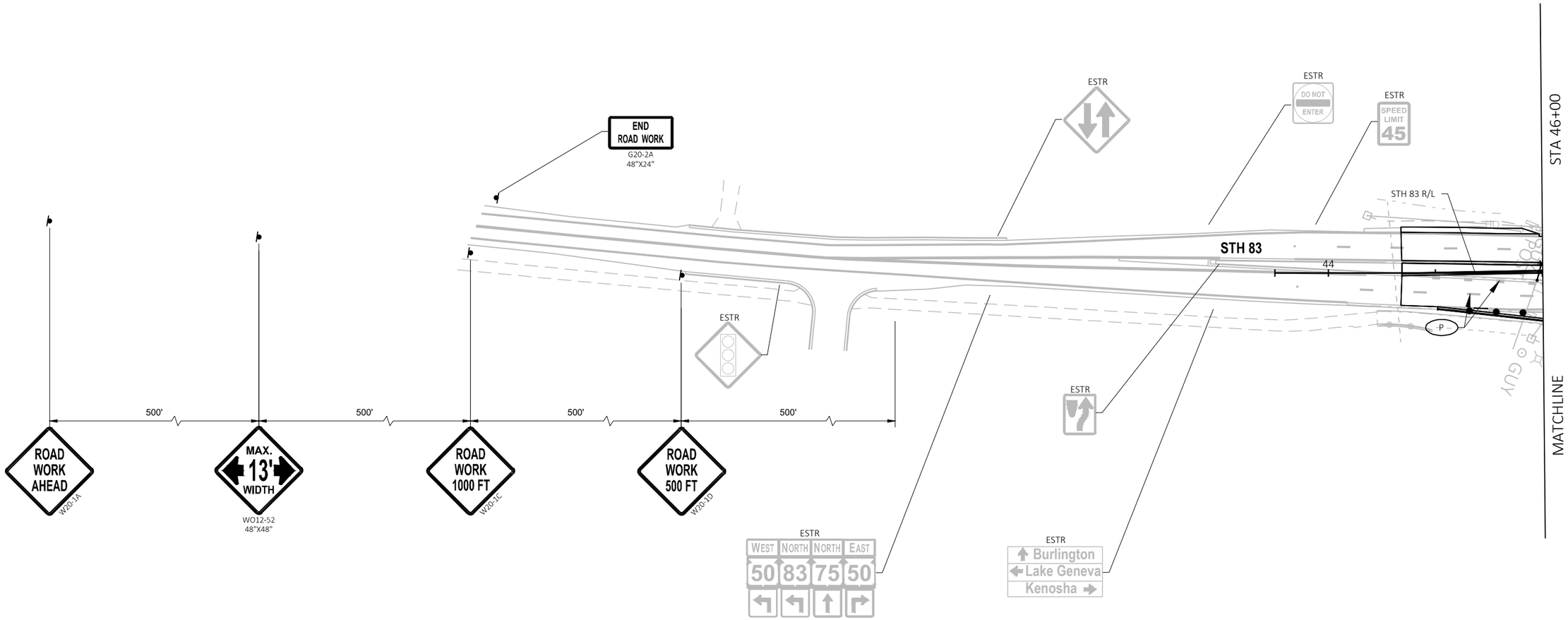

SHEET 102 OF 126

PROJECT NO: 1310-04-70	HWY: STH 50	COUNTY: KENOSHA	TRAFFIC CONTROL-STAGING - STAGE 4C	SHEET 454	E

FILE NAME : T:\1182708.06\CIVIL3D\13100400\13100400\SHEETSPLAN\026104_S4C.DWG
LAYOUT NAME - 11

PLOT DATE : 1/14/2022 4:36 PM PLOT BY : BLACKWOOD, JIM PLOT NAME : PLOT SCALE : 1 IN:100 FT

2

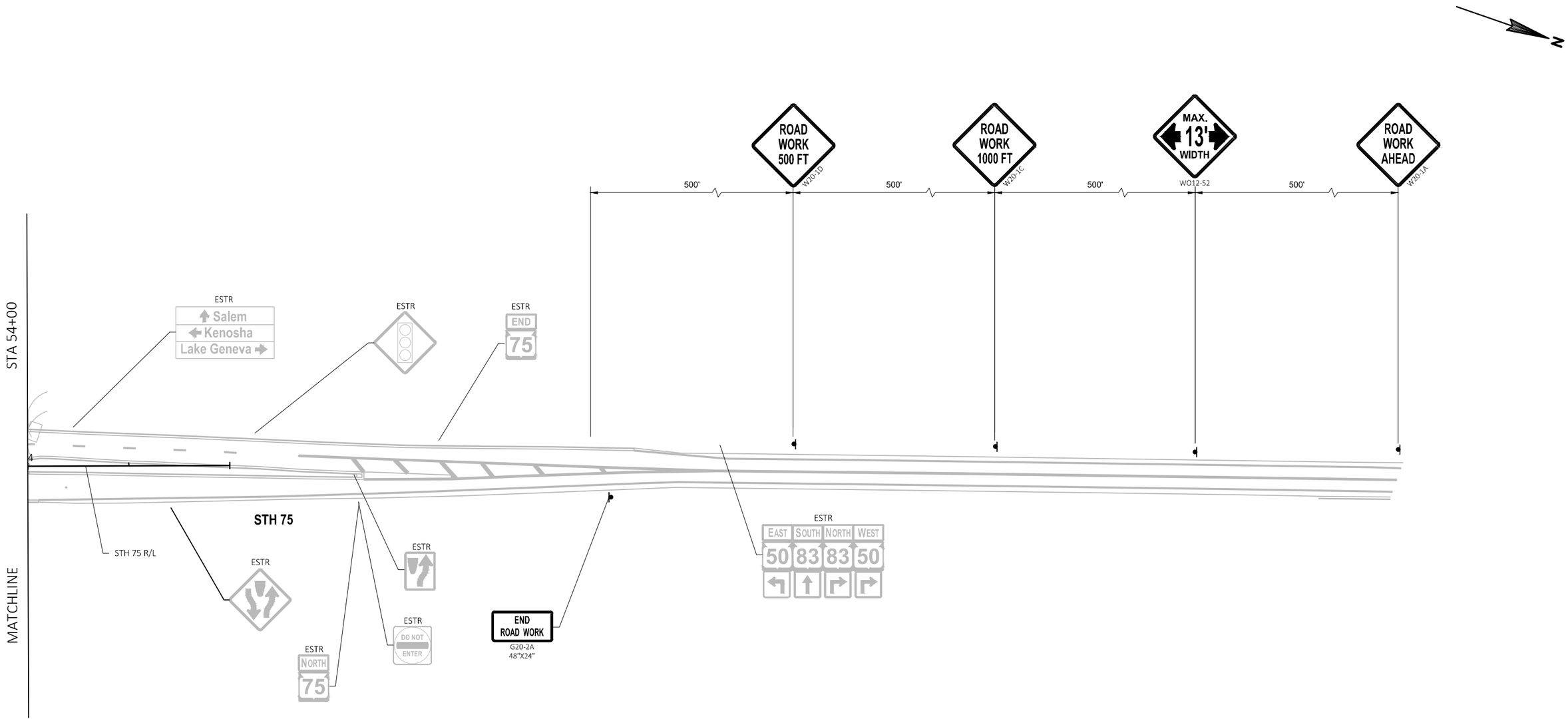

LEGEND

- WORK ZONE
- TEMPORARY PAVEMENT TO BE USED IN FUTURE STAGES
- WORK CONSTRUCTED UNDER TRAFFIC
- ASPHALTIC SURFACE TEMPORARY PLACED IN PREVIOUS STAGE

SHEET 103 OF 126

PROJECT NO: 1310-04-70	HWY: STH 50	COUNTY: KENOSHA	TRAFFIC CONTROL-STAGING - STAGE 4C	SHEET 455	E

FILE NAME : T:\1182708.06\CIVIL3D\13100400\13100400\SHEETSPLAN\026104_S4C.DWG
LAYOUT NAME - 12

PLOT DATE : 1/14/2022 4:36 PM PLOT BY : BLACKWOOD, JIM PLOT NAME : PLOT SCALE : 1 IN:100 FT

NOTE:
STAGE 4C PEDESTRIAN PLAN IS ONE ALTERNATIVE FOR HOW PEDESTRIANS CAN BE ACCOMMODATED DURING STAGE 4C. THE CONTRACTOR MY PROPOSE ALTERNATIVE CONCEPTS TO THE ENGINEER FOR APPROVAL THAT FITS THE CONTRACTOR'S CONSTRUCTION OPERATIONS THAT SHALL FIT THE FOLLOWING CRITERIA:

- PEDESTRIANS SHALL BE ACCOMMODATED ON THE NORTH SIDE OF STH 50 FROM 246TH AVE TO 236TH DURING THE ENTIRE STAGE
- A PEDESTRIAN CROSSING SHALL NOT BE ALLOWED AT A NON-SIGNALIZED INTERSECTION
- TEMPORARY PEDESTRIAN BARRICADES ARE REQUIRED WHEN SLOPES ADJACENT TO THE PEDESTRIAN ACCESS ROUTE EXCEED 3:1 OR CONSTRUCTION EQUIPMENT IS WITHIN CLOSE PROXIMITY TO THE PEDESTRIAN ACCESS ROUTE

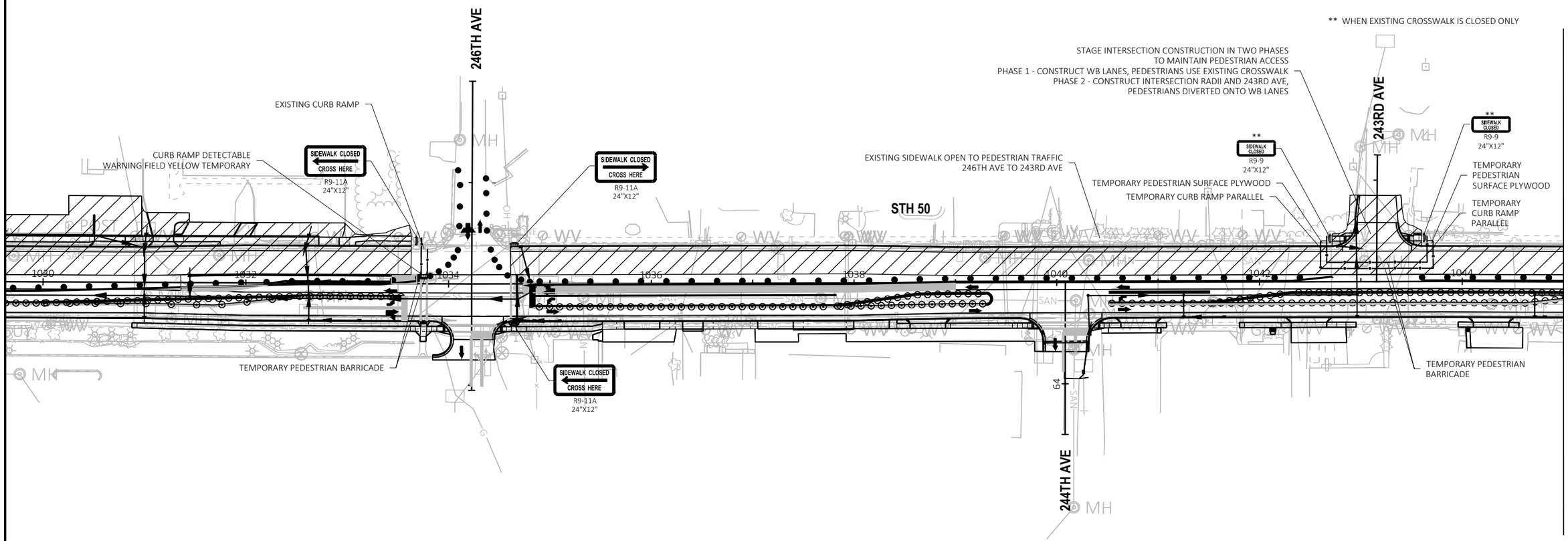

LEGEND

- WORK ZONE
- TEMPORARY PAVEMENT TO BE USED IN FUTURE STAGES
- WORK CONSTRUCTED UNDER TRAFFIC
- ASPHALTIC SURFACE TEMPORARY PLACED IN PREVIOUS STAGE

1030+00.00

SHEET 104 OF 126

PROJECT NO: 1310-04-70	HWY: STH 50	COUNTY: KENOSHA	TRAFFIC CONTROL-STAGING - STAGE 4C1 PEDESTRIAN	SHEET 456 E

FILE NAME : T:\1182708.06\CIVIL3D\13100400\13100400\SHEETSPLAN\026104A_S4C1.DWG
LAYOUT NAME - 06
PLOT DATE : 1/14/2022 4:37 PM
PLOT BY : BLACKWOOD, JIM
PLOT NAME :
PLOT SCALE : 1 IN:100 FT

2

2

N

EXISTING SIDEWALK OPEN TO PEDESTRIAN TRAFFIC
243RD AVE TO 74TH PLACE

74TH PL

PAVE WB LANES IN HALVES TO MAINTAIN ACCESS TO 74TH PLACE

EXISTING SIDEWALK OPEN TO PEDESTRIAN TRAFFIC
74TH PLACE TO 236TH AVE

STA 1045+00

STA 1060+00

1046 1048 1050 1052 1054 1056 1058

STH 50

242ND AVE

MATCHLINE

MATCHLINE

LEGEND

WORK ZONE

TEMPORARY PAVEMENT TO BE USED IN FUTURE STAGES

WORK CONSTRUCTED UNDER TRAFFIC

ASPHALTIC SURFACE TEMPORARY PLACED IN PREVIOUS STAGE

SHEET 105 OF 126

PROJECT NO: 1310-04-70	HWY: STH 50	COUNTY: KENOSHA	TRAFFIC CONTROL-STAGING - STAGE 4C1 PEDESTRIAN	SHEET 457	E

FILE NAME : T:\1182708.06\CIVIL3D\13100400\13100400\SHEETSPLAN\026104A_S4C1.DWG
LAYOUT NAME - 07

PLOT DATE : 1/14/2022 4:37 PM PLOT BY : BLACKWOOD, JIM PLOT NAME : PLOT SCALE : 1 IN:100 FT

WISDOT/CADDS SHEET 42

2

N

MH

236TH AVE

STA 1060+00

TW4

TEMPORARY CURB RAMP CONCRETE

SIDEWALK CLOSED
CROSS HERE
R9-11A
24"X12"

SIDEWALK CLOSED
R9-9
24"X12"

TEMPORARY PEDESTRIAN SURFACE PLYWOOD

TEMPORARY CURB RAMP PARALLEL

CURB RAMP DETECTABLE WARNING FIELD YELLOW TEMPORARY

TEMPORARY PEDESTRIAN SURFACE PLYWOOD

TEMPORARY CURB RAMP PERPENDICULAR

TEMPORARY PEDESTRIAN SURFACE PLYWOOD

TEMPORARY CURB RAMP PERPENDICULAR

STH 50

1062

1064

1066

1068

1070

1072

GV

WV

TW4

TEMPORARY PEDESTRIAN BARRICADE

TEMPORARY PEDESTRIAN BARRICADE

MATCHLINE

LEGEND

WORK ZONE

TEMPORARY PAVEMENT TO BE USED IN FUTURE STAGES

WORK CONSTRUCTED UNDER TRAFFIC

ASPHALTIC SURFACE TEMPORARY PLACED IN PREVIOUS STAGE

SHEET 106 OF 126

PROJECT NO: 1310-04-70	HWY: STH 50	COUNTY: KENOSHA	TRAFFIC CONTROL-STAGING - STAGE 4C1 PEDESTRIAN	SHEET 458	E

FILE NAME : T:\1182708.06\CIVIL3D\13100400\13100400\SHEETSPLAN\026104A_S4C1.DWG
LAYOUT NAME - 08

PLOT DATE : 1/14/2022 4:37 PM PLOT BY : BLACKWOOD, JIM PLOT NAME : PLOT SCALE : 1 IN:100 FT

2

NOTE:
STAGE 4C PEDESTRIAN PLAN IS ONE ALTERNATIVE FOR HOW PEDESTRIANS CAN BE ACCOMMODATED DURING STAGE 4C. THE CONTRACTOR MY PROPOSE ALTERNATIVE CONCEPTS TO THE ENGINEER FOR APPROVAL THAT FITS THE CONTRACTOR'S CONSTRUCTION OPERATIONS THAT SHALL FIT THE FOLLOWING CRITERIA:

- PEDESTRIANS SHALL BE ACCOMMODATED ON THE NORTH SIDE OF STH 50 FROM 246TH AVE TO 236TH DURING THE ENTIRE STAGE
- A PEDESTRIAN CROSSING SHALL NOT BE ALLOWED AT A NON-SIGNALIZED INTERSECTION
- TEMPORARY PEDESTRIAN BARRICADES ARE REQUIRED WHEN SLOPES ADJACENT TO THE PEDESTRIAN ACCESS ROUTE EXCEED 3:1 OR CONSTRUCTION EQUIPMENT IS WITHIN CLOSE PROXIMITY TO THE PEDESTRIAN ACCESS ROUTE

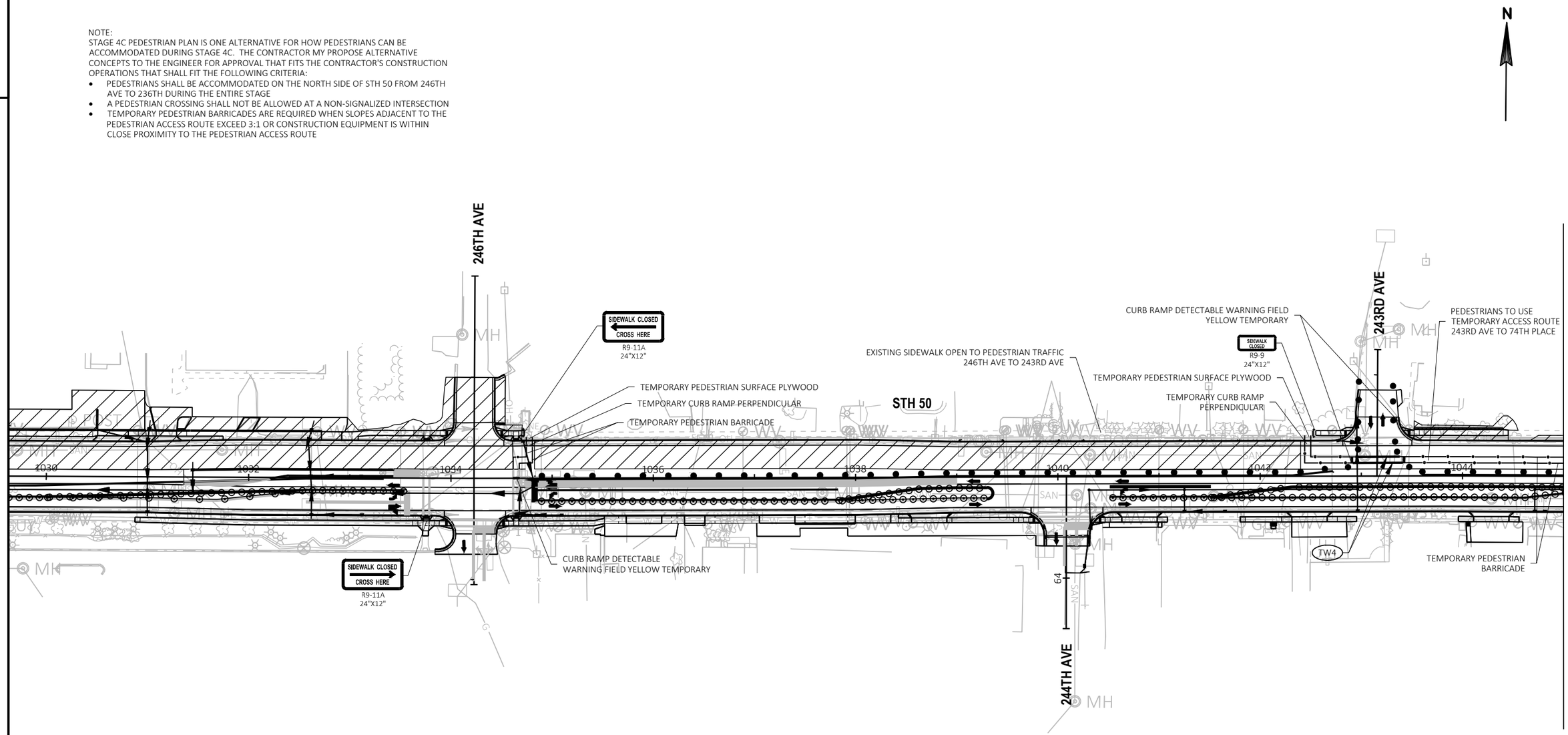

LEGEND

- WORK ZONE
- TEMPORARY PAVEMENT TO BE USED IN FUTURE STAGES
- WORK CONSTRUCTED UNDER TRAFFIC
- ASPHALTIC SURFACE TEMPORARY PLACED IN PREVIOUS STAGE

1030+00.00

SHEET 107 OF 126

PROJECT NO: 1310-04-70	HWY: STH 50	COUNTY: KENOSHA	TRAFFIC CONTROL-STAGING - STAGE 4C2 PEDESTRIAN	SHEET 459	E

FILE NAME : T:\1182708.06\CIVIL3D\13100400\13100400\SHEETSPLAN\026104B_S4C2.DWG
LAYOUT NAME - 06
PLOT DATE : 1/14/2022 4:38 PM
PLOT BY : BLACKWOOD, JIM
PLOT NAME :
PLOT SCALE : 1 IN:100 FT

WISDOT/CADDS SHEET 42

2

N

STA 1045+00

STA 1060+00

PEDESTRIANS TO USE TEMPORARY ACCESS ROUTE 243RD AVE TO 74TH PLACE

74TH PL

PAVE INTERSECTION IN HALVES TO MAINTAIN ACCESS TO 74TH PLACE

SIDEWALK CLOSED
R9-9
24"X12"

EXISTING SIDEWALK OPEN TO PEDESTRIAN TRAFFIC
74TH PLACE TO 236TH AVE

TW4

TEMPORARY PEDESTRIAN SURFACE PLYWOOD

TEMPORARY CURB RAMP PERPENDICULAR

1046 1048 1050 1052 1054 1056 1058

STH 50

TEMPORARY PEDESTRIAN BARRICADE

TEMPORARY PEDESTRIAN BARRICADE

CURB RAMP DETECTABLE WARNING FIELD YELLOW TEMPORARY

242ND AVE

MATCHLINE

MATCHLINE

LEGEND

- WORK ZONE
- TEMPORARY PAVEMENT TO BE USED IN FUTURE STAGES
- WORK CONSTRUCTED UNDER TRAFFIC
- ASPHALTIC SURFACE TEMPORARY PLACED IN PREVIOUS STAGE

SHEET 108 OF 126

PROJECT NO: 1310-04-70	HWY: STH 50	COUNTY: KENOSHA	TRAFFIC CONTROL-STAGING - STAGE 4C2 PEDESTRIAN	SHEET 460	E

FILE NAME : T:\1182708.06\CIVIL3D\13100400\13100400\SHEETSPLAN\026104B_S4C2.DWG
LAYOUT NAME - 07

PLOT DATE : 1/14/2022 4:38 PM PLOT BY : BLACKWOOD, JIM PLOT NAME : PLOT SCALE : 1 IN:100 FT

2

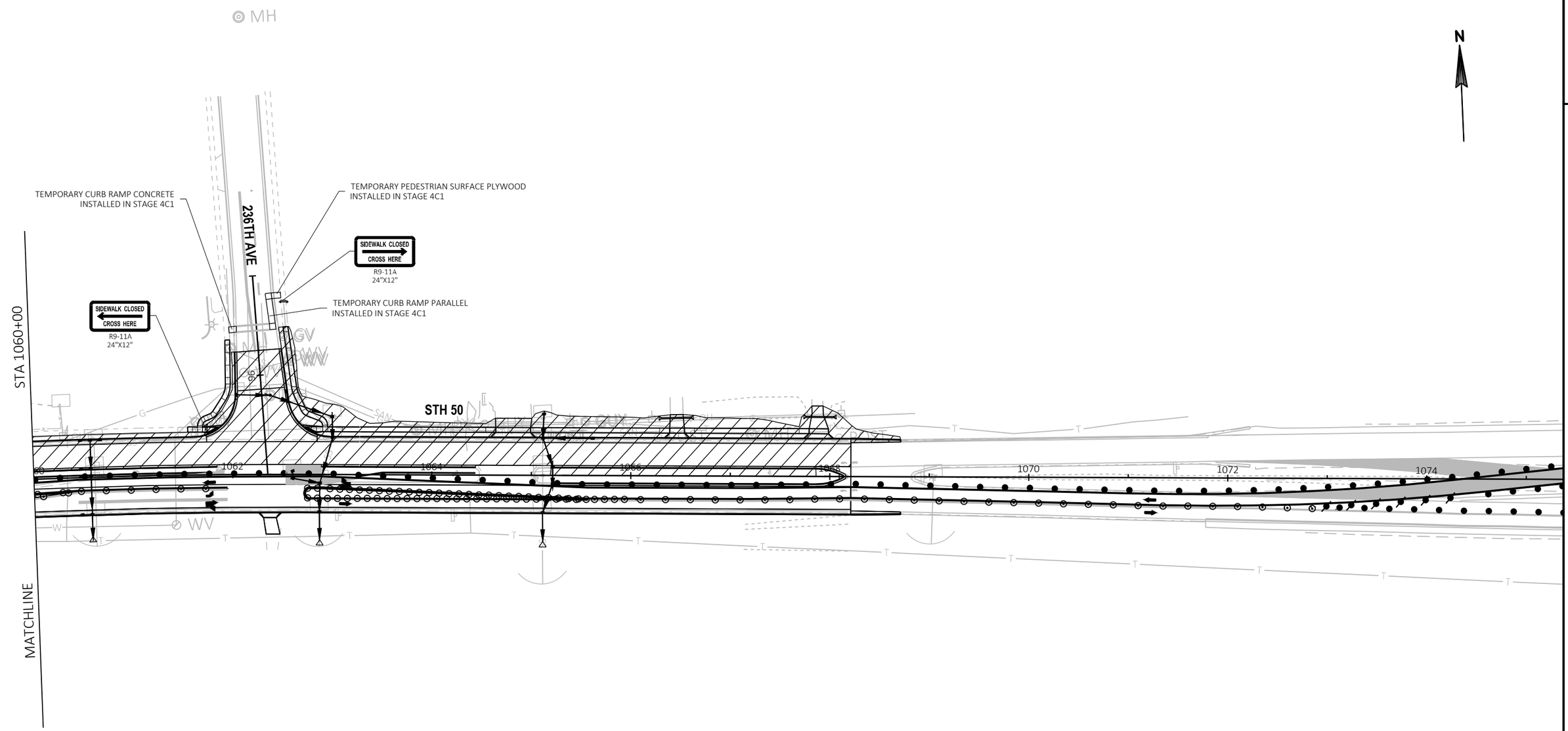

LEGEND

- WORK ZONE
- TEMPORARY PAVEMENT TO BE USED IN FUTURE STAGES
- WORK CONSTRUCTED UNDER TRAFFIC
- ASPHALTIC SURFACE TEMPORARY PLACED IN PREVIOUS STAGE

SHEET 109 OF 126

PROJECT NO: 1310-04-70	HWY: STH 50	COUNTY: KENOSHA	TRAFFIC CONTROL-STAGING - STAGE 4C2 PEDESTRIAN	SHEET 461	E

FILE NAME : T:\1182708.06\CIVIL3D\13100400\13100400\SHEETSPLAN\026104B_S4C2.DWG
LAYOUT NAME - 08

PLOT DATE : 1/14/2022 4:38 PM PLOT BY : BLACKWOOD, JIM PLOT NAME : PLOT SCALE : 1 IN:100 FT

NOTE:
STAGE 4C PEDESTRIAN PLAN IS ONE ALTERNATIVE FOR HOW PEDESTRIANS CAN BE ACCOMMODATED DURING STAGE 4C. THE CONTRACTOR MY PROPOSE ALTERNATIVE CONCEPTS TO THE ENGINEER FOR APPROVAL THAT FITS THE CONTRACTOR'S CONSTRUCTION OPERATIONS THAT SHALL FIT THE FOLLOWING CRITERIA:

- PEDESTRIANS SHALL BE ACCOMMODATED ON THE NORTH SIDE OF STH 50 FROM 246TH AVE TO 236TH DURING THE ENTIRE STAGE
- A PEDESTRIAN CROSSING SHALL NOT BE ALLOWED AT A NON-SIGNALIZED INTERSECTION
- TEMPORARY PEDESTRIAN BARRICADES ARE REQUIRED WHEN SLOPES ADJACENT TO THE PEDESTRIAN ACCESS ROUTE EXCEED 3:1 OR CONSTRUCTION EQUIPMENT IS WITHIN CLOSE PROXIMITY TO THE PEDESTRIAN ACCESS ROUTE

N

246TH AVE

CURB RAMP DETECTABLE WARNING FIELD YELLOW TEMPORARY

CURB RAMP DETECTABLE WARNING FIELD YELLOW TEMPORARY

SIDEWALK CLOSED R9-9 24"X12"

TEMPORARY PEDESTRIAN BARRICADE

PEDESTRIANS TO USE TEMPORARY ACCESS ROUTE 246TH AVE TO 243RD AVE

STH 50

SIDEWALK CLOSED R9-9 24"X12"

TEMPORARY PEDESTRIAN SURFACE PLYWOOD

TEMPORARY CURB RAMP PERPENDICULAR

243RD AVE

PEDESTRIANS TO USE EXISTING AND PROPOSED SIDEWALK 243RD AVE TO 74TH PLACE

STA 1045+00

1030 1032 1034 1036 1038 1040 1042 1044

TW4 TW4 TW4

TEMPORARY PEDESTRIAN BARRICADE

64

244TH AVE

MATCHLINE

1030+00.00

LEGEND

- WORK ZONE
- TEMPORARY PAVEMENT TO BE USED IN FUTURE STAGES
- WORK CONSTRUCTED UNDER TRAFFIC
- ASPHALTIC SURFACE TEMPORARY

SHEET 110 OF 126

PROJECT NO: 1310-04-70	HWY: STH 50	COUNTY: KENOSHA	TRAFFIC CONTROL-STAGING - STAGE 4C3 PEDESTRIAN	SHEET 462	E

FILE NAME : T:\1182708.06\CIVIL3D\13100400\13100400\SHEETSPLAN\026104C_S4C3.DWG
LAYOUT NAME - 06
PLOT DATE : 1/14/2022 4:39 PM
PLOT BY : BLACKWOOD, JIM
PLOT NAME :
PLOT SCALE : 1 IN:100 FT

2

2

N

STA 1045+00

STA 1060+00

PEDESTRIANS TO USE TEMPORARY ACCESS ROUTE 243RD AVE TO 74TH PLACE

74TH PL

SIDEWALK OPEN TO PEDESTRIAN TRAFFIC 74TH PLACE TO 236TH AVE

TEMPORARY PEDESTRIAN SURFACE PLYWOOD

TEMPORARY CURB RAMP PERPENDICULAR

SIDEWALK CLOSED R9-9 24"X12"

TEMPORARY PEDESTRIAN BARRICADE

TW4

STH 50

242ND AVE

MATCHLINE

MATCHLINE

LEGEND

WORK ZONE

TEMPORARY PAVEMENT TO BE USED IN FUTURE STAGES

WORK CONSTRUCTED UNDER TRAFFIC

ASPHALTIC SURFACE TEMPORARY

SHEET 111 OF 126

PROJECT NO: 1310-04-70	HWY: STH 50	COUNTY: KENOSHA	TRAFFIC CONTROL-STAGING - STAGE 4C3 PEDESTRIAN	SHEET 463	E

FILE NAME : T:\1182708.06\CIVIL3D\13100400\13100400\SHEETSPLAN\026104C_S4C3.DWG
LAYOUT NAME - 07

PLOT DATE : 1/14/2022 4:39 PM PLOT BY : BLACKWOOD, JIM PLOT NAME : PLOT SCALE : 1 IN:100 FT

WISDOT/CADDS SHEET 42

2

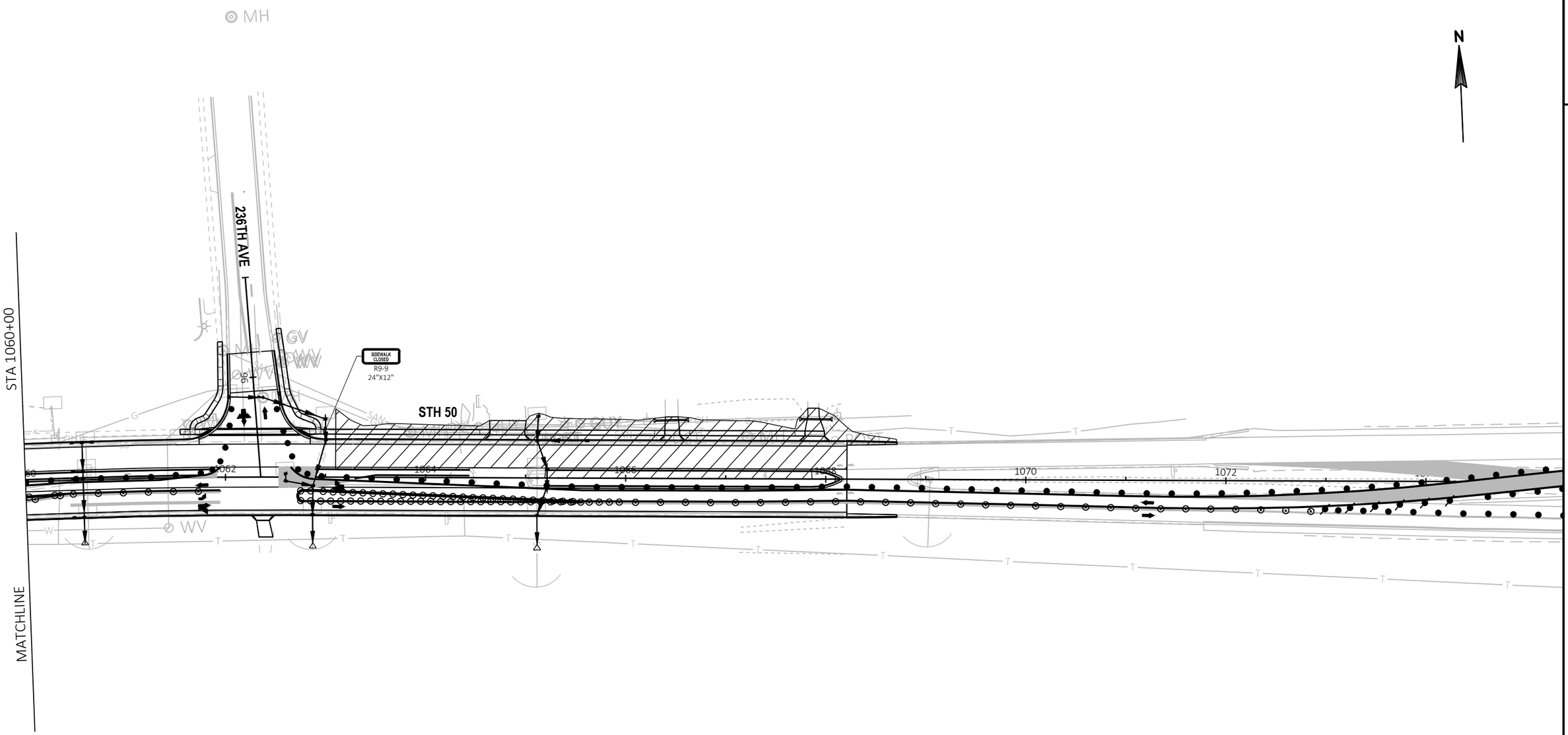

LEGEND

- WORK ZONE
- TEMPORARY PAVEMENT TO BE USED IN FUTURE STAGES
- WORK CONSTRUCTED UNDER TRAFFIC
- ASPHALTIC SURFACE TEMPORARY

SHEET 112 OF 126

PROJECT NO: 1310-04-70	HWY: STH 50	COUNTY: KENOSHA	TRAFFIC CONTROL-STAGING - STAGE 4C3 PEDESTRIAN	SHEET 464	E

FILE NAME : T:\1182708.06\CIVIL3D\13100400\13100400\SHEETSPLAN\026104C_S4C3.DWG
LAYOUT NAME - 08

PLOT DATE : 1/14/2022 4:39 PM PLOT BY : BLACKWOOD, JIM PLOT NAME : PLOT SCALE : 1 IN:100 FT

2

TRAFFIC CONTROL NOTES - STAGE 5

CONSTRUCTION:
- STH 50 MEDIAN
- REMOVE EAST & WEST CROSSOVERS

TRAFFIC:
- STH 50 - 1 THRU LANE IN EACH DIRECTION
- STH 75/ STH 83 - TWO THRU LANES

PEDESTRIANS:
- SIDEWALKS AND CROSSWALKS PARALLEL TO STH 50 OPEN AT ALL TIMES

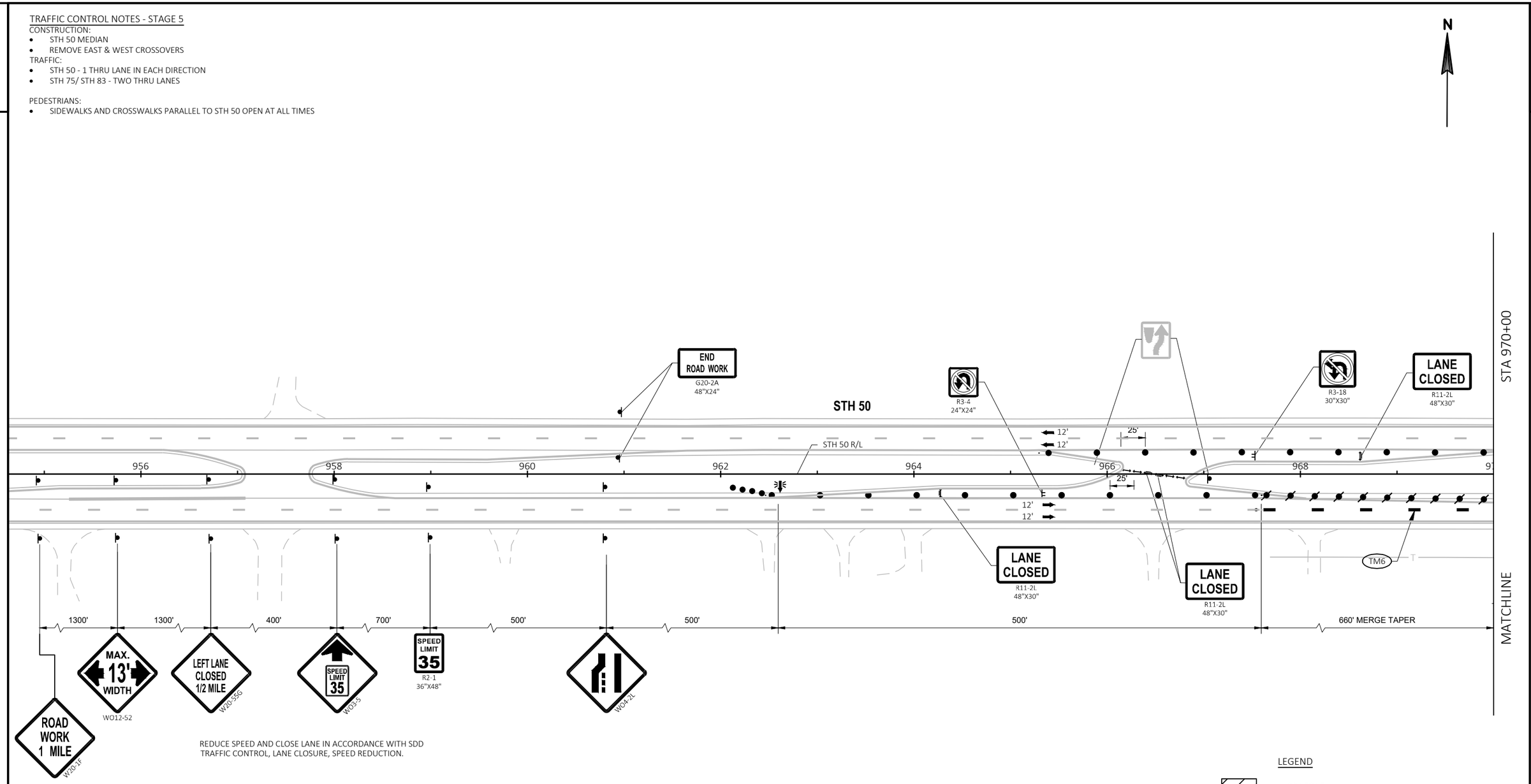

REDUCE SPEED AND CLOSE LANE IN ACCORDANCE WITH SDD TRAFFIC CONTROL, LANE CLOSURE, SPEED REDUCTION.

LEGEND

- WORK ZONE
- TEMPORARY PAVEMENT TO BE USED IN FUTURE STAGES
- WORK CONSTRUCTED UNDER TRAFFIC
- ASPHALTIC SURFACE TEMPORARY PLACED IN PREVIOUS STAGE

SHEET 113 OF 126

PROJECT NO: 1310-04-70	HWY: STH 50	COUNTY: KENOSHA	TRAFFIC CONTROL-STAGING - STAGE 5	SHEET 465	E

FILE NAME : T:\1182708.06\CIVIL3D\13100400\13100400\SHEETSPLAN\026105_S5.DWG
LAYOUT NAME - 01
PLOT DATE : 1/14/2022 4:40 PM PLOT BY : BLACKWOOD, JIM PLOT NAME : PLOT SCALE : 1 IN:100 FT

2

N

MATCHLINE

STA 970+00

STA 985+00

MATCHLINE

ONE WAY
R6-2R
24"X30"

LANE CLOSED
R11-2L
48"X30"

ESTR

R3-18
30"X30"

COVER SIGN
SPEED LIMIT
55

STH 50

LANE CLOSED
R11-2L
48"X30"

ESTR
WEST NORTH
50 83

ESTR

ESTR
ONE WAY

ESTR

ESTR
DO NOT ENTER

BEGIN LEFT TURN LANE
R3-20L
24"X36"

970 972 974 976 978 STH 50 R/L 980 982 984

25' 12' 12' 25' 12' 11'

+36 37' LT
+36 25' LT
+19 36' LT
+59 36' LT
+59 36' LT
+59 25' LT
+59 25' LT
+58 37' LT

TY4 TM6 TY4 TM6 TY4 TY4

600' MERGE TAPER

TM6

R3-4
24"X24"

LANE CLOSED
R11-2L
48"X30"

ONE WAY
R6-2R
24"X30"

ESTR
WRONG WAY

COVER SIGN
SPEED LIMIT
35

ESTR
DO NOT ENTER

TM6

TY4

WO1-6
48"X24"

ESTR
EAST SOUTH
50 83

ONE WAY
R6-2R
24"X30"

END ROAD WORK
G20-2A
48"X24"

ROAD WORK AHEAD
W20-1A

261ST ST

LEGEND

- WORK ZONE
- TEMPORARY PAVEMENT TO BE USED IN FUTURE STAGES
- WORK CONSTRUCTED UNDER TRAFFIC
- ASPHALTIC SURFACE TEMPORARY PLACED IN PREVIOUS STAGE

SHEET 114 OF 126

PROJECT NO: 1310-04-70	HWY: STH 50	COUNTY: KENOSHA	TRAFFIC CONTROL-STAGING - STAGE 5	SHEET 466	E

FILE NAME : T:\1182708.06\CIVIL3D\13100400\13100400\SHEETSPLAN\026105_S5.DWG
LAYOUT NAME - 02
PLOT DATE : 1/14/2022 4:40 PM
PLOT BY : BLACKWOOD, JIM
PLOT NAME :
PLOT SCALE : 1 IN:100 FT
WISDOT/CADDS SHEET 42

2

N

STA 985+00

STA 1000+00

MATCHLINE

MATCHLINE

COVER SIGN

SPEED LIMIT 35

ESTR

LANE CLOSED
R11-2L
48"X30"

R3-18
30"X30"

LANE CLOSED
R11-2L
48"X30"

LANE CLOSED
R11-2L
48"X30"

TY4

REMOVE TYPE S CASTING AND ADJUSTMENT RINGS
ADJUST INLET AND INSTALL TYPE H CASTING
TO FINAL GRADE

MOVE DRUMS 4 FEET BACK FROM YELLOW EDGELINE AT INTERSECTION
TO PROVIDE FOR TRUCK TURNING MOVEMENTS AT CTH F INTERSECTION

ONE WAY
R6-2R
24"X30"

SPEED LIMIT 35
R2-1
24"X30"

ONE WAY
R6-2R
24"X30"

LANE CLOSED
R11-2L
48"X30"

ONE WAY
R6-2R
24"X30"

+98
22' LT

+76
10' LT

+76
22' LT

986
988
990
992
994
996
998
1000

25'
25'

11'
11'
10'

STH 50 R/L

STH 50

+21
23' RT

+26
25' RT

+38
10' RT

+03
2' RT

+78
2' RT

SPEED LIMIT 35
R2-1
24"X30"

ESTR
SPEED LIMIT 35

ONE WAY
R6-2R
24"X30"

R3-18
30"X30"

ESTR
JCT
COUNTY F

ESTR

SPEED LIMIT 35
R2-1
24"X30"

R3-18
30"X30"

M1-5A
24"X24"

COUNTY F

M6-1
21"X21"

STOP
R1-1
30"X30"

CTH F

350'

END ROAD WORK
G20-2A
48"X24"

ROAD WORK AHEAD
W20-1A

NOTE:
SEE PAVEMENT MARKING PLAN FOR PERMANENT
PAVEMENT MARKING LAYOUT INFORMATION

LEGEND

- WORK ZONE
- TEMPORARY PAVEMENT TO BE USED IN FUTURE STAGES
- WORK CONSTRUCTED UNDER TRAFFIC
- ASPHALTIC SURFACE TEMPORARY PLACED IN PREVIOUS STAGE

SHEET 115 OF 126

PROJECT NO: 1310-04-70	HWY: STH 50	COUNTY: KENOSHA	TRAFFIC CONTROL-STAGING - STAGE 5	SHEET 467	E

FILE NAME : T:\1182708.06\CIVIL3D\13100400\13100400\SHEETSPLAN\026105_S5.DWG
LAYOUT NAME - 03

PLOT DATE : 1/14/2022 4:40 PM PLOT BY : BLACKWOOD, JIM PLOT NAME : PLOT SCALE : 1 IN:100 FT

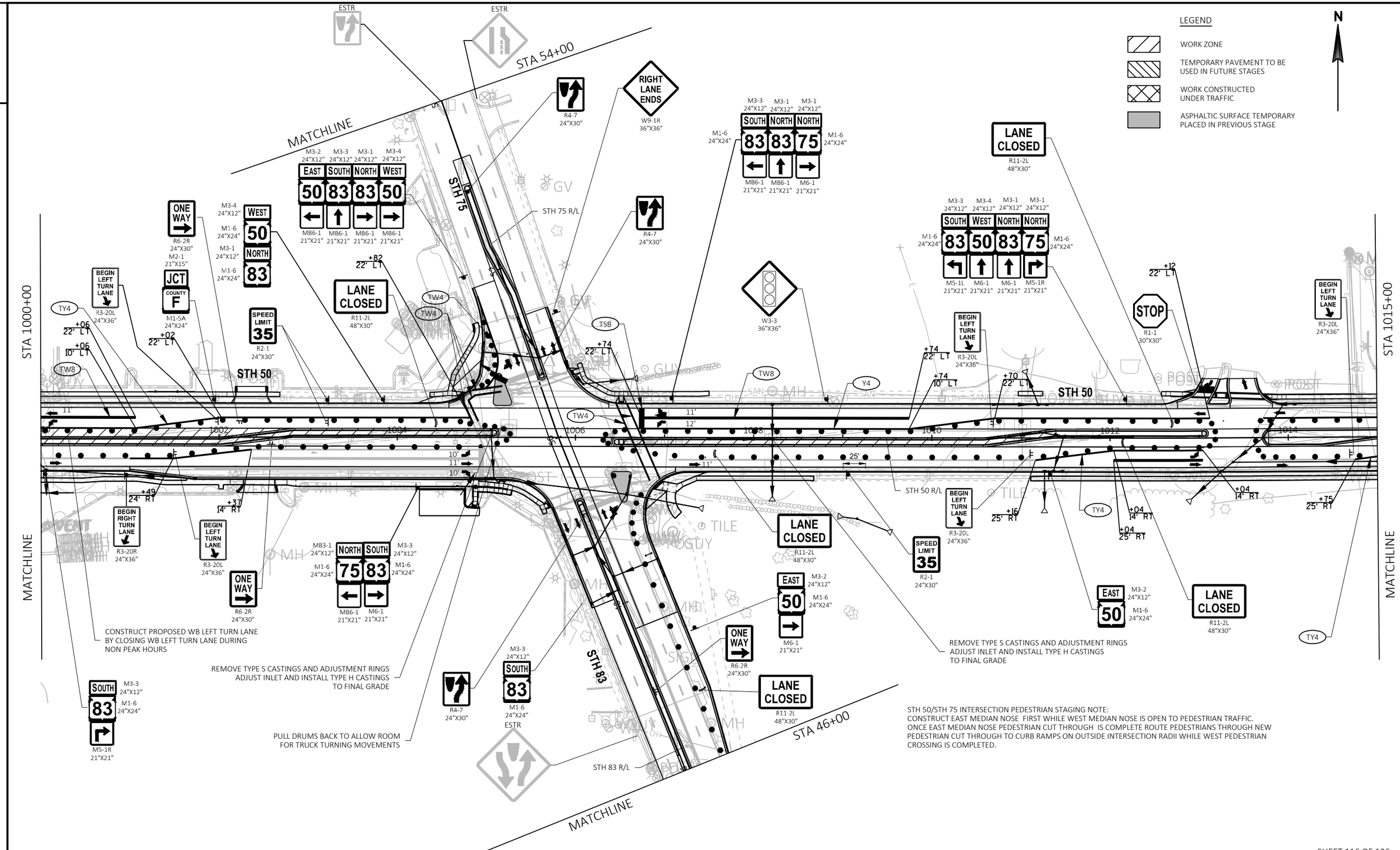

PROJECT NO: 1310-04-70	HWY: STH 50	COUNTY: KENOSHA	TRAFFIC CONTROL-STAGING - STAGE 5	SHEET 468	E

FILE NAME : T:\1182708.06\CIVIL3D\13100400\13100400\SHEETSPLAN\026105_S5.DWG
LAYOUT NAME - 04
PLOT DATE : 1/14/2022 4:40 PM PLOT BY : BLACKWOOD, JIM PLOT NAME : PLOT SCALE : 1 IN:100 FT
WISDOT/CADDS SHEET 42

2

N

STA 1015+00

STA 1030+00

MATCHLINE

MATCHLINE

ROAD WORK AHEAD W20-1A

JCT 75 83 M2-1 21"X15" M1-6 24"X24" M1-6 24"X24"

STOP R1-1 30"X30"

250TH AVE

END ROAD WORK G20-2A 48"X24"

250TH AVE R/L

ESTR SPEED LIMIT 25

R3-2 24"X24"

SPEED LIMIT 35 END SCHOOL ZONE S5-2 24"X30"

R2-1 24"X30"

ONE WAY R6-2R 24"X30"

LANE CLOSED R11-2L 48"X30"

SPEED LIMIT 35 R2-1 24"X30"

ONE WAY R6-2R 24"X30"

ROAD WORK AHEAD W20-1A

R6-1R 36"X12" ONE WAY R3-2 24"X24"

R1-1 30"X30" STOP

248TH AVE

END ROAD WORK G20-2A 48"X24"

WO1-6 48"X24"

248TH AVE R/L

ROAD CLOSED R11-2 48"X30"

ONE WAY R6-2R 24"X30"

SIDEWALK CLOSED R9-9 24"X12"

R3-2 24"X24"

ONE WAY R6-2R 24"X30"

TY4

+63 22' LT

+70 20' LT

+93 4' LT

+55 25' LT

11' 11' 11'

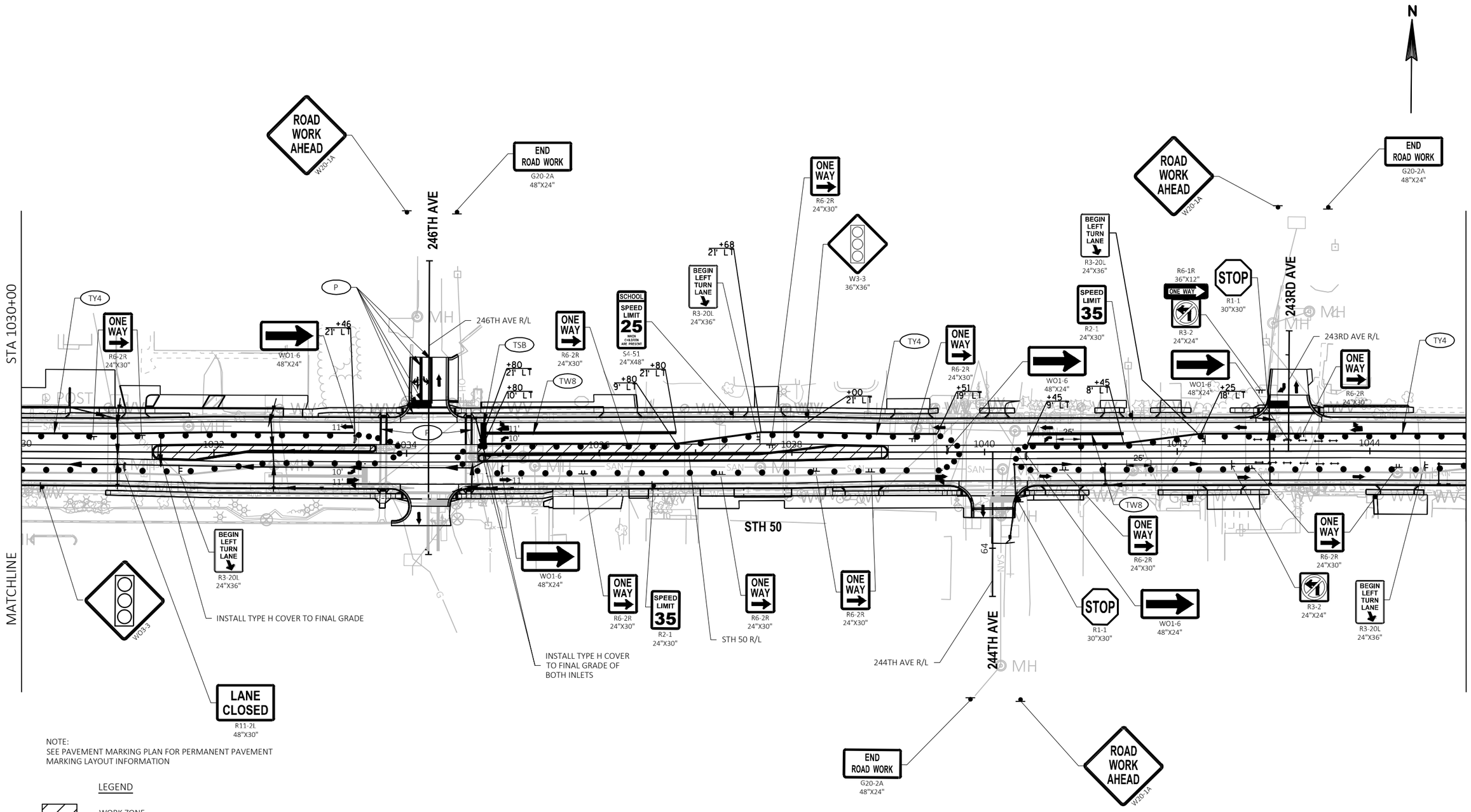

NOTE:
SEE PAVEMENT MARKING PLAN FOR PERMANENT PAVEMENT MARKING LAYOUT INFORMATION

LEGEND

- WORK ZONE
- TEMPORARY PAVEMENT TO BE USED IN FUTURE STAGES
- WORK CONSTRUCTED UNDER TRAFFIC
- ASPHALTIC SURFACE TEMPORARY PLACED IN PREVIOUS STAGE

SHEET 118 OF 126

PROJECT NO: 1310-04-70	HWY: STH 50	COUNTY: KENOSHA	TRAFFIC CONTROL-STAGING - STAGE 5	SHEET 470	E

FILE NAME : T:\1182708.06\CIVIL3D\13100400\13100400\SHEETSPLAN\026105_S5.DWG
LAYOUT NAME - 06
PLOT DATE : 1/14/2022 4:40 PM
PLOT BY : BLACKWOOD, JIM
PLOT NAME :
PLOT SCALE : 1 IN:100 FT
WISDOT/CADDS SHEET 42

2

N

ROAD WORK AHEAD
W20-1A

END ROAD WORK
G20-2A
48"X24"

ESTR
STOP

WO1-6
48"X24"

ONE WAY
R6-2R
24"X30"

74TH PL

74TH PLACE R/L

REMOVE TYPE S COVER AND ADJUSTMENT RINGS
ADJUST INLET AND INSTALL TYPE H COVER

SPEED LIMIT 35
R2-1
24"X30"

LANE CLOSED
R11-2L
48"X30"

ONE WAY
R6-2R
24"X30"

R3-2
24"X24"

SPEED LIMIT 35
R2-1
24"X30"

STA 1045+00

STA 1060+00

+54
20' LT

+56
21' LT

P

TY4

11'

10'

1046

1048

1050

1052

1054

1056

1058

25'

STH 50

STH 50 R/L

242ND AVE R/L

242ND AVE

STOP
R1-1
30"X30"

WO1-6
48"X24"

ONE WAY
R6-2R
24"X30"

R3-2
24"X24"

ONE WAY
R6-2R
24"X30"

SPEED LIMIT 35
R2-1
24"X30"

LANE CLOSED
R11-2L
48"X30"

BEGIN LEFT TURN LANE
R3-20L
24"X36"

MATCHLINE

MATCHLINE

END ROAD WORK
G20-2A
48"X24"

ROAD WORK AHEAD
W20-1A

NOTE:
SEE PAVEMENT MARKING PLAN FOR PERMANENT PAVEMENT MARKING LAYOUT INFORMATION

LEGEND

- WORK ZONE
- TEMPORARY PAVEMENT TO BE USED IN FUTURE STAGES
- WORK CONSTRUCTED UNDER TRAFFIC
- ASPHALTIC SURFACE TEMPORARY PLACED IN PREVIOUS STAGE

SHEET 119 OF 126

PROJECT NO: 1310-04-70	HWY: STH 50	COUNTY: KENOSHA	TRAFFIC CONTROL-STAGING - STAGE 5	SHEET 471	E

FILE NAME : T:\1182708.06\CIVIL3D\13100400\13100400\SHEETSPLAN\026105_S5.DWG
LAYOUT NAME - 07

PLOT DATE : 1/14/2022 4:40 PM PLOT BY : BLACKWOOD, JIM PLOT NAME : PLOT SCALE : 1 IN:100 FT

2

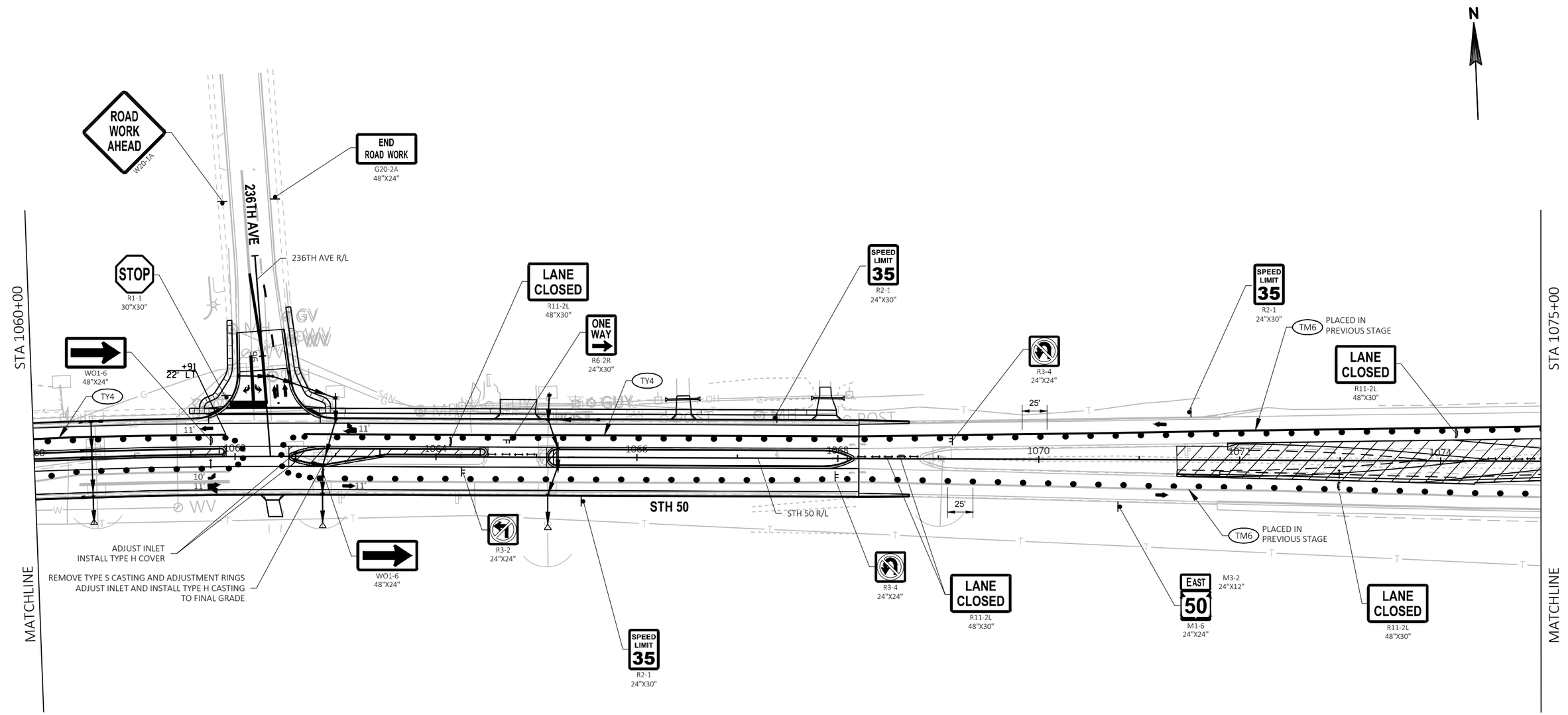

LEGEND

- WORK ZONE
- TEMPORARY PAVEMENT TO BE USED IN FUTURE STAGES
- WORK CONSTRUCTED UNDER TRAFFIC
- ASPHALTIC SURFACE TEMPORARY PLACED IN PREVIOUS STAGE

SHEET 120 OF 126

PROJECT NO: 1310-04-70	HWY: STH 50	COUNTY: KENOSHA	TRAFFIC CONTROL-STAGING - STAGE 5	SHEET 472	E

FILE NAME : T:\1182708.06\CIVIL3D\13100400\13100400\SHEETSPLAN\026105_S5.DWG
LAYOUT NAME - 08

PLOT DATE : 1/14/2022 4:40 PM PLOT BY : BLACKWOOD, JIM PLOT NAME : PLOT SCALE : 1 IN:100 FT

2

2

N

STA 1075+00

615' BUFFER SPACE

660' MERGE TAPER

LANE CLOSED
R11-2L
48"X30"

R3-4
24"X24"

LANE CLOSED
R11-2L
48"X30"

TY4

TM6 PLACED IN PREVIOUS STAGE

25'

12'

12'

1076

1078

12'

12'

TM6 PLACED IN PREVIOUS STAGE

25'

TM6 PLACED IN PREVIOUS STAGE

STH 50

MATCHLINE

COVER SIGN
SPEED LIMIT
55

R3-4
24"X24"

STH 50 R/L

ESTR

ESTR

HWY 45	2
HWY 94	7
KENOSHA	11

LANE CLOSED
R11-2L
48"X30"

TM10 PLACED IN PREVIOUS STAGE

MATCHLINE

A

LEGEND

- WORK ZONE
- TEMPORARY PAVEMENT TO BE USED IN FUTURE STAGES
- WORK CONSTRUCTED UNDER TRAFFIC
- ASPHALTIC SURFACE TEMPORARY PLACED IN PREVIOUS STAGE

SHEET 121 OF 126

PROJECT NO: 1310-04-70	HWY: STH 50	COUNTY: KENOSHA	TRAFFIC CONTROL-STAGING - STAGE 5	SHEET 473	E

FILE NAME : T:\1182708.06\CIVIL3D\13100400\13100400\SHEETSPLAN\026105_S5.DWG
LAYOUT NAME - 09

PLOT DATE : 1/14/2022 4:40 PM PLOT BY : BLACKWOOD, JIM PLOT NAME : PLOT SCALE : 1 IN:100 FT

WISDOT/CADDS SHEET 42

2

2

N

REDUCE SPEED AND CLOSE LANE IN ACCORDANCE WITH SDD
TRAFFIC CONTROL, LANE CLOSURE, SPEED REDUCTION.

660'
MERGE TAPER

500'

500'

500'

700'

400'

1300'

1300'

W04-2L

SPEED LIMIT 35
R2-1
48"X60"

SPEED LIMIT 35
W03-5

LEFT LANE CLOSED 1/2 MILE
W20-5G

MAX. 13' WIDTH
W012-52

ROAD WORK 1 MILE
W20-1F

A

ESTR

R3-4
24"X24"

TM10 PLACED IN PREVIOUS STAGE

TM10 PLACED IN PREVIOUS STAGE

STH 50

MATCHLINE

R3-4
24"X24"

ESTR

LANE CLOSED
R11-2L
48"X30"

END ROAD WORK
G20-2A
48"X24"

LEGEND

- WORK ZONE
- TEMPORARY PAVEMENT TO BE USED IN FUTURE STAGES
- WORK CONSTRUCTED UNDER TRAFFIC
- ASPHALTIC SURFACE TEMPORARY PLACED IN PREVIOUS STAGE

SHEET 122 OF 126

PROJECT NO: 1310-04-70	HWY: STH 50	COUNTY: KENOSHA	TRAFFIC CONTROL-STAGING - STAGE 5	SHEET 474	E

FILE NAME : T:\1182708.06\CIVIL3D\13100400\13100400\SHEETSPLAN\026105_S5.DWG
LAYOUT NAME - 10

PLOT DATE : 1/14/2022 4:40 PM PLOT BY : BLACKWOOD, JIM PLOT NAME : PLOT SCALE : 1 IN:100 FT

WISDOT/CADDS SHEET 42

2

2

LEGEND

WORK ZONE

TEMPORARY PAVEMENT TO BE USED IN FUTURE STAGES

WORK CONSTRUCTED UNDER TRAFFIC

ASPHALTIC SURFACE TEMPORARY PLACED IN PREVIOUS STAGE

N

STA 46+00

STH 83

STH 83 R/L

44

END ROAD WORK
G20-2A
48"X24"

ESTR

ESTR
DO NOT ENTER

ESTR
SPEED LIMIT 45

ESTR

TY4

ESTR

ESTR
WEST NORTH NORTH EAST
50 83 75 50

ESTR
Burlington
Lake Geneva
Kenosha

500'

500'

500'

500'

ROAD WORK AHEAD
W20-1A

MAX. 13' WIDTH
W012-52

ROAD WORK 1000 FT
W20-1C

ROAD WORK 500 FT
W20-1D

MATCHLINE

SHEET 123 OF 126

PROJECT NO: 1310-04-70	HWY: STH 50	COUNTY: KENOSHA	TRAFFIC CONTROL-STAGING - STAGE 5	SHEET 475	E

FILE NAME : T:\1182708.06\CIVIL3D\13100400\13100400\SHEETSPLAN\026105_S5.DWG
LAYOUT NAME - 11

PLOT DATE : 1/14/2022 4:41 PM PLOT BY : BLACKWOOD, JIM PLOT NAME : PLOT SCALE : 1 IN:100 FT

WISDOT/CADDS SHEET 42

2

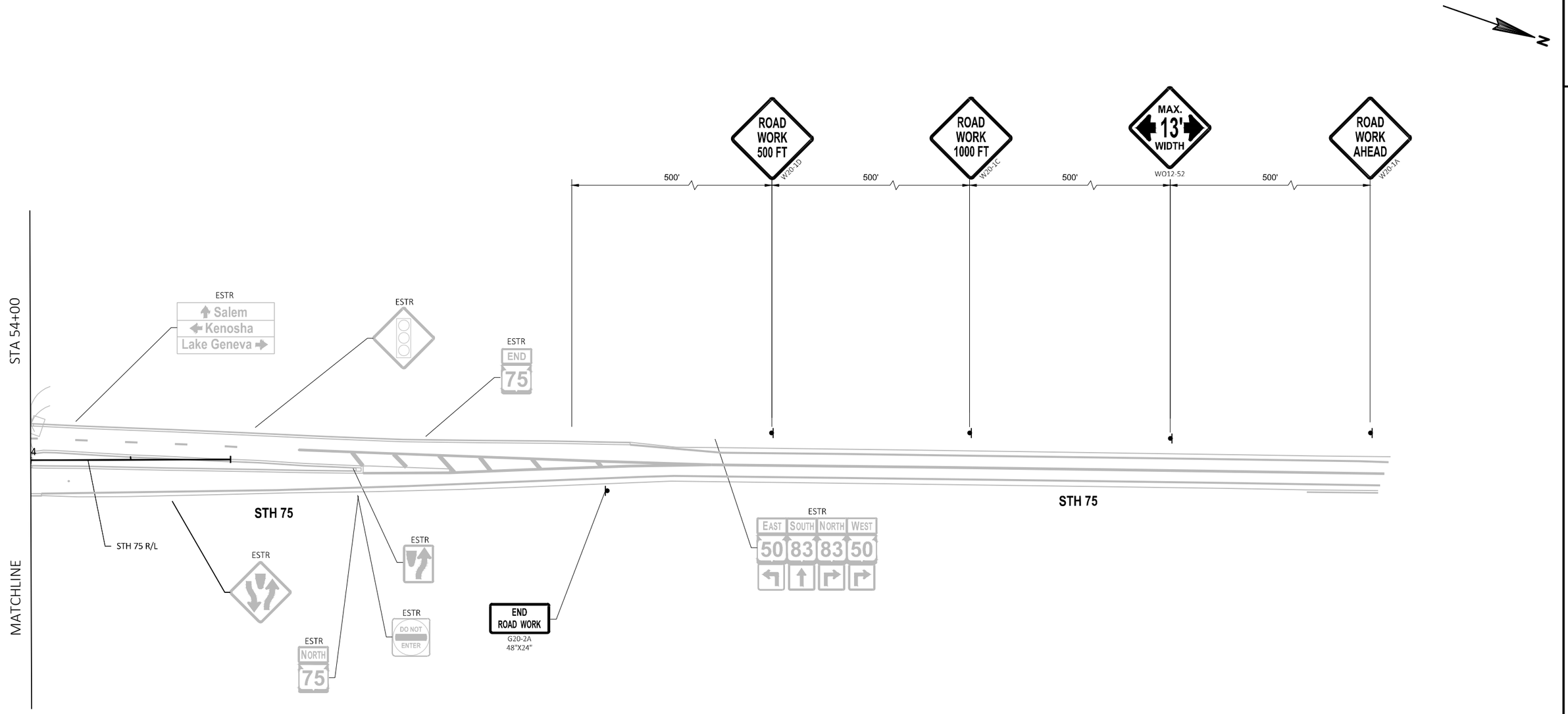

LEGEND

- WORK ZONE
- TEMPORARY PAVEMENT TO BE USED IN FUTURE STAGES
- WORK CONSTRUCTED UNDER TRAFFIC
- ASPHALTIC SURFACE TEMPORARY PLACED IN PREVIOUS STAGE

SHEET 124 OF 126

PROJECT NO: 1310-04-70	HWY: STH 50	COUNTY: KENOSHA	TRAFFIC CONTROL-STAGING - STAGE 5	SHEET 476	E

FILE NAME : T:\1182708.06\CIVIL3D\13100400\13100400\SHEETSPLAN\026105_S5.DWG
LAYOUT NAME - 12

PLOT DATE : 1/14/2022 4:41 PM PLOT BY : BLACKWOOD, JIM PLOT NAME : PLOT SCALE : 1 IN:100 FT

NOTES:
1. ALL PAVEMENT MARKINGS SHOWN ARE PERMANENT PAVEMENT MARKINGS UNLESS OTHERWISE NOTED.
2. ALL PERMANENT SIGNS SHALL BE INSTALLED PRIOR TO THE START OF STAGE 6 EXCEPT SIGNS ON THE ISLANDS. PERMANENT SIGNS ARE NOT SHOWN.
3. MAXIMUM DURATION OF STAGE 6A IS SEVEN (7) CALENDAR DAYS.

LEGEND

- WORK ZONE
- TEMPORARY PAVEMENT TO BE USED IN FUTURE STAGES
- WORK CONSTRUCTED UNDER TRAFFIC
- ASPHALTIC SURFACE TEMPORARY PLACED IN PREVIOUS STAGE

N

ROAD WORK AHEAD W20-1A
1000'
ROAD WORK 1000 FT W20-1C
500'
ROAD WORK 500 FT W20-1D
500'
STH 75
END ROAD WORK G20-2A 48"X24"
STH 75 R/L
M4-4 24"X12"
TRUCK
R3-1 24"X24"
LANE CLOSED R11-2L 48"X30"
TW4
END ROAD WORK G20-2A 48"X24"
DELINEATE CROSSWALKS WITHIN WORK ZONE WITH TEMPORARY PEDESTRIAN BARRICADES
STH 50
SIDEWALK CLOSED CROSS HERE R9-11A 24"X12"
REMOVE TYPE S COVER AND ADJUSTMENT RINGS ADJUST INLET AND INSTALL TYPE H COVER
500'
ROAD WORK 500 FT W20-1D
500'
ROAD WORK AHEAD W20-1A
STH 50
STH 50 R/L
SIDEWALK CLOSED CROSS HERE R9-11A 24"X12"
END ROAD WORK G20-2A 48"X24"
500'
ROAD WORK AHEAD W20-1A
500'
ROAD WORK 500 FT W20-1D
SIDEWALK CLOSED CROSS HERE R9-11A 24"X12"
M4-4 24"X12"
TRUCK
R3-1 24"X24"
LANE CLOSED R11-2L 48"X30"
ROAD WORK 500 FT W20-1D
END ROAD WORK G20-2A 48"X24"
STH 83 R/L
500'
ROAD WORK 1000 FT W20-1C
1000'
ROAD WORK AHEAD W20-1A

SHEET 125 OF 126

PROJECT NO: 1310-04-70	HWY: STH 50	COUNTY: KENOSHA	TRAFFIC CONTROL-STAGING - STAGE 6A	SHEET 477 E

FILE NAME : T:\1182708.06\CIVIL3D\13100400\13100400\SHEETSPLAN\026106_S6A.DWG
LAYOUT NAME - 04
PLOT DATE : 1/14/2022 4:41 PM
PLOT BY : BLACKWOOD, JIM
PLOT NAME :
PLOT SCALE : 1 IN:100 FT

NOTES:
1. ALL PAVEMENT MARKINGS SHOWN ARE PERMANENT PAVEMENT MARKINGS UNLESS OTHERWISE NOTED.
2. ALL PERMANENT SIGNS SHALL BE INSTALLED PRIOR TO THE START OF STAGE 6 EXCEPT SIGNS ON THE ISLANDS. PERMANENT SIGNS ARE NOT SHOWN.
3. MAXIMUM DURATION OF STAGE 6B IS SEVEN (7) CALENDAR DAYS.

LEGEND

- WORK ZONE
- TEMPORARY PAVEMENT TO BE USED IN FUTURE STAGES
- WORK CONSTRUCTED UNDER TRAFFIC
- ASPHALTIC SURFACE TEMPORARY PLACED IN PREVIOUS STAGE

N

ROAD WORK AHEAD W20-1A
1000'
ROAD WORK 1000 FT W20-1C
ROAD WORK 500 FT W20-1D
500'
45°
STH 75
END ROAD WORK G20-2A 48"X24"
STH 75 R/L
M4-4 24"X12"
TRUCK
R3-1 24"X24"
REMOVE TYPE S COVER AND ADJUSTMENT RINGS
ADJUST INLET AND INSTALL TYPE H COVER
SIDEWALK CLOSED AHEAD CROSS HERE R9-11 24"x15"
LANE CLOSED R11-2L 48"X30"
END ROAD WORK G20-2A 48"X24"
SIDEWALK CLOSED R9-9 24"X12"
STH 50
SIDEWALK CLOSED CROSS HERE R9-11A 24"X12"
ROAD WORK 500 FT W20-1D
500'
ROAD WORK AHEAD W20-1A
STH 50
STH 50 R/L
END ROAD WORK G20-2A 48"X24"
ROAD WORK AHEAD W20-1A
500'
ROAD WORK 500 FT W20-1D
SIDEWALK CLOSED CROSS HERE R9-11A 24"X12"
END ROAD WORK G20-2A 48"X24"
STH 83 R/L

SHEET 126 OF 126

PROJECT NO: 1310-04-70	HWY: STH 50	COUNTY: KENOSHA	TRAFFIC CONTROL-STAGING - STAGE 6B	SHEET 478 E

FILE NAME : T:\1182708.06\CIVIL3D\13100400\13100400\SHEETSPLAN\026107_S6B.DWG
LAYOUT NAME - 04
PLOT DATE : 1/14/2022 4:42 PM
PLOT BY : BLACKWOOD, JIM
PLOT NAME :
PLOT SCALE : 1 IN:100 FT

NOTE:
ON DIVIDED ROADWAYS PLACE SIGNS ON BOTH SIDES OF ROADWAY

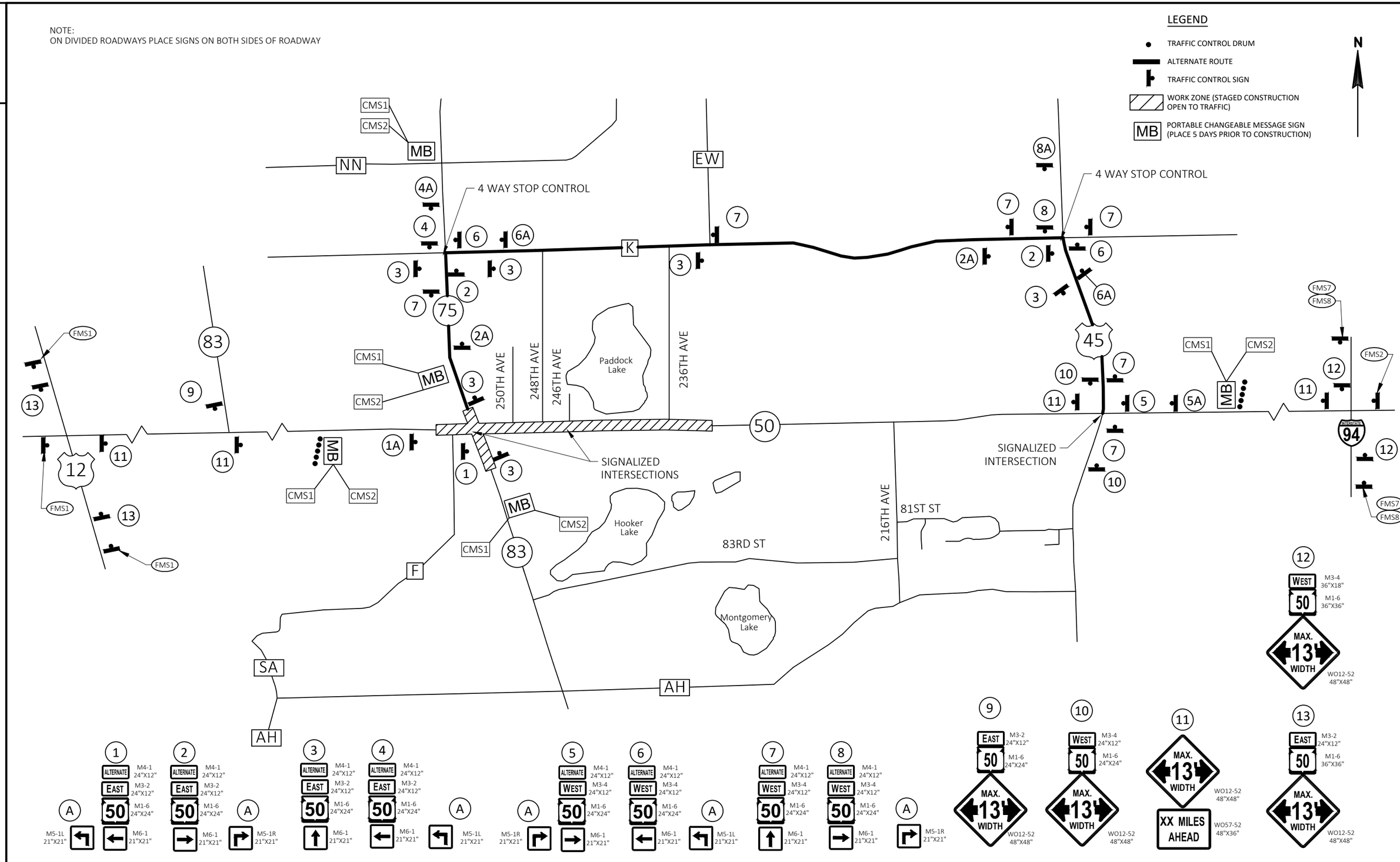

PROJECT NO: 1310-04-70	HWY: STH 50	COUNTY: KENOSHA	ALTERNATIVE ROUTE	SHEET 479	E

FILE NAME : N:\PDS\C3D\13100400\SHEETSPLAN\027001_DT.DWG
LAYOUT NAME - 01
PLOT DATE : 1/25/2022 12:03 PM
PLOT BY : BLACKWOOD, JAMES X
PLOT NAME :
WISDOT/CADDS SHEET 42

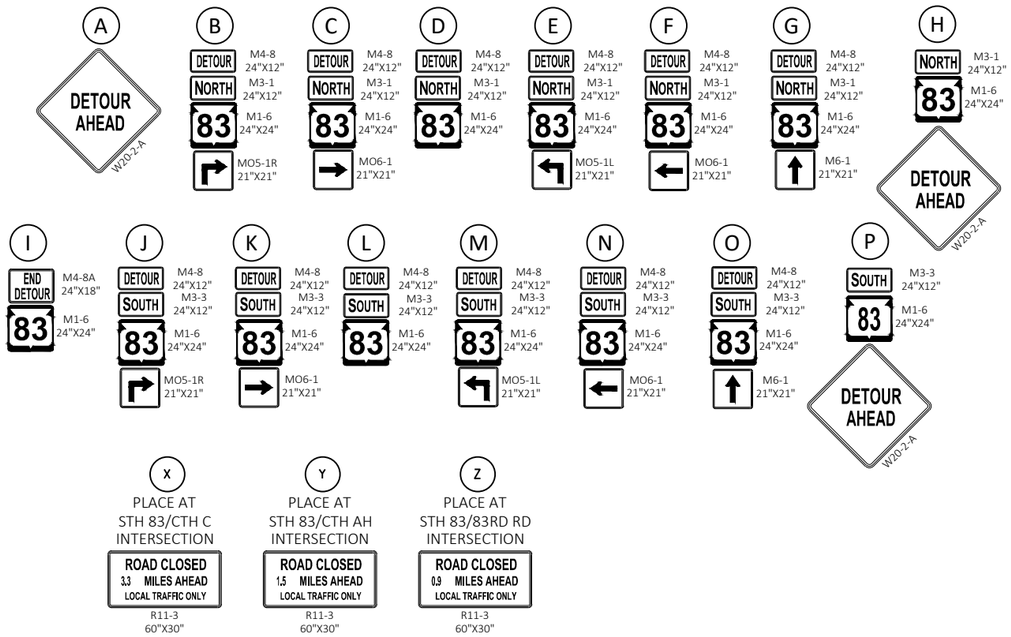

NOTES:

1. SIGN LOCATIONS ARE APPROXIMATE. THE ACTUAL LOCATION AND SPACING MAY BE ADJUSTED AS DIRECTED BY THE ENGINEER TO MEET FIELD CONDITIONS.
2. CONTRACTOR SHOULD LOCATE FIXED MESSAGE SIGNS A MINIMUM OF 400 FEET FROM ANY EXISTING TYPE I SIGN.
3. ALL FIXED MESSAGE SIGNS SHALL BE BLACK NON-REFLECTIVE MESSAGE ON ORANGE FLORESCENT REFLECTIVE BACKGROUND PER SPEC 643 & 637, UNLESS OTHERWISE NOTED IN THE SIGN DETAILS.
4. SEE FIXED MESSAGE SIGNS AND SPECIAL MESSAGE SIGNS LAYOUT SHEETS FOR MORE INFORMATION.
5. ALL SIGNS, TEMPORARY OR EXISTING, IN CONFLICT WITH THE TRAFFIC CONTROL "IN USE" SHALL BE COVERED. THE COVERING OF WOOD POST MOUNTED SIGNS WILL BE PAID UNDER SEPARATE BID ITEM (643.0910 & 643.0920)
6. SIGNS TO BE PLACED 10 DAYS PRIOR TO CONSTRUCTION.
7. ANY "STOP" SIGNS THAT ARE REMOVED FOR A CONSTRUCTION OPERATION SHALL BE IMMEDIATELY RE-ESTABLISHED.
8. SEE TRAFFIC CONTROL/STAGING PLAN FOR ADDITIONAL TRAFFIC CONTROL DETOUR SIGNS.
9. ALL DETOUR SIGNS ON IH-94 SHALL BE SIZE 3 SIGNS.

LEGEND: FIXED MESSAGE SIGNS

- EXISTING GUIDE SIGN TO BE COVERED
- FIXED MESSAGE SIGN(S) ON WOOD POST SUPPORTS OR TUBULAR STEEL POSTS
- (XX) FIXED MESSAGE SIGN NUMBER
- (A1) CONTRACTOR SHALL COVER AS DIRECTED BY THE ENGINEER ALL ROUTE MARKINGS PERTAINING TO THE PROJECT.
- CMS CHANGEABLE MESSAGE SIGN

APPROXIMATE DURATION:

21 CALENDAR DAYS

1. CLOSE STH 83 FROM CTH C TO STH STH 50, MAINTAIN LOCAL TRAFFIC.
2. HARD CLOSE STH 83 NB JUST NORTH OF DRIVEWAY TO BASEBALL FIELD, ABOUT 1000-FT SOUTH OF STH 50.
3. DETOUR STH 83 THRU TRAFFIC FROM CTH C TO STH 50 VIA CTH C, USH 45, AND STH 50.

LEGEND

- STH 83 STAGE 2 CONSTRUCTION LIMITS
- DETOUR ROUTE

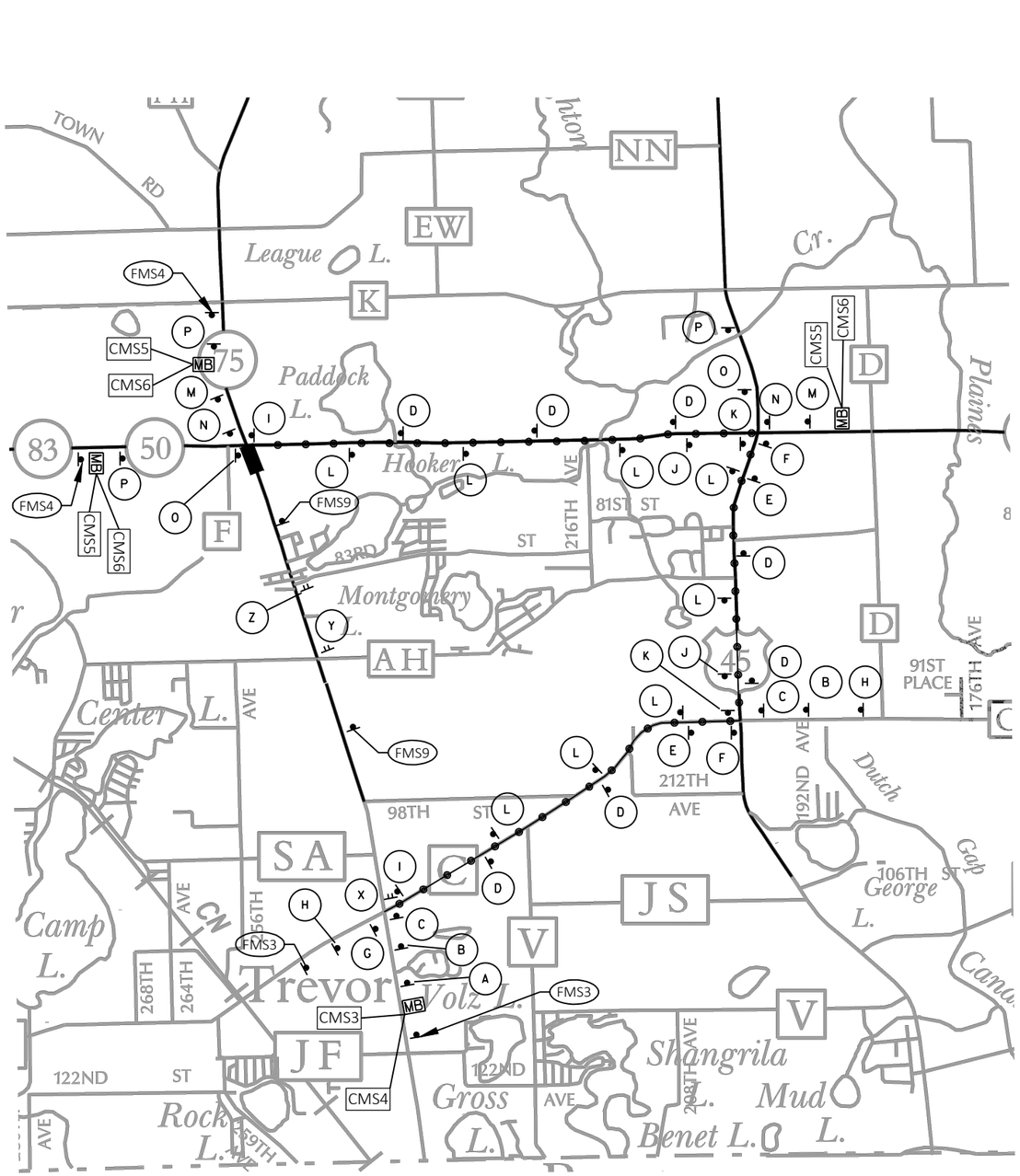

PROJECT NO: 1310-04-70	HWY: STH 50	COUNTY: KENOSHA	DETOUR PLAN - STAGE 2B	SHEET 480	E

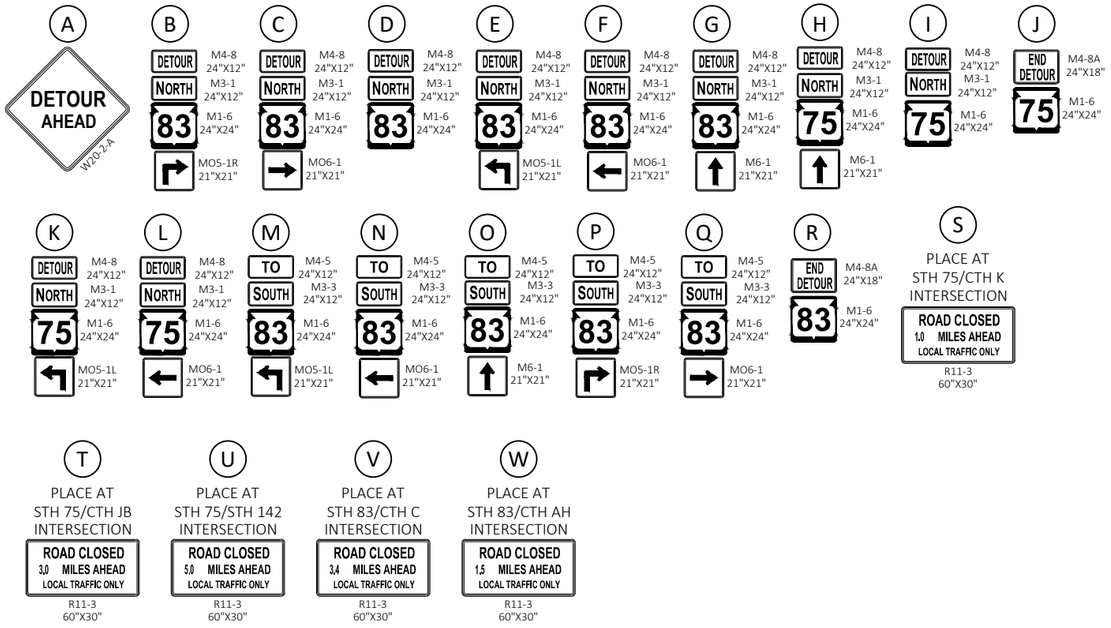

NOTES:

1. SIGN LOCATIONS ARE APPROXIMATE. THE ACTUAL LOCATION AND SPACING MAY BE ADJUSTED AS DIRECTED BY THE ENGINEER TO MEET FIELD CONDITIONS.
2. CONTRACTOR SHOULD LOCATE FIXED MESSAGE SIGNS A MINIMUM OF 400 FEET FROM ANY EXISTING TYPE I SIGN.
3. ALL FIXED MESSAGE SIGNS SHALL BE BLACK NON-REFLECTIVE MESSAGE ON ORANGE FLORESCENT REFLECTIVE BACKGROUND PER SPEC 643 & 637, UNLESS OTHERWISE NOTED IN THE SIGN DETAILS.
4. SEE FIXED MESSAGE SIGNS AND SPECIAL MESSAGE SIGNS LAYOUT SHEETS FOR MORE INFORMATION.
5. ALL SIGNS, TEMPORARY OR EXISTING, IN CONFLICT WITH THE TRAFFIC CONTROL "IN USE" SHALL BE COVERED. THE COVERING OF WOOD POST MOUNTED SIGNS WILL BE PAID UNDER SEPARATE BID ITEM (643.0910 & 643.0920)
6. SIGNS TO BE PLACED 10 DAYS PRIOR TO CONSTRUCTION.
7. ANY "STOP" SIGNS THAT ARE REMOVED FOR A CONSTRUCTION OPERATION SHALL BE IMMEDIATELY RE-ESTABLISHED.
8. SEE TRAFFIC CONTROL/STAGING PLAN FOR ADDITIONAL TRAFFIC CONTROL DETOUR SIGNS.
9. ALL DETOUR SIGNS ON IH-94 SHALL BE SIZE 3 SIGNS.

LEGEND: FIXED MESSAGE SIGNS

- EXISTING GUIDE SIGN TO BE COVERED
- FIXED MESSAGE SIGN(S) ON WOOD POST SUPPORTS OR TUBULAR STEEL POSTS
- (XX) FIXED MESSAGE SIGN NUMBER
- (A1) CONTRACTOR SHALL COVER AS DIRECTED BY THE ENGINEER ALL ROUTE MARKINGS PERTAINING TO THE PROJECT.
- MB CMS (CHANGEABLE MESSAGE SIGN)

APPROXIMATE DURATION:

21 CALENDAR DAYS

1. STH 75 REMAINS OPEN TO TRAFFIC FROM STH 142 TO STH 50.
2. NO THRU TRAFFIC FROM STH 75 SB TO STH 83 SB. DETOUR STH 75 THRU TRAFFIC FROM STH 75 SB TO STH 83 SB VIA STH 142, USH 45, AND CTH C.
3. NO THRU TRAFFIC FROM STH 83 NB TO STH 75 NB. DETOUR STH 83 NB TRAFFIC VIA CTH C, USH 45, AND STH 142.
4. CLOSE STH 50 EB LEFT TURN LANE TRAFFIC TO STH 75 NB. DETOUR STH 50 EB TO STH 75 NB TRAFFIC VIA STH 50, USH 45, AND STH 142.
5. CLOSE STH 50 WB LEFT TURN LANE TRAFFIC TO STH 83 SB. DETOUR STH 50 WB TO STH 83 SB VIA USH 45 AND CTH C.

LEGEND

- STH 50 STAGE 3 CONSTRUCTION LIMITS
- DETOUR ROUTE

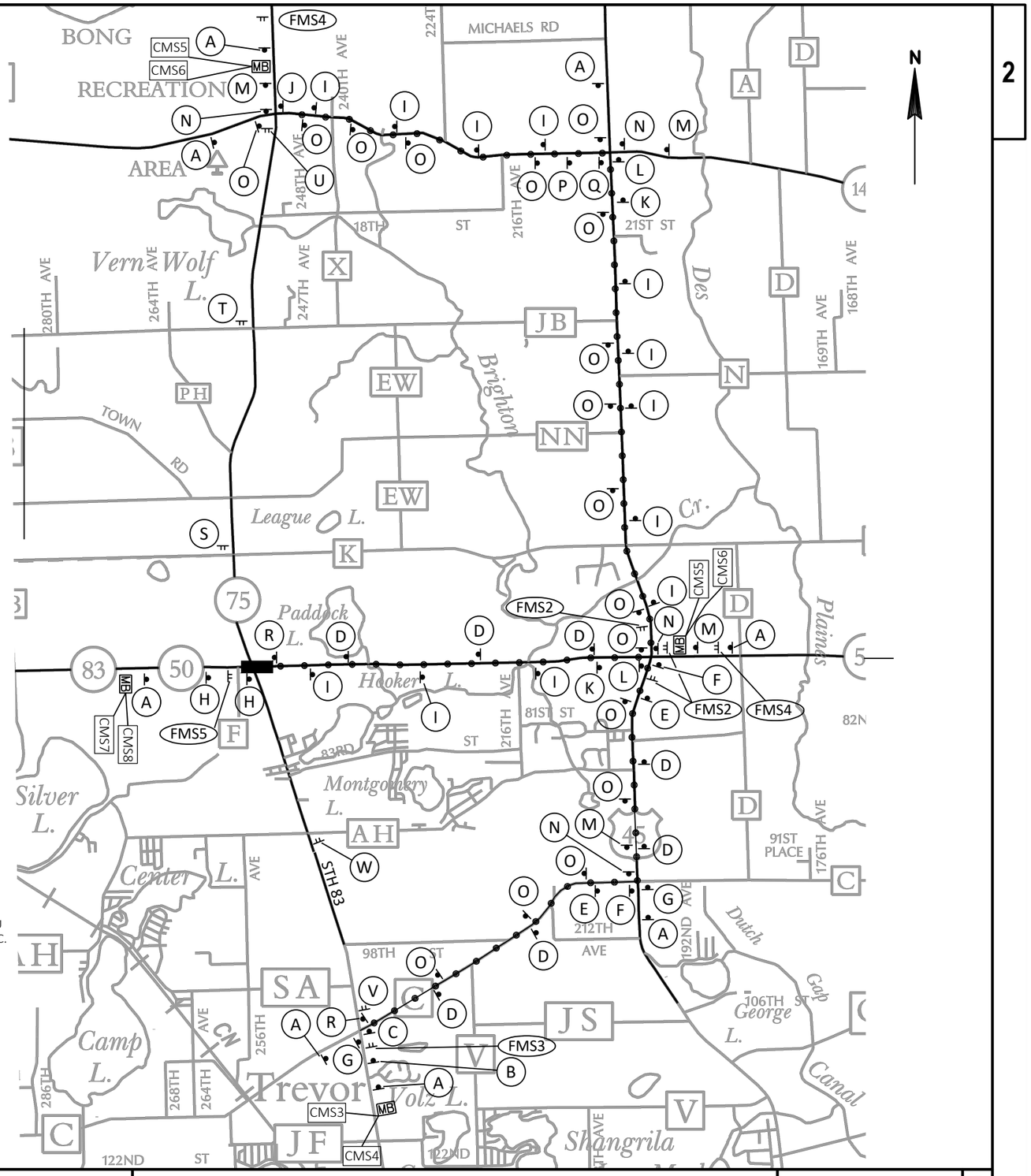

PROJECT NO: 1310-04-70	HWY: STH 50	COUNTY: KENOSHA	DETOUR PLAN - STAGE 3	SHEET 481 E

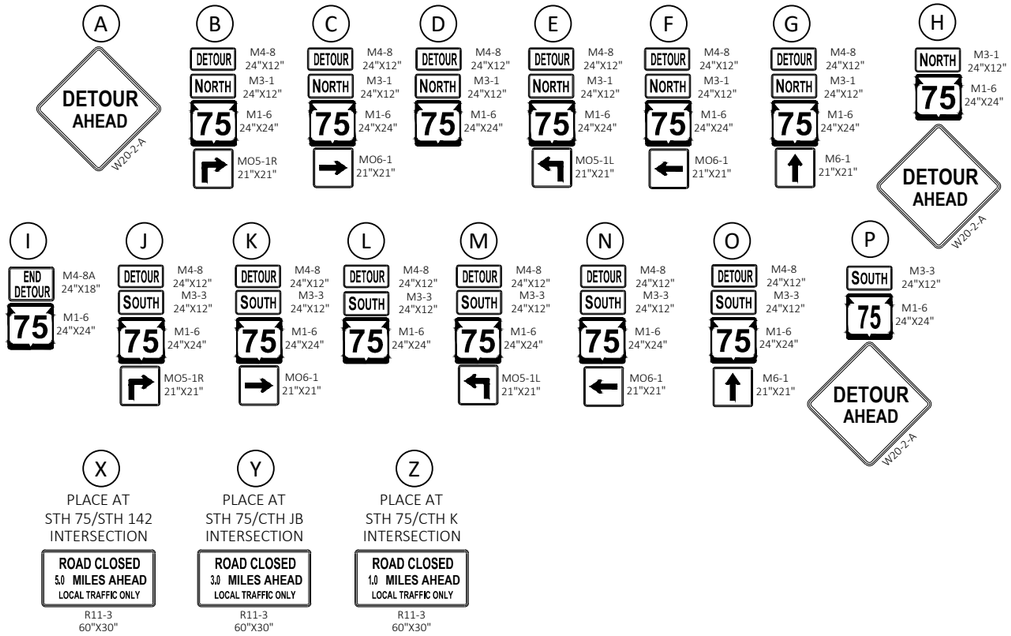

NOTES:

1. SIGN LOCATIONS ARE APPROXIMATE. THE ACTUAL LOCATION AND SPACING MAY BE ADJUSTED AS DIRECTED BY THE ENGINEER TO MEET FIELD CONDITIONS.
2. CONTRACTOR SHOULD LOCATE FIXED MESSAGE SIGNS A MINIMUM OF 400 FEET FROM ANY EXISTING TYPE I SIGN.
3. ALL FIXED MESSAGE SIGNS SHALL BE BLACK NON-REFLECTIVE MESSAGE ON ORANGE FLORESCENT REFLECTIVE BACKGROUND PER SPEC 643 & 637, UNLESS OTHERWISE NOTED IN THE SIGN DETAILS.
4. SEE FIXED MESSAGE SIGNS AND SPECIAL MESSAGE SIGNS LAYOUT SHEETS FOR MORE INFORMATION.
5. ALL SIGNS, TEMPORARY OR EXISTING, IN CONFLICT WITH THE TRAFFIC CONTROL "IN USE" SHALL BE COVERED. THE COVERING OF WOOD POST MOUNTED SIGNS WILL BE PAID UNDER SEPARATE BID ITEM (643.0910 & 643.0920)
6. SIGNS TO BE PLACED 10 DAYS PRIOR TO CONSTRUCTION.
7. ANY "STOP" SIGNS THAT ARE REMOVED FOR A CONSTRUCTION OPERATION SHALL BE IMMEDIATELY RE-ESTABLISHED.
8. SEE TRAFFIC CONTROL/STAGING PLAN FOR ADDITIONAL TRAFFIC CONTROL DETOUR SIGNS.
9. ALL DETOUR SIGNS ON IH-94 SHALL BE SIZE 3 SIGNS.

LEGEND: FIXED MESSAGE SIGNS

- EXISTING GUIDE SIGN TO BE COVERED
- FIXED MESSAGE SIGN(S) ON WOOD POST SUPPORTS OR TUBULAR STEEL POSTS
- (XX) FIXED MESSAGE SIGN NUMBER
- (A1) CONTRACTOR SHALL COVER AS DIRECTED BY THE ENGINEER ALL ROUTE MARKINGS PERTAINING TO THE PROJECT.
- CMS CHANGEABLE MESSAGE SIGN

APPROXIMATE DURATION:

21 CALENDAR DAYS

1. CLOSE STH 75 FROM STH 50 TO STH 142. MAINTAIN LOCAL TRAFFIC.
2. HARD CLOSE STH 75 FROM STH 50 TO ABOUT 275-FT NORTH OF STH 50.
3. DETOUR STH 75 THRU TRAFFIC FROM STH 50 TO STH 142 VIA STH 50, USH 45, AND STH 142.

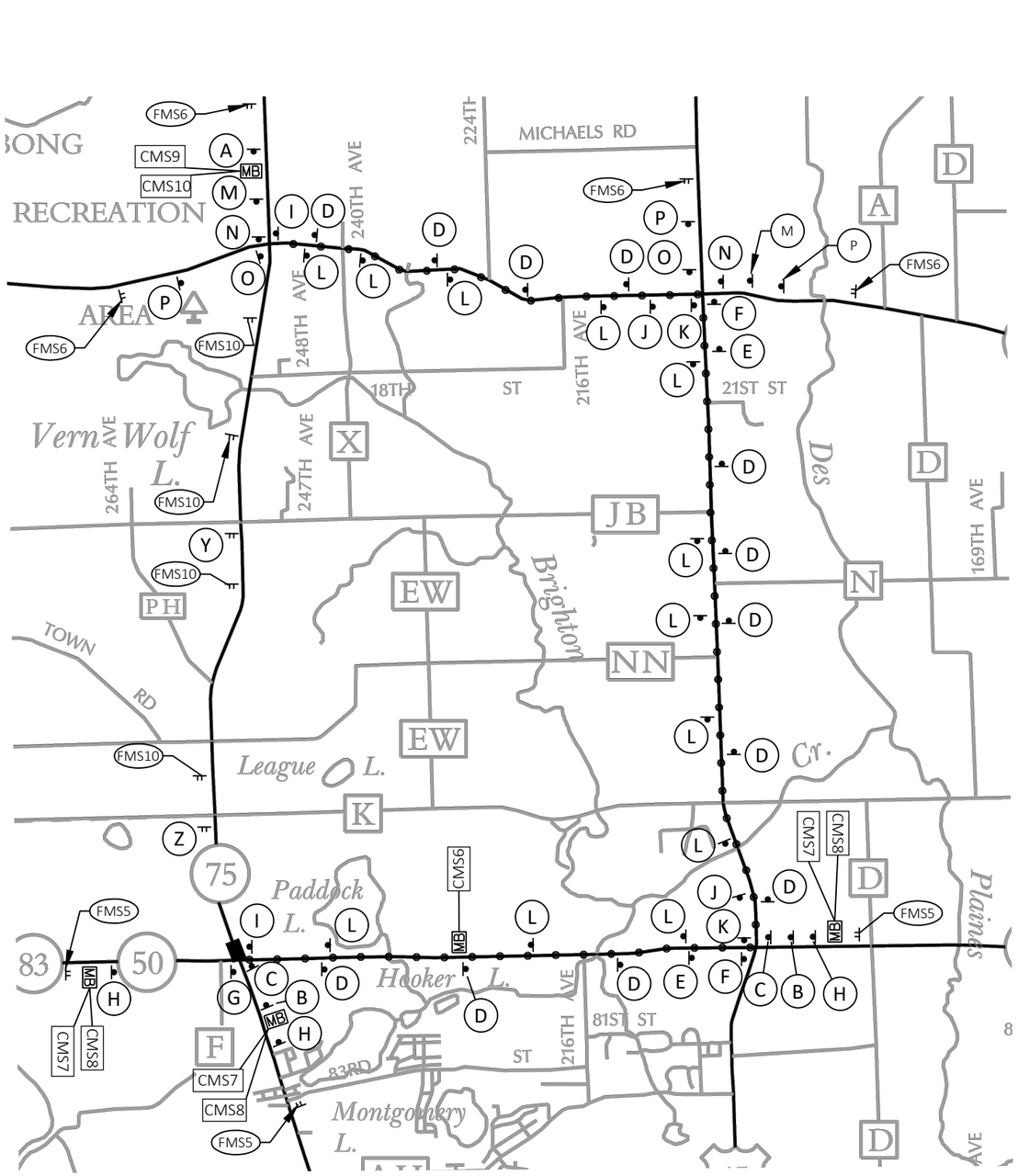

LEGEND

- STH 75 STAGE 4A CONSTRUCTION LIMITS
- DETOUR ROUTE

PROJECT NO: 1310-04-70	HWY: STH 50	COUNTY: KENOSHA	DETOUR PLAN - STAGE 4A	SHEET 482	E

FILE NAME : N:\PDS\C3D\13100400\SHEETSPLAN\027004-DT.DWG
LAYOUT NAME - 027004-dt
PLOT DATE : 4/14/2022 10:23 AM
PLOT BY : YANG, VANG NENG
PLOT NAME :
PLOT SCALE : ##########

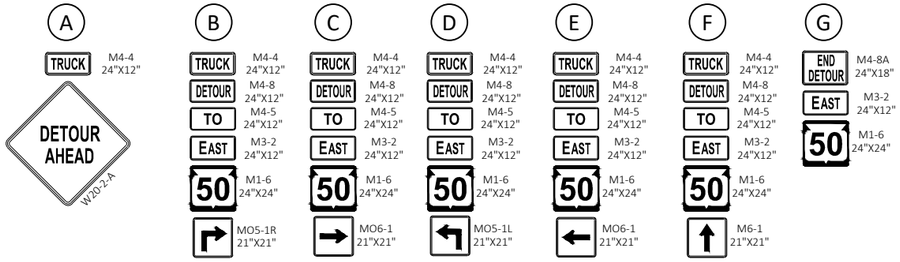

NOTES:

1. SIGN LOCATIONS ARE APPROXIMATE. THE ACTUAL LOCATION AND SPACING MAY BE ADJUSTED AS DIRECTED BY THE ENGINEER TO MEET FIELD CONDITIONS.
2. CONTRACTOR SHOULD LOCATE FIXED MESSAGE SIGNS A MINIMUM OF 400 FEET FROM ANY EXISTING TYPE I SIGN.
3. ALL FIXED MESSAGE SIGNS SHALL BE BLACK NON-REFLECTIVE MESSAGE ON ORANGE FLORESCENT REFLECTIVE BACKGROUND PER SPEC 643 & 637, UNLESS OTHERWISE NOTED IN THE SIGN DETAILS.
4. SEE FIXED MESSAGE SIGNS AND SPECIAL MESSAGE SIGNS LAYOUT SHEETS FOR MORE INFORMATION.
5. ALL SIGNS, TEMPORARY OR EXISTING, IN CONFLICT WITH THE TRAFFIC CONTROL "IN USE" SHALL BE COVERED. THE COVERING OF WOOD POST MOUNTED SIGNS WILL BE PAID UNDER SEPARATE BID ITEM (643.0910 & 643.0920)
6. SIGNS TO BE PLACED 10 DAYS PRIOR TO CONSTRUCTION.
7. ANY "STOP" SIGNS THAT ARE REMOVED FOR A CONSTRUCTION OPERATION SHALL BE IMMEDIATELY RE-ESTABLISHED.
8. SEE TRAFFIC CONTROL/STAGING PLAN FOR ADDITIONAL TRAFFIC CONTROL DETOUR SIGNS.
9. ALL DETOUR SIGNS ON IH-94 SHALL BE SIZE 3 SIGNS.

LEGEND: FIXED MESSAGE SIGNS

- EXISTING GUIDE SIGN TO BE COVERED
- FIXED MESSAGE SIGN(S) ON WOOD POST SUPPORTS OR TUBULAR STEEL POSTS
- (XX) FIXED MESSAGE SIGN NUMBER
- (A1) CONTRACTOR SHALL COVER AS DIRECTED BY THE ENGINEER ALL ROUTE MARKINGS PERTAINING TO THE PROJECT.
- CMS CHANGEABLE MESSAGE SIGN

APPROXIMATE DURATION:

7 CALENDAR DAYS

1. CLOSE STH 83 NB RIGHT RURN LANE TO TRUCK TRAFFIC FROM TO STH 50 EB.
2. DETOUR TRUCK TRAFFIC ON STH 83 NB TO STH 50 EB VIA CTH C & USH 45.

LEGEND

- STH 83 STAGE 2 CONSTRUCTION LIMITS
- DETOUR ROUTE

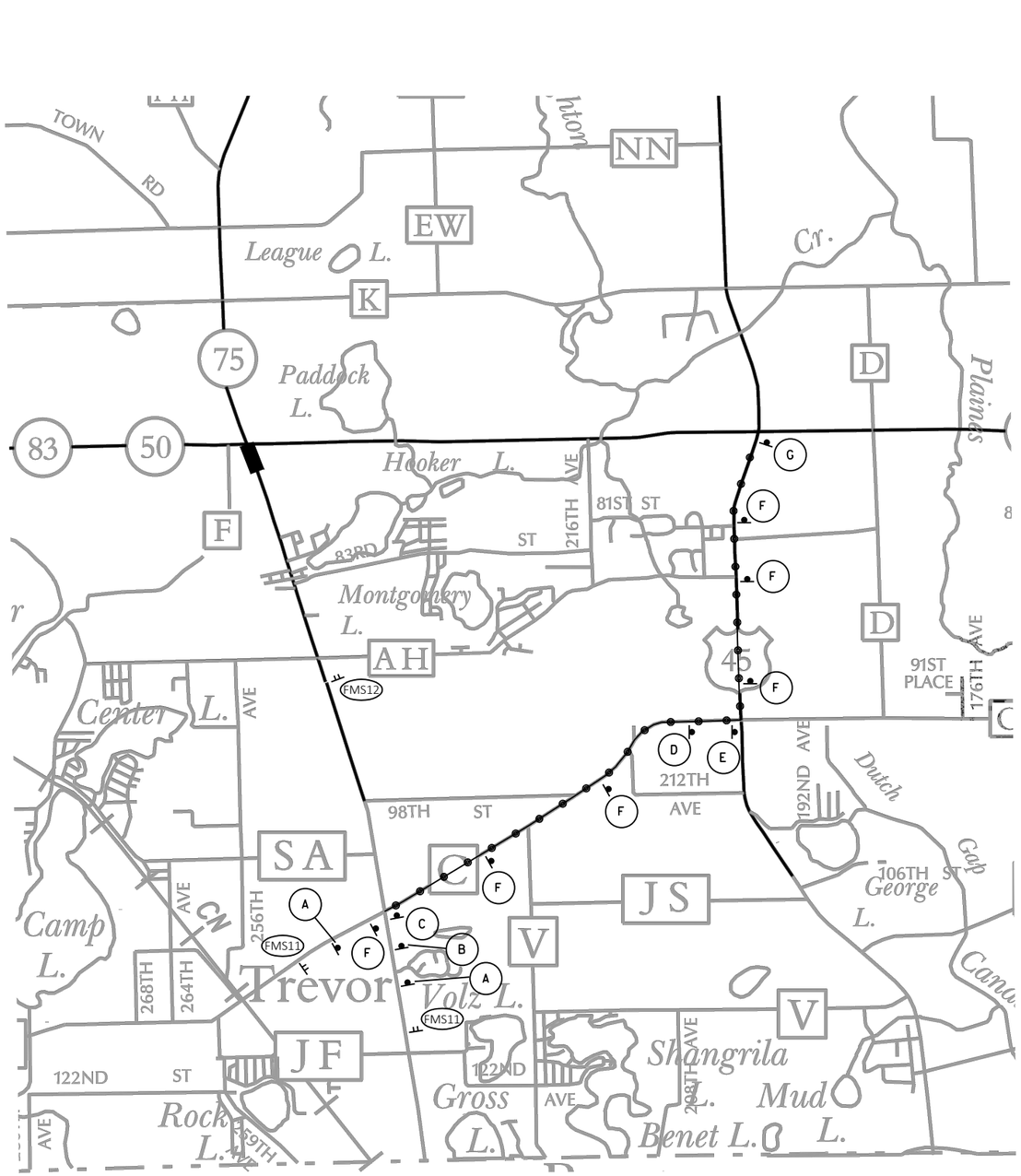

PROJECT NO: 1310-04-70	HWY: STH 50	COUNTY: KENOSHA	DETOUR PLAN - STAGE 6A TRUCK DETOUR	SHEET 483	E

FILE NAME : N:\PDS\C3D\13100400\SHEETSPLAN\027005-DT.DWG
LAYOUT NAME - 027005-dt
PLOT DATE : 4/14/2022 10:31 AM PLOT BY : YANG, VANG NENG PLOT NAME : PLOT SCALE : ##########
WISDOT/CADDS SHEET 42

2

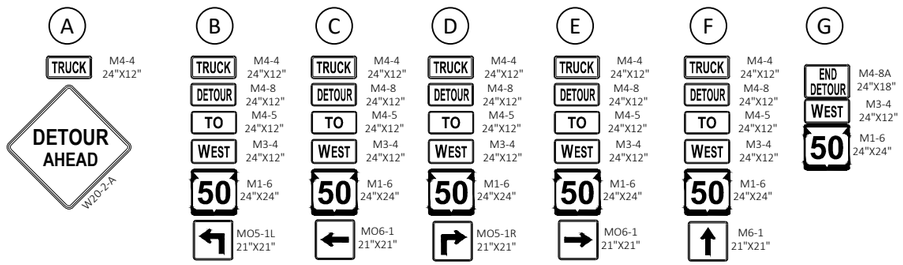

NOTES:

1. SIGN LOCATIONS ARE APPROXIMATE. THE ACTUAL LOCATION AND SPACING MAY BE ADJUSTED AS DIRECTED BY THE ENGINEER TO MEET FIELD CONDITIONS.
2. CONTRACTOR SHOULD LOCATE FIXED MESSAGE SIGNS A MINIMUM OF 400 FEET FROM ANY EXISTING TYPE I SIGN.
3. ALL FIXED MESSAGE SIGNS SHALL BE BLACK NON-REFLECTIVE MESSAGE ON ORANGE FLORESCENT REFLECTIVE BACKGROUND PER SPEC 643 & 637, UNLESS OTHERWISE NOTED IN THE SIGN DETAILS.
4. SEE FIXED MESSAGE SIGNS AND SPECIAL MESSAGE SIGNS LAYOUT SHEETS FOR MORE INFORMATION.
5. ALL SIGNS, TEMPORARY OR EXISTING, IN CONFLICT WITH THE TRAFFIC CONTROL "IN USE" SHALL BE COVERED. THE COVERING OF WOOD POST MOUNTED SIGNS WILL BE PAID UNDER SEPARATE BID ITEM (643.0910 & 643.0920)
6. SIGNS TO BE PLACED 10 DAYS PRIOR TO CONSTRUCTION.
7. ANY "STOP" SIGNS THAT ARE REMOVED FOR A CONSTRUCTION OPERATION SHALL BE IMMEDIATELY RE-ESTABLISHED.
8. SEE TRAFFIC CONTROL/STAGING PLAN FOR ADDITIONAL TRAFFIC CONTROL DETOUR SIGNS.
9. ALL DETOUR SIGNS ON IH-94 SHALL BE SIZE 3 SIGNS.

LEGEND: FIXED MESSAGE SIGNS

- EXISTING GUIDE SIGN TO BE COVERED
- FIXED MESSAGE SIGN(S) ON WOOD POST SUPPORTS OR TUBULAR STEEL POSTS
- (XX) FIXED MESSAGE SIGN NUMBER
- (A1) CONTRACTOR SHALL COVER AS DIRECTED BY THE ENGINEER ALL ROUTE MARKINGS PERTAINING TO THE PROJECT.
- CMS CHANGEABLE MESSAGE SIGN

APPROXIMATE DURATION:

14 CALENDAR DAYS

1. CLOSE STH 75 NB RIGHT RURN LANE TO TRUCK TRAFFIC FROM TO STH 50 WB.
2. DETOUR TRUCK TRAFFIC ON STH 75 NB TO STH 50 WB VIA STH 142, USH 45, AND STH 50.

LEGEND

- STH 75 STAGE 4A CONSTRUCTION LIMITS
- DETOUR ROUTE

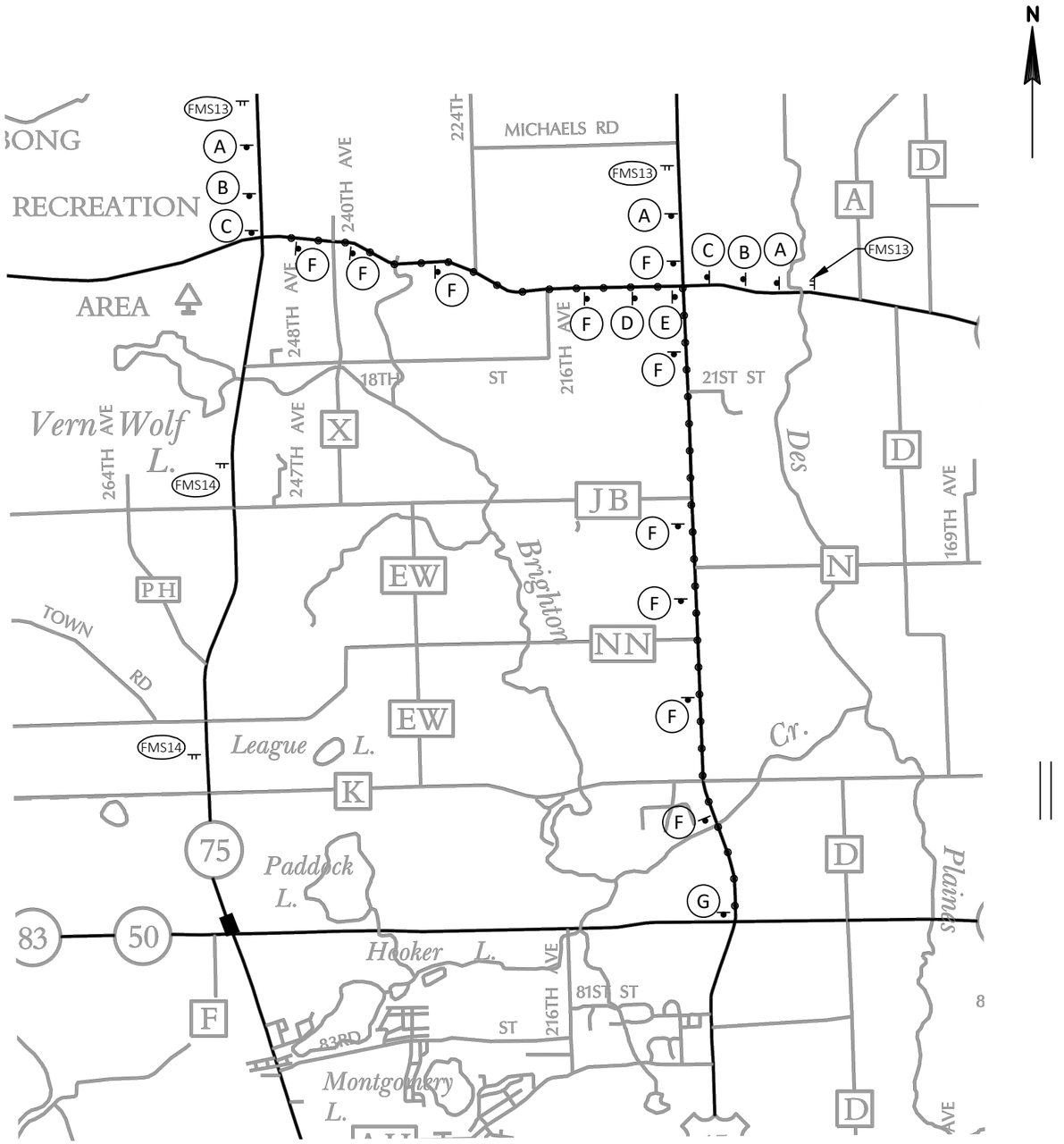

PROJECT NO: 1310-04-70	HWY: STH 50	COUNTY: KENOSHA	DETOUR PLAN - STAGE 6A/6B TRUCK DETOUR	SHEET 484	E

FILE NAME : N:\PDS\C3D\13100400\SHEETSPLAN\027006-DT.DWG
LAYOUT NAME - 027006-dt
PLOT DATE : 4/14/2022 10:33 AM
PLOT BY : YANG, VANG NENG
PLOT NAME :
PLOT SCALE : ##########

2

	FRAME 1	FRAME 2
CMS 1 7 DAYS PRIOR TO START OF WORK	WIS 50 CONST PROJECT	BEGINS XXXXDAY
CMS 2 DURING CONSTRUCTION	WIS 50 ROADWORK AHEAD	USE ALT ROUTE

	FRAME 1	FRAME 2
CMS 3 7 DAYS PRIOR TO START OF CLOSURE	WIS 83 TO CLOSE XXXXDAY	USE DETOUR ROUTE
CMS 4 DURING CLOSURE	WIS 83 CLOSED AT WI 50	USE DETOUR ROUTE

	FRAME 1	FRAME 2
CMS 5 7 DAYS PRIOR TO START OF CLOSURE	WI 83 SB TO CLOSE XXXXDAY	USE DETOUR ROUTE
CMS 6 DURING CLOSURE	WI 83 SB CLOSED AT WI 50	USE DETOUR ROUTE

	FRAME 1	FRAME 2
CMS 7 7 DAYS PRIOR TO START OF CLOSURE	WIS 75 TO CLOSE XXXXDAY	USE DETOUR ROUTE
CMS 8 DURING CLOSURE	WIS 75 CLOSED AHEAD	USE DETOUR ROUTE

	FRAME 1	FRAME 2
CMS 9 7 DAYS PRIOR TO START OF CLOSURE	WIS 75 TO CLOSE XXXXDAY	USE DETOUR ROUTE
CMS 10 DURING CLOSURE	WIS 75 CLOSED AT WI 50	USE DETOUR ROUTE

	FRAME 1	FRAME 2
CMS 11 DURING CLOSURE	WIS 50 CLOSED 10PM-5AM	USE ALT ROUTE

PROJECT NO: 1310-04-70	HWY: STH 50	COUNTY: KENOSHA	DETOUR PLAN - PCMS FOR ALL STAGES	SHEET 485	E

FILE NAME : N:\PDS\C3D\13100400\SHEETSPLAN\027000_DT.DWG
LAYOUT NAME - 027000-PCMS

PLOT DATE : 1/25/2022 12:02 PM PLOT BY : BLACKWOOD, JAMES X PLOT NAME : PLOT SCALE : ##########

WISDOT/CADDS SHEET 42

2

CONTROL POINTS & BENCH MARKS

POINT NUMBER	Y	X	STATION	OFFSET	ELEVATION	DESCRIPTION
CP 900	128276.933	546898.464	972+76.21	3.56' RT	798.87	FENO WITH ALUM DOT/AYRES CAP
CP 901	128315.934	548297.582	986+72.11	62.12' LT	817.56	FENO WITH ALUM DOT/AYRES CAP
CP 902	128143.971	549468.150	998+48.08	59.35' RT	829.58	FENO WITH ALUM DOT/AYRES CAP
DC 37	128251.540	549700.998	1000+84.91	48.31' LT	832.27	DC CHX
BM 700	128152.220	549692.110	1000+72.09	51.01' RT	833.34	BM

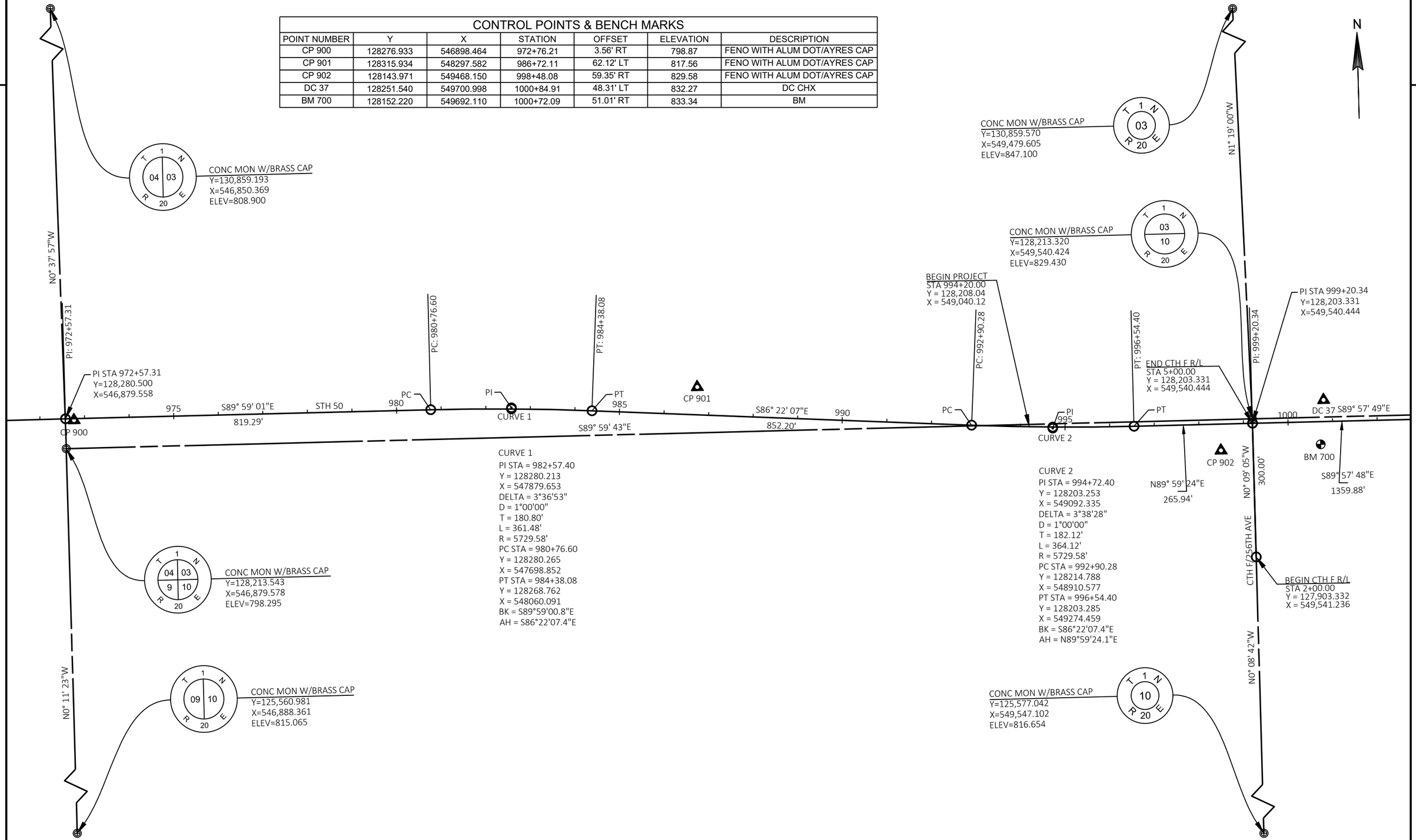

PROJECT NO: 1310-04-70	HWY: STH 50	COUNTY: KENOSHA	ALIGNMENT	SHEET 486	E

FILE NAME : N:\PDS\C3D\13100400\SHEETSPLAN\027201-AD.DWG
LAYOUT NAME - 027201_AD
PLOT DATE : 2/21/2022 12:52 PM
PLOT BY : YANG, VANG NENG
PLOT NAME :
PLOT SCALE : 1 IN:200 FT

CONTROL POINTS & BENCH MARKS

POINT NUMBER	Y	X	STATION	OFFSET	ELEVATION	DESCRIPTION
CP 903	128270.931	550266.590	1006+46.21	68.07' LT	827.39	FENO WITH ALUM DOT/AYRES CAP
DC 36	128143.820	550311.790	1006+91.77	59.02' RT	826.43	DC CHX
BM 701	128333.861	550951.675	1013+32.52	131.05' LT	825.11	BM
DC 35	128248.370	551580.050	1019+59.98	43.35' LT	821.80	DC CHX
CP 904	128155.203	551632.634	1020+12.62	49.79' RT	819.96	FENO WITH ALUM DOT/AYRES CAP
BM 703	128244.110	552223.640	1026+03.78	39.34' LT	802.37	BM
DC 34	128163.480	552679.560	1030+59.32	43.32' RT	820.86	DC CHX

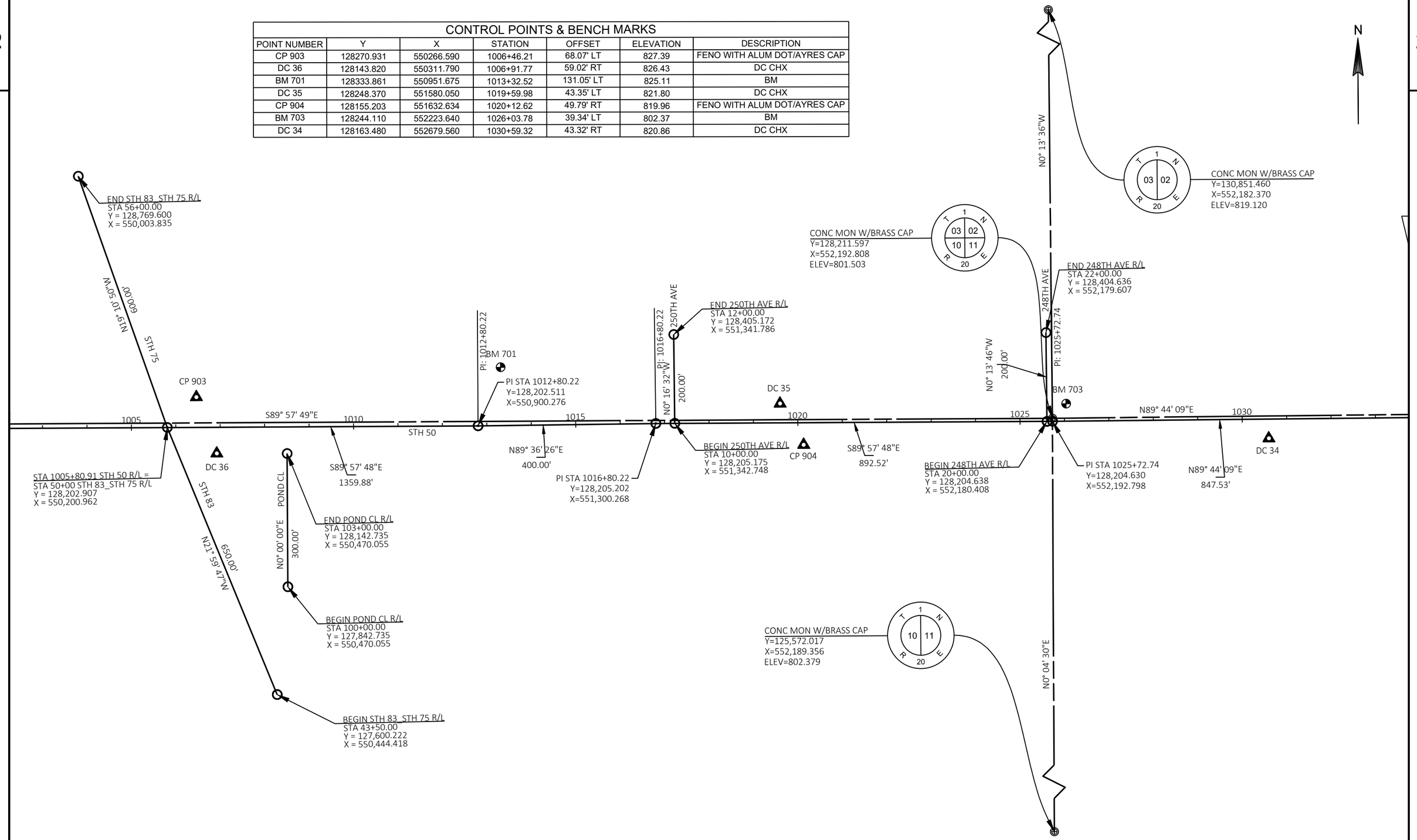

PROJECT NO: 1310-04-70	HWY: STH 50	COUNTY: KENOSHA	ALIGNMENT	SHEET 487	E

FILE NAME : N:\PDS\C3D\13100400\SHEETSPLAN\027201-AD.DWG
LAYOUT NAME - 027202_AD

PLOT DATE : 1/25/2022 12:15 PM PLOT BY : BLACKWOOD, JAMES X PLOT NAME : PLOT SCALE : 1 IN:200 FT

CONTROL POINTS & BENCH MARKS

POINT NUMBER	Y	X	STATION	OFFSET	ELEVATION	DESCRIPTION
CP 905	128161.656	553089.266	1034+68.67	47.46' RT	824.85	FENO WITH ALUM DOT/AYRES CAP
BM 704	128265.495	553093.182	1034+73.82	56.33' LT	826.20	BM
DC 33	128256.610	553489.904	1038+70.41	42.72' LT	826.75	DC CHX
BM 705	128167.819	553569.751	1039+49.19	47.02' RT	827.53	BM
BM 200	128062.971	553578.752	1039+56.95	151.96' RT	826.66	BM CHISELED CROSS SET IN MH RIM
BM 707	128345.740	554127.170	1045+07.78	125.19' LT	816.58	BM RR SPIKE IN SOUTH FACE PPOLE
DC 32	128264.460	554198.382	1045+78.62	43.59' LT	820.86	DC CHX
CP 906	128270.459	554371.499	1047+51.76	48.79' LT	820.77	FENO WITH ALUM DOT/AYRES CAP
DC 31	128161.538	554785.274	1051+66.02	55.73' RT	819.96	DC CHX
BM 24	128209.340	555488.100	1058+68.21	0.51' RT	791.75	PK NAIL
BM 706	128249.293	555784.204	1061+62.96	43.84' RT	791.17	BM

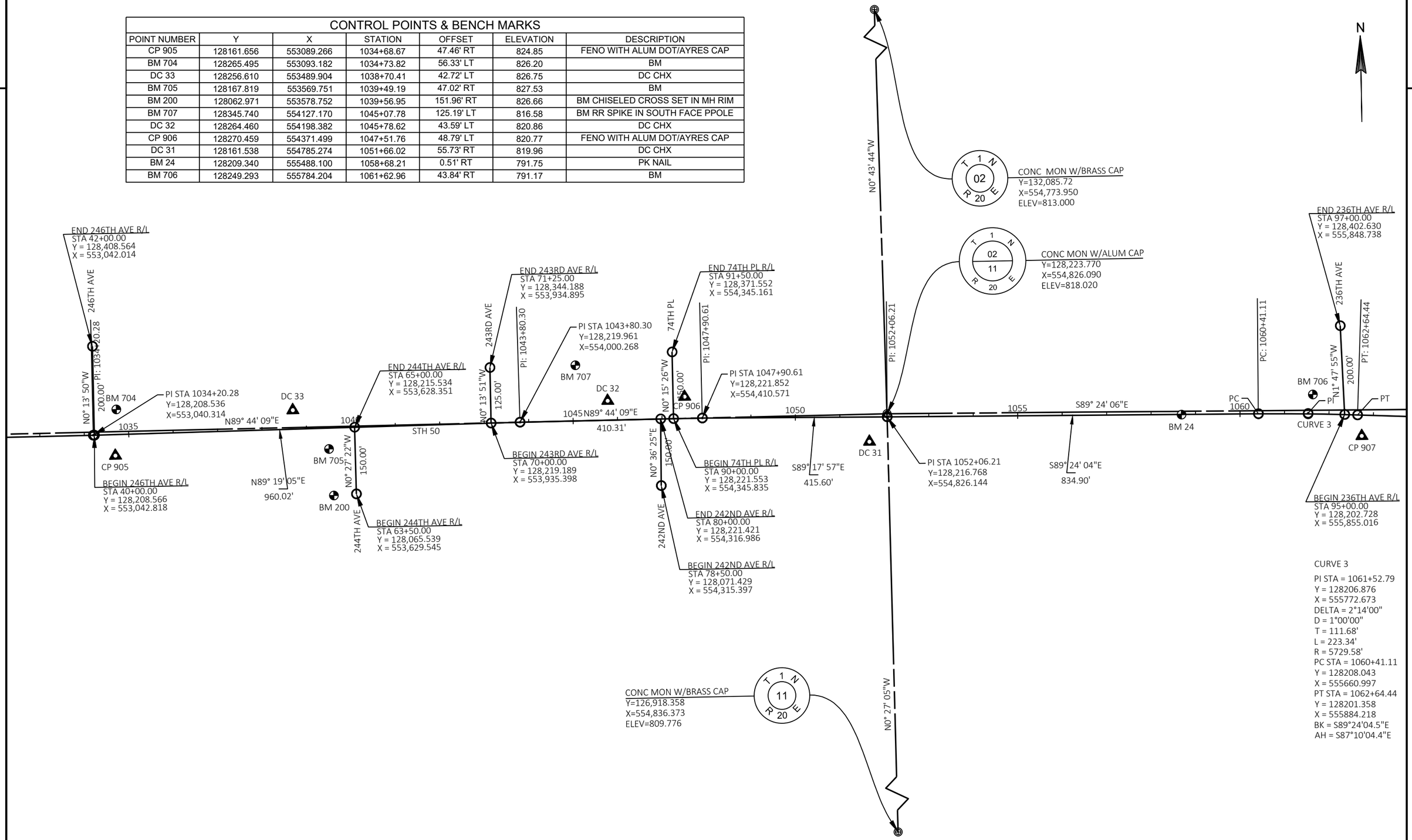

CURVE 3

PI STA = 1061+52.79
Y = 128206.876
X = 555772.673
DELTA = 2°14'00"
D = 1°00'00"
T = 111.68'
L = 223.34'
R = 5729.58'
PC STA = 1060+41.11
Y = 128208.043
X = 555660.997
PT STA = 1062+64.44
Y = 128201.358
X = 555884.218
BK = S89°24'04.5"E
AH = S87°10'04.4"E

PROJECT NO: 1310-04-70	HWY: STH 50	COUNTY: KENOSHA	ALIGNMENT	SHEET 488	E

CONTROL POINTS & BENCH MARKS

POINT NUMBER	Y	X	STATION	OFFSET	ELEVATION	DESCRIPTION
CP 907	128153.744	555892.660	1062+75.23	47.14' RT	791.83	FENO WITH ALUM DOT/AYRES CAP
DC 21	128193.480	556040.950	1064+21.37	0.12' RT	796.19	DC CP 0.75 RBR
CP 908	128210.907	557334.392	1077+14.18	79.76' RT	800.82	FENO WITH ALUM DOT/AYRES CAP
CP 909	128127.942	558865.344			757.52	FENO WITH ALUM DOT/AYRES CAP

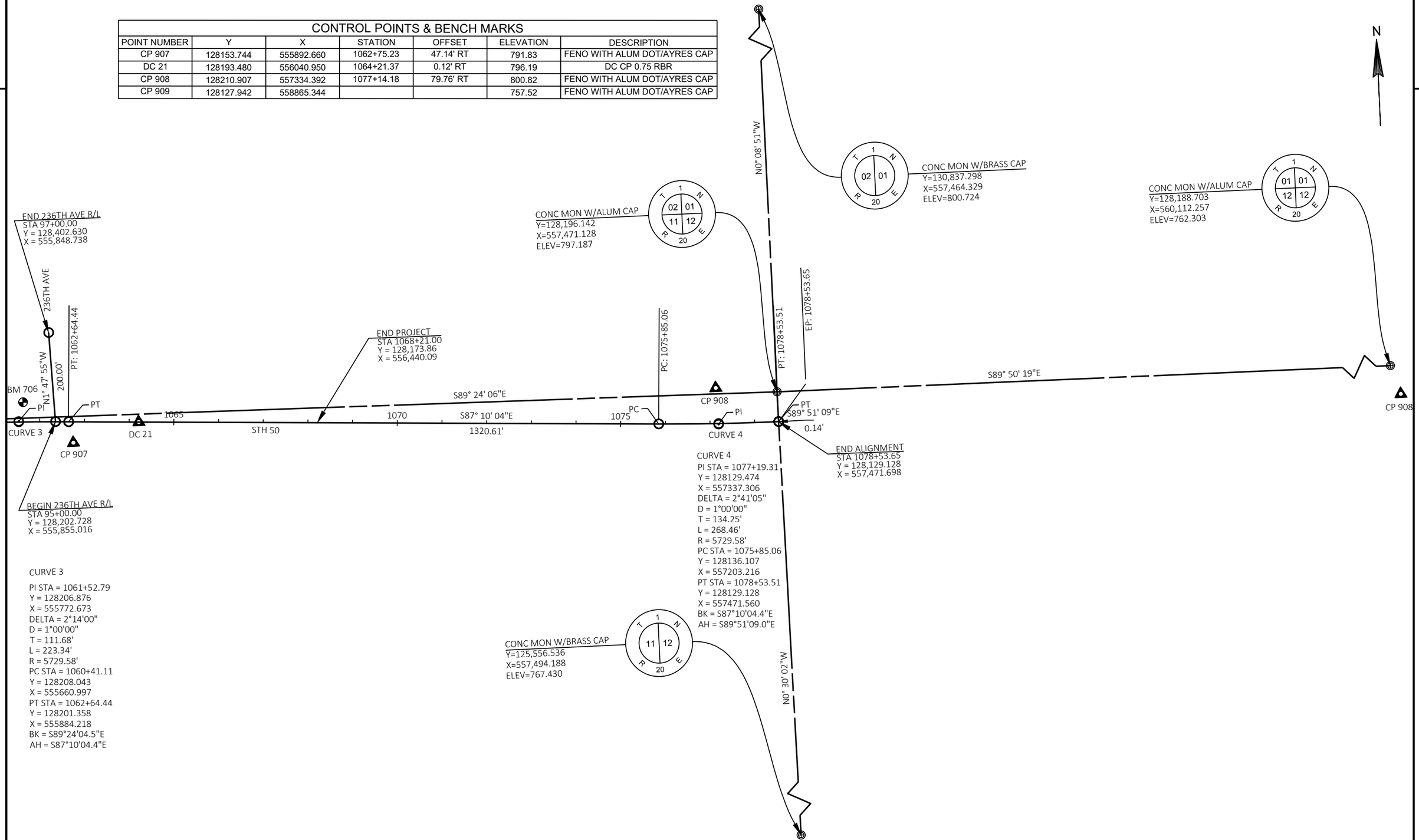

CURVE 3

PI STA = 1061+52.79
Y = 128206.876
X = 555772.673
DELTA = 2°14'00"
D = 1°00'00"
T = 111.68'
L = 223.34'
R = 5729.58'
PC STA = 1060+41.11
Y = 128208.043
X = 555660.997
PT STA = 1062+64.44
Y = 128201.358
X = 555884.218
BK = S89°24'04.5"E
AH = S87°10'04.4"E

CURVE 4

PI STA = 1077+19.31
Y = 128129.474
X = 557337.306
DELTA = 2°41'05"
D = 1°00'00"
T = 134.25'
L = 268.46'
R = 5729.58'
PC STA = 1075+85.06
Y = 128136.107
X = 557203.216
PT STA = 1078+53.51
Y = 128129.128
X = 557471.560
BK = S87°10'04.4"E
AH = S89°51'09.0"E

PROJECT NO: 1310-04-70	HWY: STH 50	COUNTY: KENOSHA	ALIGNMENT	SHEET 489 E

1310-04-70

Line	Item	Item Description	Unit	Total	Qty
0002	108.4400	CPM Progress Schedule	EACH	1.000	1.000
0004	201.0105	Clearing	STA	19.000	19.000
0006	201.0120	Clearing	ID	93.000	93.000
0008	201.0205	Grubbing	STA	19.000	19.000
0010	201.0220	Grubbing	ID	93.000	93.000
0012	202.0105	Roadside Clearing	STA	2.000	2.000
0014	203.0100	Removing Small Pipe Culverts	EACH	3.000	3.000
0016	204.0100	Removing Concrete Pavement	SY	61,340.000	61,340.000
0018	204.0115	Removing Asphaltic Surface Butt Joints	SY	55.000	55.000
0020	204.0120	Removing Asphaltic Surface Milling	SY	1,830.000	1,830.000
0022	204.0130	Removing Curb	LF	250.000	250.000
0024	204.0150	Removing Curb & Gutter	LF	1,420.000	1,420.000
0026	204.0155	Removing Concrete Sidewalk	SY	3,880.000	3,880.000
0028	204.0170	Removing Fence	LF	72.000	72.000
0030	204.0190	Removing Surface Drains	EACH	3.000	3.000
0032	204.0195	Removing Concrete Bases	EACH	28.000	28.000
0034	204.0210	Removing Manholes	EACH	12.000	12.000
0036	204.0220	Removing Inlets	EACH	109.000	109.000
0038	204.0245	Removing Storm Sewer (size) 01. 12-Inch	LF	2,870.000	2,870.000
0040	204.0245	Removing Storm Sewer (size) 02. 15-Inch	LF	1,640.000	1,640.000
0042	204.0245	Removing Storm Sewer (size) 03. 18-Inch	LF	1,330.000	1,330.000
0044	204.0245	Removing Storm Sewer (size) 04. 21-Inch	LF	70.000	70.000
0046	204.0245	Removing Storm Sewer (size) 05. 24-Inch	LF	1,020.000	1,020.000
0048	204.9060.S	Removing (item description) 01. Traffic Counter	EACH	1.000	1.000
0050	204.9060.S	Removing (item description) 02. Vertical Panels	EACH	25.000	25.000
0052	204.9060.S	Removing (item description) 03. Private Light Pole	EACH	1.000	1.000
0054	204.9060.S	Removing (item description) 04. Inlet Covers	EACH	31.000	31.000
0056	204.9060.S	Removing (item description) 05. Traffic Signals STH 50 & STH 75/83	EACH	1.000	1.000
0058	204.9060.S	Removing (item description) 06. Traffic Signals STH 50 & 246th Ave	EACH	1.000	1.000
0060	204.9060.S	Removing (item description) 07. Loop Detector Wire & Lead-in Cable STH 50 & STH 75/83	EACH	1.000	1.000
0062	204.9060.S	Removing (item description) 08. Loop Detector Wire & Lead-in Cable STH 50 & 246th Ave	EACH	1.000	1.000
0064	204.9060.S	Removing (item description) 09. Retaining Wall Sta 1037+70	EACH	1.000	1.000
0066	204.9060.S	Removing (item description) 10. Retaining Wall Sta 51+50	EACH	1.000	1.000
0068	205.0100	Excavation Common	CY	82,979.000	82,979.000
0070	205.0501.S	Excavation, Hauling, and Disposal of Petroleum Contaminated Soil	TON	1,800.000	1,800.000
0072	206.3000	Excavation for Structures Retaining Walls (structure) 01. R-30-71	LS	1.000	1.000
0074	206.3000	Excavation for Structures Retaining Walls (structure) 02. R-30-70	LS	1.000	1.000
0076	209.2500	Backfill Granular Grade 2	TON	1,260.000	1,260.000
0078	210.1500	Backfill Structure Type A	TON	1,285.000	1,285.000
0080	213.0100	Finishing Roadway (project) 01. 1310-04-70	EACH	1.000	1.000
0082	305.0110	Base Aggregate Dense 3/4-Inch	TON	140.000	140.000
0084	305.0120	Base Aggregate Dense 1 1/4-Inch	TON	39,760.000	39,760.000
0086	310.0110	Base Aggregate Open-Graded	TON	1,915.000	1,915.000
0088	312.0110	Select Crushed Material	TON	71,600.000	71,600.000
0090	390.0303	Base Patching Concrete	SY	196.000	196.000
0092	390.0403	Base Patching Concrete Shes	SY	32.000	32.000
0094	405.0100	Coloring Concrete WisDOT Red	CY	45.000	45.000

1310-04-70

Line	Item	Item Description	Unit	Total	Qty
0096	415.0095	Concrete Pavement 9 1/2-Inch	SY	49,670.000	49,670.000
0098	415.0210	Concrete Pavement Gaps	EACH	19.000	19.000
0100	415.1095	Concrete Pavement HES 9 1/2-Inch	SY	1,440.000	1,440.000
0102	416.0170	Concrete Driveway 7-Inch	SY	1,404.000	1,404.000
0104	416.0270	Concrete Driveway HES 7-Inch	SY	359.000	359.000
0106	416.0512	Concrete Truck Apron 12-Inch	SY	135.000	135.000
0108	416.0610	Drilled Tie Bars	EACH	210.000	210.000
0110	416.0620	Drilled Dowel Bars	EACH	195.000	195.000
0112	416.1010	Concrete Surface Drains	CY	7.000	7.000
0114	450.4000	HMA Cold Weather Paving	TON	300.000	300.000
0116	455.0605	Tack Coat	GAL	506.000	506.000
0118	460.2000	Incentive Density HMA Pavement	DOL	1,231.000	1,231.000
0120	460.6223	HMA Pavement 3 MT 58-28 S	TON	538.000	538.000
0122	460.6224	HMA Pavement 4 MT 58-28 S	TON	772.000	772.000
0124	465.0115	Asphaltic Surface Detours	TON	60.000	60.000
0126	465.0120	Asphaltic Surface Driveways and Field Entrances	TON	869.000	869.000
0128	465.0125	Asphaltic Surface Temporary	TON	2,076.000	2,076.000
0130	465.0310	Asphaltic Curb	LF	423.000	423.000
0132	495.1000.S	Cold patch	TON	50.000	50.000
0134	502.3210	Pigmented Surface Sealer	SY	495.000	495.000
0136	504.0500	Concrete Masonry Retaining Walls	CY	276.000	276.000
0138	505.0400	Bar Steel Reinforcement HS Structures	LB	6,800.000	6,800.000
0140	505.0600	Bar Steel Reinforcement HS Coated Structures	LB	17,290.000	17,290.000
0142	513.2001	Railing Pipe	LF	307.000	307.000
0144	516.0500	Rubberized Membrane Waterproofing	SY	14.000	14.000
0146	520.1018	Apron Endwalls for Culvert Pipe 18-Inch	EACH	3.000	3.000
0148	520.8000	Concrete Collars for Pipe	EACH	3.000	3.000
0150	520.8700	Cleaning Culvert Pipes	EACH	2.000	2.000
0152	521.1015	Apron Endwalls for Culvert Pipe Steel 15-Inch	EACH	4.000	4.000
0154	521.2005.S	Surface Drain Pipe Corrugated Metal Slotted (inch) 01. 8-Inch	LF	280.000	280.000
0156	521.3115	Culvert Pipe Corrugated Steel 15-Inch	LF	58.000	58.000
0158	522.1012	Apron Endwalls for Culvert Pipe Reinforced Concrete 12-Inch	EACH	5.000	5.000
0160	522.1018	Apron Endwalls for Culvert Pipe Reinforced Concrete 18-Inch	EACH	3.000	3.000
0162	522.1024	Apron Endwalls for Culvert Pipe Reinforced Concrete 24-Inch	EACH	3.000	3.000
0164	522.2614	Apron Endwalls for Culvert Pipe Reinforced Concrete Horizontal Elliptical 14x23-Inch	EACH	2.000	2.000
0166	524.0136	Culvert Pipe Salvaged 36-Inch	LF	24.000	24.000
0168	524.0636	Apron Endwalls for Culvert Pipe Salvaged 36-Inch	EACH	1.000	1.000
0170	601.0105	Concrete Curb Type A	LF	15.000	15.000
0172	601.0110	Concrete Curb Type D	LF	175.000	175.000
0174	601.0405	Concrete Curb & Gutter 18-Inch Type A	LF	2,455.000	2,455.000
0176	601.0407	Concrete Curb & Gutter 18-Inch Type D	LF	135.000	135.000
0178	601.0409	Concrete Curb & Gutter 30-Inch Type A	LF	9,120.000	9,120.000
0180	601.0411	Concrete Curb & Gutter 30-Inch Type D	LF	1,700.000	1,700.000
0182	601.0580	Concrete Curb & Gutter 4-Inch Sloped 36-Inch Type R	LF	140.000	140.000
0184	601.0600	Concrete Curb Pedestrian	LF	790.000	790.000
0186	602.0410	Concrete Sidewalk 5-Inch	SF	61,860.000	61,860.000
0188	602.0505	Curb Ramp Detectable Warning Field Yellow	SF	420.000	420.000
0190	602.0605	Curb Ramp Detectable Warning Field Radial Yellow	SF	211.000	211.000
0192	602.1500	Concrete Steps	SF	35.000	35.000

1310-04-70

Line	Item	Item Description	Unit	Total	Qty
0194	602.2400	Concrete Safety Islands	SF	1,415.000	1,415.000
0196	606.0200	Riprap Medium	CY	304.000	304.000
0198	608.0312	Storm Sewer Pipe Reinforced Concrete Class III 12-Inch	LF	1,265.000	1,265.000
0200	608.0315	Storm Sewer Pipe Reinforced Concrete Class III 15-Inch	LF	816.000	816.000
0202	608.0318	Storm Sewer Pipe Reinforced Concrete Class III 18-Inch	LF	283.000	283.000
0204	608.0324	Storm Sewer Pipe Reinforced Concrete Class III 24-Inch	LF	586.000	586.000
0206	608.0360	Storm Sewer Pipe Reinforced Concrete Class III 60-Inch	LF	167.000	167.000
0208	608.0412	Storm Sewer Pipe Reinforced Concrete Class IV 12-Inch	LF	1,460.000	1,460.000
0210	608.0415	Storm Sewer Pipe Reinforced Concrete Class IV 15-Inch	LF	515.000	515.000
0212	608.0418	Storm Sewer Pipe Reinforced Concrete Class IV 18-Inch	LF	611.000	611.000
0214	608.0421	Storm Sewer Pipe Reinforced Concrete Class IV 21-Inch	LF	185.000	185.000
0216	608.0424	Storm Sewer Pipe Reinforced Concrete Class IV 24-Inch	LF	958.000	958.000
0218	608.0512	Storm Sewer Pipe Reinforced Concrete Class V 12-Inch	LF	166.000	166.000
0220	608.2414	Storm Sewer Pipe Reinforced Concrete Horizontal Elliptical Class HE-IV 14x23-Inch	LF	197.000	197.000
0222	608.2419	Storm Sewer Pipe Reinforced Concrete Horizontal Elliptical Class HE-IV 19x30-Inch	LF	66.000	66.000
0224	608.3012	Storm Sewer Pipe Class III-A 12-Inch	LF	202.000	202.000
0226	608.3015	Storm Sewer Pipe Class III-A 15-Inch	LF	35.000	35.000
0228	608.3018	Storm Sewer Pipe Class III-A 18-Inch	LF	698.000	698.000
0230	608.3024	Storm Sewer Pipe Class III-A 24-Inch	LF	497.000	497.000
0232	611.0420	Reconstructing Manholes	EACH	1.000	1.000
0234	611.0530	Manhole Covers Type J	EACH	32.000	32.000
0236	611.0600	Inlet Covers Type A	EACH	1.000	1.000
0238	611.0612	Inlet Covers Type C	EACH	2.000	2.000
0240	611.0624	Inlet Covers Type H	EACH	142.000	142.000
0242	611.0627	Inlet Covers Type HM	EACH	1.000	1.000
0244	611.0642	Inlet Covers Type MS	EACH	18.000	18.000
0246	611.0651	Inlet Covers Type S	EACH	40.000	40.000
0248	611.0666	Inlet Covers Type Z	EACH	12.000	12.000
0250	611.1003	Catch Basins 3-FT Diameter	EACH	15.000	15.000
0252	611.1004	Catch Basins 4-FT Diameter	EACH	53.000	53.000
0254	611.1005	Catch Basins 5-FT Diameter	EACH	5.000	5.000
0256	611.1006	Catch Basins 6-FT Diameter	EACH	3.000	3.000
0258	611.1230	Catch Basins 2x3-FT	EACH	87.000	87.000
0260	611.2004	Manholes 4-FT Diameter	EACH	14.000	14.000
0262	611.2005	Manholes 5-FT Diameter	EACH	12.000	12.000
0264	611.2006	Manholes 6-FT Diameter	EACH	1.000	1.000
0266	611.2008	Manholes 8-FT Diameter	EACH	5.000	5.000
0268	611.3220	Inlets 2x2-FT	EACH	4.000	4.000
0270	611.3901	Inlets Median 1 Grate	EACH	14.000	14.000
0272	611.3902	Inlets Median 2 Grate	EACH	2.000	2.000
0274	611.8115	Adjusting Inlet Covers	EACH	11.000	11.000
0276	611.8120.S	Cover Plates Temporary	EACH	15.000	15.000
0278	612.0106	Pipe Underdrain 6-Inch	LF	25,570.000	25,570.000
0280	612.0206	Pipe Underdrain Unperforated 6-Inch	LF	30.000	30.000
0282	612.0406	Pipe Underdrain Wrapped 6-Inch	LF	490.000	490.000
0284	612.0902.S	Insulation Board Polystyrene (inch) 01. 2-Inch	SY	2.000	2.000
0286	616.0204	Fence Chain Link 4-FT	LF	384.000	384.000
0288	616.0208	Fence Chain Link 8-FT	LF	72.000	72.000
0290	616.0329	Gates Chain Link (width) 01. 4-FT	EACH	2.000	2.000

1310-04-70

Line	Item	Item Description	Unit	Total	Qty
0292	618.0100	Maintenance And Repair of Haul Roads (project) 01. 1310-04-70	EACH	1.000	1.000
0294	619.1000	Mobilization	EACH	1.000	1.000
0296	620.0300	Concrete Median Sloped Nose	SF	755.000	755.000
0298	623.0200	Dust Control Surface Treatment	SY	72,940.000	72,940.000
0300	624.0100	Water	MGAL	1,130.000	1,130.000
0302	625.0100	Topsoil	SY	41,770.000	41,770.000
0304	625.0500	Salvaged Topsoil	SY	9,680.000	9,680.000
0306	627.0200	Mulching	SY	9,680.000	9,680.000
0308	628.1504	Silt Fence	LF	4,463.000	4,463.000
0310	628.1520	Silt Fence Maintenance	LF	2,236.000	2,236.000
0312	628.1905	Mobilizations Erosion Control	EACH	9.000	9.000
0314	628.1910	Mobilizations Emergency Erosion Control	EACH	5.000	5.000
0316	628.2004	Erosion Mat Class I Type B	SY	18,708.000	18,708.000
0318	628.2027	Erosion Mat Class II Type C	SY	1,348.000	1,348.000
0320	628.6510	Soil Stabilizer Type B	ACRE	1.000	1.000
0322	628.7005	Inlet Protection Type A	EACH	173.000	173.000
0324	628.7010	Inlet Protection Type B	EACH	93.000	93.000
0326	628.7015	Inlet Protection Type C	EACH	411.000	411.000
0328	628.7020	Inlet Protection Type D	EACH	299.000	299.000
0330	628.7504	Temporary Ditch Checks	LF	180.000	180.000
0332	628.7555	Culvert Pipe Checks	EACH	19.000	19.000
0334	628.7560	Tracking Pads	EACH	10.000	10.000
0336	628.7570	Rock Bags	EACH	126.000	126.000
0338	629.0210	Fertilizer Type B	CWT	30.000	30.000
0340	630.0110	Seeding Mixture No. 10	LB	19.000	19.000
0342	630.0130	Seeding Mixture No. 30	LB	192.000	192.000
0344	630.0200	Seeding Temporary	LB	95.000	95.000
0346	630.0300	Seeding Borrow Pit	LB	164.000	164.000
0348	630.0500	Seed Water	MGAL	480.000	480.000
0350	631.0300	Sod Water	MGAL	342.000	342.000
0352	631.1000	Sod Lawn	SY	16,146.000	16,146.000
0354	633.5200	Markers Culvert End	EACH	15.000	15.000
0356	634.0618	Posts Wood 4x6-Inch X 18-FT	EACH	262.000	262.000
0358	634.0814	Posts Tubular Steel 2x2-Inch X 14-FT	EACH	20.000	20.000
0360	637.2210	Signs Type II Reflective H	SF	2,118.480	2,118.480
0362	637.2215	Signs Type II Reflective H Folding	SF	104.440	104.440
0364	637.2230	Signs Type II Reflective F	SF	293.810	293.810
0366	638.2102	Moving Signs Type II	EACH	8.000	8.000
0368	638.2602	Removing Signs Type II	EACH	184.000	184.000
0370	638.3000	Removing Small Sign Supports	EACH	161.000	161.000
0372	643.0300	Traffic Control Drums	DAY	279,376.000	279,376.000
0374	643.0420	Traffic Control Barricades Type III	DAY	28,406.000	28,406.000
0376	643.0500	Traffic Control Flexible Tubular Marker Posts	EACH	2,516.000	2,516.000
0378	643.0600	Traffic Control Flexible Tubular Marker Bases	EACH	2,516.000	2,516.000
0380	643.0705	Traffic Control Warning Lights Type A	DAY	56,812.000	56,812.000
0382	643.0715	Traffic Control Warning Lights Type C	DAY	24,162.000	24,162.000
0384	643.0800	Traffic Control Arrow Boards	DAY	1,301.000	1,301.000
0386	643.0900	Traffic Control Signs	DAY	128,017.000	128,017.000
0388	643.0920	Traffic Control Covering Signs Type II	EACH	125.000	125.000

1310-04-70

Line	Item	Item Description	Unit	Total	Qty
0390	643.1000	Traffic Control Signs Fixed Message	SF	850.000	850.000
0392	643.1050	Traffic Control Signs PCMS	DAY	2,487.000	2,487.000
0394	643.5000	Traffic Control	EACH	1.000	1.000
0396	644.1410	Temporary Pedestrian Surface Asphalt	SF	2,558.000	2,558.000
0398	644.1420	Temporary Pedestrian Surface Plywood	SF	1,092.000	1,092.000
0400	644.1430	Temporary Pedestrian Surface Plate	SF	240.000	240.000
0402	644.1601	Temporary Pedestrian Curb Ramp	DAY	17.000	17.000
0404	644.1810	Temporary Pedestrian Barricade	LF	5,428.000	5,428.000
0406	645.0111	Geotextile Type DF Schedule A	SY	14,370.000	14,370.000
0408	645.0120	Geotextile Type HR	SY	597.000	597.000
0410	645.0220	Geogrid Type SR	SY	10,240.000	10,240.000
0412	646.1020	Marking Line Epoxy 4-Inch	LF	26,628.000	26,628.000
0414	646.1545	Marking Line Grooved Wet Ref Contrast Epoxy 4-Inch	LF	3,705.000	3,705.000
0416	646.3020	Marking Line Epoxy 8-Inch	LF	1,416.000	1,416.000
0418	646.3545	Marking Line Grooved Wet Ref Contrast Epoxy 8-Inch	LF	3,220.000	3,220.000
0420	646.5020	Marking Arrow Epoxy	EACH	71.000	71.000
0422	646.5120	Marking Word Epoxy	EACH	16.000	16.000
0424	646.6120	Marking Stop Line Epoxy 18-Inch	LF	508.000	508.000
0426	646.6220	Marking Yield Line Epoxy 18-Inch	EACH	20.000	20.000
0428	646.7220	Marking Chevron Epoxy 24-Inch	LF	30.000	30.000
0430	646.7420	Marking Crosswalk Epoxy Transverse Line 6-Inch	LF	2,702.000	2,702.000
0432	646.8120	Marking Curb Epoxy	LF	527.000	527.000
0434	646.8220	Marking Island Nose Epoxy	EACH	25.000	25.000
0436	646.9000	Marking Removal Line 4-Inch	LF	2,168.000	2,168.000
0438	646.9010	Marking Removal Line Water Blasting 4-Inch	LF	200.000	200.000
0440	646.9100	Marking Removal Line 8-Inch	LF	650.000	650.000
0442	646.9110	Marking Removal Line Water Blasting 8-Inch	LF	100.000	100.000
0444	646.9300	Marking Removal Special Marking	EACH	2.000	2.000
0446	646.9310	Marking Removal Special Marking Water Blasting	EACH	2.000	2.000
0448	649.0105	Temporary Marking Line Paint 4-Inch	LF	48,336.000	48,336.000
0450	649.0150	Temporary Marking Line Removable Tape 4-Inch	LF	71,749.000	71,749.000
0452	649.0205	Temporary Marking Line Paint 8-Inch	LF	4,749.000	4,749.000
0454	649.0250	Temporary Marking Line Removable Tape 8-Inch	LF	4,420.000	4,420.000
0456	649.0505	Temporary Marking Arrow Paint	EACH	11.000	11.000
0458	649.0550	Temporary Marking Arrow Removable Tape	EACH	16.000	16.000
0460	649.0605	Temporary Marking Word Paint	EACH	8.000	8.000
0462	649.0650	Temporary Marking Word Removable Tape	EACH	8.000	8.000
0464	649.0805	Temporary Marking Stop Line Paint 18-Inch	LF	242.000	242.000
0466	649.0850	Temporary Marking Stop Line Removable Tape 18-Inch	LF	242.000	242.000
0468	649.0905	Temporary Marking Diagonal Paint 12-Inch	LF	81.000	81.000
0470	649.0960	Temporary Marking Removable Mask Out Tape 6-Inch	LF	1,356.000	1,356.000
0472	649.0970	Temporary Marking Removable Mask Out Tape 10-Inch	LF	1,321.000	1,321.000
0474	650.4000	Construction Staking Storm Sewer	EACH	235.000	235.000
0476	650.4500	Construction Staking Subgrade	LF	14,578.000	14,578.000
0478	650.5000	Construction Staking Base	LF	1,703.000	1,703.000
0480	650.5500	Construction Staking Curb Gutter and Curb & Gutter	LF	27,905.000	27,905.000
0482	650.6000	Construction Staking Pipe Culverts	EACH	2.000	2.000
0484	650.6500	Construction Staking Structure Layout (structure) 01. R-30-71	LS	1.000	1.000
0486	650.6500	Construction Staking Structure Layout (structure) 02. R-30-70	LS	1.000	1.000

1310-04-70

Line	Item	Item Description	Unit	Total	Qty
0488	650.6500	Construction Staking Structure Layout (structure) 03. R-30-73	LS	1.000	1.000
0490	650.7000	Construction Staking Concrete Pavement	LF	15,515.000	15,515.000
0492	650.8500	Construction Staking Electrical Installations (project) 01. 1310-04-70	LS	1.000	1.000
0494	650.9000	Construction Staking Curb Ramps	EACH	47.000	47.000
0496	650.9910	Construction Staking Supplemental Control (project) 01. 1310-04-70	LS	1.000	1.000
0498	650.9920	Construction Staking Slope Stakes	LF	14,578.000	14,578.000
0500	652.0225	Conduit Rigid Nonmetallic Schedule 40 2-Inch	LF	1,909.000	1,909.000
0502	652.0235	Conduit Rigid Nonmetallic Schedule 40 3-Inch	LF	2,658.000	2,658.000
0504	652.0800	Conduit Loop Detector	LF	3,329.000	3,329.000
0506	653.0135	Pull Boxes Steel 24x36-Inch	EACH	15.000	15.000
0508	653.0140	Pull Boxes Steel 24x42-Inch	EACH	28.000	28.000
0510	653.0905	Removing Pull Boxes	EACH	39.000	39.000
0512	654.0101	Concrete Bases Type 1	EACH	11.000	11.000
0514	654.0102	Concrete Bases Type 2	EACH	5.000	5.000
0516	654.0105	Concrete Bases Type 5	EACH	4.000	4.000
0518	654.0110	Concrete Bases Type 10	EACH	2.000	2.000
0520	654.0120	Concrete Bases Type 10-Special	EACH	6.000	6.000
0522	654.0217	Concrete Control Cabinet Bases Type 9 Special	EACH	2.000	2.000
0524	655.0230	Cable Traffic Signal 5-14 AWG	LF	1,325.000	1,325.000
0526	655.0235	Cable Traffic Signal 7-12 AWG	LF	994.000	994.000
0528	655.0240	Cable Traffic Signal 7-14 AWG	LF	1,095.000	1,095.000
0530	655.0260	Cable Traffic Signal 12-14 AWG	LF	3,896.000	3,896.000
0532	655.0280	Cable Traffic Signal 19-14 AWG	LF	48.000	48.000
0534	655.0320	Cable Type UF 2-10 AWG Grounded	LF	1,507.000	1,507.000
0536	655.0515	Electrical Wire Traffic Signals 10 AWG	LF	3,533.000	3,533.000
0538	655.0610	Electrical Wire Lighting 12 AWG	LF	1,521.000	1,521.000
0540	655.0700	Loop Detector Lead In Cable	LF	11,706.000	11,706.000
0542	655.0800	Loop Detector Wire	LF	8,884.000	8,884.000
0544	655.0900	Traffic Signal EVP Detector Cable	LF	2,099.000	2,099.000
0546	656.0200	Electrical Service Meter Breaker Pedestal (location) 01. STH 50 & STH 75/83	LS	1.000	1.000
0548	656.0200	Electrical Service Meter Breaker Pedestal (location) 02. STH 50 & 246th Ave	LS	1.000	1.000
0550	657.0100	Pedestal Bases	EACH	11.000	11.000
0552	657.0255	Transformer Bases Breakaway 11 1/2-Inch Bolt Circle	EACH	9.000	9.000
0554	657.0305	Poles Type 2	EACH	2.000	2.000
0556	657.0310	Poles Type 3	EACH	3.000	3.000
0558	657.0322	Poles Type 5-Aluminum	EACH	4.000	4.000
0560	657.0425	Traffic Signal Standards Aluminum 15-FT	EACH	5.000	5.000
0562	657.0430	Traffic Signal Standards Aluminum 10-FT	EACH	6.000	6.000
0564	657.0610	Luminaire Arms Single Member 4 1/2-Inch Clamp 6-FT	EACH	13.000	13.000
0566	658.0173	Traffic Signal Face 3S 12-Inch	EACH	24.000	24.000
0568	658.0174	Traffic Signal Face 4S 12-Inch	EACH	20.000	20.000
0570	658.0416	Pedestrian Signal Face 16-Inch	EACH	16.000	16.000
0572	658.0500	Pedestrian Push Buttons	EACH	17.000	17.000
0574	658.5069	Signal Mounting Hardware (location) 01. STH 50 & STH 75/83	LS	1.000	1.000
0576	658.5069	Signal Mounting Hardware (location) 02. STH 50 & 246th Ave	LS	1.000	1.000
0578	659.1125	Luminaires Utility LED C	EACH	13.000	13.000
0580	659.5000.S	Lamp, Ballast, LED, Switch Disposal by Contractor	EACH	164.000	164.000
0582	661.0200	Temporary Traffic Signals for Intersections (location) 01. STH 50 & STH 75/83	LS	1.000	1.000
0584	661.0200	Temporary Traffic Signals for Intersections (location) 02. STH 50 & 246th Ave	LS	1.000	1.000

1310-04-70

Line	Item	Item Description	Unit	Total	Qty
0586	661.0300	Generators	DAY	2.000	2.000
0588	690.0150	Sawing Asphalt	LF	3,640.000	3,640.000
0590	690.0250	Sawing Concrete	LF	21,600.000	21,600.000
0592	715.0502	Incentive Strength Concrete Structures	DOL	276.000	276.000
0594	715.0715	Incentive Flexural Strength Concrete Pavement	DOL	14,901.000	14,901.000
0596	740.0440	Incentive IRI Ride	DOL	11,200.000	11,200.000
0598	ASP.1T0A	On-the-Job Training Apprentice at $5.00/HR	HRS	4,200.000	4,200.000
0600	ASP.1T0G	On-the-Job Training Graduate at $5.00/HR	HRS	2,200.000	2,200.000
0602	SPV.0035	Special 01. Backfill Slurry	CY	44.000	44.000
0604	SPV.0060	Special 04. Field Facilities Office Space	EACH	1.000	1.000
0606	SPV.0060	Special 05. Concrete Saddle	EACH	5.000	5.000
0608	SPV.0060	Special 06. Section Corner Monuments	EACH	3.000	3.000
0610	SPV.0060	Special 08. Construction Staking Pond Layout	EACH	1.000	1.000
0612	SPV.0060	Special 09. Temporary Pipe Connection 12-Inch	EACH	13.000	13.000
0614	SPV.0060	Special 10. Temporary Pipe Connection 15-Inch	EACH	3.000	3.000
0616	SPV.0060	Special 11. Temporary Pipe Connection 18-Inch	EACH	4.000	4.000
0618	SPV.0060	Special 12. Temporary Pipe Connection 21-Inch	EACH	1.000	1.000
0620	SPV.0060	Special 13. Temporary Pipe Connection 24-Inch	EACH	2.000	2.000
0622	SPV.0060	Special 14. Install Poles Type 9	EACH	2.000	2.000
0624	SPV.0060	Special 15. Install Poles Type 9 Special	EACH	6.000	6.000
0626	SPV.0060	Special 16. Install Monotube Arms 25-FT	EACH	1.000	1.000
0628	SPV.0060	Special 17. Install Monotube Arms 30-FT	EACH	1.000	1.000
0630	SPV.0060	Special 18. Install Monotube Arms 40-FT Type 9/10 Special Pole	EACH	6.000	6.000
0632	SPV.0060	Special 19. Install Camera Assembly Temporary Signal Pole	EACH	1.000	1.000
0634	SPV.0060	Special 20. Trnspt and Install State Furn Traffic Signal Cabinet STH 50 & STH 75/83	EACH	1.000	1.000
0636	SPV.0060	Special 21. Trnspt and Install State Furn Traffic Signal Cabinet STH 50 & 246th Ave	EACH	1.000	1.000
0638	SPV.0060	Special 22. Trnspt Traffic Signal & Inter Lighting Materials STH 50 & STH 75/83	EACH	1.000	1.000
0640	SPV.0060	Special 23. Trnspt Traffic Signal & Inter Lighting Materials STH 50 & 246th Ave	EACH	1.000	1.000
0642	SPV.0060	Special 24. Trnspt & Install State Furn EVP Detector Heads STH 50 & STH 75/83	EACH	1.000	1.000
0644	SPV.0060	Special 25. Trnspt & Install State Furn EVP Detector Heads STH 50 & 246th Ave	EACH	1.000	1.000
0646	SPV.0060	Special 26. Temporary EVP System STH 50 & STH 75/83	EACH	1.000	1.000
0648	SPV.0060	Special 27. Temporary EVP System STH 50 & 246th Ave	EACH	1.000	1.000
0650	SPV.0060	Special 28. Moving and New RRFB System STH 50 at 248th Ave Station 1018+50 EB Right	EACH	1.000	1.000
0652	SPV.0060	Special 29. Moving and New RRFB System STH 50 at 248th Ave Station 1026+00 EB Right	EACH	1.000	1.000
0654	SPV.0060	Special 30. Moving and New RRFB System STH 50 at 248th Ave Station 1026+30 WB Right	EACH	1.000	1.000
0656	SPV.0060	Special 31. Moving and New RRFB System STH 50 at 248th Ave Station 1026+25 Median	EACH	1.000	1.000
0658	SPV.0060	Special 32. Moving and New RRFB System STH 50 at 248th Ave Station 1040+50 WB Right	EACH	1.000	1.000
0660	SPV.0060	Special 33. RRFB System STH 50 at 242nd Ave Station 1043+45 EB Right	EACH	1.000	1.000
0662	SPV.0060	Special 34. RRFB System STH 50 at 242nd Ave Station 1047+80 Median Back to Back	EACH	1.000	1.000
0664	SPV.0060	Special 35. RRFB System STH 50 at 242nd Ave Station 1047+60 EB Right	EACH	1.000	1.000
0666	SPV.0060	Special 36. RRFB System STH 50 at 242nd Ave Station 1047+80 WB Right	EACH	1.000	1.000
0668	SPV.0060	Special 37. RRFB System STH 50 at 242nd Ave Station 1052+00 WB Right	EACH	1.000	1.000
0670	SPV.0060	Special 38. Reconstructing Sanitary Manhole Covers	EACH	7.000	7.000
0672	SPV.0060	Special 39. Adjusting Sanitary Manhole Covers	EACH	21.000	21.000
0674	SPV.0060	Special 40. Reconstructing Water Valve Boxes	EACH	2.000	2.000

1310-04-70

Line	Item	Item Description	Unit	Total	Qty
0676	SPV.0060	Special 41. Adjusting Water Valve Boxes	EACH	16.000	16.000
0678	SPV.0060	Special 42. Adjusting Water Service Boxes	EACH	25.000	25.000
0680	SPV.0060	Special 43. Relocating Sanitary Service Line	EACH	10.000	10.000
0682	SPV.0060	Special 44. Moving Fire Hydrants	EACH	2.000	2.000
0684	SPV.0090	Special 01. Concrete Curb & Gutter 12-Inch Type D	LF	5.000	5.000
0686	SPV.0090	Special 02. Concrete Curb & Gutter 12-Inch Pan 24-Inch Type D	LF	10.000	10.000
0688	SPV.0090	Special 03. Concrete Curb & Gutter 18-Inch Pan 24-Inch Type D	LF	35.000	35.000
0690	SPV.0090	Special 04. Concrete Curb & Gutter 66-Inch Type A	LF	13,020.000	13,020.000
0692	SPV.0090	Special 05. Concrete Curb & Gutter 4-Inch Sloped 72-Inch Type A	LF	85.000	85.000
0694	SPV.0090	Special 06. Concrete Curb & Gutter 9-Inch Pan 18-Inch Type D	LF	35.000	35.000
0696	SPV.0090	Special 07. Parking Lot Curb	LF	185.000	185.000
0698	SPV.0090	Special 08. Wood Pedestrian Fence	LF	53.000	53.000
0700	SPV.0090	Special 09. Trench Drain 12-Inch	LF	95.000	95.000
0702	SPV.0090	Special 10. Storm Sewer Pipe PVC SDR 35 6-Inch	LF	29.000	29.000
0704	SPV.0090	Special 11. Storm Sewer Pipe PVC SDR 35 8-Inch	LF	101.000	101.000
0706	SPV.0090	Special 12. Concrete Curb & Gutter 66-Inch Type A HES	LF	60.000	60.000
0708	SPV.0165	Special 01. Concrete Sidewalk 12-Inch	SF	435.000	435.000
0710	SPV.0165	Special 02. Construction Staking Sidewalk	SF	62,295.000	62,295.000
0712	SPV.0165	Special 03. Wall Modular Block Gravity R-30-71	SF	50.000	50.000
0714	SPV.0165	Special 04. Wall Modular Block Gravity R-30-73	SF	355.000	355.000
0716	SPV.0165	Special 05. Wall Modular Block Gravity Landscape Partial Station 51+50 LT	SF	20.000	20.000
0718	SPV.0165	Special 06. Curb Ramp Detectable Warning Field Yellow Temporary	SF	283.000	283.000
0720	SPV.0170	Special 02. Removal and Disposal of Invasive Plant Species	STA	3.000	3.000
0722	SPV.0200	Special 01. Vertically Extending Fire Hydrants	VF	1.000	1.000

3

CLEARING & GRUBBING

STATION	TO	STATION	LOCATION	201.0105 CLEARING STA	201.0120 CLEARING ID	201.0205 GRUBBING STA	201.0220 GRUBBING ID	202.0105 ROADSIDE CLEARING STA	REMARKS FOR INFORMATION ONLY
1007+00	-	1008+00	STH 50, RT	1	--	1	--	--	3 TREES (17 ID)
1011+00	-	1012+00	STH 50, RT	1	--	1	--	--	4 TREES (15 ID)
1016+00	-	1017+00	STH 50, LT	1	--	1	--	--	2 TREES (22 ID)
1019+00	-	1020+00	STH 50, LT	--	5	--	5	--	1 TREE (5 ID)
1020+00	-	1021+00	STH 50, LT	--	10	--	10	--	1 TREE (10 ID)
1022+00	-	1023+00	STH 50, LT	1	--	1	--	--	2 TREES (19 ID)
1027+00	-	1028+00	STH 50, LT & RT	1	--	1	--	--	2 TREES (20 ID)
1028+00	-	1029+00	STH 50, LT & RT	1	--	1	--	--	3 TREES (25 ID)
1029+00	-	1030+00	STH 50, LT	--	7	--	7	--	1 TREE (7 ID)
1030+00	-	1031+00	STH 50, LT	1	--	1	--	--	1 TREE (14 ID)
1031+00	-	1032+00	STH 50, RT	--	10	--	10	--	1 TREE (10 ID)
1032+00	-	1033+00	STH 50, LT & RT	1	--	1	--	--	2 TREES (23 ID)
1035+00	-	1036+00	STH 50, RT	--	11	--	11	--	1 TREE (11 ID)
1036+00	-	1037+00	STH 50, RT	--	4	--	4	--	1 TREE (4 ID)
1037+00	-	1038+00	STH 50, LT	--	7	--	7	--	2 TREES (7 ID)
1040+00	-	1041+00	STH 50, LT	--	5	--	5	--	1 TREE (5 ID)
1041+00	-	1042+00	STH 50, RT	--	8	--	8	--	1 TREE (8 ID)
1042+00	-	1043+00	STH 50, LT	--	8	--	8	--	2 TREES (8 ID)
1043+00	-	1044+00	STH 50, LT & RT	1	--	1	--	--	4 TREES (25 ID)
1044+00	-	1045+00	STH 50, LT	1	--	1	--	--	2 TREES (24 ID)
1048+00	-	1049+00	STH 50, LT	1	--	1	--	--	2 TREES (24 ID)
1050+00	-	1051+00	STH 50, LT	--	9	--	9	--	1 TREE (9 ID)
1051+00	-	1052+00	STH 50, LT	1	--	1	--	--	2 TREES (23 ID)
1054+00	-	1055+00	STH 50, LT	1	--	1	--	--	2 TREE (26 ID)
1055+00	-	1056+00	STH 50, LT	1	--	1	--	--	2 TREE (22 ID)
1056+00	-	1057+00	STH 50, LT	--	9	--	9	--	1 TREE (9 ID)
1058+00	-	1059+00	STH 50, LT	1	--	1	--	--	2 TREES (27 ID)
1059+00	-	1060+00	STH 50, LT & RT	1	--	1	--	--	3 TREES (26 ID)
1055+58	-	1057+00	STH 50, 48' RT	--	--	--	--	2	CLEAR BRUSH
47+00	-	48+00	STH 83, RT	1	--	1	--	--	3 TREES (39 ID)
101+00	-	102+00	DETENTION POND	1	--	1	--	--	3 TREES (69 ID)
102+00	-	103+00	DETENTION POND	1	--	1	--	--	6 TREES (69 ID)
			TOTALS	19	93	19	93	2	

ALL ITEMS CATEGORY 0010 UNLESS OTHRWISE NOTED

3

REMOVING SMALL PIPE CULVERTS

STATION	TO	STATION	LOCATION	203.0100 EACH	REMARKS
998+50	-	998+89	83' RT - 153' RT	1	CMP 18"X80'
1066+29	-	1066+60	58' LT	1	CMP 18"X30'
1067+73	-	1068+05	60' LT	1	CMP 18"X30'
			TOTAL	3	

REMOVING RETAINING WALL

STATION	TO	STATION	LOCATION	204.9060.09 REMOVING RETAINING WALL STA 1037+70 EACH	204.9060.10 REMOVING RETAINING WALL STA 51+50 EACH	REMARKS
1037+46	-	1037+92	STH 50, 46' RT	1	--	SHORT LIMESTONE WALL
51+44	-	51+52	STH 75, 50' LT	--	1	PARTIAL RETAINING WALL
			TOTALS	1	1	

3

REMOVING CONCRETE PAVEMENT

STATION	TO	STATION	LOCATION	204.0100 SY
994+20	-	997+00	STH 50 LT & RT	1,870
997+00	-	1003+00	STH 50 LT & RT	5,040
1003+00	-	1009+00	STH 50 LT & RT	4,600
1009+00	-	1015+00	STH 50 LT & RT	4,300
1015+00	-	1021+00	STH 50 LT & RT	4,950
1021+00	-	1027+00	STH 50 LT & RT	4,920
1027+00	-	1033+00	STH 50 LT & RT	4,760
1033+00	-	1039+00	STH 50 LT & RT	4,970
1039+00	-	1045+00	STH 50 LT & RT	5,090
1045+00	-	1051+00	STH 50 LT & RT	4,840
1051+00	-	1057+00	STH 50 LT & RT	4,440
1057+00	-	1063+00	STH 50 LT & RT	4,580
1063+00	-	1068+20	STH 50 LT & RT	3,610
46+18	-	49+62	STH 83 LT & RT	1,760
50+39	-	53+32	STH 75 LT $ RT	1,610
			TOTAL	61,340

REMOVING CONCRETE SIDEWALK

STATION	TO	STATION	LOCATION	204.0155 SY
997+00	-	1003+00	STH 50 LT & RT	290
1003+00	-	1009+00	STH 50 LT & RT	550
1009+00	-	1015+00	STH 50 LT & RT	330
1015+00	-	1021+00	STH 50 LT & RT	530
1021+00	-	1027+00	STH 50 LT & RT	580
1027+00	-	1033+00	STH 50 LT & RT	370
1033+00	-	1039+00	STH 50 LT & RT	610
1039+00	-	1045+00	STH 50 LT & RT	290
1045+00	-	1051+00	STH 50 LT & RT	160
1051+00	-	1057+00	STH 50 LT & RT	30
1057+00	-	1063+00	STH 50 LT & RT	140
			TOTAL	3,880

REMOVING FENCE

STATION	TO	STATION	LOCATION	204.0170 LF
1052+23	-	1052+39	STH 50, 50' LT	16
1052+59	-	1052+79	STH 50, 49' LT	20
1052+99	-	1053+15	STH 50, 49' LT	16
1059+30	-	1059+50	STH 50, 49' LT	20
			TOTAL	72

REMOVING SURFACE DRAINS

STATION	LOCATION	204.0190 EACH
986+45	STH 50, 0'-16' RT	1
987+80	STH 50, 7'-19' LT	1
1025+25	STH 50, 88' RT	1
	TOTAL	3

ALL ITEMS CATEGORY 0010 UNLESS OTHRWISE NOTED

REMOVING STORM SEWER

BEGIN LOCATION STATION	BEGIN LOCATION OFFSET	TO	END LOCATION STATION	END LOCATION OFFSET	LOCATION	204.0210 REMOVING MANHOLES EACH	204.0220 REMOVING INLETS EACH	204.0245.01 REMOVING STORM SEWER 12-INCH LF	204.0245.02 REMOVING STORM SEWER 15-INCH LF	204.0245.03 REMOVING STORM SEWER 18-INCH LF	204.0245.04 REMOVING STORM SEWER 21-INCH LF	204.0245.05 REMOVING STORM SEWER 24-INCH LF	209.2500 BACKFILL GRANULAR GRADE 2 TON
994+31	8' RT	-	994+31	36' RT	STH 50 R/L	--	1	30	--	--	--	--	9
994+31	36' RT	-	994+32	42' RT	STH 50 R/L	--	1	10	--	--	--	--	5
998+32	36' LT	-	997+71	8' LT	STH 50 R/L	--	1	70	--	--	--	--	--
997+71	8' LT	-	997+71	8' RT	STH 50 R/L	--	1	20	--	--	--	--	--
997+71	8' RT	-	997+71	36' RT	STH 50 R/L	--	1	30	--	--	--	--	--
997+71	36' RT	-	997+71	46' RT	STH 50 R/L	--	1	10	--	--	--	--	--
997+76	63' RT	-	999+76	8' RT	STH 50 R/L	--	1	--	--	--	--	--	--
999+96	2' RT	-	999+97	8' RT	STH 50 R/L	--	1	10	--	--	--	--	5
999+97	8' RT	-	1000+08	36' RT	STH 50 R/L	--	1	30	--	--	--	--	9
1000+08	36' RT	-	999+76	63' RT	STH 50 R/L	--	1	45	--	--	--	--	--
1000+37	36' RT	-	1000+45	63' RT	STH 50 R/L	--	--	--	--	--	10	--	--
1005+03	78' LT	-	1005+06	96' LT	STH 50 R/L	--	1	20	--	--	--	--	7
1005+06	96' LT	-	1005+50	95' RT	STH 50 R/L	--	1	45	--	--	--	--	12
1005+50	95' LT	-	1005+65	68' LT	STH 50 R/L	--	1	35	--	--	--	--	10
1005+25	2' LT	-	1005+25	8' LT	STH 50 R/L	--	1	10	--	--	--	--	5
1005+25	8' LT	-	1005+26	49' LT	STH 50 R/L	--	1	40	--	--	--	--	11
1005+26	49' LT	-	1005+65	68' LT	STH 50 R/L	--	1	45	--	--	--	--	12
1005+65	68' LT	-	1006+08	56' LT	STH 50 R/L	--	1	--	45	--	--	--	16
1006+08	56' LT	-	1006+69	65' LT	STH 50 R/L	--	1	--	65	--	--	--	--
1005+09	36' RT	-	1005+74	80' RT	STH 50 R/L	--	1	80	--	--	--	--	20
1005+85	106'RT	-	1005+74	80' RT	STH 50 R/L	--	1	30	--	--	--	--	9
1005+74	74' RT	-	1006+00	69' RT	STH 50 R/L	--	1	30	--	--	--	--	9
1006+26	116' RT	-	1006+00	69' RT	STH 50 R/L	--	1	55	--	--	--	--	14
1006+00	69' RT	-	1006+55	40' RT	STH 50 R/L	--	1	--	65	--	--	--	22
1006+55	40' RT	-	1006+82	53' RT	STH 50 R/L	--	1	--	30	--	--	--	11
1006+82	53'RT	-	1007+35	70' RT	STH 50 R/L	--	1	--	60	--	--	--	11
1008+22	36' LT	-	1008+22	2' RT	STH 50 R/L	--	1	40	--	--	--	--	--
1008+22	2' RT	-	1008+22	8' RT	STH 50 R/L	--	1	10	--	--	--	--	--
1008+22	8' RT	-	1008+22	36' RT	STH 50 R/L	--	1	30	--	--	--	--	--
1008+22	36' RT	-	1008+21	71' RT	STH 50 R/L	--	1	35	--	--	--	--	--
1010+72	36' RT	-	1011+01	36' RT	STH 50 R/L	--	1	30	--	--	--	--	9
1011+01	36' RT	-	1011+02	8' RT	STH 50 R/L	--	1	30	--	--	--	--	9
1011+72	1' RT	-	1011+02	8' RT	STH 50 R/L	--	1	70	--	--	--	--	18
1011+02	8' RT	-	1011+02	8' LT	STH 50 R/L	--	1	20	--	--	--	--	7
1010+72	8' LT	-	1011+02	8' LT	STH 50 R/L	--	1	30	--	--	--	--	9
1011+02	8' LT	-	1011+01	36' LT	STH 50 R/L	--	1	--	30	--	--	--	11
1010+36	36' LT	-	1011+01	36' LT	STH 50 R/L	--	1	30	--	--	--	--	9
1011+01	36' LT	-	1011+02	88' LT	STH 50 R/L	--	1	--	55	--	--	--	--
1017+50	63' LT	-	1016+96	63' LT	STH 50 R/L	--	1	55	--	--	--	--	--
1016+96	63' LT	-	1015+97	34' LT	STH 50 R/L	--	1	--	30	--	--	--	--
1016+97	34' LT	-	1015+52	34' LT	STH 50 R/L	1	--	--	--	145	--	--	60
1015+52	34' LT	-	1014+21	35' LT	STH 50 R/L	--	1	--	--	135	--	--	54
1014+21	35' LT	-	1013+76	3' LT	STH 50 R/L	--	1	--	--	60	--	--	26
1013+76	3' LT	-	1013+21	36' RT	STH 50 R/L	--	1	--	--	70	--	--	--
1015+22	36' RT	-	1013+21	36' RT	STH 50 R/L	--	1	200	--	--	--	--	46

REMOVING STORM SEWER

BEGIN LOCATION STATION	OFFSET	TO	END LOCATION STATION	OFFSET	LOCATION	204.0210 REMOVING MANHOLES EACH	204.0220 REMOVING INLETS EACH	204.0245.01 REMOVING STORM SEWER 12-INCH LF	204.0245.02 REMOVING STORM SEWER 15-INCH LF	204.0245.03 REMOVING STORM SEWER 18-INCH LF	204.0245.04 REMOVING STORM SEWER 21-INCH LF	204.0245.05 REMOVING STORM SEWER 24-INCH LF	209.2500 BACKFILL GRANULAR GRADE 2 TON
1013+21	34' RT	-	1012+96	63' RT	STH 50 R/L	--	1	--	--	--	40	--	--
1020+02	33' LT	-	1020+46	13' RT	STH 50 R/L	--	1	65	--	--	--	--	17
1020+47	33' RT	-	1020+46	13' RT	STH 50 R/L	--	1	20	--	--	--	--	7
1020+46	13' RT	-	1023+47	13' RT	STH 50 R/L	1	--	--	305	--	--	--	--
1023+05	33' LT	-	1023+47	13' RT	STH 50 R/L	--	1	65	--	--	--	--	17
1023+47	33' RT	-	1023+47	13' RT	STH 50 R/L	--	1	20	--	--	--	--	7
1023+47	13' RT	-	1025+14	15' RT	STH 50 R/L	1	--	--	170	--	--	--	--
1026+23	33' LT	-	1025+88	58' LT	STH 50 R/L	--	1	45	--	--	--	--	12
1025+98	59' LT	-	1025+88	58' LT	STH 50 R/L	--	--	10	--	--	--	--	3
1025+88	58' LT	-	1025+20	54' LT	STH 50 R/L	--	1	--	70	--	--	--	23
1025+30	61' LT	-	1025+20	54' LT	STH 50 R/L	--	1	15	--	--	--	--	--
1025+20	54' LT	-	1025+08	33' LT	STH 50 R/L	--	1	--	--	--	--	25	--
1024+21	51' LT	-	1025+08	33' LT	STH 50 R/L	--	1	90	--	--	--	--	22
1025+08	33' LT	-	1025+14	15' RT	STH 50 R/L	--	1	--	--	--	--	50	--
1025+14	15' RT	-	1025+15	35' RT	STH 50 R/L	--	--	--	--	--	--	--	--
1034+70	34' LT	-	1034+70	13' RT	STH 50 R/L	--	1	50	--	--	--	--	13
1034+70	33' RT	-	1034+70	13' RT	STH 50 R/L	--	1	20	--	--	--	--	--
1034+70	13' RT	-	1032+62	13' RT	STH 50 R/L	1	--	--	--	210	--	--	--
1032+62	48' LT	-	1032+62	34' LT	STH 50 R/L	--	1	15	--	--	--	--	6
1032+62	34' LT	-	1032+62	13' RT	STH 50 R/L	--	1	50	--	--	--	--	13
1032+62	33' RT	-	1032+62	13' RT	STH 50 R/L	--	1	20	--	--	--	--	7
1032+62	34' LT	-	1032+62	13' RT	STH 50 R/L	--	1	50	--	--	--	--	13
1032+62	33' RT	-	1032+62	13' RT	STH 50 R/L	--	1	20	--	--	--	--	7
1032+62	13' RT	-	1031+02	13' RT	STH 50 R/L	1	--	--	--	--	--	165	--
1031+01	47' LT	-	1031+01	34' LT	STH 50 R/L	--	1	15	--	--	--	--	6
1031+01	34' LT	-	1031+02	13' RT	STH 50 R/L	--	1	50	--	--	--	--	13
1031+02	33' RT	-	1031+02	13' RT	STH 50 R/L	--	1	20	--	--	--	--	7
1032+02	13' RT	-	1029+19	13' RT	STH 50 R/L	1	--	--	--	--	--	185	--
1029+71	33' LT	-	1029+19	13' RT	STH 50 R/L	--	1	70	--	--	--	--	18
1029+21	33' RT	-	1029+19	13' RT	STH 50 R/L	--	1	20	--	--	--	--	7
1029+19	13' RT	-	1026+69	13' RT	STH 50 R/L	1	--	--	--	--	--	250	--
1026+71	33' RT	-	1026+69	13' RT	STH 50 R/L	--	1	20	--	--	--	--	7
1026+69	13' RT	-	1025+14	13' RT	STH 50 R/L	1	--	--	--	--	--	155	--
1039+87	57' RT	-	1040+32	31' RT	STH 50 R/L	--	1	55	--	--	--	--	14
1040+26	88' RT	-	1040+32	32' RT	STH 50 R/L	--	--	60	--	--	--	--	15
1040+32	32' RT	-	1041+21	33' RT	STH 50 R/L	1	--	--	--	90	--	--	39
1041+21	33' RT	-	1042+96	33' RT	STH 50 R/L	--	1	--	--	175	--	--	70
1042+96	33' RT	-	1042+95	57' LT	STH 50 R/L	--	1	--	--	90	--	--	--
1044+71	33' RT	-	1045+75	34' RT	STH 50 R/L	--	1	105	--	--	--	--	25
1047+18	74' RT	-	1046+47	34' RT	STH 50 R/L	--	1	85	--	--	--	--	--
1046+47	34' RT	-	1045+75	34' RT	STH 50 R/L	--	1	--	75	--	--	--	25
1045+75	34' RT	-	1045+75	34' LT	STH 50 R/L	--	1	--	--	70	--	--	--
1045+75	34' LT	-	1045+90	34' LT	STH 50 R/L	--	2	--	--	15	--	--	--
1047+44	35' RT	-	1047+63	3' RT	STH 50 R/L	--	1	40	--	--	--	--	11
1047+63	3' RT	-	1047+65	35' LT	STH 50 R/L	--	1	40	--	--	--	--	--
1047+65	35' LT	-	1046+46	34' LT	STH 50 R/L	--	1	--	120	--	--	--	38
1046+46	34' LT	-	1045+90	34' LT	STH 50 R/L	--	1	--	--	60	--	--	--

REMOVING STORM SEWER

BEGIN LOCATION STATION	OFFSET	TO	END LOCATION STATION	OFFSET	LOCATION	204.0210 REMOVING MANHOLES EACH	204.0220 REMOVING INLETS EACH	204.0245.01 REMOVING STORM SEWER 12-INCH LF	204.0245.02 REMOVING STORM SEWER 15-INCH LF	204.0245.03 REMOVING STORM SEWER 18-INCH LF	204.0245.04 REMOVING STORM SEWER 21-INCH LF	204.0245.05 REMOVING STORM SEWER 24-INCH LF	209.2500 BACKFILL GRANULAR GRADE 2 TON
1051+21	35' LT	-	1052+21	35' LT	STH 50 R/L	--	1	100	--	--	--	--	24
1052+21	35' LT	-	1052+21	7' LT	STH 50 R/L	1	--	30	--	--	--	--	--
1052+21	7' LT	-	1052+20	3' RT	STH 50 R/L	--	1	5	--	--	--	--	--
1052+20	3' RT	-	1052+21	35' RT	STH 50 R/L	--	1	40	--	--	--	--	--
1052+21	35' RT	-	1053+10	67' RT	STH 50 R/L	--	1	--	95	--	--	--	--
1054+85	35' LT	-	1055+01	4' RT	STH 50 R/L	--	1	35	--	--	--	--	--
1055+01	4' LT	-	1055+08	7' RT	STH 50 R/L	--	1	15	--	--	--	--	--
1055+08	7' RT	-	1055+22	36' RT	STH 50 R/L	--	1	--	35	--	--	--	--
1055+23	55' RT	-	1055+22	36' RT	STH 50 R/L	--	1	20	--	--	--	--	--
1055+22	36' RT	-	1058+21	36' RT	STH 50 R/L	--	1	--	300	--	--	--	91
1058+21	35' LT	-	1058+21	8' LT	STH 50 R/L	--	1	30	--	--	--	--	--
1058+22	8' LT	-	1058+22	8' RT	STH 50 R/L	--	1	15	--	--	--	--	--
1058+22	8' RT	-	1058+21	36' RT	STH 50 R/L	--	1	30	--	--	--	--	--
1058+21	36' RT	-	1058+98	71' RT	STH 50 R/L	--	1	--	--	85	--	--	--
1061+55	36' LT	-	1060+62	36' LT	STH 50 R/L	--	1	95	--	--	--	--	23
1060+62	36' LT	-	1060+62	8' LT	STH 50 R/L	--	1	30	--	--	--	--	9
1060+62	8' LT	-	1060+62	C/L	STH 50 R/L	--	1	10	--	--	--	--	5
1060+62	C/L	-	1060+62	36' RT	STH 50 R/L	--	1	40	--	--	--	--	11
1060+62	36' RT	-	1060+62	69' RT	STH 50 R/L	--	1	--	35	--	--	--	13
1062+03	80' LT	-	1062+37	80' LT	STH 50 R/L	--	1	35	--	--	--	--	--
1062+37	80' LT	-	1062+56	73' LT	STH 50 R/L	1	--	--	--	--	20	--	--
1062+56	73' LT	-	1063+00	58' LT	STH 50 R/L	--	1	--	--	--	--	45	--
1063+00	58' LT	-	1063+00	36' LT	STH 50 R/L	--	1	--	--	--	--	25	--
1063+00	35' LT	-	1062+87	8' RT	STH 50 R/L	--	1	--	--	--	--	50	--
1062+60	3' LT	-	1062+87	8' RT	STH 50 R/L	--	1	30	--	--	--	--	--
1062+87	8' RT	-	1062+87	36' RT	STH 50 R/L	--	1	--	--	--	--	30	--
1062+87	36' RT	-	1062+87	72' RT	STH 50 R/L	--	1	--	--	--	--	40	--
1065+12	59' LT	-	1065+12	36' LT	STH 50 R/L	--	1	--	25	--	--	--	--
1065+12	36' LT	-	1065+11	8' LT	STH 50 R/L	--	1	--	30	--	--	--	11
1065+11	8' LT	-	1065+11	C/L	STH 50 R/L	1	--	--	--	10	--	--	8
1065+11	C/L	-	1065+12	8' RT	STH 50 R/L	--	1	--	--	10	--	--	6
1065+11	8' RT	-	1065+12	36' RT	STH 50 R/L	--	1	--	--	30	--	--	14
1065+12	36' RT	-	1065+12	109' RT	STH 50 R/L	--	1	--	--	75	--	--	--
45+95	7' RT	-	45+99	7' LT	STH 83 R/L	--	1	20	--	--	--	--	--
					UNDISTRIBUTED	--	--	--	--	--	--	--	148
					TOTALS	12	109	2,870	1,640	1,330	70	1020	1,260

ALL ITEMS CATEGORY 0010 UNLESS OTHRWISE NOTED

3

REMOVING ASPHALTIC SURFACE

STATION	TO	STATION	LOCATION	204.0115 REMOVING ASPHALTIC SURFACE BUTT JOINTS SY	204.0120 REMOVING ASPHALTIC SURFACE MILLING SY
44+68	-	47+79	STH 83, RT	30	830
44+68	-	48+08	STH 83, LT	25	1000
			TOTALS	55	1,830

REMOVING CURB & GUTTER

STATION	TO	STATION	LOCATION	204.0130 REMOVING CURB LF	204.0150 REMOVING CURB & GUTTER LF
986+50	-	988+30	STH 50, MEDIAN	--	320
1002+18	-	1002+54	STH 50, 45' LT	--	30
1002+20	-	1002+65	STH 50, 48' RT	--	25
1004+25	-	1004+92	STH 50, 58' RT	--	90
1012+61	-	1013+24	STH 50, 37' LT	--	90
1013+30	-	1013+87	STH 50, 37' LT	--	75
1015+36	-	1015+87	STH 50, 35' LT	--	80
1021+85	-	1021+89	STH 50, 45' LT	10	--
1022+18	-	1023+09	STH 50, 35' RT	--	45
1023+42	-	1023+45	STH 50, 45' LT	20	--
1024+99	-	1025+92	STH 50, 35' RT	--	145
1029+37	-	1029+37	STH 50, 46' LT	25	--
1031+02	-	1032+18	STH 50, 46' LT	195	--
1033+82	-	1034+68	STH 50, 32' RT	--	105
1034+37	-	1036+39	STH 50, 46' LT	--	25
1068+21	-	1068+71	STH 50, LT & RT	--	100
3+05	-	4+05	CTH F, 24' RT	--	100
40+54	-	41+00	246TH AVE, LT & RT	--	60
64+39	-	64+43	244TH AVE, LT	--	5
70+58	-	70+85	243RD AVE, LT	--	30
79+41	-	79+44	242ND AVE, LT	--	5
95+80	-	96+25	236TH AVE, LT & RT	--	90
			TOTALS	250	1420

3

REMOVING TRAFFIC COUNTER

STATION	LOCATION	204.9060.S.01 EACH	REMARKS
1052+73	STH 50, 51' LT	1	COUNTY PARKING PARKING LOT
	TOTAL	1	

REMOVING VERTICAL PANELS

STATION	TO	STATION	LOCATION	204.9060.S.02 EACH
1014+25	-	1016+00	STH 50 MEDIAN	25
			TOTAL	25

REMOVING PRIVATE LIGHT POLE

STATION	LOCATION	204.9060.S.03 REMOVING PRIVATE LIGHT POLE EACH	659.5000.S LAMP, BALLAST, LED, SWITCH DISPOSAL BY CONTRACTOR EACH	REMARKS
103465	50' LT	1	1	NE CORNER OF STH 50 & 246TH AVE
	TOTAL	1	1	

ALL ITEMS CATEGORY 0010 UNLESS OTHRWISE NOTED

PROJECT NO: 1310-04-70	HWY: STH 50	COUNTY: KENOSHA	MISCELLANEOUS QUANTITIES	SHEET:

FILE NAME : _____ PLOT DATE : _____ PLOT BY : _____ PLOT NAME : _____ PLOT SCALE : 1:1

Earthwork Summary			A	B	C	D	E	F	G	H	I	J
			Item #205.0100			Item #205.0501.S		Item #312.0110				
Division	From/To Station	Location	Common Excavation (1) (CY) Cut (2) (CY)	Common Excavation (1) (CY) EBS Excavation (3)(4)(5) (CY)	Salvaged/ Unusable Pavement Material (6) (CY)	Excavation, Hauling, and Disposal of Petroleum Contaminated Soil (7)(12) (CY)	Available Material (8) (CY)	Select Crushed Material (3)(11)(13) (TON) Factor 1.75	Unexpanded Fill (CY)	Expanded Fill (9) (CY) Factor 1.20	Mass Ordinate +/- (5)(10) (CY)	Waste (CY)
1	984+23 - 990+15	West Crossover	446	0	18	0	428	0	19	23	405	405
	1071+38 - 1078+10	East Crossover	714	0	0	0	714	0	160	192	522	522
Division 1 Subtotal			1,160	0	18	0	1,142	0	179	215	927	927
2	996+50 - 1064+00	STH 50 Stage 1B	780	0	549	0	231	0	0	0	231	231
Division 2 Subtotal			780	0	549	0	231	0	0	0	231	231
3	994+21 - 1068+20	STH 50 Stage 2	25,408	0	7,263	323	17,822	0	851	1,021	16,801	16,801
	3+04 - 4+25	CTH F	831	0	169	0	662	0	18	22	641	641
	44+69 - 49+25	STH 83	2,636	0	513	0	2,123	0	24	29	2,094	2,094
	100+32 - 103+00	POND	7,293	0	0	0	7,293	0	405	486	6,807	6,807
	18+50 - 19+30	W H.S. DWY	219	0	8	0	211	0	63	76	135	135
	78+95 - 79+40	242ND AVE	210	0	43	0	167	0	0	0	167	167
Division 3 Subtotal			36,597	0	7,996	323	28,278	0	1,361	1,633	26,645	26,645
4	996+50 - 1020+50	STH 50 Stage 3	2,910	0	533	0	2,377	0	0	0	2,377	2,377
Division 4 Subtotal			2,910	0	533	0	2,377	0	0	0	2,377	2,377
5	1004+00 - 1006+50	STH 50 Stage 4A	1,082	0	19	0	1,063	0	0	0	1,063	1,063
	50+75 - 53+32	STH 75	1,290	0	403	0	887	0	4	5	882	882
Division 5 Subtotal			2,372	0	421	0	1,951	0	4	5	1,946	1,946
6	1021+00 - 1065+00	STH 50 Stage 4B	4,946	0	2,607	276	2,063	0	0	0	2,063	2,063
Division 6 Subtotal			4,946	0	2,607	276	2,063	0	0	0	2,063	2,063
7	994+21 - 1068+20	STH 50 Stage 4C	24,651	0	7,263	666	16,722	0	278	334	16,388	16,388
	10+50 - 10+91	250TH AVE	169	0	50	0	119	0	4	5	114	114
	40+55 - 51+00	246TH AVE	193	0	45	0	148	0	9	11	137	137
	70+60 - 70+85	243RD AVE	107	0	47	0	60	0	0	0	60	60
	90+50 - 90+70	74TH PL	63	0	38	0	25	0	0	0	25	25
	95+75 - 96+25	236TH AVE	319	0	114	0	205	0	2	2	202	202
Division 7 Subtotal			25,502	0	7,557	666	17,279	0	293	352	16,927	16,927
8	996+50 - 1050+00	STH 50 Stage 5	3,477	0	1,189	28	2,260	0	16	19	2,241	2,241
Division 8 Subtotal			3,477	0	1,189	28	2,260	0	16	19	2,241	2,241
UNDISTRIBUTED	994+20 - 1068+21	STH 50	0	5,235	0	507	0	9,170	0	0	0	5,235
Grand Total			77,744	5,235	20,871	1,800	55,581	9,170	1,853	2,224	53,357	58,592
Total Common Exc			82,979									

PROJECT NO: 1310-04-70	HWY: STH 50	COUNTY: KENOSHA	MISCELLANEOUS QUANTITIES	SHEET:

FILE NAME : _____ PLOT DATE : _____ PLOT BY : _____ PLOT NAME : _____ PLOT SCALE : 1:1

3

3

Notes:

(1) Common Excavation is the sum of the Cut (A) and EBS Excavation (B) columns. Item number 205.0100

(2) Salvaged/Unusable Pavement Material (C) and Excavation for Select Subgrade Improvement are included in Cut (A).

(3) EBS Excavation to be backfilled with Select Crushed Material (F). Item number 312.0110.

(4) EBS Excavation (B) volume is based on 18-Inch excavation of 15% of the roadway reconstruction area. Actual EBS areas to be determined by the engineer using a proof roll.

(5) EBS Excavation Material (B) shall be removed from the site and shall not be used as fill material. EBS Excavation material (B) is not included in the Mass Ordinate (I) but is included in the waste volume (H).

(6) Salvaged/Unusable Pavement Material (C) is included in the Cut (A). This assumes the existing pavement structure is salvaged or wasted by the contractor. The existing pavement tructure is not shown on the cross sections.

(7) Excavation Hauling and Disposal of Petroleum Contaminated Soil (D) is not included in Cut (A). Item Number 205.0501.S

(8) Available Material (E) = Cut (A) - Salvaged/Unusable Pavement Material (C) - Petroleum Contaminated Soil (D).

(9) Expanded Fill (H) = Unexpaned Fill (F)*Expanded Fill Factor (1.2)

(10) The Mass Ordinate (I) + or - Quantity calculated for the Division. Plus quantity indicates a wast volume of material within the Division. Minus indicates a borrow volume of materrial within the Division.

(11) Use 9,170 TON of Select Crusched Material to backfill Undistributed EBS. Select Crushed Material item number 312.0110

(12) Undistributed Excavation, Hauling, and Disposal of Petroleum contaminated Soil is for excavation storm sewer, traffic signal bases in contaminated soil areas and is not included in the mass ordinate.

(13) Additional Select Crushed Material quantity shown elsewhere in plans. See Base Aggregate & Select Crushed Material Miscellaneous Quantity Table.

ALL ITEMS CATEGORY 0010 UNLESS OTHRWISE NOTED

3

BASE AGGREGATE & SELECT CRUSHED MATERIAL

STATION	TO	STATION	LOCATION	305.0110 ** BASE AGGREGATE DENSE 3/4-INCH TON	305.0120 ** BASE AGGREGATE DENSE 1 1/4-INCH TON	312.0110 *** SELECT CRUSHED MATERIAL TON	623.0200 DUST CONTROL SURFACE TREATMENT SY	650.4500 CONSTRUCTION STAKING SUBGRADE LF	650.5000 CONSTRUCTION STAKING BASE LF	650.9920 CONSTRUCTION STAKING SLOPE STAKES LF
993+70	-	997+00	STH 50	30	860	1,930	2,160	660	--	660
997+00	-	1003+00	STH 50	20	2,610	5,220	5,870	1,200	--	1,200
1003+00	-	1009+00	STH 50	--	3,880	8,020	9,020	1,200	--	1,200
1009+00	-	1015+00	STH 50	--	2,410	4,690	5,550	1,200	--	1,200
1015+00	-	1021+00	STH 50	10	2,500	4,720	5,300	770	--	770
1021+00	-	1027+00	STH 50	--	2,500	4,560	5,130	720	--	720
1027+00	-	1033+00	STH 50	--	2,680	4,420	4,970	920	--	920
1033+00	-	1039+00	STH 50	--	2,650	4,750	5,340	1,200	--	1,200
1039+00	-	1045+00	STH 50	10	2,420	4,680	5,260	615	--	615
1045+00	-	1051+00	STH 50	10	2,410	4,830	5,460	950	--	950
1051+00	-	1057+00	STH 50	--	2,130	4,510	5,070	1,200	--	1,200
1057+00	-	1063+00	STH 50	--	2,190	4,840	5,450	1,200	--	1,200
1063+00	-	1068+20	STH 50	30	1,860	3,840	4,320	1,040	--	1,040
3+05	-	4+05	CTH F	20	440	--	580	100	100	100
44+69	-	49+23	STH 83	10	730	840	950	908	908	908
50+74	-	52+95	STH 75	--	500	580	650	442	442	442
10+32	-	10+60	250TH AVE	--	130	--	160	28	28	28
20+30	-	20+58	248TH AVE	--	60	--	70	28	28	28
3+55	-	3+68	WEST SCHOOL DWY	--	400	--	520	13	13	13
39+45	-	39+68	EAST SCHOOL DWY	--	100	--	130	23	23	23
40+32	-	40+55	246TH AVE	--	170	--	230	23	23	23
64+42	-	64+70	244TH AVE	--	100	--	130	28	28	28
70+30	-	70+58	243RD AVE	--	110	--	140	28	28	28
79+40	-	79+69	242ND AVE	--	180	--	240	29	29	29
95+33	-	95+86	236TH AVE	--	180	--	240	53	53	53
			TOTALS	140	34,200	62,430	72,940	14,578	1,703	14,578

NOTE:
** ADDITIONAL QUANTITY SHOWN ELSEWHERE IN PLANS. SEE TEMPORARY ASPHALT MISCELLANEOUS QUANTITY TABLE.
** ADDITIONAL QUANTITY SHOWN ELSEWHERE IN PLANS. SEE EARTHWORK SUMMARY MISCELLANEOUS QUANTITY TABLE.

ALL ITEMS CATEGORY 0010 UNLESS OTHRWISE NOTED

3

3

BASE PATCHING

STATION	TO	STATION	LOCATION	390.0303 BASE PATCHING CONCRETE SY	390.0403 BASE PATCHING CONCRETE SHES SY	REMARKS
44+69	-	48+08	STH 83	100	--	UNDISTRIBUTED
45+87	-	45+99	STH 83 RT	32	--	LOOP DETECTOR
47+17	-	47+29	STH 83 RT	32	--	LOOP DETECTOR
52+65	-	52+77	STH 75 LT	32	--	LOOP DETECTOR
53+95	-	54+07	STH 75 LT	--	32	LOOP DETECTOR
			TOTALS	196	32	

CONCRETE TRUCK APRON

STATION	TO	STATION	LOCATION	405.0100 COLORING CONCRETE WISDOT RED CY	416.0512 CONCRETE TRUCK APRON 12-INCH SY	SPV.0165.01 CONCRETE SIDEWALK 12-INCH SF	*** SPV.0165.02 CONSTRUCTION STAKING SIDEWALK SF
1004+24	-	1004+93	STH 50, 39'-86' LT	25	76	213	213
1006+80	-	1007+46	STH 50, 39'-86' RT	20	59	222	222
			TOTALS	45	135	435	435

NOTE:
*** ADDITIONAL QUANTITIES SHOWN ELSEWHERE IN PLANS. SEE CONCRETE SIDEWALK 5-INCH MISCELLANEOUS QUANTITY TABI

ALL ITEMS CATEGORY 0010 UNLESS OTHRWISE NOTED

3

CONCRETE PAVEMENT

STATION	TO	STATION	LOCATION	415.0095 CONCRETE PAVEMENT 9 1/2-INCH SY	415.0210 CONCRETE PAVEMENT GAPS EACH	415.1095 CONCRETE PAVEMENT HES 9 1/2-INCH SY	650.7000 CONSTRUCTION STAKING CONCRETE PAVEMENT LF
994+20	-	997+00	STH 50	1,430	--	--	560
997+00	-	1003+00	STH 50	3,900	2	--	1,200
1003+00	-	1009+00	STH 50	4,130	2	--	1,200
1009+00	-	1015+00	STH 50	3,740	--	--	1,200
1015+00	-	1021+00	STH 50	3,990	2	--	1,200
1021+00	-	1027+00	STH 50	3,830	1	--	1,200
1027+00	-	1033+00	STH 50	3,620	2	80	1,200
1033+00	-	1039+00	STH 50	3,730	2	--	1,200
1039+00	-	1045+00	STH 50	3,880	2	70	1,200
1045+00	-	1051+00	STH 50	3,890	2	--	1,200
1051+00	-	1057+00	STH 50	3,590	2	--	1,200
1057+00	-	1063+00	STH 50	3,270	1	--	1,200
1063+00	-	1068+20	STH 50	2,980	1	--	1,040
4+04		4+67	CTH F (256TH AVE)	540	--	--	63
48+56	-	49+78	STH 83	1,210	--	510	244
51+13	-	51+79	STH 75	620	--	380	132
10+32	-	10+60	250TH AVE	170	--	--	28
20+30	-	20+58	248TH AVE	200	--	--	28
3+55	-	3+68	WEST SCHOOL DWY	80	--	--	13
39+45	-	39+68	EAST SCHOOL DWY	130	--	--	23
40+32	-	40+55	246TH AVE	120	--	--	23
64+42	-	64+70	244TH AVE	170	--	--	28
70+30	-	70+58	243RD AVE	160	--	--	28
79+40	-	79+69	242ND AVE	170	--	--	29
90+37	-	90+60	74TH PL	120	--	--	23
95+33	-	95+86	236TH AVE	--	--	400	53
			TOTALS	49,670	19	1,440	15,515

ALL ITEMS CATEGORY 0010 UNLESS OTHRWISE NOTED

CONCRETE DRIVEWAY

STATION	TO	STATION	LOCATION	416.0170 CONCRETE DRIVEWAY 7-INCH SY	416.0270 CONCRETE DRIVEWAY HES 7-INCH SY
994+20	-	997+00	STH 50 LT	46	--
997+00	-	1003+00	STH 50 LT & RT	136	--
1003+00	-	1009+00	STH 50 LT & RT	--	--
1009+00	-	1015+00	STH 50 LT & RT	--	--
1015+00	-	1021+00	STH 50 LT & RT	255	--
1021+00	-	1027+00	STH 50 LT	170	--
1027+00	-	1033+00	STH 50 LT & RT	157	25
1033+00	-	1039+00	STH 50 LT & RT	257	--
1039+00	-	1045+00	STH 50 LT & RT	164	19
1045+00	-	1051+00	STH 50 LT & RT	65	--
1051+00	-	1057+00	STH 50 LT & RT	70	--
1057+00	-	1063+00	STH 50 LT & RT	19	--
1063+00	-	1068+20	STH 50 LT & RT	65	--
995+75	-	1068+04	UNDISTRIBUTED	--	315
			TOTAL	1,404	359

DRILLED TIE & DOWEL BARS

STATION	TO	STATION	LOCATION	416.0610 DRILLED TIE BARS EACH	416.0620 DRILLED DOWEL BARS EACH	REMARKS
994+20	-	994+20	STH 50 WB LANE	4	16	
994+20	-	994+20	STH 50 EB LANE	4	16	
1002+18	-	1002+66	STH 50 LT & RT	8	--	
1004+25	-	1004+93	STH 50 RT	4	--	
1013+05	-	1013+65	STH 50 LT	8	--	
1015+39	-	1015+80	STH 50 LT	4	--	
1068+21	-	1068+71	STH 50 LT & RT	36	48	
45+87	-	45+99	STH 83 RT	--	16	BASE PATCHING
46+19	-	47+44	STH 83 10' LT	45	--	TIE NEW C/G TO CONC BASE
47+17	-	47+29	STH 83 RT	--	16	BASE PATCHING
52+64	-	52+76	STH 75 LT	4	16	BASE PATCHING
53+94	-	54+06	STH 75 LT	8	16	BASE PATCHING
52+28	-	53+32	STH 75 LT	30	--	TIE NEW C/G TO CONC BASE
18+50	-	18+50	W HIGH SCH DWY	4	--	
40+68	-	48+08	STH 83-UNDISTRIBUTED	51	51	VARIOUS BASE PATCHING
			TOTALS	210	195	

CONCRETE SURFACE DRAINS

STATION	TO	STATION	LOCATION	416.1010 CY
986+34	-	986+52	STH 50 RT	2
987+75	-	987+92	STH 50 LT	2
1031+29	-	1031+37	STH 50 LT	1
3+98	-	4+10	CTH F, 24' RT	2
			TOTAL	7

ALL ITEMS CATEGORY 0010 UNLESS OTHRWISE NOTED

3

HMA PAVEMENT

STATION	TO	STATION	LOCATION	450.4000 HMA COLD WEATHER PAVING TON	455.0605 TACK COAT GAL	460.6223 HMA PAVEMENT 3 MT 58-28 S TON	460.6224 HMA PAVEMENT 4 MT 58-28 S TON	495.1000.S COLD PATCH TON
3+04	-	4+04	CTH F	--	33	97	56	--
44+69	-	48+56	STH 83	--	339	101	500	--
51+68	-	53+32	STH 75	--	26	33	38	--
10+60	-	10+90	250TH AVE	--	10	28	16	--
18+50	-	19+65	W HIGH SCHOOL DWY	--	24	71	41	--
20+58	-	20+68	248TH AVE	--	5	12	7	--
39+25	-	39+45	E HIGH SCHOOL DWY	--	8	22	13	--
40+55	-	41+00	246TH AVE	--	13	37	21	--
64+05	-	64+42	244TH AVE	--	8	22	13	--
70+58	-	70+85	243RD AVE	--	8	24	14	--
78+95	-	79+40	242ND AVE	--	15	44	26	--
90+60	-	90+70	74TH PL	--	3	6	4	--
95+86	-	96+25	236TH AVE	--	14	41	23	--
			UNDISTRIBUTED	300	--	--	--	50
			TOTALS	300	506	538	772	50

TEMPORARY ASPHALT

***

STATION	TO	STATION	LOCATION	305.0120 BASE AGGREGATE DENSE 1 1/4-INCH TON	465.0115 ASPHALTIC SURFACE DETOURS TON	465.0125 ASPHALTIC SURFACE TEMPORARY TON	465.0310 ASPHALTIC CURB LF
STAGE 1A:							
984+00	-	990+00	STH 50	580	--	221	240
1071+38	-	1077+85	STH 50	1300	--	500	--
STAGE 1B:							
996+38	-	1010+85	STH 50	600	--	230	--
1024+16	-	1025+21	STH 50	90	--	32	110
1032+98	-	1036+01	STH 50	110	--	42	--
1048+62	-	1050+96	STH 50	60	--	20	--
1057+82	-	1064+47	STH 50	350	--	134	--
STAGE 2A:			STH 50		--	--	--
998+55	-	1020+29	STH 60	130	--	49	10
1020+21	-	1062+54	STH 50	330	--	125	63
STAGE 2B:							
49+05	-	49+51	STH 83	50	20	17	--
STAGE 3:							
996+38	-	1020+67	STH 50	880	20	296	--
STAGE 4A:					--		--
1003+20	-	1005+14	STH 50	130	--	49	--
50+52	-	50+90	STH 75	50	--	17	--
STAGE 4B:							--
1025+25	-	1063+25	STH 50	900	20	344	--
							--
			TOTALS	5560	60	2076	423

ASPHALTIC SURFACE DRIVEWAYS AND FIELD ENTRANCES

STATION	TO	STATION	LOCATION	465.0120 ASPHALTIC SURFACE DRIVEWAYS AND FIELD ENTRANCES TON
994+20	-	997+00	STH 50 LT	4
997+00	-	1003+00	STH 50 LT & RT	30
1003+00	-	1009+00	STH 50 RT	43
1009+00	-	1015+00	STH 50	21
1015+00	-	1021+00	STH 50 LT & RT	45
1021+00	-	1027+00	STH 50 LT & RT	88
1027+00	-	1033+00	STH 50 LT	283
1033+00	-	1039+00	STH 50 LT & RT	113
1039+00	-	1045+00	STH 50 LT & RT	110
1045+00	-	1051+00	STH 50 LT & RT	48
1051+00	-	1057+00	STH 50 LT & RT	62
1057+00	-	1063+00	STH 50	--
1063+00	-	1068+70	STH 50 LT	22
			TOTAL	869

ALL ITEMS CATEGORY 0010 UNLESS OTHRWISE NOTED

3

CONCRETE CURB & GUTTER

STATION	TO	STATION	LOCATION	601.0105 CONCRTETE CURB TYPE A LF	601.0110 CONCRETE CURB TYPE D LF	601.0405 CONCRETE CURB & GUTTER 18-INCH TYPE A LF	601.0407 CONCRETE CURB & GUTTER 18-INCH TYPE D LF	601.0409 CONCRETE CURB & GUTTER 30-INCH TYPE A LF	601.0411 CONCRETE CURB & GUTTER 30-INCH TYPE D LF	601.0580 CONCRETE CURB & GUTTER 4-INCH SLOPED 36-INCH TYPE R LF	601.0600 CONCRETE CURB PEDESTRIAN LF	*** 650.5500 CONSTRUCTION STAKING CURB GUTTER AND CURB & GUTTER LF
986+50	-	988+30	STH 50	--	--	--	--	315	--	--	--	315
994+20	-	997+00	STH 50	--	--	--	--	560	--	--	--	560
997+00	-	1003+00	STH 50	--	--	--	--	1345	--	--	--	1,345
1003+00	-	1009+00	STH 50	--	--	--	90	1215	--	--	200	1,505
1009+00	-	1015+00	STH 50	--	--	--	--	1120	70	--	165	1,355
1015+00	-	1021+00	STH 50	--	--	--	--	370	--	--	--	370
1021+00	-	1027+00	STH 50	15	45	--	45	270	275	--	115	765
1027+00	-	1033+00	STH 50	--	130	320	--	90	--	--	15	555
1033+00	-	1039+00	STH 50	--	--	955	--	80	145	--	190	1,370
1039+00	-	1045+00	STH 50	--	--	--	--	110	50	--	15	175
1045+00	-	1051+00	STH 50	--	--	675	--	110	--	--	90	875
1051+00	-	1057+00	STH 50	--	--	505	--	520	--	--	--	1,025
1057+00	-	1063+00	STH 50	--	--	--	--	1170	80	--	--	1,250
1063+00	-	1068+70	STH 50	--	--	--	--	880	--	--	--	880
1071+38	-	1071+70	STH 50, RT	--	--	--	--	45	--	--	--	45
3+05	-	4+05	CTH F, RT	--	--	--	--	--	95	--	--	95
44+69	-	49+23	STH 83	--	--	--	--	485	760	65	--	1,310
50+74	-	52+95	STH 75	--	--	--	--	435	225	75	--	735
			TOTALS	15	175	2,455	135	9,120	1,700	140	790	14,530

NOTE:
*** ADDITIONAL QUANTITY SHOWN ELSEWHERE IN PLANS. SEE CONCRETE CG SPECIALS MISCELLANEOUS QUANTITY TABLE.

3

CONCRETE CURB & GUTTER SPECIALS

STATION	TO	STATION	LOCATION	SPV.0090.01 CONRETE CURB & GUTTER 12-INCH TYPE D LF	SPV.0090.02 CONCRETE CURB & GUTTER 12-INCH PAN 24-INCH TYPE D LF	SPV.0090.03 CONCRETE CURB & GUTTER 18-INCH PAN 24-INCH TYPE D LF	SPV.0090.04 CONCRETE CURB & GUTTER 66-INCH TYPE A LF	SPV.0090.05 CONCRETE CURB & GUTTER 4-INCH SLOPED 72-INCH TYPE A LF	SPV.0090.06 CONCRETE CURB & GUTTER 9-INCH PAN 18-INCH TYPE D LF	SPV.0090.07 PARKING LOT CURB LF	SPV.0090.12 CONCRETE CURB & GUTTER 66-INCH TYPE A HES LF	*** 650.5500 CONSTRUCTION STAKING CURB GUTTER AND CURB & GUTTER LF
994+20	-	997+00	STH 50	--	--	--	560	--	--	--	--	560
997+00	-	1003+00	STH 50	--	--	35	865	--	--	--	--	900
1003+00	-	1009+00	STH 50	--	--	--	525	85	--	40	--	650
1009+00	-	1015+00	STH 50	--	--	--	1,095	--	--	--	--	1,095
1015+00	-	1021+00	STH 50	--	--	--	1,130	--	35	--	--	1,165
1021+00	-	1027+00	STH 50	--	--	--	1,030	--	--	--	--	1,030
1027+00	-	1033+00	STH 50	--	--	--	1,170	--	--	145	30	1,315
1033+00	-	1039+00	STH 50	5	10	--	1,090	--	--	--	--	1,105
1039+00	-	1045+00	STH 50	--	--	--	1,040	--	--	--	30	1,040
1045+00	-	1051+00	STH 50	--	--	--	1,075	--	--	--	--	1,075
1051+00	-	1057+00	STH 50	--	--	--	1,200	--	--	--	--	1,200
1057+00	-	1063+00	STH 50	--	--	--	1,090	--	--	--	--	1,090
1063+00	-	1068+20	STH 50	--	--	--	1,150	--	--	--	--	1,150
			TOTALS	5	10	35	13,020	85	35	185	60	13,375

NOTE:
*** ADDITIONAL QUANTITY SHOWN ELSEWHERE IN PLANS. SEE CONCRETE CURB & GUTTER MISCELLANEOUS QUANTITY TABLE.

ALL ITEMS CATEGORY 0010 UNLESS OTHRWISE NOTED

3

RAILING PIPE

STATION	TO	STATION	LOCATION	513.2001 LF	REMARKS
1004+85	-	1005+24	STH 50, 55' RT	52	INSTALL ON PARKING LOT & PEDESTRIAN CURBS
1004+91	-	1005+29	STH 50, 61' RT	40	INSTALL BEHIND PEDESTRIAN CURB
1031+29	-	1032+72	STH 50, 45' LT	143	INSTALL ON PARKING LOT CURB
1037+40	-	1038+00	STH 50, 45' LT	60	INSTALL ON PARKING LOT CURB
1042+10	-	1042+10	STH 50, 45' RT	4	INSTALL ON WEST SIDE OF CONCRETE STEPS
1042+15	-	1042+15	STH 50, 45' RT	4	INSTALL ON EAST SIDE OF CONCRETE STEPS
1044+04	-	1044+04	STH 50, 45' RT	4	INSTALL ON WEST SIDE OF CONCRETE STEPS
			TOTAL	307	

CLEANING CULVERT PIPES

STATION	LOCATION	520.8700 EACH	REMARKS
1009+60	STH 50	1	EXISTING 36" CPRC
1059+40	STH 50	1	EXISTING 36" CPRC
	TOTAL	2	

3

RESET CULVERT PIPE

STATION	TO	STATION	LOCATION	524.0136 CULVERT PIPE SALVAGED 36-INCH LF	524.0636 APRON ENDWALLS FOR CULVERT PIPE SALVAGED 36-INCH EACH
1059+32	-	1059+47	STH 50 LT	24	1
			TOTAL 0010	24	1

CONCRETE SIDEWALK 5-INCH

STATION	TO	STATION	LOCATION	602.0410 CONCRETE SIDEWALK 5-INCH SF	*** SPV.0165.02 CONSTRUCTION STAKING SIDEWALK SF
994+20	-	997+00	STH 50 LT & RT	10	10
997+00	-	1003+00	STH 50 LT & RT	5,810	5,810
1003+00	-	1009+00	STH 50 LT & RT	7,040	7,040
1009+00	-	1015+00	STH 50 LT & RT	5,000	5,000
1015+00	-	1021+00	STH 50 LT & RT	5,830	5,830
1021+00	-	1027+00	STH 50 LT & RT	6,110	6,110
1027+00	-	1033+00	STH 50 LT & RT	5,690	5,690
1033+00	-	1039+00	STH 50 LT & RT	8,260	8,260
1039+00	-	1045+00	STH 50 LT & RT	2,300	2,300
1045+00	-	1051+00	STH 50 LT & RT	4,610	4,610
1051+00	-	1057+00	STH 50 LT & RT	2,170	2,170
1057+00	-	1063+00	STH 50 LT & RT	2,750	2,750
1063+00	-	1068+20	STH 50 LT & RT	2,650	2,650
44+69	-	49+22	STH 83 MEDIAN	2,510	2,510
50+72	-	52+79	STH 75 MEDIAN	1,120	1,120
			TOTALS	61,860	61,860

NOTE:
*** ADDITIONAL QUANTITIES SHOWN ELSEWHERE IN PLANS.
SEE CONCRETE TRUCK APRON MISCELLANEOUS QUANTITY TABLE.

CONCRETE STEPS

STATION	TO	STATION	LOCATION	602.1500 SF
1042+10	-	1042+15	STH 55, 45' RT	19
1044+04	-	1044+08	STH 55, 45' RT	16
			TOTAL	35

CONCRETE SAFETY ISLANDS

STATION	TO	STATION	LOCATION	602.2400 SF
1005+08	-	1005+29	STH 50, 36' LT	500
1006+40	-	1006+63	STH 50, 36' RT	507
1025+31	-	1025+61	STH 50, 36' RT	408
			TOTAL	1,415

ALL ITEMS CATEGORY 0010 UNLESS OTHRWISE NOTED

3

CURB RAMPS

STATION	TO	STATION	LOCATION	602.0505 CURB RAMP DETECTABLE WARNING FIELD YELLOW SF	602.0605 CURB RAMP DETECTABLE WARNING FIELD RADIAL YELLOW SF	650.9000 CONSTRUCTION STAKING CURB RAMPS EACH
998+62	-	999+88	CTH F INTERSECTION	20	37.09	4
1004+67	-	1006+99	STH 83/75 INTERSECTION	110	42.20	7
1012+81	-	1013+81	STH 50 LT, STRIP MALL DWY	20	36.66	4
1016+88	-	1017+55	STH 50 LT, 250TH AVE	20	--	2
1025+03	-	1026+17	248TH AVE INTERSECTION	80	39.08	10
1033+73	-	1034+67	246TH AVE INTERSECTION	80	--	8
1039+75	-	1040+42	STH 50 RT, 244TH AVE	20	--	2
1042+83	-	1043+48	STH 50 LT, 243RD AVE	20	--	2
1046+62	-	1047+76	242ND AVE INTERSECTION	50	16.39	6
1061+75	-	1062+84	STH 50 LT, 236TH AVE	--	39.40	2
			TOTALS	420	211	47

RIPRAP & GEOTEXTILE

STATION	TO	STATION	LOCATION	606.0200 RIPRAP MEDIUM CY	645.0120 GEOTEXTILE TYPE HR SY	REMARKS
STAGE 1B:						
1007+62	-	1008+48	80'-300' RT	217	433	OPEN CHANNEL INSIDE DETENTION POND
1009+08	-	1009+55	85'-100' RT	41	81	EMERGENCY SPILLWAY FROM POND
1009+52	-	1009+65	100'-115' RT	6	11	PIPE DISCHARGE FROM POND
STAGE 2A-2B:						
994+50	-	994+50	71' RT	3	5	12" STORM SEWER PIPE DISCHARGE
997+71	-	997+71	71' RT	3	5	12" STORM SEWER PIPE DISCHARGE
1008+21	-	1008+21	71' RT	3	5	12" STORM SEWER PIPE DISCHARGE
1011+26	-	1011+26	84' RT	3	6	18" STORM SEWER PIPE DISCHARGE
1012+87	-	1012+87	72' RT	3	6	18" STORM SEWER PIPE DISCHARGE
1053+11	-	1053+11	67' RT	3	6	18" STORM SEWER PIPE DISCHARGE
1058+98	-	1058+98	71' RT	4	7	24" STORM SEWER PIPE DISCHARGE
1060+58	-	1060+58	65' RT	4	7	14X23" STORM SEWER PIPE DISCHARGE
1062+88	-	1062+88	71' RT	4	7	24" STORM SEWER PIPE DISCHARGE
1065+12	-	1065+12	72' RT	3	6	18" STORM SEWER PIPE DISCHARGE
STAGE 4A-4C:						
1006+70	-	1006+70	67' LT	4	7	14X23" STORM SEWER PIPE DISCHARGE
1011+04	-	1011+04	76' LT	3	5	12" STORM SEWER PIPE DISCHARGE
			TOTALS	304	597	

ALL ITEMS CATEGORY 0010 UNLESS OTHRWISE NOTED

3

TEMPORARY INLET COVERS

***

STAGE	STATION	LOCATION	204.9060.S.04 REMOVING INLET COVERS EACH	611.0651 INLET COVERS TYPE S EACH	611.8115 ADJUSTING INLET COVERS EACH	611.8120.S COVER PLATES TEMPORARY EACH	REMARKS
STAGE 1B	997+71	STH 50, 9' LT	1	1	1	--	INSTALL ON EXISTING INLET
STAGE 1B	999+96	STH 50, 9' RT	1	1	1	--	INSTALL ON EXISTING INLET
STAGE 1B	999+97	STH 50, 1' RT	1	1	1	--	INSTALL ON EXISTING INLET
STAGE 1B	1005+25	STH 50, 1' LT	1	1	1	--	INSTALL ON EXISTING INLET
STAGE 1B	1005+25	STH 50, 9' LT	1	1	1	--	INSTALL ON EXISTING INLET
STAGE 1B	1010+72	STH 50, 9' LT	1	1	1	--	INSTALL ON EXISTING INLET
STAGE 1B	1058+22	STH 50, 7' LT	1	1	1	--	INSTALL ON EXISTING INLET
STAGE 1B	1060+62	STH 50, R/L	1	1	1	--	INSTALL ON EXISTING INLET
STAGE 1B	1060+61	STH 50, 9' LT	1	1	1	--	INSTALL ON EXISTING INLET
STAGE 1B	1062+60	STH 50, 3' LT	1	1	1	--	INSTALL ON EXISTING INLET
STAGE 2A-2B	977+71	STH 50, 8.5' RT	--	--	--	1	INSTALL ON PROPOSED INLET
STAGE 2A-2B	999+76	STH 50, 2' RT	--	--	--	1	INSTALL ON PROPOSED INLET
STAGE 2A-2B	1008+21	STH 50, 8.5' RT	--	--	--	1	INSTALL ON PROPOSED INLET
STAGE 2A-2B	1013+71	STH 50 R/L	--	--	--	1	INSTALL ON PROPOSED INLET
STAGE 2A-2B	1031+45	STH 50, 7' RT	--	--	--	1	INSTALL ON PROPOSED INLET
STAGE 2A-2B	1032+61	STH 50, 2' LT	1	1	--	--	INSTALL ON PROPOSED INLET
STAGE 2A-2B	1034+81	STH 50, 2' RT	1	1	--	--	INSTALL ON PROPOSED INLET
STAGE 2A-2B	1034+81	STH 50, 8' RT	1	1	--	--	INSTALL ON PROPOSED INLET
STAGE 2A-2B	1047+65	STH 50, 8' RT	--	--	--	1	INSTALL ON PROPOSED INLET
STAGE 2B	1006+57	STH 50, 64' RT	1	1	--	--	INSTALL ON PROPOSED INLET
STAGE 2B	1006+62	STH 50, 44' RT	1	1	--	--	INSTALL ON PROPOSED INLET
STAGE 3	977+71	STH 50, 8.5' LT	--	--	--	1	INSTALL ON PROPOSED INLET
STAGE 3	977+71	STH 50, 8.5' RT	1	1	--	--	INSTALL ON PROPOSED INLET
STAGE 3	999+76	STH 50, 2' RT	1	1	--	--	INSTALL ON PROPOSED INLET
STAGE 3	999+76	STH 50, 8.5' RT	1	1	--	--	INSTALL ON PROPOSED INLET
STAGE 3	1005+06	STH 50, 1.5' LT	1	1	--	--	INSTALL ON PROPOSED INLET
STAGE 3	999+76	STH 50, 8.5' RT	1	1	--	--	INSTALL ON PROPOSED INLET
STAGE 3	1005+06	STH 50, 1.5' LT	1	1	--	--	INSTALL ON PROPOSED INLET
STAGE 3	1005+06	STH 50, 9' LT	1	1	--	--	INSTALL ON PROPOSED INLET
STAGE 3	1007+50	STH 50, 1.5' LT	1	1	--	--	INSTALL ON PROPOSED INLET
STAGE 3	1008+21	STH 50, 1.5' LT	1	1	--	--	INSTALL ON PROPOSED INLET
STAGE 3	1008+21	STH 50, 8.5' RT	1	1	--	--	INSTALL ON PROPOSED INLET
STAGE 3	1010+65	STH 50, 1' RT	--	--	--	1	INSTALL ON PROPOSED INLET
STAGE 3	1010+75	STH 50, 0.5' LT	--	--	--	1	INSTALL ON PROPOSED INLET
STAGE 3	1011+21	STAH 50, 6' LT	--	--	--	1	INSTALL ON PROPOSED INLET
STAGE 4A	50+86	STH 75, 38' LT	1	1	--	--	INSTALL ON PROPOSED INLET
STAGE 4B	1031+45	STH 50, 7' RT	1	1	--	--	INSTALL ON PROPOSED INLET
STAGE 4B	1047+65	STH 50, 2' RT	1	1	--	--	INSTALL ON PROPOSED INLET
STAGE 4B	1047+65	STH 50, 8' RT	1	1	--	--	INSTALL ON PROPOSED INLET
STAGE 4B	1048+25	STH 50, 2' RT	1	1	--	--	INSTALL ON PROPOSED INLET
STAGE 4B	1052+22	STH 50, 2' LT	--	--	--	1	INSTALL ON PROPOSED INLET
STAGE 4B	1052+22	STH 50, 8' LT	--	--	--	1	INSTALL ON PROPOSED INLET
STAGE 4B	1058+22	STH 50, 7.5' LT	--	--	--	1	INSTALL ON PROPOSED INLET
STAGE 4B	1060+48	STH 50, 8.5' LT	--	--	--	1	INSTALL ON PROPOSED INLET
STAGE 4B	1060+58	STH 50, 8.5' LT	--	--	--	1	INSTALL ON PROPOSED INLET
STAGE 4B	1062+60	STH 50, 3' LT	1	1	--	--	INSTALL ON PROPOSED INLET
STAGE 4B	1062+60	STH 50, 4' RT	1	1	--	--	INSTALL ON PROPOSED INLET
STAGE 4B	1062+88	STH 50, 8' RT	1	1	--	--	INSTALL ON PROPOSED INLET
		TOTALS	31	31	10	15	

NOTE:
*** ADDITIONAL QUANTITY SHOWN ELSEWHERE IN PLANS. SEE STORM SEWER MANHOLE AND INLET COVERS & CROSSOVER STORM SEWER MISCELLANEOUS QUANTITY TABLES

ALL ITEMS CATEGORY 0010 UNLESS OTHRWISE NOTED

3

PIPE UNDERDRAIN

STATION	TO	STATION	LOCATION	310.0110 BASE AGGREGATE OPEN-GRADED TON	612.0106 PIPE UNDERDRAIN 6-INCH LF	612.0206 PIPE UNDERDRAIN UNPERFORATED 6-INCH LF	612.0406 PIPE UNDERDRAIN WRAPPED 6-INCH LF	645.0111 GEOTEXTILE TYPE DF SCHEDULE A SY
994+20	-	997+00	STH 50	85	1,120	--	--	630
997+00	-	1003+00	STH 50	180	2,410	--	--	1,340
1003+00	-	1009+00	STH 50	135	1,820	--	--	1,020
1009+00	-	1015+00	STH 50	180	2,400	--	--	1,340
1015+00	-	1021+00	STH 50	115	1,520	--	--	850
1021+00	-	1027+00	STH 50	105	1,420	--	--	790
1027+00	-	1033+00	STH 50	120	1,610	--	--	900
1033+00	-	1039+00	STH 50	160	2,160	15	--	1,200
1039+00	-	1045+00	STH 50	90	1,200	--	--	670
1045+00	-	1051+00	STH 50	140	1,880	--	--	1,050
1051+00	-	1057+00	STH 50	165	2,220	--	--	1,240
1057+00	-	1063+00	STH 50	170	2,250	--	--	1,250
1063+00	-	1068+20	STH 50	150	2,030	--	--	1,230
45+00	-	49+65	STH 83	80	1,020	--	--	570
50+34	-	52+95	STH 75	40	510	15	10	290
			TOTALS	1,915	25,570	30	10	14,370

INSULATION BOARD POLYSTYRENE (INCH) 2-INCH

STATION	TO	STATION	LOCATION	612.0902.S SY	REMARKS
1022+25	-	1023+50	STH 50, 13' RT	2	SEE UTILITY PLANS
			TOTAL 0010	2	

FENCE CHAIN LINK

STATION	TO	STATION	LOCATION	616.0208 FENCE CHAIN LINK 8-FT LF	616.0329.01 GATES CHAIN LINK (WIDTH) 4-FT EACH
1052+23	-	1052+39	STH 50, 49' LT	16	--
1052+59	-	1052+79	STH 50, 49' LT	20	2
1052+99	-	1053+15	STH 50, 49' LT	16	--
1059+30	-	1059+50	STH 50, 50' LT	20	--
			TOTALS	72	2

CONCRETE MEDIAN SLOPED NOSE

STATION	TO	STATION	LOCATION	620.0300 SF
988+22	-	988+27	STH 50, R/L	23
998+72	-	998+77	STH 50, R/L	18
999+70	-	999+75	STH 50, 5' RT	24
1005+07	-	1005+12	STH 50, 5' LT	26
1006+43	-	1006+48	STH 50, 5' RT	26
1013+03	-	1013+08	STH 50, 5' LT	26
1013+73	-	1013+78	STH 50, R/L	54
1016+56	-	1016+61	STH 50, 5' LT	26
1025+89	-	1025+94	STH 50, 2' LT	27
1027+43	-	1027+48	STH 50, R/L	39
1031+37	-	1031+42	STH 50, R/L	49
1033+63	-	1033+68	STH 50, 5' LT	26
1034+75	-	1034+80	STH 50, 5' RT	26
1038+93	-	1038+98	STH 50, R/L	58
1047+58	-	1047+63	STH 50, 5' RT	29
1052+22	-	1052+27	STH 50, 5' LT	26
1053+08	-	1053+12	STH 50, 5' RT	26
1061+84	-	1061+89	STH 50, 5' LT	26
1062+56	-	1062+61	STH 50, R/L	23
1064+44	-	1064+49	STH 50, 5' LT	26
1065+12	-	1065+17	STH 50, R/L	54
1068+09	-	1068+14	STH 50, R/L	19
49+20	-	49+25	STH 83, 5' LT	26
50+69	-	50+74	STH 75, 5' RT	26
52+95	-	53+00	STH 75, 5' LT	26
			TOTAL	755

WATER

STATION	TO	STATION	LOCATION	624.0100 MGAL	REMARKS
994+20	-	1068+20	PROJECT LIMITS	170	EXCAVATION COMMON
994+20	-	1068+20	PROJECT LIMITS	800	BASE AGG DENSE 1 1/4-INCH
994+20	-	1068+20	PROJECT LIMITS	10	BASE AGG DENSE 3/4-INCH
994+20	-	1068+20	UNDISTRIBUTED	150	
			TOTAL 0010	1130	

ALL ITEMS CATEGORY 0010 UNLESS OTHRWISE NOTED

PROJECT NO: 1310-04-70	HWY: STH 50	COUNTY: KENOSHA	MISCELLANEOUS QUANTITIES	SHEET:

FILE NAME : _____ PLOT DATE : _____ PLOT BY : _____ PLOT NAME : _____ PLOT SCALE : 1:1

RESTORATION ITEMS

STATION	TO	STATION	LOCATION	625.0100 TOPSOIL SY	625.0500 SALVAGED TOPSOIL SY	627.0200 MULCHING SY	628.2004 EROSION MAT CLASS I TYPE B SY	628.2027 EROSION MAT CLASS II TYPE C SY	628.6510 SOIL STABILIZER TYPE B ACRE	629.0210 FERTILIZER TYPE B CWT	630.0110 SEEDING MIXTURE NO. 10 LB(1)	630.0130 SEEDING MIXTURE NO. 30 LB(2)	630.0200 SEEDING TEMPORARY LB(3)	630.0300 SEEDING BORROW PIT LB(4)	630.0500 SEED WATER MGAL	631.0300 SOD WATER MGAL	631.1000 SOD LAWN SY
STAGE 1A:																	
984+25	-	990+15	WEST CROSSOVER	388	--	--	388	--	--	0.5	--	--	11	--	9	--	--
1071+39	-	1078+14	EAST CROSSOVER	602	--	--	602	--	--	0.5	--	--	17	--	14	--	--
STAGE 1B:																	
994+00	-	1000+00	STH 50 MEDIAN	444	--	--	444	--	--	0.5	--	--	12	--	10	--	--
1000+00	-	1015+00	STH 50 MEDIAN	425	--	--	425	--	--	0.5	--	--	12	--	10	--	--
1015+00	-	1030+00	STH 50 MEDIAN	--	--	--	--	--	--	--	--	--	--	--	--	--	--
1030+00	-	1045+00	STH 50 MEDIAN	81	--	--	81	--	--	0.5	--	--	3	--	2	--	--
1045+00	-	1060+00	STH 50 MEDIAN	512	--	--	512	--	--	0.5	--	--	14	--	12	--	--
1060+00	-	1068+20	STH 50 MEDIAN	224	--	--	224	--	--	0.5	--	--	7	--	6	--	--
STAGES 2A-2B:																	
994+00	-	1000+00	STH 50 RT	2,829	--	--	2,829	--	--	2.0	--	51	--	--	64	--	--
1000+00	-	1015+00	STH 50 RT	5,654	--	--	3,419	1,348	--	2.5	19	62	--	--	77	20	889
1015+00	-	1030+00	STH 50 RT	2,152	--	--	--	--	--	1.5	--	--	--	--	--	49	2,152
1030+00	-	1045+00	STH 50 RT	543	--	--	--	--	--	0.5	--	--	--	--	--	13	543
1045+00	-	1060+00	STH 50 RT	1,447	--	--	--	--	--	1.0	--	--	--	--	--	33	1,447
1060+00	-	1068+70	STH 50 RT	1,382	--	--	--	--	--	1.0	--	--	--	--	--	31	1,382
STAGE 4A:																	
1000+00	-	1015+00	STH 50 LT	345	--	--	--	--	--	0.5	--	--	--	--	--	8	345
STAGES 4B-4C:																	
994+00	-	1000+00	STH 50 LT	700	--	--	--	--	--	0.5	--	--	--	--	--	16	700
1000+00	-	1015+00	STH 50 LT	542	--	--	--	--	--	0.5	--	--	--	--	--	13	542
1015+00	-	1030+00	STH 50 LT	1,026	--	--	--	--	--	0.0	--	--	--	--	--	23	1,026
1030+00	-	1045+00	STH 50 LT	970	--	--	--	--	--	0.0	--	--	--	--	--	22	970
1045+00	-	1060+00	STH 50 LT	1,973	--	--	1,010	--	--	0.5	--	19	--	--	23	3	1,973
1060+00	-	1068+70	STH 50 LT	7,693	--	--	1,113	--	--	0.5	--	21	--	--	25	17	--
STAGE 5:																	
984+25	-	990+15	WEST CROSSOVER	1,060	--	--	1,060	--	--	1.0	--	--	--	--	24	--	--
1071+39	-	1078+14	EAST CROSSOVER	2,424	--	--	2,424	--	--	2.0	--	--	--	--	55	--	--
ALL STAGES:																	
994+20	-	1068+70	WASTE SITE	--	9,680	9,680	--	--	--	6.5	--	--	--	131	55	--	--
			UNDISTRIBUTED	8,354	--	--	4,177	--	1.00	6.0	--	39	19	33	94	94	4,177
			TOTALS	41,770	9,680	9,680	18,708	1,348	1.00	30.0	19	192	95	164	480	342	16,146

NOTES:
(1) TO BE USED AT THE BOTTOM OF THE DRY DETENTION POND.
(2) TO BE USED AT ALL FINAL RESTORATION AREAS WHERE SOD LAWN IS NOT REQUIRED.
(3) AS DIRECTED BY THE FILED ENGINEER AND DETAILS IN THE TEMPORARY WORK.
(4) TO BE USED AT WASTE SITE.

ALL ITEMS CATEGORY 0010 UNLESS OTHRWISE NOTED

3

3

SILT FENCE

STATION	TO	STATION	LOCATION	628.1504 SILT FENCE LF	628.1520 SILT FENCE MAINTENANCE LF	628.7570 ROCK BAGS EACH	REMARKS
STAGE 1A:							
988+97	-	990+38	4'-5' RT	141	71	--	
STAGE 2A:							
999+56	-	1002+15	58'-197' RT	331	166	--	
1007+57	-	1008+03	253'-448' RT	154	77	--	
1011+11	-	1013+61	53'-82' RT	287	144	--	
1020+36	-	1025+59	56'-164' RT	608	304	54	SEE NOTE 1
1048+83	-	1052+29	54'-56' RT	347	174	--	
1052+49	-	1055+44	47'-75' RT	225	113	18	SEE NOTE 1
1057+25	-	1058+73	47'-72' RT	170	85	--	
1058+84	-	1062+33	49'-69' RT	356	178	18	SEE NOTE 1
1062+45	-	1068+72	45'-68' RT	663	332	36	SEE NOTE 1
STAGE 4A:							
1006+11	-	1007+50	56'-82' LT	155	78	--	
STAGE 4C:							
994+10	-	995+50	49' LT	140	70	--	
999+62	-	1002+18	55'-57' LT	256	128	--	
1010+83	-	1011+27	71' LT	44	22	--	
1017+67	-	1018+62	54'-65' LT	96	48	--	
1032+97	-	1033+90	63'-100' LT	125	63	--	
1036+38	-	1039+98	53'-72' LT	227	114	--	SKIP DWY
1043+42	-	1044+57	47'-73' LT	138	69	--	
			TOTALS	4463	2236	126	

NOTE 1:
ROCK BAGS USE FOR SILT FENCE RELIEF POINT

EROSION CONTROL MOBILIZATION

STATION	TO	STATION	LOCATION	628.1905 MOBILIZATIONS EROSION CONTROL EACH	628.1910 MOBILIZATIONS EMERGENCY EROSION CONTROL EACH
STAGES 1A & 1B:					
982+00	-	1078+50	STH 50 PROJECT LIMITS	2	--
STAGES 2A & 2B:					
994+20	-	1068+20	STH 50 PROJECT LIMITS	2	1
STAGE 3:					
994+20	-	1068+20	STH 50 PROJECT LIMITS	1	1
STAGES 4A & 4B:					
994+20	-	1068+20	STH 50 PROJECT LIMITS	2	1
STAGE 4C:					1
994+20	-	1068+20	STH 50 PROJECT LIMITS	1	1
STAGE 5:					
982+00	-	1078+50	STH 50 PROJECT LIMITS	1	--
			TOTALS	9	5

ALL ITEMS CATEGORY 0010 UNLESS OTHRWISE NOTED

3

TEMPORARY DITCH CHECKS

STATION	LOCATION	628.7504 LF
STAGE 2A:		
994+00	STH 50, 60'-80' RT	20
996+10	STH 50, 60'-80' RT	20
998+15	STH 50, 65'-85' RT	20
998+75	STH 50, 95'-115' RT	20
STAGE 4C:		
1034+00	STH 50, 165' LT	20
1034+50	STH 50, 150' LT	20
1063+25	STH 50, 50'-70' LT	20
1066+75	STH 50, 50'-70' LT	20
1067+25	STH 50, 50'-70' LT	20
	TOTAL	180

CULVERT PIPE CHECKS

STATION	LOCATION	628.7555 EACH	REMARKS
STAGE 2A:			
3+76	CTH F, 51' RT	1	12-INCH EXISTING SS PIPE
STAGE 4B:			
1009+50	STH 50, 90' LT	7	36-INCH EXISTING CULVERT PIPE
1059+39	STH 50, 64' LT	7	36-INCH EXISTING CULVERT PIPE
1066+60	STH 50, 59' LT	2	15-INCH DRIVEWAY PIPE
1068+04	STH 50, 60' LT	2	15-INCH DRIVEWAY PIPE
	TOTAL	19	

3

TRACKING PADS

STATION	TO	STATION	LOCATION	628.7560 EACH
STAGE 1A:				
982+00	-	1078+50	WEST & EAST CROSSOVERS	2
STAGE 2A:				
994+20	-	1068+20	STH 50 EB LANES	3
STAGE 2B:				
44+68	-	49+25	STH 83	1
STAGE 4B:				
994+20	-	1023+00	STH 50 MEDIAN	1
STAGE 4C:				
1023+00	-	1068+20	STH 50 WB LANES	2
982+00	-	1078+50	WASTE SITE	1
			TOTAL	10

ALL ITEMS CATEGORY 0010 UNLESS OTHRWISE NOTED

3

INLET PROTECTIONS

STAGE	STATION	TO	STATION	LOCATION	628.7005 INLET PROTECTION TYPE A EACH	628.7010 INLET PROTECTION TYPE B EACH	628.7015 INLET PROTECTION TYPE C EACH	628.7020 INLET PROTECTION TYPE D EACH
1A	982+61	-	986+74	STH 50 MEDIAN	2	2	--	--
1A	1069+00	-	1078+00	STH 50 MEDIAN	2	2	--	--
1B	978+00	-	992+50	STH 50 LT & RT	1	1	--	--
1B	994+00	-	1003+00	STH 50 LT & RT	--	--	11	--
1B	1003+00	-	1018+00	STH 50, 83 & 75	--	--	32	--
1B	1018+00	-	1033+00	STH 50 LT & RT	--	--	22	--
1B	1033+00	-	1048+00	STH 50 LT & RT	--	--	20	--
1B	1048+00	-	1063+00	STH 50 LT & RT	--	--	23	--
1B	1063+00	-	1078+00	STH 50 LT & RT	1	1	5	--
2A	994+00	-	1000+00	STH 50 LT & RT	5	4	5	--
2A	1000+00	-	1015+00	STH 50 LT & RT	15	6	16	11
2A	1015+00	-	1030+00	STH 50 LT & RT	20	3	13	13
2A	1030+00	-	1045+00	STH 50 LT & RT	20	2	9	9
2A	1045+00	-	1060+00	STH 50 LT & RT	14	4	16	5
2A	1060+00	-	1074+50	STH 50 LT & RT	6	2	8	5
2B	44+68	-	49+25	STH 83 LT & RT	10	2	3	5
3	985+00	-	1000+00	STH 50 MEDIAN	--	3	4	--
3	1000+00	-	1005+00	STH 50 MEDIAN	7	7	13	22
3	1005+00	-	1030+00	STH 50 MEDIAN	--	2	5	--
4A	50+80	-	54+00	STH 75 LT & RT	10	1	--	9
4B	985+00	-	1000+00	STH 50 LT & RT	1	4	4	--
4B	1000+00	-	1015+00	STH 50 LT & RT	6	7	11	30
4B	1015+00	-	1030+00	STH 50 LT & RT	2	4	12	10
4B	1030+00	-	1045+00	STH 50 LT & RT	3	1	13	9
4B	1045+00	-	1060+00	STH 50 LT & RT	7	2	16	5
4B	1060+00	-	1074+50	STH 50 LT & RT	2	1	7	8
4C	985+00	-	1000+00	STH 50 LT & RT	1	4	4	--
4C	1000+00	-	1015+00	STH 50 LT & RT	6	3	10	30
4C	1015+00	-	1030+00	STH 50 LT & RT	10	9	14	9
4C	1030+00	-	1045+00	STH 50 LT & RT	4	4	13	9
4C	1045+00	-	1060+00	STH 50 LT & RT	8	2	11	9
4C	1060+00	-	1074+50	STH 50 LT & RT	10	2	9	11
5	985+00	-	1000+00	STH 50 LT & RT	--	--	--	8
5	1000+00	-	1015+00	STH 50 LT & RT	--	3	17	29
5	1015+00	-	1030+00	STH 50 LT & RT	--	2	15	10
5	1030+00	-	1045+00	STH 50 LT & RT	--	--	18	9
5	1045+00	-	1060+00	STH 50 LT & RT	--	--	11	5
5	1060+00	-	1074+50	STH 50 LT & RT	--	--	11	11
5	1074+50	-	1078+00	STH 50 LT & RT	--	--	1	--
6A & 6B	1000+00	-	1015+00	STH 50, 83 & 75	--	3	9	18
				TOTALS	173	93	411	299

ALL ITEMS CATEGORY 0010 UNLESS OTHRWISE NOTED

3

TRAFFIC CONTROL

STAGE	DURATION	643.0300 TRAFFIC CONTROL DRUMS ** EACH	643.0300 TRAFFIC CONTROL DRUMS ** DAY	643.0420 TRAFFIC CONTROL BARRICADES TYPE III ** EACH	643.0420 TRAFFIC CONTROL BARRICADES TYPE III ** DAY	643.0500 TRAFFIC CONTROL FLEXIBLE TUBULAR MARKER POSTS EACH	643.0600 TRAFFIC CONTROL FLEXIBLE TUBULAR MARKER BASES EACH	643.0705 TRAFFIC CONTROL WARNING LIGHTS TYPE A ** EACH	643.0705 TRAFFIC CONTROL WARNING LIGHTS TYPE A ** DAY	643.0715 TRAFFIC CONTROL WARNING LIGHTS TYPE C ** EACH	643.0715 TRAFFIC CONTROL WARNING LIGHTS TYPE C ** DAY	643.0800 TRAFFIC CONTROL ARROW BOARDS ** EACH	643.0800 TRAFFIC CONTROL ARROW BOARDS ** DAY	643.0900 TRAFFIC CONTROL SIGNS ** EACH	643.0900 TRAFFIC CONTROL SIGNS ** DAY	643.0920 NUMBER OF CYCLES EACH	643.0920 TRAFFIC CONTROL COVERING SIGNS TYPE II EACH	643.1050 TRAFFIC CONTROL SIGNS PCMS ** EACH	643.1050 TRAFFIC CONTROL SIGNS PCMS ** DAY	SPV.0165.06 CURB RAMP DETECTABLE WARNING FIELD YELLOW TEMPORARY SF
STAGE 1A:	21 DAYS	248	5208	45	945	--	--	90	1890	46	966	6	126	79	1659	--	--	3	84	--
STAGE 1B:	21 DAYS	980	20580	83	1743	--	--	166	3486	52	1092	4	84	175	3675	1	6	2	56	--
WINTER SHUTDOWN:	115 DAYS	--	--	--	--	--	--	--	--	--	--	--	--	0	0	--	--	--	--	--
STAGE 2A:	90 DAYS	958	86220	55	4950	703	703	110	9900	96	8640	4	360	244	21960	1	6	3	270	43
STAGE 2B:	21 DAYS	895	18795	57	1197	712	712	104	2184	93	1953	4	84	241	5061	1	22	2	42	--
STAGE 2B1:	7 DAYS	--	--	4	28	--	--	8	56	--	--	--	--	5	35	--	--	--	--	72
STAGE 2B2:	7 DAYS	--	--	3	21	--	--	6	42	--	--	--	--	3	21	--	--	--	--	--
STAGE 3:	21 DAYS	1121	23541	140	2940	--	--	290	6090	78	1638	4	84	226	4746	1	29	4	84	60
STAGE 4A:	21 DAYS	1030	30900	151	4530	205	205	302	9060	90	2700	4	120	256	7680	1	24	4	120	24
STAGE 4B:	30 DAYS	889	53340	136	8160	191	191	272	16320	80	4800	4	240	270	16200	1	5	4	240	24
STAGE 4C:	60 DAYS	794	11116	116	1624	705	705	232	3248	87	1218	4	56	301	4214	1	5	4	56	--
STAGES 4C1-4C3:	7 DAYS		--		--		--		--		--		--	19	133	--	--		--	60
STAGE 5:	21 DAYS	1016	21336	104	2184	--	--	208	4368	55	1155	7	147	284	5964	--	--	--	--	--
STAGE 6A:	14 DAYS	40	560	4	56	--	--	8	112		--	--	--	23	322	--	--	--	--	--
STAGE 6B:	7 DAYS	15	105	4	28	--	--	8	56		--	--	--	18	126	--	--	--	--	--
ALT ROUTE:	299 DAYS	20	5980	--	--	--	--	--	--	--	--	--	--	141	42159	--	--	4	1196	--
STAGE 2B DETOUR:	21 DAYS	20	420	--	--	--	--	--	--	--	--	--	--	134	2814	1	4	4	84	--
STAGE 3 DETOUR:	21 DAYS	20	420	--	--	--	--	--	--	--	--	--	--	229	4809	1	12	4	84	--
STAGE 4A DETOUR:	30 DAYS	25	750	--	--	--	--	--	--	--	--	--	--	171	5130	1	12	5	150	--
STAGE 6A DETOUR:	14 DAYS	5	70	--	--	--	--	--	--	--	--	--	--	44	616	--	--	1	14	--
STAGE 6B DETOUR:	7 DAYS	5	35	--	--	--	--	--	--	--	--	--	--	99	693	--	--	1	7	--
			279,376		28,406	2,516	2,516		56,812		24,162	1,301			128,017		125		2,487	283

NOTE:
** TOTAL QUANTITY OF TRAFFIC CONTROL DEVISE PER STAGE FOR INFORMATION ONLY.

ALL ITEMS CATEGORY 0010 UNLESS OTHRWISE NOTED

3

TRAFFIC CONTROL SIGNS FIXED MESSAGE

LOCATION	NUMBER OF SIGNS	HEIGHT INCH	WIDTH INCH	643.1000 TRAFFIC CONTROL SIGNS FIXED MESSAGE SF	REMARKS
STH 50, 83, 75, CTH K, USH 12 & USH 45	4	48	90	120	SEE ALTERNATE ROUTE PLAN
IH-94	2	90	120	150	SEE ALTERNATE ROUTE PLAN
IH-94	2	24	120	40	SEE ALTERNATE ROUTE PLAN
STH 50, USH 45, CTH C, STH 83 & STH 75	4	36	66	66	SEE STAGE 2B DETOUR PLAN
STH 50, USH 45, CTH C, STH 83	3	36	66	50	SEE STAGE 3 DETOUR PLAN
STH 50, USH 45, CTH C, STH 83	2	48	90	60	SEE STAGE 3 DETOUR PLAN
STH 75, STH 142, USH 45	1	36	66	17	SEE STAGE 3 DETOUR PLAN
STH 75, STH 142, USH 45	1	48	90	30	SEE STAGE 3 DETOUR PLAN
STH 50, USH 45, STH 142, STH 75 & 83	6	36	66	99	SEE STAGE 4A DETOUR PLAN
STH 50, USH 45, STH 142, STH 75 & 83	4	30	60	50	SEE STAGE 4A DETOUR PLAN
STH 83, CTH C, USH 45	3	36	84	63	SEE STAGE 6A TRUCK DETOUR
STH 75, STH 142, USH 45	5	36	84	105	SEE STAGE 6B TRUCK DETOUR
TOTALS				850	

ALL ITEMS CATEGORY 0010 UNLESS OTHRWISE NOTED

TEMPORARY PEDESTRIAN SURFACES

STATION	TO	STATION	LOCATION	644.1410 TEMPORARY PEDESTRIAN SURFACE ASPHALT SF	644.1420 TEMPORARY PEDESTRIAN SURFACE PLYWOOD SF	644.1430 TEMPORARY PEDESTRIAN SURFACE PLATE SF	644.1601 TEMPORARY CURB RAMP EACH	644.1810 TEMPORARY PEDESTRIAN BARRICADE LF
STAGE 2A:								
1006+68	-	1034+67	2'-78' RT	665	--	120	2	665
STAGE 2B:								
1006+85	-	1006+95	10'90' RT	229	474	60	--	375
STAGE 2B1:								
1005+06	-	1007+11	48' LT-76' RT	344	--	--	1	--
STAGE 2B2:								
1006+80	-	1007+06	91'-108' RT	--	202	--	1	--
STAGE 3:								
1005+00	-	1005+17	10' LT - 10' RT	--	--	--	--	76
1006+88	-	1006+94	10' LT - 10' RT	--	--	--	--	96
1005+00	-	1006+94	10' LT - 10' RT	--	--	--	--	172
STAGE 4A:								
1004+19	-	1007+68	0'-45' LT	736	220	60	2	507
STAGE 4B:								
1004+72	-	1006+88	9'-37' LT	--	--	--	--	227
STAGE 4C:								
1033+72	-	1034+67	9'-37' LT	336	--	--	2	--
STAGE 4C1:								
1042+60	-	1062+76	29'-60' LT	--	196	--	4	637
STAGE 4C2:								
1034+62	-	1047+97	9'-40' LT	248	--	--	2	966
STAGE 4C3:								
1042+60	-	1053+29	35'-37' LT	--	30	--	3	1879
			TOTALS	2558	1092	240	17	5428

GEOGRID TYPE SR

STATION	TO	STATION	LOCATION	645.0220 SY	REMARKS
1020+00	-	1030+00	STH 50	8,890	UNDER ROADWAY
1020+00	-	1030+00	STH 50, LT	830	UNDER LEFT SIDEWALK
1020+00	-	1030+00	STH 50, RT	520	UNDER RIGHT SIDEWALK
			TOTAL	10,240	

ALL ITEMS CATEGORY 0010 UNLESS OTHRWISE NOTED

3

PAVEMENT MARKING

STATION	TO	STATION	LOCATION	646.1020 MARKING LINE EPOXY 4-INCH LF WHITE	646.1020 MARKING LINE EPOXY 4-INCH LF YELLOW	646.1545 MARKING LINE GROOVED WET REF CONTRAST EPOXY 4-INCH LF WHITE	646.1545 MARKING LINE GROOVED WET REF CONTRAST EPOXY 4-INCH LF YELLOW	646.3020 MARKING LINE EPOXY 8-INCH LF	646.3545 MARKING LINE GROOVED WET REF CONTRAST EPOXY 8-INCH LF	646.5020 MARKING ARROW EPOXY EACH	646.5120 MARKING WORD EPOXY EACH	646.6120 MARKING STOP LINE EPOXY 18-INCH LF	646.6220 MARKING YIELD LINE EPOXY 18-INCH EACH	646.7220 MARKING CHEVRON EPOXY 24-INCH LF	646.7420 MARKING CROSSWALK EPOXY TRANSVERSE LINE 6-INCH LF	646.8120 MARKING CURB EPOXY LF	646.8220 MARKING ISLAND NOSE EPOXY EACH
WEST END	-	986+50	STH 50	--	759	--	--	--	--	2	1	--	--	--	--	--	--
986+50	-	992+50	STH 50	--	312	--	--	--	--	--	--	--	--	--	--	90	1
992+50	-	997+00	STH 50	559	--	125	--	--	--	--	--	40	--	--	324	--	--
997+00	-	1003+00	STH 50	1,027	279	300	--	140	359	7	3	154	--	--	699	79	2
1003+00	-	1009+00	STH 50	1,399	505	275	130	112	1,031	9	5	18	20	30	110	40	4
1009+00	-	1015+00	STH 50	1,200	--	300	--	--	323	3	1	24	--	--	105	30	2
1015+00	-	1021+00	STH 50	1,108	634	300	--	50	140	6	1	44	--	--	312	--	--
1021+00	-	1027+00	STH 50	964	1,459	300	--	39	--	7	--	--	--	--	--	35	2
1027+00	-	1033+00	STH 50	1,200	977	300	--	--	73	5	--	109	--	--	471	20	2
1033+00	-	1039+00	STH 50	1,011	198	225	--	99	367	7	1	45	--	--	204	30	3
1039+00	-	1045+00	STH 50	1,021	1,578	300	--	19	--	8	--	38	--	--	309	--	--
1045+00	-	1051+00	STH 50	1,016	376	300	--	86	312	6	1	--	--	--	--	10	1
1051+00	-	1057+00	STH 50	1,200	--	300	--	--	274	3	2	36	--	--	168	20	2
1057+00	-	1063+00	STH 50	1,062	--	300	--	49	249	4	1	--	--	--	--	77	2
1063+00	-	1069+00	STH 50	1,145	--	250	--	--	92	--	--	--	--	--	--	86	3
1069+00	-	1075+00	STH 50	--	633	--	--	--	--	--	--	--	--	--	--	--	-- --
1075+00	-	EAST END	STH 50	--	660	--	--	--	--	--	--	--	--	--	--	--	-- --
SOUTH END	-	42+00	STH 83	314	412	--	--	377	--	2	--	--	--	--	--	--	--
42+00	-	48+00	STH 83	1,567	1,267	--	--	377	--	2	--	--	--	--	--	--	--
52+00	-	NORTH END	STH 75	402	384	--	--	68	--	--	--	--	--	--	--	10	1
			TOTALS	26,628		3,705		1,416	3,220	71	16	508	20	30	2,702	527	25

ALL ITEMS CATEGORY 0010 UNLESS OTHRWISE NOTED

3

TEMPORARY MARKING - TABLE 1

STAGE	LOCATION	649.0105 TEMPORARY MARKING LINE PAINT 4-INCH LF		649.0150 TEMPORARY MARKING LINE REMOVABLE TAPE 4-INCH LF		649.0205 TEMPORARY MARKING LINE PAINT 8-INCH LF	649.0250 TEMPORARY MARKING LINE REMOVABLE TAPE 8-INCH LF	649.0805 TEMPORARY MARKING STOP LINE PAINT 18-INCH LF	649.0850 TEMPORARY MARKING STOP LINE REMOVABLE TAPE 18-INCH LF	649.0960 TEMPORARY MARKING REMOVABLE MASK OUT TAPE 6-INCH LF	649.0970 TEMPORARY MARKING REMOVABLE MASK OUT TAPE 10-INCH LF
		WHITE	YELLOW	WHITE	YELLOW						
STAGE 1A	STH 50	--	--	--	9,575	--	100	--	--	611	--
STAGE 1B	STH 50	838	11,772	--	2,525	2,874	--	65	--	26	--
STAGE 2A	STH 50/75/83	9,319	17,564	5,820	3,697	1,459	325	120	--	130	341
STAGE 2B	STH 50	173	--	--	--	--	--	--	--	--	116
STAGE 3	STH 50, 75 & 83	4,475	1,162	464	14,178	416	672	57	101	199	--
STAGE 4A	STH 50 & 83	1,860	213	1,304	5,076	--	1,657	--	56	--	341
STAGE 4B	STH 50 & 75	--	--	552	--	--	336	--	--	--	--
STAGE 4C	STH 50 WB	540	420	6,459	9,657	--	400	--	23	169	341
STAGE 4C1	236TH AVE	--	--	207	---	--	--	--	--	--	--
STAGE 4C2	STH 50 WB	--	--	184	--	--	--	--	--	--	--
STAGE 4C3	STH 50 WB	--	--	932	--	--	--	--	--	--	--
STAGE 5	STH 50 & 75	--	--	123	10,567	--	930	--	62	221	182
STAGE 6A-6B	STH 83, 34' RT	--	--	429	--	--	--	--	--	--	--
	SUBTOTALS	17,205	31,131	16,474	55,275						
	TOTALS	48,336		71,749		4,749	4,420	242	242	1,356	1,321

TEMPORARY MARKING - TABLE 2

STAGE	LOCATION	649.0505 TEMPORARY MARKING ARROW PAINT EACH	649.0550 TEMPORARY MARKING ARROW REMOVABLE TAPE EACH	649.0605 TEMPORARY MARKING WORD PAINT EACH	649.0650 TEMPORARY MARKING WORD REMOVABLE TAPE EACH	649.0905 TEMPORARY MARKING DIAGONAL PAINT 12-INCH LF
STAGE 1B	STH 50	6	--	4	--	--
STAGE 2A	STH 50	3	--	2	--	--
STAGE 2B	STH 75	1	--	1	--	81
STAGE 3	STH 75 & 83	1	3	1	1	--
STAGE 4A	STH 50 & 83	--	6	--	3	--
STAGE 4B	STH 50	--	4	--	2	--
STAGE 4C	STH 50	--	3	--	2	-
	TOTALS	11	16	8	8	81

ALL ITEMS CATEGORY 0010 UNLESS OTHRWISE NOTED

3

					MARKING REMOVAL					
				646.9000	646.9010	646.9100	646.9110	646.9300	646.9310
STATION	TO	STATION	LOCATION	MARKING REMOVAL LINE 4-INCH LF	MARKING REMOVAL LINE WATER BLASTING 4-INCH LF	MARKING REMOVAL LINE 8-INCH LF	MARKING REMOVAL LINE WATER BLASTING 8-INCH LF	MARKING REMOVAL SPECIAL MARKING EACH	MARKING REMOVAL SPECIAL MARKING WATER BLASTING EACH
STAGE 1B:									
1000+75	-	1046+57	STH 50 WB & EB	313	--	--	--	--	--
STAGE 2A:									
994+00	-	1072+50	STH 50 WB	1855	200	650	100	2	2
			TOTALS	2168	200	650	100	2	2

ALL ITEMS CATEGORY 0010 UNLESS OTHRWISE NOTED

3

CONSTRUCTION STAKING STORM SEWER

STRUCTURE NO.	STATION	TO	STATION	LOCATION	650.4000 EACH
1A-1C	994+50	-	994+50	STH 50 RT	3
2A-2E	997+71	-	998+34	STH 50 LT & RT	5
3A-3H	999+76	-	1001+74	STH 50 RT	8
4A-4G	1004+75	-	1007+38	STH 50 RT	7
6A-6F	1007+50	-	1008+21	STH 50 LT & RT	6
7A-7D	1010+69	-	1011+29	STH 50 LT	4
8A-8J	1010+65	-	1012+25	STH 50 RT	10
10, 10A-10E	1012+91	-	1014+08	STH 50 LT & RT	6
9, 9A-9B	1016+96	-	1017+56	STH 50 LT & RT	3
11, 11A-11B	1020+25	-	1020+25	STH 50 LT & RT	3
12, 12A-12B	1023+00	-	1023+00	STH 50 LT & RT	3
13, 14, 14A	1024+00	-	1024+88	STH 50 LT & RT	3
21, 21A-21D	1026+04	-	1026+21	STH 50 LT & RT	3
23E-23I	1024+21	-	1025+08	STH 50 LT	5
23, 23A-23D	1025+14	-	1025+98	STH 50 LT & RT	5
20, 20A-20D	1027+65	-	1027+90	STH 50 LT & RT	5
19, 19A-19F	1029+21	-	1029+55	STH 50 LT & RT	7
18, 18A-18E	1029+01	-	1029+50	STH 50 LT & RT	6
17, 17A-17B	1031+45	-	1031+45	STH 50 LT & RT	3
16, 16A-16F	1032+59	-	1032+62	STH 50 LT & RT	7
15, 15A-15H	1034+56	-	1034+96	STH 50 LT & RT	9
30, 30A-30E	1039+80	-	1040+31	STH 50 RT	6
31, 31A-31B	1041+25	-	1041+65	STH 50 RT	3
32, 32A	1042+96	-	1042+96	STH 50 RT	2
33, 33A	1042+77	-	1042+96	STH 50 LT	2
34	1042+96	-	1042+96	STH 50 LT	1
43, 43A	1045+75	-	1045+75	STH 50 RT	2
44-47	1045+75	-	1046+52	STH 50 LT	4
40, 40A-40F	1047+30	-	1048+25	STH 50 LT & RT	7
41, 41A-41F	1046+40	-	1047+18	STH 50 RT	7
50A-50E	1052+22	-	1053+06	STH 50 LT & RT	5
60, 60A-60E	1054+82	-	1055+25	STH 50 LT & RT	6
61, 61A-61C	1058+22	-	1058+22	STH 50 LT & RT	4
62-63	1058+22	-	1058+93	STH 50 RT	2
70A-70I, 71	1060+48	-	1060+58	STH 50 LT & RT	10
80A-80E, 80	1062+04	-	1063+00	STH 50 LT	6
81A-81B, 81	1062+60	-	1062+88	STH 50 RT	3
82-83	1062+88	-	1062+88	STH 50 RT	2
90A-90G	1065+12	-	1065+22	STH 50 LT & RT	7
110-112	45+95	-	45+99	STH 83 LT & RT	3
4O-4P	1006+57	-	1006+61	STH 50 RT	2
4F-4G, 4R	48+12	-	48+32	STH 83 RT	3
4H-4N, 4S	48+13	-	49+28	STH 83 LT	8
5A-5C, 5M	50+86	-	51+28	STH 75 LT	4
5H, 5L	50+91	-	51+26	STH 75 RT	2
5D-5G	50+91	-	51+42	STH 75 MEDIAN	4
5C, 5G-5K	50+47	-	51+26	STH 75 RT	6
24, 24A-24I	18+86	-	19+20	W SCHOOL DWY	10
101-103	1009+00	-	1009+48	POND	3
				TOTAL	235

CONSTRUCTION STAKING ELECTRICAL INSTALLATIONS (PROJECT) 1310-04-70

STATION	TO	STATION	LOCATION	650.8500 LS
994+20	-	1068+20	PROJECT LIMITS	1
			TOTAL	1

CONTSTRUCTION STAKING SUPPLEMENTAL CONTROL (PROJECT) 1310-04-70

STATION	TO	STATION	LOCATION	650.9910 LS	REMARKS
994+20	-	1068+20	STH 50	1	PROJECT LIMITS
			TOTAL	1	

CONSTRUCTION STAKING POND LAYOUT

STATION	LOCATION	SPV.0060.08 EACH
1008+00	STH 50, 100' RT	1
	TOTAL	1

SAWING ASPHALT & CONCRETE

STAGE	LOCATION	690.0150 SAWING ASPHALT LF	690.0250 SAWING CONCRET LF
STAGE 1A	STH 50	--	426
STAGE 1B	STH 50	--	4021
STAGE 2A	STH 50	1178	6452
STAGE 2B	STH 83	103	629
STAGE 3	STH 50	--	2275
STAGE 4A	STH 75	--	405
STAGE 4B	STH 50	--	5424
STAGE 4C	STH 50	2029	--
	UNDISTRIBUTED	330	1968
	TOTAL	3,640	21,600

ALL ITEMS CATEGORY 0010 UNLESS OTHRWISE NOTED

3

BACKFILL SLURRY

STATION	TO	STATION	LOCATION	SPV.0035.01 CY
1024+04	-	1024+84	14.5' RT	23
1025+29	-	1026+00	13'-14.5' RT	21
			TOTAL	44

CONCRETE SADDLE

STATION	LOCATION	SPV.0060.05 EACH
1006+16	STH 50, 61' LT	1
1006+65	STH 50, 65' LT	1
1007+19	STH 50, 79' RT	1
1008+21	STH 50, 46' RT	1
1040+31	STH 50, 42' RT	1
	TOTAL 0010	5

SECTION CORNER MONUMENTS

STATION	LOCATION	SPV.0060.06 EACH	REMARKS
999+20	STH 50, 10' LT	1	SEC N-10-1-20
1025+73	STH 50, 7' LT	1	SEC SW-2-1-20
1052+06	STH 50, 7' LT	1	SEC S-2-1-20
	TOTAL	3	

3

TEMPORARY PIPE CONNECTIONS

STATION	LOCATION	SPV.0060.09 TEMPORARY PIPE CONNECTION 12-INCH EACH	SPV.0060.10 TEMPORARY PIPE CONNECTION 15-INCH EACH	SPV.0060.11 TEMPORARY PIPE CONNECTION 18-INCH EACH	SPV.0060.12 TEMPORARY PIPE CONNECTION 21-INCH EACH	SPV.0060.13 TEMPORARY PIPE CONNECTION 24-INCH EACH
STAGE 2A:						
977+71	STH 50, 10' RT	1	--	--	--	--
1006+54	STH 50, 40' RT	--	1	--	--	--
1008+22	STH 50, 10' RT	1	--	--	--	--
1013+74	STH 50, 1' LT	--	--	1	--	--
1031+00	STH 50, 7' RT	1	--	--	--	--
1045+75	STH 50, 7' RT	--	--	1	--	--
1052+20	STH 50, 7' RT	1	--	--	--	--
1055+09	STH 50, 9' RT	--	1	--	--	--
1058+21	STH 50, 9' RT	1	--	--	--	--
1060+61	STH 50, 9' RT	1	--	--	--	--
1062+87	STH 50, 9' RT	--	--	--	--	1
1065+12	STH 50, 9' RT	--	--	1	--	--
STAGE 3:						
997+74	STH 50, 10' LT	1	--	--	--	--
1008+22	STH 50, 10' LT	1	--	--	--	--
1013+80	STH 50, 10' LT	--	--	1	--	--
STAGE 4B:						
1031+00	STH 50, 7' LT	1	--	--	--	--
1045+75	STH 50, 7' LT	--	--	--	1	--
1052+20	STH 50, 9' LT	1	--	--	--	--
1054+98	STH 50, 9' LT	1	--	--	--	--
1058+21	STH 50, 9' LT	1	--	--	--	--
1060+61	STH 50, 9' LT	1	--	--	--	--
1062+93	STH 50, 10' LT	--	--	--	--	1
1065+12	STH 50, 10' LT	--	1	--	--	--
	TOTALS	13	3	4	1	2

ALL ITEMS CATEGORY 0010 UNLESS OTHRWISE NOTED

PROJECT NO: 1310-04-70	HWY: STH 50	COUNTY: KENOSHA	MISCELLANEOUS QUANTITIES	SHEET:

FILE NAME : _____ PLOT DATE : _____ PLOT BY : _____ PLOT NAME : _____ PLOT SCALE : 1:1

3

WOOD PEDESTRIAN FENCE

STATION	TO	STATION	LOCATION	SPV.0090.08 LF
1001+20	-	1001+73	STH 50, 51' LT	53
			TOTAL	53

WALL MODULAR BLOCK GRAVITY PARTIAL WALL

STATION	TO	STATION	LOCATION	SPV.0165.05 SF	REMARKS
51+42	-	51+52	STH 75, 50' LT	20	PARTIAL 2'X10' WALL
			TOTAL 0010	20	

3

REMOVAL AND DISPOSAL OF INVASIVE SPECIES

STATION	TO	STATION	LOCATION	SPV.0170.02 STA	REMARKS
1007+00	-	1010+00	STH 50, 70' RT	3	REMOVE ALL WITHIN WISDOT RIGHT OF WAY
			TOTAL	3	

ALL ITEMS CATEGORY 0010 UNLESS OTHRWISE NOTED

3

VILLAGE OF PADDOCK LAKE - WATER & SANITARY SEWER WORK

***

STA		STA	LOCATION	SPV.0060.38 RECONSTRUCTING SANITARY MANHOLE COVERS EACH	SPV.0060.39 ADJUSTING SANITARY MANHOLE COVERS EACH CAT 0010	SPV.0060.39 ADJUSTING SANITARY MANHOLE COVERS EACH CAT 0060	SPV.0060.40 RECONSTRUCTING WATER VALVE BOXES EACH	SPV.0060.41 ADJUSTING WATER VALVE BOXES EACH	SPV.0060.42 ADJUSTING WATER SERVICE BOXES EACH	SPV.0060.43 RELOCATING SANITARY SERVICE LINE EACH	SPV.0060.44 MOVING FIRE HYDRANTS EACH	SPV.0200.01 VERTICALLY EXTENDING FIRE HYDRANTS VF
991+00	-	997+00	STH 50	--	--	--	--	--	--	--	--	--
997+00	-	1003+00	STH 50	--	1	--	--	--	--	--	--	--
1003+00	-	1009+00	STH 50	1	1	3	--	4	--	--	1	--
1009+00	-	1015+00	STH 50	--	--	1	--	3	--	--	--	--
1015+00	-	1021+00	STH 50	3	--	1	--	1	--	--	--	--
1021+00	-	1027+00	STH 50	2	--	1	1	2	1	--	--	1
1027+00	-	1033+00	STH 50	--	--	3	--	--	2	--	--	--
1033+00	-	1039+00	STH 50	1	--	1	1	1	9	--	1	--
1039+00	-	1045+00	STH 50	--	--	6	--	--	9	--	--	--
1045+00	-	1051+00	STH 50	--	--	1	--	--	3	--	--	--
1051+00	-	1057+00	STH 50	--	--	--	--	--	--	--	--	--
1057+00	-	1063+00	STH 50	--	--	--	--	4	1	--	--	--
1063+00	-	1069+00	STH 50	--	--	2	--	--	--	--	--	--
44+00	-	48+00	STH 83	--	--	--	--	1	--	--	--	--
52+00	-	56+00	STH 75	--	--	--	--	--	--	--	--	--
991+00	-	1069+00	UNDISTRIBUTED	--	--	--	--	--	--	10	--	--
			TOTALS	7	2	19	2	16	25	10	2	1

NOTE:

*** ADJUSTING SANITARY MANHOLE COVERS FOR WALGREEN'S MANHOLES CATEGORY 0010. ALL OTHER ITEMS CATEGORY 0060

ALL ITEMS CATEGORY 0010 UNLESS OTHRWISE NOTED

3

CULVERT PIPE

ROADWAY	INLET STATION	INLET OFFSET	INLET ELEVATION	DISCHARGE STATION	DISCHARGE OFFSET	DISCHARGE ELEVATION	PIPE SLOPE	MINIMUM PIPE WALL THICKNESS	521.1015 APRON ENDWALLS FOR CULVERT PIPE STEEL 15-INCH EACH	521.3115 CULVERT PIPE CORRUGATED STEEL 15-INCH LF	650.6000 CONSTRUCTION STAKING CULVERT PIPES EACH
STH 50	1066+60.3	58.7' LT	800.90	1066+30.4	57.9' LT	800.39	1.69%	0.064"	2	30	1
	1068+03.9	59.8' LT	804.84	1067+75.8	60.0' LT	804.65	0.67%	0.064"	2	28	1
							PROJECT TOTALS		4	58	2

ALL ITEMS CATEGORY 0010 UNLESS NOTED OTHERWISE

STORM SEWER STRUCTURES

STRUCTURE NUMBER	STATION	OFFSET	RIM ELEV	LOWEST PIPE INVERT ELEV	TOP OF STRUCTURE ELEV	BOTTOM OF STRUCTURE ELEV	STR DEPTH FEET	520.8000 CONCRETE COLLARS FOR PIPE EACH	611.0420 RECONSTRUCTING MANHOLES EACH	611.1003 CATCH BASINS 3-FT DIAMETER EACH	611.1004 CATCH BASINS 4-FT DIAMETER EACH	611.1005 CATCH BASINS 5-FT DIAMETER EACH	611.1006 CATCH BASINS 6-FT DIAMETER EACH	611.1230 CATCH BASINS 2X3-FT EACH	611.2004 MANHOLES 4-FT DIAMETER EACH	611.2005 MANHOLES 5-FT DIAMETER EACH	611.2006 MANHOLES 6-FT DIAMETER EACH	611.2008 MANHOLES 8-FT DIAMETER EACH	*** 611.3220 INLETS 2X2-FT EACH	*** 611.3901 INLETS MEDIAN 1 GRATE EACH	611.3902 INLETS MEDIAN 2 GRATE EACH	SPV.0090.09 TRENCH DRAIN 12-INCH LF	COMMENTS
1A	994+50.0	8.5' RT	825.41	821.67	824.41	819.67	4.74	---	---	---	---	---	---	1	---	---	---	---	---	---	---	---	
1B	994+50.0	37.5' RT	825.84	821.52	824.84	819.52	5.31	---	---	---	---	---	---	1	---	---	---	---	---	---	---	---	
1C	994+50.0	65.5' RT	---	821.38	---	---	---	---	---	---	---	---	---	---	---	---	---	---	---	---	---	---	
2A	998+31.5	37.5' LT	827.88	824.51	826.88	822.51	4.36	---	---	---	1	---	---	---	---	---	---	---	---	---	---	---	
2B	997+71.0	8.5' LT	826.92	824.18	825.92	822.18	3.74	---	---	---	1	---	---	---	---	---	---	---	---	---	---	---	
2C	997+71.0	8.5' RT	827.91	824.09	826.91	822.09	4.82	---	---	---	---	---	---	1	---	---	---	---	---	---	---	---	
2D	997+71.0	37.5' RT	827.83	823.95	826.83	821.95	4.88	---	---	---	---	---	---	1	---	---	---	---	---	---	---	---	
2E	997+71.0	65.5' RT	---	823.81	---	---	---	---	---	---	---	---	---	---	---	---	---	---	---	---	---	---	
3A	999+76.0	1.7' RT	830.65	826.59	829.65	824.59	5.07	---	---	---	---	---	---	1	---	---	---	---	---	---	---	---	
3B	999+76.5	8.5' RT	830.88	826.52	829.88	824.52	5.36	---	---	---	1	---	---	---	---	---	---	---	---	---	---	---	
3C	1001+73.5	46.5' RT	832.44	827.78	831.44	825.78	5.67	---	---	---	---	---	---	1	---	---	---	---	---	---	---	---	
3D	1000+06.2	37.5' RT	831.23	825.85	830.23	823.85	6.38	---	---	---	1	---	---	---	---	---	---	---	---	---	---	---	
3E	1000+37.5	62.7' RT	---	828.20	---	---	---	1	---	---	---	---	---	---	---	---	---	---	---	---	---	---	
3F	1000+06.3	62.8' RT	829.92	824.85	828.68	824.60	4.08	---	---	---	---	---	---	---	---	1	---	---	---	---	---	---	
3G	999+75.7	74.5' RT	827.67	824.91	826.67	824.72	1.95	---	---	---	---	---	---	---	---	---	---	---	---	1	---	---	
3H	999+76.4	62.5' RT	829.41	824.55	828.17	823.88	4.29	---	---	---	---	---	---	---	---	1	---	---	---	---	---	---	
4A	1005+05.6	8.5' LT	830.18	824.35	829.18	822.35	6.83	---	---	---	---	---	---	1	---	---	---	---	---	---	---	---	
4B	1005+08.6	1.5' LT	830.30	824.28	829.30	822.28	7.02	---	---	---	---	---	---	1	---	---	---	---	---	---	---	---	
4C	1004+75.3	58.2' RT	832.26	824.59	831.17	822.59	8.59	---	---	1	---	---	---	---	---	---	---	---	---	---	---	---	
4D	1004+83.2	46.5' RT	830.58	823.81	829.58	821.81	7.77	---	---	---	1	---	---	---	---	---	---	---	---	---	---	---	
4E	1005+08.7	46.5' RT	830.15	823.30	829.15	821.30	7.86	---	---	---	1	---	---	---	---	---	---	---	---	---	---	---	
4R	48+12.1	52.5' RT	827.14	822.21	826.14	820.21	5.92	---	---	---	---	---	---	1	---	---	---	---	---	---	---	---	
4F	48+22.1	52.5' RT	827.08	822.16	826.08	820.16	5.92	---	---	---	---	---	---	1	---	---	---	---	---	---	---	---	
4G	48+32.1	52.5' RT	827.13	822.11	826.13	820.11	6.02	---	---	---	---	---	---	1	---	---	---	---	---	---	---	---	
4S	48+13.4	35.5' LT	828.68	822.59	827.68	820.59	7.09	---	---	---	---	---	---	1	---	---	---	---	---	---	---	---	
4H	48+16.5	1.5' LT	827.35	822.42	826.35	820.42	5.93	---	---	---	---	---	---	1	---	---	---	---	---	---	---	---	
4I	48+32.1	1.5' LT	827.42	821.84	826.42	819.84	6.58	---	---	---	1	---	---	---	---	---	---	---	---	---	---	---	
4J	48+61.2	8.5' LT	828.44	821.69	827.44	819.69	7.75	---	---	---	1	---	---	---	---	---	---	---	---	---	---	---	
4K	48+61.2	35.5' LT	828.36	823.19	827.36	821.19	6.17	---	---	---	---	---	---	1	---	---	---	---	---	---	---	---	
4L	49+28.3	35.6' LT	828.87	823.41	827.87	821.41	6.46	---	---	---	1	---	---	---	---	---	---	---	---	---	---	---	
4M	48+71.2	35.5' LT	828.41	822.84	827.41	820.84	6.57	---	---	---	---	---	---	1	---	---	---	---	---	---	---	---	
4N	48+71.2	8.5' LT	828.43	821.64	827.43	819.64	7.79	---	---	---	1	---	---	---	---	---	---	---	---	---	---	---	
4O	1006+61.4	43.6' RT	827.08	822.26	825.58	820.26	5.32	---	---	1	---	---	---	---	---	---	---	---	---	---	---	---	
4P	1006+57.4	63.7' RT	827.35	821.30	826.35	819.30	7.05	---	---	---	---	---	1	---	---	---	---	---	---	---	---	---	
4Q	1007+38.0	78.5' RT	---	820.89	---	---	---	---	---	---	---	---	---	---	---	---	---	---	---	---	---	---	
5A	50+85.9	38.4' LT	829.36	824.56	828.36	822.56	5.80	---	---	1	---	---	---	---	---	---	---	---	---	---	---	---	
5M	51+04.9	54.7' LT	829.01	824.15	827.51	822.15	5.36	---	---	---	1	---	---	---	---	---	---	---	---	---	---	---	
5B	51+27.8	44.8' LT	828.79	823.99	827.79	821.99	5.80	---	---	---	---	---	---	1	---	---	---	---	---	---	---	---	
5C	51+18.5	48.6' LT	828.74	823.89	827.74	821.89	5.85	---	---	---	1	---	---	---	---	---	---	---	---	---	---	---	
5D	51+41.7	1.5' RT	828.33	823.65	827.33	821.65	5.68	---	---	---	---	---	---	1	---	---	---	---	---	---	---	---	
5E	51+31.7	1.5' RT	828.38	823.35	827.38	821.35	6.03	---	---	---	1	---	---	---	---	---	---	---	---	---	---	---	
5F	51+01.4	8.5' RT	828.60	823.19	827.60	821.19	6.41	---	---	---	1	---	---	---	---	---	---	---	---	---	---	---	
5G	50+91.4	8.5' RT	828.59	823.14	827.59	821.14	6.45	---	---	---	---	1	---	---	---	---	---	---	---	---	---	---	
5L	51+26.4	35.5' RT	828.46	823.35	827.46	821.35	6.11	---	---	---	---	---	---	1	---	---	---	---	---	---	---	---	
5H	50+91.4	35.5' RT	828.25	823.01	827.25	821.01	6.24	---	---	---	---	1	---	---	---	---	---	---	---	---	---	---	
5I	50+71.2	36.2' RT	828.16	822.91	827.16	820.91	6.26	---	---	---	1	---	---	---	---	---	---	---	---	---	---	---	
5J	50+47.5	45.7' RT	828.50	822.78	827.26	822.57	4.68	---	---	---	---	---	---	---	1	---	---	---	---	---	---	---	
5K	1006+64.1	65.9' LT	---	822.50	---	---	---	---	---	---	---	---	---	---	---	---	---	---	---	---	---	---	
6A	1008+21.0	37.5' LT	824.15	820.25	823.15	818.25	4.90	---	---	---	---	---	---	1	---	---	---	---	---	---	---	---	
6B	1007+50.0	1.5' RT	825.06	820.22	824.06	818.22	5.84	---	---	---	---	---	---	1	---	---	---	---	---	---	---	---	
6C	1008+21.0	1.5' RT	823.96	819.86	822.96	817.86	5.10	---	---	---	---	---	---	1	---	---	---	---	---	---	---	---	
6D	1008+21.0	8.5' RT	824.32	819.79	823.32	817.79	5.53	---	---	---	---	---	---	1	---	---	---	---	---	---	---	---	
6E	1008+21.0	37.5' RT	824.31	819.50	823.31	817.50	5.81	---	---	---	---	---	---	1	---	---	---	---	---	---	---	---	
6F	1008+21.0	65.5' RT	---	819.22	---	---	---	---	---	---	---	---	---	---	---	---	---	---	---	---	---	---	
7A	1011+29.3	37.5' LT	821.95	817.16	820.95	815.16	5.78	---	---	---	---	---	---	1	---	---	---	---	---	---	---	---	
SUBTOTALS								**1**	**0**	**3**	**15**	**2**	**1**	**24**	**1**	**2**	**0**	**0**	**0**	**1**	**0**	**0**	

ALL ITEMS CATEGORY 0010 UNLESS NOTED OTHERWISE

STORM SEWER STRUCTURES

STRUCTURE NUMBER	STATION	OFFSET	RIM ELEV	LOWEST PIPE INVERT ELEV	TOP OF STRUCTURE ELEV	BOTTOM OF STRUCTURE ELEV	STR DEPTH FEET	520.8000 CONCRETE COLLARS FOR PIPE EACH	611.0420 RECONSTRUCTING MANHOLES EACH	611.1003 CATCH BASINS 3-FT DIAMETER EACH	611.1004 CATCH BASINS 4-FT DIAMETER EACH	611.1005 CATCH BASINS 5-FT DIAMETER EACH	611.1006 CATCH BASINS 6-FT DIAMETER EACH	611.1230 CATCH BASINS 2X3-FT EACH	611.2004 MANHOLES 4-FT DIAMETER EACH	611.2005 MANHOLES 5-FT DIAMETER EACH	611.2006 MANHOLES 6-FT DIAMETER EACH	611.2008 MANHOLES 8-FT DIAMETER EACH	*** 611.3220 INLETS 2X2-FT EACH	*** 611.3901 INLETS MEDIAN 1 GRATE EACH	611.3902 INLETS MEDIAN 2 GRATE EACH	SPV.0090.09 TRENCH DRAIN 12-INCH LF	COMMENTS
7B	1010+69.3	37.5' LT	822.03	817.56	821.03	815.56	5.47	---	---	---	---	---	---	1	---	---	---	---	---	---	---	---	
7C	1011+19.3	37.5' LT	821.95	817.06	820.95	815.06	5.89	---	---	---	---	---	---	1	---	---	---	---	---	---	---	---	
7D	1011+06.2	71.0' LT	---	816.70	---	---	---	---	---	---	---	---	---	---	---	---	---	---	---	---	---	---	
8A	1010+65.1	0.7' RT	821.87	817.07	820.87	815.07	5.80	---	---	---	---	---	---	1	---	---	---	---	---	---	---	---	
8B	1010+75.0	0.5' LT	821.82	816.72	820.82	814.72	6.10	---	---	---	---	---	---	1	---	---	---	---	---	---	---	---	
8C	1011+21.7	6.3' LT	821.94	816.25	820.94	814.25	6.69	---	---	---	1	---	---	---	---	---	---	---	---	---	---	---	
8D	1012+25.0	1.5' LT	821.05	817.22	820.05	815.22	4.83	---	---	---	---	---	---	1	---	---	---	---	---	---	---	---	
8E	1011+57.9	1.5' LT	821.72	816.82	820.72	814.82	5.90	---	---	---	---	---	---	1	---	---	---	---	---	---	---	---	
8F	1011+47.9	1.5' LT	821.77	815.73	820.77	813.73	7.04	---	---	---	1	---	---	---	---	---	---	---	---	---	---	---	
8G	1011+46.4	37.5' RT	822.01	816.03	821.01	814.03	6.99	---	---	---	---	---	---	1	---	---	---	---	---	---	---	---	
8H	1011+36.4	37.5' RT	822.01	815.33	821.01	813.33	7.68	---	---	---	1	---	---	---	---	---	---	---	---	---	---	---	
8I	1011+26.4	37.5' RT	822.01	812.32	821.01	810.32	10.69	---	---	---	1	---	---	---	---	---	---	---	---	---	---	---	
8J	1011+26.4	78.5' RT	---	811.91	---	---	---	---	---	---	---	---	---	---	---	---	---	---	---	---	---	---	
9A	1017+55.5	63.5' LT	822.86	820.30	821.86	820.11	1.75	---	---	---	---	---	---	---	---	---	---	---	---	1	---	---	
9B	1016+96.0	62.8' LT	824.59	820.12	823.59	819.93	3.65	---	---	---	---	---	---	---	---	---	---	---	---	1	---	---	
9	1016+96.0	27.0' RT	825.44	819.85	824.20	819.64	4.55	---	---	---	---	---	---	---	1	---	---	---	---	---	---	---	
10A	1014+07.6	37.5' LT	823.50	818.79	822.50	816.79	5.71	---	---	---	---	---	---	1	---	---	---	---	---	---	---	---	
10B	1013+94.6	37.5' LT	823.45	818.69	822.45	816.69	5.76	---	---	---	---	---	---	1	---	---	---	---	---	---	---	---	
10C	1013+71.9	0.0' LT	823.14	818.11	822.14	816.11	6.03	---	---	---	1	---	---	---	---	---	---	---	---	---	---	---	
10	1013+37.5	27.5' RT	823.12	817.53	821.88	817.32	4.56	---	---	---	---	---	---	---	---	---	---	---	---	---	---	---	
10D	1013+25.0	37.5' RT	822.81	817.41	821.81	815.41	6.40	---	---	---	1	---	---	---	---	---	---	---	---	---	---	---	
10E	1012+91.2	68.2' RT	---	817.07	---	---	---	---	---	---	---	---	---	---	---	---	---	---	---	---	---	---	
11A	1020+25.0	34.5' LT	819.68	814.88	818.68	812.88	5.80	---	---	---	---	---	---	1	---	---	---	---	---	---	---	---	
11B	1020+25.0	34.5' RT	819.44	814.64	818.44	812.64	5.80	---	---	---	---	---	---	1	---	---	---	---	---	---	---	---	
11	1020+25.0	13.0' RT	819.88	813.43	818.64	813.22	5.42	---	---	---	---	---	---	---	1	---	---	---	---	---	---	---	
12A	1023+00.0	34.5' LT	806.86	802.06	805.86	800.06	5.80	---	---	---	---	---	---	1	---	---	---	---	---	---	---	---	
12B	1023+00.0	34.5' RT	806.44	801.64	805.44	799.64	5.80	---	---	---	---	---	---	1	---	---	---	---	---	---	---	---	
12	1023+00.0	13.0' RT	806.88	799.81	805.64	799.56	6.08	---	---	---	---	---	---	---	---	1	---	---	---	---	---	---	
13	1024+00.0	13.8' RT	802.78	792.49	801.54	791.92	9.62	---	---	---	---	---	---	---	---	---	---	---	1	---	---	---	
14A	1024+87.5	34.5' RT	800.81	796.01	799.81	794.01	5.80	---	---	---	---	---	---	1	---	---	---	---	---	---	---	---	
14	1024+87.5	14.5' RT	801.22	791.61	799.98	791.40	8.58	---	---	---	---	---	---	---	---	---	---	---	1	---	---	---	
15A	1034+71.5	36.5' LT	824.25	819.45	823.25	817.45	5.80	---	---	---	---	---	---	1	---	---	---	---	---	---	---	---	
15B	1034+96.4	1.7' RT	824.38	819.03	823.29	817.03	6.26	---	---	1	---	---	---	---	---	---	---	---	---	---	---	---	
15C	1034+81.4	1.7' RT	824.29	818.88	823.20	816.88	6.32	---	---	1	---	---	---	---	---	---	---	---	---	---	---	---	
15D	1034+81.4	8.2' RT	824.40	818.80	823.32	816.80	6.52	---	---	1	---	---	---	---	---	---	---	---	---	---	---	---	
15E	1035+09.3	36.5' RT	824.64	819.83	823.64	817.83	5.81	---	---	---	---	---	---	1	---	---	---	---	---	---	---	---	
15F	1034+84.3	36.5' RT	824.38	819.58	823.38	817.58	5.80	---	---	---	---	---	---	1	---	---	---	---	---	---	---	---	
15G	1034+56.1	37.7' RT	824.04	819.24	823.04	817.24	5.80	---	---	---	1	---	---	---	---	---	---	---	---	---	---	---	
15H	1034+67.4	35.0' RT	824.23	818.76	822.99	818.57	4.42	---	---	---	---	---	---	---	1	---	---	---	---	---	---	---	
15	1034+68.2	15.0' RT	824.32	817.64	823.08	817.39	5.69	---	---	---	---	---	---	---	---	1	---	---	---	---	---	---	
16A	1032+62.0	47.5' LT	822.60	817.62	821.60	815.62	5.97	---	---	1	---	---	---	---	---	---	---	---	---	---	---	---	
16B	1032+59.0	36.5' LT	822.19	817.39	821.19	815.39	5.80	---	---	---	---	---	---	1	---	---	---	---	---	---	---	---	
16C	1033+11.2	1.7' LT	822.89	817.69	821.80	815.69	6.11	---	---	1	---	---	---	---	---	---	---	---	---	---	---	---	
16D	1032+61.2	1.7' LT	822.63	816.69	821.55	814.69	6.86	---	---	---	1	---	---	---	---	---	---	---	---	---	---	---	
16E	1033+12.1	36.5' RT	822.56	817.76	821.56	815.76	5.80	---	---	---	---	---	---	1	---	---	---	---	---	---	---	---	
16F	1032+62.1	36.5' RT	822.21	817.41	821.21	815.41	5.80	---	---	---	---	---	---	1	---	---	---	---	---	---	---	---	
16	1032+62.3	15.0' RT	822.65	815.17	821.41	814.92	6.49	---	---	---	---	---	---	---	---	1	---	---	---	---	---	---	
17A	1031+44.7	7.1' LT	822.01	817.21	820.93	815.21	5.72	---	---	1	---	---	---	---	---	---	---	---	---	---	---	---	
17B	1031+44.8	7.1' RT	822.01	816.93	820.92	814.93	6.00	---	---	1	---	---	---	---	---	---	---	---	---	---	---	---	
17	1031+44.8	13.6' RT	821.89	814.00	820.65	813.75	6.91	---	---	---	---	---	---	---	1	---	---	---	---	---	---	---	
18A	1031+07.6	46.0' LT	821.44	819.40	---	---	---	---	---	---	---	---	---	---	---	---	---	---	---	---	---	21.1	
18B	1031+01.6	47.7' LT	821.54	816.29	820.54	816.13	4.41	---	---	---	---	---	---	---	---	---	---	---	---	1	---	---	
18C	1030+50.7	46.0' LT	820.59	818.73	---	---	---	---	---	---	---	---	---	---	---	---	---	---	---	---	---	38.0	
18D	1031+00.0	34.5' LT	820.85	815.78	819.85	813.78	6.07	---	---	---	---	---	---	1	---	---	---	---	---	---	---	---	
18E	1031+00.0	34.5' RT	820.85	816.05	819.85	814.05	5.80	---	---	---	---	---	---	1	---	---	---	---	---	---	---	---	
SUBTOTALS								**0**	**0**	**7**	**8**	**0**	**0**	**22**	**4**	**3**	**0**	**3**	**0**	**3**	**0**	**59**	

ALL ITEMS CATEGORY 0010 UNLESS NOTED OTHERWISE

STORM SEWER STRUCTURES

STRUCTURE NUMBER	STATION	OFFSET	RIM ELEV	LOWEST PIPE INVERT ELEV	TOP OF STRUCTURE ELEV	BOTTOM OF STRUCTURE ELEV	STR DEPTH FEET	520.8000 CONCRETE COLLARS FOR PIPE EACH	611.0420 RECONSTRUCTING MANHOLES EACH	611.1003 CATCH BASINS 3-FT DIAMETER EACH	611.1004 CATCH BASINS 4-FT DIAMETER EACH	611.1005 CATCH BASINS 5-FT DIAMETER EACH	611.1006 CATCH BASINS 6-FT DIAMETER EACH	611.1230 CATCH BASINS 2X3-FT EACH	611.2004 MANHOLES 4-FT DIAMETER EACH	611.2005 MANHOLES 5-FT DIAMETER EACH	611.2006 MANHOLES 6-FT DIAMETER EACH	611.2008 MANHOLES 8-FT DIAMETER EACH	*** 611.3220 INLETS 2X2-FT EACH	*** 611.3901 INLETS MEDIAN 1 GRATE EACH	611.3902 INLETS MEDIAN 2 GRATE EACH	SPV.0090.09 TRENCH DRAIN 12-INCH LF	COMMENTS
18	1031+00.0	13.0' RT	821.29	811.53	820.05	811.28	8.77	---	---	---	---	---	---	---	---	1	---	---	---	---	---	---	
19A	1029+54.6	49.8' LT	823.07	812.37	822.07	812.20	9.87	---	---	---	---	---	---	---	---	---	---	---	1	---	---	---	
19B	1029+44.6	49.2' LT	816.80	811.91	815.80	811.73	4.07	---	---	---	---	---	---	---	---	---	---	---	---	1	---	---	
19C	1029+01.1	46.0' LT	815.83	813.71	---	---	---	---	---	---	---	---	---	---	---	---	---	---	---	---	---	36.0	
19D	1029+44.0	34.5' LT	816.64	811.62	815.64	809.62	6.02	---	---	---	---	---	---	1	---	---	---	---	---	---	---	---	
19E	1029+21.1	33.0' RT	---	813.39	---	---	---	---	---	---	---	---	---	---	---	---	---	---	---	---	---	---	
19F	1029+50.0	34.5' RT	816.87	812.07	815.87	810.07	5.80	---	---	---	---	---	---	1	---	---	---	---	---	---	---	---	
19	1029+50.0	13.0' RT	817.31	806.50	816.07	806.25	9.82	---	---	---	---	---	---	---	---	1	---	---	---	---	---	---	
20A	1027+65.2	49.8' LT	815.76	803.74	814.76	803.57	11.19	---	---	---	---	---	---	---	---	---	---	---	1	---	---	---	
20B	1027+64.9	34.5' LT	808.25	803.18	807.25	801.18	6.07	---	---	---	---	---	---	1	---	---	---	---	---	---	---	---	
20C	1027+89.5	34.5' RT	809.49	804.95	808.49	802.95	5.54	---	---	---	---	---	---	1	---	---	---	---	---	---	---	---	
20D	1027+64.5	34.5' RT	808.24	804.70	807.24	802.70	4.54	---	---	---	---	---	---	1	---	---	---	---	---	---	---	---	
20	1027+64.5	13.0' RT	808.68	801.14	807.44	800.89	6.55	---	---	---	---	---	---	---	---	1	---	---	---	---	---	---	
21A	1026+21.1	34.5' LT	802.73	797.93	801.73	795.93	5.79	---	---	---	---	---	---	1	---	---	---	---	---	---	---	---	
21B	1026+09.3	5.5' LT	802.79	797.62	801.79	795.62	6.17	---	---	---	1	---	---	---	---	---	---	---	---	---	---	---	
21C	1026+04.1	5.1' RT	802.34	797.50	801.34	795.50	5.84	---	---	---	1	---	---	---	---	---	---	---	---	---	---	---	
21D	1026+04.1	34.5' RT	801.73	796.93	800.73	794.93	5.80	---	---	---	---	---	---	1	---	---	---	---	---	---	---	---	
21	1026+04.1	13.0' RT	802.17	792.82	800.93	792.26	8.67	---	---	---	---	---	---	---	---	---	---	1	---	---	---	---	
22	1025+25.0	14.5' RT	801.15	792.03	799.91	791.82	8.09	---	---	---	---	---	---	---	---	---	---	1	---	---	---	---	
23A	1025+97.5	59.2' LT	801.35	796.70	800.35	796.51	3.84	---	---	---	---	---	---	---	---	---	---	---	---	1	---	---	
23B	1025+87.7	57.6' LT	801.57	796.50	800.57	794.50	6.07	---	---	---	1	---	---	---	---	---	---	---	---	---	---	---	
23C	1025+29.6	60.5' LT	801.21	795.09	800.21	794.89	5.32	---	---	---	---	---	---	---	---	---	---	---	---	1	---	---	
23D	1025+19.5	54.2' LT	800.84	794.36	799.84	794.11	5.73	---	---	---	---	---	---	---	---	---	---	---	---	---	1	---	
23E	1024+20.9	50.7' LT	802.18	797.43	801.18	797.25	3.93	---	---	---	---	---	---	---	---	---	---	---	---	1	---	---	
23F	1024+20.9	34.5' LT	802.18	797.11	801.18	795.11	6.07	---	---	---	---	---	---	1	---	---	---	---	---	---	---	---	
23G	1024+97.7	34.5' LT	800.93	795.57	799.93	793.57	6.36	---	---	---	---	---	---	1	---	---	---	---	---	---	---	---	
23H	1025+17.0	35.8' LT	800.79	795.99	799.79	793.99	5.80	---	---	---	---	---	---	1	---	---	---	---	---	---	---	---	
23I	1025+07.7	34.5' LT	800.82	793.90	799.82	791.90	7.92	---	---	---	---	---	1	---	---	---	---	---	---	---	---	---	
23	1025+13.8	14.7' RT	801.13	789.30	799.89	788.63	11.26	---	---	---	---	---	---	---	---	---	---	1	---	---	---	---	
24A	19+22.0	25.6' RT	799.28	794.63	798.04	792.63	5.40	---	---	1	---	---	---	---	---	---	---	---	---	---	---	---	
24B	18+92.6	27.2' RT	799.06	794.32	798.06	794.13	3.92	---	---	---	---	---	---	---	---	---	---	---	---	1	---	---	
24C	18+86.4	13.5' RT	799.24	794.09	798.24	792.09	6.15	---	---	---	---	1	---	---	---	---	---	---	---	---	---	---	
24D	19+00.0	13.0' RT	799.14	793.93	798.14	791.93	6.21	---	---	---	1	---	---	---	---	---	---	---	---	---	---	---	
24E	19+11.8	13.0' RT	799.22	793.43	798.22	791.43	6.79	---	---	1	---	---	---	---	---	---	---	---	---	---	---	---	
24F	18+92.1	13.5' LT	799.24	793.40	798.24	791.40	6.83	---	---	---	---	---	---	1	---	---	---	---	---	---	---	---	
24G	19+00.0	13.5' LT	799.14	793.30	798.14	791.30	6.83	---	---	---	---	---	---	1	---	---	---	---	---	---	---	---	
24H	19+11.8	13.5' LT	799.22	792.65	798.22	790.65	7.57	---	---	---	---	---	---	1	---	---	---	---	---	---	---	---	
24I	19+10.9	40.1' LT	794.61	791.17	793.61	790.98	2.63	---	---	---	---	---	---	---	---	---	---	---	---	1	---	---	
24	19+10.9	29.4' LT	796.73	784.61	795.23	784.61	10.62	---	1	---	---	---	---	---	---	---	---	---	---	---	---	---	
30A	60+50.2	22.5' LT	825.16	820.54	824.16	818.54	5.62	---	---	---	---	---	---	1	---	---	---	---	---	---	---	---	
30B	64+40.3	21.0' LT	825.07	820.44	824.07	818.44	5.63	---	---	---	1	---	---	---	---	---	---	---	---	---	---	---	
30C	64+11.7	18.2' RT	---	819.95	---	---	---	1	---	---	---	---	---	---	---	---	---	---	---	---	---	---	
30D	64+40.7	22.5' RT	824.68	819.43	823.68	817.43	6.24	---	---	---	1	---	---	---	---	---	---	---	---	---	---	---	
30E	64+50.6	24.0' RT	824.75	819.34	823.75	817.34	6.41	---	---	---	1	---	---	---	---	---	---	---	---	---	---	---	
30	1040+30.6	13.0' RT	825.13	818.99	823.89	818.74	5.15	---	---	---	---	---	---	---	---	1	---	---	---	---	---	---	
31A	1041+65.0	34.5' RT	823.82	819.36	822.82	817.36	5.46	---	---	---	---	---	---	1	---	---	---	---	---	---	---	---	
31B	1041+25.0	34.5' RT	823.96	819.16	822.96	817.16	5.80	---	---	---	---	---	---	1	---	---	---	---	---	---	---	---	
31	1041+25.0	13.0' RT	824.40	818.52	823.16	818.27	4.89	---	---	---	---	---	---	---	---	1	---	---	---	---	---	---	
32A	1042+96.2	34.5' RT	822.78	817.93	821.78	815.93	5.85	---	---	---	---	---	---	1	---	---	---	---	---	---	---	---	
32	1042+96.2	13.0' RT	823.11	815.72	821.87	815.47	6.40	---	---	---	---	---	---	---	---	1	---	---	---	---	---	---	
33A	1042+77.4	35.1' LT	822.79	816.65	821.79	814.65	7.14	---	---	---	---	---	---	1	---	---	---	---	---	---	---	---	
33	1042+95.7	33.1' LT	822.68	815.28	821.44	815.07	6.37	---	---	---	---	---	---	---	---	1	---	---	---	---	---	---	
34	1042+95.5	56.6' LT	821.63	815.06	820.63	813.06	7.57	---	---	---	1	---	---	---	---	---	---	---	---	---	---	---	
40A	1047+65.3	36.5' LT	820.30	817.12	819.30	815.12	4.17	---	---	---	---	---	---	1	---	---	---	---	---	---	---	---	
40B	1048+25.0	1.7' RT	821.00	817.23	819.92	815.23	4.68	---	---	1	---	---	---	---	---	---	---	---	---	---	---	---	
SUBTOTALS								**1**	**1**	**3**	**8**	**1**	**1**	**19**	**0**	**2**	**5**	**1**	**2**	**2**	**6**	**1**	**36**

ALL ITEMS CATEGORY 0010 UNLESS NOTED OTHERWISE

STORM SEWER STRUCTURES

STRUCTURE NUMBER	STATION	OFFSET	RIM ELEV	LOWEST PIPE INVERT ELEV	TOP OF STRUCTURE ELEV	BOTTOM OF STRUCTURE ELEV	STR DEPTH FEET	520.8000 CONCRETE COLLARS FOR PIPE EACH	611.0420 RECONSTRUCTING MANHOLES EACH	611.1003 CATCH BASINS 3-FT DIAMETER EACH	611.1004 CATCH BASINS 4-FT DIAMETER EACH	611.1005 CATCH BASINS 5-FT DIAMETER EACH	611.1006 CATCH BASINS 6-FT DIAMETER EACH	611.1230 CATCH BASINS 2X3-FT EACH	611.2004 MANHOLES 4-FT DIAMETER EACH	611.2005 MANHOLES 5-FT DIAMETER EACH	611.2006 MANHOLES 6-FT DIAMETER EACH	611.2008 MANHOLES 8-FT DIAMETER EACH	*** 611.3220 INLETS 2X2-FT EACH	*** 611.3901 INLETS MEDIAN 1 GRATE EACH	611.3902 INLETS MEDIAN 2 GRATE EACH	SPV.0090.09 TRENCH DRAIN 12-INCH LF	COMMENTS
40C	1047+64.7	1.8' RT	821.04	816.68	819.96	814.68	5.28	---	---	---	1	---	---	---	---	---	---	---	---	---	---	---	
40D	1047+64.7	8.2' RT	820.85	816.65	819.77	814.65	5.12	---	---	---	1	---	---	---	---	---	---	---	---	---	---	---	
40E	1047+42.0	36.2' RT	820.14	816.91	819.14	814.91	4.23	---	---	---	1	---	---	---	---	---	---	---	---	---	---	---	
40F	1047+29.7	38.8' RT	820.08	816.60	819.08	814.60	4.49	---	---	---	1	---	---	---	---	---	---	---	---	---	---	---	
40	1047+30.0	14.6' RT	820.51	816.23	819.27	816.02	3.25	---	---	---	---	---	---	---	1	---	---	---	---	---	---	---	
41A	1047+18.3	74.0' RT	820.23	816.33	818.99	814.33	4.66	---	---	---	1	---	---	---	---	---	---	---	---	---	---	---	
41B	1046+59.7	37.3' RT	819.62	815.73	818.62	813.73	4.89	---	---	---	1	---	---	---	---	---	---	---	---	---	---	---	
41C	1046+40.5	35.2' RT	819.62	816.48	818.62	814.48	4.14	---	---	---	---	---	---	1	---	---	---	---	---	---	---	---	
41D	1046+50.5	35.3' RT	819.59	815.68	818.59	813.68	4.90	---	---	---	1	---	---	---	---	---	---	---	---	---	---	---	
41	1046+50.0	13.8' RT	820.19	815.58	818.95	815.35	3.61	---	---	---	---	---	---	---	1	---	---	---	---	---	---	---	
42A	1044+81.6	34.5' RT	820.48	816.62	819.48	814.62	4.86	---	---	---	---	---	---	1	---	---	---	---	---	---	---	---	
42B	1044+71.6	34.5' RT	820.57	816.57	819.57	814.57	5.00	---	---	---	---	---	---	1	---	---	---	---	---	---	---	---	
42	1044+71.6	13.0' RT	821.01	816.22	819.77	816.03	3.74	---	---	---	---	---	---	---	1	---	---	---	---	---	---	---	
43A	1045+75.0	34.6' RT	819.91	816.06	818.91	814.06	4.85	---	---	---	1	---	---	---	---	---	---	---	---	---	---	---	
43	1045+75.0	13.1' RT	820.35	815.20	819.11	814.97	4.14	---	---	---	---	---	---	---	1	---	---	---	---	---	---	---	
44	1045+75.1	34.6' LT	819.82	814.96	818.82	812.96	5.86	---	---	---	---	1	---	---	---	---	---	---	---	---	---	---	
45	1046+52.0	35.3' LT	819.73	815.95	818.73	813.95	4.78	---	---	---	1	---	---	---	---	---	---	---	---	---	---	---	NO SUMP
46	1046+42.0	35.2' LT	819.72	815.40	818.72	815.40	3.32	---	---	---	1	---	---	---	---	---	---	---	---	---	---	---	
47	1045+89.5	34.7' LT	819.77	814.89	818.77	812.89	5.88	---	---	---	1	---	---	---	---	---	---	---	---	---	---	---	
50A	1052+21.7	36.5' LT	817.42	812.62	816.42	810.62	5.80	---	---	---	---	---	---	1	---	---	---	---	---	---	---	---	
50B	1052+21.7	8.3' LT	817.50	812.09	816.41	810.09	6.33	---	---	1	---	---	---	---	---	---	---	---	---	---	---	---	
50C	1052+21.7	1.7' LT	817.30	812.02	816.22	810.02	6.19	---	---	1	---	---	---	---	---	---	---	---	---	---	---	---	
50D	1052+21.7	36.5' RT	817.42	811.64	816.42	809.64	6.78	---	---	---	1	---	---	---	---	---	---	---	---	---	---	---	
50E	1053+05.5	64.9' RT	---	810.76	---	---	---	---	---	---	---	---	---	---	---	---	---	---	---	---	---	---	
60A	1054+82.3	36.5' LT	805.43	800.31	804.43	798.31	6.12	---	---	---	1	---	---	---	---	---	---	---	---	---	---	---	
60B	1055+01.9	2.6' LT	804.44	799.34	803.44	797.34	6.10	---	---	---	1	---	---	---	---	---	---	---	---	---	---	---	
60C	1055+07.6	7.5' RT	804.25	799.16	803.25	797.16	6.09	---	---	---	1	---	---	---	---	---	---	---	---	---	---	---	
60D	1055+22.7	56.2' RT	803.72	799.20	802.72	799.01	3.71	---	---	---	---	---	---	---	---	---	---	---	---	1	---	---	
60E	1055+25.0	36.5' RT	803.30	798.23	802.30	798.23	4.07	---	---	---	1	---	---	---	---	---	---	---	---	---	---	---	NO SUMP
60	1055+25.0	26.5' RT	803.51	796.66	802.27	796.41	5.86	---	---	---	---	---	---	---	1	---	---	---	---	---	---	---	
61A	1058+21.5	36.5' LT	791.62	787.76	790.62	785.76	4.86	---	---	---	---	---	---	1	---	---	---	---	---	---	---	---	
61B	1058+21.5	7.5' LT	791.70	787.30	790.70	785.30	5.41	---	---	---	---	---	---	1	---	---	---	---	---	---	---	---	
61C	1058+21.5	8.1' RT	791.70	787.18	790.70	785.18	5.52	---	---	---	---	---	---	1	---	---	---	---	---	---	---	---	
61	1058+21.5	27.1' RT	791.83	786.29	790.59	786.04	4.56	---	---	---	---	---	---	---	---	1	---	---	---	---	---	---	
62	1058+21.5	37.1' RT	791.62	786.21	790.62	784.21	6.41	---	---	---	1	---	---	---	---	---	---	---	---	---	---	---	
63	1058+92.8	68.7' RT	---	785.62	---	---	---	---	---	---	---	---	---	---	---	---	---	---	---	---	---	---	
70A	1060+47.7	37.5' LT	788.74	785.84	787.74	783.84	3.90	---	---	---	---	---	---	1	---	---	---	---	---	---	---	---	
70B	1060+67.6	37.5' LT	788.74	785.84	787.74	783.84	3.90	---	---	---	---	---	---	1	---	---	---	---	---	---	---	---	
70C	1060+57.7	37.5' LT	788.73	785.54	787.73	783.54	4.19	---	---	---	---	---	---	1	---	---	---	---	---	---	---	---	
70D	1060+47.7	8.5' LT	788.82	785.61	787.82	783.61	4.21	---	---	---	---	---	---	1	---	---	---	---	---	---	---	---	
70E	1060+57.7	8.5' LT	788.81	785.39	787.81	783.39	4.42	---	---	---	---	---	---	1	---	---	---	---	---	---	---	---	
70F	1060+47.7	1.5' LT	788.54	785.58	787.54	783.58	3.97	---	---	---	---	---	---	1	---	---	---	---	---	---	---	---	
70G	1060+57.7	1.5' LT	788.49	785.36	787.49	783.36	4.13	---	---	---	---	---	---	1	---	---	---	---	---	---	---	---	
70H	1060+47.7	37.5' RT	788.74	785.38	787.74	783.38	4.36	---	---	---	---	---	---	1	---	---	---	---	---	---	---	---	
70I	1060+57.7	37.5' RT	788.73	785.16	787.73	783.16	4.57	---	---	---	---	---	---	1	---	---	---	---	---	---	---	---	
71	1060+57.7	59.5' RT	---	785.05	---	---	---	---	---	---	---	---	---	---	---	---	---	---	---	---	---	---	
80A	1062+03.8	80.1' LT	790.76	787.51	789.76	785.51	4.25	---	---	---	---	---	---	1	---	---	---	---	---	---	---	---	
80B	1062+37.5	79.5' LT	791.05	786.76	789.81	786.51	3.30	---	---	---	---	---	---	---	---	1	---	---	---	---	---	---	
80C	1062+53.8	83.4' LT	790.83	787.30	789.83	785.30	4.53	---	---	---	---	---	---	1	---	---	---	---	---	---	---	---	
80D	1062+55.1	73.5' LT	790.59	786.66	789.59	784.66	4.93	---	---	---	---	---	1	---	---	---	---	---	---	---	---	---	
80E	1062+99.7	58.3' LT	790.72	786.43	789.72	786.18	3.54	---	---	---	---	---	---	---	---	---	---	---	---	---	1	---	
80	1063+00.2	37.5' LT	791.78	786.32	790.78	784.32	6.46	---	---	---	1	---	---	---	---	---	---	---	---	---	---	---	
81A	1062+60.1	3.4' LT	790.83	787.26	789.83	785.26	4.57	---	---	---	---	---	---	1	---	---	---	---	---	---	---	---	
81B	1062+60.2	4.0' RT	790.84	786.97	789.84	784.97	4.87	---	---	---	1	---	---	---	---	---	---	---	---	---	---	---	
81	1062+87.5	8.6' RT	791.55	786.08	790.55	784.08	6.47	---	---	---	1	---	---	---	---	---	---	---	---	---	---	---	
SUBTOTALS								**0**	**0**	**2**	**19**	**1**	**1**	**19**	**5**	**2**	**0**	**0**	**0**	**1**	**1**	**0**	

ALL ITEMS CATEGORY 0010 UNLESS NOTED OTHERWISE

3

STORM SEWER STRUCTURES

STRUCTURE NUMBER	STATION	OFFSET	RIM ELEV	LOWEST PIPE INVERT ELEV	TOP OF STRUCTURE ELEV	BOTTOM OF STRUCTURE ELEV	STR DEPTH FEET	520.8000 CONCRETE COLLARS FOR PIPE EACH	611.0420 RECONSTRUCTING MANHOLES EACH	611.1003 CATCH BASINS 3-FT DIAMETER EACH	611.1004 CATCH BASINS 4-FT DIAMETER EACH	611.1005 CATCH BASINS 5-FT DIAMETER EACH	611.1006 CATCH BASINS 6-FT DIAMETER EACH	611.1230 CATCH BASINS 2X3-FT EACH	611.2004 MANHOLES 4-FT DIAMETER EACH	611.2005 MANHOLES 5-FT DIAMETER EACH	611.2006 MANHOLES 6-FT DIAMETER EACH	611.2008 MANHOLES 8-FT DIAMETER EACH	*** 611.3220 INLETS 2X2-FT EACH	*** 611.3901 INLETS MEDIAN 1 GRATE EACH	611.3902 INLETS MEDIAN 2 GRATE EACH	SPV.0090.09 TRENCH DRAIN 12-INCH LF	COMMENTS
82	1062+87.2	37.5' RT	791.46	785.94	790.46	783.94	6.52	---	---	---	---	---	---	1	---	---	---	---	---	---	---	---	
83	1062+87.6	65.5' RT	---	785.80	---	---	---	---	---	---	---	---	---	---	---	---	---	---	---	---	---	---	
90A	1065+12.5	61.7' LT	796.57	792.85	795.57	792.66	2.91	---	---	---	---	---	---	---	---	---	---	---	---	1	---	---	
90B	1065+61.5	37.5' LT	798.42	794.14	797.42	792.14	5.28	---	---	---	---	---	---	1	---	---	---	---	---	---	---	---	
90C	1065+11.5	37.5' LT	798.42	792.12	797.42	790.12	7.30	---	---	---	---	1	---	---	---	---	---	---	---	---	---	---	
90D	1065+21.5	8.5' LT	798.98	791.50	797.98	789.50	8.48	---	---	---	1	---	---	---	---	---	---	---	---	---	---	---	
90E	1065+21.5	8.5' RT	798.83	791.16	797.83	789.16	8.67	---	---	---	1	---	---	---	---	---	---	---	---	---	---	---	
90F	1065+11.5	37.5' RT	798.41	790.55	797.41	788.55	8.86	---	---	---	1	---	---	---	---	---	---	---	---	---	---	---	
90G	1065+11.6	66.5' RT	---	789.97	---	---	---	---	---	---	---	---	---	---	---	---	---	---	---	---	---	---	
100	1009+00.3	88.8' RT	---	814.75	---	---	---	---	---	---	---	---	---	---	---	---	---	---	---	---	---	---	
101	1009+16.1	90.9' RT	819.00	807.87	817.76	807.66	10.10	---	---	---	---	---	---	---	1	---	---	---	---	---	---	---	
102	1009+49.6	104.1' RT	---	807.15	---	---	---	---	---	---	---	---	---	---	---	---	---	---	---	---	---	---	
110	45+98.9	7.9' LT	---	825.23	---	---	---	1	---	---	---	---	---	---	---	---	---	---	---	---	---	---	
111	45+97.2	1.4' LT	829.46	825.08	828.46	823.08	5.38	---	---	---	---	---	---	1	---	---	---	---	---	---	---	---	
112	45+94.9	6.9' RT	828.76	824.88	827.52	824.21	3.31	---	---	---	---	---	---	---	1	---	---	---	---	---	---	---	
TOTALS								**3**	**1**	**15**	**53**	**5**	**3**	**87**	**14**	**12**	**1**	**5**	**2**	**12**	**2**	**95**	

1. RIM ELEVATIONS ARE GIVEN AT THE FLANGE LINE FOR INLET GRATES, AND AT THE CENTER OF THE MANHOLE STRUCTURE FOR MANHOLES.
2. STATIONS AND OFFSETS ARE TO THE CENTER OF STRUCTURES.
3. STRUCTURE DEPTH:
   MANHOLES: RIM ELEV - INVERT ELEV - CASTING HEIGHT - ADJUSTMENT
   CATCH BASINS: RIM ELEV - INVERT ELEV - CASTING HEIGHT - ADJUSTMENT + 24 INCHES
4. ADJUSTMENT IS 6 INCHES UNLESS OTHERWISE NOTED
5. PROVIDE A RECTANGULAR OPENING IN FLAT TOP SLAB WHEN ROUND CATCH BASINS ARE USED.

*** ADDITIONAL QUANTITIES FOUND ELSEWHERE

ALL ITEMS CATEGORY 0010 UNLESS NOTED OTHERWISE

STORM SEWER MANHOLE AND INLET COVERS

STRUCTUR NUMBER	611.0530 MANHOLE COVERS TYPE J EACH	611.0600 INLET COVERS TYPE A EACH	611.0612 TYPE C EACH	611.0624 TYPE H EACH	611.0627 TYPE HM EACH	*** 611.0642 TYPE MS EACH	611.0651 TYPE S EACH	611.0666 TYPE Z EACH	*** 611.8115 ADJUSTING INLET COVERS EACH
1A	---	---	---	1	---	---	---	---	---
1B	---	---	---	1	---	---	---	---	---
1C	---	---	---	---	---	---	---	---	---
2A	---	---	---	1	---	---	---	---	---
2B	---	---	---	1	---	---	---	---	---
2C	---	---	---	1	---	---	---	---	---
2D	---	---	---	1	---	---	---	---	---
2E	---	---	---	---	---	---	---	---	---
3A	---	---	---	1	---	---	---	---	---
3B	---	---	---	1	---	---	---	---	---
3C	---	---	---	1	---	---	---	---	---
3D	---	---	---	1	---	---	---	---	---
3E	---	---	---	---	---	---	---	---	---
3F	1	---	---	---	---	---	---	---	---
3G	---	---	---	---	---	1	---	---	---
3H	1	---	---	---	---	---	---	---	---
4A	---	---	---	1	---	---	---	---	---
4B	---	---	---	1	---	---	---	---	---
4C	---	---	---	---	---	---	---	1	---
4D	---	---	---	1	---	---	---	---	---
4E	---	---	---	1	---	---	---	---	---
4R	---	---	---	1	---	---	---	---	---
4F	---	---	---	1	---	---	---	---	---
4G	---	---	---	1	---	---	---	---	---
4S	---	---	---	1	---	---	---	---	---
4H	---	---	---	1	---	---	---	---	---
4I	---	---	---	1	---	---	---	---	---
4J	---	---	---	1	---	---	---	---	---
4K	---	---	---	1	---	---	---	---	---
4L	---	---	---	1	---	---	---	---	---
4M	---	---	---	1	---	---	---	---	---
4N	---	---	---	1	---	---	---	---	---
4O	---	1	---	---	---	---	---	---	---
4P	---	---	---	1	---	---	---	---	---
4Q	---	---	---	---	---	---	---	---	---
5A	---	---	---	---	---	---	1	---	---
5M	---	---	---	---	1	---	---	---	---
5B	---	---	---	1	---	---	---	---	---
5C	---	---	---	1	---	---	---	---	---
5D	---	---	---	1	---	---	---	---	---
5E	---	---	---	1	---	---	---	---	---
5F	---	---	---	1	---	---	---	---	---
5G	---	---	---	1	---	---	---	---	---
5L	---	---	---	1	---	---	---	---	---
5H	---	---	---	1	---	---	---	---	---
5I	---	---	---	1	---	---	---	---	---
5J	1	---	---	---	---	---	---	---	---
5K	---	---	---	---	---	---	---	---	---
6A	---	---	---	1	---	---	---	---	---
6B	---	---	---	1	---	---	---	---	---
6C	---	---	---	1	---	---	---	---	---
6D	---	---	---	1	---	---	---	---	---
6E	---	---	---	1	---	---	---	---	---
6F	---	---	---	---	---	---	---	---	---
7A	---	---	---	1	---	---	---	---	---
SUBTOTALS	**3**	**1**	**0**	**41**	**1**	**1**	**1**	**1**	**0**

STORM SEWER ENDWALLS

STRUCTURE NUMBER	520.1018 AEW FOR CULV PIPE 18" EACH	*** 522.1012 APRON ENDWALLS FOR CULVERT PIPE REINFORCED CONCRETE 12" EACH	522.1018 18" EACH	522.1024 24" EACH	522.2614 HE 14X23-INCH EACH	633.5200 MARKERS CULVERT END EACH	COMMENTS
1A	---	---	---	---	---	---	
1B	---	---	---	---	---	---	
1C	---	1	---	---	---	1	
2A	---	---	---	---	---	---	
2B	---	---	---	---	---	---	
2C	---	---	---	---	---	---	
2D	---	---	---	---	---	---	
2E	---	1	---	---	---	1	
3A	---	---	---	---	---	---	
3B	---	---	---	---	---	---	
3C	---	---	---	---	---	---	
3D	---	---	---	---	---	---	
3E	---	---	---	---	---	---	
3F	---	---	---	---	---	---	
3G	---	---	---	---	---	---	
3H	---	---	---	---	---	---	
4A	---	---	---	---	---	---	
4B	---	---	---	---	---	---	
4C	---	---	---	---	---	---	
4D	---	---	---	---	---	---	
4E	---	---	---	---	---	---	
4R	---	---	---	---	---	---	
4F	---	---	---	---	---	---	
4G	---	---	---	---	---	---	
4S	---	---	---	---	---	---	
4H	---	---	---	---	---	---	
4I	---	---	---	---	---	---	
4J	---	---	---	---	---	---	
4K	---	---	---	---	---	---	
4L	---	---	---	---	---	---	
4M	---	---	---	---	---	---	
4N	---	---	---	---	---	---	
4O	---	---	---	---	---	---	
4P	---	---	---	---	---	---	
4Q	---	---	---	1	---	1	
5A	---	---	---	---	---	---	
5M	---	---	---	---	---	---	
5B	---	---	---	---	---	---	
5C	---	---	---	---	---	---	
5D	---	---	---	---	---	---	
5E	---	---	---	---	---	---	
5F	---	---	---	---	---	---	
5G	---	---	---	---	---	---	
5L	---	---	---	---	---	---	
5H	---	---	---	---	---	---	
5I	---	---	---	---	---	---	
5J	---	---	---	---	---	---	
5K	---	---	---	---	1	1	
6A	---	---	---	---	---	---	
6B	---	---	---	---	---	---	
6C	---	---	---	---	---	---	
6D	---	---	---	---	---	---	
6E	---	---	---	---	---	---	
6F	---	1	---	---	---	1	
7A	---	---	---	---	---	---	
SUBTOTALS	**0**	**3**	**0**	**1**	**1**	**5**	

ALL ITEMS CATEGORY 0010 UNLESS NOTED OTHERWISE

STORM SEWER MANHOLE AND INLET COVERS

STRUCTUR NUMBER	611.0530 MANHOLE COVERS TYPE J EACH	611.0600 INLET COVERS TYPE A EACH	611.0612 TYPE C EACH	611.0624 TYPE H EACH	611.0627 TYPE HM EACH	*** 611.0642 TYPE MS EACH	611.0651 TYPE S EACH	611.0666 TYPE Z EACH	*** 611.8115 ADJUSTING INLET COVERS EACH
7B	---	---	---	1	---	---	---	---	---
7C	---	---	---	1	---	---	---	---	---
7D	---	---	---	---	---	---	---	---	---
8A	---	---	---	1	---	---	---	---	---
8B	---	---	---	1	---	---	---	---	---
8C	---	---	---	1	---	---	---	---	---
8D	---	---	---	1	---	---	---	---	---
8E	---	---	---	1	---	---	---	---	---
8F	---	---	---	1	---	---	---	---	---
8G	---	---	---	1	---	---	---	---	---
8H	---	---	---	1	---	---	---	---	---
8I	---	---	---	1	---	---	---	---	---
8J	---	---	---	---	---	---	---	---	---
9A	---	---	---	---	---	1	---	---	---
9B	---	---	---	---	---	1	---	---	---
9	1	---	---	---	---	---	---	---	---
10A	---	---	---	1	---	---	---	---	---
10B	---	---	---	1	---	---	---	---	---
10C	---	---	---	---	---	---	1	---	---
10	1	---	---	---	---	---	---	---	---
10D	---	---	---	1	---	---	---	---	---
10E	---	---	---	---	---	---	---	---	---
11A	---	---	---	1	---	---	---	---	---
11B	---	---	---	1	---	---	---	---	---
11	1	---	---	---	---	---	---	---	---
12A	---	---	---	1	---	---	---	---	---
12B	---	---	---	1	---	---	---	---	---
12	1	---	---	---	---	---	---	---	---
13	1	---	---	---	---	---	---	---	---
14A	---	---	---	1	---	---	---	---	---
14	1	---	---	---	---	---	---	---	---
15A	---	---	---	1	---	---	---	---	---
15B	---	---	---	---	---	---	---	1	---
15C	---	---	---	---	---	---	---	1	---
15D	---	---	---	---	---	---	---	1	---
15E	---	---	---	1	---	---	---	---	---
15F	---	---	---	1	---	---	---	---	---
15G	---	---	---	1	---	---	---	---	---
15H	1	---	---	---	---	---	---	---	---
15	1	---	---	---	---	---	---	---	---
16A	---	---	---	---	---	---	1	---	---
16B	---	---	---	1	---	---	---	---	---
16C	---	---	---	---	---	---	---	1	---
16D	---	---	---	---	---	---	---	1	---
16E	---	---	---	1	---	---	---	---	---
16F	---	---	---	1	---	---	---	---	---
16	1	---	---	---	---	---	---	---	---
17A	---	---	---	---	---	---	---	1	---
17B	---	---	---	---	---	---	---	1	---
17	1	---	---	---	---	---	---	---	---
18A	---	---	---	---	---	---	---	---	---
18B	---	---	---	---	---	1	---	---	---
18C	---	---	---	---	---	---	---	---	---
18D	---	---	---	1	---	---	---	---	---
18E	---	---	---	1	---	---	---	---	---
SUBTOTALS	**10**	**0**	**0**	**28**	**0**	**3**	**2**	**7**	**0**

STORM SEWER ENDWALLS

STRUCTURE NUMBER	520.1018 AEW FOR CULV PIPE 18" EACH	*** 522.1012 APRON ENDWALLS FOR CULVERT PIPE REINFORCED CONCRETE 12" EACH	522.1018 18" EACH	522.1024 24" EACH	522.2614 HE 14X23-INCH EACH	633.5200 MARKERS CULVERT END EACH	COMMENTS
7B	---	---	---	---	---	---	
7C	---	---	---	---	---	---	
7D	---	1	---	---	---	1	
8A	---	---	---	---	---	---	
8B	---	---	---	---	---	---	
8C	---	---	---	---	---	---	
8D	---	---	---	---	---	---	
8E	---	---	---	---	---	---	
8F	---	---	---	---	---	---	
8G	---	---	---	---	---	---	
8H	---	---	---	---	---	---	
8I	---	---	---	---	---	---	
8J	1	---	---	---	---	1	
9A	---	---	---	---	---	---	
9B	---	---	---	---	---	---	
9	---	---	---	---	---	---	
10A	---	---	---	---	---	---	
10B	---	---	---	---	---	---	
10C	---	---	---	---	---	---	
10	---	---	---	---	---	---	
10D	---	---	---	---	---	---	
10E	---	---	1	---	---	1	
11A	---	---	---	---	---	---	
11B	---	---	---	---	---	---	
11	---	---	---	---	---	---	
12A	---	---	---	---	---	---	
12B	---	---	---	---	---	---	
12	---	---	---	---	---	---	
13	---	---	---	---	---	---	
14A	---	---	---	---	---	---	
14	---	---	---	---	---	---	
15A	---	---	---	---	---	---	
15B	---	---	---	---	---	---	
15C	---	---	---	---	---	---	
15D	---	---	---	---	---	---	
15E	---	---	---	---	---	---	
15F	---	---	---	---	---	---	
15G	---	---	---	---	---	---	
15H	---	---	---	---	---	---	
15	---	---	---	---	---	---	
16A	---	---	---	---	---	---	
16B	---	---	---	---	---	---	
16C	---	---	---	---	---	---	
16D	---	---	---	---	---	---	
16E	---	---	---	---	---	---	
16F	---	---	---	---	---	---	
16	---	---	---	---	---	---	
17A	---	---	---	---	---	---	
17B	---	---	---	---	---	---	
17	---	---	---	---	---	---	
18A	---	---	---	---	---	---	
18B	---	---	---	---	---	---	
18C	---	---	---	---	---	---	
18D	---	---	---	---	---	---	
18E	---	---	---	---	---	---	
SUBTOTALS	**1**	**1**	**1**	**0**	**0**	**3**	

ALL ITEMS CATEGORY 0010 UNLESS NOTED OTHERWISE

STORM SEWER MANHOLE AND INLET COVERS

STRUCTUR NUMBER	611.0530 MANHOLE COVERS TYPE J EACH	611.0600 INLET COVERS TYPE A EACH	611.0612 TYPE C EACH	611.0624 TYPE H EACH	611.0627 TYPE HM EACH	*** 611.0642 TYPE MS EACH	611.0651 TYPE S EACH	611.0666 TYPE Z EACH	*** 611.8115 ADJUSTING INLET COVERS EACH
18	1	---	---	---	---	---	---	---	---
19A	---	---	---	---	---	---	1	---	---
19B	---	---	---	---	---	1	---	---	---
19C	---	---	---	---	---	---	---	---	---
19D	---	---	---	1	---	---	---	---	---
19E	---	---	---	---	---	---	---	---	---
19F	---	---	---	1	---	---	---	---	---
19	1	---	---	---	---	---	---	---	---
20A	---	---	---	---	---	---	1	---	---
20B	---	---	---	1	---	---	---	---	---
20C	---	---	---	1	---	---	---	---	---
20D	---	---	---	1	---	---	---	---	---
20	1	---	---	---	---	---	---	---	---
21A	---	---	---	1	---	---	---	---	---
21B	---	---	---	1	---	---	---	---	---
21C	---	---	---	1	---	---	---	---	---
21D	---	---	---	1	---	---	---	---	---
21	1	---	---	---	---	---	---	---	---
22	1	---	---	---	---	---	---	---	---
23A	---	---	---	---	---	1	---	---	---
23B	---	---	---	1	---	---	---	---	---
23C	---	---	---	---	---	1	---	---	---
23D	---	---	---	---	---	2	---	---	---
23E	---	---	---	---	---	1	---	---	---
23F	---	---	---	1	---	---	---	---	---
23G	---	---	---	1	---	---	---	---	---
23H	---	---	---	1	---	---	---	---	---
23I	---	---	---	1	---	---	---	---	---
23	1	---	---	---	---	---	---	---	---
24A	---	---	1	---	---	---	---	---	---
24B	---	---	---	---	---	1	---	---	---
24C	---	---	---	1	---	---	---	---	---
24D	---	---	---	---	---	---	1	---	---
24E	---	---	---	---	---	---	1	---	---
24F	---	---	---	1	---	---	---	---	---
24G	---	---	---	1	---	---	---	---	---
24H	---	---	---	1	---	---	---	---	---
24I	---	---	---	---	---	1	---	---	---
24	---	---	---	---	---	---	---	---	---
30A	---	---	---	1	---	---	---	---	---
30B	---	---	---	1	---	---	---	---	---
30C	---	---	---	---	---	---	---	---	---
30D	---	---	---	1	---	---	---	---	---
30E	---	---	---	1	---	---	---	---	---
30	1	---	---	---	---	---	---	---	---
31A	---	---	---	1	---	---	---	---	---
31B	---	---	---	1	---	---	---	---	---
31	1	---	---	---	---	---	---	---	---
32A	---	---	---	1	---	---	---	---	---
32	1	---	---	---	---	---	---	---	---
33A	---	---	---	1	---	---	---	---	---
33	1	---	---	---	---	---	---	---	---
34	---	---	---	1	---	---	---	---	---
40A	---	---	---	1	---	---	---	---	---
40B	---	---	---	---	---	---	---	1	---
SUBTOTALS	**10**	**0**	**1**	**28**	**0**	**8**	**4**	**1**	**0**

STORM SEWER ENDWALLS

STRUCTURE NUMBER	520.1018 AEW FOR CULV PIPE 18" EACH	*** 522.1012 APRON ENDWALLS FOR CULVERT PIPE REINFORCED CONCRETE 12" EACH	522.1018 18" EACH	522.1024 24" EACH	522.2614 HE 14X23-INCH EACH	633.5200 MARKERS CULVERT END EACH	COMMENTS
18	---	---	---	---	---	---	
19A	---	---	---	---	---	---	
19B	---	---	---	---	---	---	
19C	---	---	---	---	---	---	
19D	---	---	---	---	---	---	
19E	---	---	---	---	---	---	
19F	---	---	---	---	---	---	
19	---	---	---	---	---	---	
20A	---	---	---	---	---	---	
20B	---	---	---	---	---	---	
20C	---	---	---	---	---	---	
20D	---	---	---	---	---	---	
20	---	---	---	---	---	---	
21A	---	---	---	---	---	---	
21B	---	---	---	---	---	---	
21C	---	---	---	---	---	---	
21D	---	---	---	---	---	---	
21	---	---	---	---	---	---	
22	---	---	---	---	---	---	
23A	---	---	---	---	---	---	
23B	---	---	---	---	---	---	
23C	---	---	---	---	---	---	
23D	---	---	---	---	---	---	
23E	---	---	---	---	---	---	
23F	---	---	---	---	---	---	
23G	---	---	---	---	---	---	
23H	---	---	---	---	---	---	
23I	---	---	---	---	---	---	
23	---	---	---	---	---	---	
24A	---	---	---	---	---	---	
24B	---	---	---	---	---	---	
24C	---	---	---	---	---	---	
24D	---	---	---	---	---	---	
24E	---	---	---	---	---	---	
24F	---	---	---	---	---	---	
24G	---	---	---	---	---	---	
24H	---	---	---	---	---	---	
24I	---	---	---	---	---	---	
24	---	---	---	---	---	---	
30A	---	---	---	---	---	---	
30B	---	---	---	---	---	---	
30C	---	---	---	---	---	---	
30D	---	---	---	---	---	---	
30E	---	---	---	---	---	---	
30	---	---	---	---	---	---	
31A	---	---	---	---	---	---	
31B	---	---	---	---	---	---	
31	---	---	---	---	---	---	
32A	---	---	---	---	---	---	
32	---	---	---	---	---	---	
33A	---	---	---	---	---	---	
33	---	---	---	---	---	---	
34	---	---	---	---	---	---	
40A	---	---	---	---	---	---	
40B	---	---	---	---	---	---	
SUBTOTALS	**0**	**0**	**0**	**0**	**0**	**0**	**0**

ALL ITEMS CATEGORY 0010 UNLESS NOTED OTHERWISE

STORM SEWER MANHOLE AND INLET COVERS

STRUCTUR NUMBER	611.0530 MANHOLE COVERS TYPE J EACH	611.0600 INLET COVERS TYPE A EACH	611.0612 TYPE C EACH	611.0624 TYPE H EACH	611.0627 TYPE HM EACH	*** 611.0642 TYPE MS EACH	611.0651 TYPE S EACH	611.0666 TYPE Z EACH	*** 611.8115 ADJUSTING INLET COVERS EACH
40C	---	---	---	---	---	---	---	1	---
40D	---	---	---	---	---	---	---	1	---
40E	---	---	---	1	---	---	---	---	---
40F	---	---	---	1	---	---	---	---	---
40	1	---	---	---	---	---	---	---	---
41A	---	---	1	---	---	---	---	---	---
41B	---	---	---	1	---	---	---	---	---
41C	---	---	---	1	---	---	---	---	---
41D	---	---	---	1	---	---	---	---	---
41	1	---	---	---	---	---	---	---	---
42A	---	---	---	1	---	---	---	---	---
42B	---	---	---	1	---	---	---	---	---
42	1	---	---	---	---	---	---	---	---
43A	---	---	---	1	---	---	---	---	---
43	1	---	---	---	---	---	---	---	---
44	---	---	---	1	---	---	---	---	---
45	---	---	---	1	---	---	---	---	---
46	---	---	---	1	---	---	---	---	---
47	---	---	---	1	---	---	---	---	---
50A	---	---	---	1	---	---	---	---	---
50B	---	---	---	---	---	---	---	1	---
50C	---	---	---	---	---	---	---	1	---
50D	---	---	---	1	---	---	---	---	---
50E	---	---	---	---	---	---	---	---	---
60A	---	---	---	1	---	---	---	---	---
60B	---	---	---	1	---	---	---	---	---
60C	---	---	---	1	---	---	---	---	---
60D	---	---	---	---	---	1	---	---	---
60E	---	---	---	1	---	---	---	---	---
60	1	---	---	---	---	---	---	---	---
61A	---	---	---	1	---	---	---	---	---
61B	---	---	---	1	---	---	---	---	---
61C	---	---	---	1	---	---	---	---	---
61	1	---	---	---	---	---	---	---	---
62	---	---	---	1	---	---	---	---	---
63	---	---	---	---	---	---	---	---	---
70A	---	---	---	1	---	---	---	---	---
70B	---	---	---	1	---	---	---	---	---
70C	---	---	---	1	---	---	---	---	---
70D	---	---	---	1	---	---	---	---	---
70E	---	---	---	1	---	---	---	---	---
70F	---	---	---	1	---	---	---	---	---
70G	---	---	---	1	---	---	---	---	---
70H	---	---	---	1	---	---	---	---	---
70I	---	---	---	1	---	---	---	---	---
71	---	---	---	---	---	---	---	---	---
80A	---	---	---	1	---	---	---	---	---
80B	1	---	---	---	---	---	---	---	---
80C	---	---	---	1	---	---	---	---	---
80D	---	---	---	1	---	---	---	---	---
80E	---	---	---	---	---	2	---	---	---
80	---	---	---	1	---	---	---	---	---
81A	---	---	---	1	---	---	---	---	---
81B	---	---	---	1	---	---	---	---	---
81	---	---	---	1	---	---	---	---	---
SUBTOTALS	**7**	**0**	**1**	**38**	**0**	**3**	**0**	**3**	**0**

STORM SEWER ENDWALLS

STRUCTURE NUMBER	520.1018 AEW FOR CULV PIPE 18" EACH	*** 522.1012 APRON ENDWALLS FOR CULVERT PIPE REINFORCED CONCRETE 12" EACH	522.1018 18" EACH	522.1024 24" EACH	522.2614 HE 14X23-INCH EACH	633.5200 MARKERS CULVERT END EACH	COMMENTS
40C	---	---	---	---	---	---	
40D	---	---	---	---	---	---	
40E	---	---	---	---	---	---	
40F	---	---	---	---	---	---	
40	---	---	---	---	---	---	
41A	---	---	---	---	---	---	
41B	---	---	---	---	---	---	
41C	---	---	---	---	---	---	
41D	---	---	---	---	---	---	
41	---	---	---	---	---	---	
42A	---	---	---	---	---	---	
42B	---	---	---	---	---	---	
42	---	---	---	---	---	---	
43A	---	---	---	---	---	---	
43	---	---	---	---	---	---	
44	---	---	---	---	---	---	
45	---	---	---	---	---	---	
46	---	---	---	---	---	---	
47	---	---	---	---	---	---	
50A	---	---	---	---	---	---	
50B	---	---	---	---	---	---	
50C	---	---	---	---	---	---	
50D	---	---	---	---	---	---	
50E	1	---	---	---	---	1	
60A	---	---	---	---	---	---	
60B	---	---	---	---	---	---	
60C	---	---	---	---	---	---	
60D	---	---	---	---	---	---	
60E	---	---	---	---	---	---	
60	---	---	---	---	---	---	
61A	---	---	---	---	---	---	
61B	---	---	---	---	---	---	
61C	---	---	---	---	---	---	
61	---	---	---	---	---	---	
62	---	---	---	---	---	---	
63	---	---	---	1	---	1	
70A	---	---	---	---	---	---	
70B	---	---	---	---	---	---	
70C	---	---	---	---	---	---	
70D	---	---	---	---	---	---	
70E	---	---	---	---	---	---	
70F	---	---	---	---	---	---	
70G	---	---	---	---	---	---	
70H	---	---	---	---	---	---	
70I	---	---	---	---	---	---	
71	---	---	---	---	1	1	
80A	---	---	---	---	---	---	
80B	---	---	---	---	---	---	
80C	---	---	---	---	---	---	
80D	---	---	---	---	---	---	
80E	---	---	---	---	---	---	
80	---	---	---	---	---	---	
81A	---	---	---	---	---	---	
81B	---	---	---	---	---	---	
81	---	---	---	---	---	---	
SUBTOTALS	**1**	**0**	**0**	**1**	**1**	**3**	

ALL ITEMS CATEGORY 0010 UNLESS NOTED OTHERWISE

3

STORM SEWER MANHOLE AND INLET COVERS

STRUCTUR NUMBER	611.0530 MANHOLE COVERS TYPE J EACH	611.0600 INLET COVERS TYPE A EACH	611.0612 TYPE C EACH	611.0624 TYPE H EACH	611.0627 TYPE HM EACH	*** 611.0642 TYPE MS EACH	611.0651 TYPE S EACH	611.0666 TYPE Z EACH	*** 611.8115 ADJUSTING INLET COVERS EACH
82	---	---	---	1	---	---	---	---	---
83	---	---	---	---	---	---	---	---	---
90A	---	---	---	---	---	1	---	---	---
90B	---	---	---	1	---	---	---	---	---
90C	---	---	---	1	---	---	---	---	---
90D	---	---	---	1	---	---	---	---	---
90E	---	---	---	1	---	---	---	---	---
90F	---	---	---	1	---	---	---	---	---
90G	---	---	---	---	---	---	---	---	---
100	---	---	---	---	---	---	---	---	---
101	1	---	---	---	---	---	---	---	---
102	---	---	---	---	---	---	---	---	---
110	---	---	---	---	---	---	---	---	1
111	---	---	---	1	---	---	---	---	---
112	1	---	---	---	---	---	---	---	---
TOTALS	**32**	**1**	**2**	**142**	**1**	**16**	**7**	**12**	**1**

STORM SEWER ENDWALLS

STRUCTURE NUMBER	520.1018 AEW FOR CULV PIPE 18" EACH	*** 522.1012 APRON ENDWALLS FOR CULVERT PIPE REINFORCED CONCRETE 12" EACH	522.1018 18" EACH	522.1024 24" EACH	522.2614 HE 14X23-INCH EACH	633.5200 MARKERS CULVERT END EACH	COMMENTS
82	---	---	---	---	---	---	
83	---	---	---	1	---	1	
90A	---	---	---	---	---	---	
90B	---	---	---	---	---	---	
90C	---	---	---	---	---	---	
90D	---	---	---	---	---	---	
90E	---	---	---	---	---	---	
90F	---	---	---	---	---	---	
90G	1	---	---	---	---	1	
100	---	---	1	---	---	1	
101	---	---	---	---	---	---	
102	---	---	1	---	---	1	
110	---	---	---	---	---	---	
111	---	---	---	---	---	---	
112	---	---	---	---	---	---	
TOTALS	**3**	**4**	**3**	**3**	**2**	**15**	

*** ADDITIONAL QUANTITIES FOUND ELSEWHERE

ALL ITEMS CATEGORY 0010 UNLESS NOTED OTHERWISE

STORM SEWER PIPES

PIPE NUMBER	FROM STR	TO STR	INLET ELEV	DISCH ELEV	SLOPE (%)	608.0312 STORM SEWER PIPE REINFORCED CONCRETE CLASS III 12-INCH LF	608.0315 15-INCH LF	608.0318 18-INCH LF	608.0324 24-INCH LF	608.0360 60-INCH LF	*** 608.0412 CLASS IV 12-INCH LF	608.0415 15-INCH LF	608.0418 18-INCH LF	608.0421 21-INCH LF	608.0424 24-INCH LF	608.2414 HORIZONTAL ELLIPTICAL CLASS HE-IV 14X23-INCH LF	608..2419 19x30-INCH LF	608.3012 STORM SEWER PIPE CLASS III-A 12-INCH LF	608.3015 15-INCH LF	608.3018 18-INCH LF	608.3024 24-INCH LF	SPV.0090.10 STORM SEWER PIPE PVC SDR 35 6-INCH LF	SPV.0090.11 8-INCH LF
P1A	1A	1B	821.67	821.52	0.50%	---	---	---	---	---	29.0	---	---	---	---	---	---	---	---	---	---	---	---
P1B	1B	1C	821.52	821.38	0.50%	---	---	---	---	---	28.0	---	---	---	---	---	---	---	---	---	---	---	---
P1C	1C	ENDWALL	821.38	---	---	---	---	---	---	---	---	---	---	---	---	---	---	---	---	---	---	---	---
P2A	2A	2B	824.51	824.18	0.50%	---	---	---	---	---	67.1	---	---	---	---	---	---	---	---	---	---	---	---
P2B	2B	2C	824.18	824.09	0.50%	---	---	---	---	---	17.0	---	---	---	---	---	---	---	---	---	---	---	---
P2C	2C	2D	824.09	823.95	0.50%	---	---	---	---	---	29.0	---	---	---	---	---	---	---	---	---	---	---	---
P2D	2D	2E	823.95	823.81	0.50%	---	---	---	---	---	28.0	---	---	---	---	---	---	---	---	---	---	---	---
P2E	2E	ENDWALL	823.81	---	---	---	---	---	---	---	---	---	---	---	---	---	---	---	---	---	---	---	---
P3A	3A	3B	826.59	826.52	1.00%	---	---	---	---	---	6.8	---	---	---	---	---	---	---	---	---	---	---	---
P3B	3B	3D	826.52	826.10	1.00%	---	---	---	---	---	41.5	---	---	---	---	---	---	---	---	---	---	---	---
P3C	3C	3D	827.78	826.10	1.00%	---	---	---	---	---	167.5	---	---	---	---	---	---	---	---	---	---	---	---
P3D	3D	3F	825.85	825.60	1.00%	---	---	---	---	---	---	25.3	---	---	---	---	---	---	---	---	---	---	---
P3E	3E	3F	828.20	826.00	7.06%	---	---	---	---	---	---	---	---	31.2	---	---	---	---	---	---	---	---	---
P3F	3F	3H	824.85	824.55	1.00%	---	---	---	---	---	---	---	---	---	---	---	---	---	---	---	29.9	---	---
P3G	3G	3H	824.91	824.83	0.66%	---	---	---	---	---	---	12.0	---	---	---	---	---	---	---	---	---	---	---
P3H	3H	EXIST SS	824.55	---	---	---	---	---	---	---	---	---	---	---	---	---	---	---	---	---	---	---	---
P4A	4A	4B	824.35	824.28	1.00%	---	---	---	---	---	---	---	---	---	---	---	---	7.0	---	---	---	---	---
P4B	4B	4E	824.28	823.80	1.00%	---	---	---	---	---	---	---	---	---	---	---	---	48.1	---	---	---	---	---
P4C	4C	4D	824.59	824.31	2.00%	---	---	---	---	---	---	---	---	---	---	---	---	14.1	---	---	---	---	---
P4D	4D	4E	823.81	823.30	2.00%	---	---	---	---	---	---	---	---	---	---	---	---	---	---	25.5	---	---	---
P4E	4E	4P	823.30	821.80	1.00%	---	---	---	---	---	---	---	---	---	---	---	---	---	---	149.7	---	---	---
P4R	4R	4F	822.21	822.16	0.50%	---	---	---	---	---	10.0	---	---	---	---	---	---	---	---	---	---	---	---
P4F	4F	4G	822.16	822.11	0.50%	---	---	---	---	---	10.0	---	---	---	---	---	---	---	---	---	---	---	---
P4G	4G	4I	822.11	821.84	0.50%	---	---	---	---	---	---	54.0	---	---	---	---	---	---	---	---	---	---	---
P4S	4S	4H	822.59	822.42	0.50%	34.1	---	---	---	---	---	---	---	---	---	---	---	---	---	---	---	---	---
P4H	4H	4I	822.42	822.34	0.50%	15.6	---	---	---	---	---	---	---	---	---	---	---	---	---	---	---	---	---
P4I	4I	4J	821.84	821.69	0.50%	---	---	29.9	---	---	---	---	---	---	---	---	---	---	---	---	---	---	---
P4J	4J	4N	821.69	821.64	0.50%	---	---	10.0	---	---	---	---	---	---	---	---	---	---	---	---	---	---	---
P4K	4K	4M	823.19	823.09	1.00%	10.0	---	---	---	---	---	---	---	---	---	---	---	---	---	---	---	---	---
P4L	4L	4M	823.41	822.84	1.00%	---	57.2	---	---	---	---	---	---	---	---	---	---	---	---	---	---	---	---
P4M	4M	4N	822.84	822.30	2.00%	---	27.0	---	---	---	---	---	---	---	---	---	---	---	---	---	---	---	---
P4N	4N	4P	821.64	821.30	0.50%	---	---	---	69.0	---	---	---	---	---	---	---	---	---	---	---	---	---	---
P4O	4O	4P	822.26	822.06	1.00%	20.5	---	---	---	---	---	---	---	---	---	---	---	---	---	---	---	---	---
P4P	4P	4Q	821.30	820.89	0.50%	---	---	---	---	---	---	---	---	---	82.0	---	---	---	---	---	---	---	---
P4Q	4Q	ENDWALL	820.89	---	---	---	---	---	---	---	---	---	---	---	---	---	---	---	---	---	---	---	---
P5A	5A	5M	824.56	824.15	1.65%	25.0	---	---	---	---	---	---	---	---	---	---	---	---	---	---	---	---	---
P5M	5M	5C	824.15	823.89	1.70%	15.0	---	---	---	---	---	---	---	---	---	---	---	---	---	---	---	---	---
P5B	5B	5C	823.99	823.89	1.00%	10.0	---	---	---	---	---	---	---	---	---	---	---	---	---	---	---	---	---
P5C	5C	5G	823.89	823.31	0.92%	63.2	---	---	---	---	---	---	---	---	---	---	---	---	---	---	---	---	---
P5D	5D	5E	823.65	823.60	0.50%	10.0	---	---	---	---	---	---	---	---	---	---	---	---	---	---	---	---	---
P5E	5E	5F	823.35	823.19	0.50%	---	31.1	---	---	---	---	---	---	---	---	---	---	---	---	---	---	---	---
P5F	5F	5G	823.19	823.14	0.50%	---	10.0	---	---	---	---	---	---	---	---	---	---	---	---	---	---	---	---
P5G	5G	5H	823.14	823.01	0.50%	---	---	---	---	---	---	---	---	---	---	27.0	---	---	---	---	---	---	---
P5L	5L	5H	823.35	823.18	0.50%	35.0	---	---	---	---	---	---	---	---	---	---	---	---	---	---	---	---	---
P5H	5H	5I	823.01	822.91	0.50%	---	---	---	---	---	---	---	---	---	---	20.1	---	---	---	---	---	---	---
P5I	5I	5J	822.91	822.78	0.50%	---	---	---	---	---	---	---	---	---	---	25.5	---	---	---	---	---	---	---
P5J	5J	5K	822.78	822.50	0.50%	---	---	---	---	---	---	---	---	---	---	56.0	---	---	---	---	---	---	---
P5K	5K	ENDWALL	822.50	---	---	---	---	---	---	---	---	---	---	---	---	---	---	---	---	---	---	---	---
P6A	6A	6C	820.25	819.86	1.00%	---	---	---	---	---	39.0	---	---	---	---	---	---	---	---	---	---	---	---
P6B	6B	6C	820.22	819.86	0.50%	---	---	---	---	---	71.0	---	---	---	---	---	---	---	---	---	---	---	---
P6C	6C	6D	819.86	819.79	1.00%	---	---	---	---	---	7.0	---	---	---	---	---	---	---	---	---	---	---	---
P6D	6D	6E	819.79	819.50	1.00%	29.0	---	---	---	---	---	---	---	---	---	---	---	---	---	---	---	---	---
P6E	6E	6F	819.50	819.22	1.00%	28.0	---	---	---	---	---	---	---	---	---	---	---	---	---	---	---	---	---
P6F	6F	ENDWALL	819.22	---	---	---	---	---	---	---	---	---	---	---	---	---	---	---	---	---	---	---	---
P7A	7A	7C	817.16	817.06	1.00%	10.0	---	---	---	---	---	---	---	---	---	---	---	---	---	---	---	---	---
SUBTOTALS						**305**	**125**	**40**	**69**	**0**	**551**	**91**	**0**	**31**	**82**	**129**	**0**	**69**	**0**	**175**	**30**	**0**	**0**

ALL ITEMS CATEGORY 0010 UNLESS NOTED OTHERWISE

PROJECT NO: 1310-04-70	**HWY: STH 50**	**COUNTY: KENOSHA**	**MISCELLANEOUS QUANTITIES**	**SHEET:** 541 **E**

FILE NAME : T:\1102717\cadd\civil3d\27090300\SheetsPlan\023002_up.pptx PLOT DATE : _____ PLOT BY : _____ PLOT NAME : _____ PLOT SCALE : 1:1

STORM SEWER PIPES

PIPE NUMBER	FROM STR	TO STR	INLET ELEV	DISCH ELEV	SLOPE (%)	608.0312 STORM SEWER PIPE REINFORCED CONCRETE CLASS III 12-INCH LF	608.0315 15-INCH LF	608.0318 18-INCH LF	608.0324 24-INCH LF	608.0360 60-INCH LF	*** 608.0412 CLASS IV 12-INCH LF	608.0415 15-INCH LF	608.0418 18-INCH LF	608.0421 21-INCH LF	608.0424 24-INCH LF	608.2414 HORIZONTAL ELLIPTICAL CLASS HE-IV 14X23-INCH LF	608..2419 19x30-INCH LF	608.3012 STORM SEWER PIPE CLASS III-A 12-INCH LF	608.3015 15-INCH LF	608.3018 18-INCH LF	608.3024 24-INCH LF	SPV.0090.10 STORM SEWER PIPE PVC SDR 35 6-INCH LF	SPV.0090.11 8-INCH LF
P7B	7B	7C	817.56	817.06	1.00%	50.0	---	---	---	---	---	---	---	---	---	---	---	---	---	---	---	---	---
P7C	7C	7D	817.06	816.70	1.00%	36.0	---	---	---	---	---	---	---	---	---	---	---	---	---	---	---	---	---
P7D	7D	ENDWALL	816.70	---	---	---	---	---	---	---	---	---	---	---	---	---	---	---	---	---	---	---	---
P8A	8A	8B	817.07	816.97	1.00%	10.0	---	---	---	---	---	---	---	---	---	---	---	---	---	---	---	---	---
P8B	8B	8C	816.72	816.25	1.00%	---	47.1	---	---	---	---	---	---	---	---	---	---	---	---	---	---	---	---
P8C	8C	8F	816.25	815.98	1.00%	---	26.7	---	---	---	---	---	---	---	---	---	---	---	---	---	---	---	---
P8D	8D	8E	817.22	816.82	0.60%	---	---	---	---	---	67.1	---	---	---	---	---	---	---	---	---	---	---	---
P8E	8E	8F	816.82	816.72	1.00%	10.0	---	---	---	---	---	---	---	---	---	---	---	---	---	---	---	---	---
P8F	8F	8H	815.73	815.33	1.00%	---	---	40.7	---	---	---	---	---	---	---	---	---	---	---	---	---	---	---
P8G	8G	8H	816.03	815.83	2.00%	---	---	---	---	---	---	---	---	---	---	---	---	10.0	---	---	---	---	---
P8H	8H	8I	815.33	815.23	1.00%	---	---	---	---	---	---	---	---	---	---	---	---	---	---	10.0	---	---	---
P8I	8I	8J	812.32	811.91	1.00%	---	---	---	---	---	---	---	---	---	---	---	---	---	---	41.0	---	---	---
P8J	8J	ENDWALL	811.91	---	---	---	---	---	---	---	---	---	---	---	---	---	---	---	---	---	---	---	---
P9A	9A	9B	820.30	820.12	0.30%	---	---	---	---	---	---	59.5	---	---	---	---	---	---	---	---	---	---	---
P9B	9B	9	820.12	819.85	0.30%	---	---	---	---	---	---	89.8	---	---	---	---	---	---	---	---	---	---	---
P9	9	10	819.85	818.78	0.30%	---	---	---	---	---	---	---	358.3	---	---	---	---	---	---	---	---	---	---
P10A	10A	10B	818.79	818.69	0.75%	13.0	---	---	---	---	---	---	---	---	---	---	---	---	---	---	---	---	---
P10B	10B	10C	818.69	818.36	0.75%	43.8	---	---	---	---	---	---	---	---	---	---	---	---	---	---	---	---	---
P10C	10C	10	818.11	817.78	0.75%	---	44.1	---	---	---	---	---	---	---	---	---	---	---	---	---	---	---	---
P10	10	10D	817.53	817.41	0.75%	---	---	16.0	---	---	---	---	---	---	---	---	---	---	---	---	---	---	---
P10D	10D	10E	817.41	817.07	0.75%	---	---	45.7	---	---	---	---	---	---	---	---	---	---	---	---	---	---	---
P10E	10E	ENDWALL	817.07	---	---	---	---	---	---	---	---	---	---	---	---	---	---	---	---	---	---	---	---
P11A	11A	11	814.88	813.93	2.00%	47.5	---	---	---	---	---	---	---	---	---	---	---	---	---	---	---	---	---
P11B	11B	11	814.64	814.21	2.00%	21.5	---	---	---	---	---	---	---	---	---	---	---	---	---	---	---	---	---
P11	11	12	813.43	800.31	4.77%	---	---	---	---	---	---	---	---	---	---	---	---	---	---	275.3	---	---	---
P12A	12A	12	802.06	801.11	2.00%	47.5	---	---	---	---	---	---	---	---	---	---	---	---	---	---	---	---	---
P12B	12B	12	801.64	801.21	2.00%	21.5	---	---	---	---	---	---	---	---	---	---	---	---	---	---	---	---	---
P12	12	13	799.81	797.31	2.50%	---	---	---	---	---	---	---	---	---	100.0	---	---	---	---	---	---	---	---
P13	13	14	792.49	791.61	1.00%	---	---	---	---	87.5	---	---	---	---	---	---	---	---	---	---	---	---	---
P14A	14A	14	796.01	795.61	2.00%	20.0	---	---	---	---	---	---	---	---	---	---	---	---	---	---	---	---	---
P14	14	23	791.61	791.35	1.00%	---	---	---	---	---	---	---	---	---	---	---	---	---	---	26.3	---	---	---
P15A	15A	15C	819.45	818.88	1.43%	39.5	---	---	---	---	---	---	---	---	---	---	---	---	---	---	---	---	---
P15B	15B	15C	819.03	818.88	1.00%	15.0	---	---	---	---	---	---	---	---	---	---	---	---	---	---	---	---	---
P15C	15C	15D	818.88	818.80	1.30%	6.5	---	---	---	---	---	---	---	---	---	---	---	---	---	---	---	---	---
P15D	15D	15	818.80	818.61	1.30%	---	---	---	---	---	---	---	---	---	---	---	---	14.9	---	---	---	---	---
P15E	15E	15F	819.83	819.58	1.00%	25.0	---	---	---	---	---	---	---	---	---	---	---	---	---	---	---	---	---
P15F	15F	15H	819.58	819.24	2.00%	17.0	---	---	---	---	---	---	---	---	---	---	---	---	---	---	---	---	---
P15G	15G	15H	819.24	819.01	2.00%	11.7	---	---	---	---	---	---	---	---	---	---	---	---	---	---	---	---	---
P15H	15H	15	818.76	818.36	2.00%	---	20.0	---	---	---	---	---	---	---	---	---	---	---	---	---	---	---	---
P15	15	16	817.64	816.40	0.60%	---	---	---	206.0	---	---	---	---	---	---	---	---	---	---	---	---	---	---
P16A	16A	16B	817.62	817.39	2.00%	11.4	---	---	---	---	---	---	---	---	---	---	---	---	---	---	---	---	---
P16B	16B	16C	817.39	816.69	2.00%	34.8	---	---	---	---	---	---	---	---	---	---	---	---	---	---	---	---	---
P16C	16C	16D	817.69	816.69	2.00%	50.0	---	---	---	---	---	---	---	---	---	---	---	---	---	---	---	---	---
P16D	16D	16	816.69	816.36	2.00%	---	---	---	---	---	---	---	---	---	---	---	---	16.8	---	---	---	---	---
P16E	16E	16F	817.76	817.41	0.70%	50.0	---	---	---	---	---	---	---	---	---	---	---	---	---	---	---	---	---
P16F	16F	16	817.41	816.98	2.00%	21.5	---	---	---	---	---	---	---	---	---	---	---	---	---	---	---	---	---
P16	16	17	815.17	814.00	1.00%	---	---	---	---	---	---	---	---	---	---	---	---	---	---	---	117.5	---	---
P17A	17A	17B	817.21	816.93	2.00%	14.2	---	---	---	---	---	---	---	---	---	---	---	---	---	---	---	---	---
P17B	17B	17	816.93	816.80	2.00%	6.5	---	---	---	---	---	---	---	---	---	---	---	---	---	---	---	---	---
P17	17	18	814.00	813.55	1.00%	---	---	---	---	---	---	---	---	---	---	---	---	---	---	---	44.8	---	---
P18A	18A	18B	819.40	819.03	6.00%	---	---	---	---	---	---	---	---	---	---	---	---	---	---	---	---	---	6.2
P18B	18B	18D	816.29	816.03	2.00%	13.3	---	---	---	---	---	---	---	---	---	---	---	---	---	---	---	---	---
P18C	18C	18D	818.73	817.72	2.00%	---	---	---	---	---	---	---	---	---	---	---	---	---	---	---	---	---	50.6
P18D	18D	18	815.78	814.83	2.00%	---	47.5	---	---	---	---	---	---	---	---	---	---	---	---	---	---	---	---
P18E	18E	18	816.05	815.62	2.00%	21.5	---	---	---	---	---	---	---	---	---	---	---	---	---	---	---	---	---
SUBTOTALS						**659**	**185**	**102**	**206**	**88**	**67**	**149**	**358**	**0**	**100**	**0**	**0**	**42**	**0**	**353**	**162**	**0**	**57**

ALL ITEMS CATEGORY 0010 UNLESS NOTED OTHERWISE

STORM SEWER PIPES

PIPE NUMBER	FROM STR	TO STR	INLET ELEV	DISCH ELEV	SLOPE (%)	608.0312 STORM SEWER PIPE REINFORCED CONCRETE CLASS III 12-INCH LF	608.0315 15-INCH LF	608.0318 18-INCH LF	608.0324 24-INCH LF	608.0360 60-INCH LF	*** 608.0412 CLASS IV 12-INCH LF	608.0415 15-INCH LF	608.0418 18-INCH LF	608.0421 21-INCH LF	608.0424 24-INCH LF	608.2414 HORIZONTAL ELLIPTICAL CLASS HE-IV 14X23-INCH LF	608..2419 19x30-INCH LF	608.3012 STORM SEWER PIPE CLASS III-A 12-INCH LF	608.3015 15-INCH LF	608.3018 18-INCH LF	608.3024 24-INCH LF	SPV.0090.10 STORM SEWER PIPE PVC SDR 35 6-INCH LF	SPV.0090.11 8-INCH LF
P18	18	19	811.53	810.41	0.75%	---	---	---	150.0	---	---	---	---	---	---	---	---	---	---	---	---	---	---
P19A	19A	19B	812.37	812.16	2.00%	10.1	---	---	---	---	---	---	---	---	---	---	---	---	---	---	---	---	---
P19B	19B	19D	811.91	811.62	2.00%	---	14.7	---	---	---	---	---	---	---	---	---	---	---	---	---	---	---	---
P19C	19C	19D	813.71	813.14	1.30%	---	---	---	---	---	---	---	---	---	---	---	---	---	---	---	---	---	44.5
P19D	19D	19	811.62	810.66	2.00%	---	47.9	---	---	---	---	---	---	---	---	---	---	---	---	---	---	---	---
P19E	19E	19F	813.39	812.81	2.00%	---	---	---	---	---	---	---	---	---	---	---	---	---	---	---	---	28.9	---
P19F	19F	19	812.07	811.64	2.00%	---	21.5	---	---	---	---	---	---	---	---	---	---	---	---	---	---	---	---
P19	19	20	806.50	801.14	2.89%	---	---	---	---	---	---	---	---	---	---	---	---	---	---	---	185.6	---	---
P20A	20A	20B	803.74	803.43	2.00%	15.3	---	---	---	---	---	---	---	---	---	---	---	---	---	---	---	---	---
P20B	20B	20	803.18	802.23	2.00%	---	47.5	---	---	---	---	---	---	---	---	---	---	---	---	---	---	---	---
P20C	20C	20D	804.95	804.70	1.00%	---	---	---	---	---	25.0	---	---	---	---	---	---	---	---	---	---	---	---
P20D	20D	20	804.70	804.48	1.00%	---	---	---	---	---	21.5	---	---	---	---	---	---	---	---	---	---	---	---
P20	20	21	801.14	796.82	2.69%	---	---	---	160.5	---	---	---	---	---	---	---	---	---	---	---	---	---	---
P21A	21A	21B	797.93	797.62	1.00%	31.3	---	---	---	---	---	---	---	---	---	---	---	---	---	---	---	---	---
P21B	21B	21C	797.62	797.50	1.00%	11.8	---	---	---	---	---	---	---	---	---	---	---	---	---	---	---	---	---
P21C	21C	21	797.50	797.42	1.00%	7.9	---	---	---	---	---	---	---	---	---	---	---	---	---	---	---	---	---
P21D	21D	21	796.93	796.82	0.50%	21.5	---	---	---	---	---	---	---	---	---	---	---	---	---	---	---	---	---
P21	21	22	792.82	792.03	1.00%	---	---	---	---	79.2	---	---	---	---	---	---	---	---	---	---	---	---	---
P22	22	23	792.03	791.92	1.00%	---	---	---	---	---	---	---	---	---	---	---	---	---	---	11.2	---	---	---
P23A	23A	23B	796.70	796.50	2.00%	---	9.9	---	---	---	---	---	---	---	---	---	---	---	---	---	---	---	---
P23B	23B	23C	796.50	795.34	2.00%	---	57.9	---	---	---	---	---	---	---	---	---	---	---	---	---	---	---	---
P23C	23C	23D	795.09	794.86	2.00%	---	---	---	---	---	---	---	---	---	---	---	---	---	---	11.9	---	---	---
P23D	23D	23I	794.36	793.90	2.00%	---	---	---	---	---	---	---	---	---	---	---	---	---	---	---	23.0	---	---
P23E	23E	23F	797.43	797.11	2.00%	---	16.2	---	---	---	---	---	---	---	---	---	---	---	---	---	---	---	---
P23F	23F	23G	797.11	795.57	2.00%	---	76.9	---	---	---	---	---	---	---	---	---	---	---	---	---	---	---	---
P23G	23G	23I	795.57	795.37	2.00%	---	10.0	---	---	---	---	---	---	---	---	---	---	---	---	---	---	---	---
P23H	23H	23I	795.99	795.80	2.00%	9.4	---	---	---	---	---	---	---	---	---	---	---	---	---	---	---	---	---
P23I	23I	23	793.90	792.90	2.00%	---	---	---	---	---	---	---	---	---	---	---	---	---	---	---	49.6	---	---
P23	23	EXIST SS	789.30	---	---	---	---	---	---	---	---	---	---	---	---	---	---	---	---	---	---	---	---
P24A	24A	24E	794.63	794.31	2.00%	---	---	---	---	---	---	---	---	---	---	---	---	---	---	---	---	---	---
P24B	24B	24C	794.32	794.09	1.62%	---	14.2	---	---	---	---	---	---	---	---	---	---	---	---	---	---	---	---
P24C	24C	24D	794.09	793.93	1.61%	---	10.0	---	---	---	---	---	---	---	---	---	---	---	---	---	---	---	---
P24D	24D	24E	793.93	793.72	2.00%	---	10.6	---	---	---	---	---	---	---	---	---	---	---	---	---	---	---	---
P24E	24E	24H	793.43	792.90	2.00%	---	26.5	---	---	---	---	---	---	---	---	---	---	---	---	---	---	---	---
P24F	24F	24G	793.40	793.30	1.00%	---	---	---	---	---	---	---	---	---	---	---	---	10.0	---	---	---	---	---
P24G	24G	24H	793.30	793.15	1.20%	---	---	---	---	---	---	---	---	---	---	---	---	12.9	---	---	---	---	---
P24H	24H	24	792.65	792.33	2.00%	---	---	---	---	---	---	---	---	---	---	---	---	---	---	16.0	---	---	---
P24I	24I	24	791.17	790.96	2.00%	---	---	---	---	---	---	---	---	---	---	---	---	---	10.6	---	---	---	---
P24	24	EXIST SS	784.61	;---	---	---	---	---	---	---	---	---	---	---	---	---	---	---	---	---	---	---	---
P30A	30A	30B	820.54	820.44	1.00%	10.0	---	---	---	---	---	---	---	---	---	---	---	---	---	---	---	---	---
P30B	30B	30D	820.44	820.00	1.00%	43.5	---	---	---	---	---	---	---	---	---	---	---	---	---	---	---	---	---
P30C	30C	30D	819.95	819.68	0.91%	29.3	---	---	---	---	---	---	---	---	---	---	---	---	---	---	---	---	---
P30D	30D	30E	819.43	819.34	0.95%	---	10.0	---	---	---	---	---	---	---	---	---	---	---	---	---	---	---	---
P30E	30E	30	819.34	818.99	0.95%	---	---	---	---	---	---	---	36.6	---	---	---	---	---	---	---	---	---	---
P30	30	31	818.99	818.52	0.50%	---	---	---	---	---	---	---	---	---	94.4	---	---	---	---	---	---	---	---
P31A	31A	31B	819.36	819.16	0.50%	40.0	---	---	---	---	---	---	---	---	---	---	---	---	---	---	---	---	---
P31B	31B	31	819.16	818.73	2.00%	21.5	---	---	---	---	---	---	---	---	---	---	---	---	---	---	---	---	---
P31	31	32	818.52	817.23	0.75%	---	---	---	---	---	---	---	---	---	171.2	---	---	---	---	---	---	---	---
P32A	32A	32	817.93	817.50	2.00%	21.5	---	---	---	---	---	---	---	---	---	---	---	---	---	---	---	---	---
P32	32	33	815.72	815.28	0.95%	---	---	---	---	---	---	---	---	---	---	---	---	---	---	---	46.1	---	---
P33A	33A	33	816.65	816.28	2.00%	---	---	---	---	---	---	---	---	---	---	---	---	18.5	---	---	---	---	---
P33	33	34	815.28	815.06	0.95%	---	---	---	---	---	---	---	---	---	---	---	---	---	---	23.5	---	---	---
P34	34	EXIST SS	815.06	---	---	---	---	---	---	---	---	---	---	---	---	---	---	---	---	---	---	---	---
P40A	40A	40C	817.12	816.93	0.50%	---	---	---	---	---	38.3	---	---	---	---	---	---	---	---	---	---	---	---
P40B	40B	40C	817.23	816.93	0.50%	---	---	---	---	---	60.3	---	---	---	---	---	---	---	---	---	---	---	---
SUBTOTALS						**273**	**374**	**0**	**311**	**79**	**0** **145**	**0**	**37**	**0**	**266**	**0**	**0**	**0**	**0** **41**	**11**	**63**	**304**	**0** **29** **44**

ALL ITEMS CATEGORY 0010 UNLESS NOTED OTHERWISE

STORM SEWER PIPES

PIPE NUMBER	FROM STR	TO STR	INLET ELEV	DISCH ELEV	SLOPE (%)	608.0312 STORM SEWER PIPE REINFORCED CONCRETE CLASS III 12-INCH LF	608.0315 15-INCH LF	608.0318 18-INCH LF	608.0324 24-INCH LF	608.0360 60-INCH LF	*** 608.0412 CLASS IV 12-INCH LF	608.0415 15-INCH LF	608.0418 18-INCH LF	608.0421 21-INCH LF	608.0424 24-INCH LF	608.2414 HORIZONTAL ELLIPTICAL CLASS HE-IV 14X23-INCH LF	608..2419 19x30-INCH LF	608.3012 STORM SEWER PIPE CLASS III-A 12-INCH LF	608.3015 15-INCH LF	608.3018 18-INCH LF	608.3024 24-INCH LF	SPV.0090.10 STORM SEWER PIPE PVC SDR 35 6-INCH LF	SPV.0090.11 8-INCH LF
P40C	40C	40D	816.68	816.65	0.50%	---	---	---	---	---	---	6.4	---	---	---	---	---	---	---	---	---	---	---
P40D	40D	40	816.65	816.48	0.50%	---	---	---	---	---	---	35.3	---	---	---	---	---	---	---	---	---	---	---
P40E	40E	40F	816.91	816.85	0.50%	---	---	---	---	---	12.6	---	---	---	---	---	---	---	---	---	---	---	---
P40F	40F	40	816.60	816.48	0.50%	---	---	---	---	---	---	24.2	---	---	---	---	---	---	---	---	---	---	---
P40	40	41	816.23	815.83	0.50%	---	---	---	---	---	---	---	80.0	---	---	---	---	---	---	---	---	---	---
P41A	41A	41B	816.33	815.98	0.50%	---	---	---	---	---	---	---	69.2	---	---	---	---	---	---	---	---	---	---
P41B	41B	41D	815.73	815.68	0.50%	---	---	---	---	---	---	---	---	9.4	---	---	---	---	---	---	---	---	---
P41C	41C	41D	816.48	816.43	0.50%	---	---	---	---	---	9.4	---	---	---	---	---	---	---	---	---	---	---	---
P41D	41D	41	815.68	815.58	0.50%	---	---	---	---	---	---	---	---	21.5	---	---	---	---	---	---	---	---	---
P41	41	43	815.58	815.20	0.50%	---	---	---	---	---	---	---	---	75.0	---	---	---	---	---	---	---	---	---
P42A	42A	42B	816.62	816.57	0.50%	---	---	---	---	---	10.0	---	---	---	---	---	---	---	---	---	---	---	---
P42B	42B	42	816.57	816.47	0.50%	---	---	---	---	---	21.5	---	---	---	---	---	---	---	---	---	---	---	---
P42	42	43	816.22	815.70	0.50%	---	---	---	---	---	---	103.4	---	---	---	---	---	---	---	---	---	---	---
P43A	43A	43	816.06	815.95	0.50%	---	---	---	---	---	21.5	---	---	---	---	---	---	---	---	---	---	---	---
P43	43	44	815.20	814.96	0.50%	---	---	---	---	---	---	---	---	47.7	---	---	---	---	---	---	---	---	---
P44	44	47	814.96	814.89	0.50%	---	---	---	---	---	---	---	14.4	---	---	---	---	---	---	---	---	---	---
P45	45	46	815.95	815.90	0.50%	---	---	---	---	---	10.0	---	---	---	---	---	---	---	---	---	---	---	---
P46	46	47	815.40	815.14	0.50%	---	---	---	---	---	---	---	52.5	---	---	---	---	---	---	---	---	---	---
P47	47	EXIST SS	814.89	---	---	---	---	---	---	---	---	---	---	---	---	---	---	---	---	---	---	---	---
P50A	50A	50B	812.62	812.34	1.00%	28.3	---	---	---	---	---	---	---	---	---	---	---	---	---	---	---	---	---
P50B	50B	50C	812.09	812.02	1.00%	---	6.5	---	---	---	---	---	---	---	---	---	---	---	---	---	---	---	---
P50C	50C	50D	812.02	811.64	1.00%	---	38.3	---	---	---	---	---	---	---	---	---	---	---	---	---	---	---	---
P50D	50D	50E	811.64	810.76	1.00%	---	---	88.4	---	---	---	---	---	---	---	---	---	---	---	---	---	---	---
P50E	50E	ENDWALL	810.76	---	---	---	---	---	---	---	---	---	---	---	---	---	---	---	---	---	---	---	---
P60A	60A	60B	800.31	799.34	2.50%	---	39.1	---	---	---	---	---	---	---	---	---	---	---	---	---	---	---	---
P60B	60B	60C	799.34	799.16	1.50%	---	11.6	---	---	---	---	---	---	---	---	---	---	---	---	---	---	---	---
P60C	60C	60	799.16	798.13	4.00%	---	25.8	---	---	---	---	---	---	---	---	---	---	---	---	---	---	---	---
P60D	60D	60E	799.20	799.00	1.00%	---	---	---	---	---	---	19.8	---	---	---	---	---	---	---	---	---	---	---
P60E	60E	60	798.23	798.13	1.00%	---	10.0	---	---	---	---	---	---	---	---	---	---	---	---	---	---	---	---
P60	60	61	796.66	786.29	3.50%	---	---	---	---	---	---	---	---	---	296.7	---	---	---	---	---	---	---	---
P61A	61A	61B	787.76	787.55	0.75%	---	---	---	---	---	29.0	---	---	---	---	---	---	---	---	---	---	---	---
P61B	61B	61C	787.30	787.18	0.75%	---	---	---	---	---	---	15.6	---	---	---	---	---	---	---	---	---	---	---
P61C	61C	61	787.18	787.04	0.75%	---	---	---	---	---	---	19.0	---	---	---	---	---	---	---	---	---	---	---
P61	61	62	786.29	786.21	0.75%	---	---	---	---	---	---	---	---	---	10.0	---	---	---	---	---	---	---	---
P62	62	63	786.21	785.62	0.75%	---	---	---	---	---	---	---	---	---	78.0	---	---	---	---	---	---	---	---
P63	63	ENDWALL	785.62	---	---	---	---	---	---	---	---	---	---	---	---	---	---	---	---	---	---	---	---
P70A	70A	70C	785.84	785.79	0.50%	---	---	---	---	---	10.1	---	---	---	---	---	---	---	---	---	---	---	---
P70B	70B	70C	785.84	785.79	0.50%	---	---	---	---	---	10.0	---	---	---	---	---	---	---	---	---	---	---	---
P70C	70C	70E	785.54	785.39	0.50%	---	---	---	---	---	---	29.0	---	---	---	---	---	---	---	---	---	---	---
P70D	70D	70E	785.61	785.56	0.50%	---	---	---	---	---	10.0	---	---	---	---	---	---	---	---	---	---	---	---
P70E	70E	70G	785.39	785.36	0.50%	---	---	---	---	---	---	---	---	---	---	7.0	---	---	---	---	---	---	---
P70F	70F	70G	785.58	785.52	0.50%	---	---	---	---	---	10.0	---	---	---	---	---	---	---	---	---	---	---	---
P70G	70G	70I	785.36	785.16	0.50%	---	---	---	---	---	---	---	---	---	---	39.0	---	---	---	---	---	---	---
P70H	70H	70I	785.38	785.33	0.50%	---	---	---	---	---	9.9	---	---	---	---	---	---	---	---	---	---	---	---
P70I	70I	71	785.16	785.05	0.50%	---	---	---	---	---	---	---	---	---	---	22.0	---	---	---	---	---	---	---
P71	71	ENDWALL	785.05	---	---	---	---	---	---	---	---	---	---	---	---	---	---	---	---	---	---	---	---
P80A	80A	80B	787.51	787.34	0.50%	---	---	---	---	---	34.1	---	---	---	---	---	---	---	---	---	---	---	---
P80B	80B	80D	786.76	786.66	0.50%	---	---	---	---	---	---	---	---	---	---	---	18.9	---	---	---	---	---	---
P80C	80C	80D	787.30	787.25	0.50%	---	---	---	---	---	10.0	---	---	---	---	---	---	---	---	---	---	---	---
P80D	80D	80E	786.66	786.43	0.50%	---	---	---	---	---	---	---	---	---	---	---	47.2	---	---	---	---	---	---
P80E	80E	80	786.43	786.32	0.50%	---	---	---	---	---	---	---	---	---	20.8	---	---	---	---	---	---	---	---
P80	80	81	786.32	786.08	0.50%	---	---	---	---	---	---	---	---	---	47.8	---	---	---	---	---	---	---	---
P81A	81A	81B	787.26	787.22	0.50%	---	---	---	---	---	7.3	---	---	---	---	---	---	---	---	---	---	---	---
P81B	81B	81	786.97	786.83	0.50%	---	---	---	---	---	---	27.7	---	---	---	---	---	---	---	---	---	---	---
P81	81	82	786.08	785.94	0.50%	---	---	---	---	---	---	---	---	---	28.9	---	---	---	---	---	---	---	---
SUBTOTALS						**28**	**131**	**88**	**0**	**0**	**215**	**274**	**216**	**154**	**482**	**68**	**66**	**0**	**0**	**0**	**0**	**0**	**0**

ALL ITEMS CATEGORY 0010 UNLESS NOTED OTHERWISE

3

STORM SEWER PIPES

PIPE NUMBER	FROM STR	TO STR	INLET ELEV	DISCH ELEV	SLOPE (%)	608.0312 STORM SEWER PIPE REINFORCED CONCRETE CLASS III 12-INCH LF	608.0315 15-INCH LF	608.0318 18-INCH LF	608.0324 24-INCH LF	608.0360 60-INCH LF	*** 608.0412 CLASS IV 12-INCH LF	608.0415 15-INCH LF	608.0418 18-INCH LF	608.0421 21-INCH LF	608.0424 24-INCH LF	608.2414 HORIZONTAL ELLIPTICAL CLASS HE-IV 14X23-INCH LF	608..2419 19x30-INCH LF	608.3012 STORM SEWER PIPE CLASS III-A 12-INCH LF	608.3015 15-INCH LF	608.3018 18-INCH LF	608.3024 24-INCH LF	SPV.0090.10 STORM SEWER PIPE PVC SDR 35 6-INCH LF	SPV.0090.11 8-INCH LF
P82	82	83	785.94	785.80	0.50%	---	---	---	---	---	---	---	---	---	28.0	---	---	---	---	---	---	---	---
P83	83	ENDWALL	785.80	---	---	---	---	---	---	---	---	---	---	---	---	---	---	---	---	---	---	---	---
P90A	90A	90C	792.85	792.36	2.00%	---	---	---	---	---	---	---	---	---	---	---	---	---	24.3	---	---	---	---
P90B	90B	90C	794.14	792.62	3.05%	---	---	---	---	---	---	---	---	---	---	---	---	50.0	---	---	---	---	---
P90C	90C	90D	792.12	791.50	2.00%	---	---	---	---	---	---	---	---	---	---	---	---	---	---	30.7	---	---	---
P90D	90D	90E	791.50	791.16	2.00%	---	---	---	---	---	---	---	---	---	---	---	---	---	---	17.0	---	---	---
P90E	90E	90F	791.16	790.55	2.00%	---	---	---	---	---	---	---	---	---	---	---	---	---	---	30.7	---	---	---
P90F	90F	90G	790.55	789.97	2.00%	---	---	---	---	---	---	---	---	---	---	---	---	---	---	29.0	---	---	---
P90G	90G	ENDWALL	789.97	---	---	---	---	---	---	---	---	---	---	---	---	---	---	---	---	---	---	---	---
P100	100	101	814.75	814.59	1.00%	---	---	16.0	---	---	---	---	---	---	---	---	---	---	---	---	---	---	---
P101	101	102	807.87	807.15	2.00%	---	---	36.0	---	---	---	---	---	---	---	---	---	---	---	---	---	---	---
P102	102	ENDWALL	807.15	---	---	---	---	---	---	---	---	---	---	---	---	---	---	---	---	---	---	---	---
P110	110	111	825.23	825.08	2.24%	---	---	---	---	---	6.7	---	---	---	---	---	---	---	---	---	---	---	---
P111	111	112	825.08	824.88	2.30%	---	---	---	---	---	8.7	---	---	---	---	---	---	---	---	---	---	---	---
P112	112	EXIST SS	824.88	---	---	---	---	---	---	---	---	---	---	---	---	---	---	---	---	---	---	---	---
TOTALS						**1265**	**816**	**283**	**586**	**167**	**994**	**515**	**611**	**185**	**958**	**197**	**66**	**202**	**35**	**698**	**497**	**29**	**101**

1. PIPE LENGTHS ARE FROM CENTER TO CENTER OF STRUCTURES.

*** ADDITIONAL QUANTITIES FOUND ELSEWHERE

ALL ITEMS CATEGORY 0010 UNLESS NOTED OTHERWISE

CROSSOVER STORM SEWER

STRUCTURE NUMBER	STATION	OFFSET	RIM ELEV	LOWEST PIPE INVERT ELEV	TOP OF STRUCTURE ELEV	BOTTOM OF STRUCTURE ELEV	STR DEPTH FEET	*** 611.3220 INLETS 2X2-FT EACH	*** 611.3901 INLETS MEDIAN 1 GRATE EACH	*** 611.0642 INLET COVERS TYPE MS EACH	*** 611.0651 INLET COVERS TYPE S EACH	*** 522.1012 APRON ENDWALLS FOR CULV PIPE REIN CONC 12" EACH	PIPE NUMBER	FROM STR	TO STR	INLET ELEV	DISCH ELEV	SLOPE (%)	*** 608.0412 STORM SEWER PIPE REINFORCED CONCRETE CLASS IV 12-INCH LF	608.0512 STORM SEWER PIPE REINFORCED CONCRETE CLASS V 12-INCH LF	COMMENTS
T1	986+74.1	17.6' LT	818.93	816.59	817.93	816.42	1.51	1	---	---	1	---	PT1	T1	T2	816.59	815.78	0.50%	---	161.8	
T2	985+12.5	8.8' LT	818.22	815.78	817.22	815.61	1.61	1	---	---	1	---	PT2	T2	T3	815.78	815.76	0.50%	---	4.0	
T3	982+12.5	4.8' LT	0.00	815.76	---	---	---	---	---	---	---	1	PT3	T3	ENDWALL	815.76	0.00	---	---	---	
T4	1073+24.9	0.1' LT	806.85	803.74	806.85	803.57	3.28	---	1	1	---	---	PT4	T4	T5	803.74	796.75	1.50%	465.8	---	
T5	1077+90.7	0.1' LT	799.26	796.75	799.26	796.08	3.17	---	1	1	---	---	PT5	T5	EXIST SS	796.75	796.75	---	---	---	SEE NOTE 7
TOTALS								**2**	**2**	**2**	**2**	**1**							**466**	**166**	

NOTES:

1. RIM ELEVATIONS ARE GIVEN AT THE FLOW LINE FOR INLET GRATES, AND AT THE CENTER OF THE MANHOLE STRUCTURE FOR MANHOLES.
2. STATIONS AND OFFSETS ARE TO THE CENTER OF STRUCTURES.
3. PIPE LENGTHS ARE FROM CENTER TO CENTER OF STRUCTURES
4. STRUCTURE DEPTH:
   MANHOLES: RIM ELEV - INVERT ELEV - CASTING HEIGHT - ADJUSTMENT
   CATCH BASINS: RIM ELEV - INVERT ELEV - CASTING HEIGHT - ADJUSTMENT + 24 INCHES
5. ADJUSTMENT IS 6 INCHES UNLESS OTHERWISE NOTED
6. PROVIDE A RECTANGULAR OPENING IN FLAT TOP SLAB WHEN ROUND CATCH BASINS ARE USED.
7. APRON ENDWALL FOR CULVERT PIPE 12-INCH IS TO BE INSTALLED AT END OF CONSTRUCTION AFTER T5 IS REMOVED.

*** ADDITIONAL QUANTITIES FOUND ELSEWHERE - STORM SEWER

SURFACE DRAIN PIPE CORRUGATED METAL SLOTTED 8-INCH

ROADWAY	LOCATION	521.2005.01 LF
STH 50	WEST CROSSOVER	115
	EAST CROSSOVER	165
	CTH O SUBTOTAL	280

ALL ITEMS CATEGORY 0010 UNLESS NOTED OTHERWISE

TYPE II SIGN REMOVALS

1310-04-70 STH 50

SIGN NO.	SIGN CODE & SIZE	SIGN MESSAGE	638.2602 REMOVING SIGNS TYPE II [EA]	638.3000 REMOVING SMALL SIGN SUPPORTS [EA]	REMARKS / NEW SIGN LOCATION
1R	J4-2	EAST WIS 50 SOUTH WIS 83	1	2	--
2R	R2-1	SPEED LIMIT 55	1	1	--
3R	R5-1A	--	1	1	--
4R	R2-1	SPEED LIMIT 35	1	1	--
5R	R2-1	SPEED LIMIT 35	1	1	--
6R	J2-1	JCT WIS 75	1	1	--
7R	J2-1	JCT WIS 75	1	1	--
8R	J2-1	JCT COUNTY F	1	1	SHEET 2 OF 20
9R	W5-52R	--	1	1	--
10R	R2-1	SPEED LIMIT 35	1	1	--
11R	R2-1	SPEED LIMIT 35	1	1	OTHER R2-1 REMOVED AS WELL
12R	NOT USED				
13R	R2-1	SPEED LIMIT 35	1	1	--
14R	J2-3	NORTH 75 EAST 50 SOUTH 83	1	2	--
15R	J2-3	NORTH 75 EAST 50 SOUTH 83	1	2	--
16R	I2-3	PADDOCK LAKE POPULATION 2992	1	2	SHEET 3 OF 20
17R	J3-1	COUNTY F [RA]	1	1	--
18R	NOT USED				
19R	NOT USED				
20R	R4-7	--	1	1	--
21R	NOT USED				
22R	J3-1	COUNTY F [LA]	1	1	R7-1D REMOVED AS WELL
23R	NOT USED				
24R	R4-7	--	1	1	--
25R	NOT USED				

3

TYPE II SIGN REMOVALS

1310-04-70 STH 50

SIGN NO.	SIGN CODE & SIZE	SIGN MESSAGE	638.2602 REMOVING SIGNS TYPE II [EA]	638.3000 REMOVING SMALL SIGN SUPPORTS [EA]	REMARKS / NEW SIGN LOCATION
26R	R4-7	--	1	1	--
27R	W3-3	--	1	1	--
28R	W3-3	--	1	1	--
29R	J1-1	JCT COUNTY F	1	1	--
30R	R7-1D	--	1	1	--
31R	R1-1	--	1	1	R6-3A REMOVED AS WELL
32R	NOT USED				
33R	JV3-1	WIS 50 WIS 83 [DA]	1	1	--
34R	NOT USED				
35R	R4-7	--	1	1	SHEET 4 OF 20
36R	NOT USED				
37R	R2-1	SPEED LIMIT 35	1	1	R7-1L REMOVED AS WELL
38R	JV4-1	WEST WIS 50 NORTH WIS 83	1	1	--
39R	J3-1	NORTH WIS 75 [LA]	1	1	--
40R	J3-1	SOUTH WIS 83 [RA]	1	1	--
41R	R5-1	--	1	1	--
42R	R1-1F	--	1	--	ON SIGNAL POLE
43R	R1-1F	--	1	--	ON SIGNAL POLE
44R	R6-2L	--	1	--	ON SIGNAL POLE
45R	R10-50	--	1	--	ON SIGNAL POLE
46R	R4-7	--	1	--	ON SIGNAL POLE
47R	R10-50	--	1	--	ON SIGNAL POLE
48R	R4-7	--	1	--	ON SIGNAL POLE
49R	R1-1F	--	1	--	ON SIGNAL POLE
50R	R1-1F	--	1	--	ON SIGNAL POLE
51R	NOT USED				
52R	J3-3	SOUTH 83 NORTH 83 NORTH 75	1	2	R5-1 AND R7-1D REMOVED AS WELL
53R	NOT USED				
54R	R2-1	SPEED LIMIT 35	1	1	R7-1D REMOVED AS WELL
55R	NOT USED				

TYPE II SIGN REMOVALS

1310-04-70 STH 50

SIGN NO.	SIGN CODE & SIZE	SIGN MESSAGE	638.2602 REMOVING SIGNS TYPE II [EA]	638.3000 REMOVING SMALL SIGN SUPPORTS [EA]	REMARKS / NEW SIGN LOCATION
56R	R7-1D	--	1	1	SHEET 5 OF 20
57R	R1-1	--	1	1	--
58R	R3-2	--	1	1	--
59R	NOT USED				
60R	R6-2R	--	1	1	--
61R	R2-1	SPEED LIMIT 35	1	--	ON POWER POLE
62R	R3-9B	--	1	1	--
63R	R7-1D	--	1	1	--
64R	R4-7	--	1	1	--
65R	R4-7	--	1	1	--
66R	R4-7	--	1	1	--
67R	NOT USED				
68R	J4-1	EAST WIS 50	1	1	--
69R	W3-3	--	1	1	--
70R	NOT USED				
71R	NOT USED				
72R	J2-4	SOUTH 83 WEST 50 NORTH 83 N. 75	1	2	--
73R	D1-3	LAKE GENEVA/SALEM/BURLINGTON	1	2	--
74R	JV1-1	JCT WIS 75 WIS 83	1	1	SHEET 6 OF 20
75R	R1-1	--	1	1	--
76R	NOT USED				
77R	R2-1	SPEED LIMIT 35	1	1	S5-2 REMOVED AS WELL
78R	NOT USED				
79R	R7-1D	--	1	1	--
80R	R2-1	SPEED LIMIT 35	1	1	R7-1D REMOVED AS WELL
81R	--	POST IN TERRACE	--	1	--
82R	NOT USED				
83R	NOT USED				
84R	NOT USED				
85R	NOT USED				

TYPE II SIGN REMOVALS

1310-04-70 STH 50

SIGN NO.	SIGN CODE & SIZE	SIGN MESSAGE	638.2602 REMOVING SIGNS TYPE II [EA]	638.3000 REMOVING SMALL SIGN SUPPORTS [EA]	REMARKS / NEW SIGN LOCATION
86R	S4-51	SCHOOL SPEED LIMIT 25	1	1	--
87R	R2-1	SPEED LIMIT 35	1	1	SHEET 7 OF 20
88R	NOT USED				
89R	R1-1	--	1	1	--
90R	R7-1D	--	1	1	--
91R	NOT USED				
92R	R3-9B	--	1	1	R7-1D REMOVED AS WELL
93R	NOT USED				
94R	NOT USED				
95R	NOT USED				
96R	NOT USED				
97R	NOT USED				
98R	NOT USED				
99R	NOT USED				
100R	R1-1	--	1	1	R5-1 AND R3-2 REMOVED AS WELL
101R	S1-1	--	1	1	R5-1 AND S16-7L REMOVED AS WELL
102R	NOT USED				
103R	NOT USED				
104R	NOT USED				
105R	NOT USED				
106R	NOT USED				
107R	NOT USED				
108R	R3-2	--	1	1	SHEET 8 OF 20
109R	R3-2	--	1	1	--
110R	R7-1D	--	1	1	--
111R	W3-3	--	1	1	R7-1D REMOVED AS WELL
112R	NOT USED				
113R	R7-1D	--	1	--	ON POWER POLE
114R	R3-9B	--	1	1	--
115R	R3-9B	--	1	1	--

TYPE II SIGN REMOVALS

1310-04-70 STH 50

SIGN NO.	SIGN CODE & SIZE	SIGN MESSAGE	**638.2602** REMOVING SIGNS TYPE II [EA]	**638.3000** REMOVING SMALL SIGN SUPPORTS [EA]	REMARKS / NEW SIGN LOCATION
116R	R1-1F	--	1	--	SHEET 9 OF 20; ON SIGNAL POLE
117R	R1-1F	--	1	--	ON SIGNAL POLE
118R	R1-1F	--	1	--	ON SIGNAL POLE
119R	R1-1F	--	1	--	ON SIGNAL POLE
120R	R1-1F	--	1	--	ON SIGNAL POLE
121R	R1-1F	--	1	--	ON SIGNAL POLE
122R	R4-7	--	1	--	ON SIGNAL POLE
123R	R4-7	--	1	--	ON SIGNAL POLE
124R	S1-1	--	1	--	ON SIGNAL POLE
125R	S16-7L	--	1	--	ON SIGNAL POLE
126R	R2-1	SPEED LIMIT 35	1	1	--
127R	R7-1D	--	1	--	ON POWER POLE
128R	W3-3	--	1	1	R7-1D REMOVED AS WELL
129R	S4-51	SCHOOL SPEED LIMIT 25	1	1	--
130R	NOT USED				
131R	S1-1	--	1	--	ON SIGNAL POLE
132R	S16-7L	--	1	--	ON SIGNAL POLE
133R	NOT USED				
134R	R3-9B	--	1	1	SHEET 10 OF 20
135R	NOT USED				
136R	NOT USED				
137R	NOT USED				
138R	R2-1	SPEED LIMIT 35	1	--	ON POWER POLE
139R	R7-1D	--	1	--	ON POWER POLE
140R	R1-1	--	1	1	--
141R	R7-1D	--	1	1	--
142R	R1-1	--	1	1	--
143R	R2-1	SPEED LIMIT 35	1	1	S5-2 REMOVED AS WELL
144R	NOT USED				
145R	R7-1D	--	1	--	ON POWER POLE

TYPE II SIGN REMOVALS

1310-04-70 STH 50

SIGN NO.	SIGN CODE & SIZE	SIGN MESSAGE	638.2602 REMOVING SIGNS TYPE II [EA]	638.3000 REMOVING SMALL SIGN SUPPORTS [EA]	REMARKS / NEW SIGN LOCATION
146R	R7-1D	--	1	--	SHEET 11 OF 20; ON POWER POLE
147R	R7-1D	--	1	--	ON POWER POLE
148R	R7-1D	--	1	1	--
149R	R1-1	--	1	1	--
150R	R1-1	--	1	1	--
151R	R4-7	--	1	1	--
152R	R3-9B	--	1	1	--
153R	R2-1	35 MPH	1	1	OTHER R2-1 REMOVED AS WELL
154R	NOT USED				
155R	R2-1	35 MPH	1	1	R7-1D REMOVED AS WELL
156R	NOT USED				
157R	R2-1	SPEED LIMIT 35	1	1	R7-1D REMOVED AS WELL
158R	NOT USED				
159R	R4-7	--	1	1	SHEET 12 OF 20
160R	R4-7	--	1	1	--
161R	R7-1D	--	1	1	--
162R	R7-1D	--	1	1	--
163R	NOT USED				
164R	NOT USED				SHEET 13 OF 20
165R	R2-1	SPEED LIMIT 35	1	1	R7-1D REMOVED AS WELL
166R	R2-1	SPEED LIMIT 35	1	1	R7-1D REMOVED AS WELL
167R	NOT USED				
168R	R7-1D	--	1	1	--
169R	R2-1	SPEED LIMIT 35	1	1	OTHER R2-1 REMOVED AS WELL
170R	NOT USED				
171R	R1-1	--	1	1	SHEET 14 OF 20
172R	NOT USED				
173R	NOT USED				
174R	R2-1	SPEED LIMIT 35	1	1	R7-1D REMOVED AS WELL
175R	R2-1	SPEED LIMIT 35	1	1	--

TYPE II SIGN REMOVALS

1310-04-70 STH 50

SIGN NO.	SIGN CODE & SIZE	SIGN MESSAGE	638.2602 REMOVING SIGNS TYPE II [EA]	638.3000 REMOVING SMALL SIGN SUPPORTS [EA]	REMARKS / NEW SIGN LOCATION
176R	R4-7	--	1	1	--
177R	R4-7	--	1	1	--
178R	R4-7	--	1	1	--
179R	R2-1	SPEED LIMIT 35	1	1	OTHER R2-1 REMOVED AS WELL
180R	NOT USED				
181R	I2-3	PADDOCK LAKE POPULATION 2992	1	2	SHEET 15 OF 20
182R	R2-1	SPEED LIMIT 35	1	1	--
183R	R4-7	--	1	1	--
184R	R2-1	SPEED LIMIT 35	1	1	--
185R	R4-7	--	1	1	--
186R	R2-1	SPEED LIMIT 35	1	1	--
187R	R2-1	SPEED LIMIT 35	1	1	--
188R	J4-1	EAST WIS 50	1	1	--
189R	W3-5	SPEED LIMIT 35	1	1	SHEET 16 OF 20
190R	W3-5	SPEED LIMIT 35	1	1	--
191R	R2-1	SPEED LIMIT 55	1	1	--
192R	R4-7	--	1	1	--
193R	R4-7	--	1	1	--
194R	W6-1	--	1	1	SHEET 17 OF 20
195R	R7-1D	--	1	1	--
196R	NOT USED				
197R	W3-3	--	1	1	W14-3 ON BACK SIDE REMOVED AS WELL
198R	NOT USED				
199R	NOT USED				
200R	R7-1D	--	1	1	--
201R	R7-1D	--	1	1	--
202R	W6-3	--	1	1	--
203R	J2-4	WEST 50 NORTH 83 NORTH 75 EAST 50	1	2	--
204R	R5-1	--	1	1	SHEET 18 OF 20; R7-1D ON BACK REM'D
205R	R4-7	--	1	1	--

SIGN NO.	SIGN CODE & SIZE	SIGN MESSAGE	638.2602 REMOVING SIGNS TYPE II [EA]	638.3000 REMOVING SMALL SIGN SUPPORTS [EA]	REMARKS / NEW SIGN LOCATION
206R	R2-1	SPEED LIMIT 45	1	1	R5-1A ON BACK SIDE REMOVED AS WELL
207R	R4-7	--	1	1	--
208R	R4-7	--	1	1	--
209R	NOT USED				
210R	R7-1L	--	1	1	--
211R	R6-2L	--	1	1	--
212R	R6-2L	--	1	1	--
213R	D1-3	BURLINGTON/LAKE GENEVA/KENOSHA	1	2	--
214R	J3-4	WEST 50 NORTH 83 NORTH 75 EAST 50	1	3	R5-1 ON BACK SIDE REMOVED AS WELL
215R	NOT USED				
216R	R7-1R	--	1	1	--
217R	NOT USED				
218R	W6-2	--	1	1	--
219R	J4-1	SOUTH WIS 83	1	1	--
220R	R10-50	--	1	--	SHEET 19 OF 20; ON SIGNAL POLE
221R	R10-50	--	1	--	ON SIGNAL POLE
222R	R4-7	--	1	1	--
223R	W12-1D	--	1	--	ON SIGNAL POLE
224R	W12-1D	--	1	--	ON SIGNAL POLE
225R	R1-2	--	1	1	--
226R	R1-2	--	1	1	--
227R	R4-7	--	1	--	ON SIGNAL POLE
228R	R4-7	--	1	--	ON SIGNAL POLE
229R	R1-1F	--	1	--	ON SIGNAL POLE
230R	R1-1F	--	1	--	ON SIGNAL POLE

TYPE II SIGN REMOVALS

1310-04-70 STH 50

SIGN NO.	SIGN CODE & SIZE	SIGN MESSAGE	638.2602 REMOVING SIGNS TYPE II [EA]	638.3000 REMOVING SMALL SIGN SUPPORTS [EA]	REMARKS / NEW SIGN LOCATION
231R	R1-1F	--	1	--	ON SIGNAL POLE
232R	R1-1F	--	1	--	ON SIGNAL POLE
233R	R5-1	--	1	1	--
234R	J3-2	EAST WIS 50 SOUTHWIS 83	1	1	--
235R	J3-2	WEST WIS 50 NORTH WIS 83	1	1	--
236R	W9-1R	--	1	1	--
237R	NOT USED				
238R	NOT USED				SHEET 20 OF 20
239R	D1-3	SALEM/KENOSHA/LAKE GENEVA	1	2	R5-1A ON BACK SIDE REMOVED AS WELL
240R	W3-3	--	1	1	
241R	R4-7	--	1	1	W5-54 REMOVED AS WELL
242R	NOT USED				
243R	J1-1	END WIS 75	1	1	--
244R	NOT USED				
245R	J2-4	EAST 50 SOUTH 83 NORTH 83 WEST 50	1	3	NEAR STATION 60 + 05
246R	R4-7	--	1	1	--
247R	W4-2R	--	1	1	--
248R	W6-2	--	1	1	R5-1A ON BACK SIDE REMOVED AS WELL
249R	NOT USED				
250R	J4-1	NORTH WIS 75	1	1	R5-1 ON BACK SIDE REMOVED AS WELL
--	--	--	--	--	--
TOTALS			184	161	

SIGN NO.	SIGN CODE & SIZE	SIGN MESSAGE	TYPE II SIGN SIZE W [IN.]	X	H [IN.]	**637.2210** SIGNS TYPE II REFLC H [SF]	**637.2230** SIGNS TYPE II REFLC F [SF]	**637.2215** SIGNS TYPE II REFLC H FOLDING [SF]	**634.0618** POSTS WOOD 4"X 6"X18' [EA]	**634.0814** POSTS TUBULAR STEEL 2"X2"X14' [EA]	**638.2102** MOVE SIGNS TYPE II [EA]	MOUNT ON SAME POST AS SIGN #	REMARKS / NEW SIGN LOCATION
1	J4-2(3)		72	X	54	27.000	--	--	2	--	--	--	
	M3-2		36	x	18								
	M1-6	WIS 50	36	x	36								
	M3-3		36	x	18								
	M1-6	WIS 83	36	x	36								
2	R2-1(3)	SPEED LIMIT 55	36	X	48	12.000	--	--	1	--	--	--	--
3	R2-1(3)	SPEED LIMIT 35	36	X	48	12.000	--	--	1	--	--	--	--
4	R5-1A(2M)	--	42	X	30	8.750	--	--	1	--	--	--	MOUNT FACING WEST
5	R2-1(3)	SPEED LIMIT 35	36	X	48	12.000	--	--	1	--	--	--	--
6	J1-1(2M)	--	24	X	39	6.500	--	--	1	--	--	--	--
	M2-1	--	21	x	15								
	M1-6	WIS 75	24	x	24								
7	J1-1(2M)	--	24	X	39	6.500	--	--	1	--	--	--	--
	M2-1	--	21	x	15								
	M1-6	WIS 75	24	x	24								
8	J1-1(2M)	--	24	X	39	6.500	--	--	1	--	--	--	SHEET 2 OF 20
	M2-1	--	21	x	15								
	M1-5A	COUNTY F	24	x	24								
9	W5-52R(2M)	--	12	X	36	--	3.000	--	1	--	--	--	--
10	R2-1(2M)	SPEED LIMIT 35	30	X	36	7.500	--	--	1	--	--	--	--
11	J2-3(2M)	--	72	X	57	28.500	--	--	2	--	--	--	--
	M3-1		24	x	12								
	M1-6	WIS 75	24	x	24								
	M5-1L		21	x	21								
	M3-2		24	x	12								
	M1-6	WIS 50	24	x	24								
	M6-1		21	x	21								
	M3-3		24	x	12								
	M1-6	WIS 83	24	x	24								
	M5-1R		21	x	21								

SIGN NO.	SIGN CODE & SIZE	SIGN MESSAGE	TYPE II SIGN SIZE W [IN.]	X	H [IN.]	637.2210 SIGNS TYPE II REFLC H [SF]	637.2230 SIGNS TYPE II REFLC F [SF]	637.2215 SIGNS TYPE II REFLC H FOLDING [SF]	634.0618 POSTS WOOD 4"X 6"X18' [EA]	634.0814 POSTS TUBULAR STEEL 2"X2"X14' [EA]	638.2102 MOVE SIGNS TYPE II [EA]	MOUNT ON SAME POST AS SIGN #	REMARKS / NEW SIGN LOCATION
12	J2-3(2M)	--	72	X	57	28.500	--	--	2	--	--	--	--
	M3-1		24	x	12								
	M1-6	WIS 75	24	x	24								
	M5-1L		21	x	21								
	M3-2		24	x	12								
	M1-6	WIS 50	24	x	24								
	M6-1		21	x	21								
	M3-3		24	x	12								
	M1-6	WIS 83	24	x	24								
	M5-1R		21	x	21								
13	R2-1(2M)	SPEED LIMIT 35	30	X	36	7.500	--	--	1	--	--	--	--
14	R2-1(2M)	SPEED LIMIT 35	30	X	36	7.500	--	--	--	--	--	13	MOUNT ON BACK OF SIGN NO. 13
15	R2-1(2M)	SPEED LIMIT 35	30	X	36	7.500	--	--	1	--	--	--	--
16	R5-1A(2M)	--	42	X	30	8.750	--	--	1	--	--	--	SHEET 3 OF 20; MOUNT FACING EAST
17	I2-3	PADDOCK LAKE POPULATION 2992	66	X	18	8.250	--	--	2	--	--	--	--
18	J3-1(2M)	--	24	X	45	7.500	--	--	1	--	--	--	--
	M1-5A	COUNTY F	24	x	24								
	M6-1	--	21	x	21								
19	R5-1(2M)	--	36	X	36	9.000	--	--	--	--	--	18	MOUNT ON BACK OF SIGN NO. 18
20	R7-1D(2M)	--	24	X	30	5.000	--	--	1	--	--	--	--
21	R4-7(2M)	--	24	X	30	5.000	--	--	1	--	--	--	--
22	R4-7(2M)	--	24	X	30	5.000	--	--	1	--	--	--	--
23	R5-1(2M)	--	36	X	36	9.000	--	--	1	--	--	--	MOUNT FACING WEST
24	I55-56	ADOPT A HIGHWAY	--	--	--	--	--	--	--	--	1	23	MOUNT ON BACK OF SIGN NO. 23
25	J3-1(2M)	--	24	X	45	7.500	--	--	1	--	--	--	--
	M1-5A	COUNTY F	24	x	24								
	M6-1	--	21	x	21								
26	R5-1A (2M)	--	42	X	30	8.750	--	--	1	--	--	--	MOUNT FACING WEST
26A	R5-1A (2M)	--	42	X	30	8.750	--	--	1	--	--	--	MOUNT FACING EAST
27	J1-1(2M)	--	24	X	39	6.500	--	--	--	--	--	26	MOUNT ON BACK OF SIGN NO. 26
	M2-1		21	x	15								
	M1-5A	COUNTY F	24	x	24								
28	R6-3A(2S)	--	30	X	24	5.000	--	--	--	--	--	29	MOUNT BELOW SIGN NO. 29
29	R1-1(2M)	--	36	X	36	7.460	--	--	1	--	--	--	--

SIGN NO.	SIGN CODE & SIZE	SIGN MESSAGE	TYPE II SIGN SIZE W [IN.]	X	H [IN.]	637.2210 SIGNS TYPE II REFLC H [SF]	637.2230 SIGNS TYPE II REFLC F [SF]	637.2215 SIGNS TYPE II REFLC H FOLDING [SF]	634.0618 POSTS WOOD 4"X 6"X18' [EA]	634.0814 POSTS TUBULAR STEEL 2"X2"X14' [EA]	638.2102 MOVE SIGNS TYPE II [EA]	MOUNT ON SAME POST AS SIGN #	REMARKS / NEW SIGN LOCATION
30	JV3-1(2M)	--	24	X	69	11.500	--	--	1	--	--	--	--
	M1-6	WIS 50	24	x	24								
	M1-6	WIS 83	24	x	24								
	M6-4		21	x	21								
31	R7-1D(2M)	--	24	X	30	5.000	--	--	1	--	--	--	--
32	W3-3(2M)	--	36	X	36	--	9.000	--	1	--	--	--	--
33	W3-3(2M)	--	36	X	36	--	9.000	--	1	--	--	--	--
34	R3-20L(2M)	--	24	X	36	6.000	--	--	1	--	--	--	--
35	R3-20L(2M)	--	24	X	36	6.000	--	--	1	--	--	--	SHEET 4 OF 20
36	R2-1(2M)	SPEED LIMIT 35	30	X	36	7.500	--	--	1	--	--	--	--
37	JV4-1(2M)	--	24	X	72	12.000	--	--	1	--	--	--	--
	M3-4		24	x	12								
	M1-6	WIS 50	24	x	24								
	M3-1		24	x	12								
	M1-6	WIS 83	24	x	24								
38	J3-1(2M)	--	24	X	57	9.500	--	--	1	--	--	--	--
	M3-3		24	x	12								
	M1-6	WIS 83	24	x	24								
	M6-1		21	x	21								
39	J3-1(2M)	--	24	X	57	9.500	--	--	1	--	--	--	--
	M3-1		24	x	12								
	M1-6	WIS 75	24	x	24								
	M6-1		21	x	21								
40	R5-1(2M)	--	36	X	36	9.000	--	--	1	--	--	--	MOUNT FACING EAST
41	R6-2L(2M)	--	30	X	36	7.500	--	--	1	--	--	--	--
42	R4-7(2M)	--	24	X	30	5.000	--	--	--	--	--	--	MOUNT ON SIGNAL POLE
43	R6-3(2S)	--	30	X	24	5.000	--	--	--	--	--	44	MOUNT ABOVE SIGN NO. 44
44	R1-1F(2M)	--	36	X	36	--	--	7.460	--	--	--	--	MOUNT ON SIGNAL POLE
45	M1-94S	WIS 83 ANTIOCH RD	102	X	18	12.750	--	--	--	--	--	--	MOUNT ON MAST ARM
46	R4-7(2M)	--	24	X	30	5.000	--	--	--	--	--	--	MOUNT ON SIGNAL POLE
47	R2-1(2M)	SPEED LIMIT 35	30	X	36	7.500	--	--	1	--	--	--	--
48	R7-1D(2M)	--	24	X	30	5.000	--	--	1	--	--	--	--

SIGN NO.	SIGN CODE & SIZE	SIGN MESSAGE	TYPE II SIGN SIZE W [IN.]	X	H [IN.]	637.2210 SIGNS TYPE II REFLC H [SF]	637.2230 SIGNS TYPE II REFLC F [SF]	637.2215 SIGNS TYPE II REFLC H FOLDING [SF]	634.0618 POSTS WOOD 4"X 6"X18' [EA]	634.0814 POSTS TUBULAR STEEL 2"X2"X14' [EA]	638.2102 MOVE SIGNS TYPE II [EA]	MOUNT ON SAME POST AS SIGN #	REMARKS / NEW SIGN LOCATION
49	M1-94S	WIS 83 ANTIOCH RD	102	X	18	12.750	--	--	--	--	--	--	MOUNT ON MAST ARM
50	R6-3(2S)	--	30	X	24	5.000	--	--	--	--	--	51	MOUNT ABOVE SIGN NO. 51
51	R1-1F(2M)	--	36	X	36	--	--	7.460	--	--	--	--	MOUNT ON SIGNAL POLE
52	R5-1(2M)	--	36	X	36	9.000	--	--	--	--	--	53	MOUNT ON BACK OF SIGN NO. 53
53	J3-4(2M)	--	96	X	57	38.000	--	--	2	--	--	--	--
	M3-3		24	x	12								
	M1-6	WIS 83	24	x	24								
	M6-1		21	x	21								
	M3-4		24	x	12								
	M1-6	WIS 50	24	x	24								
	M6-1		21	x	21								
	M3-1		24	x	12								
	M1-6	WIS 83	24	x	24								
	M6-1		21	x	21								
	M3-1		24	x	12								
	M1-6	WIS 75	24	x	24								
	M6-1		21	x	21								
54	R1-1F(2M)	--	36	X	36	--	--	7.460	--	--	--	46	MOUNT ON POLE ON BACK OF NO. 46
55	R7-1D(2M)	--	24	X	30	5.000	--	--	1	--	--	--	--
56	R6-2L(2M)	--	30	X	36	7.500	--	--	1	--	--	--	--
57	R1-1F(2M)	--	36	X	36	--	--	7.460	--	--	--	42	MOUNT ON POLE ON BACK OF NO.42
58	J4-1(2M)	--	24	X	36	6.000	--	--	1	--	--	--	SHEET 5 OF 20
	M3-2		24	x	12								
	M1-6	WIS 50	24	x	24								
59	R5-1A (2M)	--	42	X	30	8.750	--	--	1	--	--	--	MOUNT FACING WEST
60	W3-3(2M)	--	36	X	36	--	9.000	--	--	--	--	59	MOUNT ON BACK OF SIGN NO. 59
61	W3-3(2M)	--	36	X	36	--	9.000	--	1	--	--	--	--
62	D1-3	LAKE GENEVA/SALEM/BURLINGTON	54	X	36	13.500	--	--	2	--	--	--	--
63	R3-20L(2M)	--	24	X	36	6.000	--	--	1	--	--	--	--
64	R3-20L(2M)	--	24	X	36	6.000	--	--	1	--	--	--	--
65	R7-1D(2M)	--	24	X	30	5.000	--	--	1	--	--	--	--
66	R7-1D(2M)	--	24	X	30	5.000	--	--	1	--	--	--	--

SIGN NO.	SIGN CODE & SIZE	SIGN MESSAGE	TYPE II SIGN SIZE W [IN.]	X	H [IN.]	**637.2210** SIGNS TYPE II REFLC H [SF]	**637.2230** SIGNS TYPE II REFLC F [SF]	**637.2215** SIGNS TYPE II REFLC H FOLDING [SF]	**634.0618** POSTS WOOD 4"X 6"X18' [EA]	**634.0814** POSTS TUBULAR STEEL 2"X2"X14' [EA]	**638.2102** MOVE SIGNS TYPE II [EA]	MOUNT ON SAME POST AS SIGN #	REMARKS / NEW SIGN LOCATION
67	J2-4(2M)	--	96	X	57	38.000	--	--	2	--	--	--	--
	M3-3		24	x	12								
	M1-6	WIS 83	24	x	24								
	M5-1L		21	x	21								
	M3-4		24	x	12								
	M1-6	WIS 50	24	x	24								
	M6-1		21	x	21								
	M3-1		24	x	12								
	M1-6	WIS 83	24	x	24								
	M6-1		21	x	21								
	M3-1		24	x	12								
	M1-6	WIS 75	24	x	24								
	M5-1R		21	x	21								
68	R3-53R(2M)	--	24	X	30	5.000	--	--	1	--	--	--	--
69	R1-1(2M)	--	36	X	36	7.460	--	--	1	--	--	--	--
70	R5-1(2M)	--	36	X	36	9.000	--	--	1	--	--	--	MOUNT FACING WEST
71	R2-1(2M)	SPEED LIMIT 35	30	X	36	7.500	--	--	--	--	--	70	MOUNT ON BACK OF SIGN NO. 70
72	R6-2R(2S)	--	24	X	30	5.000	--	--	1	--	--	--	
73	R4-7(2M)	--	24	X	30	5.000	--	--	1	--	--	--	
74	R4-7(2M)	--	24	X	30	5.000	--	--	1	--	--	--	
75	NOT USED												
76	NOT USED												
77	NOT USED												
78	R3-20L(2M)	--	24	X	36	6.000	--	--	1	--	--	--	SHEET 6 OF 20
79	R4-7(2S)	--	24	X	30	5.000	--	--	1	--	--	--	SHEET 5 OF 20
80	R6-2R(2S)	--	24	X	30	5.000	--	--	1	--	--	--	SHEET 6 OF 20
81	R2-1(2M)	SPEED LIMIT 35	30	X	36	7.500	--	--	1	--	--	--	
82	R7-1D(2M)	--	24	X	30	5.000	--	--	1	--	--	--	
83	D1-1	250TH AVE [LA]	60	X	24	10.000	--	--	2	--	--	--	SHEET 5 OF 20
84	JV1-1(2M)	--	24	X	63	10.500	--	--	1	--	--	--	SHEET 6 OF 20
	M2-1		21	x	15								
	M1-6	WIS 75	24	x	24								
	M1-6	WIS 83	24	x	24								

SIGN NO.	SIGN CODE & SIZE	SIGN MESSAGE	TYPE II SIGN SIZE W [IN.]	X	H [IN.]	637.2210 SIGNS TYPE II REFLC H [SF]	637.2230 SIGNS TYPE II REFLC F [SF]	637.2215 SIGNS TYPE II REFLC H FOLDING [SF]	634.0618 POSTS WOOD 4"X 6"X18' [EA]	634.0814 POSTS TUBULAR STEEL 2"X2"X14' [EA]	638.2102 MOVE SIGNS TYPE II [EA]	MOUNT ON SAME POST AS SIGN #	REMARKS / NEW SIGN LOCATION
85	R4-7(2M)	--	24	X	30	5.000	--	--	1	--	--	--	--
86	R2-1(2M)	SPEED LIMIT 35	30	X	36	7.500	--	--	1	--	--	--	SHEET 5 OF 20
87	R3-2	--		--		--	--	--	1	--	1	--	SHEET 6 OF 20
88	R1-1(2M)	--	36	X	36	7.460	--	--	1	--	--	--	
89	R5-1(2M)	--	36	X	36	9.000	--	--	1	--	--	--	MOUNT FACING EAST
90	R3-9B(2M)	--	24	X	36	6.000	--	--	1	--	--	--	--
91	R3-9D(2M)	--	24	X	6	1.000	--	--	--	--	--	90	MOUNT ABOVE SIGN NO. 90
92	R3-9B(2M)	--	24	X	36	6.000	--	--	1	--	--	--	--
93	R3-9C(2M)	--	24	X	6	1.000	--	--	--	--	--	92	MOUNT ABOVE SIGN NO. 92
94	R2-1(2M)	SPEED LIMIT 35	30	X	36	7.500	--	--	1	--	--	--	--
95	S5-2(2M)	--	24	X	30	5.000	--	--	--	--	--	94	MOUNT BELOW SIGN NO. 94
96	R7-1D(2M)	--	24	X	30	5.000	--	--	1	--	--	--	--
97	D1-1	250TH AVE [RA]	60	X	24	10.000	--	--	2	--	--	--	--
98	S4-51(2M)	SCHOOL SPEED LIMIT 25	24	X	48	--	8.000	--	1	--	--	--	--
99	R3-9B(2M)	--	24	X	36	6.000	--	--	1	--	--	--	SHEET 7 OF 20
100	D1-63	248TH AVE NEXT INTERSECTION	60	X	27	11.250	--	--	2	--	--	--	--
101	R7-1D(2M)	--	24	X	30	5.000	--	--	1	--	--	--	
102	R3-9D(2M)	--	24	X	6	1.000	--	--	--	--	--	99	MOUNT ABOVE SIGN NO. 99
103	R5-1(2M)	--	36	X	36	9.000	--	--	1	--	--	--	MOUNT FACING NORTH
104	R3-2(2S)	--	24	X	24	4.000	--	--	--	--	--	103	MOUNT ON BACK OF SIGN NO. 103
105	R1-1(2M)	--	36	X	36	7.460	--	--	1	--	--	--	--
106	R3-53R(2S)	--	24	X	30	5.000	--	--	--	--	--	105	MOUNT BELOW SIGN NO. 105
107	R5-1(2M)	--	36	X	36	9.000	--	--	1	--	--	--	--
108	R5-1(2M)	--	36	X	36	9.000	--	--	1	--	--	--	MOUNT FACING WEST
109	R4-7(2M)	--	24	X	30	5.000	--	--	1	--	--	--	--
110	R2-1(2M)	SPEED LIMIT 35	30	X	36	7.500	--	--	1	--	--	--	--
111	R7-1D(2M)	--	24	X	30	5.000	--	--	1	--	--	--	--
112	R3-9B(2M)	--	24	X	36	6.000	--	--	1	--	--	--	--
113	R1-1(2M)	--	36	X	36	7.460	--	--	1	--	--	--	--
114	R3-9C(2M)	--	24	X	6	1.000	--	--	--	--	--	112	MOUNT ABOVE SIGN NO. 112
115	NOT USED												

SIGN NO.	SIGN CODE & SIZE	SIGN MESSAGE	TYPE II SIGN SIZE W [IN.]	X	H [IN.]	637.2210 SIGNS TYPE II REFLC H [SF]	637.2230 SIGNS TYPE II REFLC F [SF]	637.2215 SIGNS TYPE II REFLC H FOLDING [SF]	634.0618 POSTS WOOD 4"X 6"X18' [EA]	634.0814 POSTS TUBULAR STEEL 2"X2"X14' [EA]	638.2102 MOVE SIGNS TYPE II [EA]	MOUNT ON SAME POST AS SIGN #	REMARKS / NEW SIGN LOCATION
116	S1-1	--	--			--	--	--	--	--	1	--	MOUNT IN MEDIAN; SEE SEPARATE QTYS. FOR RRFB ASSEMBLY
117	NOT USED												
118	S16-7R	--	--			--	--	--	--	--	1	116	MOUNT BELOW RRFB IN MEDIAN
119	NOT USED												
120	S1-1	--	--			--	--	--	--	--	1	--	MOUNT IN MEDIAN; SEE SEPARATE QTYS. FOR RRFB ASSEMBLY
121	NOT USED												
122	S16-7R	--	--			--	--	--	--	--	1	120	MOUNT BELOW RRFB IN MEDIAN
123	R3-2(2M)	--	36	X	36	9.000	--	--	1	--	--	--	SHEET 8 OF 20
124	R3-9B(2M)	--	24	X	36	6.000	--	--	1	--	--	--	--
125	R3-9C(2M)	--	24	X	6	1.000	--	--	--	--	--	124	MOUNT ABOVE SIGN NO. 124
126	D1-63	248TH AVE NEXT INTERSECTION	60	X	27	11.250	--	--	2	--	--	--	--
127	R7-1D(2M)	--	24	X	30	5.000	--	--	1	--	--	--	--
128	R5-1A(2M)	--	42	X	30	8.750	--	--	1	--	--	--	MOUNT FACING EAST
129	R3-20L(2M)	--	24	X	36	6.000	--	--	1	--	--	--	--
130	R7-1D(2M)	--	24	X	30	5.000	--	--	1	--	--	--	--
131	R4-7(2M)	--	24	X	30	5.000	--	--	1	--	--	--	--
132	R5-1(2M)	--	36	X	36	9.000	--	--	--	--	--	124	MOUNT ON BACK OF SIGN NO. 124
133	R7-1D(2M)	--	24	X	30	5.000	--	--	1	--	--	--	--
134	W3-3(2M)	--	36	X	36	--	9.000	--	1	--	--	--	--
135	D1-65	246TH AVE NEXT SIGNAL	60	X	21	8.750	--	--	2	--	--	--	--
136	R3-9B(2M)	--	24	X	36	6.000	--	--	--	--	--	128	MOUNT ON BACK OF SIGN NO. 128
137	R3-9D(2M)	--	24	X	6	3.880	--	--	--	--	--	136	MOUNT ABOVE SIGN NO. 136
138	R4-7(2M)	--	24	X	30	5.000	--	--	1	--	--	--	
139	R5-1(2M)	--	36	X	36	9.000	--	--	1	--	--	--	MOUNT FACING WEST
140	R3-9B(2M)	--	24	X	36	6.000	--	--	1	--	--	--	
141	R3-9D(2M)	--	24	X	6	1.000	--	--	--	--	--	140	MOUNT ABOVE SIGN NO. 140
142	R3-9B(2M)	--	24	X	36	6.000	--	--	1	--	--	--	

SIGN NO.	SIGN CODE & SIZE	SIGN MESSAGE	TYPE II SIGN SIZE W [IN.]	X	H [IN.]	637.2210 SIGNS TYPE II REFLC H [SF]	637.2230 SIGNS TYPE II REFLC F [SF]	637.2215 SIGNS TYPE II REFLC H FOLDING [SF]	634.0618 POSTS WOOD 4"X 6"X18' [EA]	634.0814 POSTS TUBULAR STEEL 2"X2"X14' [EA]	638.2102 MOVE SIGNS TYPE II [EA]	MOUNT ON SAME POST AS SIGN #	REMARKS / NEW SIGN LOCATION
143	R3-9C(2M)	--	24	X	6	1.000	--	--	--	--	--	142	MOUNT ABOVE SIGN NO. 142
144	R1-1F(2M)	--	36	X	36	--	--	7.460	--	--	--	--	MOUNT ON SIGNAL POLE; SHEET 9 OF 20
145	R1-1F(2M)	--	36	X	36	--	--	7.460	--	--	--	--	MOUNT ON SIGNAL POLE
146	M1-94S	WIS 50 75TH ST	78	X	18	9.750	--	--	--	--	--	--	MOUNT ON MAST ARM
147	R6-3(2S)	--	30	X	24	5.000	--	--	--	--	--	148	MOUNT ABOVE SIGN NO. 148
148	R1-1F(2M)	--	36	X	36	--	--	7.460	--	--	--	--	MOUNT ON SIGNAL POLE
149	R6-2L(2M)	--	30	X	36	7.500	--	--	--	--	--	--	MOUNT ON SIGNAL POLE
150	M1-94H	246TH AVE	72	X	18	9.000	--	--	--	--	--	--	MOUNT ON MAST ARM
151	R4-7(2M)	--	24	X	30	5.000	--	--	--	--	--	--	MOUNT ON SIGNAL POLE
152	R6-3(2S)	--	30	X	24	5.000	--	--	--	--	--	153	MOUNT ABOVE SIGN NO. 153
153	R1-1F(2M)	--	36	X	36	--	--	7.460	--	--	--	--	MOUNT ON SIGNAL POLE
154	M1-94S	WIS 50 75TH ST	78	X	18	9.750	--	--	--	--	--	--	MOUNT ON MAST ARM
155	R1-1F(2M)	--	36	X	36	--	--	7.460	--	--	--	--	MOUNT ON SIGNAL POLE
156	R1-1F(2M)	--	36	X	36	--	--	7.460	--	--	--	151	MOUNT ON BACK OF SIGN NO. 151
157	R5-1(2M)	--	36	X	36	9.000	--	--	--	--	--	155	MOUNT ON BACK OF SIGN NO. 155
158	R6-2R(2S)	--	24	X	30	5.000	--	--	1	--	--	--	
159	R2-1(2M)	SPEED LIMIT 35	30	X	36	7.500	--	--	1	--	--	--	
160	R5-1A(2M)	--	42	X	30	8.750	--	--	1	--	--	--	MOUNT FACING WEST
161	S4-51(2M)	SCHOOL SPEED LIMIT 25	24	X	48	--	8.000	--	--	--	--	160	MOUNT ON BACK OF SIGN NO. 160
162	W3-3(2M)	--	36	X	36	--	9.000	--	1	--	--	--	
163	R3-20L(2M)	--	24	X	36	6.000	--	--	1	--	--	--	
164	R4-7(2M)	--	24	X	30	5.000	--	--	--	--	--	144	MOUNT ON BACK OF SIGN NO. 144
165	M1-94H	246TH AVE	72	X	18	9.000	--	--	--	--	--	--	MOUNT ON MAST ARM
166	R6-2L(2M)	--	30	X	36	7.500	--	--	--	--	--	--	MOUNT ON SIGNAL POLE
167	R5-1(2M)	--	36	X	36	9.000	--	--	--	--	--	145	MOUNT ON BACK OF SIGN NO. 145
168	S1-1(2M)	--	36	X	36	--	6.750	--	1	--	--	--	--
169	S16-7L(2M)	--	30	X	18	--	3.750	--	--	--	--	168	MOUNT BELOW SIGN NO. 168
170	S1-1(2M)	--	36	X	36	--	6.750	--	1	--	--	--	--
171	S16-7L(2M)	--	30	X	18	--	3.750	--	--	--	--	170	MOUNT BELOW SIGN NO. 170
172	R7-1D(2M)	--	24	X	30	5.000	--	--	1	--	--	--	--
173	NOT USED												
174	NOT USED												

SIGN NO.	SIGN CODE & SIZE	SIGN MESSAGE	TYPE II SIGN SIZE W [IN.]	X	H [IN.]	637.2210 SIGNS TYPE II REFLC H [SF]	637.2230 SIGNS TYPE II REFLC F [SF]	637.2215 SIGNS TYPE II REFLC H FOLDING [SF]	634.0618 POSTS WOOD 4"X 6"X18' [EA]	634.0814 POSTS TUBULAR STEEL 2"X2"X14' [EA]	638.2102 MOVE SIGNS TYPE II [EA]	MOUNT ON SAME POST AS SIGN #	REMARKS / NEW SIGN LOCATION
175	R1-1(2M)	--	36	X	36	7.460	--	--	1	--	--	--	SHEET 10 OF 20
176	R7-1D(2M)	--	24	X	30	5.000	--	--	1	--	--	--	--
177	R2-1(2M)	SPEED LIMIT 35	30	X	36	7.500	--	--	1	--	--	--	--
178	R2-1(2M)	SPEED LIMIT 35	30	X	36	7.500	--	--	1	--	--	--	--
179	S5-2(2M)	--	24	X	30	5.000	--	--	--	--	--	178	MOUNT BELOW SIGN NO. 178
180	R1-1(2M)	--	36	X	36	7.460	--	--	1	--	--	--	--
181	R7-1D(2M)	--	24	X	30	5.000	--	--	1	--	--	--	--
182	W11-2(2M)	--	36	X	36	--	9.000	--	--	--	--	--	SEE MISC.QTYS. FOR RRFB ASSEMBLY
183	W16-9P(2M)	--	30	X	18	--	3.750	--	--	--	--	182	MOUNT BELOW RRFB
184	R4-7(2M)	--	24	X	30	5.000	--	--	1	--	--	--	--
185	W5-54(2M)	--	18	X	18	--	2.250	--	--	--	--	184	MOUNT BELOW SIGN NO. 184 AT 4 FT. HT.
186	R3-9B(2M)	--	24	X	36	6.000	--	--	1	--	--	--	--
186A	R3-9D(2M)	--	24	X	6	1.000	--	--	--	--	--	186	MOUNT ABOVE SIGN NO. 186
187	R7-1D(2M)	--	24	X	30	5.000	--	--	1	--	--	--	--
188	R3-9B(2M)	--	24	X	36	6.000	--	--	1	--	--	--	--
188A	R3-9C(2M)	--	24	X	6	1.000	--	--	--	--	--	188	MOUNT ABOVE SIGN NO. 188
189	NOT USED												
190	D1-65	246TH AVE NEXT SIGNAL	60	X	21	8.750	--	--	2	--	--	--	--
191	NOT USED												
192	NOT USED												
193	R2-1(2M)	SPEED LIMIT 35	30	X	36	7.500	--	--	1	--	--	--	SHEET 11 OF 20
194	R2-1(2M)	SPEED LIMIT 35	30	X	36	7.500	--	--	1	--	--	--	--
195	R2-1(2M)	SPEED LIMIT 35	30	X	36	7.500	--	--	--	--	--	194	MOUNT ON BACK OF SIGN NO. 194
196	R2-1(2M)	SPEED LIMIT 35	30	X	36	7.500	--	--	1	--	--	--	--
197	R3-20L(2M)	--	24	X	36	6.000	--	--	1	--	--	--	--
198	R3-20L(2M)	--	24	X	36	6.000	--	--	1	--	--	--	--
199	R7-1D(2M)	--	24	X	30	5.000	--	--	1	--	--	--	--
200	R7-1D(2M)	--	24	X	30	5.000	--	--	1	--	--	--	--
201	R3-9B(2M)	--	24	X	36	6.000	--	--	1	--	--	--	--
201A	R3-9C(2M)	--	24	X	6	1.000	--	--	--	--	--	201	MOUNT ABOVE SIGN NO. 201
202	R3-9B(2M)	--	24	X	36	6.000	--	--	1	--	--	--	--
202A	R3-9D(2M)	--	24	X	6	1.000	--	--	--	--	--	202	MOUNT ABOVE SIGN NO. 202

SIGN NO.	SIGN CODE & SIZE	SIGN MESSAGE	TYPE II SIGN SIZE W [IN.]	X	H [IN.]	637.2210 SIGNS TYPE II REFLC H [SF]	637.2230 SIGNS TYPE II REFLC F [SF]	637.2215 SIGNS TYPE II REFLC H FOLDING [SF]	634.0618 POSTS WOOD 4"X 6"X18' [EA]	634.0814 POSTS TUBULAR STEEL 2"X2"X14' [EA]	638.2102 MOVE SIGNS TYPE II [EA]	MOUNT ON SAME POST AS SIGN #	REMARKS / NEW SIGN LOCATION
203	R7-1D(2M)	--	24	X	30	5.000	--	--	1	--	--	--	--
204	R7-1D(2M)	--	24	X	30	5.000	--	--	1	--	--	--	--
205	R1-1(2M)	--	36	X	36	7.460	--	--	1	--	--	--	--
206	R1-1(2M)	--	36	X	36	7.460	--	--	1	--	--	--	--
207	R7-1D(2S)	--	18	X	24	3.000	--	--	1	--	--	--	--
208	R5-1(2M)	--	36	X	36	9.000	--	--	1	--	--	--	MOUNT FACING WEST
209	R5-1A(2M)	--	42	X	30	8.750	--	--	1	--	--	--	MOUNT FACING WEST
210	W11-2(2M)	--	36	X	36	--	9.000	--	--	--	--	--	SHEET 12 OF 20; SEE MISC. QTYS. FOR RRFB ASSEMBLY
211	W16-9P(2M)	--	30	X	18	--	3.750	--	--	--	--	210	MOUNT BELOW RRFB
212	R4-7(2M)	--	24	X	30	5.000	--	--	1	--	--	--	--
213	R7-1D(2M)	--	24	X	30	5.000	--	--	1	--	--	--	--
214	R7-1D(2M)	--	24	X	30	5.000	--	--	1	--	--	--	--
215	R4-7(2M)	--	24	X	30	5.000	--	--	1	--	--	--	--
216	R3-20L(2M)	--	24	X	36	6.000	--	--	1	--	--	--	--
217	R2-1(2M)	SPEED LIMIT 35	30	X	36	7.500	--	--	1	--	--	--	SHEET 13 OF 20
218	R2-1(2M)	SPEED LIMIT 35	30	X	36	7.500	--	--	1	--	--	--	--
219	R7-1D(2M)	--	24	X	30	5.000	--	--	1	--	--	--	--
220	R2-1(2M)	SPEED LIMIT 35	30	X	36	7.500	--	--	--	--	--	218	MOUNT ON BACK OF SIGN NO. 218
221	R2-1(2M)	SPEED LIMIT 35	30	X	36	7.500	--	--	1	--	--	--	--
222	R7-1D(2M)	--	24	X	30	5.000	--	--	1	--	--	--	--
223	R3-20L(2M)	--	24	X	36	6.000	--	--	1	--	--	--	--
224	D1-63	236TH AVE NEXT INTERSECTION	60	X	27	11.250	--	--	2	--	--	--	--
225	R7-1D(2M)	--	24	X	30	5.000	--	--	1	--	--	--	--
226	I55-56	ADOPT A HIGHWAY	--	--	--	--	--	--	1	--	1	--	SHEET 14 OF 20
227	R7-1D(2M)	--	24	X	30	5.000	--	--	1	--	--	--	--
228	R4-7(2M)	--	24	X	30	5.000	--	--	1	--	--	--	--
229	R4-7(2M)	--	24	X	30	5.000	--	--	1	--	--	--	--
230	D1-63	236TH AVE NEXT INTERSECTION	60	X	27	11.250	--	--	2	--	--	--	--
231	R1-1(2M)	--	36	X	36	7.460	--	--	1	--	--	--	--
232	R6-3A(2S)	--	30	X	24	5.000	--	--	--	--	--	231	MOUNT BELOW SIGN NO. 231

SIGN NO.	SIGN CODE & SIZE	SIGN MESSAGE	TYPE II SIGN SIZE W [IN.]	X	H [IN.]	637.2210 SIGNS TYPE II REFLC H [SF]	637.2230 SIGNS TYPE II REFLC F [SF]	637.2215 SIGNS TYPE II REFLC H FOLDING [SF]	634.0618 POSTS WOOD 4"X 6"X18' [EA]	634.0814 POSTS TUBULAR STEEL 2"X2"X14' [EA]	638.2102 MOVE SIGNS TYPE II [EA]	MOUNT ON SAME POST AS SIGN #	REMARKS / NEW SIGN LOCATION
233	R3-20L(2M)	--	24	X	36	6.000	--	--	1	--	--	--	--
234	R4-7(2M)	--	24	X	30	5.000	--	--	1	--	--	--	--
235	R4-7(2M)	--	24	X	30	5.000	--	--	1	--	--	--	--
236	R2-1(2M)	SPEED LIMIT 35	30	X	36	7.500	--	--	1	--	--	--	--
237	R2-1(2M)	SPEED LIMIT 35	30	X	36	7.500	--	--	1	--	--	--	--
238	R2-1(2M)	SPEED LIMIT 35	30	X	36	7.500	--	--	1	--	--	--	--
239	R2-1(2M)	SPEED LIMIT 35	30	X	36	7.500	--	--	--	--	--	228	MOUNT ON BACK OF SIGN NO. 228
240	R2-1(2M)	SPEED LIMIT 35	30	X	36	7.500	--	--	1	--	--	--	SHEET 15 OF 20
241	R2-1(2M)	SPEED LIMIT 35	30	X	36	7.500	--	--	1	--	--	--	--
242	R4-7(2M)	--	24	X	30	5.000	--	--	1	--	--	--	--
243	R4-7(2M)	--	24	X	30	5.000	--	--	1	--	--	--	--
244	I2-3	PADDOCK LAKE POPULATION 2992	66	X	18	8.250	--	--	2	--	--	--	--
245	J4-1(2M)	--	24	X	36	6.000	--	--	1	--	--	--	--
	M3-2		24	x	12								
	M1-6	WIS 50	24	x	24								
246	R2-1(3)	SPEED LIMIT 35	36	X	48	12.000	--	--	1	--	--	--	--
247	R2-1(3)	SPEED LIMIT 35	36	X	48	12.000	--	--	1	--	--	--	--
248	R2-1(3)	SPEED LIMIT 55	36	X	48	12.000	--	--	1	--	--	--	--
249	R2-1(3)	SPEED LIMIT 55	36	X	48	12.000	--	--	1	--	--	--	--
250	W3-5(3)	SPEED LIMIT 35	36	X	36	--	9.000	--	1	--	--	--	SHEET 16 OF 20
251	W3-5(3)	SPEED LIMIT 35	36	X	36	--	9.000	--	1	--	--	--	--
252	R4-7(3)	--	36	X	48	12.000	--	--	1	--	--	--	--
253	R4-7(3)	--	36	X	48	12.000	--	--	1	--	--	--	--
254	W6-1(2S)	--	36	X	36	--	9.000	--	1	--	--	--	SHEET 17 OF 20
255	W3-3(2S)	--	36	X	36	--	9.000	--	1	--	--	--	--
256	W14-3(2S)	--	48	X	36	--	5.560	--	--	--	--	255	MOUNT ON BACK OF OF SIGN NO. 255
257	R7-1D(2S)	--	18	X	24	3.000	--	--	1	--	--	--	--
258	R7-1D(2S)	--	18	X	24	3.000	--	--	1	--	--	--	--

SIGN NO.	SIGN CODE & SIZE	SIGN MESSAGE	TYPE II SIGN SIZE W [IN.]	X	H [IN.]	637.2210 SIGNS TYPE II REFLC H [SF]	637.2230 SIGNS TYPE II REFLC F [SF]	637.2215 SIGNS TYPE II REFLC H FOLDING [SF]	634.0618 POSTS WOOD 4"X 6"X18' [EA]	634.0814 POSTS TUBULAR STEEL 2"X2"X14' [EA]	638.2102 MOVE SIGNS TYPE II [EA]	MOUNT ON SAME POST AS SIGN #	REMARKS / NEW SIGN LOCATION
259	J2-4(2S)	--	96	X	57	38.000	--	--	2	--	--	--	--
	M3-4		24	x	12								
	M1-6	WIS 50	24	x	24								
	M5-1L		21	x	21								
	M3-1		24	x	12								
	M1-6	WIS 83	24	x	24								
	M5-1L		21	x	21								
	M3-1		24	x	12								
	M1-6	WIS 75	24	x	24								
	M6-1		21	x	21								
	M3-2		24	x	12								
	M1-6	WIS 50	24	x	24								
	M5-1R		21	x	21								
260	W6-3(2S)	--	36	X	36	--	9.000	--	1	--	--	--	--
261	R7-1D(2S)	--	18	X	24	3.000	--	--	1	--	--	--	--
262	R5-1(2M)	--	36	X	36	9.000	--	--	1	--	--	--	MOUNT FACING SOUTH; SHT. 18 OF 20
263	R7-1D(2M)	--	24	X	30	5.000	--	--	1	--	--	--	--
264	R5-1A(2M)	--	42	X	30	8.750	--	--	1	--	--	--	MOUNT FACING SOUTH
265	R2-1(2M)	SPEED LIMIT 45	30	X	36	7.500	--	--	1	--	--	--	--
266	R7-1L(2M)	--	24	X	30	5.000	--	--	1	--	--	--	--
267	W6-2(2M)	--	36	X	36	--	9.000	--	--	--	--	264	MOUNT ON BACK OF SIGN NO. 264
268	R5-1(2M)	--	36	X	36	9.000	--	--	--	--	--	269	MOUNT ON BACK OF SIGN NO. 269
269	J4-1(2M)	--	24	X	36	6.000	--	--	1	--	--	--	--
	M3-3		24	x	12								
	M1-6	WIS 83	24	x	24								
270	R4-7(2M)	--	24	X	30	5.000	--	--	1	--	--	--	--
271	W5-54(2M)	--	18	X	18	--	2.250	--	--	--	--	270	MOUNT BELOW SIGN NO. 270 AT 4 FT. HT.
272	D1-3	BURLINGTON/LAKE GENEVA/KENOSHA	54	X	36	13.500	--	--	2	--	--	--	--
273	R7-1R(2M)	--	24	X	30	5.000	--	--	1	--	--	--	--
274	R3-20L(2M)	--	24	X	36	6.000	--	--	1	--	--	--	--
275	R4-4(2M)	--	36	X	30	7.500	--	--	1	--	--	--	--
276	R6-2R(2S)	--	24	X	30	5.000	--	--	1	--	--	--	--

SIGN NO.	SIGN CODE & SIZE	SIGN MESSAGE	TYPE II SIGN SIZE W [IN.]	X	H [IN.]	**637.2210** SIGNS TYPE II REFLC H [SF]	**637.2230** SIGNS TYPE II REFLC F [SF]	**637.2215** SIGNS TYPE II REFLC H FOLDING [SF]	**634.0618** POSTS WOOD 4"X 6"X18' [EA]	**634.0814** POSTS TUBULAR STEEL 2"X2"X14' [EA]	**638.2102** MOVE SIGNS TYPE II [EA]	MOUNT ON SAME POST AS SIGN #	REMARKS / NEW SIGN LOCATION
277	J3-4(2M)	--	96	X	57	38.000	--	--	2	--	--	--	--
	M3-4		24	x	12								
	M1-6	WIS 50	24	x	24								
	M6-1		21	x	21								
	M3-1		24	x	12								
	M1-6	WIS 83	24	x	24								
	M6-1		21	x	21								
	M3-1		24	x	12								
	M1-6	WIS 75	24	x	24								
	M6-1		21	x	21								
	M3-2		24	x	12								
	M1-6	WIS 50	24	x	24								
	M6-1		21	x	21								
278	R5-1A(2M)	--	42	X	30	8.750	--	--	--	--	--	277	MOUNT ON BACK OF SIGN NO. 277
279	R6-2L(2M)	--	30	X	36	7.500	--	--	--	--	--	--	MOUNT ON SIGNAL POLE; SHEET 19 OF 20
280	R5-1(2M)	--	36	X	36	9.000	--	--	--	--	--	244	MOUNT ON BACK OF SIGN NO. 244; SH. 15
281	R1-2(2M)	--	48	X	42	7.000	--	--	1	--	--	--	SHEET 19 OF 20
282	R1-1F(2M)	--	36	X	36	--	--	7.460	--	--	--	279	MOUNT ON SIGNAL POLE ON BACK OF 279
283	R6-3(2S)	--	30	X	24	5.000	--	--	--	--	--	282	MOUNT ABOVE SIGN NO. 282
284	W12-1D(2M)	--	24	X	24	--	4.000	--	1	--	--	--	MOUNT HEIGHT 2 FEET
285	R1-1F(2M)	--	36	X	36	--	--	7.460	1	--	--	--	--
286	R4-7(2M)	--	24	X	30	5.000	--	--	--	--	--	285	MOUNT ON BACK OF SIGN NO. 285
287	M1-94S	WIS 50 WIS 83 75TH ST	96	X	18	12.000	--	--	--	--	--	--	MOUNT ON MAST ARM
288	W9-1R(2M)	--	36	X	36	--	9.000	--	1	--	--	--	--
289	R3-20L(2M)	--	24	X	36	6.000	--	--	1	--	--	--	--
290	R3-20L(2M)	--	24	X	36	6.000	--	--	1	--	--	--	--
291	R5-1(2M)	--	36	X	36	9.000	--	--	1	--	--	--	MOUNT FACING SOUTH

SIGN NO.	SIGN CODE & SIZE	SIGN MESSAGE	TYPE II SIGN SIZE W [IN.]	X	H [IN.]	**637.2210** SIGNS TYPE II REFLC H [SF]	**637.2230** SIGNS TYPE II REFLC F [SF]	**637.2215** SIGNS TYPE II REFLC H FOLDING [SF]	**634.0618** POSTS WOOD 4"X 6"X18' [EA]	**634.0814** POSTS TUBULAR STEEL 2"X2"X14' [EA]	**638.2102** MOVE SIGNS TYPE II [EA]	MOUNT ON SAME POST AS SIGN #	REMARKS / NEW SIGN LOCATION
292	J3-2(2M)	--	48	X	57	19.000	--	--	1	--	--	--	--
	M3-2		24	x	12								
	M1-6	WIS 50	24	x	24								
	M6-1		21	x	21								
	M3-3		24	x	12								
	M1-6	WIS 83	24	x	24								
	M6-1		21	x	21								
293	R4-7(2M)	--	24	X	30	5.000	--	--	1	--	--	--	--
294	J4-2(2M)	--	48	X	57	19.000	--	--	1	--	--	--	--
	M3-4		24	x	12								
	M1-6	WIS 50	24	x	24								
	M6-1		21	x	21								
	M3-1		24	x	12								
	M1-6	WIS 83	24	x	24								
	M6-1		21	x	21								
295	R6-2L(2M)	--	30	X	36	7.500	--	--	--	--	--	--	MOUNT ON SIGNAL POLE
296	R5-1(2M)	--	36	X	36	9.000	--	--	1	--	--	--	MOUNT FACING NORTH
297	R1-2(2M)	--	48	X	42	7.000	--	--	1	--	--	--	--
298	R1-1F(2M)	--	36	X	36	--	--	7.460	--	--	--	295	MOUNT ON SIGNAL POLE ON BACK OF 295
299	R6-3(2S)	--	30	X	24	5.000	--	--	--	--	--	298	MOUNT ABOVE SIGN NO. 298
300	W12-1D(2M)	--	24	X	24	--	4.000	--	1	--	--	--	MOUNT HEIGHT 2 FEET
301	R1-1F(2M)	--	36	X	36	--	--	7.460	1	--	--	--	--
302	R4-7(2M)	--	24	X	30	5.000	--	--	--	--	--	301	MOUNT ON BACK OF SIGN NO. 301
303	M1-94S	WIS 50 WIS 83 75TH ST	96	X	18	12.000	--	--	--	--	--	--	MOUNT ON MAST ARM
304	R5-1A(2M)	--	42	X	30	8.750	--	--	1	--	--	--	MOUNT FACING NORTH; SHT. 20 OF 20
305	R4-7(2M)	--	24	X	30	5.000	--	--	1	--	--	--	--
306	W5-54(2M)	--	18	X	18	--	2.250	--	--	--	--	305	MOUNT BELOW SIGN NO. 305 AT 4 FT. HT.
307	I55-56	ADOPT A HIGHWAY	--	--	--	--	--	--	1	--	1	--	--

SIGN NO.	SIGN CODE & SIZE	SIGN MESSAGE	TYPE II SIGN SIZE W [IN.]	X	H [IN.]	637.2210 SIGNS TYPE II REFLC H [SF]	637.2230 SIGNS TYPE II REFLC F [SF]	637.2215 SIGNS TYPE II REFLC H FOLDING [SF]	634.0618 POSTS WOOD 4"X 6"X18' [EA]	634.0814 POSTS TUBULAR STEEL 2"X2"X14' [EA]	638.2102 MOVE SIGNS TYPE II [EA]	MOUNT ON SAME POST AS SIGN #	REMARKS / NEW SIGN LOCATION
308	J2-4(2S)	--	96	X	57	38.000	--	--	2	--	--	--	NEAR STATION 60+05
	M3-2		24	x	12								
	M1-6	WIS 50	24	x	24								
	M5-1L		21	x	21								
	M3-3		24	x	12								
	M1-6	WIS 83	24	x	24								
	M6-1		21	x	21								
	M3-4		24	x	12								
	M1-6	WIS 50	24	x	24								
	M5-1R		21	x	21								
	M3-1		24	x	12								
	M1-6	WIS 83	24	x	24								
	M5-1R		21	x	21								
309	J4-1(2S)	--	24	X	36	6.000	--	--	1	--	--	--	--
	M3-1		24	x	12								
	M1-6	WIS 75	24	x	24								
310	J1-1(2S)	--	24	X	36	6.000	--	--	1	--	--	--	--
	M4-6		24	x	12								
	M1-6	WIS 75	24	x	24								
311	W3-3(2M)	--	36	X	36	--	9.000	--	1	--	--	--	--
312	R5-1A(2M)	--	42	X	30	8.750	--	--	--	--	--	317	MOUNT FACING SOUTH
313	W4-2R(2M)	--	36	X	36	--	9.000	--	1	--	--	--	--
314	R4-7(2M)	--	24	X	30	5.000	--	--	1	--	--	--	--
315	W6-2(2M)	--	36	X	36	--	9.000	--	--	--	--	304	MOUNT ON BACK OF SIGN NO. 304
316	R5-1(2M)	--	36	X	36	9.000	--	--	--	--	--	309	MOUNT ON BACK OF SIGN NO. 309
317	D1-3	SALEM/KENOSHA/LAKE GENEVA	54	X	36	13.500	--	--	2	--	--	--	--
318	W11-2(2M)	--	36	X	36	--	9.000	--	--	--	--	--	SHEET 11 OF 20; SEE MISC. QTYS. FOR RRFB ASSEMBLY
319	W16-7L(2M)	--	30	X	18	--	3.750	--	--	--	--	318	MOUNT BELOW RRFB
320	W11-2(2M)	--	36	X	36	--	9.000	--	--	--	--	--	SEE MISC.QTYS. FOR RRFB ASSEMBLY
321	W16-7L(2M)	--	30	X	18	--	3.750	--	--	--	--	320	MOUNT BELOW RRFB

SIGN NO.	SIGN CODE & SIZE	SIGN MESSAGE	TYPE II SIGN SIZE W [IN.]	X	H [IN.]	637.2210 SIGNS TYPE II REFLC H [SF]	637.2230 SIGNS TYPE II REFLC F [SF]	637.2215 SIGNS TYPE II REFLC H FOLDING [SF]	634.0618 POSTS WOOD 4"X 6"X18' [EA]	634.0814 POSTS TUBULAR STEEL 2"X2"X14' [EA]	638.2102 MOVE SIGNS TYPE II [EA]	MOUNT ON SAME POST AS SIGN #	REMARKS / NEW SIGN LOCATION
322	D1-1	242ND AVE [RA]	60	X	24	10.000	--	--	2	--	--	--	SHEET 10 OF 20
323	D1-1	242ND AVE [LA]	60	X	24	10.000	--	--	2	--	--	--	SHEET 12 OF 20
324	R5-1(2M)	--	36	X	36	9.000	--	--	1	--	--	--	MOUNT FACING WEST
325	R5-1(2M)	--	36	X	36	9.000	--	--	1	--	--	--	MOUNT FACING EAST; SHEET 14 OF 20
326	R6-2L(2M)	--	30	X	36	7.500	--	--	1	--	--	--	--
327	R5-1(2M)	--	36	X	36	9.000	--	--	--	--	--	236	MOUNT ON BACK OF SIGN NO. 236
328	R6-2L(2M)	--	30	X	36	7.500	--	--	1	--	--	--	SHEET 3 OF 20
329	R6-2R(2S)	--	24	X	30	5.000	--	--	1	--	--	--	
330	R6-2R(2S)	--	24	X	30	5.000	--	--	1	--	--	--	
331	R7-1L(2M)	--	24	X	30	5.000	--	--	--	--	--	36	MOUNT BELOW SIGN NO. 36; SHEET 4
332	R2-1(2M)	SPEED LIMIT 35	30	X	36	7.500	--	--	--	--	--	39	MOUNT ON BACK OF SIGN NO. 39
333	R6-2R(2S)	--	24	X	30	5.000	--	--	1	--	--	--	SHEET 13 OF 20
334	W12-1R(2S)	--	24	X	24	--	4.000	--	1	--	--	--	SHEET 5 OF 20; MOUNT HEIGHT 2 FEET
335	R4-7(2S)	--	24	X	30	5.000	--	--	1	--	--	--	SHEET 7 OF 20
336	R7-1D(2M)	--	24	X	30	5.000	--	--	1	--	--	--	SHEET 9 OF 20
337	W3-3(2M)	--	36	X	36	--	9.000	--	1	--	--	--	--
338	R6-2R(2S)	--	24	X	30	5.000	--	--	1	--	--	--	--
339	R6-2R(2S)	--	24	X	30	5.000	--	--	1	--	--	--	SHEET 10 OF 20
340	R5-1(2M)	--	36	X	36	9.000	--	--	--	--	--	188	MOUNT ON BACK OF SIGN NO. 188
341	R6-2R(2S)	--	24	X	30	5.000	--	--	1	--	--	--	SHEET 12 OF 20
342	R5-1(2M)	--	36	X	36	9.000	--	--	1	--	--	--	MOUNT FACING EAST; SHEET 12 OF 20
343	W11-2(2M)	--	36	X	36	--	9.000	--	--	--	--	--	SHEET 11 OF 20; SEE MISC. QTYS. FOR RRFB ASSEMBLY
344	W16-7R(2M)	--	30	X	18	--	3.750	--	--	--	--	343	MOUNT BELOW RRFB
345	W11-2(2M)	--	36	X	36	--	9.000	--	--	--	--	--	SEE MISC.QTYS. FOR RRFB ASSEMBLY
346	W16-7R(2M)	--	30	X	18	--	3.750	--	--	--	--	345	MOUNT BELOW RRFB
		UNDISTRIBUTED				--	--	--	2	20	--	--	--
TOTALS						2118.480	293.810	104.440	262	20	8		

Rectangular Rapid Flash Beacon - MISC QUANTITIES						1310-04-70 STH 50
LOCATION		Rectangular Rapid	Rectangular Rapid	Rectangular Rapid	Rectangular Rapid	Rectangular Rapid
		Flash Beacon STH 50 at 242nd Ave	Flash Beacon STH 50 at 242nd Ave	Flash Beacon STH 50 at 242nd Ave	Flash Beacon STH 50 at 242nd Ave	Flash Beacon STH 50 at 242nd Ave
STH 50 AT 242ND AVE		(RRFB) System Station 1043+45 EB Right	(RRFB) System Station 1047 +80 Median back to back assembly	(RRFB) System Station 1047 + 60 EB right	(RRFB) System Station 1047+80 WB right	(RRFB) System Station 1052+00 WB right
		EACH	EACH	EACH	EACH	EACH
		SPV.0060.33	SPV.0060.34	SPV.0060.35	SPV.0060.36	SPV.0060.37
Station 1043+45 STH 50 EB Advance assembly right		1				
Station 1047 +80 Median STH 50 EB and WB back to back			1			
Station 1047+60 STH 50 EB right				1		
Station 1047 +80 STH 50 WB right					1	
Station 1052+00 STH 50 WB advance assembly right						1
TOTAL		1	1	1	1	1

see signing plan for locations

SHEET: 1 OF 1

PROJECT NO: 1310-04-70	HWY: STH 50	COUNTY: KENOSHA	MISCELLANEOUS QUANTITIES – RRFB'S	SHEET: 572	E

Rectangular Rapid Flash Beacon - MISC QUANTITIES						1310-04-70 STH 50
MOVING EXISTING RRFB'S						
LOCATION		Rectangular Rapid	Rectangular Rapid	Rectangular Rapid	Rectangular Rapid	Rectangular Rapid
		Flash Beacon, STH 50 at 248th Ave	Flash Beacon, STH 50 at 248th Ave	Flash Beacon, STH 50 at 248th Ave	Flash Beacon, STH 50 at 248th Ave	Flash Beacon, STH 50 at 248th Ave
STH 50 AT 248TH AVE		(RRFB) System Station 1018+50 EB right	(RRFB) System Station 1026+00 EB right	(RRFB) System Station 1026+30 WB right	(RRFB) System Station 1026+25 EB and WB median	(RRFB) System Station 1040+50 WB right
		EACH	EACH	EACH	EACH	EACH
		SPV.0060.28	SPV.0060.29	SPV.0060.30	SPV.0060.31	SPV.0060.32
Station 1018+50 sth 50 EB right advance sign		1				
Station 1026+00 STH 50 EB right			1			
Station 1026+30 STH 50 WB right				1		
Station 1026+25 STH 50 EB and WB median					1	
Station 1040+50 STH 50 WB right advance sign						1
TOTAL		1	1	1	1	1

see signing plan for locations

SHEET: 1 OF 1

PROJECT NO: 1310-04-70	HWY: STH 50	COUNTY: KENOSHA	MISCELLANEOUS QUANTITIES – MOVING EXISTING RRFB'S	SHEET: 573	E

FILE NAME : N:\SPO\Operations\Signing\Miscellaneous Quantities\1310-04-70\030202_MQ.pptx PLOT DATE : 7/23/2021 PLOT BY : DOTTAH PLOT NAME : 030202_MQ.pdf PLOT SCALE : 1:1

3

REMOVING CONCRETE BASES

SIGNAL BASE NO.	204.0195 REMOVING CONCRETE BASES EACH
SB1	1
SB2	1
SB3	1
SB4	1
SB5	1
SB6	1
SB7	1
SB8	1
SB9	1
SB10	1
SB11	1
SB12	1
SB13	1
SB14	1
SB15	1
SB16	1
SB17	1
CB1	1
TOTAL	18

REMOVING PULL BOXES

PULL BOX NO.	653.0905 REMOVING PULL BOXES EACH
PB1	1
PB2	1
PB3	1
PB4	1
PB5	1
PB6	1
PB7	1
PB8	1
PB9	1
PB10	1
PB11	1
PB12	1
PB13	1
PB14	1
PB15	1
PB16	1
PB17	1
PB18	1
PB19	1
PB20	1
PB21	1
PB22	1
PB23	1
PB24	1
PB25	1
TOTAL	25

REMOVING TRAFFIC SIGNALS

LOCATION		204.9060.S.05 REMOVING TRAFFIC SIGNALS EACH	659.5000.S LAMP, BALLAST, LED, SWITCH DISPOSAL BY CONTRACTOR EACH
STH 50 & STH 75/83		1	112
	TOTAL	1	112

3

REMOVING LOOP DETECTOR WIRE AND LEAD-IN CABLE

LOCATION		204.9060.S.07 REMOVING LOOP DETECTOR WIRE & LEAD-IN CABLE EACH
STH 50 & STH 75/83		1
	TOTAL	1

STATE FURNISHED MATERIALS SUMMARY

EACH	DESCRIPTION
1	TRAFFIC SIGNAL CONTROLLER, FULLY ACTUATED, 8 PHASE
1	TRAFFIC SIGNAL CABINET
4	POLES TYPE 9 SPECIAL
4	MONOTUBE ARMS 40-FT TYPE 9/10 SPECIAL POLE
4	EVP DETECTOR HEADS
1	TEMPORARY CAMERA ASSEMBLY
1	CELLULAR MODEM

ALL ITEMS CATEGORY 0050

STH 50 & STH 75/83
VILLAGE OF PADDOCK LAKE
KENOSHA COUNTY

CONDUIT

FROM	TO	652.0225 CONDUIT RIGID NONMETALLIC SCHEDULE 40 2-INCH L.F.	652.0235 CONDUIT RIGID NONMETALLIC SCHEDULE 40 3-INCH L.F.
CB1	PB1	--	36
PB1	PB2	141	--
PB1	PB4	--	144
PB2	PB3	132	--
PB4	PB5	22	--
PB4	PB6	--	72
PB4	SB12	10	--
PB6	PB7	--	54
PB7	SB1	--	16
PB7	PB8	--	88
PB8	PB9	--	46
PB9	SB2	13	--
PB9	PB10	234	--
PB9	PB11	--	110
PB11	SB3	5	--
PB11	PB12	--	210
PB11	SB13	37	--
PB12	PB13	139	--
PB12	PB15	--	54
PB12	PB16	--	104
PB13	PB14	148	--
PB15	SB4	19	--
PB15	SB5	--	11
PB16	PB17	42	--
PB16	SB14	23	--
PB16	PB18	--	70
PB18	PB19	--	82
PB19	SB6	--	10
PB19	SB7	29	--
PB19	PB20	--	146
PB20	PB21	--	118
PB20	SB8	14	--
PB21	PB22	212	--
PB21	PB23	--	96
PB23	PB24	19	--
PB23	PB25	--	124
PB24	SB9	23	--
PB24	SB15	7	--
PB25	PB26	--	47
PB25	CB1	--	57
PB26	SB10	14	--
PB26	SB11	--	5
		--	--
	TOTAL	1283	1700

PULL BOXES

PULL BOX NO.	LOCATION^	653.0135 PULL BOXES STEEL 24x36-INCH EACH	653.0140 PULL BOXES STEEL 24x42-INCH EACH
PB1	1006+87.62, 84.3' RT	--	1
PB2	47+02.87, 57.4' RT	1	--
PB3	45.52.63, 43.7' RT	1	--
PB4	1006+20.56, 111.2' RT	--	1
PB5	1006+12.53, 91.0' RT	1	--
PB6	1006+86.17, 122.8' RT	--	1
PB7	1005+75.47, 96.5' RT	--	1
PB8	1005+25.95, 50.4' RT	--	1
PB9	1005+01.44, 50.3' RT	--	1
PB10	1002+67.07, 51.0' RT	1	--
PB11	1004+96.74, 4.5' LT	--	1
PB12	1004+92.25, 109.6' LT	--	1
PB13	52+88.45, 40.6' LT	1	--
PB14	54+36.78, 39.5'LT	1	--
PB15	1005+14.63, 60.1' LT	--	1
PB16	1005+43.18, 123.0' LT	--	1
PB17	1005+57.09, 83.6' LT	1	--
PB18	1005+75.85, 135.5' LT	--	1
PB19	1005+89.82, 94.9' LT	--	1
PB20	1006+41.61, 43.7' LT	--	1
PB21	1007+00.33, 43.2' LT	--	1
PB22	1009+13.78, 42.5' LT	1	--
PB23	1006+99.36, 4.9' RT	--	1
PB24	1006+78.56, 5.0' RT	1	--
PB25	1006+99.40, 66.7' RT	--	1
PB26	1006+53.05, 56.4' RT	--	1
	TOTAL	9	17

ALL ITEMS CATEGORY 0050

STH 50 & STH 75/83
VILLAGE OF PADDOCK LAKE
KENOSHA COUNTY

CONCRETE BASES

SIGNAL BASE NO.	LOCATION^	654.0101 CONCRETE BASES TYPE 1 EACH	654.0102 CONCRETE BASES TYPE 2 EACH	654.0105 CONCRETE BASES TYPE 5 EACH	654.0120 CONCRETE BASES TYPE 10-SPECIAL EACH	654.0217 CONCRETE CONTROL CABINET BASES TYPE 9 SPECIAL EACH
SB1	1005+68.75, 81.1' RT	--	--	--	1	--
SB2	1005+12.79, 49.6' RT	1	--	--	--	--
SB3	1005+01.79, 4.7' LT	--	1	--	--	--
SB4	1005+13.14, 40.8' LT	1	--	--	--	--
SB5	1005+16.64, 49.2' LT	--	--	--	1	--
SB6	1005+95.24, 86.7' LT	--	--	--	1	--
SB7	1006+04.07, 70.9' LT	1	--	--	--	--
SB8	1006+56.05, 45.0' LT	1	--	--	--	--
SB9	1006+55.41, 4.8' RT	--	1	--	--	--
SB10	1006+55.43, 42.8' RT	1	--	--	--	--
SB11	1006+52.37, 51.1' RT	--	--	--	1	--
SB12	1006+16.73, 101.7' RT	--	--	1	--	--
SB13	1004+65.18, 4.9' LT	--	--	1	--	--
SB14	1005+51.26, 99.9' LT	--	--	1	--	--
SB15	1006+71.58, 4.9' RT	--	--	1	--	--
CB1	1007+00.00, 85.7' RT	--	--	--	--	1
	TOTAL	5	2	4	4	1

SIGNAL MOUNTING HARDWARE

LOCATION	658.5069.01 SIGNAL MOUNTING HARDWARE L.S.
STH 50 & STH 75/83	1
TOTAL	1

TEMPORARY TRAFFIC SIGNALS FOR INTERSECTIONS

LOCATION	661.0200.01 TEMPORARY TRAFFIC SIGNALS FOR INTERSECTIONS L.S.	661.0300 GENERATORS DAY	SPV.0060.19 INSTALL CAMERA ASSEMBLY TEMPORARY SIGNAL POLE EACH
STH 50 & STH 75/83	1	1	1
TOTAL	1	1	1

ELECTRICAL SERVICE METER BREAKER PEDESTAL

LOCATION*	656.0200.01 ELECTRICAL SERVICE METER BREAKER PEDESTAL L.S.
STH 50 & STH 75/83	1
TOTAL	1

ALL ITEMS CATEGORY 0050

STH 50 & STH 75/83
VILLAGE OF PADDOCK LAKE
KENOSHA COUNTY

TRAFFIC DETECTOR LOOPS

LOOP NO.	HOME RUN PB	LOCATION** ^	SIZE (FT)x(FT)	NO. OF TURNS	PAVEMENT TYPE	SDD INSTALLATION REFERENCE	652.0800 CONDUIT LOOP DETECTOR L.F.	655.0700 LOOP DETECTOR LEAD IN CABLE L.F.	655.0800 LOOP DETECTOR WIRE L.F.
11	PB11	1004+87.17, 4.0' RT	6' x 20'	3	ASPHALT	9F15-4B - LOOP DETECTOR INSTALLED IN BASE COURSE WITH PULL (SPLICE) BOX OFF ROADWAY (OPTION 2)	74	303	190
12	PB11	1005+13.15, 4.0' RT	6' x 20'	3	ASPHALT	9F15-4B - LOOP DETECTOR INSTALLED IN BASE COURSE WITH PULL (SPLICE) BOX OFF ROADWAY (OPTION 2)	66	303	178
21	PB22	1009+15.91, 27.7' LT	6' x 15'	4	ASPHALT	9F15-4B - LOOP DETECTOR INSTALLED IN BASE COURSE WITH PULL (SPLICE) BOX OFF ROADWAY (OPTION 2)	66	347	204
22	PB22	1009+16.17, 16.0' LT	6' x 15'	4	ASPHALT	9F15-4B - LOOP DETECTOR INSTALLED IN BASE COURSE WITH PULL (SPLICE) BOX OFF ROADWAY (OPTION 2)	90	347	228
31	PB5	49+00.75, 4.9' RT	6' x 20'	3	ASPHALT	9F15-4B - LOOP DETECTOR INSTALLED IN BASE COURSE WITH PULL (SPLICE) BOX OFF ROADWAY (OPTION 2)	68	112	184
32	PB5	49+26.75, 4.9' RT	6' x 20'	3	ASPHALT	9F15-4B - LOOP DETECTOR INSTALLED IN BASE COURSE WITH PULL (SPLICE) BOX OFF ROADWAY (OPTION 2)	66	112	184
41	PB14	54+36.60, 21.7' LT	6' x 20'	5	ASPHALT	9F15-4B - LOOP DETECTOR INSTALLED IN BASE COURSE WILL PULL (SPLICE) BOX OFF ROADWAY (OPTION 2)	68	712	288
42	PB13	52+92.82, 27.8' LT	6' x 15'	5	ASPHALT	9F15-4B - LOOP DETECTOR INSTALLED IN BASE COURSE WILL PULL (SPLICE) BOX OFF ROADWAY (OPTION 2)	64	565	294
43	PB13	52+92.93, 16.0' LT	6' x 15'	5	ASPHALT	9F15-4B - LOOP DETECTOR INSTALLED IN BASE COURSE WILL PULL (SPLICE) BOX OFF ROADWAY (OPTION 2)	86	565	316
44	PB15	50+93.13, 27.8' LT	6' x 20'	3	ASPHALT	9F15-4B - LOOP DETECTOR INSTALLED IN BASE COURSE WILL PULL (SPLICE) BOX OFF ROADWAY (OPTION 2)	90	461	202
45	PB15	50+67.13, 27.8' LT	6' x 20'	3	ASPHALT	9F15-4B - LOOP DETECTOR INSTALLED IN BASE COURSE WILL PULL (SPLICE) BOX OFF ROADWAY (OPTION 2)	82	461	198
46	PB17	50+93.14, 15.8' LT	6' x 20'	3	ASPHALT	9F15-4B - LOOP DETECTOR INSTALLED IN BASE COURSE WILL PULL (SPLICE) BOX OFF ROADWAY (OPTION 2)	86	383	206
47	PB17	50+67.14, 15.8' LT	6' x 20'	3	ASPHALT	9F15-4B - LOOP DETECTOR INSTALLED IN BASE COURSE WILL PULL (SPLICE) BOX OFF ROADWAY (OPTION 2)	84	383	204
51	PB24	1006+81.37, 4.0' LT	6' x 20'	3	ASPHALT	9F15-4B - LOOP DETECTOR INSTALLED IN BASE COURSE WILL PULL (SPLICE) BOX OFF ROADWAY (OPTION 2)	66	106	182
52	PB24	1006+55.37, 4.0' LT	6' x 20'	3	ASPHALT	9F15-4B - LOOP DETECTOR INSTALLED IN BASE COURSE WILL PULL (SPLICE) BOX OFF ROADWAY (OPTION 2)	66	106	182
61	PB10	1002+59.29, 27.5' RT	6' x 15'	4	ASPHALT	9F15-4B - LOOP DETECTOR INSTALLED IN BASE COURSE WILL PULL (SPLICE) BOX OFF ROADWAY (OPTION 2)	96	482	264
62	PB10	1002+59.02, 15.7' RT	6' x 15'	4	ASPHALT	9F15-4B - LOOP DETECTOR INSTALLED IN BASE COURSE WILL PULL (SPLICE) BOX OFF ROADWAY (OPTION 2)	118	482	286
71	PB17	50+93.14, 4.8' LT	6' x 20'	3	ASPHALT	9F15-4B - LOOP DETECTOR INSTALLED IN BASE COURSE WILL PULL (SPLICE) BOX OFF ROADWAY (OPTION 2)	72	383	186
72	PB17	50+67.18, 4.9' LT	6' x 20'	3	ASPHALT	9F15-4B - LOOP DETECTOR INSTALLED IN BASE COURSE WILL PULL (SPLICE) BOX OFF ROADWAY (OPTION 2)	66	383	182
81	PB3	45+50.81, 26.6' RT	6' x 15'	4	ASPHALT	9F15-4B - LOOP DETECTOR INSTALLED IN BASE COURSE WILL PULL (SPLICE) BOX OFF ROADWAY (OPTION 2)	80	349	248
82	PB3	45+51.30, 13.9' RT	6' x 15'	4	ASPHALT	9F15-4B - LOOP DETECTOR INSTALLED IN BASE COURSE WILL PULL (SPLICE) BOX OFF ROADWAY (OPTION 2)	106	349	274
83	PB2	47+00.52, 28.2' RT	6' x 15'	3	ASPHALT	9F15-4B - LOOP DETECTOR INSTALLED IN BASE COURSE WILL PULL (SPLICE) BOX OFF ROADWAY (OPTION 2)	104	199	220
84	PB2	47+01.04, 15.5' RT	6' x 15'	3	ASPHALT	9F15-4B - LOOP DETECTOR INSTALLED IN BASE COURSE WILL PULL (SPLICE) BOX OFF ROADWAY (OPTION 2)	130	199	246
85	PB26	49+00.82, 28.0' RT	6' x 20'	3	ASPHALT	9F15-4B - LOOP DETECTOR INSTALLED IN BASE COURSE WILL PULL (SPLICE) BOX OFF ROADWAY (OPTION 2)	102	71	214
86	PB26	49+26.87, 28.0' RT	6' x 20'	3	ASPHALT	9F15-4B - LOOP DETECTOR INSTALLED IN BASE COURSE WILL PULL (SPLICE) BOX OFF ROADWAY (OPTION 2)	92	71	208
87	PB5	49+00.82, 16.1' RT	6' x 20'	3	ASPHALT	9F15-4B - LOOP DETECTOR INSTALLED IN BASE COURSE WILL PULL (SPLICE) BOX OFF ROADWAY (OPTION 2)	88	112	204
88	PB5	49+26.79, 16.0' RT	6' x 20'	3	ASPHALT	9F15-4B - LOOP DETECTOR INSTALLED IN BASE COURSE WILL PULL (SPLICE) BOX OFF ROADWAY (OPTION 2)	88	112	204
						TOTAL	2264	8458	5976

ALL ITEMS CATEGORY 0050

STH 50 & STH 75/83
VILLAGE OF PADDOCK LAKE
KENOSHA COUNTY

3

TRAFFIC SIGNAL CABLE AND WIRE (ABOVE GROUND)

FROM	TO	655.0230 CABLE TRAFFIC SIGNAL 5-14 AWG L.F.	655.0240 CABLE TRAFFIC SIGNAL 7-14 AWG L.F.
SB1	HEAD 13	65	--
SB1	HEAD 14	65	--
SB1	HEAD 16	--	65
SB1	HEAD 28	15	--
SB1	BUTTON	6	--
SB2	HEAD 6	22	--
SB2	HEAD 21	--	22
SB2	HEAD 29	15	--
SB2	BUTTON	6	--
SB3	HEAD 9	--	22
SB3	BUTTON	6	--
SB4	HEAD 30	15	--
SB4	BUTTON	6	--
SB5	HEAD 18	65	--
SB5	HEAD 19	65	--
SB5	HEAD 23	--	65
SB5	BUTTON	6	--
SB6	HEAD 2	65	--
SB6	HEAD 3	65	--
SB6	HEAD 5	--	65
SB7	HEAD 24	15	--
SB7	BUTTON	6	--
SB8	HEAD 10	--	22
SB8	HEAD 17	22	--
SB8	HEAD 25	15	--
SB8	BUTTON	6	--
SB9	HEAD 11	--	22
SB9	HEAD 20	--	22
SB9	BUTTON	6	--
SB10	HEAD 26	15	--
SB10	BUTTON	6	
SB11	HEAD 7	--	65
SB11	HEAD 8	--	65
SB11	HEAD 27	15	--
SB11	BUTTON	6	--
		--	--
	TOTAL	599	435

TRAFFIC SIGNAL CABLE AND WIRE (UNDERGROUND)

FROM	TO	655.0515 ELECTRICAL WIRE TRAFFIC SIGNALS 10 AWG L.F.
CB1	SB1	204
SB1	SB2	117
SB2	SB3	92
SB3	SB4	213
SB4	SB5	40
SB5	SB6	254
SB6	SB7	49
SB7	SB8	136
SB8	SB9	205
SB9	SB10	208
SB10	SB11	29
SB11	CB1	88
PB1	CB1	20
PB4	SB1	101
PB6	SB1	55
PB7	SB1	27
PB8	SB2	23
PB9	SB2	47
PB11	SB3	15
PB12	SB5	75
PB15	SB5	21
PB16	SB6	106
PB18	SB6	61
PB19	SB6	20
PB20	SB8	25
PB21	SB8	83
PB23	SB9	54
PB24	SB9	26
PB25	CB1	26
PB26	SB11	15
	TOTAL	2435

TRAFFIC SIGNAL CABLE AND WIRE (UNDERGROUND)

FROM	TO	655.0235 CABLE TRAFFIC SIGNAL 7-12 AWG L.F.	655.0260 CABLE TRAFFIC SIGNAL 12-14 AWG L.F.	655.0320 CABLE TYPE UF 2-10 AWG GROUNDED L.F.
CB1	SB1	--	204	--
CB1	SB2	--	278	--
CB1	SB3	--	369	--
CB1	SB4	562	--	--
CB1	SB5	--	554	--
CB1	SB6	--	317	--
CB1	SB7	335	--	--
CB1	SB8	--	239	--
CB1	SB9	--	152	--
CB1	SB10	97	--	--
CB1	SB11	--	88	--
CB1	SB12	--	--	113
SB12	SB13	--	--	304
CB1	SB15	--	--	135
SB15	SB14	--	--	378
		--	--	--
	TOTAL	994	2201	930

TRAFFIC SIGNAL CABLE AND WIRE

FROM	TO	655.0610 ELECTRICAL WIRE LIGHTING 12 AWG L.F.
SB12	LUMINAIRE	234
SB13	LUMINAIRE	234
SB14	LUMINAIRE	234
SB15	LUMINAIRE	234
		--
	TOTAL	936

TRAFFIC SIGNAL EVP DETECTOR CABLE

FROM	TO	655.0900 TRAFFIC SIGNAL EVP DETECTOR CABLE L.F.
CB1	SB5 (HEAD A)	579
CB1	SB11 (HEAD B)	140
CB1	SB1 (HEAD C)	248
CB1	SB6 (HEAD D)	357
	TOTAL	1324

ALL ITEMS CATEGORY 0050

STH 50 & STH 75/83
VILLAGE OF PADDOCK LAKE
KENOSHA COUNTY

POLES (CONTRACTOR FURNISHED)

SIGNAL BASE NO.	657.0100 PEDESTAL BASES EACH	657.0255 TRANSFORMER BASES BREAKAWAY 11 1/2-INCH BOLT CIRCLE EACH	657.0305 POLES TYPE 2 EACH	657.0322 POLES TYPE 5 ALUMINUM EACH	657.0425 TRAFFIC SIGNAL STANDARDS ALUMINUM 15-FT EACH	657.0430 TRAFFIC SIGNAL STANDARDS ALUMINUM 10-FT EACH	657.0610 LUMINAIRE ARMS SINGLE MEMBER 4 1/2-INCH CLAMP 6-FT EACH	658.0500 PEDESTRIAN PUSH BUTTONS EACH	659.1125 LUMINAIRES UTILITY LED C EACH
SB1	--	--	--	--	--	--	--	1	--
SB2	1	--	--	--	1	--	--	1	--
SB3	--	1	1	--	--	--	--	--	--
SB4	1	--	--	--	--	1	--	1	--
SB5	--	--	--	--	--	--	--	1	--
SB7	1	--	--	--	--	1	--	1	--
SB8	1	--	--	--	1	--	--	1	--
SB9	--	1	1	--	--	--	--	1	--
SB10	1	--	--	--	--	1	--	1	--
SB11	--	--	--	--	--	--	--	1	--
SB12	--	1	--	1	--	--	2	--	2
SB13	--	1	--	1	--	--	2	--	2
SB14	--	1	--	1	--	--	2	--	2
SB15	--	1	--	1	--	--	2	--	2
TOTAL	5	6	2	4	2	3	8	9	8

POLES (STATE FURNISHED)

SIGNAL BASE NO.	SPV.0060.15 INSTALL POLES TYPE 9 SPECIAL EACH	SPV.0060.18 INSTALL MONOTUBE ARMS 40-FT TYPE 9/10 SPECIAL POLE EACH
SB1	1	1
SB5	1	1
SB6	1	1
SB11	1	1
	--	--
TOTAL	4	4

ALL ITEMS CATEGORY 0050

STH 50 & STH 75/83
VILLAGE OF PADDOCK LAKE
KENOSHA COUNTY

PLOT DATE : 4/14/2022 7:42 AM PLOT BY : PLOT NAME : 030201_mq PLOT SCALE : 1.000000:1.000000
WISDOT / CADDS SHEET 42

FACES

SIGNAL HEAD NO.	SIGNAL BASE NO.	658.0173 TRAFFIC SIGNAL FACE 3S 12-INCH EACH	658.0174 TRAFFIC SIGNAL FACE 4S 12-INCH EACH	658.0416 PEDESTRIAN SIGNAL FACE 16-INCH EACH
1	SB11	1	--	--
2	SB6	1	--	--
3	SB6	1	--	--
4	SB5	--	1	--
5	SB6	--	1	--
6	SB2	1	--	--
7	SB11	1	--	--
8	SB11	1	--	--
9	SB3	--	1	--
10	SB8	--	1	--
11	SB9	--	1	--
12	SB5	1	--	--
13	SB1	1	--	--
14	SB1	1	--	--
15	SB11	--	1	--
16	SB1	--	1	--
17	SB8	1	--	--
18	SB5	1	--	--
19	SB5	1	--	--
20	SB9	--	1	--
21	SB2	--	1	--
22	SB3	--	1	--
23	SB5	--	--	1
24	SB7	--	--	1
25	SB8	--	--	1
26	SB10	--	--	1
27	SB11	--	--	1
28	SB1	--	--	1
29	SB2	--	--	1
30	SB4	--	--	1
	TOTAL	12	10	8

LED MODULES SUMMARY*

SIGNAL HEAD NO.	SIGNAL BASE NO.	PEDESTRIAN SIGNAL FACE 16-INCH EACH	LED MODULES 12-INCH RED BALL EACH	LED MODULES 12-INCH YELLOW BALL EACH	LED MODULES 12-INCH GREEN BALL EACH	LED MODULES 12-INCH RED ARROW EACH	LED MODULES 12-INCH YELLOW ARROW EACH	LED MODULES 12-INCH GREEN ARROW EACH
1	SB11	--	1	1	1	--	--	--
2	SB6	--	1	1	1	--	--	--
3	SB6	--	1	1	1	--	--	--
4	SB5	--	--	--	--	1	2	1
5	SB6	--	--	--	--	1	2	1
6	SB2	--	1	1	1	--	--	--
7	SB11	--	1	1	1	--	--	--
8	SB11	--	1	1	1	--	--	--
9	SB3	--	--	--	--	1	2	1
10	SB8	--	--	--	--	1	2	1
11	SB9	--	--	--	--	1	2	1
12	SB5	--	1	1	1	--	--	--
13	SB1	--	1	1	1	--	--	--
14	SB1	--	1	1	1	--	--	--
15	SB11	--	--	--	--	1	2	1
16	SB1	--	--	--	--	1	2	1
17	SB8	--	1	1	1	--	--	--
18	SB5	--	1	1	1	--	--	--
19	SB5	--	1	1	1	--	--	--
20	SB9	--	--	--	--	1	2	1
21	SB2	--	--	--	--	1	2	1
22	SB3	--	--	--	--	1	2	1
23	SB5	1	--	--	--	--	--	--
24	SB7	1	--	--	--	--	--	--
25	SB8	1	--	--	--	--	--	--
26	SB10	1	--	--	--	--	--	--
27	SB11	1	--	--	--	--	--	--
28	SB1	1	--	--	--	--	--	--
29	SB2	1	--	--	--	--	--	--
30	SB4	1	--	--	--	--	--	--
	TOTAL	8	12	12	12	10	20	10

*ITEMS INCIDENTAL TO 658.0173 , 658.0174, OR 658.0416

ALL ITEMS CATEGORY 0050

STH 50 & STH 75/83
VILLAGE OF PADDOCK LAKE
KENOSHA COUNTY

PROJECT NO: 1310-04-70 | **HWY: STH 50** | **COUNTY: KENOSHA** | **MISCELLANEOUS QUANTITIES** | **SHEET NO:** 580 **E**

PLOT DATE : 4/14/2022 7:42 AM PLOT BY : PLOT NAME : 030201_mq PLOT SCALE : 1.000000:1.000000
WISDOT / CADDS SHEET 42

3

TRANSPORT AND INSTALL STATE FURNISHED TRAFFIC SIGNAL CABINET

LOCATION	SPV.0060.20 TRNSPT AND INSTALL STATE FURN TRAFFIC SIGNAL CABINET EACH
STH 50 & STH 75/83	1
TOTAL	1

TRANSPORT TRAFFIC SIGNAL AND INTERSECTION LIGHTING MATERIALS

LOCATION	SPV.0060.22 TRNSPT TRAFFIC SIGNAL & INTER LIGHTING MATERIALS EACH
STH 50 & STH 75/83	1
TOTAL	1

3

EVP DETECTOR HEAD INSTALLATION

LOCATION	SPV.0060.24 TRNSPT & INSTALL STATE FURN EVP HEADS EACH
STH 50 & STH 75/83	1
TOTAL	1

TEMPORARY EVP SYSTEM

LOCATION	SPV.0060.26 TEMPORARY EVP SYSTEM EACH
STH 50 & STH 75/83	1
TOTAL	1

ALL ITEMS CATEGORY 0050

STH 50 & STH 75/83
VILLAGE OF PADDOCK LAKE
KENOSHA COUNTY

3

REMOVING CONCRETE BASES

SIGNAL BASE NO.	204.0195 REMOVING CONCRETE BASES EACH
SB1	1
SB2	1
SB3	1
SB4	1
SB5	1
SB6	1
SB7	1
SB8	1
SB9	1
CB1	1
TOTAL	10

REMOVING TRAFFIC SIGNALS

LOCATION		204.9060.S.06 REMOVING TRAFFIC SIGNALS EACH	659.5000.S LAMP, BALLAST, LED, SWITCH DISPOSAL BY CONTRACTOR EACH
STH 50 & 246TH AVE		1	51
	TOTAL	1	51

3

REMOVING LOOP DETECTOR WIRE AND LEAD-IN CABLE

LOCATION		204.9060.S.08 REMOVING LOOP DETECTOR WIRE & LEAD-IN CABLE EACH
STH 50 & 246TH AVE		1
	TOTAL	1

REMOVING PULL BOXES

PULL BOX NO.	653.0905 REMOVING PULL BOXES EACH
PB1	1
PB2	1
PB3	1
PB4	1
PB5	1
PB6	1
PB7	1
PB8	1
PB9	1
PB10	1
PB11	1
PB12	1
PB13	1
PB14	1
TOTAL	14

STATE FURNISHED MATERIALS SUMMARY

EACH	DESCRIPTION
1	TRAFFIC SIGNAL CONTROLLER, FULLY ACTUATED, 8 PHASE
1	TRAFFIC SIGNAL CABINET
2	POLES TYPE 9
2	POLES TYPE 9 SPECIAL
1	MONOTUBE ARMS 25-FT
1	MONOTUBE ARMS 30-FT
2	MONOTUBE ARMS 40-FT TYPE 9/10 SPEC POLE
4	EVP DETECTOR HEADS
1	CELLULAR MODEM

ALL ITEMS CATEGORY 0050

STH 50 & 246th AVENUE
VILLAGE OF PADDOCK LAKE
KENOSHA COUNTY

CONDUIT

FROM	TO	652.0225 CONDUIT RIGID NONMETALLIC SCHEDULE 40 2-INCH L.F.	652.0235 CONDUIT RIGID NONMETALLIC SCHEDULE 40 3-INCH L.F.
CB1	PB1	--	72
PB1	PB2	16	--
PB1	SB1	14	--
PB1	PB3	--	112
PB3	SB2	--	6
PB3	SB3	10	--
PB3	PB4	--	82
PB4	SB4	16	--
PB4	PB5	234	--
PB4	PB6	--	92
PB6	SB5	7	--
PB6	PB7	12	--
PB6	PB8	--	70
PB8	SB6	--	20
PB8	PB9	--	88
PB9	SB7	11	--
PB9	SB8	4	--
PB9	PB10	22	--
PB9	PB11	--	110
PB11	SB9	--	5
PB11	SB10	13	--
PB11	PB12	--	86
PB12	SB11	11	--
PB12	PB13	240	--
PB12	PB14	--	92
PB14	SB12	5	--
PB14	PB15	11	--
PB14	PB16	--	70
PB16	PB17	--	24
PB17	SB13	--	5
PB17	CB1	--	24
		--	--
	TOTAL	626	958

PULL BOXES

PULL BOX NO.	LOCATION^	653.0135 PULL BOXES STEEL 24x36-INCH EACH	653.0140 PULL BOXES STEEL 24x42-INCH EACH
PB1	1034+49.88, 54.0' RT	--	1
PB2	1034+49.69, 70.4' RT	1	--
PB3	1033+94.09, 53.7' RT	--	1
PB4	1033+53.71, 39.9' RT	--	1
PB5	1031+32.44, 39.4' RT	1	--
PB6	1033+54.50, 5.0' LT	--	1
PB7	1033+42.59, 5.1' LT	1	--
PB8	1033+54.77, 40.0' LT	--	1
PB9	1033+94.74, 50.4' LT	--	1
PB10	1034+00.36, 69.1' LT	1	--
PB11	1034+50.07, 50.3' LT	--	1
PB12	1034+90.80, 40.5' LT	--	1
PB13	1037+19.79, 40.0'LT	1	--
PB14	1034+90.80, 5.0' RT	--	1
PB15	1035+01.40, 5.0' RT	1	--
PB16	1034+90.80, 50.0' RT	--	1
PB17	1034+87.86, 52.4' RT	--	1
	TOTAL	6	11

ALL ITEMS CATEGORY 0050

STH 50 & 246th AVENUE
VILLAGE OF PADDOCK LAKE
KENOSHA COUNTY

CONCRETE BASES

SIGNAL BASE NO.	LOCATION^	654.0101 CONCRETE BASES TYPE 1 EACH	654.0102 CONCRETE BASES TYPE 2 EACH	654.0110 CONCRETE BASES TYPE 10 EACH	654.0120 CONCRETE BASES TYPE 10-SPECIAL EACH	654.0217 CONCRETE CONTROL CABINET BASES TYPE 9 SPECIAL EACH
SB1	1034+63.05, 48.6' RT	1	--	--	--	--
SB2	1033+98.89, 56.4' RT	--	--	1	--	--
SB3	1033+86.06, 48.6' RT	1	--	--	--	--
SB4	1033+70.96, 40.4' RT	1	--	--	--	--
SB5	1033+61.05, 5.1' LT	--	1	--	--	--
SB6	1033+72.11, 48.5' LT	--	--	--	1	--
SB7	1033+83.83, 48.6' LT	1	--	--	--	--
SB8	1034+00.54', 61.8' LT	--	1	--	--	--
SB9	1034+54.62, 51.3' LT	--	--	1	--	--
SB10	1034+63.19, 48.5' LT	1	--	--	--	--
SB11	1034+79.98, 40.5' LT	1	--	--	--	--
SB12	1034+86.28, 4.9' RT	--	1	--	--	--
SB13	1034+85.17, 48.6' RT	--	--	--	1	--
CB1	1034+76.77, 50.1' RT	--	--	--	--	1
		--	--			
	TOTAL	6	3	2	2	1

SIGNAL MOUNTING HARDWARE

LOCATION	658.5069.02 SIGNAL MOUNTING HARDWARE L.S.
STH 50 & 246TH AVE	1
TOTAL	1

TEMPORARY TRAFFIC SIGNALS FOR INTERSECTIONS

LOCATION	661.0200.02 TEMPORARY TRAFFIC SIGNALS FOR INTERSECTIONS L.S.	661.0300 GENERATORS DAY
STH 50 & 246TH AVE	1	1
TOTAL	1	1

ELECTRICAL SERVICE METER BREAKER PEDESTAL

LOCATION*	656.0200.02 ELECTRICAL SERVICE METER BREAKER PEDESTAL L.S.
STH 50 & 246TH AVE	1
TOTAL	1

ALL ITEMS CATEGORY 0050

STH 50 & 246th AVENUE
VILLAGE OF PADDOCK LAKE
KENOSHA COUNTY

3

TRAFFIC DETECTOR LOOPS

LOOP NO.	HOME RUN PB	LOCATION** ^	SIZE (FT)x(FT)	NO. OF TURNS	PAVEMENT TYPE	SDD INSTALLATION REFERENCE	652.0800 CONDUIT LOOP DETECTOR L.F.	655.0700 LOOP DETECTOR LEAD IN CABLE L.F.	655.0800 LOOP DETECTOR WIRE L.F.
11	PB7	1033+37.52, 3.8' RT	6' x 20'	3	ASPHALT	9F15-4B - LOOP DETECTOR INSTALLED IN BASE COURSE WITH PULL (SPLICE) BOX OFF ROADWAY (OPTION 2)	68	187	184
12	PB7	1033+65.54, 4.0' RT	6' x 20'	3	ASPHALT	9F15-4B - LOOP DETECTOR INSTALLED IN BASE COURSE WITH PULL (SPLICE) BOX OFF ROADWAY (OPTION 2)	66	187	182
21	PB13	1037+25.59, 25.9' LT	6' x 15'	4	ASPHALT	9F15-4B - LOOP DETECTOR INSTALLED IN BASE COURSE WITH PULL (SPLICE) BOX OFF ROADWAY (OPTION 2)	76	350	244
22	PB13	1037+25.90, 14.1' LT	6' x 15'	4	ASPHALT	9F15-4B - LOOP DETECTOR INSTALLED IN BASE COURSE WITH PULL (SPLICE) BOX OFF ROADWAY (OPTION 2)	100	350	268
31	PB2	1034+27.74, 48.4' RT	6' x 20'	3	ASPHALT	9F15-4B - LOOP DETECTOR INSTALLED IN BASE COURSE WITH PULL (SPLICE) BOX OFF ROADWAY (OPTION 2)	71	68	206
41	PB10	1034+09.92, 74.7' LT	6' x 20'	3	ASPHALT	9F15-4B - LOOP DETECTOR INSTALLED IN BASE COURSE WILL PULL (SPLICE) BOX OFF ROADWAY (OPTION 2)	70	286	186
42	PB10	1034+09.79, 48.7' LT	6' x 20'	3	ASPHALT	9F15-4B - LOOP DETECTOR INSTALLED IN BASE COURSE WILL PULL (SPLICE) BOX OFF ROADWAY (OPTION 2)	66	286	182
51	PB15	1035+04.98, 4.1' LT	6' x 20'	3	ASPHALT	9F15-4B - LOOP DETECTOR INSTALLED IN BASE COURSE WILL PULL (SPLICE) BOX OFF ROADWAY (OPTION 2)	66	82	182
52	PB15	1034+76.94, 4.3' LT	6' x 20'	3	ASPHALT	9F15-4B - LOOP DETECTOR INSTALLED IN BASE COURSE WILL PULL (SPLICE) BOX OFF ROADWAY (OPTION 2)	66	82	182
61	PB5	1031+28.13, 25.7' RT	6' x 15'	4	ASPHALT	9F15-4B - LOOP DETECTOR INSTALLED IN BASE COURSE WILL PULL (SPLICE) BOX OFF ROADWAY (OPTION 2)	76	365	236
62	PB5	1031+27.90, 14.1' RT	6' x 15'	4	ASPHALT	9F15-4B - LOOP DETECTOR INSTALLED IN BASE COURSE WILL PULL (SPLICE) BOX OFF ROADWAY (OPTION 2)	98	365	266
71	PB10	1034+19.74, 74.6' LT	6' x 20'	3	ASPHALT	9F15-4B - LOOP DETECTOR INSTALLED IN BASE COURSE WILL PULL (SPLICE) BOX OFF ROADWAY (OPTION 2)	86	286	202
72	PB10	1034+19.65, 48.6' LT	6' x 20'	3	ASPHALT	9F15-4B - LOOP DETECTOR INSTALLED IN BASE COURSE WILL PULL (SPLICE) BOX OFF ROADWAY (OPTION 2)	84	286	200
81	PB2	1034+37.17, 48.5' LT	6' x 20'	3	ASPHALT	9F15-4B - LOOP DETECTOR INSTALLED IN BASE COURSE WILL PULL (SPLICE) BOX OFF ROADWAY (OPTION 2)	72	68	188
						TOTAL	1065	3248	2908

ALL ITEMS CATEGORY 0050

STH 50 & 246th AVENUE
VILLAGE OF PADDOCK LAKE
KENOSHA COUNTY

3

TRAFFIC SIGNAL CABLE AND WIRE (ABOVE GROUND)

FROM	TO	655.0230 CABLE TRAFFIC SIGNAL 5-14 AWG L.F.	655.0240 CABLE TRAFFIC SIGNAL 7-14 AWG L.F.
SB1	HEAD 1	22	--
SB1	HEAD 15	--	22
SB1	HEAD 23	15	--
SB1	HEAD 30	15	--
SB1	BUTTON	6	--
SB1	BUTTON	6	--
SB2	HEAD 13	50	--
SB2	HEAD 14	50	--
SB2	HEAD 16	--	50
SB3	HEAD 24	15	--
SB3	BUTTON	6	--
SB4	HEAD 6	22	--
SB4	HEAD 21	--	22
SB4	HEAD 25	15	--
SB4	BUTTON	6	--
SB5	HEAD 9	--	22
SB5	HEAD 22	--	22
SB6	HEAD 18	65	--
SB6	HEAD 19	65	--
SB6	HEAD 26	15	--
SB6	BUTTON	6	--
SB7	HEAD 27	15	--
SB7	BUTTON	6	--
SB8	HEAD 4	--	22
SB8	HEAD 12	22	--
SB9	HEAD 2	55	--
SB9	HEAD 3	55	--
SB9	HEAD 5	--	55
SB10	HEAD 28	15	--
SB10	HEAD 29	15	--
SB10	BUTTON	6	--
SB10	BUTTON	6	--
SB11	HEAD 10	--	22
SB11	HEAD 17	22	--
SB12	HEAD 11	--	22
SB12	HEAD 20	--	22
SB13	HEAD 7	65	--
SB13	HEAD 8	65	--
		--	--
	TOTAL	726	281

TRAFFIC SIGNAL CABLE AND WIRE (UNDERGROUND)

FROM	TO	655.0515 ELECTRICAL WIRE TRAFFIC SIGNALS 10 AWG L.F.
CB1	SB1	48
SB1	SB2	96
SB2	SB3	25
SB3	SB4	90
SB4	SB5	89
SB5	SB6	81
SB6	SB7	93
SB7	SB8	25
SB8	SB9	84
SB9	SB10	28
SB10	SB11	28
SB11	SB12	81
SB12	SB13	87
SB13	CB1	23
PB1	SB1	24
PB3	SB2	16
PB4	SB4	27
PB6	SB5	17
PB8	SB7	29
PB9	SB8	14
PB11	SB9	15
PB12	SB11	21
PB14	SB12	15
PB16	SB13	27
PB17	SB13	15
		--
	TOTAL	1098

TRAFFIC SIGNAL CABLE AND WIRE

FROM	TO	655.0610 ELECTRICAL WIRE LIGHTING 12 AWG L.F.
SB5	LUMINAIRE	234
SB8	LUMINAIRE	117
SB12	LUMINAIRE	234
	TOTAL	585

TRAFFIC SIGNAL EVP DETECTOR CABLE

FROM	TO	655.0900 TRAFFIC SIGNAL EVP DETECTOR CABLE L.F.
CB1	SB6 (HEAD A)	312
CB1	SB13 (HEAD B)	83
CB1	SB2 (HEAD C)	151
CB1	SB9 (HEAD D)	229
	TOTAL	775

TRAFFIC SIGNAL CABLE AND WIRE (UNDERGROUND)

FROM	TO	655.0240 CABLE TRAFFIC SIGNAL 7-14 AWG L.F.	655.0260 CABLE TRAFFIC SIGNAL 12-14 AWG L.F.	655.0280 CABLE TRAFFIC SIGNAL 19-14 AWG L.F.	655.0320 CABLE TYPE UF 2-10 AWG GROUNDED L.F.
CB1	SB1	--	--	48	--
CB1	SB2	--	106	--	--
CB1	SB3	110	--	--	--
CB1	SB4	--	171	--	--
CB1	SB5	--	215	--	215
CB1	SB6	--	272	--	--
CB1	SB7	269	--	--	--
CB1	SB8	--	262	--	--
CB1	SB9	--	198	--	--
CB1	SB10	--	206	--	--
CB1	SB11	--	152	--	--
CB1	SB12	--	90	--	90
CB1	SB13	--	23	--	--
SB5	SB8		--	--	272
		--	--	--	--
	TOTAL	379	1695	48	577

ALL ITEMS CATEGORY 0050

STH 50 & 246th AVENUE
VILLAGE OF PADDOCK LAKE
KENOSHA COUNTY

3

POLES (CONTRACTOR FURNISHED)

SIGNAL BASE NO.	657.0100 PEDESTAL BASES EACH	657.0255 TRANSFORMER BASES BREAKAWAY 11 1/2-INCH BOLT CIRCLE EACH	657.0310 POLES TYPE 3 EACH	657.0425 TRAFFIC SIGNAL STANDARDS ALUMINUM 15-FT EACH	657.0430 TRAFFIC SIGNAL STANDARDS ALUMINUM 10-FT EACH	657.0610 LUMINAIRE ARMS SINGLE MEMBER 4 1/2-INCH CLAMP 6-FT EACH	658.0500 PEDESTRIAN PUSH BUTTONS EACH	659.1125 LUMINAIRES UTILITY LED C EACH
SB1	1	--	--	1	--	--	2	--
SB3	1	--	--	--	1	--	1	--
SB4	1	--	--	1	--	--	1	--
SB5	--	1	1	--	--	2	--	2
SB6	--	--	--	--	--	--	1	--
SB7	1	--	--	--	1	--	1	--
SB8	--	1	1	--	--	1	--	1
SB10	1	--	--	--	1	--	1	--
SB11	1	--	--	1	--	--	1	--
SB12	--	1	1	--	--	2	--	2
TOTAL	6	3	3	3	3	5	8	5

POLES (STATE FURNISHED)

SIGNAL BASE NO.	SPV.0060.14 INSTALL POLES TYPE 9 EACH	SPV.0060.15 INSTALL POLES TYPE 9 SPECIAL EACH	SPV.0060.16 INSTALL MONOTUBE ARMS 25-FT EACH	SPV.0060.17 INSTALL MONOTUBE ARMS 30-FT EACH	SPV.0060.18 INSTALL MONOTUBE ARMS 40-FT TYPE 9/10 SPECIAL POLE EACH
SB2	1	--	1	--	--
SB6	--	1	--	--	1
SB9	1	--	--	1	--
SB13	--	1	--	--	1
	--	--	--	--	--
TOTAL	2	2	1	1	2

ALL ITEMS CATEGORY 0050

STH 50 & 246th AVENUE
VILLAGE OF PADDOCK LAKE
KENOSHA COUNTY

FACES

SIGNAL HEAD NO.	SIGNAL BASE NO.	658.0173 TRAFFIC SIGNAL FACE 3S 12-INCH EACH	658.0174 TRAFFIC SIGNAL FACE 4S 12-INCH EACH	658.0416 PEDESTRIAN SIGNAL FACE 16-INCH EACH
1	SB1	1	--	--
2	SB9	1	--	--
3	SB9	1	--	--
4	SB8	--	1	--
5	SB9	--	1	--
6	SB4	1	--	--
7	SB13	1	--	--
8	SB13	1	--	--
9	SB5	--	1	--
10	SB11	--	1	--
11	SB12	--	1	--
12	SB8	1	--	--
13	SB2	1	--	--
14	SB2	1	--	--
15	SB1	--	1	--
16	SB2	--	1	--
17	SB11	1	--	--
18	SB6	1	--	--
19	SB6	1	--	--
20	SB12	--	1	--
21	SB4	--	1	--
22	SB5	--	1	--
23	SB1	--	--	1
24	SB3	--	--	1
25	SB4	--	--	1
26	SB6	--	--	1
27	SB7	--	--	1
28	SB10	--	--	1
29	SB10	--	--	1
30	SB1	--	--	1
TOTAL		12	10	8

LED MODULES SUMMARY*

SIGNAL HEAD NO.	SIGNAL BASE NO.	PEDESTRIAN SIGNAL FACE 16-INCH EACH	LED MODULES 12-INCH RED BALL EACH	LED MODULES 12-INCH YELLOW BALL EACH	LED MODULES 12-INCH GREEN BALL EACH	LED MODULES 12-INCH RED ARROW EACH	LED MODULES 12-INCH YELLOW ARROW EACH	LED MODULES 12-INCH GREEN ARROW EACH
1	SB1	--	1	1	1	--	--	--
2	SB9	--	1	1	1	--	--	--
3	SB9	--	1	1	1	--	--	--
4	SB8	--	--	--	--	1	2	1
5	SB9	--	--	--	--	1	2	1
6	SB4	--	1	1	1	--	--	--
7	SB13	--	1	1	1	--	--	--
8	SB13	--	1	1	1	--	--	--
9	SB5	--	--	--	--	1	2	1
10	SB11	--	--	--	--	1	2	1
11	SB12	--	--	--	--	1	2	1
12	SB8	--	1	1	1	--	--	--
13	SB2	--	1	1	1	--	--	--
14	SB2	--	1	1	1	--	--	--
15	SB1	--	--	--	--	1	2	1
16	SB2	--	--	--	--	1	2	1
17	SB11	--	1	1	1	--	--	--
18	SB6	--	1	1	1	--	--	--
19	SB6	--	1	1	1	--	--	--
20	SB12	--	--	--	--	1	2	1
21	SB4	--	--	--	--	1	2	1
22	SB5	--	--	--	--	1	2	1
23	SB1	1	--	--	--	--	--	--
24	SB3	1	--	--	--	--	--	--
25	SB4	1	--	--	--	--	--	--
26	SB6	1	--	--	--	--	--	--
27	SB7	1	--	--	--	--	--	--
28	SB10	1	--	--	--	--	--	--
29	SB10	1	--	--	--	--	--	--
30	SB1	1	--	--	--	--	--	--
TOTAL		8	12	12	12	10	20	10

*ITEMS INCIDENTAL TO 658.0173 , 658.0174, OR 658.0416

ALL ITEMS CATEGORY 0050

STH 50 & 246th AVENUE
VILLAGE OF PADDOCK LAKE
KENOSHA COUNTY

PROJECT NO: 1310-04-70 | **HWY: STH 50** | **COUNTY: KENOSHA** | **MISCELLANEOUS QUANTITIES** | **SHEET NO: 588** E

PLOT DATE : 4/14/2022 7:15 AM PLOT BY : PLOT NAME : 030201_mq PLOT SCALE : 1.000000:1.000000
WISDOT / CADDS SHEET 42

3

TRANSPORT AND INSTALL STATE FURNISHED TRAFFIC SIGNAL CABINET

LOCATION	SPV.0060.21 TRNSPT AND INSTALL STATE FURN TRAFFIC SIGNAL CABINET EACH
STH 50 & 246TH AVE	1
TOTAL	1

TRANSPORT TRAFFIC SIGNAL AND INTERSECTION LIGHTING MATERIALS

LOCATION	SPV.0060.23 TRNSPT TRAFFIC SIGNAL & INTER LIGHTING MATERIALS EACH
STH 50 & 246TH AVE	1
TOTAL	1

3

EVP DETECTOR HEAD INSTALLATION

LOCATION	SPV.0060.25 TRNSPT & INSTALL STATE FURN EVP HEADS EACH
STH 50 & 246TH AVE	1
TOTAL	1

TEMPORARY INFRARED EVP SYSTEM

LOCATION	SPV.0060.27 TEMPORARY EVP SYSTEM EACH
STH 50 & 246TH AVE	1
TOTAL	1

ALL ITEMS CATEGORY 0050

STH 50 & 246th AVENUE
VILLAGE OF PADDOCK LAKE
KENOSHA COUNTY

CONVENTIONAL SYMBOLS

SECTION LINE
HIGHWAY EASEMENT
QUARTER LINE
SIXTEENTH LINE
NEW REFERENCE LINE
NEW HE LINE
EXISTING R/W LINE
PROPERTY LINE
LOT, TIE, AND OTHER MINOR LINES
SLOPE INTERCEPT
CORPORATE LIMITS
UNDERGROUND FACILITY (COMMUNICATIONS, ELECTRIC, ETC)
FEE ACQUISITION AREA (HATCHING VARIES BY OWNER)
TEMP. LIMITED EASEMENT AREA
EASEMENT AREA (HIGHWAY, PERMANENT LIMITED, OR RESTRICTED DEVELOPMENT)
TRANSMISSION STRUCTURES
BUILDING
BUILDING (TO BE REMOVED)
BRIDGE

PARCEL NUMBER
PRW POINT NUMBER
SECTION CORNER
NOTATION FOR COMBUSTABLE FLUIDS
NOTATION FOR HIGH VOLTAGE TRANSMISSION LINES
ACCESS CONTROLLED BY ACQUISITION
NO ACCESS (BY STATUTORY AUTHORITY)
ACCESS RESTRICTED (BY PREVIOUS PROJECT OR CONTROL)
NO ACCESS (NEW HIGHWAY)
NATIONAL GEODETIC SURVEY MONUMENT
SIXTEENTH CORNER MONUMENT
PARALLEL OFFSETS

UTILITY NUMBER
TLE POINT NUMBER
R/W MONUMENT
NON-MONUMENTED R/W POINT
FOUND IRON PIN
VALVE (GAS, WATER, ETC.)
SIGN
OFF-PREMISE SIGN

CONVENTIONAL UTILITY SYMBOLS

WATER	W
GAS	G
TELEPHONE	T
OVERHEAD TRANSMISSION LINES	OH
ELECTRIC	E
CABLE TELEVISION	TV
FIBER OPTIC	FO
SANITARY SEWER	SAN
STORM SEWER	SS
ELECTRIC TOWER	

	NON-COMPENSABLE	COMPENSABLE
POWER POLE		
TELEPHONE POLE		
TELEPHONE PEDESTAL		

CURVE DATA ABBREVIATIONS

LONG CHORD	LCH
LONG CHORD BEARING	LCB
RADIUS	R
DEGREE OF CURVE	D
CENTRAL ANGLE	Δ / DELTA
LENGTH OF CURVE	L
TANGENT	T
DIRECTION AHEAD	DA
DIRECTION BACK	DB

CONVENTIONAL ABBREVIATIONS

ACCESS RIGHTS	AR	OUTLOT	OL
ACRES	AC	PAGE	P
AHEAD	AH	POINT OF TANGENCY	PT
ALUMINUM	ALUM	PROPERTY LINE	PL
AND OTHERS	ET AL	RECORDED AS	(100')
BACK	BK	REEL / IMAGE	R/I
BLOCK	BLK	REFERENCE LINE	R/L
CENTERLINE	C/L	PERMANENT LIMITED EASEMENT	PLE
CERTIFIED SURVEY MAP	CSM	POINT OF BEGINNING	POB
CONCRETE	CONC	POINT OF CURVATURE	PC
COUNTY	CO	POINT OF COMPOUND CURVE	PCC
COUNTY TRUNK HIGHWAY	CTH	POINT OF INTERSECTION	PI
DISTANCE	DIST	REMAINING	REM
CORNER	COR	RESTRICTIVE DEVELOPMENT EASEMENT	RDE
DOCUMENT NUMBER	DOC	RIGHT	RT
EASEMENT	EASE	RIGHT OF WAY	R/W
EXISTING	EX	SECTION	SEC
GAS VALVE	GV	SEPTIC VENT	SEPV
GRID NORTH	GN	SQUARE FEET	SF
HIGHWAY EASEMENT	HE	STATE TRUNK HIGHWAY	STH
IDENTIFICATION	ID	STATION	STA
LAND CONTRACT	LC	TELEPHONE PEDESTAL	TP
LEFT	LT	TEMPORARY LIMITED EASEMENT	TLE
MONUMENT	MON	TRANSPORTATION PROJECT PLAT	TPP
NATIONAL GEODETIC SURVEY	NGS	UNITED STATES HIGHWAY	USH
NUMBER	NO	VOLUME	V

R/W PROJECT NUMBER	SHEET NUMBER	TOTAL SHEETS
1310-04-20		
CONSTRUCTION PROJECT NUMBER 1310-04-70	4.01	

PLAT OF RIGHT OF WAY REQUIRED FOR

STATE HIGHWAY 50

USH 12 TO USH 45

STH 50	KENOSHA COUNTY

NOTES:

POSITIONS SHOWN ON THIS PLAT ARE WISCONSIN COORDINATE REFERENCE SYSTEM COORDINATES (WISCRS), KENOSHA COUNTY, NAD83 2007 IN US SURVEY FEET. VALUES SHOWN ARE GRID COORDINATES, GRID BEARINGS, AND GRID DISTANCES. GRID DISTANCES MAY BE USED AS GROUND DISTANCES.

ALL NEW RIGHT-OF-WAY MONUMENTS WILL BE TYPE 2 (TYPICALLY 3/4"X24" IRON REBARS) UNLESS OTHERWISE NOTED, AND WILL BE PLACED PRIOR TO THE COMPLETION OF THE PROJECT.

RIGHT-OF-WAY BOUNDARIES ARE DEFINED WITH COURSES OF THE PERIMETER OF THE HIGHWAY LANDS REFERENCED TO THE U.S. PUBLIC LAND SURVEY SYSTEM OR OTHER "SURVEYS" OF PUBLIC RECORD.

DIMENSIONING FOR THE NEW RIGHT-OF-WAY IS MEASURED ALONG AND PERPENDICULAR TO THE NEW REFERENCE LINES.

PROPERTY LINES SHOWN ON THIS PLAT ARE DRAWN FROM DATA DERIVED FROM MAPS AND DOCUMENTS OF PUBLIC RECORD AND/OR EXISTING OCCUPATIONAL LINES. THIS PLAT MAY NOT BE A TRUE REPRESENTATION OF EXISTING PROPERTY LINES, EXCLUDING RIGHT-OF-WAY, AND SHOULD NOT BE USED AS A SUBSTITUTE FOR AN ACCURATE FIELD SURVEY.

A TEMPORARY LIMITED EASEMENT (TLE) IS A RIGHT FOR CONSTRUCTION PURPOSES, AS DEFINED HEREIN, INCLUDING THE RIGHT TO OPERATE NECESSARY EQUIPMENT THEREON, THE RIGHT OF INGRESS AND EGRESS, AS LONG AS REQUIRED FOR SUCH PUBLIC PURPOSE, INCLUDING THE RIGHT TO PRESERVE, PROTECT, REMOVE, OR PLANT THEREON ANY VEGETATION THAT THE HIGHWAY AUTHORITIES MAY DEEM DESIRABLE. ALL (TLEs) ON THIS PLAT EXPIRE AT THE COMPLETION OF THE CONSTRUCTION PROJECT FOR WHICH THIS INSTRUMENT IS GIVEN.

A PERMANENT LIMITED EASEMENT (PLE) IS A RIGHT FOR CONSTRUCTION AND MAINTENANCE PURPOSES, AS DEFINED HEREIN, INCLUDING THE RIGHT TO OPERATE NECESSARY EQUIPMENT THEREON AND THE RIGHT OF INGRESS ANDEGRESS, AS LONG AS REQUIRED FOR SUCH PUBLIC PURPOSE, INCLUDING THE RIGHT TO PRESERVE, PROTECT, REMOVE, OR PLANT THEREON ANY VEGETATION THAT THE HIGHWAY AUTHORITIES MAY DEEM DESIRABLE, BUT WITHOUT PREJUDICE TO THE OWNER'S RIGHTS TO MAKE OR CONSTRUCT IMPROVEMENTS ON SAID LANDS OR TO FLATTEN THE SLOPES, SAID ACTIVITIES WILL NOT IMPAIR OR OTHERWISE ADVERSELY AFFECT THE HIGHWAY FACILITIES.

AN EASEMENT FOR HIGHWAY PURPOSES (HE), AS LONG AS SO USED, INCLUDING THE RIGHT TO PRESERVE, PROTECT, REMOVE, OR PLANT THEREON ANY VEGETATION THAT THE HIGHWAY AUTHORITIES MAY DEEM DESIRABLE.

BEGIN RELOCATION ORDER
STA 996+45.80
Y = 128203.290
X = 549265.859
LOCATED 10.08 FEET SOUTH AND 274.56 FEET WEST OF THE NORTH ¼ CORNER OF SECTION 10, TOWNSHIP 1 NORTH, RANGE 20 EAST

R-20-E

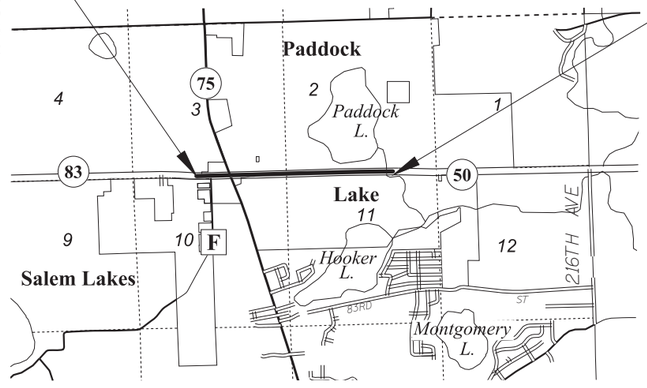

T-1-N

N

LAYOUT
SCALE 0 1.0 MILE

TOTAL NET LENGTH OF CENTERLINE = 1.393 MI.

END RELOCATION ORDER
STA 1070+00.00
Y = 128167.287
X = 556572.934
LOCATED 28.80 FEET SOUTH AND 898.19 FEET WEST OF THE NORTHEAST CORNER OF SECTION 11, TOWNSHIP 1 NORTH, RANGE 20 EAST

APPROVED
FOR
THE DEPARTMENT OF TRANSPORTATION

DATE

PLAT PREPARED BY
AYRES ASSOCIATES

THE SURVEY IS PREPARED AT THE REQUEST OF THE WISCONSIN DEPARTMENT OF TRANSPORTATION.

THE FIELD SURVEY WAS PERFORMED IN DECEMBER 2018.

THIS SURVEY IS ACCURATE TO THE BEST OF MY KNOWLEDGE AND BELIEF.

WISCONSIN
NATHAN A. VAUGHN
S-2986
DOUSMAN
WI
LAND SURVEYOR

7/06/2020
NATHAN VAUGHN, P.L.S. DATE
S-2986

REVISION DATE:
11/11/2020
03/08/2021

FILE NAME : V:\SURVEY\WK\76-0103.00 75TH ST-VILLAGE OF PADDOCK LAKE-STH50_1310-04-00\CADD\C3D\RW\RW PLAT SHEETS\13100420_0401_TI.DWG
PLOT DATE : 3/9/2021 10:04 AM
PLOT BY : LARSON, BENJAMIN
PLOT NAME :
BASE DATE: 04/30/2019

SCHEDULE OF LANDS & INTERESTS REQUIRED

OWNER'S NAMES ARE SHOWN FOR REFERENCE PURPOSES ONLY AND ARE SUBJECT TO CHANGE PRIOR TO THE TRANSFER OF LAND INTERESTS TO THE DEPARTMENT

PARCEL NUMBER	SHEET NUMBER	OWNER (S)	INTEREST REQUIRED	TOTAL SQ FT	R/W SQ FT REQUIRED		TOTAL SQ FT REMAINING	PLE SQ FT	TLE SQ FT
					NEW	EXISTING			
1	4.04	FRED & CHRIS INVESTMENTS	FEE/TLE	32234	390	---	31844	---	2933
2	4.04, 4.05	SEE-WAY INVESTMENTS, LLC	FEE/TLE	16117	374	---	15743	---	1977
3	4.04	BREG2 LLC	TLE	324958	---	---	324958	---	612
4	4.05	O'REILLY AUTOMOTIVE	FEE/TLE	71438	674	---	70764	---	1636
5	4.05	TRIPLE B REAL ESTATE	FEE/TLE	75359	807	---	74552	---	1053
6	4.05, 4.06	MILLS ENTERPRISES-VILLAGE PLAZA LLC	TLE	284447	---	---	284447	---	1530
7	4.05	RODGER BERMAN AND ESTHER Y. BERMAN	FEE/TLE	87991	4394	---	83597	---	12095
8	4.05	PADDOCK LAKE BP, LLC	FEE/TLE	80586	882	---	79704	---	3635
9	4.06	BUDDY BELLS LAND HOLDINGS	TLE	34412	---	---	34412	---	890
10	4.06	OLSEN PROPERTIES	TLE	13939	---	---	13939	---	581
11	4.06	GTE NORTH INCORPORATED	FEE/TLE	14810	194	---	14616	---	602
12	4.06	NEW MIDWEST WISCONSIN LLC	TLE	30492	---	---	30492	---	3747
13	4.06	HANS PETER LANGENSTROER	TLE	23958	---	---	23958	---	2641
14	4.06, 4.07	CENTRAL HIGH SCHOOL DISTRICT OF WESTOSHA	FEE/TLE	5814389	5866	---	5808523	---	24383
15	4.06	CHRIST LUTHERAN CHURCH	FEE/TLE	277477	500	---	276977	---	9221
16	4.06	PADDOCK LAKE PROPERTIES	FEE/TLE	119790	769	---	119021	---	2156
17	4.07	RMDB COOL LLC	FEE/TLE	20909	146	---	20763	---	1836
18	4.07	JA BECKER PROPERTIES, LLC	FEE/PLE/TLE	28750	600	---	28150	4000	1381
19	4.07	RICHARD L BENSON	FEE/PLE/TLE	21780	750	---	21030	2139	2917
20 (2)	4.07	REALITY INCOME PROPERTIES 6 LLC	FEE/PLE/TLE	58806	300	---	58506	147	4103
21	4.07	ZACKARY W. SULLIVAN, MASON S. SULLIVAN, LUCAS C. SULLIVAN, AND PAIGE I. SULLIVAN	FEE/TLE	14375	455	---	13920	---	2160
22	4.07	AMMA & H, LLC	FEE/TLE	28750	721	---	28029	---	3672
23	4.07	GAGLIARDI PROPERTY, JUBILEE REAL ESTATE LLC, JEFFREY L SORENSEN	FEE/TLE	77101	639	---	76462	---	5388
24	4.07, 4.08	NEAL S GILL	FEE/TLE	20909	191	---	20718	---	2678
25	4.07	PARK APARTMENTS LLC	FEE/TLE	21780	210	---	21570	---	2660
26	4.07	PATRICIA A ZAMBA	FEE/TLE	0.29 AC	0.01 AC	---	0.28 AC	---	0.02 AC
27	4.07	TEAK PROPERTIES	FEE/TLE	23958	316	---	23642	---	2197
28	4.08	PADDOCK LAKE PROFESSIONAL PARK	FEE/TLE	13504	150	---	13354	---	1179
29	4.08	SUSAN C SOMMER	FEE/TLE	6534	75	---	6459	---	673
30	4.08	KENNETH A WARNER	FEE/TLE	8712	150	---	8562	---	649
31	4.08	BRAD ANDERSON	FEE/TLE	6970	126	---	6844	---	936
32	4.08	DAVID A SCHULZ	FEE/TLE	5663	113	---	5550	---	697
33	4.08	MIKE MARZEC	FEE/TLE	10454	511	---	9943	---	923
34	4.08	VILLAGE OF PADDOCK LAKE	FEE/TLE	10454	699	---	9755	---	829
35	4.08	SANDRA L PHILLIPS	FEE/TLE	16988	234	---	16754	---	1593
36	4.08, 4.09	COUNTY OF KENOSHA	HE/PLE/TLE	702187	11303	---	690884	530	7512
37	4.08	BAKERIA, LLP	FEE/TLE	16553	163	---	16390	---	2643
38	4.08	24207 75TH, LLC	FEE/TLE	18295	298	---	17997	---	1275
39 (3)	4.08	PEDRO JAIMES	FEE/TLE	26136	399	---	25737	---	1969
40	4.08	24301 75TH ST LLC	FEE/TLE	12632	189	---	12443	---	1271
41	4.08	RGC GROUP LLC	FEE/TLE	21780	256	---	21524	---	834
42	4.09	SOUTHPORT BANK	FEE/TLE	46174	199	---	45975	---	495
43	4.09	R&T ROG LLC	FEE	34412	1307	---	33105	---	---
44	4.09	CARL BRYZEK FARMS LLC	TLE	4543308	---	---	4543308	---	269
46	4.09	MOORE-STRANG HOLDINGS	FEE/PLE/TLE	74052	82	---	73970	1501	852
47	4.10	KEVIN VAN HEIRSEELE	FEE/TLE	31799	1141	---	30658	---	181
48	4.10	KAREN VAN HEIRSEELE	FEE/TLE	25265	247	---	25018	---	44
49	4.05	PADLACK PARTNERS, LLC	TLE	74488	---	---	74488	---	349
51 (3)	4.08	JAIMES, ET AL	FEE/TLE	6534	98	---	6436	---	684
UTILITYNUMBER	**SHEET NUMBER**	**OWNER (S)**	**INTEREST REQUIRED**						
100	4.05, 4.06, 4.07, 4.09	VILLAGE OF PADDOCK LAKE	RELEASE OF RIGHTS	---	---	---		---	---
101	4.05, 4.06, 4.07	WE ENERGIES ELECTRIC	RELEASE OF RIGHTS	---	---	---		---	---
102	4.04, 4.05, 4.08	AT&T WISCONSIN	RELEASE OF RIGHTS	---	---	---		---	---
103	4.05, 4.06, 4.09, 4.10	FRONTIER COMMUNICATIONS	RELEASE OF RIGHTS	---	---	---		---	---
105	4.05, 4.06, 4.07, 4.09	WE ENERGIES GAS	RELEASE OF RIGHTS	---	---	---		---	---
106	4.04	AMERICAN TRANSMISSION COMPANY	RELEASE OF RIGHTS	---	---	---		---	---

4

4

REVISION DATE
11/11/2020
03/08/2021

DATE August 5, 2020

HWY: STH 50

COUNTY: KENOSHA

R/W PROJECT NUMBER 1310-04-21

CONSTRUCTION PROJECT NUMBER 1310-04-70

PLAT SHEET 4.02

PS&E SHEET

E

FILE NAME : 13100420_0402_SC.DWG
LAYOUT NAME - 4.02

PLOT DATE : 3/9/2021 11:05 AM PLOT BY : LARSON, BENJAMIN PLOT NAME : PLOT SCALE :

WISDOT/CADDS SHEET 75

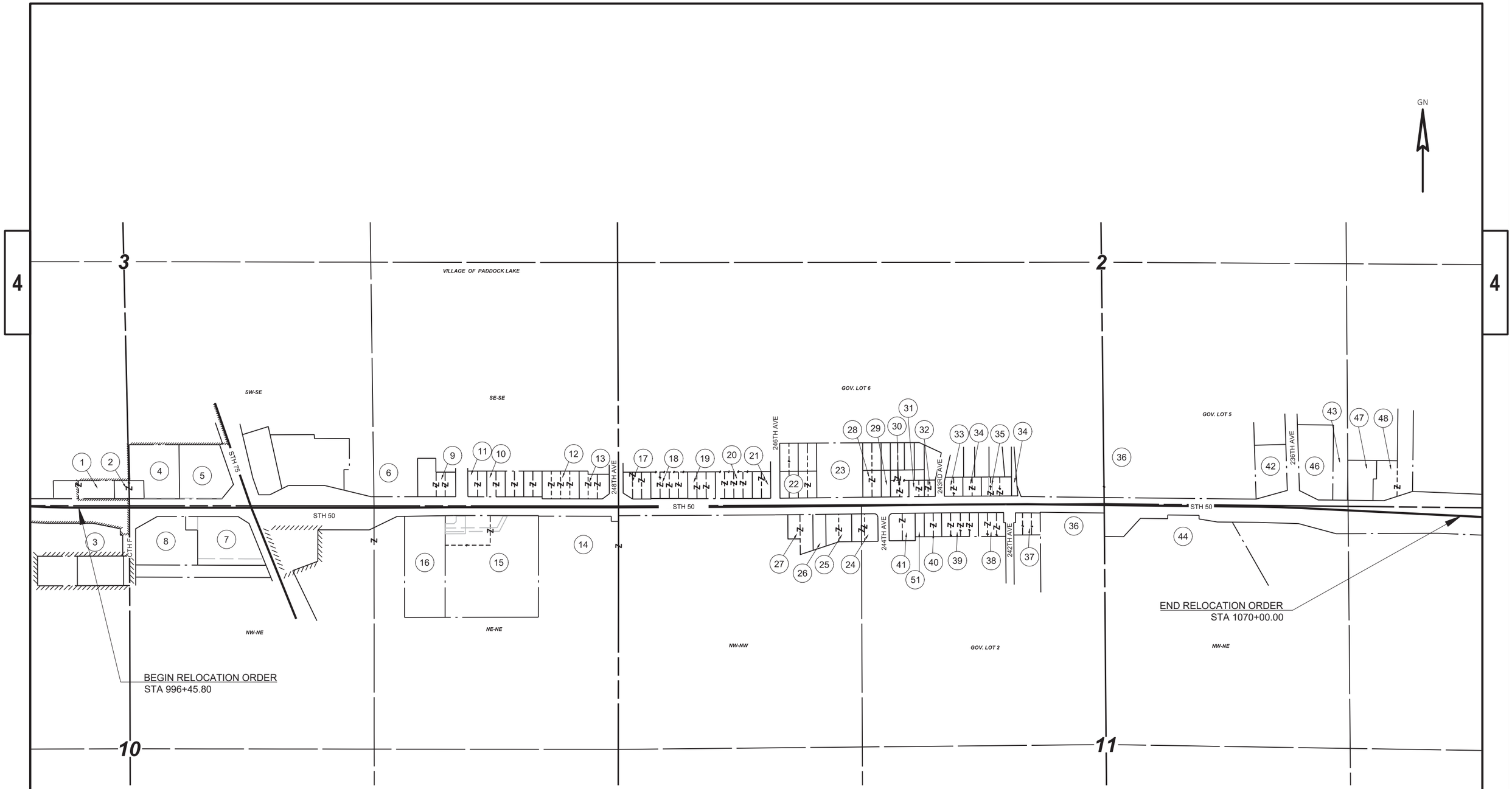

REVISION DATE 11/11/2020 03/08/2021	DATE August 5, 2020	NOT TO SCALE	HWY: STH 50	R/W PROJECT NUMBER 1310-04-20	PLAT SHEET 4.03
			COUNTY: KENOSHA	CONSTRUCTION PROJECT NUMBER 1310-04-70	PS&E SHEET 592 E

FILE NAME : V:\SURVEY\WK\76-0103.00 75TH ST-VILLAGE OF PADDOCK LAKE-STH50_1310-04-00\CADD\C3D\RW\RW PLAT SHEETS\13100420_0403_RL.DWG
LAYOUT NAME - 4.03

PLOT DATE : 3/9/2021 11:05 AM PLOT BY : LARSON, BENJAMIN PLOT NAME : PLOT SCALE : 1 IN:500 FT

WISDOT/CADDS SHEET 75

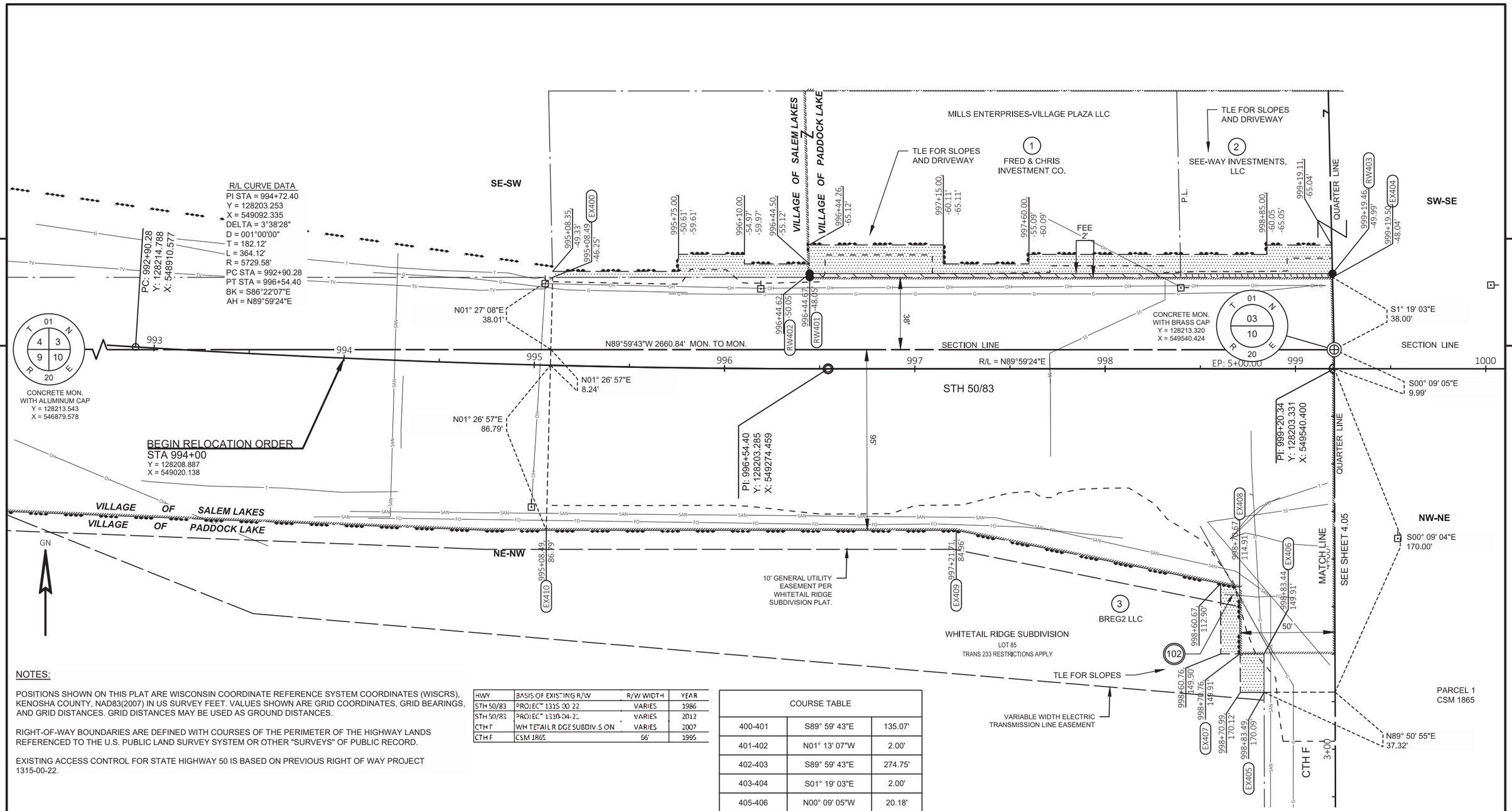

NOTES:

POSITIONS SHOWN ON THIS PLAT ARE WISCONSIN COORDINATE REFERENCE SYSTEM COORDINATES (WISCRS), KENOSHA COUNTY, NAD83(2007) IN US SURVEY FEET. VALUES SHOWN ARE GRID COORDINATES, GRID BEARINGS, AND GRID DISTANCES. GRID DISTANCES MAY BE USED AS GROUND DISTANCES.

RIGHT-OF-WAY BOUNDARIES ARE DEFINED WITH COURSES OF THE PERIMETER OF THE HIGHWAY LANDS REFERENCED TO THE U.S. PUBLIC LAND SURVEY SYSTEM OR OTHER "SURVEYS" OF PUBLIC RECORD.

EXISTING ACCESS CONTROL FOR STATE HIGHWAY 50 IS BASED ON PREVIOUS RIGHT OF WAY PROJECT 1315-00-22.

HWY	BASIS OF EXISTING R/W	R/W WIDTH	YEAR
STH 50/83	PROJECT 1315-00-22	VARIES	1986
STH 50/83	PROJECT 1310-04-20	VARIES	2012
CTH F	WHITETAIL RIDGE SUBDIVISION	VARIES	2007
CTH F	CSM 1865	66'	1995

COURSE TABLE		
400-401	S89° 59' 43"E	135.07'
401-402	N01° 13' 07"W	2.00'
402-403	S89° 59' 43"E	274.75'
403-404	S01° 19' 03"E	2.00'
405-406	N00° 09' 05"W	20.18'
406-407	N89° 59' 27"W	12.69'
407-408	N00° 09' 05"W	35.00'
408-409	N78° 38' 31"W	151.94'
409-410	N89° 59' 43"W	215.42'

106 AMERICAN TRANSMISSION COMPANY
VARIABLE WIDTH EASEMENT
DOC. 1835841, 1835850, AND DOCUMENT RECORDED
PARCEL 3

102 AT&T WISCONSIN
10' EASEMENT TO GENERAL TELEPHONE COMPANY
V.1212, P.303, DOC.748620
PARCEL 3
10' EASEMENT WHITETAIL RIDGE SUBDIVISION
DOC.1536120
PARCEL 3

REVISION DATE 11/11/2020	DATE August 5, 2020	SCALE, FEET 0 25 50	HWY: STH 50	R/W PROJECT NUMBER 1310-04-20	PLAT SHEET 4.04
	GRID FACTOR N/A		COUNTY: KENOSHA	CONSTRUCTION PROJECT NUMBER 1310-04-70	PS&E SHEET 593 E

FILE NAME : V:\SURVEY\WK\76-0103.00 75TH ST-VILLAGE OF PADDOCK LAKE-STH50_1310-04-00\CADD\C3D\RW\RW PLAT SHEETS\13100420_0404_RP.DWG
LAYOUT NAME - 4.04
PLOT DATE : 3/9/2021 10:01 AM PLOT BY : LARSON, BENJAMIN PLOT NAME : PLOT SCALE : 1 IN:50 FT

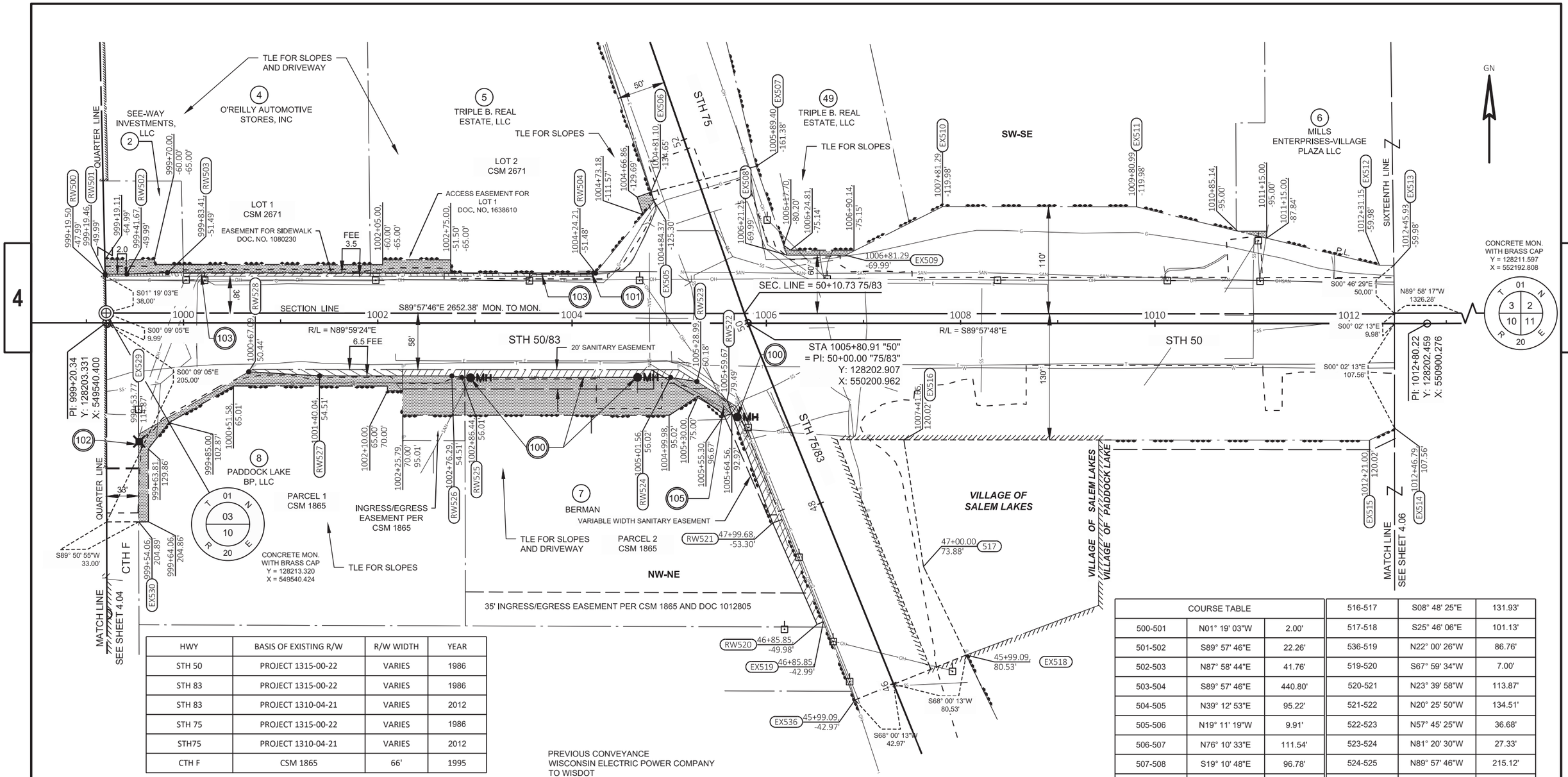

HWY	BASIS OF EXISTING R/W	R/W WIDTH	YEAR
STH 50	PROJECT 1315-00-22	VARIES	1986
STH 83	PROJECT 1315-00-22	VARIES	1986
STH 83	PROJECT 1310-04-21	VARIES	2012
STH 75	PROJECT 1315-00-22	VARIES	1986
STH75	PROJECT 1310-04-21	VARIES	2012
CTH F	CSM 1865	66'	1995

NOTES:

POSITIONS SHOWN ON THIS PLAT ARE WISCONSIN COORDINATE REFERENCE SYSTEM COORDINATES (WISCRS), KENOSHA COUNTY, NAD83(2007) IN US SURVEY FEET. VALUES SHOWN ARE GRID COORDINATES, GRID BEARINGS, AND GRID DISTANCES. GRID DISTANCES MAY BE USED AS GROUND DISTANCES.

RIGHT-OF-WAY BOUNDARIES ARE DEFINED WITH COURSES OF THE PERIMETER OF THE HIGHWAY LANDS REFERENCED TO THE U.S. PUBLIC LAND SURVEY SYSTEM OR OTHER "SURVEYS" OF PUBLIC RECORD.

EXISTING ACCESS CONTROL FOR STATE HIGHWAY 50 IS BASED ON PREVIOUS RIGHT OF WAY PROJECT 1315-00-22.

EXISTING ACCESS CONTROL FOR STATE HIGHWAY 83 IS BASED ON PREVIOUS RIGHT OF WAY PROJECT 1315-00-22.

EXISTING ACCESS CONTROL FOR STATE HIGHWAY 75 IS BASED ON PREVIOUS RIGHT OF WAY PROJECT .

100 VILLAGE OF PADDOCK LAKE - SANITARY
20' SANITARY EASEMENT DOC.1017524
PARCEL 7

VARIABLE WIDTH SANITARY EASEMENT
V.1244, P.662, DOC.765514
PARCEL 7

VARIABLE SANITARY WIDTH EASEMENT
V.1248, P.470, DOC.767663
PARCEL 7

101 WE ENERGIES - ELECTRIC
NO RECORD OF EASEMENT
PARCEL 5

103 FRONTIER COMMUNICATIONS
NO RECORD OF EASEMENT
PARCEL 4, 5

102 AT&T DISTRIBUTION
NO RECORD OF EASEMENT
PARCEL 8

105 WE ENERGIES - GAS
NO RECORD OF EASEMENT
PARCEL 7

COURSE TABLE		
500-501	N01° 19' 03"W	2.00'
501-502	S89° 57' 46"E	22.26'
502-503	N87° 58' 44"E	41.76'
503-504	S89° 57' 46"E	440.80'
504-505	N39° 12' 53"E	95.22'
505-506	N19° 11' 19"W	9.91'
506-507	N76° 10' 33"E	111.54'
507-508	S19° 10' 48"E	96.78'
508-509	S89° 57' 46"E	60.04'
509-510	N63° 28' 20"E	111.79'
510-511	S89° 57' 46"E	199.70'
511-512	S76° 28' 32"E	257.26'
512-513	S89° 57' 46"E	14.78'
514-515	S64° 14' 15"W	28.64'
515-516	N89° 57' 46"W	479.35'
516-517	S08° 48' 25"E	131.93'
517-518	S25° 46' 06"E	101.13'
536-519	N22° 00' 26"W	86.76'
519-520	S67° 59' 34"W	7.00'
520-521	N23° 39' 58"W	113.87'
521-522	N20° 25' 50"W	134.51'
522-523	N57° 45' 25"W	36.68'
523-524	N81° 20' 30"W	27.33'
524-525	N89° 57' 46"W	215.12'
525-526	N81° 33' 17"W	10.26'
526-527	N89° 57' 46"W	136.24'
527-528	N86° 46' 14"W	73.06'
528-529	S60° 25' 07"W	130.36'
529-530	S00° 09' 05"E	90.02'

REVISION DATE 11/11/2020	DATE August 5, 2020	SCALE, FEET 0 50 100	HWY: STH 50	R/W PROJECT NUMBER 1310-04-20	PLAT SHEET 4.05
	GRID FACTOR N/A		COUNTY: KENOSHA	CONSTRUCTION PROJECT NUMBER 1310-04-70	PS&E SHEET 594 E

FILE NAME : V:\SURVEY\WK\76-0103.00 75TH ST-VILLAGE OF PADDOCK LAKE-STH50_1310-04-00\CADD\C3D\RW\RW PLAT SHEETS\13100420_0405_RP.DWG
LAYOUT NAME - 4.05
PLOT DATE : 3/9/2021 10:00 AM PLOT BY : LARSON, BENJAMIN PLOT NAME : PLOT SCALE : 1 IN:100 FT

WISDOT/CADDS SHEET 75

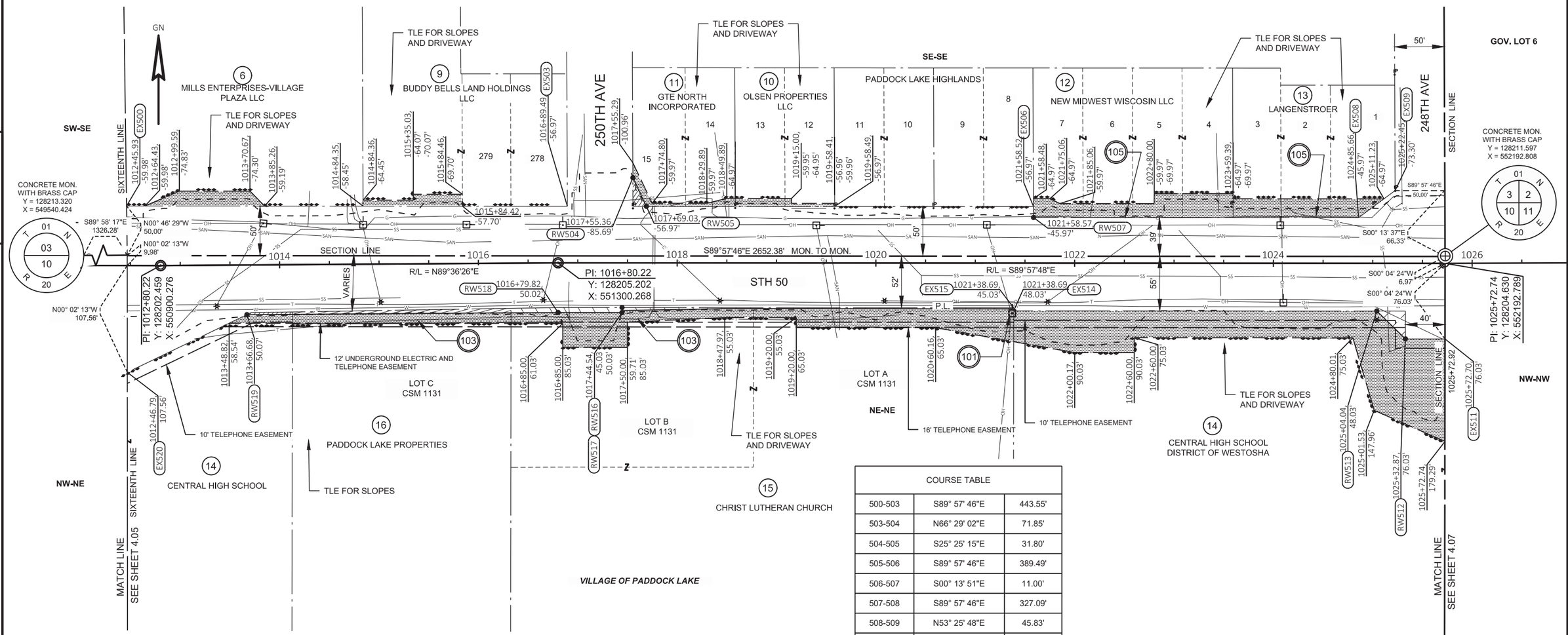

(105) WE ENERGIES - GAS
NO RECORD OF EASEMENT
PARCEL 12, 13

(101) WE ENERGIES - ELECTRIC
12" EASEMENT
V.1409, P.291, DOC.849471
PARCEL 15, 16

(103) FRONTIER COMMUNICATION
12' EASEMENT V.1215, P.129, DOC.750167
PARCEL 15, 16
10' EASEMENT V.1212, P890, DOC.748949
PARCEL 14
16.5' EASEMENT TO GENERAL TELEPHONE COMPANY
V.889, P.675, DOC.554504
V.893, P.817, DOC.557151
PARCEL 14, 15 & 16

COURSE TABLE		
500-503	S89° 57' 46"E	443.55'
503-504	N66° 29' 02"E	71.85'
504-505	S25° 25' 15"E	31.80'
505-506	S89° 57' 46"E	389.49'
506-507	S00° 13' 51"E	11.00'
507-508	S89° 57' 46"E	327.09'
508-509	N53° 25' 48"E	45.83'
511-512	N89° 57' 46"W	39.84'
512-513	N45° 47' 29"W	40.18'
513-514	N89° 57' 46"W	365.36'
514-515	N00° 03' 23"E	3.00'
515-516	N89° 57' 46"W	394.15'
516-517	S00° 01' 43"W	5.00'
517-518	N89° 57' 46"W	64.35'
518-519	S89° 35' 56"W	313.13'
519-520	S64° 14' 15"W	133.59'

HWY	BASIS OF EXISTING R/W	R/W WIDTH	YEAR
STH 50	PROJECT 1315-00-22	VARIES	1986
STH 50	DOC. NO. 788728	94'	1987
STH 50	DOC. NO. 791051	94'	1987
250TH AVE	PADDOCK LAKE HIGHLANDS	66'	1929
248TH AVE	PADDOCK LAKE HIGHLANDS	75'	1929

NOTES:

POSITIONS SHOWN ON THIS PLAT ARE WISCONSIN COORDINATE REFERENCE SYSTEM COORDINATES (WISCRS), KENOSHA COUNTY, NAD83(2007) IN US SURVEY FEET. VALUES SHOWN ARE GRID COORDINATES, GRID BEARINGS, AND GRID DISTANCES. GRID DISTANCES MAY BE USED AS GROUND DISTANCES.

RIGHT-OF-WAY BOUNDARIES ARE DEFINED WITH COURSES OF THE PERIMETER OF THE HIGHWAY LANDS REFERENCED TO THE U.S. PUBLIC LAND SURVEY SYSTEM OR OTHER "SURVEYS" OF PUBLIC RECORD.

EXISTING ACCESS CONTROL FOR STATE HIGHWAY 50 IS BASED ON PREVIOUS RIGHT OF WAY PROJECT 1315-00-22.

REVISION DATE 11/11/2020	DATE August 5, 2020	SCALE, FEET 0 50 100	HWY: STH 50	R/W PROJECT NUMBER 1310-04-20	PLAT SHEET 4.06
	GRID FACTOR N/A		COUNTY: KENOSHA	CONSTRUCTION PROJECT NUMBER 1310-04-70	PS&E SHEET 595 E

FILE NAME : V:\SURVEY\WK\76-0103.00 75TH ST-VILLAGE OF PADDOCK LAKE-STH50_1310-04-00\CADD\C3D\RW\RW PLAT SHEETS\13100420_0406_RP.DWG
LAYOUT NAME - 4.06
PLOT DATE : 3/9/2021 10:00 AM PLOT BY : LARSON, BENJAMIN PLOT NAME : PLOT SCALE : 1 IN:100 FT

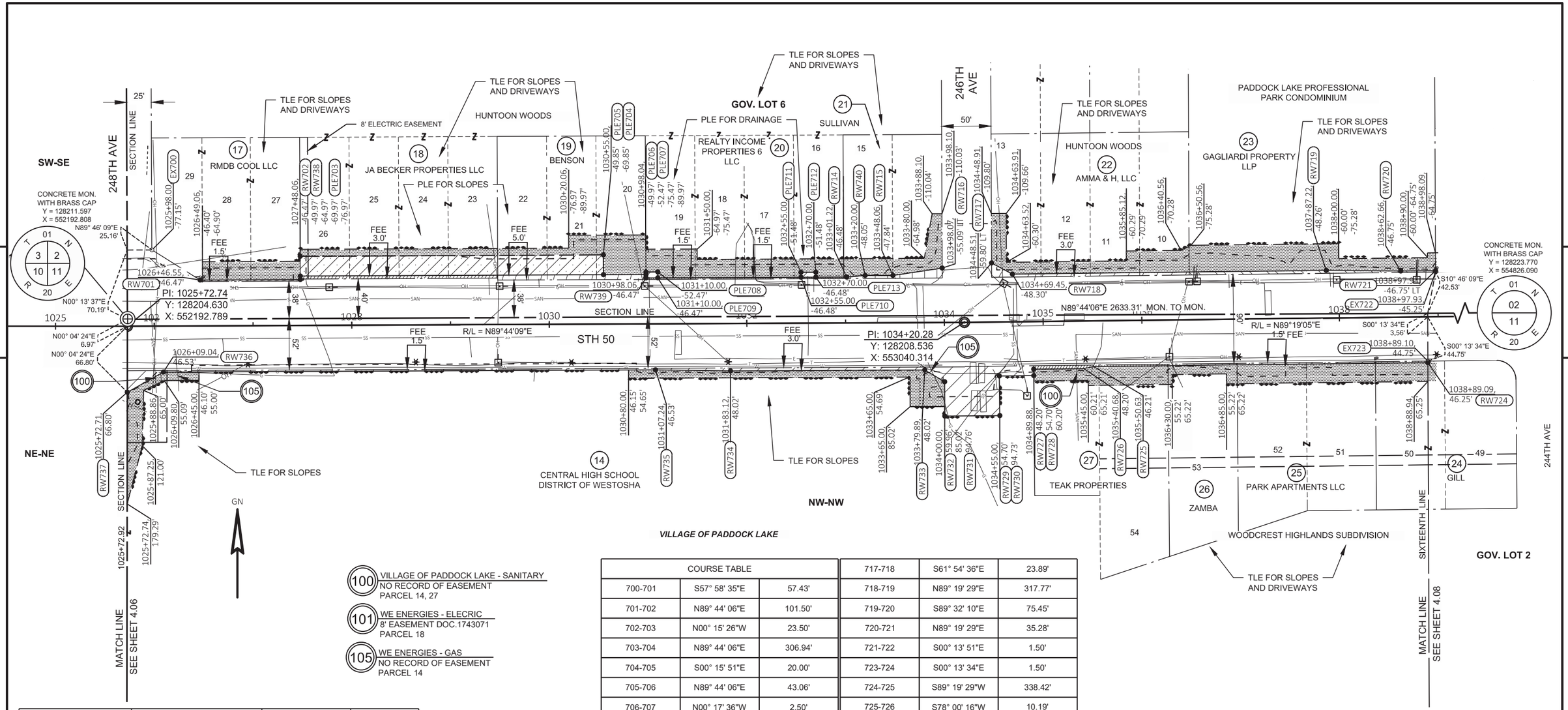

100 VILLAGE OF PADDOCK LAKE - SANITARY
NO RECORD OF EASEMENT
PARCEL 14, 27

101 WE ENERGIES - ELECRIC
8' EASEMENT DOC.1743071
PARCEL 18

105 WE ENERGIES - GAS
NO RECORD OF EASEMENT
PARCEL 14

HWY	BASIS OF EXISTING R/W	R/W WIDTH	YEAR
STH 50	PROJECT 1315-00-22	VARIES	
248TH AVE	PADDOCK LAKE HIGHLANDS	75'	1929
248TH AVE	HUNTOON WOODS	25'	1925
246TH AVE	HUNTOON WOODS	50'	1925
244TH AVE	WOODCREAST HEIGHTS	60'	1951

NOTES:

POSITIONS SHOWN ON THIS PLAT ARE WISCONSIN COORDINATE REFERENCE SYSTEM COORDINATES (WISCRS), KENOSHA COUNTY, NAD83(2007) IN US SURVEY FEET. VALUES SHOWN ARE GRID COORDINATES, GRID BEARINGS, AND GRID DISTANCES. GRID DISTANCES MAY BE USED AS GROUND DISTANCES.

RIGHT-OF-WAY BOUNDARIES ARE DEFINED WITH COURSES OF THE PERIMETER OF THE HIGHWAY LANDS REFERENCED TO THE U.S. PUBLIC LAND SURVEY SYSTEM OR OTHER "SURVEYS" OF PUBLIC RECORD.

EXISTING ACCESS CONTROL FOR STATE HIGHWAY 50 IS BASED ON PREVIOUS RIGHT OF WAY PROJECT 1315-00-22.

VILLAGE OF PADDOCK LAKE

COURSE TABLE					
700-701	S57° 58' 35"E	57.43'	717-718	S61° 54' 36"E	23.89'
701-702	N89° 44' 06"E	101.50'	718-719	N89° 19' 29"E	317.77'
702-703	N00° 15' 26"W	23.50'	719-720	S89° 32' 10"E	75.45'
703-704	N89° 44' 06"E	306.94'	720-721	N89° 19' 29"E	35.28'
704-705	S00° 15' 51"E	20.00'	721-722	S00° 13' 51"E	1.50'
705-706	N89° 44' 06"E	43.06'	723-724	S00° 13' 34"E	1.50'
706-707	N00° 17' 36"W	2.50'	724-725	S89° 19' 29"W	338.42'
707-708	N89° 44' 06"E	11.94'	725-726	S78° 00' 16"W	10.19'
708-709	S00° 15' 51"E	6.00'	726-727	S89° 19' 29"W	50.77'
709-710	N89° 44' 06"E	145.00'	727-728	S00° 27' 22"E	6.50'
710-711	N00° 15' 51"W	5.00'	728-729	S89° 19' 29"W	34.88'
711-712	N89° 44' 06"E	15.00'	729-730	S00° 40' 55"E	40.03'
712-713	S00° 15' 51"E	5.00'	730-731	S89° 26' 42"W	55.69'
713-714	N89° 44' 06"E	31.22'	731-732	N00° 15' 51"W	34.79'
714-740	N84° 57' 04"E	18.85'	732-733	N59° 33' 33"W	23.38'
740-715	S89° 50' 07"E	28.06'	733-734	S89° 44' 06"W	196.78'
715-716	N81° 29' 31"E	50.54'	734-735	N89° 07' 56"W	75.89'
716-717	N84° 07' 09"E	50.24'	735-736	S89° 44' 06"W	498.21'
			736-737	S60° 48' 46"W	41.90'

REVISION DATE 11/11/2020	DATE August 5, 2020	SCALE, FEET 0 50 100	HWY: STH 50	R/W PROJECT NUMBER 1310-04-20	PLAT SHEET 4.07
	GRID FACTOR N/A		COUNTY: KENOSHA	CONSTRUCTION PROJECT NUMBER 1310-04-70	PS&E SHEET 596 E

FILE NAME : V:\SURVEY\WK\76-0103.00 75TH ST-VILLAGE OF PADDOCK LAKE-STH50_1310-04-00\CADD\C3D\RW\RW PLAT SHEETS\13100420_0407_RP.DWG
LAYOUT NAME - 4.07
PLOT DATE : 3/9/2021 9:59 AM PLOT BY : LARSON, BENJAMIN PLOT NAME : PLOT SCALE : 1 IN:100 FT

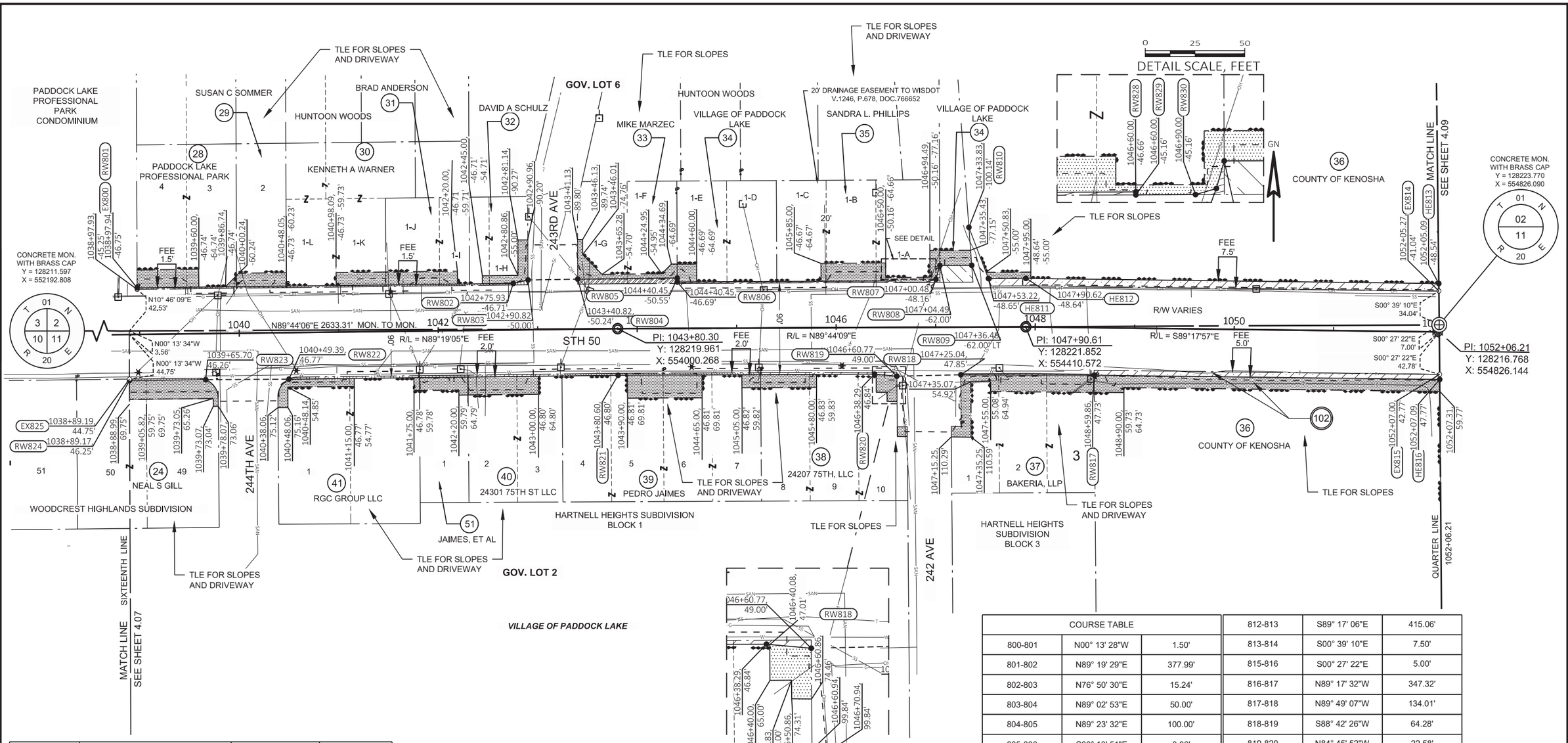

HWY	BASIS OF EXISTING R/W	R/W WIDTH	YEAR
STH 50	PROJECT 1315-00-22	VARIES	1986
244TH AVE	WOODCREAST HEIGHTS	60'	1951
243RD AVE	HUNTOON WOODS	50'	1925
242ND AVE	HARTNELL HEIGHTS SUBDIVISION	40'	1925

NOTES:

POSITIONS SHOWN ON THIS PLAT ARE WISCONSIN COORDINATE REFERENCE SYSTEM COORDINATES (WISCRS), KENOSHA COUNTY, NAD83(2007) IN US SURVEY FEET. VALUES SHOWN ARE GRID COORDINATES, GRID BEARINGS, AND GRID DISTANCES. GRID DISTANCES MAY BE USED AS GROUND DISTANCES.

RIGHT-OF-WAY BOUNDARIES ARE DEFINED WITH COURSES OF THE PERIMETER OF THE HIGHWAY LANDS REFERENCED TO THE U.S. PUBLIC LAND SURVEY SYSTEM OR OTHER "SURVEYS" OF PUBLIC RECORD.

EXISTING ACCESS CONTROL FOR STATE HIGHWAY 50 IS BASED ON PREVIOUS RIGHT OF WAY PROJECT 1315-00-22.

COURSE TABLE		
800-801	N00° 13' 28"W	1.50'
801-802	N89° 19' 29"E	377.99'
802-803	N76° 50' 30"E	15.24'
803-804	N89° 02' 53"E	50.00'
804-805	N89° 23' 32"E	100.00'
805-806	S00° 13' 51"E	3.86'
806-828	N89° 44' 34"E	219.55'
828-829	S00° 15' 51"E	1.50'
829-830	N89° 44' 34"E	30.00'
830-807	N73° 46' 03"E	10.90'
807-808	N15° 52' 57"E	14.41'
808-809	N89° 44' 09"E	31.99'
809-810	N04° 14' 11"W	38.23'
810-811	S20° 53' 38"E	55.03'
811-812	N89° 44' 34"E	37.63'
812-813	S89° 17' 06"E	415.06'
813-814	S00° 39' 10"E	7.50'
815-816	S00° 27' 22"E	5.00'
816-817	N89° 17' 32"W	347.32'
817-818	N89° 49' 07"W	134.01'
818-819	S88° 42' 26"W	64.28'
819-820	N84° 45' 52"W	22.58'
820-821	S89° 44' 34"W	257.69'
821-822	S89° 19' 29"W	330.87'
822-823	S89° 40' 02"W	83.69'
823-824	S89° 19' 29"W	76.61'
824-825	N00° 13' 34"W	1.50'

REVISION DATE 11/11/2020 03/08/2021	DATE August 5, 2020	SCALE, FEET 0 50 100	HWY: STH 50	R/W PROJECT NUMBER 1310-04-20	PLAT SHEET 4.08
	GRID FACTOR N/A		COUNTY: KENOSHA	CONSTRUCTION PROJECT NUMBER 1310-04-70	PS&E SHEET 597 E

FILE NAME : V:\SURVEY\WK\76-0103.00 75TH ST-VILLAGE OF PADDOCK LAKE-STH50_1310-04-00\CADD\C3D\RW\RW PLAT SHEETS\13100420_0408_RP.DWG
LAYOUT NAME - 4.08
PLOT DATE : 3/9/2021 11:11 AM PLOT BY : LARSON, BENJAMIN PLOT NAME : PLOT SCALE : 1 IN:100 FT

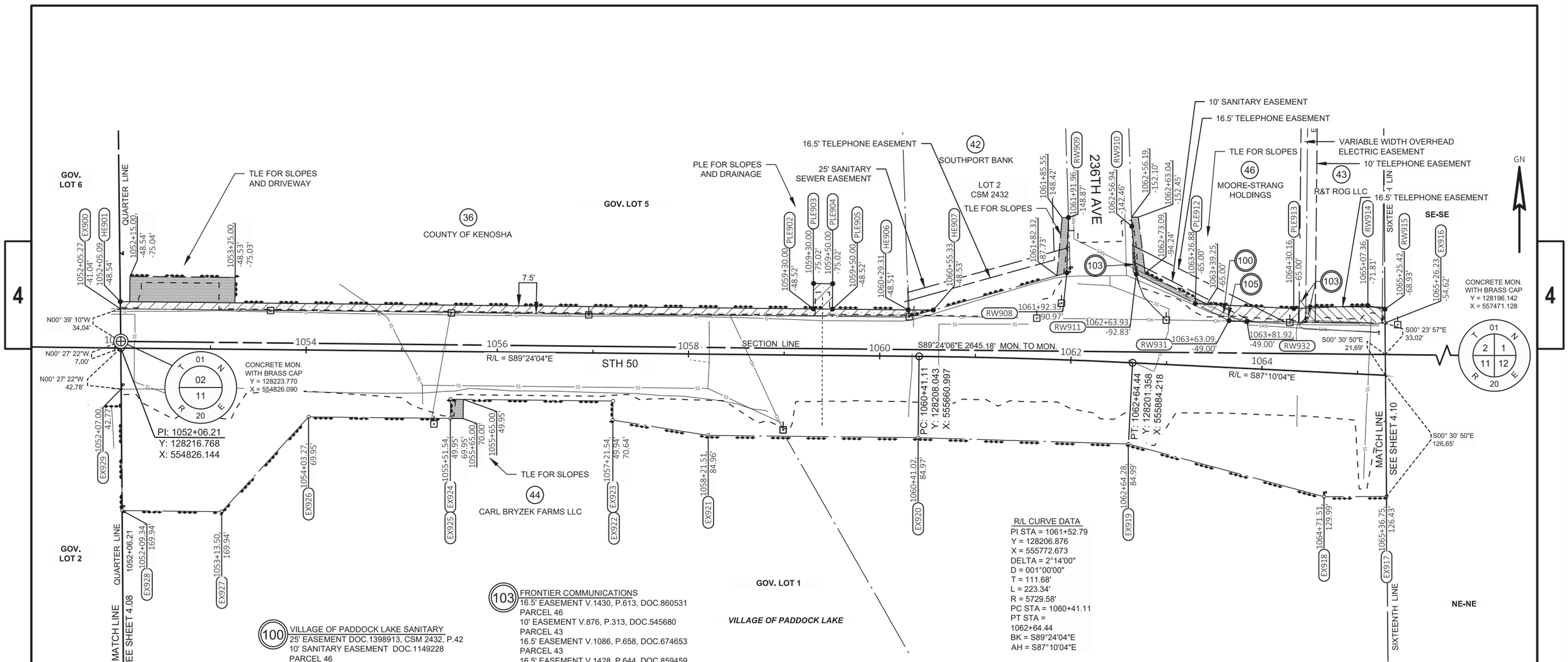

100 VILLAGE OF PADDOCK LAKE SANITARY
25' EASEMENT DOC.1398913, CSM 2432, P.42
10' SANITARY EASEMENT DOC.1149228
PARCEL 46

101 WE ENERGIES - ELECTRIC
ELECTRIC EASEMENT V.519, P.567, DOC.406151
PARCEL 46

103 FRONTIER COMMUNICATIONS
16.5' EASEMENT V.1430, P.613, DOC.860531
PARCEL 46
10' EASEMENT V.876, P.313, DOC.545680
PARCEL 43
16.5' EASEMENT V.1086, P.658, DOC.674653
PARCEL 43
16.5' EASEMENT V.1428, P.644, DOC.859459
PARCEL 42

105 WE ENERGIES - GAS
NO RECORD OF EASEMENT
PARCEL 46

HWY	BASIS OF EXISTING R/W	R/W WIDTH	YEAR
STH 50	PROJECT 1315-00-22	VARIES	1986
236TH AVE	CSM 2432	66'	2004

NOTES:

POSITIONS SHOWN ON THIS PLAT ARE WISCONSIN COORDINATE REFERENCE SYSTEM COORDINATES (WISCRS), KENOSHA COUNTY, NAD83(2007) IN US SURVEY FEET. VALUES SHOWN ARE GRID COORDINATES, GRID BEARINGS, AND GRID DISTANCES. GRID DISTANCES MAY BE USED AS GROUND DISTANCES.

RIGHT-OF-WAY BOUNDARIES ARE DEFINED WITH COURSES OF THE PERIMETER OF THE HIGHWAY LANDS REFERENCED TO THE U.S. PUBLIC LAND SURVEY SYSTEM OR OTHER "SURVEYS" OF PUBLIC RECORD.

EXISTING ACCESS CONTROL FOR STATE HIGHWAY 50 IS BASED ON PREVIOUS RIGHT OF WAY PROJECT 1315-00-22.

COURSE TABLE			911-912	S63° 19' 31"E	68.84'	924-925	S00° 36' 05"W	20.00'
900-901	N00° 39' 10"W	7.50'	912-913	S87° 10' 04"E	103.28'	925-926	N89° 23' 55"W	148.27'
901-902	S89° 23' 59"E	724.82'	913-914	N87° 47' 17"E	77.50'	926-927	S42° 30' 50"W	134.38'
902-903	N00° 35' 56"E	26.50'	914-915	S78° 05' 19"E	18.29'	927-928	N89° 23' 55"W	104.16'
903-904	S89° 23' 59"E	20.00'	915-916	S00° 23' 57"E	14.33'	928-929	N00° 27' 22"W	127.19'
904-905	S00° 35' 56"W	26.50'	917-918	S89° 42' 43"W	65.34'	912-931	S63° 19' 31"E	39.58'
905-906	S89° 23' 59"E	79.31'	918-919	N74° 54' 52"W	212.06'	931-932	S87° 10' 04"E	18.84'
906-907	S89° 23' 59"E	26.15'	919-920	N88° 16' 56"W	219.93'	932-916	N89° 23' 55"W	144.42'
907-908	N74° 24' 41"E	145.03'	920-921	N89° 23' 55"W	219.51'			
908-909	N01° 42' 33"E	57.90'	921-922	N80° 52' 04"W	101.12'			
909-910	S82° 04' 35"E	66.94'	922-923	N00° 41' 21"E	20.00'			
910-911	S05° 23' 010"E	50.15'	923-924	N89° 23' 55"W	170.00'			

REVISION DATE 11/11/2020	DATE August 5, 2020	SCALE, FEET 0 50 100	HWY: STH 50	R/W PROJECT NUMBER 1310-04-20	PLAT SHEET 4.09	
	GRID FACTOR N/A		COUNTY: KENOSHA	CONSTRUCTION PROJECT NUMBER 1310-04-70	PS&E SHEET 598	E

FILE NAME : V:\SURVEY\WK\76-0103.00 75TH ST-VILLAGE OF PADDOCK LAKE-STH50_1310-04-00\CADD\C3D\RW\RW PLAT SHEETS\13100420_0409_RP.DWG
LAYOUT NAME - 4.09
PLOT DATE : 3/9/2021 9:57 AM PLOT BY : LARSON, BENJAMIN PLOT NAME : PLOT SCALE : 1 IN:100 FT
WISDOT/CADDS SHEET 75

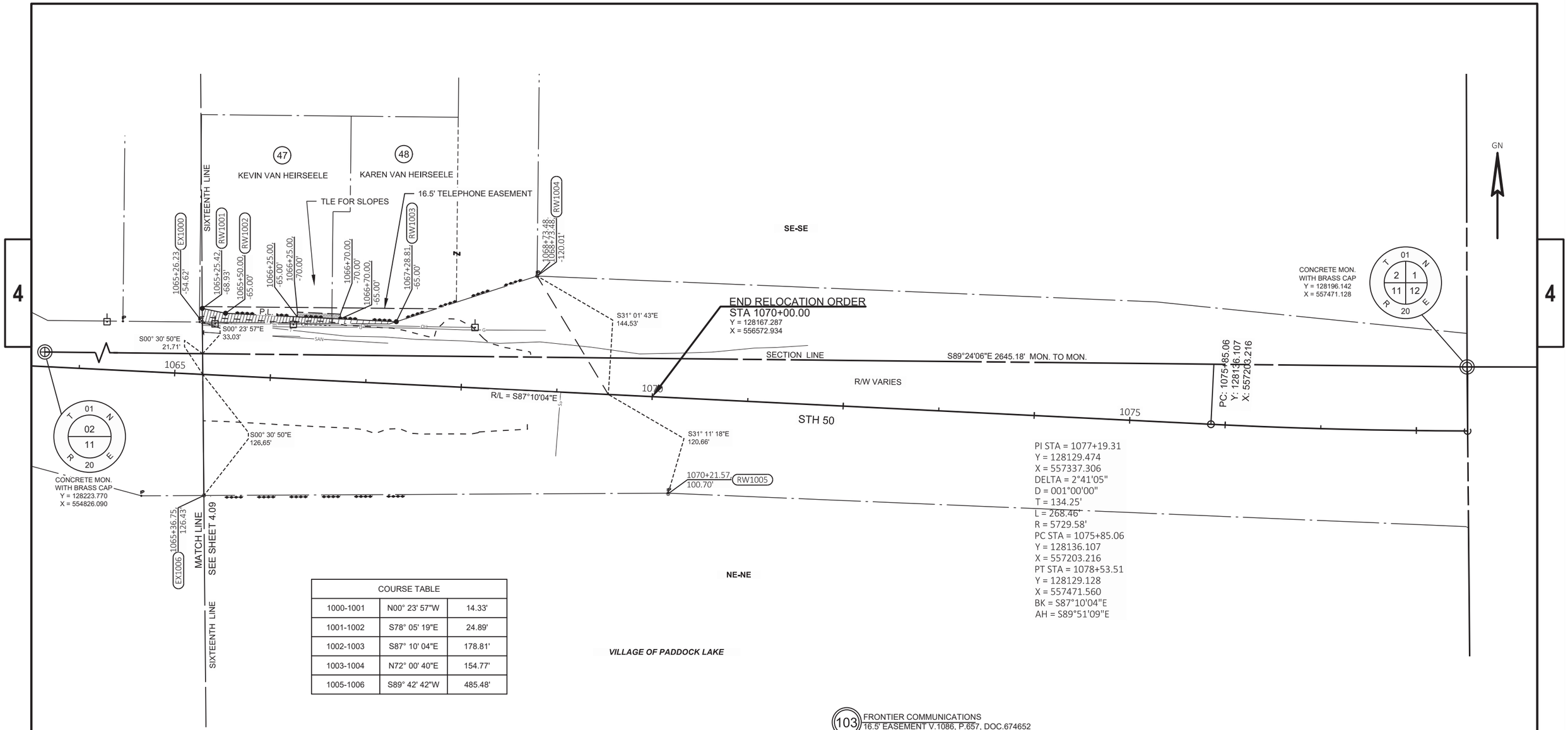

COURSE TABLE		
1000-1001	N00° 23' 57"W	14.33'
1001-1002	S78° 05' 19"E	24.89'
1002-1003	S87° 10' 04"E	178.81'
1003-1004	N72° 00' 40"E	154.77'
1005-1006	S89° 42' 42"W	485.48'

HWY	BASIS OF EXISTING R/W	R/W WIDTH	YEAR
STH 50	PROJECT 1315-00-22	VARIES	

NOTES:

POSITIONS SHOWN ON THIS PLAT ARE WISCONSIN COORDINATE REFERENCE SYSTEM COORDINATES (WISCRS), KENOSHA COUNTY, NAD83(2007) IN US SURVEY FEET. VALUES SHOWN ARE GRID COORDINATES, GRID BEARINGS, AND GRID DISTANCES. GRID DISTANCES MAY BE USED AS GROUND DISTANCES.

RIGHT-OF-WAY BOUNDARIES ARE DEFINED WITH COURSES OF THE PERIMETER OF THE HIGHWAY LANDS REFERENCED TO THE U.S. PUBLIC LAND SURVEY SYSTEM OR OTHER "SURVEYS" OF PUBLIC RECORD.

EXISTING ACCESS CONTROL FOR STATE HIGHWAY 50 IS BASED ON PREVIOUS RIGHT OF WAY PROJECT 1315-00-22.

REVISION DATE 11/11/2020	DATE August 5, 2020	SCALE, FEET 0 50 100	HWY: STH 50	R/W PROJECT NUMBER 1310-04-20	PLAT SHEET 4.10
	GRID FACTOR N/A		COUNTY: KENOSHA	CONSTRUCTION PROJECT NUMBER 1310-04-70	PS&E SHEET 599 E

FILE NAME : V:\SURVEY\WK\76-0103.00 75TH ST-VILLAGE OF PADDOCK LAKE-STH50_1310-04-00\CADD\C3D\RW\RW PLAT SHEETS\13100420_0410_RP.DWG
LAYOUT NAME - 4.10
PLOT DATE : 3/9/2021 9:56 AM PLOT BY : LARSON, BENJAMIN PLOT NAME : PLOT SCALE : 1 IN:100 FT
WISDOT/CADDS SHEET 75

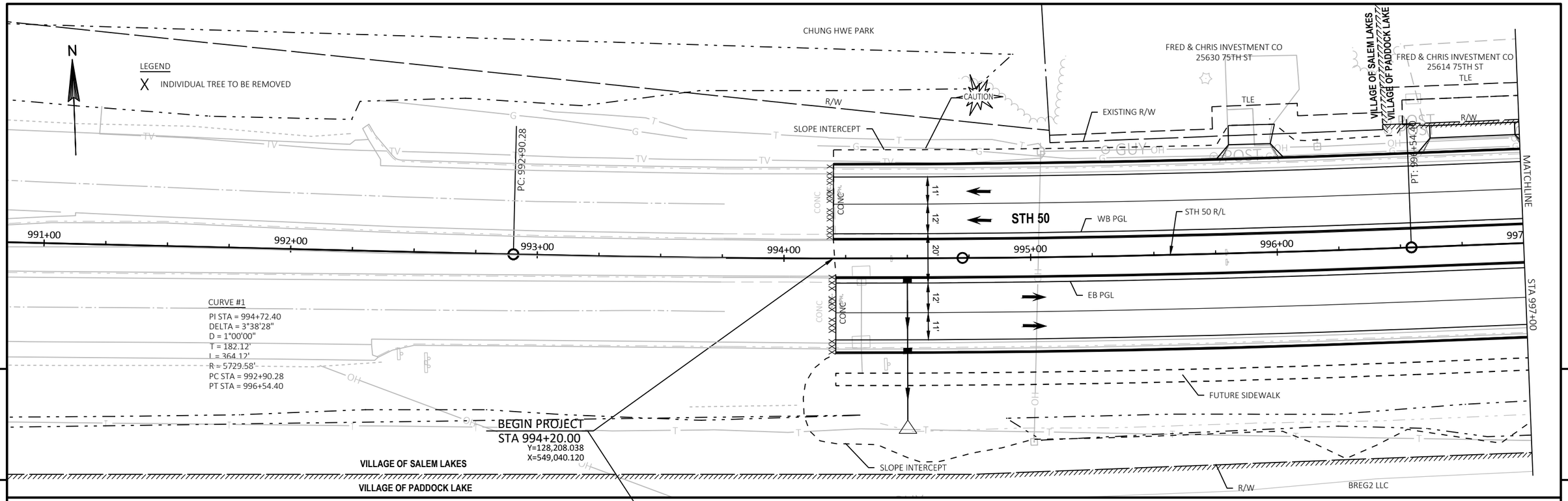

PROJECT NO: 1310-04-70	HWY: STH 50	COUNTY: KENOSHA	PLAN AND PROFILE: STH 50	SHEET 600	E

FILE NAME : T:\1182708.06\CIVIL3D\13100400\13100400\SHEETSPLAN\050101_PP.DWG
LAYOUT NAME - PP_01

PLOT DATE : 3/17/2022 10:38 PM PLOT BY : BLACKWOOD, JIM PLOT NAME : PLOT SCALE : 1 IN:40 FT

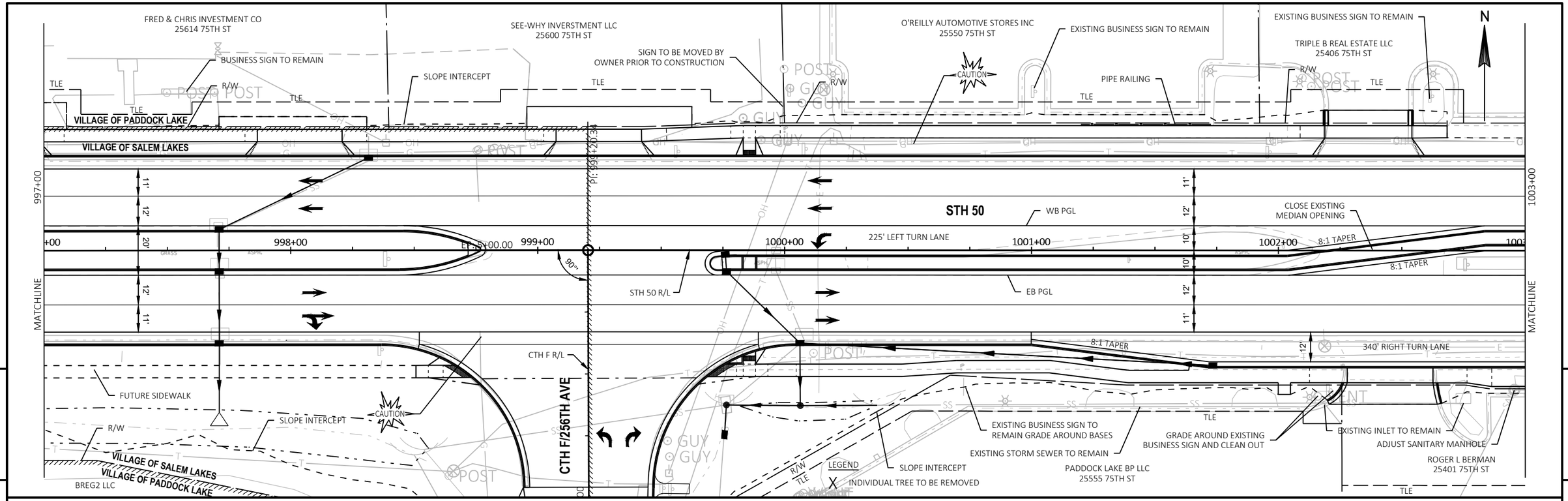

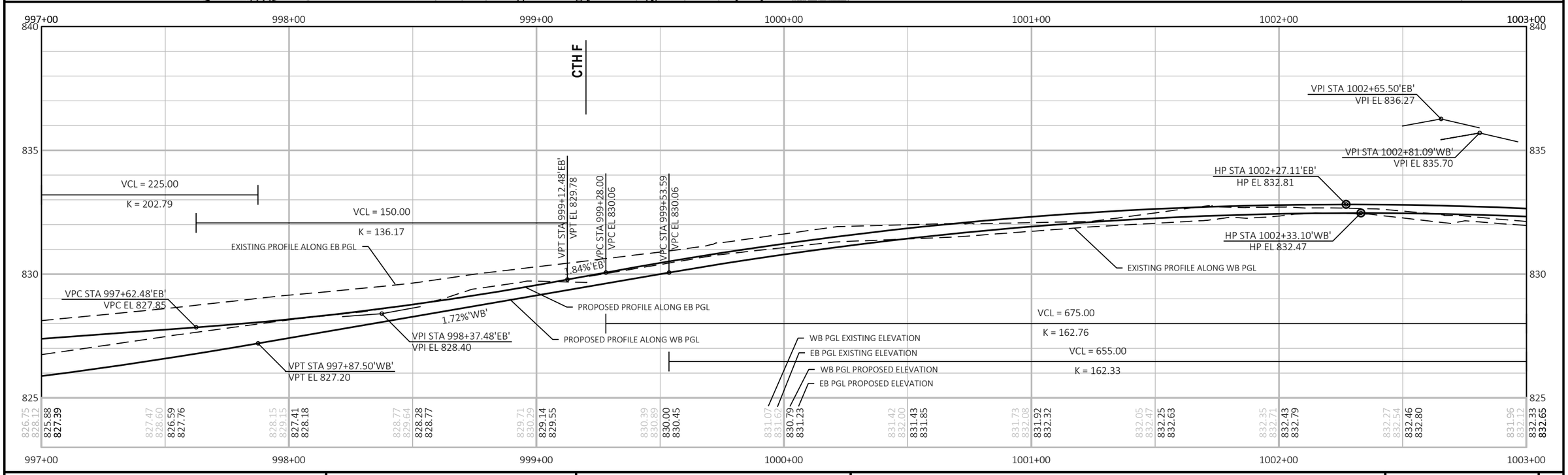

PROJECT NO: 1310-04-70	HWY: STH 50	COUNTY: KENOSHA	PLAN AND PROFILE: STH 50	SHEET 601	E

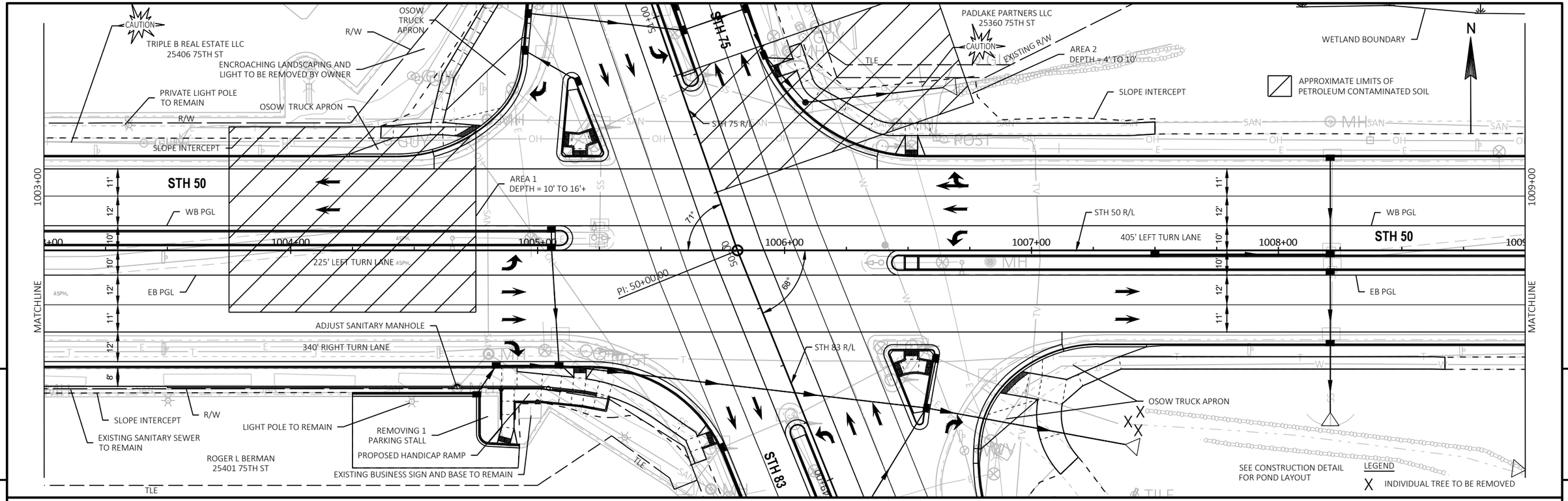

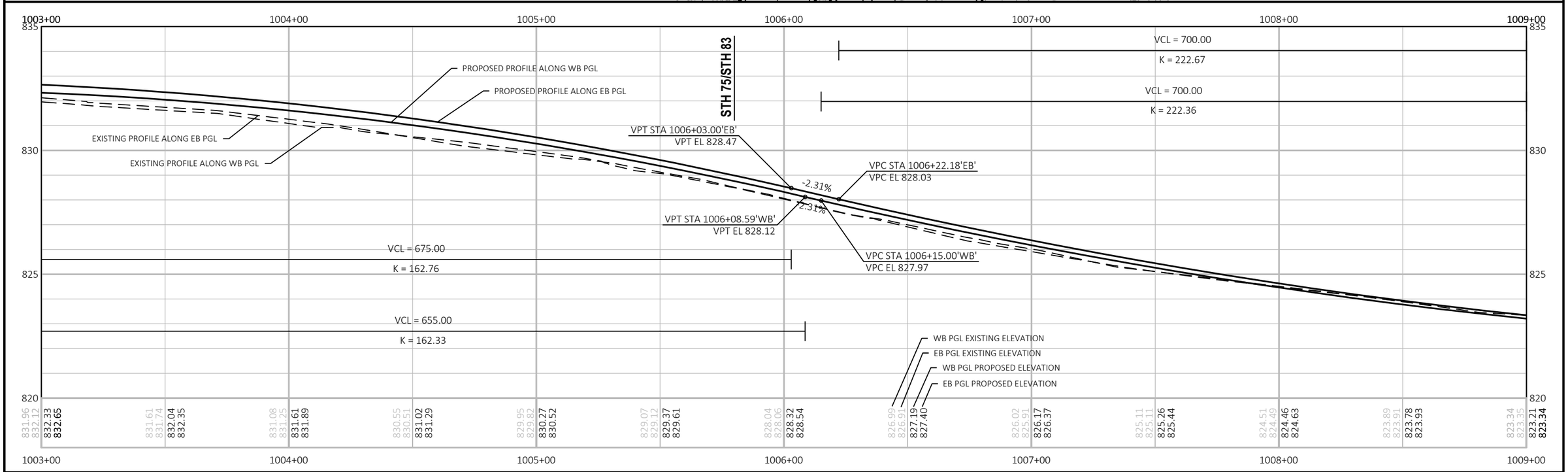

PROJECT NO: 1310-04-70	HWY: STH 50	COUNTY: KENOSHA	PLAN AND PROFILE: STH 50	SHEET 602	E

FILE NAME : T:\1182708.06\CIVIL3D\13100400\13100400\SHEETSPLAN\050101_PP.DWG
LAYOUT NAME - PP_03

PLOT DATE : 3/17/2022 10:38 PM PLOT BY : BLACKWOOD, JIM PLOT NAME : PLOT SCALE : 1 IN:40 FT

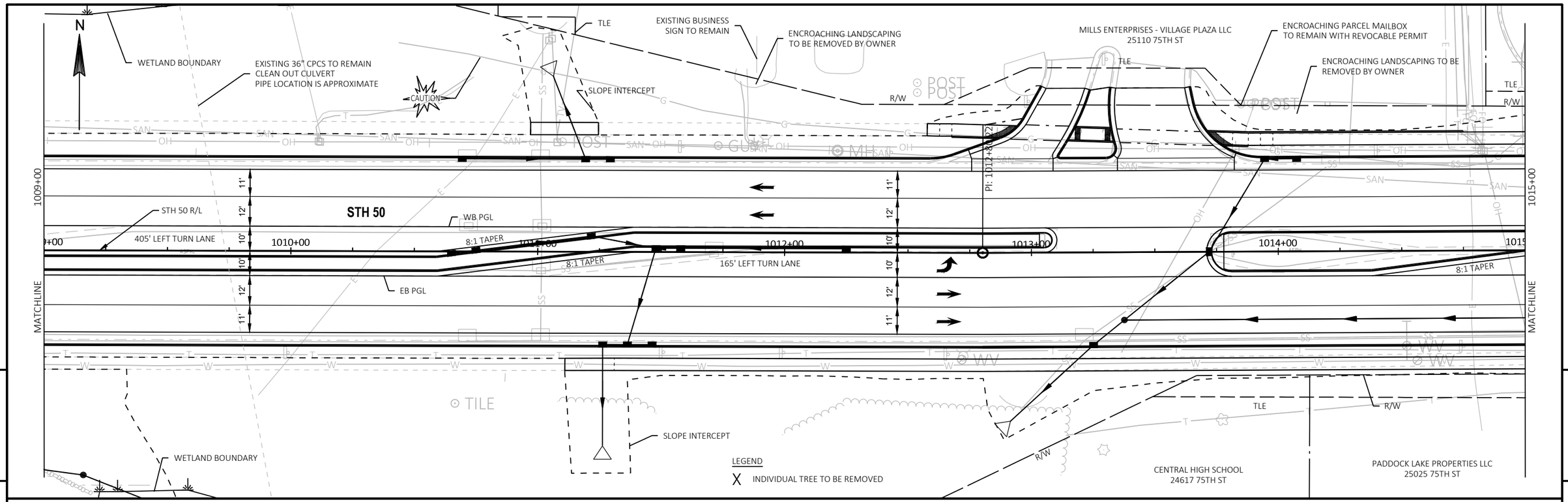

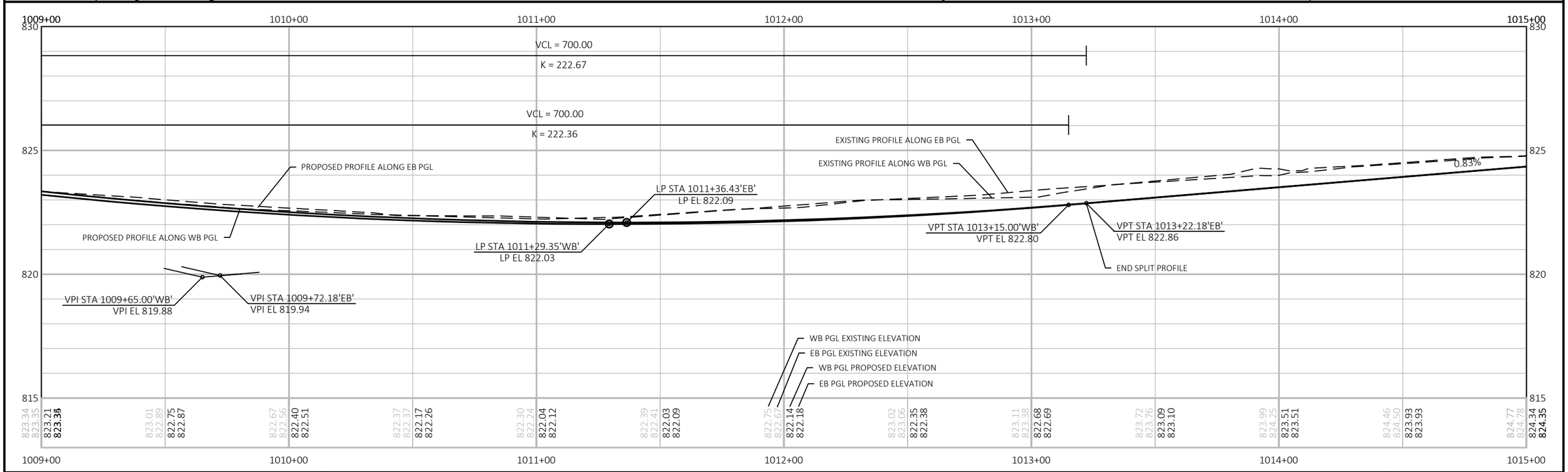

PROJECT NO: 1310-04-70	HWY: STH 50	COUNTY: KENOSHA	PLAN AND PROFILE: STH 50	SHEET 603	E

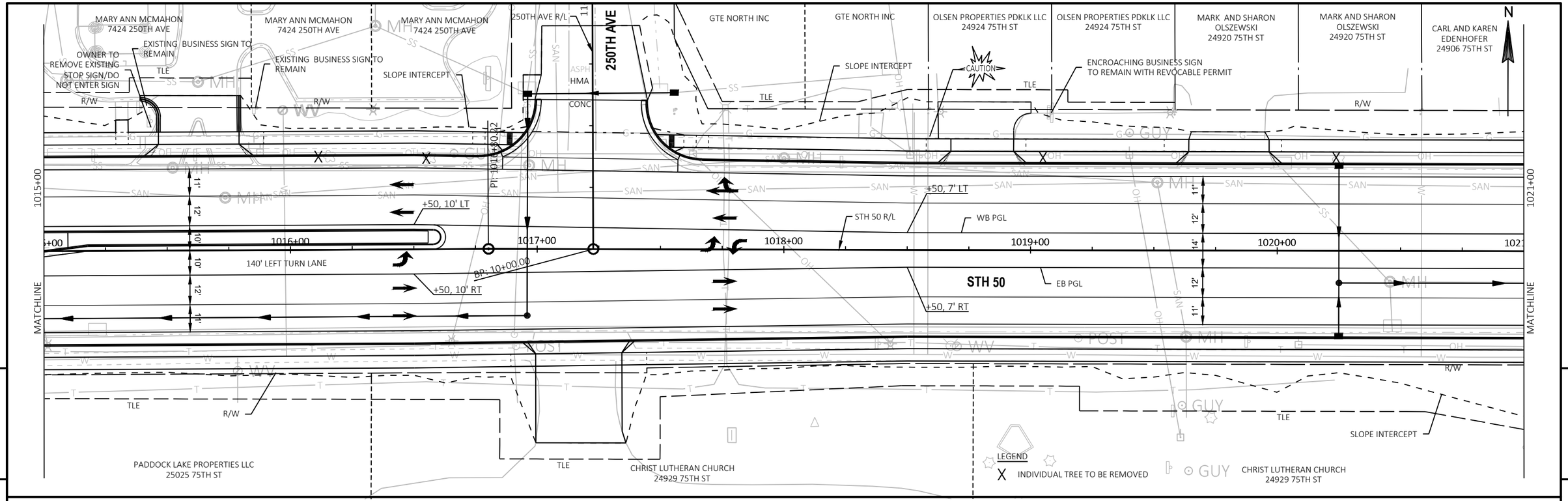

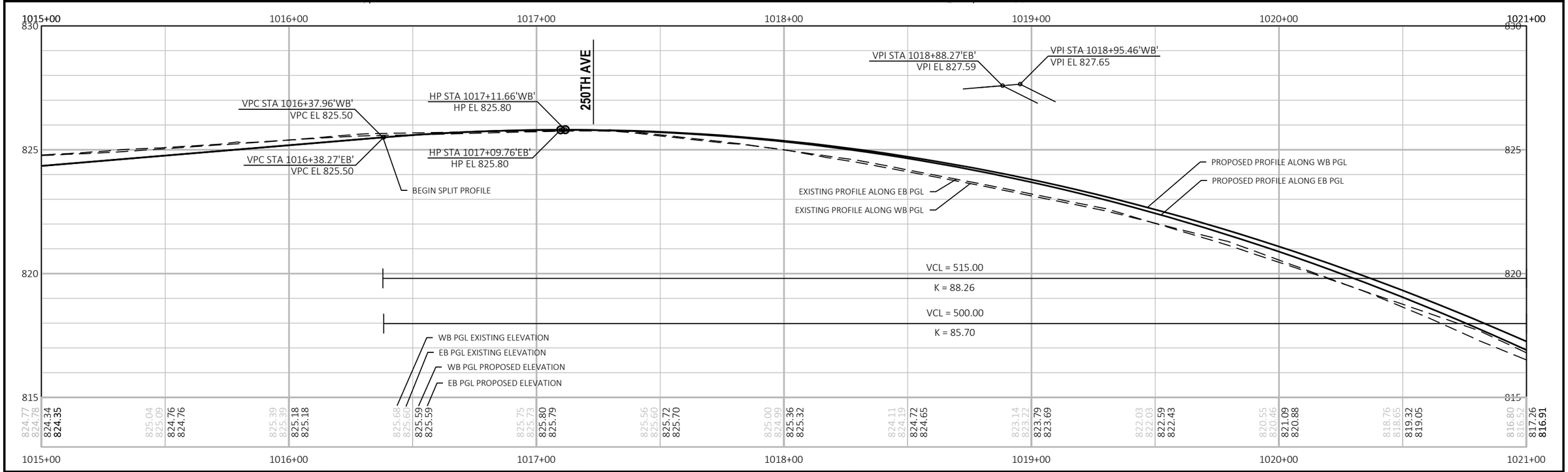

PROJECT NO: 1310-04-70	HWY: STH 50	COUNTY: KENOSHA	PLAN AND PROFILE: STH 50	SHEET 604	E

FILE NAME : T:\1182708.06\CIVIL3D\13100400\13100400\SHEETSPLAN\050101_PP.DWG
LAYOUT NAME - PP_05

PLOT DATE : 3/17/2022 10:39 PM PLOT BY : BLACKWOOD, JIM PLOT NAME : PLOT SCALE : 1 IN:40 FT

WISDOT/CADDS SHEET 44

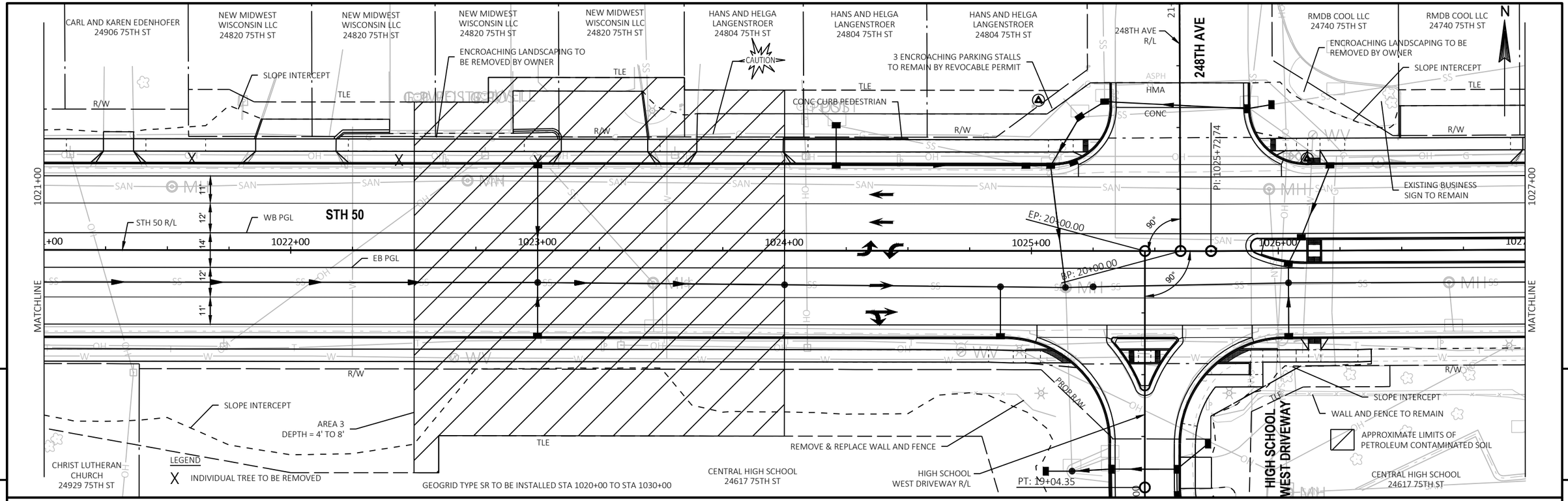

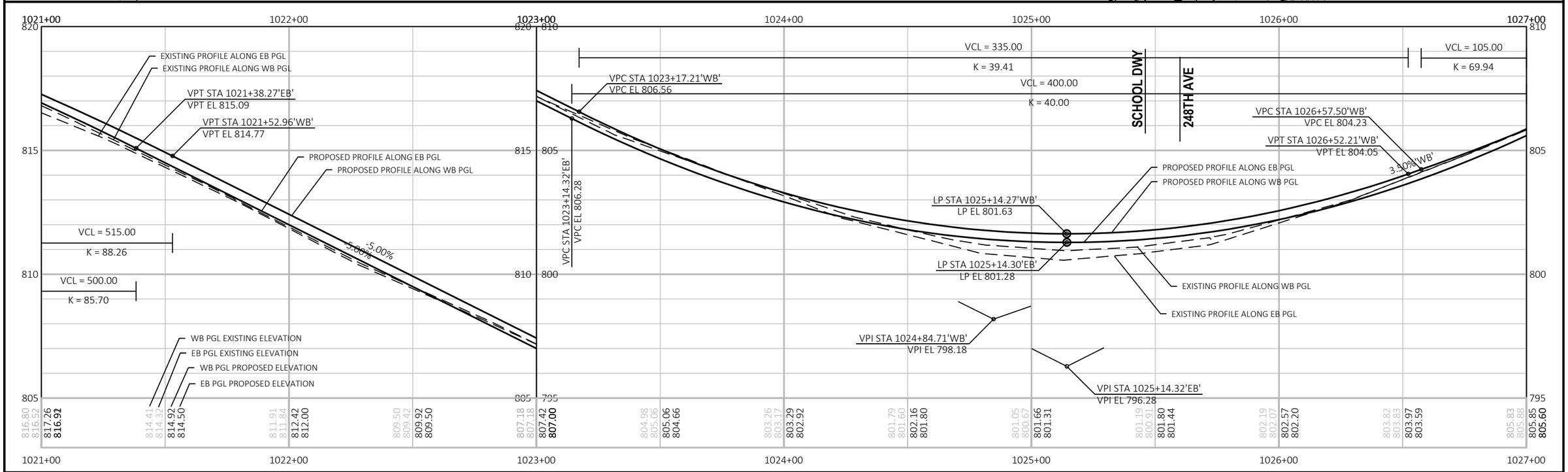

PROJECT NO: 1310-04-70	HWY: STH 50	COUNTY: KENOSHA	PLAN AND PLOTTING: STH 50	SHEET 605	E

RMDB COOL LLC
24740 75TH ST

J A BECKER PROPERTIES LLC
24708 75TH ST

J A BECKER PROPERTIES LLC
24708 75TH ST

J A BECKER PROPERTIES LLC
24708 75TH ST

J A BECKER PROPERTIES LLC
24708 75TH ST

RICHARD AND JAYNE BENSON
24706 75TH ST

RICHARD AND JAYNE BENSON
24706 75TH ST

RICHARD AND JAYNE BENSON
24706 75TH ST

REALTY INCOME
PROPERTIES 6 LLC
24616 75TH ST

REALTY INCOME
PROPERTIES 6 LLC
24616 75TH ST

REALTY INCOME
PROPERTIES 6 LLC
24616 75TH ST

REALTY INCOME
PROPERTIES 6 LLC
24616 75TH ST

N

R/W
TLE
PLE
R-30-71
(SEE STRUCTURE PLAN)
BUSINESS SIGN TO BE
REMOVE BY OWNER
TRENCH DRAIN
(SEE CONSTRUCTION DETAIL)
SLOPE INTERCEPT
BUSINESS SIGN TO BE
REMOVED BY OWNER
R-30-70
(SEE STRUCTURE
PLAN)
TRENCH DRAIN
(SEE CONSTRUCTION
DETAIL)
TRENCH DRAIN
(SEE CONSTRUCTION DETAIL)
12" SURFACE DRAIN
PARKING LOT CURB
(SEE CONSTRUCTION DETAIL)
CAUTION
BUSINESS SIGN TO REMAIN

1027+00
1033+00
MATCHLINE

PIPE UNDERDRAIN UNPERFORATED 8-INCH
PIPE UNDERDRAIN UNPERFORATED
8-INCH
STH 50
WB PGL
STH 50 R/L
EB PGL
PIPE UNDERDRAIN UNPERFORATED 6-INCH
+00, 7' LT
POSSIBLE CONTAMINATED SOIL AREA
DEPTH UNKOWN
+00, 9' LT
+00, 7' RT
+00, 9' RT
6:1 TAPER
125' LEFT
TURN LANE
11'
12'
14'
8'
10'

+00
1028+00
1029+00
1030+00
1031+00
1032+00

SLOPE INTERCEPT
R/W
TLE

GEOGRID TYPE SR TO BE INSTALLED STA 1020+00 TO STA 1030+00

LEGEND
INDIVIDUAL TREE TO BE REMOVED

CENTRAL HIGH SCHOOL
24617 75TH ST

5

5

1027+00 1028+00 1029+00 1030+00 1031+00 1032+00 1033+00

VCL = 105.00
K = 69.94
VCL = 400.00
K = 40.00
VPT STA 1027+62.50'WB'
VPT EL 808.70
5.00%
PROPOSED PROFILE ALONG EB & WB PGL
EXISTING PROFILE ALONG EB PGL
EXISTING PROFILE ALONG WB PGL
END SPLIT PROFILE
VPT STA 1027+14.32'EB'
VPT EL 806.29
VPI STA 1027+10.00'WB'
VPI EL 806.07
VPC STA 1028+52.50
VPC EL 813.20
VPI STA 1030+15.00
VPI EL 821.32
0.58%
VPT STA 1031+77.50
VPT EL 822.27
VCL = 325.00
K = 73.58
WB PGL EXISTING ELEVATION
EB PGL EXISTING ELEVATION
WB PGL PROPOSED ELEVATION
EB PGL PROPOSED ELEVATION

815 810 805 800 825 820 815 810

1027+00	1028+00	1029+00	1030+00	1031+00	1032+00
805.83 / 805.85 / 805.60	808.11 / 808.20 / 808.08 / 808.07	810.60 / 810.69 / 810.57 / 810.57	812.97 / 813.02 / 813.07 / 813.07	815.22 / 815.29 / 815.42 / 815.42	817.23 / 817.25 / 817.43 / 817.43
818.96 / 818.83 / 819.10 / 819.10	820.29 / 820.29 / 820.42 / 820.42	821.43 / 821.48 / 821.41 / 821.41	822.27 / 822.26 / 822.06 / 822.06	822.77 / 822.74 / 822.40 / 822.41	823.17 / 823.11 / 822.70 / 822.70
823.50	822.99				

PROJECT NO: 1310-04-70	HWY: STH 50	COUNTY: KENOSHA	PLAN AND PROFILE: STH 50	SHEET 606	E

FILE NAME : T:\1182708.06\CIVIL3D\13100400\13100400\SHEETSPLAN\050101_PP.DWG
LAYOUT NAME - PP_07

PLOT DATE : 3/17/2022 10:39 PM PLOT BY : BLACKWOOD, JIM PLOT NAME : PLOT SCALE : 1 IN:40 FT

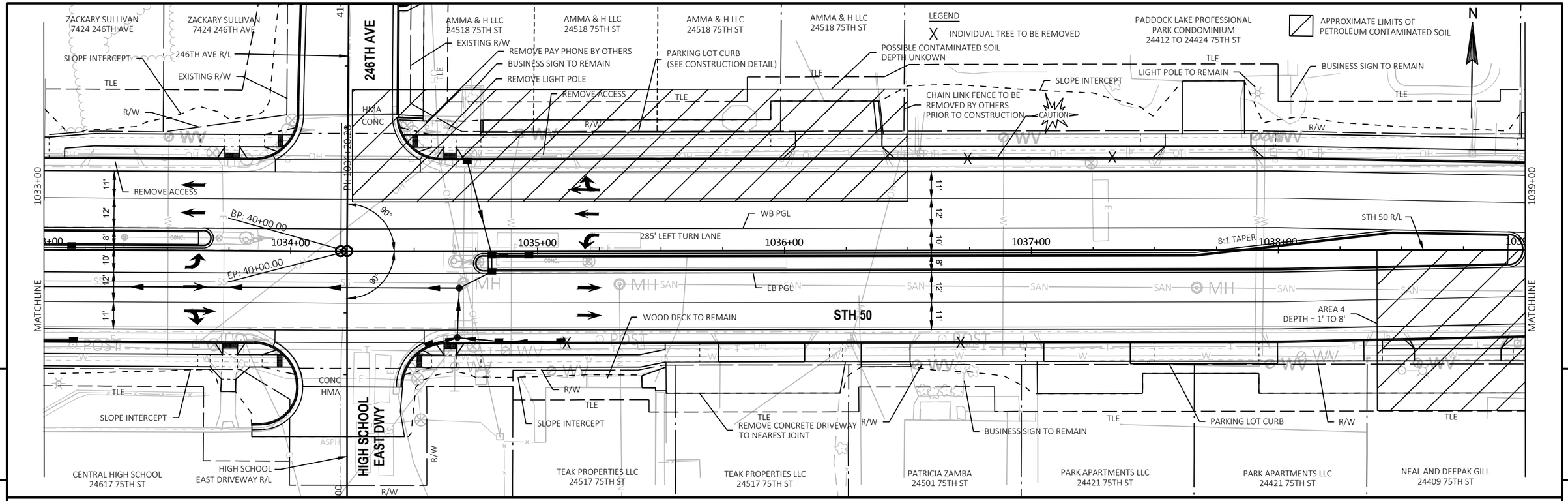

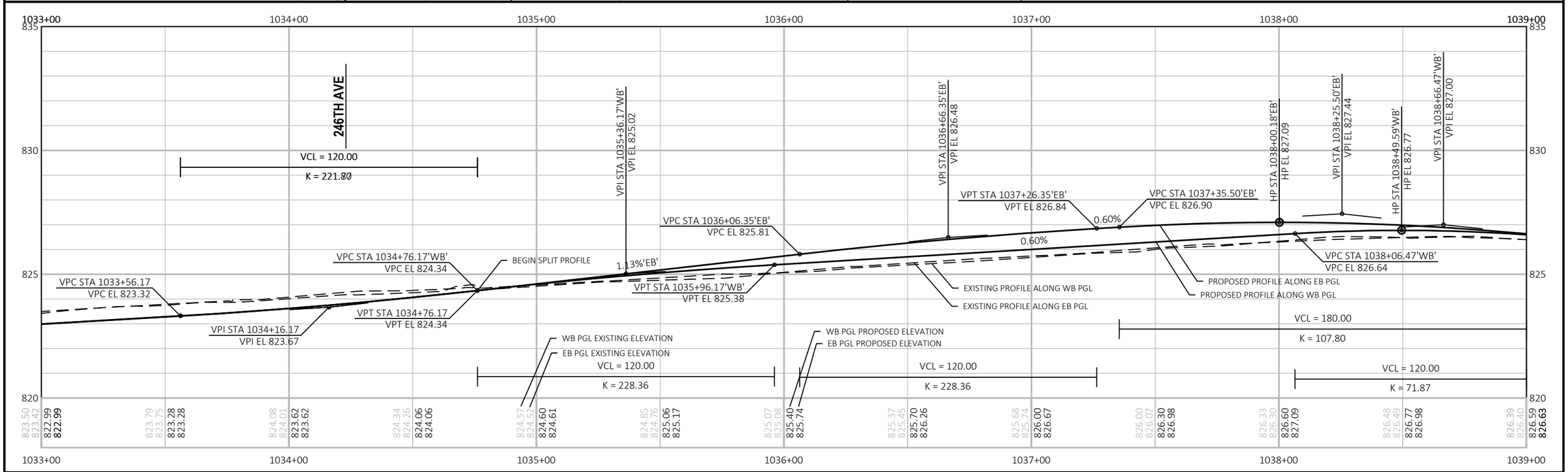

PROJECT NO: 1310-04-70	HWY: STH 50	COUNTY: KENOSHA	PLAN AND PROFILE: STH 50	SHEET 607	E

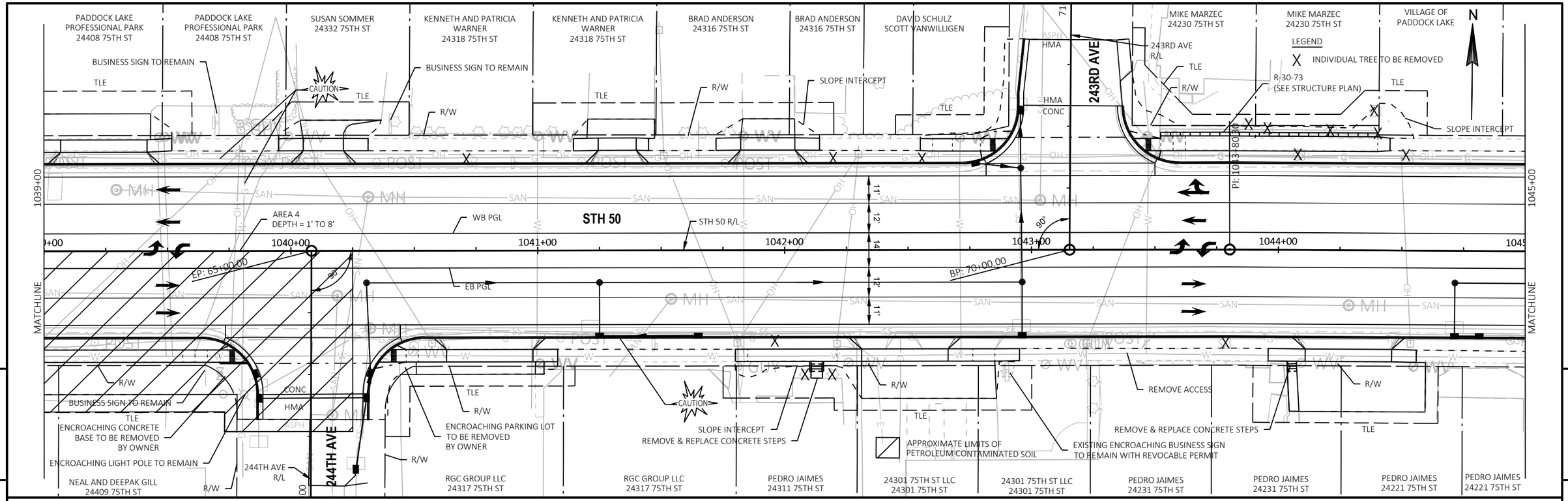

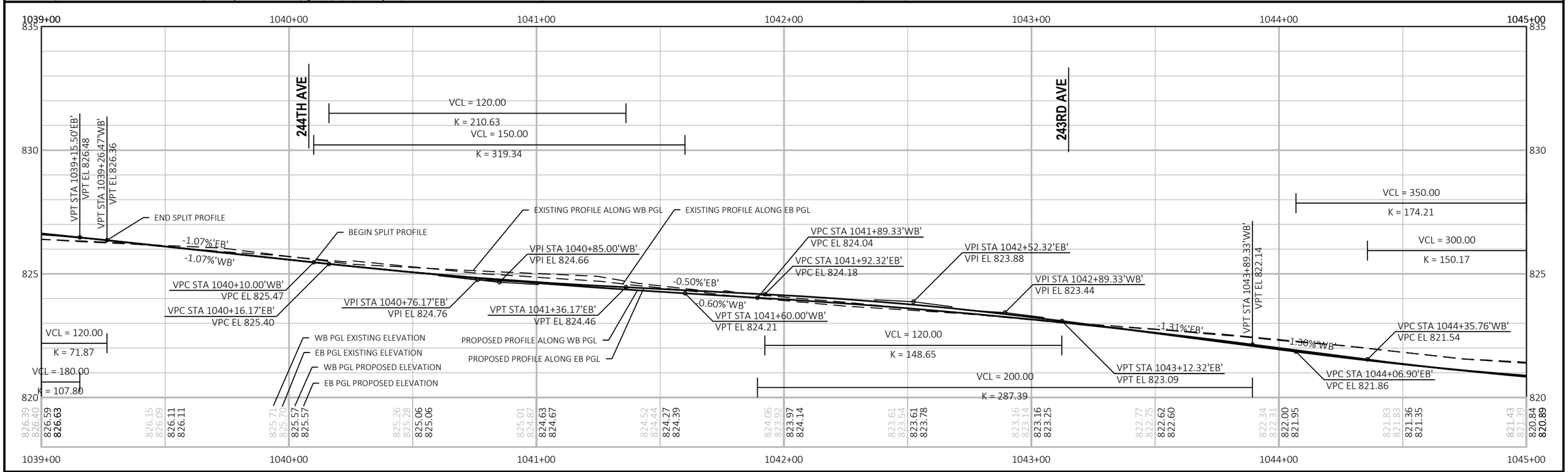

PROJECT NO: 1310-04-70	HWY: STH 50	COUNTY: KENOSHA	PLAN AND PROFILE: STH 50	SHEET 608	E

FILE NAME : T:\1182708.06\CIVIL3D\13100400\13100400\SHEETSPLAN\050101_PP.DWG
LAYOUT NAME - PP_09
PLOT DATE : 3/17/2022 10:39 PM
PLOT BY : BLACKWOOD, JIM
PLOT NAME :
PLOT SCALE : 1 IN:40 FT
WISDOT/CADDS SHEET 44

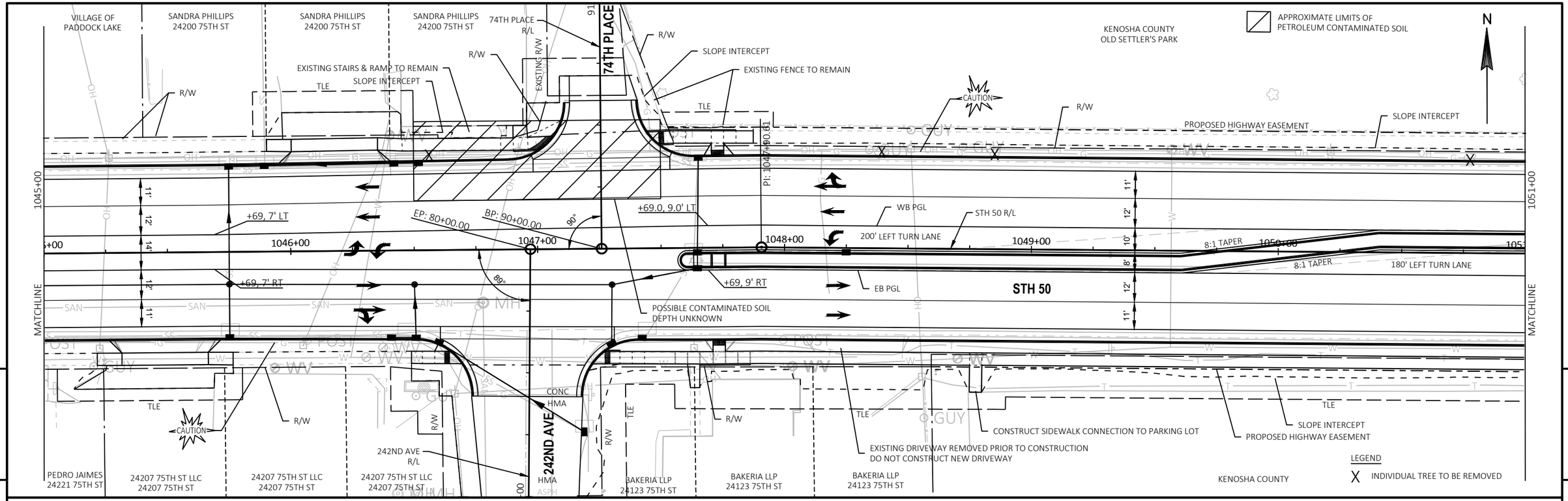

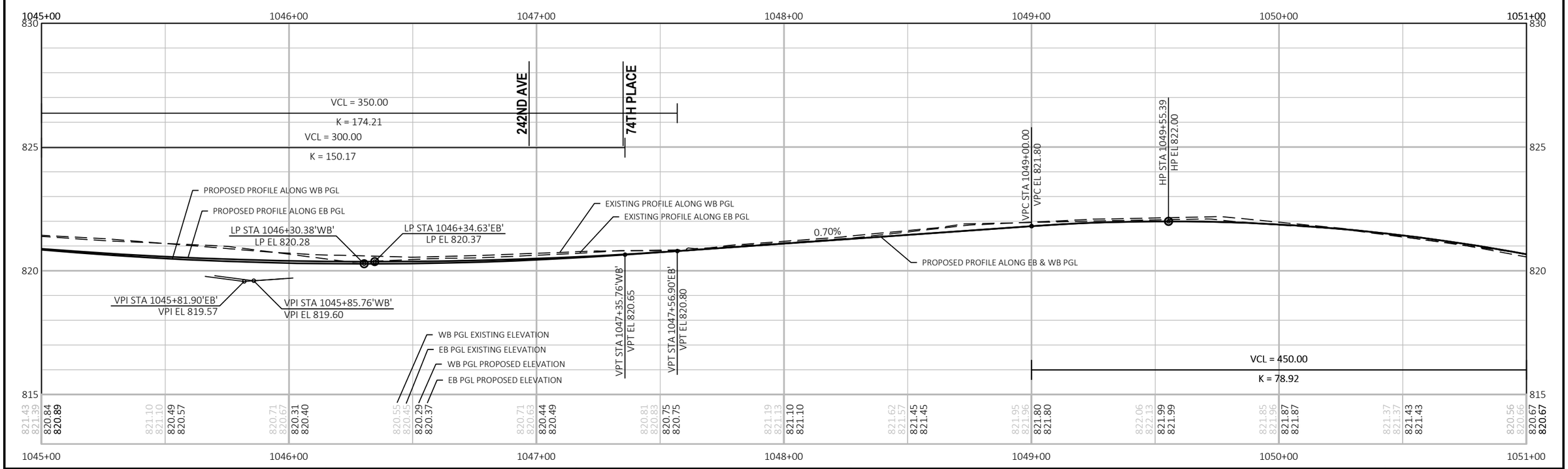

PROJECT NO: 1310-04-70	HWY: STH 50	COUNTY: KENOSHA	PLAN AND PROFILE: STH 50	SHEET 609	E

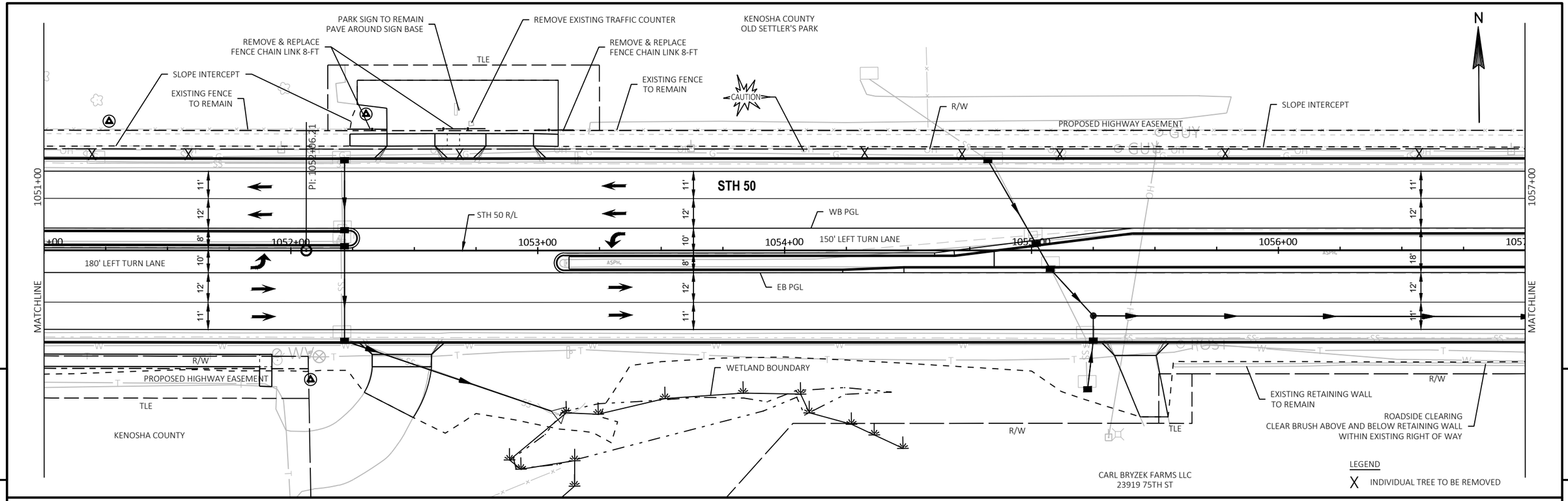

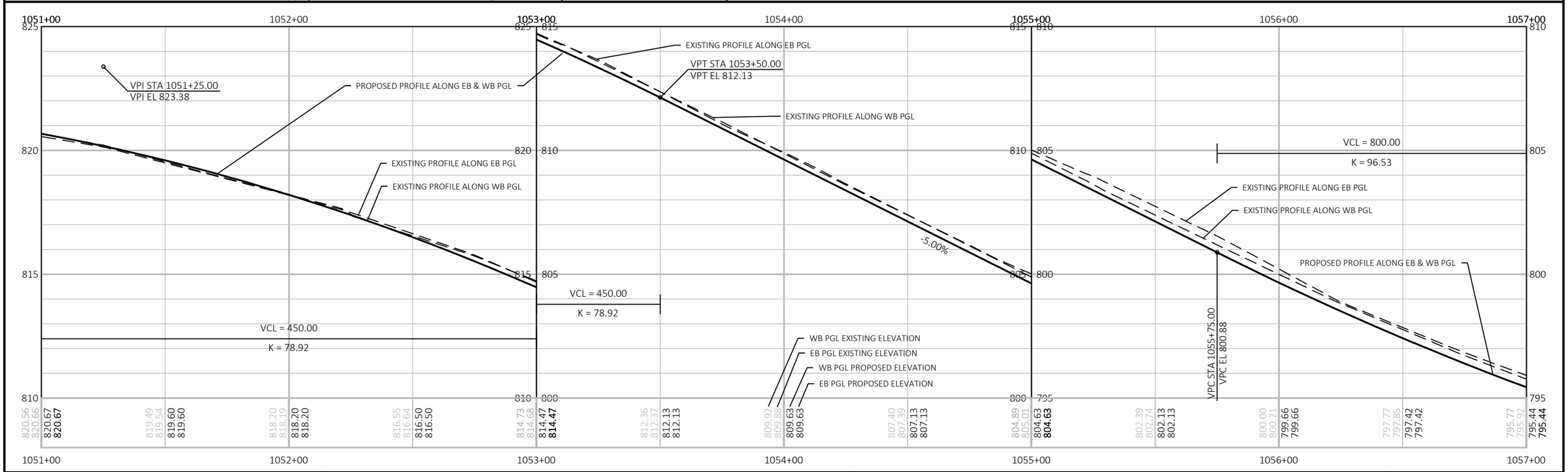

PROJECT NO: 1310-04-70	HWY: STH 50	COUNTY: KENOSHA	PLAN AND PROFILE: STH 50	SHEET 610	E

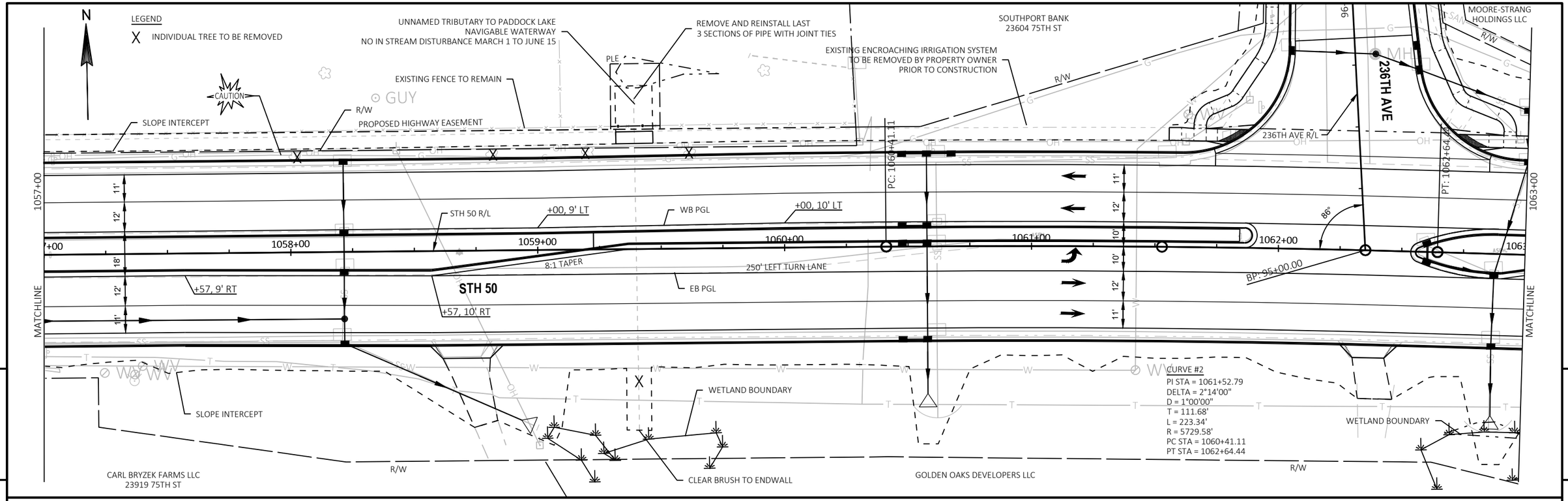

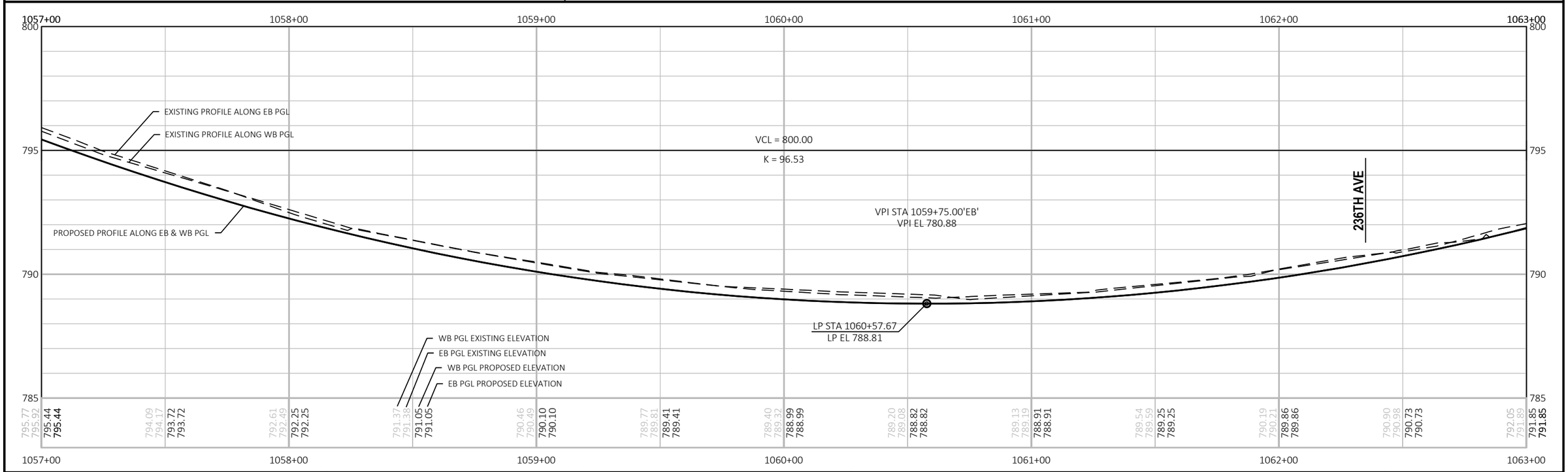

PROJECT NO: 1310-04-70	HWY: STH 50	COUNTY: KENOSHA	PLAN AND PROFILE: STH 50	SHEET 611	E

FILE NAME : T:\1182708.06\CIVIL3D\13100400\13100400\SHEETSPLAN\050101_PP.DWG
LAYOUT NAME - PP_12

PLOT DATE : 3/17/2022 10:40 PM PLOT BY : BLACKWOOD, JIM PLOT NAME : PLOT SCALE : 1 IN:40 FT

WISDOT/CADDS SHEET 44

MOORE-STRANG HOLDINGS LLC

R&T ROG LLC
23522 75TH ST

KEVIN AND LORI VANHEIRSEELE
23512 75TH ST

KAREN VANHEIRSEELE
23502 75TH ST

N

PLE

R/W

CAUTION

TLE

1027+00

MATCHLINE

11'
12'
10'
10'
12'
11'

WB PGL

STH 50 R/L

1064+00
1065+00
1066+00
1067+00
1068+00
1069+00

6:1 TAPER

95' LEFT TURN LANE

STH 50

EB PGL

20'

XXX XXX XXX XXX XXX XXX

ASPH.

CONC.

SLOPE INTERCEPT

WETLAND BOUNDARY

END PROJECT
STA 1068+21.00

LEGEND

X INDIVIDUAL TREE TO BE REMOVED

5

5

1063+00
1064+00
1065+00
1066+00
1067+00
1068+00
1069+00

805
800
795
790
815
810

VPI STA 1066+50.00'EB'
VPI EL 803.07

VPI STA 1066+31.10'WB'
VPI EL 802.45

PROPOSED PROFILE ALONG WB PGL

PROPOSED PROFILE ALONG EB PGL

EXISTING PROFILE ALONG EB PGL

EXISTING PROFILE ALONG WB PGL

VCL = 800.00
K = 96.53

VCL = 800.00
K = 96.53

VPC STA 1064+86.10'WB'
VPC EL 797.68

VPC STA 1064+80.00'EB'
VPC EL 797.48

START SPLIT PROFILE

3.29%

VPT STA 1063+75.00
VPT EL 794.03

VCL = 340.00
K = 193.99

VCL = 290.00
K = 181.61

1.53%'EB'

VPT STA 1068+20.00'EB'
VPT EL 805.68

STA 1068+21.03'EB'
EL 805.69

1.69%'WB'

STA 1068+21.03'WB'
EL 805.66

VPT STA 1067+76.10'WB'
VPT EL 804.90

VCL = 340.00

VCL = 290.00 K = 193.99

K = 181.61

WB PGL EXISTING ELEVATION
EB PGL EXISTING ELEVATION
WB PGL PROPOSED ELEVATION
EB PGL PROPOSED ELEVATION

| | | |

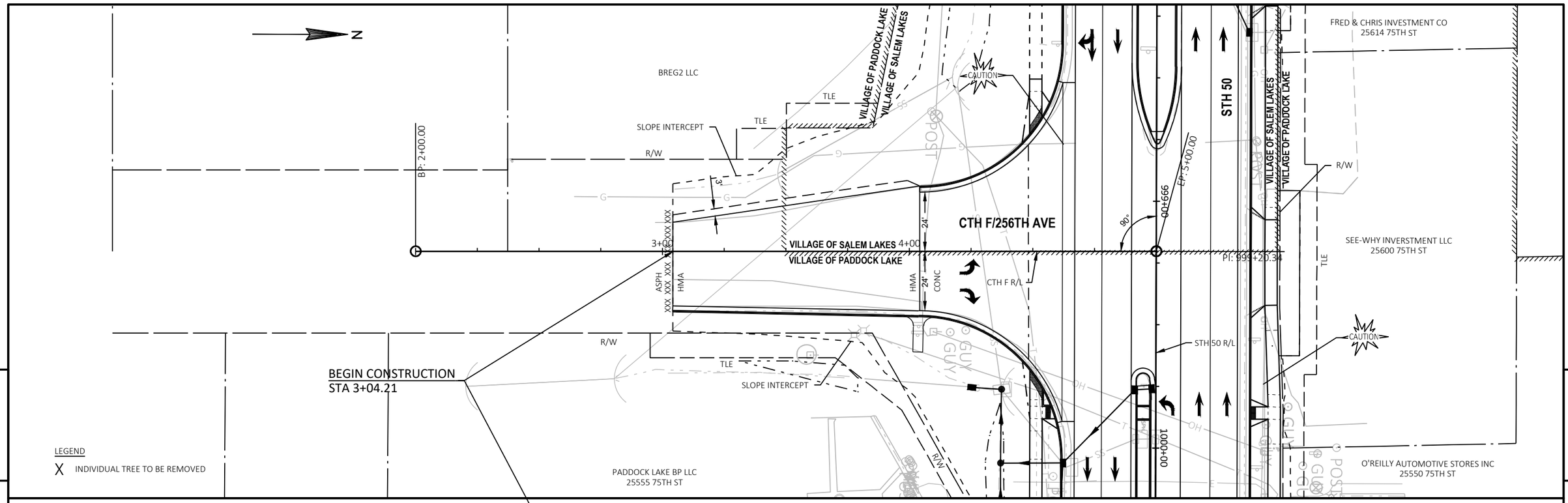

PROJECT NO: 1310-04-70	HWY: STH 50	COUNTY: KENOSHA	PLAN AND PROFILE: CTH F - 256TH AVE	SHEET 613	E

FILE NAME : T:\1182708.06\CIVIL3D\13100400\13100400\SHEETSPLAN\050102_PP-CTH F.DWG
LAYOUT NAME - PP_14

PLOT DATE : 1/18/2022 1:09 PM PLOT BY : BLACKWOOD, JIM PLOT NAME : PLOT SCALE : 1 IN:40 FT

WISDOT/CADDS SHEET 44

SMMFLP LLP
7600 ANTIOCH RD

SMMFLP LLP
7600 ANTIOCH RD

ROGER BERMAN
25401 75TH ST

RESURFACING ← → RECONSTRUCTION

SLOPE INTERCEPT

CAUTION

R/W

STH 83

STH 83 R/L

SB PGL

NB PGL

350' LEFT TURN LANE

235' RIGHT TURN LANE

8:1 TAPER

CLOSE MEDIAN OPENING

BEGIN CONSTRUCTION
STA 44+68.72

ASPH
HMA

HMA
XXX XXX XXX
CONC

12'
12'
10'
10'
12'
12'
17'

44+00
45+00
46+00
47+00
48+00
49+00
50+00

100'-0"

STH 50

OSOW TRUCK APRON

RESURFACING ← → RECONSTRUCTION

SLOPE INTERCEPT

R/W

CENTRAL HIGH SCHOOL
24617 75TH ST

LEGEND

X INDIVIDUAL TREE TO BE REMOVED

5

5

VCL = 160.00
K = 97.30

VCL = 165.00
K = 96.61

VPC STA 48+08.41'SB'
VPC EL 828.64

STA 48+08.39'SB'
EL 828.64

-0.64%

-0.50%

STA 47+68.59'NB'
EL 827.79

VPC STA 47+83.80'NB'
VPC EL 827.71

LP STA 48+32.11'NB'
LP EL 827.59

VPI STA 48+66.30'NB'
VPI EL 827.30

PROPOSED PROFILE ALONG SB PGL

EXISTING PROFILE ALONG SB PGL

LP STA 48+71.15'SB'
LP EL 828.43

STA 49+68.45'SB'
EL 828.92

STA 49+60.35'NB'
EL 828.43

1.00%

1.21%

PROPOSED PROFILE ALONG NB PGL

EXISTING PROFILE ALONG NB PGL

VPI STA 48+88.41'SB'
VPI EL 828.12

VPT STA 49+48.80'NB'
VPT EL 828.29

VPT STA 49+68.41'SB'
VPT EL 828.92

SB PGL EXISTING PROFILE ELEVATION
NB PGL EXISTING PROFILE ELEVATION
SB PGL PROPOSED PROFILE ELEVATION
NB PGL PROPOSED PROFILE ELEVATION

835
830
825
820

830.08 829.69
829.88 829.21
829.74 828.77
829.44 828.60
829.15 828.27
828.89 827.88
828.69 827.66
827.64
828.37 827.46
828.46 827.61
827.99 827.37
828.48 827.83
828.02 827.63
828.75 828.31
828.70 828.27

PROJECT NO: 1310-04-70	HWY: STH 50	COUNTY: KENOSHA	PLAN AND PROFILE: STH 83	SHEET 614	E

FILE NAME : T:\1182708.06\CIVIL3D\13100400\13100400\SHEETSPLAN\050103_PP-83-75.DWG
LAYOUT NAME - PP_15
PLOT DATE : 3/17/2022 10:45 PM
PLOT BY : BLACKWOOD, JIM
PLOT NAME :
PLOT SCALE : 1 IN:40 FT
WISDOT/CADDS SHEET 44

ENCROACHING LANDSCAPING AND LIGHTS TO BE REMOVED BY OWNER

TRIPLE B REAL ESTATE LLC
25406 75TH ST

APPROXIMATE LIMITS OF PETROLEUM CONTAMINATED SOIL

N

STH 50

SLOPE INTERCEPT

ENCROACHING MINOR RETAINING WALL TO MODIFIED BY WISDOT AND TO REMAIN BY REVOCABLE PERMIT

TLE

OSOW TRUCK APRON

AREA 1
DEPTH = 10' TO 16'

CAUTION

R/W

EXISTING R/W

PT: 50+00.00

EP: 56+00.00

CONC

ASPH

SB PGL

STH 75 R/L

95' LEFT TURN LANE

50+00 51+00 52+00 53+00 54+00 55+00

NB PGL

STH 75

END PROJECT
STA 51+89.71

AREA 2
DEPTH = 4' TO 10'

SLOPE INTERCEPT

PADLAKE PARTNERS LLC
25360 75TH ST

LEGEND

X INDIVIDUAL TREE TO BE REMOVED

5

5

50+00 51+00 52+00 53+00 54+00 55+00 56+00

835 830 825 820

VCL = 110.00
K = 101.92
VCL = 145.00
K = 96.28

PROPOSED PROFILE ALONG NB PGL

PROPOSED PROFILE ALONG SB PGL

STA 50+31.46'NB'
EL 828.77

STA 50+38.43'SB'
EL 829.21

-1.02%

-0.58%

0.50%

0.48%

LP STA 51+43.05'SB'
LP EL 828.64

STA 51+42.33'NB'
EL 828.72

VPT STA 51+89.68'SB'
VPT EL 828.75

STA 51+89.71'SB'
EL 828.75

VPT STA 51+42.27'NB'
VPT EL 828.72

VPI STA 51+17.18'SB'
VPI EL 828.40

LP STA 50+91.35'NB'
LP EL 828.59

VPC STA 50+32.27'NB'
VPC EL 828.76

VPC STA 50+44.68'SB'
VPC EL 829.14

VPI STA 50+87.27'NB'
VPI EL 828.45

EXISTING PROFILE ALONG NB PGL

EXISTING PROFILE ALONG SB PGL

SB PGL EXISTING PROFILE ELEVATION

NB PGL EXISTING PROFILE ELEVATION

SB PGL PROPOSED PROFILE ELEVATION

NB PGL PROPOSED PROFILE ELEVATION

828.70 828.27 828.72 828.39 829.09 828.68 828.52 828.57 828.74 828.60 828.57 828.64

50+00 51+00 52+00 53+00 54+00 55+00

PROJECT NO: 1310-04-70	HWY: STH 50	COUNTY: KENOSHA	PLAN AND PROFILE: STH 75	SHEET 615	E

FILE NAME : T:\1182708.06\CIVIL3D\13100400\13100400\SHEETSPLAN\050103_PP-83-75.DWG
LAYOUT NAME - PP_16

PLOT DATE : 3/17/2022 10:45 PM PLOT BY : BLACKWOOD, JIM PLOT NAME : PLOT SCALE : 1 IN:40 FT

WISDOT/CADDS SHEET 44

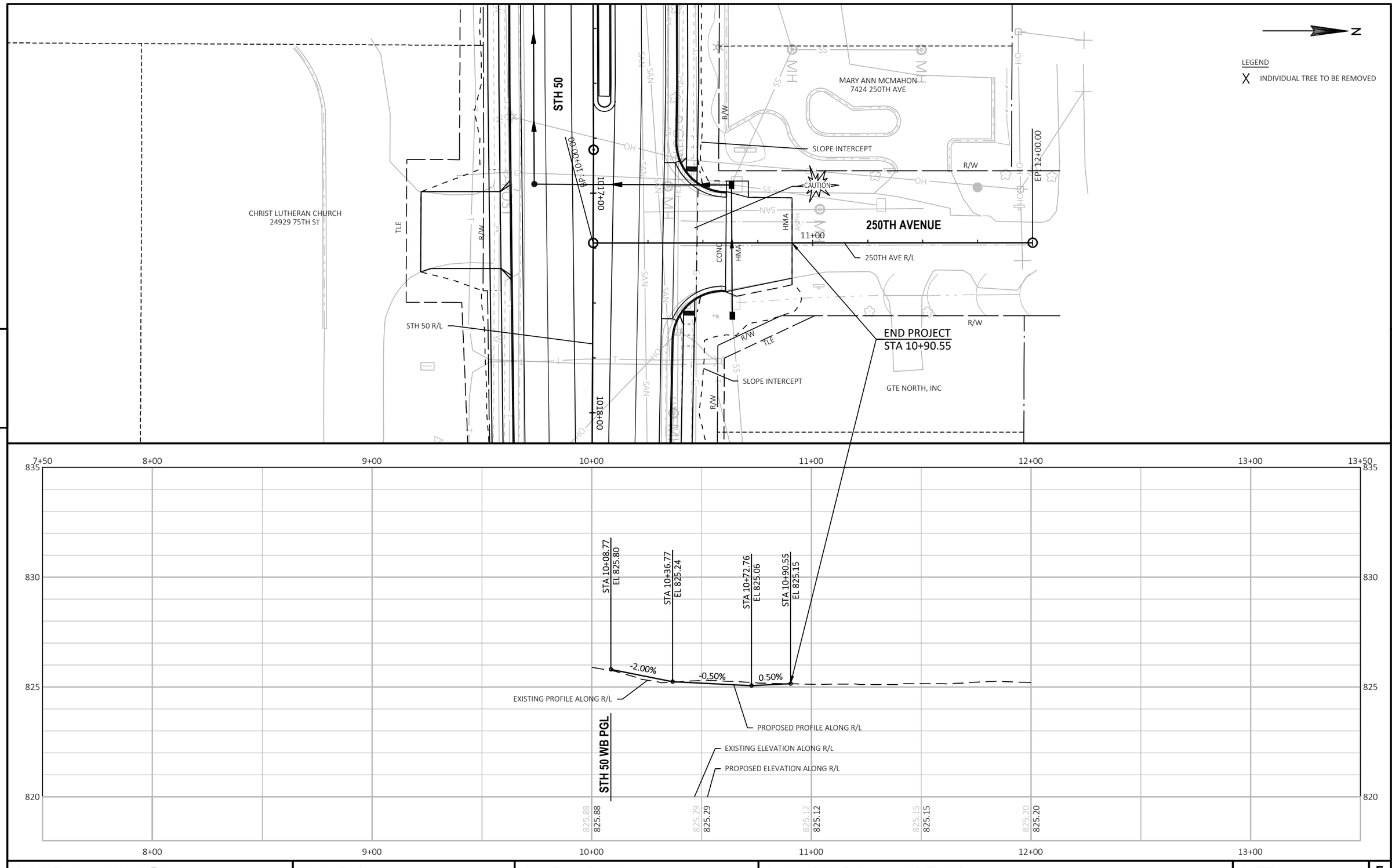

PROJECT NO: 1310-04-70	HWY: STH 50	COUNTY: KENOSHA	PLAN AND PROFILE: 250TH AVE	SHEET 616	E

FILE NAME : T:\1182708.06\CIVIL3D\13100400\13100400\SHEETSPLAN\050104_PP-250TH.DWG
LAYOUT NAME - PP_16a

PLOT DATE : 1/18/2022 1:11 PM PLOT BY : BLACKWOOD, JIM PLOT NAME : PLOT SCALE : 1 IN:40 FT

WISDOT/CADDS SHEET 44

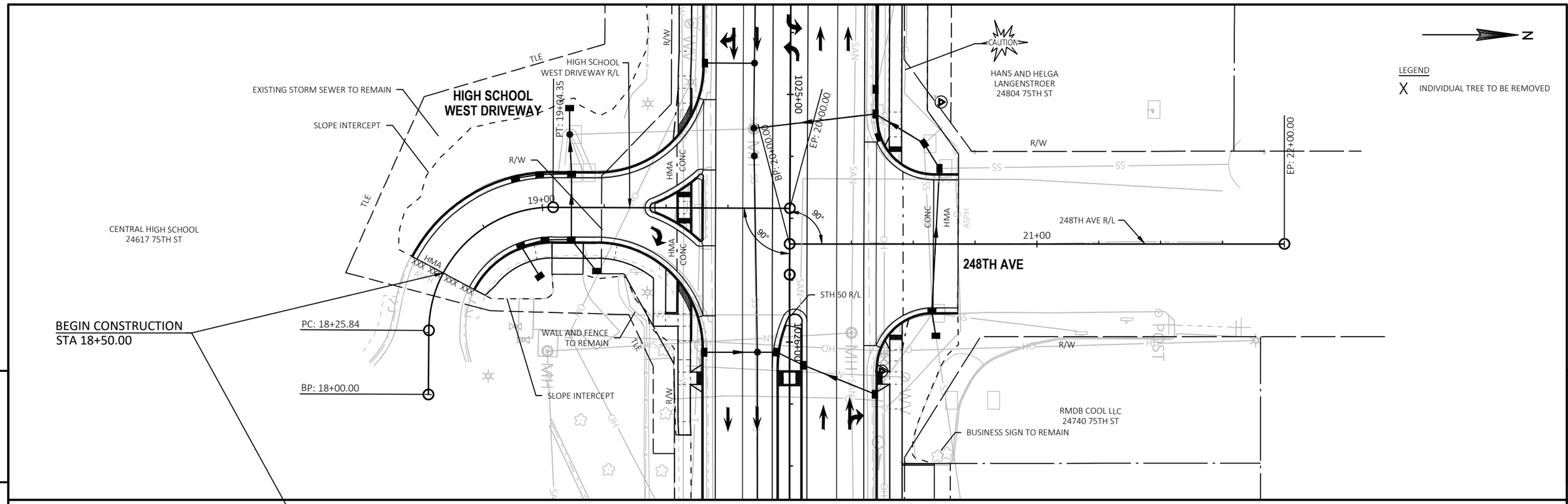

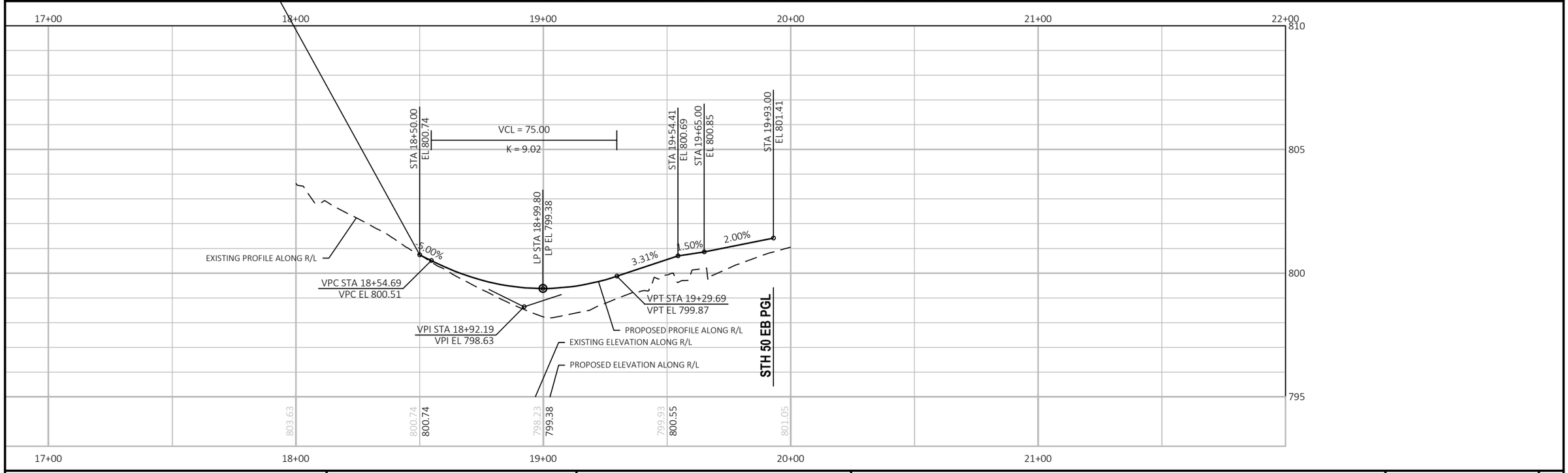

PROJECT NO: 1310-04-70	HWY: STH 50	COUNTY: KENOSHA	PLAN AND PROFILE: HIGH SCHOOL WEST DRIVEWAY	SHEET 617	E

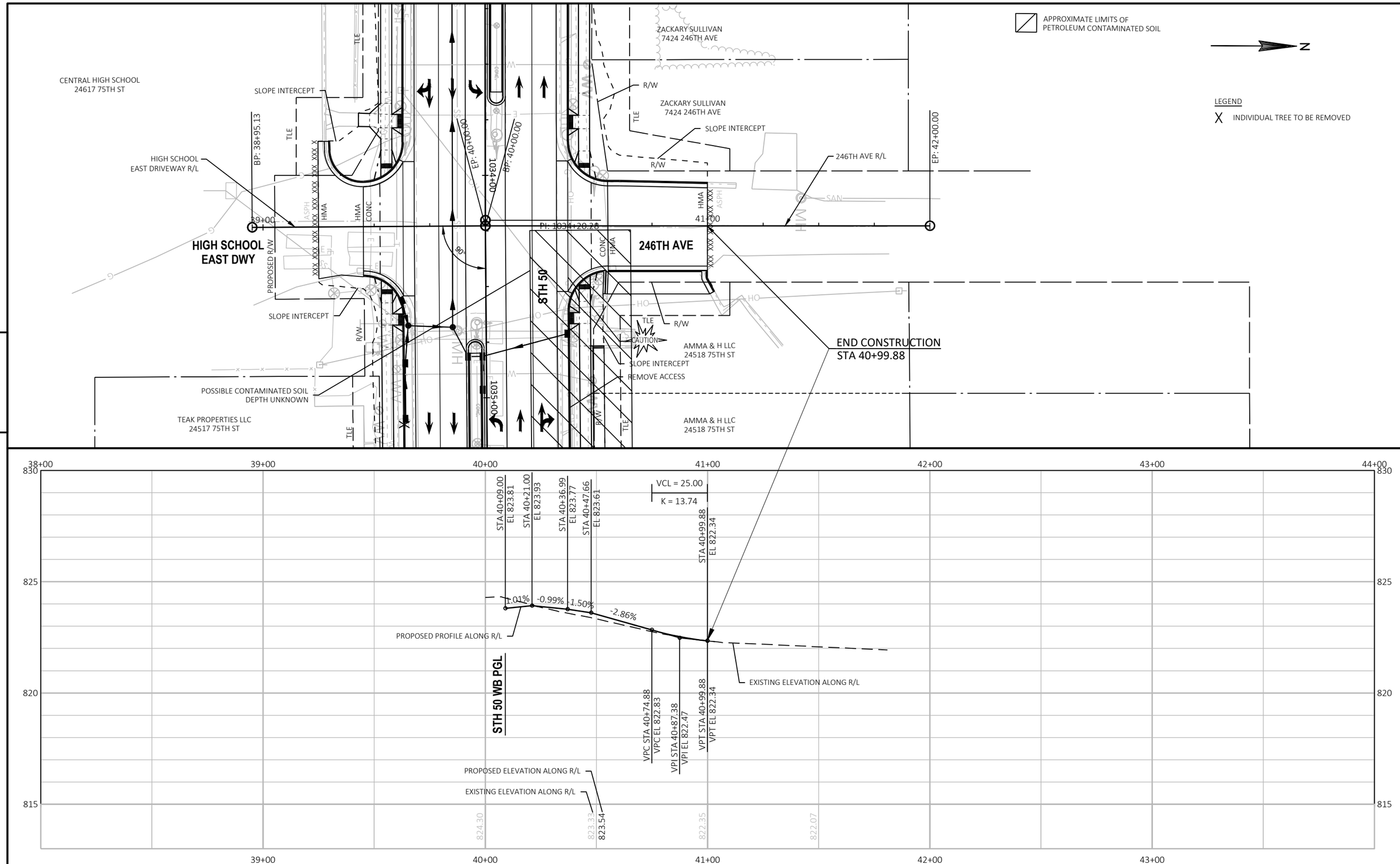

PROJECT NO: 1310-04-70	HWY: STH 50	COUNTY: KENOSHA	PLAN AND PROFILE: 246TH AVE	SHEET 618	E

FILE NAME : T:\1182708.06\CIVIL3D\13100400\13100400\SHEETSPLAN\050105_PP-246TH.DWG
LAYOUT NAME - PP_18
PLOT DATE : 1/18/2022 1:12 PM
PLOT BY : BLACKWOOD, JIM
PLOT NAME :
PLOT SCALE : 1 IN:40 FT
WISDOT/CADDS SHEET 44

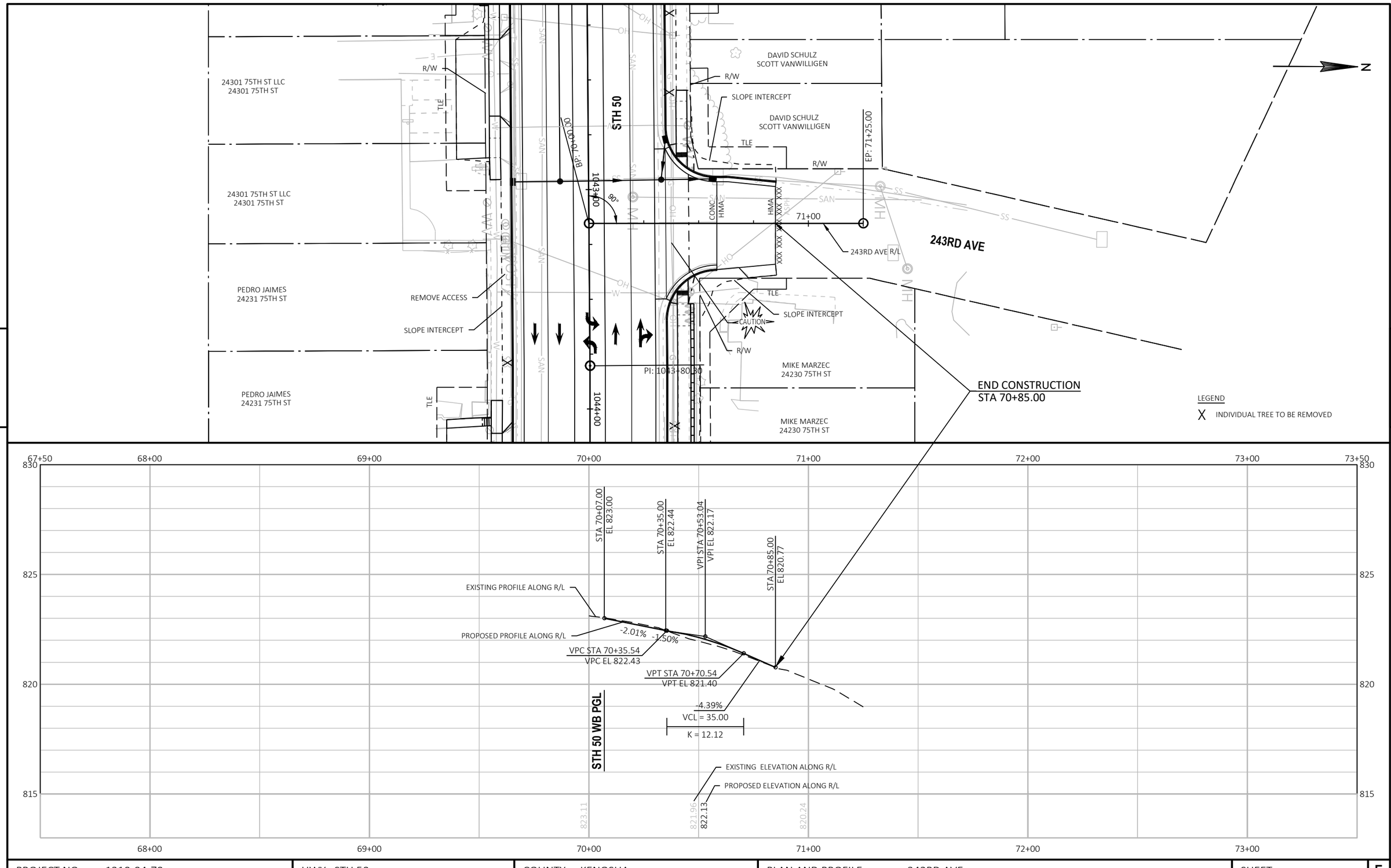

PROJECT NO: 1310-04-70	HWY: STH 50	COUNTY: KENOSHA	PLAN AND PROFILE: 243RD AVE	SHEET 619	E

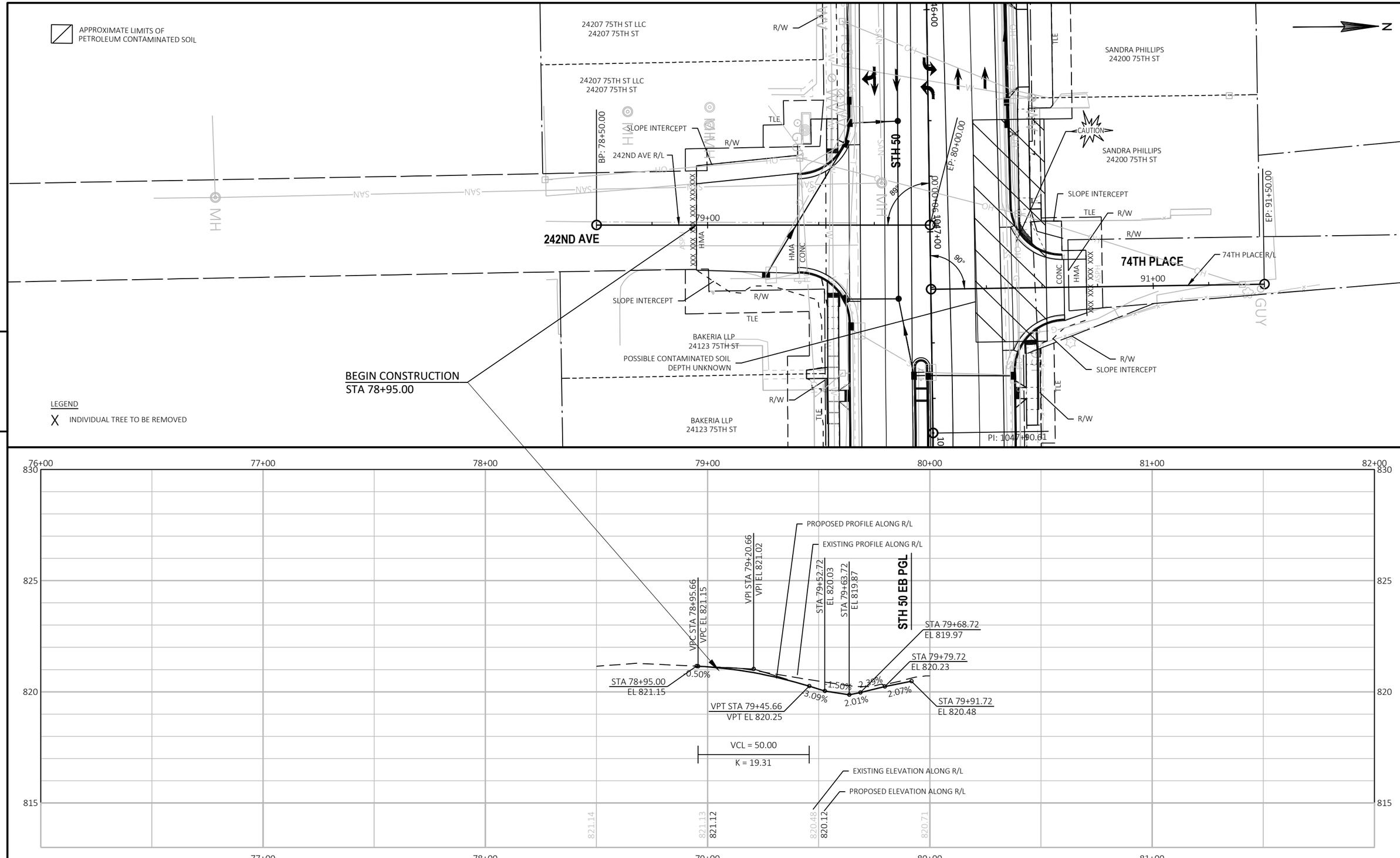

PROJECT NO: 1310-04-70	HWY: STH 50	COUNTY: KENOSHA	PLAN AND PROFILE: 242ND AVE	SHEET 620	E

FILE NAME : T:\1182708.06\CIVIL3D\13100400\13100400\SHEETSPLAN\050107_PP-242ND.DWG
LAYOUT NAME - PP_20
PLOT DATE : 1/18/2022 1:13 PM
PLOT BY : BLACKWOOD, JIM
PLOT NAME :
PLOT SCALE : 1 IN:40 FT
WISDOT/CADDS SHEET 44

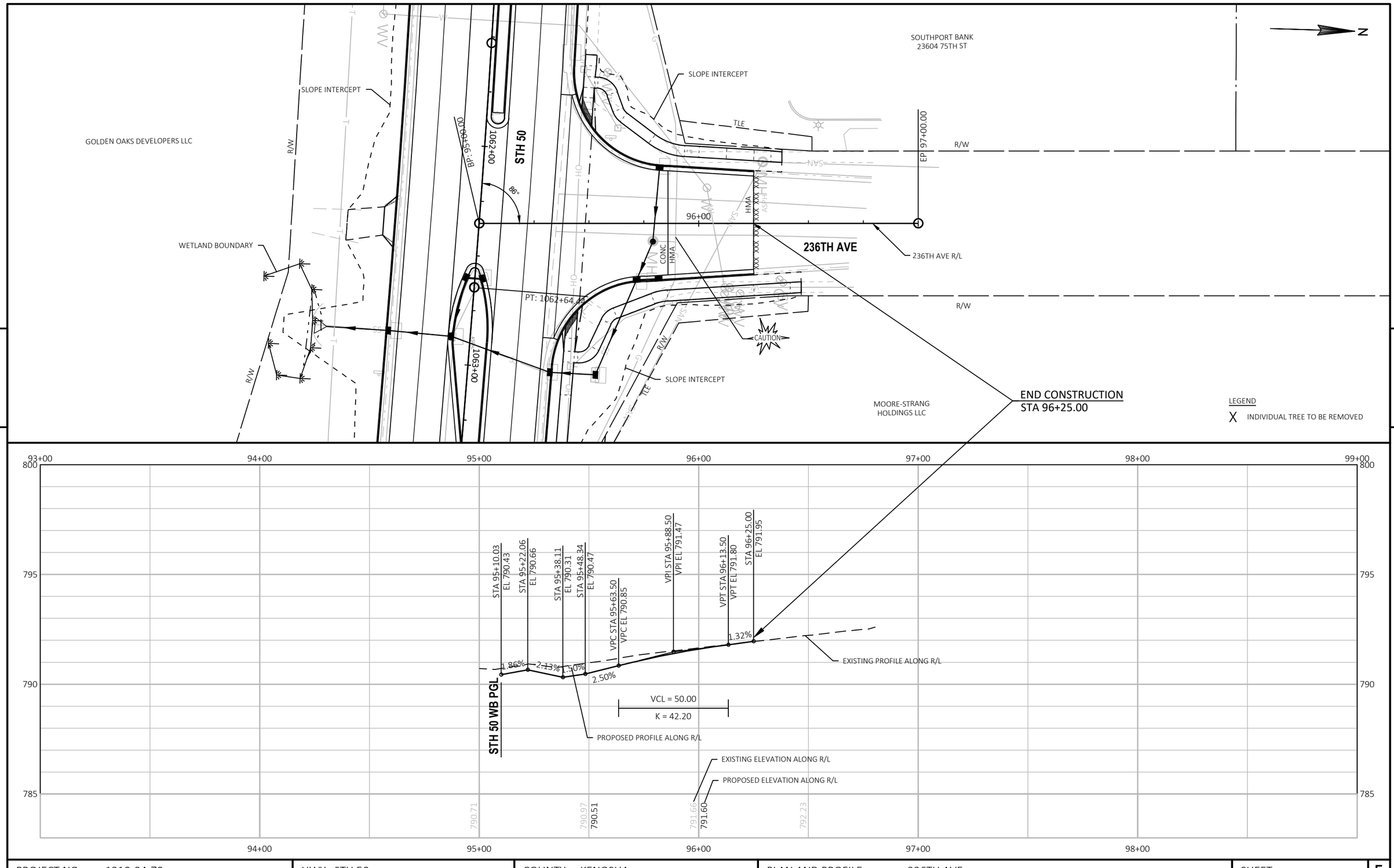

PROJECT NO: 1310-04-70	HWY: STH 50	COUNTY: KENOSHA	PLAN AND PROFILE: 236TH AVE	SHEET 621	E

FILE NAME : T:\1182708.06\CIVIL3D\13100400\13100400\SHEETSPLAN\050108_PP-236TH.DWG
LAYOUT NAME - PP_20

PLOT DATE : 1/18/2022 1:14 PM PLOT BY : BLACKWOOD, JIM PLOT NAME : PLOT SCALE : 1 IN:40 FT

WISDOT/CADDS SHEET 44

Standard Detail Drawing List

08A05-19A	INLET COVERS TYPE A, H, A-S, H-S & Z
08A05-19B	INLET COVERS TYPE B, B-A, C, MS, MS-A, & WM
08A05-19C	INLET COVERS TYPE F, HM, HM-S, S, T, V, HM-GJ, & HM-GJ-S
08A05-19D	INLET COVER TYPE BW, MANHOLE COVERS, TYPE K, J, J-S, L & M
08A08-02	CATCH BASINS 3-FT, 4-FT, 5-FT AND 6-FT DIAMETER
08A09-02	CATCH BASINS 2X3-FT AND 2.5X3-FT
08B09-02	MANHOLES 3-FT, 4-FT, 5-FT, 6-FT, 7-FT AND 8-FT DIAMETER
08C06-02	INLETS 3-FT AND 4-FT DIAMETER
08C07-02	INLETS 2X2-FT, 2X2.5-FT, 2X3-FT AND 2.5X3-FT
08C08-02	INLETS MEDIAN 1 AND 2 GRATE
08D01-22A	CONCRETE CURB & GUTTER
08D01-22B	CONCRETE CURB, TIES AND CURB AND GUTTER APPLICATIONS
08D04-05	CONCRETE SURFACE DRAINS & ASPHALTIC FLUMES
08D05-20A	CURB RAMPS TYPES 1 AND 1-A
08D05-20B	CURB RAMPS TYPES 2 AND 3
08D05-20C	CURB RAMPS TYPES 4A AND 4A1
08D05-20D	CURB RAMPS TYPE 4B AND 4B1
08D05-20E	CURB RAMPS TYPES 5, 6, 7A, 7B & 8
08D05-20F	CURB RAMPS RADIAL DETECTABLE WARNING FIELD APPLICATIONS
08D05-20G	CURB RAMPS RECTANGULAR AND RADIAL DETECTABLE WARNING PLATES
08D13-01	SLOTTED CORRUGATED METAL PIPE SURFACE DRAINS
08D15-05B	EDGEDRAIN AND BASE AGGREGATE OPEN GRADED
08D18-02	DRIVEWAY AND SIDEWALK RAMPS TYPES X & Y
08D19-02	DRIVEWAY AND SIDEWALK RAMPS TYPE Z
08D20-01	DRIVEWAYS WITH CURB & GUTTER RETURNS
08E08-03	TYPICAL INSTALLATIONS OF EROSION BALES / TEMPORARY DITCH CHECKS
08E09-06	SILT FENCE
08E10-02	INLET PROTECTION TYPE A, B, C AND D
08E14-01	TRACKING PAD
08E15-01	CULVERT PIPE CHECK
08F01-11	APRON ENDWALLS FOR CULVERT PIPE
08F04-08	JOINT TIES FOR CONCRETE PIPE AND CONCRETE COLLAR DETAIL
09B02-10	CONDUIT
09B04-11	PULL BOX
09C02-09	CONCRETE BASES, TYPES 1, 2, 5, & 6
09C03-04	TRANSFORMER/PEDESTAL BASES
09C06-07	CONCRETE CONTROL CABINET BASE, TYPE 9, SPECIAL
09C11-10	CONCRETE BASE TYPE 10
09C15-01	CONCRETE BASE TYPE 10 SPECIAL
09D01-05	CABINET SERVICE INSTALLATION (METER BREAKER PEDESTAL)
09D02-03	SIGNAL CONTROL CABINET
09E01-15A	POLE MOUNTINGS FOR TRAFFIC SIGNALS TYPE 2
09E01-15D	POLE MOUNTINGS FOR LIGHTING UNITS, TYPE 5 (30 FEET)
09E01-15G	HARDWARE DETAILS FOR POLE MOUNTINGS
09E03-06	NON-FREEWAY LIGHTING UNIT POLE WIRING
09E06-05	TRAFFIC SIGNAL STANDARD POLY BRACKET MOUNTINGS (TYPICAL) 13 FT. OR 15 FT.
09E07-06	TRAFFIC SIGNAL STANDARD PEDESTRIAN AND FLASHER TYPICAL MOUNTING DETAILS
09E08-09A	TYPE 9 POLE 15'-30' MONOTUBE ARM
09E08-09C	TYPE 9 SPECIAL POLE 40' MONOTUBE ARM
09E08-09K	GENERAL NOTES,HARDWARE DETAILS FOR TYPE 9/10,9/10 SPECIAL,12 & 13 POLES W/MONOTUBE ARMS
09F15-04B	LOOP DETECTOR INSTALLED IN BASE COURSE WITH PULL (SPLICE) BOX OFF ROADWAY (OPTION 2)
09G01-04A	SPAN WIRE TEMPORARY TRAFFIC SIGNAL
09G01-04B	SPAN WIRE TEMPORARY TRAFFIC SIGNAL
09G01-04C	SPAN WIRE TEMPORARY TRAFFIC SIGNAL
09G01-04D	SPAN WIRE TEMPORARY TRAFFIC SIGNAL
09G01-04E	SPAN WIRE TEMPORARY TRAFFIC SIGNAL
09G01-04F	SPAN WIRE TEMPORARY TRAFFIC SIGNAL
09G01-04G	SPAN WIRE TEMPORARY TRAFFIC SIGNAL
10A18-05A	LUMINAIRE ARMS, SINGLE MEMBER 6-INCH CLAMP
11B02-02	CONCRETE MEDIAN NOSE
12A03-10	NAME PLATE (STRUCTURES)
13C01-19	CONCRETE PAVEMENT LONGITUDINAL JOINTS AND TIES
13C13-09	URBAN DOWELED CONCRETE PAVEMENT
13C14-07A	BASE PATCHING CONCRETE
13C14-07B	BASE PATCHING CONCRETE
13C14-07C	BASE PATCHING CONCRETE
13C18-07A	CONCRETE PAVEMENT JOINTING

6

Standard Detail Drawing List

13C18-07B	CONCRETE PAVEMENT STEEL REINFORCEMENT
13C18-07C	CONCRETE PAVEMENT JOINT TYPES
13C18-07D	CONCRETE PAVEMENT JOINT TYPES AT UTILITY FIXTURES
13C19-03	HMA LONGITUDINAL JOINTS
15A03-02A	FLEXIBLE MARKER POST FOR CULVERT END
15A03-02B	FLEXIBLE MARKER POST FOR CULVERT END
15B03-15A	FENCE CHAIN LINK
15B03-15B	FENCE CHAIN LINK
15C02-08A	BARRICADES AND SIGNS FOR MAINLINE CLOSURES
15C02-08B	BARRICADES AND SIGNS FOR VARIOUS CLOSURES
15C02-08C	DETOUR SIGNING FOR MAINLINE CLOSURES
15C04-05	TRAFFIC CONTROL, ADVANCE WARNING SIGNS 45 M.P.H. OR GREATER TWO-WAY UNDIVIDED ROAD OPEN TO TRAFFIC
15C05-05	TRAFFIC CONTROL, ADVANCE WARNING SIGNS 40 M.P.H. OR LESS
15C07-15B	PAVEMENT MARKING WORDS
15C07-15C	PAVEMENT MARKING ARROWS
15C08-20A	LONGITUDINAL MARKING (MAINLINE)
15C08-20B	PAVEMENT MARKING (TURN LANES)
15C08-20C	PAVEMENT MARKING (TURN LANES)
15C11-09A	CHANNELIZING DEVICES FLEXIBLE TUBULAR MARKER POST
15C11-09B	CHANNELIZING DEVICES DRUMS, CONES, BARRICADES AND VERTICAL PANELS
15C12-08	TRAFFIC CONTROL FOR LANE CLOSURE WITH FLAGGING OPERATION
15C18-05B	MEDIAN ISLAND MARKING MEDIAN ISLAND NOSE
15C18-05C	MEDIAN PAVEMENT MARKINGS DOUBLE ARROW WARNING SIGN PLACEMENT
15C20-02	YIELD MARKING
15C21-10	SIGNING AND MARKING FOR TWO LANE TO FOUR LANE DIVIDED TRANSITIONS
15C33-04	STOP LINE AND CROSSWALK PAVEMENT MARKING
15D06-04	TRAFFIC CONTROL, TWO LANE TWO WAY OPERATION
15D11-07	TRAFFIC CONTROL, SINGLE LANE CROSSOVER
15D12-09A	TRAFFIC CONTROL, LANE CLOSURE
15D12-09B	TRAFFIC CONTROL, LANE CLOSURE, SPEED REDUCTION
15D20-05B	TRAFFIC CONTROL, SINGLE RIGHT LANE CLOSURE, UNDIVIDED NON-FREEWAY/EXPRESSWAY
15D21-07A	TRAFFIC CONTROL, INTERSECTION WITHIN SINGLE LANE CLOSURE
15D21-07B	TRAFFIC CONTROL, INTERSECTION WITHIN SINGLE LANE CLOSURE
15D30-06A	TRAFFIC CONTROL, PEDESTRIAN ACCOMMODATION
15D30-06B	TRAFFIC CONTROL, TEMPORARY ADA COMPLIANT PEDESTRIAN ACCOMMODATION
15D30-06C	TRAFFIC CONTROL, PEDESTRIAN ACCOMMODATION
16A01-07	LANDMARK REFERENCE MONUMENTS AND COVERS

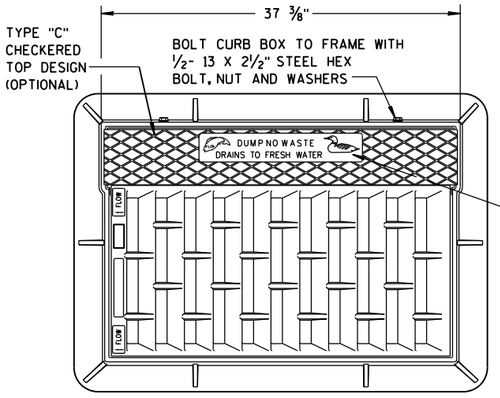

NOTE:
GRATE IS REVERSIBLE.

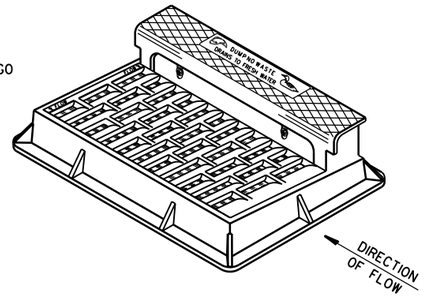

NOTE: CURB BOX HEIGHT ADJUSTABLE 6" TO 9"

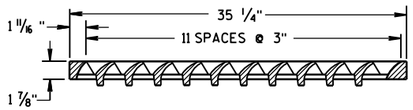

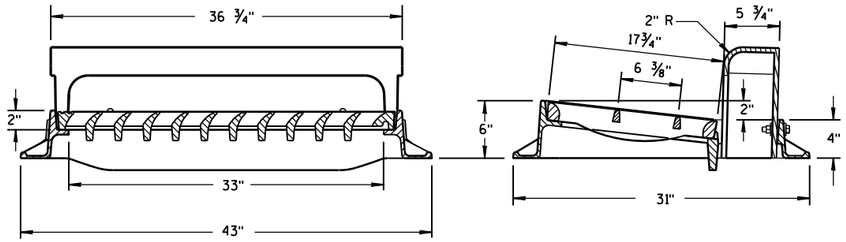

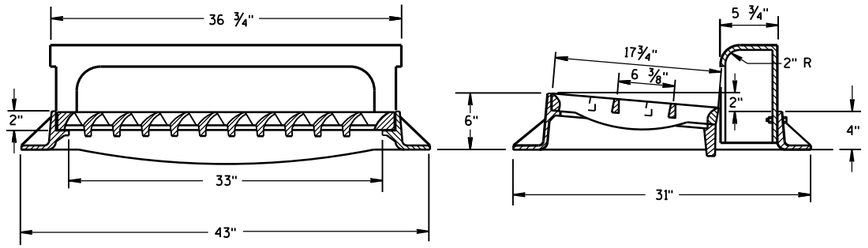

TYPE "H"

NOTE: EITHER CASTING IS ACCEPTABLE

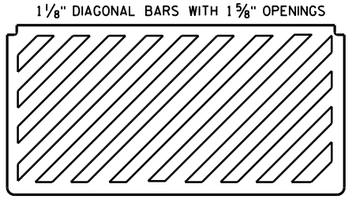

SPECIAL GRATE FOR TYPE "H" COVER

(MEASURES 35 1/4" X 17 3/4" X 2")

(NOTED AS TYPE H-S ON DRAINAGE TABLE)

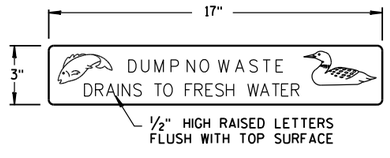

LOGO DETAIL

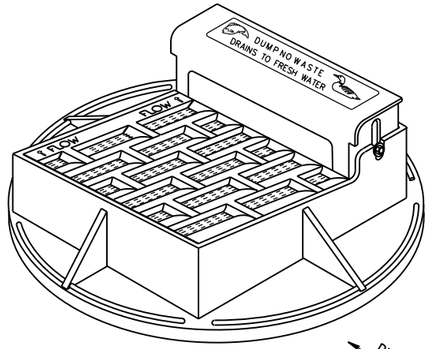

NOTE: CURB BOX ADJUSTABLE 4" TO 9"

NOTE:
GRATE IS REVERSIBLE.

GENERAL NOTES

DETAILS OF CONSTRUCTION, MATERIALS AND WORKMANSHIP NOT SHOWN ON THIS DRAWING SHALL CONFORM TO THE PERTINENT REQUIREMENTS OF THE STANDARD SPECIFICATIONS AND THE APPLICABLE SPECIAL PROVISIONS.

DETAIL DRAWINGS FOR PROPOSED ALTERNATE DESIGNS FOR CATCH BASIN, MANHOLE AND INLET COVERS SHALL BE SUBMITTED TO THE ENGINEER FOR APPROVAL PROVIDING THAT SUCH ALTERNATE DESIGNS MAKE PROVISION FOR EQUIVALENT CAPACITY AND STRENGTH.

ROUND FRAMES AND COVERS SHALL HAVE CONTINUOUSLY MACHINED BEARING SURFACES TO PREVENT ROCKING AND RATTLING.

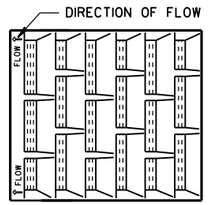

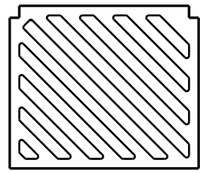

SPECIAL GRATE FOR TYPE "A" COVER

(MEASURES 19 3/4" X 17" X 1 7/8")

(NOTED AS TYPE A-S ON DRAINAGE TABLE)

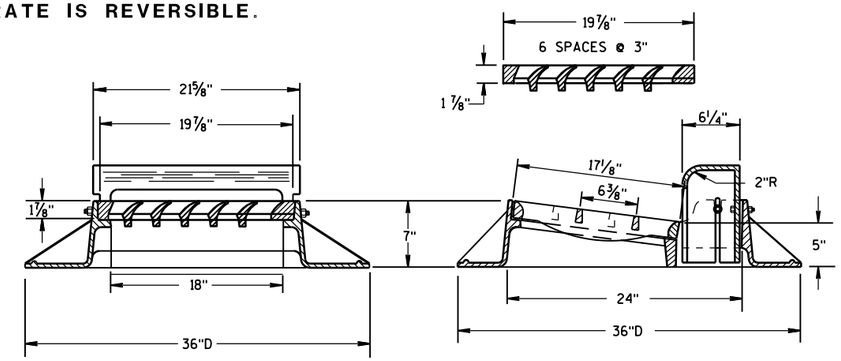

TYPE "A"

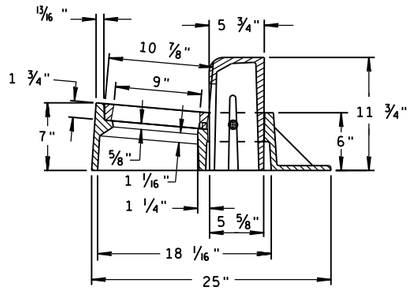

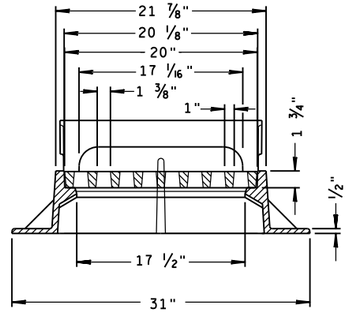

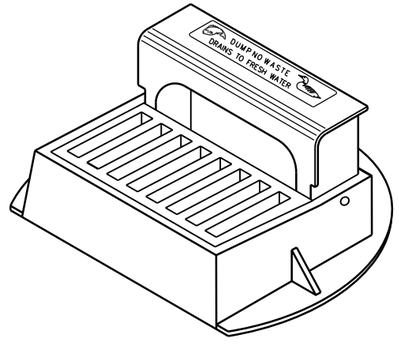

TYPE "Z"

INLET COVERS
TYPE A, H, A-S, H-S & Z

STATE OF WISCONSIN
DEPARTMENT OF TRANSPORTATION

APPROVED
11-27-13 — DATE
/S/ Jerry H. Zogg — ROADWAY STANDARDS ENGINEER
FHWA

6

S.D.D. 8 A 5-19a

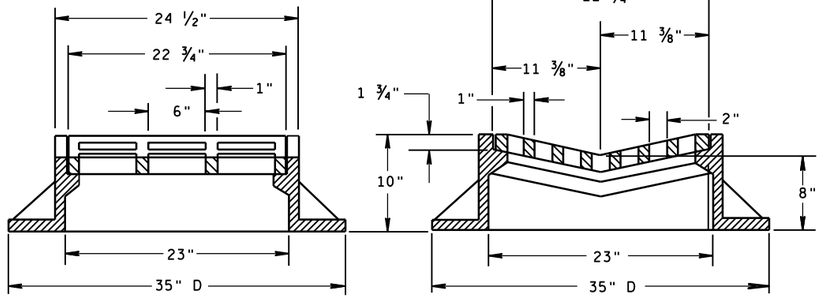

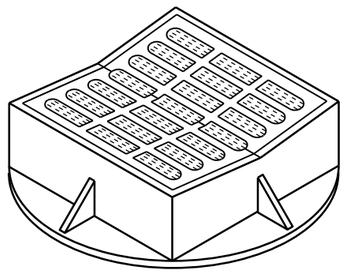

TYPE "B"

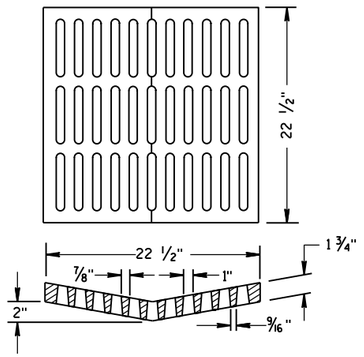

ALTERNATIVE GRATE FOR TYPE "B" COVER

USE WHERE PEDESTRIAN OR BICYCLE TRAFFIC IS POSSIBLE.
NOTED AS TYPE B-A ON THE DRAINAGE TABLE

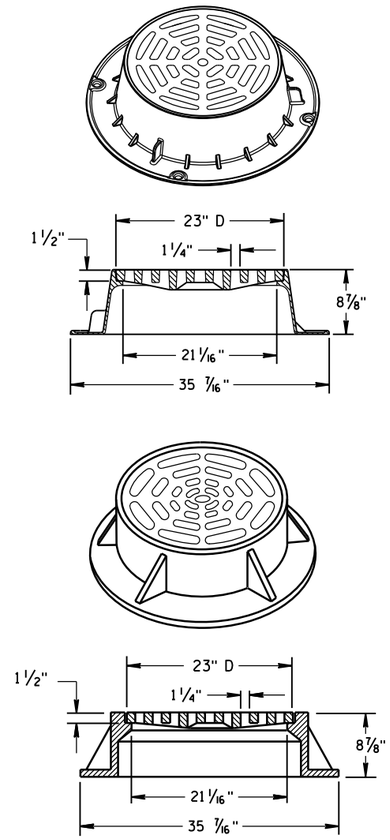

TYPE "C"

NOTE: EITHER CASTING IS ACCEPTABLE

GENERAL NOTES

DETAILS OF CONSTRUCTION, MATERIALS AND WORKMANSHIP NOT SHOWN ON THIS DRAWING SHALL CONFORM TO THE PERTINENT REQUIREMENTS OF THE STANDARD SPECIFICATIONS AND THE APPLICABLE SPECIAL PROVISIONS.

DETAIL DRAWINGS FOR PROPOSED ALTERNATE DESIGNS FOR CATCH BASIN, MANHOLE AND INLET COVERS SHALL BE SUBMITTED TO THE ENGINEER FOR APPROVAL PROVIDING THAT SUCH ALTERNATE DESIGNS MAKE PROVISION FOR EQUIVALENT CAPACITY AND STRENGTH.

ROUND FRAMES AND COVERS SHALL HAVE CONTINUOUSLY MACHINED BEARING SURFACES TO PREVENT ROCKING AND RATTLING.

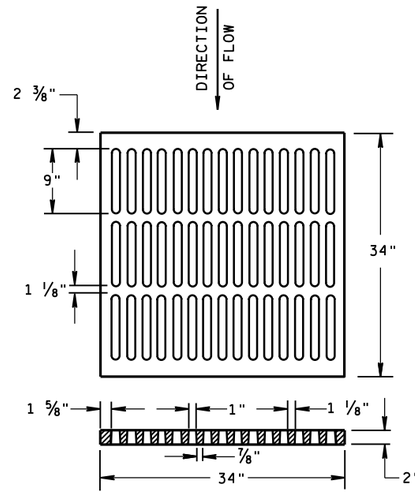

ALTERNATIVE TYPE "MS"

USE WHERE PEDESTRIAN OR BICYCLE TRAFFIC IS PERMITTED
NOTED AS TYPE MS-A ON THE DRAINAGE TABLE

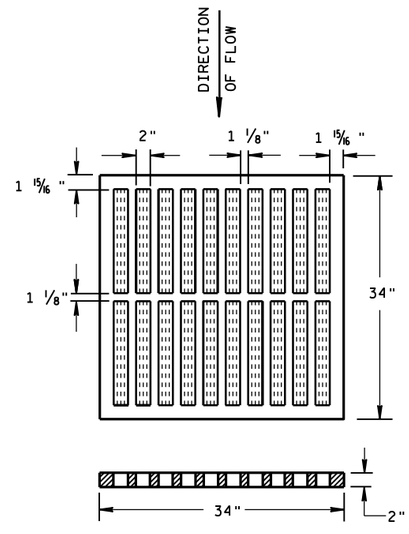

TYPE "MS"

USE ON FREEWAYS AND EXPRESSWAYS
NOTED AS TYPE MS ON DRAINAGE TABLE

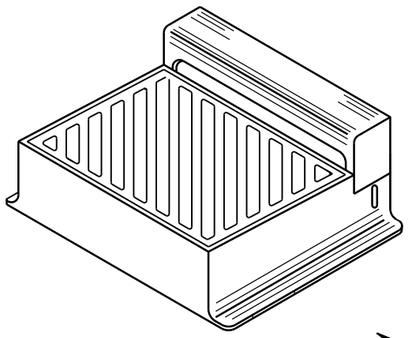

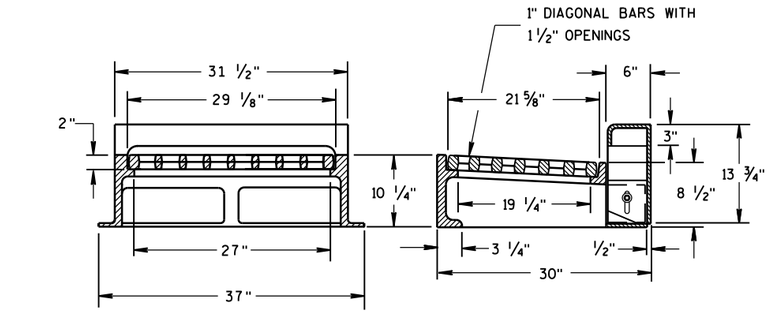

NOTE: CURB BOX HEIGHT ADJUSTABLE 6" TO 9"

TYPE "WM"

DIRECTION OF FLOW

DIAGONAL SLOTS, SHALL BE ORIENTED TO THE DIRECTION OF FLOW AS ILLUSTRATED. GRATES ARE MANUFACTURED TO BE REVERSIBLE.

INLET COVERS
TYPE B, B-A, C, MS, MS-A, & WM

STATE OF WISCONSIN
DEPARTMENT OF TRANSPORTATION

APPROVED
11/27/2013 — DATE
/S/ Jerry H. Zogg — ROADWAY STANDARDS DEVELOPMENT ENGINEER
FHWA

6

S.D.D. 8 A 5-19b

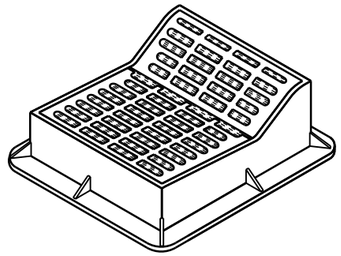

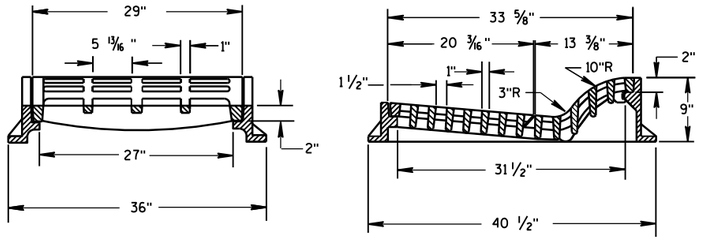

TYPE "F"

USE WITH TYPES A & D CONCRETE CURB & GUTTER, 36 INCH.

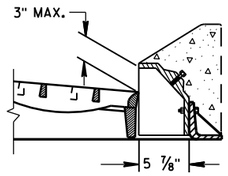

ALTERNATIVE CURB BOX FOR TYPE "HM" COVER

USE WITH TYPES G & J CONCRETE CURB & GUTTER, 30 INCH
NOTED AS TYPE HM-GJ ON DRAINAGE TABLE

NOTE:
SPECIAL GRATE FOR THE
TYPE "H" COVER MAY ALSO BE
USED FOR THE TYPE "HM-GJ" COVER
NOTED AS TYPE HM-GJ-S ON DRAINAGE TABLE

GENERAL NOTES

DETAILS OF CONSTRUCTION, MATERIALS AND WORKMANSHIP NOT SHOWN ON THIS DRAWING SHALL CONFORM TO THE PERTINENT REQUIREMENTS OF THE STANDARD SPECIFICATIONS AND THE APPLICABLE SPECIAL PROVISIONS.

DETAIL DRAWINGS FOR PROPOSED ALTERNATE DESIGNS FOR INLET COVERS SHALL BE SUBMITTED TO THE ENGINEER FOR APPROVAL PROVIDING THAT SUCH ALTERNATE DESIGNS MAKE PROVISION FOR EQUIVALENT CAPACITY AND STRENGTH.

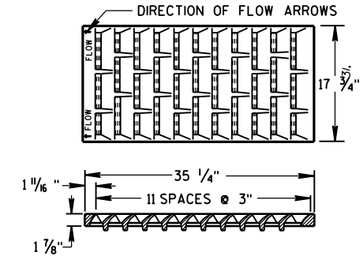

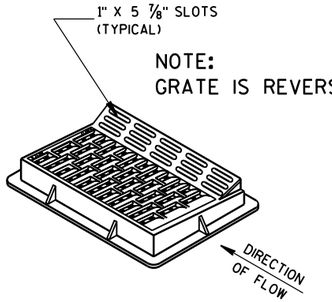

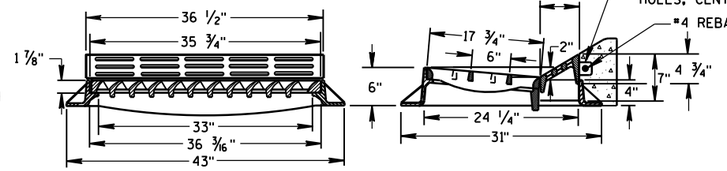

TYPE "HM"

USE WITH TYPES A & D CONCRETE CURB & GUTTER, 36 INCH.

NOTE:
SPECIAL GRATE FOR THE
TYPE "H" COVER MAY ALSO BE
USED FOR THE TYPE "HM" COVER
NOTED AS TYPE HM-S ON DRAINAGE TABLE

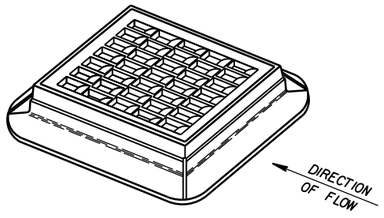

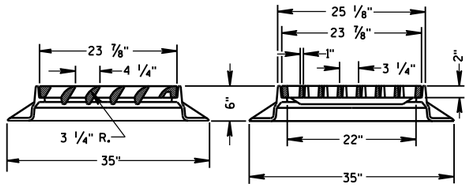

TYPE "S"

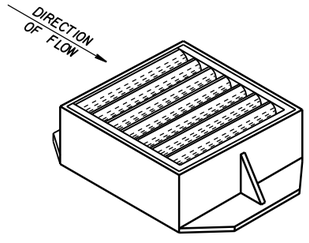

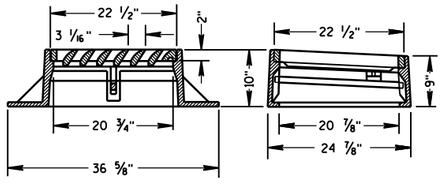

TYPE "V"

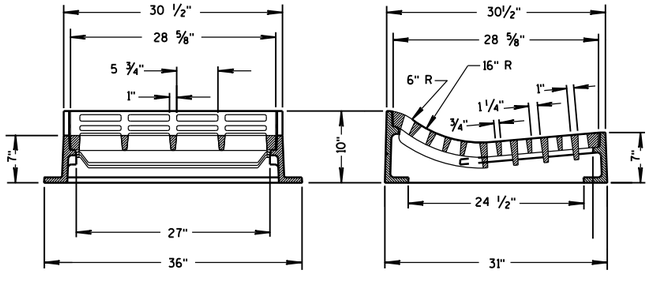

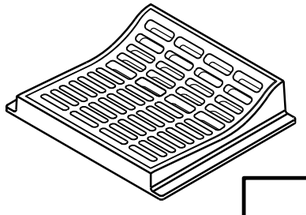

TYPE "T"

USE WITH TYPES R & T CONCRETE CURB & GUTTER, 36 INCH.

INLET COVERS
TYPE F, HM, HM-S, S, T, V, HM-GJ, & HM-GJ-S

STATE OF WISCONSIN
DEPARTMENT OF TRANSPORTATION

APPROVED
11/27/2013
DATE

/S/ Jerry H. Zogg
ROADWAY STANDARDS ENGINEER

626

FHWA

6

S.D.D. 8 A 5-19c

6

S.D.D. 8 A 5-19c

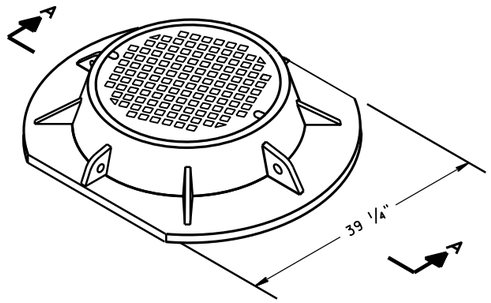

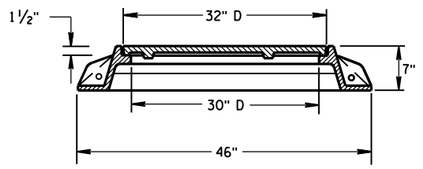

SECTION A-A
TYPE "K"

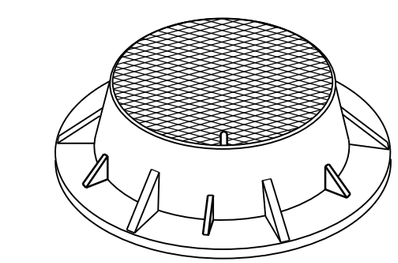

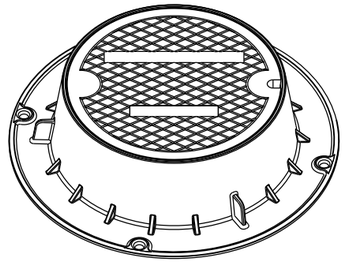

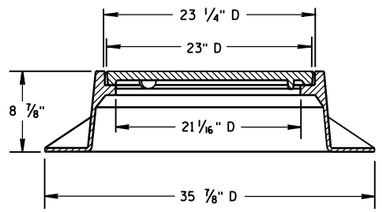

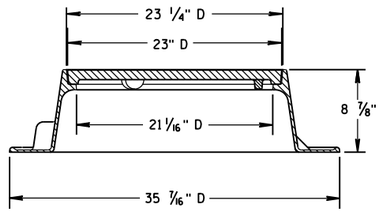

TYPE "J"
NOTE: EITHER CASTING IS ACCEPTABLE

GENERAL NOTES

DETAILS OF CONSTRUCTION, MATERIALS AND WORKMANSHIP NOT SHOWN ON THIS DRAWING SHALL CONFORM TO THE PERTINENT REQUIREMENTS OF THE STANDARD SPECIFICATIONS AND THE APPLICABLE SPECIAL PROVISIONS.

DETAIL DRAWINGS FOR PROPOSED ALTERNATE DESIGNS FOR MANHOLE COVERS SHALL BE SUBMITTED TO THE ENGINEER FOR APPROVAL PROVIDING THAT SUCH ALTERNATE DESIGNS MAKE PROVISION FOR EQUIVALENT CAPACITY AND STRENGTH.

ROUND FRAMES AND COVERS SHALL HAVE CONTINUOUSLY MACHINED BEARING SURFACES TO PREVENT ROCKING AND RATTLING.

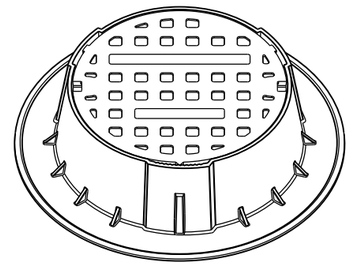

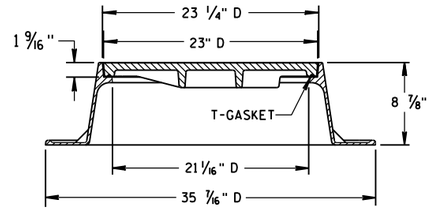

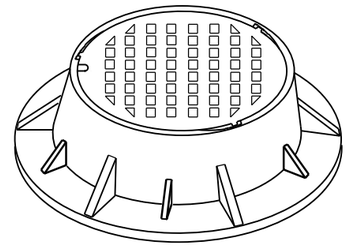

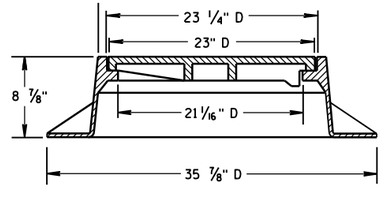

TYPE "J" SPECIAL
TYPE "B" NON-ROCKING SELF-SEAL LID
(NOTED AS TYPE J-S ON THE DRAINAGE TABLE)
NOTE: EITHER CASTING IS ACCEPTABLE

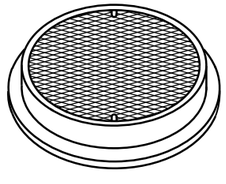

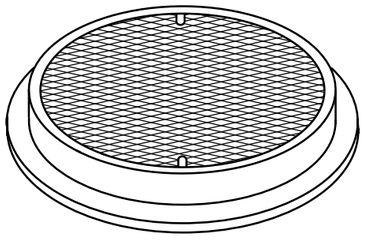

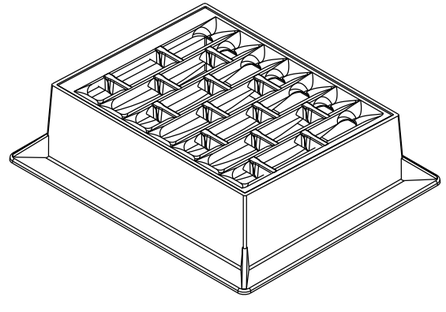

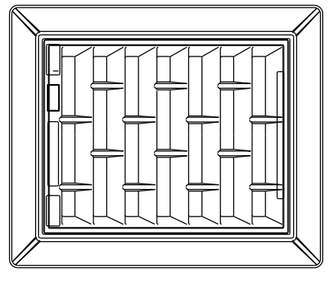

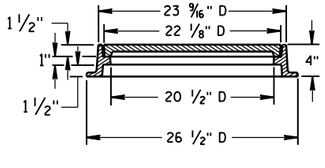

TYPE "L"

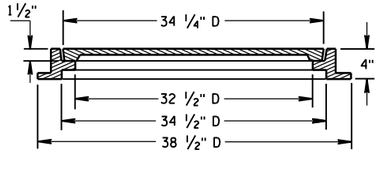

TYPE "M"

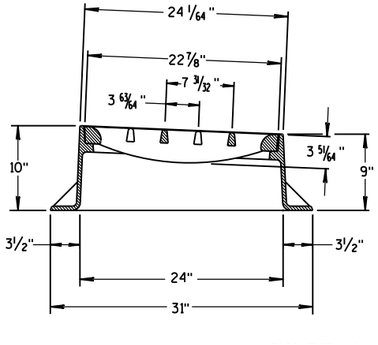

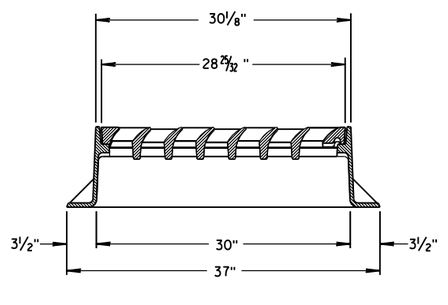

INLET COVER TYPE "BW"

INLET COVER TYPE BW
MANHOLE COVERS, TYPE K, J, J-S, L & M

STATE OF WISCONSIN
DEPARTMENT OF TRANSPORTATION

APPROVED
11/27/2013
DATE
FHWA

/S/ Jerry H. Zogg
ROADWAY STANDARDS DEVELOPMENT ENGINEER

627

6

S.D.D. 8 A 5-19d

6

S.D.D. 8 A 5-19d

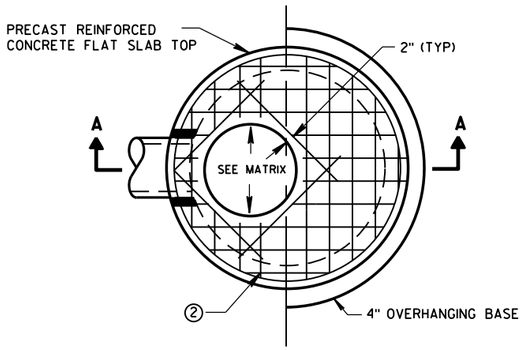

PLAN VIEW CIRCULAR OPENING

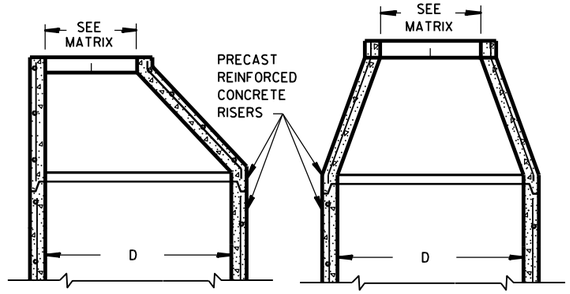

OPTIONAL PRECAST REINFORCED CONCRETE ECCENTRIC TOP

OPTIONAL PRECAST REINFORCED CONCRETE CONCENTRIC TOP

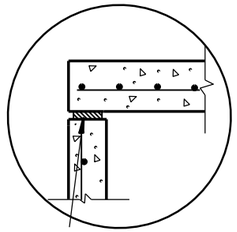

TOP WITH PLAIN END JOINT

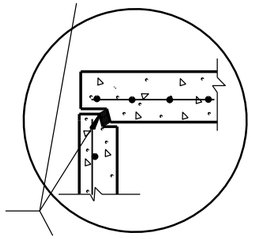

TOP WITH TONGUE AND GROOVE JOINT

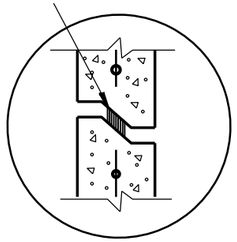

RISER WITH TONGUE AND GROOVE JOINT

DETAIL "B"

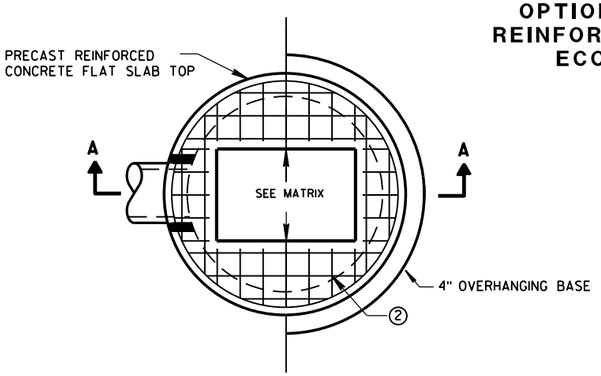

PLAN VIEW RECTANGULAR OPENING

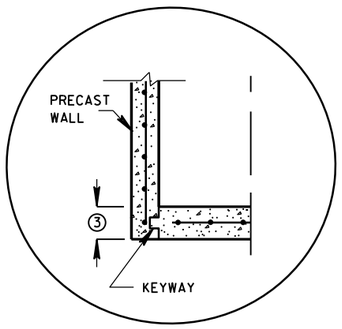

JOINTS TO BE SEALED WITH A BUTYL RUBBER SEAL PER SEALANT MANUFACTURERS RECOMMENDATIONS CONFORMING TO ASTM C 990 (TYP)

PRECAST REINFORCED CONCRETE WITH INTEGRAL BASE OPTION

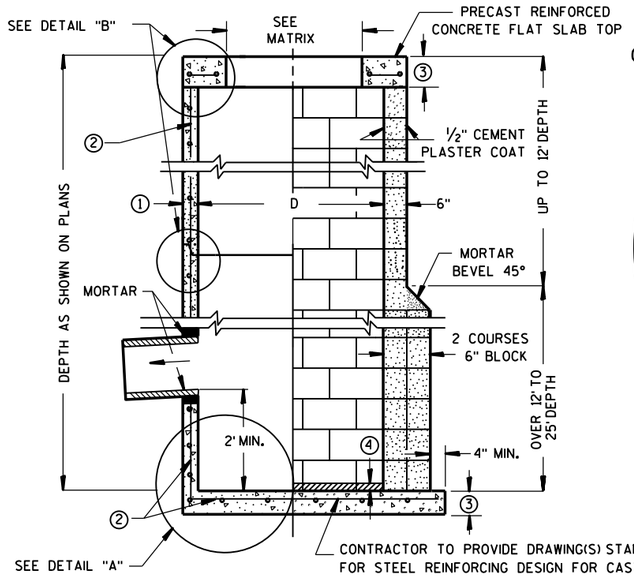

SECTION A-A

PRECAST REINFORCED CONCRETE WITH MONOLITHIC BASE

CONCRETE BLOCK WITH CAST-IN-PLACE OR PRECAST REINFORCED CONCRETE BASE ②

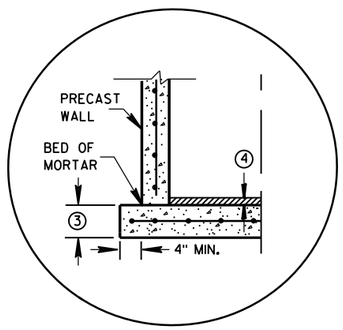

SEPARATE PRECAST REINFORCED CONCRETE BASE OPTION

DETAIL "A"

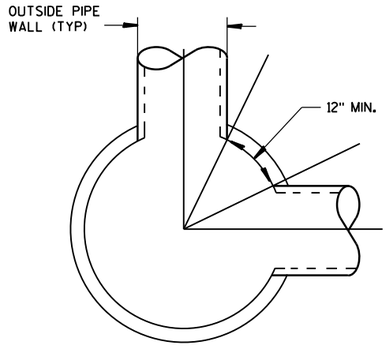

DETAIL "C"

GENERAL NOTES

DETAILS OF CONSTRUCTION, MATERIALS AND WORKMANSHIP NOT SHOWN ON THIS DRAWING SHALL CONFORM TO THE PERTINENT REQUIREMENTS OF THE STANDARD SPECIFICATIONS AND THE APPLICABLE SPECIAL PROVISIONS.

UNLESS OTHERWISE AUTHORIZED IN WRITING BY THE ENGINEER, THE CONTRACTOR SHALL NOT ORDER AND DELIVER PRECAST CATCH BASIN UNITS REQUIRED FOR THE PROJECT UNTIL A LIST OF SIZES IS FURNISHED BY THE ENGINEER.

DETAILED DRAWINGS FOR PROPOSED ALTERNATE DESIGNS FOR UNDERGROUND DRAINAGE STRUCTURES SHALL BE SUBMITTED TO THE ENGINEER FOR APPROVAL PROVIDING THAT SUCH ALTERNATE DESIGNS MAKE PROVISION FOR EQUIVALENT CAPACITY AND STRENGTH.

ALL DRAINAGE STRUCTURES ARE DESIGNATED ON THE PLANS AS "MANHOLES 3X3-L", "CATCH BASINS 4-B", "INLETS 2X3-H", ETC. THE FIRST NUMBERS DESIGNATE THE SIZE OF THE STRUCTURE, AND THE FOLLOWING LETTER DESIGNATES THE TYPE OF COVER TO BE USED TO COMPRISE THE COMPLETE UNIT.

BASES SHALL BE PLACED ON A BED OF MATERIAL AT LEAST 6 INCHES IN DEPTH, WHICH MEETS THE REQUIREMENTS OF FOUNDATION BACKFILL. THIS BEDDING SHALL BE COMPACTED AND PROVIDE UNIFORM SUPPORT FOR THE ENTIRE AREA OF THE BASE.

PRECAST REINFORCED CONCRETE CONE TOPS (ECCENTRIC OR CONCENTRIC) OR PRECAST REINFORCED CONCRETE FLAT SLAB TOPS MAY BE USED ON CONCRETE BLOCK STRUCTURES.

ECCENTRIC CONE TOPS MAY BE USED ON ALL STRUCTURES, AND CONCENTRIC CONE TOPS SHALL BE USED ONLY ON STRUCTURES 5 FEET OR LESS IN DEPTH, UNLESS OTHERWISE DIRECTED BY THE ENGINEER.

STEPS MEETING AASHTO M199 AND THE FOLLOWING REQUIREMENTS SHALL BE INSTALLED IN ALL STRUCTURES OVER 5 FEET IN DEPTH: 16 INCH C-C MAXIMUM SPACING; PROJECT A MINIMUM CLEAR DISTANCE OF 4 INCHES FROM THE WALL AT THE POINT OF EMBEDMENT; MINIMUM LENGTH OF 10 INCHES; MINIMUM WALL EMBEDMENT OF 3 INCHES. FERROUS METAL STEPS NOT PAINTED OR TREATED TO RESIST CORROSION SHALL HAVE A MINIMUM CROSS SECTIONAL DIMENSION OF 1 INCH.

STEPS OF APPROVED POLYPROPYLENE PLASTIC COATED REINFORCEMENT BAR ARE ACCEPTABLE. REINFORCING BAR MUST BE A MINIMUM OF ½ INCH AND MEET THE REQUIREMENTS OF ASTM A615.

CERTIFICATION SHALL BE PROVIDED THAT INSTALLED STEPS WHEN TESTED IN ACCORDANCE WITH SECTION 10 OF AASHTO T280 CAN WITHSTAND A VERTICAL LOAD OF 800 LBS. AND A HORIZONTAL LOAD OF 400 LBS.

ALL BAR STEEL REINFORCEMENT SHALL BE EMBEDDED 2 INCHES CLEAR UNLESS OTHERWISE SHOWN OR NOTED.

ALL PRECAST INLET UNITS SHALL CONFORM TO THE PERTINENT REQUIREMENTS OF AASHTO DESIGNATION M199.

PRECAST REINFORCED RISERS SHALL HAVE A TONGUE AND GROOVE JOINT WITH TONGUE UP OR DOWN.

CONCRETE BLOCK WILL NOT BE PERMITED FOR STRUCTURES GREATER THAN 4 FEET IN DIAMETER.

4" OVERHANGING BASES ARE REQUIRED FOR ALL CONCRETE BLOCK INSTALLATIONS. 4" OVERHANG IS REQUIRED WHEN SEPARATE PRECAST BASE IS PROVIDED. OVERHANG IS NOT REQUIRED ON PRECAST STRUCTURES WITH AN INTEGRAL OR MONOLITHIC BASE.

FOR ADDITIONAL CONFIGURATIONS, MAINTAIN A MINIMUM OF 12 INCHES AS MEASURED FROM THE INSIDE OF THE STRUCTURE WALL BETWEEN THE OUTSIDE PIPE WALLS OF ADJACENT PIPES. SEE DETAIL "C".

① MINIMUM WALL THICKNESS SHALL BE 4 INCHES FOR 3-FT, 5 INCHES FOR 4-FT, 6 INCHES FOR 5-FT AND 7 INCHES FOR 6-FT DIAMETER PRECAST CATCH BASINS.

② FOR PRECAST CATCH BASINS PROVIDE REINFORCING STEEL IN ACCORDANCE TO AASHTO M199.

③ PRECAST FLAT SLAB TOPS AND BASES WITH A DIAMETER OF 48" AND LESS SHALL HAVE A MINIMUM THICKNESS OF 6". PRECAST FLAT SLAB TOPS AND BASES WITH A DIAMETER LARGER THAN 48" SHALL HAVE A MINIMUM THICKNESS OF 8".

④ 1" CONCRETE KEY POURED AFTER INSTALLATION. 2' SUMP MEASURED FROM TOP OF KEY.

CATCH BASIN COVER OPENING MATRIX

CATCH BASIN SIZE	INLET COVER TYPE	ALL A'S	ALL B'S	BW	C	F	ALL H'S	S	T	V	WM	Z
	OPENING SIZE (FT)											
3-FT	2X2	X	X					X		X		
	2 DIA.				X							X
4-FT-6-FT	2X2	X	X					X		X		
	2X2.5			X				X	X	X	X	
	2 DIA.				X							X
	2X3						X					
	2.5X3					X						

PIPE MATRIX

CATCH BASIN SIZE	MAXIMUM INSIDE PIPE DIAMETER FOR TWO PIPES	
	180° SEPARATION (IN)	90° SEPARATION (IN)
3-FT	15	12
4-FT	24	18
5-FT	36	24
6-FT	42	30

CATCH BASINS 3-FT, 4-FT, 5-FT AND 6-FT DIAMETER

STATE OF WISCONSIN
DEPARTMENT OF TRANSPORTATION

APPROVED
Sept., 2016 — DATE
/S/ Rodney Taylor — ROADWAY STANDARDS UNIT SUPERVI
628
ENT
FHWA

CATCH BASINS 3-FT, 4-FT, 5-FT AND 6-FT DIAMETER

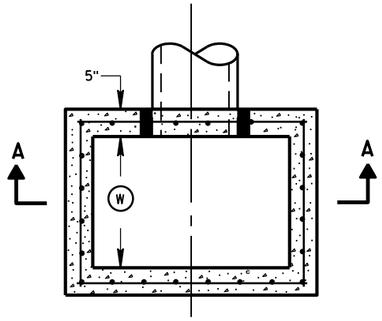

PLAN VIEW

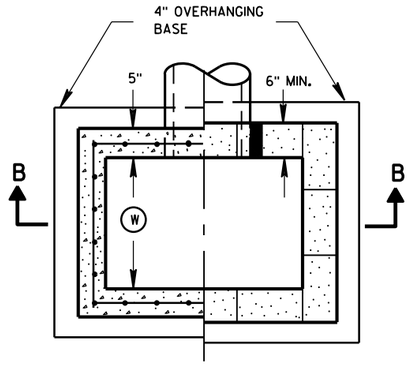

PLAN VIEW

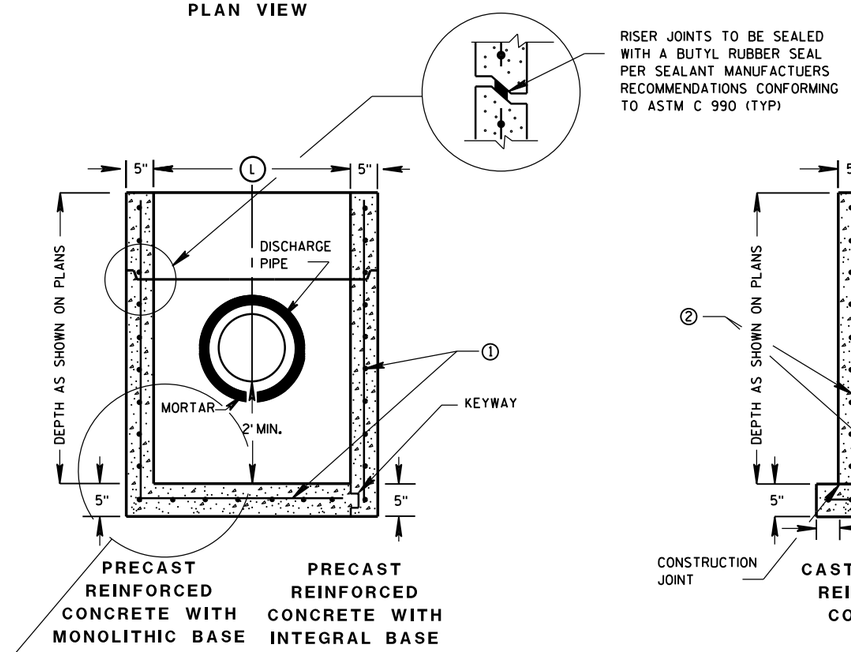

SECTION A-A

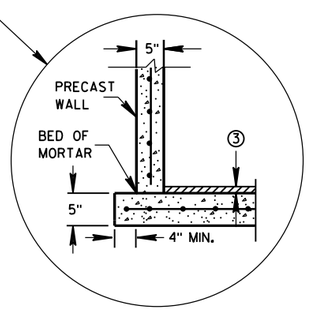

SEPARATE PRECAST REINFORCED CONCRETE BASE OPTION

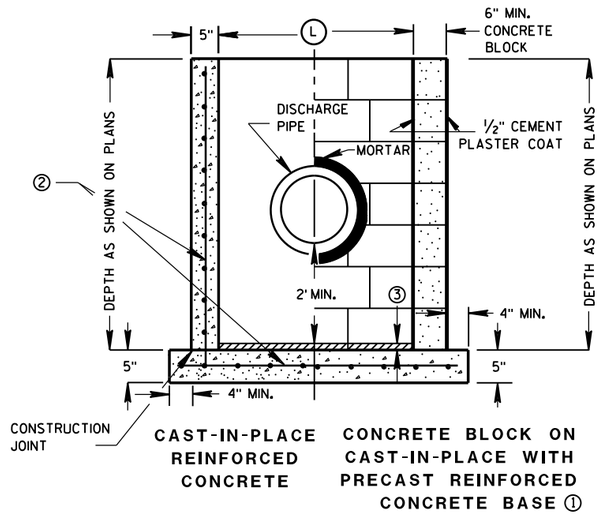

SECTION B-B

GENERAL NOTES

DETAILS OF CONSTRUCTION, MATERIALS AND WORKMANSHIP NOT SHOWN ON THIS DRAWING SHALL CONFORM TO THE PERTINENT REQUIREMENTS OF THE STANDARD SPECIFICATIONS AND THE APPLICABLE SPECIAL PROVISIONS.

UNLESS OTHERWISE AUTHORIZED IN WRITING BY THE ENGINEER, THE CONTRACTOR SHALL NOT ORDER AND DELIVER PRECAST CATCH BASIN UNITS REQUIRED FOR THE PROJECT UNTIL A LIST OF SIZES IS FURNISHED BY THE ENGINEER.

DETAILED DRAWINGS FOR PROPOSED ALTERNATE DESIGNS FOR UNDERGROUND DRAINAGE STRUCTURES SHALL BE SUBMITTED TO THE ENGINEER FOR APPROVAL PROVIDING THAT SUCH ALTERNATE DESIGNS MAKE PROVISION FOR EQUIVALENT CAPACITY AND STRENGTH.

ALL PRECAST CATCH BASIN UNITS SHALL CONFORM TO THE PERTINENT REQUIREMENTS OF ASTM C 913.

ALL DRAINAGE STRUCTURES ARE DESIGNATED ON THE PLANS AS "MANHOLES 3X3-L", "CATCH BASINS 4-B", "INLETS 2X3-H", ETC. THE FIRST NUMBERS DESIGNATES THE SIZE OF THE STRUCTURE, AND THE FOLLOWING LETTER DESIGNATES THE TYPE OF COVER TO BE USED TO COMPRISE THE COMPLETE UNIT.

BASES SHALL BE PLACED ON A BED OF MATERIAL AT LEAST 6 INCHES IN DEPTH, WHICH MEETS THE REQUIREMENTS OF FOUNDATION BACKFILL. THIS BEDDING SHALL BE COMPACTED AND PROVIDE UNIFORM SUPPORT FOR THE ENTIRE AREA OF THE BASE.

ALL BAR STEEL REINFORCEMENT SHALL BE EMBEDDED 2 INCHES CLEAR UNLESS OTHERWISE SHOWN OR NOTED.

PRECAST REINFORCED RISERS SHALL HAVE A TONGUE AND GROOVE JOINT WITH TONGUE UP OR DOWN.

4" OVERHANGING BASES ARE REQUIRED FOR CAST-IN-PLACE REINFORCED CONCRETE AND CONCRETE BLOCK INSTALLATIONS.
4" OVERHANG IS REQUIRED WHEN SEPARATE PRECAST BASE IS PROVIDED.
OVERHANG IS NOT REQUIRED ON PRECAST STRUCTURES WITH AN INTEGRAL OR MONOLITHIC BASE.

MAXIMUM INSIDE PIPE DIAMETER DETERMINED BY 3" CLEARANCE ON EACH SIDE OF THE OUTSIDE WALL OF THE PIPE. SEE DETAIL "A". ASSUMES PIPE ENTERS PERPENDICULAR TO THE STRUCTURE.

① FOR PRECAST CATCH BASINS PROVIDE REINFORCING STEEL IN ACCORDANCE TO ASTM C 913.

② CONTRACTOR TO PROVIDE DRAWING(S) STAMPED BY A PROFESSIONAL ENGINEER FOR STEEL REINFORCING DESIGN FOR CAST-IN-PLACE STRUCTURES.

③ 1" CONCRETE KEY POURED AFTER INSTALLATION. 2' SUMP MEASURED FROM TOP OF KEY.

CATCH BASIN COVER MATRIX

CATCH BASIN SIZE		INLET COVER TYPE	F	ALL H'S
	WIDTH (W) (FT)	LENGTH (L) (FT)		
2X3-FT	2	3		X
2.5X3-FT	2.5	3	X	

PIPE MATRIX

CATCH BASIN SIZE	MAXIMUM INSIDE PIPE DIAMETER FOR TWO PIPES	
	WIDTH (IN)	LENGTH (IN)
2X3-FT	12	24
2.5X3-FT	18	24

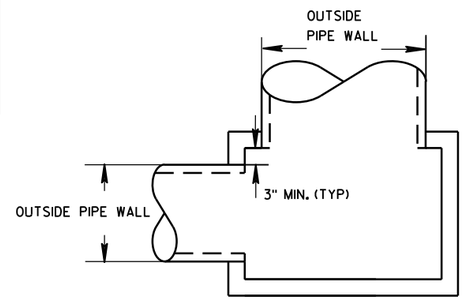

DETAIL "A"

CATCH BASINS 2X3-FT AND 2.5X3-FT

CATCH BASINS 2X3-FT AND 2.5X3-FT

STATE OF WISCONSIN
DEPARTMENT OF TRANSPORTATION

APPROVED
Sept., 2016 — DATE
/S/ Rodney Taylor
ROADWAY STANDARDS UNIT SUPERVISOR
FHWA

6

S.D.D. 8 A 9-2

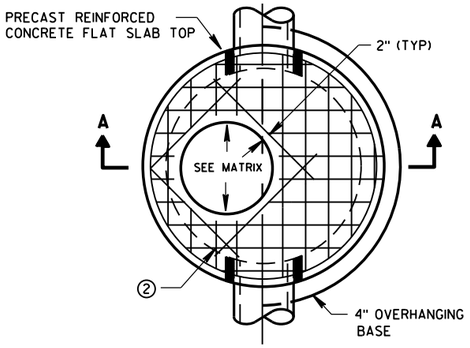

PLAN VIEW CIRCULAR OPENING

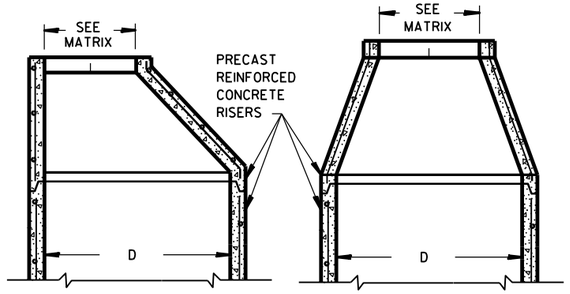

OPTIONAL PRECAST REINFORCED CONCRETE ECCENTRIC TOP

OPTIONAL PRECAST REINFORCED CONCRETE CONCENTRIC TOP

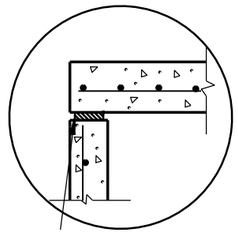

TOP WITH PLAIN END JOINT

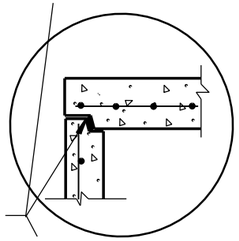

JOINTS TO BE SEALED WITH A BUTYL RUBBER SEAL PER SEALANT MANUFACTURERS RECOMMENDATIONS CONFORMING TO ASTM C990 (TYP)

TOP WITH TONGUE AND GROOVE JOINT

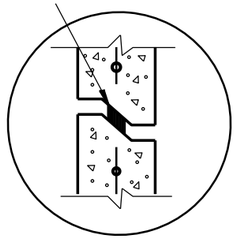

RISER WITH TONGUE AND GROOVE JOINT

DETAIL "B"

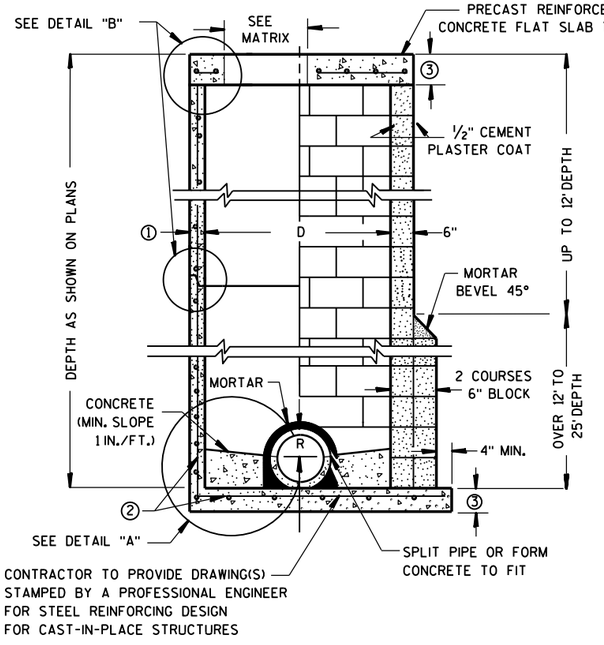

PRECAST REINFORCED CONCRETE WITH MONOLITHIC BASE

CONCRETE BLOCK WITH CAST-IN-PLACE OR PRECAST REINFORCED CONCRETE BASE ②

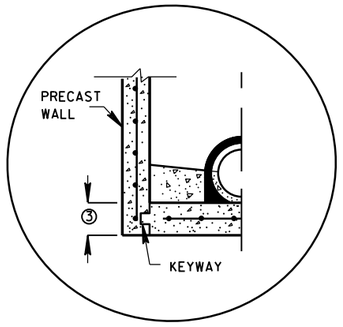

PRECAST REINFORCED CONCRETE WITH INTEGRAL BASE OPTION

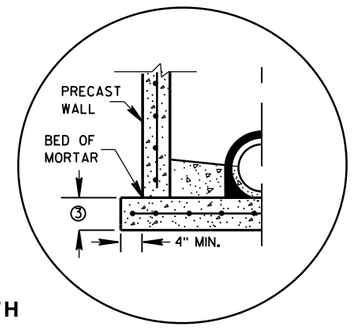

SEPARATE PRECAST REINFORCED CONCRETE BASE OPTION

DETAIL "A"

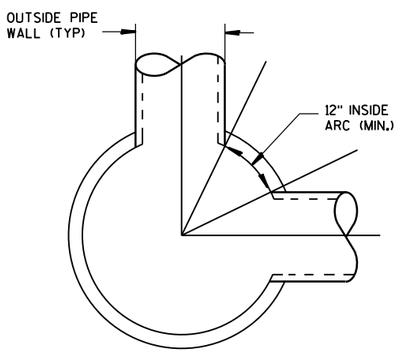

DETAIL "C"

GENERAL NOTES

DETAILS OF CONSTRUCTION, MATERIALS AND WORKMANSHIP NOT SHOWN ON THIS DRAWING SHALL CONFORM TO THE PERTINENT REQUIREMENTS OF THE STANDARD SPECIFICATIONS AND THE APPLICABLE SPECIAL PROVISIONS.

UNLESS OTHERWISE AUTHORIZED IN WRITING BY THE ENGINEER, THE CONTRACTOR SHALL NOT ORDER AND DELIVER PRECAST MANHOLE UNITS REQUIRED FOR THE PROJECT UNTIL A LIST OF SIZES IS FURNISHED BY THE ENGINEER.

DETAILED DRAWINGS FOR PROPOSED ALTERNATE DESIGNS FOR UNDERGROUND DRAINAGE STRUCTURES SHALL BE SUBMITTED TO THE ENGINEER FOR APPROVAL PROVIDING THAT SUCH ALTERNATE DESIGNS MAKE PROVISION FOR EQUIVALENT CAPACITY AND STRENGTH.

ALL DRAINAGE STRUCTURES ARE DESIGNATED ON THE PLANS AS "MANHOLES 3X3-L", "CATCH BASINS 4-B", "INLETS 2X3-H", ETC. THE FIRST NUMBERS DESIGNATE THE SIZE OF THE STRUCTURE, AND THE FOLLOWING LETTER DESIGNATES THE TYPE OF COVER TO BE USED TO COMPRISE THE COMPLETE UNIT.

BASES SHALL BE PLACED ON A BED OF MATERIAL AT LEAST 6 INCHES IN DEPTH, WHICH MEETS THE REQUIREMENTS OF FOUNDATION BACKFILL. THIS BEDDING SHALL BE COMPACTED AND PROVIDE UNIFORM SUPPORT FOR THE ENTIRE AREA OF THE BASE.

PRECAST REINFORCED CONE TOPS (ECCENTRIC OR CONCENTRIC) OR PRECAST REINFORCED FLAT SLAB TOPS MAY BE USED ON CONCRETE BLOCK STRUCTURES.

ECCENTRIC CONE TOPS MAY BE USED ON ALL STRUCTURES, AND CONCENTRIC CONE TOPS SHALL BE USED ONLY ON STRUCTURES 5 FEET OR LESS IN DEPTH, UNLESS OTHERWISE DIRECTED BY THE ENGINEER.

STEPS MEETING AASHTO M199 AND THE FOLLOWING REQUIREMENTS SHALL BE INSTALLED IN ALL STRUCTURES OVER 5 FEET IN DEPTH: 16 INCH C-C MAXIMUM SPACING; PROJECT A MINIMUM CLEAR DISTANCE OF 4 INCHES FROM THE WALL AT THE POINT OF EMBEDMENT; MINIMUM LENGTH OF 10 INCHES; MINIMUM WALL EMBEDMENT OF 3 INCHES. FERROUS METAL STEPS NOT PAINTED OR TREATED TO RESIST CORROSION SHALL HAVE A MINIMUM CROSS SECTIONAL DIMENSION OF 1 INCH.

STEPS OF APPROVED POLYPROPYLENE PLASTIC COATED REINFORCEMENT BAR ARE ACCEPTABLE. REINFORCING BAR MUST BE A MINIMUM OF ½" AND MEET THE REQUIREMENTS OF ASTM A615.

CERTIFICATION SHALL BE PROVIDED THAT INSTALLED STEPS WHEN TESTED IN ACCORDANCE WITH SECTION 10 OF AASHTO T280 CAN WITHSTAND A VERTICAL LOAD OF 800 LBS. AND A HORIZONTAL LOAD OF 400 LBS.

ALL BAR STEEL REINFORCEMENT SHALL BE EMBEDDED 2 INCHES CLEAR UNLESS OTHERWISE SHOWN OR NOTED.

CONCRETE BLOCK WILL NOT BE PERMITED FOR STRUCTURES GREATER THAN 4 FEET IN DIAMETER.

PRECAST REINFORCED RISERS SHALL HAVE A TONGUE AND GROOVE JOINT WITH TONGUE UP OR DOWN.

ALL PRECAST MANHOLE UNITS SHALL CONFORM TO THE PERTINENT REQUIREMENTS OF AASHTO DESIGNATION M 199.

4" OVERHANGING BASES ARE REQUIRED FOR ALL CONCRETE BLOCK INSTALLATIONS. 4" OVERHANG IS REQUIRED WHEN SEPARATE PRECAST BASE IS PROVIDED. OVERHANG IS NOT REQUIRED ON PRECAST STRUCTURES WITH AN INTEGRAL OR MONOLITHIC BASE.

FOR ADDITIONAL CONFIGURATIONS, MAINTAIN A MINIMUM OF 12 INCHES AS MEASURED FROM THE INSIDE OF THE STRUCTURE WALL BETWEEN THE OUTSIDE PIPE WALLS OF ADJACENT PIPES. SEE DETAIL "C".

① MINIMUM WALL THICKNESS SHALL BE 4 INCHES FOR 3-FT, 5 INCHES FOR 4-FT, 6 INCHES FOR 5-FT, 7 INCHES FOR 6-FT, 8 INCHES FOR 7-FT AND 9 INCHES FOR 8-FT DIAMETER PRECAST MANHOLES.

② FOR PRECAST MANHOLES PROVIDE REINFORCING STEEL IN ACCORDANCE TO AASHTO M199.

③ PRECAST FLAT SLAB TOPS AND BASES WITH A DIAMETER OF 48" AND LESS SHALL HAVE A MINIMUM THICKNESS OF 6". PRECAST FLAT SLAB TOPS AND BASES WITH A DIAMETER LARGER THAN 48" SHALL HAVE A MINIMUM THICKNESS OF 8".

MANHOLE COVER OPENING MATRIX

MANHOLE COVER TYPE	C	ALL J'S	K	L	M
OPENING SIZE (FT)					
2 DIA.	X	X		X	
3 DIA.			X		X

PIPE MATRIX

MANHOLE SIZE	MAXIMUM INSIDE PIPE DIAMETER FOR TWO PIPES	
	180° SEPARATION (IN)	90° SEPARATION (IN)
3-FT	15	12
4-FT	24	18
5-FT	36	24
6-FT	42	36
7-FT	48	36
8-FT	60	42

MANHOLES 3-FT, 4-FT, 5-FT, 6-FT, 7-FT AND 8-FT DIAMETER

STATE OF WISCONSIN
DEPARTMENT OF TRANSPORTATION

APPROVED

Sept., 2016
DATE

/S/ Rodney Taylor
ROADWAY STANDARDS DEVELOPMENT
UNIT SUPERV 630

FHWA

6
S.D.D. 8 B 9-2

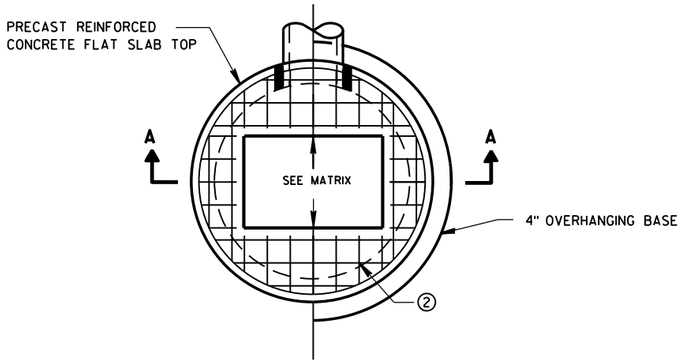

PLAN VIEW RECTANGULAR OPENING

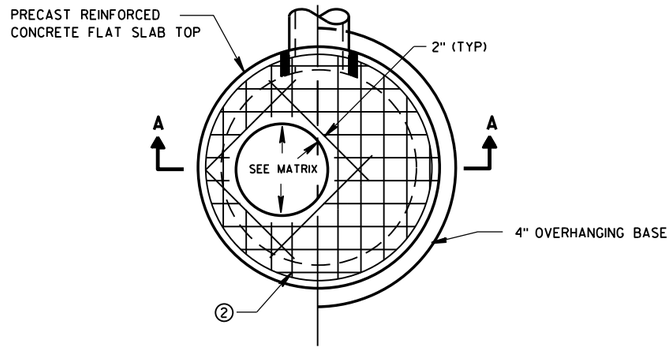

PLAN VIEW CIRCULAR OPENING

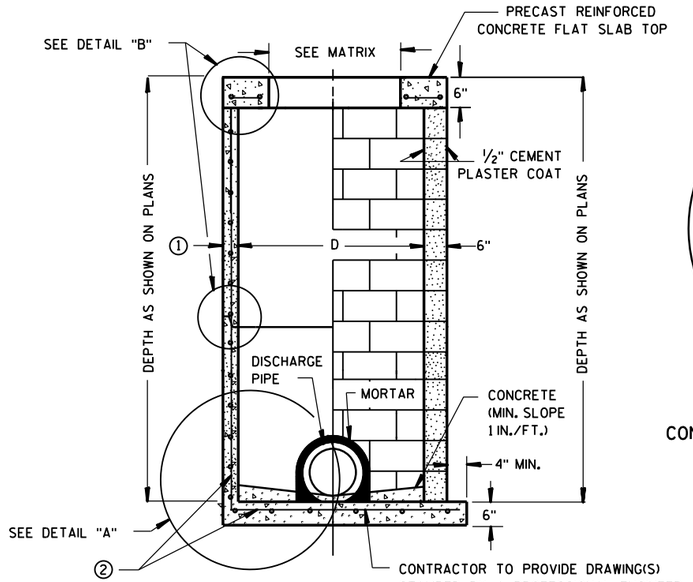

SECTION A-A

PRECAST REINFORCED CONCRETE WITH MONOLITHIC BASE

CONCRETE BLOCK WITH CAST-IN-PLACE OR PRECAST REINFORCED CONCRETE BASE ②

CIRCULAR INLETS W/ FLAT TOP

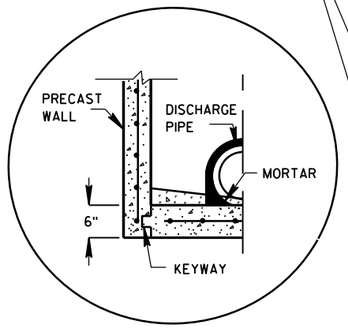

PRECAST REINFORCED CONCRETE WITH INTEGRAL BASE OPTION

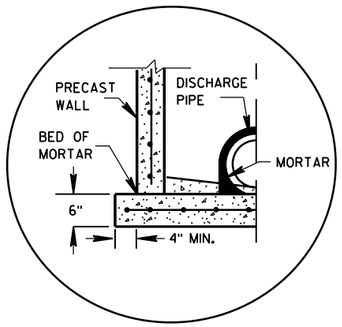

SEPARATE PRECAST REINFORCED CONCRETE BASE OPTION

DETAIL "A"

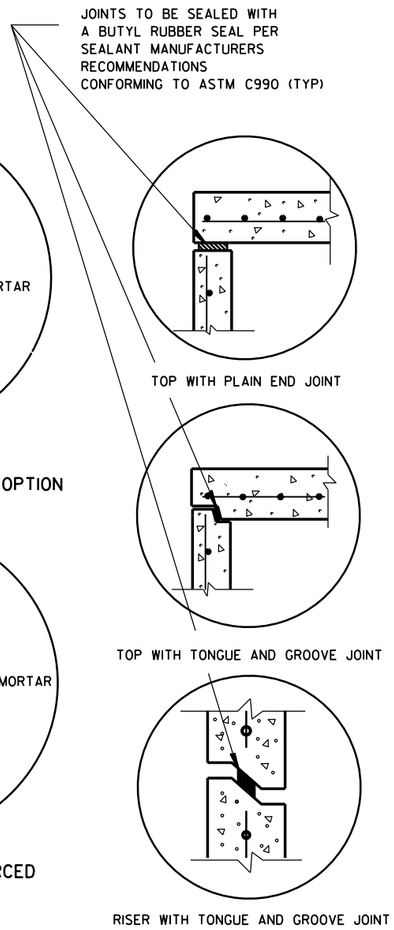

DETAIL "B"

GENERAL NOTES

DETAILS OF CONSTRUCTION, MATERIALS AND WORKMANSHIP NOT SHOWN ON THIS DRAWING SHALL CONFORM TO THE PERTINENT REQUIREMENTS OF THE STANDARD SPECIFICATIONS AND THE APPLICABLE SPECIAL PROVISIONS.

UNLESS OTHERWISE AUTHORIZED IN WRITING BY THE ENGINEER, THE CONTRACTOR SHALL NOT ORDER AND DELIVER PRECAST INLET UNITS REQUIRED FOR THE PROJECT UNTIL A LIST OF SIZES IS FURNISHED BY THE ENGINEER.

DETAILED DRAWINGS FOR PROPOSED ALTERNATE DESIGNS FOR UNDERGROUND DRAINAGE STRUCTURES SHALL BE SUBMITTED TO THE ENGINEER FOR APPROVAL PROVIDING THAT SUCH ALTERNATE DESIGNS MAKE PROVISION FOR EQUIVALENT CAPACITY AND STRENGTH.

ALL DRAINAGE STRUCTURES ARE DESIGNATED ON THE PLANS AS "MANHOLES 3X3-L", "CATCH BASINS 4-B", "INLETS 2X3-H", ETC. THE FIRST NUMBERS DESIGNATE THE SIZE OF THE STRUCTURE, AND THE FOLLOWING LETTER DESIGNATES THE TYPE OF COVER TO BE USED TO COMPRISE THE COMPLETE UNIT.

BASES SHALL BE PLACED ON A BED OF MATERIAL AT LEAST 6 INCHES IN DEPTH, WHICH MEETS THE REQUIREMENTS OF FOUNDATION BACKFILL. THIS BEDDING SHALL BE COMPACTED AND PROVIDE UNIFORM SUPPORT FOR THE ENTIRE AREA OF THE BASE.

ALL BAR STEEL REINFORCEMENT SHALL BE EMBEDDED 2 INCHES CLEAR UNLESS OTHERWISE SHOWN OR NOTED.

ALL PRECAST INLET UNITS SHALL CONFORM TO THE PERTINENT REQUIREMENTS OF AASHTO DESIGNATION M199.

PRECAST REINFORCED RISERS SHALL HAVE A TONGUE AND GROOVE JOINT WITH TONGUE UP OR DOWN.

4" OVERHANGING BASES ARE REQUIRED FOR ALL CONCRETE BLOCK INSTALLATIONS. 4" OVERHANG IS REQUIRED WHEN SEPARATE PRECAST BASE IS PROVIDED. OVERHANG IS NOT REQUIRED ON PRECAST STRUCTURES WITH AN INTEGRAL OR MONOLITHIC BASE.

FOR ADDITIONAL CONFIGURATIONS, MAINTAIN A MINIMUM OF 12 INCHES AS MEASURED FROM THE INSIDE OF THE STRUCTURE WALL BETWEEN THE OUTSIDE PIPE WALLS OF ADJACENT PIPES. SEE DETAIL "C".

① MINIMUM WALL THICKNESS SHALL BE 4-IN FOR 3-FT DIAMETER AND 5-IN FOR 4-FT DIAMETER PRECAST INLETS.

② FOR PRECAST CATCH BASINS PROVIDE REINFORCING STEEL IN ACCORDANCE TO AASHTO M199.

INLET COVER OPENING MATRIX

	INLET COVER TYPE	ALL A'S	ALL B'S	BW	C	F	ALL H'S	S	T	V	WM	Z
INLET SIZE	OPENING SIZE (FT)											
3-FT	2 DIA.				X							X
	2X2	X	X					X		X		
4-FT	2 DIA.				X							X
	2X2	X	X					X		X		
	2X2.5			X				X	X	X	X	
	2X3						X					
	2.5X3					X						

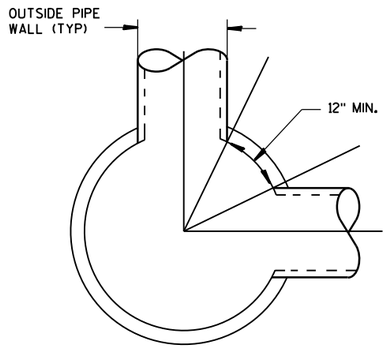

DETAIL "C"

PIPE MATRIX

INLET SIZE	MAXIMUM INSIDE PIPE DIAMETER FOR TWO PIPES	
	180° SEPARATION (IN)	90° SEPARATION (IN)
3-FT	15	12
4-FT	24	18

INLETS 3-FT AND 4-FT DIAMETER

STATE OF WISCONSIN
DEPARTMENT OF TRANSPORTATION

APPROVED
Sept., 2016 — /S/ Rodney Taylor
DATE — ROADWAY STANDARDS | ENT UNIT SUPERVI
FHWA

INLETS 3-FT AND 4-FT DIAMETER

6
S.D.D. 8 C 6-2

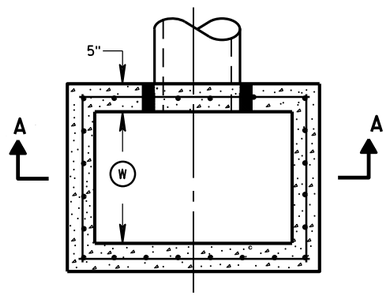

PLAN VIEW

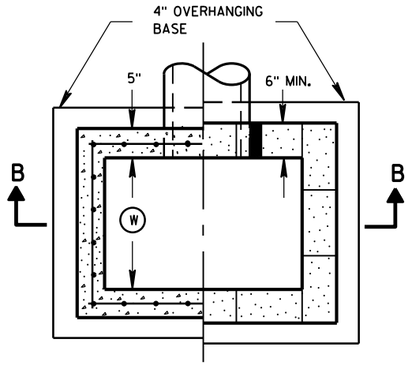

PLAN VIEW

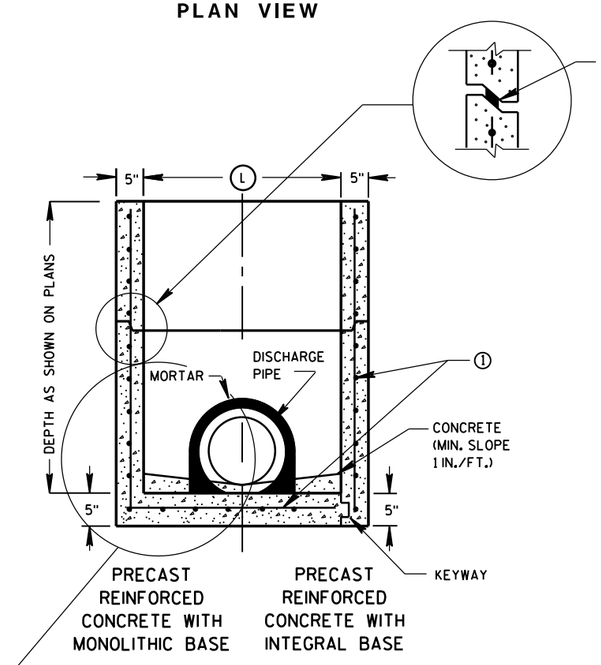

SECTION A-A

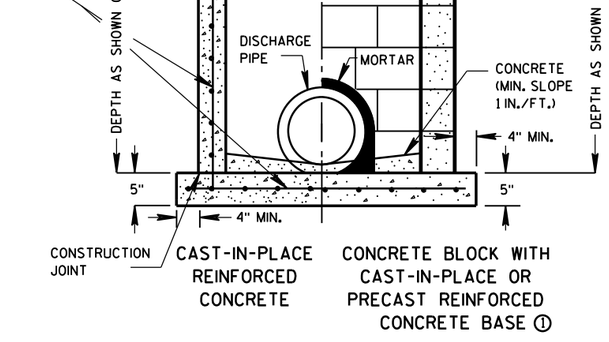

SECTION B-B

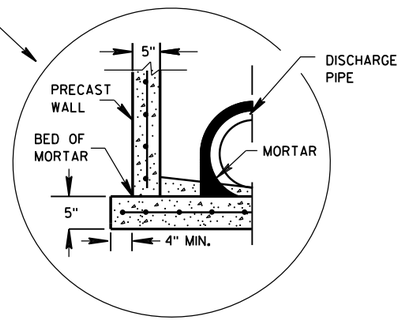

SEPARATE PRECAST REINFORCED CONCRETE BASE OPTION

GENERAL NOTES

DETAILS OF CONSTRUCTION, MATERIALS AND WORKMANSHIP NOT SHOWN ON THIS DRAWING SHALL CONFORM TO THE PERTINENT REQUIREMENTS OF THE STANDARD SPECIFICATIONS AND THE APPLICABLE SPECIAL PROVISIONS.

UNLESS OTHERWISE AUTHORIZED IN WRITING BY THE ENGINEER, THE CONTRACTOR SHALL NOT ORDER AND DELIVER PRECAST INLET UNITS REQUIRED FOR THE PROJECT UNTIL A LIST OF SIZES IS FURNISHED BY THE ENGINEER.

DETAILED DRAWINGS FOR PROPOSED ALTERNATE DESIGNS FOR UNDERGROUND DRAINAGE STRUCTURES SHALL BE SUBMITTED TO THE ENGINEER FOR APPROVAL PROVIDING THAT SUCH ALTERNATE DESIGNS MAKE PROVISION FOR EQUIVALENT CAPACITY AND STRENGTH.

ALL PRECAST INLET UNITS SHALL CONFORM TO THE PERTINENT REQUIREMENTS OF ASTM C 913.

ALL DRAINAGE STRUCTURES ARE DESIGNATED ON THE PLANS AS "MANHOLES 3X3-L", "CATCH BASINS 4-B", "INLETS 2X3-H", ETC. THE FIRST NUMBERS DESIGNATES THE SIZE OF THE STRUCTURE, AND THE FOLLOWING LETTER DESIGNATES THE TYPE OF COVER TO BE USED TO COMPRISE THE COMPLETE UNIT.

BASES SHALL BE PLACED ON A BED OF MATERIAL AT LEAST 6 INCHES IN DEPTH, WHICH MEETS THE REQUIREMENTS OF FOUNDATION BACKFILL. THIS BEDDING SHALL BE COMPACTED AND PROVIDE UNIFORM SUPPORT FOR THE ENTIRE AREA OF THE BASE.

ALL BAR STEEL REINFORCEMENT SHALL BE EMBEDDED 2 INCHES CLEAR UNLESS OTHERWISE SHOWN OR NOTED.

PRECAST REINFORCED RISERS SHALL HAVE A TONGUE AND GROOVE JOINT WITH TONGUE UP OR DOWN.

4" OVERHANGING BASES ARE REQUIRED FOR CAST-IN-PLACE REINFORCED CONCRETE AND CONCRETE BLOCK INSTALLATIONS.
4" OVERHANG IS REQUIRED WHEN SEPARATE PRECAST BASE IS PROVIDED.
OVERHANG IS NOT REQUIRED ON PRECAST STRUCTURES WITH AN INTEGRAL OR MONOLITHIC BASE.

MAXIMUM INSIDE PIPE DIAMETER DETERMINED BY 3 INCH CLEARANCE ON EACH SIDE OF THE OUTSIDE WALL OF THE PIPE. SEE DETAIL "A". ASSUMES PIPE ENTERS PERPENDICULAR TO THE STRUCTURE.

① FOR PRECAST INLETS PROVIDE REINFORCING STEEL IN ACCORDANCE TO ASTM C 913.

② CONTRACTOR TO PROVIDE DRAWING(S) STAMPED BY A PROFESSIONAL ENGINEER FOR STEEL REINFORCING DESIGN FOR CAST-IN-PLACE STRUCTURES.

INLET COVER MATRIX

INLET SIZE		INLET COVER TYPE	ALL A'S	ALL B'S	BW	F	ALL H'S	S	T	V	WM
	WIDTH (W) (FT)	LENGTH (L) (FT)									
2X2-FT	2	2	X	X				X		X	
2X2.5-FT	2	2.5			X			X	X	X	X
2X3-FT	2	3					X				
2.5X3-FT	2.5	3				X					

PIPE MATRIX

INLET SIZE	MAXIMUM INSIDE PIPE DIAMETER	
	WIDTH (IN)	LENGTH (IN)
2X2-FT	12	12
2X2.5-FT	12	18
2X3-FT	12	24
2.5X3-FT	18	24

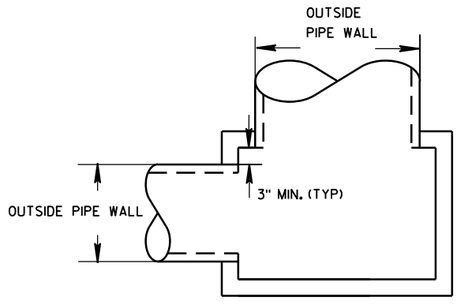

DETAIL "A"

INLETS 2X2-FT, 2X2.5-FT, 2X3-FT AND 2.5X3-FT

STATE OF WISCONSIN
DEPARTMENT OF TRANSPORTATION

APPROVED
Sept., 2016 — DATE
/S/ Rodney Taylor
ROADWAY STANDARDS D IT UNIT SUPERVIS
FHWA

INLETS 2X2-FT, 2X2.5-FT, 2X3-FT AND 2.5X3-FT

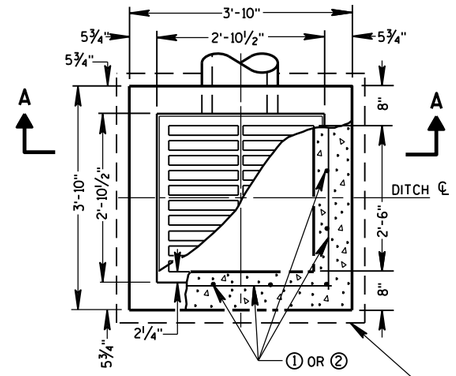

PLAN VIEW

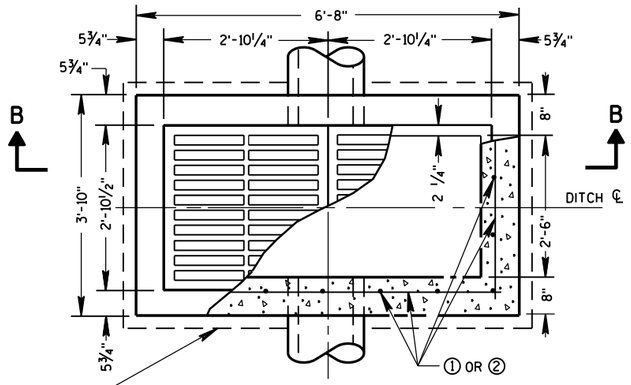

PLAN VIEW

4" OVERHANGING BASE ON REINFORCED CAST-IN-PLACE CONCRETE INLETS

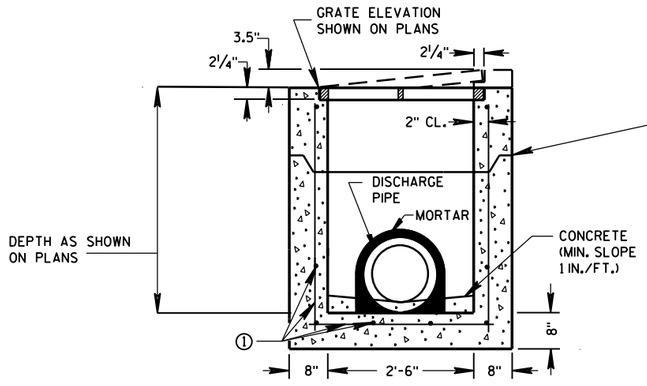

PRECAST REINFORCED CONCRETE SECTION A-A

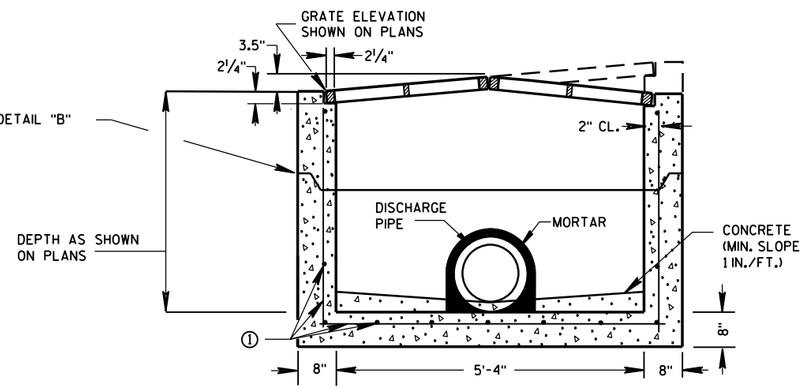

PRECAST REINFORCED CONCRETE SECTION B-B

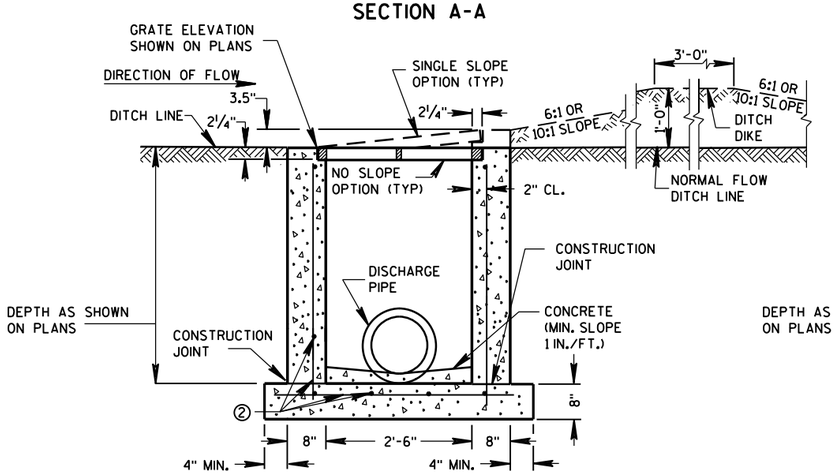

REINFORCED CAST-IN-PLACE CONCRETE SECTION A-A

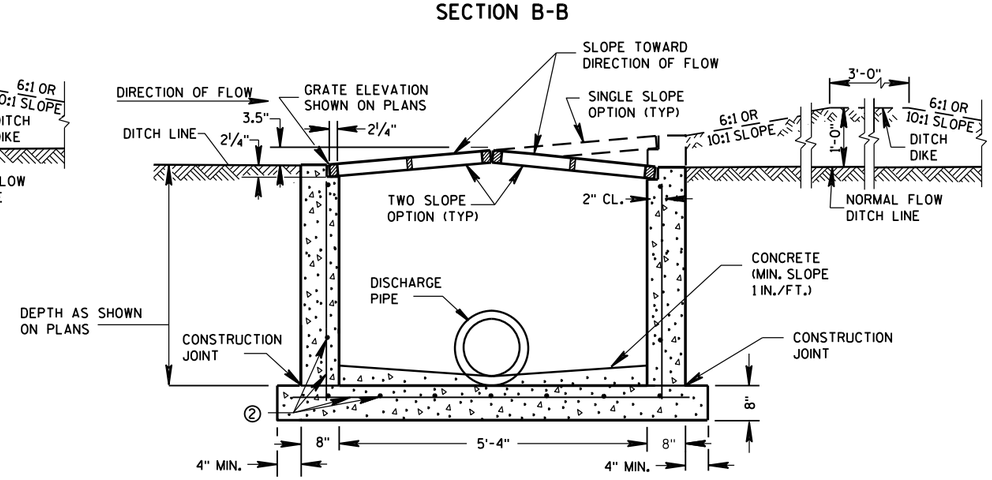

REINFORCED CAST-IN-PLACE CONCRETE SECTION B-B

INLETS MEDIAN 1 GRATE

INLETS MEDIAN 2 GRATE

GENERAL NOTES

DETAILS OF CONSTRUCTION, MATERIALS AND WORKMANSHIP NOT SHOWN ON THIS DRAWING SHALL CONFORM TO THE PERTINENT REQUIREMENTS OF THE STANDARD SPECIFICATIONS AND THE APPLICABLE SPECIAL PROVISIONS.

UNLESS OTHERWISE AUTHORIZED IN WRITING BY THE ENGINEER, THE CONTRACTOR SHALL NOT ORDER AND DELIVER PRECAST INLET UNITS REQUIRED FOR THE PROJECT UNTIL A LIST OF SIZES IS FURNISHED BY THE ENGINEER.

DETAILED DRAWINGS FOR PROPOSED ALTERNATE DESIGNS FOR INLETS WHICH MAY INCLUDE PRECAST REINFORCED CONCRETE INLETS, SHALL BE SUBMITTED TO THE ENGINEER FOR APPROVAL PROVIDING THAT SUCH ALTERNATE DESIGNS MAKE PROVISION FOR EQUIVALENT CAPACITY AND STRENGTH.

ALL MEDIAN INLETS ARE DESIGNATED ON THE PLANS AS "INLETS, 1G-MS", ETC. THE FIRST NUMBER AND LETTER DESIGNATE THE TYPE OF STRUCTURE, AND THE FOLLOWING LETTERS DESIGNATE THE TYPE OF COVER TO BE USED TO COMPRISE THE COMPLETE UNIT.

BASES SHALL BE PLACED ON A BED OF MATERIAL AT LEAST 6 INCHES IN DEPTH, WHICH MEETS THE REQUIREMENTS OF FOUNDATION BACKFILL. THIS BEDDING SHALL BE COMPACTED AND PROVIDE UNIFORM SUPPORT FOR THE ENTIRE AREA OF THE BASE.

ALL BAR STEEL REINFORCEMENT SHALL BE EMBEDDED 2 INCHES CLEAR UNLESS OTHERWISE SHOWN OR NOTED.

PRECAST REINFORCED RISERS SHALL HAVE A TONGUE AND GROOVE JOINT WITH TONGUE UP OR DOWN.

ALL PRECAST INLET UNITS SHALL CONFORM TO THE PERTINENT REQUIREMENTS OF ASTM C 913.

MAXIMUM INSIDE PIPE DIAMETER DETERMINED BY 3" CLEARANCE ON EACH SIDE OF THE OUTSIDE WALL OF THE PIPE. SEE DETAIL "A". ASSUMES PIPE ENTERS PERPENDICULAR TO THE STRUCTURE.

① FOR PRECAST INLETS PROVIDE REINFORCING STEEL IN ACCORDANCE TO ASTM C 913.

② CONTRACTOR TO PROVIDE DRAWING(S) STAMPED BY A PROFESSIONAL ENGINEER FOR STEEL REINFORCING DESIGN FOR CAST-IN-PLACE STRUCTURES.

PIPE MATRIX

	MAXIMUM INSIDE PIPE DIAMETER	
INLET SIZE	WIDTH (IN)	LENGTH (IN)
1 GRATE	18	18
2 GRATE	18	42

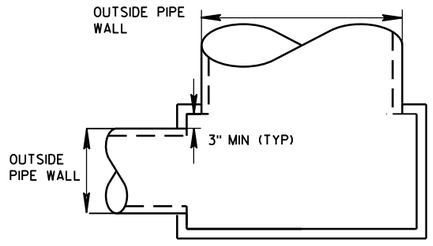

DETAIL "A"

JOINTS TO BE SEALED WITH A BUTYL RUBBER SEAL PER SEALANT MANUFACTURERS RECOMMENDATIONS CONFORMING TO ASTM C 990 (TYP)

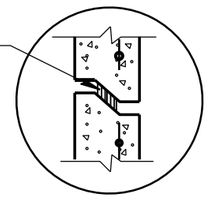

DETAIL "B"

INLETS MEDIAN 1 AND 2 GRATE

STATE OF WISCONSIN
DEPARTMENT OF TRANSPORTATION

APPROVED
Sept., 2016 — DATE
/S/ Rodney Taylor — ROADWAY STANDARDS UNIT SUPERVI ENT
FHWA

6
S.D.D. 8 C 8-2

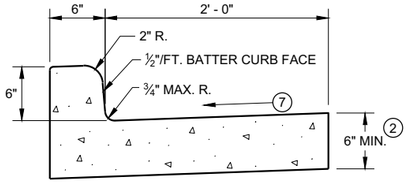

TYPES A (1) & D

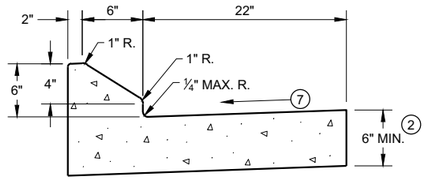

6" SLOPED CURB TYPES G (1) & J

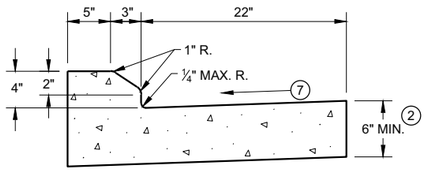

4" SLOPED CURB TYPES G (1) & J

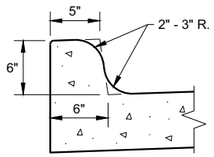

TYPES K (1) & L
(OPTIONAL CURB SHAPE)

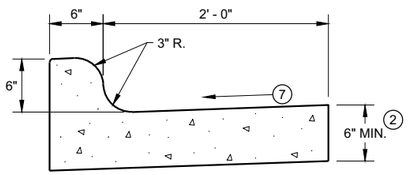

TYPES K (1) & L

CONCRETE CURB AND GUTTER 30"

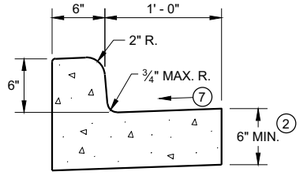

TYPES A (1) & D

CONCRETE CURB AND GUTTER 18"

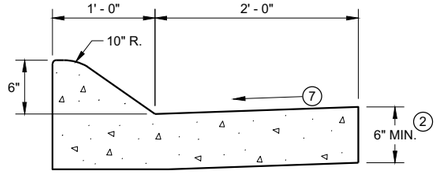

6" SLOPED CURB TYPES A (1) & D

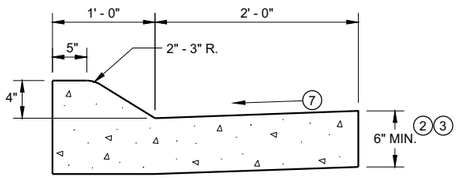

4" SLOPED CURB TYPES A (1) & D

CONCRETE CURB AND GUTTER 36"

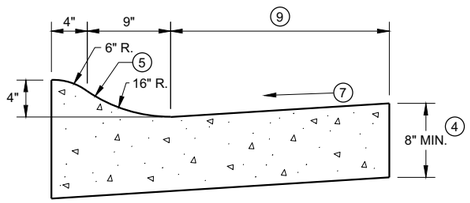

4" SLOPED CURB TYPES R (1) & T

TBT & TBTT	X
30"	22"
36"	28"

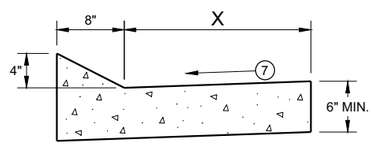

TYPES TBT & TBTT (1)

CONCRETE CURB AND GUTTER

PAVEMENT THICKNESS AND MAXIMUM CONCRETE PANEL WIDTH TABLE

PAVEMENT THICKNESS	MAXIMUM PANEL WIDTH
LESS THAN 10"	12'
10" & ABOVE	15'

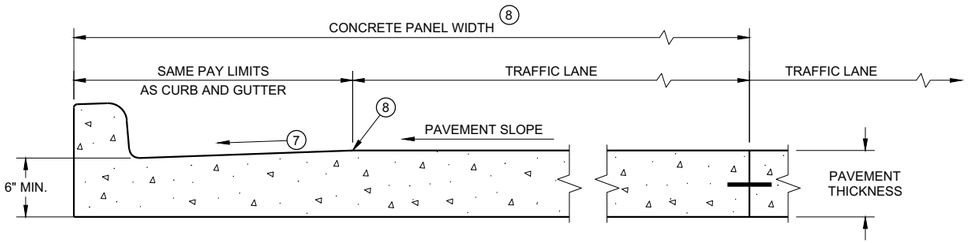

PARTIAL SECTION OF PAVEMENT * WITH INTEGRAL CURB AND GUTTER

* BIKE LANE IS NOT SHOWN

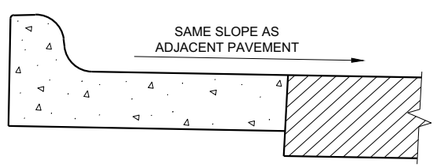

REVERSE SLOPE GUTTER (6)
(TYPICAL FOR ALL CURB & GUTTER TYPES)

GENERAL NOTES

DETAILS OF CONSTRUCTION AND WORKMANSHIP NOT SHOWN ON THIS DRAWING SHALL CONFORM TO THE PERTINENT REQUIREMENTS OF THE CONTRACT.

PAVEMENT TIES AND TIE BARS SHALL BE EPOXY COATED IN CONFORMANCE WITH SUBSECTION 505.2.6.2 OF THE STANDARD SPECIFICATIONS.

INTEGRAL CURB AND GUTTER SHALL CONFORM TO THE DETAILS SHOWN FOR CONCRETE CURB AND GUTTER INCLUDING THE TRANSVERSE GUTTER SLOPE.

UNLESS OTHERWISE SHOWN ON THE TYPICAL CROSS SECTIONS, THE BASE AGGREGATE AND COMMON EXCAVATION LIMITS ARE 2' - 0" BEHIND THE BACK OF CURBS.

(1) TIE BARS ARE REQUIRED FOR CURB AND GUTTERS TYPES A, G, K, R, AND TBTT.

(2) THE BOTTOM OF CURB AND GUTTER MAY BE CONSTRUCTED EITHER LEVEL OR PARALLEL TO THE SLOPE OF THE SUBGRADE OR BASE AGGREGATE PROVIDED A 6" MINIMUM GUTTER THICKNESS IS MAINTAINED.

(3) USE 8" MINIMUM GUTTER THICKNESS WHEN USED WITH AN ADJACENT CONCRETE TRUCK APRON PLACED BEHIND BACK OF CURB.

(4) THE BOTTOM OF CURB AND GUTTER MAY BE CONSTRUCTED EITHER LEVEL OR PARALLEL TO THE SLOPE OF THE SUBGRADE OR BASE AGGREGATE PROVIDED A 8" MINIMUM GUTTER THICKNESS IS MAINTAINED.

(5) UNLESS OTHERWISE NOTED, FOR STAKING PURPOSES THE FACE OF CURB IS 6" FROM THE BACK OF CURB.

(6) WHEN REVERSE SLOPE GUTTER IS REQUIRED, THE LOCATION(S) WILL BE SHOWN ELSEWHERE IN THE PLAN.

(7) USE 4% GUTTER CROSS SLOPE UNLESS OTHERWISE NOTED IN THE PLANS.

(8) INCLUDE LONGITUDINAL JOINT AND TIE BARS ALONG LANE EDGE WHEN CONCRETE PANEL WIDTH EXCEEDS THE MAXIMUM WIDTH PER TABLE BELOW. LONGITUDINAL JOINT(S) ARE NOT ALLOWED WITHIN TRAFFIC LANES AND BIKE LANES. LONGITUDINAL JOINT MAY BE SAWED.

(9) CONCRETE CURB AND GUTTER 4-INCH SLOPED 30-INCH TYPE "R" AND "T" = 17 INCHES
CONCRETE CURB AND GUTTER 4-INCH SLOPED 36-INCH TYPE "R" AND "T" = 23 INCHES

CONCRETE CURB AND GUTTER

STATE OF WISCONSIN
DEPARTMENT OF TRANSPORTATION

6
SDD 08D01 - 22a

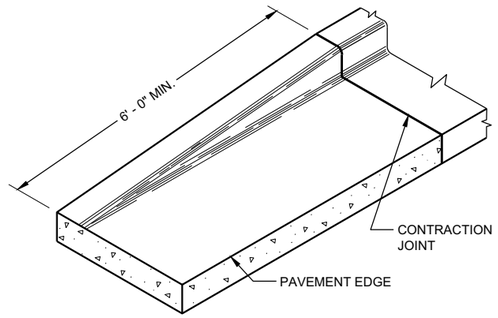

END SECTIONCURB AND GUTTER

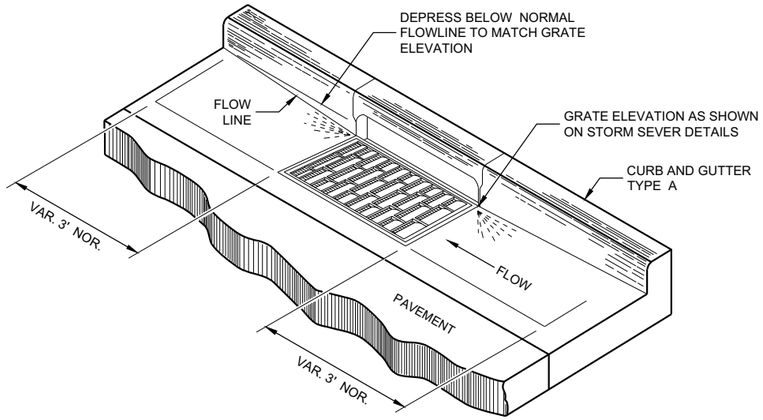

DETAIL OF CURB AND GUTTER AT INLETS

(TYPICAL H INLET COVER SHOWN)

GENERAL NOTES

DETAILS OF CONSTRUCTION AND WORKMANSHIP NOT SHOWN ON THIS DRAWING SHALL CONFORM TO THE PERTINENT REQUIREMENTS OF THE CONTRACT.

PAVEMENT TIES AND TIE BARS SHALL BE EPOXY COATED IN CONFORMANCE WITH SUBSECTION 505.2.6.2 OF THE STANDARD SPECIFICATIONS.

UNLESS OTHERWISE SHOWN ON THE TYPICAL CROSS SECTIONS, THE BASE AGGREGATE AND COMMON EXCAVATION LIMITS ARE 2' - 0" BEHIND THE BACK OF CURBS.

(1) TIE BARS ARE REQUIRED FOR CURB AND GUTTERS TYPES A, G, K, R, AND TBTT.

(2) THE BOTTOM OF CURB AND GUTTER MAY BE CONSTRUCTED EITHER LEVEL OR PARALLEL TO THE SLOPE OF THE SUBGRADE OR BASE AGGREGATE PROVIDED A 6" MINIMUM GUTTER THICKNESS IS MAINTAINED.

(9) REFER TO SDD 08D18 AND 08D19 FOR ADDITIONAL DRIVEWAY ENTRANCE CURB DETAILS.

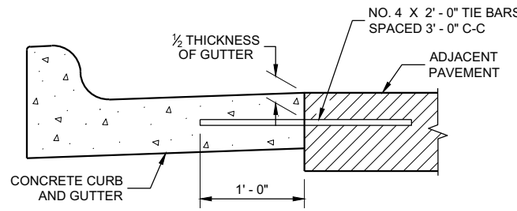

TYPICAL TIE BAR LOCATION (1)

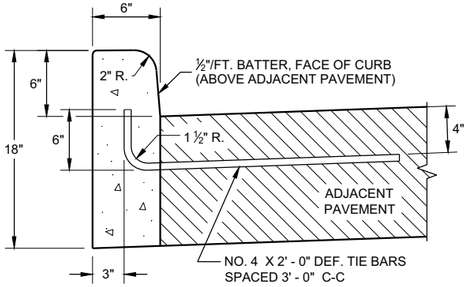

TYPES A (1) & D

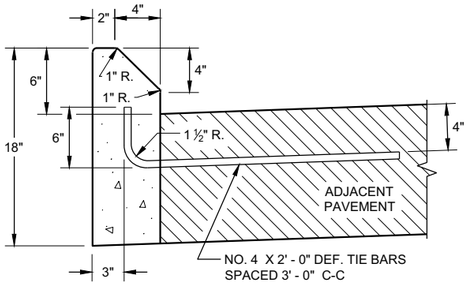

TYPES G (1) & J

CONCRETE CURB

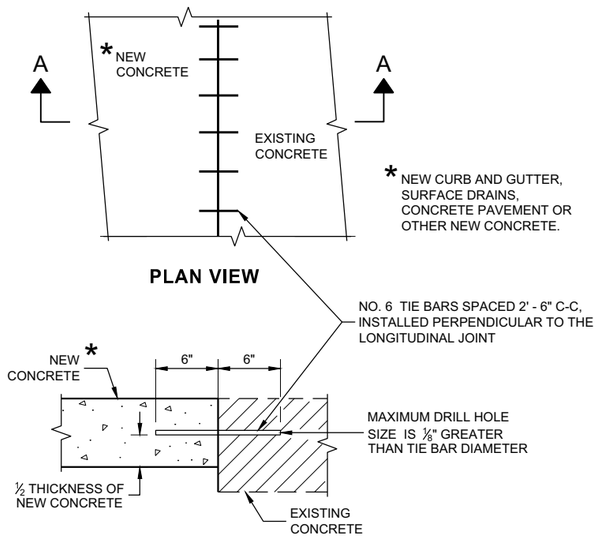

PLAN VIEW

SECTION A - A

TIE BARS DRILLED INTO EXISTING PAVEMENT

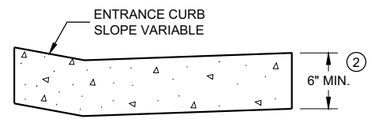

DRIVEWAY ENTRANCE CURB (9)

(WHEN DIRECTED BY THE ENGINEER)

CONCRETE CURB, TIES AND CURB AND GUTTER APPLICATIONS

STATE OF WISCONSIN
DEPARTMENT OF TRANSPORTATION

APPROVED
February 2021 — DATE
/S/ Rodnery Taylor — ROADWAY STANDARDS DEVE ENGINEER

FHWA

635

6

SDD08D01 - 22b

ASPHALTIC FLUME

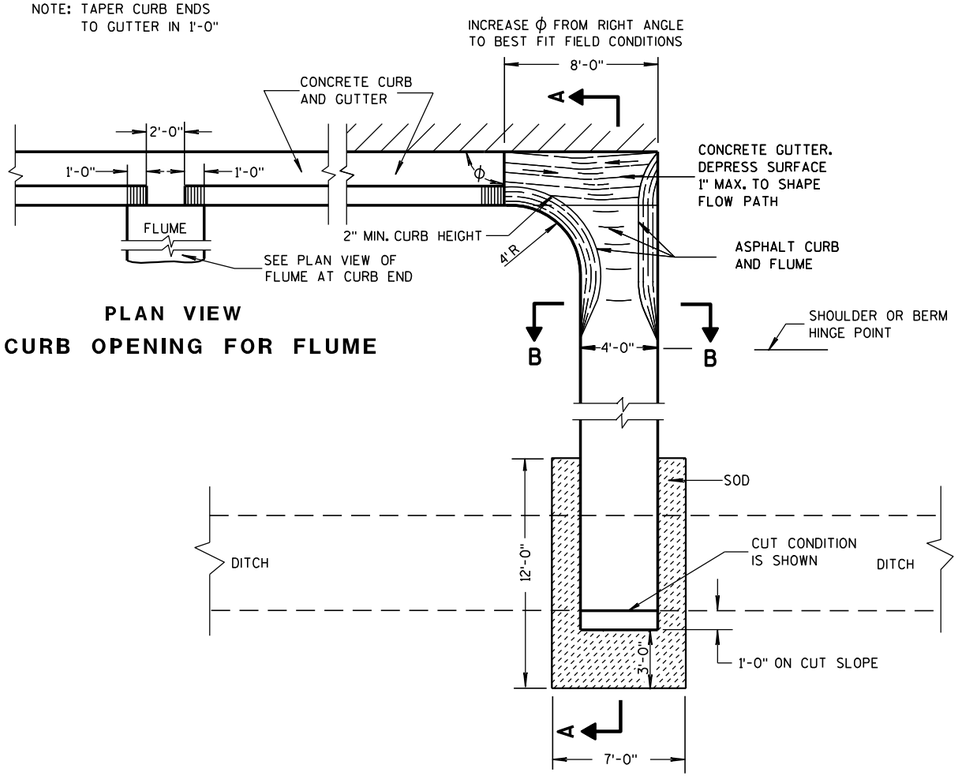

PLAN VIEW
CURB OPENING FOR FLUME

PLAN VIEW
FLUME AT CURB END

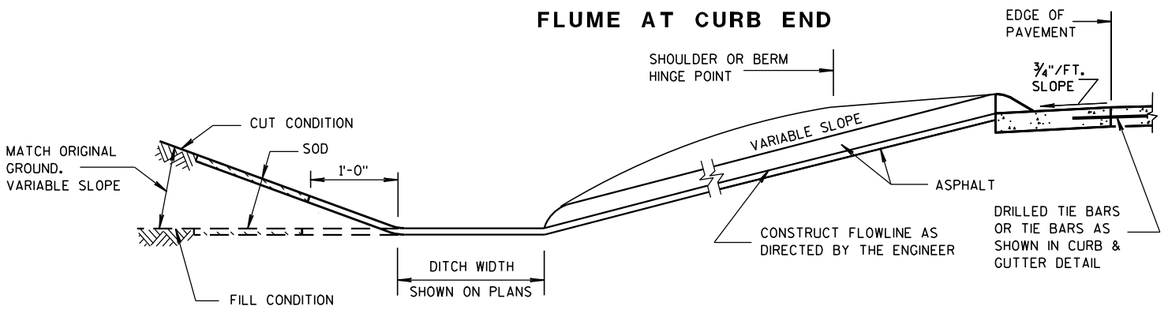

SECTION A-A

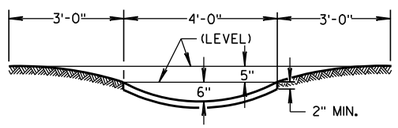

SECTION B-B

GENERAL NOTES

DETAILS OF CONSTRUCTION, MATERIALS AND WORKMANSHIP NOT SHOWN ON THIS DRAWING SHALL CONFORM TO PERTINENT REQUIREMENTS OF THE STANDARD SPECIFICATIONS AND APPLICABLE SPECIAL PROVISIONS.

WELDED STEEL WIRE FABRIC SHALL BE IN ACCORDANCE WITH AASHTO SPECIFICATION M55.

① JOINTS SHALL BE $\frac{1}{8}$ TO $\frac{1}{4}$ INCH WIDE BY $1\frac{1}{2}$ INCHES DEEP AND SPACED AT UNIFORM INTERVALS OF APPROXIMATELY 4 FEET.

② GEOTEXTILE FABRIC TYPE "R" SHALL UNDERLAY THE FULL LENGTH AND WIDTH OF THE CONCRETE SURFACE DRAIN AND RIPRAP.

③ CONCRETE SURFACE DRAIN WITHOUT CURB AND GUTTER MAY BE USED ON BACKSLOPES WHEN SPECIFIED

③ CONCRETE SURFACE DRAIN

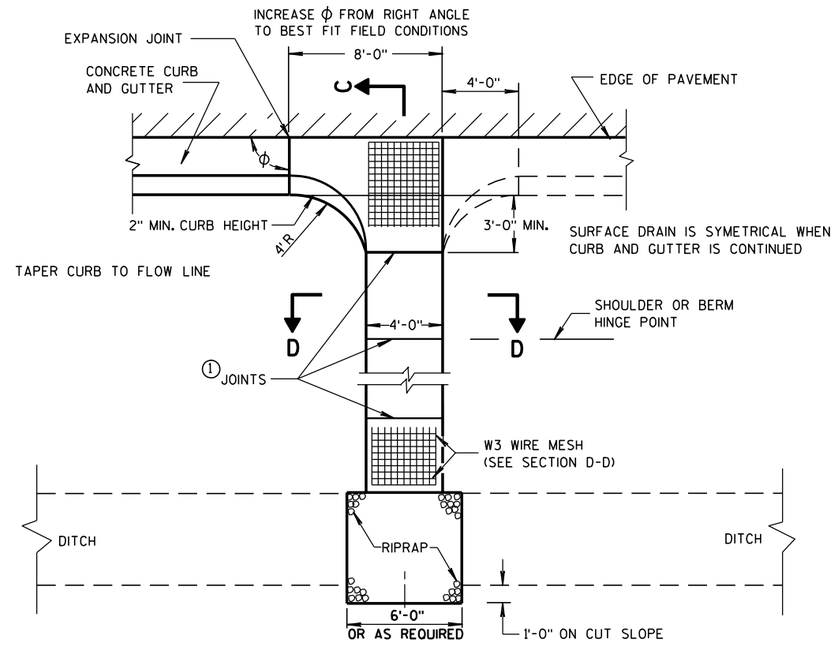

PLAN VIEW

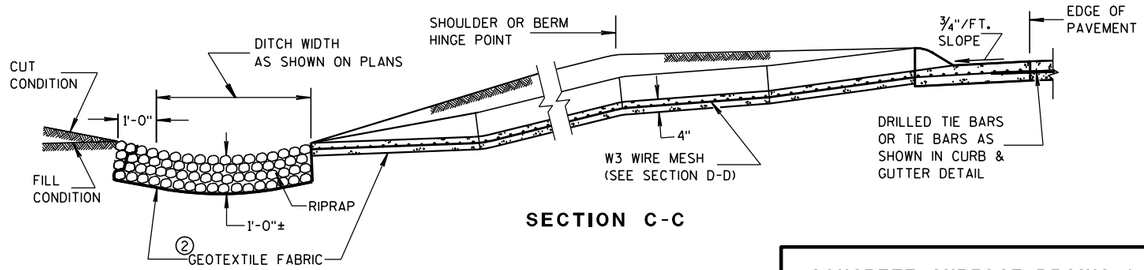

SECTION C-C

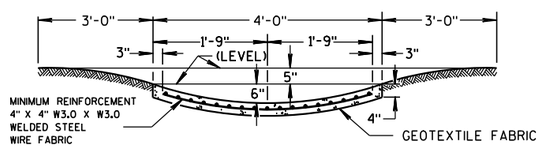

SECTION D-D

CONCRETE SURFACE DRAINS & ASPHALTIC FLUMES

STATE OF WISCONSIN
DEPARTMENT OF TRANSPORTATION

APPROVED
9-4-08 DATE
/S/ Jerry H. Zogg
ROADWAY STANDARDS ENGINEER
636
MENT
FHWA

6

S.D.D. 8 D 4-5

6

S.D.D. 8 D 4-5

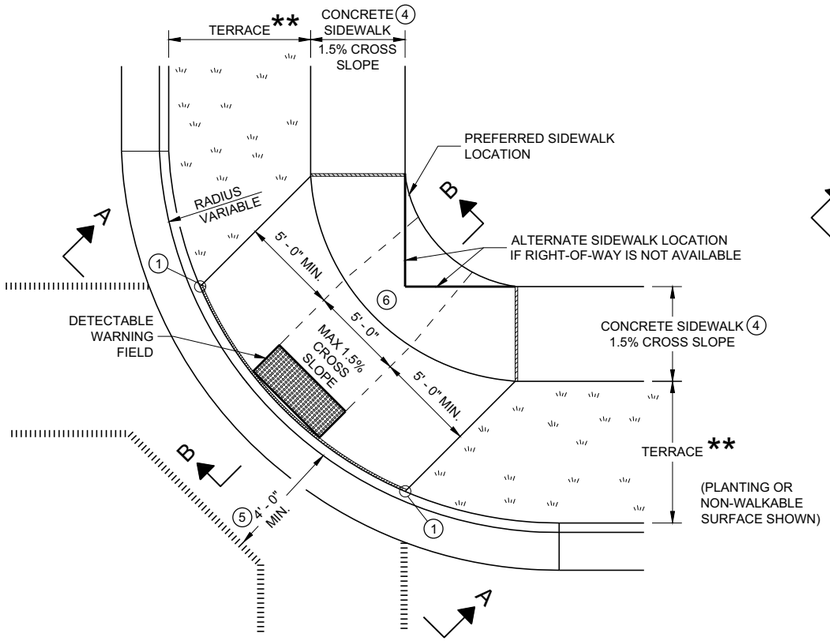

PLAN VIEW

CURB RAMP TYPE 1

(CENTER OF CORNER RADIUS)

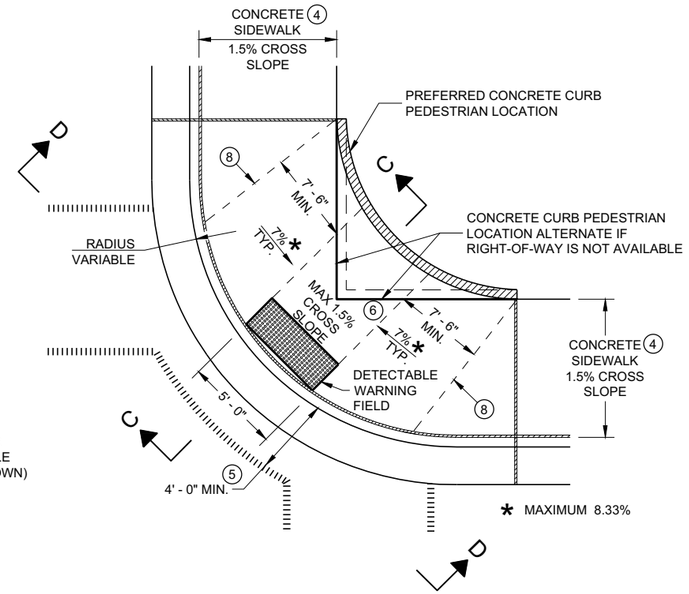

PLAN VIEW

CURB RAMP TYPE 1 - A

(NO TERRACE)

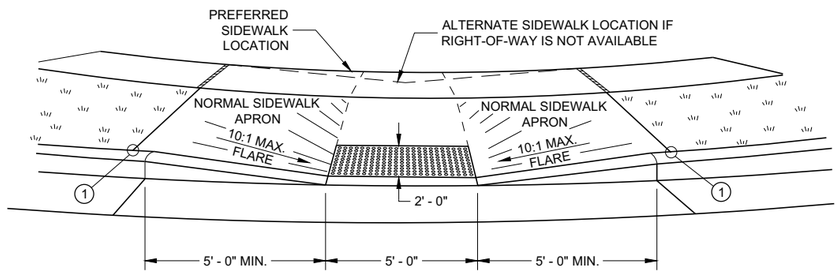

VIEW A - A FOR TYPE 1

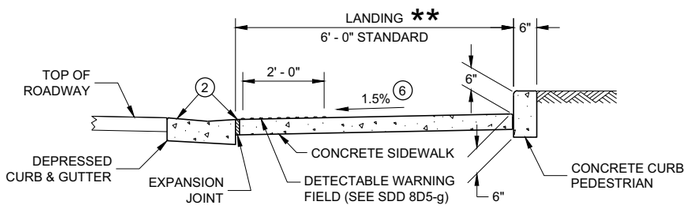

SECTION C - C FOR TYPE 1 - A

** WIDTH SHOWN ELSEWHERE IN THE PLANS

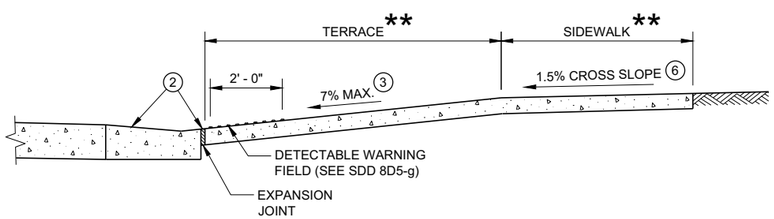

SECTION B - B FOR TYPE 1

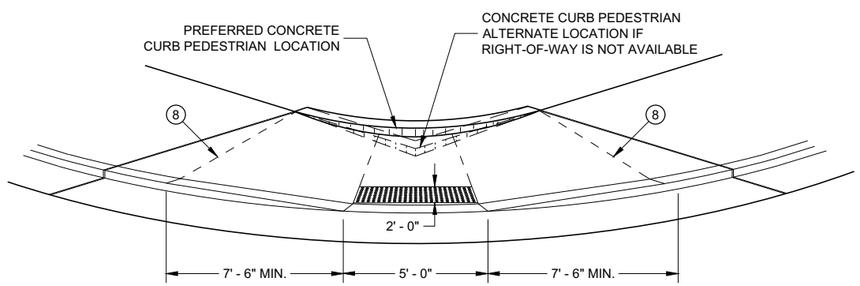

VIEW D - D FOR TYPE 1 - A

GENERAL NOTES

AVOID PLACING DRAINAGE STRUCTURES, JUNCTION BOXES OR OTHER OBSTRUCTIONS IN FRONT OF RAMP ACCESS AREAS.

DETAILS OF CONSTRUCTION, MATERIALS AND WORKMANSHIP NOT SHOWN ON THIS DRAWING SHALL CONFORM TO THE PERTINENT REQUIREMENTS OF THE STANDARD SPECIFICATIONS AND THE APPLICABLE SPECIAL PROVISIONS.

WHEN NECESSARY, THE SIDEWALK ELEVATION MAY BE LOWERED TO MEET THE HIGH POINT ON THE RAMP.

TYPE 1 CURB RAMPS SHALL HAVE A NORMAL SIDEWALK APRON AND CURB ON BOTH SIDES OF RAMP.

DETECTABLE WARNING FILED SHALL BE MEASURED AND PAID BY THE SQUARE FOOT AS "CURB RAMP DETECTABLE WARNING FIELD". THE CONCRETE PEDESTRIAN CURB, IF NEEDED, SHALL BE MEASURED AND PAID BY THE LINEAR FOOT AS "CONCRETE CURB PEDESTRIAN". CONCRETE SIDEWALK IN THE CURB RAMP AREA SHALL BE MEASURED AND PAID BY THE SQUARE FOOT AS CONCRETE SIDEWALK, INCLUDING THE AREA UNDER THE DETECTABLE WARNING FIELD.

SELECT CURB RAMP DETECTABLE WARNING FIELD MATERIALS AND DEVICES FROM THE DEPARTMENT'S APPROVED MATERIALS LIST. THE COLOR OF THE DETECTABLE WARNING FIELD IS SPECIFIED ELSEWHERE AND IS INCIDENTAL TO THE BID ITEM OF "CURB RAMP DETECTABLE WARNING FIELD"

DETECTABLE WARNING FIELDS THAT ARE INSTALLED AS A GROUP OR SIDE BY SIDE, SHALL BE FROM THE SAME MANUFACTURER.

SURFACE TEXTURE OF THE RAMP SHALL BE OBTAINED BY COARSE BROOMING TRANSVERSE TO THE SLOPE OF THE RAMP.

(1) THIS POINT IS AN EXTENSION OF OUTSIDE EDGE OF APPROACHING SIDEWALK WHERE IT MEETS THE BACK OF CONCRETE CURB. POINT LOCATION MAY BE ADJUSTED TO ALIGN WITH BEGINNING OF FULL-HEIGHT CURB IF THIS DISTANCE IS SHORT.

(2) GRADE CHANGE BETWEEN GUTTER FLAG SLOPE AND THE CURB RAMP SLOPE SHALL NOT EXCEED 11%. MAXIMUM GUTTER FLAG SLOPE IS 4%. PROVIDE LONGITUDINAL DRAINAGE AROUND CURB AND AWAY FROM CURB RAMP. NO VERTICAL LIPS OR DISCONTINUITIES GREATER THAN ¼ - INCH ARE ALLOWED. SLOPE OF CURB HEAD OPENING SHALL MATCH THE RAMP SLOPE, MINIMALLY 1.5% AND NOT TO EXCEED 7%. WHEN ADJACENT TO 1.5% LANDING, CONSTRUCT CURB HEAD OPENING AT 1.5% IN THE DIRECTION OF PEDESTRIAN TRAVEL.

(3) MAXIMUM 8.33% CURB RAMP SLOPE IS ALLOWABLE WITH FLATTENED GUTTER FLAG SLOPE AND NOT TO EXCEED 11% GRADE CHANGE.

(4) ±0.5% CONSTRUCTION TOLERANCE IN SIDEWALK CROSS SLOPE. THE SIDEWALK CROSS SLOPE SHALL NOT EXCEED 2% WITHOUT PRIOR APPROVAL FROM THE ENGINEER.

(5) PROVIDE A LEVEL LANDING IN THE STREET AND GUTTER AREA (2% MAXIMUM SLOPE IN ANY DIRECTION). WHEN THE GUTTER SLOPE EXCEEDS 2%, CONSTRUCT THE LEVEL LANDING IN THE STREET AREA.

(6) PROVIDE A LEVEL LANDING (MAXIMUM 2% SLOPE) IN ANY DIRECTION OF PEDESTRIAN TRAVEL. STANDARD LEVEL LANDING SIZE IS 5 FEET BY 5 FEET.

(8) PROVIDE GRADE BREAK PERPENDICULAR TO DIRECTION OF WHEELCHAIR TRAVEL.

LEGEND

- ½" EXPANSION JOINT SIDEWALK
- CONTRACTION JOINT FIELD LOCATED
- PAVEMENT MARKING CROSSWALK (WHITE)

CURB RAMPS
TYPE 1 AND 1-A

STATE OF WISCONSIN
DEPARTMENT OF TRANSPORTATION

6

SDD 08D05 - 20a

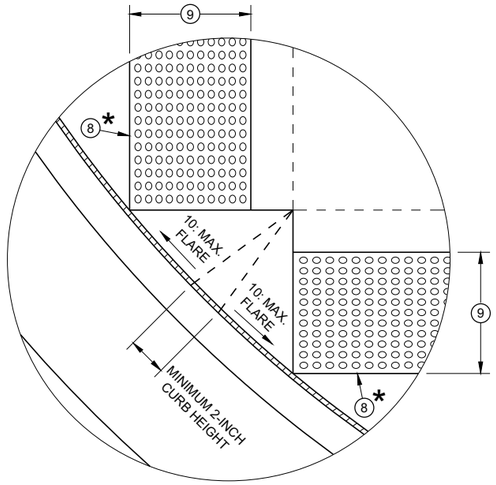

DETAIL A

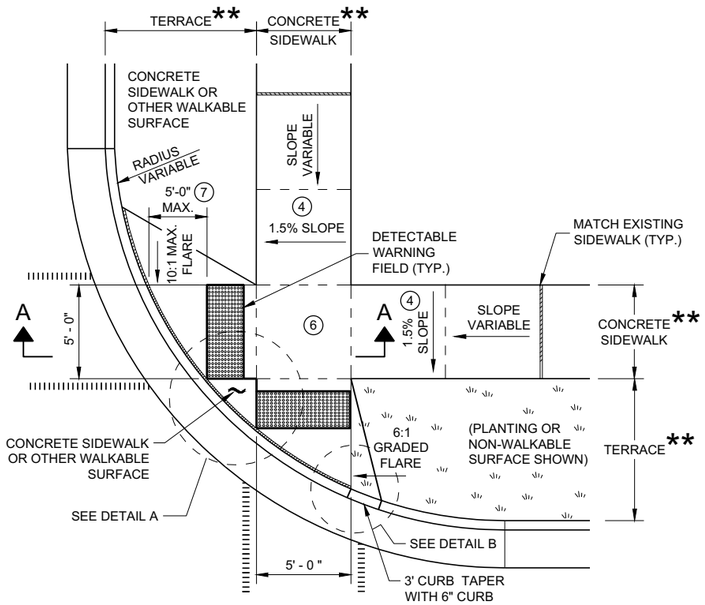

PLAN VIEW
CURB RAMP TYPE 2
(CENTER OF CORNER RADIUS)

GENERAL NOTES

AVOID PLACING DRAINAGE STRUCTURES, JUNCTION BOXES OR OTHER OBSTRUCTIONS IN FRONT OF RAMP ACCESS AREAS.

DETAILS OF CONSTRUCTION, MATERIALS AND WORKMANSHIP NOT SHOWN ON THIS DRAWING SHALL CONFORM TO THE PERTINENT REQUIREMENTS OF THE STANDARD SPECIFICATIONS AND THE APPLICABLE SPECIAL PROVISIONS.

DETECTABLE WARNING FIELDS THAT ARE INSTALLED AS A GROUP OR SIDE BY SIDE SHALL BE FROM THE SAME MANUFACTURER.

(2) GRADE CHANGE BETWEEN GUTTER FLAG SLOPE AND THE CURB RAMP SLOPE SHALL NOT EXCEED 11%. MAXIMUM GUTTER FLAG SLOPE IS 4%. PROVIDE LONGITUDINAL DRAINAGE AROUND CURB AND AWAY FROM CURB RAMP. NO VERTICAL LIPS OR DISCONTINUITIES GREATER THAN ¼ - INCH ARE ALLOWED. SLOPE OF CURB HEAD OPENING SHALL MATCH THE RAMP SLOPE, MINIMALLY 1.5% AND NOT TO EXCEED 7%. WHEN ADJACENT TO 1.5% LANDING, CONSTRUCT CURB HEAD OPENING AT 1.5% IN THE DIRECTION OF PEDESTRIAN TRAVEL.

(3) AN 8.33% CURB RAMP SLOPE IS ALLOWABLE WITH FLATTENED GUTTER FLAG SLOPE (2.67% OR LESS) AND NOT TO EXCEED 11% GRADE CHANGE.

(4) ±0.5% CONSTRUCTION TOLERANCE IN SIDEWALK CROSS SLOPE. THE SIDEWALK CROSS SLOPE SHALL NOT EXCEED 2% WITHOUT PRIOR APPROVAL FROM THE ENGINEER.

(6) PROVIDE A LEVEL LANDING (MAXIMUM 2% SLOPE) IN ANY DIRECTION OF PEDESTRIAN TRAVEL. STANDARD LEVEL LANDING SIZE IS 5 FEET X 5 FEET.

(7) WHEN GRADE BREAK DISTANCE EXCEEDS 5 FEET, USE RADIAL DETECTABLE WARNING FIELD PER SDD 8D5-f.

(8) PROVIDE GRADE BREAK PERPENDICULAR TO DIRECTION OF WHEELCHAIR TRAVEL.

(9) WHEN DISTANCE IS LESS THAN 6' - 0", IT MAY BE DIFFICULT TO ACHIEVE A 7% SLOPE OR FLATTER ALONG THE RAMP. REDUCE CURB HEIGHT IN TRIANGLE AREA TO ACHIEVE 7% SLOPE OR FLATTER ON RAMP. CONSTRUCT 2-INCH MINIMUM CURB HEIGHT BETWEEN 10:1 FLARES.

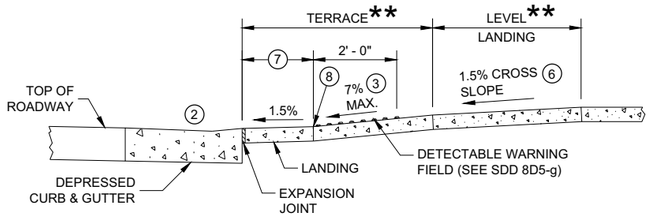

SECTION A - A FOR TYPE 2

* MAXIMUM 2.0% SLOPE IN ALL DIRECTIONS IN FRONT OF GRADE BREAK

** WIDTH SHOWN ELSEWHERE IN THE PLANS

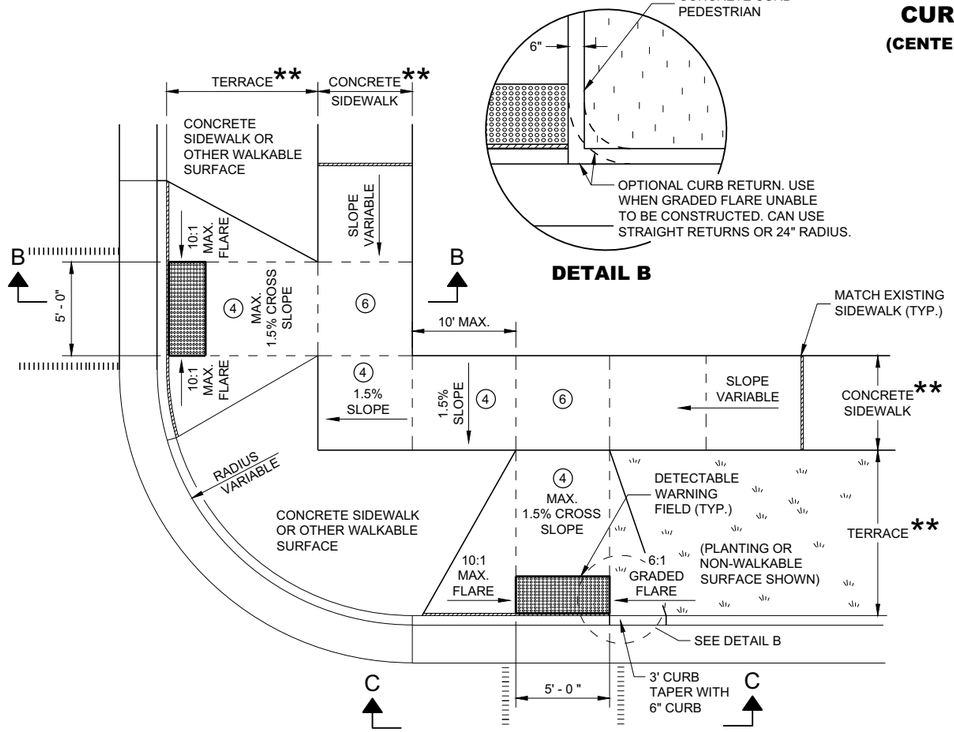

DETAIL B

PLAN VIEW
CURB RAMP TYPE 3
(OUTSIDE OF CROSSWALK AREA)

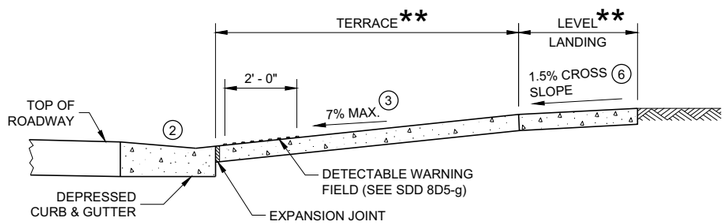

SECTION B - B FOR TYPE 3

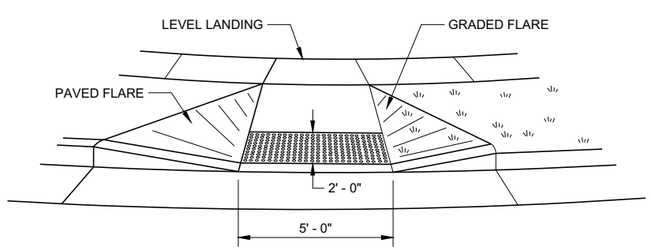

VIEW C - C FOR TYPE 3

LEGEND

- ½" EXPANSION JOINT SIDEWALK
- CONTRACTION JOINT SIDEWALK
- PAVEMENT MARKING CROSSWALK (WHITE)

CURB RAMPS TYPE 2 AND 3

STATE OF WISCONSIN
DEPARTMENT OF TRANSPORTATION

6

SDD 08D05 - 20b

6

SDD 08D05 - 20b

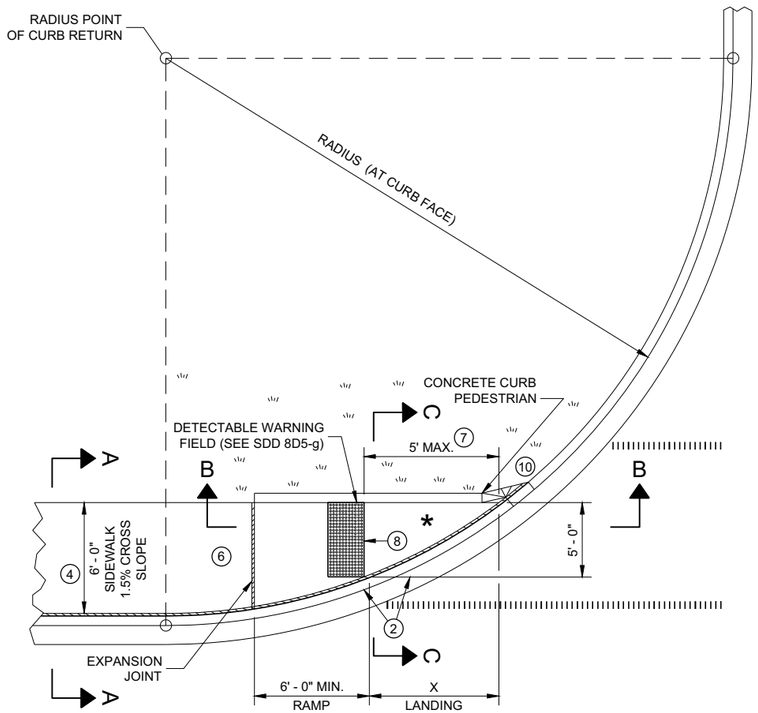

PLAN VIEW

CURB RAMP TYPE 4A

RADIUS (AT CURB FACE)	X
10 FEET	4' - 7"
15 FEET	6' - 5½"

INTERMEDIATE RADII CAN BE INTERPOLATED

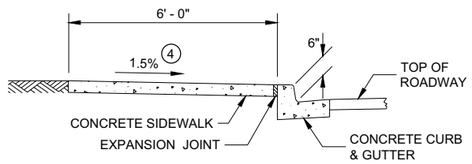

SECTION A - A FOR TYPE 4A

GENERAL NOTES

AVOID PLACING DRAINAGE STRUCTURES, JUNCTION BOXES OR OTHER OBSTRUCTIONS IN FRONT OF RAMP ACCESS AREAS.

DETAILS OF CONSTRUCTION, MATERIALS AND WORKMANSHIP NOT SHOWN ON THIS DRAWING SHALL CONFORM TO THE PERTINENT REQUIREMENTS OF THE STANDARD SPECIFICATIONS AND THE APPLICABLE SPECIAL PROVISIONS.

DETECTABLE WARNING FIELDS THAT ARE INSTALLED AS A GROUP OR SIDE BY SIDE, SHALL BE FROM THE SAME MANUFACTURER.

(2) GRADE CHANGE BETWEEN GUTTER FLAG SLOPE AND THE CURB RAMP SLOPE SHALL NOT EXCEED 11%. MAXIMUM GUTTER FLAG SLOPE IS 4%. PROVIDE LONGITUDINAL DRAINAGE AROUND CURB AND AWAY FROM CURB RAMP. NO VERTICAL LIPS OR DISCONTINUITIES GREATER THAN ¼ - INCH ARE ALLOWED. SLOPE OF CURB HEAD OPENING SHALL MATCH THE RAMP SLOPE, MINIMALLY 1.5% AND NOT TO EXCEED 7%. WHEN ADJACENT TO 1.5% LANDING, CONSTRUCT CURB HEAD OPENING AT 1.5% IN THE DIRECTION OF PEDESTRIAN TRAVEL.

(3) AN 8.33% CURB RAMP SLOPE IS ALLOWABLE WITH FLATTENED GUTTER FLAG SLOPE AND NOT TO EXCEED 11% GRADE CHANGE.

(4) ±0.5% CONSTRUCTION TOLERANCE IN SIDEWALK CROSS SLOPE. THE SIDEWALK CROSS SLOPE SHALL NOT EXCEED 2% WITHOUT PRIOR APPROVAL FROM THE ENGINEER.

(6) PROVIDE A LEVEL LANDING (MAXIMUM 2% SLOPE) IN ANY DIRECTION OF PEDESTRIAN TRAVEL. STANDARD LEVEL LANDING SIZE IS 5 FEET BY 5 FEET.

(7) WHEN THIS GRADE BREAK DISTANCE EXCEEDS 5 FEET, USE RADIAL DETECTABLE WARNING FIELD PER SDD 8D5-f.

(8) PROVIDE GRADE BREAK PERPENDICULAR TO DIRECTION OF WHEELCHAIR TRAVEL.

(10) INSTALL TRANSITION NOSE (INCIDENTAL TO OTHER PAY ITEMS). DO NOT MARK TRANSITION NOSE.

LEGEND

½" EXPANSION JOINT SIDEWALK

CONTRACTION JOINT SIDEWALK

PAVEMENT MARKING CROSSWALK (WHITE)

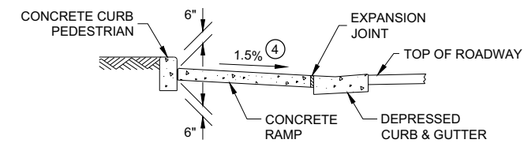

SECTION C - C FOR TYPE 4A

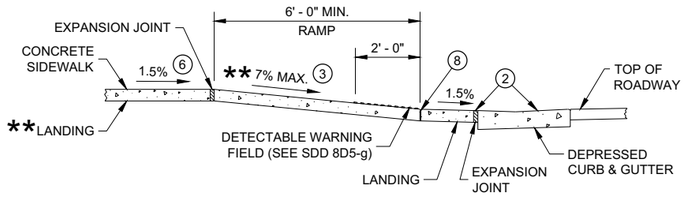

SECTION B - B FOR TYPE 4A AND TYPE 4A1

** IF RAMP SLOPE IS LESS THAN 5.0%, THEN NO ADJACENT UPHILL LANDING IS REQUIRED

* MAXIMUM 2.0% SLOPE IN ALL DIRECTIONS IF FRONT OF GRADE BREAK

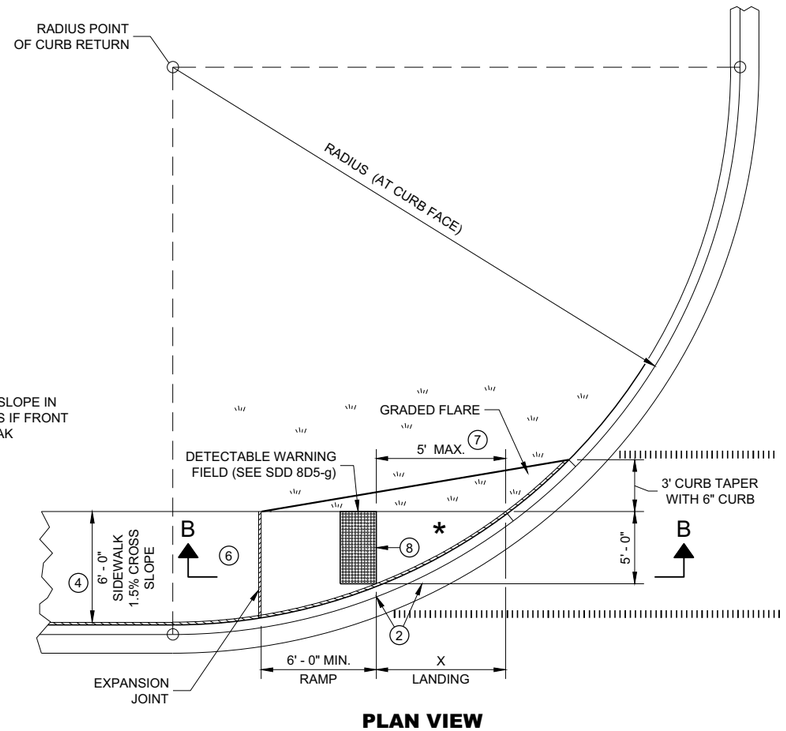

PLAN VIEW

CURB RAMP TYPE 4A1

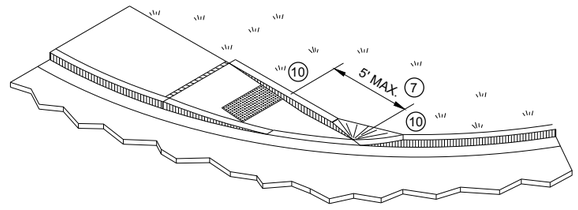

ISOMETRIC VIEW FOR TYPE 4A

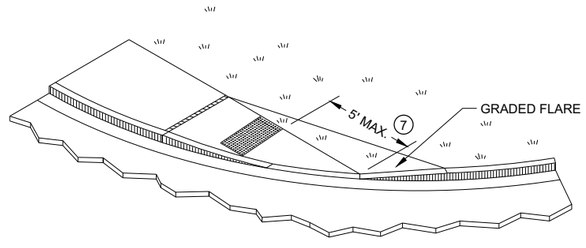

ISOMETRIC VIEW FOR TYPE 4A1

CURB RAMPS
TYPE 4A AND 4A1

STATE OF WISCONSIN
DEPARTMENT OF TRANSPORTATION

6

SDD 08D05 - 20c

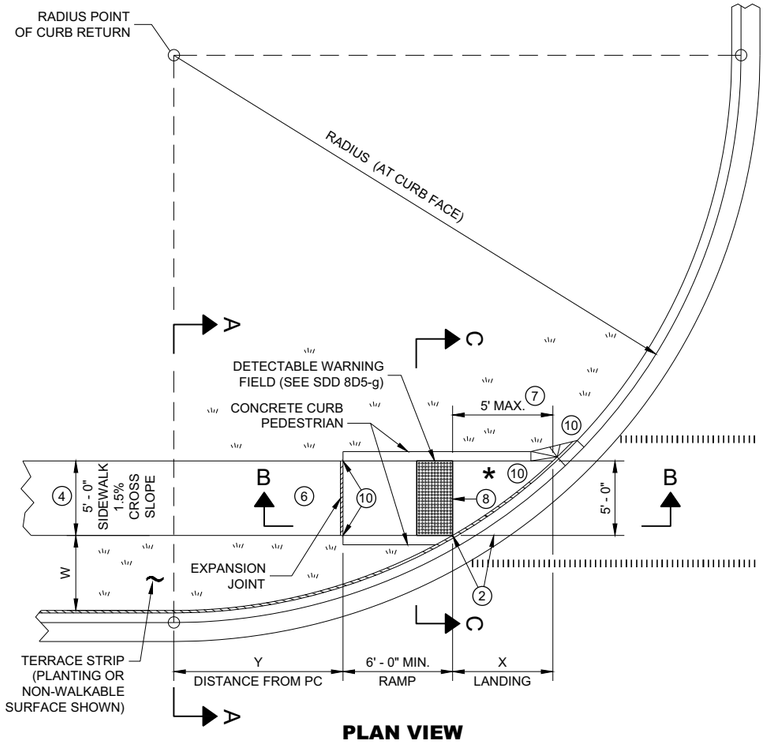

PLAN VIEW

CURB RAMP TYPE 4B

RADIUS (AT CURB FACE)	W = 3' - 0"		W = 4' - 0"		W = 5' - 0"		W = 6' - 0"		W = 7' - 0"		W = 8' - 0"		W = 9' - 0"		W = 10' - 0"	
	X	Y	X	Y	X	Y	X	Y	X	Y	X	Y	X	Y	X	Y
10 FEET	2' - 10 ¼"	0' - 5"	2' - 1"	1' - 4 ½"	1' - 5"	2' - 1"	0' - 10"	2' - 7 ½"	0' - 3 ¼"	3' - 0 ¼"						
15 FEET	4' - 6 ¾"	2' - 1 ¾"	3' - 9"	3' - 5 ¾"	3' - 1 ¼"	4' - 6"	2' - 6 ¾"	5' - 4 ½"	2' - 1"	6' - 1"	1' - 8"	6' - 8 ½"	1' - 3 ¼"	7' - 2 ½"	0' - 10 ¾"	7' - 7 ¼"
20 FEET	5' - 9 ¾"	3' - 6 ½"	4' - 11 ½"	5' - 1 ¾"	4' - 3 ¼"	6' - 5 ½"	3' - 8 ¾"	7' - 7"	3' - 3"	8' - 6 ½"	2' - 10"	9' - 4 ½"	2' - 5 ½"	10' - 1 ¼"	2' - 1 ¼"	10' - 9"
30 FEET			6' - 9 ¼"	7' - 11 ¼"	6' - 0 ¼"	9' - 8"	5' - 5"	11' - 1 ¾"	4' - 10 ¾"	12' - 5 ¾"	4' - 5 ½"	13' - 7 ¾"	4' - 0 ¾"	14' - 8 ½"	3' - 8 ½"	15' - 8 ¼"
40 FEET									6' - 1 ¾"	15' - 8 ½"	5' - 8"	17' - 2"	5' - 3"	18' - 5 ¾"	4' - 10 ¾"	19' - 8 ¼"
50 FEET															5' - 10 ¼"	23' - 2"

INTERMEDIATE RADII CAN BE INTERPOLATED
DIMENSION "Y" IS CALCULATED BASED ON 6'-0" RAMP LENGTH
DIMENSION "X" IS CALCULATED BASED ON 5'-0" SIDEWALK WIDTH

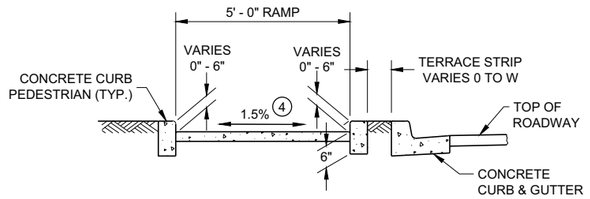

SECTION C - C FOR TYPE 4B

LEGEND

- ½" EXPANSION JOINT SIDEWALK
- CONTRACTION JOINT SIDEWALK
- PAVEMENT MARKING CROSSWALK (WHITE)

GENERAL NOTES

AVOID PLACING DRAINAGE STRUCTURES, JUNCTION BOXES OR OTHER OBSTRUCTIONS IN FRONT OF RAMP ACCESS AREAS.

DETAILS OF CONSTRUCTION, MATERIALS AND WORKMANSHIP NOT SHOWN ON THIS DRAWING SHALL CONFORM TO THE PERTINENT REQUIREMENTS OF THE STANDARD SPECIFICATIONS AND THE APPLICABLE SPECIAL PROVISIONS.

DETECTABLE WARNING FIELDS THAT ARE INSTALLED AS A GROUP OR SIDE BY SIDE, SHALL BE FROM THE SAME MANUFACTURER.

(2) GRADE CHANGE BETWEEN GUTTER FLAG SLOPE AND THE CURB RAMP SLOPE SHALL NOT EXCEED 11%. MAXIMUM GUTTER FLAG SLOPE IS 4%. PROVIDE LONGITUDINAL DRAINAGE AROUND CURB AND AWAY FROM CURB RAMP. NO VERTICAL LIPS OR DISCONTINUITIES GREATER THAN ¼ - INCH ARE ALLOWED. SLOPE OF CURB HEAD OPENING SHALL MATCH THE RAMP SLOPE, MINIMALLY 1.5% AND NOT TO EXCEED 7%. WHEN ADJACENT TO 1.5% LANDING, CONSTRUCT CURB HEAD OPENING AT 1.5% IN THE DIRECTION OF PEDESTRIAN TRAVEL.

(3) AN 8.33% CURB RAMP SLOPE IS ALLOWABLE WITH FLATTENED GUTTER FLAG SLOPE AND NOT TO EXCEED 11% GRADE CHANGE.

(4) ±0.5% CONSTRUCTION TOLERANCE IN SIDEWALK CROSS SLOPE. THE SIDEWALK CROSS SLOPE SHALL NOT EXCEED 2% WITHOUT PRIOR APPROVAL FROM THE ENGINEER.

(6) PROVIDE A LEVEL LANDING (MAXIMUM 2% SLOPE) IN ANY DIRECTION OF PEDESTRIAN TRAVEL. STANDARD LEVEL LANDING SIZE IS 5 FEET BY 5 FEET.

(7) WHEN THIS GRADE BREAK DISTANCE EXCEEDS 5 FEET, USE RADIAL DETECTABLE WARNING FIELD PER SDD 8D5-f.

(8) PROVIDE GRADE BREAK PERPENDICULAR TO DIRECTION OF WHEELCHAIR TRAVEL.

(10) INSTALL TRANSITION NOSE (INCIDENTAL TO OTHER PAY ITEMS). DO NOT MARK TRANSITION NOSE.

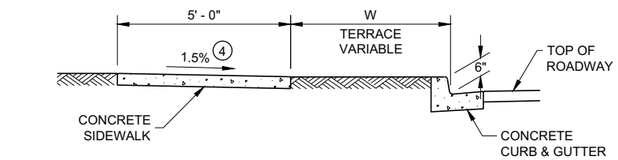

SECTION A - A FOR TYPE 4B

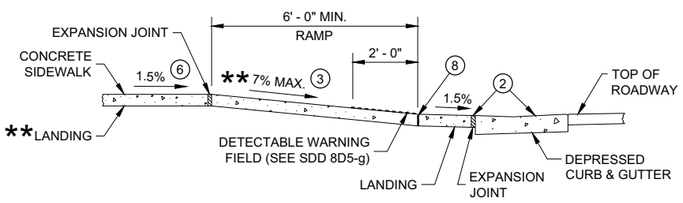

SECTION B - B FOR TYPE 4B AND TYPE 4B1

** IF RAMP SLOPE IS LESS THAN 5.0%, THEN NO ADJACENT UPHILL LANDING IS REQUIRED

* MAXIMUM 2.0% SLOPE IN ALL DIRECTIONS IF FRONT OF GRADE BREAK

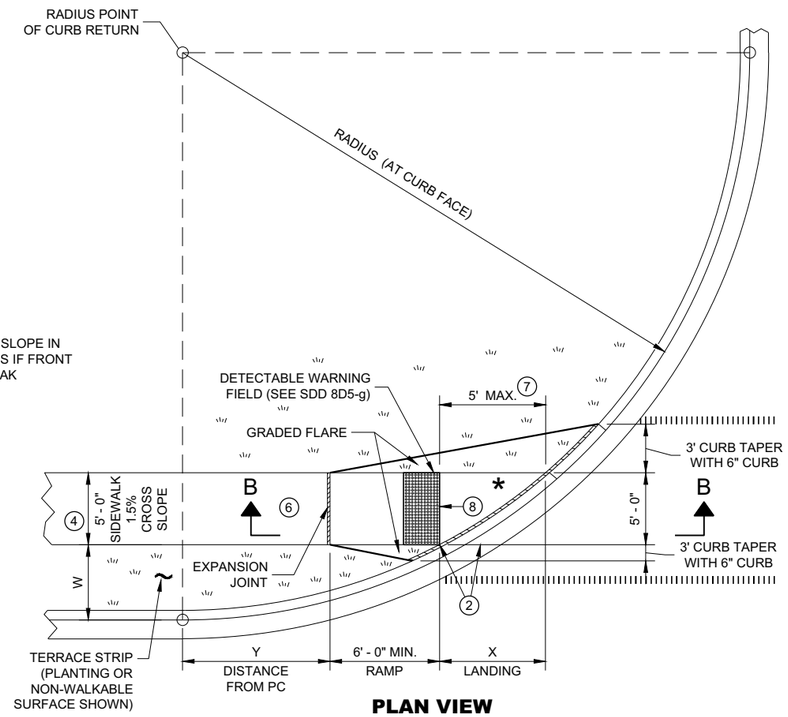

PLAN VIEW

CURB RAMP TYPE 4B1

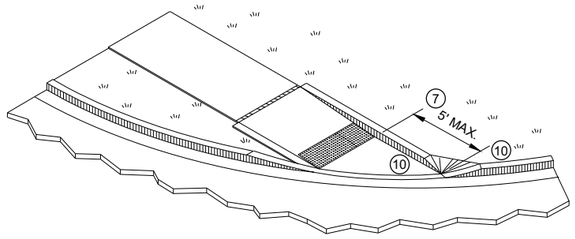

ISOMETRIC VIEW FOR TYPE 4B

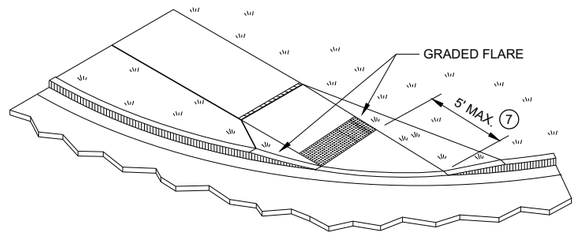

ISOMETRIC VIEW FOR TYPE 4B1

CURB RAMPS
TYPE 4B AND 4B1

STATE OF WISCONSIN
DEPARTMENT OF TRANSPORTATION

640

SDD 08D05 - 20d

SDD 08D05 - 20d

6

6

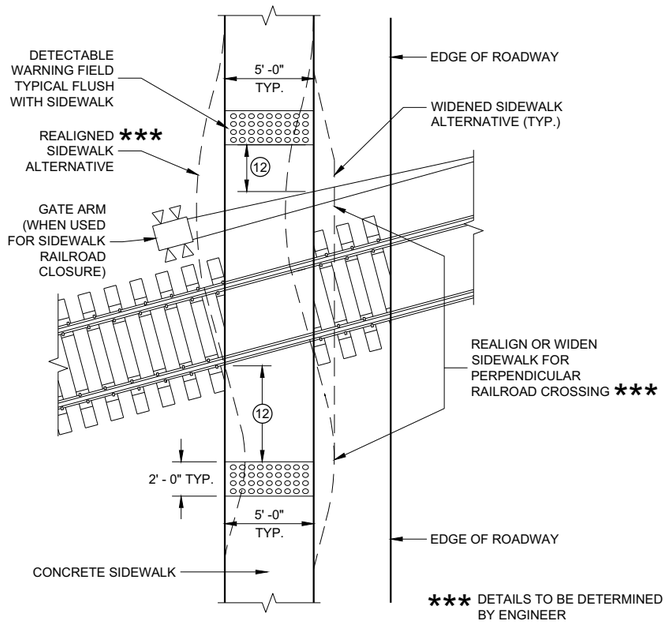

CURB RAMP TYPE 8

DETECTABLE WARNINGS AT RAILROAD CROSSING

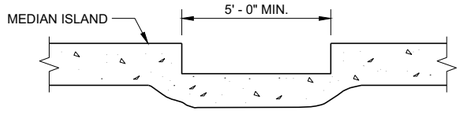

SECTION A - A FOR TYPE 5

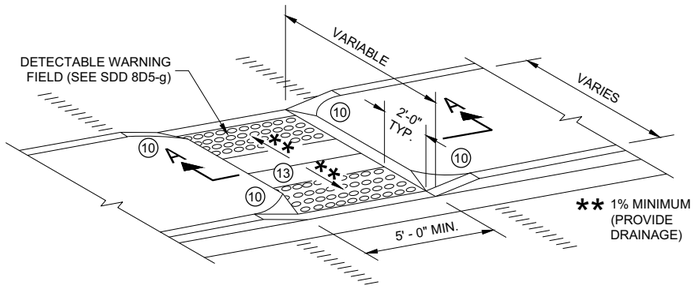

CURB RAMP TYPE 5

MEDIAN ISLAND NON-ELEVATED PEDESTRIAN CROSSING

GENERAL NOTES

AVOID PLACING DRAINAGE STRUCTURES, JUNCTION BOXES OR OTHER OBSTRUCTIONS IN FRONT OF RAMP ACCESS AREAS.

DETAILS OF CONSTRUCTION, MATERIALS AND WORKMANSHIP NOT SHOWN ON THIS DRAWING SHALL CONFORM TO THE PERTINENT REQUIREMENTS OF THE STANDARD SPECIFICATIONS AND THE APPLICABLE SPECIAL PROVISIONS.

SIDEWALK CROSS SLOPE SHALL NOT EXCEED 2%.

DETECTABLE WARNING FIELDS THAT ARE INSTALLED AS A GROUP OR SIDE BY SIDE, SHALL BE FROM THE SAME MANUFACTURER.

(2) GRADE CHANGE BETWEEN GUTTER FLAG SLOPE AND THE CURB RAMP SLOPE SHALL NOT EXCEED 11%. MAXIMUM GUTTER FLAG SLOPE IS 4%. PROVIDE LONGITUDINAL DRAINAGE AROUND CURB AND AWAY FROM CURB RAMP. NO VERTICAL LIPS OR DISCONTINUITIES GREATER THAN ½ - INCH ARE ALLOWED. SLOPE OF CURB HEAD OPENING SHALL MATCH THE RAMP SLOPE, MINIMALLY 1.5% AND NOT TO EXCEED 7%. WHEN ADJACENT TO 1.5% LANDING, CONSTRUCT CURB HEAD OPENING AT 1.5% IN THE DIRECTION OF PEDESTRIAN TRAVEL.

(3) AN 8.33% CURB RAMP SLOPE IS ALLOWABLE WITH FLATTENED GUTTER FLAG SLOPE AND NOT TO EXCEED 11% GRADE CHANGE.

(4) ±0.5% CONSTRUCTION TOLERANCE IN SIDEWALK CROSS SLOPE. THE SIDEWALK CROSS SLOPE SHALL NOT EXCEED 2% WITHOUT PRIOR APPROVAL FROM THE ENGINEER.

(6) PROVIDE A LEVEL LANDING (MAXIMUM 2% SLOPE) IN ANY DIRECTION OF PEDESTRIAN TRAVEL. STANDARD LEVEL LANDING SIZE IS 5 FEET BY 5 FEET.

(10) INSTALL TRANSITION NOSE (INCIDENTAL TO OTHER PAY ITEMS). DO NOT MARK TRANSITION NOSE.

(11) SLOPE SIDEWALK TOWARD LANDING AS SHOWN WHERE THERE IS NO TERRACE OR WHERE THE TERRACE WIDTH IS LESS THAN 6 FEET WIDE.

(12) THE EDGE OF THE DETECTABLE WARNING FIELD NEAREST TO A RAILROAD CROSSING SHALL BE 1.5 FEET ±0.1' FROM THE FACE OF THE GATE ARM IF THE GATE ARM EXTENDS ACROSS THE SIDEWALK. WHERE THERE IS NO PEDESTRIAN GATE, THE EDGE OF THE DETECTABLE WARNING FIELD NEAREST TO THE RAILROAD CROSSING SHALL BE 15 FEET FROM THE NEAREST RAIL.

(13) DO NOT INSTALL DETECTABLE WARNING FIELDS AT THE EDGES OF STEET-LEVEL PEDESTRIAN REFUGE ISLANDS IF A MINIMUM 2 FOOT CONCRETE SURFACE WITHOUT DETECTABLE WARNINGS (MEASURED IN THE DIRECTION OF PEDESTRIAN TRAVEL) CANNOT BE ACHIEVED.

LEGEND

- ½" EXPANSION JOINT SIDEWALK
- CONTRACTION JOINT FIELD LOCATED
- PAVEMENT MARKING CROSSWALK (WHITE)

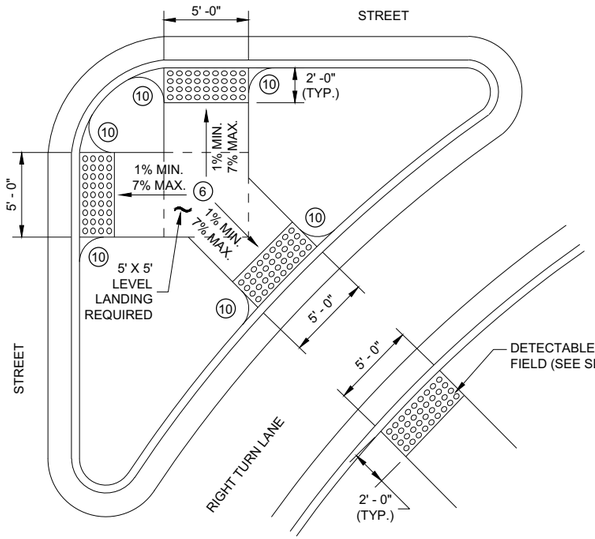

CURB RAMP TYPE 6

DETECTABLE WARNING AT ISLANDS

REFER TO GENERAL NOTES (2) AND (3) FOR ALL ISLAND CURB RAMPS

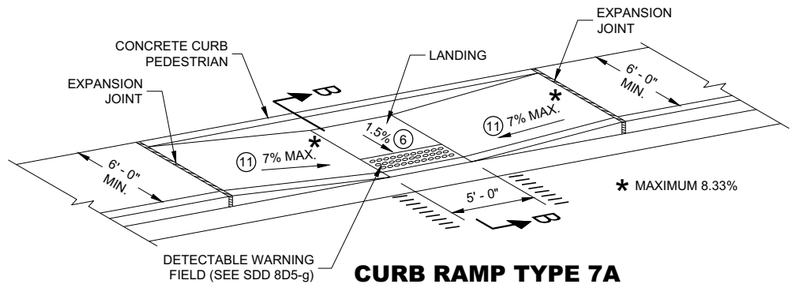

CURB RAMP TYPE 7A

MID BLOCK CROSSING

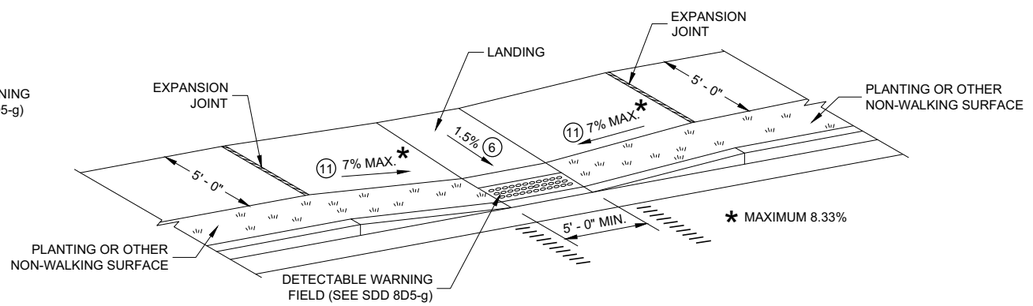

CURB RAMP TYPE 7B

MID BLOCK CROSSING

NOTE: THESE PARALLEL AND PARALLEL/PERPENDICULAR CURB RAMPS MAY BE USED AT INTERSECTIONS AND MID BLOCK LOCATIONS.

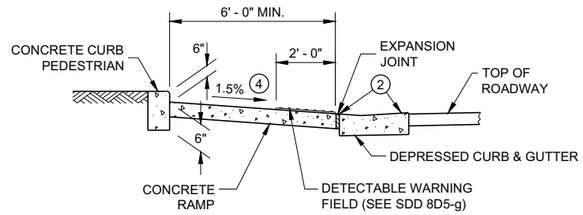

SECTION B - B FOR TYPE 7A

CURB RAMPS TYPE 5, 6, 7A, 7B & 8

STATE OF WISCONSIN
DEPARTMENT OF TRANSPORTATION

6

SDD 08D05 - 20e

RADIAL DETECTABLE WARNING FIELD PLACEMENT WHEN 5 FOOT GRADE BREAK DISTANCE PER SDD 8D5-c IS EXCEEDED

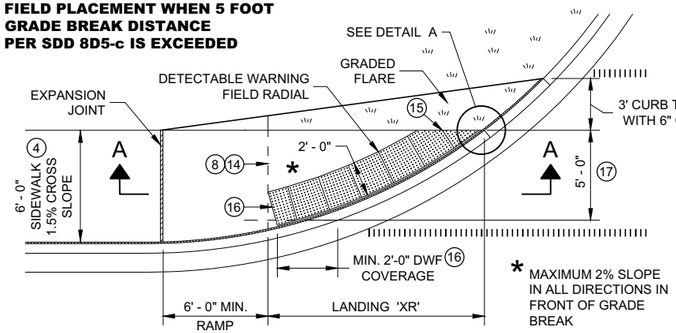

PLAN VIEW

CURB RAMP TYPE 4A1

(GRADE BREAK DISTANCE GREATER THAN 5 FEET)

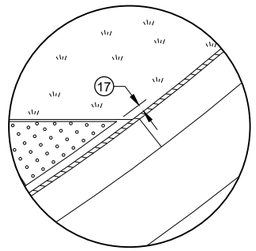

DETAIL A

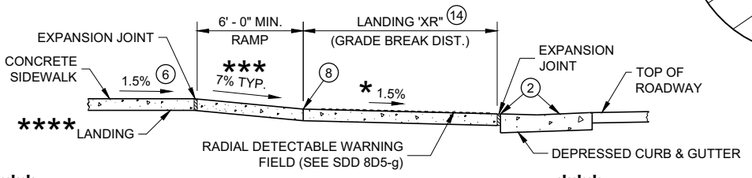

**** IF RAMP SLOPE IS LESS THAN 5.0%, THEN NO ADJACENT UPHILL LANDING IS REQUIRED

*** MAXIMUM 8.33%

SECTION A - A FOR TYPE 4A1

RADIAL DETECTABLE WARNING FIELD PLACEMENT WHEN 5 FOOT GRADE BREAK DISTANCE PER SDD 8D5-d IS EXCEEDED

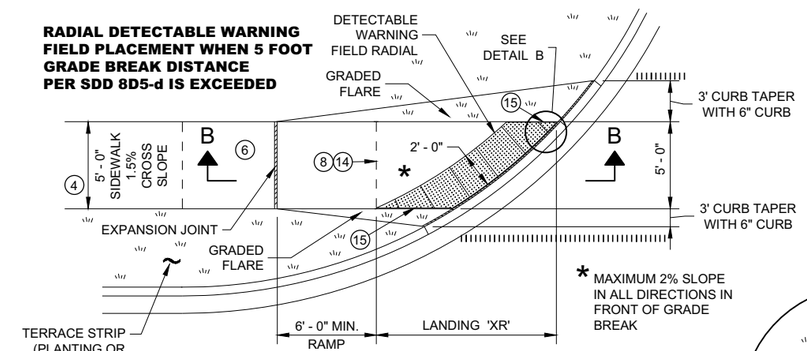

PLAN VIEW

CURB RAMP TYPE 4B1

(GRADE BREAK DISTANCE GREATER THAN 5 FEET)

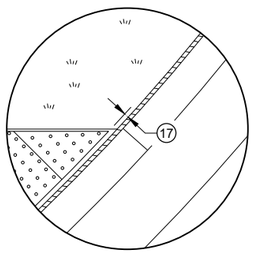

DETAIL B

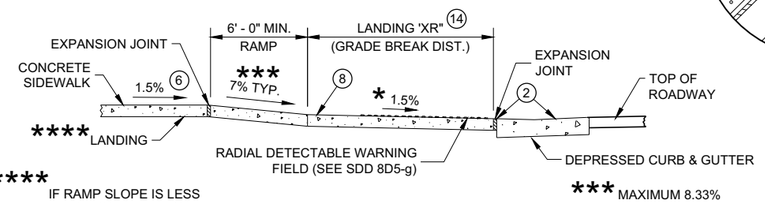

**** IF RAMP SLOPE IS LESS THAN 5.0%, THEN NO ADJACENT UPHILL LANDING IS REQUIRED

*** MAXIMUM 8.33%

SECTION B - B FOR TYPE 4B1

LEGEND

- ½" EXPANSION JOINT SIDEWALK
- CONTRACTION JOINT SIDEWALK
- PAVEMENT MARKING CROSSWALK (WHITE)

GENERAL NOTES

AVOID PLACING DRAINAGE STRUCTURES, JUNCTION BOXES OR OTHER OBSTRUCTIONS IN FRONT OF RAMP ACCESS AREAS.

DETAILS OF CONSTRUCTION, MATERIALS AND WORKMANSHIP NOT SHOWN ON THIS DRAWING SHALL CONFORM TO THE PERTINENT REQUIREMENTS OF THE STANDARD SPECIFICATIONS AND THE APPLICABLE SPECIAL PROVISIONS.

DETECTABLE WARNING FIELDS THAT ARE INSTALLED AS A GROUP OR SIDE BY SIDE, SHALL BE FROM THE SAME MANUFACTURER.

APPLY RADIAL DETECTABLE WARNING PLACEMENT SIMILARLY FOR TYPE 4A AND 4A1 CURB RAMPS AND SIMILARLY FOR TYPE 4B AND 4B1 CURB RAMPS. TYPE 4A AND 4B CURB RAMPS ARE NOT SHOWN.

REFER TO SDD 8D5-g FOR ADDITIONAL RADIAL PLATE REQUIREMENTS.

FIELD CUTS AT INTERMEDIATE JOINTS WITHIN THE RADIAL DETECTABLE WARNING FILED ARE PROHIBITED.

DETERMINE FINAL RADIAL WARNING FIELD CONFIGURATION AD ITS INDIVIDUAL PLATE LOCATIONS. PERFORM PRE-LAYOUT PRIOR TO PLACEMENT IN PLASTIC CONCRETE. FOLLOW MANUFACTURER'S PRODUCT LIST AND INSTALLATION RECOMMENDATIONS.

(2) GRADE CHANGE BETWEEN GUTTER FLAG SLOPE AND THE CURB RAMP SLOPE SHALL NOT EXCEED 11%. MAXIMUM GUTTER FLAG SLOPE IS 4%. PROVIDE LONGITUDINAL DRAINAGE AROUND CURB AND AWAY FROM CURB RAMP. NO VERTICAL LIPS OR DISCONTINUITIES GREATER THAN ¼ - INCH ARE ALLOWED. SLOPE OF CURB HEAD OPENING SHALL MATCH THE RAMP SLOPE, MINIMALLY 1.5% AND NOT TO EXCEED 7%. WHEN ADJACENT TO 1.5% LANDING, CONSTRUCT CURB HEAD OPENING AT 1.5% IN THE DIRECTION OF PEDESTRIAN TRAVEL.

(3) AN 8.33% CURB RAMP SLOPE IS ALLOWABLE WITH FLATTENED GUTTER FLAG SLOPE AND NOT TO EXCEED 11% GRADE CHANGE.

(4) ±0.5% CONSTRUCTION TOLERANCE IN SIDEWALK CROSS SLOPE. THE SIDEWALK CROSS SLOPE SHALL NOT EXCEED 2% WITHOUT PRIOR APPROVAL FROM THE ENGINEER.

(6) PROVIDE A LEVEL LANDING (MAXIMUM 2% SLOPE) IN ANY DIRECTION OF PEDESTRIAN TRAVEL. STANDARD LANDING SIZE IS 5 FEET BY 5 FEET.

(8) PROVIDE GRADE BREAK PERPENDICULAR TO DIRECTION OF WHEELCHAIR TRAVEL.

(14) CONSULT ENGINEER IF GRADE BREAK LOCATION (END OF LANDING DIMENSION "XR") REQUIRES FIELD ADJUSTMENT WHEN ESTABLISHING FINAL RADIAL DETECTABLE WARNING FIELD LOCATION.

(15) FIELD SAW CUTS ALONG RADIAL DETECTABLE WARNING PLATES WILL BE NECESSARY TO MATCH EACH CURB RAMP EDGE. AVOID CUTTING THROUGH DOMES WHENEVER POSSIBLE. MAKE FIELD CUTS TRUE TO LINE AND WITHIN ⅛" DEVIATION. SMOOTH EDGES OF FIELD CUT PLATES.

(16) USE 1' X 2" RECTANGULAR END PLATE AT END OF TYPE 4A1 RAMP AND PROVIDE MINIMUM 2' - 0" DETECTABLE WARNING FIELD COVERAGE (IN DIRECTION OF PEDESTRIAN TRAVEL) ALONG THE ENTIRE CURB RAMP WIDTH.

(17) A MAXIMUM 3 INCH CONCRETE BORDER WITH IS ALLOWABLE IN FROM OF RADIAL DETECTABLE WARNING FIELD FOR CONSTRUCTABILITY PURPOSES. CONCRETE BORDER WIDTH MAY VARY UP TO 1 INCH.

RADIAL DETECTABLE WARNING FIELD PLACEMENT WHEN 5 FOOT GRADE BREAK DISTANCE PER SDD 8D5-b IS EXCEEDED

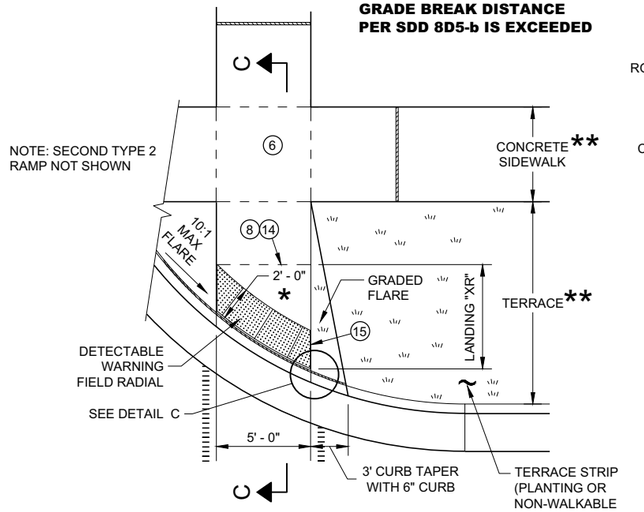

PLAN VIEW

CURB RAMP TYPE 2

(GRADE BREAK DISTANCE GREATER THAN 5 FEET)

(ON LINE WITH SIDEWALK)

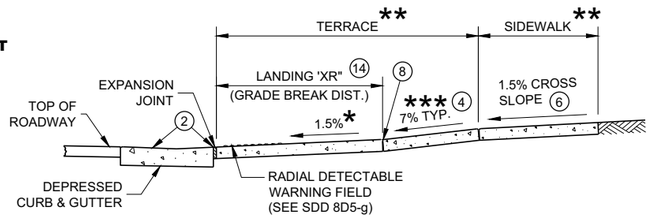

SECTION C - C FOR TYPE 2

* MAXIMUM 2% SLOPE IN ALL DIRECTIONS IN FRONT OF GRADE BREAK

** WIDTH SHOWN ELSEWHERE IN THE PLANS

*** MAXIMUM 8.33%

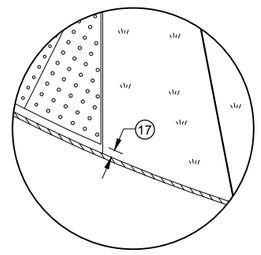

DETAIL C

CURB RAMPS RADIAL DETECTABLE WARNING FIELD APPLICATIONS

STATE OF WISCONSIN
DEPARTMENT OF TRANSPORTATION

SDD 08D05 - 20f

	MIN.	MAX.
A	1.6"	2.4"
B	0.65"	1.5"
C	*	*
D	0.9"	1.4"

* THE C DIMENSION IS 50% TO 65% OF THE D DIMENSION.

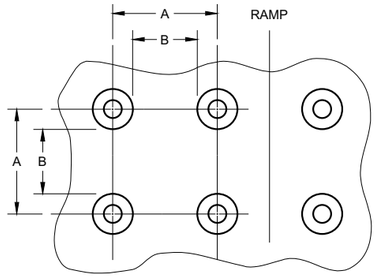

PLAN VIEW

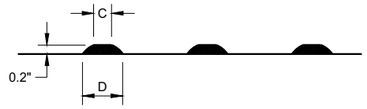

ELEVATION VIEW

TRUNCATED DOMES
DETECTABLE WARNING PATTERN DETAIL

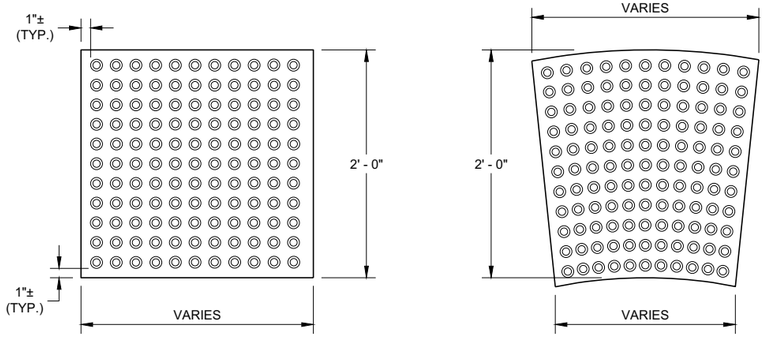

RECTANGULAR PLATES

RADIAL PLATES

PLAN VIEW
DETECTABLE WARNING FIELDS (TYPICAL)

GENERAL NOTES

DETECTABLE WARNING FIELDS THAT ARE INSTALLED AT A CURB RAMP SHALL BE FROM THE SAME MANUFACTURER.

PLACE ALL DETECTABLE WARNING FIELD SYSTEMS IN ACCORDANCE TO THE MANUFACTURER'S RECOMMENDATION.

FIELD CUTS AT INTERMEDIATE JOINTS WITHIN THE RADIAL DETECTABLE WARNING FILED ARE PROHIBITED.

DETERMINE FINAL RADIAL WARNING FIELD CONFIGURATION AND ITS INDIVIDUAL PLATE LOCATIONS. PERFORM PRE-LAYOUT PRIOR TO PLACEMENT IN PLASTIC CONCRETE. FOLLOW MANUFACTURER'S PRODUCT LIST AND INSTALLATION RECOMMENDATIONS.

FOR RADIAL DETECTABLE WARNING FIELD APPLICATIONS WHERE STANDARD RADIAL PLATES ARE NOT AVAILABLE AT AN INTERSECTION CURB RADIUS, A COMBINATION OF SQUARE OR RECTANGULAR PLATES AND RADIAL PLATES MAY BE USED TO FORM RADIAL CONFIGURATION. RADIAL WEDGE PLATES IN COMBINATION WITH SQUARE PLATES ARE ALSO ACCEPTABLE. FOLLOW MANUFACTURER'S RECOMMENDATIONS.

REFER TO CONTRACT AND STANDARD SPECIFICATIONS FOR FIELD CUTTING REQUIREMENTS.

DO NOT EMBED IN CONCRETE ANY FIELD-CUT PLATES WITH CUT EDGES SHORTER THAN 6 INCHES. CONSULT WITH MANUFACTURER FOR RE-DRILLING AND ANCHORING REQUIREMENTS OF FIELD-CUT PLATES.

(15) FIELD SAW CUTS ALONG RADIAL DETECTABLE WARNING PLATES WILL BE NECESSARY TO MATCH EACH CURB RAMP EDGE. AVOID CUTTING THROUGH DOMES WHENEVER POSSIBLE. MAKE FIELD CUTS TRUE TO LINE AND WITHIN ⅛" DEVIATION. SMOOTH EDGES OF FIELD CUT PLATES.

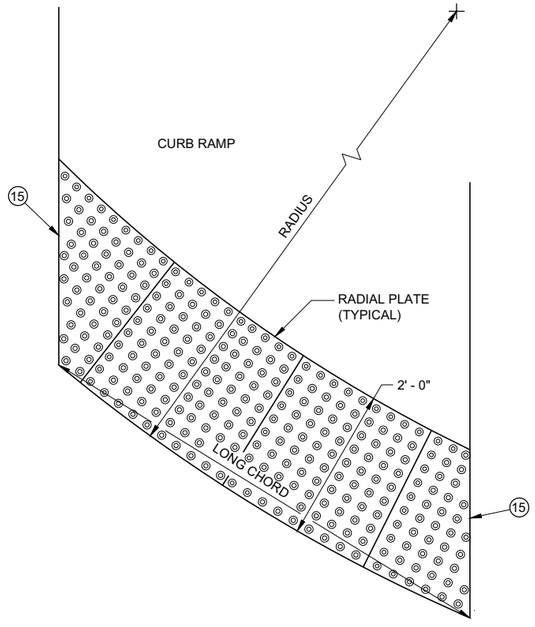

PLAN VIEW
RADIAL DETECTABLE WARNING FIELD ATTRIBUTES

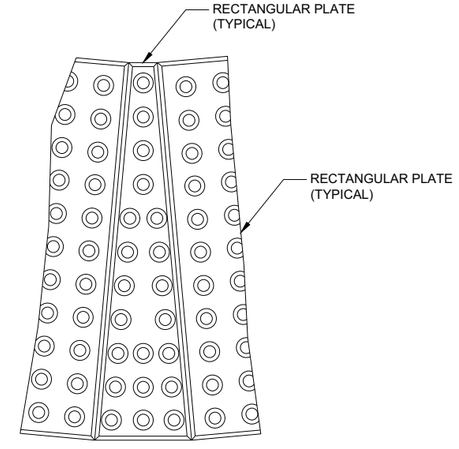

PLAN VIEW
RADIAL WEDGE PLATE CONNECTION DETAIL

CURB RAMPS
RECTANGULAR AND RADIAL
DETECTABLE WARNING PLATES

STATE OF WISCONSIN
DEPARTMENT OF TRANSPORTATION

APPROVED
May 2019
DATE
/S/ Rodney Taylor
ROADWAY STANDARDS DEVE
UNIT SUPERVISOR

FHWA

6

SDD 08D05 - 20g

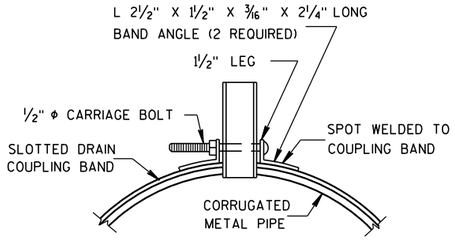

SECTION A-A

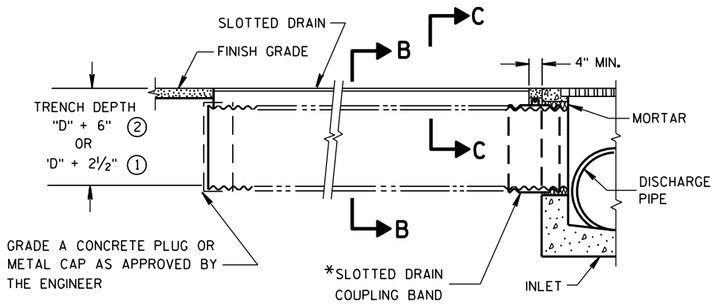

SLOTTED DRAIN INSTALLATION TYPE "A"

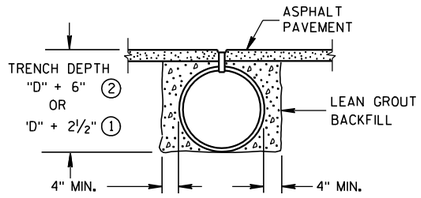

SECTION B-B

GENERAL NOTES

DETAILS OF CONSTRUCTION, MATERIALS AND WORKMANSHIP NOT SHOWN ON THIS DRAWING SHALL CONFORM TO THE PERTINENT REQUIREMENTS OF THE STANDARD SPECIFICATIONS AND THE APPLICABLE SPECIAL PROVISIONS.

BACKFILL MATERIAL

THE LEAN GROUT BACKFILL MATERIAL SHALL BE A FINE AGGREGATE, IN ACCORDANCE WITH SUBSECTION 501.3.6.3.6 OF THE STANDARD SPECIFICATIONS, MIXED WITH 150 POUNDS OF CEMENT AND APPROXIMATELY 30 GALLONS OF WATER FOR EACH 3000 POUNDS OF FINE AGGREGATE.

THE PIPE FOR THE SLOTTED DRAIN SHALL MEET AASHTO DESIGNATION M-36, AND THE GRATE ASSEMBLIES SHALL BE MADE FROM STRUCTURAL STEEL SUITABLY WELDED TO FORM THE OPEN SLOT AND HOT-DIP GALVANIZED TO MEET THE PROVISIONS OF AASHTO DESIGNATION M-111.

NORMAL PIPE SIZES ARE 12-INCH THROUGH 24-INCH DIAMETER IN 0.064 INCH THICKNESS, AND 30-INCH DIAMETER PIPE IN 0.079 INCH THICKNESS.

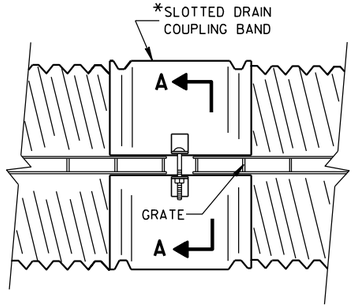

PLAN VIEW

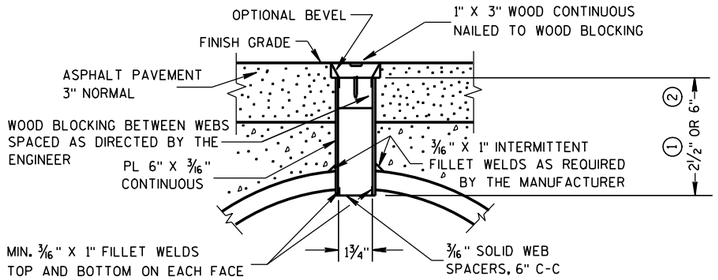

SECTION C-C

GRATE SLOT DETAIL

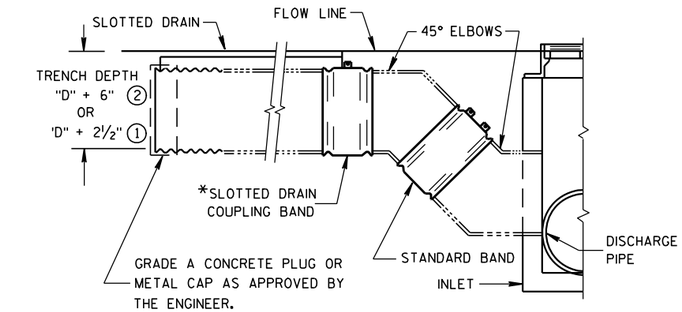

SLOTTED DRAIN INSTALLATION TYPE "B"

NOTE:

TO PREVENT "FLOATING" OF THE SLOTTED DRAIN DURING BACKFILL OPERATIONS PROVIDE ADEQUATE WEDGES, OR POUR THE LEAN GROUT ON TOP OF THE PLUGGED SLOT ALLOWING IT TO SLOUGH TO THE SIDES OF THE PIPE. THIS WILL PROVIDE ENOUGH WEIGHT ON TOP TO KEEP THE PIPE FROM FLOATING.

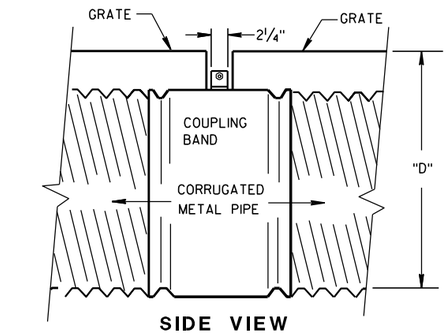

SIDE VIEW

*TYPICAL COUPLING BAND FOR SLOTTED DRAIN

(ALTERNATES PERMITTED AS APPROVED BY THE ENGINEER)

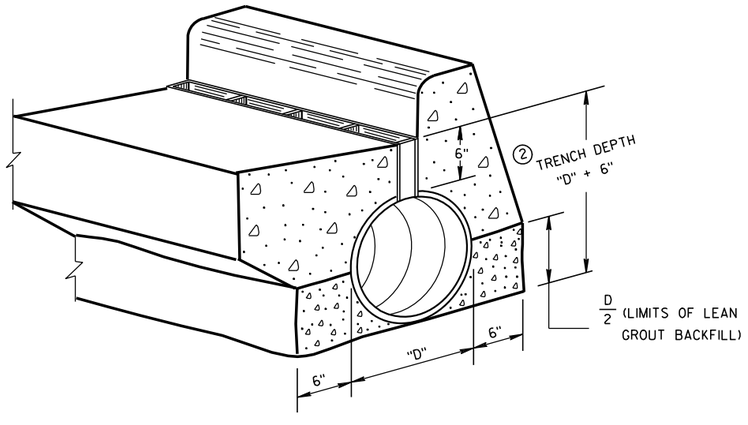

SLOTTED DRAIN INSTALLATION IN FLOW LINE OF CURB & GUTTER TYPE "C"

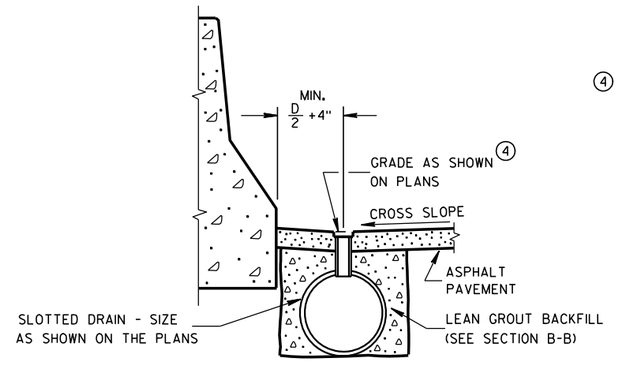

SLOTTED DRAIN INSTALLATION AT MEDIAN BARRIER TYPE "D"

① 2½" NORMAL GRATE DEPTH.

② 6" SPECIAL GRATE DEPTH, WHEN SPECIFIED ON THE PLANS.

③ FOR SCREEDING DIRECTLY OVER THE SLOTTED DRAIN WITH ASPHALT PAVER. FOR CONCRETE SURFACE USE 3" WIDE TAPE OVER THE SLOT TO KEEP MATERIAL OUT OF THE PIPE.

④ WHEN THE SURFACE IS CONCRETE PAVEMENT THE GRADE AS SHOWN ON THE PLANS WILL BE FLUSH WITH THE TOP OF THE SLOTTED DRAIN.

SLOTTED CORRUGATED METAL PIPE SURFACE DRAINS

STATE OF WISCONSIN
DEPARTMENT OF TRANSPORTATION

APPROVED

8/30/79
DATE

/S/ D. L. Str---
CHIEF ROADWAY DEVELOP 644 INEER

FHWA

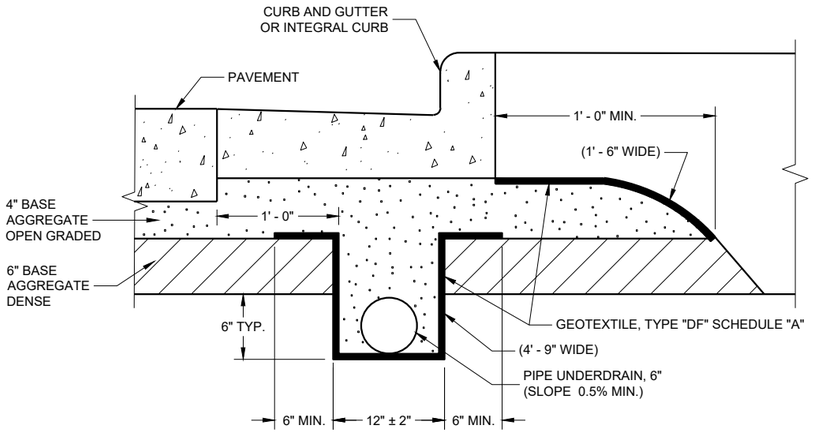

EDGEDRAIN IN URBAN ROADWAY

GENERAL NOTES

THE DIMENSIONS SHOWN ON THE TYPICAL CROSS SECTIONS WILL GOVERN IN THE EVENT THERE IS A CONFLICT WITH THE DETAILS SHOWN ON THIS DRAWING.

PIPE UNDERDRAIN SHALL BE LAID PARALLEL TO THE GRADE OF THE ROADWAY.

(1) FOLD OVER EXCESS GEOTEXTILE AT THIS LOCATION.

(2) TOTAL GEOTEXTILE WIDTH IS 6'-3" FOR PAYMENT.

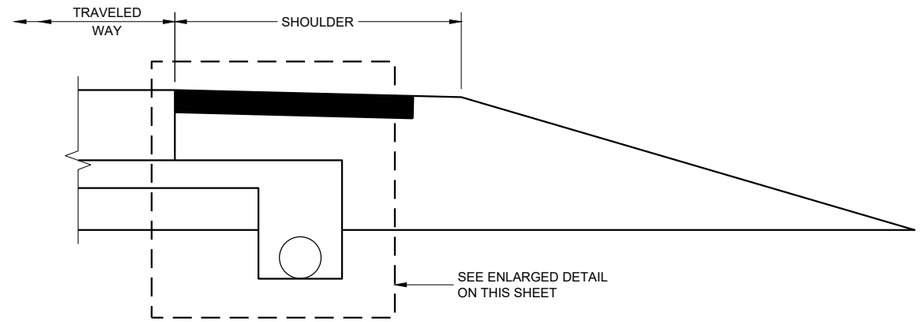

RURAL CROSS SECTION

6

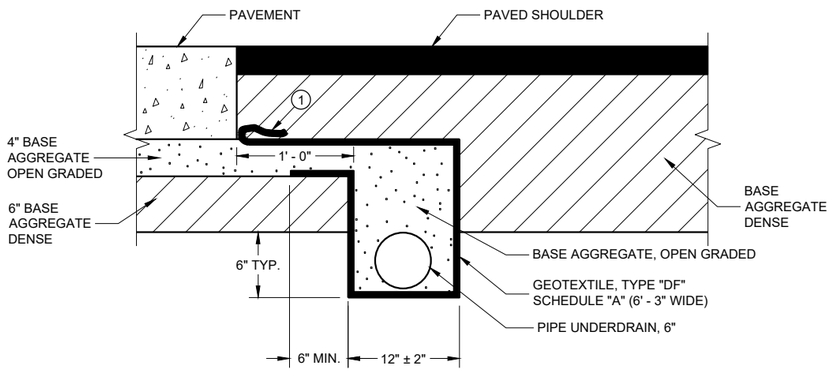

POST PAVING INSTALLATION

(QUANTITIES ARE BASED ON THIS DETAIL)

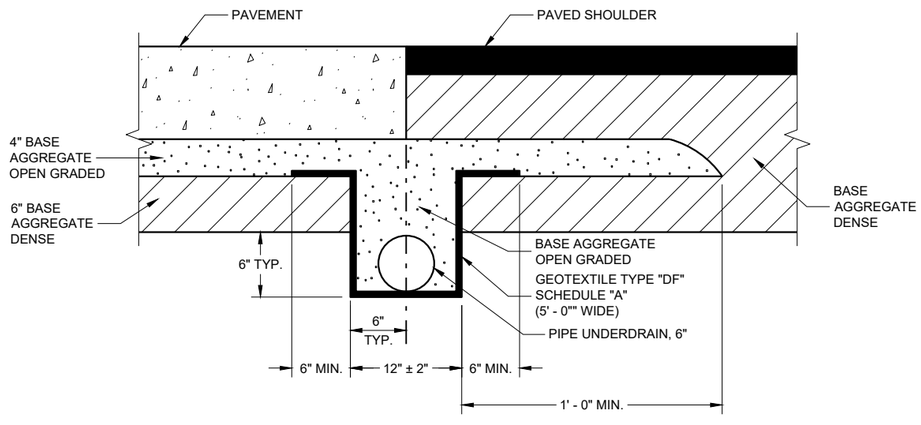

PRE-PAVING INSTALLATION ALTERNATIVE

EDGEDRAIN IN RURAL ROADWAY

6

SDD 08D15 - 05b

EGEDRAIN AND BASE AGGREGATE OPEN GRADED

SDD 08D15 - 05b

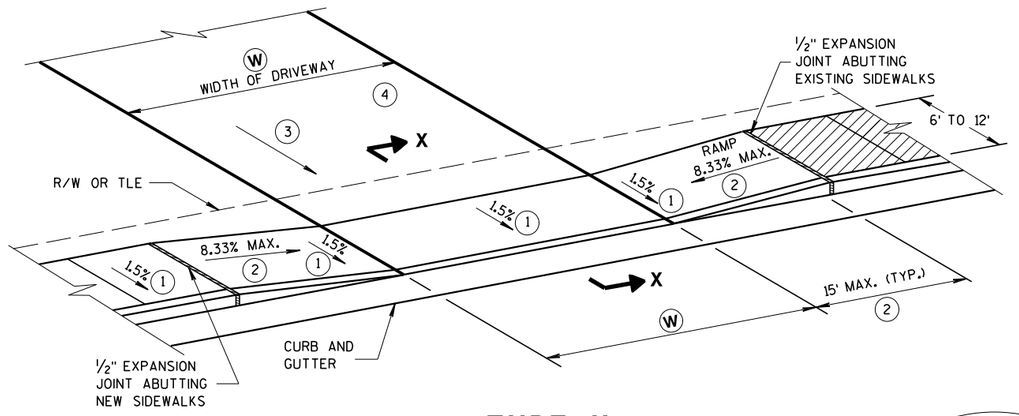

TYPE X
SIDEWALK ABUTS CURB & GUTTER
TERRACE VARIES 0 TO 3 FEET

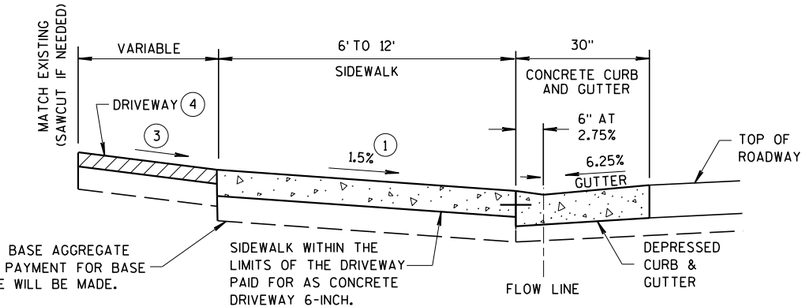

SECTION X-X

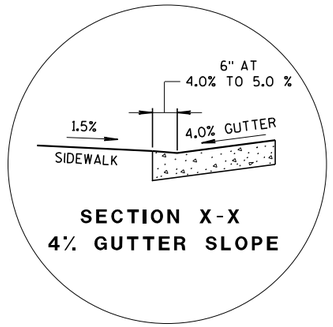

SECTION X-X
4% GUTTER SLOPE

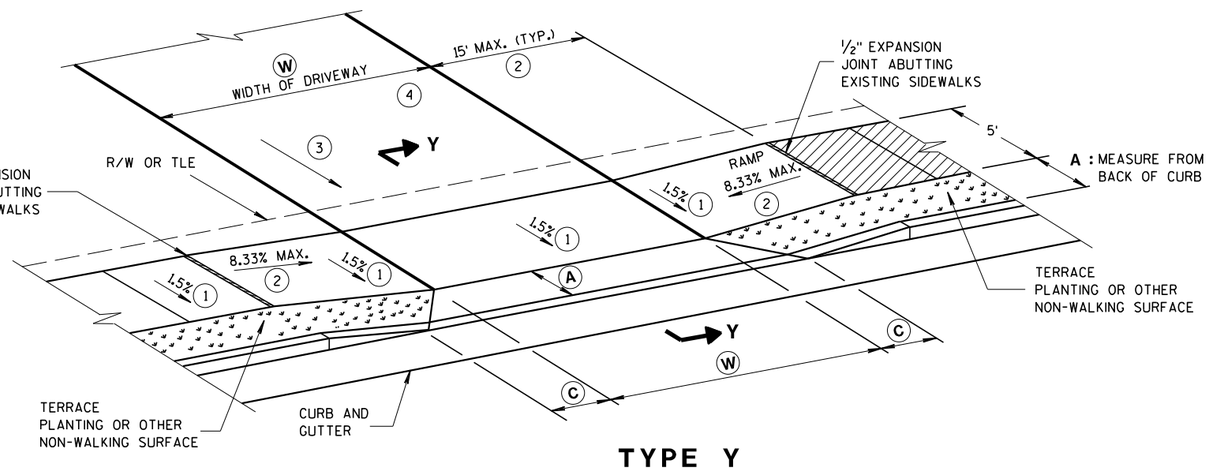

TYPE Y
SIDEWALK WITH NARROWER TERRACE
TERRACE VARIES 4 TO 6 FEET

(W): 12' MIN. - 24' MAX. RESIDENTIAL AND NON-COMMERCIAL (PE & FE)
16' MIN. - 35' MAX. COMMERCIAL (CE)

GENERAL NOTES

PROVIDE CONSTRUCTION JOINTS ALONG THE CENTER OF THE CONCRETE FOR DRIVEWAYS UNDER 20 FEET IN WIDTH AND AT THE THIRD POINTS OVER 20 FEET IN WIDTH.

(W) IS SHOWN ON PLAN AND PROFILE SHEETS.

OFFSETS, ELEVATIONS, AND PERCENT GRADE ARE SHOWN ON THE CROSS SECTIONS.

(1) CONSTRUCTION TOLERANCE OF 0.5% ± FOR SIDEWALK CROSS SLOPE. THE SIDEWALK CROSS SLOPE SHALL NOT EXCEED 2%.

(2) THE SIDEWALK RAMP MAXIMUM RUNNING SLOPE SHALL NOT REQUIRE THE RAMP LENGTH TO EXCEED 15 FEET TO AVOID CHASING THE SLOPE INDEFINITELY WHEN CONNECTING TO STEEP GRADES. WHEN APPLYING THE 15 FOOT MAXIMUM LENGTH, THE RUNNING SLOPE OF THE SIDEWALK SHALL BE AS FLAT AS FEASIBLE AND NOT EXCEED THE LONGITUDINAL GRADE OF THE ROADWAY. SLOPE SIDEWALK RAMP TOWARD APRON AS SHOWN WHERE THERE IS NO TERRACE OR WHERE THE TERRACE WIDTH IS LESS THAN 6 FEET WIDE.

(3) DRIVEWAY SLOPES: DESIRABLE MAXIMUM
- 10.5% UP AWAY FROM SIDEWALK (SAG)
- 8.5% DOWN AWAY FROM SIDEWALK (CREST)
- ABSOLUTE MAXIMUM 15% FOR BOTH CREST AND SAG

(4) DRIVEWAY TYPES
- 6-INCH CONCRETE DRIVEWAY PAVEMENT OVER 6-INCH BASE AGGREGATE
- 2-INCH TO 3-INCH ASPHALTIC SURFACE OVER 6-INCH BASE AGGREGATE
- 6-INCH BASE AGGREGATE (MAY BE INCREASED FOR CLAY SUBGRADES)

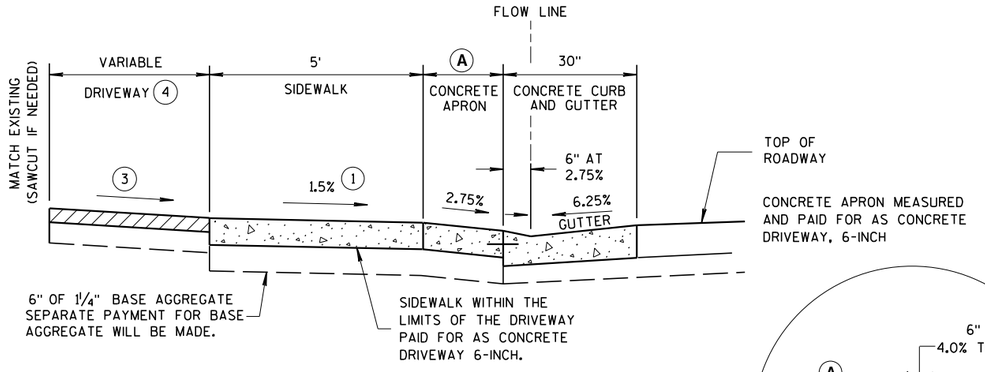

NOTE: SIDEWALK MAY BE DEPRESSED IN DRIVEWAY AREAS

SECTION Y-Y

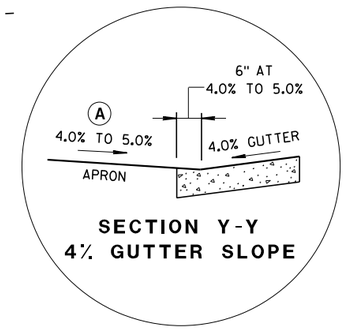

SECTION Y-Y
4% GUTTER SLOPE

DRIVEWAY DETAIL
WITH CONCRETE CURB & GUTTER
(URBAN AND SUBURBAN)

TABLE Y

(A) FEET	(C) FEET
3.5'	2.0'
4.5'	3.0'
5.5'	3.5'

NOT TO SCALE

DRIVEWAY AND SIDEWALK RAMPS
TYPES X & Y

STATE OF WISCONSIN
DEPARTMENT OF TRANSPORTATION

APPROVED
March 2018 — /S/ Rodney Taylor
DATE — ROADWAY STANDARDS 646 UNIT SUPERVISOR
FHWA

6

S.D.D. 8 D 18-2

6

S.D.D. 8 D 18-2

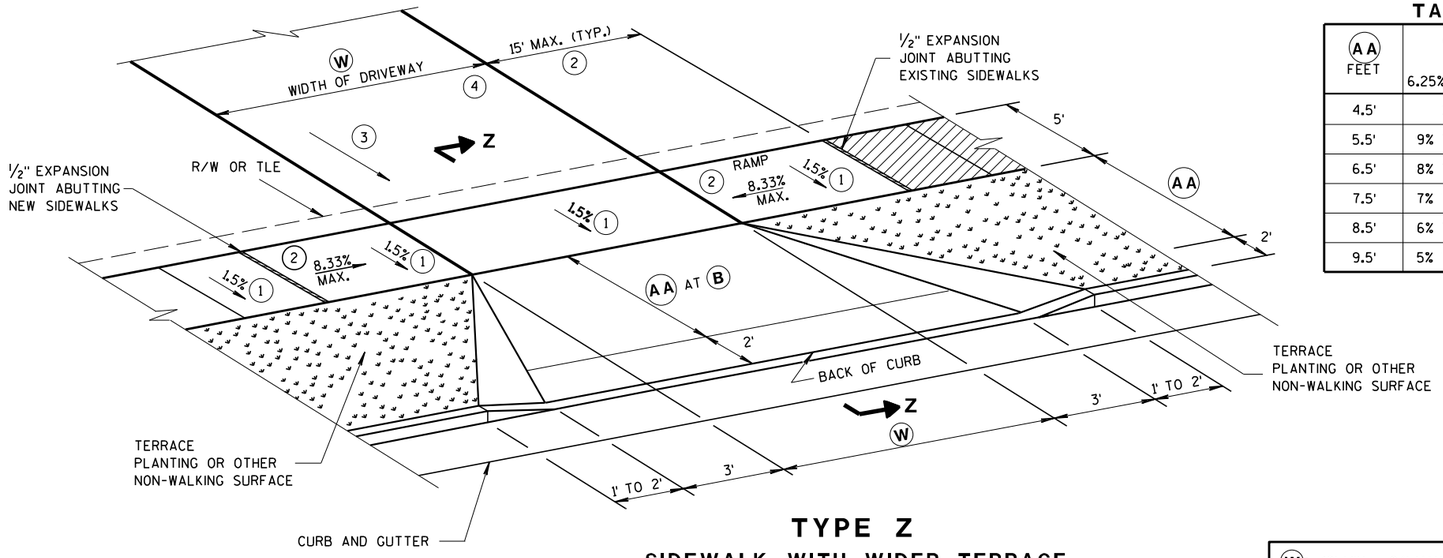

TYPE Z

SIDEWALK WITH WIDER TERRACE

TERRACE VARIES 7 TO 12 FEET

TABLE Z

(AA) FEET	(B) % 6.25% GUTTER	(B) % 4% GUTTER
4.5'	11.5%	9% TO 11.5%
5.5'	9% TO 11.5%	8% TO 11.5%
6.5'	8% TO 11.5%	6% TO 11.5%
7.5'	7% TO 11.5%	6% TO 11.5%
8.5'	6% TO 11.5%	5% TO 11.5%
9.5'	5% TO 11.5%	4% TO 11.5%

(W): 12' MIN. - 24' MAX. RESIDENTIAL AND NON-COMMERCIAL (PE & FE)
16' MIN. - 35' MAX. COMMERCIAL (CE)

GENERAL NOTES

PROVIDE CONSTRUCTION JOINTS ALONG THE CENTER OF THE CONCRETE FOR DRIVEWAYS UNDER 20 FEET IN WIDTH AND AT THE THIRD POINTS OVER 20 FEET IN WIDTH.

(W) IS SHOWN ON PLAN AND PROFILE SHEETS.

OFFSETS, ELEVATIONS, AND PERCENT GRADE ARE SHOWN ON THE CROSS SECTIONS.

(1) CONSTRUCTION TOLERANCE OF 0.5% ± FOR SIDEWALK CROSS SLOPE. THE SIDEWALK CROSS SLOPE SHALL NOT EXCEED 2%.

(2) THE SIDEWALK RAMP MAXIMUM RUNNING SLOPE SHALL NOT REQUIRE THE RAMP LENGTH TO EXCEED 15 FEET TO AVOID CHASING THE SLOPE INDEFINITELY WHEN CONNECTING TO STEEP GRADES. WHEN APPLYING THE 15 FOOT MAXIMUM LENGTH, THE RUNNING SLOPE OF THE SIDEWALK SHALL BE AS FLAT AS FEASIBLE AND NOT EXCEED THE LONGITUDINAL GRADE OF THE ROADWAY.

(3) DRIVEWAY SLOPES: DESIRABLE MAXIMUM
- 10.5% UP AWAY FROM SIDEWALK (SAG)
- 8.5% DOWN AWAY FROM SIDEWALK (CREST)
- ABSOLUTE MAXIMUM 15% FOR BOTH CREST AND SAG

(4) DRIVEWAY TYPES
- 6-INCH CONCRETE DRIVEWAY PAVEMENT OVER 6-INCH BASE AGGREGATE
- 2-INCH TO 3-INCH ASPHALTIC SURFACE OVER 6-INCH BASE AGGREGATE
- 6-INCH BASE AGGREGATE (MAY BE INCREASED FOR CLAY SUBGRADES)

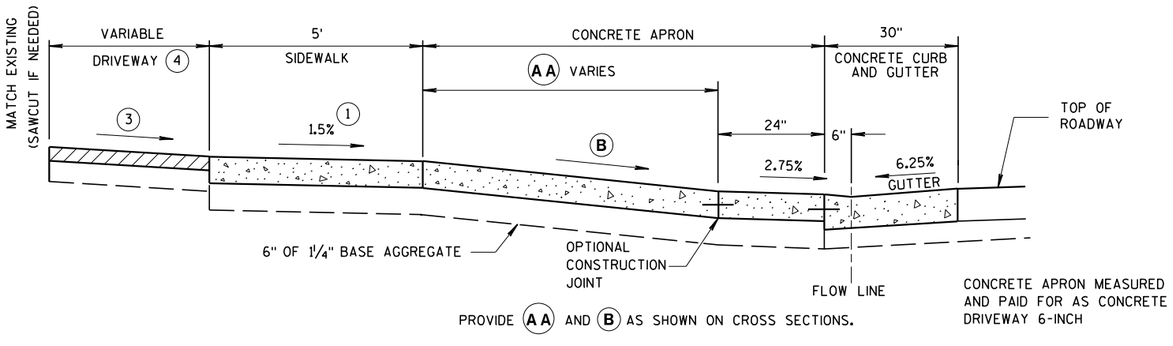

6.25% GUTTER SLOPE

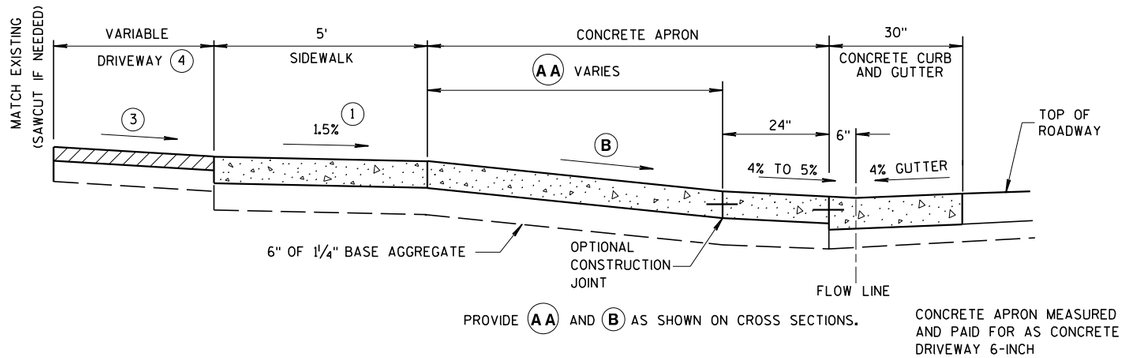

4% GUTTER SLOPE

NOTE: SIDEWALK MAY BE DEPRESSED IN DRIVEWAY AREAS FOR **B** VALUES NOT SHOWN IN TABLE Z.

SIDEWALK WITHIN THE LIMITS OF THE DRIVEWAY PAID FOR AS CONCRETE DRIVEWAY 6-INCH.

SEPARATE PAYMENT FOR BASE AGGREGATE WILL BE MADE.

SECTION Z-Z

DRIVEWAY DETAIL WITH CONCRETE CURB & GUTTER

(URBAN AND SUBURBAN)

NOT TO SCALE

DRIVEWAY AND SIDEWALK RAMPS TYPE Z

STATE OF WISCONSIN
DEPARTMENT OF TRANSPORTATION

APPROVED
March 2018 — DATE
/S/ Rodney Taylor — ROADWAY STANDARDS DEVELOPMENT UNIT SUPERVISOR
647
FHWA

6

S.D.D. 8 D 19-2

6

S.D.D. 8 D 19-2

GENERAL NOTES

A MAXIMUM RADIUS OF 10 FEET SHALL BE USED FOR NON-COMMERCIAL PRIVATE ENTRANCES. RADII FOR COMMERCIAL DRIVEWAYS SHALL BE DETERMINED BY THE ENGINEER BASED ON TRAFFIC AND DRIVEWAY PERMIT RESTRICTIONS.

THE MINIMUM ANGLE OF INTERSECTION BETWEEN THE DRIVEWAY AND HIGHWAY CENTERLINES SHALL BE 70°.

ALL CURVILINEAR PRIVATE ENTRANCE OUTLINES SHALL BE CONTAINED WITHIN THE HIGHWAY R/W.

NO DRIVEWAY SHALL BE BUILT WITHIN 3 FEET OF THE PROPERTY LINE EXCEPT FOR EXISTING JOINT DRIVEWAY SHARED BY TWO OWNERS.

Ⓦ: 12' MIN. - 24' MAX. RESIDENTIAL AND NON-COMMERCIAL (PE & FE)

16' MIN. - 35' MAX. COMMERCIAL (CE)

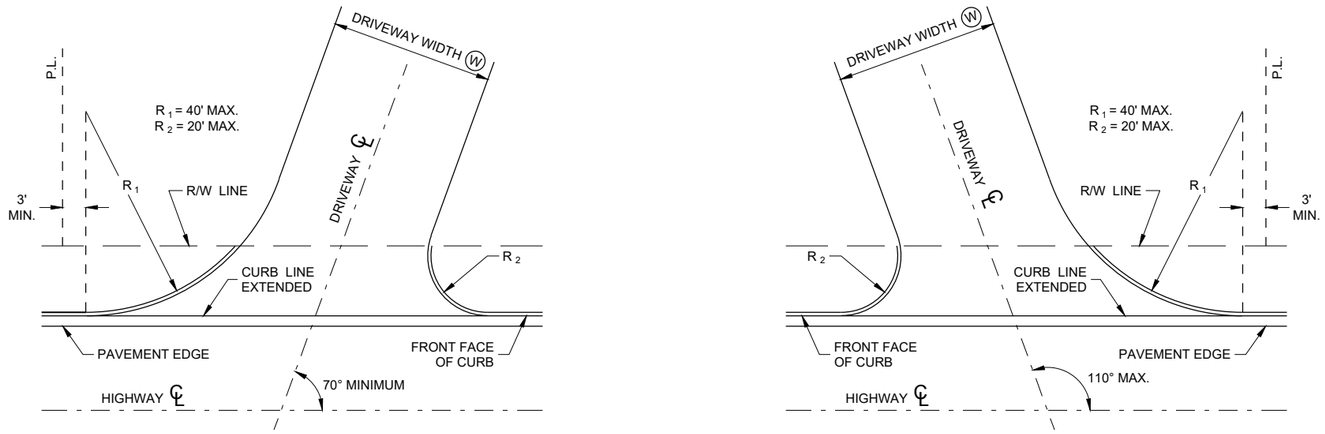

SKEWED DRIVEWAY DETAILS (COMMERCIAL AND NON-COMMERCIAL)

SIDEWALK NOT SHOWN

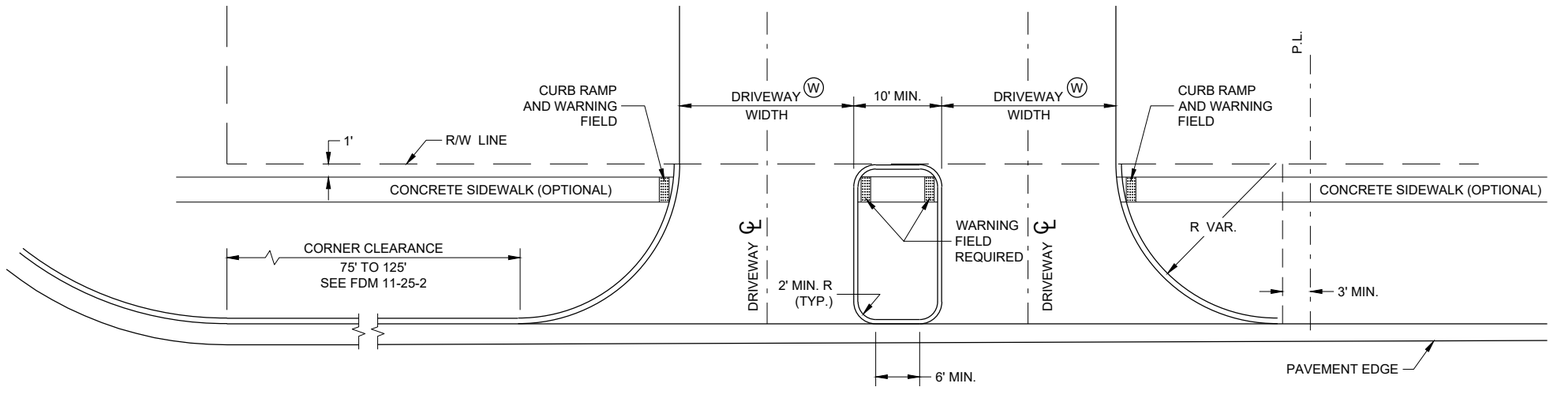

DRIVEWAY LOCATION AND SPACING DETAILS

SIDEWALK SHOWN

DRIVEWAYS WITH CURB AND GUTTER RETURNS

STATE OF WISCONSIN
DEPARTMENT OF TRANSPORTATION

APPROVED

00-00-00
DATE

/S/ <AUTHOR>
ROADWAY STANDARDS DEVE ENGINEER

FHWA

6

SDD 08D20 - 01
SDD 08D20 - 01

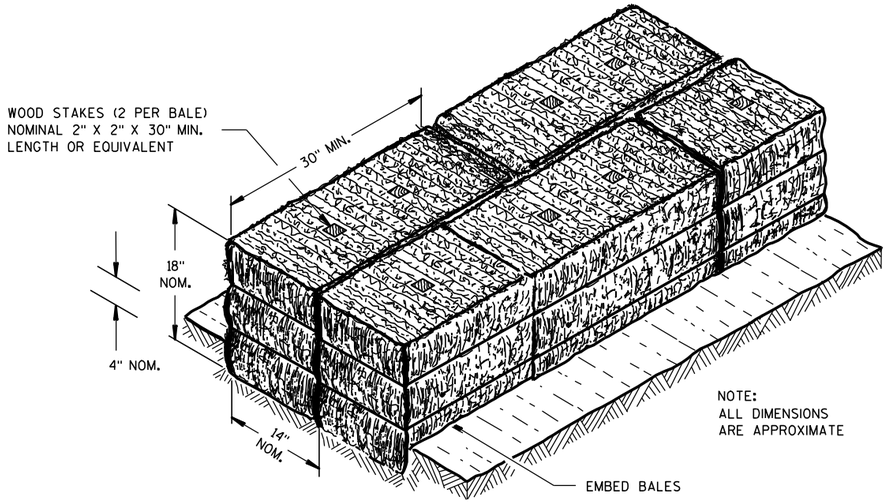

SECTION A-A

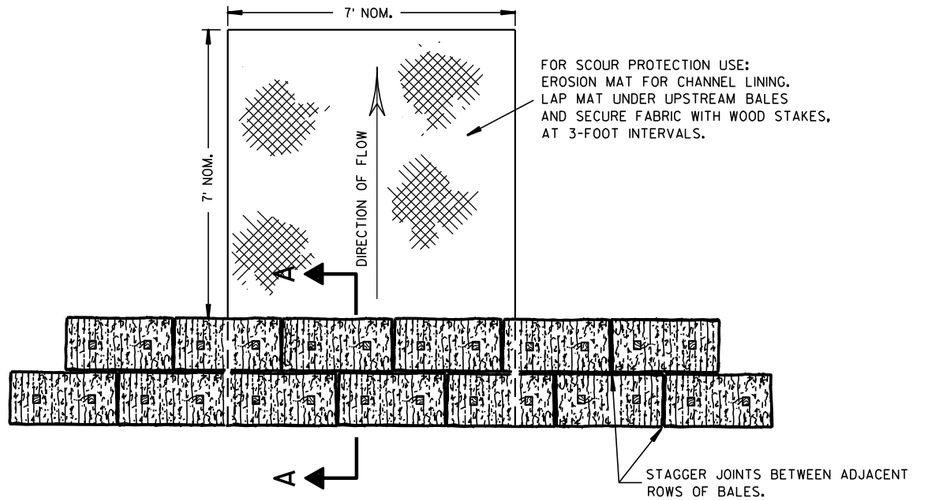

PLAN VIEW

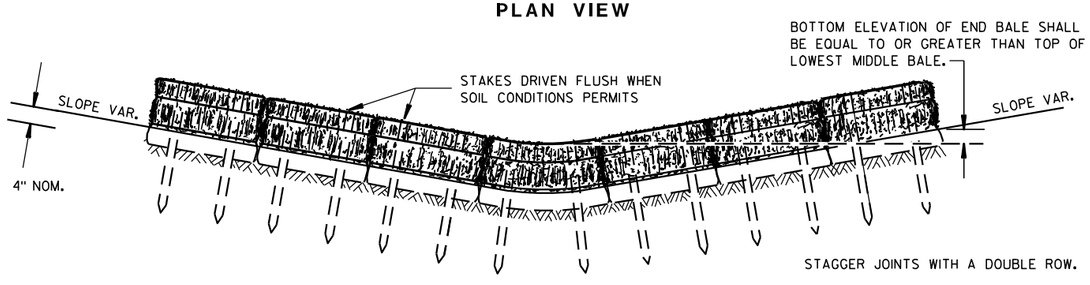

FRONT ELEVATION

TEMPORARY DITCH CHECK USING EROSION BALES (1)

GENERAL NOTES

DETAILS OF CONSTRUCTION, MATERIALS AND WORKMANSHIP NOT SHOWN ON THIS DRAWING SHALL CONFORM TO THE PERTINENT REQUIREMENTS OF THE STANDARD SPECIFICATIONS AND THE APPLICABLE SPECIAL PROVISIONS.

(1) TEMPORARY DITCH CHECKS EITHER EROSION BALES OR MANUFACTURED SHALL BE PAID FOR UNDER THE BID ITEM OF TEMPORARY DITCH CHECK. THE DEPARTMENT WILL NOT PAY FOR TEMPORARY DITCH CHECKS CONSTRUCTED OF A SINGLE ROW OF EROSION BALES.

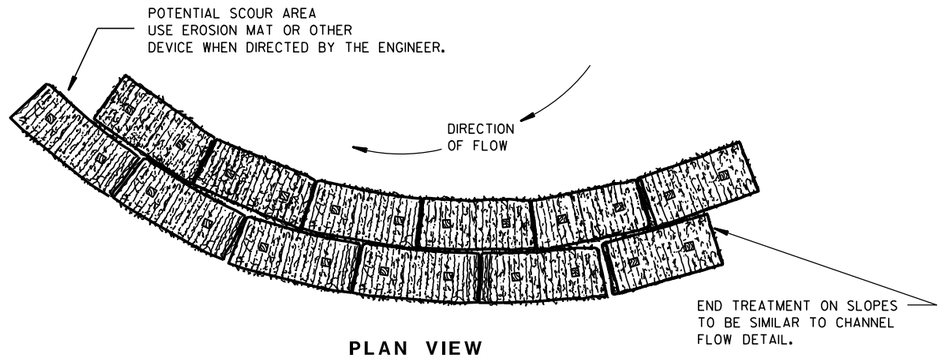

PLAN VIEW

WHEN ALTERING THE DIRECTION OF FLOW

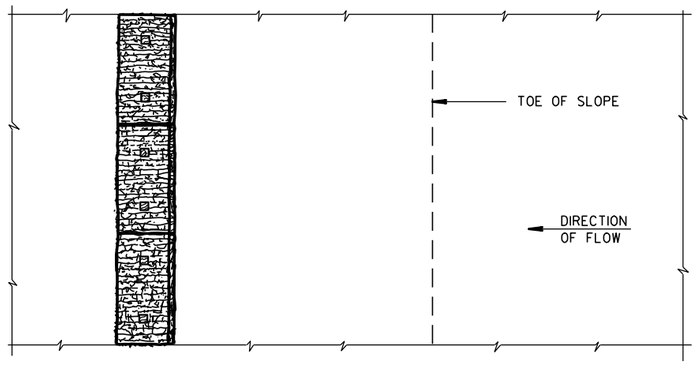

PLAN VIEW

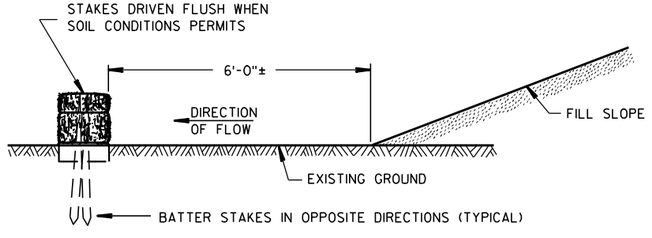

FRONT ELEVATION

WHEN EXISTING GROUND SLOPES AWAY FROM FILL SLOPE

EROSION BALES FOR SHEET FLOW

TYPICAL INSTALLATIONS OF EROSION BALES / TEMPORARY DITCH CHECKS

STATE OF WISCONSIN
DEPARTMENT OF TRANSPORTATION

APPROVED

6/04/02 — DATE

/S/ Beth Cannestra — CHIEF ROADWAY DEVELOPMENT ENGINEER

FHWA

6

S.D.D. 8 E 8-3

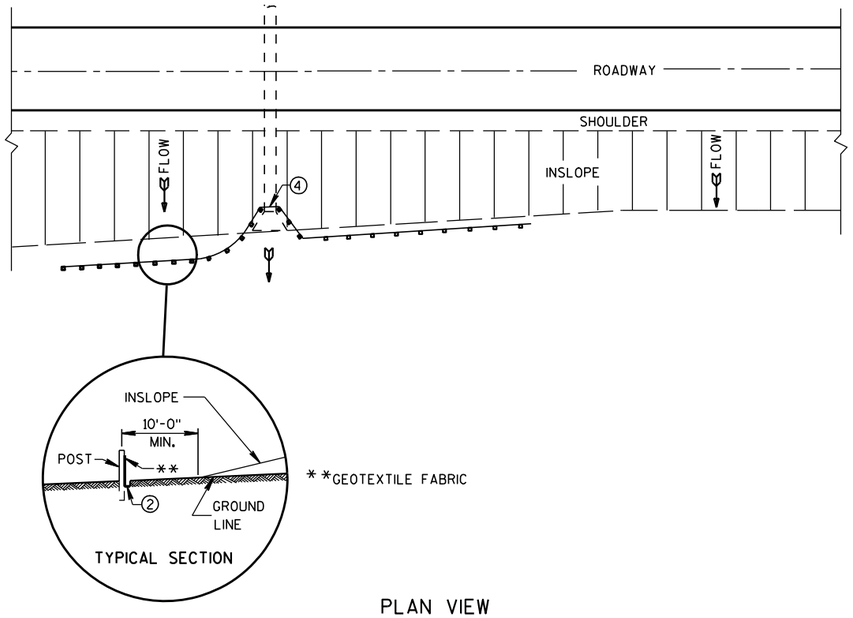

PLAN VIEW

TYPICAL APPLICATION OF SILT FENCE

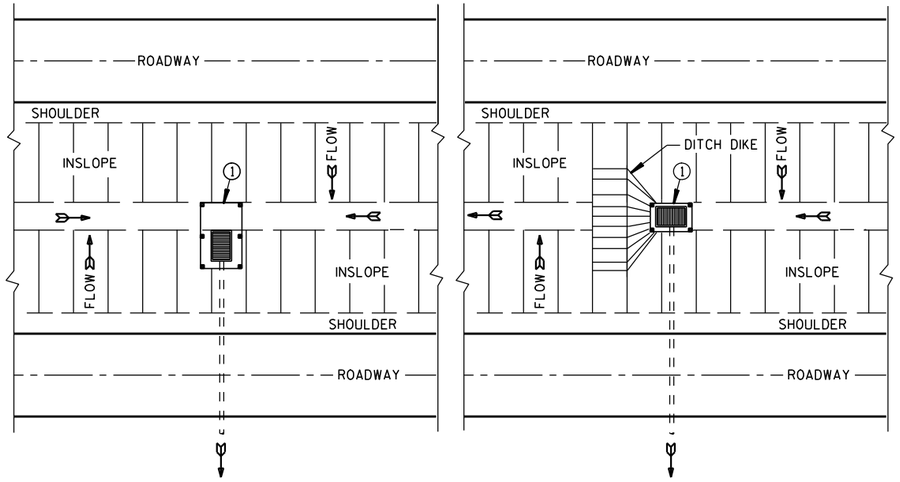

PLAN VIEW

SILT FENCE AT MEDIAN SURFACE DRAINS

GENERAL NOTES

DETAILS OF CONSTRUCTION NOT SHOWN ON THIS DRAWING SHALL CONFORM TO THE PERTINENT REQUIREMENTS OF THE STANDARD SPECIFICATIONS AND APPLICABLE SPECIAL PROVISIONS.

1. HORIZONTAL BRACE REQUIRED WITH 2" X 4" WOODEN FRAME OR EQUIVALENT AT TOP OF POSTS.
2. FOR MANUAL INSTALLATIONS THE TRENCH SHALL BE A MINIMUM OF 4" WIDE & 6" DEEP TO BURY AND ANCHOR THE GEOTEXTILE FABRIC. FOLD MATERIAL TO FIT TRENCH AND BACKFILL & COMPACT TRENCH WITH EXCAVATED SOIL.
3. WOOD POSTS SHALL BE A MINIMUM SIZE OF 1⅛" X 1⅛" OF OAK OR HICKORY.
4. SILT FENCE TO EXTEND ACROSS THE TOP OF THE PIPE.
5. CONSTRUCT SILT FENCE FROM A CONTINUOUS ROLL IF POSSIBLE BY CUTTING LENGTHS TO AVOID JOINTS. IF A JOINT IS NECESSARY USE ONE OF THE FOLLOWING TWO METHODS; A) OVERLAP THE END POSTS AND TWIST, OR ROTATE, AT LEAST 180 DEGREES, B) HOOK THE END OF EACH SILT FENCE LENGTH.

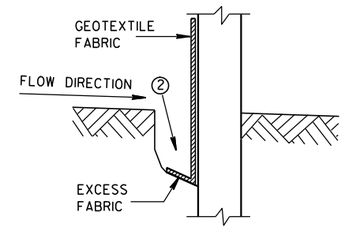

TRENCH DETAIL

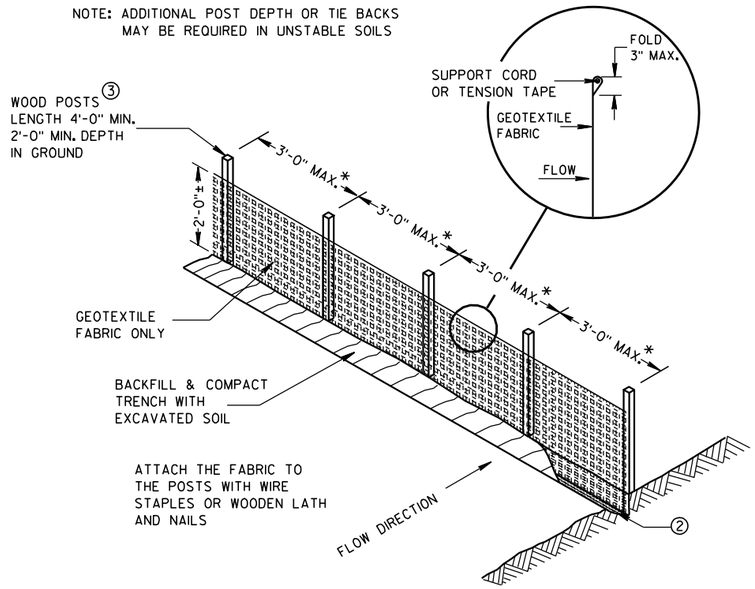

SILT FENCE

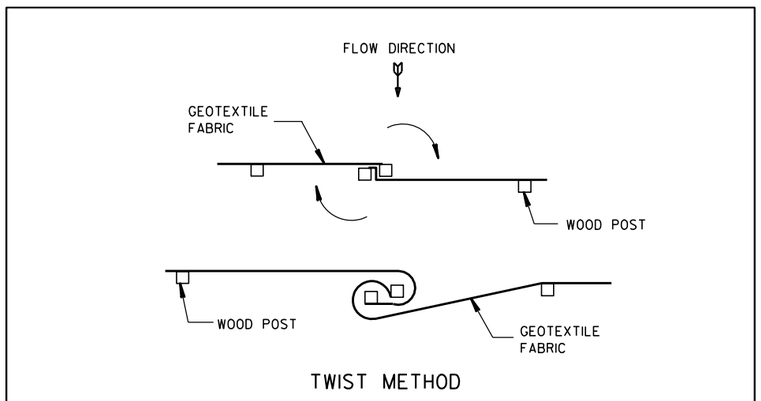

JOINING TWO LENGTHS OF SILT FENCE 5

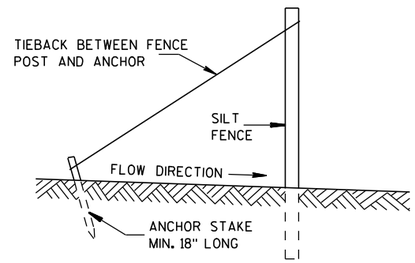

SILT FENCE TIE BACK

(WHEN REQUIRED BY THE ENGINEER)

SILT FENCE

STATE OF WISCONSIN
DEPARTMENT OF TRANSPORTATION

APPROVED
4-29-05 DATE
/S/ Beth Cannestra
CHIEF ROADWAY DEVELOPMENT ENGINEER
FHWA

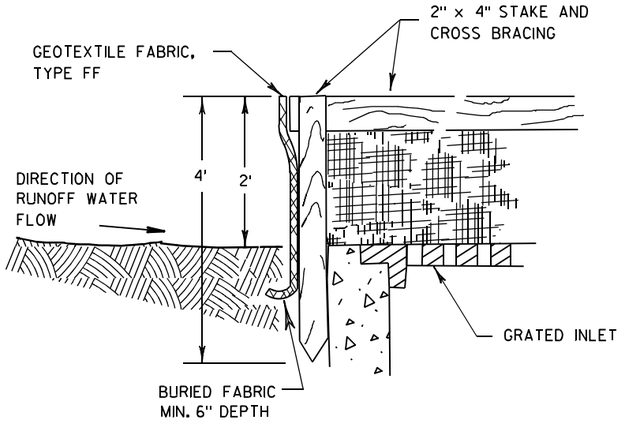

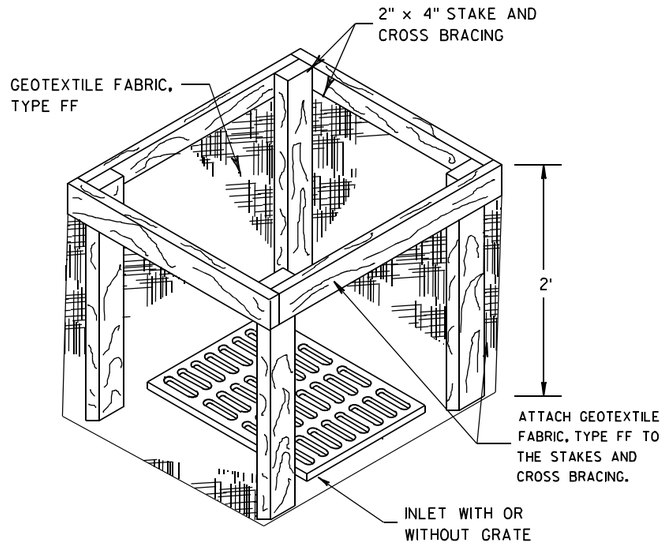

INLET PROTECTION, TYPE A

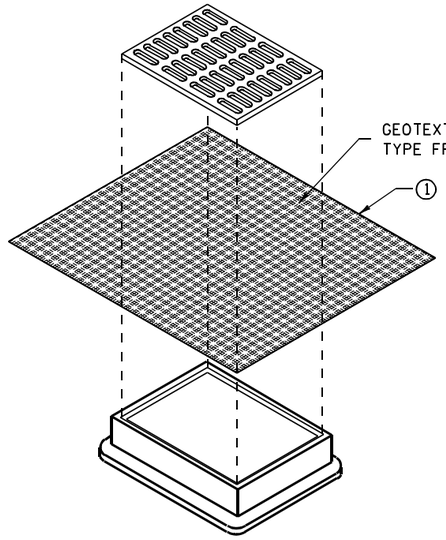

INLET PROTECTION, TYPE B
(WITHOUT CURB BOX)

(CAN BE INSTALLED IN ANY INLET WITHOUT A CURB BOX)

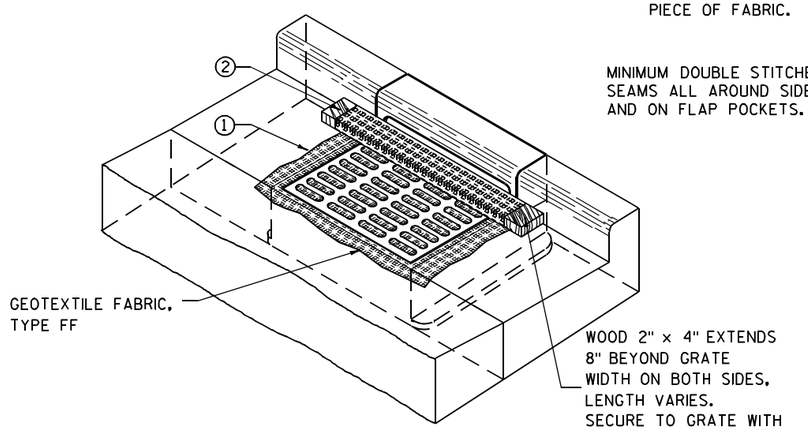

INLET PROTECTION, TYPE C (WITH CURB BOX)

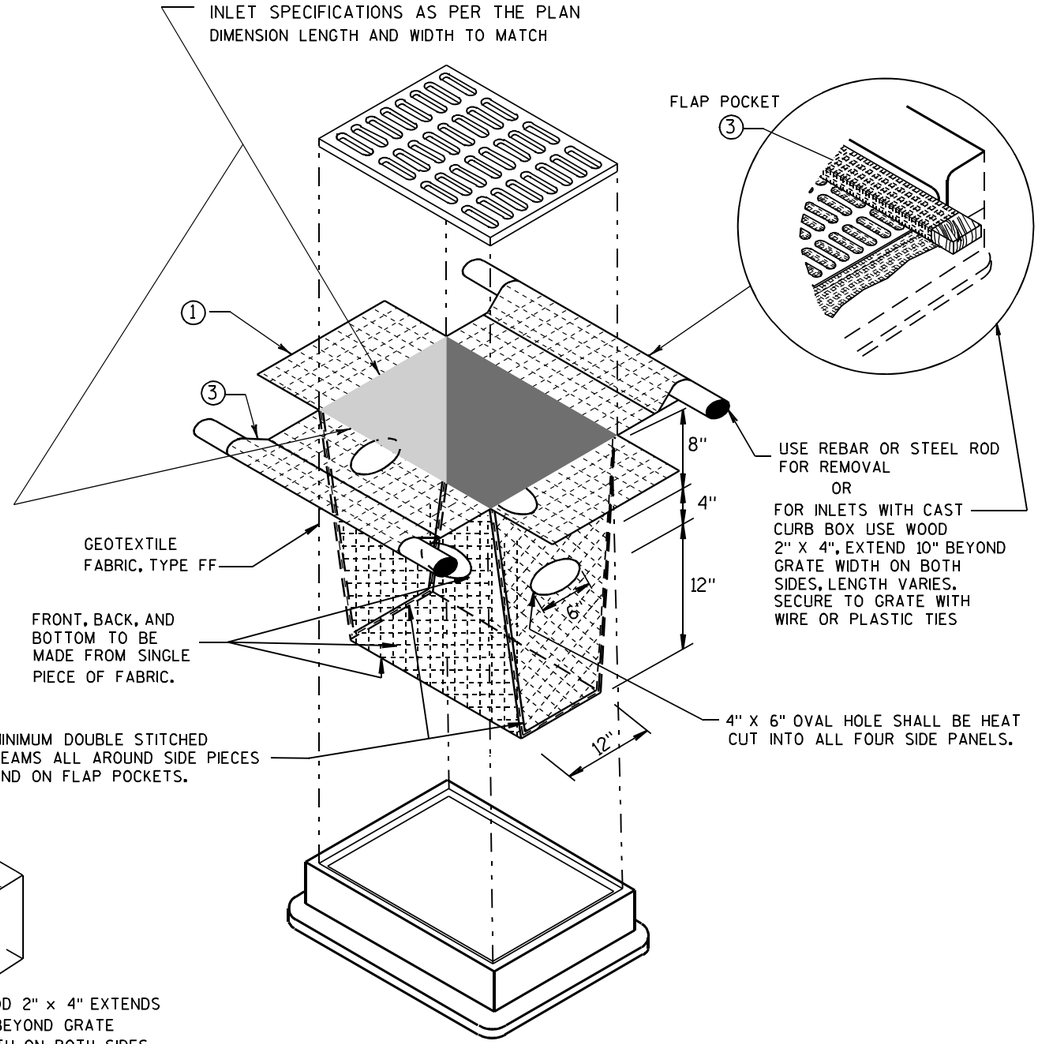

INLET PROTECTION, TYPE D

(CAN BE INSTALLED IN ANY INLET TYPE WITH
OR WITHOUT A CURB BOX AS PER NOTE ②)

GENERAL NOTES

INLET PROTECTION DEVICES SHALL BE MAINTAINED OR REPLACED AT THE DIRECTION OF THE ENGINEER.

MANUFACTURED ALTERNATIVES APPROVED AND LISTED ON THE DEPARTMENT'S EROSION CONTROL PRODUCT ACCEPTABILITY LIST MAY BE SUBSTITUTED.

WHEN REMOVING OR MAINTAINING INLET PROTECTION, CARE SHALL BE TAKEN SO THAT THE SEDIMENT TRAPPED ON THE GEOTEXTILE FABRIC DOES NOT FALL INTO THE INLET. ANY MATERIAL FALLING INTO THE INLET SHALL BE REMOVED IMMEDIATELY.

① FINISHED SIZE, INCLUDING FLAP POCKETS WHERE REQUIRED, SHALL EXTEND A MINIMUM OF 10" AROUND THE PERIMETER TO FACILITATE MAINTENANCE OR REMOVAL.

② FOR INLET PROTECTION, TYPE C (WITH CURB BOX), AN ADDITIONAL 18" OF FABRIC IS WRAPPED AROUND THE WOOD AND SECURED WITH STAPLES. THE WOOD SHALL NOT BLOCK THE ENTIRE HEIGHT OF THE CURB BOX OPENING.

③ FLAP POCKETS SHALL BE LARGE ENOUGH TO ACCEPT WOOD 2X4.

INSTALLATION NOTES

TYPE B & C

TRIM EXCESS FABRIC IN THE FLOW LINE TO WITHIN 3" OF THE GRATE.

THE CONTRACTOR SHALL DEMONSTRATE A METHOD OF MAINTENANCE, USING A SEWN FLAP, HAND HOLDS OR OTHER METHOD TO PREVENT ACCUMULATED SEDIMENT FROM ENTERING THE INLET.

TYPE D

DO NOT INSTALL INLET PROTECTION TYPE D IN INLETS SHALLOWER THAN 30", MEASURED FROM THE BOTTOM OF THE INLET TO THE TOP OF THE GRATE.

TRIM EXCESS FABRIC IN THE FLOW LINE TO WITHIN 3" OF THE GRATE.

THE INSTALLED BAG SHALL HAVE A MINIMUM SIDE CLEARANCE, BETWEEN THE INLET WALLS AND THE BAG, MEASURED AT THE BOTTOM OF THE OVERFLOW HOLES, OF 3". WHERE NECESSARY THE CONTRACTOR SHALL CINCH THE BAG, USING PLASTIC ZIP TIES, TO ACHIEVE THE 3" CLEARANCE. THE TIES SHALL BE PLACED AT A MAXIMUM OF 4" FROM THE BOTTOM OF THE BAG.

INLET PROTECTION
TYPE A, B, C, AND D

STATE OF WISCONSIN
DEPARTMENT OF TRANSPORTATION

APPROVED
10/16/02
DATE
/S/ Beth Cannestra
CHIEF ROADWAY DEVELOPMENT ENGINEER
FHWA

6
S.D.D. 8 E 10-2

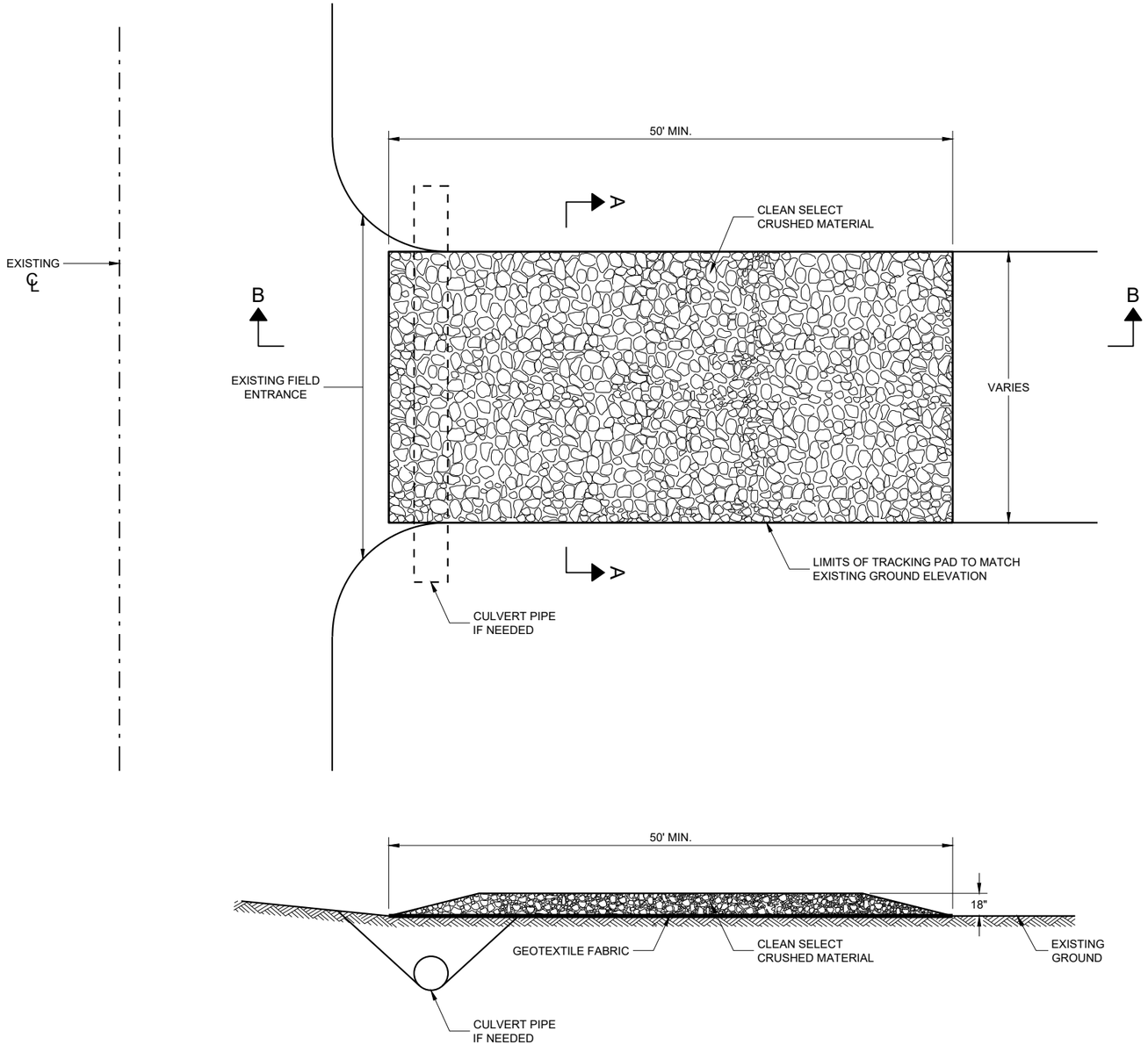

SECTION B - B

GENERAL NOTES

DETAILS OF CONSTRUCTION, MATERIALS AND WORKMANSHIP NOT SHOWN ON THIS DRAWING SHALL CONFORM TO THE PERTINENT REQUIREMENTS OF THE STANDARD SPECIFICATIONS AND THE APPLICABLE SPECIAL PROVISIONS.

TRACKING PAD SHALL BE INSPECTED DAILY. DEFICIENT AREAS SHALL BE REPAIRED OR REPLACED IMMEDIATELY.

TRACKING PAD TO BE REMOVED AFTER CONSTRUCTION IS COMPLETED.

TRACKING PAD SHALL BE THE FULL WIDTH OF THE EGRESS POINT.

SURFACE WATER MUST BE PREVENTED FROM PASSING THROUGH THE TRACKING PAD. FLOWS SHALL BE DIVERTED AWAY, AROUND OR CONVEYED UNDER THE TRACKING PAD.

CULVERT PIPE OR OTHER BMP USED TO DIVERT WATER AWAY, AROUND OR UNDER THE TRACKING PAD SHALL BE DESIGNED TO CONVEY THE 2 YEAR - 24 HOUR EVENT.

THE COST OF ADDITIONAL BMP TO DIVERT WATER ARE INCIDENTAL TO THE TRACKING PAD BID ITEM.

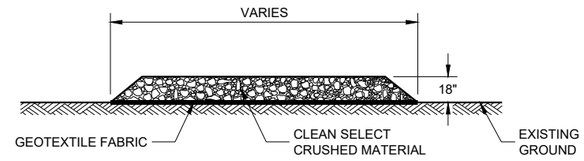

SECTION A - A

6

SDD 08E14 - 01

TRACKING PAD

STATE OF WISCONSIN
DEPARTMENT OF TRANSPORTATION

APPROVED

3/24/2011
DATE

/S/ Jerry H. Zogg
ROADWAY STANDARDS DEVE ENGINEER

FHWA

6

SDD 08E14 - 01

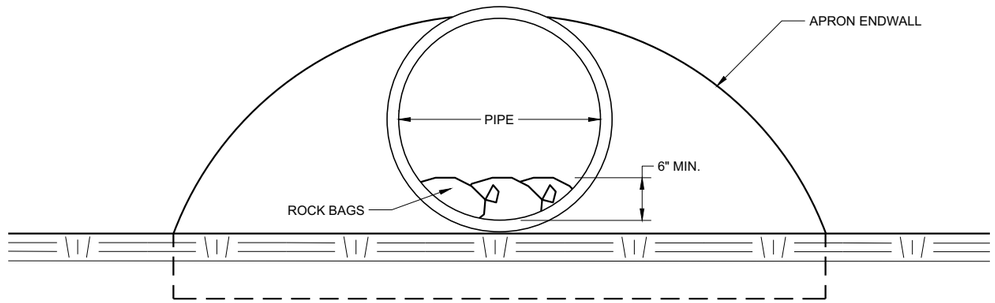

END VIEW

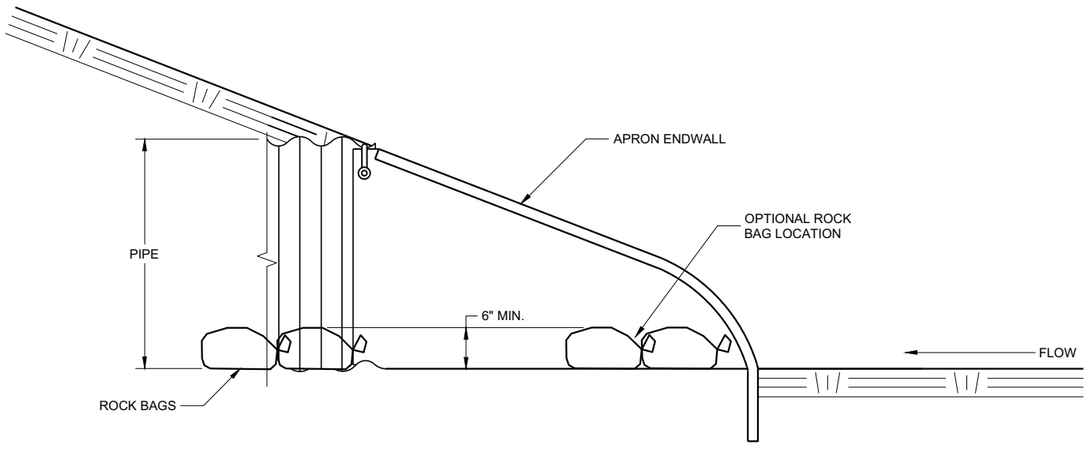

SIDE VIEW

CULVERT PIPE CHECK

(INSTALL ON INLET END ONLY)

CULVERT PIPE CHECK

STATE OF WISCONSIN
DEPARTMENT OF TRANSPORTATION

APPROVED
May 2019
DATE

/S/ Daniel Schave
EROSION CONTROL ENGI

FHWA

6

SDD 08E15 - 01

6

SDD 08E15 - 01

METAL APRON ENDWALLS

PIPE DIA. (IN.)	MIN. THICK. (Inches) STEEL	MIN. THICK. (Inches) ALUM.	DIMENSIONS (Inches) A (±1")	B (MAX.)	H (±1")	L (±1 1/2")	L1 ①	L2 ①	W (±2")	APPROX. SLOPE	BODY
12	.064	.060	6	6	6	21	12	17 1/2	24	2 1/2 to 1	1 Pc.
15	.064	.060	7	8	6	26	14	21 3/4	30	2 1/2 to 1	1 Pc.
18	.064	.060	8	10	6	31	15	28 1/4	36	2 1/2 to 1	1 Pc.
21	.064	.060	9	12	6	36	18	29 5/8	42	2 1/2 to 1	1 Pc.
24	.064	.075	10	13	6	41	18	37 1/4	48	2 1/2 to 1	1 Pc.
30	.079	.075	12	16	8	51	18	52 1/4	60	2 1/2 to 1	1 Pc.
36	.079	.105	14	19	9	60	24	59 3/4	72	2 1/2 to 1	2 Pc.
42	.109	.105	16	22	11	69	24	75 5/8	84	2 1/2 to 1	2 Pc.
48	.109	.105	18	27	12	78	24	81	90	2 1/4 to 1	3 Pc.
54	.109	.105	18	30	12	84	30	85 1/2	102	2 1/4 to 1	3 Pc.
60	.109×	.105×	18	33	12	87	—	—	114	2 to 1	3 Pc.
66	.109×	.105×	18	36	12	87	—	—	120	2 to 1	3 Pc.
72	.109×	.105×	18	39	12	87	—	—	126	2 to 1	3 Pc.
78	.109×	.105×	18	42	12	87	—	—	132	1 1/2 to 1	3 Pc.
84	.109×	.105×	18	45	12	87	—	—	138	1 1/2 to 1	3 Pc.
90	.109×	.105×	18	37	12	87	—	—	144	1 1/2 to 1	3 Pc.
96	.109×	.105×	18	35	12	87	—	—	150	1 1/2 to 1	3 Pc.

× EXCEPT CENTER PANEL SEE GENERAL NOTES

REINFORCED CONCRETE APRON ENDWALLS

PIPE DIA. (IN.)	DIMENSIONS (Inches) T	A	B	C	D	E	G	APPROX. SLOPE
12	2	4	24	48 7/8	72 1/8	24	2	3 to 1
15	2 1/4	6	27	46	73	30	2 1/4	3 to 1
18	2 1/2	9	27	46	73	36	2 1/2	3 to 1
21	2 3/4	9	36	37 1/2	73 1/2	42	2 3/4	3 to 1
24	3	9 1/2	43 1/2	30	73 1/2	48	3	3 to 1
27	3 1/4	10 1/2	49 1/2	24	73 1/2	54	3 1/4	3 to 1
30	3 1/2	12	54	19 3/4	73 1/2	60	3 1/2	3 to 1
36	4	15	63	34 3/4	97 3/4	72	4	3 to 1
42	4 1/2	21	63	35	98	78	4 1/2	3 to 1
48	5	24	72	26	98	84	5	3 to 1
54	5 1/2	27	65	* 33 1/4 - ** 35	* 98 1/4 - ** 100	90	5 1/2	2 2/5 to 1
60	6	* 30 - ** 35	60	39	99	96	5	2 to 1
66	6 1/2	* 24 - ** 30	* 72 - ** 78	* 21 - ** 27	99	102	5 1/2	2 to 1
72	7	* 24 - ** 36	78	21	99	108	6	2 to 1
78	7 1/2	* 24 - ** 36	78	21	99	114	6 1/2	2 to 1
84	8	36	90 1/2	21	111 1/2	120	6 1/2	1 1/2 to 1
90	8 1/2	41	87 1/2	24	111 1/2	132	6 1/2	1 1/2 to 1

*MINIMUM
**MAXIMUM

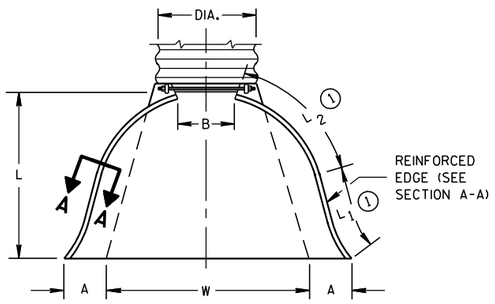

PLAN VIEW

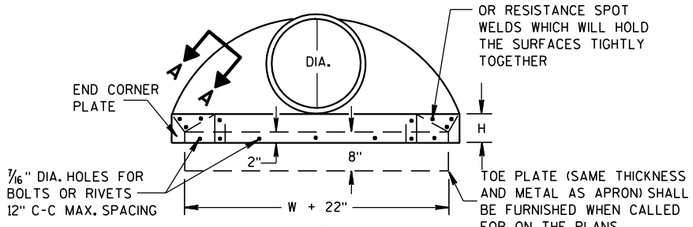

END VIEW

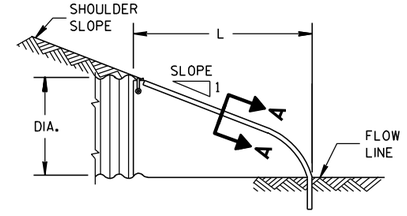

SIDE ELEVATION

METAL ENDWALLS

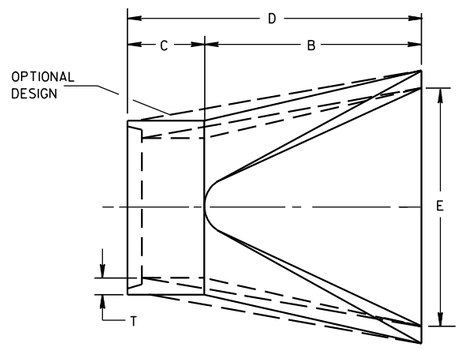

PLAN

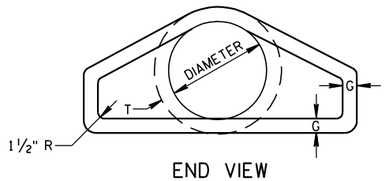

END VIEW

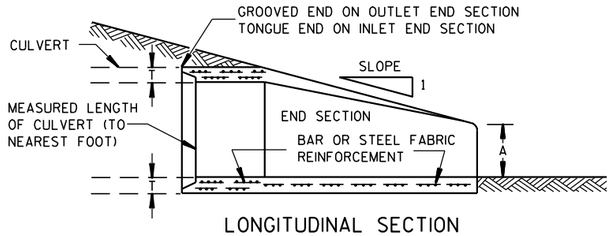

LONGITUDINAL SECTION

CONCRETE ENDWALLS

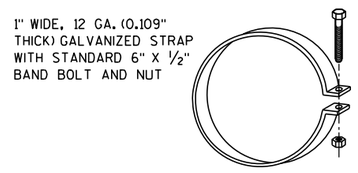

ALTERNATE FOR TYPE 1 CONNECTION

END SECTION CONNECTOR STRAP

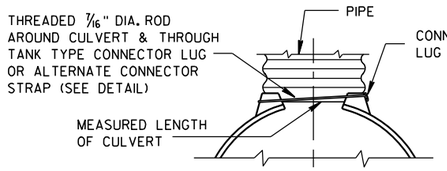

TYPE 1
FOR 12" THRU 24" CORR. PIPE

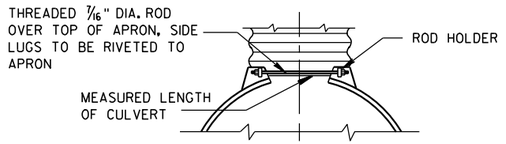

TYPE 2
FOR 30" THRU 96" CORR. PIPE

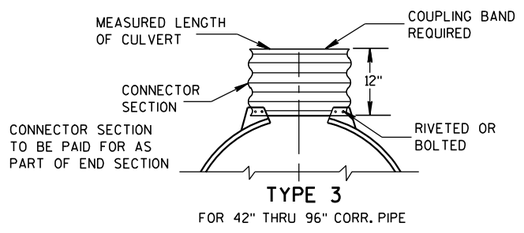

TYPE 3
FOR 42" THRU 96" CORR. PIPE

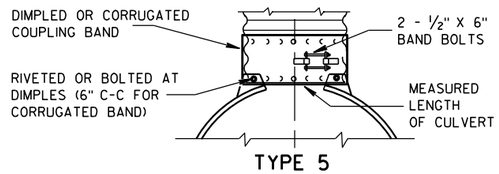

TYPE 5
ALTERNATE FOR:
ALL SIZES CORRUGATED CIRCULAR PIPE

NOTE: DIMPLED BAND FITS OVER OUTSIDE OF ENDWALL. AND CORRUGATED BAND FITS INSIDE ENDWALL. DIMPLED BAND MAY BE USED WITH HELICALLY CORRUGATED PIPE.

FOR CIRCUMFERENTIALLY CORRUGATED PIPE USE ENDWALL CONNECTION DETAILS 1, 2, 3 OR 5 AS APPLICABLE.

FOR HELICALLY CORRUGATED PIPE USE ENDWALL CONNECTION DETAILS 1, 2 OR 5.

FOR HELICALLY CORRUGATED PIPES WITH TWO CIRCUMFERENTIAL CORRUGATIONS AT EACH END USE ENDWALL CONNECTION DETAILS 1, 2 OR 3.

CONNECTION DETAILS

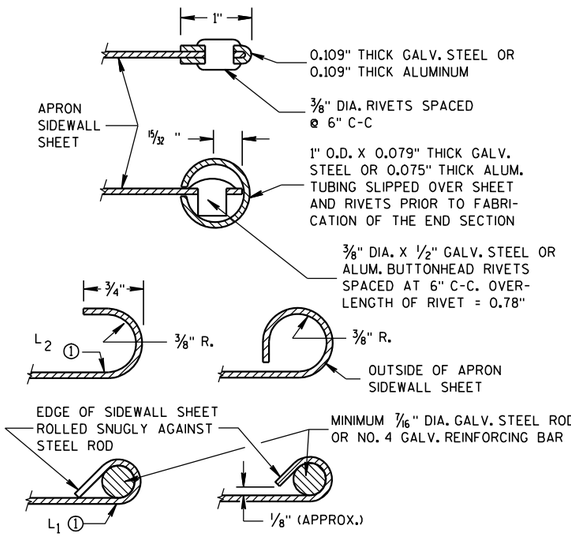

SECTION A-A

GENERAL NOTES

DETAILS OF CONSTRUCTION, MATERIALS AND WORKMANSHIP NOT SHOWN ON THIS DRAWING SHALL CONFORM TO THE PERTINENT REQUIREMENTS OF THE STANDARD SPECIFICATIONS AND THE APPLICABLE SPECIAL PROVISIONS.

CONCRETE CULVERT ENDWALLS MAY NOT BE USED WITH GALVANIZED STEEL OR ALUMINUM CULVERT PIPE OR VISE VERSA. GALVANIZED STEEL OR ALUMINUM ENDWALLS SHALL NORMALLY BE INSTALLED ON CULVERT PIPE OF THE SAME METAL.

ALL THREE PIECE STEEL APRON ENDWALLS FOR 60" DIAMETER PIPE AND LARGER SHALL HAVE 0.109" SIDES AND 0.138" CENTER PANELS. ALL THREE PIECE ALUMINUM APRON ENDWALLS FOR 60" DIAMETER PIPE AND LARGER SHALL HAVE 0.105" SIDES AND 0.134" CENTER PANELS. THE WIDTH OF CENTER PANELS SHALL BE GREATER THAN 20 PERCENT OF THE PIPE PERIMETER.

LAP SEAMS SHALL BE TIGHTLY JOINED BY GALVANIZED RIVETS OR BOLTS FOR STEEL UNITS AND ALUMINUM RIVETS AND BOLTS FOR ALUMINUM UNITS. FOR THE 60" THROUGH 96" DIAMETER APRON ENDWALL SIZES, THE REINFORCED EDGES AND CENTER PANEL SEAMS SHALL BE FURTHER REINFORCED WITH GALVANIZED STEEL OR ALUMINUM STIFFENER ANGLES. THE ANGLES SHALL BE ATTACHED BY GALVANIZED NUTS AND BOLTS FOR STEEL UNITS AND ALUMINUM NUTS AND BOLTS FOR ALUMINUM UNITS.

WHERE TWO OR MORE PIPES WITH APRON ENDWALLS ARE LAID ADJACENT TO EACH OTHER, THEY SHALL BE SEPARATED BY A DISTANCE SUFFICIENT TO PROVIDE A MINIMUM CLEARANCE OF 6 INCHES BETWEEN APRON ENDWALLS.

① FOR PIPE SIZES UP TO 60" DIAMETER, A 180° ROLLED EDGE MAY BE USED INSTEAD OF STEEL ROD REINFORCEMENT. SEE SECTION A-A.

APRON ENDWALLS FOR CULVERT PIPE

STATE OF WISCONSIN
DEPARTMENT OF TRANSPORTATION

APPROVED
11/30/94 DATE
/S/ Rory L. Rhinesmith
CHIEF ROADWAY DEVELOP 654 NEER
FHWA

6

S.D.D. 8 F 1-11

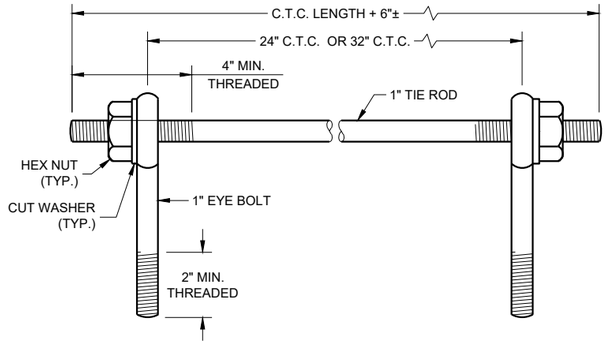

EYE BOLTS AND TIE ROD

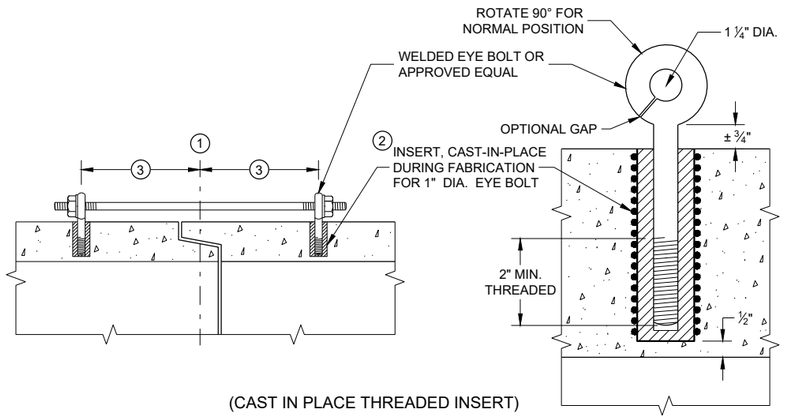

(CAST IN PLACE THREADED INSERT)

LONGITUDINAL SECTIONS

EYE BOLT AND TIE ROD ASSEMBLY (ALTERNATE NO. 1)

GENERAL NOTES

DETAILS OF CONSTRUCTION, MATERIALS, AND WORKMANSHIP NOT SHOWN ON THIS DRAWING SHALL CONFORM TO THE PERTINENT REQUIREMENTS OF THE STANDARD SPECIFICATIONS AND APPLICABLE SPECIAL PROVISIONS.

CONCRETE CULVERT AND STORM SEWER PIPE SHALL BE TIED TOGETHER IN THE MANNER ILLUSTRATED BY THIS DETAIL AT LOCATIONS DESIGNATED IN THE STANDARD SPECIFICATIONS AND THE PLAN. THE CONTRACTOR MAY USE EITHER ALTERNATE 1, 2 OR 3 FOR DRAINAGE STRUCTURES. ONLY ALTERNATE 1 AND 3 MAY BE USED FOR CATTLE PASSES, UNLESS OTHERWISE STATED IN THE CONTRACT. THE MATERIALS, FABRICATION AND WORK NECESSARY TO TIE THE PIPE BY THIS DETAIL WILL BE CONSIDERED INCIDENTAL TO THE PIPE AND APRON ENDWALLS IF REQUIRED.

DETAILED DRAWINGS FOR PROPOSED ALTERNATE DESIGNS FOR JOINT TIES SHALL BE SUBMITTED TO THE ENGINEER FOR APPROVAL.

JOINT TIES TO BE HOT-DIP GALVANIZED PER ASTM A 153.

(1) CENTER LINE OF TONGUE AND GROOVE OR BELL AND SPIGOT JOINTS.

(2) THE INSIDE OF THE THREADED INSERTS SHALL BE CLEAN TO ALLOW THE INSERTION OF THREADED EYE BOLTS.

(3) HOLES SHALL BE CAST-IN-PLACE OR DRILLED PER THE APPLICABLE DETAIL, AND EQUAL DISTANCE FROM THE CENTERLINE OF THE JOINT.

(4) BOLT PROJECTION INSIDE OF PIPE SHALL NOT EXCEED 2 INCHES.

(5) OPENING TO BE ROD DIAMETER PLUS 1 INCH.

(6) LENGTH ADEQUATE TO EXTEND TO WITHIN ½ INCH OF THE INNER SURFACE OF THE PIPE.

(7) EYE BOLT LENGTH DETERMINED BY WALL THICKNESS, BELL THICKNESS AND BOLT PROJECTION INSIDE PIPE.

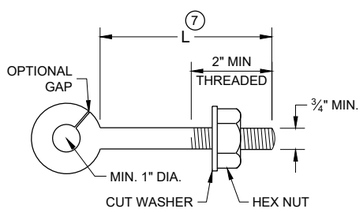

EYE BOLT (7)

NOTE: TWO EYE BOLTS MAY BE USED WITH A 30" OR 38" LONG THREADED ROD IN LIEU OF THE 90° BENT TIE ROD.

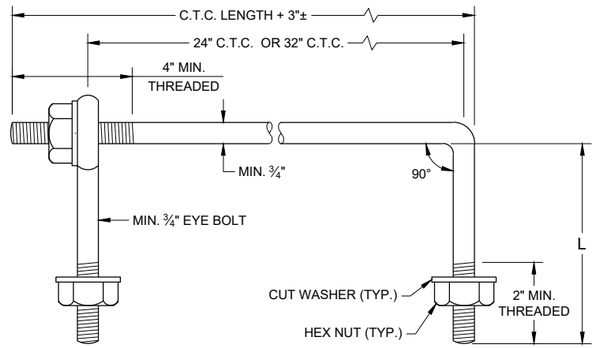

EYE BOLT AND TIE ROD

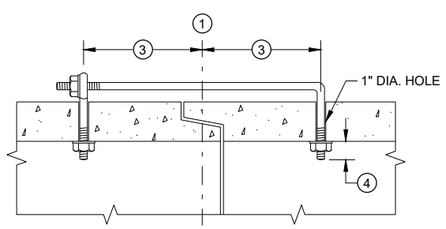

(TONGUE AND GROOVE PIPE)

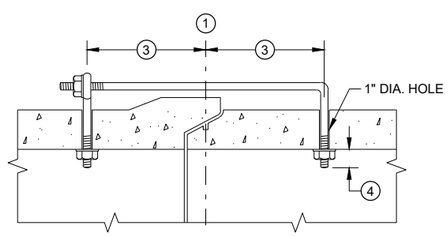

(MODIFIED BELL PIPE)

LONGITUDINAL SECTION

(JOINT TIES FOR 18" TO 66" DIA. CONCRETE PIPE)

EYE BOLT AND TIE ROD ASSEMBLY (ALTERNATE NO. 2)

ADJUSTABLE TIE ROD TABLE

PIPE DIAMETER	TIE ROD DIAMETER	D	L_1	N
12 - 60	⅝	⅝	5	½
66 - 84	¾	¾	5	½
90 - 144	1	1	7	1 7/16

DIMENSIONS SHOWN ARE IN INCHES

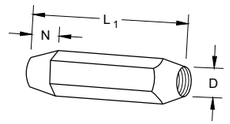

TAPERED

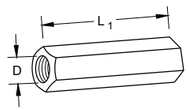

PLAIN

RIGHT AND LEFT THREADS

SLEEVE NUTS

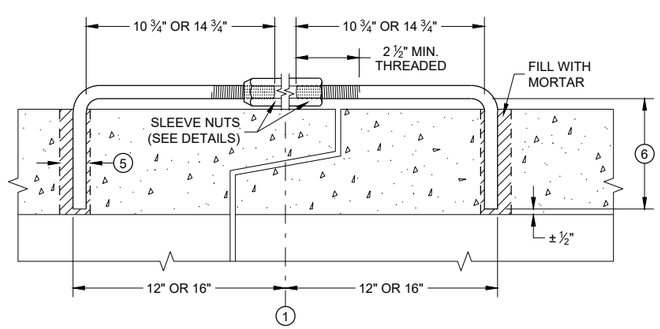

LONGITUDINAL SECTION

ADJUSTABLE TIE ROD (ALTERNATE NO. 3)

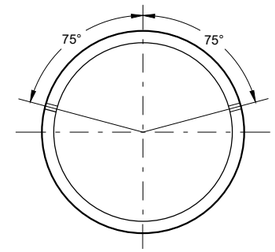

PLACEMENT OF (2) CAST-IN-PLACE INSERTS OR HOLES DURING FABRICATION FOR PIPE SECTIONS REQUIRING TIE RODS

TRANSVERSE SECTION

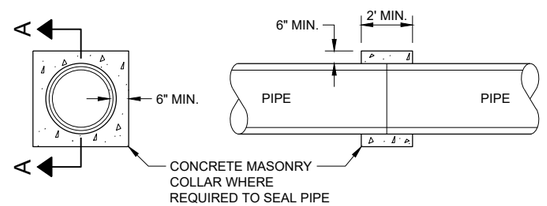

SECTION A - A

CONCRETE COLLAR DETAIL

JOINT TIES FOR CONCRETE PIPE AND CONCRETE COLLAR DETAIL

STATE OF WISCONSIN
DEPARTMENT OF TRANSPORTATION

APPROVED
November 2021 — DATE
/S/ Rodney Taylor — ROADWAY STANDARDS DEVE ENGINEER

FHWA

SDD 08F04 - 08

SDD 08F04 - 08

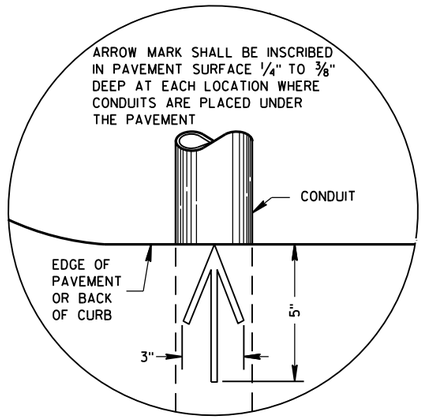

PLAN VIEW

ARROW MARK

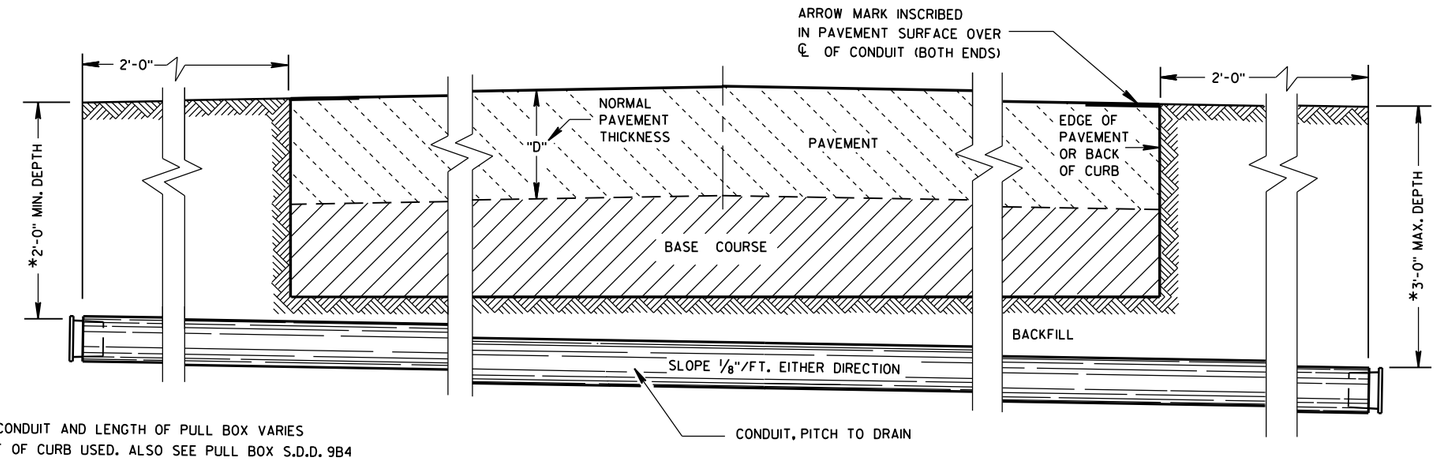

*DEPTH OF CONDUIT AND LENGTH OF PULL BOX VARIES WITH HEIGHT OF CURB USED. ALSO SEE PULL BOX S.D.D. 9B4

SIDE ELEVATION

DETAIL FOR CONDUIT UNDER PAVED HIGHWAYS

GENERAL NOTES

DETAILS OF CONSTRUCTION, MATERIALS AND WORKMANSHIP NOT SHOWN ON THIS DRAWING SHALL CONFORM TO THE PERTINENT REQUIREMENTS OF THE CONTRACT.

METALLIC (STANDARD SPECIFICATION 652.2.2) OR NONMETALLIC (STANDARD SPECIFICATION 652.2.3) CONDUIT SHALL BE FURNISHED AND PLACED AS SHOWN.

DEPTH OF CONDUIT INSTALLED BELOW THE TRAVELED WAY SHALL BE 24 INCHES MINIMUM AND 36 INCHES MAXIMUM.

DEPTH OF CONDUIT INSTALLED THAT IS NOT BELOW THE TRAVELED WAY SHALL BE 18 INCHES MINIMUM AND 36 INCHES MAXIMUM.

ANY EXCEPTION TO THE MAXIMUM DEPTH SHALL BE ONLY WITH THE WRITTEN APPROVAL OF THE ENGINEER.

THE TRENCH SHALL NOT BE BACKFILLED PRIOR TO INSPECTION OF THE CONDUIT.

ALL METALLIC CONDUIT RACEWAY ENDS SHALL BE REAMED AND THREADED.

ALL METALLIC CONDUIT IN WHICH WIRE OR CABLE IS TO BE INSTALLED SHALL BE BUSHED WITH APPROVED THREADED BUSHINGS BEFORE INSTALLATION OF THE WIRE OR CABLE.

ALL METALLIC CONDUITS IN WHICH WIRE OR CABLE IS NOT TO BE INSTALLED SHALL BE CAPPED WITH THREADED PROTECTIVE CAPS, AS APPROVED BY THE ENGINEER.

ALL NONMETALLIC CONDUIT SHALL BE CAPPED OR PLUGGED IMMEDIATELY AFTER INSTALLATION AND SHALL REMAIN CAPPED OR PLUGGED UNTIL WIRE/CABLES ARE INSTALLED.

NONMETALLIC CONDUITS IN WHICH WIRE OR CABLE IS NOT BEING INSTALLED SHALL REMAIN CAPPED OR PLUGGED.

BENDING OF PVC ELECTRICAL CONDUIT SHALL BE ACCOMPLISHED BY USING A BLANKET OR EMERSION TYPE TANK DESIGNED FOR THE PURPOSE OF BENDING PVC ELECTRICAL CONDUIT.

ALL CUT ENDS SHALL BE TRIMMED INSIDE AND OUTSIDE TO REMOVE ALL ROUGH EDGES ON NONMETALLIC CONDUIT. (SEE NEC 347.5)

WHEN REQUIRED TO CONNECT NONMETALLIC CONDUIT TO METALLIC CONDUIT, ONLY U.L. LISTED ADAPTER FITTINGS SHALL BE USED.

PRIOR TO CONDUIT ACCEPTANCE, CONDUIT CAPS OR PLUGS SHALL BE REMOVED, AND THE CAPS, PLUGS AND CONDUIT ENDS SHALL BE THOROUGHLY CLEANED AND THEN THE CAPS OR PLUGS REINSTALLED TO ENSURE THAT THE CAPS OR PLUGS CAN BE EASILY REMOVED IN THE FUTURE.

ALL CONDUIT BEING FURNISHED AND INSTALLED SHALL HAVE THE U.L. LABEL FIRMLY ATTACHED.

CONDUIT RUNS SHALL BE THE SAME SIZE OF CONDUIT FROM ONE END TO THE OTHER (FROM PULL BOX TO PULL BOX-OR-JUNCTION BOX TO JUNCTION BOX-OR-BASE TO BASE, ETC.).

TRACER WIRE SHALL BE INSTALLED AS STATED IN THE STANDARD SPECIFICATION, ITEM 652.3.1.1.

ALL CONDUIT RUNS SHALL BE STRAIGHT (WITHOUT BENDS) FROM PULL BOX TO PULL BOX, PULL BOX TO BASE AND BASE TO BASE AS SHOWN ON THE PLANS.

CONDUIT

STATE OF WISCONSIN
DEPARTMENT OF TRANSPORTATION

APPROVED
March, 2017 — DATE
/S/ Ahmet Demirbilek — STATE ELECTRICAL 656
FHWA

6

S.D.D. 9 B 2-10

TABLE OF NOMINAL DIMENSIONS AND WEIGHTS

DIMENSION IN INCHES		CORRUGATED STEEL PIPE								
PIPE DIAMETER (INSIDE)	A	12	12	12	18	18	18	24	24	24
PIPE LENGTH **	B	24	30	36	24	30	36	36	42	48
WALL THICKNESS	C	0.064	0.064	0.064	0.064	0.064	0.064	0.064	0.064	0.064
COVER	D	10 1/4	10 1/4	10 1/4	16 1/4	16 1/4	16 1/4	22 1/4	22 1/4	22 1/4
FRAME	E	14 1/2	14 1/2	14 1/2	20 1/2	20 1/2	20 1/2	26 1/2	26 1/2	26 1/2
FRAME	F	8 1/2	8 1/2	8 1/2	14 1/2	14 1/2	14 1/2	20 1/2	20 1/2	20 1/2
FRAME	G	11 1/2	11 1/2	11 1/2	17 1/2	17 1/2	17 1/2	23 1/2	23 1/2	23 1/2
WEIGHT IN POUNDS *										
FRAME AND COVER		60	60	60	110	110	110	155	155	155

* THE ACTUAL WEIGHT OF THE MANHOLE FRAME AND COVER MAY VARY WITHIN 5 PERCENT PLUS OR MINUS OF THE WEIGHTS SHOWN.

** NORMALLY USED LENGTHS. THE PROJECT ENGINEER SHALL DETERMINE IF PIPE LENGTHS, OTHER THAN THOSE SPECIFIED, SHALL BE USED, TO A MAXIMUM OF 48" (CONTINUOUS LENGTH, NON-SPLICED). THE ADDITIONAL LENGTH SHALL BE INCIDENTAL TO THE PULL BOX BID PRICE.

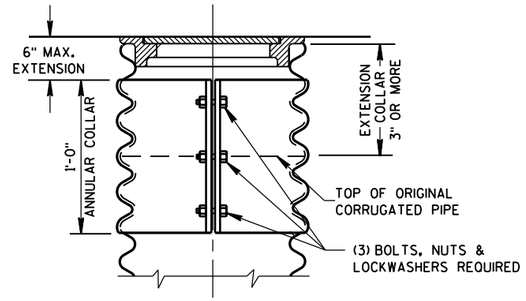

CORRUGATED PIPE EXTENDER

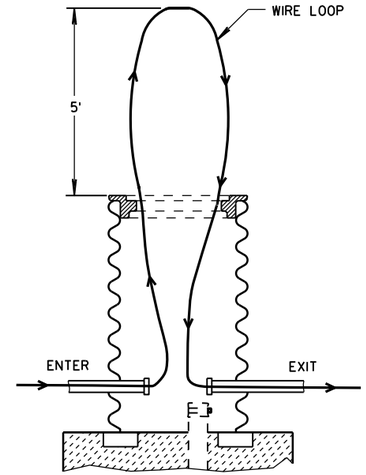

MEASUREMENT DETAIL FOR WIRE/CABLE IN THE PULL BOX

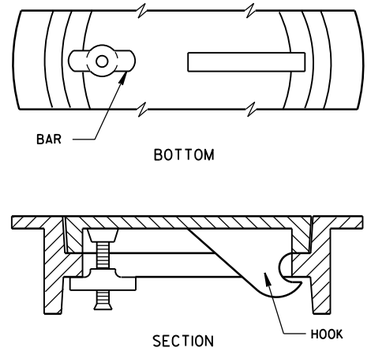

ALTERNATE COVER (LOCKING)

TIGHTENING BAR TYPE

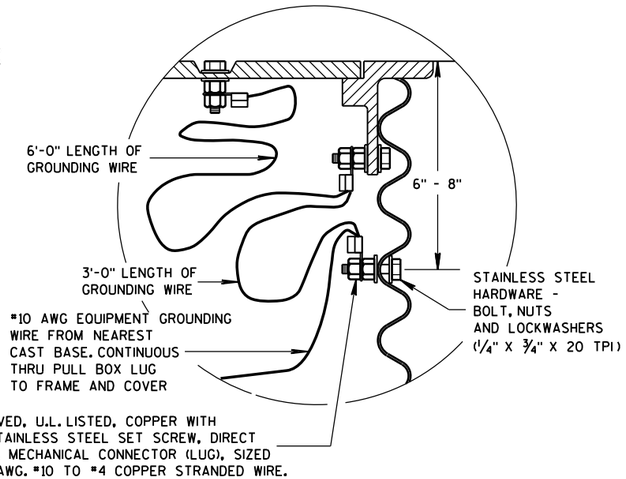

EQUIPMENT GROUNDING LUG AND LOCATION IN STEEL PULL BOXES

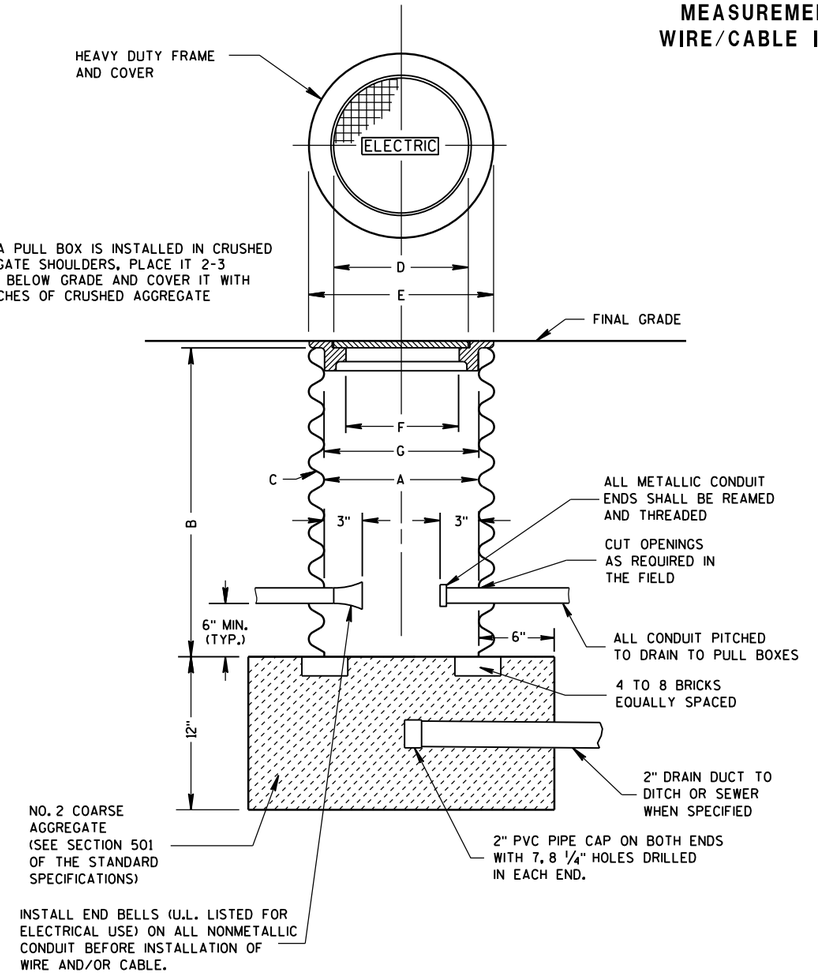

PULL BOX

GENERAL NOTES

DETAILS OF CONSTRUCTION, MATERIALS AND WORKMANSHIP NOT SHOWN ON THIS DRAWING SHALL CONFORM TO THE PERTINENT REQUIREMENTS OF THE CONTRACT.

ALL FRAMES AND COVERS SHALL BE HEAVY DUTY TYPE, SUITABLE FOR VEHICULAR TRAFFIC LOADS.

PULL BOXES LOCATED IN THE ROADWAYS SHALL HAVE LOCKING COVERS.

ENTRANCE HOLES INTO PULL BOXES SHALL BE CUT WITH A CIRCULAR HOLE SAW OR HYDRAULIC CONDUIT PUNCH. HOLE SIZE SHALL BE THE OUTSIDE DIAMETER OF THE CONDUIT THAT IS TO FIT IN THE OPENING PLUS NO MORE THAN 1/4".

THE CONTRACTOR SHALL NOT INSTALL WIRE IN ANY PULL BOX UNTIL ITS INSTALLATION HAS BEEN INSPECTED AND ACCEPTED BY THE ENGINEER.

GROUNDING LUGS (MECHANICAL CONNECTORS) SHALL BE U.L. LISTED AND APPROVED FOR USE WITH COPPER WIRE.

ALL METALLIC CONDUIT IN WHICH WIRE AND/OR CABLE IS TO BE INSTALLED, SHALL BE BUSHED BEFORE INSTALLATION OF THE WIRE AND/OR CABLE.

WHEN PULL BOXES ARE INSTALLED FOR FUTURE USE, DO NOT INSTALL THE EQUIPMENT GROUNDING LUG. THE EQUIPMENT GROUNDING LUG, THE EQUIPMENT GROUNDING ELECTRODE AND THE EQUIPMENT GROUNDING CONDUCTOR SHALL BE REQUIRED AND INSTALLED UNDER A FUTURE WIRING CONTRACT.

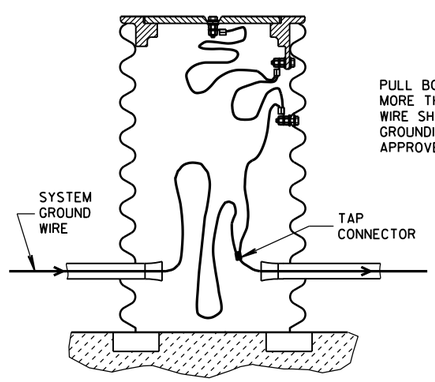

PULL BOX TO NEAREST BASE DISTANCE MORE THAN 20 FEET. PULL BOX GROUND WIRE SHALL CONNECT AT SYSTEM GROUNDING WIRE. USE DEPARTMENT APPROVED TAP CONNECTOR.

EQUIPMENT GROUNDING LUG AND LOCATION IN STEEL PULL BOXES

PULL BOX

STATE OF WISCONSIN
DEPARTMENT OF TRANSPORTATION

APPROVED
Sept. 2014
DATE
/S/ Ahmet Demirbilek
STATE ELECTRICAL 657
FHWA

6

S.D.D. 9 B 4-11

FORM DEPTH SHALL BE NO MORE THAN 6" BELOW GRADE ON THE LOWER SIDE OF BASE

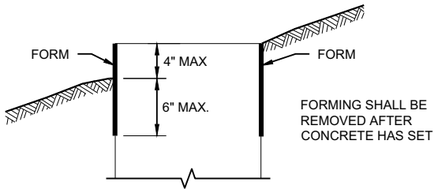

FORMING DETAIL

QUANTITY REQUIREMENTS	CONCRETE BASE TYPE		
	1	2	5 & 6
APPROX. CUBIC YARDS OF CONCRETE	0.40	0.57	0.40
LBS. OF HOOP BAR STEEL	NONE	23	16
LBS. OF VERTICAL BAR STEEL	NONE	60	18

GENERAL NOTES

DETAILS OF CONSTRUCTION, MATERIALS AND WORKMANSHIP NOT SHOWN ON THIS DRAWINGSHALL CONFORM TO THE PERTINENT REQUIREMENTS OF THE CONTRACT.

BASES SHALL BE EXCAVATED BY USE OF A CIRCULAR AUGER.

TOP SURFACES OF CONCRETE BASES SHALL BE TROWEL FINISHED SMOOTH AND LEVEL.

CONDUIT SIZES AND LOCATIONS SHALL BE SHOWN ON THE PLANS

THE FINAL OR TERMINATING CONCRETE BASE IN A CONDUIT RUN SHALL HAVE A 6" EXIT STUB INSTALLED FOR FUTURE CABLING USE. THE EXIT STUB SHALL BE SIZED AS USED THROUGHOUT THE CONDUIT RUN AS SHOWN A THE ENTRANCE OF THE BASE.

ENDS OF CONDUIT INSTALLED BELOW GRADE FRO FUTURE USE SHALL BE CAPPED IF METALLIC OR PLUGGED IF NON-METALLIC.

MINIMUM BENDING RADIUS OF CONDUIT IS EQUAL TO 6X THE DIAMETER.

CONDUIT HEIGHT ABOVE CONCRETE BASES SHALL BE 1 INCH. ALL METALLIC CONDUIT ENDS SHALL BE REAMED AND THREADED.

ALL CONDUIT ENDS AT THE TOP OF CONCRETE BASES SHALL BE CAPPED IF METALLIC OR PLUGGED IF NON-METALLIC IMMEDIATELY AFTER PLACEMENT AND BEFORE CONCRETE IS POURED. CONDUITS IN WHICH WIRE OR CABLE IS NOT INSTALLED SHALL REMAIN CAPPED OR PLUGGED.

BELL ENDS SHALL BE INSTALLED ON ALL PVC CONDUIT EXPOSED AT THE TOP OF CONCRETE BASES BEFORE INSTALLATION.

WHEN REQUIRED TO CONNECT NON-METALLIC CONDUIT TO METALLIC CONDUIT, ONLY ADAPTER FITTINGS, U.L. LISTED FOR ELECTRICAL USE, SHALL BE USED.

IF A BASE REQUIRES A DEEP FORM BECAUSE OF LOOSE DIRT OR FILL, THE FORM SHALL BE REMOVED BEFORE BACKFILLING AROUND THE BASE. BACKFILL SHALL BE TAMPED TIGHT AGAINST THE BARE CONCRETE BASE IN LAYERS OF 1 FOOT OR LESS.

A NO. 4 AWG STRANDED COPPER EQUIPMENT GROUNDING CONDUCTOR SHALL BE EXOTHERMICALLY WELDED TO THE EQUIPMENT GROUNDING ELECTRODE (GROUND ROD) FOR TYPE 2, TYPE 5 AND TYPE 6 BASES.

THE EQUIPMENT GROUNDING CONDUCTOR SHALL BE FURNISHED AND INSTALLED TO ENTER ALL BASE TYPES THROUGH A 1 INCH CONDUIT INSTALLED FOR GROUNDING PURPOSES, LEAVING A 4 FOOT COIL OF WIRE ABOVE THE CONCRETE BASE. THE EQUIPMENT GROUNDING CONDUCTOR SHALL BE NEATLY COILED AND THE COILS TIED TOGETHER.

ANCHOR RODS SHALL BE THREADED 12" IN LENGTH ON EACH END OF THE ROD. ANCHOR RODS SHALL BE MANUFACTURED IN ACCORDANCE WITH SECTION 654.2.1 OF THE STANDARD SPECIFICATIONS.

WASHERS AND LOCK WASHERS ARE REQUIRED ON ALL ANCHOR RODS.

WHEN ANCHOR RODS USING THE ALTERNATE "L" BEND ARE FURNISHED, THE 4 INCH"L" BEND SHALL BE IN ADDITION TO THE SPECIFIED ANCHOR ROD BAR LENGTH. THE "L" BEND SHALL NOT BE THREADED.

ANCHOR RODS SHALL BE INSTALLED WITH MISALIGNMENTS OF LESS THAN 1:40 FROM VERTICAL.

WELDING OF THE ANCHOR RODS TO THE CAGE IS UNACCEPTABLE. TIE WIRES SHALL BE USED.

BAR STEEL REINFORCEMENT SHALL BE COATED WITH POWDERED EPOXY RESIN IN ACCORDANCE WITH SECTION 505 OF THE STANDARD SPECIFICATIONS (LATEST EDITION).

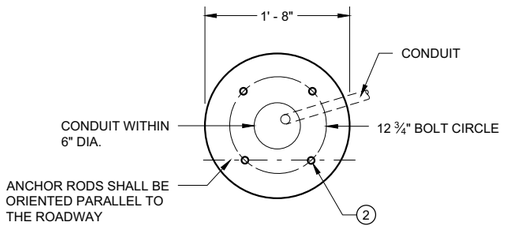

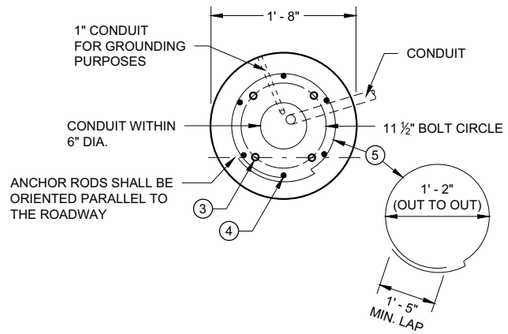

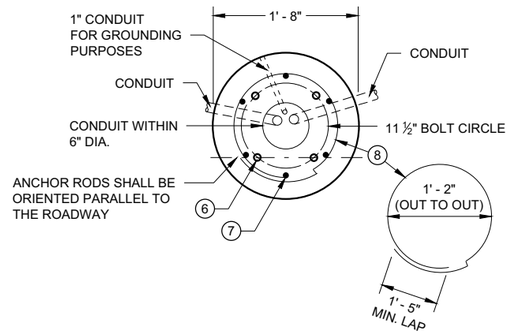

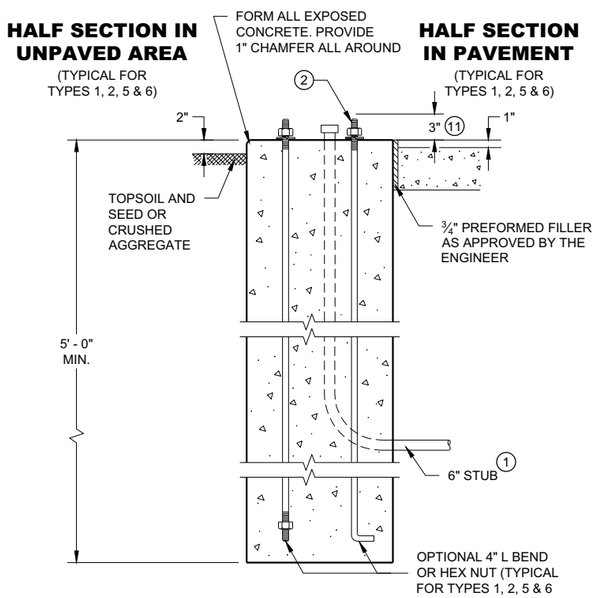

TYPE 1

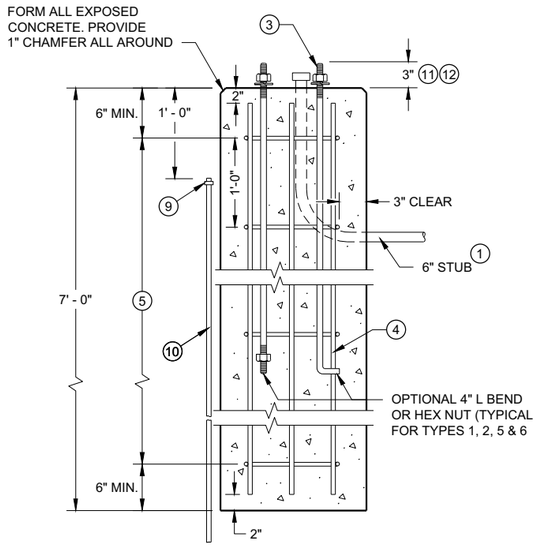

TYPE 2

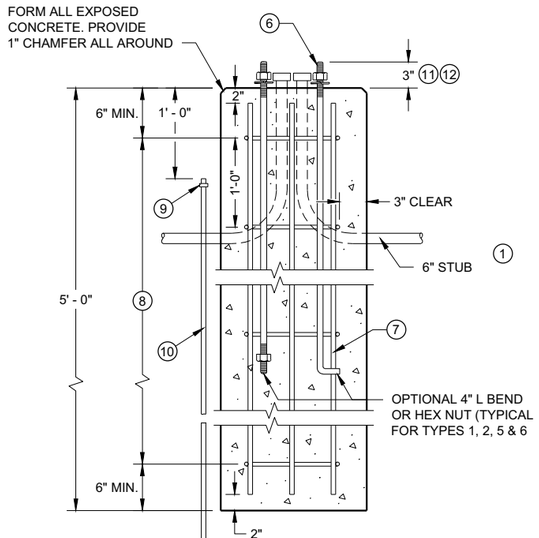

TYPE 5 & 6

CONCRETE BASES

1 THE MINIMUM DEPTH OF CONDUIT EXITING THE CONCRETE BASE AND INSTALLED BELOW THE TRAVELED WAY SHALL BE 24 INCHES. THE MINIMUM DEPTH OF CONDUIT EXITING THE CONCRETE BASE THAT IS NOT INSTALLED BELOW THE TRAVELED WAY SHALL BE 18 INCHES. THE MAXIMUM DEPTH OF ALL CONDUIT SHALL BE 36 INCHES EXCEPT WITH WRITTEN APPROVAL OF THE ENGINEER.

2 (4) 1" DIA. X 3' - 6" ANCHOR RODS.

3 (4) 1" DIA. X 5' - 0" ANCHOR RODS.

4 (6) NO. 6 X 6' - 8" BAR STEEL REINFORCEMENT.

5 (7) NO. 4 X 5' - 1" BAR STEEL REINFORCEMENT @ 1' - 0" C - C.

6 (4) 1" DIA. X 3' - 6" ANCHOR RODS.

7 (6) NO. 4 X 4' - 8" BAR STEEL REINFORCEMENT.

8 (5) NO. 4 X 5' - 1" BAR STELL REINFORCEMENT @ 1' - 0" C -C.

9 EXOTHERMIC CONNECTION TO EUIPMENT GROUNDING CONDUCTOR

10 ⅝" DIA. X 8' -0" COPPERCLAD EQUIPMENT GROUNDING ELECTRODE REQUIRED

11 ANY ANCHOR ROD PROJECTION SHORTER THAN 2 ¾" OR LONGER THAN 3 ¼" SHALL REQUIRE THE BASE TO BE REMOVED AND REPLACED AT THE CONTRACTORS EXPENSE.

12 FOR NON - BREAKAWAY INSTALLATIONS, 4 ½" ± ANCHOR ROD PROJECTION WITH THE USE OF LEVELING NUTS. RODENT SCREEN REQUIRED.

CONCRETE BASES TYPES 1, 2, 5, & 6

STATE OF WISCONSIN
DEPARTMENT OF TRANSPORTATION

APPROVED
May 2019
DATE

/S/ Ahmet Demirbilek
STATE ELECTRICAL ENGI 658

FHWA

GENERAL NOTES

DETAILS OF CONSTRUCTION, MATERIALS AND WORKMANSHIP NOT SHOWN ON THIS DRAWING SHALL CONFORM TO THE PERTINENT REQUIREMENTS OF THE CONTRACT.

FOUR (4) BOLTS SHALL BE FURNISHED WITH EACH TRANSFORMER BASE. BOLTS SHALL BE 1" DIAMETER, 4" IN LENGTH, WITH WASHERS, LOCK WASHERS AND NUTS. BOLTS, NUTS AND WASHERS SHALL BE MANUFACTURED IN ACCORDANCE WITH SECTION 531.2.2 OF THE STANDARD SPECIFICATIONS.

LEVELING SHIMS, IF NEEDED, SHALL BE DESIGNED FOR THE PURPOSE AND USED UNDER CAST BASES WHEN PLUMBING POLES OR STANDARDS DURING INSTALLATION. THE USE OF WASHERS IN LIEU OF PROPER LEVELING SHIMS IS NOT ACCEPTABLE.

SHIM LENGTH SHALL BE LONG ENOUGH TO COMPLETELY COVER THE AREA UNDER THE LENGTH AND WIDTH OF THE BASE MOUNTING FLANGE.

DOUBLE NUTTING IS NOT ACCEPTABLE FOR LEVELING OR MOUNTING PURPOSES.

A NEMA APPROVED, U.L. LISTED, COPPER WITH BRASS OR STAINLESS STEEL SET SCREW, DIRECT BURY RATED, MECHANICAL CONNECTOR (LUG), SIZED TO ACCEPT AWG. #10 TO #4 COPPER STRANDED WIRE SHALL BE FURNISHED AND INSTALLED IN THE PEDESTAL AND TRANSFORMER BASES.

THE MECHANICAL CONNECTOR SHALL BE INSTALLED USING A 1/4" - 20 (TPI) STAINLESS STEEL HEX HEAD BOLT OF SUFFICIENT LENGTH TO FIRMLY ATTACH THE LUG TO THE BASE.

SHOULD THE MANNER OF ATTACHMENT OF THE LUG REQUIRE WASHERS, HEX NUTS, LOCK WASHER - THEY SHALL BE STAINLESS STEEL AS IS THE BOLT. THE MANNER OF ATTACHMENT SHALL NOT BLOCK ACCESSIBILITY TO WIRE PLACEMENT IN THE CONNECTOR.

PEDESTAL BASE COLLAR THREADING SHALL BE TAPERED AND IN ACCORDANCE WITH NATIONAL PIPE THREADING DIMENSIONS.

BASE COLLAR THREADING SHALL EXTEND INTO THE BASE COLLAR WITH SUFFICIENT DEPTH TO ACCEPT THE INSTALLATION OF TRAFFIC SIGNAL STANDARDS TO A DEPTH OF 1 1/2", THEN TIGHTENING TO A POINT OF BEING IMMOVABLE.

THE ACCESS DOOR SHALL BE OF THE SAME MATERIAL AS THE BASE.

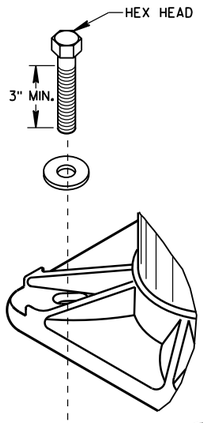

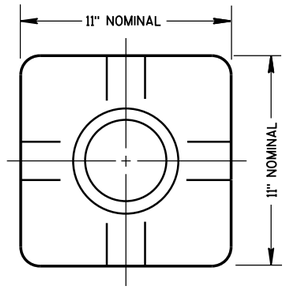

TOP VIEW
(PEDESTAL BASE)

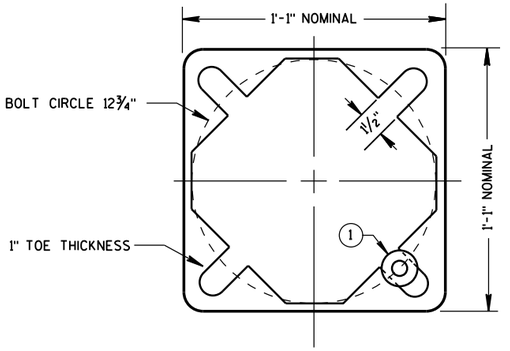

BOTTOM VIEW
(PEDESTAL BASE)

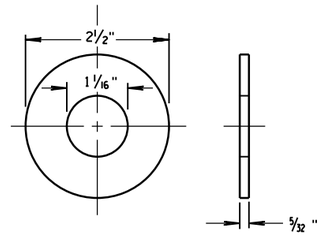

ZINC COATED STEEL WASHER
TO BE PROVIDED BY THE CONTRACTOR

PEDESTAL BASE WASHER (1)

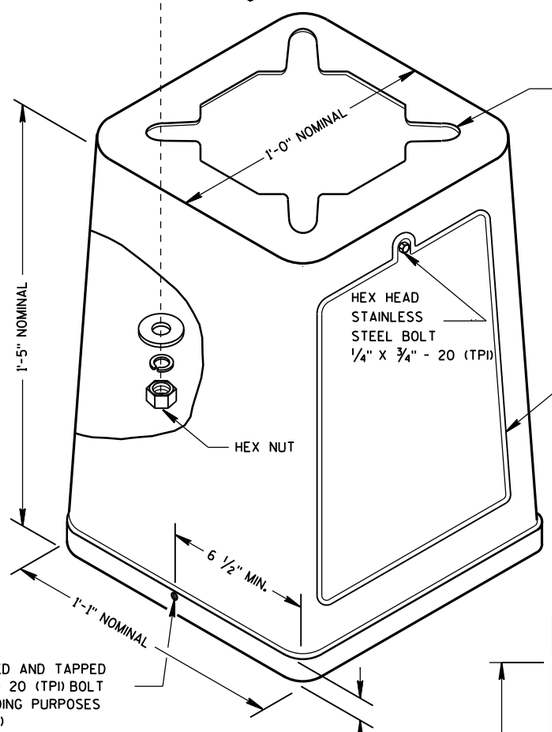

ISOMETRIC VIEW

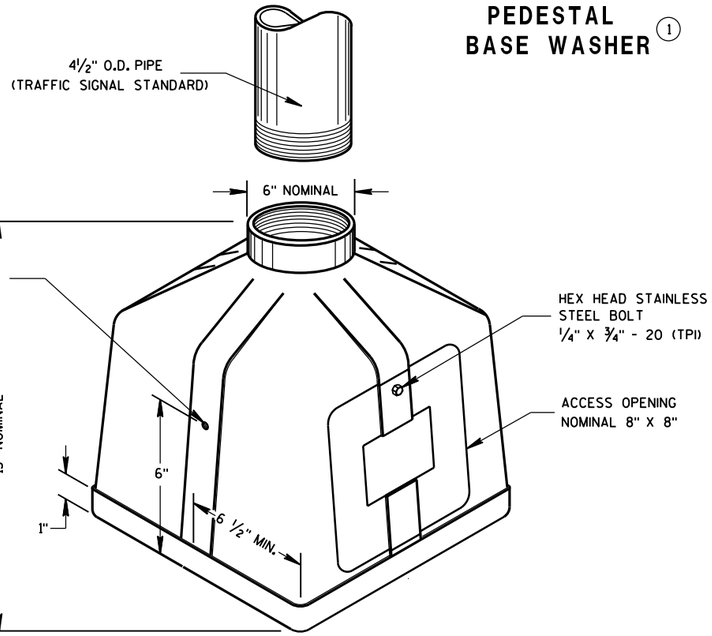

ISOMETRIC VIEW

PEDESTAL BASE

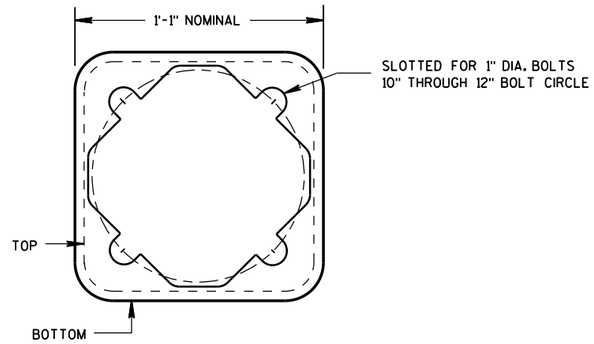

BOTTOM VIEW
(TRANSFORMER BASE)

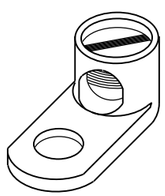

TYPICAL MECHANICAL CONNECTOR LUG

TO BE FURNISHED WITH EACH BASE

TRANSFORMER BASE

INTENDED FOR USE WITH TYPE 2, 3, 4, 5 & 6 POLES

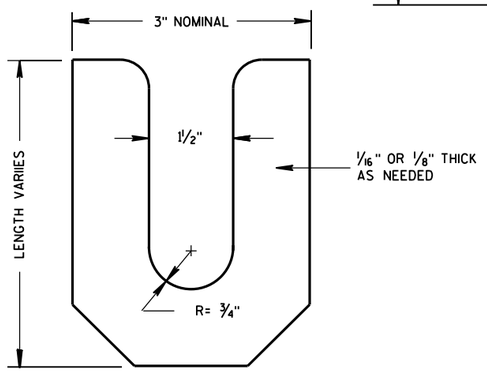

LEVELING SHIM

TRANSFORMER/PEDESTAL BASES

STATE OF WISCONSIN
DEPARTMENT OF TRANSPORTATION

APPROVED
Sept. 2014 — DATE
/S/ Ahmet Demirbilek — STATE ELECTRICAL
FHWA

659

6

S.D.D. 9 C 3-4

6

S.D.D. 9 C 3-4

SDD 09C06 Concrete Control Cabinet Base, Type 9, Special

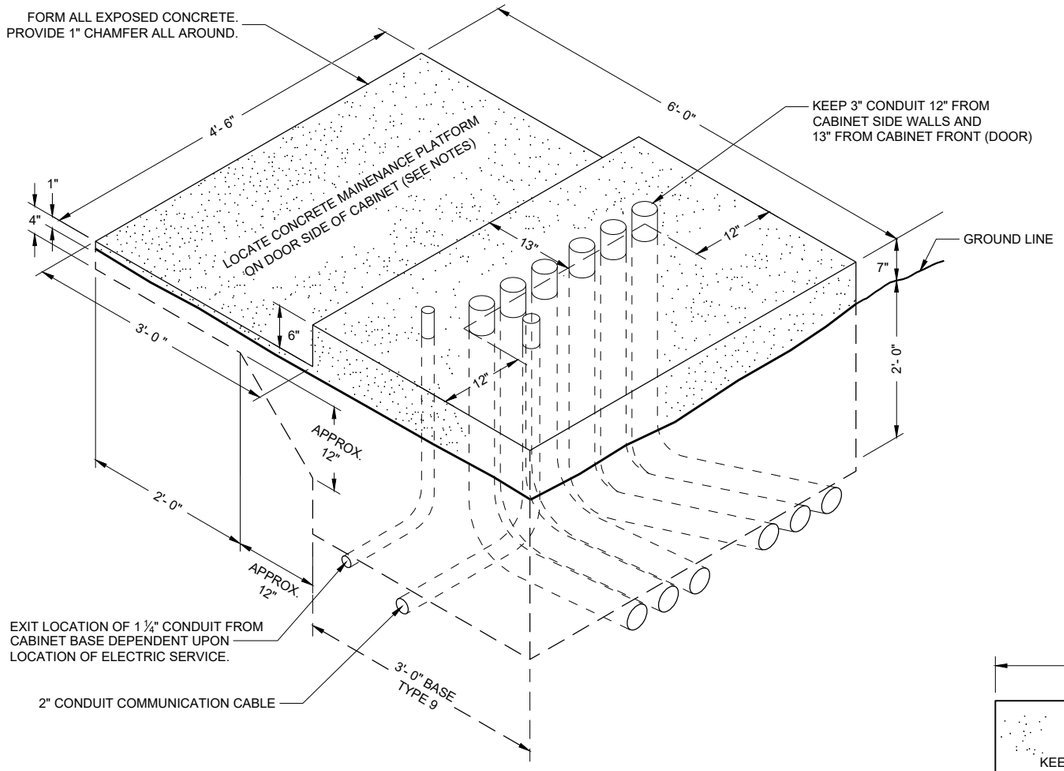

ISOMETRIC VIEW

TYPE 9 SPECIAL

(C.Y. CONCRETE = APPROX. 1.56)

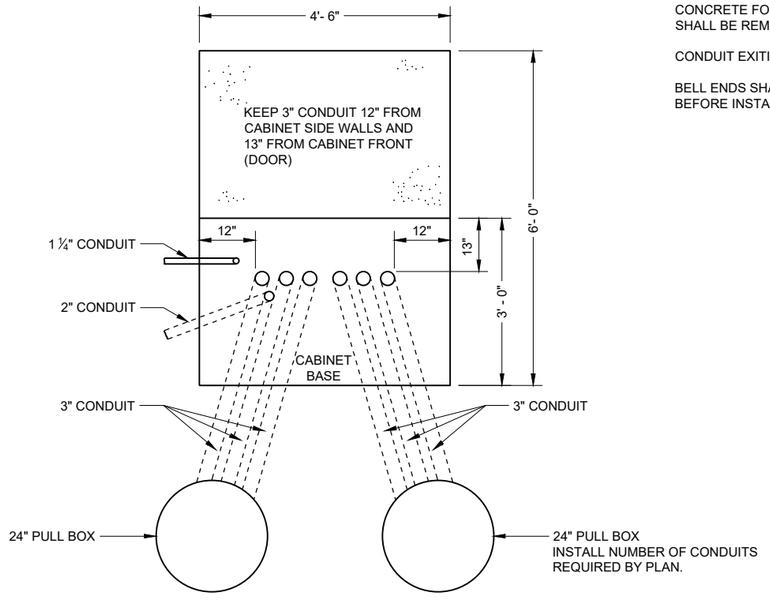

PLAN VIEW

CONCRETE CONTROL CABINET BASE, TYPE 9 SPECIAL

GENERAL NOTES

DETAILS OF CONSTRUCTION, MATERIALS AND WORKMANSHIP NOT SHOWN ON THIS DRAWING SHALL CONFORM TO THE PERTINENT REQUIREMENTS OF THE CONTRACT.

INSTALL FOUR INCH MINIMUM DIAMETER X 4 INCH MINIMUM LENGTH STAINLESS STEEL APPROVED CONCRETE MASONRY ANCHORS WITH A PULLOUT STRENGTH OF 9,000 LBS. TO ANCHOR THE CABINET TO TYPE 6, 7, 8, AND 9 BASES. THE ANCHOR STUDS SHALL BE LOCATED AS DIRECTED BY THE ENGINEER TO PROPERLY ANCHOR THE CONTROL CABINET TO THE BASE.

WHEN REQUIRED TO CONNECT NON - METALLIC CONDUIT TO METALLIC CONDUIT, ONLY ADAPTER FITTINGS, U. L. LISTED FOR ELECTRICAL USE, SHALL BE USED.

CONDUIT HEIGHT ABOVE THE CONCRETE BASE SHALL BE 1 INCH.

DEPTH OF CONDUIT INSTALLED BELOW THE TRAVELED WAY SHALL BE 24 INCHES MINIMUM AND 36 INCHES MAXIMUM.

DEPTH OF CONDUIT INSTALLED THAT IS NOT BELOW THE TRAVELED WAY SHALL BE 18 INCHES MINIMUM AND 36 INCHES MAXIMUM.

ANY EXCEPTION TO THE MAXIMUM DEPTH SHALL BE ONLY WITH THE WRITTEN APPROVAL OF THE ENGINEER.

CONTROL CABINET BASE TOP SURFACE SHALL BE TROWEL FINISHED SMOOTH AND LEVEL.

MAINTENANCE PLATFORM SHALL BE FLOAT OR BROOM FINISHED AND LEVEL.

MAINTENANCE PLATFORMS ARE NOT REQUIRED WHEN THE SURROUNDING AREA IS PAVED.

MINIMUM BENDING RADIUS OF CONDUIT EQUALS 6 TIMES THE DIAMETER.

ALL METALLIC CONDUIT ENDS SHALL BE REAMED AND THREADED.

CAP ALL BELOW GRADE METALLIC CONDUIT ENDS IN WHICH WIRE OR CABLE IS NOT BEING INSTALLED.

PLUG ALL BELOW GRADE NON - METALLIC CONDUIT ENDS IN WHICH WIRE OR CABLE IS NOT BEING INSTALLED.

ALL CONDUIT ENDS AT THE TOP OF CONCRETE BASES SHALL BE CAPPED IF METALLIC OR PLUGGED IF NON - METALLIC IMMEDIATELY AFTER PLACEMENT AND BEFORE CONCRETE IS POURED. CONDUITS IN WHICH WIRE OR CABLE IS NOT BEING INSTALLED SHALL REMAIN CAPPED OR PLUGGED.

CONCRETE FORM DEPTH BELOW FINISHED GRADE SHALL BE 6 INCHES MAXIMUM. CONCRETE FORMS SHALL BE REMOVED AFTER CONCRETE HAS SET.

CONDUIT EXITING THE CONCRETE BASE (SIX 3") SHALL TERMINATE IN PULL BOXES AS SHOWN ON THE PLANS.

BELL ENDS SHALL BE INSTALLED ON ALL PVC CONDUIT EXPOSED AT THE TOP OF THE CONCRETE BASE BEFORE INSTALLATION OF CABLE OR WIRE.

CONCRETE CONTROL CABINET BASE TYPE 9, SPECIAL

STATE OF WISCONSIN
DEPARTMENT OF TRANSPORTATION

APPROVED
September 2014
DATE

/S/ Ahmet Demerbilek
STATE ELECTRICAL ENGI 660

FHWA

6
SDD 09C06 - 07

GENERAL NOTES

DETAILS OF CONSTRUCTION, MATERIALS AND WORKMANSHIP NOT SHOWN ON THIS DRAWING SHALL CONFORM TO THE PERTINENT REQUIREMENTS OF THE CONTRACT.

BASES (SHAFT) SHALL BE EXCAVATED BY THE USE OF A CIRCULAR AUGER. IF BASE REQUIRES A DEEP FORM BECAUSE OF LOOSE SOIL, THE FORM SHALL BE REMOVED BEFORE BACKFILLING. A STEEL CASING OR CORRUGATED METAL PIPE IS ALLOWED TO REMAIN. BACKFILL SHALL BE TAMPED TIGHT AGAINST THE BASE IN LAYERS OF ONE FOOT OR LESS.

TOP SURFACE OF THE CONCRETE BASE SHALL BE TROWEL FINISHED AND LEVEL.

ANCHOR RODS SHALL BE INSTALLED WITH MISALIGNMENTS OF LESS THAN 1:40 FROM VERTICAL.

BAR STEEL REINFORCEMENT SHALL BE COATED WITH POWDERED EPOXY RESIN IN ACCORDANCE WITH SECTION 505 OF THE STANDARD SPECIFICATIONS (LATEST EDITION).

WELDING OF ANCHOR RODS TO THE CAGE IS UNACCEPTABLE. TEMPLATES SHALL BE USED.

CONDUIT SIZES AND LOCATIONS SHALL BE SHOWN ON THE PLANS.

MINIMUM BENDING RADIUS OF CONDUIT IS EQUAL TO 6 TIMES THE DIAMETER.

CONDUIT HEIGHT ABOVE CONCRETE BASES SHALL BE 4" INCHES. ALL METALLIC CONDUIT ENDS SHALL BE REAMED AND THREADED. NON-METALLIC CONDUIT SHALL HAVE BELL ENDS INSTALLED. ALL CONDUIT SHALL SLOPE TO PULL BOX.

ALL CONDUIT ENDS AT THE TOP OF CONCRETE BASES SHALL BE CAPPED IF METALLIC OR PLUGGED IF NON-METALLIC IMMEDIATELY AFTER PLACEMENT AND BEFORE CONCRETE IS POURED. CONDUITS IN WHICH WIRE OR CABLE IS NOT INSTALLED SHALL REMAIN CAPPED OR PLUGGED.

BELL ENDS SHALL BE INSTALLED ON ALL PVC CONDUIT EXPOSED AT THE TOP OF CONCRETE BASES BEFORE INSTALLATION OF CABLE OR WIRE.

WHEN REQUIRED TO CONNECT NON-METALLIC CONDUIT TO METALLIC CONDUIT, ONLY ADAPTER FITTINGS, U.L. LISTED FOR ELECTRICAL USE, SHALL BE USED.

ENDS OF CONDUIT INSTALLED BELOW GRADE FOR FUTURE USE SHALL BE CAPPED IF METALLIC OR PLUGGED IF NONMETALLIC.

A NO. 4 AWG STRANDED COPPER EQUIPMENT GROUNDING CONDUCTOR SHALL BE EXOTHERMICALLY WELDED TO THE EQUIPMENT GROUNDING ELECTRODE (GROUND ROD).

THE EQUIPMENT GROUNDING CONDUCTOR SHALL BE FURNISHED AND INSTALLED TO ENTER THE BASE THROUGH A 1 INCH CONDUIT INSTALLED FOR GROUNDING PURPOSES, LEAVING A 4 FOOT COIL OF WIRE ABOVE THE CONCRETE BASE. THE EQUIPMENT GROUNDING CONDUCTOR SHALL BE NEATLY COILED AND THE COILS TIED TOGETHER.

THE FINAL OR TERMINATING CONCRETE BASE IN A CONDUIT RUN SHALL HAVE A 6" EXIT STUB INSTALLED FOR FUTURE CABLING USE. THE EXIT STUB SHALL BE SIZED AS USED THROUGHOUT THE CONDUIT RUN AS SHOWN A THE ENTRANCE OF THE BASE.

(1) THE MINIMUM DEPTH OF CONDUIT EXITING THE CONCRETE BASE AND INSTALLED BELOW THE TRAVELED WAY SHALL BE 24 INCHES. THE MINIMUM DEPTH OF CONDUIT EXITING THE CONCRETE BASE THAT IS NOT INSTALLED BELOW THE TRAVELED WAY SHALL BE 18 INCHES. THE MAXIMUM DEPTH OF ALL CONDUIT SHALL BE 36 INCHES (GREATER THAN 36 INCHES IF INSTALLED IN BREAKER RUN) EXCEPT WITH WRITTEN APPROVAL OF THE ENGINEER.

(2) (6) 1 ½ DIA. X 4' - 4" ANCHOR RODS

(3) (6) NO. 6 X 13' - 7" BAR STEEL REINFORCEMENT.

(4) (21) NO. 5 X 7'-10" BAR STEEL REINFORCEMENT @ 8" MAX. C-C.

CONCRETE MASONRY.....fc = 3,500 p.s.i
HIGH STRENGTH BAR STEEL REINFORCEMENT, GRADE 60.....fy = 60,000 p.s.i.
ANCHOR RODS, ASTM F1554 GRADE 55 (IN ACCORDANCE .....fy = 55,000 p.s.i.
WITH SECTION 531.2.2 OF THE STANDARD SPECIFICATION)
TEMPLATES, ASTM A709, GRADE 36.....fy = 36,000 p.s.i.

QUANTITY REQUIREMENTS	
APPROX. CUBIC YARDS OF CONCRETE	2.5
LBS. OF HOOP BAR STEEL	172
LBS. OF VERTICAL BAR STEEL	122

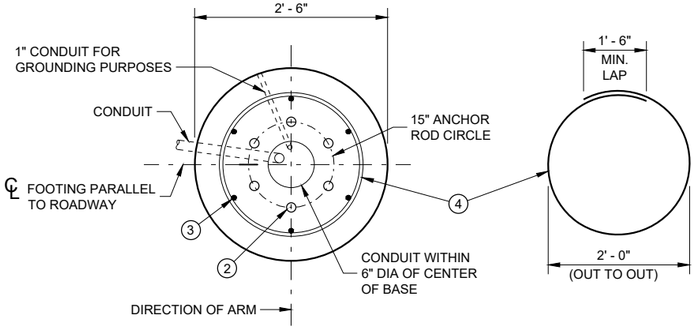

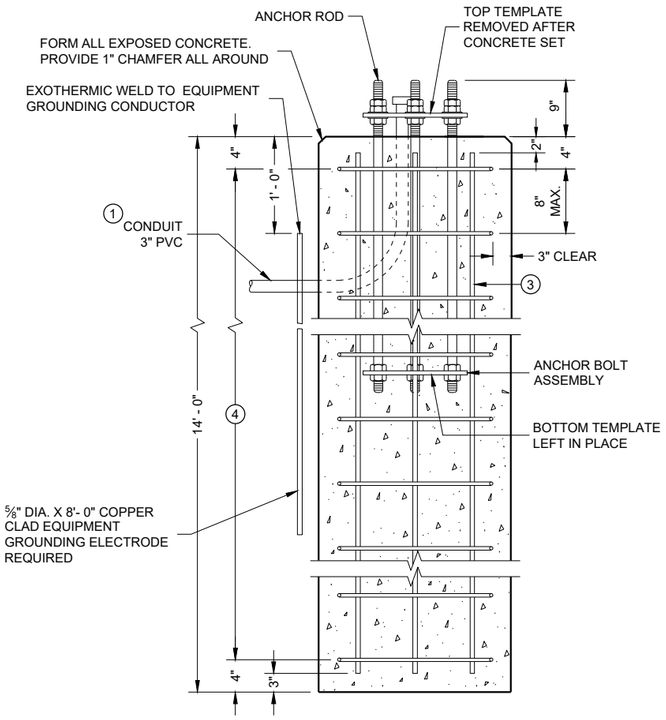

CONCRETE BASE, TYPE 10
(FOR TYPE 9, TYPE 10 AND OVER HEIGHT (OH) POLES)

TO BE USED WHEN GROUND ELEVATION AT BASE EQUALS OR IS GREATER THAN HIGH POINT OF ROADWAY ELEVATION. SEE SDD 9C13 WHEN GROUND ELEVATION AT BASE IS LOWER THAN HIGH POINT OF ROADWAY ELEVATION.

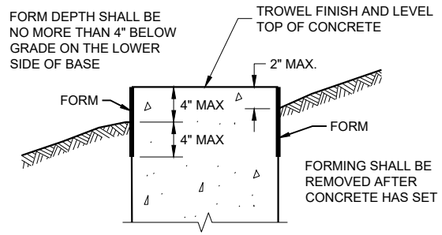

FORMING DETAIL

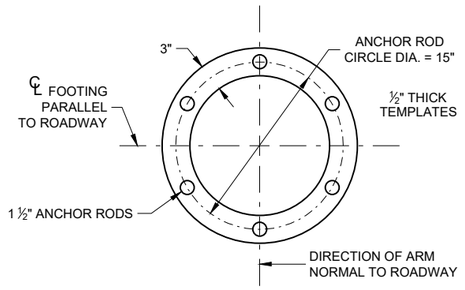

TOP AND BOTTOM TEMPLATE

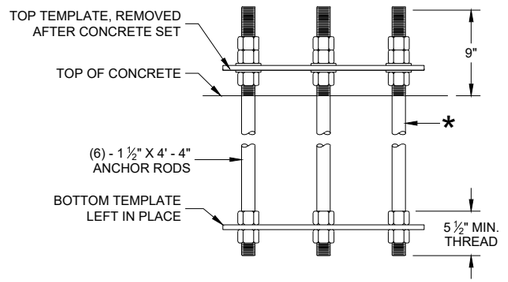

ANCHOR ROD ASSEMBLY DETAILS

* THREAD TOP 10" OF ANCHOR ROD FOR 3 NUTS AND 2 WASHERS AND BOTTOM 5 ½" FOR 2 NUTS PER ANCHOR ROD. HOT DIP GALVANIZE THE ENTIRE LENGTH OF THE ANCHOR ROD (ASTM A123) AND HOT DIP NUTS AND WASHERS (ASTM A153. USE ZINC COATED NUTS MANUFACTURED WITH SUFFICIENT ALLOWANCE TO ALLOW NUTS TO RUN FREELY ON THE THREADS.

CONCRETE BASE TYPE 10

STATE OF WISCONSIN
DEPARTMENT OF TRANSPORTATION

APPROVED
May 2017 — DATE
/S/ Ahmet Demerbilek — WIND LOADED STRUCTU PROGRAM LEADER
FHWA

6

SDD 09C11 - 10

6

SDD 09C11 - 10

GENERAL NOTES

DETAILS OF CONSTRUCTION, MATERIALS AND WORKMANSHIP NOT SHOWN ON THIS DRAWING SHALL CONFORM TO THE PERTINENT REQUIREMENTS OF THE CONTRACT.

THE CONTRACTOR IS RESPONSIBLE FOR MAKING THEIR OWN DETERMINATION AS TO THE TYPE AND LOCATION OF UNDERGROUND UTILITIES AS MAY BE NECESSARY TO AVOID DAMAGE THERETO.

BASES (SHAFT) SHALL BE EXCAVATED BY THE USE OF A CIRCULAR AUGER. IF BASE REQUIRES A DEEP FORM BECAUSE OF LOOSE SOIL, THE FORM SHALL BE REMOVED BEFORE BACKFILLING. A STEEL CASING OR CORRUGATED METAL PIPE IS ALLOWED TO REMAIN. BACKFILL SHALL BE TAMPED TIGHT AGAINST THE BASE IN LAYERS OF ONE FOOT OR LESS.

TOP SURFACE OF THE CONCRETE BASE SHALL BE TROWEL FINISHED AND LEVEL.

ANY DAMAGE TO THE CONCRETE BASE AND ANCHOR RODS DURING CONSTRUCTION OPERATIONS SHALL BE REPAIRED AT THE ENGINEER'S DIRECTION, AT THE EXPENSE OF THE CONTRACTOR.

THE REINFORCEMENT AND ANCHOR RODS SHALL BE ADEQUATELY SUPPORTED IN THE PROPER POSITIONS SO NO MOVEMENT OCCURS DURING CONCRETE PLACEMENT.

ORIENT ANCHOR RODS IN FOOTING AND PROVIDE ANCHOR RODS STICK OUT ABOVE TOP OF CONCRETE FOOTING BASE PER THIS SHEET.

ANCHOR RODS SHALL BE INSTALLED WITH MISALIGNMENTS OF LESS THAN 1:40 FROM VERTICAL.

BAR STEEL REINFORCEMENT SHALL BE COATED WITH POWDERED EPOXY RESIN IN ACCORDANCE WITH SECTION 505 OF THE STANDARD SPECIFICATIONS (LATEST EDITION).

BENDING DIMENSIONS FOR REINFORCING BARS ARE OUT TO OUT.

WELDING OF ANCHOR RODS TO THE CAGE IS UNACCEPTABLE. TEMPLATES SHALL BE USED.

USE 3" CLEAR FOR ALL REINFORCEMENT UNLESS NOTED OTHERWISE.

FORM ALL EXPOSED CONCRETE CORNERS WITH 1" CHAMFER ALL AROUND. TOP OF THE CONCRETE BASE SHALL BE TROWEL FINISHED AND LEVEL.

CONDUIT SIZES AND LOCATIONS SHALL BE SHOWN ON THE PLANS.

MINIMUM BENDING RADIUS OF CONDUIT IS EQUAL TO 6 TIMES THE DIAMETER.

CONDUIT HEIGHT ABOVE CONCRETE BASES SHALL BE 4 ½" INCHES. ALL METALLIC CONDUIT ENDS SHALL BE REAMED AND THREADED. NON-METALLIC CONDUIT SHALL HAVE BELL ENDS INSTALLED. ALL CONDUIT SHALL SLOPE TO PULL BOX.

ALL CONDUIT ENDS AT THE TOP OF CONCRETE BASES SHALL BE CAPPED IF METALLIC OR PLUGGED IF NON-METALLIC IMMEDIATELY AFTER PLACEMENT AND BEFORE CONCRETE IS POURED. CONDUITS IN WHICH WIRE OR CABLE IS NOT INSTALLED SHALL REMAIN CAPPED OR PLUGGED.

BELL ENDS SHALL BE INSTALLED ON ALL PVC CONDUIT EXPOSED AT THE TOP OF CONCRETE BASES BEFORE INSTALLATION OF CABLE OR WIRE.

WHEN REQUIRED TO CONNECT NON-METALLIC CONDUIT TO METALLIC CONDUIT, ONLY ADAPTER FITTINGS, U.L. LISTED FOR ELECTRICAL USE, SHALL BE USED.

A NO. 4 AWG STRANDED COPPER EQUIPMENT GROUNDING CONDUCTOR SHALL BE EXOTHERMICALLY WELDED TO THE EQUIPMENT GROUNDING ELECTRODE (GROUND ROD).

THE EQUIPMENT GROUNDING CONDUCTOR SHALL BE FURNISHED AND INSTALLED TO ENTER THE BASE THROUGH A 1 INCH CONDUIT INSTALLED FOR GROUNDING PURPOSES, LEAVING A 4 FOOT COIL OF WIRE ABOVE THE CONCRETE BASE. THE EQUIPMENT GROUNDING CONDUCTOR SHALL BE NEATLY COILED AND THE COILS TIED TOGETHER.

THE FINAL OR TERMINATING CONCRETE BASE IN A CONDUIT RUN SHALL HAVE A 6" EXIT STUB INSTALLED FOR FUTURE CABLING USE. THE EXIT STUB SHALL BE SIZED AS USED THROUGHOUT THE CONDUIT RUN AS SHOWN A THE ENTRANCE OF THE BASE.

(1) THE MINIMUM DEPTH OF CONDUIT EXITING THE CONCRETE BASE AND INSTALLED BELOW THE TRAVELED WAY SHALL BE 24 INCHES. THE MINIMUM DEPTH OF CONDUIT EXITING THE CONCRETE BASE THAT IS NOT INSTALLED BELOW THE TRAVELED WAY SHALL BE 18 INCHES. THE MAXIMUM DEPTH OF ALL CONDUIT SHALL BE 36 INCHES (GREATER THAN 36 INCHES IF INSTALLED IN BREAKER RUN) EXCEPT WITH WRITTEN APPROVAL OF THE ENGINEER.

CONCRETE MASONRY.....fc = 3,500 p.s.i
HIGH STRENGTH BAR STEEL REINFORCEMENT, GRADE 60.....fy = 60,000 p.s.i.
ANCHOR RODS, ASTM F1554 GRADE 55 (IN ACCORDANCE WITH SECTION 531.2.2 OF THE STANDARD SPECIFICATION).....fy = 55,000 p.s.i.
TEMPLATES, ASTM A709, GRADE 36.....fy = 36,000 p.s.i.

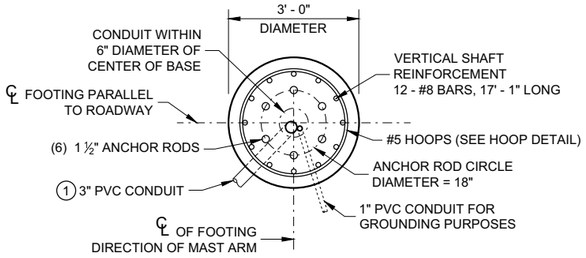

PLAN VIEW

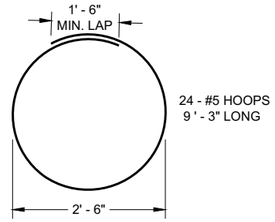

HOOP DETAIL

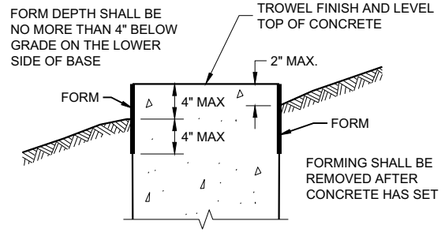

FORMING DETAIL

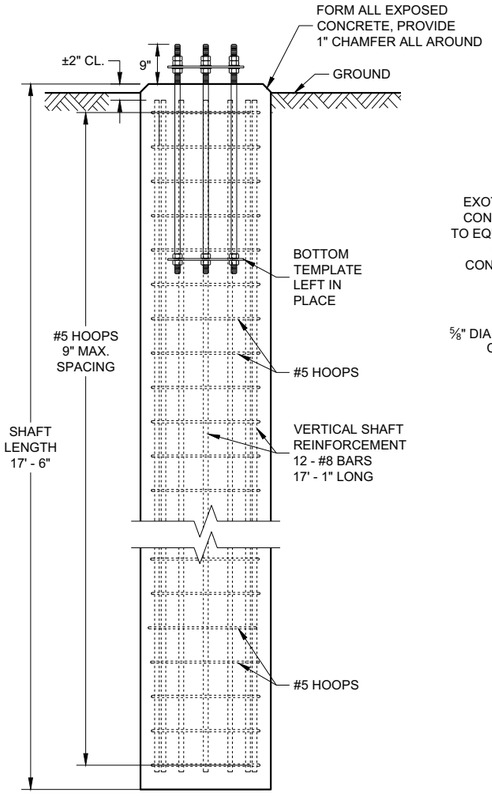

ELEVATION VIEW
(CONDUITS NOT SHOWN ON THIS VIEW FOR CLARITY)

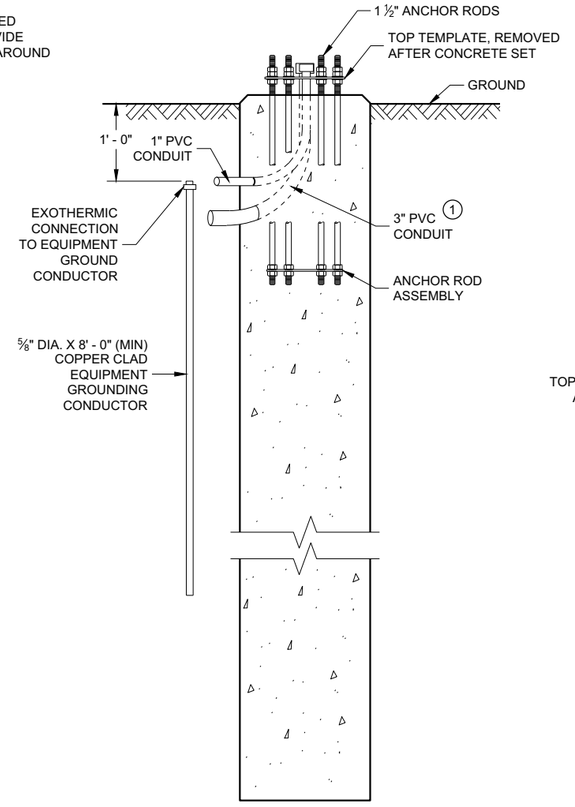

SIDE VIEW
(HOOPS AND VERTICAL SHAFT REINFORCEMENT NOT SHOWN ON THIS VIEW FOR CLARITY)

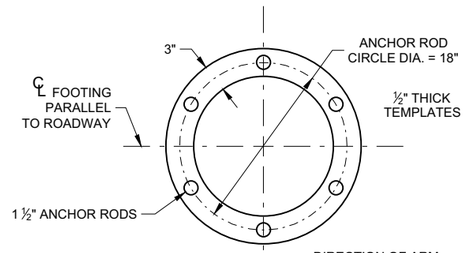

TOP AND BOTTOM TEMPLATE

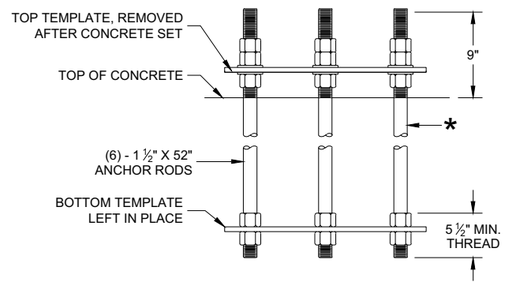

ANCHOR ROD ASSEMBLY DETAILS

* THREAD TOP 10" OF ANCHOR ROD FOR 3 NUTS AND 2 WASHERS AND BOTTOM 5 ½" FOR 2 NUTS PER ANCHOR ROD. HOT DIP GALVANIZE THE ENTIRE LENGTH OF THE ANCHOR ROD (ASTM A123) AND HOT DIP NUTS AND WASHERS (ASTM A153. USE ZINC COATED NUTS MANUFACTURED WITH SUFFICIENT ALLOWANCE TO ALLOW NUTS TO RUN FREELY ON THE THREADS.

CONCRETE BASE, TYPE 10 SPECIAL
(FOR TYPE 9 SPECIAL AND TYPE 10 SPECIAL POLES)

CONCRETE = 4.6 CUBIC YARD
H.S. REINFORCEMENT = 779 LBS.

FOR USE WHEN GROUND ELEVATION AT BASE EQUALS OR IS GREATER THAN HIGH POINT OF ROADWAY ELEVATION.

CONCRETE BASE TYPE 10 SPECIAL

STATE OF WISCONSIN
DEPARTMENT OF TRANSPORTATION

APPROVED
August 2020 — DATE
/S/ Alex Crabtree — WIND LOADED STRUCTU PROGRAM LEADER
FHWA

6

SDD 09C15 - 01
SDD 09C15 - 01

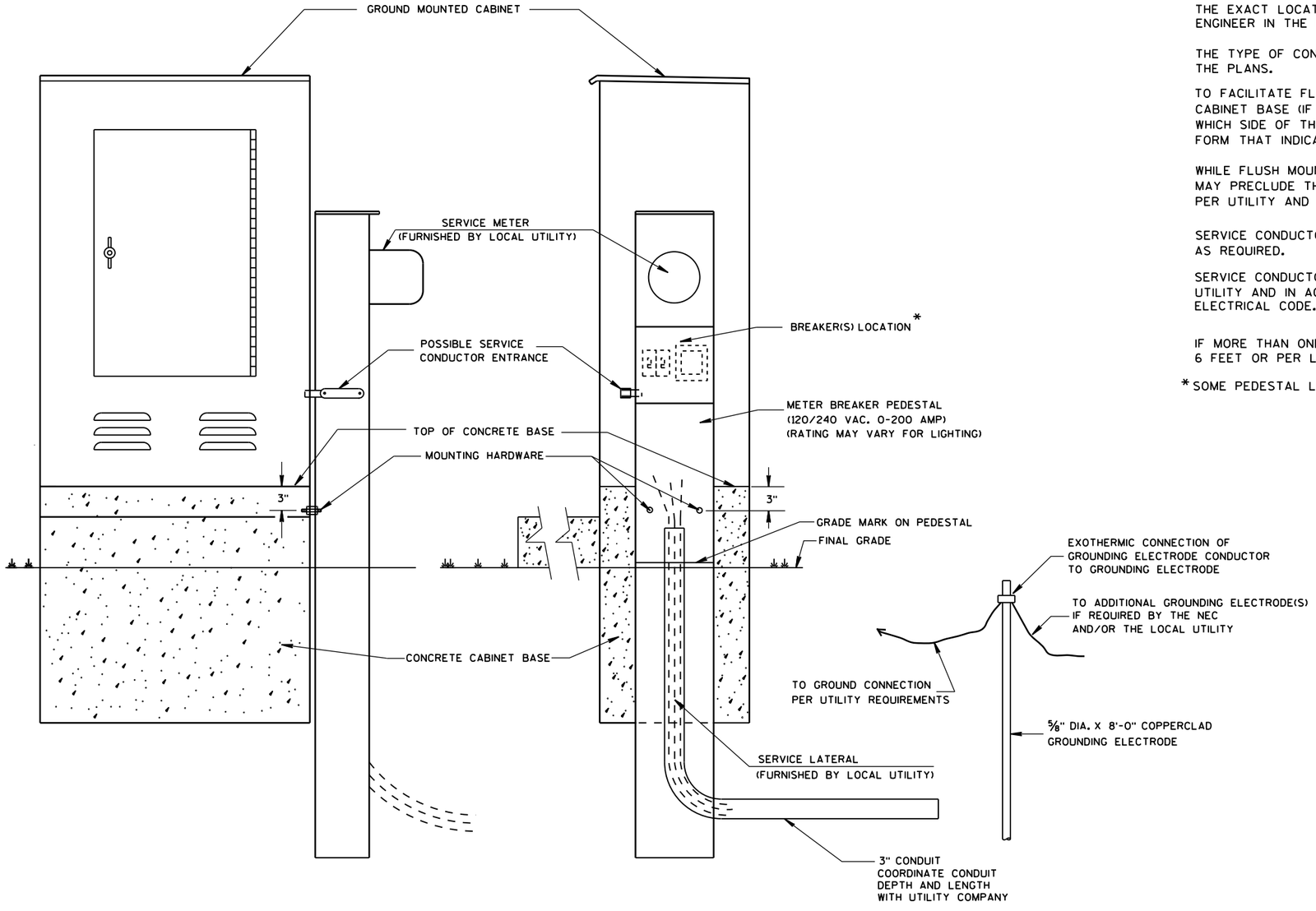

TYPICAL CABINET SERVICE INSTALLATION

GENERAL NOTES

DETAILS OF CONSTRUCTION, MATERIALS AND WORKMANSHIP NOT SHOWN ON THIS DRAWING SHALL CONFORM TO THE PERTINENT REQUIREMENTS OF THE CONTRACT.

THE EXACT LOCATION OF THE METER BREAKER PEDESTAL SHALL BE DETERMINED BY THE ENGINEER IN THE FIELD.

THE TYPE OF CONCRETE CABINET BASE TO BE INSTALLED SHALL BE AS CALLED FOR IN THE PLANS.

TO FACILITATE FLUSH MOUNTING OF THE METER BREAKER PEDESTAL AGAINST THE SIDE OF THE CABINET BASE (IF FLUSH MOUNTING POSSIBLE. CONFER WITH THE LOCAL UTILITY TO DETERMINE WHICH SIDE OF THE CONCRETE BASE THE ELECTRICAL SERVICE LATERAL WILL APPROACH. THEN FORM THAT INDICATED SIDE FOR FULL SIDE DEPTH.

WHILE FLUSH MOUNTING IS THE MOST DESIRABLE MOUNTING CONFIGURATION UTILITY REQUIREMENTS MAY PRECLUDE THIS OPTION. CONTRACTOR MUST PROVIDE UTILITY APPROVED PEDESTAL AND INSTALL PER UTILITY AND MANUFACTURERS REQUIREMENTS.

SERVICE CONDUCTOR ENTRANCES SHALL BE RIGID METALLIC CONDUIT, NIPPLES AND/OR CONDULETS AS REQUIRED.

SERVICE CONDUCTOR ENTRANCES SHALL BE SIZED AND LOCATED AS REQUIRED BY THE LOCAL UTILITY AND IN ACCORDANCE WITH APPROPRIATE ARTICLES OF THE LATEST ACCEPTED NATIONAL ELECTRICAL CODE.

IF MORE THAN ONE GROUNDING ELECTRODE IS REQUIRED, THE DISTANCE APART SHALL BE 6 FEET OR PER LOCAL UTILITY REGULATIONS.

* SOME PEDESTAL LIGHTING PLANS SHOW MAIN LUGS ONLY.

6

S.D.D. 9 D 1-5

6

S.D.D. 9 D 1-5

CABINET SERVICE INSTALLATION (METER BREAKER PEDESTAL)

STATE OF WISCONSIN
DEPARTMENT OF TRANSPORTATION

APPROVED
Sept. 2014
DATE

/S/ Ahmet Demirbilek
STATE ELECTRICAL 663

FHWA

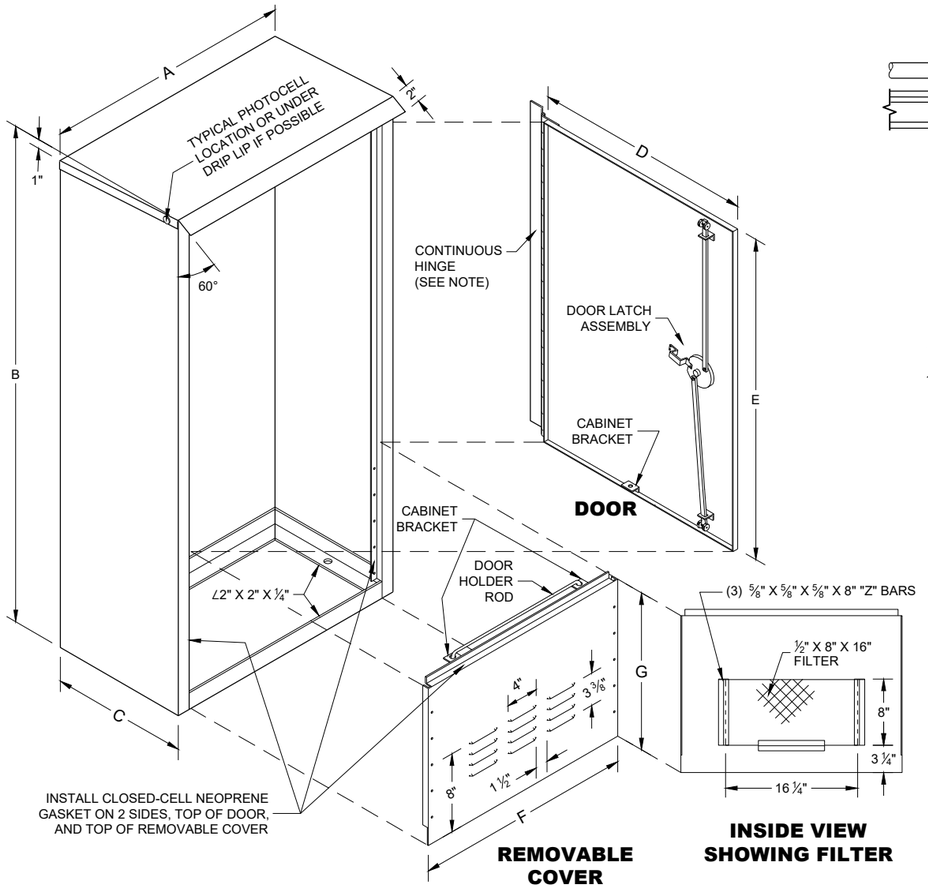

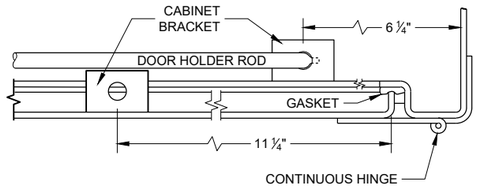

HINGE AND DOOR HOLDER

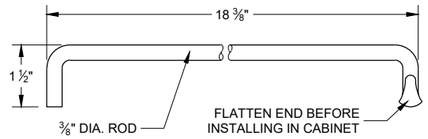

HOLDER ROD

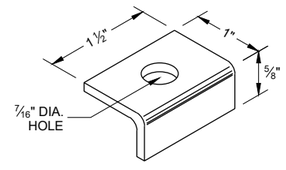

CABINET BRACKET

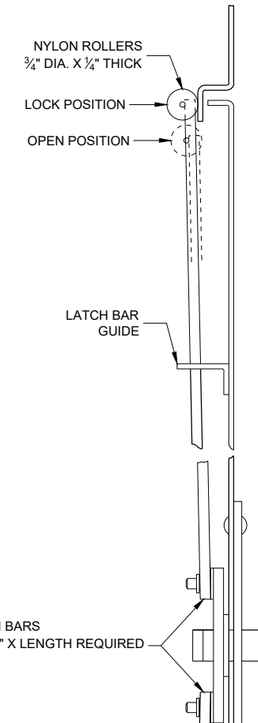

SIDE VIEW

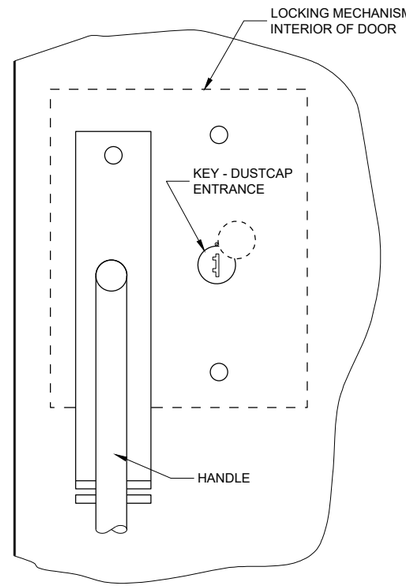

FRONT VIEW

LATCH ASSEMBLY

GENERAL NOTES

DETAILS OF CONSTRUCTION, MATERIALS AND WORKMANSHIP NOT SHOWN ON THIS DRAWING SHALL CONFORM TO THE PERTINENT REQUIREMENTS OF THE STANDARD SPECIFICATIONS AND APPLICABLE SPECIAL PROVISIONS.

PRIME WITH PHOSPHATE TREATMENT AND PRIMER.

FINISH EXTERIOR SURFACES WITH RUSTOLEUM #906 SILVER GRAY OR APPROVED EQUAL.

FINISH INTERIOR WITH RUSTOLEUM #2766 HIGH GLOSS WHITE ENAMEL OR APPROVED EQUAL.

ALL SHEET METAL PARTS SHALL BE .125 INCH THICK ALUMINUM.

ALL SEAMS SHALL BE CONTINUOUSLY WELDED.

ALUMINUM SHALL BE TYPE 5052-H32.

CONTINUOUS HINGE SHALL BE HEAVY GAUGE ALUMINUM WITH ¼" DIAMETER STAINLESS STEEL HINGE PIN. HINGE IS SECURED WITH ¼" X 20 TPI STAINLESS STEEL CARRIAGE BOLTS AND STAINLESS STEEL NYLOCK NUTS.

A SINGLE PHOTOCELL SHALL BE LOCATED ON THE NORTH - NORTHEAST SIDE OF THE CABINET UNLESS OTHERWISE CALLED FOR IN THE SPECIAL PROVISIONS. THE PHOTOCELL SHALL BE PLACED AS SHOWN AND SHALL BE LISTED ON THE DEPARTMENTS APPROVED PRODUCTS LIST.

DOOR LATCH ASSEMBLY TO BE PROVIDED WITH THREE-POINT LOCKING MECHANISM.

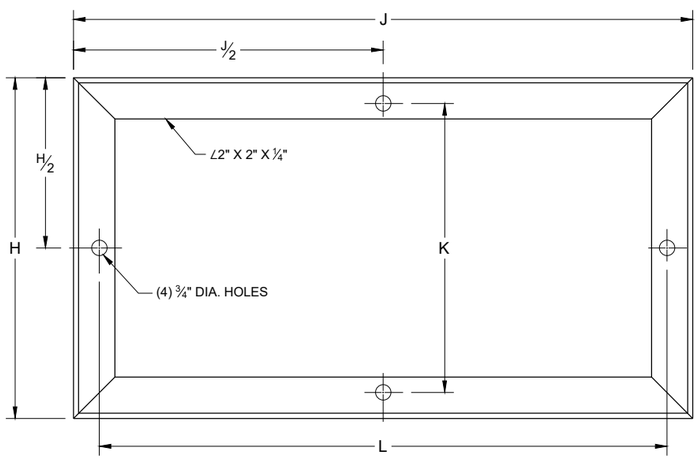

MOUNTING BASE

TABLE OF DIMENSIONS (INCHES)

MARK	CABINET TYPE		
	3060	3860	3866
A	30	38	38
B	60	60	66
C	16 ½	16 ½	24
D	26 ½	34 ¾	33 ¾
E	38 ¾	38 ¾	38 ¾
F	26 ½	34 ¾	33 ¾
G	19	19	25
H	16 ½	16 ½	24
H/2	8 ¼	8 ¼	12
J	30	38	38
J/2	15	19	19
K	13 ¾	13 ¾	21 ¼
L	27 ½	35 ½	35 ½

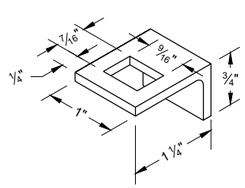

LATCH BAR GUIDE

SIGNAL CONTROL CABINET

STATE OF WISCONSIN
DEPARTMENT OF TRANSPORTATION

APPROVED
September 2014
DATE

/S/ Ahmet Demerbilek
STATE ELECTRICAL ENGI 664

FHWA

SDD 09D02 - 03

6

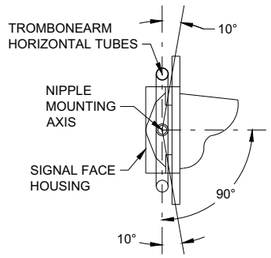

SECTION A-A

(10 DEGREES TILT REQUIREMENT OF FACE(S) IN THE TROMBONE MOUNTING)

FOR MANUFACTURERS USE ONLY

WELD TO BE 100% R.T. OR U.T. TESTED AS PER THE REQUIREMENTS OF AWS D 1.5-88. RECORDS OF COMPLIANCE OF SUCH TESTING SHALL BE FURNISHED TO THE OFFICE OF DESIGN / BRIDGE FOR VERIFICATION AND APPROVAL.

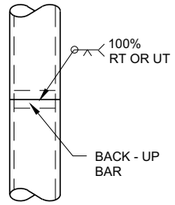

POLE SPLICE DETAIL

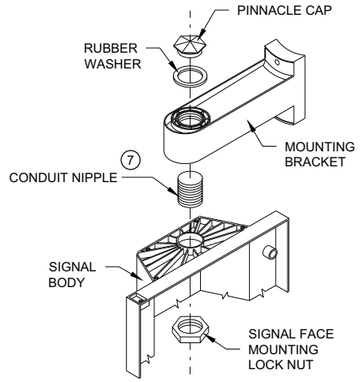

SIGNAL FACE MOUNTING DETAIL

(BANDED)

GENERAL NOTES

DETAILS OF CONSTRUCTION, MATERIALS AND WORKMANSHIP NOT SHOWN ON THIS DRAWING SHALL CONFORM TO THEPERTINENT REQUIREMENTS OF THE CONTRACT.

POLES SHALL BE EITHER ALUMINUM OR GALVANIZED STEEL AS CALLED FOR IN THE CONTRACT.

SECTION 657, POLES, OF THE STANDARD SPECIFICATIONS SHALL APPLY TO THIS DRAWING.

A PULL WIRE / ROPE SHALL BE INSTALLED IN EACH TROMBONE ARM RACEWAY DURING THE MANUFACTURING PROCESS.

TYPE 2 ALUMINUM POLES SHALL BE CONSTRUCTED OF 6063 - T6 ALUMINUM ALLOY. SLEEVING INSIDE THE POLE IS NOT ACCEPTABLE.

WHEN TRANSFORMER BASES ARE USED, WIRE CONNECTIONS SHALL BE MADE IN THE TRANSFORMER BASE.

(1) 4" X 6" REINFORCED HANDHOLE AND COVER ASSEMBLY WITH TWO (2) ¼" X ¾" - 20 TPI , STAINLESS STEEL, HEX HEAD BOLTS.

(2) SIGNAL FACE MOUNTING BRACKETS. MOUNT WITH CAP SCREWS AND BANDING.

(3) GROMMETS. 1" CHASE NIPPLES OR 1" CLOSE CONDUIT NIPPLES WITH BUSHINGS SHALL BE PROVIDED FOR 1 ⅜" HOLE IN POLE SHAFT FOR WIRING.

(4) SECURELY MOUNT DULL BLACK POLYCARBONATE BACKPLATES, PROJECTING 5" BEYOND ALL SIDES OF THE SIGNAL FACE HOUSING,PER MANUFACTURER'S RECOMMENDATIONS.

(5) POLE MOUNTED SIGNAL FACES SHALL REQUIRE ONE OR MORE MOUNTING SPACERS UNDER THE TOP MOUNTING BRACKET(S) ASREQUIRED, TO PLUMB THE SIGNAL FACES.

(6) CAST ALUMINUM TRANSFORMER BASE, WHEN REQUIRED.

(7) USE 1 ½" ID NIPPLES ZINC-COATED RIGID METAL CONDUIT, LONG ENOUGH TO ACCOMMODATE FULL DEPTH THREADING INTO THE HEAD MOUNTING LOCK NUT IN ORDER TO TIGHTEN THE FACE, BUT THAT DO NOTINTERFERE WITH REFLECTOR CLOSURE. THREAD THE NIPPLE INTO THE MOUNTING BRACKET/ELBOW UNTIL TIGHT. USE APPROVED PINNACLE TYPE HARDWARE FROM A DEPARTMENT APPROVED MANUFACTURER TO CLOSE THE UNUSED 1 ½" OPENING IN SIGNAL FACES AND BRACKET ENDS.

(8) VERTICAL STRUT (ADJUSTABLE). ONE (1) SET SCREW (¼" X ¾" - 20 TPI STAINLESS STEEL, HEX HEAD) INTO EACH ARM MEMBER IF STRUTIS THE SLIDING TYPE.

(9) FURNISH AND INSTALL VENTILATED, CAST METALLIC (ALUMINUM ALLOY) CAPS. FASTEN CAPS WITH ONE (1) ¼" X ¾" - 20 TPI STAINLESS STEEL, HEX HEAD BOLT.

(10) SHIMMING, IF NEEDED, SHALL BE LOCATED BETWEEN THE CONCRETE FOUNDATION AND THE TRANSFORMER BASE.

(11) USE SERRATED LOCK WASHERS WITH NOTCHES BETWEEN END TEE AND SIGNAL HEAD.

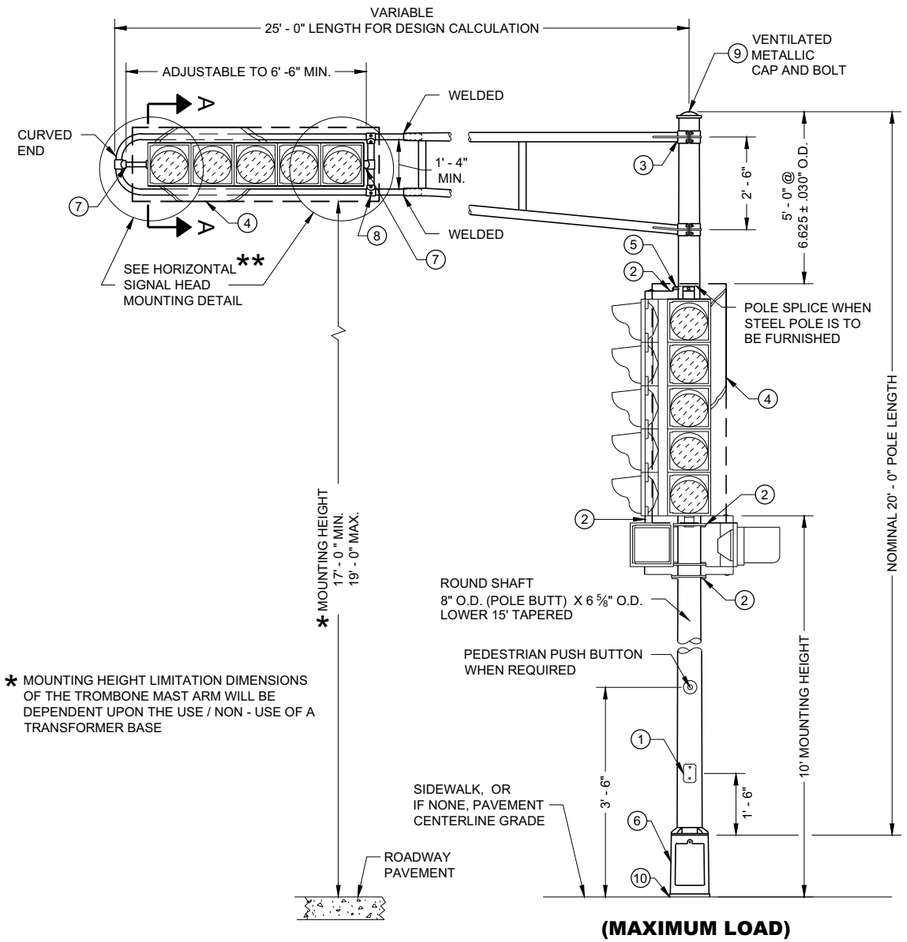

* MOUNTING HEIGHT LIMITATION DIMENSIONS OF THE TROMBONE MAST ARM WILL BE DEPENDENT UPON THE USE / NON - USE OF A TRANSFORMER BASE

(MAXIMUM LOAD)

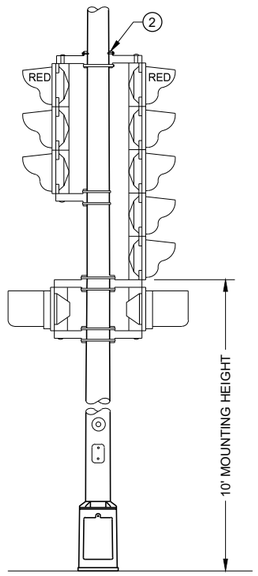

TYPICAL MOUNTING OF BACK TO BACK 3 AND 5 SECTION SIGNAL FACES

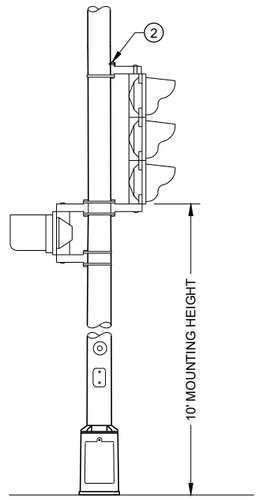

TYPICAL MOUNTING OF 3 SECTION SIGNAL FACE

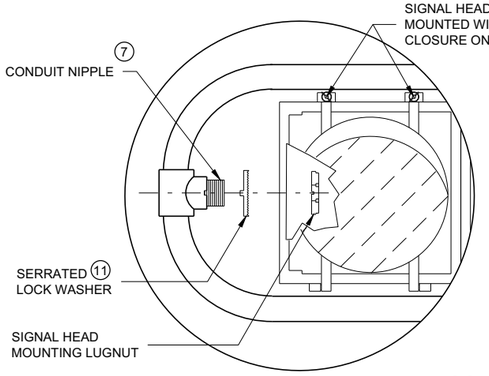

HORIZONTAL SIGNAL HEAD MOUNTING DETAIL **

** SIGNAL HEAD ATTACHMENT ALSO APPLIES TO MOUNTING AT CROSS BAR

TYPE 2 POLE MOUNTING CONFIGURATION

POLE MOUNTINGS FOR TRAFFIC SIGNALS TYPE 2

STATE OF WISCONSIN
DEPARTMENT OF TRANSPORTA 665

6

SDD 09E01 - 15a

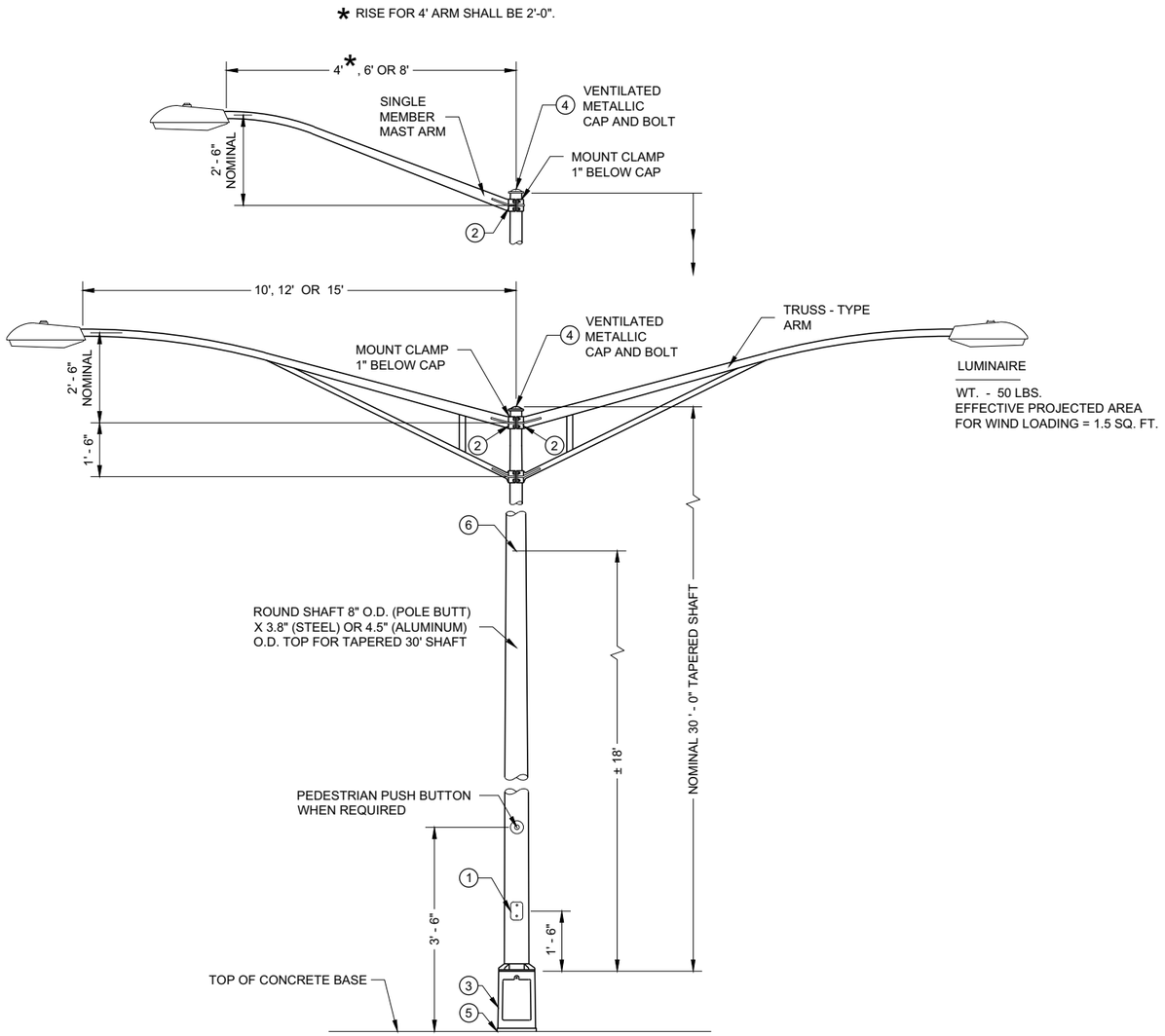

TYPE 5 POLE MOUNTING CONFIGURATION
(MAXIMUM LOAD)
LIGHTING ONLY

GENERAL NOTES

DETAILS OF CONSTRUCTION, MATERIALS AND WORKMANSHIP NOT SHOWN ON THIS DRAWING SHALL CONFORM TO THE PERTINENT REQUIREMENTS OF THE CONTRACT.

SECTION 657, POLES, OF THE STANDARD SPECIFICATIONS SHALL APPLY TO THIS DRAWING.

ALL TYPE 5 POLE MOUNTINGS SHALL BE DESIGNED TO INCLUDE TWIN 15' ARMS WITH LUMINAIRES.

POLES SHALL BE GALVANIZED STEEL OR ALUMINUM, AS CALLED FOR IN THE CONTRACT.

TYPE 5 ALUMINUM POLES SHALL BE CONSTRUCTED OF 6063 - T6 ALUMINUM ALLOY. SLEEVING INSIDE THE POLE IS NOT ACCEPTABLE.

TYPE 5 ALUMINUM POLES SHALL HAVE A MINIMUM WALL THICKNESS OF 0.1888".

TYPE 5 STEEL POLES SHALL HAVE A MINIMUM WALL THICKNESS OF U.S. STANDARD 11 GAGE (0.1196").

THE SLIPFITTER END OF THE LUMINAIRE MAST ARM SHALL BE A NOMINAL 2 ⅜ INCHES IN OUTSIDE DIAMETER. THE STRAIGHT PORTION OF THE SLIPFITTER END OF THE LUMINAIRE MAST ARM SHALL BE A NOMINAL 12 INCHES IN LENGTH.

WHEN TRANSFORMER BASES ARE USED, WIRE CONNECTIONS SHALL BE MADE IN THE TRANSFORMER BASE.

(1) 4" X 6" REINFORCED HANDHOLE AND COVER ASSEMBLY WITH TWO (2) ¼" X ¾" - 20 TPI , STAINLESS STEEL, HEX HEAD BOLTS.

(2) GROMMETS. 1" CHASE NIPPLES OR 1" CLOSE CONDUIT NIPPLES WITH BUSHINGS SHALL BE PROVIDED FOR 1 ⅜" HOLE IN POLE SHAFT FOR WIRING.

(3) CAST ALUMINUM TRANSFORMER BASE, WHEN REQUIRED.

(4) FURNISH AND INSTALL VENTILATED, CAST METALLIC (ALUMINUM ALLOY) CAPS. FASTEN CAPS WITH ONE (1) ¼" X ¾" - 20 TPI STAINLESS STEEL, HEX HEAD BOLT.

(5) SHIMMING, IF NEEDED, SHALL BE LOCATED BETWEEN THE CONCRETE FOUNDATION AND POLE.

(6) INTERNAL DUMBBELL - TYPE VIBRATION DAMPER.

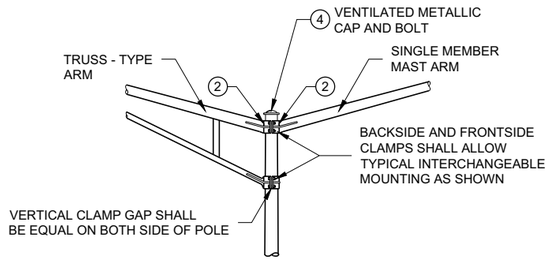

INTERCHANGEABLE MOUNTING DETAIL

POLE MOUNTINGS FOR LIGHTING UNITS, TYPE 5 (30 FEET)

STATE OF WISCONSIN
DEPARTMENT OF TRANSPORTA 666

6

SDD 09E01 - 15d

6

SDD 09E01 - 15d

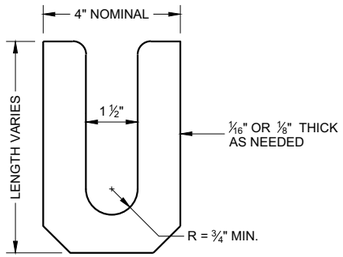

LEVELING SHIM (1)
SHALL BE ALUMINUM

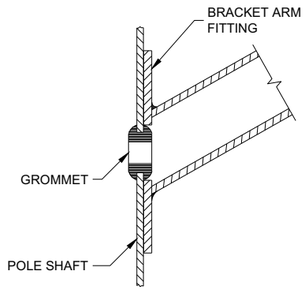

TYPICAL APPLICATION OF GROMMET IN POLE SHAFT

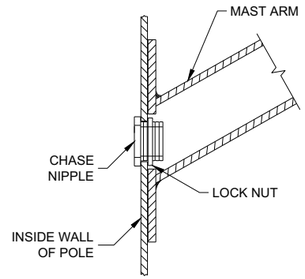

TYPICAL APPLICATION OF CHASE NIPPLE IN POLE SHAFT

GENERAL NOTES

CLAMP BOLT-NUT TIGHTENING TORQUE SHALL BE INDICATED BY INDENT STAMPING (1/2 INCH NUMERALS AND LETTERS) OR WEATHERPROOF PRINTING ON THE INSIDE OF THE CLAMP THAT IS WELDED TO THE ARM MEMBER.

(1) 4.5" I.D. FOR LUMINAIRE MAST ARM CLAMP. 6.625" I.D. FOR TROMBONE MAST ARM CLAMP.

(2) INDIVIDUAL BASE PLATE ANCHOR ROD COVERS. (4 REQUIRED)

(3) BASE PLATE SLOTTED TO ACCEPT 11" THROUGH 12" BOLT CIRCLE USING 1" DIAMETER ANCHOR RODS.

(4) LEVELING SHIMS, DESIGNED FOR THE PURPOSE, SHALL BE USED WHEN PLUMBING POLES. THE USE OF WASHERS IN LIEU OF PROPER LEVELING SHIMS IS NOT ACCEPTABLE. LEVELING SHIMS SHALL BE USED ONLY BETWEEN THE TOP OF THE CONCRETE BASE AND A METALLIC BASE PLATE.

SHIMS SHALL BE LONG ENOUGH AND WIDE ENOUGH TO COMPLETELY COVER THE AREA UNDER THE LENGTH AND WIDTH OF THE BASE MOUNTING FLANGE.

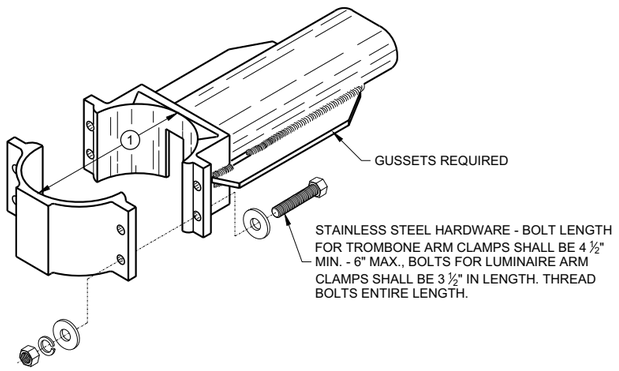

TYPICAL TROMBONE MAST ARM AND SINGLE LUMINAIRE MAST ARM MOUNTING CLAMP

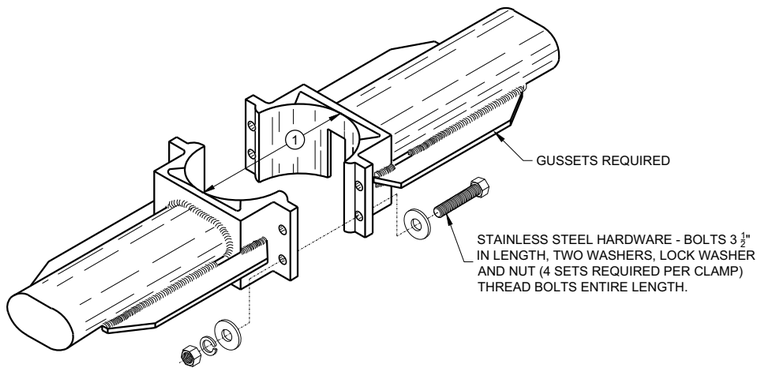

TYPICAL LUMINAIRE MAST ARM (DOUBLE) MOUNTING BRACKETS

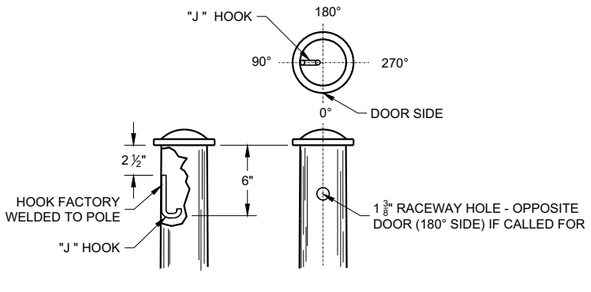

TYPICAL "J" HOOK LOCATION

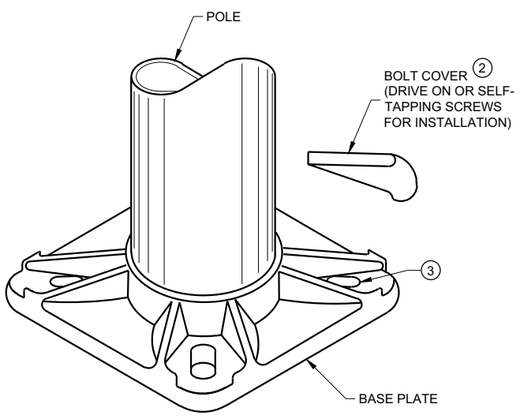

BASE PLATE

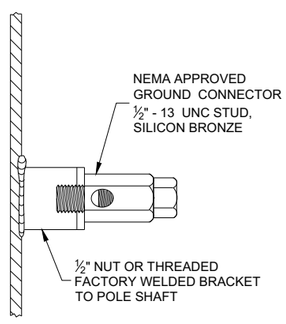

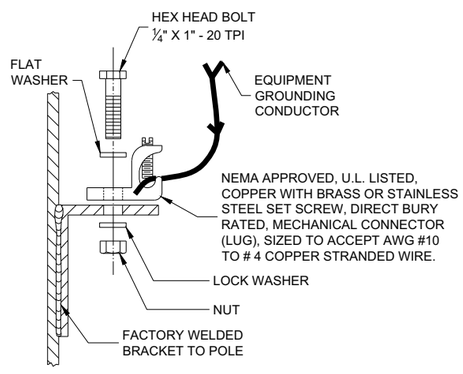

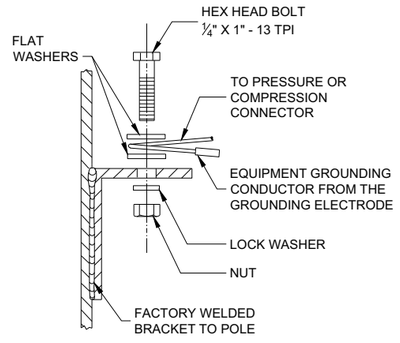

TYPICAL GROUNDING CONNECTIONS
NUT, BOLT AND WASHERS SHALL BE STAINLESS STEEL

HARDWARE DETAILS FOR POLE MOUNTING

STATE OF WISCONSIN
DEPARTMENT OF TRANSPORTATION

APPROVED
November 2018
DATE

/S/ Ahmet Demirbilek
STATE ELECTRICAL ENGI 667

FHWA

6
SDD 09E01 - 15g

GENERAL NOTES

DETAILS OF CONSTRUCTION, MATERIALS AND WORKMANSHIP NOT SHOWN ON THIS DRAWING SHALL CONFORM TO THE PERTINENT REQUIREMENTS OF THE CONTRACT.

THE EQUIPMENT GROUND CONNECTOR SHALL BE TAPED WITH 3 WRAPS (MINIMUM) OF APPROVED RUBBER TAPE AND 3 WRAPS (MINIMUM) OF APPROVED VINYL TAPE TO COVER SHARP WIRE ENDS AFTER THE CONNECTION IS COMPLETED.

WHEN TRANSFORMER BASES ARE USED, ALL WIRING CONNECTIONS SHALL OCCUR WITHIN THE TRANSFORMER BASES.

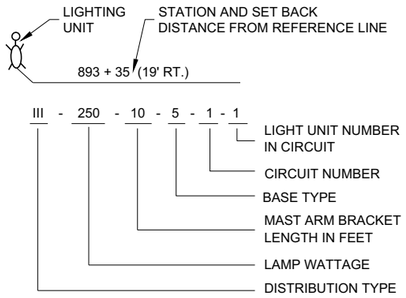

LIGHTING UNIT CODE
(TYPICAL)

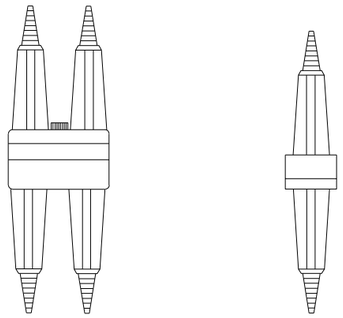

DETAIL "A"
BREAKAWAY DOUBLE POLE WITH WATERPROOF INSULATING BOOT

DETAIL "B"
BREAKAWAY SINGLE POLE WITH WATERPROOF INSULATING BOOT

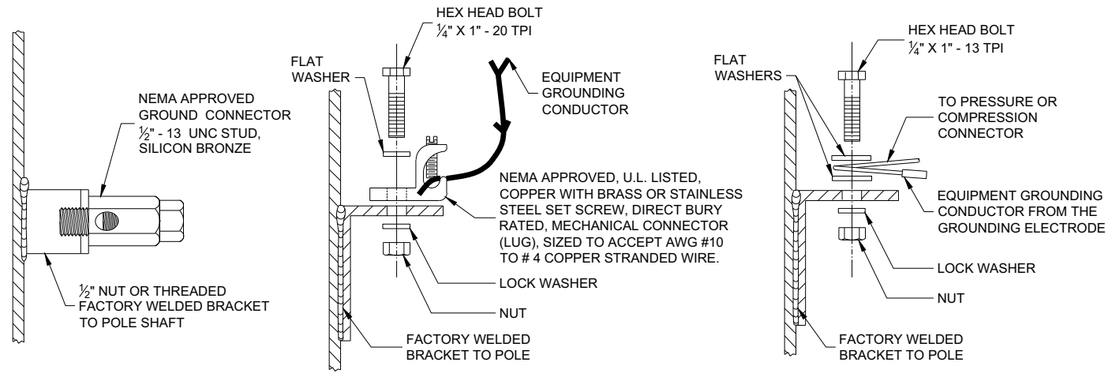

TYPICAL GROUNDING CONNECTIONS
NUT, BOLT AND WASHERS SHALL BE STAINLESS STEEL

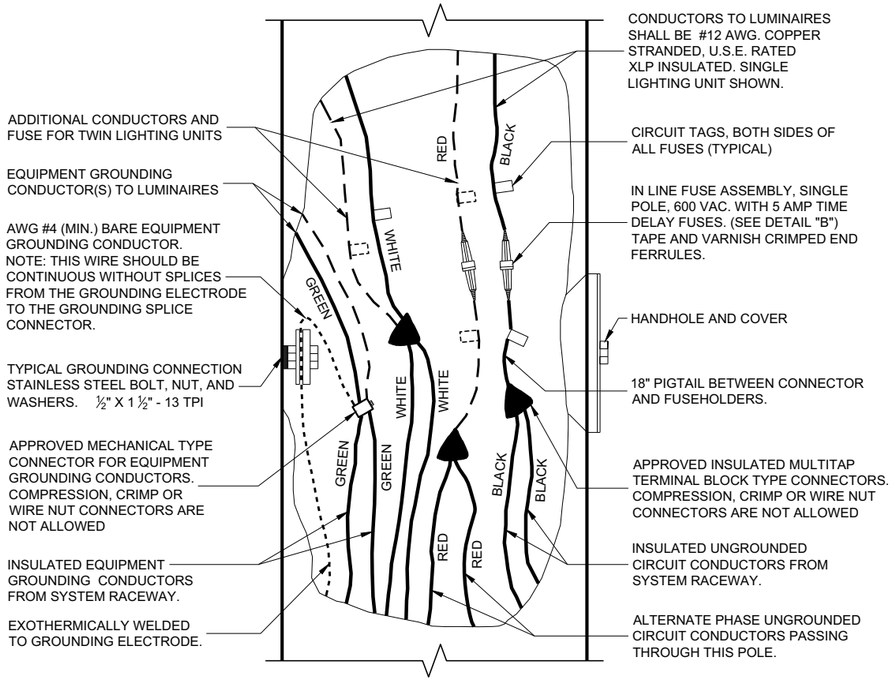

3 WIRE - 120, 240 OR 480 VAC (UNGROUNDED CONDUCTORS) WITH GROUNDING CONDUCTOR AND EQUIPMENT GROUNDING CONDUCTOR

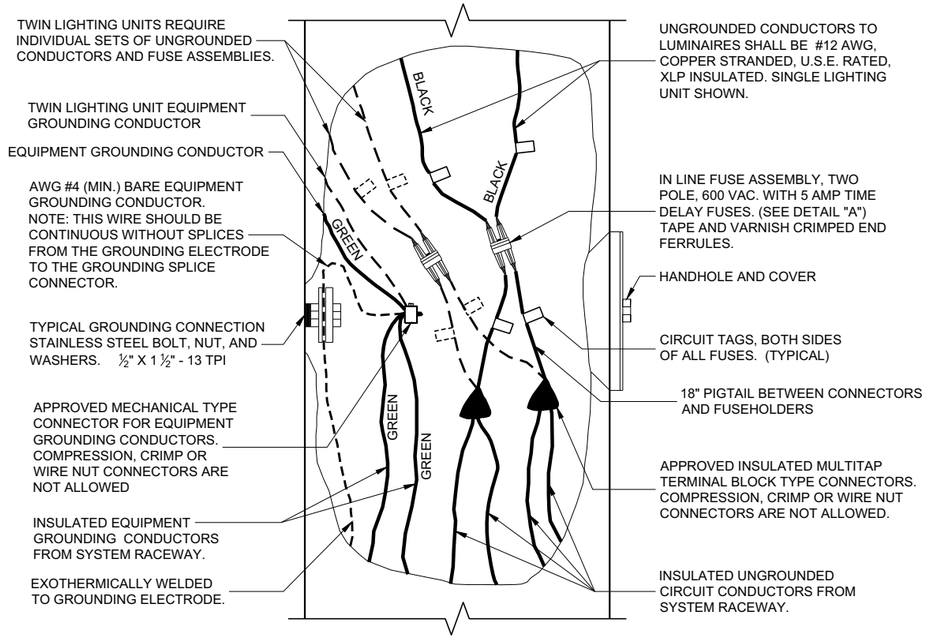

2 WIRE - 240 OR 480 VAC (UNGROUNDED CONDUCTORS) WITH EQUIPMENT GROUNDING CONDUCTOR

NON - FREEWAY LIGHTING UNIT POLE WIRING

STATE OF WISCONSIN
DEPARTMENT OF TRANSPORTATION

APPROVED
November 2018
DATE
/S/ Ahmet Demirbilek
STATE ELECTRICAL ENGI 668

FHWA

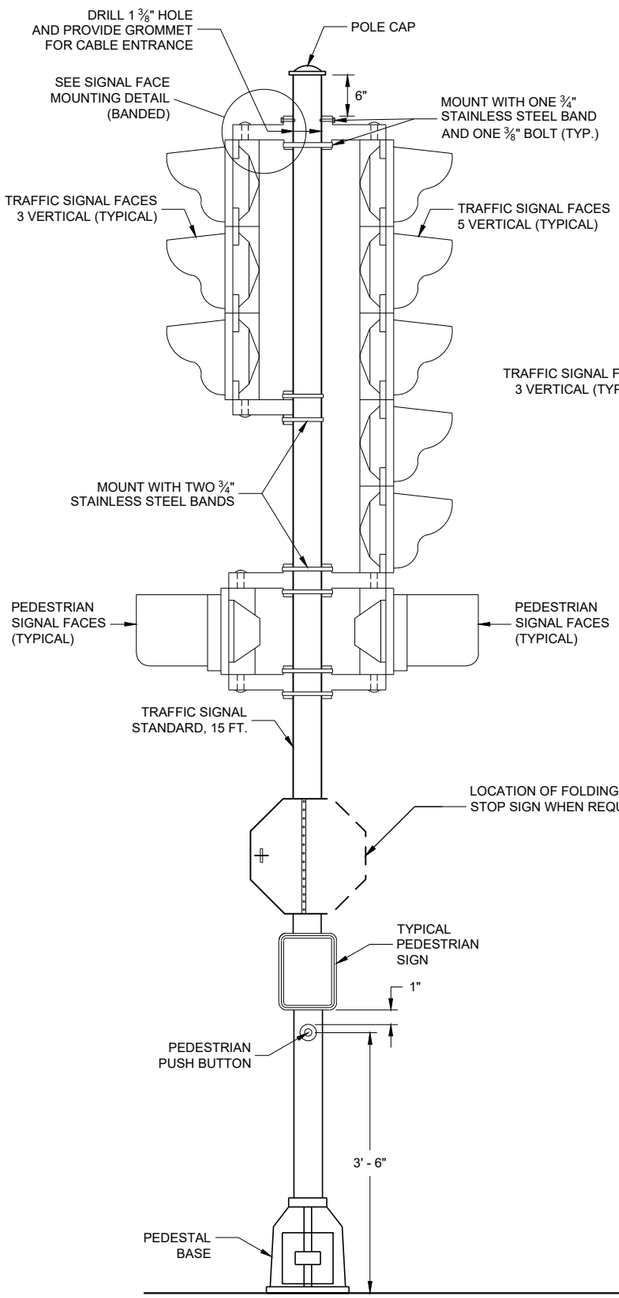

TRAFFIC SIGNAL STANDARD - 15 FT.

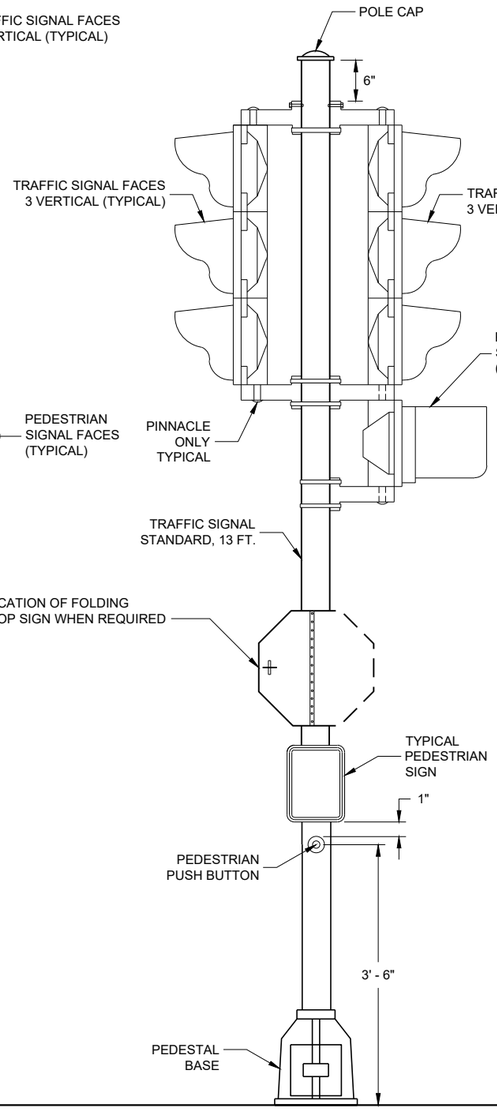

TRAFFIC SIGNAL STANDARD - 13 FT.

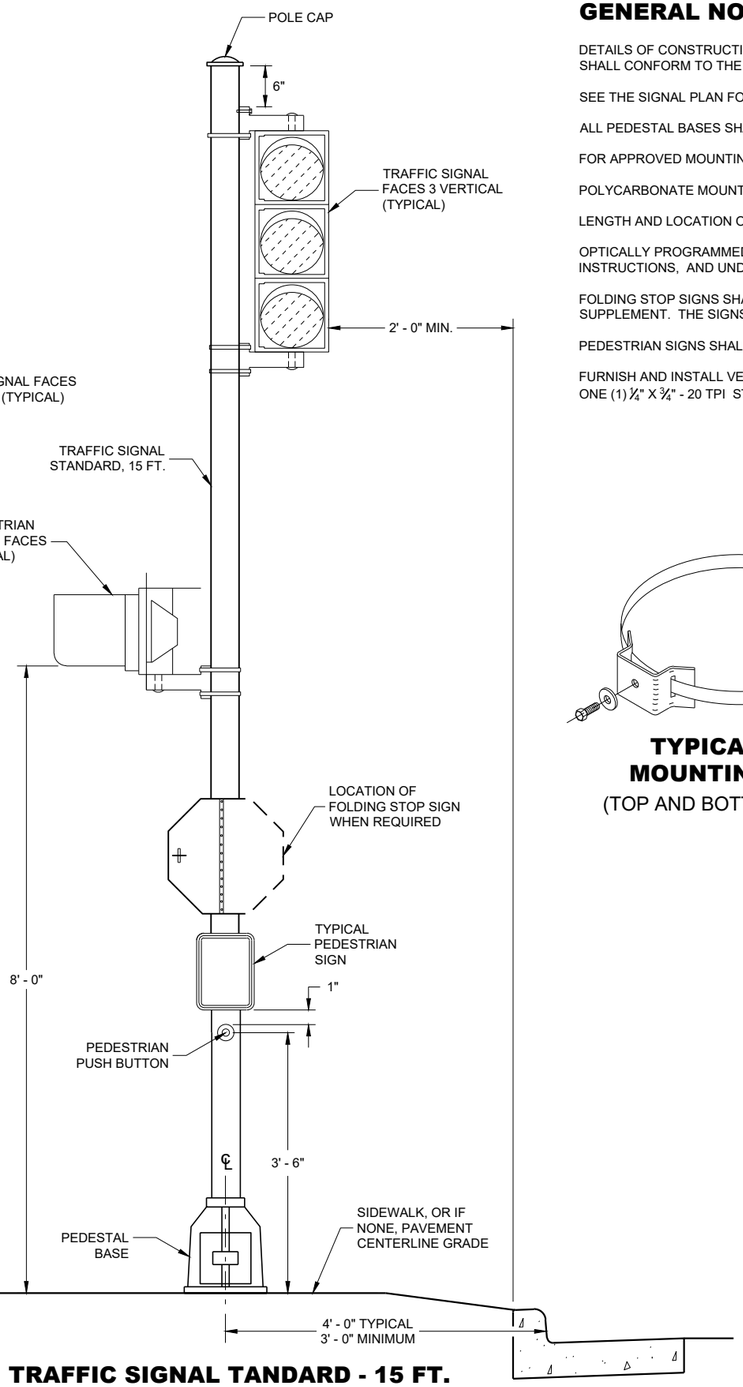

TRAFFIC SIGNAL TANDARD - 15 FT.
3M MOUNTING (TYPICAL)

GENERAL NOTES

DETAILS OF CONSTRUCTION, MATERIALS AND WORKMANSHIP NOT SHOWN ON THIS DRAWING SHALL CONFORM TO THE PERTINENT REQUIREMENTS OF THE CONTRACT.

SEE THE SIGNAL PLAN FOR REQUIRED SIGNAL FACE SIZES.

ALL PEDESTAL BASES SHALL BE MOUNTED ON CONCRETE BASE - TYPE 1.

FOR APPROVED MOUNTING HARDWARE, SEE THE CONTRACT SPECIAL PROVISIONS.

POLYCARBONATE MOUNTING BRACKETS SHALL BE USED.

LENGTH AND LOCATION OF TRAFFIC SIGNAL STANDARDS SHALL BE AS SHOWN ON THE PLANS.

OPTICALLY PROGRAMMED SIGNAL FACES SHALL BE MASKED IN ACCORDANCE WITH MANUFACTURERS INSTRUCTIONS, AND UNDER THE DIRECTIONS OF THE REGION TRAFFIC ENGINEER.

FOLDING STOP SIGNS SHALL BE IN ACCORDANCE WITH THE MUTCD AND/OR THE LATEST WISCONSIN SUPPLEMENT. THE SIGNS SHALL BE SIZED AND LOCATED AS CALLED FOR IN IN THE PLANS.

PEDESTRIAN SIGNS SHALL BE AS DESIGNATED IN THE PLANS.

FURNISH AND INSTALL VENTILATED, CAST, METALLIC (ALUMINUM ALLOY) CAPS. FASTEN CAPS WITH ONE (1) 1/4" X 3/4" - 20 TPI STAINLESS STEEL, HEX HEAD BOLT.

TYPICAL SIGN MOUNTING BAND
(TOP AND BOTTOM OF SIGN)

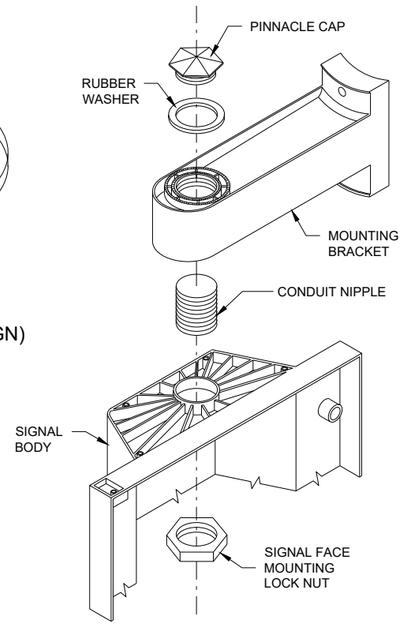

SIGNAL FACE MOUNTING DETAIL (BANDED)

TRAFFIC SIGNAL STANDARD POLY BRACKET MOUNTINGS (TYPICAL) 13 FT. OR 15 FT.

STATE OF WISCONSIN
DEPARTMENT OF TRANSPORTATION

APPROVED
2/28/2013
DATE
/S/ Ahmet Demirbilek
STATE ELECTRICAL ENGI 669

FHWA

6
SDD 09E06 - 05

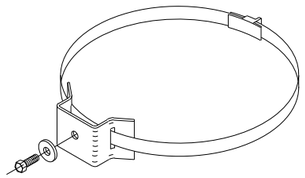

TYPICAL SIGN MOUNTING BAND
(TOP AND BOTTOM OF SIGN)

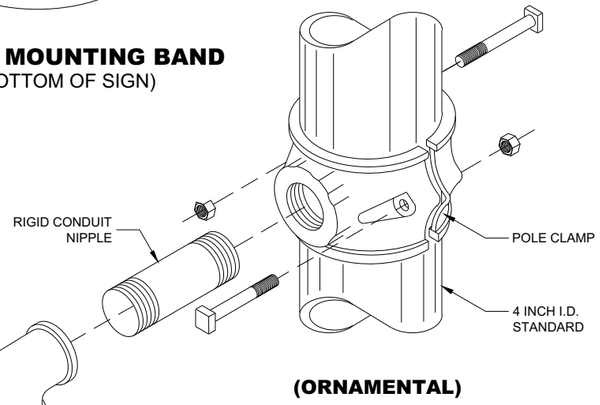

(ORNAMENTAL)

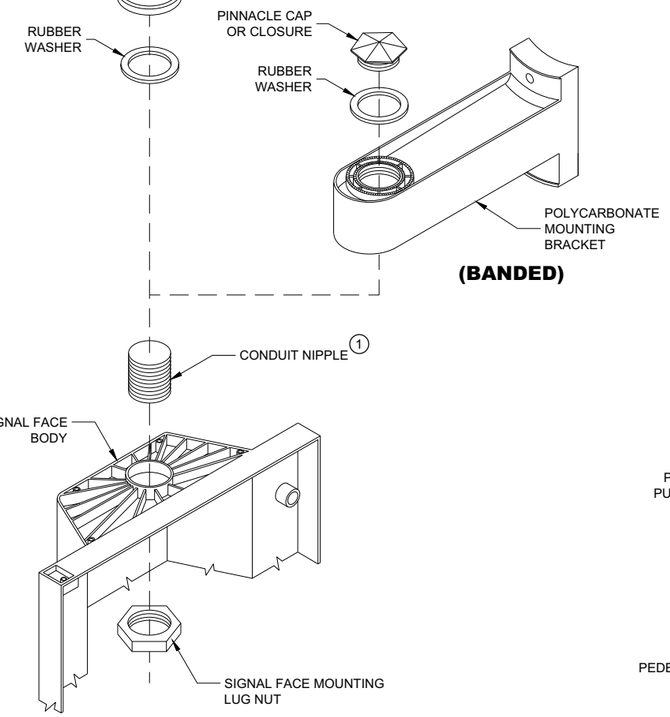

(BANDED)

SIGNAL FACE MOUNTING DETAILS

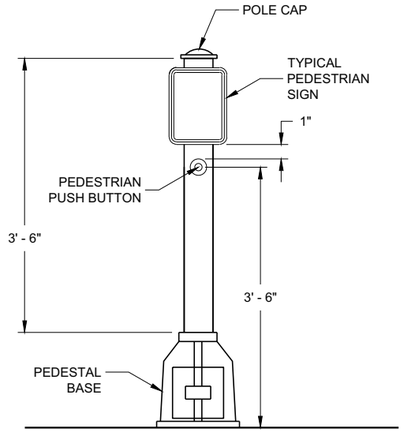

PEDESTRIAN PUSH BUTTON TYPICAL MOUNTING

GENERAL NOTES

DETAILS OF CONSTRUCTION, MATERIALS AND WORKMANSHIP NOT SHOWN ON THIS DRAWING SHALL CONFORM TO THE PERTINENT REQUIREMENTS OF THE CONTRACT.

SEE THE SIGNAL PLAN FOR REQUIRED SIGNAL FACE SIZES.

LOCATIONS SHALL BE AS SHOWN ON THE PLANS, UNLESS APPROVED BY THE ENGINEER IN THE FIELD.

ALL PEDESTAL BASES SHALL BE MOUNTED ON CONCRETE BASE - TYPE 1.

FOR APPROVED MOUNTING HARDWARE, SEE THE CONTRACT SPECIFICATIONS.

POLYCARBONATE SIGNAL FACE MOUNTING BRACKETS SHALL BE USED UNLESS ORNAMENTAL POLE CLAMPS ARE SPECIFIED.

LENGTH OF TRAFFIC STANDARDS SHALL BE AS SHOWN ON THE PLANS.

MOUNTINGS AND BRACKETS SHALL BE AS SHOWN ON THE PLANS OR DESCRIBED IN THE SPECIAL PROVISIONS (BY THE REGION TRAFFIC ENGINEER).

PEDESTRIAN SIGNS SHALL BE AS DESIGNATED IN THE PLANS.

FURNISH AND INSTALL VENTILATED, CAST, METALLIC (ALUMINUM ALLOY) CAPS. FASTEN CAPS WITH ONE (1) ¼" X ¾" - 20 TPI STAINLESS STEEL, HEX HEAD BOLT.

(1) USE 1 ½" ID NIPPLES ZINC-COATED RIGID METAL CONDUIT, LONG ENOUGH TO ACCOMMODATE FULL DEPTH THREADING INTO THE HEAD MOUNTING LOCK NUT IN ORDER TO TIGHTEN THE FACE, BUT THAT DO NOT INTERFERE WITH REFLECTOR CLOSURE. THREAD THE NIPPLE INTO THE MOUNTING BRACKET/ELBOW UNTIL TIGHT. USE APPROVED PINNACLE TYPE HARDWARE FROM A DEPARTMENT APPROVED MANUFACTURER TO CLOSE THE UNUSED 1 ½" OPENING IN SIGNAL FACESAND BRACKET ENDS.

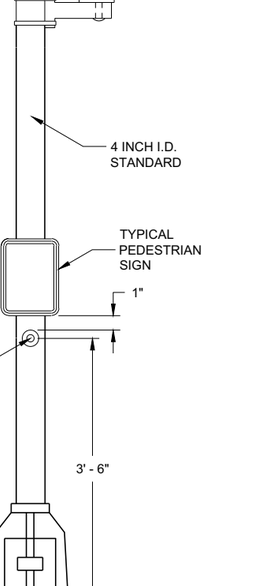

PEDESTRIAN FACE STANDARD - 10 FT.
(WALK - DON'T WALK)

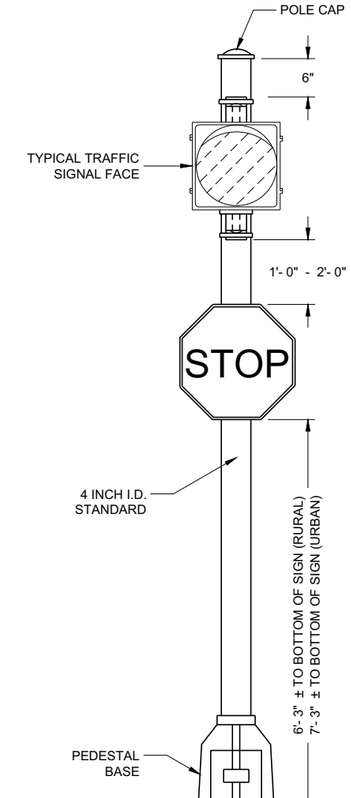

STANDARD FLASHER
10 FOOT, 13 FOOT OR 15 FOOT AS REQUIRED

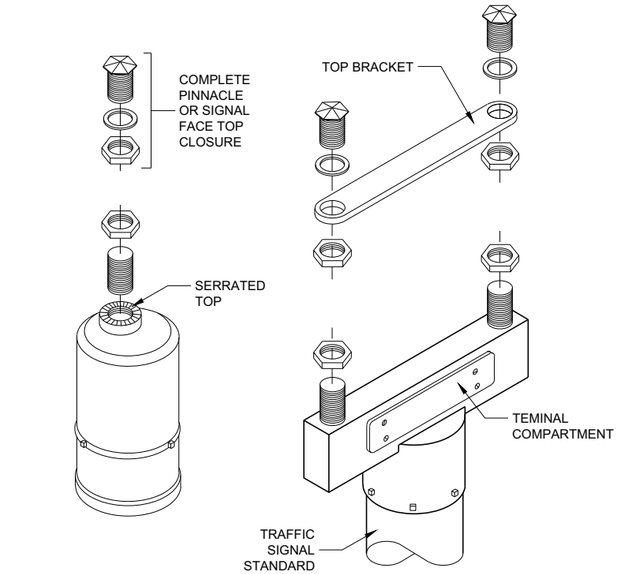

SINGLE
(OFFSET - SERRATED MOUNTING)

DOUBLE
(SERRATED MOUNTING)

SLIPFITTERS

TRAFFIC SIGNAL STANDARD
PEDESTRIAN AND FLASHER
TYPICAL MOUNTING DETAILS

STATE OF WISCONSIN
DEPARTMENT OF TRANSPORTATION

APPROVED
November 2018
DATE

/S/ Ahmet Demirbilek
STATE ELECTRICAL ENGI 670

FHWA

6

SDD 09E07 - 06

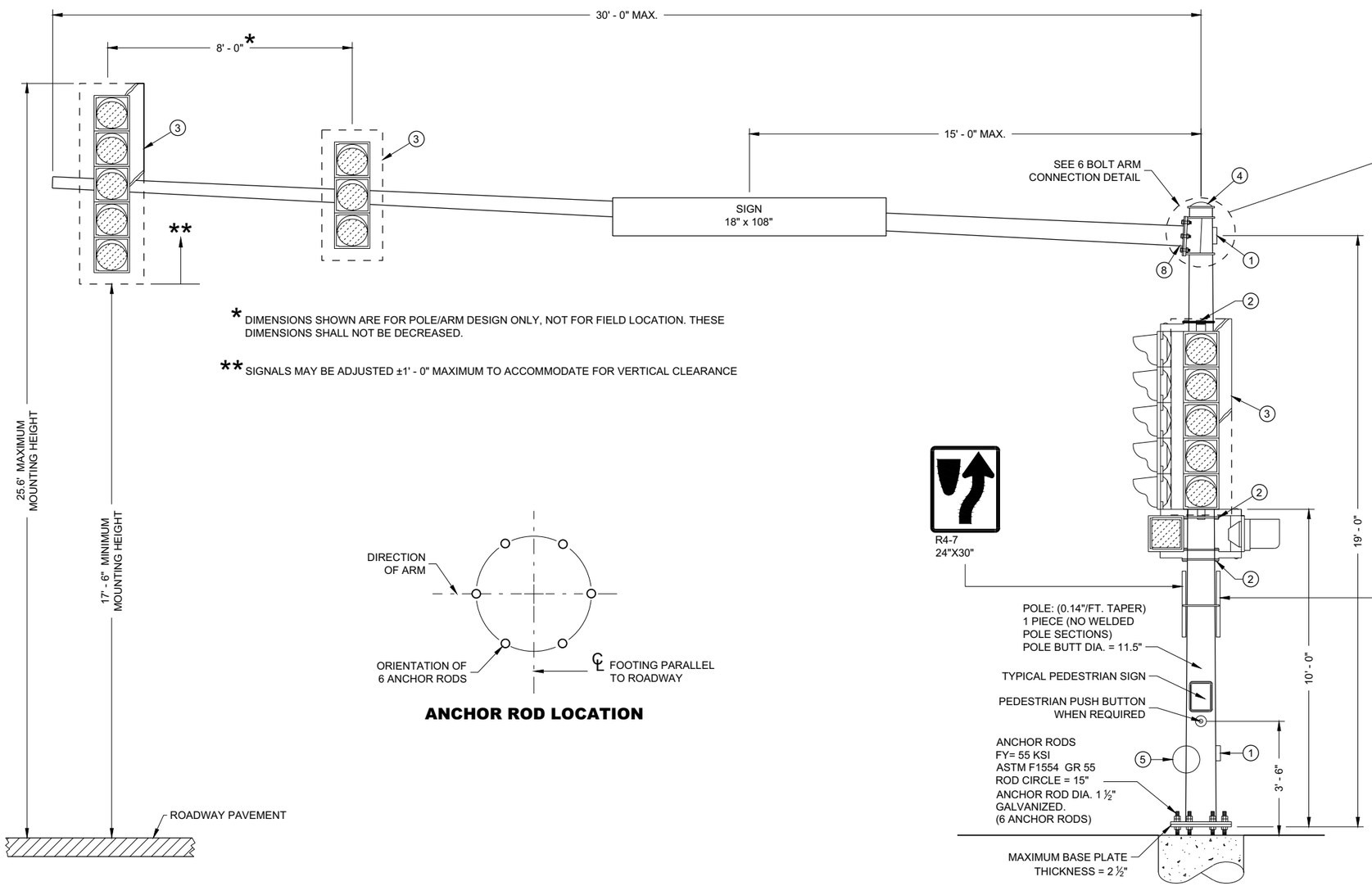

* DIMENSIONS SHOWN ARE FOR POLE/ARM DESIGN ONLY, NOT FOR FIELD LOCATION. THESE DIMENSIONS SHALL NOT BE DECREASED.

** SIGNALS MAY BE ADJUSTED ±1' - 0" MAXIMUM TO ACCOMMODATE FOR VERTICAL CLEARANCE

ANCHOR ROD LOCATION

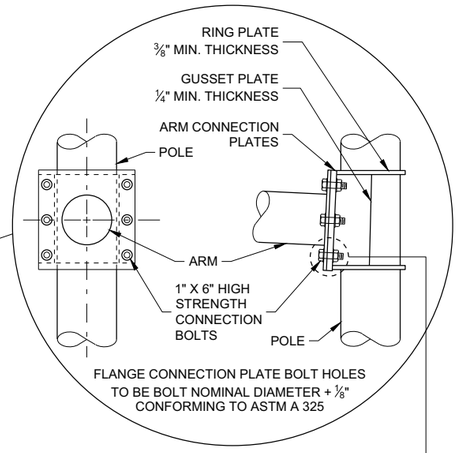

6 BOLT ARM CONNECTION DETAIL

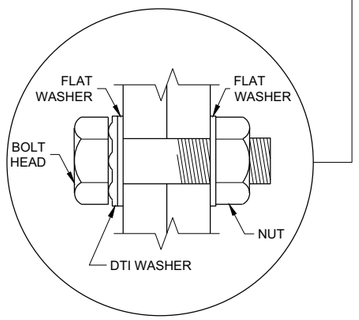

RECOMMENDED BOLT ASSEMBLY DETAIL

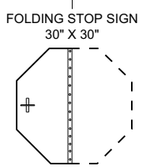

TYPE 9 POLE
15' - 30' MONOTUBE ARM
(MAXIMUM LOAD)

TYPE 9 POLE
15' - 30' MONOTUBE ARM

STATE OF WISCONSIN
DEPARTMENT OF TRANSPORTATION

APPROVED
August 2020
DATE

/S/ Ahmet Demirbilek
STATE ELECTRICAL ENGI 671

FHWA

6

SDD 09E08 - 09a

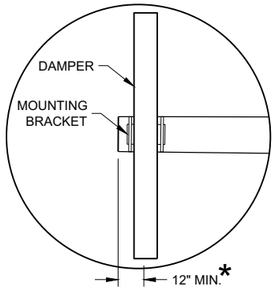

DUMBBELL VIBRATION DAMPER

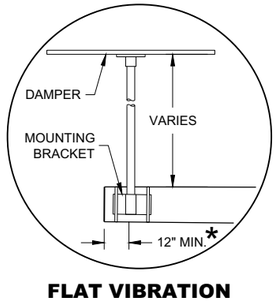

FLAT VIBRATION DAMPER

* MOUNT AS CLOSE TO END OF MAST ARM FOR MAXIMUM DAMPING PER MANUFACTURER'S RECOMMENDATIONS.

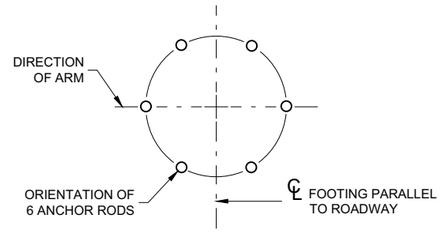

ANCHOR ROD LOCATION

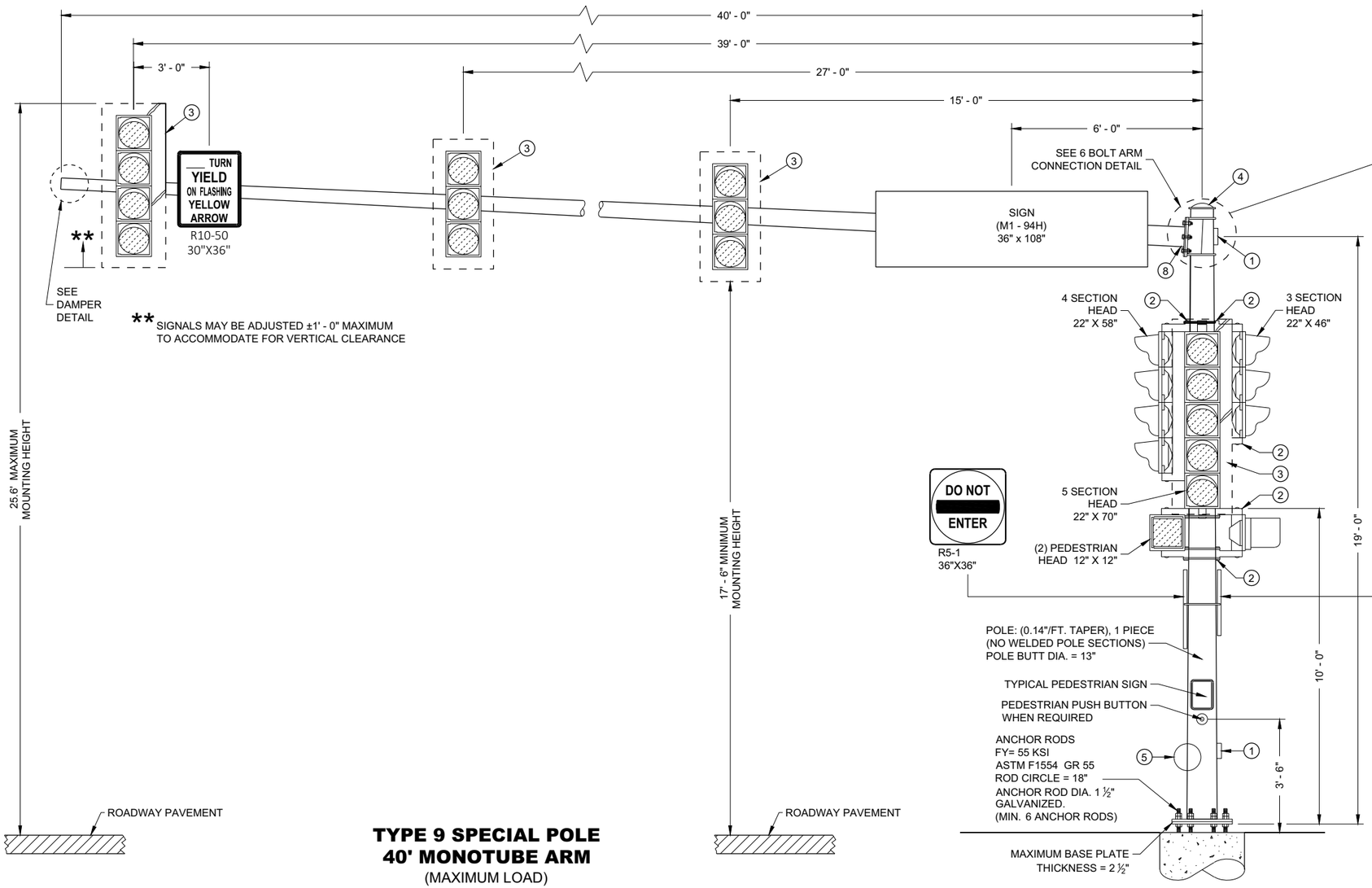

TYPE 9 SPECIAL POLE 40' MONOTUBE ARM
(MAXIMUM LOAD)

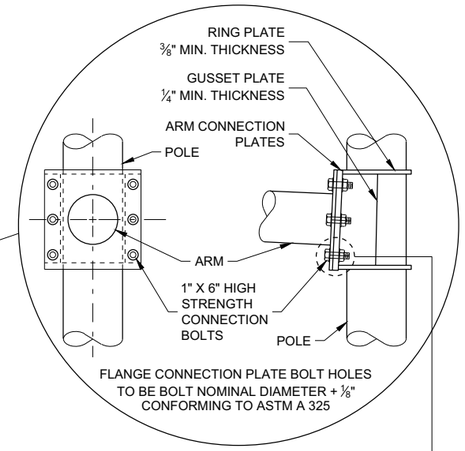

6 BOLT ARM CONNECTION DETAIL

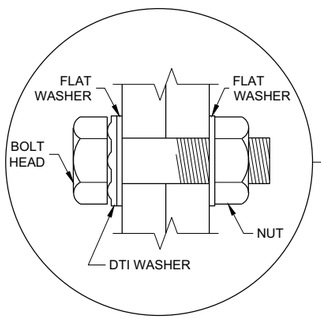

RECOMMENDED BOLT ASSEMBLY DETAIL

TYPE 9 SPECIAL POLE 40' MONOTUBE ARM

STATE OF WISCONSIN
DEPARTMENT OF TRANSPORTATION

APPROVED
August 2020
DATE

/S/ Ahmet Demirbilek
STATE ELECTRICAL ENGI 672

FHWA

6

SDD 09E08 - 09c

6

SDD 09E08 - 09c

GENERAL NOTES

DETAILS OF CONSTRUCTION NOT SHOWN ON THIS DRAWING SHALL CONFORM TO THE PERTINENT REQUIREMENTS OF THE CONTRACT.

POLE TYPES 9 AND 10 ARE FOR ARM LENGTHS 15 FOOT TO 30 FOOT.

POLE TYPES 9 SPECIAL AND 10 SPECIAL ARE FOR ARM LENGTHS 35 FOOT, 40 FOOT, AND 45 FOOT.

POLE TYPES 12 AND 13 ARE FOR ARM LENGTHS 35 FOOT TO 55 FOOT.

MONOTUBE POLES AND ARMS SHALL BE GALVANIZED STEEL.

RING STIFFENED BUILT UP BOX TYPE OF ATTACHMENT FOR TRAFFIC SIGNAL ARM.

ONE PIECE POLE CONSTRUCTION (NO WELDED POLE SECTIONS).

STANDARD STRAIGHT ARM DESIGN (3% ± RISE).

SECTION 657, POLES OF THE STANDARD SPECIFICATION SHALL APPLY TO THIS DRAWING.

PROVIDE WIREWAY THRU POLE WALL AND ARM CONNECTION PLATES. PROVIDE ROUND, SMOOTH INSIDE SURFACE.

MANUFACTURER'S SUBMITTED POLE DESIGNS AND DRAWINGS SHALL BE SIGNED AND STAMPED BY A REGISTERED PROFESSIONAL ENGINEER AND CERTIFIED AS BEING IN COMPLIANCE WITH THE AASHTO "LRFD SPECIFICATIONS FOR STRUCTURAL SUPPORTS FOR HIGHWAY SIGNS, LUMINAIRES AND TRAFFIC SIGNAL 2015 1ST EDITION (INCLUDING INTERIM REVISIONS)" AND ALL PERTINENT WISDOT SPECIFICATIONS AND DRAWINGS FOR THE LIGHTING STRUCTURES AS FOLLOWS:

CATEGORY III FATIGUE LOADS OF GALLOPING, TRUCK GUSTS (AT 45 MPH VEHICLE VELOCITY) AND NATURAL WIND GUSTS FOR DESIGN OF TYPE 9 AND TYPE 10 STRUCTURES.

CATEGORY II FATIGUE LOADS OF TRUCK GUSTS (AT 45 MPH VEHICLE VELOCITY) AND NATURAL WIND GUSTS FOR DESIGN OF TYPE 9 SPECIAL AND TYPE 10 SPECIAL STRUCTURES. IN LIEU OF DESIGNING FOR GALLOPING, A VIBRATION DAMPER MITIGATION DEVICE IS REQUIRED TO BE SUPPLIED AND INSTALLED AT THE END OF THE MAST ARM.

CATEGORY II FATIGUE FATIGUE LOADS OF GALLOPING, TRUCK GUSTS (AT 45 MPH VEHICLE VELOCITY) AND NATURAL WIND GUSTS FOR DESIGN OF TYPE12 AND TYPE 13 STRUCTURES.

115 MPH (700 YEAR MRI BASIC WIND SPEED).

SECURE THE OPENING BELOW THE BASE PLATE WITH STAINLESS STEEL OR GALVANIZED STEEL MESH AND SECURE THE MESH WITH ¾" STAINLESS STEEL BANDING AROUND THE LEVELING NUTS.

INDENT PRINT (NOMINAL ½" HIGH) THE POLE LENGTH AND FIRST TWO LETTERS OF THE MANUFACTURERS NAME ON TWO SIDES OF THE BASE PLATE 180 DEGREES APART, BEFORE GALVANIZING. THE ARM SHALL BE IDENTIFIED WITH THE SAME INFORMATION BY INDENT PRINT.

SIGNAL FACE SHALL BE MOUNTED 6 INCHES (NOMINAL) FROM THE END OF THE MONOTUBE ARM OR AS SHOWN ON THE PLAN CONSTRUCTION DETAIL OR A S DIRECTED BY THE PROJECT ENGINEER/ELECTRICAL OPERATIONS PERSONNEL. MOUNT ALL LIKE HEAD AT SAME ELEVATION.

SIGN MOUNTING BRACKETS SHALL BE FURNISHED IN ACCORDANCE WITH SECTION 637 OF THE STANDARD SPECIFICATIONS FOR HIGHWAY AND STRUCTURE CONSTRUCTION.

(1) DESIGN FOR MAXIMUM ALLOWABLE HAND HOLE WITH COVER ASSEMBLY WITH TWO ¼" X ¾" - 20 TPI STAINLESS STEEL HEX HEAD BOLTS.

(2) SIGNAL MOUNTING BRACKETS FOR POLE MOUNTING, MOUNT WITH CAP SCREW AND BANDING (SEE SPECIFICATION SECTION 658).

(3) SECURELY MOUNT BACK PLATES, PROJECTING 5" BEYOND ALL SIDES OF THE SIGNAL FACE HOUSING, PER MANUFACTURERS RECOMMENDATIONS.

(4) THE TOP OF THE POLE SHAFT AND THE MONOTUBE ARM SHALL BE EQUIPPED WITH A REMOVABLE, VENTILATED CAP HELD SECURELY IN PLACE WITH SET SCREWS.

(5) FACTORY WELDED BRACKET FOR GROUNDING LUG, OPPOSITE HAND HOLD, (LUG AND HARDWARE PAID UNDER SEPARATE ITEM). PROVIDE HOLE IN BRACKET FOR ¼" X ¾" - 20 TPI STAINLESS STEEL HEX HEAD BOLT.

(6) FACTORY WELDED "J" HOOK FOR STRAIN RELIEF FOR POLE LUMINAIRE WIRE.

(7) INSTALL STRUCTURAL IDENTIFICATION PLAQUES.

STRUCTURAL IDENTIFICATION PLAQUES SHALL BE PLACED ON THE POLES IN THE SAME DIRECTION AS THE ARM.

MOUNTING HEIGHT SHALL BE 6' - 0" ABOVE THE CURB OR SHOULDER. ADJUST IF IT IS KNOWN THAT REQUIRED TRAFFIC SIGNS WILL BE OBSTRUCTED.

(8) FACTORY DRILLED ½" DRAIN HOLE 2" FROM FLANGE CONNECTION PLATE.

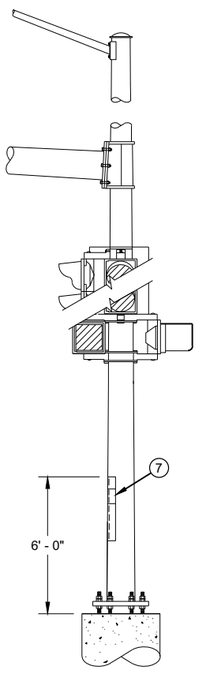

STRUCTURAL IDENTIFICATION PLAQUE PLACEMENT

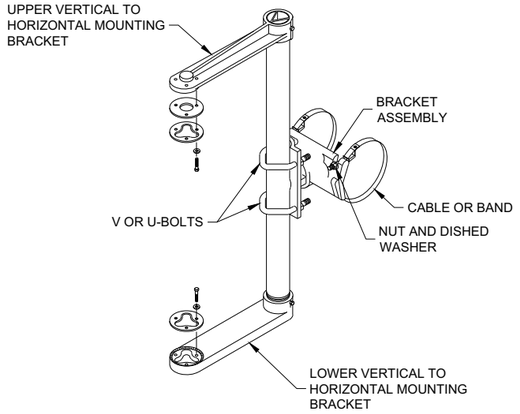

SIGNAL FACE MOUNTING BRACKET DETAIL FOR MONOTUBE ARM

(MOUNT PER MANFACTURER'S RECOMMENDATION)

TYPICAL GROUNDING (5) CONNECTIONS

NUT, BOLT AND WASHERS SHALL BE STAINLESS STEEL

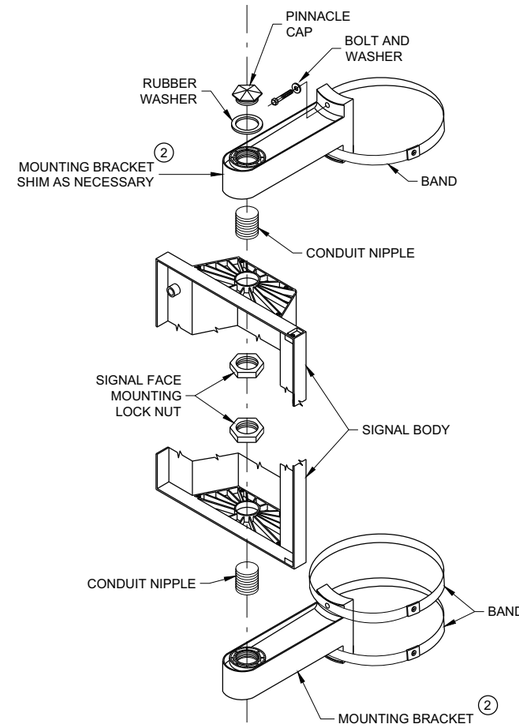

SIGNAL FACE VERTICAL MOUNTING DETAIL

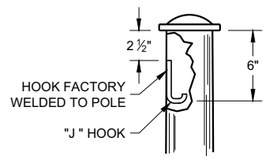

TYPICAL "J" HOOK (6) WIRE SUPPORT

GENERAL NOTES AND HARDWARE FOR TYPES 9,10, 9/10 SPECIAL, 12 AND 13 POLES WITH MONOTUBE ARMS

STATE OF WISCONSIN
DEPARTMENT OF TRANSPORTATION

APPROVED
August 2020 — DATE
/S/ Ahmet Demirbilek — STATE ELECTRICAL ENGINEER
673

FHWA

6

6

SDD 09E08 - 09k

SDD 09E08 - 09k

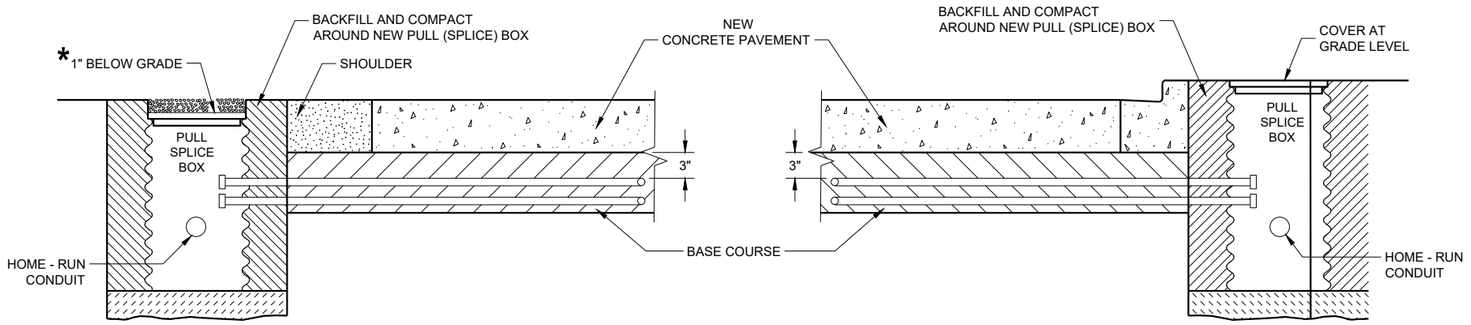

SECTION A - A
NO CURB AND GUTTER

SECTION B - B
CURB AND GUTTER

* RECESS PULL (SPLICE) BOX SO THAT THE COVER IS 3" BELOW GRADE IN SHOULDER AREAS OF CRUSHED AGGREGATE. BACKFILL OVER COVER WITH THE CRUSHED AGGREGATE TO BRING THE AREA TO GRADE LEVEL.

LOOP DETECTOR INSTALLATION DETAIL

GENERAL NOTES

DETAILS OF CONSTRUCTION, MATERIALS AND WORKMANSHIP NOT SHOWN ON THIS DRAWING SHALL CONFORM TO THE PERTINENT REQUIREMENTS OF THE CONTRACT.

PITCH LEAD OUT CONDUIT TO DRAIN TO ROADSIDE PULL (SPLICE) BOX.

LOOP SIZE, LOCATION, NUMBER OF TURNS OF WIRE AND ASSOCIATED SIGNAL PHASE SHALL BE AS SHOWN ON THE PLANS.

SPLICES SHALL BE INSTALLED BY USING CAST IN PLACE SPLICE KITS LISTED ON THE DEPARTMENTS APPROVED PRODUCTS LIST OR AN ENGINEER APPROVED EQUAL. NON-INSULATED BUTT SPLICES TO FIT #12 AWG STRANDED WIRE SHALL BE USED. SPLICES SHALL BE SOLDERED AND INSULATED FROM EACH OTHER AS PER INSTRUCTIONS INCLUDED IN THE SPLICE KIT.

MEASURE GROUND RESISTANCE USING A MEGGER. REPLACE LOOP WIRE NOT ATTAINING A READING OF INFINITY TO GROUND.

AFTER SPLICING THE LOOP WIRE TO THE LOOP LEAD-IN CABLE, THE CONTRACTOR SHALL MEASURE INDUCTANCE, GROUND RESISTANCE AND WIRE RESISTANCE AT THE CABINET END OF THE LEAD-IN CABLE AND FURNISH A COPY OF THE READING TO THE PROJECT ENGINEER FOR EVALUATION.

LOOP DETECTOR LEADS SHALL BE IDENTIFIED WITH THEIR ASSOCIATED LOOP BY USE OF WATERPROOF TAGS AT BOTH ENDS OF THE CABLE. A LISTING OF THE CABLE IDENTIFICATION PER INDIVIDUAL LOOP LEAD-IN SHALL BE PLACED IN THE CABINET.

THE #12 AWG LOOP WIRE IN THE PULL (SPLICE) BOX SHALL BE HAND TWISTED AT LEAST 3 TWISTS PER FOOT BEFORE BEING SPLICED TO THE LOOP LEAD-IN CABLE.

SPLICES OF LOOP WIRE TO LEAD-IN CABLE SHALL BE MADE ONLY IN PULL (SPLICE) BOXES AT THE SIDE OF THE ROAD.

THE #12 AWG LOOP WIRE SHALL BE INSTALLED FROM THE ROADSIDE PULL (SPLICE) BOX, THROUGH THE LOOP CONDUIT, BACK TO THE ROADSIDE PULL (SPLICE) BOX, AND BE INSTALLED IN ONE NON-SPLICED, CONTINUOUS LENGTH.

PROTECTION OF THE CONDUIT IN THE BASE COURSE SHALL BE REQUIRED AFTER INSTALLATION AND BEFORE NEW PAVEMENT IS INSTALLED.

SHOULD INSTALLATION REPAIR BE REQUIRED, IT SHALL BE DONE UNDER THE DIRECTION OF THE PROJECT ENGINEER.

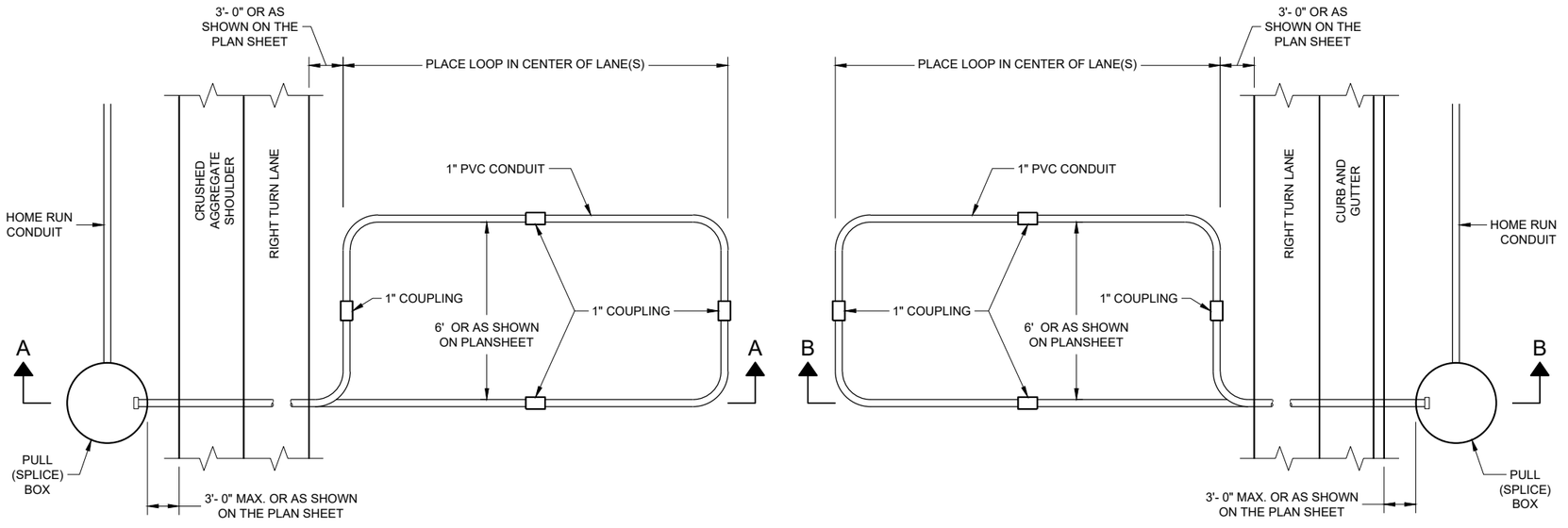

TYPICAL PLAN LOOP DETECTOR WITH 24" PULL (SPLICE) BOX

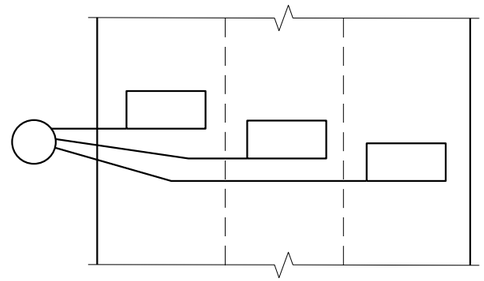

MULTI-LANE INSTALLATION

LOOP DETECTOR INSTALLED IN BASE COURSE WITH PULL (SPLICE) BOX OFF ROADWAY (OPTION 2)

STATE OF WISCONSIN
DEPARTMENT OF TRANSPORTATION

APPROVED
September 2014
DATE
/S/ Ahmet Demirbilek
STATE ELECTRICAL ENGI 674

FHWA

6

SDD 09F15 - 04b

6

SDD 09F15 - 04b

MINIMUM POLE LENGTHS	POLE BURIAL DEPTHS
25'	5'
30'	6'
35'	7'
40'	8'
45'	9'

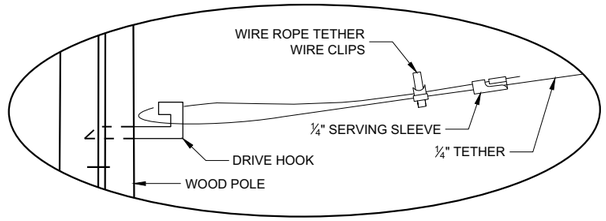

DETAIL "A"

GENERAL NOTES

DETAILS OF CONSTRUCTION, MATERIALS AND WORKMANSHIP NOT SHOWN ON THIS DRAWING SHALL CONFORM TO THE PERTINENT REQUIREMENTS OF THE CONTRACT.

1. WOOD POLES SHALL BE CLASS 4. LENGTH DETERMINED BY SIGNAL PLAN.
2. SIGNAL FACES:
   A. ALL SECTIONS SHALL BE 12" AND POLYCARBONATE.
   B. EACH SHALL CONTAIN A 5" WIDE DULL BLACK POLYCARBONATE BACKPLATE.
   C. EACH SHALL BE WIRED FROM THE TOP SIGNAL MOUNTING BRACKET.
   D. NEAR RIGHT SIGNAL FACE SUSPENDED ON THE TETHER (NO BACKPLATE) SHALL NOT BE OVER THE TRAVELED WAY. IF THE POLE IS WITHIN 5 FEET OF THE TRAVELED WAY MOUNT THE SIGNAL FACE ON THE WOOD POLE WITH BACKPLATE.
3. SPAN WIRE:
   A. EACH SPAN WIRE SHALL BE INDIVIDUALLY DOWN GUYED
   B. SIGNAL AND LIGHTING CABLES SHALL ONLY BE ATTACHED TO THE UPPER SPAN WIRE.
   C. THE SIGNAL ASSEMBLY SHALL HAVE A 17' MIN. HEIGHT ABOVE THE ROADWAY. THIS SHALL BE MEASURED AFTER THE SPAN WIRE INSTALLATION IS COMPLETED WITH ALL CABLES AND SIGNAL FACES IN PLACE. MAINTAIN MINIMUM AND MAXIMUM HEIGHTS AS ROADWAY WORK PROGRESSES.

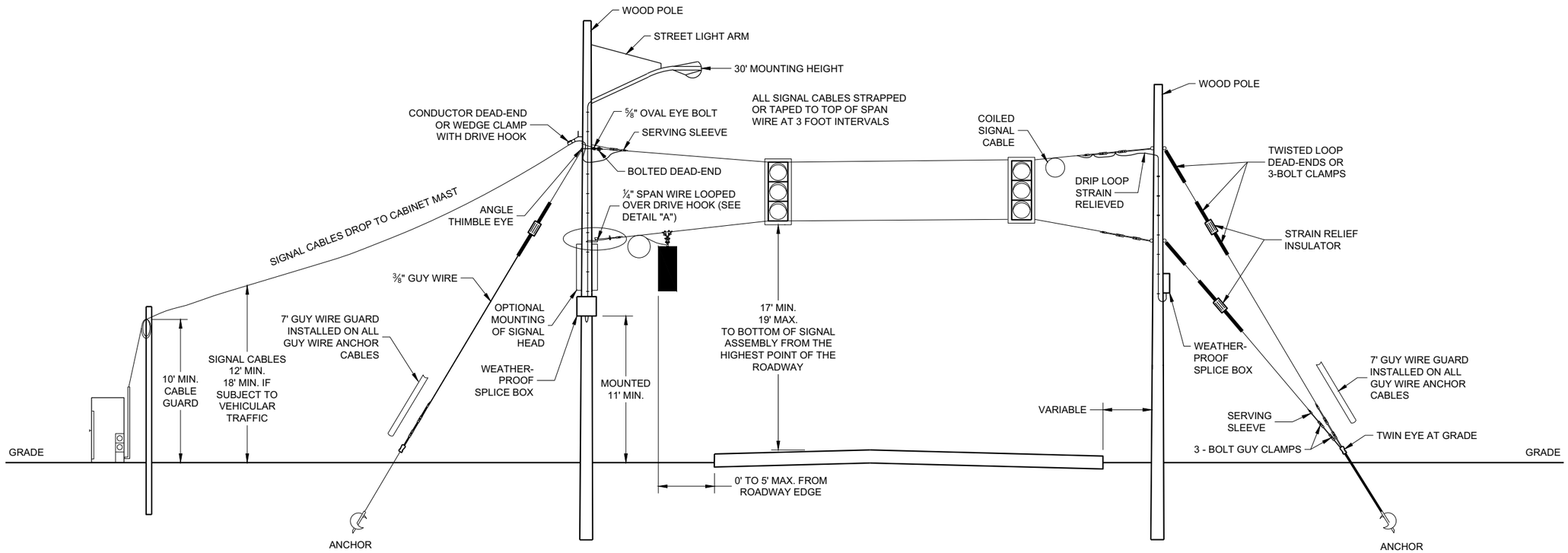

SPAN WIRE
TEMPORARY SIGNALS

SPAN WIRE TEMPORARY TRAFFIC SIGNAL

STATE OF WISCONSIN
DEPARTMENT OF TRANSPORTATION

APPROVED
June 2015
DATE
/S/ Ahmet Demerbilek
STATE ELECTRICAL ENGI 675

FHWA

6

6

SDD09G01 - 04a

SDD09G01 - 04a

MINIMUM POLE LENGTHS	CLASS	POLE BURIAL DEPTHS
25'	V	5'
30'	V	6'
35'	IV	7'
40'	IV	8'
45'	IV	9'

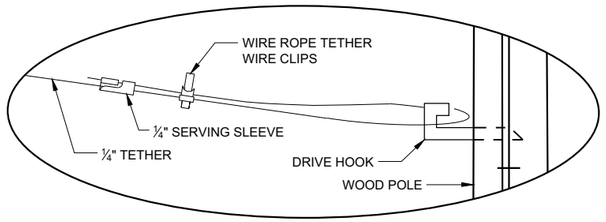

DETAIL "A"

GENERAL NOTES

DETAILS OF CONSTRUCTION, MATERIALS AND WORKMANSHIP NOT SHOWN ON THIS DRAWING SHALL CONFORM TO THE PERTINENT REQUIREMENTS OF THE CONTRACT.

1. WOOD POLES SHALL BE CLASS 4. LENGTH DETERMINED BY SIGNAL PLAN.
2. SIGNAL FACES:
   - A. ALL SECTIONS SHALL BE 12" AND POLYCARBONATE.
   - B. EACH SHALL CONTAIN A 5" WIDE DULL BLACK POLYCARBONATE BACKPLATE.
   - C. EACH SHALL BE WIRED FROM THE TOP SIGNAL MOUNTING BRACKET.
   - D. NEAR RIGHT SIGNAL FACE SUSPENDED ON THE TETHER (NO BACKPLATE) SHALL NOT BE OVER THE TRAVELED WAY. IF THE POLE IS WITHIN 5 FEET OF THE TRAVELED WAY MOUNT THE SIGNAL FACE ON THE WOOD POLE WITH BACKPLATE.
   - E. FAR INDICATION SHALL BE MAINTAINED OVER CENTER OF TRAFFIC LANE.
3. SPAN WIRE:
   - A. EACH SPAN WIRE SHALL BE INDIVIDUALLY DOWN GUYED
   - B. SIGNAL AND LIGHTING CABLES SHALL ONLY BE ATTACHED TO THE UPPER SPAN WIRE.
   - C. THE SIGNAL ASSEMBLY SHALL HAVE A 17' MIN. HEIGHT ABOVE THE ROADWAY. THIS SHALL BE MEASURED AFTER THE SPAN WIRE INSTALLATION IS COMPLETED WITH ALL CABLES AND SIGNAL FACES IN PLACE. MAINTAIN MINIMUM AND MAXIMUM HEIGHTS AS ROADWAY WORK PROGRESSES.

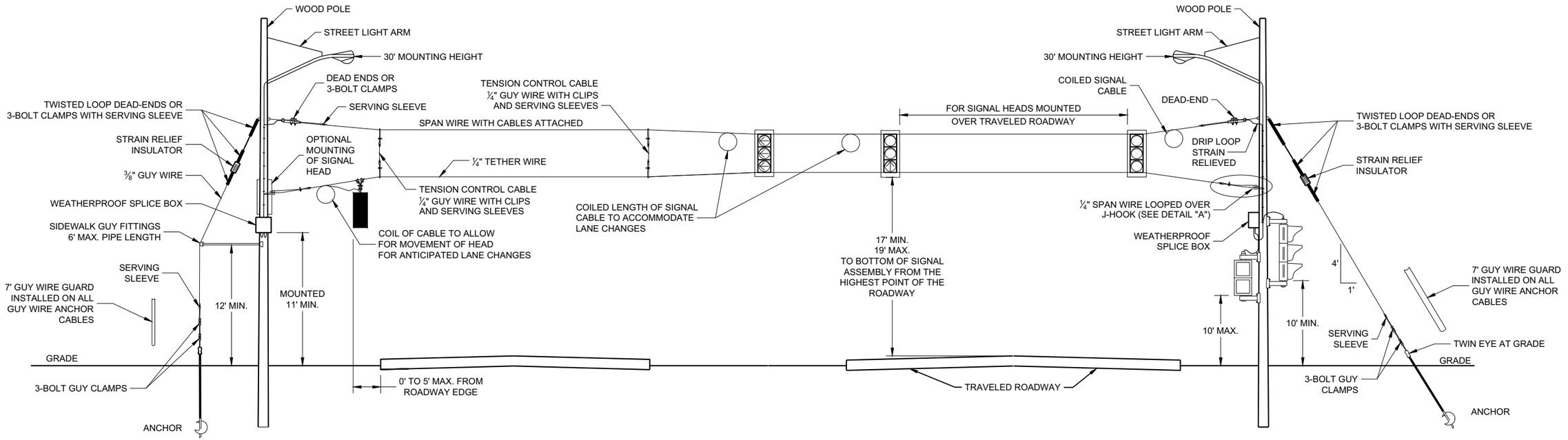

SPAN WIRE
TEMPORARY SIGNALS
4 LANE ROADWAYS

SPAN WIRE TEMPORARY TRAFFIC SIGNAL

STATE OF WISCONSIN
DEPARTMENT OF TRANSPORTATION

APPROVED
June 2015
DATE

/S/ Ahmet Demerbilek
STATE ELECTRICAL ENGI 676

FHWA

6

6

SDD09G01 - 04b

SDD09G01 - 04b

MINIMUM POLE LENGTHS	CLASS	POLE BURIAL DEPTHS
25'	V	5'
30'	V	6'
35'	IV	7'
40'	IV	8'
45'	IV	9'

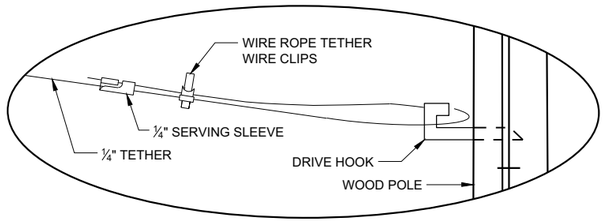

DETAIL "A"

GENERAL NOTES

DETAILS OF CONSTRUCTION, MATERIALS AND WORKMANSHIP NOT SHOWN ON THIS DRAWING SHALL CONFORM TO THE PERTINENT REQUIREMENTS OF THE CONTRACT.

1. WOOD POLES SHALL BE CLASS 4. LENGTH DETERMINED BY SIGNAL PLAN.
2. SIGNAL FACES:
   - A. ALL SECTIONS SHALL BE 12" AND POLYCARBONATE.
   - B. EACH SHALL CONTAIN A 5" WIDE DULL BLACK POLYCARBONATE BACKPLATE.
   - C. EACH SHALL BE WIRED FROM THE TOP SIGNAL MOUNTING BRACKET.
   - D. NEAR RIGHT SIGNAL FACE SUSPENDED ON THE TETHER (NO BACKPLATE) SHALL NOT BE OVER THE TRAVELED WAY. IF THE POLE IS WITHIN 5 FEET OF THE TRAVELED WAY MOUNT THE SIGNAL FACE ON THE WOOD POLE WITH BACKPLATE.
   - E. FAR INDICATION SHALL BE MAINTAINED OVER CENTER OF TRAFFIC LANE.
3. SPAN WIRE:
   - A. EACH SPAN WIRE SHALL BE INDIVIDUALLY DOWN GUYED
   - B. SIGNAL AND LIGHTING CABLES SHALL ONLY BE ATTACHED TO THE UPPER SPAN WIRE.
   - C. THE SIGNAL ASSEMBLY SHALL HAVE A 17' MIN. HEIGHT ABOVE THE ROADWAY. THIS SHALL BE MEASURED AFTER THE SPAN WIRE INSTALLATION IS COMPLETED WITH ALL CABLES AND SIGNAL FACES IN PLACE. MAINTAIN MINIMUM AND MAXIMUM HEIGHTS AS ROADWAY WORK PROGRESSES.

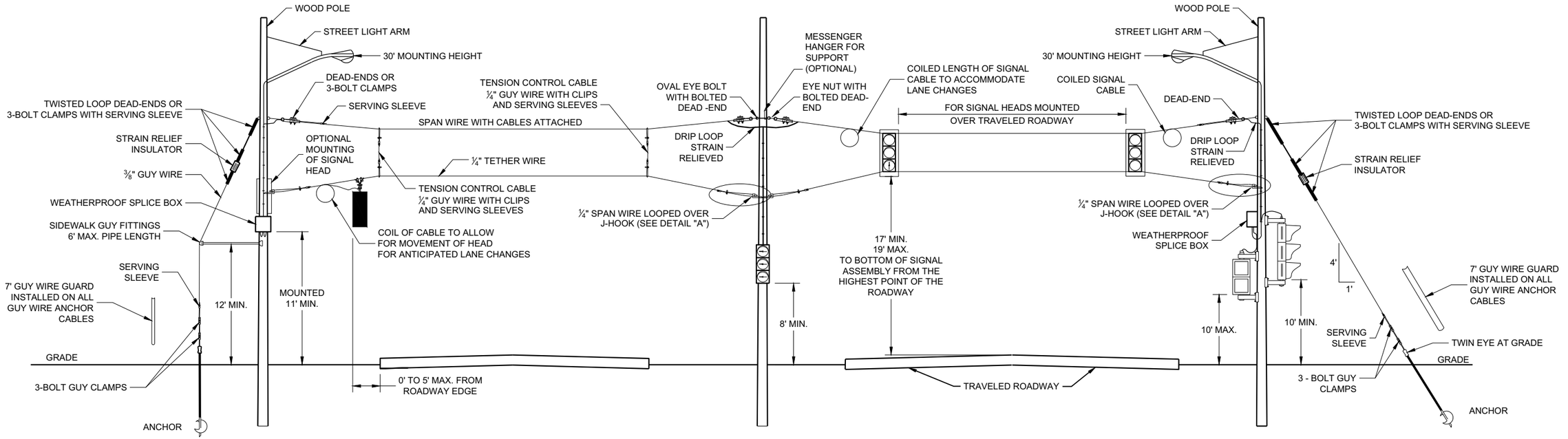

SPAN WIRE
TEMPORARY SIGNALS
4 LANE ROADWAYS

SPAN WIRE TEMPORARY TRAFFIC SIGNAL

STATE OF WISCONSIN
DEPARTMENT OF TRANSPORTATION

APPROVED
June 2015
DATE

/S/ Ahmet Demerbilek
STATE ELECTRICAL ENGI 677

FHWA

6

6

SDD09G01 - 04c

SDD09G01 - 04c

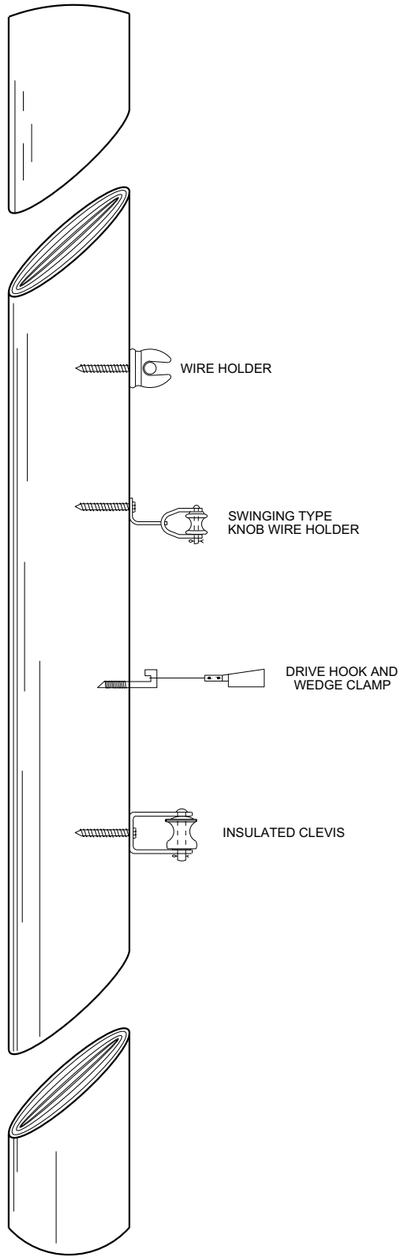

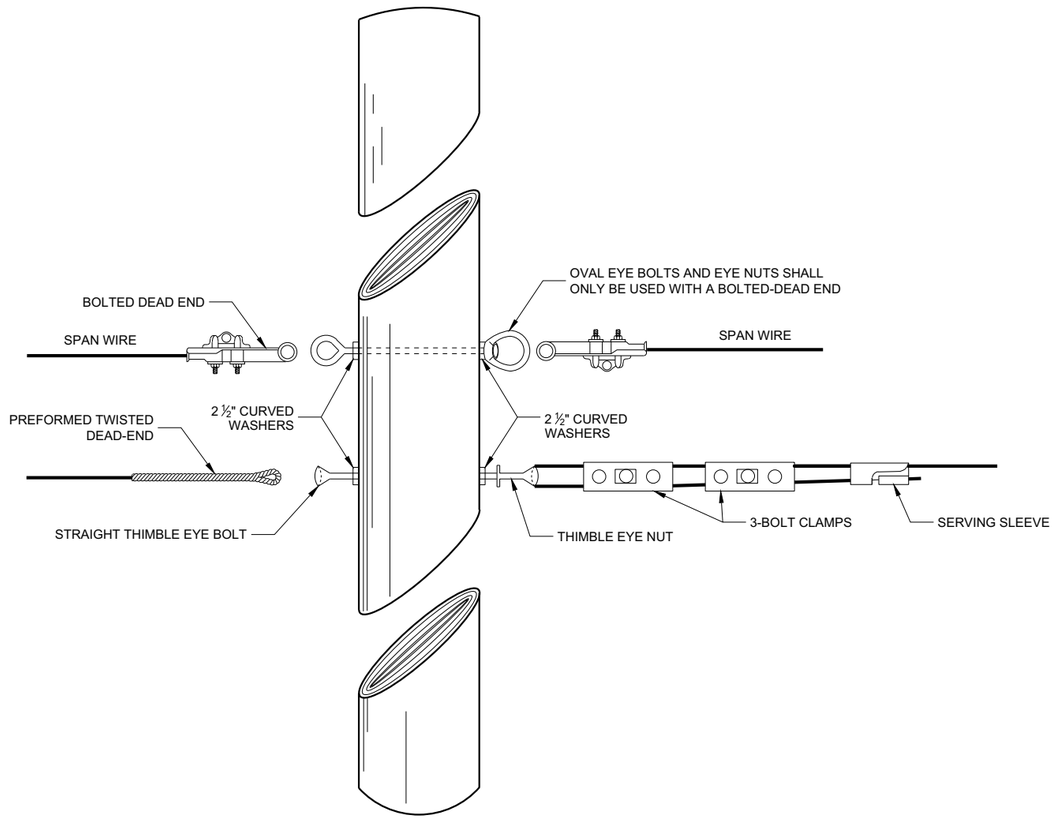

SPAN WIRE TEMPORARY TRAFFIC SIGNAL

STATE OF WISCONSIN
DEPARTMENT OF TRANSPORTATION

APPROVED

June 2015
DATE

/S/ Ahmet Demerbilek
ROADWAY STANDARDS DEVE ENGINEER

678

FHWA

6

SDD 09G01 - 4d

GENERAL NOTES

1. USE ¾" DRILL IN WOOD POLE TO PROVIDE FOR ⅝" BOLTS.
2. SAFETY LOOP REQUIRED ON EACH END OF ALL SPAN WIRES.

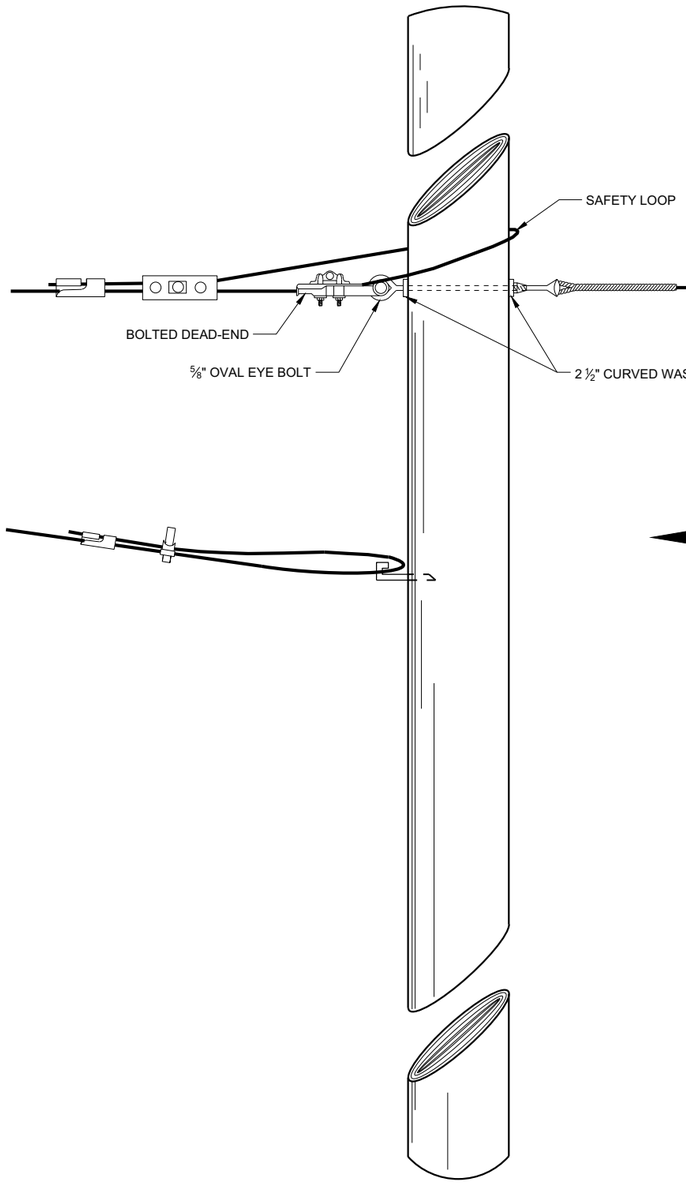

SPAN WIRE POLE

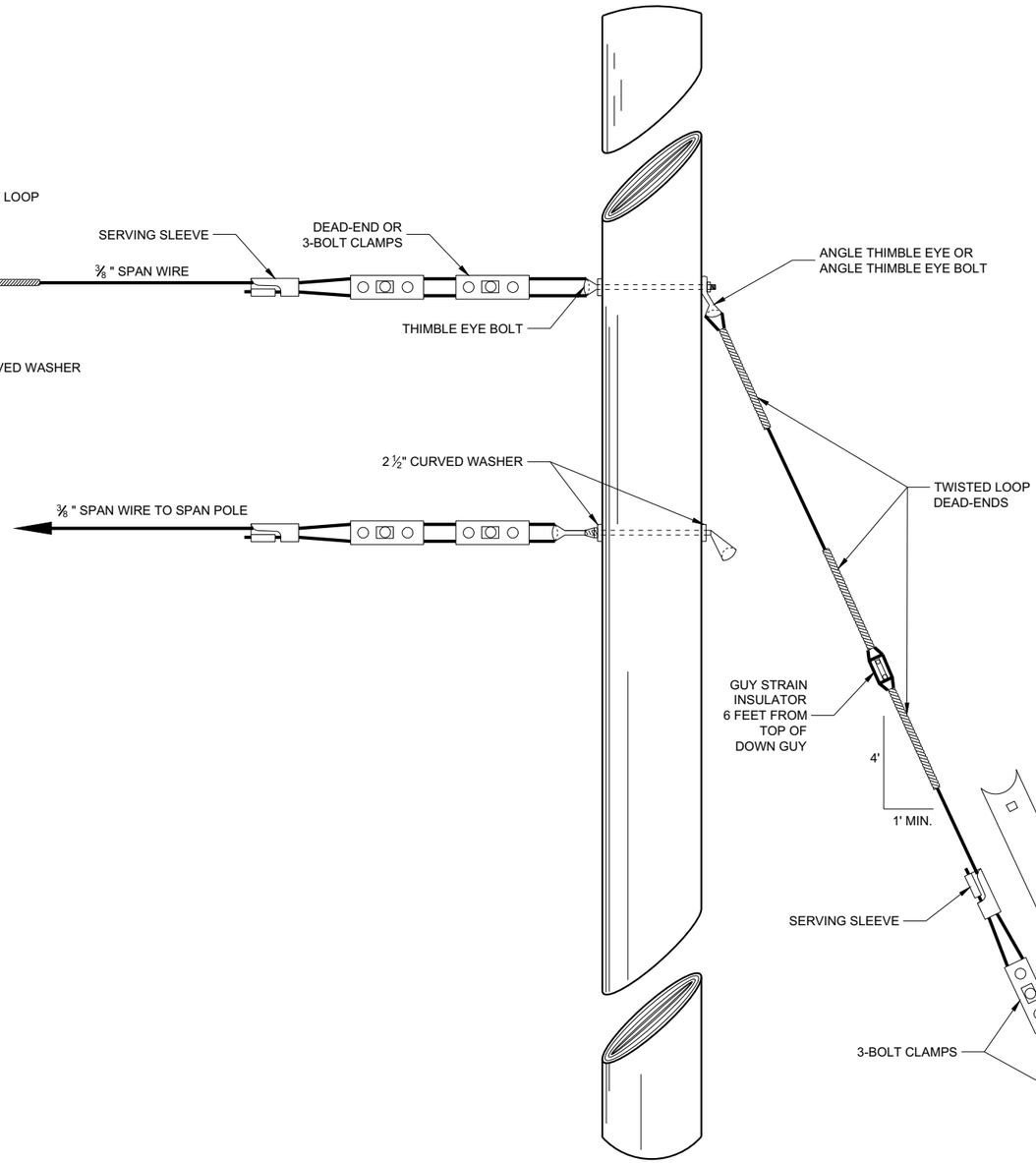

GUY POLE

TYPICAL DEAD-ENDINGS OR GUYING

SPAN WIRE TEMPORARY TRAFFIC SIGNAL

STATE OF WISCONSIN
DEPARTMENT OF TRANSPORTATION

APPROVED
June 2015 — DATE
/S/ Ahmet Demerbilek — ROADWAY STANDARDS DEVE ENGINEER
FHWA

6

SDD 09G01 - 4e

6

SDD 09G01 - 4e

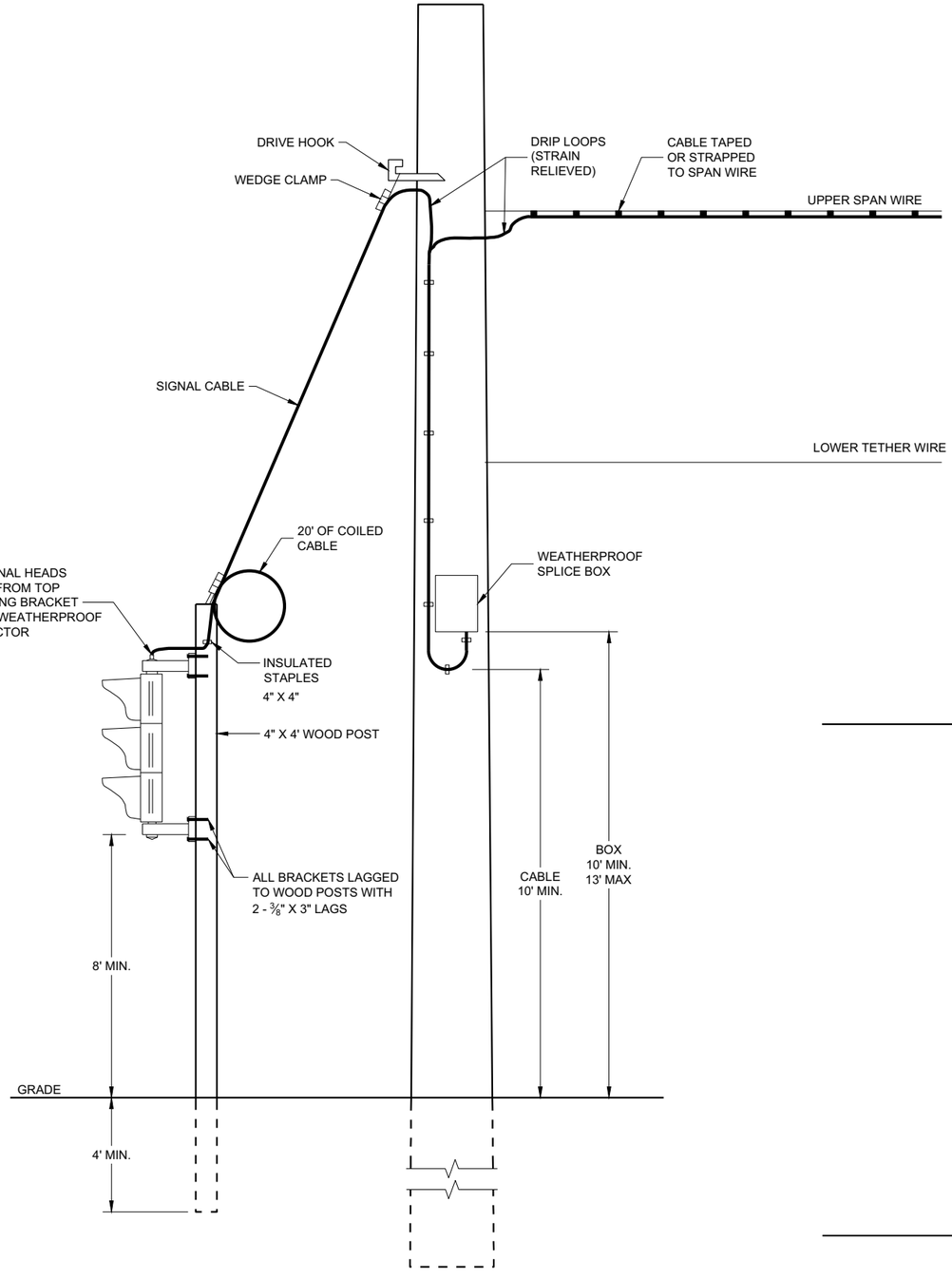

TYPICAL DROP TO TEMPORARY MOVEABLE SIGNAL

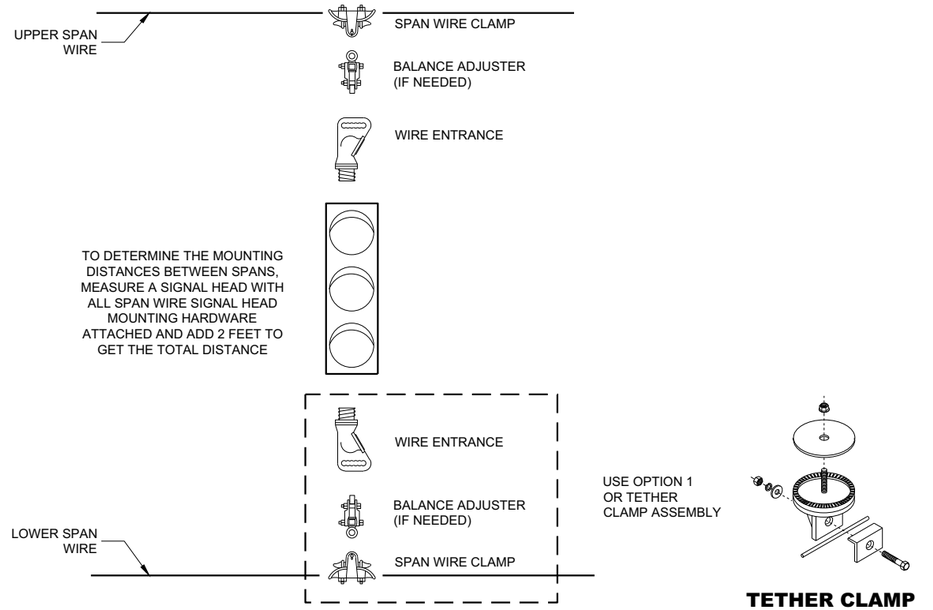

OPTION 1

USE OPTION 1 OR TETHER CLAMP ASSEMBLY

TETHER CLAMP ASSEMBLY OPTION

TYPICAL SPAN WIRE MOUNTING HARDWARE

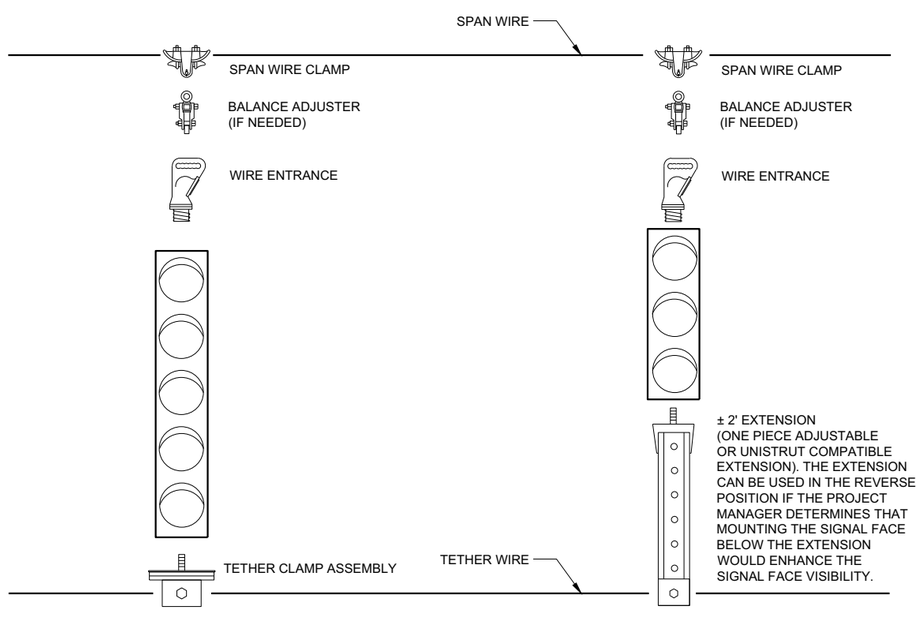

5 SECTION VERTICAL WITH 3 SECTION VERTICAL ON ONE SPAN WIRE

SPAN WIRE TEMPORARY TRAFFIC SIGNAL

STATE OF WISCONSIN
DEPARTMENT OF TRANSPORTATION

APPROVED
June 2015
DATE

/S/ Ahmet Demerbilek
ROADWAY STANDARDS DEVE ENGINEER

680

FHWA

6
SDD 09G01 - 4f

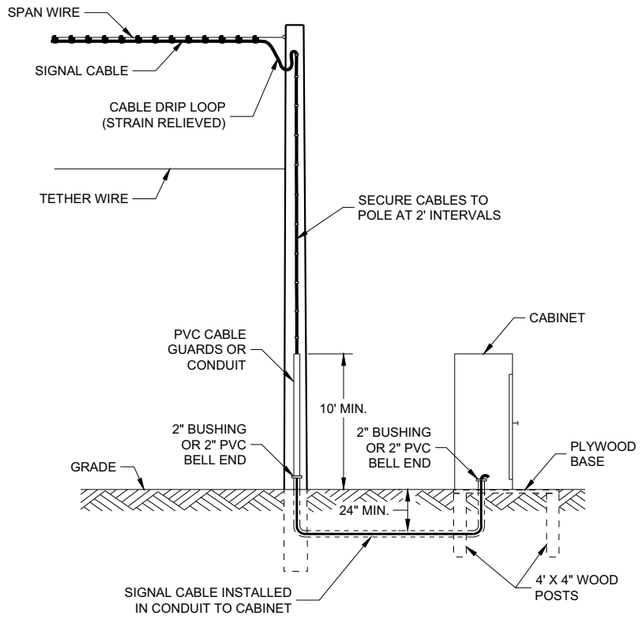

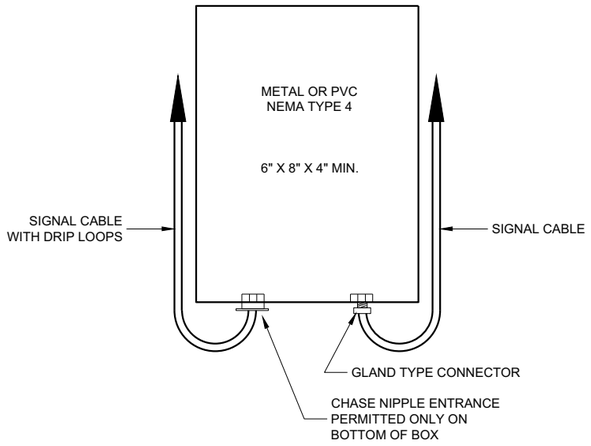

SPLICE BOX

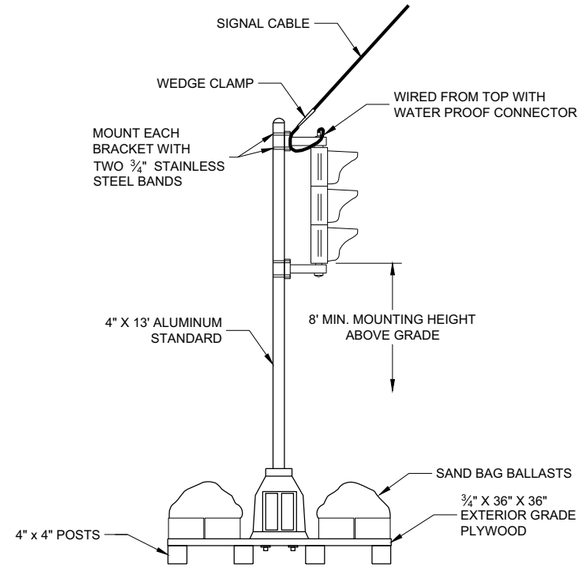

TYPICAL SKID TYPE TEMPORARY

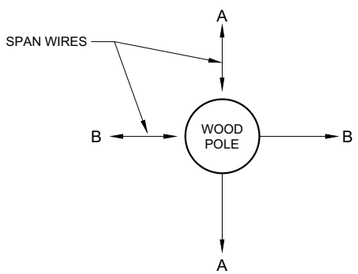

ALL DOWN OR SIDEWALK GUYS
SHALL BE INSTALLED IN THE
OPOSITE DIRECTION OF THE
STRAIN OF THE SPAN WIRE

CORNER POLES

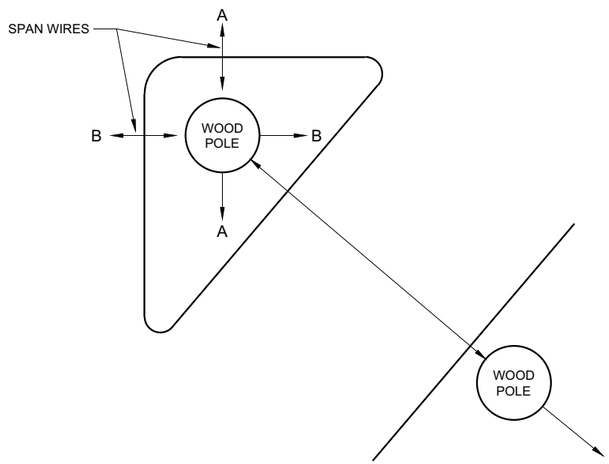

ISLAND POLES

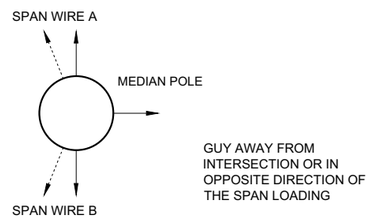

GUY AWAY FROM
INTERSECTION OR IN
OPPOSITE DIRECTION OF
THE SPAN LOADING

MEDIAN POLES

SPAN WIRE TEMPORARY TRAFFIC SIGNAL

STATE OF WISCONSIN
DEPARTMENT OF TRANSPORTATION

APPROVED
June 2015
DATE

/S/ Ahmet Demerbilek
ROADWAY STANDARDS DEVE
ENGINEER

FHWA

SDD 09G01 - 4g

6

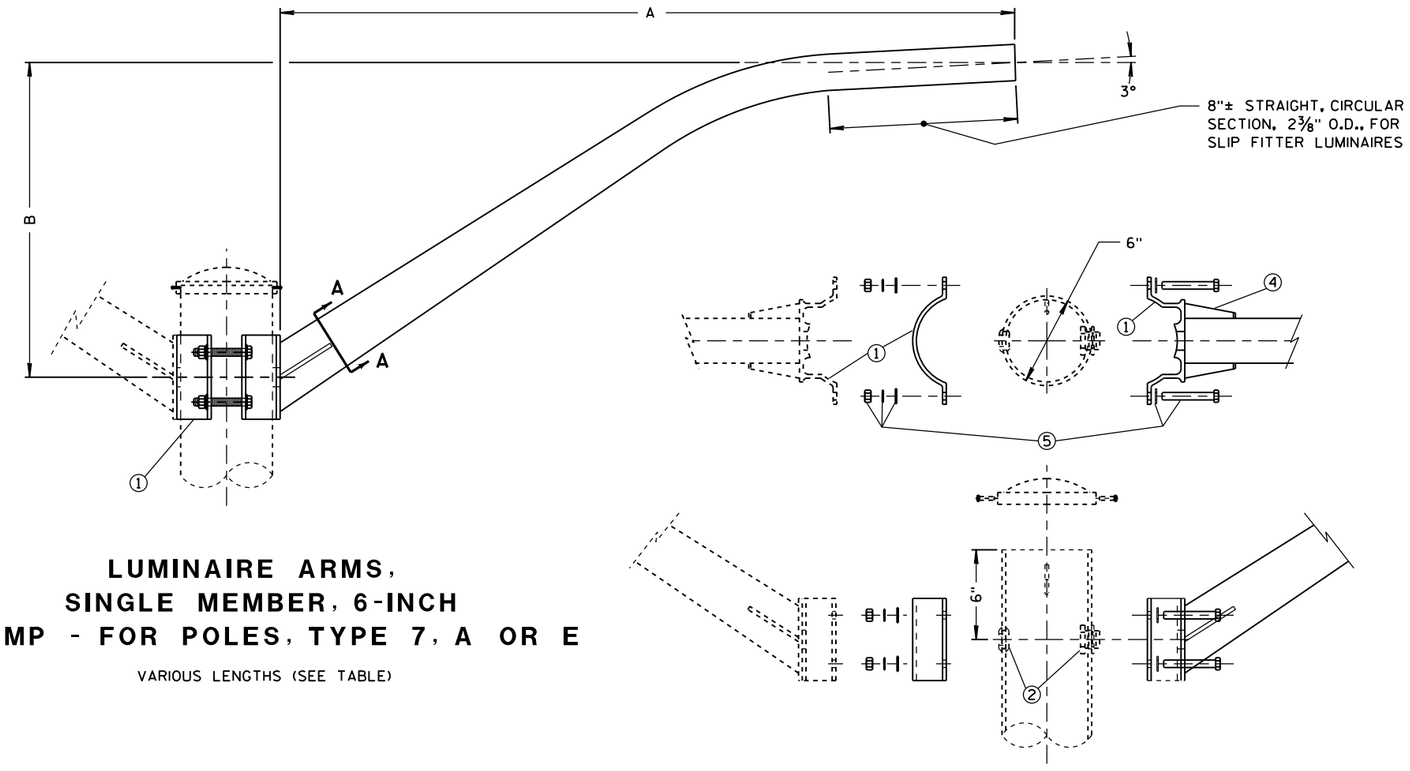

LUMINAIRE ARMS, SINGLE MEMBER, 6-INCH CLAMP - FOR POLES, TYPE 7, A OR E

VARIOUS LENGTHS (SEE TABLE)

CLAMP ASSEMBLY

SINGLE MEMBER CLAMP SHOWN

TYPE	DIM. A NOMINAL ARM LENGTH (FT)	DIM. B APPROX. RISE (FT)
SINGLE MEMBER	4.0	2.0
SINGLE MEMBER	8.0	3.0
SINGLE MEMBER	10.0	3.0
SINGLE MEMBER	15.0	3.0

GENERAL NOTES

DETAILS OF CONSTRUCTION, MATERIALS, AND WORKMANSHIP NOT SHOWN ON THIS DRAWING SHALL CONFORM TO THE PERTINENT REQUIREMENTS OF THE CONTRACT.

ARMS AND CLAMP EXTRUSIONS SHALL BE CONSTRUCTED OF NATURAL FINISH 6063-T6 ALUMINUM.

HEAT TREATMENT OF WELDS IN STRUCTURAL AREAS IS REQUIRED.

ALL THREADED FASTENER COMPONENTS SHALL BE STAINLESS STEEL. NUTS SHALL BE HEX NUTS. BOLTS SHALL BE HEX HEAD. ALL THREADED SURFACES SHALL BE COATED WITH ANTI-SEIZE COMPOUND PRIOR TO INSTALLATION.

LUMINAIRE LOADING FOR DESIGN CALCULATION SHALL BE 50 LBS. IN WEIGHT AND 1.5 SQ. FT. FOR E.P.A..

① CLAMPS SHALL BE EXTRUDED ALUMINUM.

② RACE WAY: 1 3/8" FIELD DRILLED HOLE WITH 1" CHASE NIPPLE AND NUT (OR NEOPRENE GROMMET) PER EACH REQUIRED LUMINAIRE ARM. PROVIDE 1 1/2" HOLE IN CLAMP EXTRUSION TO CONTINUE RACEWAY.

③ STIFFENER

④ GUSSETS REQUIRED.

⑤ CLAMP BOLT ASSEMBLY (BOLT - 1/2"-13 UNC, 2 EACH - FLAT WASHER, LOCK WASHER, NUT) - 4 EACH PER CLAMP.

LUMINAIRE ARMS, SINGLE MEMBER 6-INCH CLAMP

STATE OF WISCONSIN
DEPARTMENT OF TRANSPORTATION

APPROVED
Sept. 2014 — DATE
/S/ Ahmet Demirbilek — STATE ELECTRICAL
FHWA

6

S.D.D. 10 A 18-5a

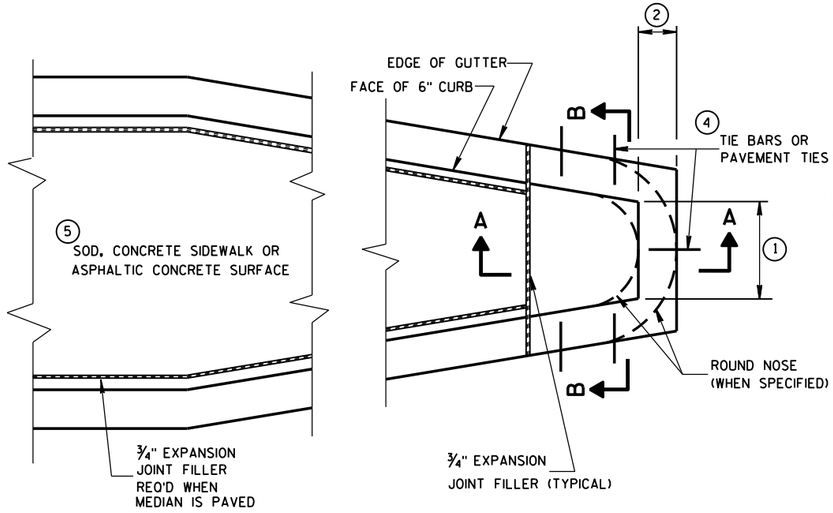

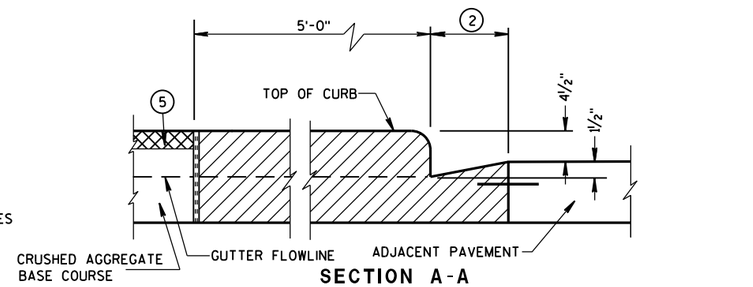

SECTION A-A

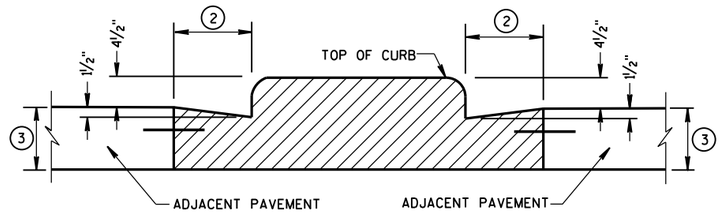

SECTION B-B

CONCRETE MEDIAN BLUNT NOSE DETAIL

GENERAL NOTES

DETAILS OF CONSTRUCTION, MATERIALS AND WORKMANSHIP NOT SHOWN ON THIS DRAWING SHALL CONFORM TO THE PERTINENT REQUIREMENTS OF THE STANDARD SPECIFICATIONS AND THE APPLICABLE SPECIAL PROVISIONS.

(1) SEE PLAN FOR MEDIAN NOSE WIDTH AND RADIUS (FOR ROUND NOSE ALTERNATE).

(2) WIDTH OF GUTTER TO MATCH EXISTING ADJACENT GUTTER OR AS SPECIFIED ELSEWHERE IN THE PLAN.

(3) DEPTH EQUAL TO ADJACENT PAVEMENT. ADJACENT PAVEMENT STRUCTURE DETAILS ARE SHOWN ON THE PLAN. TYPICAL OPTIONS ARE:

(1) NEW OR EXISTING CONCRETE PAVEMENT.

(2) ASPHALTIC CONCRETE PAVEMENT OVER NEW OR EXISTING CONCRETE BASE COURSE.

(3) ASPHALTIC CONCRETE PAVEMENT OVER CRUSHED AGGREGATE BASE COURSE.

(4) TIE BARS OR PAVEMENT TIES REQUIRED IN NEW CONCRETE PAVEMENT OR CONCRETE BASE COURSE. TIE BARS SHALL BE NO. 4 X 2'-0" SPACED AT 2'-0" C-C.

PAVEMENT TIES REQUIRED IN EXISTING CONCRETE BASE COURSE. PAVEMENT TIES SHALL BE NO. 6 X 1'-0" SPACED AT 3'-0" C-C INSTALLED ON A HORIZONTAL SKEW OF 6:1. THE DIRECTION OF SKEW SHALL ALTERNATE AFTER EVERY ONE OR TWO BARS.

(5) SURFACE TYPE AND DETAILS ARE SHOWN ELSEWHERE IN THE PLAN.

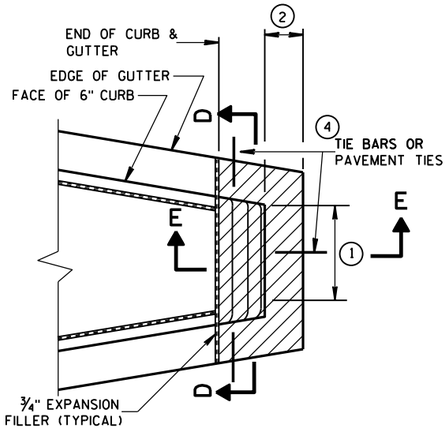

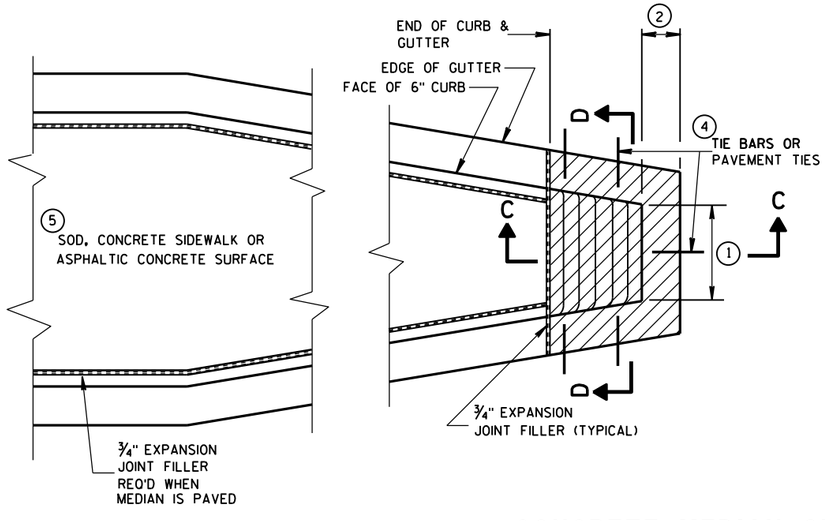

CONCRETE MEDIAN SLOPED NOSE TYPE 1

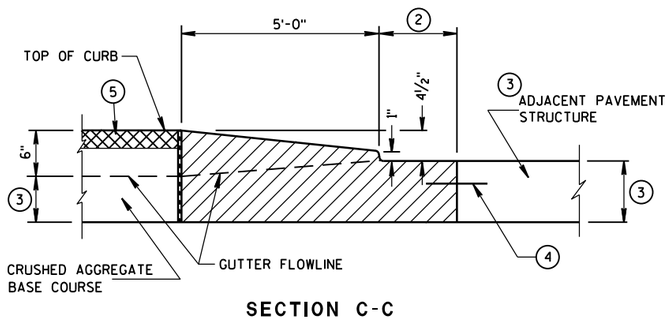

SECTION C-C

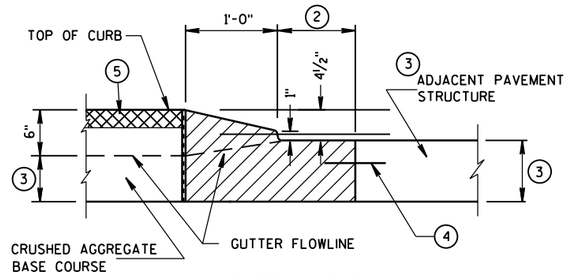

SECTION E-E

CONCRETE MEDIAN SLOPED NOSE TYPE 2

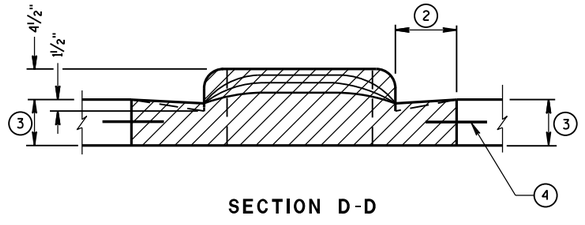

SECTION D-D

CONCRETE MEDIAN NOSE

STATE OF WISCONSIN
DEPARTMENT OF TRANSPORTATION

APPROVED
6/8/2006
DATE
/S/ Jerry H. Zogg
ROADWAY STANDARDS DEVELOPMENT ENGINEER
FHWA

6

S.D.D. 11 B 2-2

6

S.D.D. 11 B 2-2

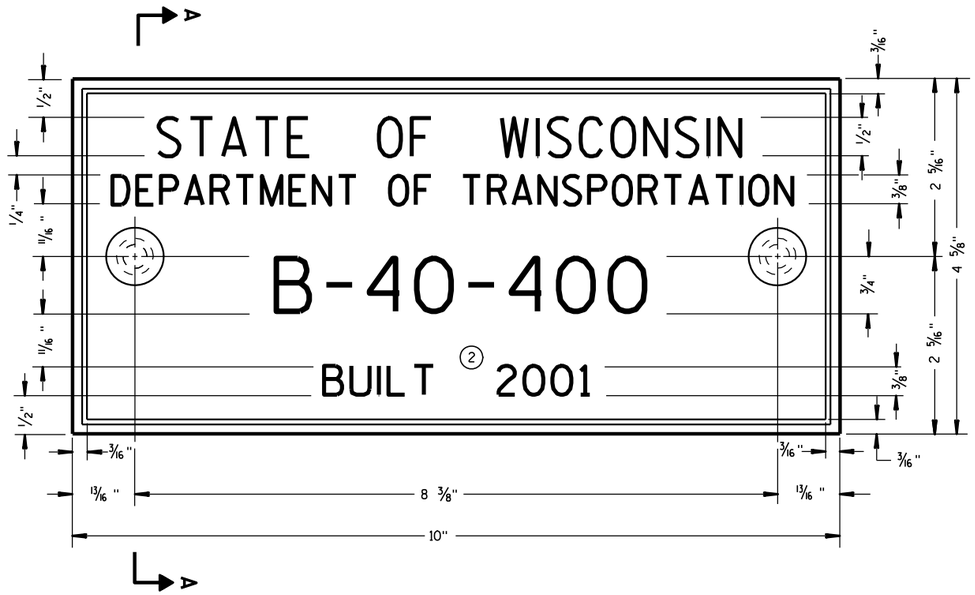

TYPICAL NAME PLATE
(BRIDGES, CULVERTS, AND RETAINING WALLS)

GENERAL NOTES

NAME PLATES TO BE INSTALLED ON BRIDGES, CULVERTS, AND RETAINING WALLS SHALL CONFORM TO THE REQUIREMENTS OF SECTION 502.3.11 OF THE STANDARD SPECIFICATIONS.

THE BRIDGE NUMBER AND YEAR BUILT SHOWN ON THIS DRAWING ARE EXAMPLES ONLY. SEE CONSTRUCTION PLANS FOR INDIVIDUAL NUMBERING AND YEAR BUILT.

(1) EPOXY RESIN SHALL BE FROM AN APPROVED MANUFACTURER AND USED IN ACCORDANCE WITH MANUFACTURER'S RECOMMENDATIONS.

(2) REHABILITATION OF AN EXISTING STRUCTURE SHOULD USE THE DATE OF ORIGINAL STRUCTURE CONSTRUCTION.

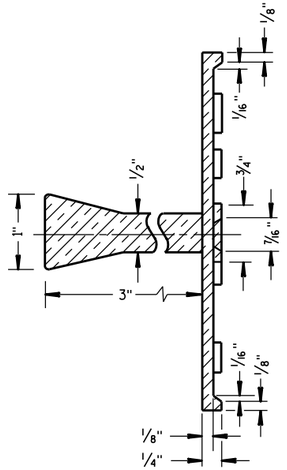

SECTION A-A

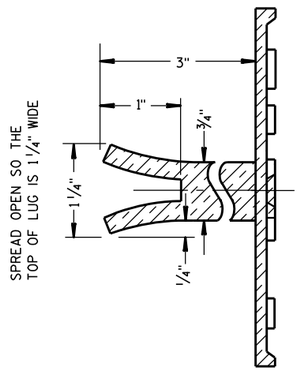

ALTERNATE LUG

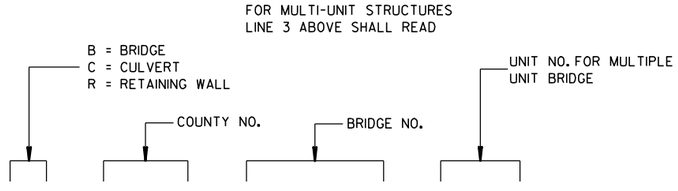

NUMBERING DESIGNATION
MULTI-UNIT STRUCTURES

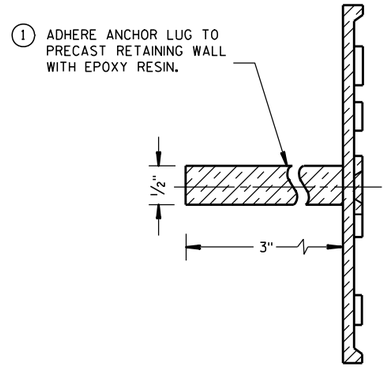

ALTERNATE LUG
(FOR ATTACHMENT TO PRECAST STRUCTURES)

NAME PLATE (STRUCTURES)

STATE OF WISCONSIN
DEPARTMENT OF TRANSPORTATION

APPROVED

3/26/10 DATE

/S/ Scot Beck -- CHIEF STRUCTURAL DEVELOP 684 ENGINEER

FHWA

6

S.D.D. 12 A 3-10

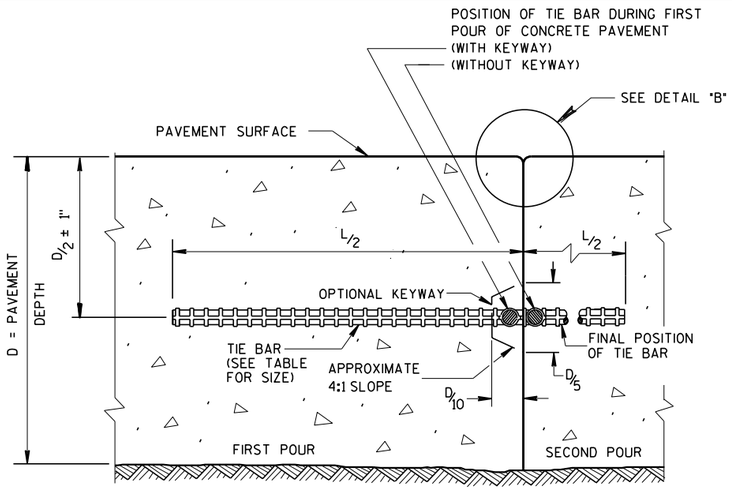

CONSTRUCTION JOINT

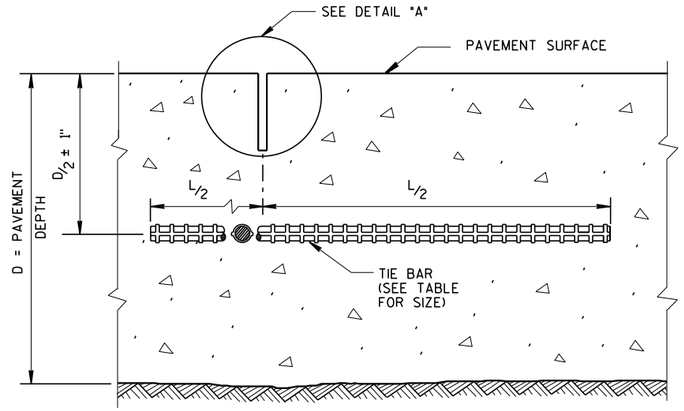

SAWED JOINT

GENERAL NOTES

CREATE A LONGITUDINAL JOINT FOR PAVEMENT WIDTHS GREATER THAN 15 FEET.

CORRELATE LONGITUDINAL JOINTS WITH LANE LINES WHEN POSSIBLE.

(1) ANCHOR TIE BARS INTO DRILLED HOLES WITH AN EPOXY.

(2) PAVEMENT THAT WAS IN PLACE PRIOR TO THE CONTRACT.

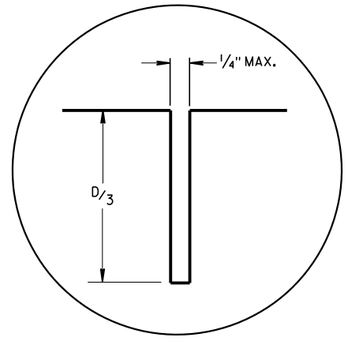

DETAIL "A"

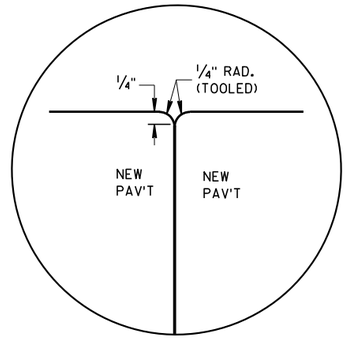

DETAIL "B"

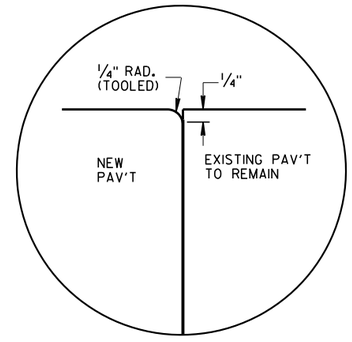

DETAIL "C"

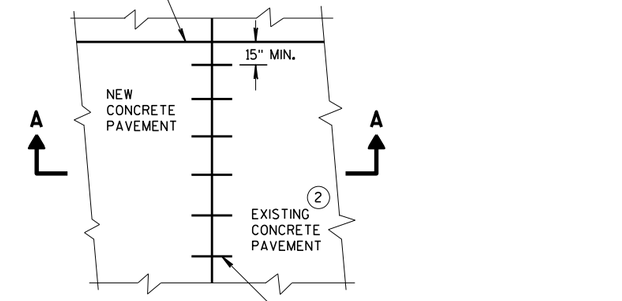

PLAN VIEW

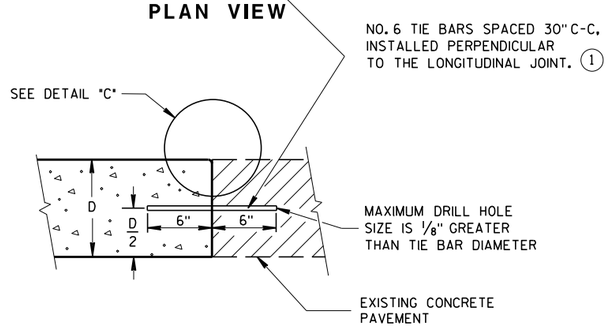

SECTION A-A
LONGITUDINAL CONSTRUCTION JOINT TIE BARS ANCHORED INTO EXISTING PAVEMENT

TIE BAR TABLE

PAVEMENT DEPTH (D)	TIE BAR SIZE	TIE BAR LENGTH (L)	MAX. TIE BAR SPACING
< 10 1/2"	NO. 4	30"	36"
≥ 10 1/2"	NO. 5	36"	36"
	NO. 4 *	30"	24" **

* SUBSTITUTE BENT BARS AT LONGITUDINAL JOINTS WHEN EQUIPMENT LIMITATIONS DURING CONSTRUCTION WARRANT (e.g. AUXILIARY LANES OR TURN LANES)

** CONFORM TO 15" MINUMUM SPACING FROM TRANSVERSE JOINTS; SPACING BETWEEN TIE BARS WILL BE 30" AT TRANSVERSE JOINTS.

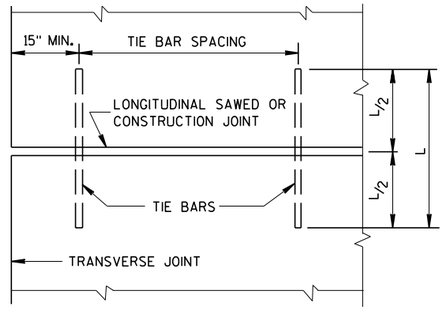

PLAN VIEW
SHOWING LOCATION OF TIE BARS

CONCRETE PAVEMENT LONGITUDINAL JOINTS AND TIES

STATE OF WISCONSIN
DEPARTMENT OF TRANSPORTATION

APPROVED
March 2018 — DATE
/S/ Peter Kemp, PE — PAVEMENT SUPE
FHWA

6

S.D.D. 13 C 1-19

6

S.D.D. 13 C 1-19

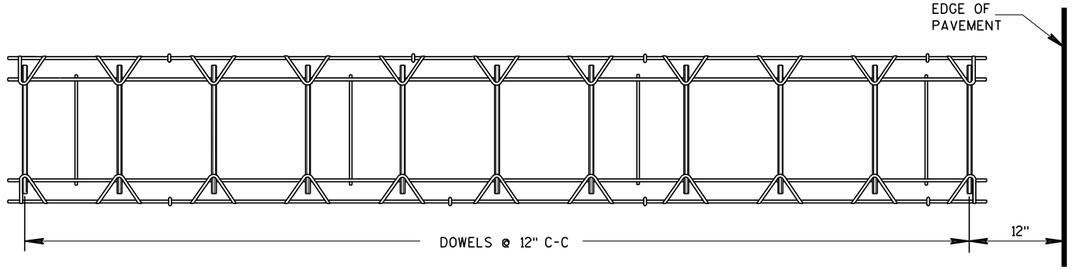

PLAN VIEW



SIDE VIEW

CONTRACTION JOINT DOWEL ASSEMBLY ①

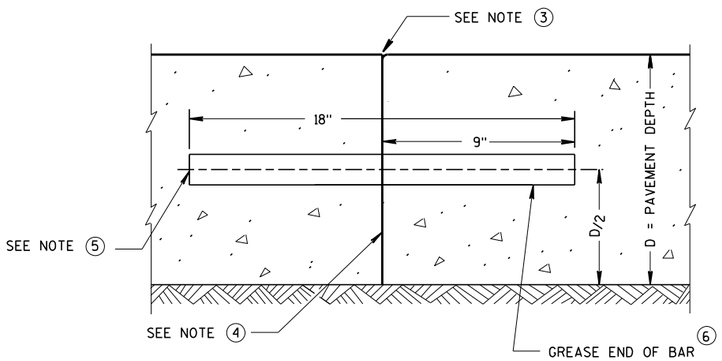

TRANSVERSE CONSTRUCTION JOINT

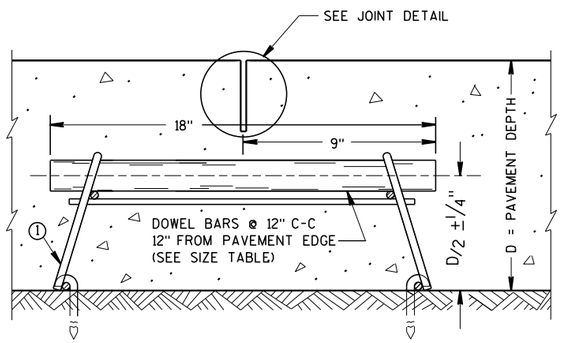

DOWELED CONTRACTION JOINT

PAVEMENT DEPTH, DOWEL BAR SIZE AND JOINT SPACING TABLE

PAVEMENT DEPTH (D)	DOWEL BAR DIAMETER	CONTRACTION JOINT SPACING
5 ½", 6", 6 ½"	NONE	12'
7", 7 ½"	1"	14'
8", 8 ½"	1 ¼"	15'
9", 9 ½"	1 ¼"	15'
10" & ABOVE	1 ½"	15'

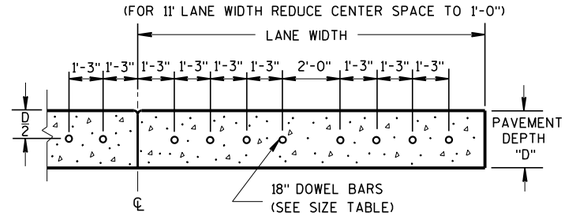

DRILLED DOWEL BAR CONSTRUCTION JOINT ⑦

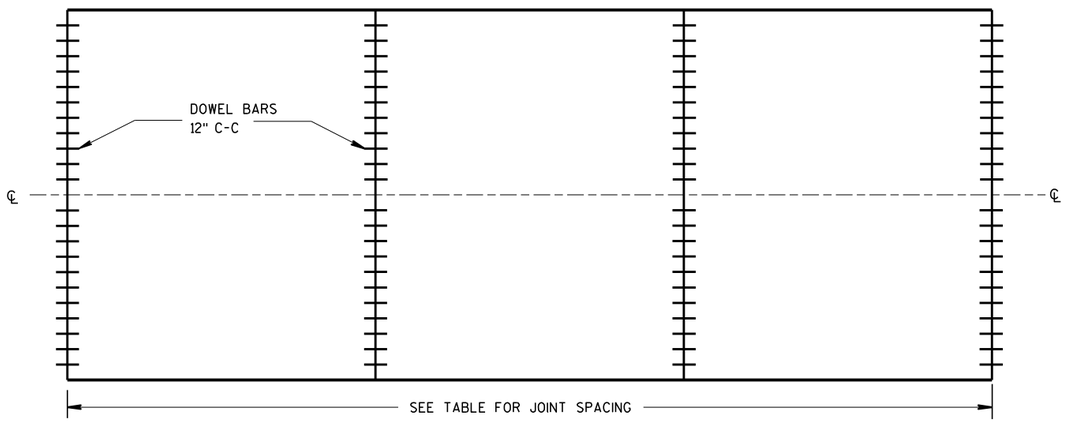

CONTRACTION JOINT LOCATIONS

GENERAL NOTES

CONTRACTION JOINTS

CONSTRUCT TRANSVERSE CONTRACTION JOINTS NORMAL TO THE CENTERLINE. SHOW THE LOCATION OF CONTRACTION JOINTS THROUGH INTERSECTIONS ON THE PLANS OR AS DIRECTED BY THE ENGINEER.

INSTALL DOWEL BARS PARALLEL TO THE PAVEMENT CENTERLINE AND PAVEMENT SURFACE.

FOR PAVEMENT SLABS OF VARYING WIDTHS, LOCATE THE OUTER MOST DOWEL BAR SO THAT THE CENTER OF THE BAR IS A MINIMUM OF 6 INCHES AND A MAXIMUM OF 18 INCHES FROM THE LONGITUDINAL JOINT AND THE FREE EDGE OF PAVEMENT.

CONSTRUCTION JOINTS

LOCATE CONSTRUCTION JOINTS A MINIMUM OF 6 FEET FROM THE NEAREST CONTRACTION JOINT AND ALIGN PARALLEL TO CONTRACTION JOINTS.

① OBTAIN THE ENGINEER'S APPROVAL FOR THE USE OF ALTERNATIVE DESIGNS OF THE DOWEL ASSEMBLY. USE MECHANICAL DOWEL BAR INSERTERS OR DOWEL ASSEMBLIES WHEN CONSTRUCTING CONTRACTION JOINTS.

② SECURE BASKETS WITH ANCHORS TO HOLD DOWEL BARS IN THE CORRECT POSITION AND ALIGNMENT. TYPE, LOCATION, NUMBER AND LENGTH OF ANCHORS ARE DEPENDENT UPON FIELD CONDITIONS.

③ FORM OR SAW CONSTRUCTION JOINTS. PROVIDE A ¼-INCH RADIUS AT FORMED JOINTS.

④ PROVIDE A SMOOTH VERTICAL FACE FOR THE ENTIRE DEPTH OF THE PAVEMENT WHEN FORMING CONSTRUCTION JOINTS.

⑤ INSTALL DOWEL BARS AT CONSTRUCTION JOINTS BY FORMING OR DRILLING. INSTALL FORMED DOWEL BARS 12 INCHES C-C AND 12 INCHES FROM PAVEMENT EDGE. REMOVE EXCESS CONCRETE FROM THE FREE END OF THE DOWEL BAR IF DOWEL BARS ARE FORMED THROUGH A HEADER BOARD. INSTALL DRILLED DOWEL BARS ACCORDING TO *DRILLED DOWEL BAR CONSTRUCTION JOINT* DETAIL.

⑥ APPLY A THIN UNIFORM COATING OF SURFACE TREATMENT TO THE FREE END OF DOWEL BARS TO PREVENT BONDING.

⑦ ANCHOR DOWEL BARS INTO DRILLED HOLES WITH AN EPOXY. MAXIMUM DRILLED HOLE SIZE IS ⅛-INCH GREATER THAN DOWEL BAR DIAMETER, 9 INCHES IN LENGTH.

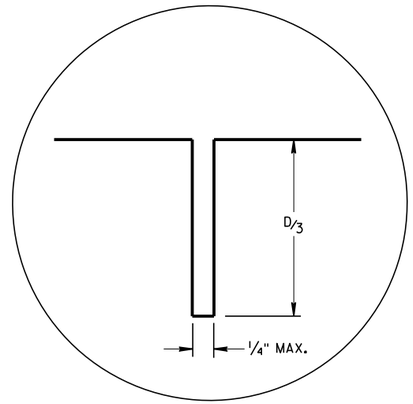

JOINT DETAIL

URBAN DOWELED CONCRETE PAVEMENT

STATE OF WISCONSIN
DEPARTMENT OF TRANSPORTATION

APPROVED
March 2018
DATE

/S/ Peter Kemp P.E.
PAVEMENT SUP 686

FHWA

6

S.D.D. 13 C 13-9

6

S.D.D. 13 C 13-9

GENERAL NOTES

SAW CUT, DRILL, AND LIFT OUT EXISTING CONCRETE PAVEMENT WITHIN THE BOUNDARIES OF CONCRETE REPAIR AREAS. THE CONTRACTOR MAY MAKE ADDITIONAL SAW CUTS INSIDE THE REPAIR LIMITS TO REDUCE WEIGHT AND SIZE OF CONCRETE PIECES.

PROVIDE 6-FOOT MINIMUM DISTANCE FROM BOUNDARIES OF CONCRETE REPAIR AREAS TO ADJACENT TRANSVERSE JOINT OR CRACK.

THE LENGTH OF THE REPAIRS MAY VARY FROM THE DIMENSIONS SHOWN IF THE EXISTING CONCRETE PAVEMENT IS NONDOWELED AND THE PAVEMENT IS TO BE OVERLAID AFTER REPAIRING.

(1) DOWEL BARS MIGHT NOT EXIST.

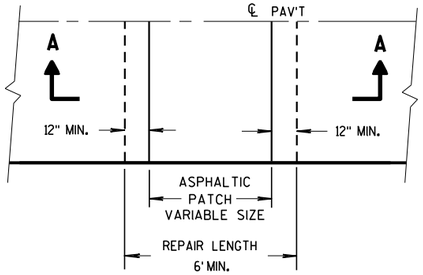

PLAN VIEW

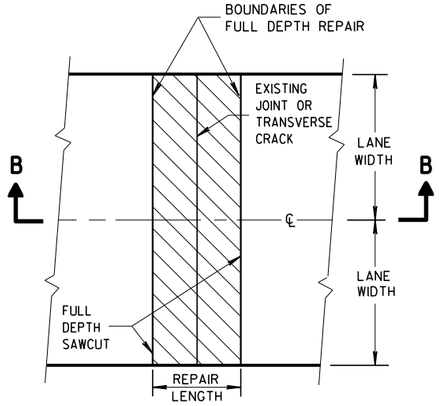

PLAN VIEW
(DOUBLE LANE REPAIR)

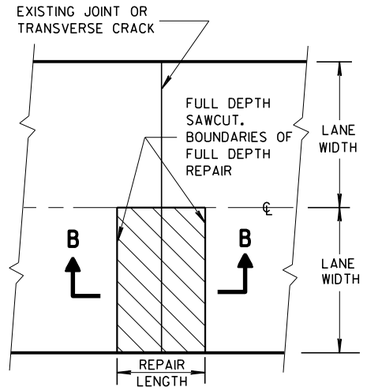

PLAN VIEW
(SINGLE LANE REPAIR)

FULL DEPTH CONCRETE PAVEMENT REMOVAL

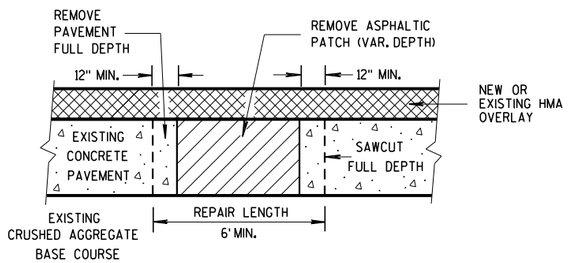

SECTION A-A

HMA PATCH REMOVAL

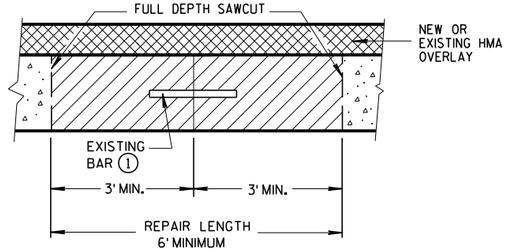

SECTION B-B

CONCRETE REMOVAL

6

6

S.D.D. 13 C 14-7a

S.D.D. 13 C 14-7a

BASE PATCHING CONCRETE

STATE OF WISCONSI
DEPARTMENT OF TRANSPORTATION

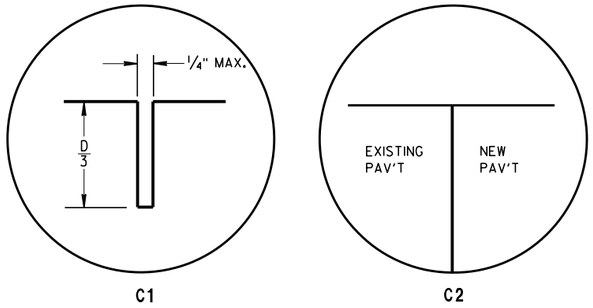

TRANSVERSE JOINTS

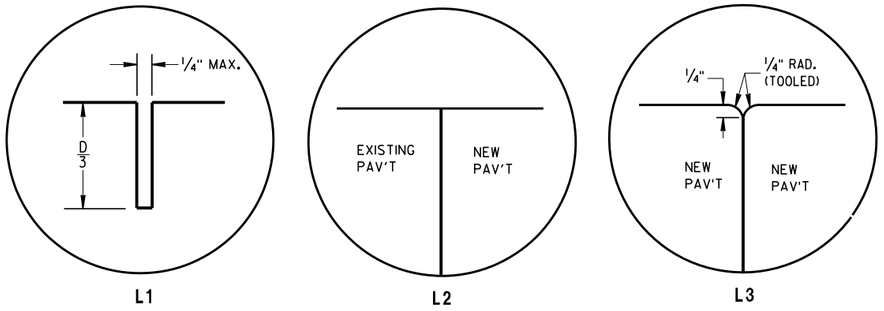

LONGITUDINAL JOINTS

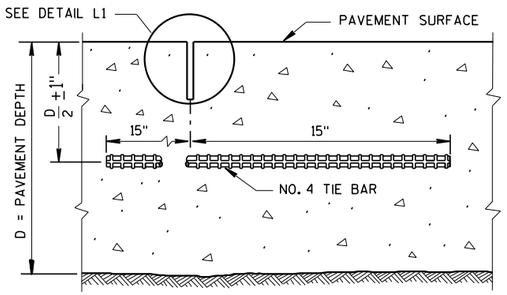

SECTION C-C

SAWED LONGITUDINAL JOINT

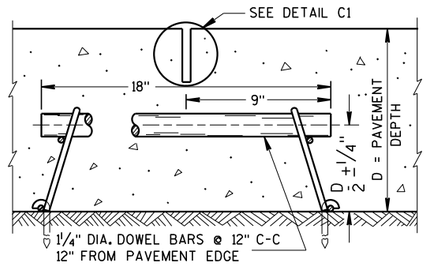

SECTION F-F

CONTRACTION JOINT

GENERAL NOTES

INSTALL DOWEL BARS PARALLEL TO THE PAVEMENT CENTERLINE AND PAVEMENT SURFACE.

CONCRETE BASE PATCHES OF EXISTING NONDOWELED CONCRETE PAVEMENTS DO NOT NEED TO BE DOWELED.

ANCHOR DOWEL BARS AND TIE BARS INTO DRILLED HOLES WITH AN EPOXY.

PROVIDE A MINIMUM DISTANCE OF 15 INCHES FROM AN EXISTING TRANSVERSE JOINT OR THE EDGE OF REPLACEMENT TO THE CENTER OF THE TIE BAR NEAREST THAT JOINT OR EDGE.

(1) APPLY A THIN UNIFORM COATING OF SURFACE TREATMENT TO THE FREE END OF DOWEL BARS TO PREVENT BONDING.

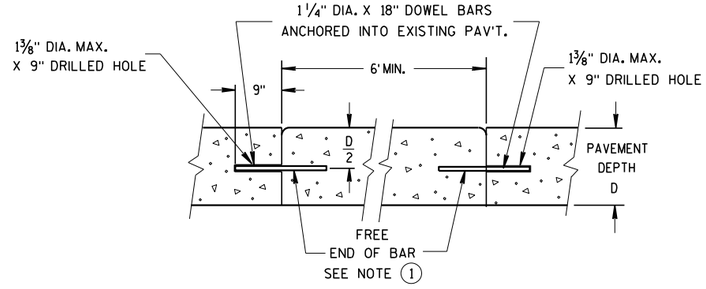

SECTION D-D

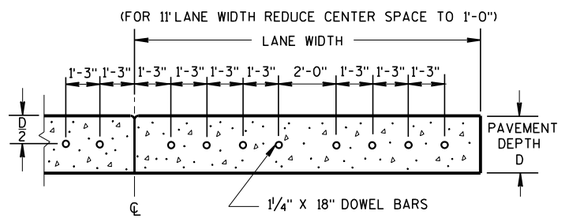

SECTION E-E

SPACING OF DOWEL BARS ANCHORED INTO EXISTING PAVEMENT

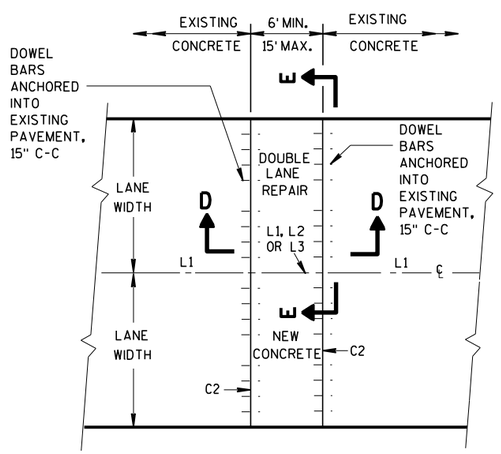

PLAN VIEW

MULTI-LANE CONCRETE BASE PATCH 15' MAXIMUM LENGTH

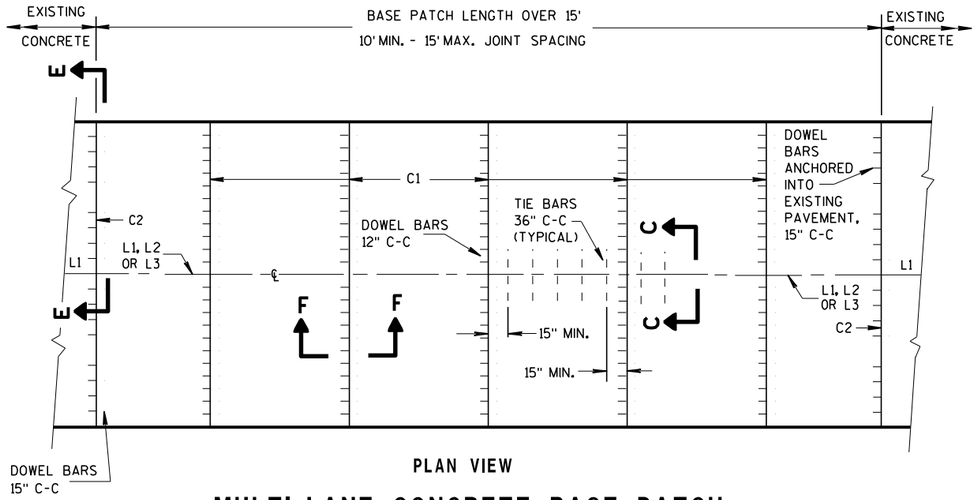

PLAN VIEW

MULTI-LANE CONCRETE BASE PATCH GREATER THAN 15' IN LENGTH

BASE PATCHING CONCRETE

STATE OF WISCONSIN
DEPARTMENT OF TRANSPORTATION

6

S.D.D. 13 C 14-7b

6

S.D.D. 13 C 14-7b

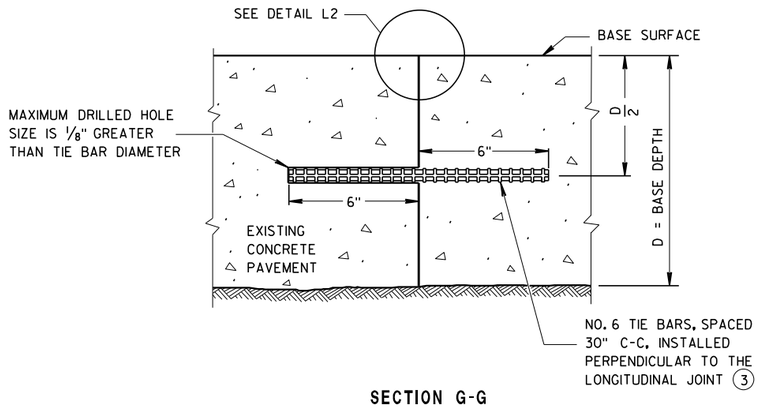

SECTION G-G

TIE BARS ANCHORED INTO EXISTING PAVEMENT

GENERAL NOTES

(1) USE AN ENGINEER-APPROVED BOND BREAKER (E.G. RELEASE AGENT, CURING COMPOUND) FOR SINGLE LANE BASE PATCHES UP TO 15 FEET IN LENGTH.

(2) WITH THE APPROVAL OF THE ENGINEER, FOR SINGLE LANE PAVEMENT REPLACEMENTS LESS THAN 30 FEET IN LENGTH, DRILLED TIE BARS MAY BE INSTALLED ON 6:1 SKEW HORIZONTALLY, DIRECTION OF SKEW ALTERNATING WITH EACH SUCCESSIVE BAR. DRIVE SKEWED TIE BARS TO A DEPTH OF 6 INCHES IN A HOLE OF SUCH A DIAMETER AS TO PROVIDE A TIGHT DRIVEN FIT.

(3) ANCHOR TIE BARS INTO DRILLED HOLES WITH AN EPOXY.

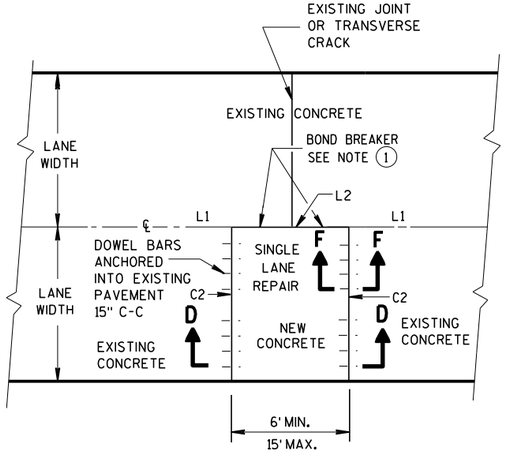

PLAN VIEW

SINGLE LANE CONCRETE BASE PATCH 15' MAXIMUM LENGTH

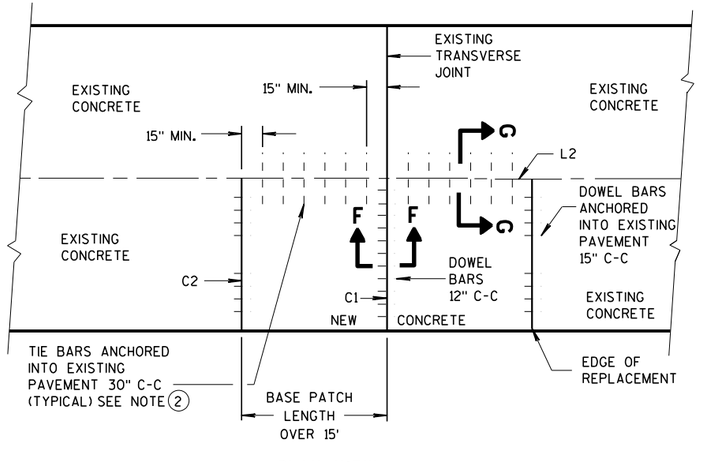

PLAN VIEW

SINGLE LANE CONCRETE BASE PATCH GREATER THAN 15' IN LENGTH

BASE PATCHING CONCRETE

STATE OF WISCONSIN
DEPARTMENT OF TRANSPORTATION

APPROVED
March 2018 — DATE
/S/ Peter Kemp P.E. — PAVEMENT SUPERVISOR
FHWA

6

S.D.D. 13 C 14-7c

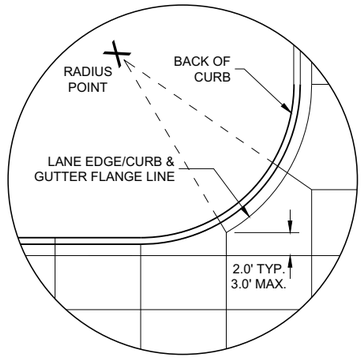

DETAIL "A"

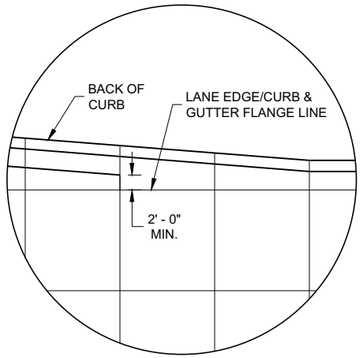

DETAIL "B"

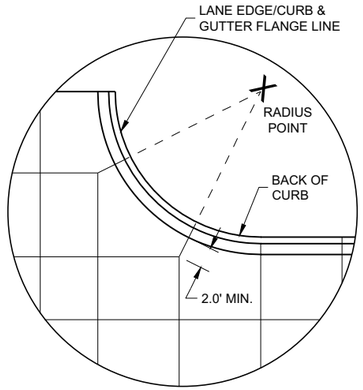

DETAIL "C"

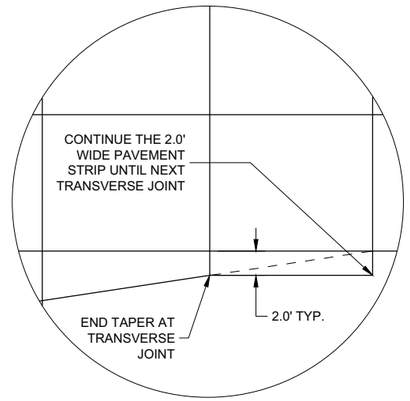

DETAIL "D"

GENERAL NOTES

THE PRIMARY ROADWAY CONTROLS THE TRANSVERSE JOINT PATTERN.

ALIGN NEW JOINTS WITH EXISTING JOINTS OR CRACKS.

CONSTRUCT TRANSVERSE JOINTS PERPENDICULAR TO THE ROADWAY.

ADJUST TRANSVERSE JOINTS TO ALIGN WITH UTILITY FIXTURES (E.G MANHOLES AND INLETS) IN THE PAVEMENT STRUCTURE WHEN POSSIBLE. WATER VALVES DO NOT REQUIRE JOINT ADJUSTMENT.

AVOID SLABS LESS THAN 2 FEET WIDE OR GREATER THAN 15 FEET WIDE.

SEE TABLE FOR TRANSVERSE JOINT SPACING. JOINT SPACING SPECIFIED IS MAXIMUM AND ACTUAL SPACING CAN BE ADJUSTED TO ACCOMMODATE INTERSECTIONS.

AVOID ANGLES LESS THAN 60° BY DOGLEGGING JOINTS THROUGH CURVE RADIUS POINTS. USE 90° ANGLES WHEN POSSIBLE.

CORRELATE LONGITUDINAL JOINTS WITH LANE LINES WHEN POSSIBLE.

1. PROVIDE TRANSVERSE JOINTS AT ALL PAVEMENT WIDTH CHANGES.
2. CONSTRUCT DOWELED EXPANSION JOINT ON THE SIDE ROAD OF AN INTERSECTION IF THE SIDE ROAD IS CONCRETE PAVEMENT AND GREATER THAN 300 FEET IN LENGTH. ALIGN EXPANSION JOINT WITHEDGE OF RADIUS.
3. THE ENGINEER MAY APPROVE SLIGHT VARIATIONS FROM THESE JOINTING DETAILS.

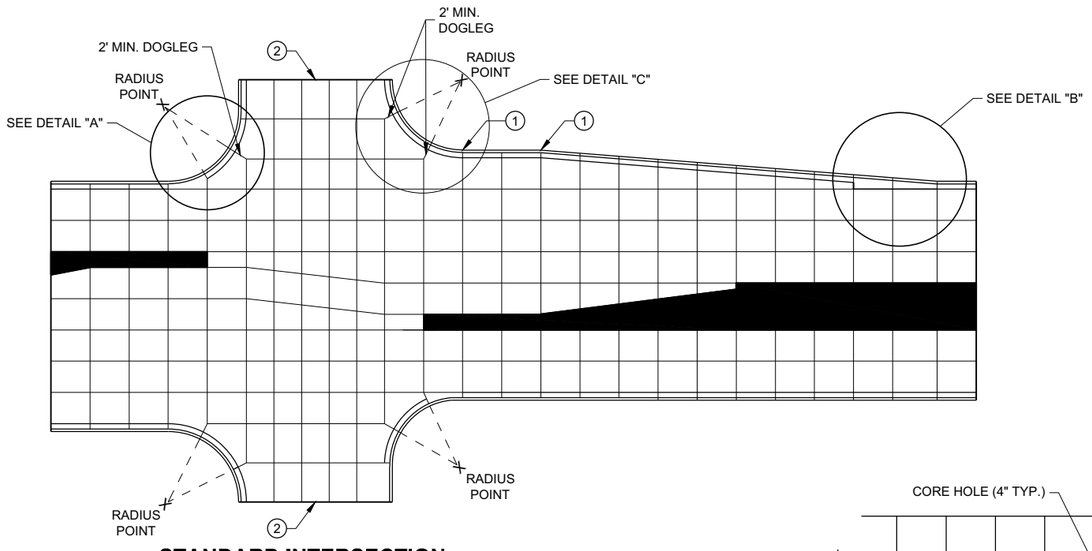

STANDARD INTERSECTION

PAVEMENT DEPTH AND JOINT SPACING TABLE

PAVEMENT DEPTH (D)	CONTRACTION JOINT SPACING
6", 6 ½"	12'
7", 7 ½"	14'
8" & ABOVE	15'

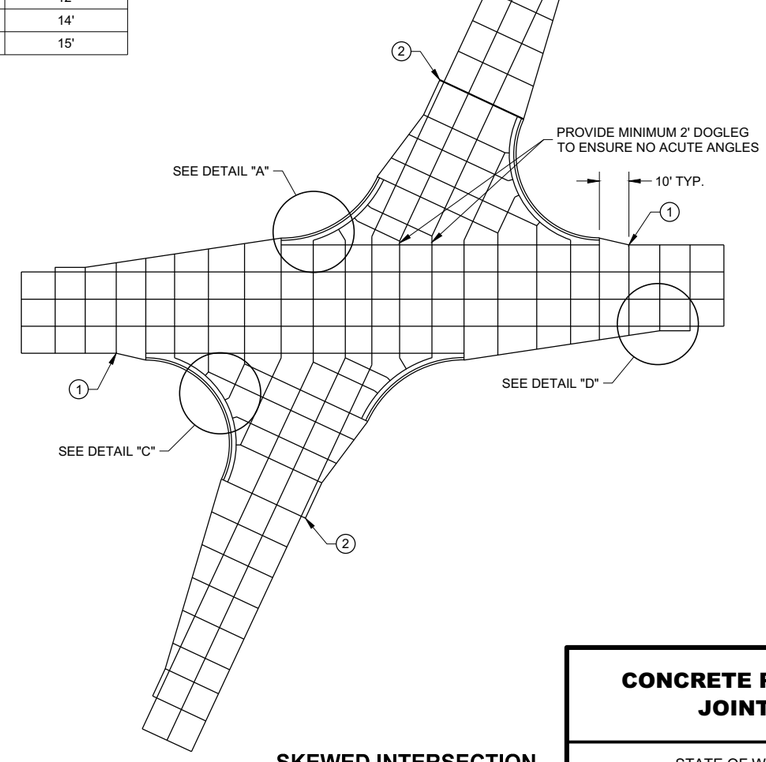

SKEWED INTERSECTION

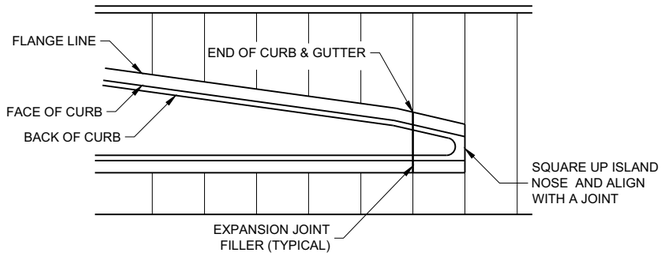

APPROACH TO MEDIAN

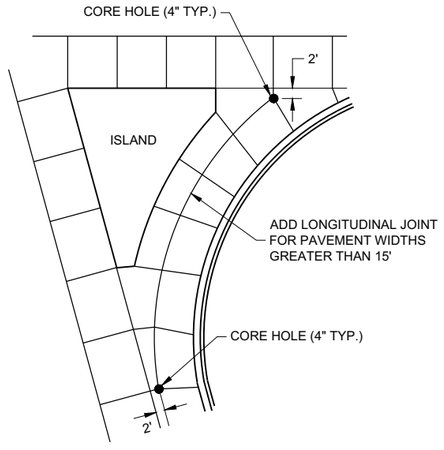

LARGE RIGHT TURN

CONCRETE PAVEMENT JOINTING

STATE OF WISCONSIN
DEPARTMENT OF TRANSPORTATION

6

SDD 13C18 - 07a

LEGEND

POTENTIAL DOWELED EXPANSION JOINT

DOWELED JOINT

TIED JOINT

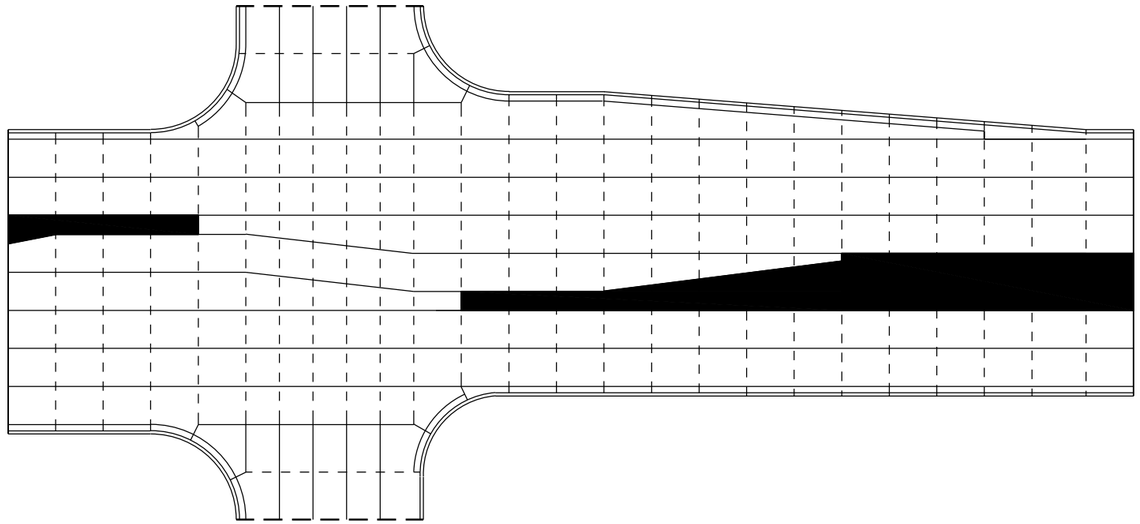

STANDARD INTERSECTION

GENERAL NOTES

USE AN EXPANSION JOINT FILLER MEETING THE REQUIREMENTS OF STANDARD SPECIFICATION 415.

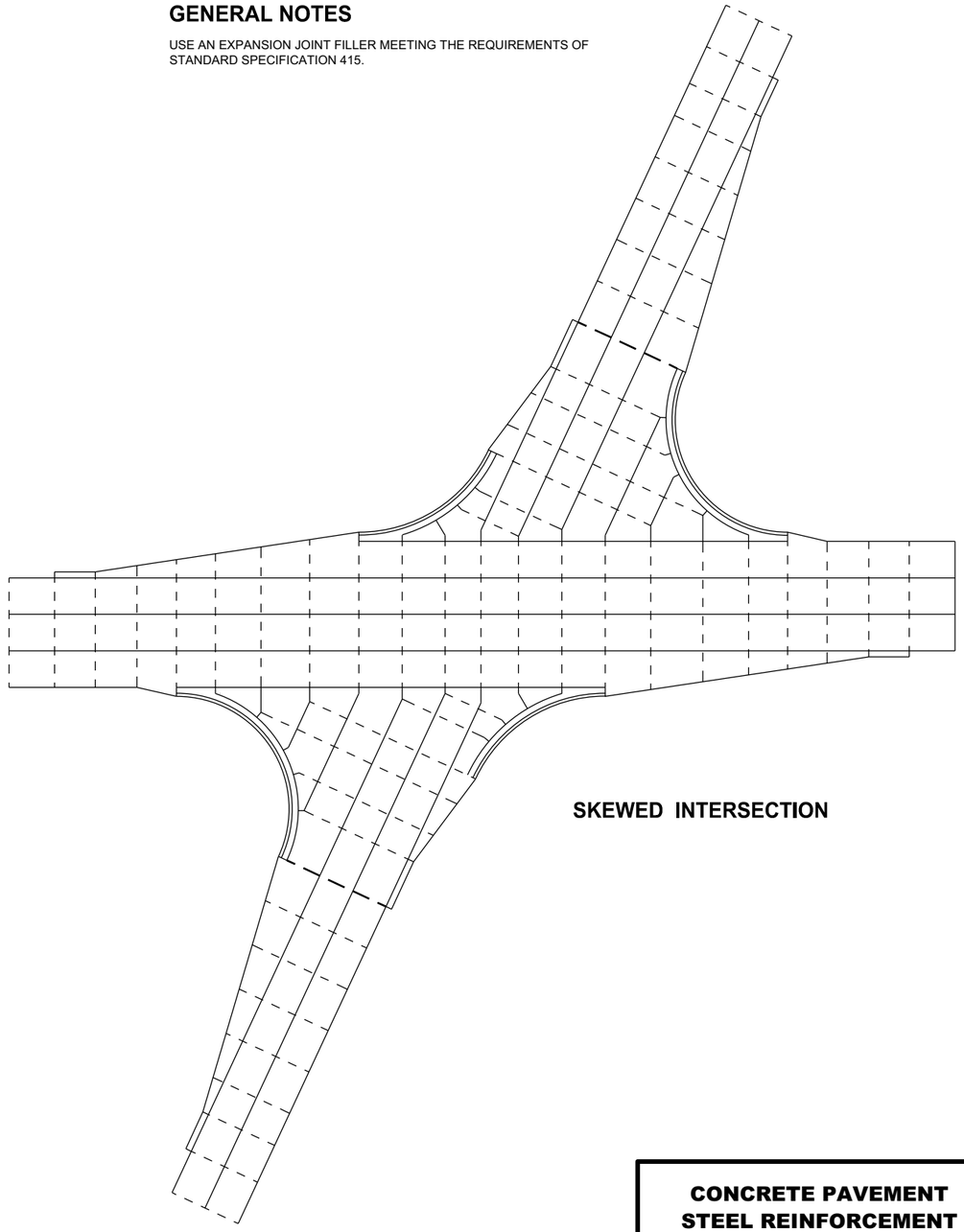

SKEWED INTERSECTION

6

SDD 13C18 - 07b

CONCRETE PAVEMENT
STEEL REINFORCEMENT

STATE OF WISCONSIN
DEPARTMENT OF TRANSPORTATION

6

SDD 13C18 - 07b

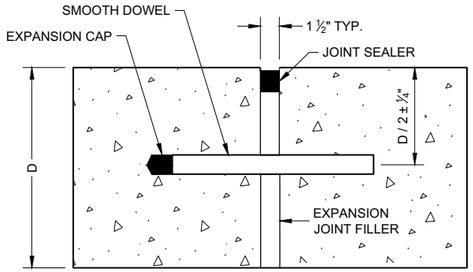

DOWELED TRANSVERSE (1)

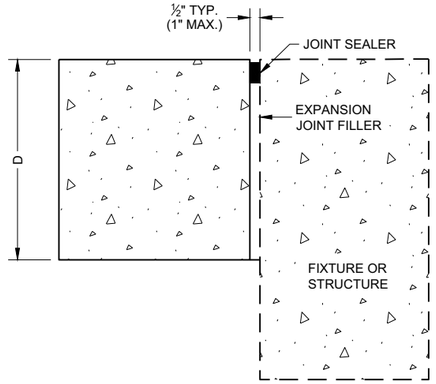

UNTIED - LONGITUDINAL

EXPANSION JOINTS

TIE BAR TABLE

PAVEMENT DEPTH (D)	TIE BAR SIZE	TIE BAR LENGTH (L)	MAX. TIE BAR SPACING
< 10 ½"	NO. 4	30"	36"
≥ 10 ½"	NO. 5	36"	36"
	NO. 4*	30"	24"**

* SUBSTITUTE BENT BARS AT LONGITUDINAL JOINTS WHEN EQUIPMENT LIMITATIONS DURING CONSTRUCTION WARRANT (e.g. AUXILIARY LANES OR TURN LANES)

** CONFORM TO 15" MINIMUM SPACING FROM TRANSVERSE JOINTS; SPACING BETWEEN TIE BARS WILL BE 30" AT TRANSVERSE JOINTS.

GENERAL NOTES

1. USE DOWELED EXPANSION JOINTS ON SIDE ROADS AT INTERSECTIONS (TO ISOLATETHE SIDE ROAD FROM THE THROUGH STREET) IF THE SIDE ROAD IS CONCRETE PAVEMENT AND GREATER THAN 300 FEET IN LENGTH.
2. SPACE CONTRACTION JOINTS IN ACCORDANCE WITH SDD 13C4, 13C11 OR 13C13.
3. LOCATE CONSTRUCTION JOINTS A MINIMUM OF 6 FEET FROM THE NEAREST CONTRACTION JOINT AND ALIGN PARALLEL TO CONTRACTION JOINTS.
4. CONSTRUCTION JOINTS CAN BE FORMED OR SAWED.
5. IF JOINT IS FORMED, PROVIDE A ¼" RADIUS.
6. ANCHOR TIE BARS INTO DRILLED HOLES WITH AN EPOXY.

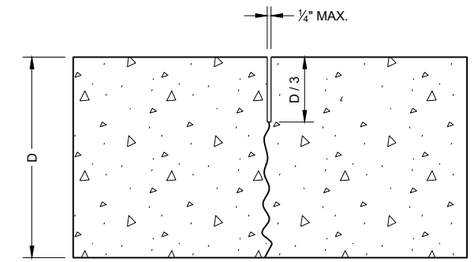

UNDOWELED TRANSVERSE

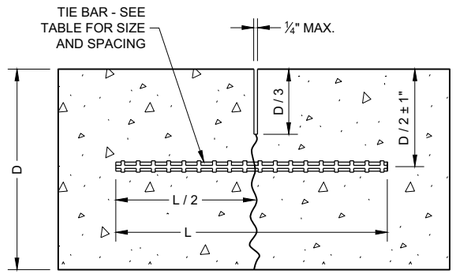

TIED LONGITUDINAL

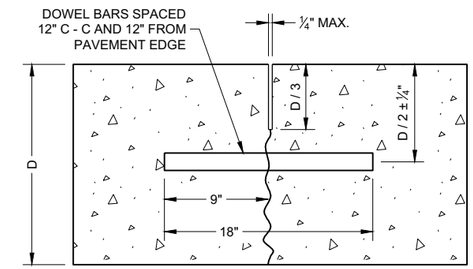

DOWELED TRANSVERSE

CONTRACTION JOINTS (2)

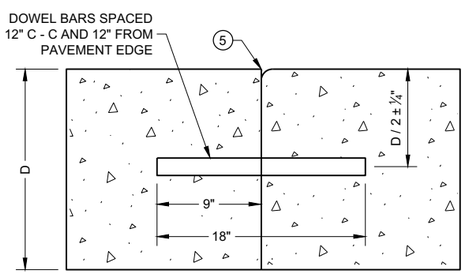

DOWELED TRANSVERSE (3)

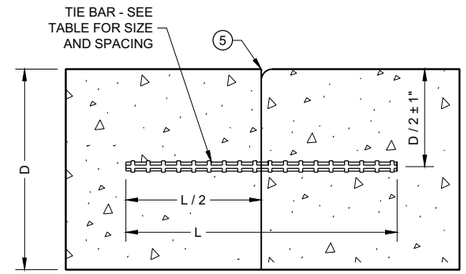

TIED LONGITUDINAL

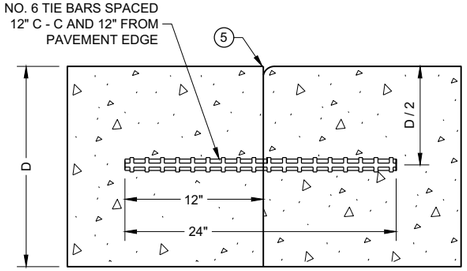

TIED TRANSVERSE (3)
(FOR USE ON NON-DOWELED PAVEMENTS ONLY)

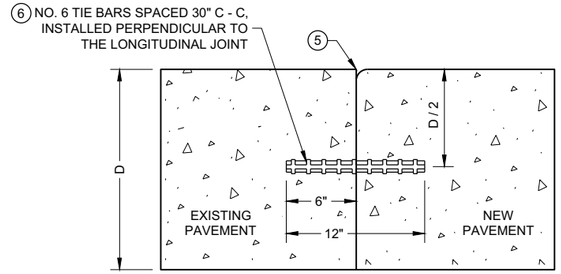

TIED LONGITUDINAL TO EXISTING

CONSTRUCTION JOINTS (4)

CONCRETE PAVEMENT JOINT TYPES

STATE OF WISCONSIN
DEPARTMENT OF TRANSPORTATION

6
SDD 13C18 - 07c

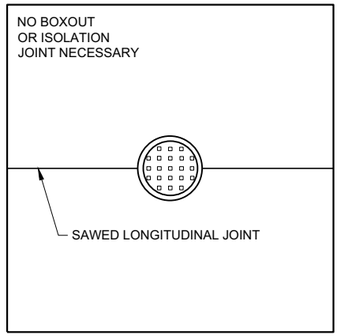

MANHOLE WITH LONGITUDINAL JOINT

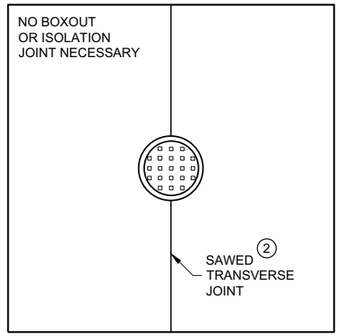

MANHOLE WITH TRANSVERSE JOINT

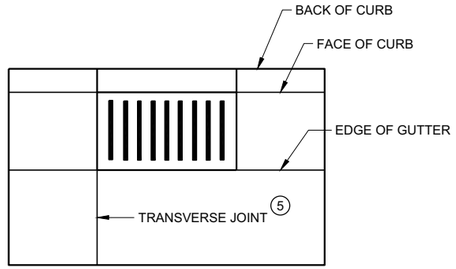

INLET WITH TRANSVERSE JOINT

GENERAL NOTES

1. USE BOXOUTS WHEN UTILITY STRUCTURE IS IN THE PATH OF CONSTRUCTION JOINTS. PROVIDE A 1 FOOT MINIMUM CLEARANCE BETWEEN THE EXTERIOR LIMIT OF THE STRUCTURE TO THE DIAMOND BOXOUT.
2. ADJUST TRANSVERSE JOINT TO INTERSECT MANHOLE IF POSSIBLE.
3. IF DISTANCE BETWEEN THE LONGITUDINAL JOINT AND THE EDGE OF MANHOLE IS 2 FEET OR LESS, DIVERT THE LONGITUDINAL JOINT AT A 2:1 TAPER RATE TO THE CENTER OF THE MANHOLE. IF THE DISTANCE IS GREATER THAN 2 FEET, DO NOT DIVERT THE JOINT AND SAW AS NORMAL. PLACE REINFORCEMENT REBAR AROUND THE MANHOLE.
4. IF THE DISTANCE FROM THE EDGE OF THE MANHOLE TO THE NEAREST TRANSVERSE JOINT IS LESS 4 FEET OR LESS, REDIRECT JOINT TO INTERSECT THE CENTER OF THE MANHOLE. IF DISTANCE IS GREATER THAN 4 FEET, DO NOT DIVERT THE JOINT AND SAW AS NORMAL. PLACE REINFORCEMENT REBAR AROUND THE MANHOLE.
5. ALIGN TRANSVERSE JOINT WITH ONE EDGE OF INLET WHEN PRACTICAL.

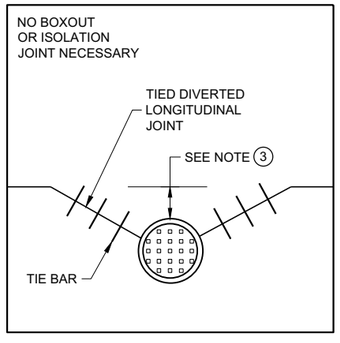

MANHOLE WITH DIVERTED LONGITUDINAL CONTRACTION JOINT

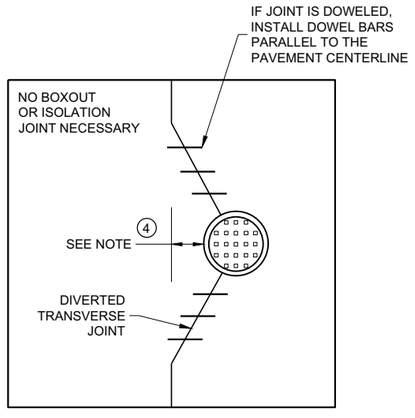

MANHOLE WITH DIVERTED TRANSVERSE CONTRACTION JOINT

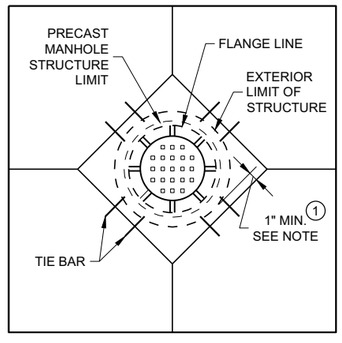

DIAGONAL MANHOLE BOXOUT FOR CONSTRUCTION JOINTS

CONCRETE PAVEMENT JOINTING AT UTILITY FIXTURES

STATE OF WISCONSIN
DEPARTMENT OF TRANSPORTATION

APPROVED
November 2018
DATE

/S/ Peter Kemp P.E.
PAVEMENT SUPERVIS

FHWA

6

SDD13C18 - 07d
SDD13C18 - 07d

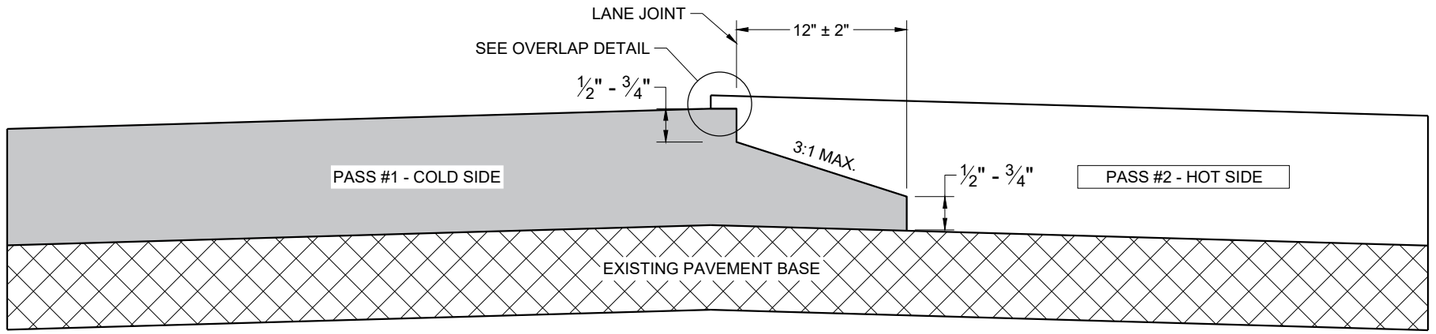

TYPICAL PAVEMENT CROSS SECTION
NOTCHED WEDGE JOINT

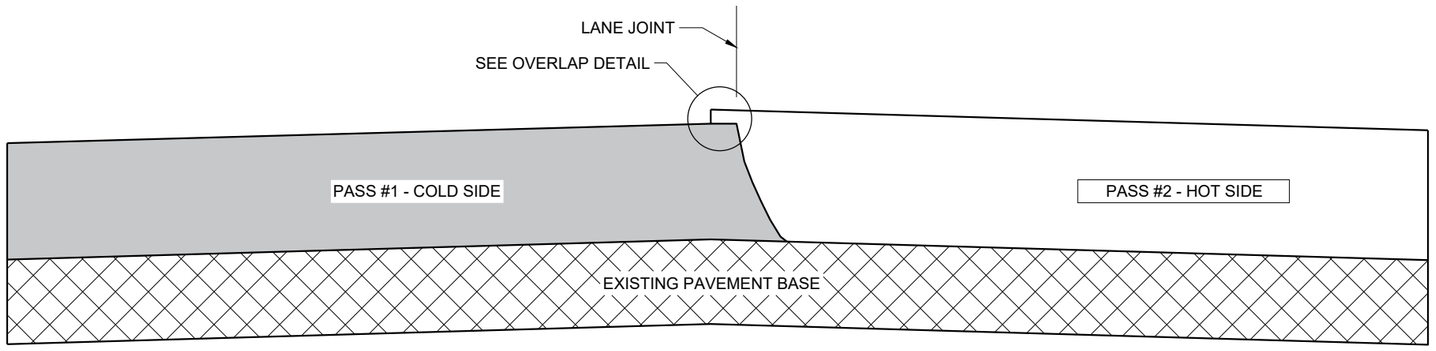

TYPICAL PAVEMENT CROSS SECTION
VERTICAL JOINT

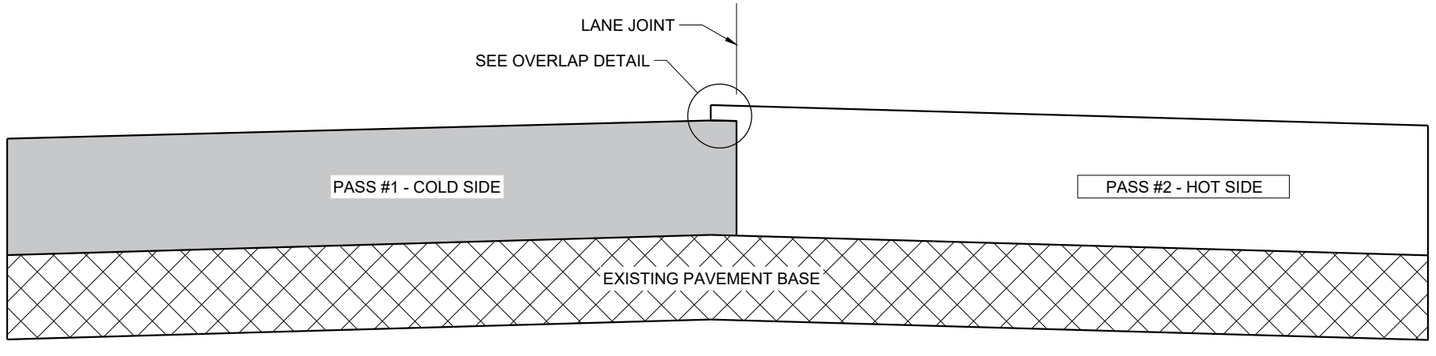

TYPICAL PAVEMENT CROSS SECTION
VERTICAL JOINT (MILLED)

GENERAL NOTES

IN ADDITION TO THE DETAILS PROVIDED IN THIS DRAWING, CONFORM TO STANDARD SPECIFICATION 450.3.2.8 FOR WHEN A NOTCHED WEDGE JOINT IS REQUIRED AND FOR GENERAL JOINT CONSTRUCTION REQUIREMENTS.

FOR ALL LONGITUDINAL JOINTS, ENSURE THE PAVER SCREED OVERLAPS THE PREVIOUSLY PLACED PAVEMENT BY 1" ± 0.5" AND THE HOT SIDE OF THE JOINT REMAINS HIGHER THAN THE COLD SIDE BY APPROXIMATELY 0.1" AFTER FINAL COMPACTION. (IT WILL BE FLUSH WHEN PAVING IN ECHELON.)

ONLY REMOVE THE LONGITUDINAL NOTCHED WEDGE JOINT FOR SMA PAVEMENT OR AS DIRECTED BY THE ENGINEER TO ADDRESS SPECIFIC LENGTHS OF JOINT DAMAGED BY TRAFFIC.

WHEN MILLING BACK OR REMOVING ANY LONGITUDINAL JOINT, LIMIT THE MATERIAL REMOVED TO 2" FROM THE TOP NOTCH OR FROM THE VERTICAL JOINT EDGE ON THE COLD SIDE OF THE JOINT.

USE LONGITUDINAL MILLED JOINT AS PLANS SHOW OR THE AS THE ENGINEER DIRECTS.

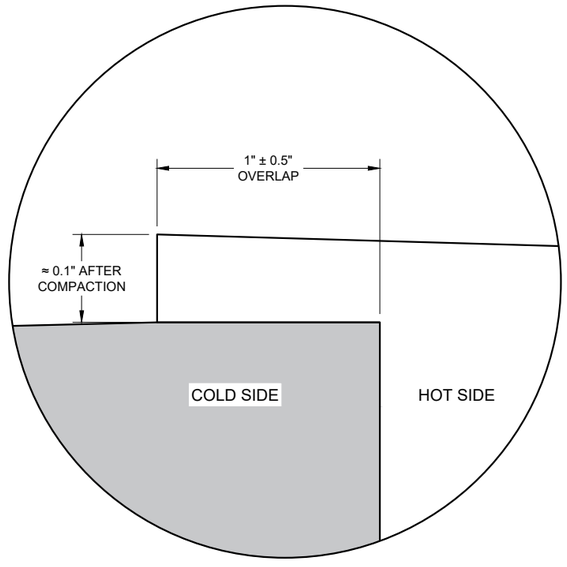

OVERLAP DETAIL (TYPICAL)

HMA LONGITUDINAL JOINTS	
STATE OF WISCONSIN DEPARTMENT OF TRANSPORTATION	
APPROVED November 2020 DATE	/S/ Steven Hefel HMA PAVEMENT ENGIN 694
FHWA	

6

SDD 13C19 - 03

6

SDD 13C19 - 03

GENERAL NOTES

DETAILS OF CONSTRUCTION, MATERIALS AND WORKMANSHIP NOT SHOWN ON THIS DRAWING SHALL CONFORM TO THE PERTINENT REQUIREMENTS OF THE STANDARD SPECIFICATIONS AND THE APPLICABLE SPECIAL PROVISIONS.

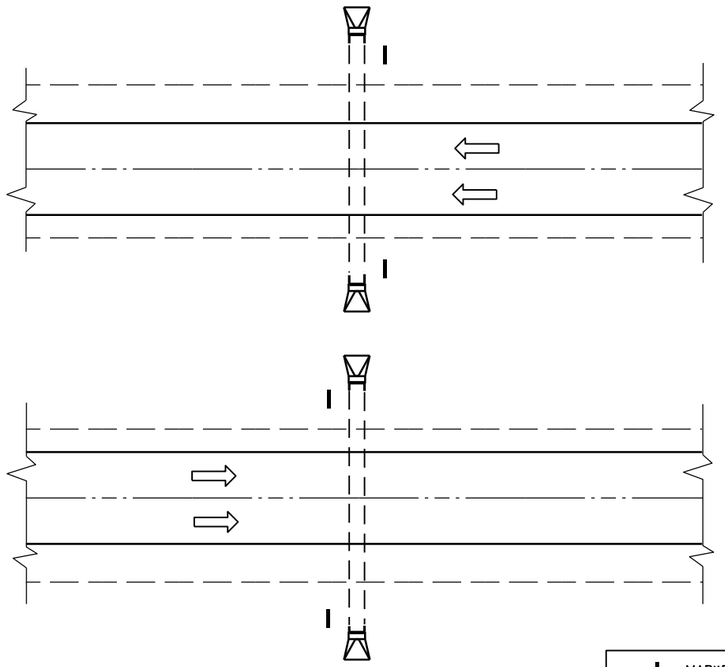

PLAN VIEW

DIVIDED HIGHWAY

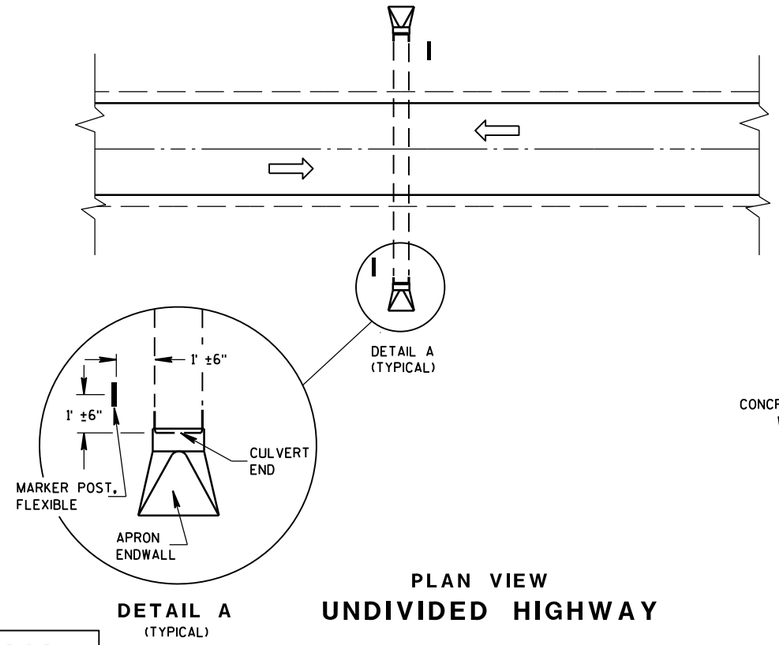

DETAIL A
(TYPICAL)

PLAN VIEW

UNDIVIDED HIGHWAY

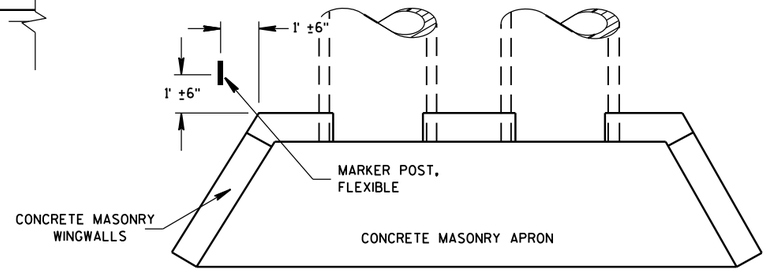

PLAN VIEW

CONCRETE MASONRY ENDWALLS FOR CULVERT PIPE AND PIPE ARCH

MARKER POST, FLEXIBLE

DIRECTION OF TRAFFIC FLOW

FLEXIBLE MARKER POST LOCATION

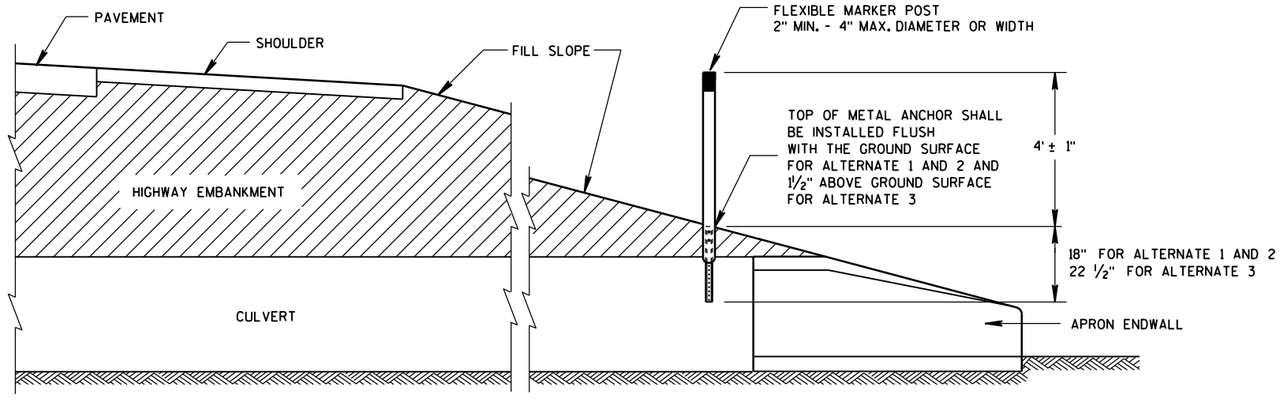

CROSS SECTION

FLEXIBLE MARKER POST

FLEXIBLE MARKER POST FOR CULVERT END

STATE OF WISCONSIN
DEPARTMENT OF TRANSPOI

6

S.D.D. 15 A 3-2a

6

S.D.D. 15 A 3-2a

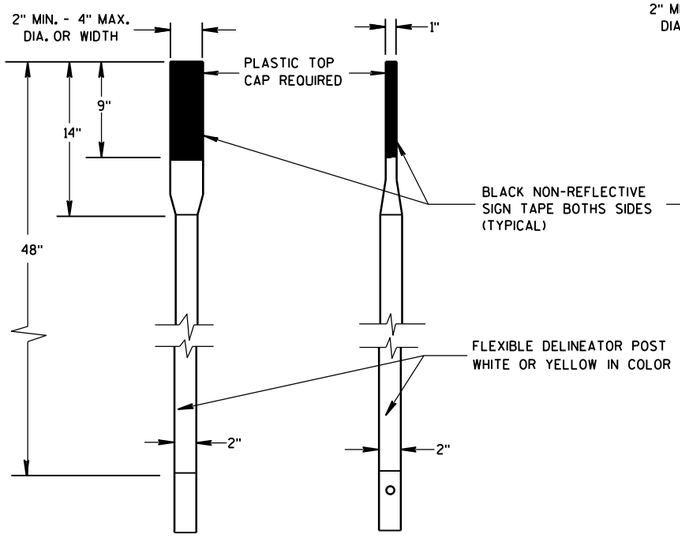

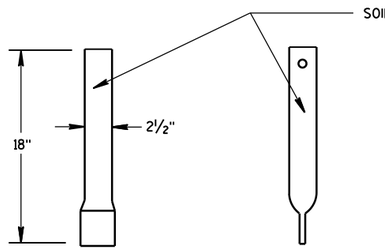

FRONT VIEW SIDE VIEW

ALTERNATE 1

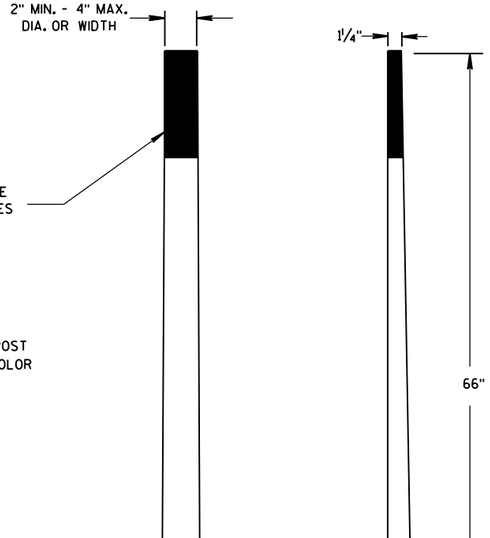

FRONT VIEW SIDE VIEW

ALTERNATE 2

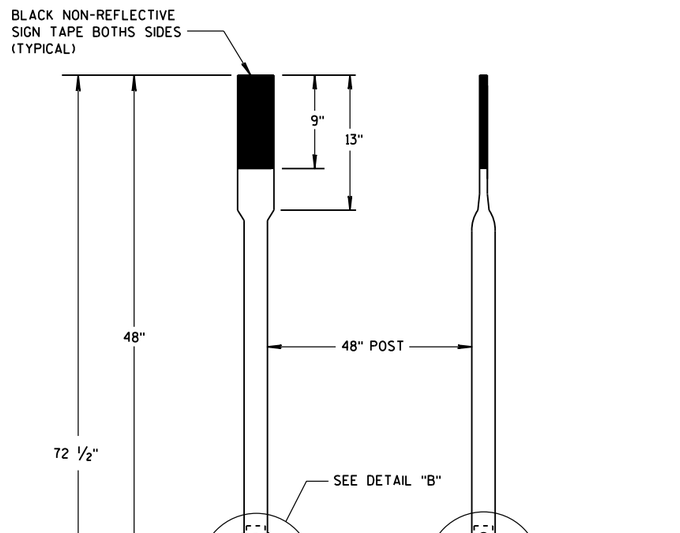

FRONT VIEW SIDE VIEW

ALTERNATE 3

FLEXIBLE MARKER POSTS

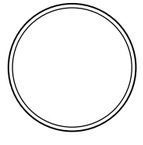

SECTION A-A

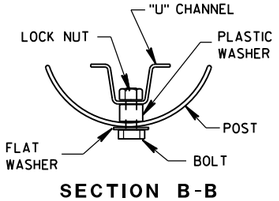

SECTION B-B

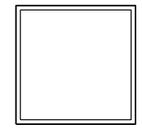

SECTION C-C

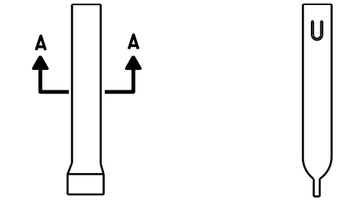

FRONT VIEW SIDE VIEW

ALTERNATE 1

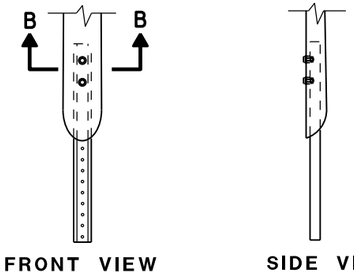

FRONT VIEW SIDE VIEW

ALTERNATE 2

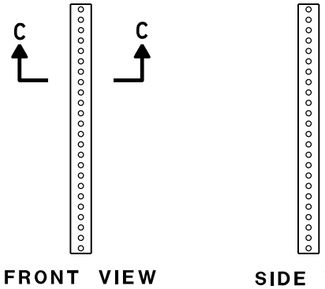

FRONT VIEW SIDE VIEW

ALTERNATE 3

FLEXIBLE MARKER POST ANCHORS

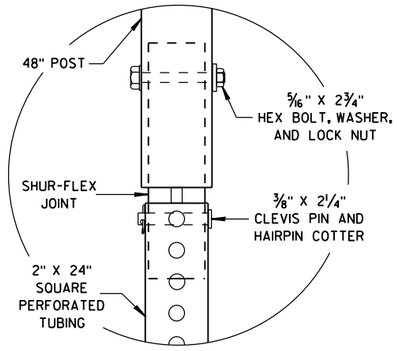

DETAIL B

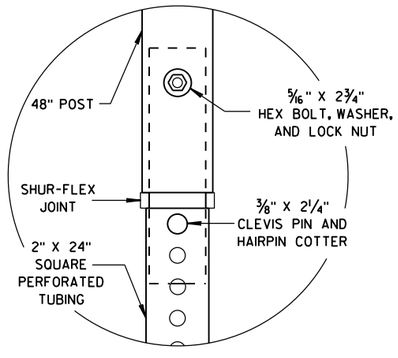

DETAIL C

FLEXIBLE MARKER POST
FOR CULVERT END

STATE OF WISCONSIN
DEPARTMENT OF TRANSPORTATION

APPROVED
10/1/2012 — DATE
/S/ Travis Feltes — STATE TRAFFIC ENGINEER
FHWA

6

S.D.D. 15 A 3-2b

6

S.D.D. 15 A 3-2b

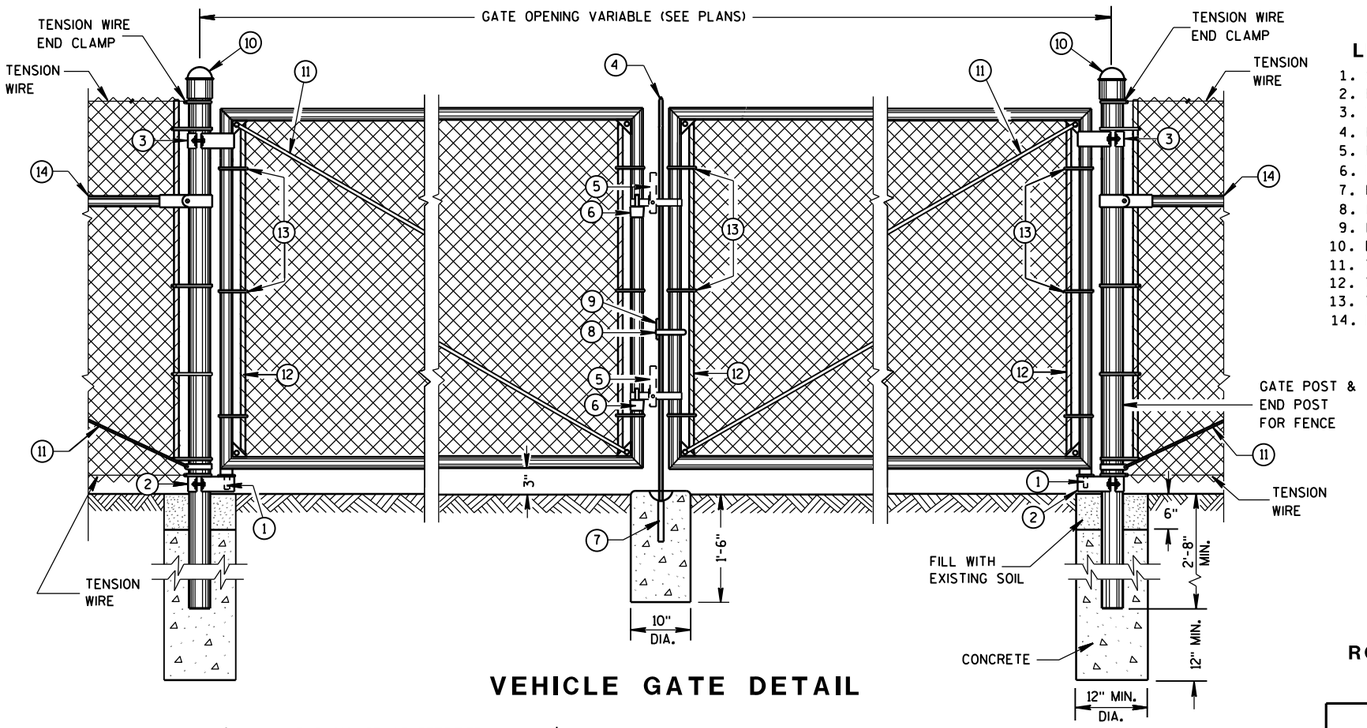

VEHICLE GATE DETAIL

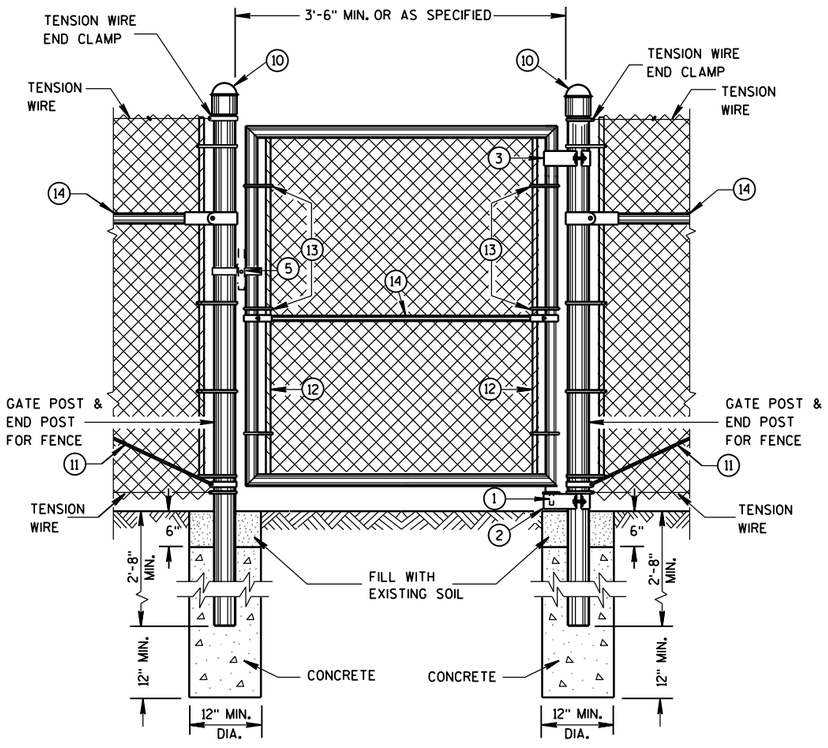

PEDESTRIAN GATE DETAIL

LEGEND

1. STRAIGHT PLUG
2. BOTTOM HINGE
3. TOP HINGE
4. PLUNGER ROD
5. FULCRUM LATCH
6. FORK CATCH *
7. PLUNGER ROD CATCH
8. LOCK KEEPER GUIDE
9. LOCK KEEPER
10. DOME TOPS
11. TRUSS RODS
12. TENSION BAR
13. TENSION BANDS
14. BRACE RAIL

*NOT REQUIRED ON SINGLE SWING PEDESTRIAN GATE

GENERAL NOTES

FENCE POSTS INSTALLED ON CONCRETE WALLS SHALL BE ANCHORED INTO EMBEDDED METAL SLEEVES OR CORED HOLE BY FILLING THE ANNULAR SPACE WITH PEA GRAVEL FOLLOWED BY AN EPOXY RESIN ADHESIVE. THE EPOXY RESIN ADHESIVE SHALL CONFORM TO THE REQUIREMENTS OF AASHTO M 235, CLASS A, B OR C.

USE FENCE FABRIC KNUCKLED AT BOTH SELVAGES.

FOR LEAF GATES GREATER THAN 8 FEET WIDE, INSTALL INTERIOR VERTICAL BRACE RAIL AT 8 FOOT INTERVALS.

FOR FABRIC HEIGHTS GREATER THAN 8 FEET, INSTALL INTERIOR HORIZONTAL BRACE RAILS TO LEAF GATE.

MAXIMUM SAG FOR OUTER GATE MEMBER SHALL NOT EXCEED THE GREATER OF 1% OF THE LEAF GATE WIDTH OR 2 INCHES.

USE TYPE 2, CLASS 3, MARCELLED/CRIMPED, TENSION WIRE PER ASTM A 817.

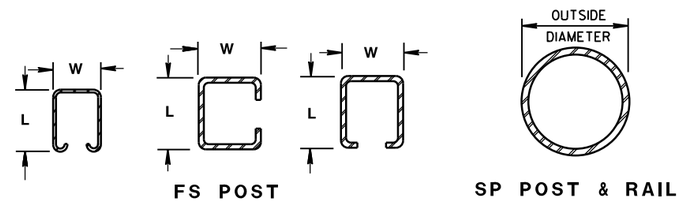

CROSS SECTIONS OF POSTS AND RAILS

REQUIRED FENCE POST SIZES

USE	FABRIC HEIGHTS FEET	POST TYPE
TERMINAL POSTS **	LESS THAN OR EQUAL TO 6 FT.	SP3
	GREATER THAN OR EQUAL TO 6 FT.	SP4
LINE POSTS	LESS THAN OR EQUAL TO 6 FT.	SP2
	LESS THAN OR EQUAL TO 8 FT.	SP3
	GREATER THAN OR EQUAL TO 8 FT.	SP4
	LESS THAN OR EQUAL TO 8 FT.	FS2 OR FS2†
	GREATER THAN OR EQUAL TO 8 FT.	FS3

BRACE RAIL TYPES

USE		TYPE
BRACE RAIL		SP1 OR FS1

** INCLUDES END, CORNER, ANGLE, INTERSECTION AND INTERMEDIATE BRACED POSTS

ROLLED-FORMED STEEL FENCE POST (2.0 OZ./SQ. FT. COATING)

POST TYPE	LENGTH (L) INCH	WIDTH (W) INCH	WEIGHT LBS/FT
FS1	1.625	1.25	1.35
FS2†	1.875	1.625	1.850
FS2	1.875	1.625	2.400
FS3	2.250	1.700	2.780

REQUIRED POST SIZE FOR GATES

USE	LEAF WIDTHS FEET	POST TYPE
GATES	LESS THAN OR EQUAL TO 6 FT.	SP4
	LESS THAN OR EQUAL TO 13 FT.	SP5
	LESS THAN OR EQUAL TO 18 FT.	SP6
	LESS THAN OR EQUAL TO 23 FT.	SP7

ROUND STEEL FENCE POST (1.8 OZ./SQ. FT. COATING)

POST TYPE	OUTSIDE DIMENSION INCH	WALL THICKNESS INCH	WEIGHT LBS/FT
SP1	1.660	0.140	2.270
SP2	1.900	0.145	2.720
SP3	2.375	0.154	3.650
SP4	2.875	0.203	5.800
SP5	4.000	0.226	9.120
SP6	6.625	0.280	18.990
SP7	8.625	0.322	28.580

FENCE CHAIN LINK

STATE OF WISCONSIN
DEPARTMENT OF TRANSPOR

6

S.D.D. 15 B 3-15a

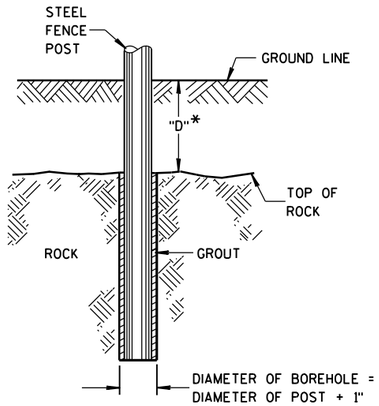

*IF "D" IS LESS THAN 2'-6", DRILL ROCK AND INSTALL GROUT

ROCK INSTALLATION OF LINE POST

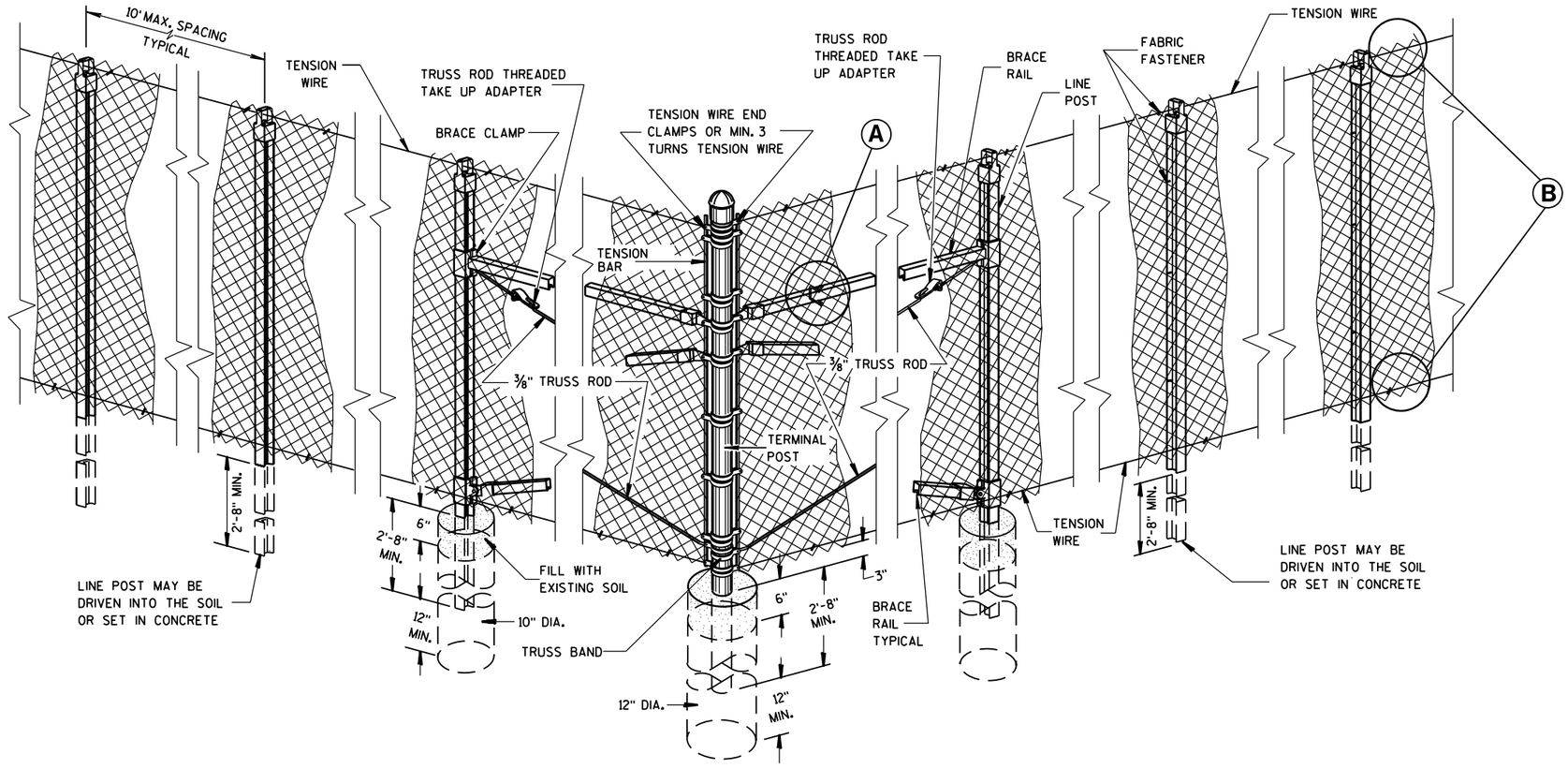

END, CORNER, ANGLE INTERSECTION & INTERMEDIATE BRACED POSTS

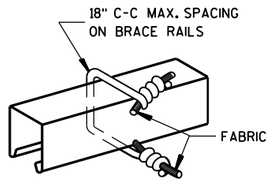

BRACE RAIL

FABRIC FASTENER

Ⓐ

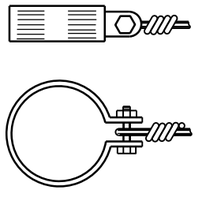

TENSION WIRE END CLAMP

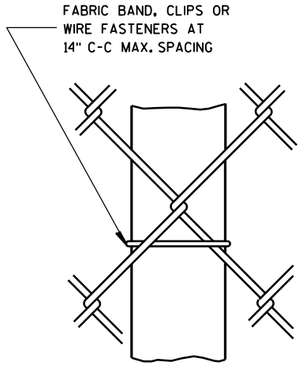

LINE POST

FABRIC FASTENER

AT TOP

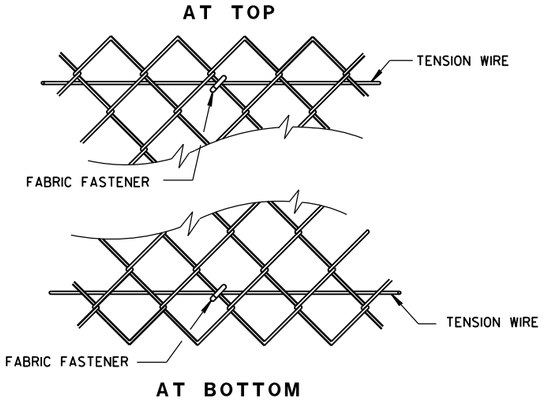

AT BOTTOM

SELVAGES

Ⓑ

FENCE CHAIN LINK

STATE OF WISCONSIN
DEPARTMENT OF TRANSPORTATION

APPROVED
FEB. 2015 DATE
FHWA
/S/ Jerry H. Zogg
ROADWAY STANDARDS DEVELOPMENT ENGINEER

6
S.D.D. 15 B 3-15b

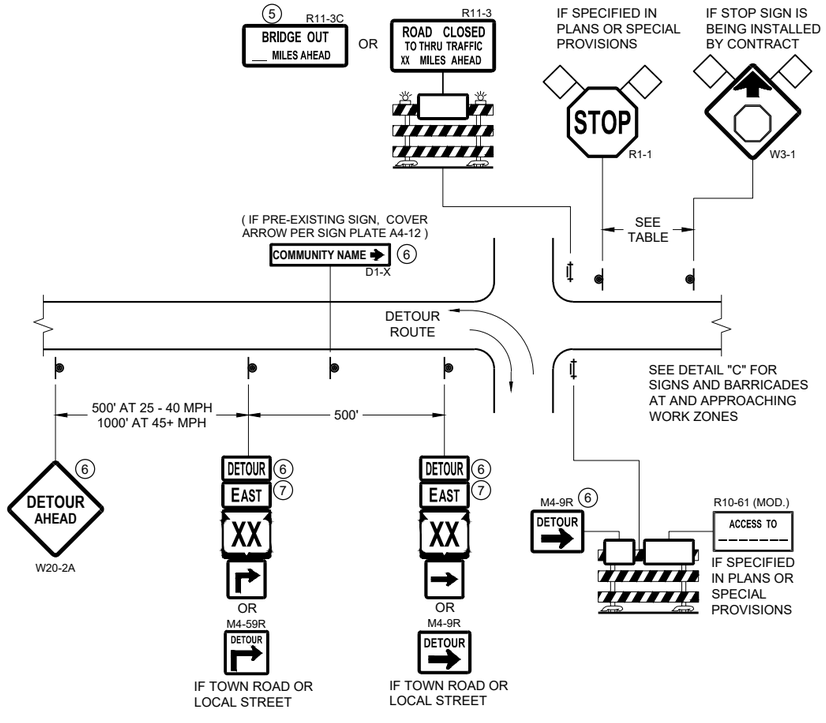

DETAIL A
MAINLINE CLOSURE WITH POSTED DETOUR

WORK ZONE GREATER THAN OR EQUAL TO ½ MILE FROM DETOUR ROUTE (1000 FEET IF URBAN)

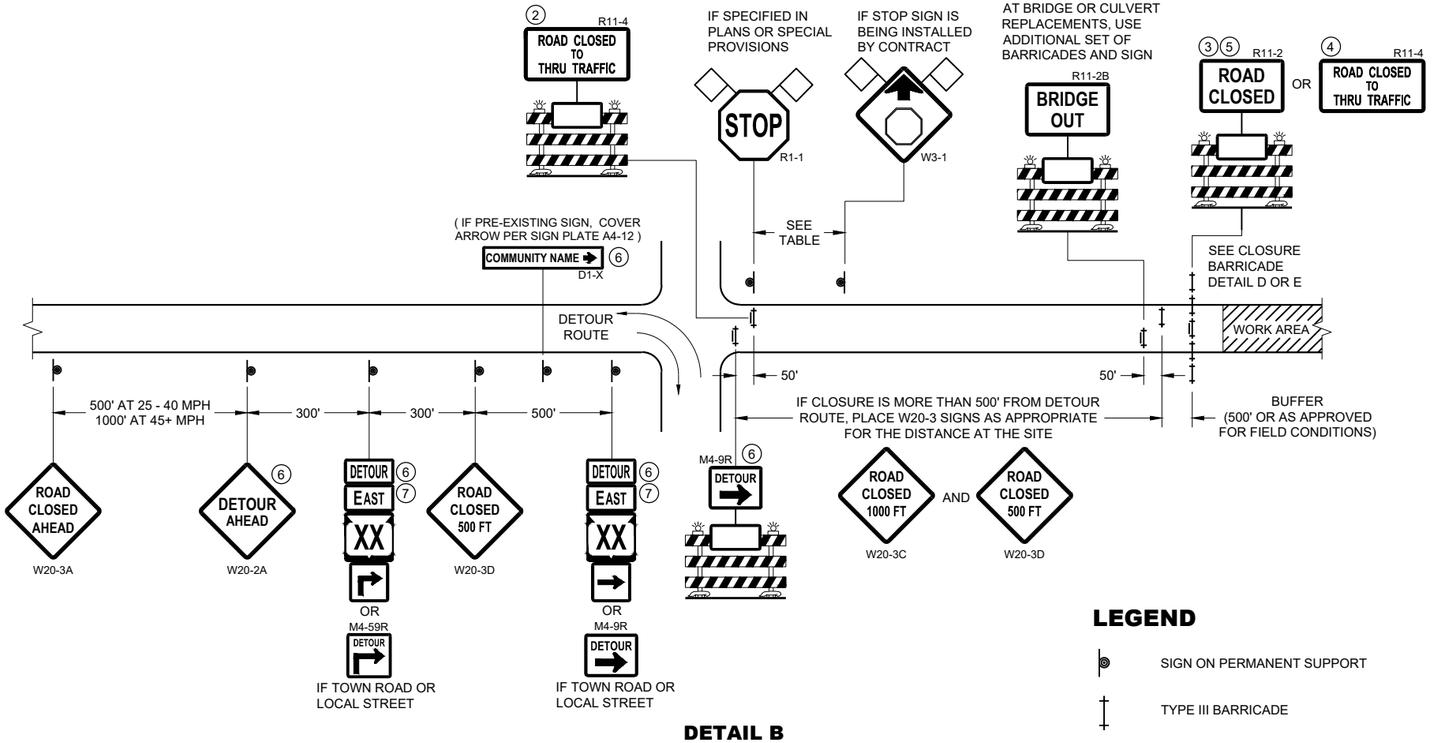

DETAIL B
MAINLINE CLOSURE WITH POSTED DETOUR

WORK ZONE LESS THAN ½ MILE FROM DETOUR ROUTE (1000 FEET IF URBAN)

LEGEND

- SIGN ON PERMANENT SUPPORT
- TYPE III BARRICADE
- TYPE III BARRICADE WITH ATTACHED SIGN
- TYPE "A" WARNING LIGHT (FLASHING)
- WORK AREA
- FLAGS, 16" X 16" MIN. (ORANGE)

DETOUR M4 - 8
EAST M3 - X
XX M1 - 4 OR XX M1 - 6 OR COUNTY X M1 - 5A
M05 - 1 OR M06 - 1

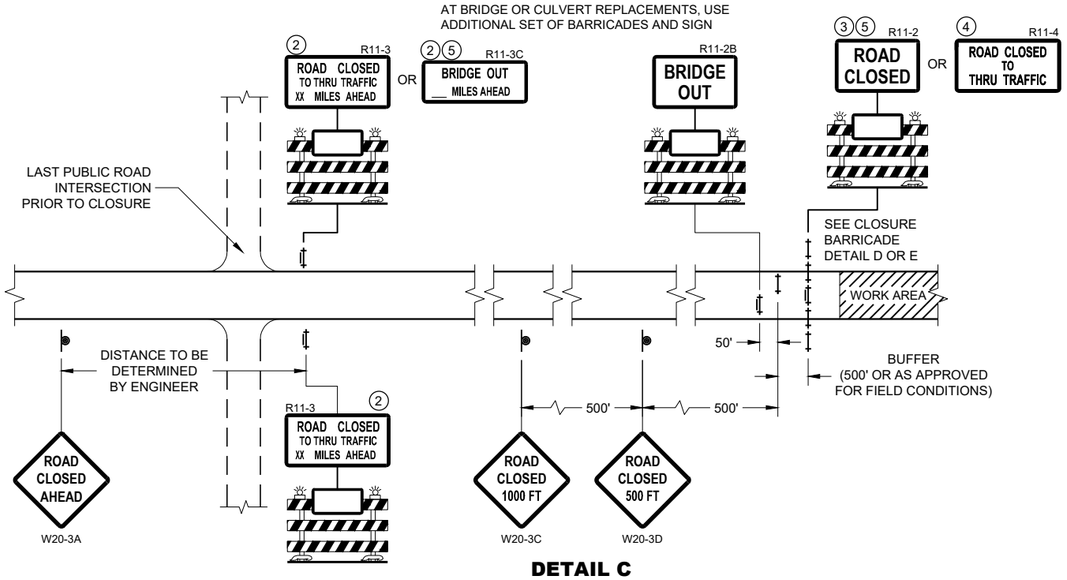

DETAIL C
MAINLINE CLOSURE, NO POSTED DETOUR

SPEED LIMIT (MPH)	"STOP AHEAD" ADVANCE WARNING DISTANCE (FT)
25	200
30	200
35	350
40	350
45	500
50	550
55	750

SEE SDD 15C2-SHEET "b"
FOR GENERAL NOTES
AND FOOTNOTES ① THROUGH ⑦

BARRICADES AND SIGNS FOR MAINLINE CLOSURES

STATE OF WISCONSIN
DEPARTMENT OF TRANSPORTATION

APPROVED
February 2020
DATE
/S/ Andrew Heidtke
WORK ZONE ENGINEER

FHWA

699

6

SDD 15C02 - 08a

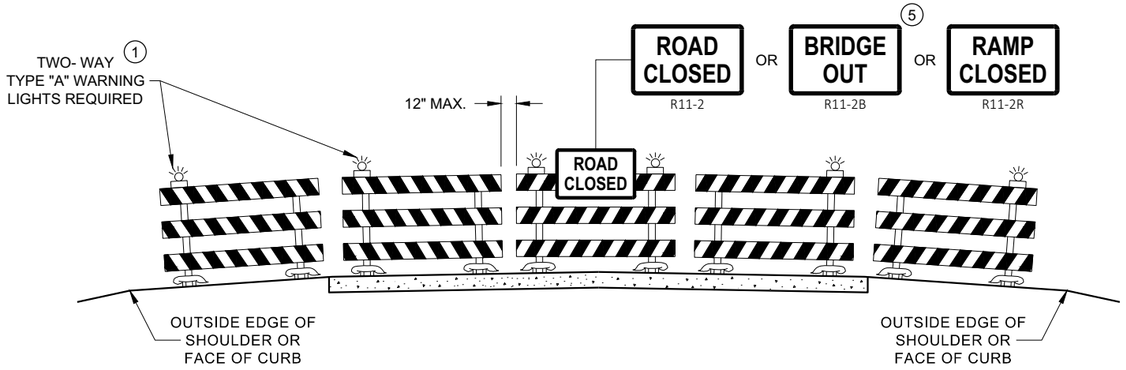

DETAIL D
ROAD CLOSURE BARRICADE DETAIL
APPROACH VIEW

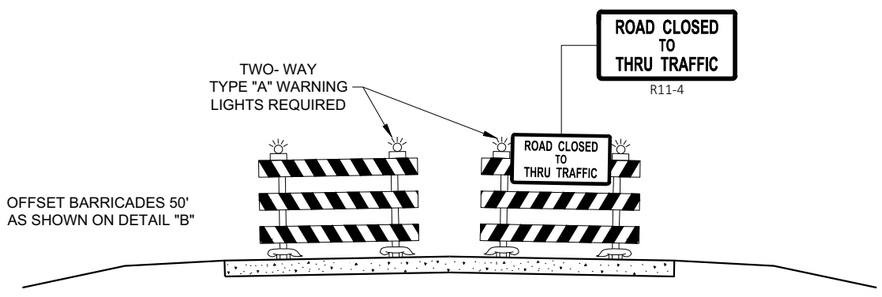

DETAIL E
LANE CLOSURE BARRICADE DETAIL
APPROACH VIEW

SEE SDD 15C2 - SHEET "a" FOR LEGEND

GENERAL NOTES

THE EXACT NUMBER, LOCATION, AND SPACING OF ALL SIGNS AND BARRICADES SHALL BE ADJUSTED TO FIT FIELD CONDITIONS AS APPROVED BY THE ENGINEER.

ANY SIGNS TEMPORARY OR EXISTING, WHICH CONFLICT WITH TRAFFIC CONTROL "IN USE", SHALL BE REMOVED OR COVERED AS NEEDED AND AS APPROVED BY THE ENGINEER.

THE SPACING BETWEEN TRAFFIC CONTROL SIGNS SHOULD BE ADJUSTED TO NOT CONFLICT WITH AND SHOULD PROVIDE A DESIRABLE MINIMUM OF 200 FEET CLEARANCE TO EXISTING SIGNS THAT WILL REMAIN IN PLACE.

BARRICADES THAT MUST BE MOVED FOR A WORK OPERATION SHALL BE IMMEDIATELY RE-ESTABLISHED UPON COMPLETION OF THE OPERATION, OR FOR CONTINUING OPERATIONS, AT THE END OF EACH WORKING DAY.

SIGNS THAT WILL BE IN PLACE LESS THAN 7 CONTINUOUS DAYS AND NIGHTS MAY BE MOUNTED ON PORTABLE SUPPORTS.

ALL TYPE III BARRICADES SHALL HAVE RAILS REFLECTORIZED ON BOTH FACES. STRIPES SHALL BE PROPERLY SLOPED DOWN TOWARD THE TRAFFIC SIDE OR AS SHOWN IN THE ROAD CLOSURE BARRICADE DETAIL "D" FOR FULL ROAD CLOSURES.

TYPE "A" LOW - INTENSITY FLASHING WARNING LIGHTS SHALL BE VISIBLE ON BOTH SIDES OF THE BARRICADE.

THE R11 - 2, R11 - 3, M4 - 9, R11 - 4, AND R10 - 61 SIGNS PLACED ON THE BARRICADES SHALL COVER NO MORE THAN THE TOP RAIL. THE SIGNS SHALL NOT COVER ANY PORTION OF THE MIDDLE RAIL OR BOTTOM RAILS.

"WO" AND "MO" SIGNS ARE THE SAME AS "W" AND "M" SIGNS EXCEPT THE BACKGROUND IS ORANGE.

ALL SIGNS SHALL BE 48" X 48" UNLESS OTHERWISE NOTED BELOW:
- R11 - 2 SHALL BE 48" X 30"
- R11 - 3 SHALL, R11 - 4 AND R10 - 61 SHALL BE 60 " X 30"
- M4 - 9 SHALL BE 30" X 24"
- M3 - X SHALL BE 24" X 12" (36" X 18" IF NEEDED TO MATCH EXISTING SIGNS)
- M4 - 8 SHALL BE 24" X 12" (36" X 18" IF NEEDED TO MATCH EXISTING SIGNS)
- M1 - 4, M1 - 5A AND M1 - 6 SHALL BE 24" X 24" (36" X 36" IF NEEDED TO MATCH EXISTING SIGNS)
- MO5 - 1 AND MO6 - 1 SHALL BE 21" X 21" (30" X 30" IF NEEDED TO MATCH EXISTING SIGNS)
- D1 - X SHALL BE AS SHOWN ON SPECIFIC PROJECT SIGNING DETAIL SHEETS.
- R1 - 1 SHALL BE 36" X 36"

(1) TWO WARNING LIGHTS SHALL BE PROVIDED ON THE CENTER BARRICADE AND A MINIMUM OF ONE WARNING LIGHT SHALL BE PROVIDED ON EACH OF THE OTHER BARRICADES WITHIN THE ROADWAY LIMITS. SPACING OF THE WARNING LIGHTS SHALL BE UNIFORM TO THE EDGE OF ROADWAY AS SHOWN (APPROX. 8 FOOT LIGHT SPACING.

(2) THESE SIGNS AND BARRICADES ARE NOT REQUIRED IF ROAD CLOSURE BEGINS AT AN INTERSECTION.

(3) FOR ROAD CLOSURE WITHOUT LOCAL ACCESS TO PROJECT, SEE ROAD CLOSURE BARRICADE DETAIL "D".

(4) FOR ROAD CLOSURE WITH LOCAL ACCESS TO PROJECT, SEE ROAD CLOSURE BARRICADE DETAIL "E".

(5) FOR BRIDGE OR CULVERT REPLACEMENTS, SUBSTITUTE "BRIDGE OUT" INSTEAD OF "ROAD CLOSED" ON R11 - 2 AND R11 - 3 SIGNS.

(6) INSTALL DETOUR AND COMMUNITY GUIDE SIGNS AND ARROWS ONLY IF SPECIFIED IN THE CONTRACT. IF THERE ARE EXISTING ROUTE MARKER ASSEMBLIES THAT WILL REMAIN IN PLACE, ADJUST THE LOCATION OF THE DETOUR ROUTE SIGNS TO CORRESPOND WITH THE EXISTING ASSEMBLIES. MODIFY EXISTING SIGNS WHERE POSSIBLE. SEE SPECIFIC PROJECT DETOUR SIGNING DETAIL SHEETS. IF DETOUR SIGNS ARE BEING INSTALLED BY OTHERS, PLACE THE CONTRACTED TRAFFIC CONTROL SIGNS TO ALLOW FOR PLACEMENT OF ALL WARNING, DETOUR AND GUIDE SIGNS AS SHOWN.

(7) "EAST" CARDINAL DIRECTION MARKERS AND RIGHT TURN ARROWS ARE SHOWN. USE OTHER CARDINAL DIRECTIONS AND ARROWS AS APPROPRIATE.

BARRICADES AND SIGNS FOR VARIOUS CLOSURES

STATE OF WISCONSIN
DEPARTMENT OF TRANSPORTATION

APPROVED
February 2020
DATE
/S/ Andrew Heidtke
WORK ZONE ENGINEER
700
FHWA

6
SDD 15C02 - 08b

THIS DRAWING PROVIDES GENERAL GUIDANCE ON TYPICAL DETOUR SIGN LAYOUT AND SPACING. SEE PROJECT DETOUR SIGNING SHEETS FOR SPECIFIC DETAILS FOR EACH PROJECT.

LEGEND

- SIGN ON PERMANENT SUPPORT
- WORK AREA
- DETOUR / EAST — M4 - 8, M3 - X
- XX — M1 - 4; XX — M1 - 6; COUNTY X — M1 - 5A
- M05 - 1; M06 - 1; M06 - 1

GENERAL NOTES

THE EXACT NUMBER, LOCATION AND SPACING OF ALL SIGNS SHALL BE ADJUSTED TO FIT FIELD CONDITIONS AS APPROVED BY THE ENGINEER.

IF THERE ARE EXISTING ROUTE MARKER ASSEMBLIES THAT WILL REMAIN IN PLACE, ADJUST THE LOCATION OF THE DETOUR ROUTE SIGNS TO CORRESPOND WITH THE EXISTING ASSEMBLIES. SEE SPECIFIC PROJECT DETOUR SIGNING DETAIL SHEETS. MODIFY EXISTING SIGNS WHERE POSSIBLE.

THE SPACING BETWEEN TRAFFIC CONTROL AND DETOUR SIGNS SHOULD BE ADJUSTED TO NOT CONFLICT WITH AND TO PROVIDE A DESIRABLE MINIMUM OF 200 FEET CLEARANCE TO EXISTING SIGNS THAT WILL REMAIN IN PLACE.

ANY SIGNS TEMPORARY OR EXISTING, WHICH CONFLICT WITH TRAFFIC CONTROL "IN USE" SHALL BE REMOVED OR COVERED AS NEEDED AND AS APPROVED BY THE ENGINEER.

SIGNS THAT WILL BE IN PLACE LESS THAN 7 CONTINUOUS DAYS AND NIGHTS MAY BE MOUNTED ON PORTABLE SUPPORTS.

"MO" SIGNS ARE THE SAME AS "M" SIGNS EXCEPT THE BACKGROUND IS ORANGE.

SIGN SIZES SHALL BE AS FOLLOWS:

M3-X SHALL BE 24" X 12" (36" X 18" IF NEEDED TO MATCH EXISTING SIGNS)
M4-8 SHALL BE 24" X 12" (36" X 18" IF NEEDED TO MATCH EXISTING SIGNS)
M1-4, M1-5A AND M1-6 SHALL BE 24" X 24" (36" X 36" IF NEEDED TO MATCH EXISTING SIGNS)
M05-1 AND M06-1 SHALL BE 21" X 21" (30" X 30" IF NEEDED TO MATCH EXISTING SIGNS)
M4-9 AND M4-59 SHALL BE 30" X 24"
M4-8a SHALL BE 24" X 18"
G20-51 SHALL BE 60" X 24"
W20-2A SHALL BE 48" X 48"
D1-X SHALL BE AS SHOWN ON SPECIFIC PROJECT SIGNING DETAIL SHEETS.

* OPTIONAL SIGNS. SEE SPECIFIC PROJECT DETOUR SIGNING DETAIL SHEETS.

** FOR A TOWN ROAD OR LOCAL STREET DETOURED ONTO A STATE TRUNK HIGHWAY, PLACE A ROAD NAME PLAQUE ABOVE THE M4-9 SIGN AS SPECIFIED IN THE CONTRACT.

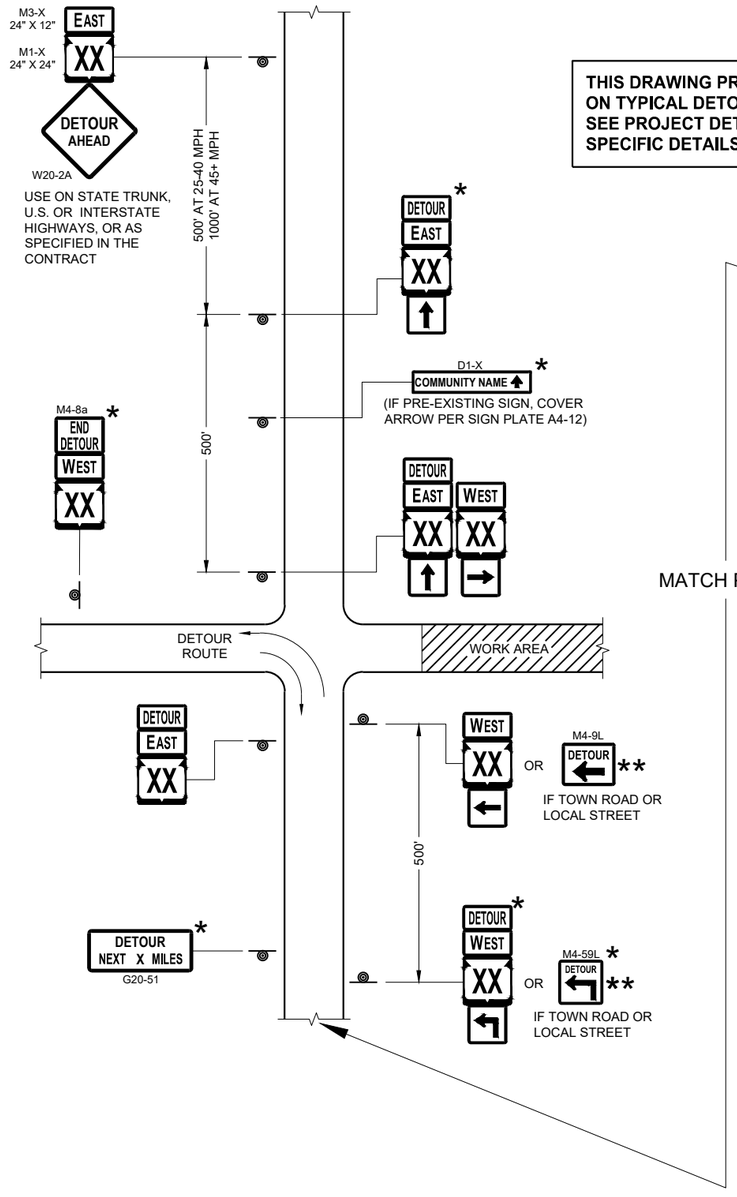

MATCH POINT

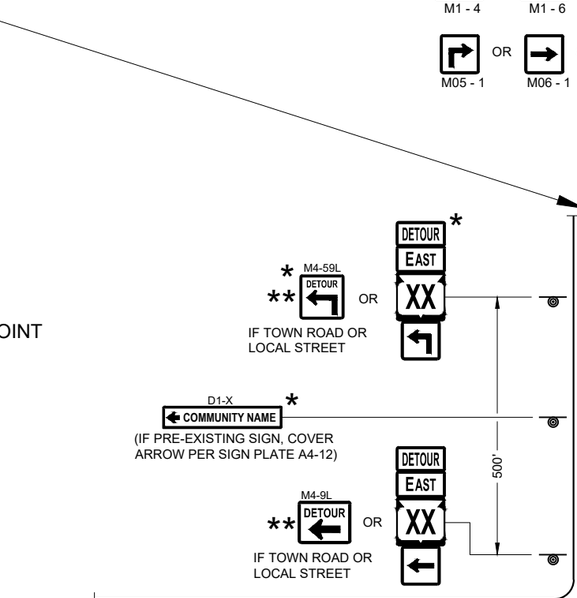

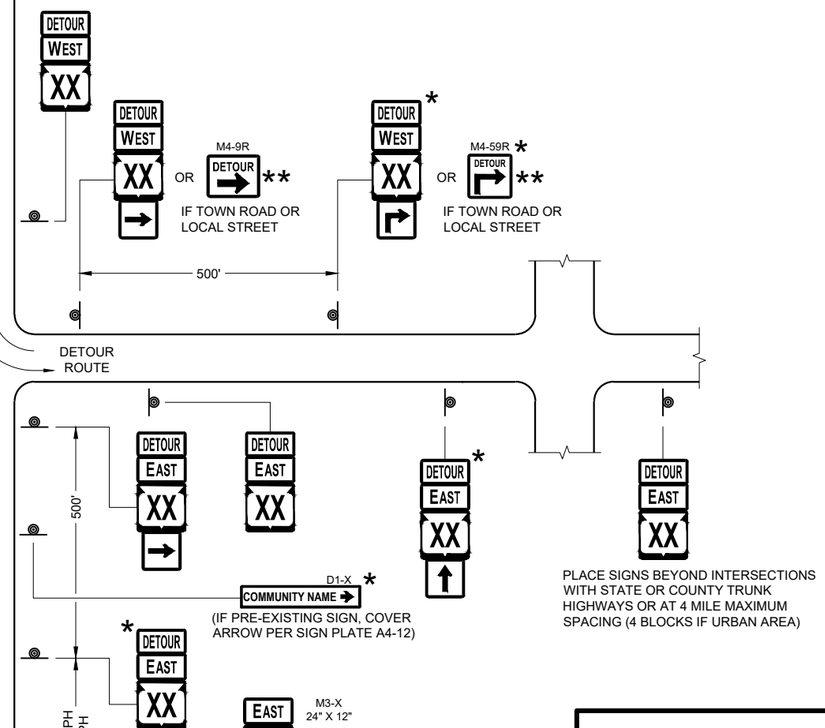

SEE SPECIFIC PROJECT DETOUR SIGNING DETAIL SHEETS AND DETAIL A OR B ON SDD SHEET 15C02 - SHEET "a"

DETAIL F
DETOUR SIGNING

DETOUR SIGNING FOR MAINLINE CLOSURES

STATE OF WISCONSIN
DEPARTMENT OF TRANSPORTATION

APPROVED
February 2020
DATE

/S/ Andrew Heidtke
WORK ZONE ENGINEER

FHWA

SDD 15C02 - 08c
6

GENERAL NOTES

THE EXACT NUMBER, LOCATION, AND SPACING OF ALL SIGNS AND DEVICES SHALL BE ADJUSTED TO FIT FIELD CONDITIONS.

THE SPACING BETWEEN TRAFFIC CONTROL SIGNS SHOULD BE ADJUSTED TO NOT CONFLICT WITH AND SHOULD PROVIDE A MINIMUM OF 200 FEET (500 FEET DESIRABLE) CLEARANCE TO EXISTING SIGNS THAT WILL REMAIN IN PLACE.

ALL SIGNS ARE 48" X 48" UNLESS OTHERWISE NOTED.

SIGNS THAT WILL BE IN PLACE LESS THAN SEVEN CONTINUOUS DAYS AND NIGHTS MAY BE MOUNTED ON PORTABLE SUPPORTS.

IF A "STOP" SIGN MUST BE REMOVED FOR A WORK OPERATION, A TEMPORARY "STOP" SIGN SHALL BE PLACED PRIOR TO THE SIGN REMOVAL, OR A FLAGGER SHALL BE PROVIDED UNTIL THE SIGN IS REESTABLISHED.

* OMIT G20-1 SIGNS IF LENGTH OF WORK AREA IS 2 MILES OR LESS

** PLACE AN ADDITIONAL W20-1A "ROAD WORK AHEAD" SIGN IF WORK AREA WITHIN THE PROJECT IS SEPARATED BY MORE THAN 2 MILES FROM PREVIOUS WORK AREA.

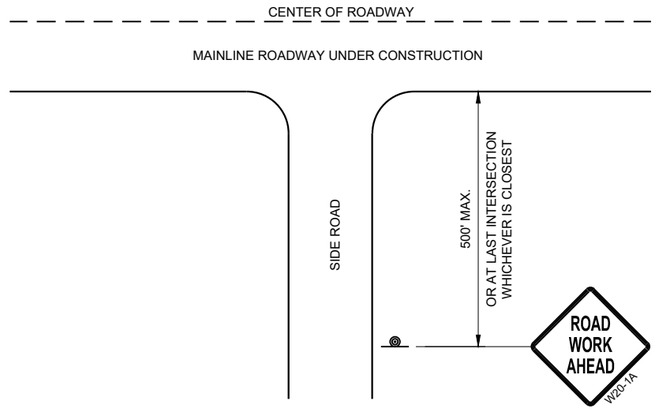

TYPICAL SIDE ROAD APPROACH WARNING SIGN DETAIL

LEGEND

SIGN ON PERMANENT SUPPORT

DIRECTION OF TRAFFIC

WORK AREA

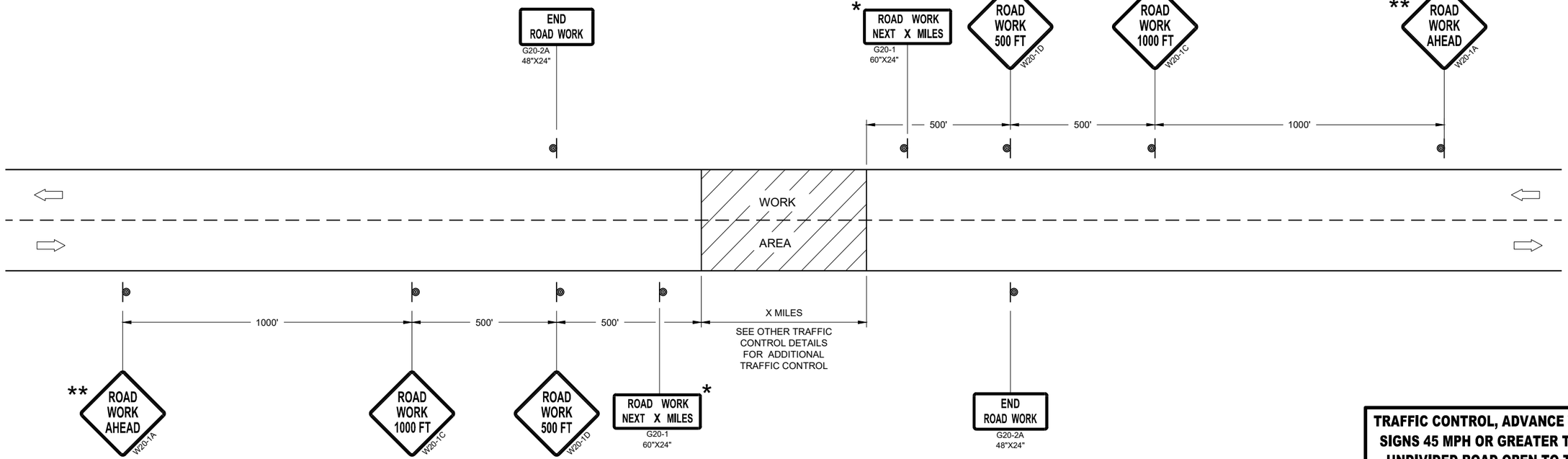

TRAFFIC CONTROL, ADVANCE WARNING SIGNS 45MPH OR GREATER

TRAFFIC CONTROL, ADVANCE WARNING SIGNS 45 MPH OR GREATER TWO-WAY UNDIVIDED ROAD OPEN TO TRAFFIC

STATE OF WISCONSIN
DEPARTMENT OF TRANSPORTATION

APPROVED
July 2018
DATE

/S/ Andrew Heidtke
WORK ZONE ENGINEE

FHWA

6
SDD 15C04 - 05

GENERAL NOTES

THE EXACT NUMBER, LOCATION, AND SPACING OF ALL SIGNS AND DEVICES SHALL BE ADJUSTED TO FIT FIELD CONDITIONS.

THE SPACING BETWEEN TRAFFIC CONTROL SIGNS SHOULD BE ADJUSTED TO NOT CONFLICT WITH AND SHOULD PROVIDE A MINIMUM OF 200 FEET (500 FEET DESIRABLE) CLEARANCE TO EXISTING SIGNS THAT WILL REMAIN IN PLACE.

ALL SIGNS ARE 48" X 48" UNLESS OTHERWISE NOTED. IF NECESSARY DUE TO SPACE CONSTRAINTS, 36"X36" SIGNS MAY BE USED INSTEAD OF 48" X 48" SIGNS.

SIGNS THAT WILL BE IN PLACE LESS THAN SEVEN CONTINUOUS DAYS AND NIGHTS MAY BE MOUNTED ON PORTABLE SUPPORTS.

IF A "STOP" SIGN MUST BE REMOVED FOR A WORK OPERATION, A TEMPORARY "STOP" SIGN SHALL BE PLACED PRIOR TO THE SIGN REMOVAL, OR A FLAGGER SHALL BE PROVIDED UNTIL THE SIGN IS REESTABLISHED.

* THE THIRD W20-1 SIGN IS REQUIRED ONLY IF THERE IS AN INTERSECTION BETWEEN THE "ROAD WORK 500 FEET" SIGN AND THE WORK ZONE. ADJUST THE PLACEMENT OF THIS SIGN BASED ON INTERSECTION LOCATION AND OTHER FIELD CONDITIONS.

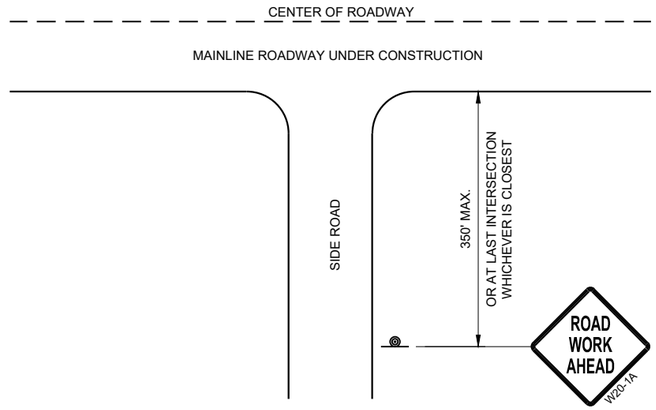

TYPICAL SIDE ROAD APPROACH WARNING SIGN DETAIL

LEGEND

SIGN ON PERMANENT SUPPORT

DIRECTION OF TRAFFIC

WORK AREA

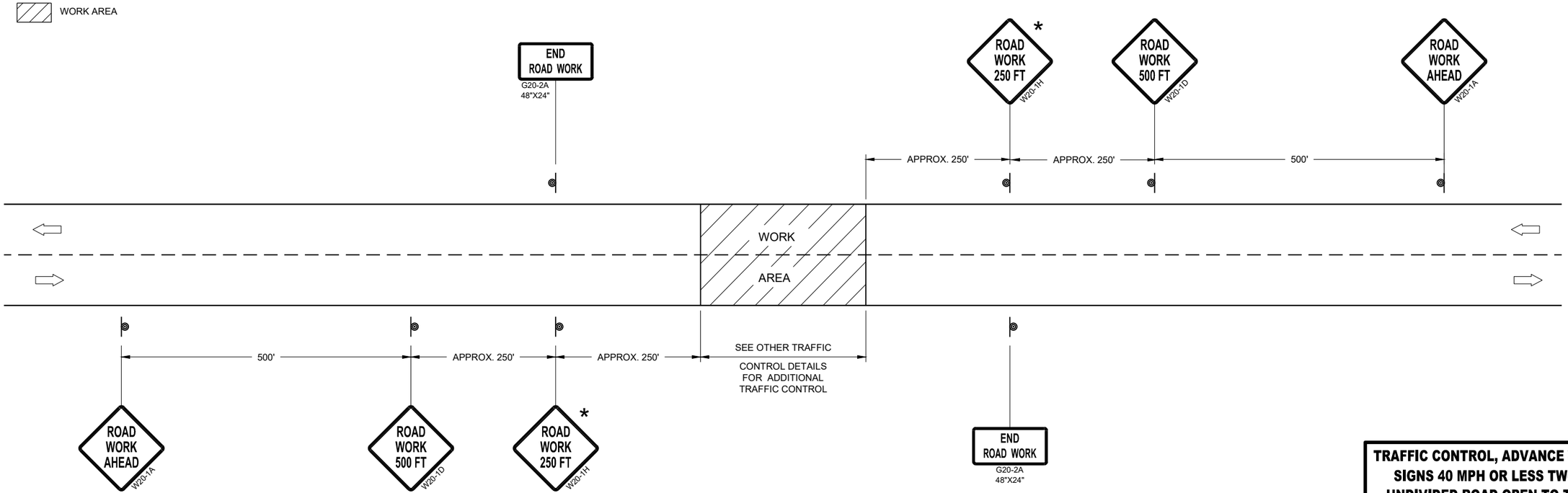

TRAFFIC CONTROL, ADVANCE WARNING SIGNS 40MPH OR LESS

TRAFFIC CONTROL, ADVANCE WARNING SIGNS 40 MPH OR LESS TWO-WAY UNDIVIDED ROAD OPEN TO TRAFFIC

STATE OF WISCONSIN
DEPARTMENT OF TRANSPORTATION

APPROVED
July 2018
DATE

/S/ Andrew Heidtke
WORK ZONE ENGINEE

703

FHWA

6

SDD 15C05 - 05

6

SDD 15C05 - 05

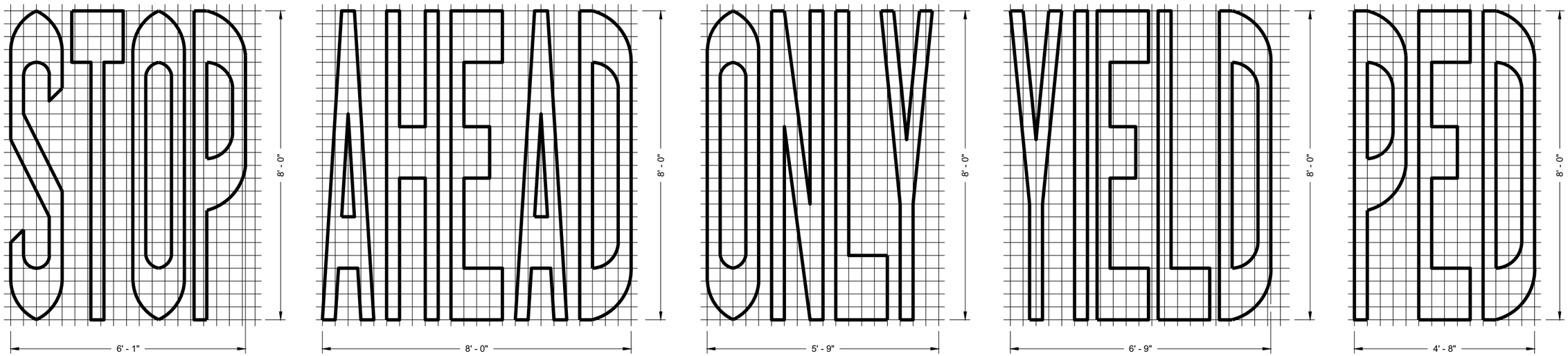

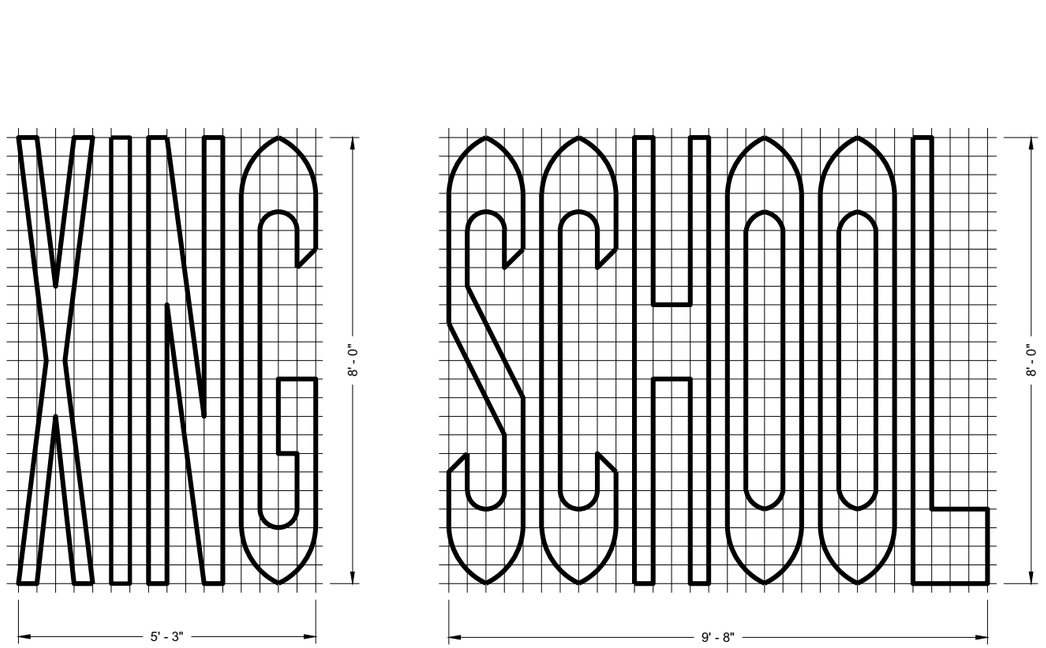

SINGLE LANE

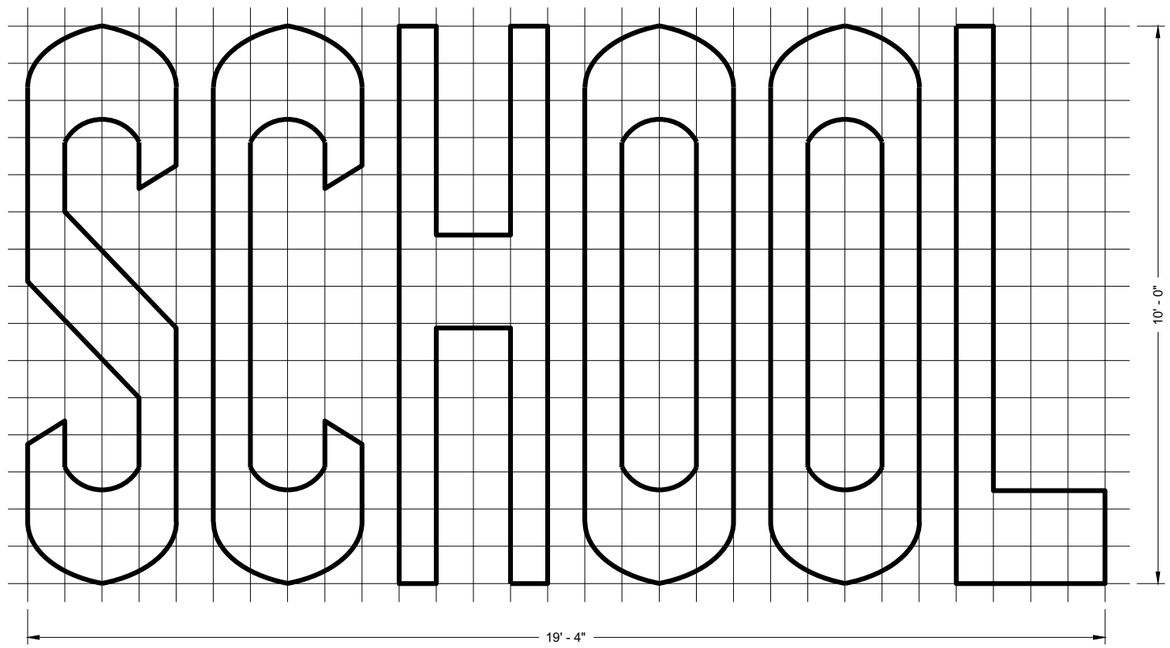

TWO - LANE

GENERAL NOTES

DETAILS OF INSTALLATION, MATERIALS AND WORKMANSHIP NOT SHOWN ON THIS DRAWING SHALL CONFORM TO THE PERTINENT REQUIREMENTS OF THE STANDARD SPECIFICATIONS AND APPLICABLE SPECIAL PROVISIONS.

PAVEMENT MARKING WORDS

STATE OF WISCONSIN
DEPARTMENT OF TRANSPORTATION

APPROVED
November 2019
DATE

/S/ Matthew Rauch
STATE SIGNING AND MAF ENGINEER

FHWA

6

SDD 15C07 - 15b

SDD 15C07 - 15b

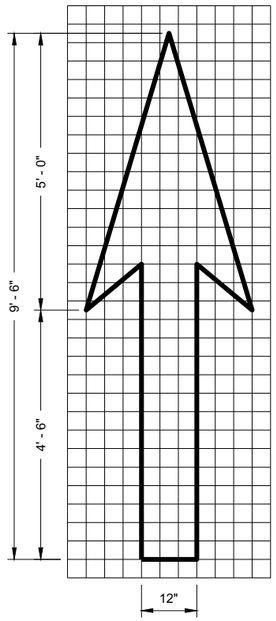

TYPE 1

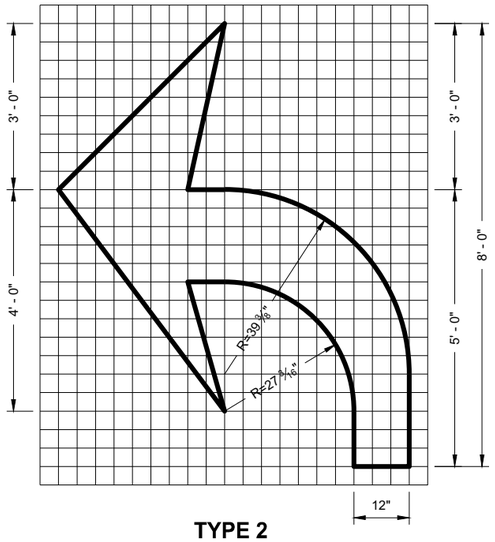

TYPE 2

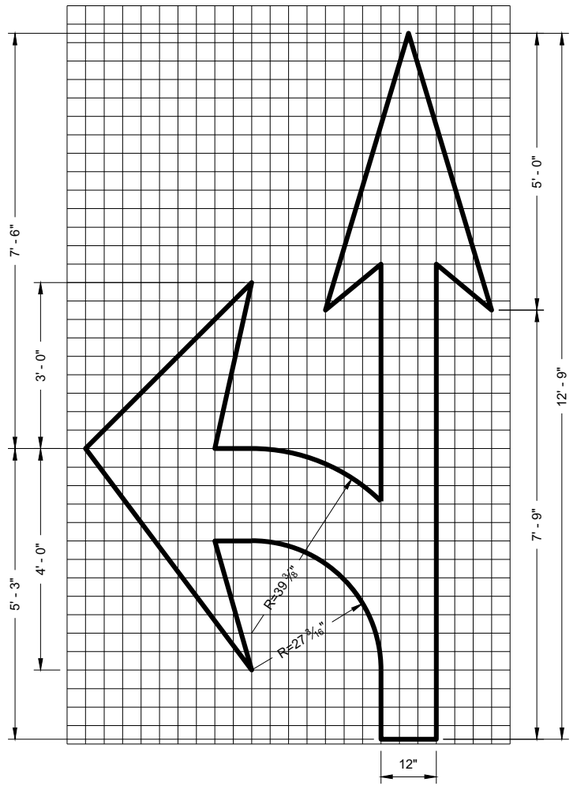

TYPE 3

GENERAL NOTES

DETAILS OF INSTALLATION, MATERIALS AND WORKMANSHIP NOT SHOWN ON THIS DRAWING SHALL CONFORM TO THE PERTINENT REQUIREMENTS OF THE STANDARD SPECIFICATIONS AND APPLICABLE SPECIAL PROVISIONS.

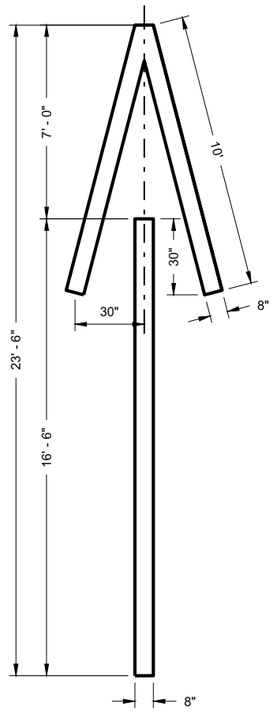

TYPE 4

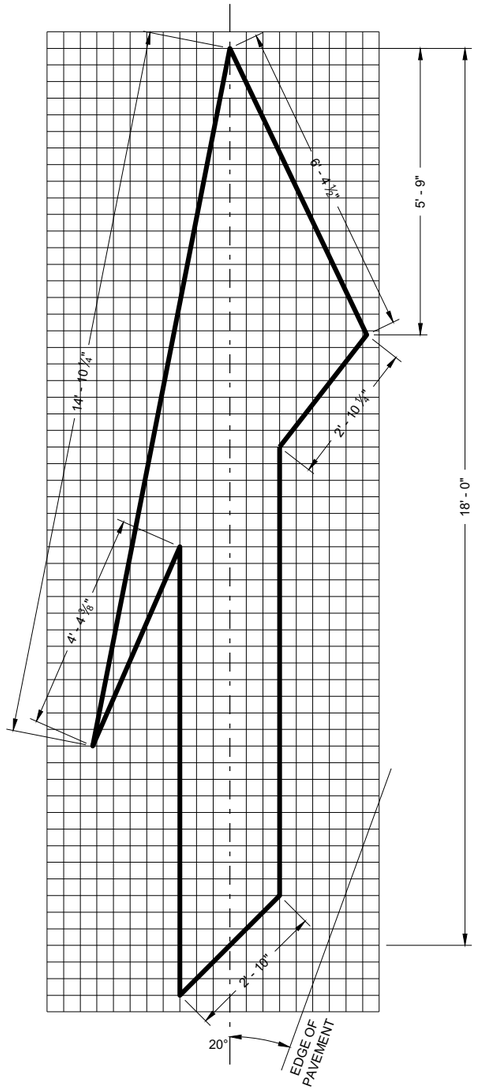

TYPE 5 LANE DROP ARROW

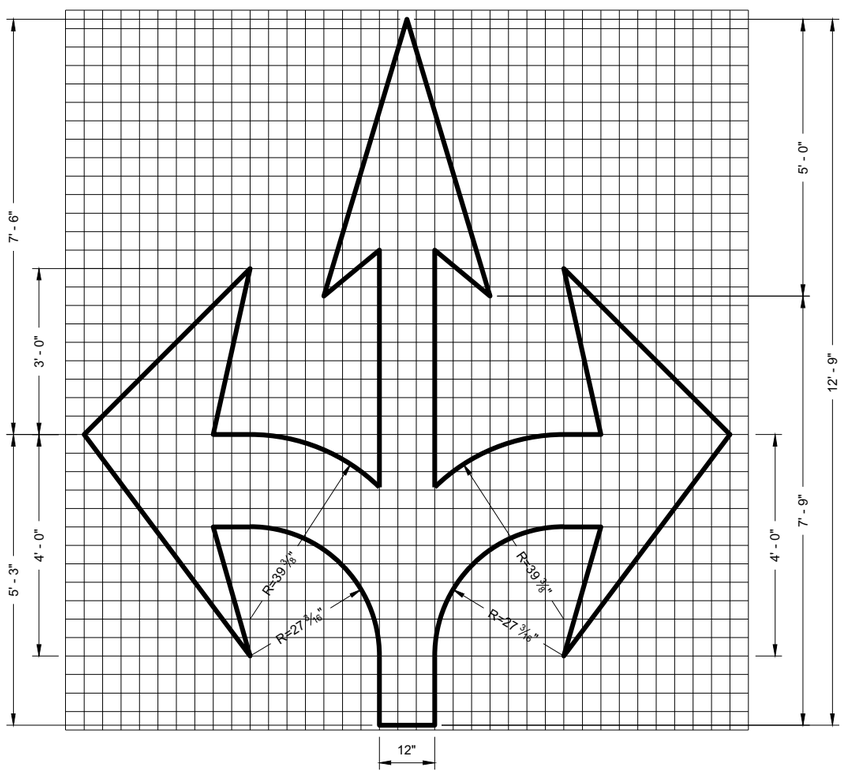

TYPE 6

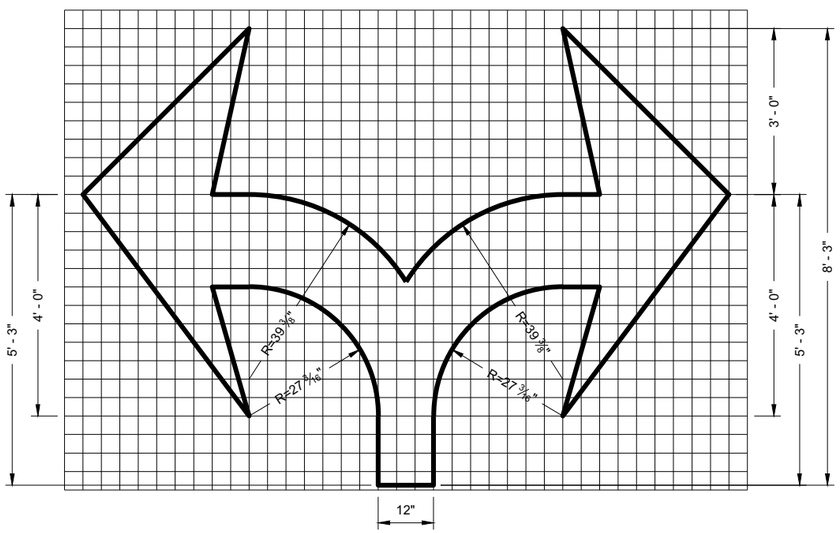

TYPE 7

PAVEMENT MARKING ARROWS

STATE OF WISCONSIN
DEPARTMENT OF TRANSPORTATION

APPROVED
November 2019 — DATE
/S/ Matthew Rauch — STATE SIGNING AND MARKING ENGINEER

FHWA

705

6

SDD 15C07 - 15c

6

SDD 15C07 - 15c

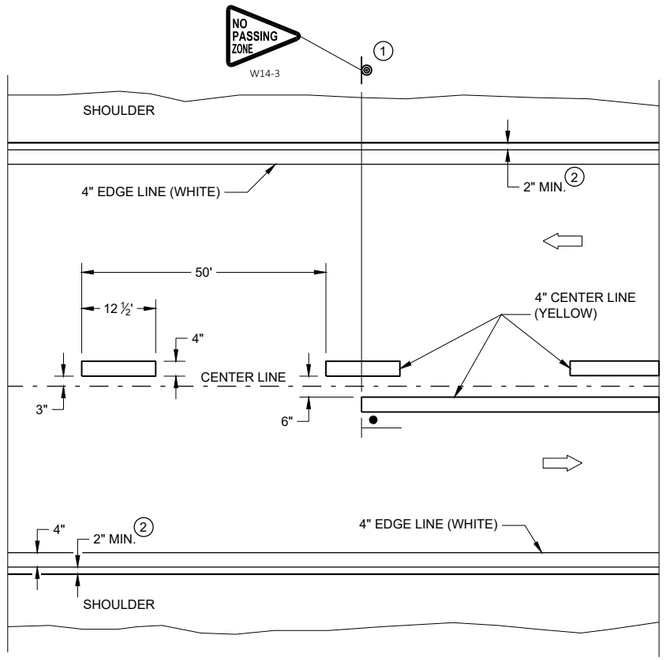

TWO WAY TRAFFIC

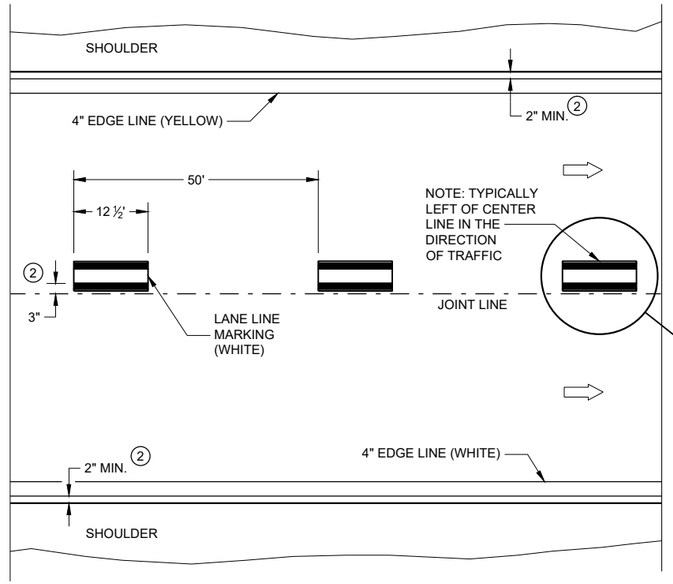

ONE WAY TRAFFIC

PERMANENT PAVEMENT MARKING

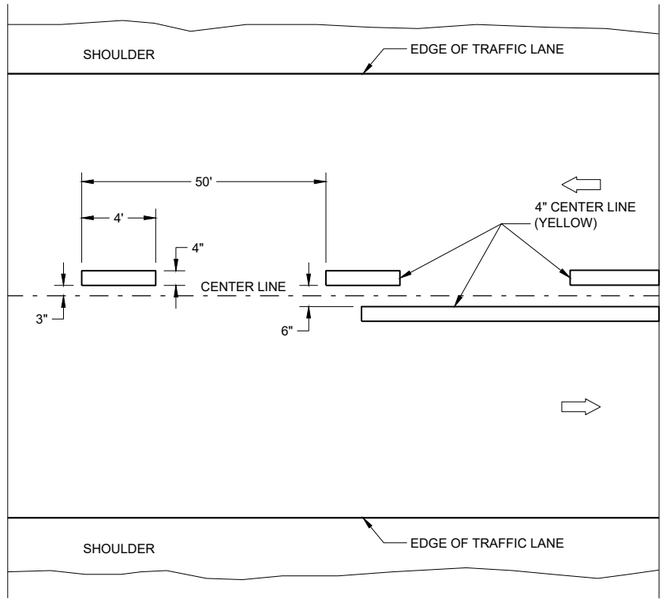

TWO WAY TRAFFIC

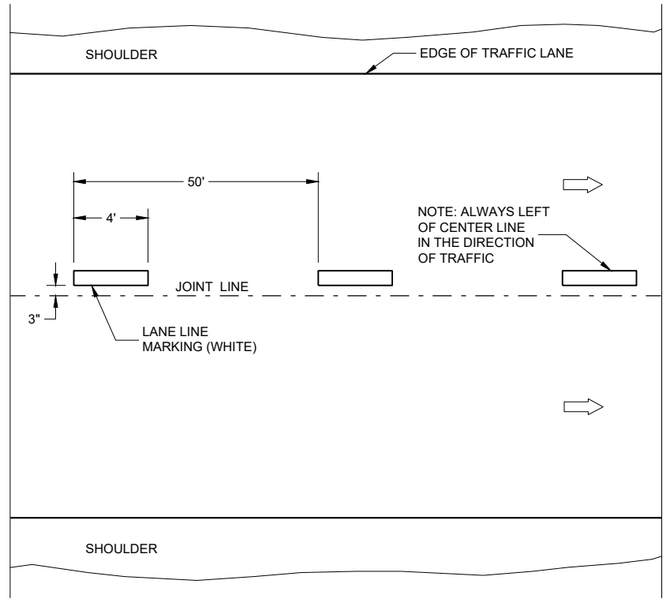

ONE WAY TRAFFIC

TEMPORARY PAVEMENT MARKING

GENERAL NOTES

DETAILS OF CONSTRUCTION NOT SHOWN ON THIS DRAWING SHALL CONFORM TO STANDARD SPECIFICATIONS AND SPECIAL PROVISIONS.

1. LOCATE THE NO PASSING ZONE W14-3 SIGN WITHIN 50 FEET OF THE "T" MARKING
2. MEASURE FROM EDGE OF MARKING TO JOINT LINE. THIS DOES NOT INCLUDE SPACE NEEDED FOR GROOVING OPERATIONS.

LEGEND

"T" MARKING

SIGN ON PERMANENT SUPPORT

DIRECTION OF TRAFFIC

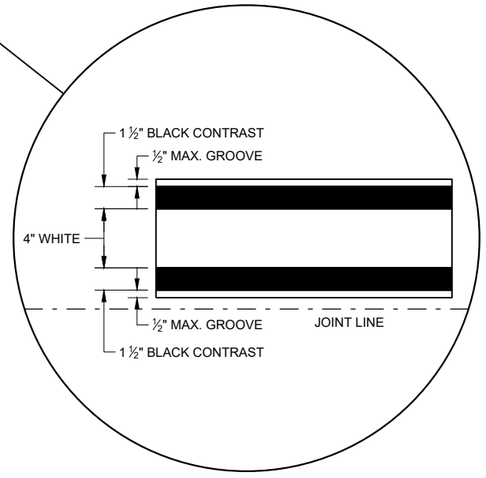

LONGITUDINAL MARKING (MAINLINE)

STATE OF WISCONSIN
DEPARTMENT OF TRANSPORTATION

APPROVED
February 2020
DATE
/S/ Matthew Rauch
STATEWIDE SIGNING AND M ENGINEER

FHWA

SDD 15C08 - 20a

SDD 15C08 - 20a

GENERAL NOTES

1. A SET OF ARROWS IS REQUIRED EVERY 400 FEET OR NEAR INTERSECTIONS OR DRIVEWAYS WITH TURNING TRAFFIC.
2. 8" WHITE
3. TURN BAY LENGTH OF LESS THAN 48' DOES NOT REQUIRE PAVEMENT ARROWS OR TEXT.

DIRECTION OF TRAFFIC

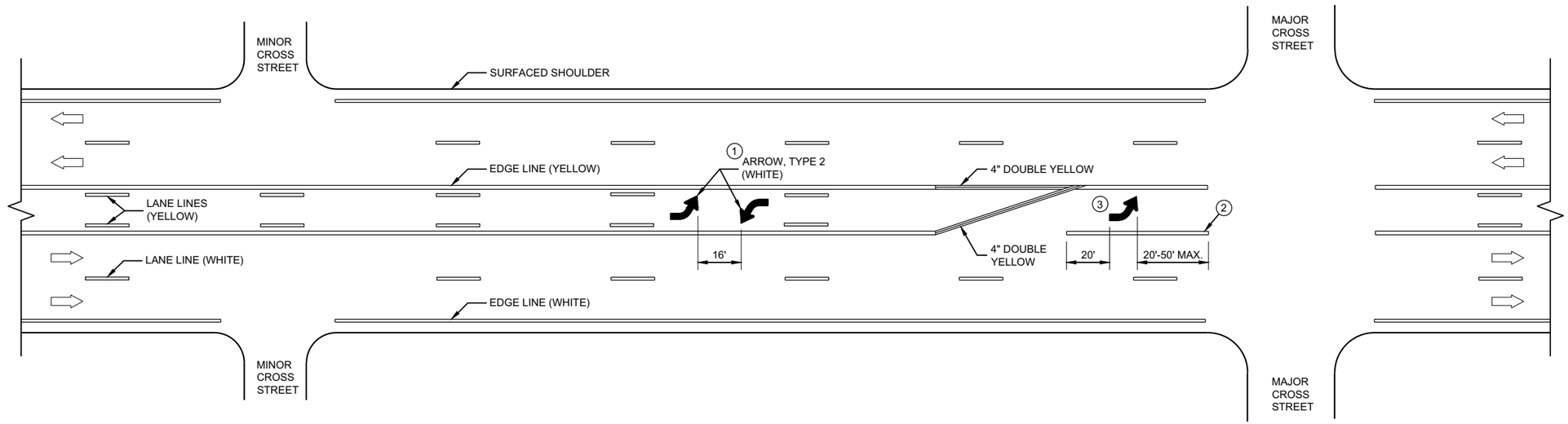

TWO WAY LEFT TURN LANE

6

6

SDD 15C08 - 20b

SDD 15C08 - 20b

PAVEMENT MARKING (TURN LANES)

STATE OF WISCONSIN
DEPARTMENT OF TRANSPORTATION

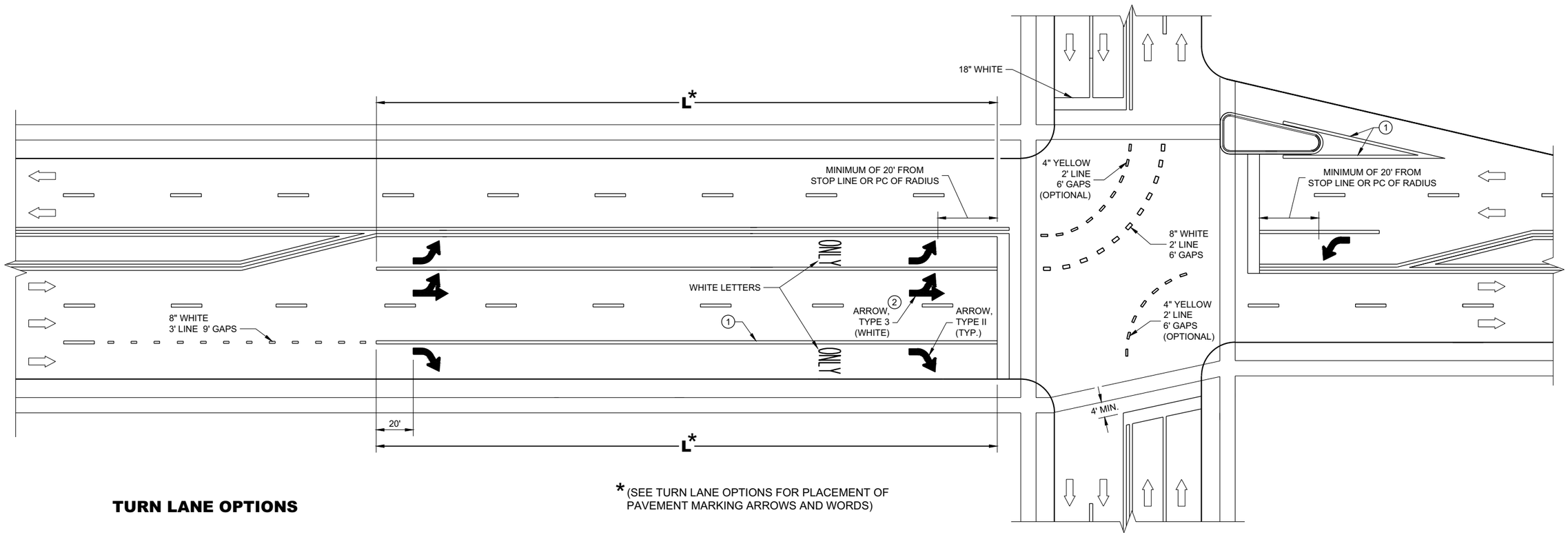

* (SEE TURN LANE OPTIONS FOR PLACEMENT OF PAVEMENT MARKING ARROWS AND WORDS)

TURN LANE OPTIONS

LENGTH OF TURN BAY (**L**) OF 0 - 47' DOES NOT REQUIRE PAVEMENT MARKING ARROWS OR WORDS

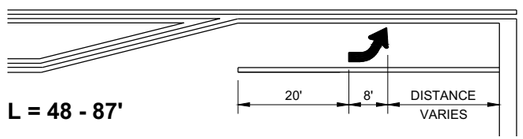

L = 48 - 87'

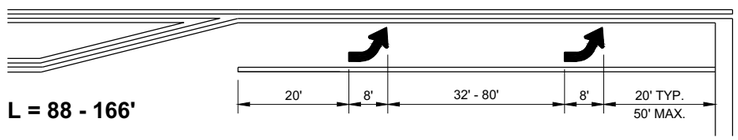

L = 88 - 166'

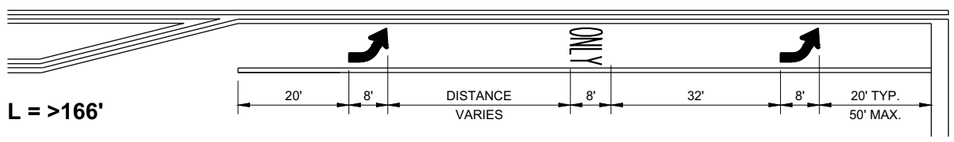

L = >166'

GENERAL NOTES

1. 8" WHITE
2. QUANTITY AND LOCATION OF TYPE 3 ARROWS ARE THE SAME AS THE TYPE II ARROWS IN THE ADJACENT TURN LANE. FOR TURN LANES WITH A PHYSICAL SEPARATION IN THE SAME DIRECTION OF TRAVEL, THE ARROWS AND "ONLY" MARKING MAY BE ELIMINATED.

DIRECTION OF TRAFFIC

L = LENGTH OF TURN BAY

PAVEMENT MARKING (TURN LANES)

STATE OF WISCONSIN
DEPARTMENT OF TRANSPORTATION

6

SDD 15C08 - 20c

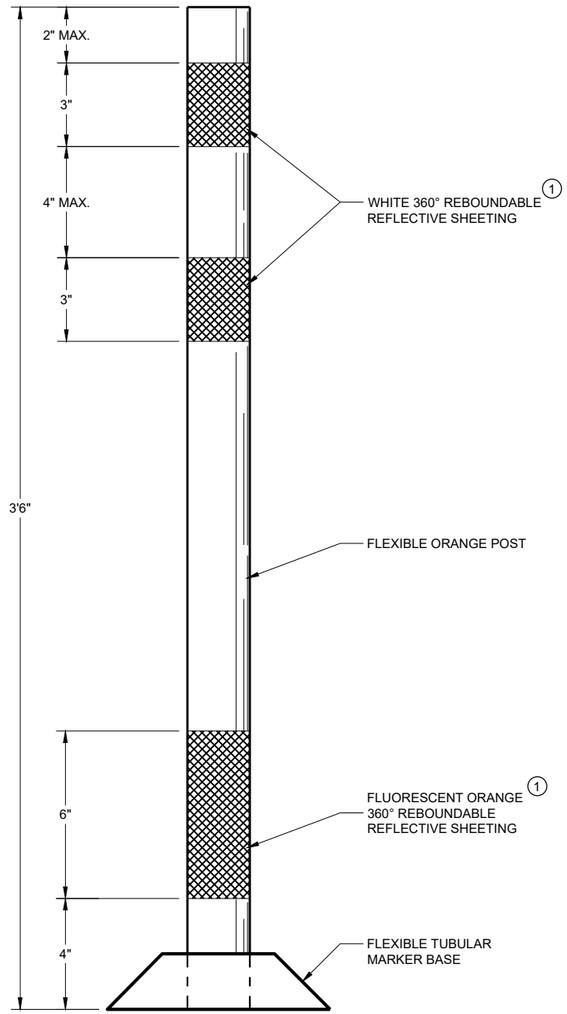

FLEXIBLE TUBULAR MARKER POST WORK ZONE

GENERAL NOTES

DETAILS OF CONSTRUCTION NOT SHOWN ON THIS DRAWING SHALL CONFORM TO THE PERTINENT REQUIREMENTS OF THE STANDARD SPECIFICATIONS AND THE APPLICABLE SPECIAL PROVISIONS.

SURFACE MOUNTED BASES SHALL BE FURNISHED IN ACCORDANCE WITH MANUFACTURERS RECOMMENDATIONS TO BE COMPATIBLE WITH FLEXIBLE TUBULAR MARKER POSTS TO A SIZE AND SHAPE THAT WILL PROVIDE A STABLE POST FOUNDATION WHEN SECURED TO THE PAVEMENT.

THE ASPHALTIC ADHESIVE OR BUTYL PAD FURNISHED SHALL BE IN ACCORDANCE WITH MANUFACTURERS RECOMMENDATIONS, UNLESS DIRECTED BY THE ENGINEER TO USE BOLTS.

(1) REFLECTIVE SHEETING SHALL FOLLOW THE REQUIREMENTS IN THE APPROVED PRODUCTS LISTING FOR SIGN SHEETING.

6

SDD 15C11 - 09a

CHANNELIZING DEVICES
FLEXIBLE TUBULAR MARKER POST

STATE OF WISCONSIN
DEPARTMENT OF TRANSPORTATION

APPROVED
May 2021
DATE

/S/ Andrew Heidtke
WORK ZONE ENGINEE

FHWA

6

SDD 15C11 - 09a

GENERAL NOTES

1. REFLECTIVE SHEETING SHALL FOLLOW THE REQUIREMENTS IN THE APPROVED PRODUCTS LISTING FOR SIGN SHEETING.
2. LOCATION OF WARNING LIGHTS WHEN SHOWN ON THE PLAN.

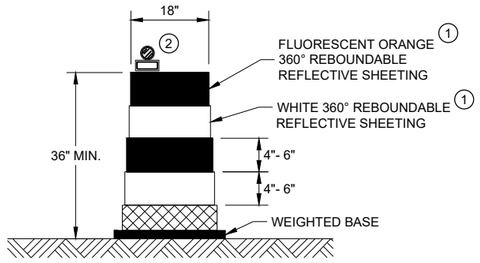

DRUM

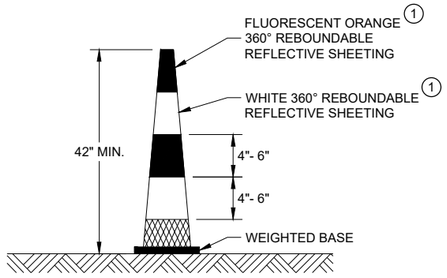

42" CONE

DO NOT USE IN TAPERS
½ SPACING OF DRUMS

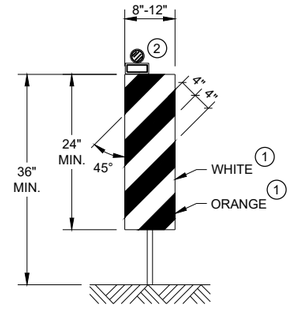

VERTICAL PANEL

THE STRIPES SHALL SLOPE DOWNWARD TO
THE TRAFFIC SIDE FOR CHANNELIZATION.

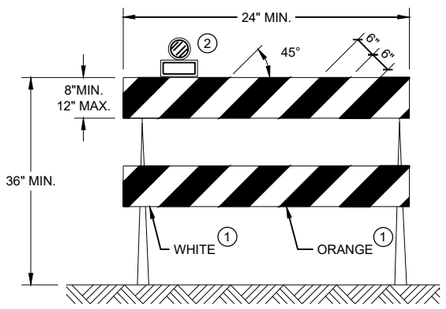

TYPE II BARRICADE

FOR RAILS LESS THAN 36" LONG, 4" WIDE STRIPES
MAY BE USED. ALL STRIPES SHALL SLOPE DOWNWARD
TO THE TRAFFIC SIDE FOR CHANNELIZATION.

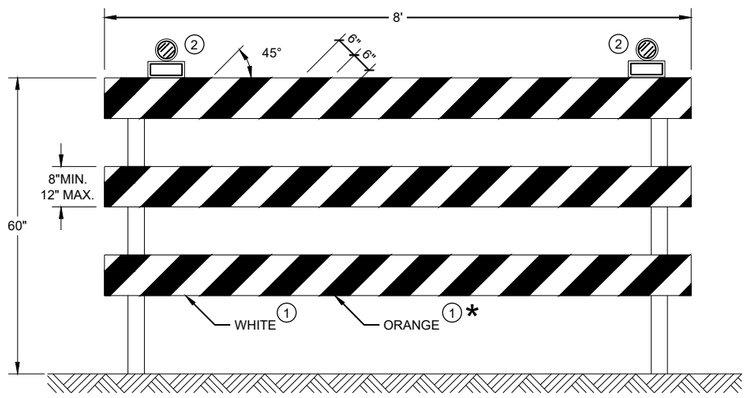

TYPE III BARRICADE

IF SIGN MOUNTED, DO NOT COVER MORE THAN 50% OF THE TOP
TWO RAILS OR 33% OF THE TOTAL AREA OF THE THREE RAILS.

* IF USED FOR A PERMANENT APPLICATION USE RED SHEETING.

CHANNELIZING DEVICES
DRUMS, CONES, BARRICADES
AND VERTICAL PANELS

STATE OF WISCONSIN
DEPARTMENT OF TRANSPORTATION

APPROVED
May 2021
DATE

/S/ Andrew Heidtke
WORK ZONE ENGINEE

FHWA

6

SDD 15C11 - 09b

6

SDD 15C11 - 09b

LEGEND

SIGN ON PORTABLE OR PERMANENT SUPPORT

TEMPORARY PORTABLE RUMBLE STRIP ARRAY

DIRECTION OF TRAFFIC

WORK AREA

FLAGGER, EQUIPPED WITH STOP/SLOW PADDLE FASTENED ON SUPPORT STAFF

GENERAL NOTES

DETAILS OF TRAFFIC CONTROL DEVICES AND INSTALLATION NOT SHOWN ON THIS DRAWING SHALL CONFORM TO THE PERTINENT REQUIREMENTS OF THE STANDARD SPECIFICATIONS, THE SPECIAL PROVISIONS, AND THE MANUAL ON UNIFORM TRAFFIC CONTROL DEVICES.

ALL SIGNS ARE 48" X 48" UNLESS OTHERWISE NOTED.

"WO" SIGNS ARE THE SAME AS "W" SIGNS EXCEPT THE BACKGROUND IS ORANGE.

THE EXACT NUMBER, LOCATION AND SPACING OF ALL SIGNS, DEVICES, AND LOCATION OF ALL FLAGGERS SHALL BE ADJUSTED TO FIT FIELD CONDITIONS AS APPROVED BY THE ENGINEER.

THE FIRST ADVANCE WARNING SIGN SHOULD TYPICALLY BE LOCATED IN ADVANCE OF THE ANTICIPATED TRAFFIC BACKUP OR QUEUE.

WHEN A SIDE ROAD OR RAMP INTERSECTS THE FACILITY ON WHICH THE WORK IS BEING PERFORMED, ADDITIONAL TRAFFIC CONTROLS SHALL BE PROVIDED AS SPECIFIED IN THE PLANS AND/OR THE SPECIAL PROVISIONS OR AS APPROVED BY THE ENGINEER.

FLAGGING

FLAGGERS SHALL BE IN SIGHT OF EACH OTHER OR IN DIRECT COMMUNICATION AT ALL TIMES. THEY SHALL BE EQUIPPED WITH STOP/SLOW PADDLES FASTENED ON SUPPORT STAFFS. WHEN THE FLAGGING OPERATION IS NOT IN EFFECT REMOVE TEMPORARY PORTABLE RUMBLE STRIPS PRIOR TO COVERING OR REMOVING ALL ADVANCE SIGNING.

(1) FOR MOVING WORK OPERATIONS, POST ADDITIONAL W20-7A FLAGGER SIGNS AT APPROXIMATELY 3,500' INTERVALS IN THE MOVING WORK OPERATION OR AS APPROVED BY THE ENGINEER.

(2) SIGN NOT REQUIRED IF FLAGGING OPERATION OCCURS WITHIN A SIGNED ROAD WORK ZONE AREA.

WHEN THE DISTANCE BETWEEN FLAGGERS EXCEEDS 2 MILES, A PILOT CAR IS REQUIRED. WHEN CURVES REDUCE SIGHT DISTANCE BELOW 400', A PILOT CAR IS REQUIRED.

TEMPORARY PORTABLE RUMBLE STRIPS

UTILIZE TEMPORARY PORTABLE RUMBLE STRIPS ON ALL FLAGGING OPERATIONS.

(3) EACH TEMPORARY PORTABLE RUMBLE STRIP ARRAY CONSISTS OF THREE RUMBLE STRIPS PLACED TRANSVERSE ACROSS THE LANE AT THE LOCATIONS SHOWN. WITHIN EACH ARRAY, SPACING BETWEEN RUMBLE STRIPS SHALL BE 15 FEET ON CENTER

ONLY USE TEMPORARY PORTABLE RUMBLE STRIPS FROM THE APPROVED PRODUCTS LIST.

INSTALL TEMPORARY RUMBLE STRIPS PER MANUFACTURER'S RECOMMENDATIONS.

PLACE ADVANCE SIGNING PRIOR TO INSTALLING TEMPORARY RUMBLE STRIPS.

DO NOT INSTALL TEMPORARY PORTABLE RUMBLE STRIPS ON GRAVEL, MILLED SURFACES, OR ASPHALT THAT HAS BEEN PAVED LESS THAN 12 HOURS.

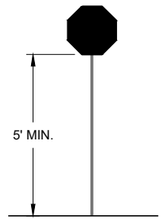

STOP/SLOW PADDLE ON SUPPORT STAFF

SIGN AND TEMPORARY RUMBLE STRIP ARRAY SPACING TABLE

SPEED LIMIT	SPACING "A"
25-30 MPH	200'
35-40 MPH	350'
45-55 MPH	500'



WO3-4

USE OF WO3-4 SIGN IS OPTIONAL. WHEN USED, THIS SIGN SHALL BE LOCATED BETWEEN THE W20-7A AND W20-4A SIGNS, USING SPACING "A".

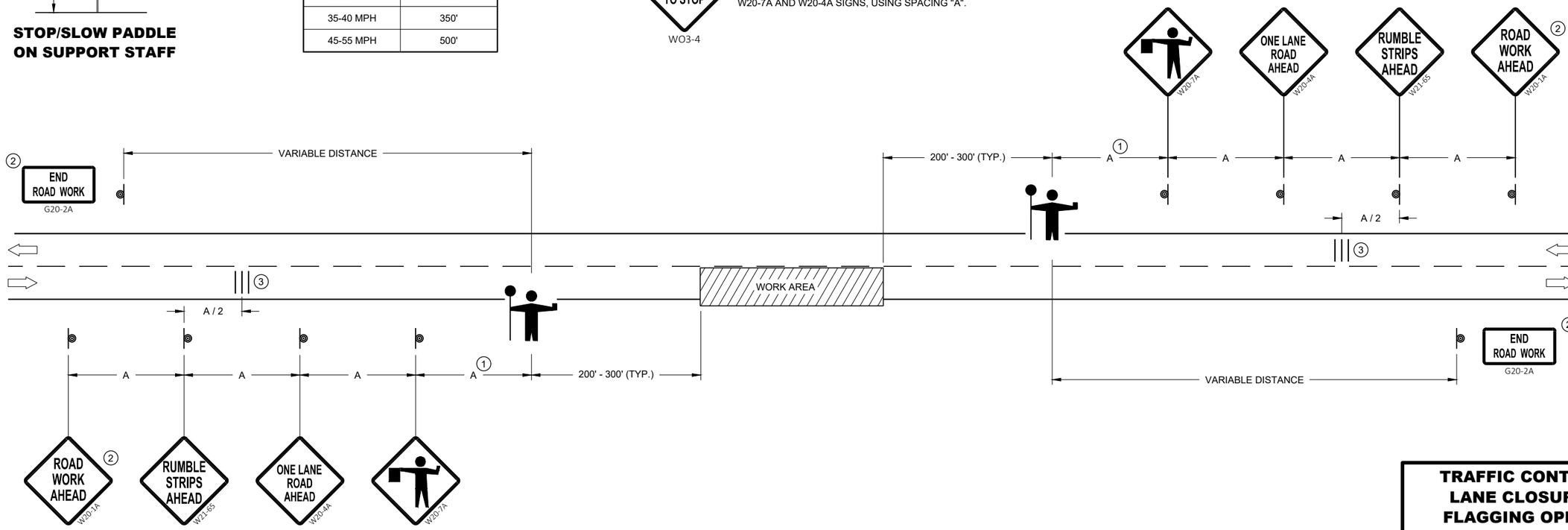

TRAFFIC CONTROL FOR LANE CLOSURE WITH FLAGGING OPERATION

STATE OF WISCONSIN
DEPARTMENT OF TRANSPORTATION

APPROVED
November 2021
DATE

/S/ Andrew Heidtke
WORK ZONE ENGINEE 711

FHWA

6
SDD 15C12 - 08

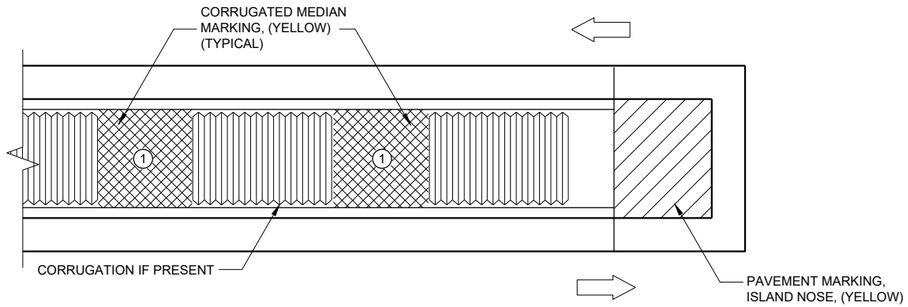

MEDIAN ISLAND WITH SQUARE BLUNT NOSE

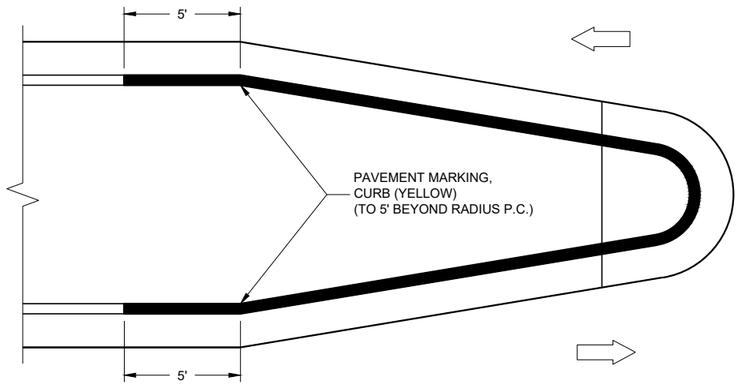

MEDIAN ISLAND WITH ROUND BLUNT NOSE

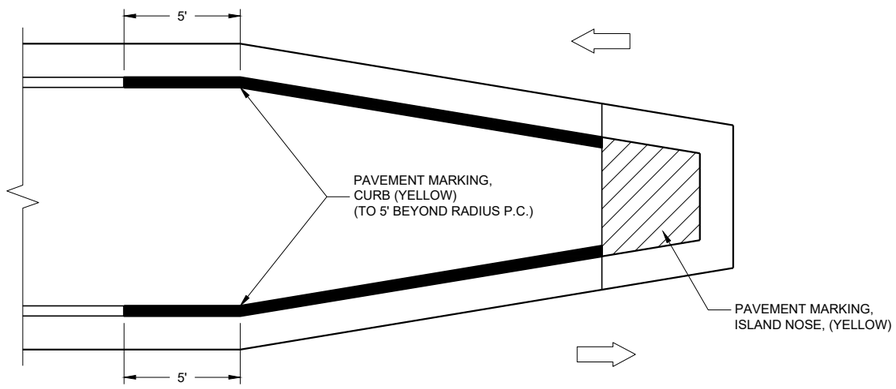

MEDIAN ISLAND WITH SLOPED NOSE

TYPICAL PLACEMENT OF PAVEMENT MARKING ON MEDIAN ISLANDS

GENERAL NOTES

WHEN CONCRETE CORRUGATED MEDIAN IS CONSTRUCTED TO SEPARATE TRAFFIC OPERATING IN THE OPPOSING DIRECTION, YELLOW PAVEMENT MARKING SHALL BE APPLIED TO THE FLAT PORTION OF THE CONCRETE CORRUGATED MEDIAN. THE ITEM OF PAVEMENT MARKING, CONCRETE CORRUGATED MEDIAN, WILL BE MEASURED IN PLACE AND ACCEPTED IN ACCORDANCE WITH THE CONTRACT AND PAID FOR AT THE CONTRACT UNIT PRICE PER SQUARE FOOT.

(1) APPLY PAVEMENT MARKING TO THE FLAT PORTION OF CORRUGATED MEDIAN.

ISLAND NOSE MARKING

CURB MARKING

CORRUGATED MEDIAN MARKING

DIRECTION OF TRAVEL

PAVEMENT MARKINGS, MEDIAN ISLAND NOSE

STATE OF WISCONSIN
DEPARTMENT OF TRANSPORTATION

APPROVED

February 2021
DATE

/S/ Matthew R. Rauch
STATE SIGNING AND MAR ENGINEER

FHWA

6

SDD 15C18 - 05b
SDD15C18 - 05b

REQUIREMENTS FOR EDGE LINES		
POSTED SPEED	IS THERE CONTINUOUS LIGHTING?	
	YES	NO
≤ 30 MPH	NO	OPTIONAL
35 OR 40 MPH	OPTIONAL	RECOMMENDED
≥ 45 MPH	RECOMMENDED	REQUIRED

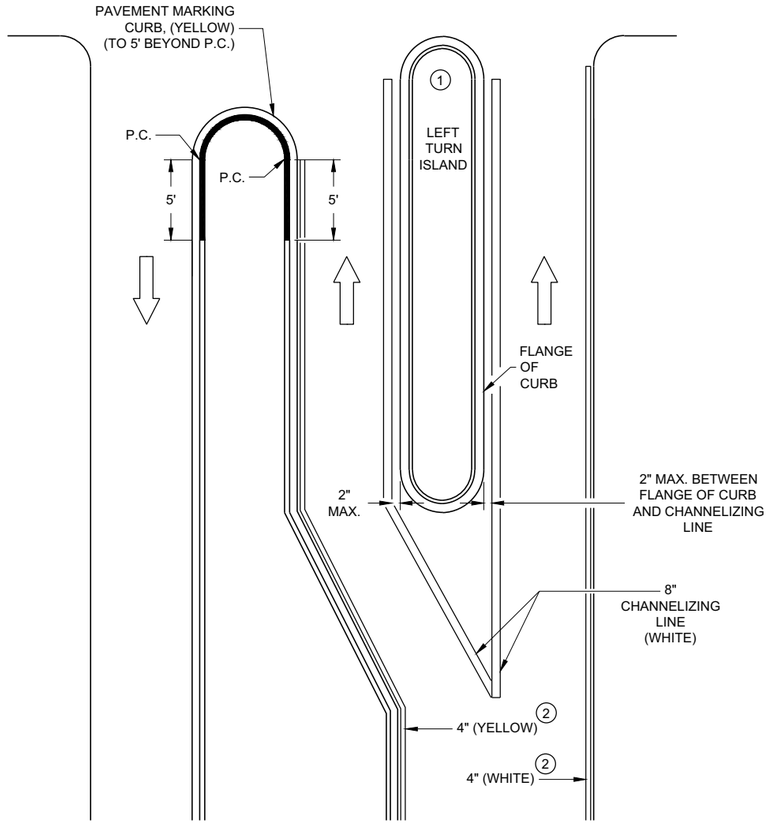

LEFT TURN & MEDIAN ISLAND

GENERAL NOTES

APPLIES TO ISLANDS AT LEFT TURNS AT ONE WAY ROADWAYS AS WELL.

SEE MISCELLANEOUS QUANTITIES FOR SIGN SIZE.

(1) MARK CURB NOSES YELLOW.

(2) MARK ACCORDING TO TABLE.

DIRECTION OF TRAVEL

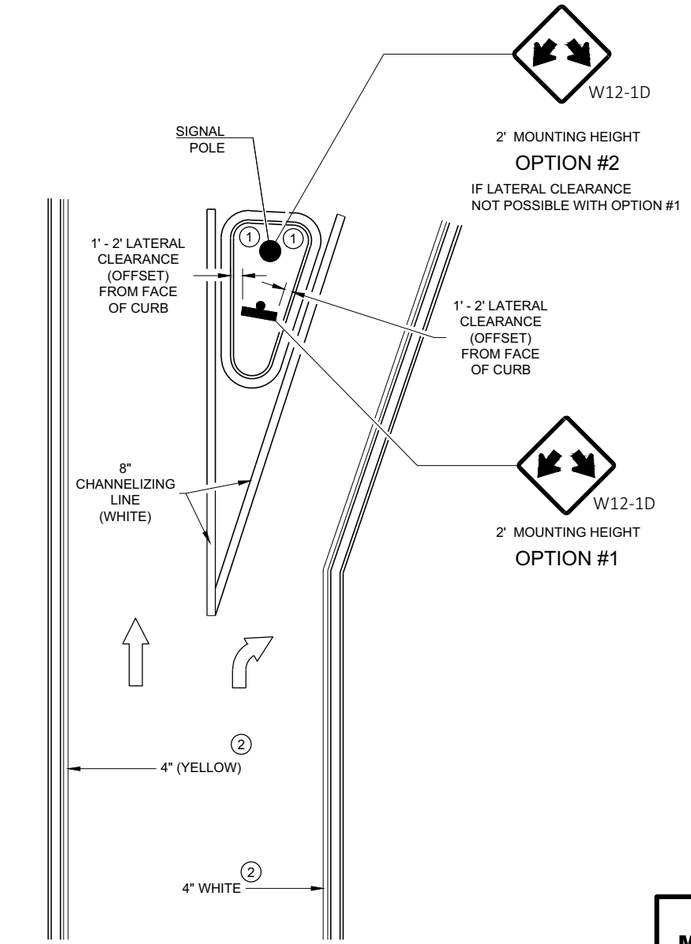

RIGHT TURN ISLAND

MEDIAN PAVEMENT MARKINGS, DOUBLE ARROW WARNING SIGN PLACEMENT

STATE OF WISCONSIN
DEPARTMENT OF TRANSPORTATION

APPROVED

February 2021
DATE

/S/ Matthew R. Rauch
STATE SIGNING AND MAF ENGINEER

FHWA

6

SDD 15C18 - 05c

6

SDD 15C18 - 05c

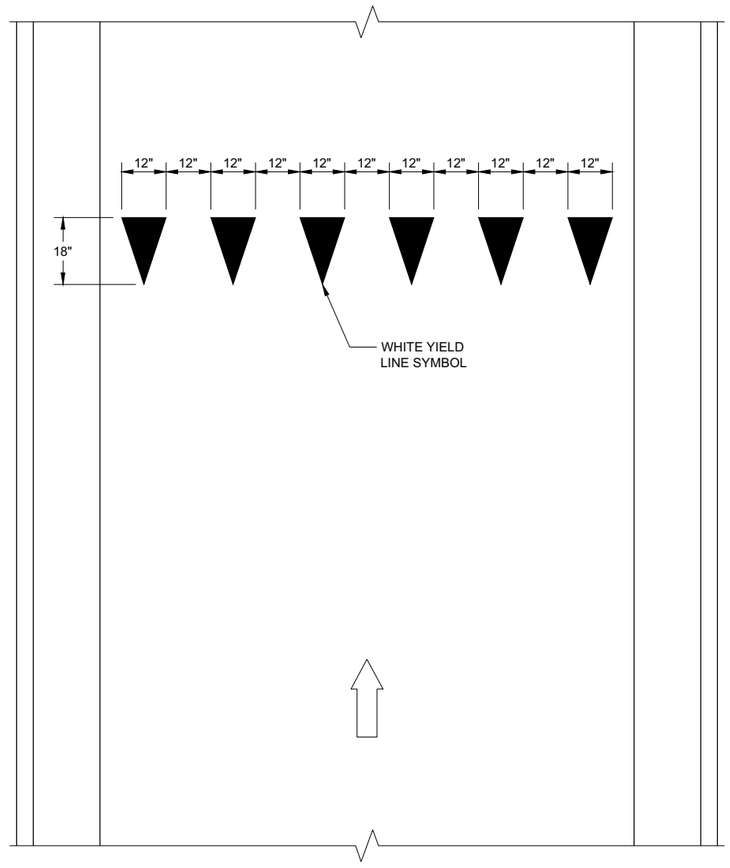

YIELD LINE

LEGEND

SIGN ON PERMANENT SUPPORT

DIRECTION OF TRAVEL

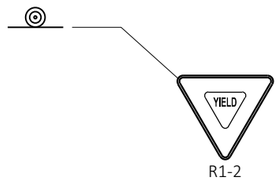

R1-2

YIELD MARKINGS

STATE OF WISCONSIN
DEPARTMENT OF TRANSPORTATION

APPROVED

4-81-2016
DATE

/S/ Matthew R. Rauch
STATE SIGNING AND MAR ENGINEER

FHWA

6

SDD 15C20 - 02

SDD 15C20 - 02

GENERAL NOTES

SIGNING AND MARKING IS SHOWN AS TYPICAL PLACEMENT. FIELD CONDITIONS MAY DICTATE CHANGES IN SIGNING AND MARKING PLACEMENT.

(1) USED ONLY WHEN APPROVED BY REGION TRAFFIC ENGINEER.

* SIGNS MAY BE OMITTED IF SPACE DOES NOT PERMIT PLACEMENT.

** IF POSTED SPEED IS 45 MPH OR GREATER, PLACE W5-54 SIGN UNDER R4-7 SIGN. MOUNT W5-54 SIGN AT 4' MOUNTING HEIGHT (TOP OF ROADWAY TO BOTTOM OF SIGN).

LEGEND

A DISTANCE DEPENDENT ON SPEED (SEE TABLE)

SIGN MOUNTED ON PERMANENT SUPPORT

DIRECTION OF TRAFFIC

DISTANCE TABLE

POSTED OR 85TH PERCENTILE SPEED	DISTANCE "A"
25	325'
30	460'
35	565'
40	670'
45	775'
50	885'
55	990'
65	1200'
70	1250'

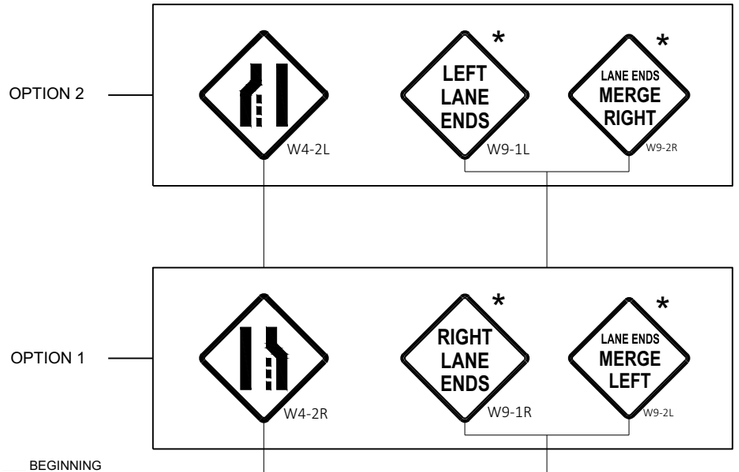

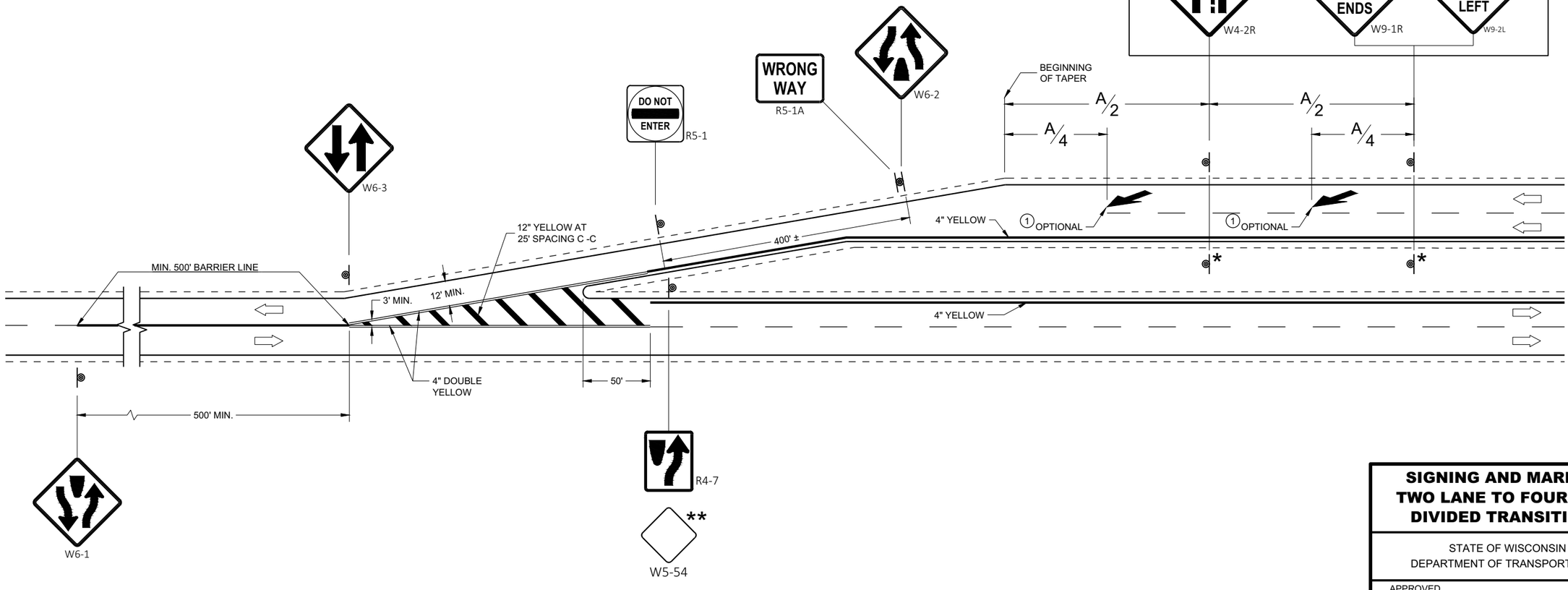

SIGNING AND MARKING TWO LANE TO FOUR LANE DIVIDED TRANSITIONS

STATE OF WISCONSIN
DEPARTMENT OF TRANSPORTATION

APPROVED
May 2020 — DATE
/S/ Matthew Rauch — STATE SIGNING AND MAR ENGINEER

FHWA

SDD 15C21 - 10

SDD 15C21 - 10

GENERAL NOTES

STOP SIGN SHALL BE PLACED A MINIMUM OF 6 FEET TO A MAXIMUM OF 50 FEET FROM THE EDGELINE LOCATION.

1. 18-INCH STOP LINES MAY BE DELETED OR ADDED BY THE REGION MARKING ENGINEER BASED ON VISIBILITY AND SIGHT LINES.
2. NO STOP LINE IS REQUIRED IF STOP SIGN IS LESS THAN OR EQUAL TO 40 FEET FROM THE EDGELINE.
3. NO STOP LINE IS REQUIRED IF STOP SIGN IS LESS THAN OR EQUAL TO 30 FEET FROM THE FLANGELINE EXTENSION.
4. MOVE CLOSER TO THE EDGE OF TRAVEL LINE AS NEEDED FOR VISIBILITY AND SIGHT LINES (NO CLOSER THAN 4 FEET).
5. LADDER BAR CROSSWALKS SHOULD ONLY BE USED FOR MID BLOCK CROSSINGS. USE 2 - 6" TRANSVERSE LINES INSTEAD.

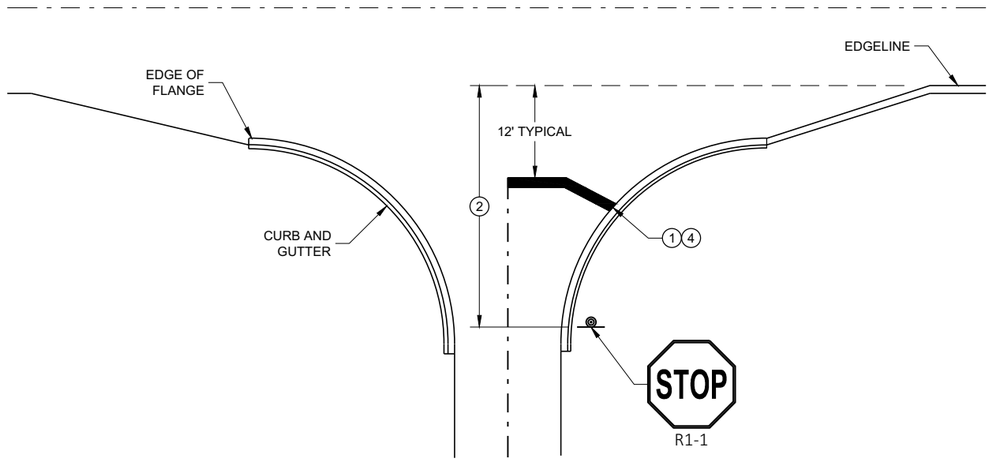

TYPICAL STOP LINE PAVEMENT MARKING WITH CURB AND GUTTER

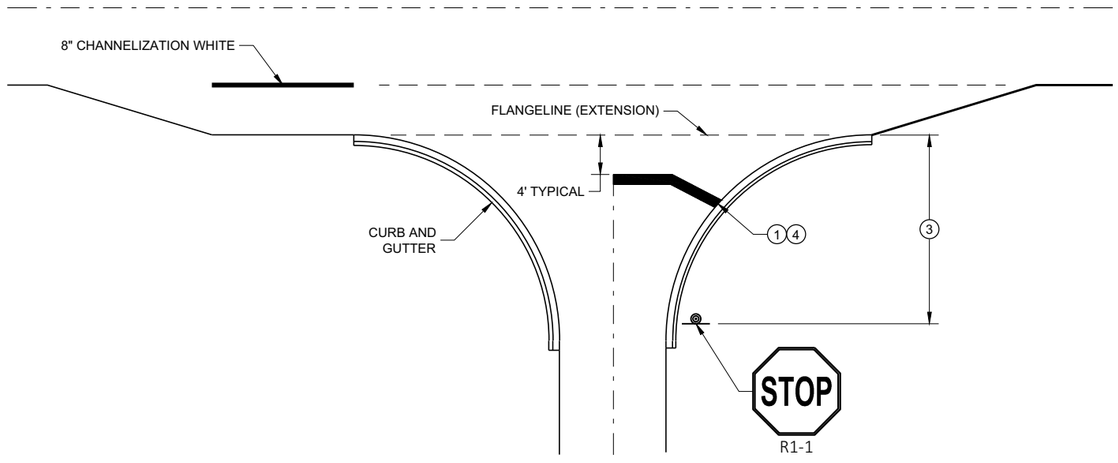

TYPICAL STOP LINE PAVEMENT MARKING FOR SIDEROADS WITH RIGHT TURN LANE

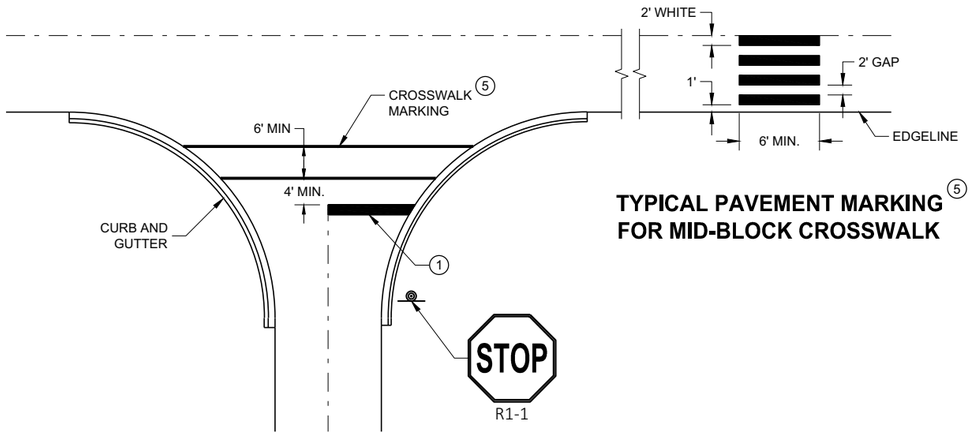

TYPICAL PAVEMENT MARKING FOR MID-BLOCK CROSSWALK 5

TYPICAL STOP LINE PAVEMENT MARKING FOR SIDEROADS WITH CROSSWALK MARKING

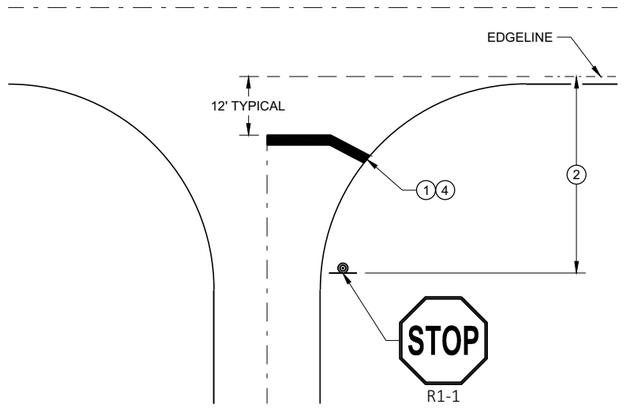

TYPICAL STOP LINE PAVEMENT MARKING WITHOUT CURB AND GUTTER

STOP LINE AND CROSSWALK PAVEMENT MARKING

STATE OF WISCONSIN
DEPARTMENT OF TRANSPORTATION

APPROVED
November 2019
DATE

/S/ Matthew Rauch
STATE SIGNING AND MAF ENGINEER

FHWA

6
SDD 15C33 - 04

LEGEND

SIGN ON PERMANENT SUPPORT

DELINEATOR, FLEXIBLE/TUBULAR MARKER

DIRECTION OF TRAFFIC

GENERAL NOTES

ALL SIGNS ARE 48"X48" UNLESS OTHERWISE NOTED.

"WO" SIGN IS THE SAME AS "W" SIGN EXCEPT THE BACKGROUND IS ORANGE.

ANY SIGNS TEMPORARY OR EXISTING, WHICH CONFLICT WITH THE TRAFFIC CONTROL "IN USE" SHALL BE REMOVED OR COVERED AS NEEDED AND AS APPROVED BY THE ENGINEER. NO WARNING LIGHTS SHALL BE WORKING ON COVERED OR "DOWNED" SIGNS.

THE EXACT NUMBER, LOCATION, AND SPACING OF ALL SIGNS AND DEVICES SHALL BE ADJUSTED TO FIT FIELD CONDITIONS AS APPROVED BY THE ENGINEER.

THE SPACING BETWEEN SIGNS SHOULD BE ADJUSTED TO NOT CONFLICT WITH AND TO PROVIDE A MINIMUM OF 200 FEET (500' DESIRABLE) DISTANCE TO EXISTING SIGNS.

A SINGLE ROW OF FLEXIBLE TUBULAR MARKERS ON CENTERLINE EXTEND FOR THE ENTIRE LENGTH OF TWO-WAY TRAFFIC AT 50 FOOT SPACING.

COVER EXISTING CENTERLINE STRIPE WITH TEMPORARY PAVEMENT MARKING, 4 INCH DOUBLE YELLOW.



(1)



(2)

(1) THE WO6-3 AND WO57-51 SHALL BE LOCATED 200 FEET BEYOND THE END OF THE ACCELERATION LANE OF EACH ENTRANCE RAMP AND / OR 500 FEET BEYOND ANY SIDE ROAD. THE R4-1 SHALL BE LOCATED 1000 FEET BEYOND THE WO6-3 AND THE WO57-51 AND THE SIGNS SHALL BE ALTERNATED WITH ONE MILE INTERVALS BETWEEN THE SIGNS.

(2) CONVENTIONAL: 24" X 30"
FREEWAY AND EXPRESSWAY: 36" X 48"

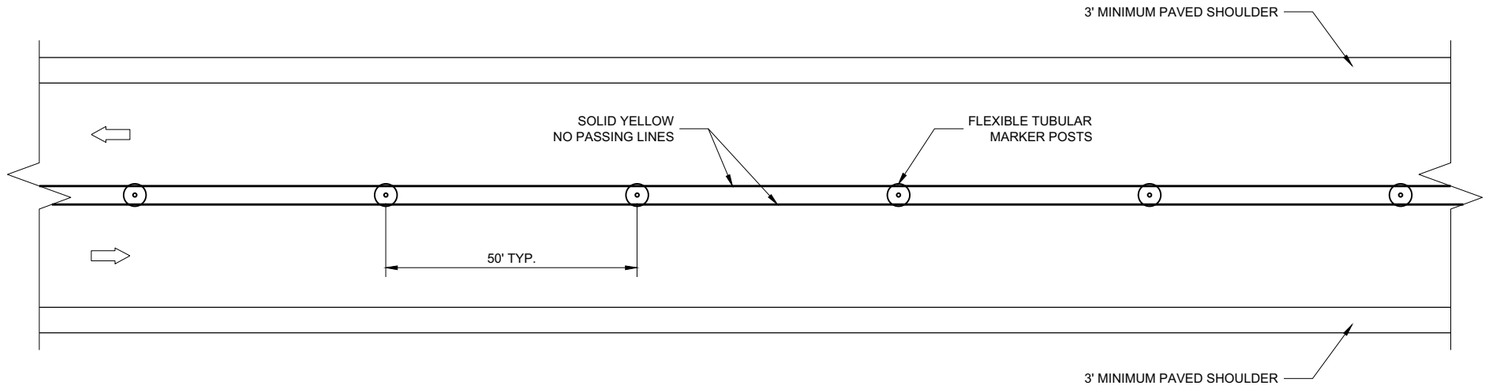

TWO LANE, TWO WAY OPERATION

TRAFFIC CONTROL
TWO LANE TWO WAY
OPERATION

STATE OF WISCONSIN
DEPARTMENT OF TRANSPORTATION

APPROVED
February 2020
DATE

/S/ Andrew Heidtke
STATE TRAFFIC ENGINEER O 717

FHWA

6
SDD 15D06 - 04

LEGEND

- SIGN ON PERMANENT SUPPORT
- TRAFFIC CONTROL DRUM
- TRAFFIC CONTROL DRUM WITH TYPE "C" STEADY BURN LIGHT
- DELINEATOR FLEXIBLE / TUBULAR MARKER
- TEMPORARY DELINEATOR (STEEL POST WITH SINGLE DELINEATOR) COLOR OF DELINEATOR SHALL MATCH THE COLOR OF THE RESPECTIVE EDGELINE MARKING
- TEMPORARY DELINEATOR (DOUBLE SIDED)
- TYPE "A" WARNING LIGHT (FLASHING)
- TYPE III BARRICADE
- TYPE III BARRICADE WITH ATTACHED SIGN
- DIRECTION OF TRAFFIC
- REMOVE PAVEMENT MARKINGS
- WORK AREA

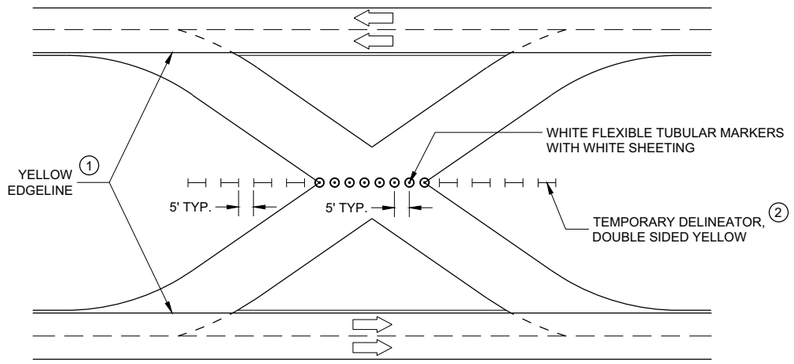

TRAFFIC CONTROL FOR CROSSOVER THAT IS NOT IN USE

GENERAL NOTES

ALL SIGNS ARE 48"X48" UNLESS OTHERWISE NOTED.

"WO" SIGN IS THE SAME AS "W" SIGN EXCEPT THE BACKGROUND IS ORANGE.

ANY SIGNS TEMPORARY OR EXISTING, WHICH CONFLICT WITH THE TRAFFIC CONTROL "IN USE" SHALL BE REMOVED OR COVERED AS NEEDED AND AS APPROVED BY THE ENGINEER. NO WARNING LIGHTS SHALL BE WORKING ON COVERED OR "DOWNED" SIGNS.

THE EXACT NUMBER, LOCATION, AND SPACING OF ALL SIGNS AND DEVICES SHALL BE ADJUSTED TO FIT FIELD CONDITIONS AS APPROVED BY THE ENGINEER.

THE SPACING BETWEEN PROPOSED SIGNS SHOULD BE ADJUSTED TO NOT CONFLICT WITH AND TO PROVIDE A MINIMUM OF 200 FEET (500' DESIRABLE) DISTANCE TO EXISTING SIGNS.

TEMPORARY PAVEMENT MARKING REMOVABLE TAPE SHALL BE USED WHEN CROSSING PERMANENT ROADWAY SURFACES THAT WILL REMAIN AFTER USED OF CROSSOVER AND TEMPORARY PAVEMENT MARKING WHERE USED.

REVERSE DEVICES WHEN OTHER LEG OF CROSSOVER IS IN USE.

1. FOR PERMANENT CROSSOVER, PAVEMENT MARKING SHOULD CONFORM TO SECTION 646 OF THE STANDARD SPECIFICATIONS.
2. FOR PERMANENT CROSSOVER, INSTALL PERMANENT DELINEATORS ACCORDING TO SECTION 633 OF THE STANDARD SPECIFICATIONS.

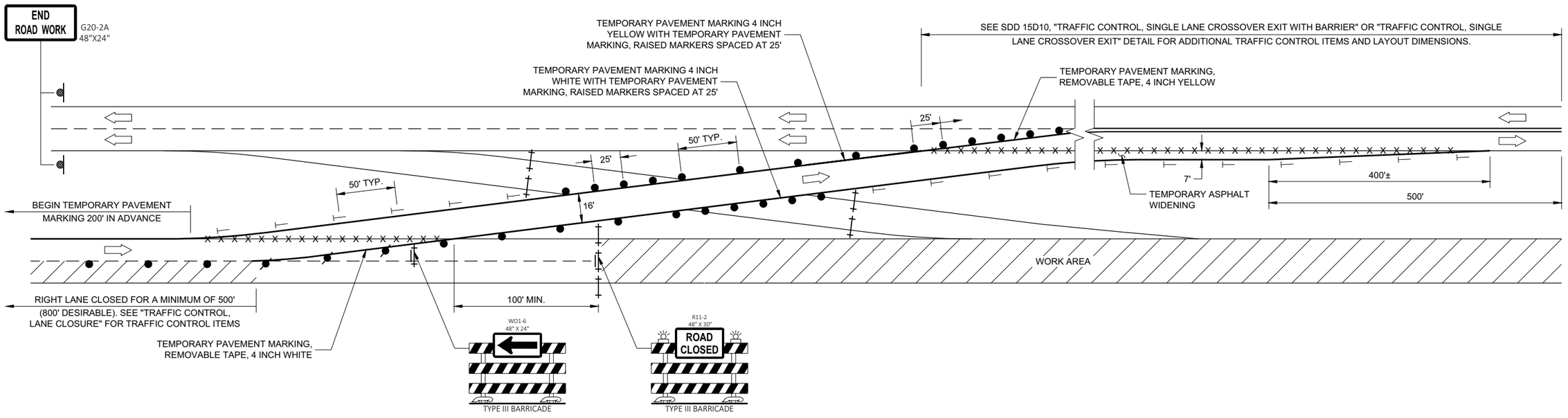

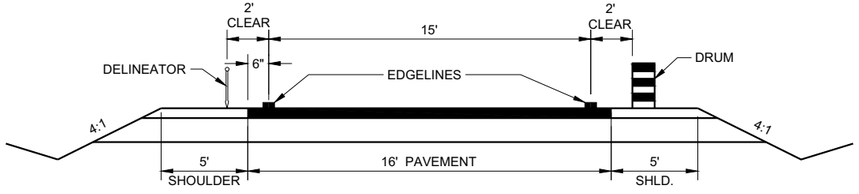

TYPICAL TEMPORARY CROSSOVER ROADWAY DIMENSIONS

(SEE PLAN FOR ROADWAY DESIGN ELEMENTS)

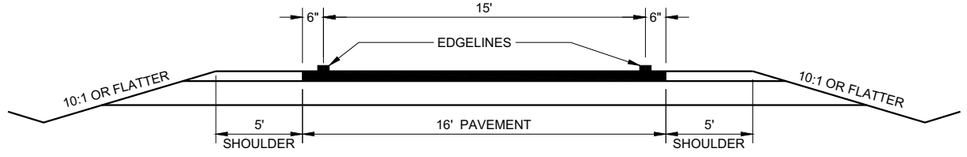

TYPICAL CROSSOVER TO REMAIN IN PLACE ROADWAY DIMENSIONS

(SEE PLAN FOR ROADWAY DESIGN ELEMENTS)

TRAFFIC CONTROL, SINGLE LANE CROSSOVER

STATE OF WISCONSIN
DEPARTMENT OF TRANSPORTATION

APPROVED
September 2017
DATE

/S/ Andrew Heidtke
WORK ZONE ENGINEER

FHWA

SDD 15D11 - 07

SDD 15D11 - 07

GENERAL NOTES

THE EXACT NUMBER, LOCATION, AND SPACING OF ALL SIGNS AND DEVICES SHALL BE ADJUSTED TO FIT FIELD CONDITIONS AS APPROVED BY THE ENGINEER.

THE SPACING BETWEEN SIGNS SHOULD BE ADJUSTED TO NOT CONFLICT WITH AND TO PROVIDE A MINIMUM OF 200 FEET (500 FEET DESIRABLE) CLEARANCE TO EXISTING SIGNS.

THIS LANE CLOSURE IS TYPICAL FOR CLOSING RIGHT LANE - REVERSE FOR CLOSING LEFT LANE.

ALL SIGNS ARE 48" x 48" UNLESS OTHERWISE NOTED.

"WO" IS THE SAME AS "W" EXCEPT THE BACKGROUND IS ORANGE.

ANY SIGNS TEMPORARY OR EXISTING, WHICH CONFLICT WITH TRAFFIC CONTROL "IN USE" SHALL BE REMOVED OR COVERED AS NEEDED OR AS APPROVED BY THE ENGINEER.

FOR A LANE CLOSURE THAT IS IN PLACE LESS THAN 7 CONTINUOUS DAYS AND NIGHTS, THE ADVANCED WARNING SIGNS MAY BE MOUNTED ON PORTABLE SUPPORTS.

REMOVE PAVEMENT MARKINGS IF LANE CLOSURE IS TO BE IN PLACE 4 OR MORE CONTINUOUS DAYS AND NIGHTS.

IF THE HORIZONTAL ALIGNMENT IS SUCH THAT A CURVE MAY REQUIRE ADDITIONAL DELINEATION, THE DEVICE SPACING MAY BE DECREASED TO 50 FEET.

WARNING LIGHTS ARE NOT REQUIRED IF THE LANE CLOSURE IS A DAYTIME ONLY OPERATION.

ADJUSTMENTS IN BUFFER SPACE NEED TO BE INCORPORATED WHEN THE LANE CLOSURE OCCURS NEAR AN INTERCHANGE EXIT OR ENTRANCE RAMP OR INTERSECTION. THE LANE CLOSURE MUST TAKE PLACE FAR ENOUGH IN ADVANCE OF AN EXIT OR ENTRANCE RAMP TO STILL ALLOW FOR ADEQUATE BUFFER SPACE. THE MINIMUM LENGTH OF THE BUFFER SPACE BEFORE AN EXIT RAMP SHOULD BE ONE HALF THE LENGTH OF THE TRANSITION AREA. THE ENTRANCE RAMP SHOULD BE FOLLOWED BY THE ORIGINAL BUFFER SPACE LENGTH OF 800 FEET DESIRABLE PRIOR TO ANOTHER TRAFFIC CONTROL CHANGE SUCH AS A CROSSOVER MANEUVER.

CONSIDER ROADWAY GEOMETRICS WHEN LOCATING SIGNS AND ARROW BOARD SO THE DRIVER HAS A CLEAR VIEW OF THE ARROW BOARD AND LANE CLOSURE DRUMS.

LEGEND

- SIGN ON PERMANENT SUPPORT
- TRAFFIC CONTROL DRUM
- TRAFFIC CONTROL DRUM WITH TYPE "C" STEADY BURN LIGHT
- TYPE III BARRICADE WITH ATTACHED SIGN
- TYPE "A" WARNING LIGHT (FLASHING)
- REMOVING PAVEMENT MARKINGS
- DIRECTION OF TRAFFIC
- WORK AREA
- FLASHING ARROW BOARD

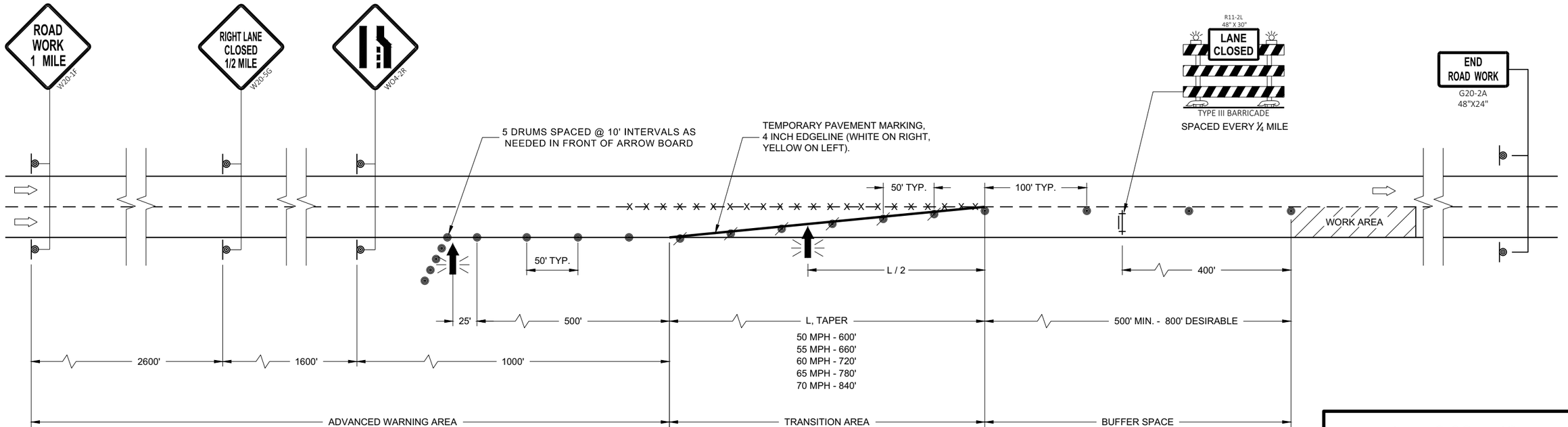

TRAFFIC CONTROL LANE CLOSURE

STATE OF WISCONSIN
DEPARTMENT OF TRANSPORTATION

APPROVED
August 2020
DATE

/S/ Andrew Heidtke
WORK ZONE ENGINEER

FHWA

719

6

SDD 15D12 - 09a

6

SDD 15D12 - 09a

GENERAL NOTES

THE EXACT NUMBER, LOCATION, AND SPACING OF ALL SIGNS AND DEVICES SHALL BE ADJUSTED TO FIT FIELD CONDITIONS AS APPROVED BY THE ENGINEER.

THE SPACING BETWEEN SIGNS SHOULD BE ADJUSTED TO NOT CONFLICT WITH AND TO PROVIDE A MINIMUM OF 200 FEET (500 FEET DESIRABLE) CLEARANCE TO EXISTING SIGNS.

THIS LANE CLOSURE IS TYPICAL FOR CLOSING RIGHT LANE - REVERSE FOR CLOSING LEFT LANE.

ALL SIGNS ARE 48" x 48" UNLESS OTHERWISE NOTED.

"WO" SIGNS ARE THE SAME AS "W" SIGNS EXCEPT THE BACKGROUND IS ORANGE.

ANY SIGNS TEMPORARY OR EXISTING, WHICH CONFLICT WITH TRAFFIC CONTROL "IN USE" SHALL BE REMOVED OR COVERED AS NEEDED OR AS APPROVED BY THE ENGINEER.

CONSIDER ROADWAY GEOMETRICS WHEN LOCATING SIGNS AND ARROW BOARD SO THE DRIVER HAS A CLEAR VIEW OF THE ARROW BOARD AND LANE CLOSURE DRUMS.

FOR A LANE CLOSURE THAT IS IN PLACE LESS THAN 7 CONTINUOUS DAYS AND NIGHTS, THE ADVANCED WARNING SIGNS MAY BE MOUNTED ON PORTABLE SUPPORTS.

REMOVE PAVEMENT MARKINGS IF LANE CLOSURE IS TO BE IN PLACE 4 OR MORE CONTINUOUS DAYS AND NIGHTS.

WARNING LIGHTS ARE NOT REQUIRED IF THE LANE CLOSURE IS A DAYTIME ONLY OPERATION.

IF THE HORIZONTAL ALIGNMENT IS SUCH THAT A CURVE MAY REQUIRE ADDITIONAL DELINEATION, THE DEVICE SPACING MAY BE DECREASED TO 50 FEET.

ADJUSTMENTS IN BUFFER SPACE NEED TO BE INCORPORATED WHEN THE LANE CLOSURE OCCURS NEAR AN INTERCHANGE EXIT OR ENTRANCE RAMP OR INTERSECTION. THE LANE CLOSURE MUST TAKE PLACE FAR ENOUGH IN ADVANCE OF AN EXIT OR ENTRANCE RAMP TO STILL ALLOW FOR ADEQUATE BUFFER SPACE. THE MINIMUM LENGTH OF THE BUFFER SPACE BEFORE AN EXIT RAMP SHOULD BE ONE HALF THE LENGTH OF THE TRANSITION AREA. THE ENTRANCE RAMP SHOULD BE FOLLOWED BY THE ORIGINAL BUFFER SPACE LENGTH OF 800 FEET DESIRABLE PRIOR TO ANOTHER TRAFFIC CONTROL CHANGE SUCH AS A CROSSOVER MANEUVER.

* A SPEED LIMIT SIGN SHALL BE LOCATED 1500 FEET BEYOND THE END OF THE ACCELERATION LANE OF EACH ENTRANCE RAMP. PLACE A SPEED LIMIT SIGN A MINIMUM OF EVERY 3 MILES. INCLUDE A RESUME SPEED LIMIT SIGN 200 FEET MINIMUM (500 FEET DESIRABLE) BEYOND THE "END OF ROADWORK" SIGN.

LEGEND

- SIGN ON PERMANENT SUPPORT
- TRAFFIC CONTROL DRUM
- TRAFFIC CONTROL DRUM WITH TYPE "C" STEADY BURN LIGHT
- TYPE III BARRICADE WITH ATTACHED SIGN
- TYPE "A" WARNING LIGHT (FLASHING)
- REMOVING PAVEMENT MARKINGS
- DIRECTION OF TRAFFIC
- WORK AREA
- FLASHING ARROW BOARD

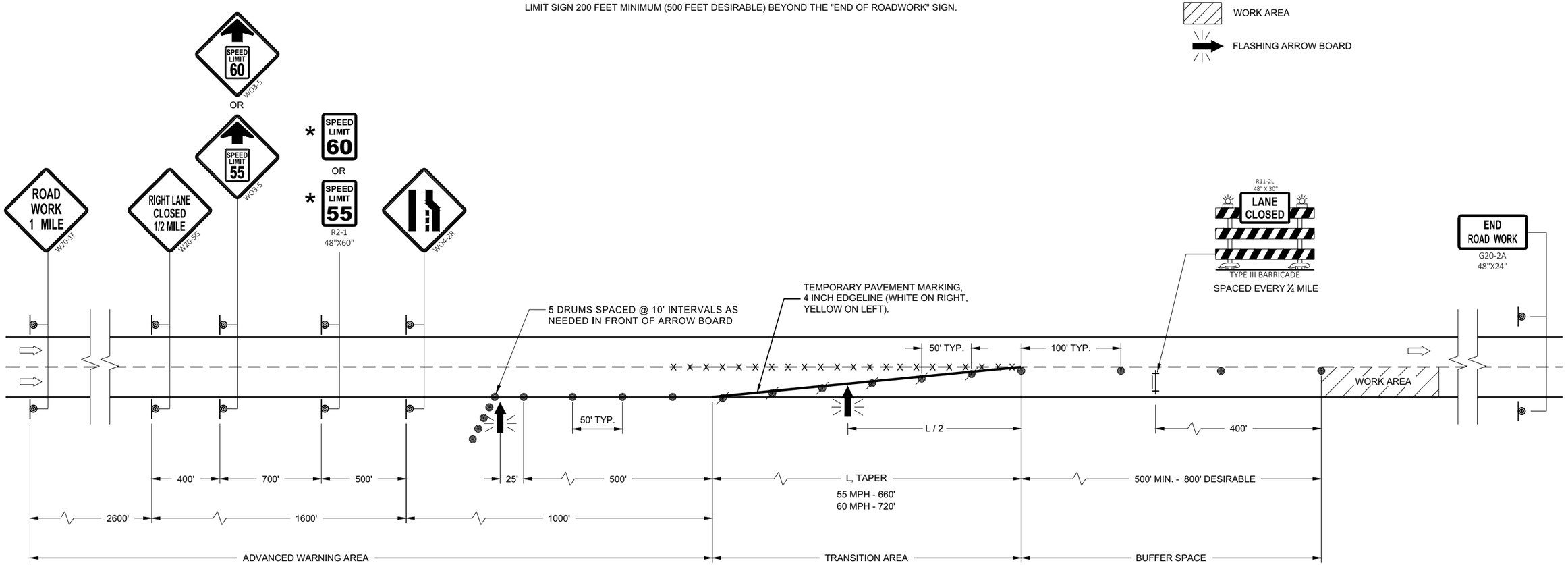

TRAFFIC CONTROL, LANE CLOSURE, SPEED REDUCTION

STATE OF WISCONSIN
DEPARTMENT OF TRANSPORTATION

APPROVED
August 2020
DATE

/S/ Andrew Heidtke
WORK ZONE ENGINEE

FHWA

SDD 15D12 - 09b

6
SDD 15D12 - 09b

LEGEND

- SIGN ON PERMANENT SUPPORT
- TRAFFIC CONTROL DRUM
- TRAFFIC CONTROL DRUM WITH TYPE "C" STEADY BURN LIGHT
- TYPE III BARRICADE WITH ATTACHED SIGN
- TYPE "A" WARNING LIGHT (FLASHING)
- FLASHING ARROW BOARD
- DIRECTION OF TRAFFIC
- REMOVE PAVEMENT MARKING (SEE GENERAL NOTES)
- WORK AREA



GENERAL NOTES

THIS DETAIL MAY BE USED FOR ROADWAYS WITH EITHER TWO OR THREE LANES IN EACH DIRECTION.

ALL SIGNS ARE 48"X48" UNLESS OTHERWISE NOTED. IF NECESSARY DUE TO SPACE CONSTRAINTS IN URBAN AREAS, 36"X 36" SIGNS MAY BE USED IF APPROVED BY REGIONAL TRAFFIC UNIT.

"WO" SIGN IS THE SAME AS "W" SIGN EXCEPT THE BACKGROUND IS ORANGE.

ANY SIGNS TEMPORARY OR EXISTING, WHICH CONFLICT WITH THE TRAFFIC CONTROL "IN USE" SHALL BE REMOVED OR COVERED AS NEEDED AND AS APPROVED BY THE ENGINEER. NO WARNING LIGHTS SHALL BE WORKING ON COVERED OR "DOWNED" SIGNS.

SIGNS THAT WILL BE IN PLACE LESS THAN 7 CONTINUOUS DAYS AND NIGHTS OR THAT WILL BE PLACED IN A CLOSED LANE MAY BE MOUNTED ON TEMPORARY SUPPORTS.

THE EXACT NUMBER, LOCATION, AND SPACING OF ALL SIGNS AND DEVICES SHALL BE ADJUSTED TO FIT FIELD CONDITIONS AS APPROVED BY THE ENGINEER.

THE SPACING BETWEEN TRAFFIC CONTROL SIGNS SHOULD BE ADJUSTED TO NOT CONFLICT WITH AND TO PROVIDE A MINIMUM OF 200 FEET (500' DESIRABLE) DISTANCE TO EXISTING SIGNS THAT WILL REMAIN IN PLACE

W20-1A, G20-1 AND G20-2A SIGNS ARE NOT REQUIRED IF THE LANE CLOSURE IS WITHIN A LARGER WORK ZONE WHERE THESE SIGNS ARE ALREADY PRESENT.

REMOVE PAVEMENT MARKINGS AND PLACE TEMPORARY PAVEMENT MARKING, REMOVABLE TAPE IF LANE CLOSURE IS TO BE IN PLACE FOR 4 OR MORE CONTINUOUS DAYS AND NIGHTS.

CONSIDER GEOMETRICS WHEN LOCATING SIGNS AND ARROW BOARDS SO THE APPROACHING DRIVER HAS A CLEAR VIEW OF THE ARROW BOARDS AND LANE CLOSURE DRUMS FOR A MINIMUM 1500 FEET IN FRONT OF DRUMS.

BARRICADES IN A CLOSED LANE THAT MUST BE MOVED FOR A WORK OPERATION SHALL BE IMMEDIATELY REESTABLISHED UPON COMPLETION OF THE OPERATION, OR FOR CONTINUING OPERATIONS, AT THE END OF EACH WORKING DAY.

CHANNELIZING DEVICES PLACED ADJACENT TO WORK AREA SHALL BE PULLED BACK FROM THE TRAVEL LANE WHEN WORK IS NOT IN PROGRESS.

WARNING LIGHTS ARE NOT REQUIRED IF THE LANE CLOSURE IS A DAYTIME ONLY OPERATION.

(1) OMIT G20-1 SIGNS IF LENGTH OF WORK AREA IS 2 MILES OR LESS.

POSTED SPEED LIMIT PRIOR TO WORK STARTING (MPH)	ADVANCE WARNING SIGN SPACING (A) FEET	TAPER LENGTH (12 FT. LANE) (L) FEET	BUFFER SPACE (B) FEET
25	200'	125'	55'
30	200'	180'	85'
35	350'	245'	120'
40	350'	320'	170'
45	500'	540'	220'
50	500'	600'	280'
55	500'	660'	335'



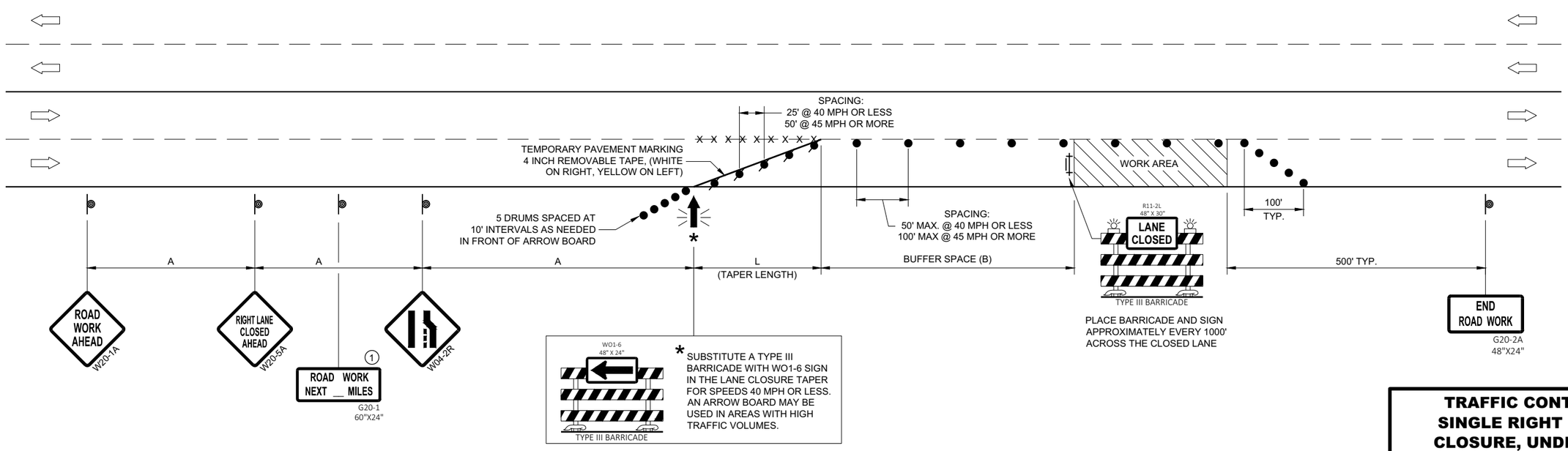

TRAFFIC CONTROL, SINGLE RIGHT LANE CLOSURE, UNDIVIDED NON-FREEWAY/EXPRESSWAY

STATE OF WISCONSIN
DEPARTMENT OF TRANSPORTATION

APPROVED
May 2020 — DATE
/S/ Andrew Heidtke — STATEWIDE WORK ZONE T SAFETY ENGINEER

FHWA

SDD 15D20 - 05b

SDD 15D20 - 05b

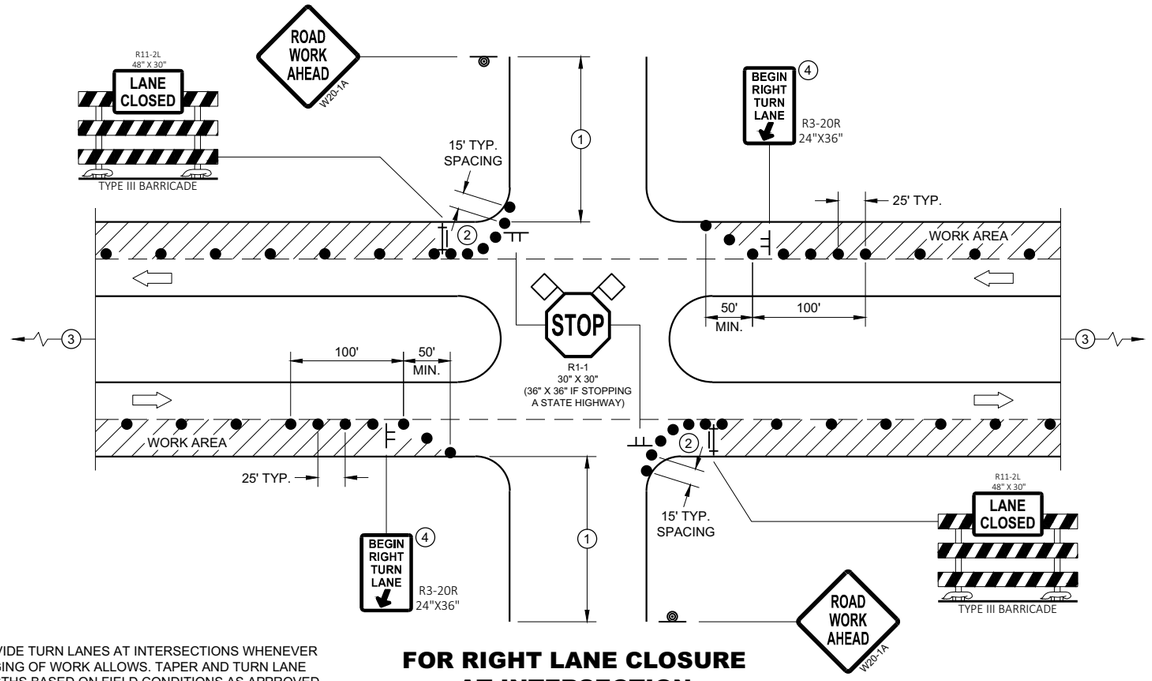

FOR RIGHT LANE CLOSURE AT INTERSECTION

PROVIDE TURN LANES AT INTERSECTIONS WHENEVER STAGING OF WORK ALLOWS. TAPER AND TURN LANE LENGTHS BASED ON FIELD CONDITIONS AS APPROVED BY THE ENGINEER.

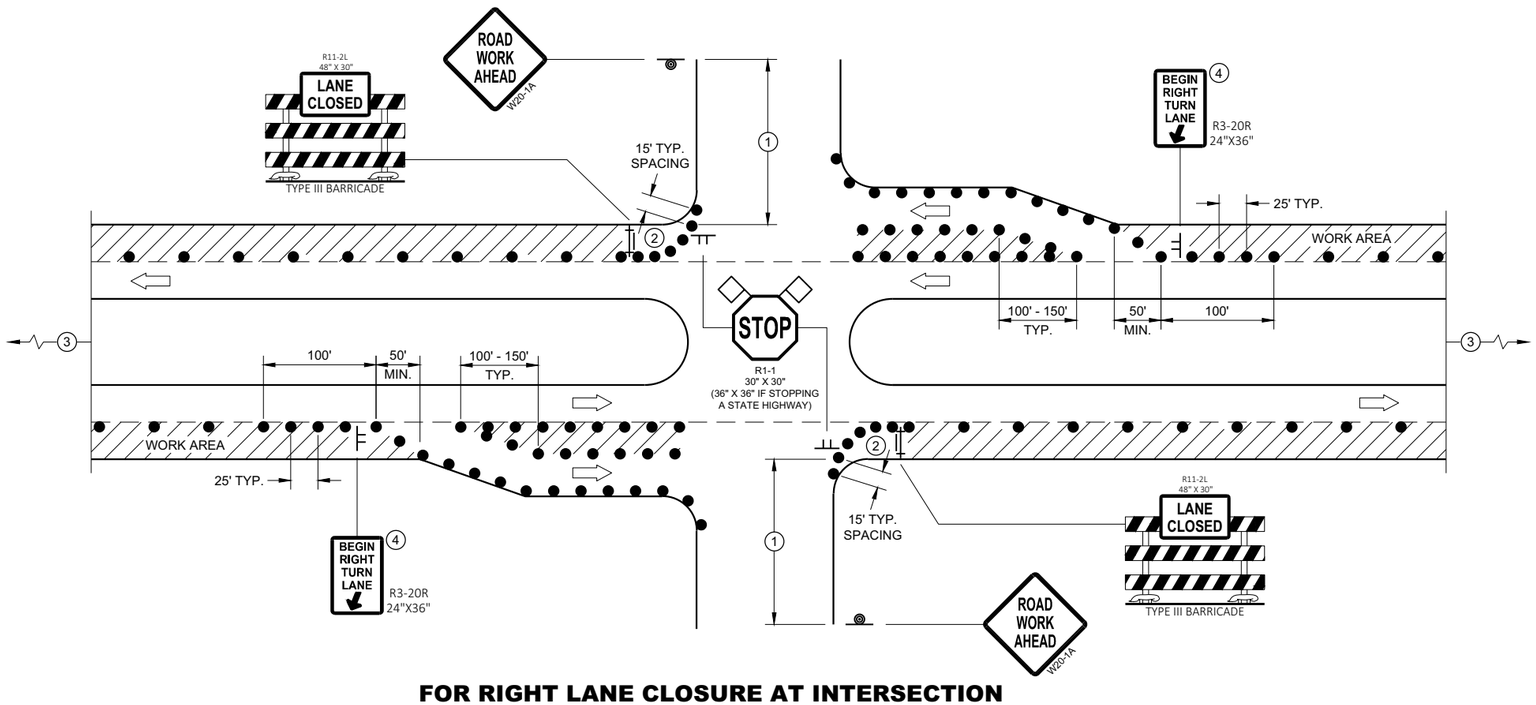

FOR RIGHT LANE CLOSURE AT INTERSECTION (WITH RIGHT TURN BAY OPEN)

GENERAL NOTES

ALL SIGNS ARE 48"X48" UNLESS OTHERWISE NOTED. IF NECESSARY DUE TO SPACE CONSTRAINTS IN URBAN AREAS, 36" X 36" MAY BE USED IF APPROVED BY THE DISTRICT TRAFFIC UNIT.

"WO" SIGN IS THE SAME AS "W" SIGN EXCEPT THE BACKGROUND IS ORANGE.

ANY SIGNS TEMPORARY OR EXISTING, WHICH CONFLICT WITH THE TRAFFIC CONTROL "IN USE" SHALL BE REMOVED OR COVERED AS NEEDED AND AS APPROVED BY THE ENGINEER. NO WARNING LIGHTS SHALL BE WORKING ON COVERED OR "DOWNED" SIGNS.

THE EXACT NUMBER, LOCATION, AND SPACING OF ALL SIGNS AND DEVICES SHALL BE ADJUSTED TO FIT FIELD CONDITIONS AS APPROVED BY THE ENGINEER.

THE SPACING BETWEEN TRAFFIC CONTROL SIGNS SHOULD BE ADJUSTED TO NOT CONFLICT WITH AND TO PROVIDE A MINIMUM OF 200 FEET (500' DESIRABLE) DISTANCE TO EXISTING SIGNS THAT WILL REMAIN IN PLACE

SIGN LAYOUTS SHALL BE IN ACCORDANCE WITH THE FHWA'S MANUAL OF STANDARD HIGHWAY SIGNS OR THE WISCONSIN STANDARD SIGN PLATES.

SIGNS THAT WILL REMAIN IN PLACE LESS THAN 7 CONTINUOUS DAYS AND NIGHTS OR THAT WILL BE PLACED IN A CLOSED LANE MAY BE MOUNTED ON PORTABLE SUPPORTS.

BARRICADES IN A CLOSED LANE THAT MUST BE MOVED FOR A WORK OPERATION SHALL BE IMMEDIATELY REESTABLISHED UPON COMPLETION OF THE OPERATION, OR FOR CONTINUING OPERATIONS, AT THE END OF EACH WORKING DAY.

CHANNELIZING DEVICES PLACED ADJACENT TO WORK AREA SHALL BE PULLED BACK FROM THE TRAVEL LANE WHEN WORK IS NOT IN PROGRESS.

(1) 500' TYPICAL OR AT LAST INTERSECTION, WHICHEVER IS CLOSER.
350' IF 35 - 40 MPH.
200' IF 25 - 30 MPH.

(2) ALSO USE BARRICADE AND 15 FOOT TYPICAL DRUM SPACING AT COMMERCIAL DRIVEWAYS

(3) SEE SEPARATE LANE CLOSURE DETAIL FOR ADDITIONAL TRAFFIC CONTROL.

(4) MINIMUM MOUNTING HEIGHT OF 5 FEET FROM EDGE OF PAVEMENT (AT EDGE LINE LOCATION) TO BOTTOM OF SIGN.

LEGEND

- SIGN ON TEMPORARY SUPPORT
- SIGN ON PERMANENT SUPPORT
- TRAFFIC CONTROL DRUM
- TYPE III BARRICADE WITH ATTACHED SIGN
- DIRECTION OF TRAFFIC
- FLAGS, 16" X 16" MIN., ORANGE
- WORK AREA

TRAFFIC CONTROL, INTERSECTION WITHIN SINGLE RIGHT LANE CLOSURE

STATE OF WISCONSIN
DEPARTMENT OF TRANSPORTATION

6

SDD15D21 - 07a

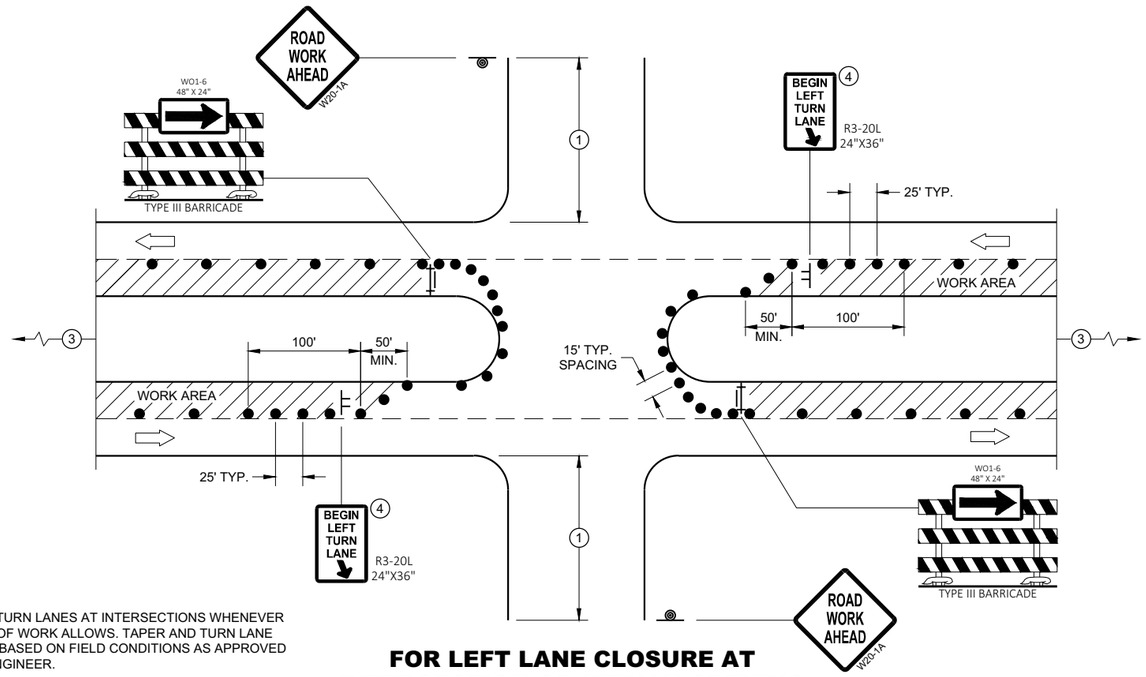

PROVIDE TURN LANES AT INTERSECTIONS WHENEVER STAGING OF WORK ALLOWS. TAPER AND TURN LANE LENGTHS BASED ON FIELD CONDITIONS AS APPROVED BY THE ENGINEER.

FOR LEFT LANE CLOSURE AT INTERSECTION OR MEDIAN OPENING

GENERAL NOTES

ALL SIGNS ARE 48"X48" UNLESS OTHERWISE NOTED. IF NECESSARY DUE TO SPACE CONSTRAINTS IN URBAN AREAS, 36" X 36" MAY BE USED IF APPROVED BY THE DISTRICT TRAFFIC UNIT.

"WO" SIGN IS THE SAME AS "W" SIGN EXCEPT THE BACKGROUND IS ORANGE.

ANY SIGNS TEMPORARY OR EXISTING, WHICH CONFLICT WITH THE TRAFFIC CONTROL "IN USE" SHALL BE REMOVED OR COVERED AS NEEDED AND AS APPROVED BY THE ENGINEER. NO WARNING LIGHTS SHALL BE WORKING ON COVERED OR "DOWNED" SIGNS.

THE EXACT NUMBER, LOCATION, AND SPACING OF ALL SIGNS AND DEVICES SHALL BE ADJUSTED TO FIT FIELD CONDITIONS AS APPROVED BY THE ENGINEER.

THE SPACING BETWEEN TRAFFIC CONTROL SIGNS SHOULD BE ADJUSTED TO NOT CONFLICT WITH AND TO PROVIDE A MINIMUM OF 200 FEET (500' DESIRABLE) DISTANCE TO EXISTING SIGNS THAT WILL REMAIN IN PLACE

SIGN LAYOUTS SHALL BE IN ACCORDANCE WITH THE FHWA'S MANUAL OF STANDARD HIGHWAY SIGNS OR THE WISCONSIN STANDARD SIGN PLATES.

SIGNS THAT WILL REMAIN IN PLACE LESS THAN 7 CONTINUOUS DAYS AND NIGHTS OR THAT WILL BE PLACED IN A CLOSED LANE MAY BE MOUNTED ON PORTABLE SUPPORTS.

BARRICADES IN A CLOSED LANE THAT MUST BE MOVED FOR A WORK OPERATION SHALL BE IMMEDIATELY REESTABLISHED UPON COMPLETION OF THE OPERATION, OR FOR CONTINUING OPERATIONS, AT THE END OF EACH WORKING DAY.

CHANNELIZING DEVICES PLACED ADJACENT TO WORK AREA SHALL BE PULLED BACK FROM THE TRAVEL LANE WHEN WORK IS NOT IN PROGRESS.

(1) 500' TYPICAL OR AT LAST INTERSECTION, WHICHEVER IS CLOSER.
350' IF 35 - 40 MPH.
200' IF 25 - 30 MPH.

(2) ALSO USE BARRICADE AND 15 FOOT TYPICAL DRUM SPACING AT COMMERCIAL DRIVEWAYS

(3) SEE SEPARATE LANE CLOSURE DETAIL FOR ADDITIONAL TRAFFIC CONTROL.

(4) MINIMUM MOUNTING HEIGHT OF 5 FEET FROM EDGE OF PAVEMENT (AT EDGE LINE LOCATION) TO BOTTOM OF SIGN.

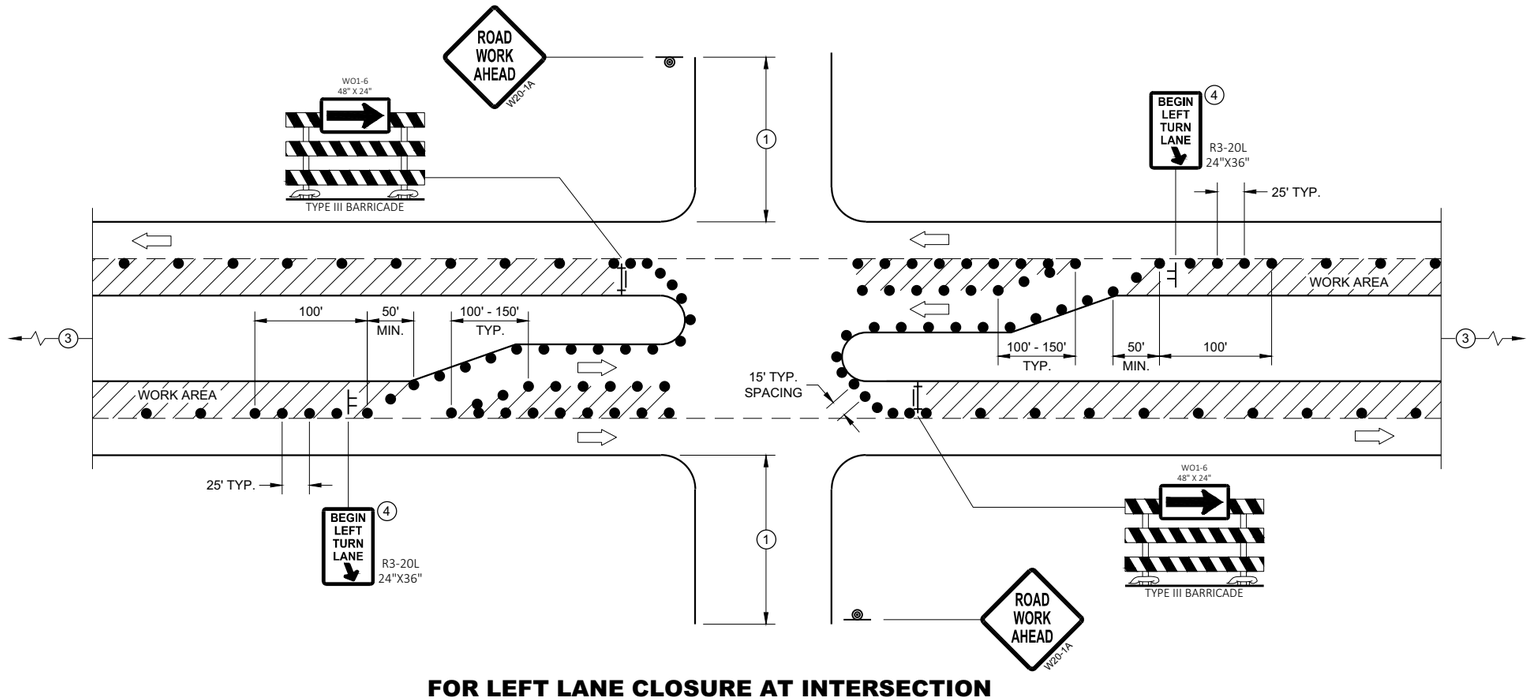

FOR LEFT LANE CLOSURE AT INTERSECTION OR MEDIAN OPENING (WITH LEFT TURN BAY OPEN)

LEGEND

- SIGN ON TEMPORARY SUPPORT
- SIGN ON PERMANENT SUPPORT
- TRAFFIC CONTROL DRUM
- TYPE III BARRICADE WITH ATTACHED SIGN
- DIRECTION OF TRAFFIC
- FLAGS, 16" X 16" MIN., ORANGE
- WORK AREA

TRAFFIC CONTROL, INTERSECTION WITHIN SINGLE LEFT LANE CLOSURE

STATE OF WISCONSIN
DEPARTMENT OF TRANSPORTATION

APPROVED
August 2020
DATE

/S/ Andrew Heidtke
WORK ZONE ENGINEE

FHWA

6

SDD 15D21 - 07b

6

SDD 15D21 - 07b

NOTE: MAY BE USED ON ROADWAY WITH POSTED SPEED OF LESS THAN 40 MPH.

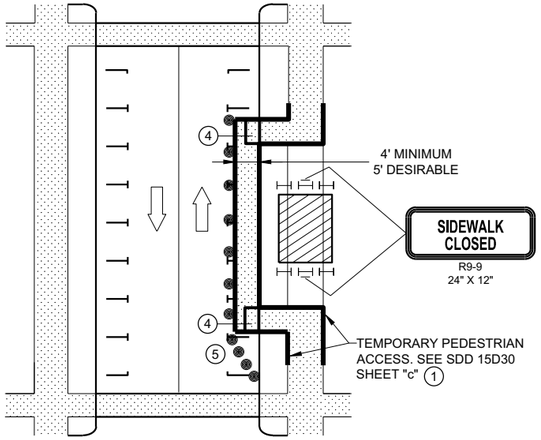

MID-BLOCK SIDEWALK CLOSURE IN PARKING LANE

NOTE: LAYOUT SAME AS ABOVE.

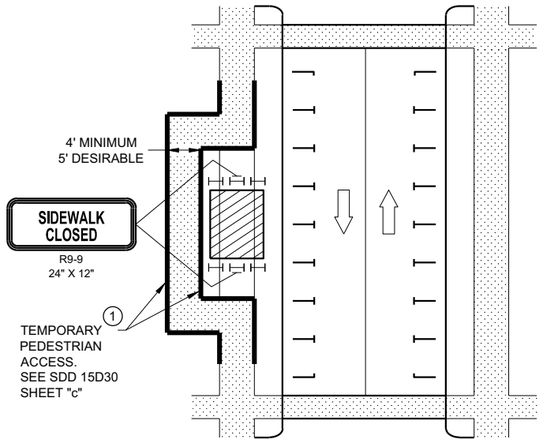

SIDEWALK DIVERSION

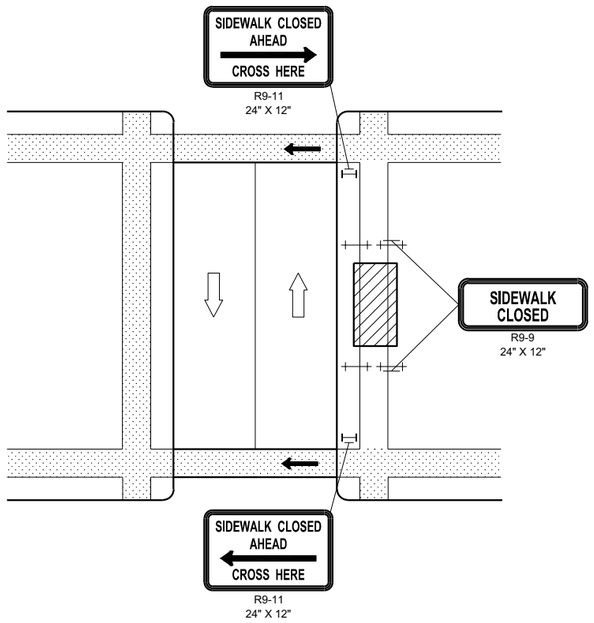

MID-BLOCK SIDEWALK CLOSURE

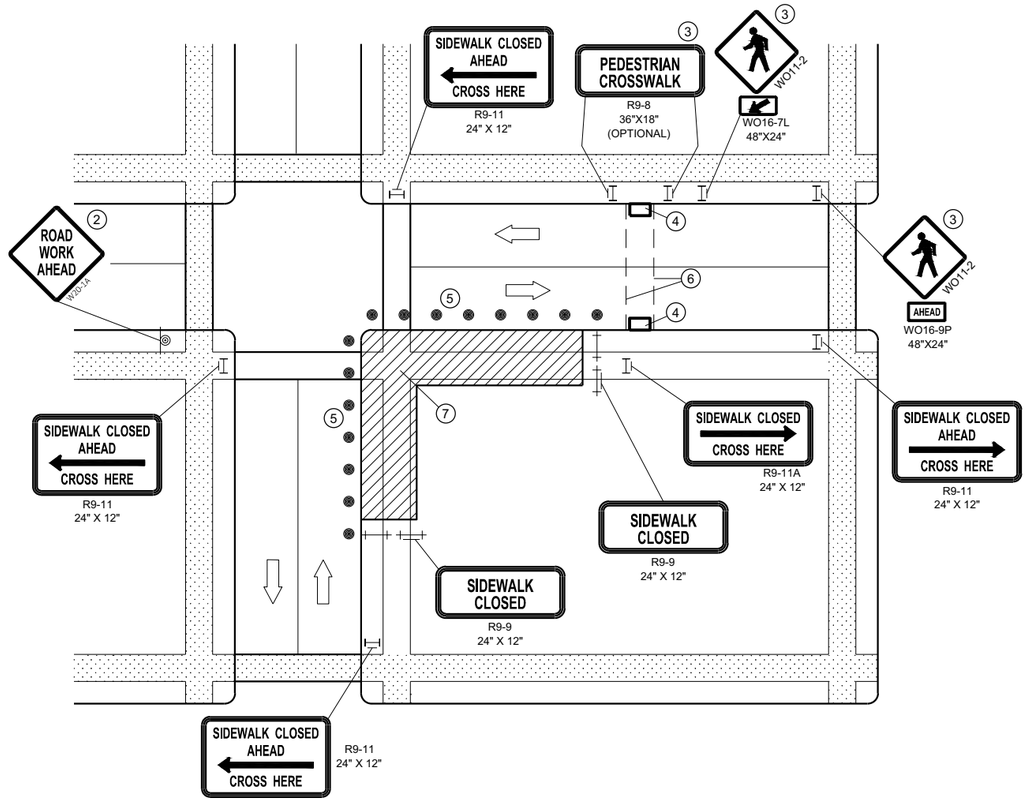

CORNER SIDEWALK CLOSURE WITH TEMPORARY CROSSWALK

GENERAL NOTES

WHEN CLOSING OR RELOCATING CROSSWALKS OR SIDEWALKS, PROVIDE DETECABLE TEMPORARY FACILITIES AND INCLUDE ACCESSIBILITY FEATURES CONSISTENT WITH EXISTING PEDESTRIAN FACILITIES.

TEMPORARY TRAFFIC CONTROL DEVICES FOR PEDESTRIANS ARE SHOWN. OTHER DEVICES MAY BE NECESSARY TO CONTROL VEHICULAR TRAFFIC. STAGE WORK AS NECESSARY, TO PROVIDE A TEMPORARY PEDESTRIAN ACCESS ROUTE AT ALL TIMES. FOR ROADWAYS WITH NO AVAILABLE DETOURS, MAINTAIN ONE OPEN SIDEWALK AT ALL TIMES.

"WO" SIGN IS THE SAME AS "W" SIGN, EXCEPT THE BACKGROUND IS ORANGE.

FOR NIGHTIME CLOSURE, USE TYPE "A" FLASHING WARNING LIGHTS ON BARRICADES, SUPPORTING SIGNS AND CLOSING SIDEWALK. USE TYPE "C" STEADY BURN LIGHTS ON CHANNELIZING DEVICES SEPARATING THE WORK AREA FROM VEHICULAR TRAFFIC.

PEDESTRIAN TRAFFIC SIGNAL DISPLAY CONTROLLING CLOSED CROSSWALK SHALL BE COVERED OR DEACTIVATED.

POST MOUNTED SIGNS LOCATED ADJACENT TO A SIDEWALK SHALL HAVE A 7 FOOT MINIMUM CLEARANCE FROM THE BOTTOM OF THE SIGN TO THE SIDEWALK SURFACE.

ALTERNATE SIDEWALK WORK BETWEEK LEFT AND RIGHT SIDE OF ROADWAY TO MAINTAIN PEDESTRIAN ACCESS.

1. IF SIDEWALK CLOSURE AFFECTS AN ACCESSIBLE AND DETECTABLE FACILITY, MAINTAIN ACCESSIBILITY AND DETECTABILITY ALONG THE ALTERNATE PEDESTRIAN ROUTE
2. "ROAD WORK AHEAD" SIGNS ARE NOT REQUIRED IF THE SIDEWALK CLOSURE OCCURS WITHIN A LARGER WORK ZONE WHERE ADVANCE WARNING SIGNS ARE ALREADY PRESENT, OR IF THE WORK AREA AND EQUIPMENT ARE MORE THAN 2 FEET BEHIND THE CURB.
3. IF TEMPORARY PEDESTRIAN CROSSWALK IS NOT PROVIDED, OMIT R9-8 AND WO11-2 SIGN ASSEMBLIES. IF PROVIDED INCLUDE ON BOTH SIDES OF THE CROSSWALK.
4. TEMPORARY CURB RAMPS. SEE SDD 15D30 SHEET "b'.
5. DRUMS OR BARRICADES AT 25 FOOT SPACING. STREET PARKING SHALL BE PROHIBITED FOR AT LEAST 50 FEET IN ADVANCE OF THE MID-BLOCK CROSSWALK.
6. TEMPORARY PAVEMENT MARKING FOR CROSSWALK LINES.
7. LIMIT WORK TO ONE QUADRANT AT A TIME TO MINIMIZE PEDESTRIAN DISRUPTION.

LEGEND

- SIGN ON PERMANENT SUPPORT
- TRAFFIC CONTROL DRUM
- TYPE II BARRICADE WITH/WITHOUT SIGN (ALL WITH ONE WARNING LIGHT, TYPE A, LOW INTENSITY FLASHING)
- TYPE III BARRICADE WITH/WITHOUT SIGN (ALL WITH ONE WARNING LIGHT, TYPE A, LOW INTENSITY FLASHING)
- UNDER PEDESTRIAN TRAFFIC
- WORK AREA
- PEDESTRIAN CHANNELIZATION DEVICE
- DIRECTION OF TRAFFIC

TRAFFIC CONTROL, PEDESTRIAN ACCOMMODATION

STATE OF WISCONSIN
DEPARTMENT OF TRANSPORTATION

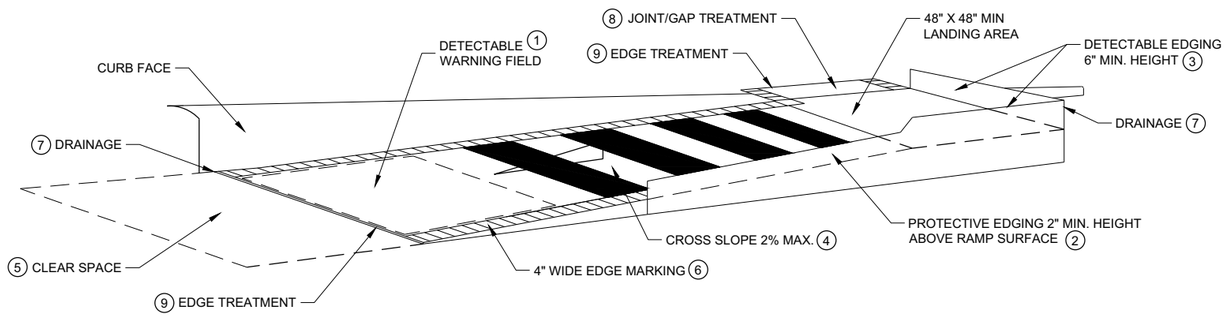

TEMPORARY CURB RAMP PARALLEL TO CURB

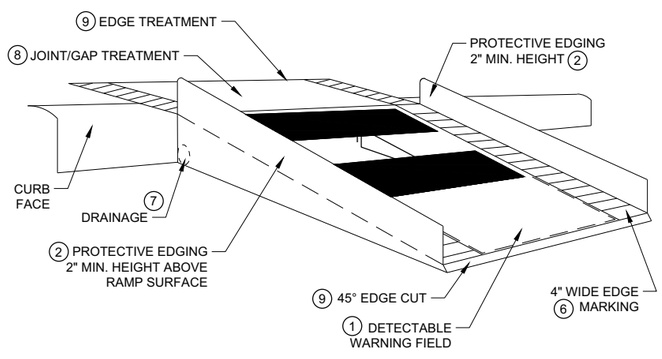

WITH PROTECTIVE EDGE

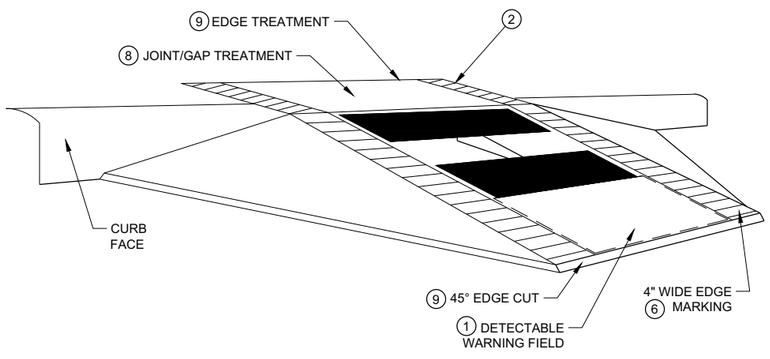

WITH SIDE APRON

TEMPORARY CURB RAMP PERPENDICULAR TO CURB

GENERAL NOTES

NOTIFY THE BUS COMPANY 7 DAYS IN ADVANCE OF THE BUS STOP RELOCATION.

ALTERNATE SIDEWALK WORK BETWEEN LEFT AND RIGHT SIDE OF ROADWAY TO MAINTAIN PEDESTRIAN ACCESS.

1. CURB RAMPS SHALL BE 48" MIN. WIDTH WITH A A FIRM, STABLE AND SLIP RESISTANT SURFACE. INSTALL CONTRASTING DETECTABLE WARNING FIELD AT PEDESTRIAN STREET CROSSINGS. REFER TO SDD 08D05, SHEET "e".
2. PROTECTIVE EDGING WITH A 2" MIN. HEIGHT SHALL BE INSTALLED WHEN A CURB RAMP OR LANDING PLATFORM HAS A VERTICAL DROP OF 6" OR GREATER OR HAS A SIDE APRON SLOPE STEEPER THAN 1:3 (33%). PROTECTIVE EDGING SHOULD BE CONSIDERED WHEN CURB RAMPS OR LANDING PLATFORMS HAVE A VERTICAL DROP OF 3" OR MORE.
3. DETECTABLE EDGING WITH 6" MIN. HEIGHT AND CONTRASTING COLOR SHALL BE INSTALLED ON ALL CURB RAMP LANDINGS WHERE THE WALKWAY CHANGES DIRECTION (TURNS).
4. CURB RAMPS AND LANDINGS SHALL HAVE A 1:50 (2%) MAX. CROSS-SLOPE.
5. CLEAR SPACE OF 48" X 48" SHALL BE PROVIDED ABOVE AND BELOW THE CURB RAMP.
6. THE CURB RAMP WALKWAY EDGE SHALL BE MARKED WITH A YELLOW COLOR, 4" WIDE MARKING, UNLESS A CONTRASTING DETECTABLE WARNING FIELD IS PROVIDED.
7. DO NOT RESTRICT WATER FLOW IN THE GUTTER SYSTEM.
8. LATERAL JOINTS OR GAPS BETWEEN SURFACES SHALL BE LESS THAN ½" WIDTH.
9. CHANGES BETWEEN SURFACE HEIGHTS SHALL NOT EXCEED ½". LATERAL EDGES SHALL BE VERTICAL UP TO ¼" HIGH AND BEVELED AT 1:2 BETWEEN ¼" AND ½".
10. 5" WIDE MIN. WITH PEDESTRIAN SAFETY BARRICADE, 10' WIDE MIN. WITHOUT PEDESTRIAN SAFETY BARRICADE.

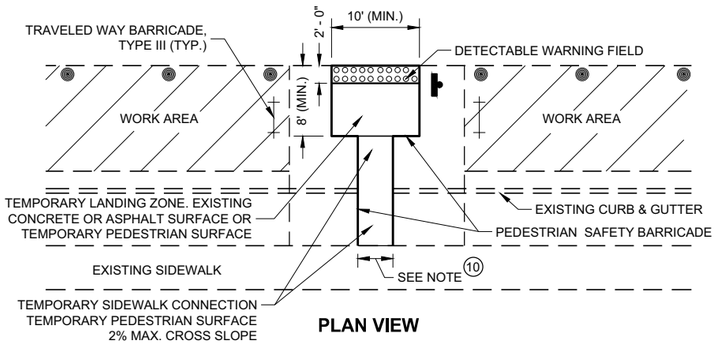

PLAN VIEW

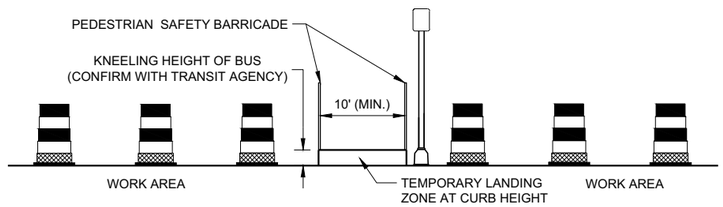

PROFILE VIEW

TEMPORARY BUS STOP PAD

LEGEND

- TRAFFIC CONTROL DRUM
- TYPE III BARRICADE
- WORK AREA

TRAFFIC CONTROL, PEDESTRIAN ACCOMMODATION

STATE OF WISCONSIN
DEPARTMENT OF TRANSPORTA 725

6

SDD 15D30 - 06b

6

SDD 15D30 - 06b

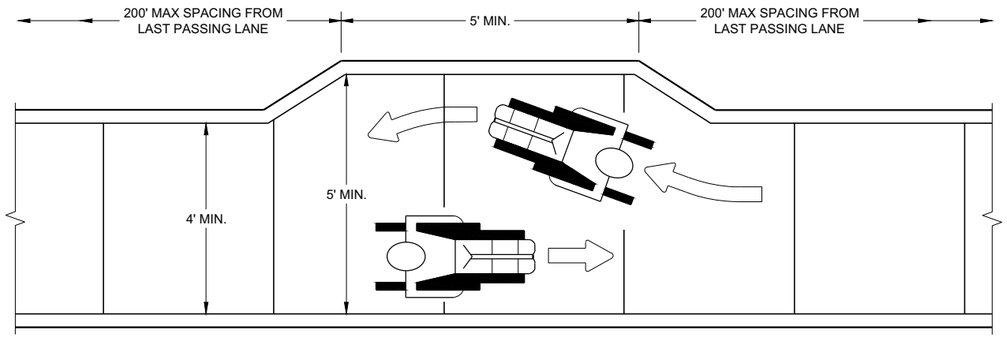

NARROW SIDEWALK PASSING DETAIL

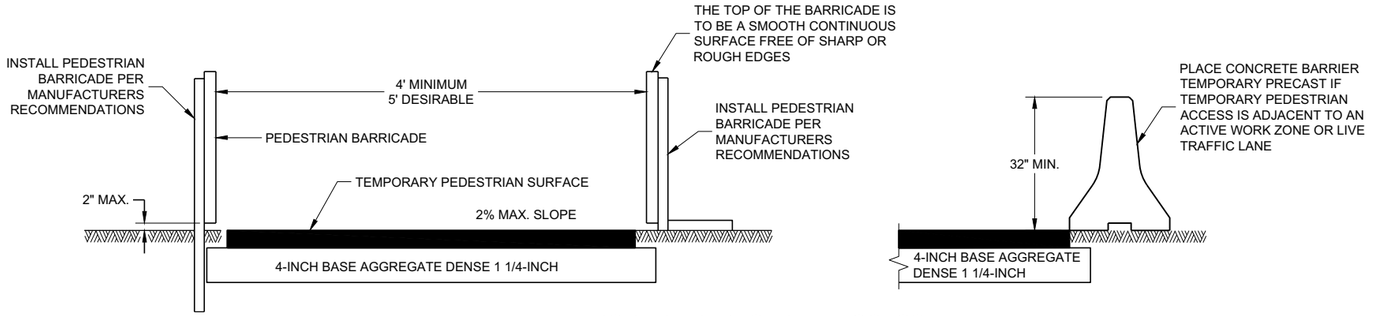

TEMPORARY PEDESTRIAN ACCESS

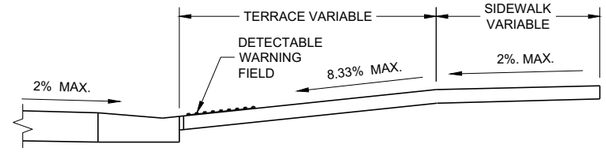

SECTION A - A

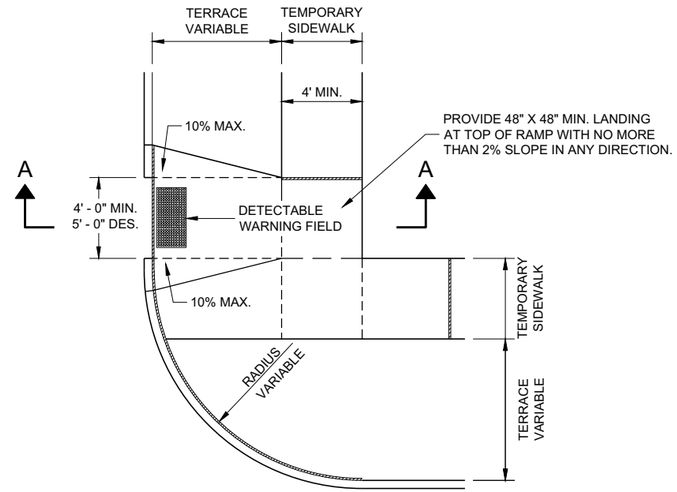

PLAN VIEW
TEMPORARY TYPE 3 RAMP
(OUTSIDE OF CROSSWALK AREA)

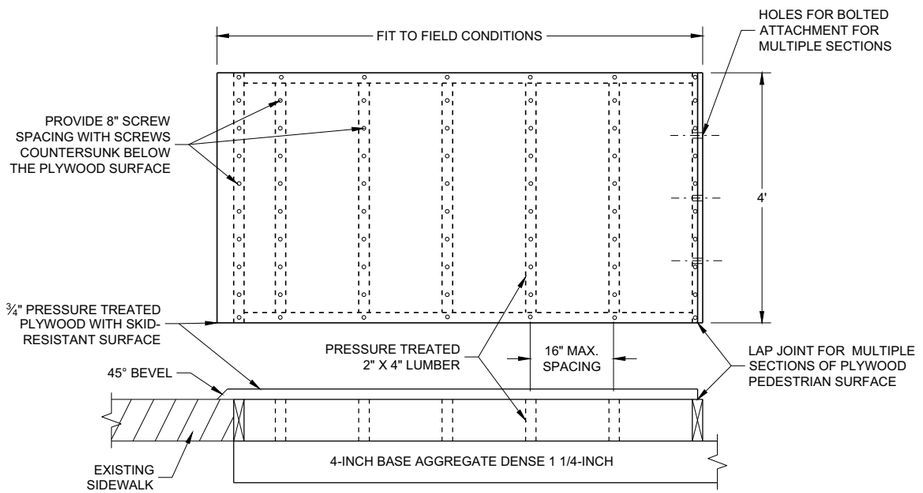

TEMPORARY PEDESTRIAN SURFACE PLYWOOD

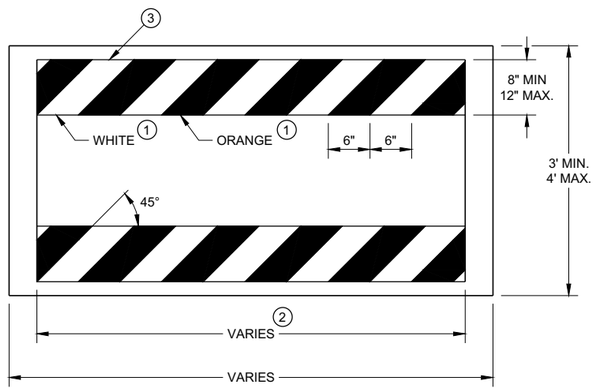

TEMPORARY PEDESTRIAN BARRICADE *

GENERAL NOTES

BARRICADE DEVICE SELECTED FROM APPROVED PRODUCT LIST

1. REFLECTIVE SHEETING SHALL FOLLOW THE REQUIREMENTS IN THE APPROVED PRODUCTS LISTING FOR SIGN SHEETING.
2. SHEETING REQUIRED ON MORE THAN 50% OF BARRICADE WIDTH.
3. PLACE SHEETING ON BOTH SIDES OF THE BARRICADE.

* USE THIS DETAIL FOR SHEETING PLACEMENT REFERENCE.

TRAFFIC CONTROL, PEDESTRIAN ACCOMMODATION

STATE OF WISCONSIN
DEPARTMENT OF TRANSPORTATION

APPROVED
November 2019
DATE

/S/ Andrew Heidtke
WORK ZONE ENGINEE 726

FHWA

6

SDD 15D30 - 06c

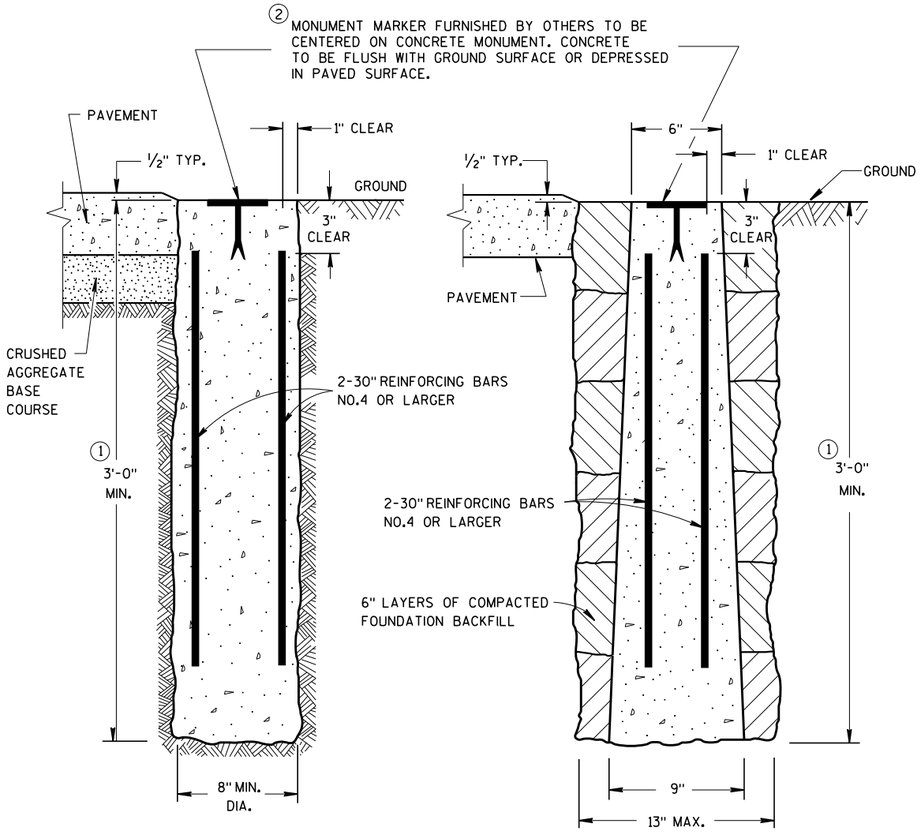

CAST-IN-PLACE

PRECAST

CONCRETE MONUMENTS

TYPE A

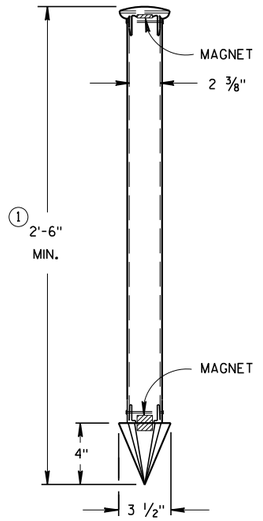

TYPE C

DRIVE-IN MONUMENT

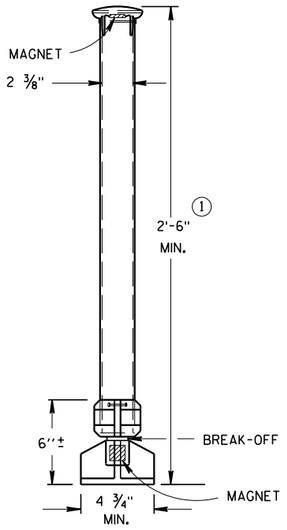

TYPE D
NON-DRIVEN
BREAK-OFF MONUMENT

ALUMINUM MONUMENTS

(INCLUDES MARKER)

GENERAL NOTES

DETAILS OF CONSTRUCTION, MATERIALS AND WORKMANSHIP NOT SHOWN ON THIS DRAWING SHALL CONFORM TO THE PERTINENT REQUIREMENTS OF THE STANDARD SPECIFICATIONS AND THE APPLICABLE SPECIAL PROVISIONS.

DETAILED DRAWINGS OF PROPOSED ALTERNATE DESIGNS FOR METAL MONUMENTS OR MONUMENT COVERS SHALL BE SUBMITTED TO THE ENGINEER FOR APPROVAL.

PERMANENT MAGNETS SHALL BE INSERTED NEAR THE TOP AND BOTTOM OF ALL ALUMINUM MONUMENTS SO THE MONUMENT CAN EASILY BE DETECTED BY A METAL DETECTOR.

THE CAST IRON MONUMENT COVER SHALL BE A "NON-ROCKING" TYPE. ADJUSTMENT OF THE COVER TO GRADE MAY BE ACCOMPLISHED BY THE USE OF MORTAR AND BRICK, OR BY EITHER PRECAST OR CAST-IN-PLACE REINFORCED CONCRETE GRADE RINGS.

MONUMENTS SHALL BE LOCATED AND PLACED AT THE DIRECTION OF THE ENGINEER.

ALUMINUM MONUMENTS AND MONUMENT COVERS SHALL BE MADE FROM AN ALUMINUM AND MAGNESIUM ALLOY AS DETERMINED BY THE MANUFACTURER.

THE MONUMENT COVERS DETAILED ON THIS DRAWING ARE NOT EQUAL ALTERNATES. MONUMENT COVERS SHALL BE CAST IRON UNLESS ALUMINUM IS SPECIFIED ELSEWHERE IN THE CONTRACT.

MONUMENT SHALL BE CAST-IN-PLACE CONCRETE UNLESS PRECAST CONCRETE OR ALUMINUM MONUMENTS ARE SPECIFIED IN THE CONTRACT OR PERMITTED BY THE ENGINEER

① MINIMUM LENGTH SHALL BE 4'-0" FOR MONUMENTS INSTALLED IN PAVED AREAS.

② AN OFFICIAL COUNTY MONUMENT MARKER SUPPLIED BY A COUNTY MAY BE REQUIRED FOR SOME SECTION CORNERS AND WITNESS MONUMENTS INSTEAD OF THIS WIS DOT MARKER.

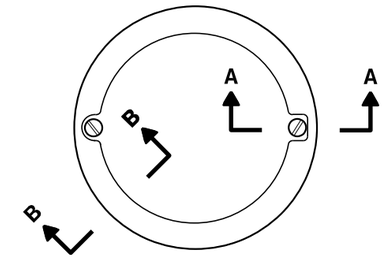

TOP VIEW

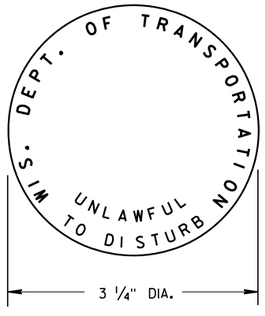

② WIS DOT MONUMENT MARKER LOGO

FOR TYPES "A", "C", & "D"

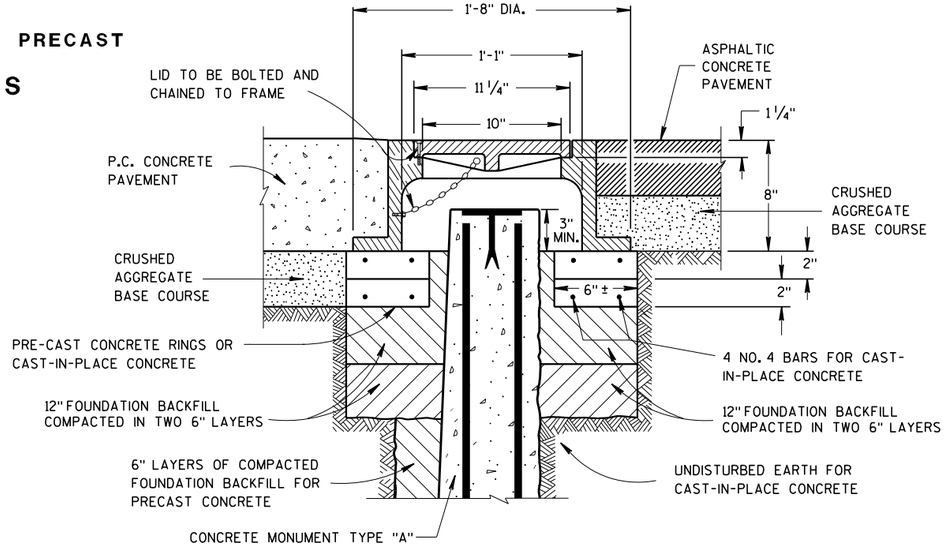

CAST IRON MONUMENT COVER

(APPROXIMATE WEIGHT 95 LBS)

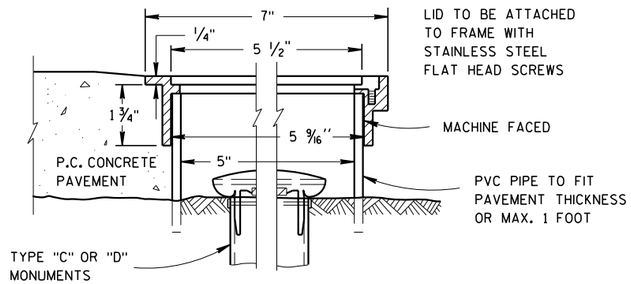

SECTION B-B SECTION A-A

ALUMINUM MONUMENT COVER

(APPROXIMATE WEIGHT 2 LBS)
(FOR CONCRETE PAVEMENT ONLY)

LANDMARK REFERENCE MONUMENTS AND COVERS

STATE OF WISCONSIN
DEPARTMENT OF TRANSPORTATION

APPROVED
March 2018 — DATE
/S/ Raymond A. Kumagai — CHIEF SURVEYING AND MAPPING ENGINEER
FHWA

6

S.D.D. 16 A 1-7

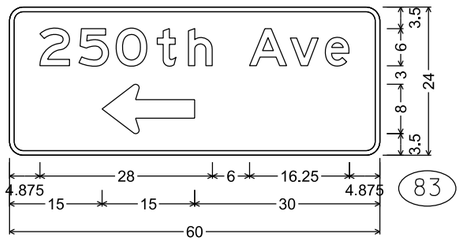

D1-1; 2.250" Radius, 0.750" Border

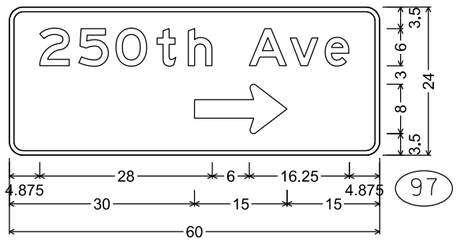

D1-1; 2.250" Radius, 0.750" Border

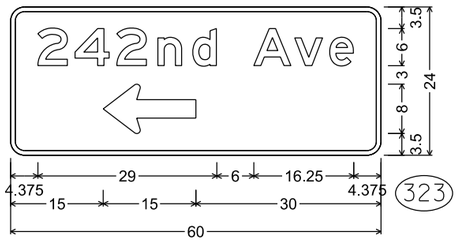

D1-1; 2.250" Radius, 0.750" Border

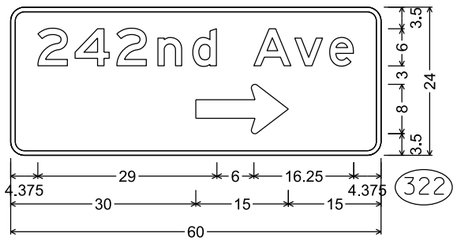

D1-1; 2.250" Radius, 0.750" Border

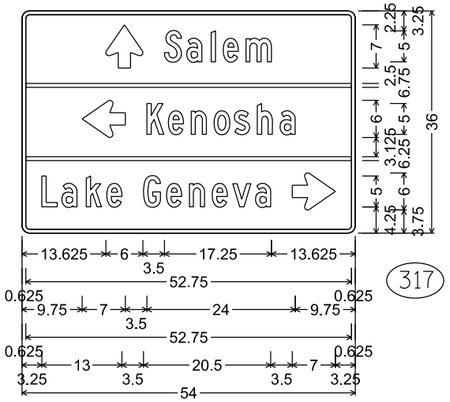

D1-3; 1.250" Radius, 0.625" Border,
"Salem", C; "Kenosha", C; "Lake", C; "Geneva", C

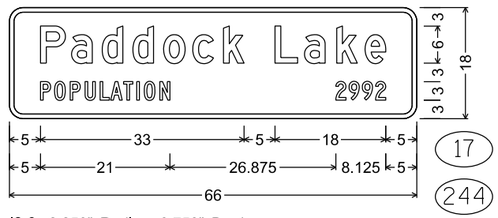

I2-3; 2.250" Radius, 0.750" Border,
"Paddock", D; "Lake", D; "POPULATION", C; "2992", C

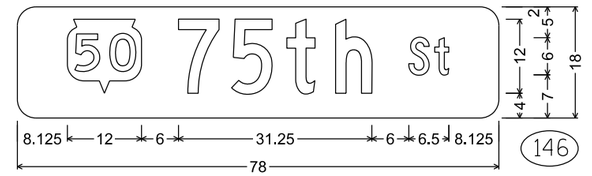

M1-94S; 3.000" Radius, No border,
"75th", C; "St", C

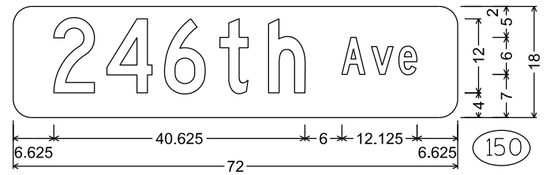

M1-94H; 3.000" Radius, No border,
"246th", C; "Ave", C

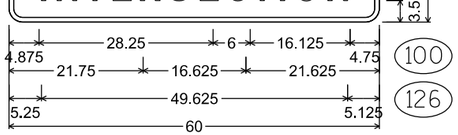

D1-63; 2.250" Radius, 0.750" Border

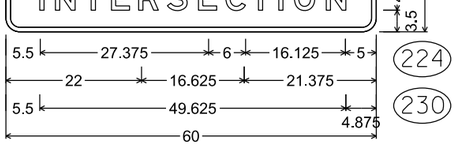

D1-63; 2.250" Radius, 0.750" Border



D1-65; 2.250" Radius, 0.750" Border

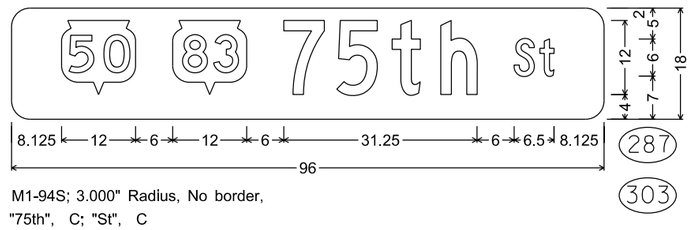

M1-94S; 3.000" Radius, No border,
"75th", C; "St", C

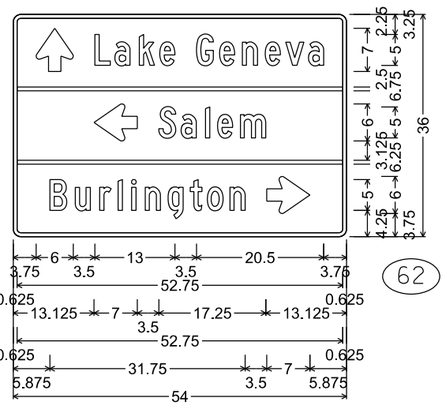

D1-3; 1.250" Radius, 0.625" Border,
"Lake", C; "Geneva", C; "Salem", C; "Burlington", C

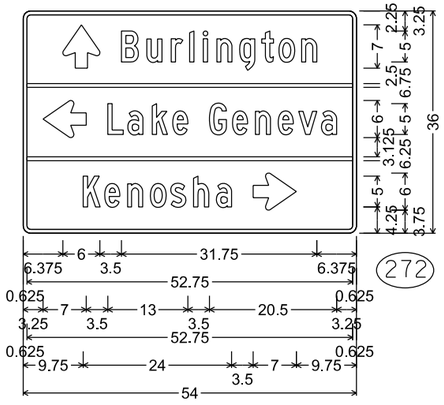

D1-3; 1.250" Radius, 0.625" Border,
"Burlington", C; "Lake", C; "Geneva", C; "Kenosha", C

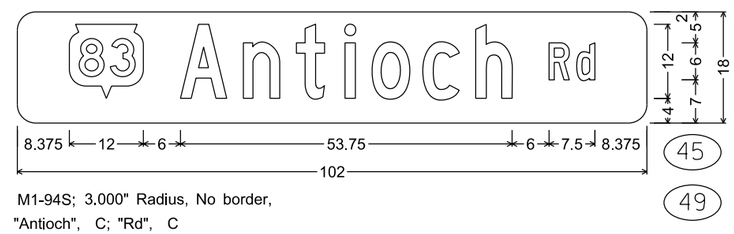

M1-94S; 3.000" Radius, No border,
"Antioch", C; "Rd", C

NOTES

1. All Signs Type II - Type H Reflective
2. Color:
   Background - Green
   Message - White
3. Message Series - E

7

7

PROJECT NO: 1310-04-70	HWY: STH 50	COUNTY: KENOSHA	PERMANENT SIGNING	SHEET NO: 728	E

NOTES

1. All Signs Type II - Type F Reflective
2. Color:
   Background - Orange
   Message - Black
3. Message Series - C

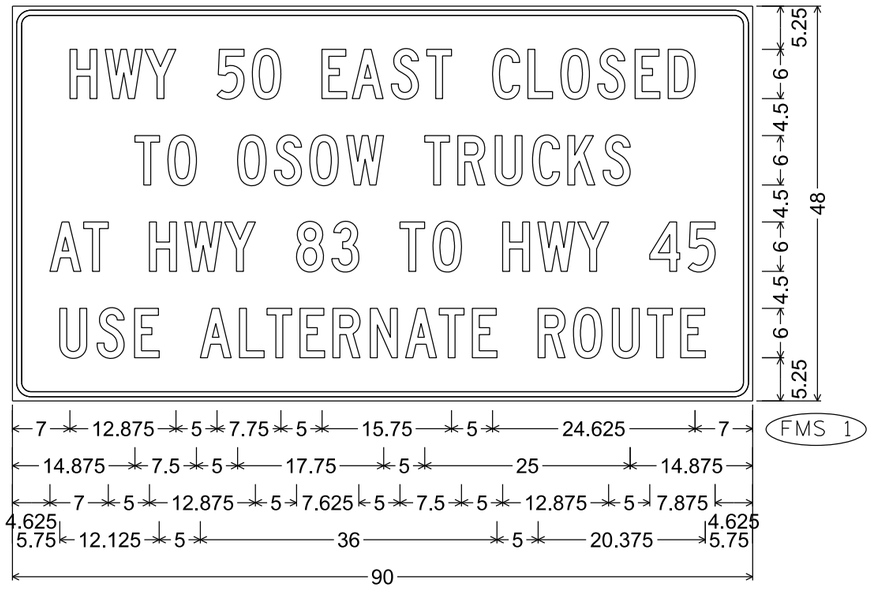

2.250" Radius, 0.625" Border, 0.500" Indent, Black on, Fluorescent orange;

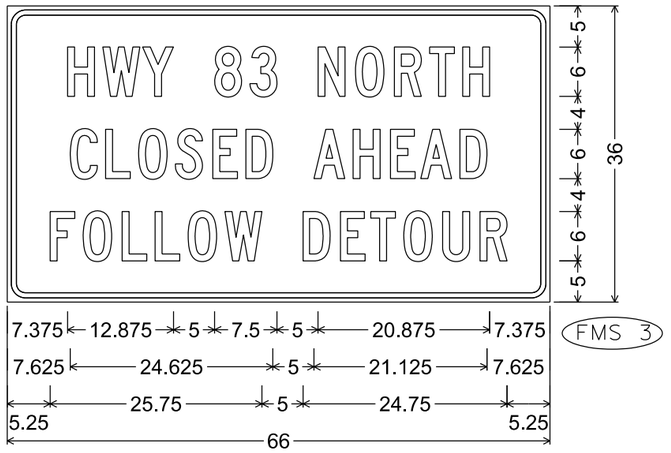

2.250" Radius, 0.625" Border, 0.500" Indent

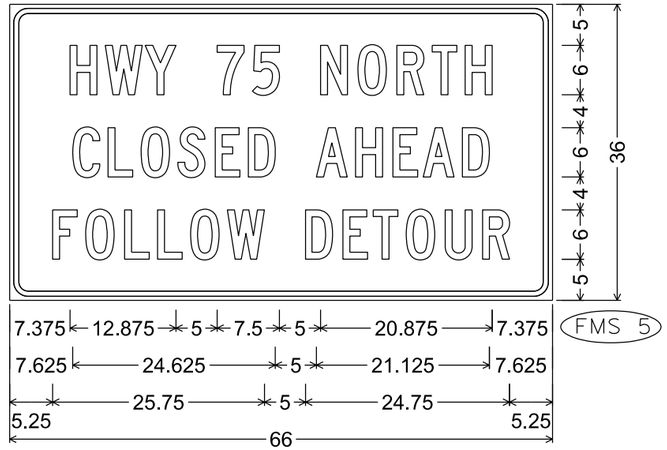

2.250" Radius, 0.625" Border, 0.500" Indent

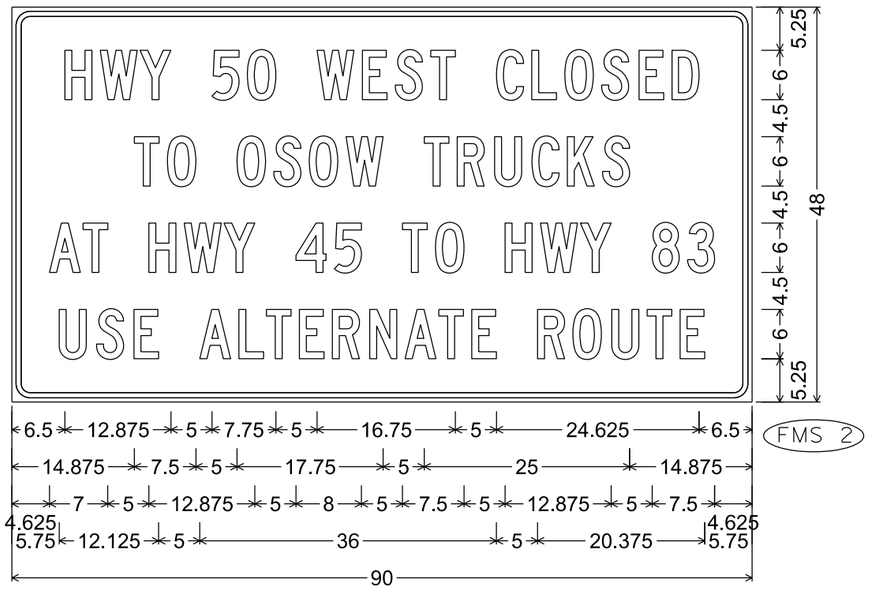

2.250" Radius, 0.625" Border, 0.500" Indent, Black on, Fluorescent orange;

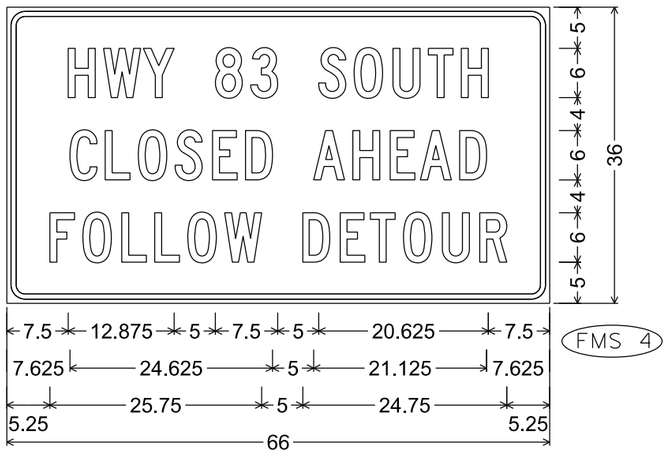

2.250" Radius, 0.625" Border, 0.500" Indent

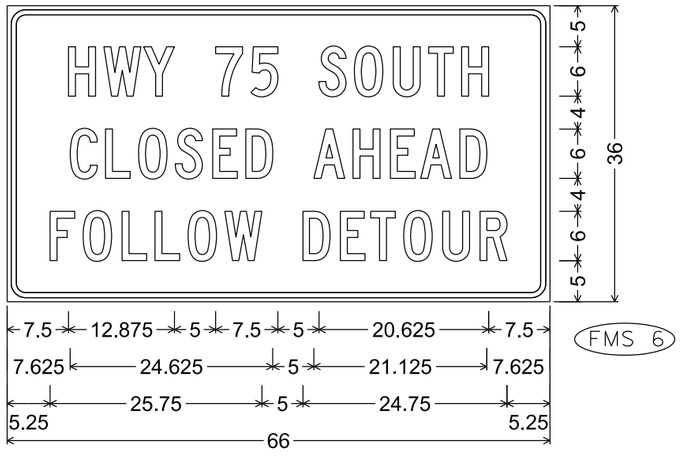

2.250" Radius, 0.625" Border, 0.500" Indent

7

7

PROJECT NO: 1310-04-70	HWY: STH 50	COUNTY: KENOSHA	TEMPORARY SIGNING	SHEET NO: 729	E

NOTES

1. Fixed Message Signs - Type II Type F Reflective
2. Color:
   Background - Orange
   Message - Black
3. Message Series - D

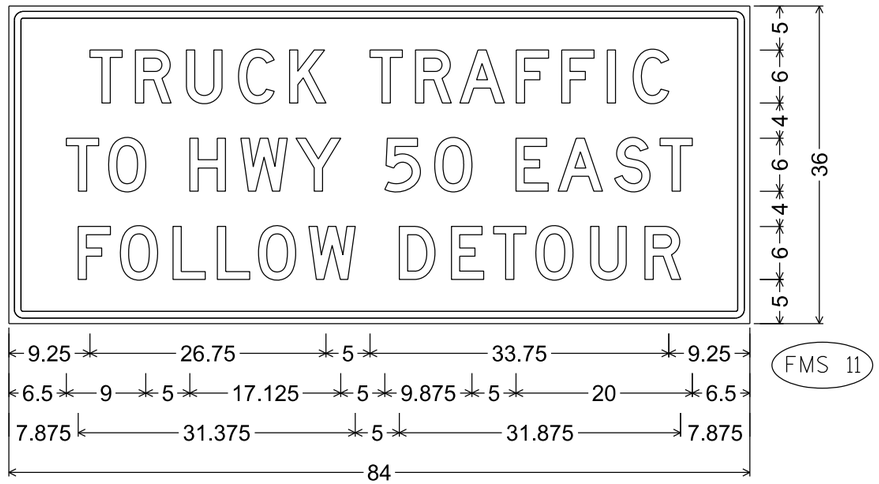

1.625" Radius, 0.750" Border, 0.625" Indent

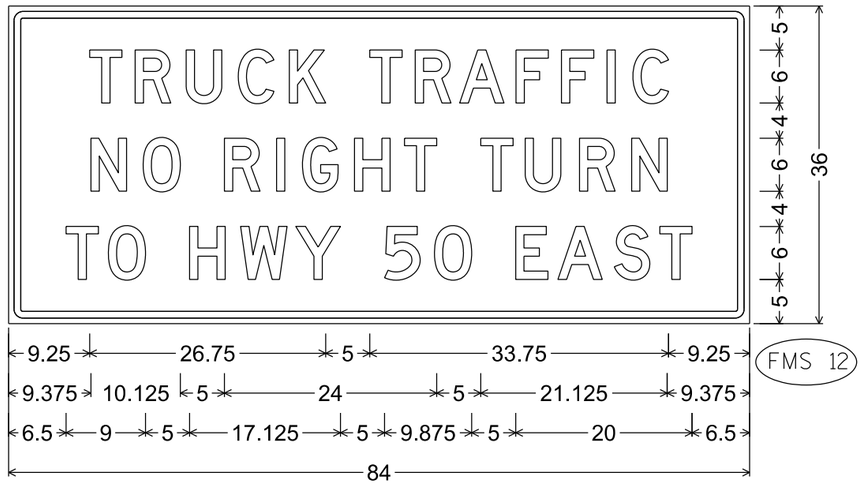

1.625" Radius, 0.750" Border, 0.625" Indent

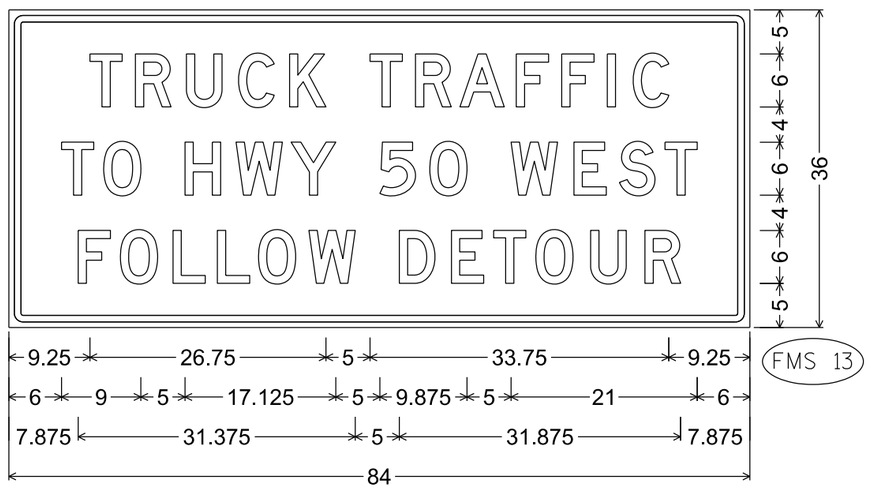

1.625" Radius, 0.750" Border, 0.625" Indent

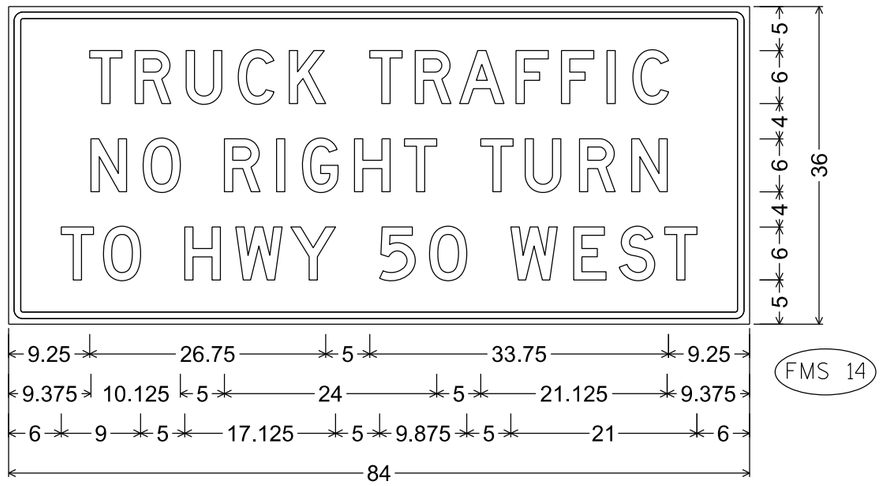

1.625" Radius, 0.750" Border, 0.625" Indent

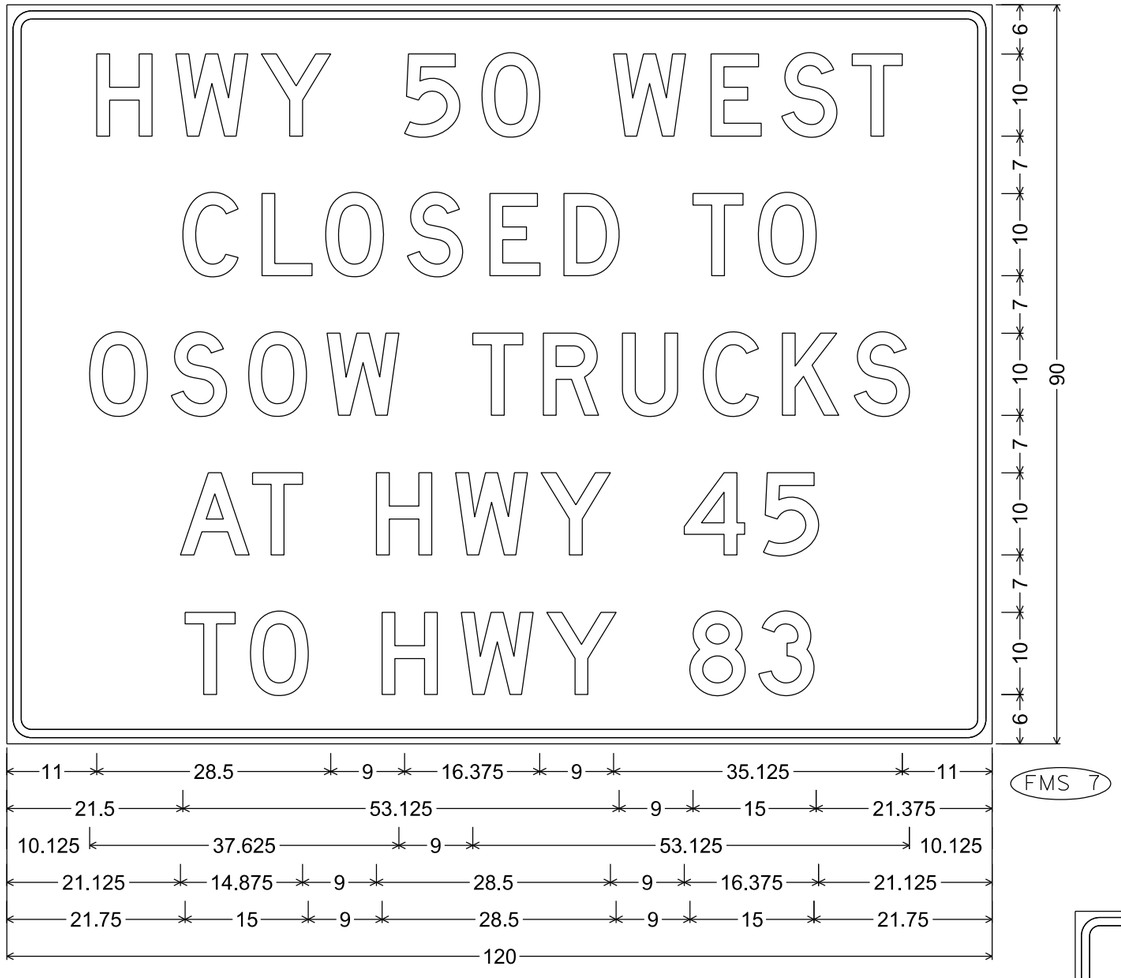

FMS 7

3.000" Radius, 1.000" Border, 0.750" Indent

NOTES

1. All Signs Type II - Type F Reflective
2. Color:
   Background - Orange
   Message - Black
3. Message Series - D

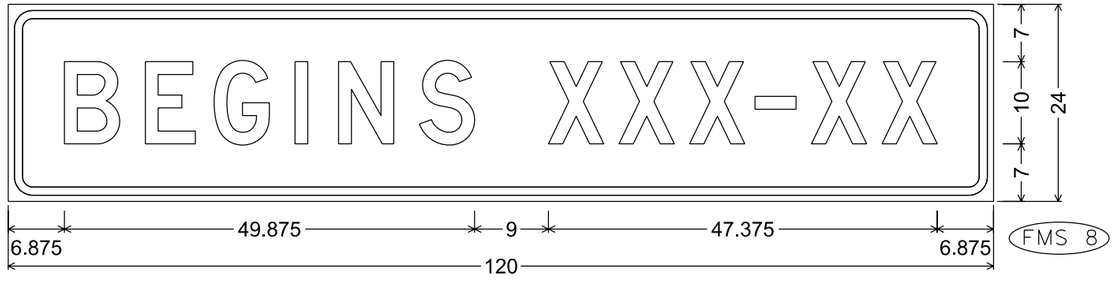

FMS 8

3.000" Radius, 1.000" Border, 0.750" Indent

7

7

NOTES

1. All Signs Type II - Type H Reflective
2. Color:
   Background - White
   Message - Black
3. Message Series - As noted

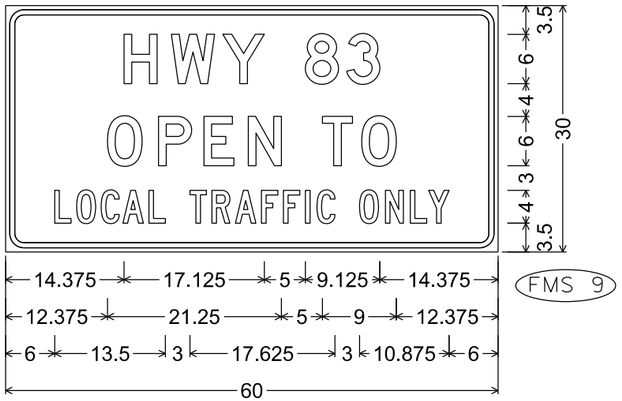

2.250" Radius, 0.625" Border, 0.500" Indent,
"HWY", D; "83", D; "OPEN", D; "TO", D;
"LOCAL", C; "TRAFFIC", C; "ONLY", C;

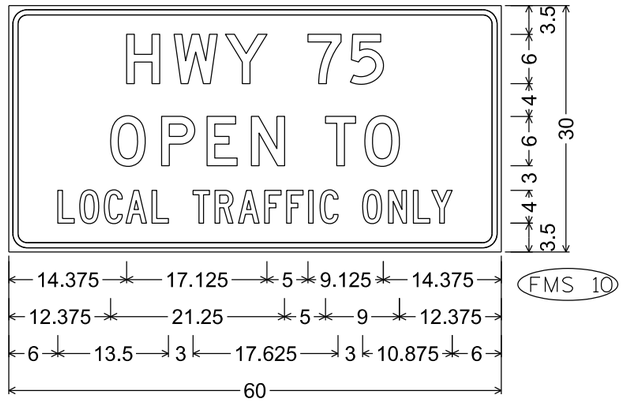

2.250" Radius, 0.625" Border, 0.500" Indent,
"HWY", D; "75", D; "OPEN", D; "TO", D;
"LOCAL", C; "TRAFFIC", C; "ONLY", C;

7

7

TYPICAL ASSEMBLIES

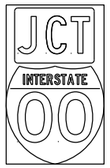

J1-1

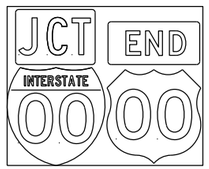

J1-2

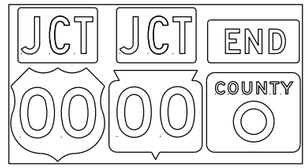

J1-3



JR1-1



J2-1

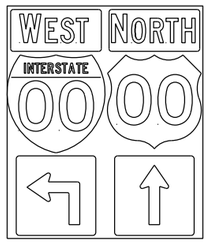

J2-2

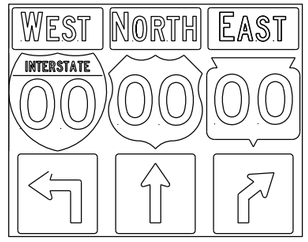

J2-3



JV
(Typical Vertical J-Assembly
See Note 10 and 11)

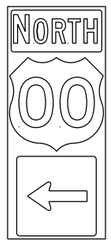

J3-1

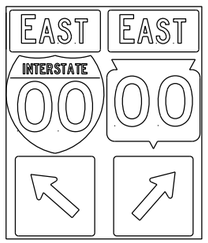

J3-2

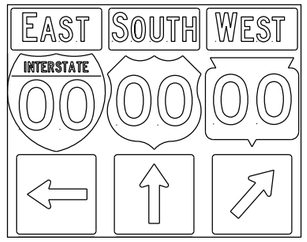

J3-3

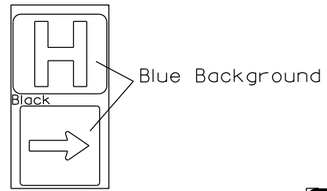

JH-1



J4-1

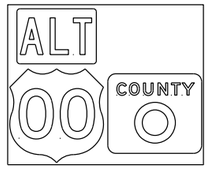

J4-2

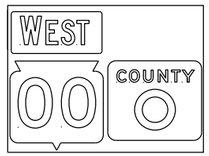

J4-2

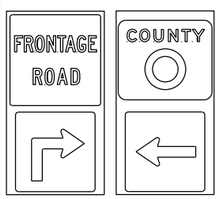

J12-1

J13-1



J32-1



J33-1



J22-1



J23-1



JR13-1



JR23-1



JR99-1

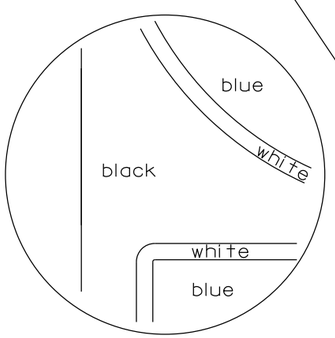

blue background
with interstate

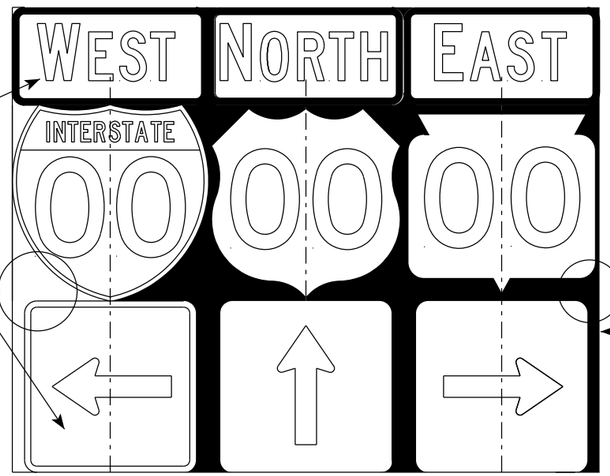

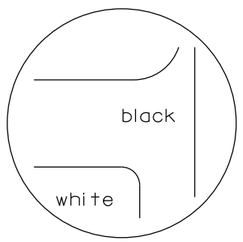

black background

NOTES

1. Signs are Type II - Type H Reflective
2. Color:
   Background - Black Non-reflective
   Message - see Note 5
3. Message Series - See Note 5
4. Corners shall be square or rounded if base material is plywood. If base material is metal the corners shall be rounded.
5. The colors and message spacing on each marker shall be according to the applicable route marker panel specifications.
6. Certain marker heads require the component pieces to be the same color. As an example, all the components used with an M1-1 Interstate marker shall be blue.
7. Single panel j-assemblies shall only be used with route marker shields that are same size. If the route marker shields are different size use multiple piece component.
8. Route assemblies that have 24 inch route shields and have dimensions greater than 48 inches (both vertical and horizontal) shall have one horizontal splice between the arrows and route shields. Vertical splices shall not be used on route assemblies with a horizontal dimension of 144 inches or less. The contractor shall not use more than one vertical joint per sign and the joint shall be between route shields.
9. Route assemblies that have 36 inch shields and have dimensions greater than 48 inchs (both vertical and horizontal) shall have two horizontal splices. One horizontal splice shall be between the cardinal direction and route shields and the other horizontal splice shall be between the arrows and route shields. Vertical splices shall not be used on route assemblies with a horizontal dimension of 144 or less. The contractor shall not use more than one vertical joint per sign and the joint shall be between route shields.
10. All Vertical J Assemblies are given a Sign Code of JV
11. For JV Assemblies that have a mixture of Interstate and non Interstate shields, arrows and cardinals shall be white on blue.

ROUTE MARKERS & COMPONENTS
IN TYPICAL ASSEMBLIES

WISCONSIN DEPT OF TRANSPORTATION

APPROVED Matthew R Rauch
for State Traffic Engineer

DATE 3/18/21 PLATE NO. A2-1S.9

PROJECT NO:

SHEET NO: 733 E

FILE NAME : C:\CAEfiles\Projects\tr_stdplate_A21S.dgn PLOT DATE : 18-MAR 2021 1:37 PLOT BY : mscj9h PLOT NAME :

WISDOT/CADDS SHEET 42

7

7

URBAN AREA

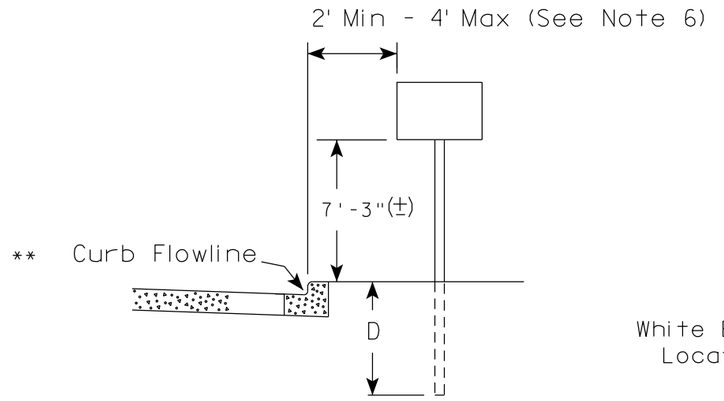

RURAL AREA (See Note 2)

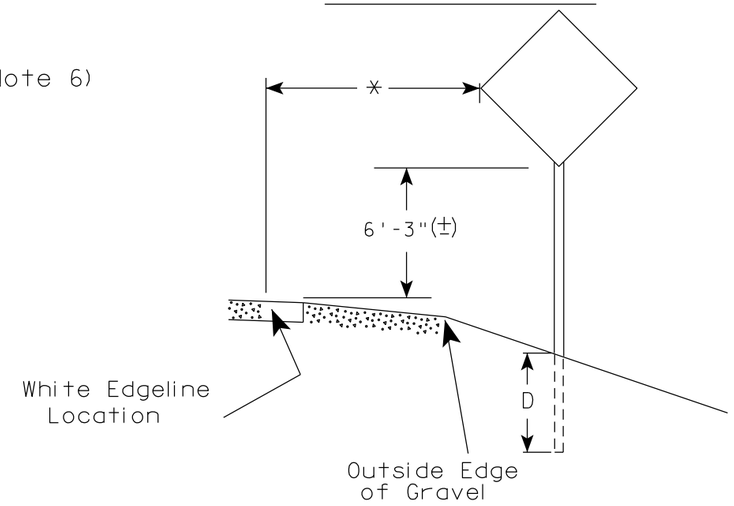

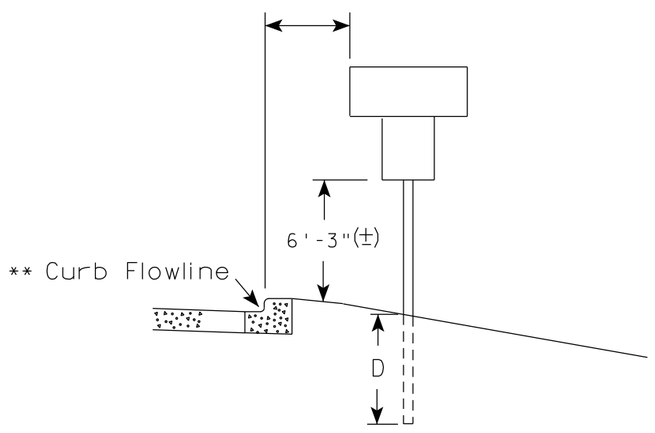

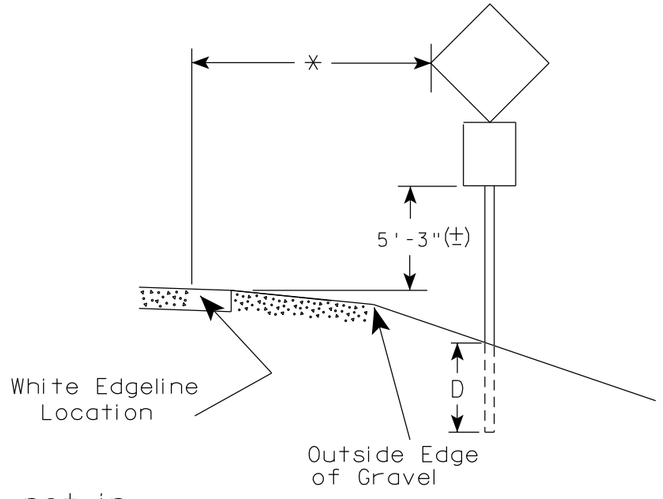

** The existence of curb and gutter does not in itself mandate the vertical clearance illustrated. That height is typically measured where there is sidewalk adjacent to the roadway or parking is permitted. In the absence of sidewalk vertical clearance is measured from the top of the curb. Offset of signs is measured from the flow line.

* 6 feet from edge of a paved shoulder or 12 feet from the edge of pavement (edge line location) or 2 feet from outside edge of gravel, whichever is greater unless directed by project engineer.

POST EMBEDMENT DEPTH

Area of Sign Installation (Sq.Ft.)	D (Min)
20 or Less	4'
Greater than 20	5'

GENERAL NOTES

1. Signs wider than 4 feet or 20 sq.ft or larger, shall be mounted on multiple posts. Refer to plate A4-4.
2. If signs are mounted on or behind barrier wall, see A4-10 sign plate.
   The Double Arrow sign (W12-1D) shall be mounted at a height of 2'-3" (±). The Chevron sign (W1-8), Roundabout Chevron panel (R6-4B), Enhanced Reference Markers, Clearance Markers (W5-52), Mile Markers (D10 series), In Road Object Markers (W5-54) & End of Road Markers (W5-56) shall be mounted at a height of 4'-3" (±).
3. For expressways and freeways, mounting height is 7'- 3" (±) or 6'-3" (±) depending upon existence of a sub-sign.
4. Minimum mounting height for signs mounted on traffic signal poles is 5'- 3" (±).
5. Offset distance shall be consistent with existing signs or consistent throughout length of project.
6. The (±) tolerance for mounting height is 3 inches.
7. Folding signs shall be mounted at a height of 5'-3" (±) or as directd by the Engineer.

TYPICAL INSTALLATION OF PERMANENT TYPE II SIGNS ON SINGLE POSTS

WISCONSIN DEPT OF TRANSPORTATION

APPROVED Matthew R Rauch
for State Traffic Engineer

DATE 5/13/2020 PLATE NO. A4-3.22

PROJECT NO:	HWY:	COUNTY:		SHEET NO: 734	E

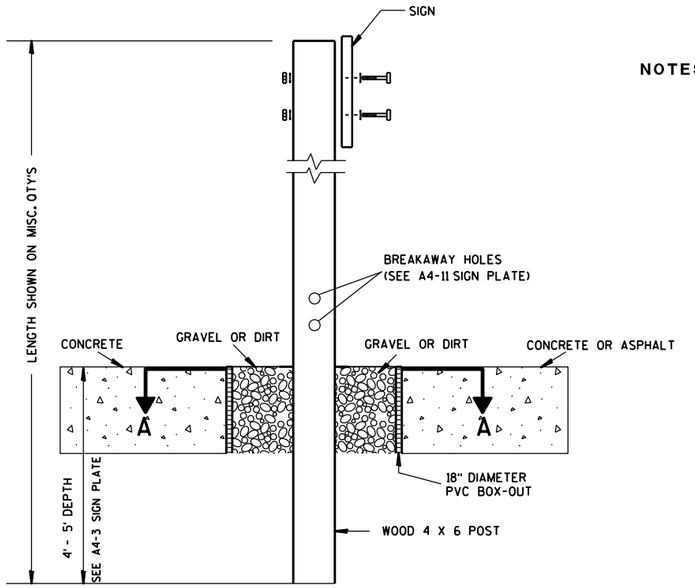

ELEVATION VIEW

DETAIL OF WOOD 4 X 6 SIGN POST IN BOX-OUT

NOTES:
1. ALL MATERIAL TO BE APPROVED BY ENGINEER PRIOR TO INSTALLATION
2. SEE SIGN PLATE A4-8 FOR SIGN HARDWARE REQUIREMENTS
3. 18 INCH X 18 INCH SQUARE BOX-OUTS MAY BE USED FOR INSTALLATIONS IN EXISTING CONCRETE OR ASPHALT LOCATIONS.

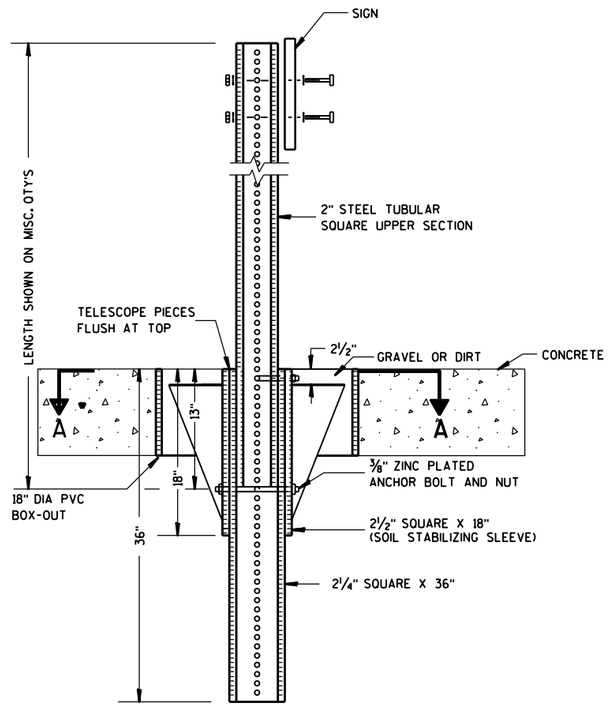

ELEVATION VIEW

DETAIL OF STEEL 2 X 2 SIGN POST IN BOX-OUT

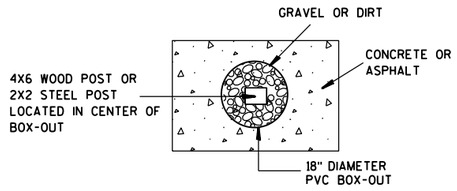

PLAN VIEW

FOR NEW CONCRETE/ASPHALT INSTALLATIONS

SIGN POST BOX-OUTS A4-3B

WISCONSIN DEPT OF TRANSPORTATION

APPROVED Matthew R Rauch
for State Traffic Engineer

DATE 1/27/14 PLATE NO. A4-3B.1

PROJECT NO:	HWY:	COUNTY:		SHEET NO:	E

FILE NAME : C:\CAEFiles\Projects\tr_stdplate\A43B.DGN PLOT DATE : 27-JAN-2014 09:48 PLOT BY : mscsja PLOT NAME : PLOT SCALE : 13.659812:1.000000 WISDOT/CADDS SHEET 42

URBAN AREA

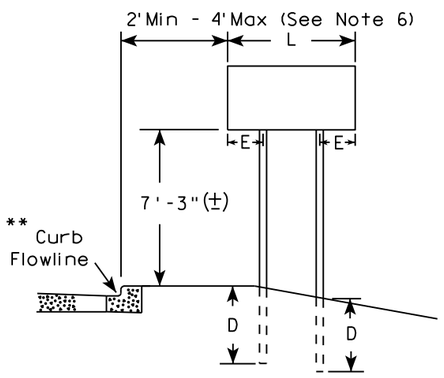

RURAL AREA (See Note 3)

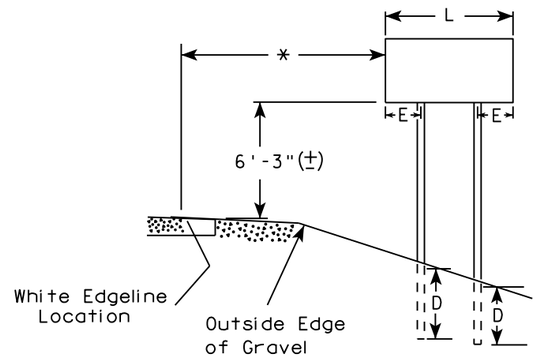

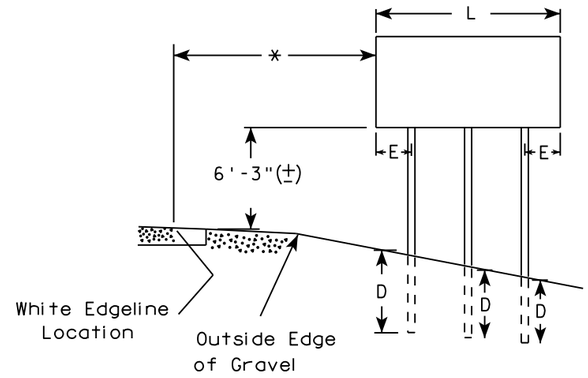

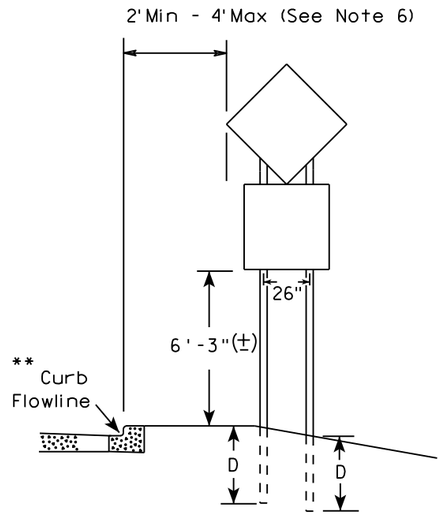

48" DIAMOND WARNING SIGN

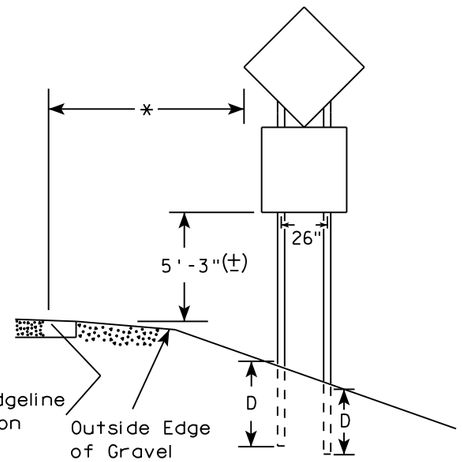

48" DIAMOND WARNING SIGN

SIGN SHAPE OTHER THAN DIAMOND (TWO POSTS REQUIRED)		
	L	E
***	Greater than 48" Less than 60"	12"
	60" to 108"	L/5

SIGN SHAPE OTHER THAN DIAMOND (THREE POSTS REQUIRED)	
L	E
Greater than 108" to 144"	12"

GENERAL NOTES

1. For 3 or 4 post installations, individual post spacing shall be greater than 3'-6".
2. See tables below for required number of posts.
3. For expressways and freeways, mounting height is 7'-3" (±) or 6'-3" (±) depending upon existence of sub-sign.
4. The (±) tolerance for mounting height is 3 inches.
5. J-Assemblies are considered to be one sign for mounting height.
6. Offset distance shall be consistent with existing signs or consistent throughout length of project.
7. Folding signs shall be mounted at a height of 5'-3" (±) or as directed by the engineer.
8. The Double Arrow sign (W12-1) shall be mounted at a height of 2'-3" (±). The Chevron sign (W1-8), Roundabout Chevron panel (R6-4B), Clearance Markers (W5-52), Mile Markers (D10 series), In Road Object Markers (W5-54) & End of Road Markers (W5-56) shall be mounted at a height of 4"-3" (±).

* 6 feet from edge of a paved shoulder or 12 feet from the edge of pavement (edge line location) or 2 feet from outside edge of gravel, whichever is greater unless directed by project engineer.

** The existence of curb and gutter does not in itself mandate the vertical clearance illustrated. That height is typically measured where there is sidewalk adjacent to the roadway or parking is permitted. In the absence of sidewalk vertical clearance is measured from the top of the curb. Offset of signs is measured from the flow line.

*** See A4-3 sign plate for signs 4' or less in width and less than 20 S.F. in area.

POST EMBEDMENT DEPTH

Area of Sign Installation (Sq. Ft.)	D (Min)
20 or Less	4'
Greater than 20	5'

TYPICAL INSTALLATION OF TYPE II SIGNS ON MULTIPLE POSTS

WISCONSIN DEPT OF TRANSPORTATION

APPROVED Matthew R Rauch
For State Traffic Engineer

DATE 8/21/17 PLATE NO. A4-4.15

PROJECT NO:	HWY:	COUNTY:		SHEET NO: 736	E

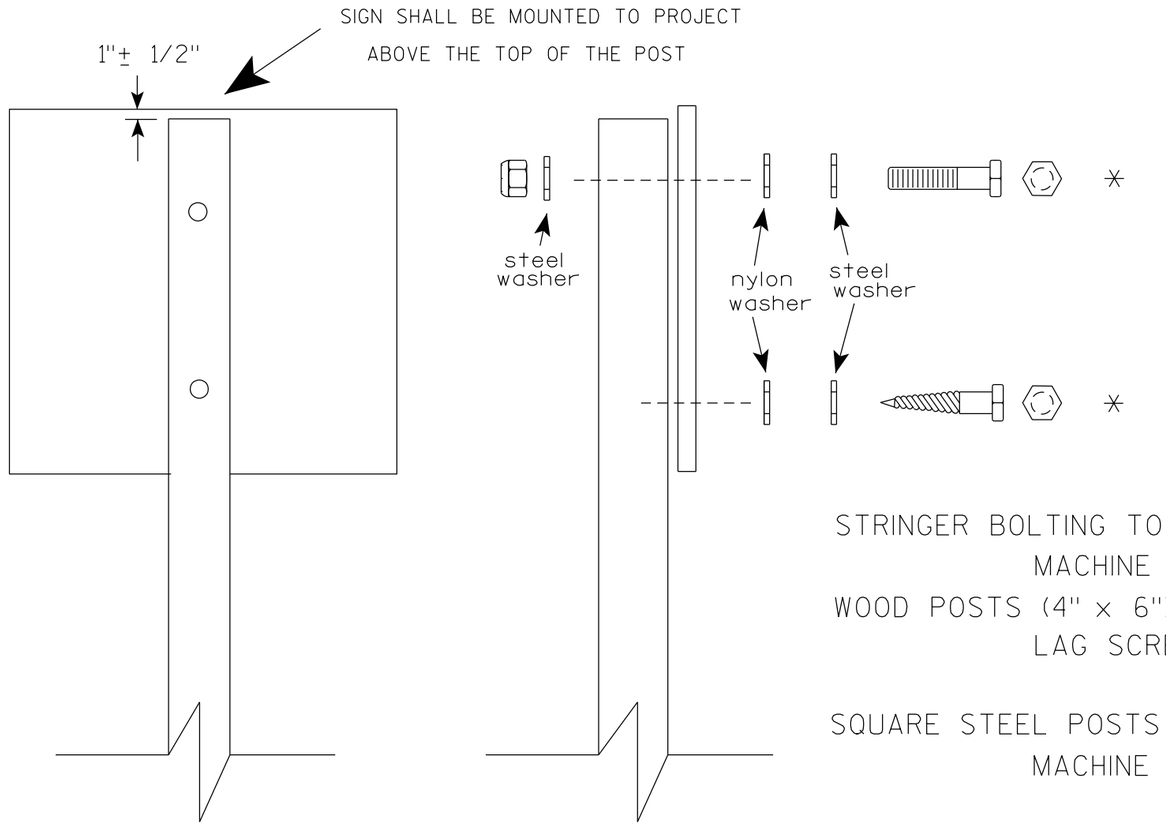

Nuts, bolts and lags used for mounting signs shall have hexagonal heads and shall be either :

a. Hot dip galvanized in accordance with ASTM Designation: A 153, Class D, or SC 3

b. Electro-galvanized in accordance with ASTM Designation : B 633, TYPE III, SC 3.

Threads on bolts and nuts shall be manufactured with sufficient allowance for the cadmium plate or galvanized coating to permit the nuts to run freely on the bolts.

STRINGER BOLTING TO ALUMINUM SIGNS (SEE SIGN PLATE A4-18)

MACHINE BOLTS - 5/16" X 1-3/4" Length w/ lock nuts

WOOD POSTS (4" x 6")

LAG SCREWS - 3/8" X 3" (NO STRINGERS ON BACK OF SIGN)
3/8" X 4" (STRINGERS ON BACK OF SIGN)

SQUARE STEEL POSTS (2" x 2")

MACHINE BOLTS - 3/8" X 3-1/4" Length w/ nuts (NO STRINGER ON BACK OF SIGN)
3/8" X 5" Length w/ nuts (STRINGERS ON BACK OF SIGN)

RIVETS - 9/32" (6605-9-6) BULB-TITE, TRI-FOLD, ALUMINUM BODY/MANDREL
O.D. FLANGE .720-.765 INCH, GRIP RANGE .042-.375 INCH

WASHERS (ALL POSTS) -

1-1/4" O.D. X 3/8" I.D. X 1/16" STEEL

1-1/4" O.D. X 3/8" I.D. X .080 NYLON

* Two different fastening systems are shown for illustration purposes. On any individual sign, either one or the other system shall be used. Actual number of fasteners per sign varies with the sign area, but normally there are two. For a single post installation, all signs greater than 9 sq. ft. require the use of 3 fasteners.

ATTACHMENT OF SIGNS TO POSTS

WISCONSIN DEPT OF TRANSPORTATION

APPROVED Matthew R Rauch
for State Traffic Engineer

DATE 4/1/2020 PLATE NO. A4-8.9

PROJECT NO:

SHEET NO: 737 E

TELESCOPIC TUBING ANCHORS
TWO PIECE SYSTEM

2 1/4 " SQUARE
12 GAUGE
PERFORATED
GALVANIZED FINISH

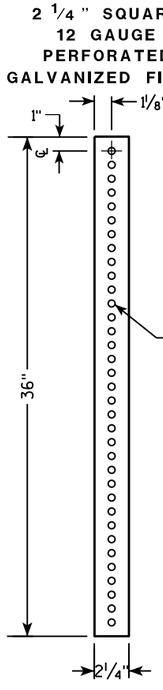

2 1/2 " SQUARE
12 GAUGE
OMNI-DIRECTIONAL
PERFORATED
SOIL STABILIZING SLEEVE
GALVANIZED FINISH

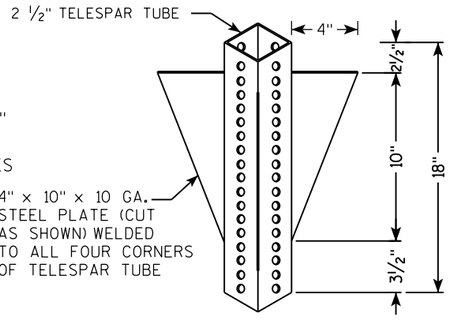

DETAIL OF TUBULAR STEEL SIGN POST
(IN POURED CONCRETE OR ASPHALT)

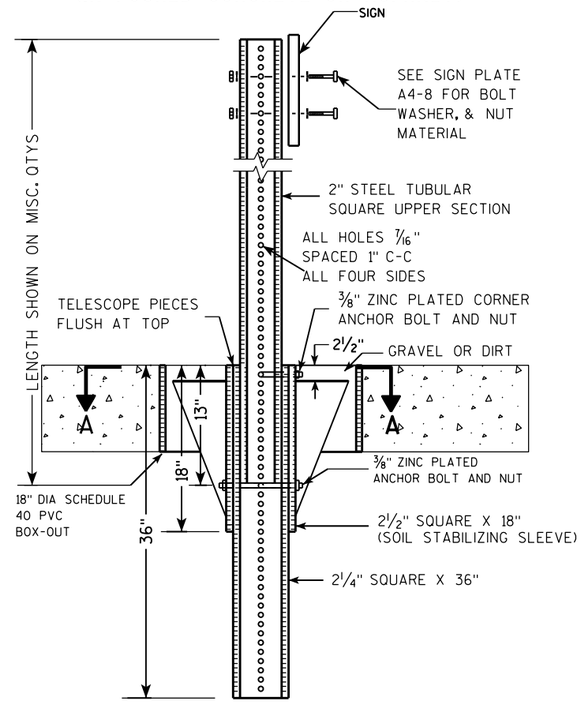

DETAIL OF TUBULAR STEEL SIGN POST
(IN LOCATIONS OTHER THAN POURED CONCRETE OR ASPHALT)

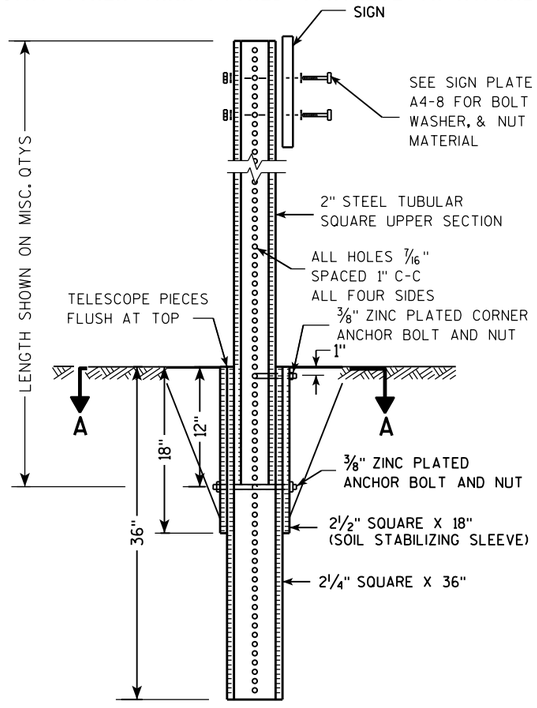

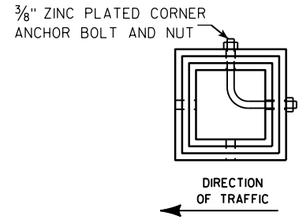

SECTION A-A

Area of Sign Installation (Sq. Ft.)	Number of Required Posts
9 or less	1
Greater than 9 less than or equal to 18	2
Greater than 18 less than or equal to 27	3

Signs wider than 3 feet or larger than 9 sq. ft shall be mounted on multiple posts (see above table).

TUBULAR STEEL
SIGN POST
A4-9

WISCONSIN DEPT OF TRANSPORTATION

APPROVED Matthew R Rauch
for State Traffic Engineer

DATE 2/05/15 PLATE 738 A4-9.9

PROJECT NO:	HWY:	COUNTY:		SHEET NO:	E

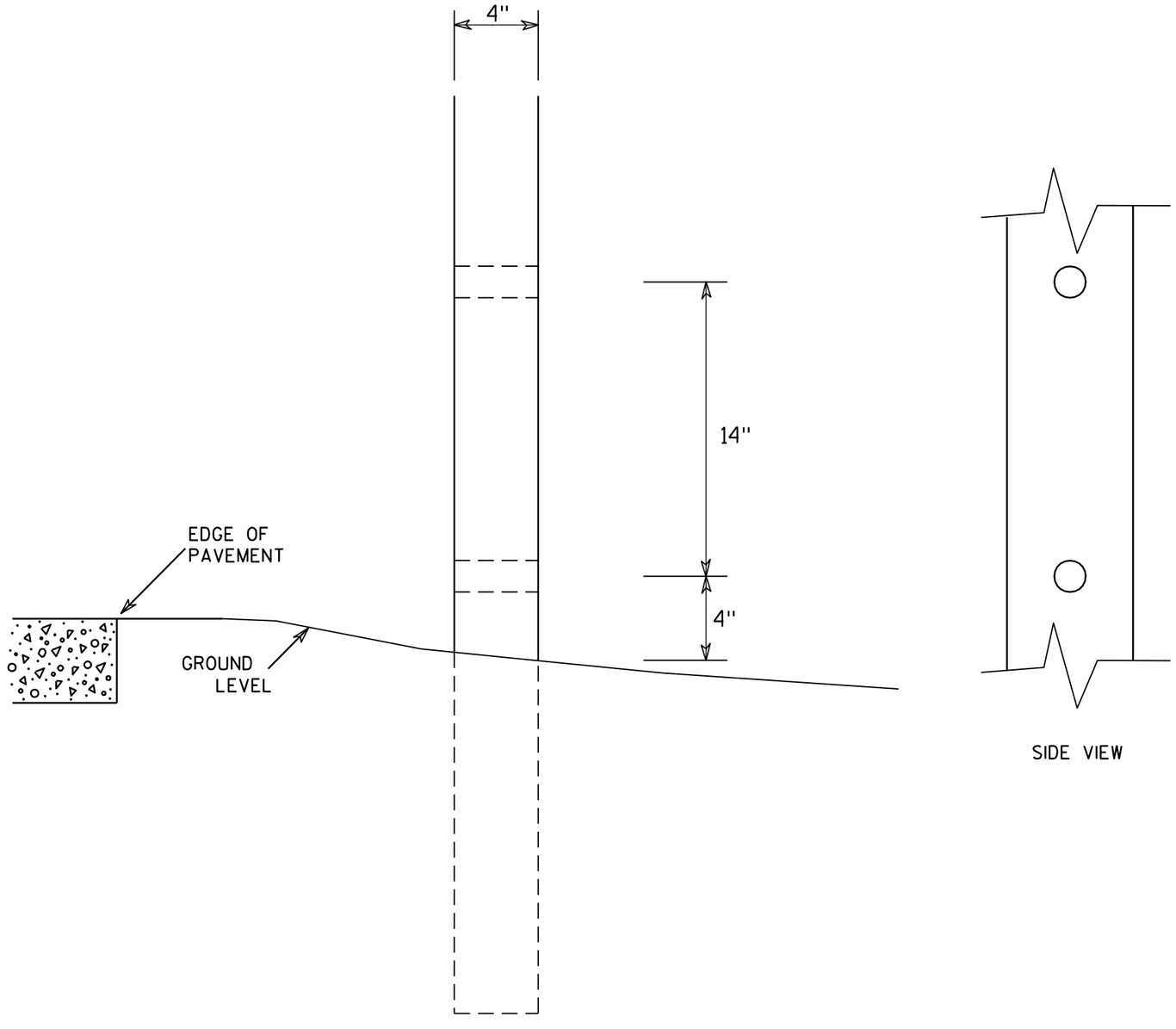

SIDE VIEW

GENERAL NOTES

1. All 4 x 6 Wood Posts shall be modified by having two 1½" diameter holes drilled perpendicular to the roadway centerline.

7

7

4 X 6 WOOD POST MODIFICATIONS

WISCONSIN DEPT OF TRANSPORTATION

APPROVED Chester J Spang for State Traffic Engineer

DATE 3/27/97 PLATE NO. A4-11.2

PROJECT NO:	HWY:	COUNTY:		SHEET NO: 739	E

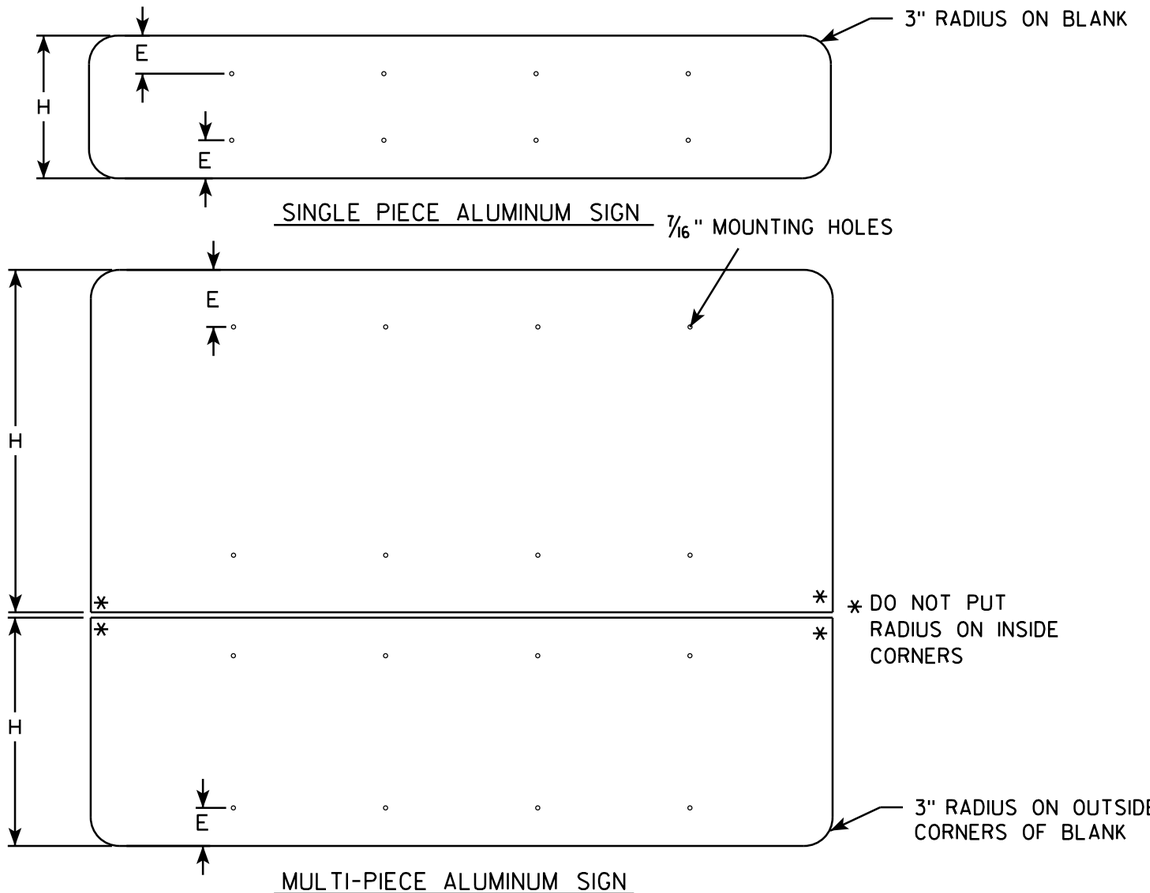

GENERAL NOTES

- ALL SIGNS OVER 60" IN WIDTH SHALL HAVE A 3" RADIUS ON THE OUTSIDE CORNERS OF THE ALUMINUM BLANK.
- MOUNTING HOLES SHALL BE 7/16" DIAMETER.
- SEE CHART FOR HOLE SPACING REQUIREMENTS
- FOR SIGN PANELS WITH DIMENSION (H) 36" AND OVER, DIMENSION E SHALL BE 6"
- FOR SIGN PANELS WITH DIMENSION (H) UNDER 36", DIMENSION E SHALL BE 4"
- SIGN STRINGER MATERIAL SHALL CONSIST OF STEEL CHANNEL POST SECTIONS, WEIGHING 1.12 LBS/FT IN ACCORDANCE WITH SECTION 633.2.1 OF THE STANDARD SPECIFICATIONS FOR HIGHWAY AND STRUCTURE CONSTRUCTION.
- SEE SIGN PLATE A4-8 FOR SIGN STRINGER BOLTING REQUIREMENTS.

SIGN WIDTH	STRINGER WIDTH	POSTS	HOLE SPACING	MOUNTING HOLES
78"	72"	2	16"	15" 31" 47" 63"
84"	72"	2	17"	16½" 33½" 50½" 67½"
90"	72"	2	18"	18" 36" 54" 72"
96"	90"	2	19"	19½" 38½" 57½" 76½"
102"	90"	2	20"	21" 41" 61" 81"
108"	90"	2	21"	22½" 43½" 64½" 85½"
114"	108"	3	15"	12" 27" 42" 57" 72" 87" 102"
120"	108"	3	16"	12" 28" 44" 60" 76" 92" 108"
126"	108"	3	17"	12" 29" 46" 63" 80" 97" 114"
132"	126"	3	18"	12" 30" 48" 66" 84" 102" 120"
138"	126"	3	19"	12" 31" 50" 69" 88" 107" 126"
144"	126"	3	20"	12" 32" 52" 72" 92" 112" 132"

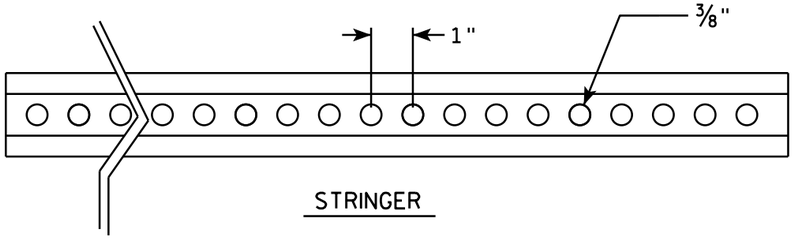

STRINGER

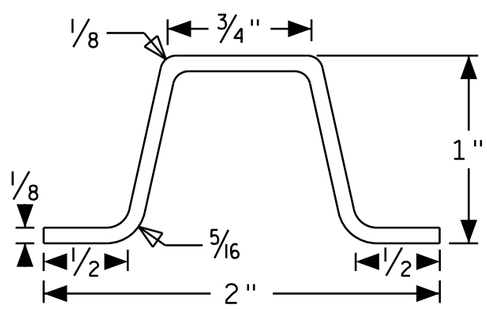

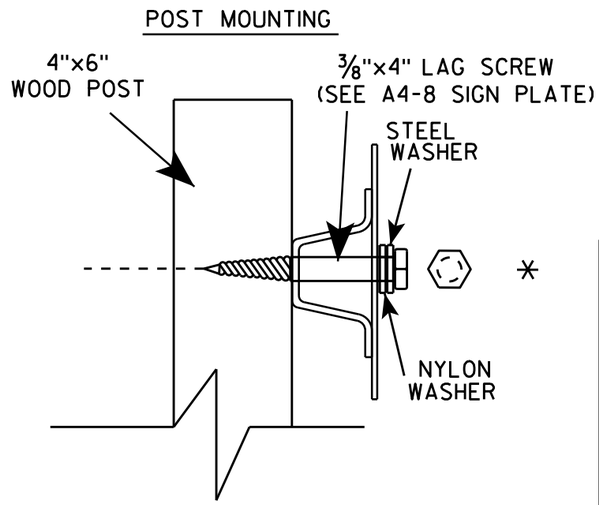

SIGN STRINGER MOUNTING REQUIREMENTS

WISCONSIN DEPT OF TRANSPORTATION

APPROVED Matthew R Rauch

for State Traffic Engineer

DATE 4/26/16 PLATE NO A4-18.1

PROJECT NO:	HWY:	COUNTY:		SHEET NO:	E

FILE NAME : C:\CAEfiles\Projects\tr_stdplate\A418.dgn PLOT DATE : 27-APR-2016 13:56 PLOT BY : mscj9h PLOT NAME : PLOT SCALE : 41.805205:1.000000

BANDING

SINGLE SIGN

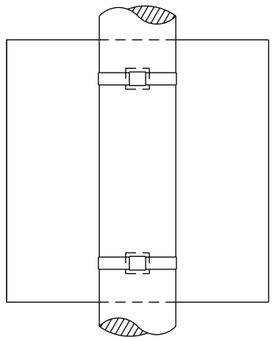

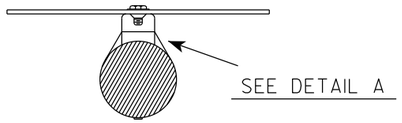

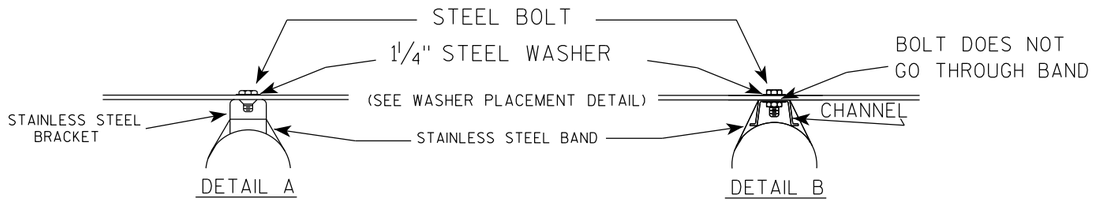

WASHER PLACEMENT

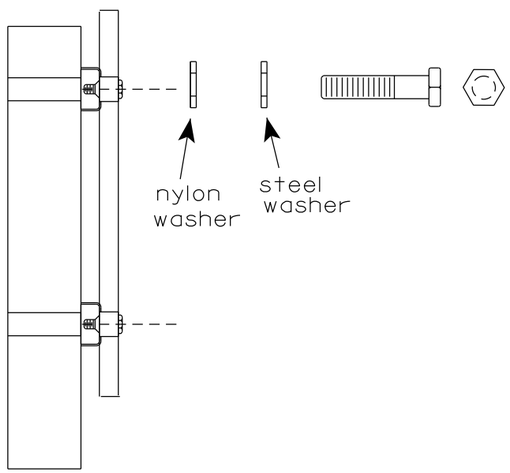

WASHERS (ALL POSTS) -
1-1/4" O.D. X 3/8" I.D. X 1/16" STEEL
1-1/4" O.D. X 3/8" I.D. X .080 NYLON
FOR ALL TYPE H SIGNS

GENERAL NOTES

1. Any sign over 3 feet in width shall use the V-Block banding method. See A5-10 standard plate.
2. Signs 3 feet or greater in height shall have three bracket bands installed. Signs less than 3 feet in height shall have two bracket bands installed.
3. Banding and assembly bracket shall be stainless steel. All bands shall be ¾" in width and 0.025" thickness.
4. ALL SIGN MOUNTING BOLTS AND WASHERS SHALL BE EITHER:
   a. Hot dip or mechanically galvanized in accordance with ASTM Designation: A 153, Class D
   b. Electro-galvanized in accordance with ASTM designation: B 633, Type III, SC 3

"J" ASSEMBLY

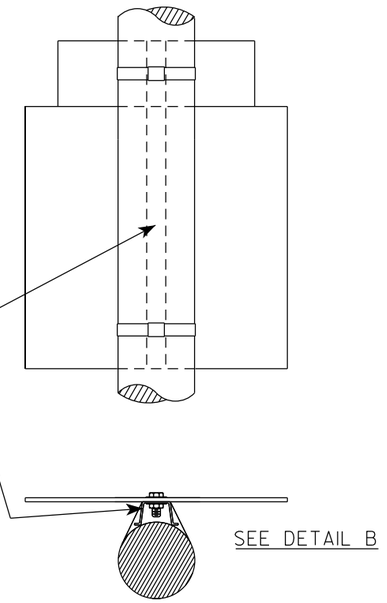

STANDARD SIGN
SIGN BANDING DETAILS

WISCONSIN DEPT OF TRANSPORTATION

APPROVED Matthew R Rauch
for State Traffic Engineer

DATE 6/10/19 PLATE NO. A5-9.4

PROJECT NO:	HWY:	COUNTY:		SHEET NO: 741	E

FILE NAME : C:\CAEfiles\Projects\tr_stdplate\A59.dgn PLOT DATE : 10-JUN 2019 4:10 PLOT BY : mscj9h PLOT NAME : PLOT SCALE : $$.....plotscale.....$$ WISDOT/CADDS SHEET 42

7

7

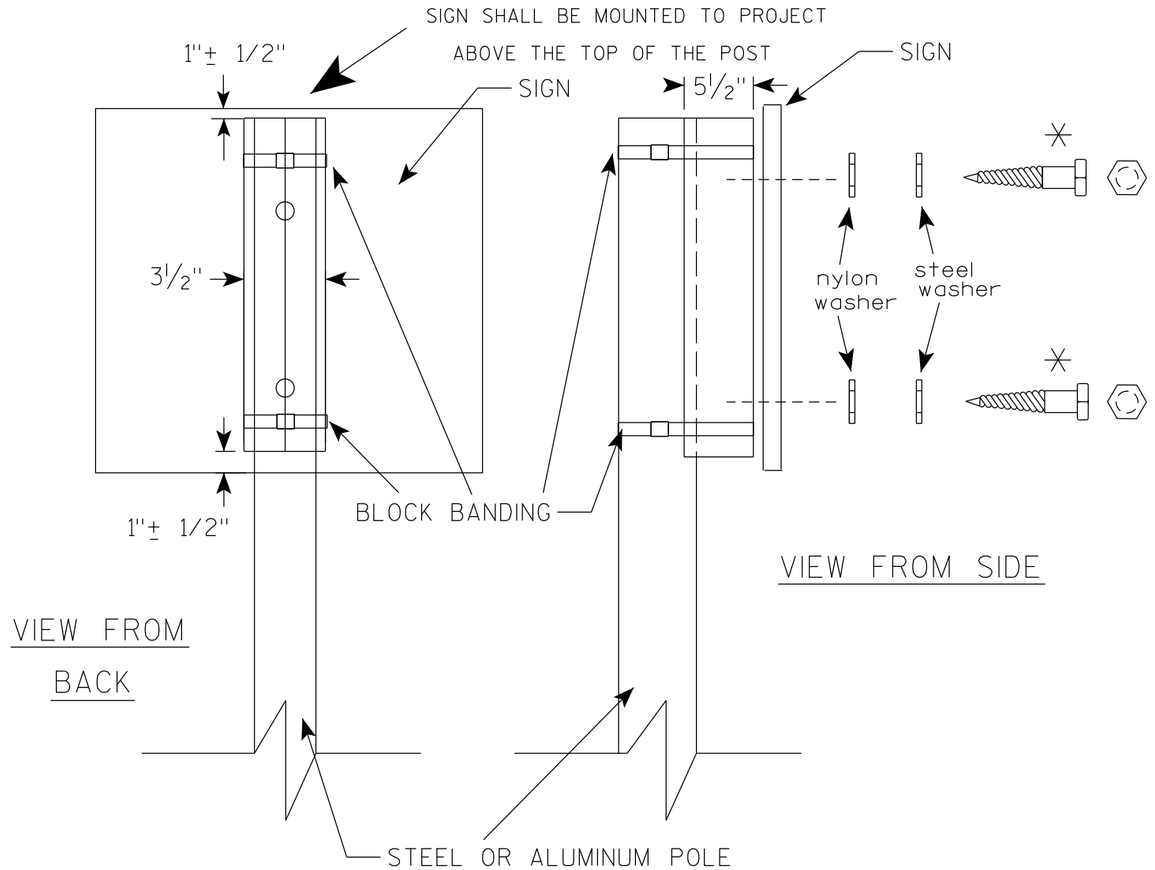

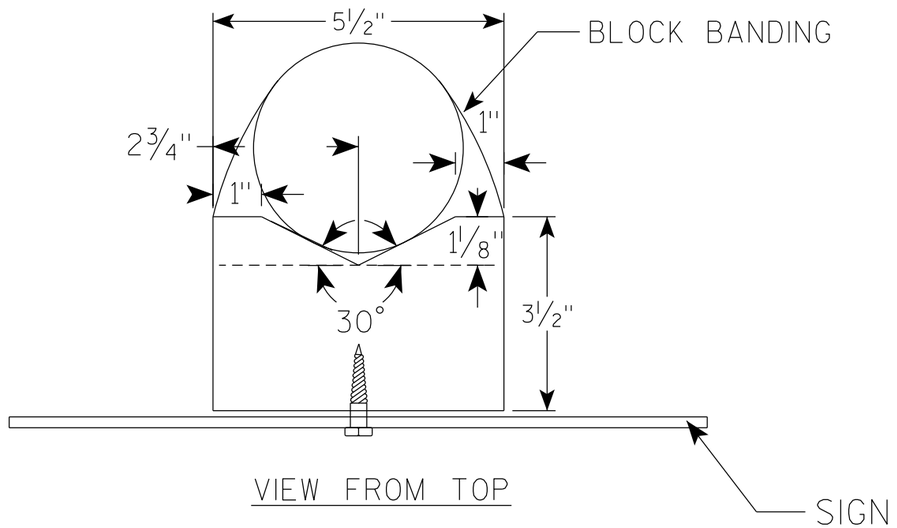

GENERAL NOTES

1. WOOD 4"X6" POST MATERIAL SHALL CONFORM TO 507.2.2 OF THE WisDOT STANDARD SPECIFICATIONS
2. BLOCK BANDING AND CLIPS SHALL BE STAINLESS STEEL, ¾" WIDTH AND 0.025" THICKNESS
3. SIGNS 3' OR GREATER IN HEIGHT SHALL UTILIZE 3 BLOCK BANDS. SIGNS UNDER 3' IN HEIGHT SHALL UTILIZE 2 BLOCK BANDS
4. ACTUAL NUMBER OF FASTENERS PER SIGN VARIES WITH THE SIGN AREA, BUT NORNALLY THERE ARE TWO. FOR SIGNS GREATER THAN 9 S.F. 3 FASTENERS SHALL BE USED.
5. ALL SIGN MOUNTING BOLTS AND WASHERS SHALL BE EITHER:
   a. Hot dip or mechanically galvanized in accordance with ASTM Designation: A 153, Class D
   b. Electro-galvanized in accordance with ASTM Designation : B 633, TYPE III, SC 3
6. ALL BOLTS SHALL HAVE HEXAGONAL HEADS.
7. STEEL WASHERS SHALL BE 1¼" O.D. X ⅜" I.D. X 1/16"
8. NYLON WASHERS SHALL BE 1¼" O.D. X ⅜" I.D. X .080 FOR TYPE H OR TYPE F FACE SIGN

✳ LAG BOLTS SHALL BE ⅜" X 2½"

BLOCK BANDING DETAIL (V-BLOCK OPTION)

WISCONSIN DEPT OF TRANSPORTATION

APPROVED Matthew R Rauch
For State Traffic Engineer

DATE 6/10/19 PLATE NO. A5-10.2

PROJECT NO:				SHEET NO: 742	E

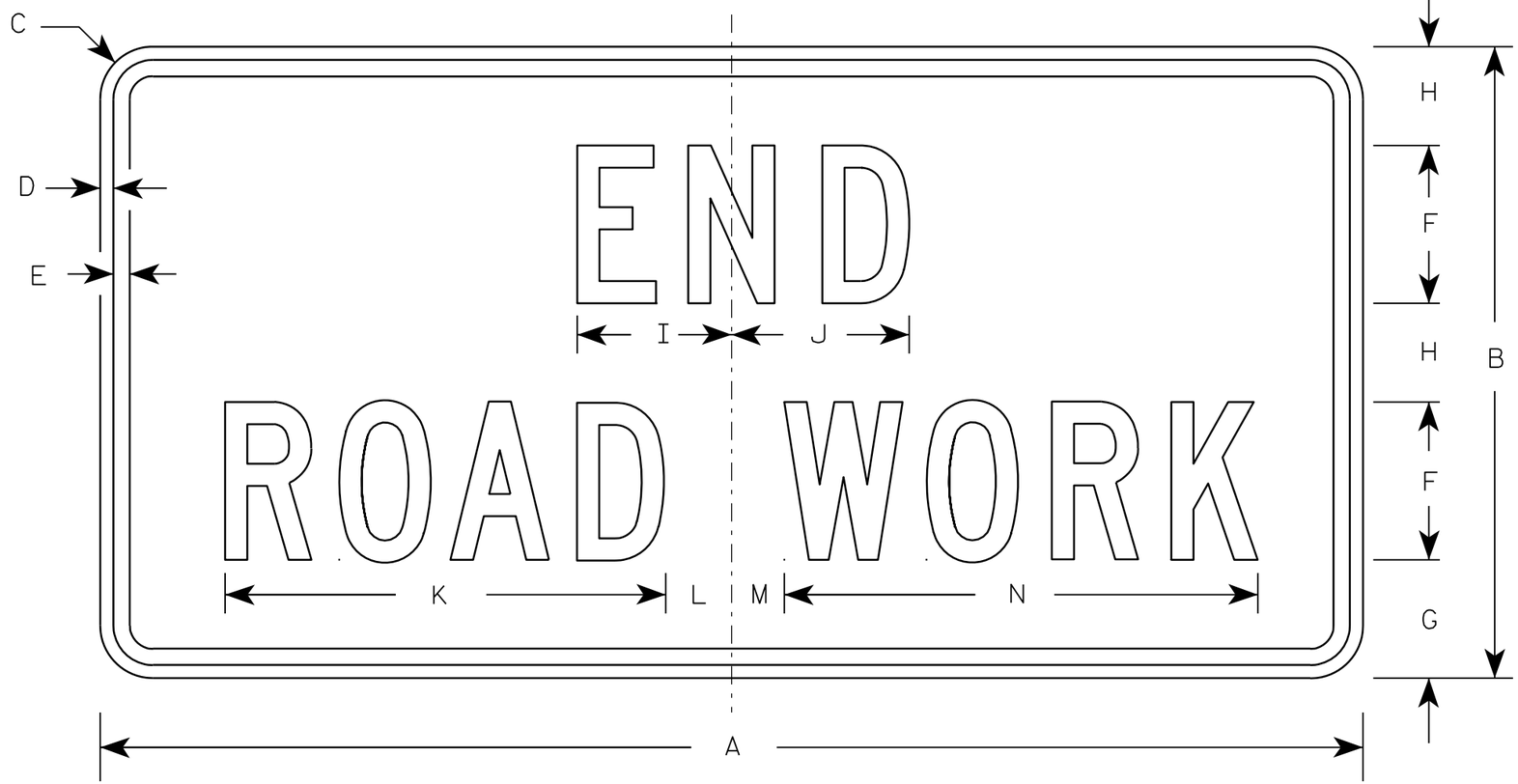

G20-2A

NOTES

1. Sign is Type II - Type F Reflective - reference WIS DOT Standard Specification for HIGHWAY and STRUCTURE CONSTRUCTION latest edition.
2. Color:
   Background - Orange
   Message - Black
3. Message Series - C
4. Corners may be square or rounded when base material is plywood but borders shall be rounded as shown. When base material is metal, the corners and borders shall be rounded.

Metric equivalent for this sign is:

SIZE	
1	900 mm X 450 mm
2	1200 mm X 600 mm
3	1200 mm X 600 mm
4	1200 mm X 600 mm
5	1200 mm X 600 mm

SIZE	A	B	C	D	E	F	G	H	I	J	K	L	M	N	O	P	Q	R	S	T	U	V	W	X	Y	Z	Area sq. ft.	Area m2
1	36	18	1 1/8	3/8	1/2	4	3 3/4	2 1/2	4 1/8	4 1/8	11 1/8	2	1	12 1/8													4.5	0.41
2	48	24	1 1/2	1/2	5/8	6	4 1/2	3 3/4	5 7/8	6 3/4	16 3/4	2 1/2	1 3/4	18 1/2													8.0	0.72
3	48	24	1 1/2	1/2	5/8	6	4 1/2	3 3/4	5 7/8	6 3/4	16 3/4	2 1/2	1 3/4	18 1/2													8.0	0.72
4	48	24	1 1/2	1/2	5/8	6	4 1/2	3 3/4	5 7/8	6 3/4	16 3/4	2 1/2	1 3/4	18 1/2													8.0	0.72
5	48	24	1 1/2	1/2	5/8	6	4 1/2	3 3/4	5 7/8	6 3/4	16 3/4	2 1/2	1 3/4	18 1/2													8.0	0.72

STANDARD SIGN
G20-2A

WISCONSIN DEPT OF TRANSPORTATION

APPROVED Matthew R Rauch
for State Traffic Engineer

DATE 9/30/09 PLATE NO. G20-2A.8

PROJECT NO:	HWY:	COUNTY:		SHEET NO: 743	E

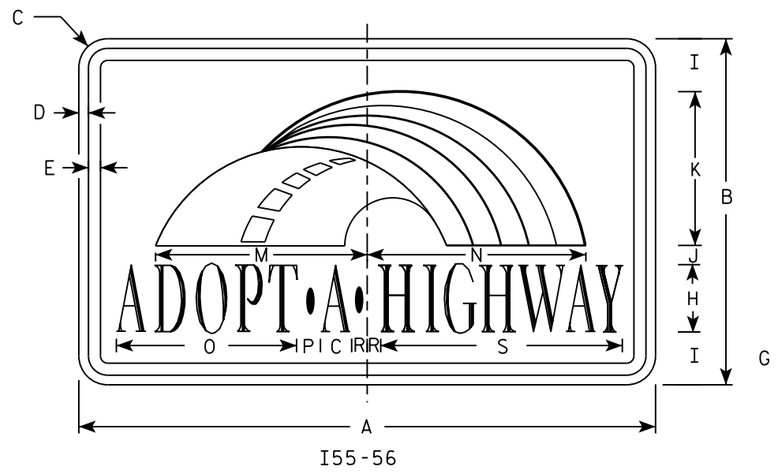

I55-56

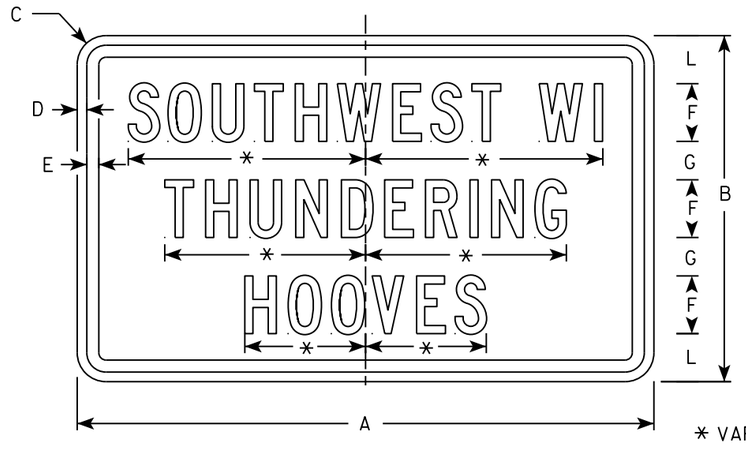

I55-56P

* VARIES

Background Colors of Symbol*

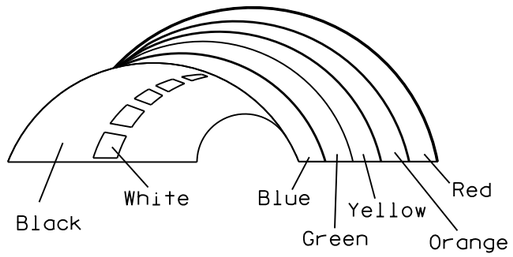

*1/4" Black Border between each color of rainbow and border of rainbow

NOTES

1. Sign is Type II - Type H Reflective
2. Color:
   Background - White
   Message - (See Note 4)
3. Message Series - (See Note 5)
4. Border - Blue
   Adopt a Highway - Red
   All other Text - Blue
5. Adopt a Highway - Dutch 8011L
   All other Text - Series C
6. Contractor shall provide and install a new post bracket in accordance with the I55-56B sign detail.

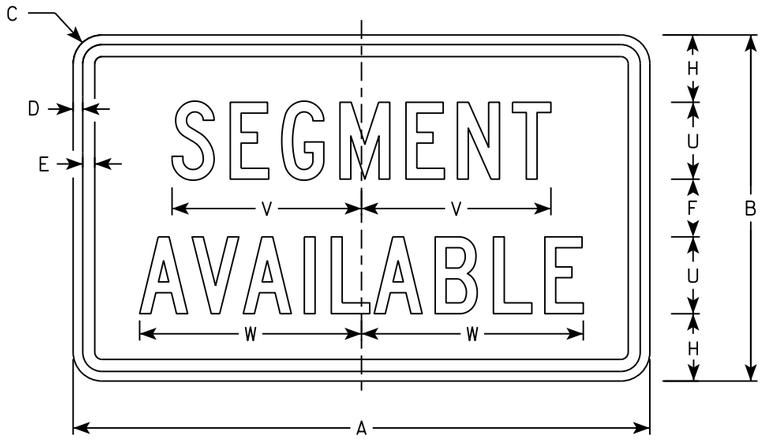

I55-56S

SIZE	A	B	C	D	E	F	G	H	I	J	K	L	M	N	O	P	Q	R	S	T	U	V	W	X	Y	Z	Area sq. ft.
1																											
2	30	18	1 1/2	1/2	5/8	3	2	3 1/2	2 3/4	1	8	2 1/2	11 1/4	11 1/8	9 3/8	1 1/4		3/4	12 5/8	7 1/2	4	9 7/8	11 1/2				3.75
3																											
4																											
5																											

STANDARD SIGN
I55-56

WISCONSIN DEPT OF TRANSPORTATION

APPROVED Matthew R Rauch
for State Traffic Engineer

DATE 2/20/18 PLATE NO. I55-56.4

PROJECT NO: | HWY: | COUNTY: | SHEET NO: 744 | E

NOTES

1. Must be capable of permanent attachment to a wood or steel channel sign post utilizing the fastening hardware specified on the A4-8 sign plate.
2. Shall be entirely primed and painted with two coats of a black powder coated enamel paint.
3. Shall be made with 12 gauge steel, and incorporate no welds, no hinged components, no threaded lock-type components, and no parts which are loose or can be separated from the main body.
4. Shall have rounded edges with at least 1/8" radii.
5. Shall not have unrounded and uncoated metal edges which can contact the back surface of the roll-up sign.
6. Top of bracket shall be mounted 2' below the bottom of the I55-56 sign.
7. Cost of bracket and fastening hardware shall be incidental to the I55-56 sign.

ISOMETRIC VIEW

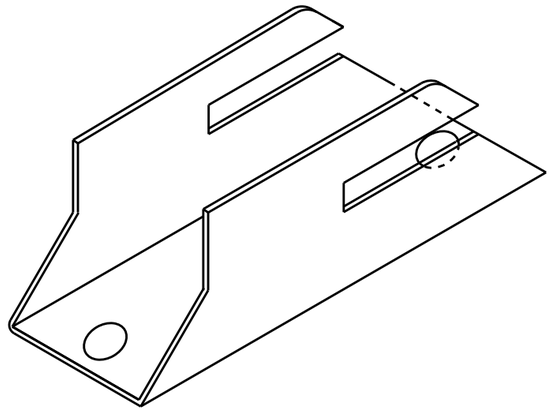

TOP VIEW

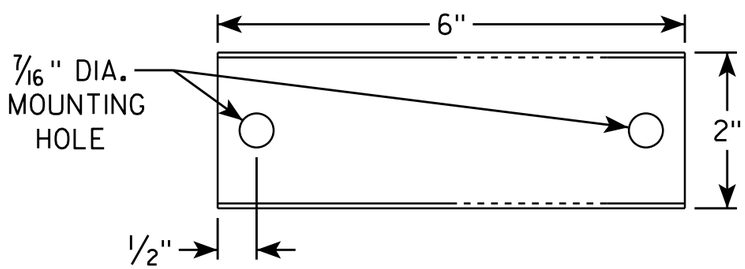

SIDE VIEW

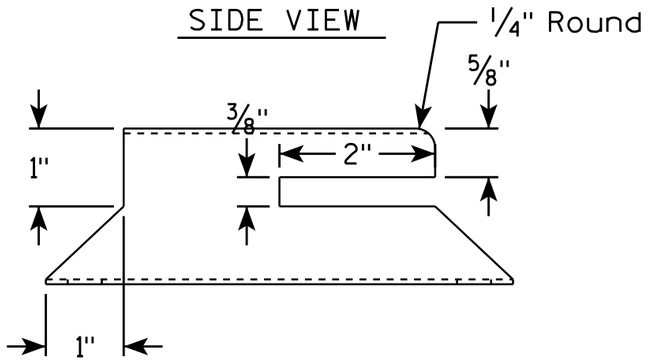

END VIEW

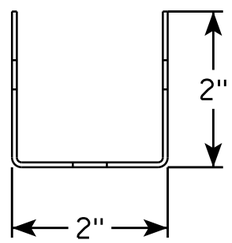

SIDE VIEW

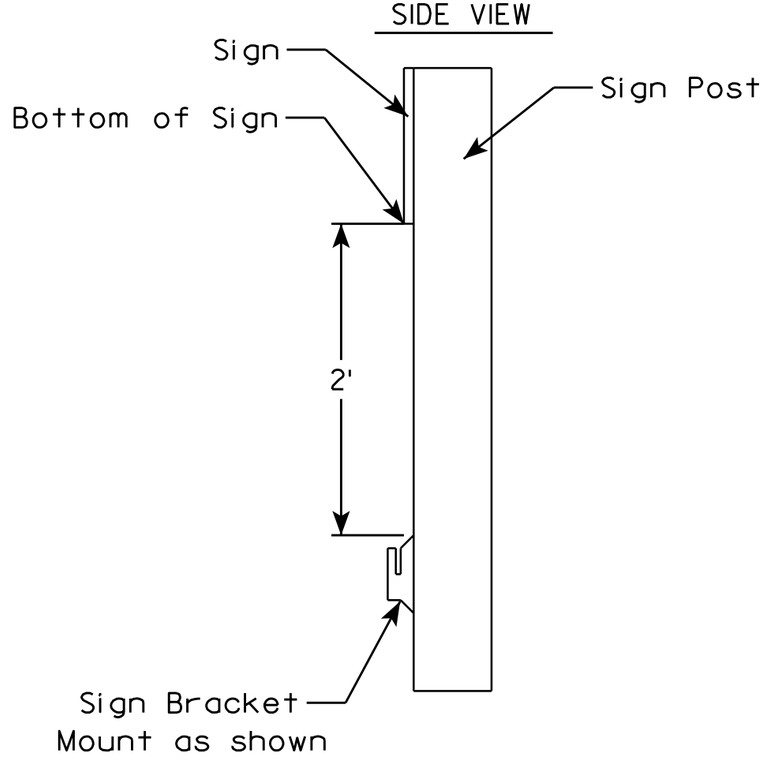

ROLLUP SIGN BRACKET
I55-56B

WISCONSIN DEPT OF TRANSPORTATION

APPROVED Matthew R Rauch
for State Traffic Engineer

DATE 4/26/16 PLATE I55-56B.2

PROJECT NO:	HWY:	COUNTY:		SHEET NO:	E

FILE NAME : C:\CAEfiles\Projects\tr_stdplate\I5556B.DGN PLOT DATE : 26-APR-2016 17:29 PLOT BY : mscj9h PLOT NAME : PLOT SCALE : 1.945842:1.000000

WISDOT/CADDS SHEET 42

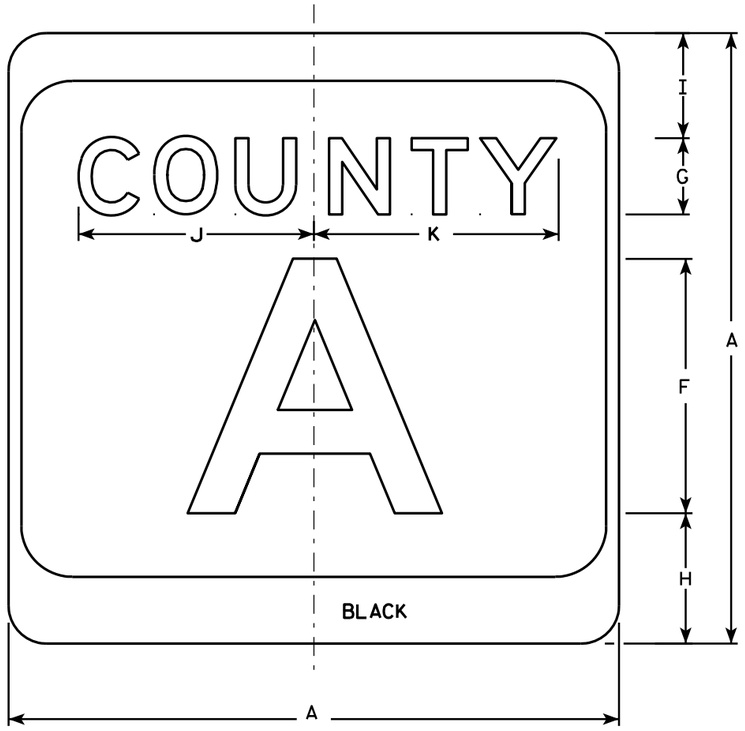

M1-5A

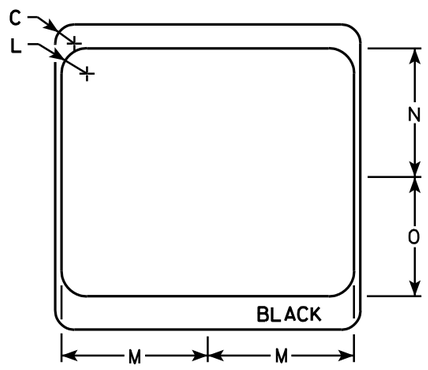

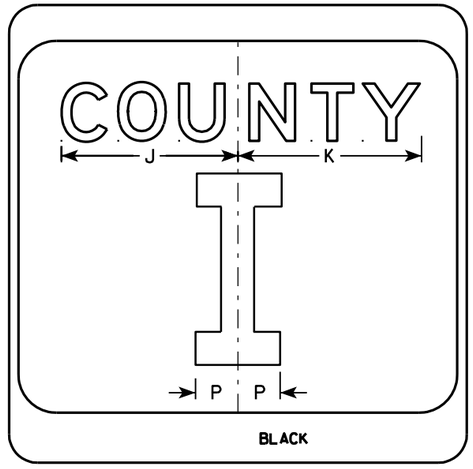

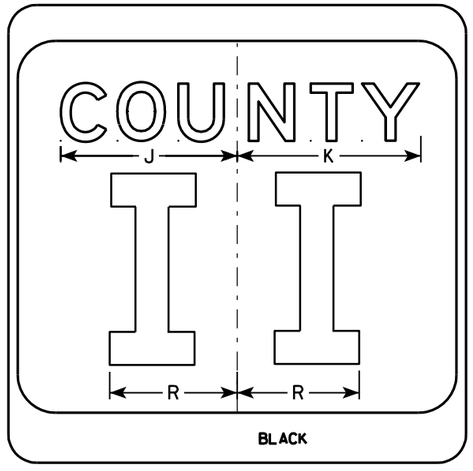

NOTES

1. Sign is Type II - see Note 7 - reference WIS DOT Standard Specification for HIGHWAY and STRUCTURE CONSTRUCTION latest edition.
2. Color:
   Background - White & Black - See Note 7
   Message - Black
3. Message Series - see Note 5
4. Corners may be square or rounded when base material is plywood but borders shall be rounded as shown. When base material is metal, the corners and borders shall be rounded.
5. Message Series E for 1 letter.
   Message Series D for 2 letters unless message is too big then Series C.
   Message Series C for 3 letters unless message is too big then Series B.
6. Substitute appropriate letters & optically center to achieve proper balance.
7. Permanent Signs
   Background - Type H Reflective
   Detour or temporary Signs
   Background - Reflective

SIZE	A	B	C	D	E	F	G	H	I	J	K	L	M	N	O	P	Q	R	S	T	U	V	W	X	Y	Z	Area sq. ft.
1																											
2	24		1 1/2			10	3	5 1/8	4 1/8	9 1/4	9 5/8	2	11 1/2	10 1/8	9 3/8	2 1/4		6 5/8									4.0
3	36		2 1/4			16	4	7 5/8	5 5/8	12 1/4	12 7/8	3	17 1/8	15 1/4	14	3 3/8		10									9.0
4	36		2 1/4			16	4	7 5/8	5 5/8	12 1/4	12 7/8	3	17 1/8	15 1/4	14	3 3/8		10									9.0
5	36		2 1/4			16	4	7 5/8	5 5/8	12 1/4	12 7/8	3	17 1/8	15 1/4	14	3 3/8		10									9.0

CTH MARKER
M1-5A FOR ASSEMBLIES

WISCONSIN DEPT OF TRANSPORTATION

APPROVED Matthew R Rauch
for State Traffic Engineer

DATE 9/27/11 PLATE NO. M1-5A.8

PROJECT NO: | HWY: | COUNTY: | SHEET NO: 746 | E

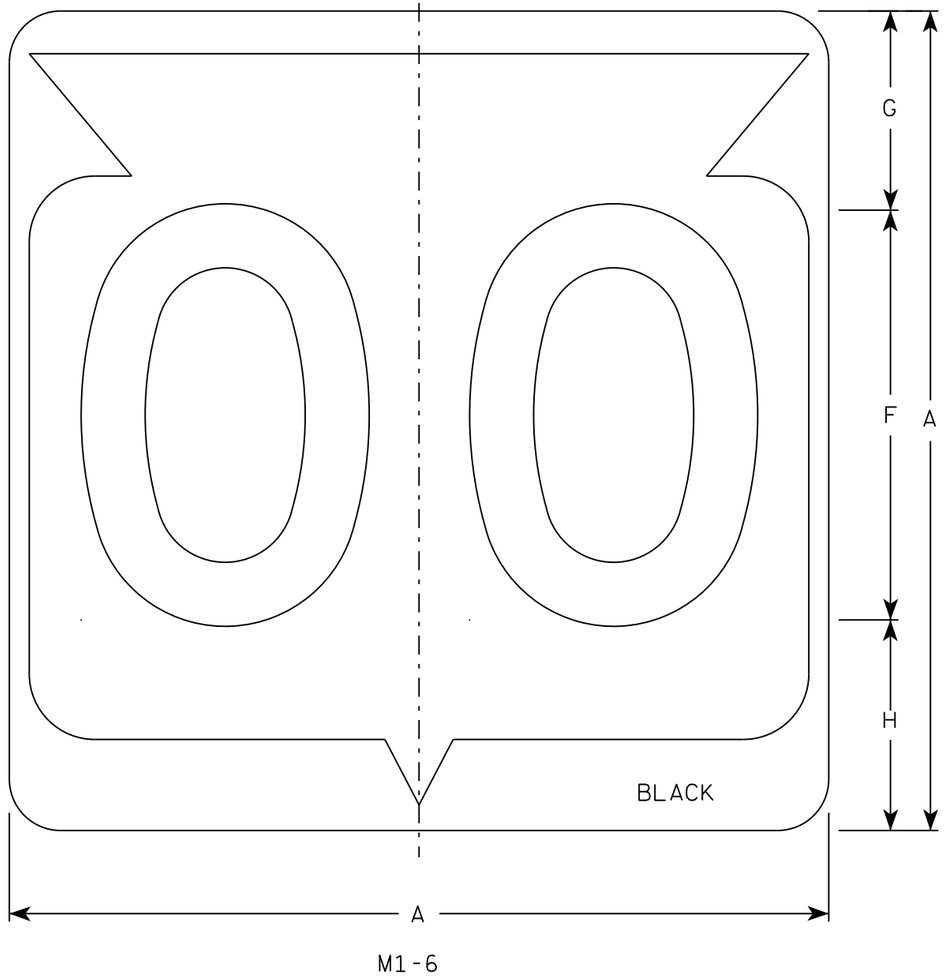

M1-6

NOTES

1. Sign is Type II - Type H Reflective
2. Color:
   Background - White
   Message - Black
3. Message Series - D except 3 number signs Series C
4. Corners may be square or rounded when base material is plywood but borders shall be rounded as shown. When base material is metal, the corners and borders shall be rounded.

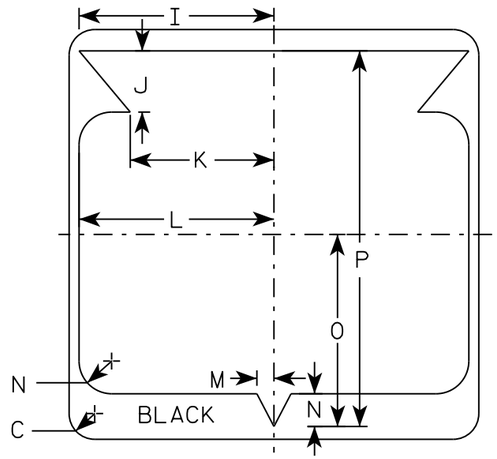

SIZE	A	B	C	D	E	F	G	H	I	J	K	L	M	N	O	P	Q	R	S	T	U	V	W	X	Y	Z	Area sq. ft.
1																											
2	24		1 1/2			12	5 1/2	6 1/2	10 1/4	2 1/2	8 7/8	11 1/2	1	1 7/8	11 1/4	21 7/8											4.0
3	36		2 1/4			18	8 3/4	9 1/4	15 3/8	5 3/8	12 5/8	17 1/8	1 1/2	2 7/8	16 7/8	33											9.0
4	36		2 1/4			18	8 3/4	9 1/4	15 3/8	5 3/8	12 5/8	17 1/8	1 1/2	2 7/8	16 7/8	33											9.0
5	36		2 1/4			18	8 3/4	9 1/4	15 3/8	5 3/8	12 5/8	17 1/8	1 1/2	2 7/8	16 7/8	33											9.0

STATE ROUTE MARKER M1-6 FOR ASSEMBLIES

WISCONSIN DEPT OF TRANSPORTATION

APPROVED Matthew R Rauch
for State Traffic Engineer

DATE 3/16/18 PLATE NO. M1-6.10

PROJECT NO:	HWY:	COUNTY:		SHEET NO: 747	E

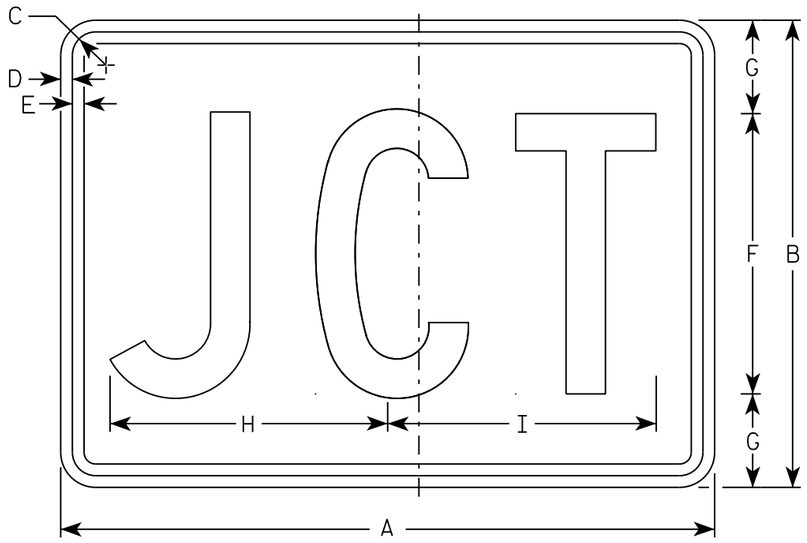

M2-1
MM2-1
MP2-1

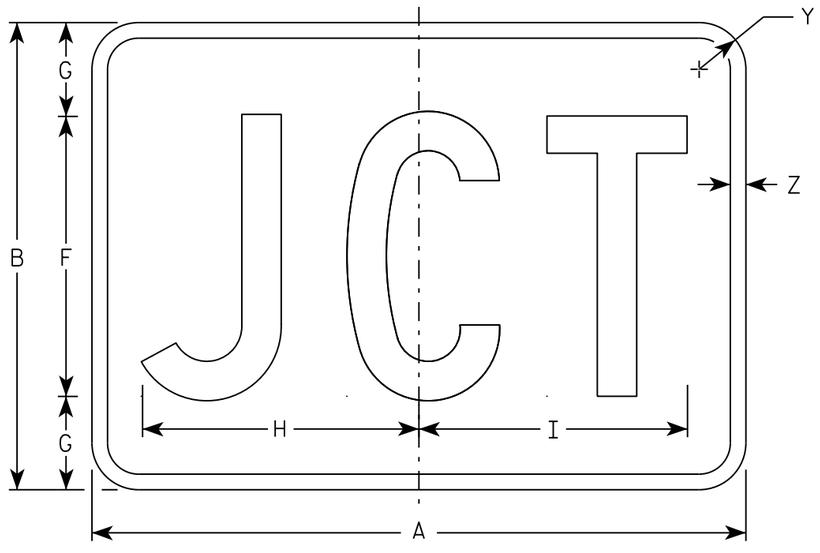

MB2-1
MK2-1
MN2-1
MR2-1

NOTES

1. Sign is Type II - Type H
2. Color:
   Background - See note 5
   Message - See note 5
3. Message Series - C
4. Corners may be square or rounded when base material is plywood but borders shall be rounded as shown. When base material is metal, the corners and borders shall be rounded.
5. M2-1 Background - White
   Message - Black
   MB2-1 Background - Blue
   Message - White
   MK2-1 Background - Green
   Message - White
   MM2-1 Background - White
   Message - Green
   MN2-1 Background - Brown
   Message - White
   MP2-1 Background - White
   Message - Blue
   MR2-1 Background - Brown
   Message - Yellow

SIZE	A	B	C	D	E	F	G	H	I	J	K	L	M	N	O	P	Q	R	S	T	U	V	W	X	Y	Z	Area sq. ft.
1																											
2	21	15	1 1/8	3/8	3/8	9	3	8 7/8	8 5/8																1 1/2	1/2	2.20
3	30	21	1 1/8	3/8	3/8	13	4	12 7/8	12 3/8																1 1/2	1/2	4.40
4	30	21	1 1/8	3/8	3/8	13	4	12 7/8	12 3/8																1 1/2	1/2	4.40
5	30	21	1 1/8	3/8	3/8	13	4	12 7/8	12 3/8																1 1/2	1/2	4.40

STANDARD SIGN
M2-1

WISCONSIN DEPT OF TRANSPORTATION

APPROVED Matthew R Rauch
for State Traffic Engineer

DATE 10/15/15 PLATE 748 12-1.12

PROJECT NO:	HWY:	COUNTY:		SHEET NO:	E

FILE NAME : C:\CAEfiles\Projects\tr_stdplate\M21.DGN PLOT DATE : 01-DEC-2015 17:54 PLOT BY : $$ plotuser $$ PLOT NAME : PLOT SCALE : 4.864603:1.000000

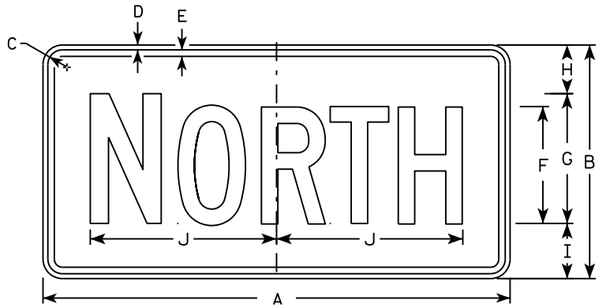

M3-1
MM3-1
MP3-1

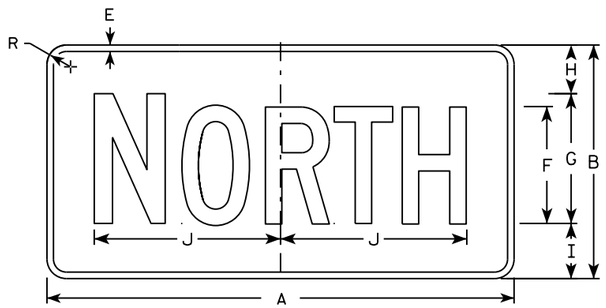

MB3-1
MK3-1
MN3-1



M3-2
MM3-2
MP3-2



MB3-2
MK3-2
MN3-2

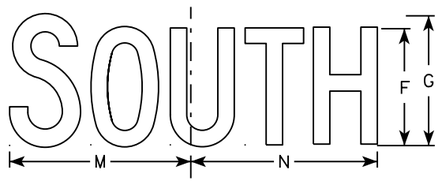

M3-3
MM3-3
MP3-3

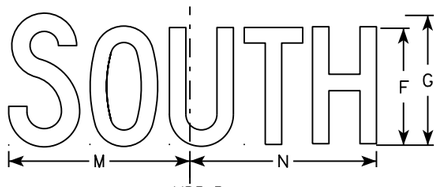

MB3-3
MK3-3
MN3-3

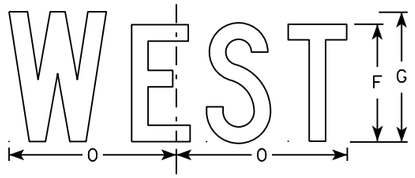

M3-4
MM3-4
MP3-4

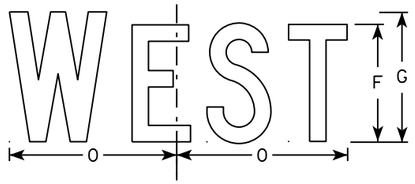

MB3-4
MK3-4
MN3-4

NOTES

1. All Signs Type II - Type H
2. Color:
   Background - See note 5
   Message - See note 5
3. Message Series - C
4. Corners may be square or rounded when base material is plywood but borders shall be rounded as shown. When base material is metal, the corners and borders shall be rounded.
5. M3-1 thru M3-4 Background - White
   Message - Black
   MB3-1 thru MB3-4 Background - Blue
   Message - White
   MK3-1 thru MK3-4 Background - Green
   Message - White
   MM3-1 thru MM3-4 Background - White
   Message - Green
   MN3-1 thru MN3-4 Background - Brown
   Message - White
   MP3-1 thru MP3-4 Background - White
   Message - Blue
6. Note the first letter of each direction is larger than the remainder of the message.

SIZE	A	B	C	D	E	F	G	H	I	J	K	L	M	N	O	P	Q	R	S	T	U	V	W	X	Y	Z	Area sq. ft.
1																											
2	24	12	1 1/8	3/8	3/8	6	7	2 1/4	2 3/4	10 1/4	7 7/8	8 3/8	10 1/4	9 3/4	8 3/4			1 1/2									2.00
3	36	18	1 1/8	3/8	1/2	9	10	3 3/4	4 1/4	14 3/8	12	12 1/8	14	14 1/8	13			1 1/2									4.5
4	36	18	1 1/8	3/8	1/2	9	10	3 3/4	4 1/4	14 3/8	12	12 1/8	14	14 1/8	13			1 1/2									4.5
5	36	18	1 1/8	3/8	1/2	9	10	3 3/4	4 1/4	14 3/8	12	12 1/8	14	14 1/8	13			1 1/2									4.5

STANDARD SIGNS
M3-1 thur M3-4
SERIES

WISCONSIN DEPT OF TRANSPORTATION

APPROVED Matthew P Rauch for State Traffic Engineer

DATE 10/15/15 PLATE NO M3-1.14

PROJECT NO: | HWY: | COUNTY: | SHEET NO: E

FILE NAME : C:\CAEfiles\Projects\tr_stdplate\M31.DGN PLOT DATE : 01-DEC-2015 17:54 PLOT BY : $$ plotuser $$ PLOT NAME : PLOT SCALE : 11.675051:1.000000

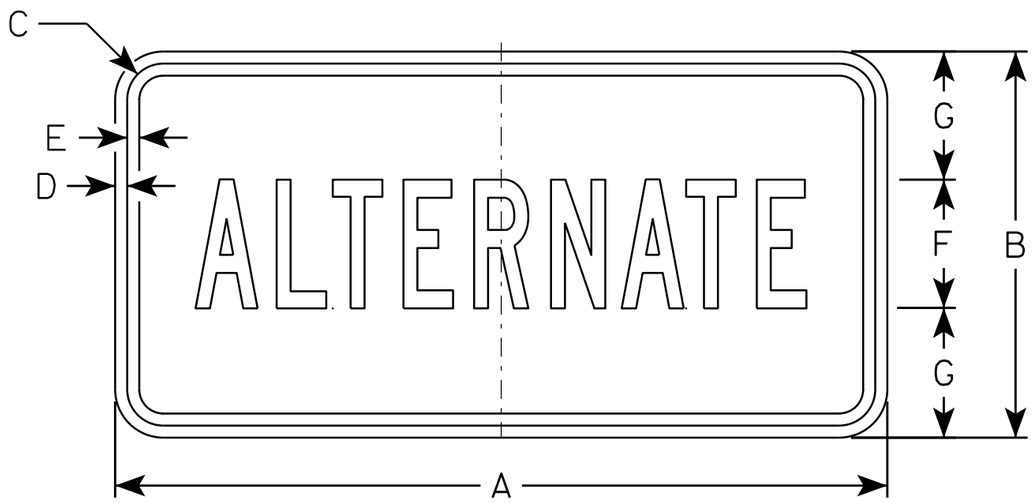

M4-1
M04-1

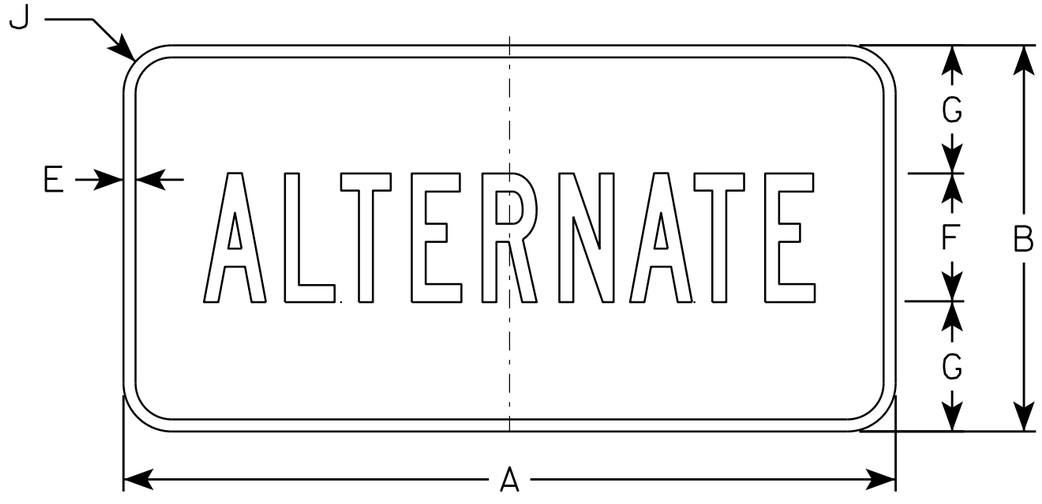

MB4-1

NOTES

1. Sign is Type II - Type H except as Shown
2. Color:
   Background - See Note 5
   Message - See note 5
3. Message Series - B
4. Corners may be square or rounded when base material is plywood but borders shall be rounded as shown. When base material is metal, the corners and borders shall be rounded.
5. M4-1 Background - White
   Message - Black

   MB4-1 Background - Blue
   Message - White

   M04-1 Background - Orange - Type F
   Message - Black

SIZE	A	B	C	D	E	F	G	H	I	J	K	L	M	N	O	P	Q	R	S	T	U	V	W	X	Y	Z	Area sq. ft.
1																											
2	24	12	1 1/8	3/8	3/8	4	4	9 3/4	9 1/2	1 1/2																	2.00
3	36	18	1 1/8	3/8	1/2	7	5 1/2	16 3/8	16 1/2	1 1/2																	4.5
4	36	18	1 1/8	3/8	1/2	7	5 1/2	16 3/8	16 1/2	1 1/2																	4.5
5	36	18	1 1/8	3/8	1/2	7	5 1/2	16 3/8	16 1/2	1 1/2																	4.5

STANDARD SIGN
M4-1

WISCONSIN DEPT OF TRANSPORTATION

APPROVED Matthew R Rauch
for State Traffic Engineer

DATE 6/30/14 PLATE 750 '14-1.8

PROJECT NO:	HWY:	COUNTY:		SHEET NO:	E

FILE NAME : C:\CAEFiles\Projects\tr_stdplate\M41.DGN PLOT DATE : 30-JUN-2014 15:38 PLOT BY : mscsja PLOT NAME : PLOT SCALE : 4.708937:1.000000

WISDOT/CADDS SHEET 42

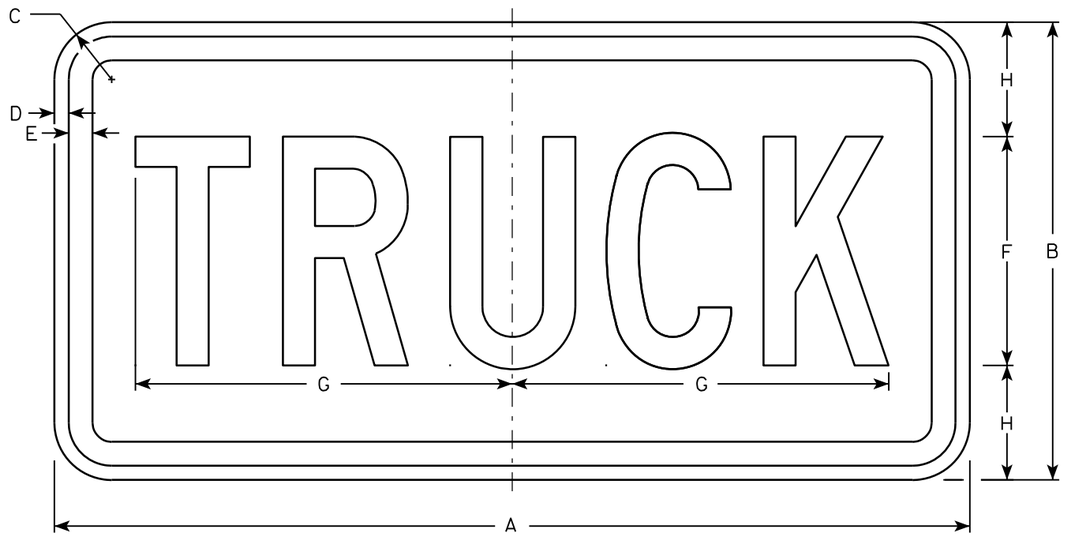

M4-4

NOTES

1. Sign is Type II - See Note 5 - reference WIS DOT Standard Specification for HIGHWAY and STRUCTURE CONSTRUCTION latest edition.
2. Color:
   Background - White - See Note 5
   Message - Black
3. Message Series - C
4. Corners may be square or rounded when base material is plywood but borders shall be rounded as shown. When base material is metal, the corners and borders shall be rounded.
5. Permanent Signs
   Background - Type H Reflective
   Temporary or other temporary Signs
   Background - Reflective

SIZE	A	B	C	D	E	F	G	H	I	J	K	L	M	N	O	P	Q	R	S	T	U	V	W	X	Y	Z	Area sq. ft.
1																											
2	24	12	1 1/2	3/8	3/8	6	9 7/8	3																			2.0
3	36	18	1 1/2	3/8	1/2	9	15 5/8	4 1/2																			4.5
4																											
5																											

STANDARD SIGN
M4-4

WISCONSIN DEPT OF TRANSPORTATION

APPROVED Matthew R Rauch
for State Traffic Engineer

DATE 11/10/10 PLATE NO. M4-4.3

PROJECT NO: | HWY: | COUNTY: | SHEET NO: 751 | E

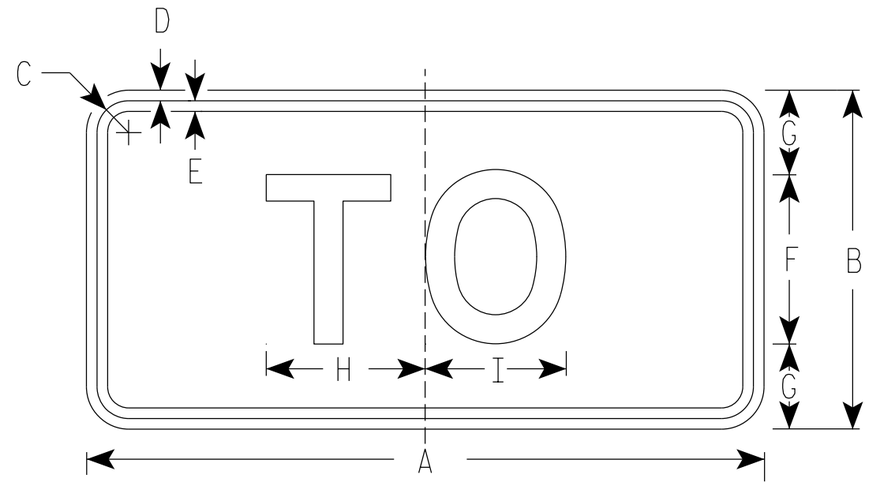

M4-5
MM4-5
MP4-5
M04-5

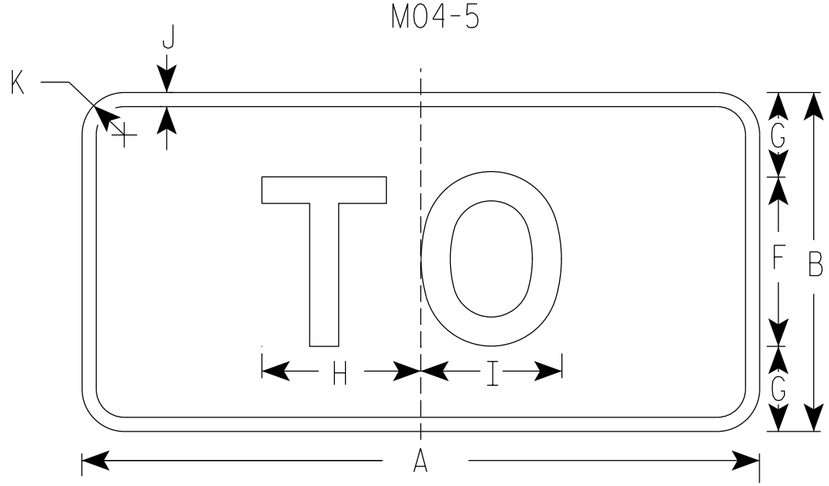

MB4-5
MK4-5
MN4-5

NOTES

1. Sign is Type II - Type H Reflective
2. Color:
   Background - See note 5
   Message - See note 5
3. Message Series - E
4. Corners may be square or rounded when base material is plywood but borders shall be rounded as shown. When base material is metal, the corners and borders shall be rounded.
5. M4-5 Background - White
   Message - Black

   MB4-5 Background - Blue
   Message - White

   MK4-5 Background - Green
   Message - White

   MM4-5 Background - White
   Message - Green

   MN4-5 Background - Brown
   Message - White

   MP4-5 Background - White
   Message - Blue

   M04-5 Background - Orange Type F Reflective
   Message - Black

SIZE	A	B	C	D	E	F	G	H	I	J	K	L	M	N	O	P	Q	R	S	T	U	V	W	X	Y	Z	Area sq. ft.
1																											
2	24	12	1 1/8	3/8	3/8	6	3	5 3/8	5 1/4	1/2	1 1/2																2.00
3	36	18	1 3/8	3/8	1/2	9	4 1/2	8 1/4	8 3/8	1/2	1 1/2																4.5
4	36	18	1 3/8	3/8	1/2	9	4 1/2	8 1/4	8 3/8	1/2	1 1/2																4.5
5	36	18	1 3/8	3/8	1/2	9	4 1/2	8 1/4	8 3/8	1/2	1 1/2																4.5

STANDARD SIGN
M4-5

WISCONSIN DEPT OF TRANSPORTATION

APPROVED Matthew R Rauch
for State Traffic Engineer

DATE 03/7/19 PLATE NO. M4-5.9

PROJECT NO: | HWY: | COUNTY: | SHEET NO: 752 | E

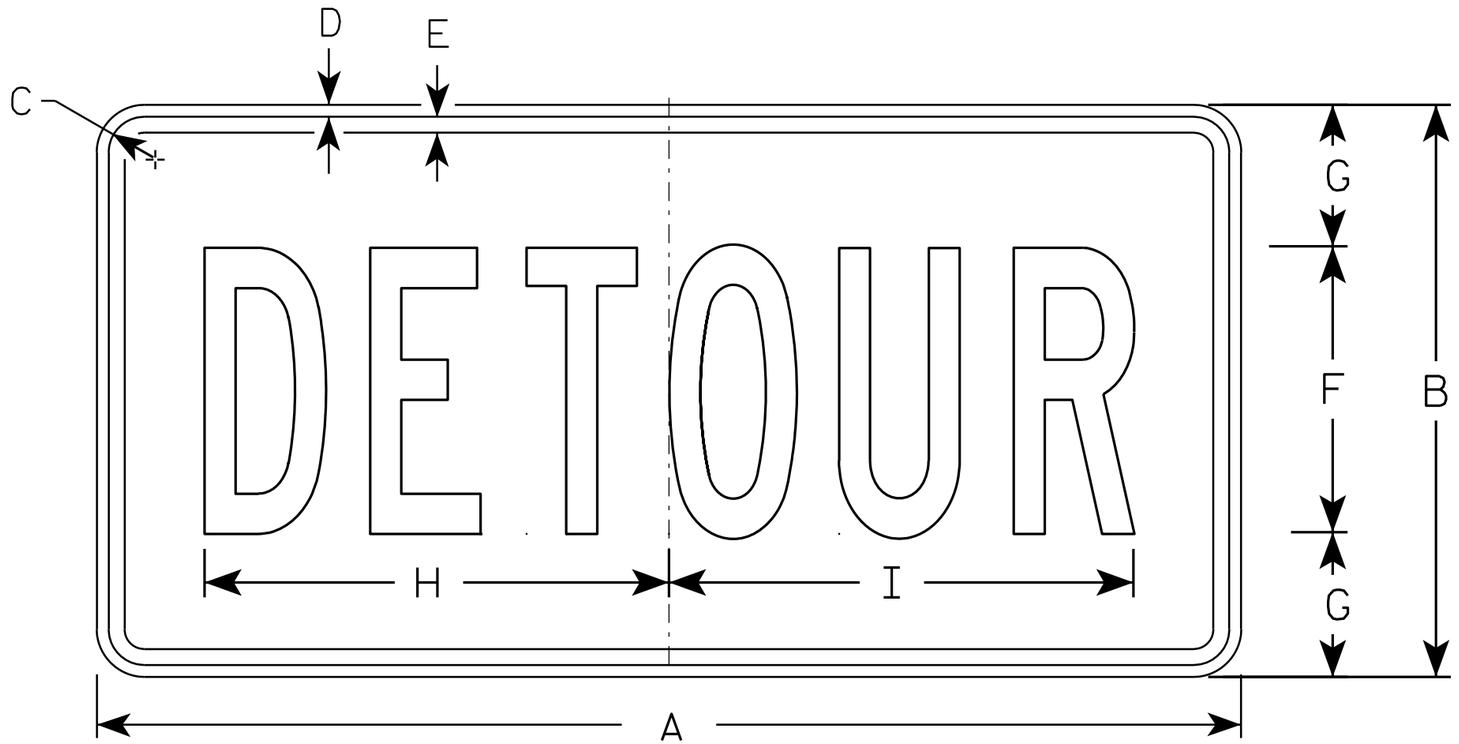

M4-8

NOTES

1. Sign is Type II - Type F Reflective - reference WIS DOT Standard Specification for HIGHWAY and STRUCTURE CONSTRUCTION latest edition.
2. Color:
   Background - Orange
   Message - Black
3. Message Series - B
4. Corners may be square or rounded when base material is plywood but borders shall be rounded as shown. When base material is metal, the corners and borders shall be rounded.

SIZE	A	B	C	D	E	F	G	H	I	J	K	L	M	N	O	P	Q	R	S	T	U	V	W	X	Y	Z	Area sq. ft.
1																											
2	24	12	1 1/8	3/8	3/8	6	3	10	10 1/4																		2.0
3	36	18	1 1/8	3/8	1/2	9	4 1/2	14 5/8	14 1/2																		4.5
4																											
5																											

STANDARD SIGN
M4-8

WISCONSIN DEPT OF TRANSPORTATION

APPROVED Matthew R Rauch
for State Traffic Engineer

DATE 11/10/10 PLATE NO. M4-8.2

PROJECT NO:	HWY:	COUNTY:		SHEET NO: 753	E

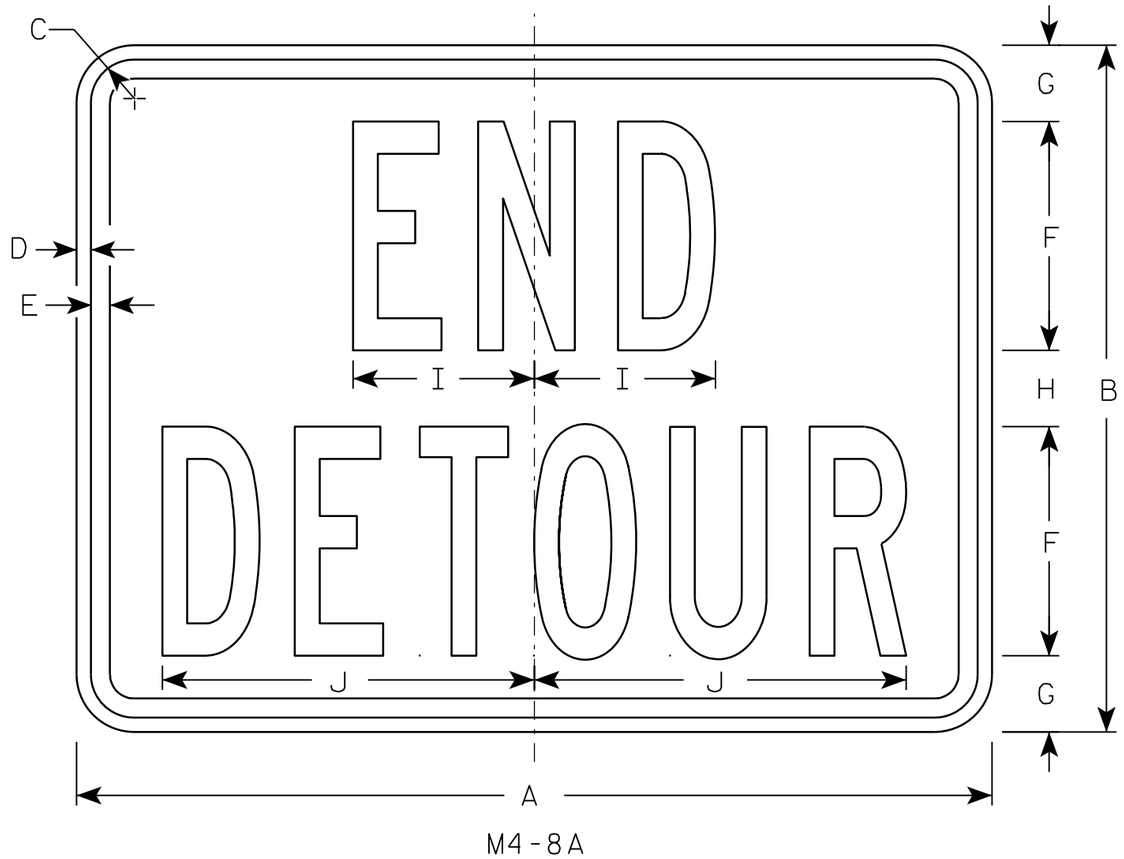

M4-8A

NOTES

1. Sign is Type II - Type F Reflective - reference WIS DOT Standard Specification for HIGHWAY and STRUCTURE CONSTRUCTION latest edition.
2. Color:
   Background - Orange
   Message - Black
3. Message Series - B
4. Corners may be square or rounded when base material is plywood but borders shall be rounded as shown. When base material is metal, the corners and borders shall be rounded.

SIZE	A	B	C	D	E	F	G	H	I	J	K	L	M	N	O	P	Q	R	S	T	U	V	W	X	Y	Z	Area sq. ft.
1																											
2	24	18	1 1/8	3/8	1/2	6	2	2	4 3/4	9 3/4																	3.0
3	30	24	1 1/8	3/8	1/2	8	2 1/2	3	6 3/4	13																	5.0
4																											
5																											

STANDARD SIGN
M4-8A

WISCONSIN DEPT OF TRANSPORTATION

APPROVED Matthew R Rauch
for State Traffic Engineer

DATE 3/9/11 PLATE NO. M4-8A.2

PROJECT NO:	HWY:	COUNTY:		SHEET NO: 754	E

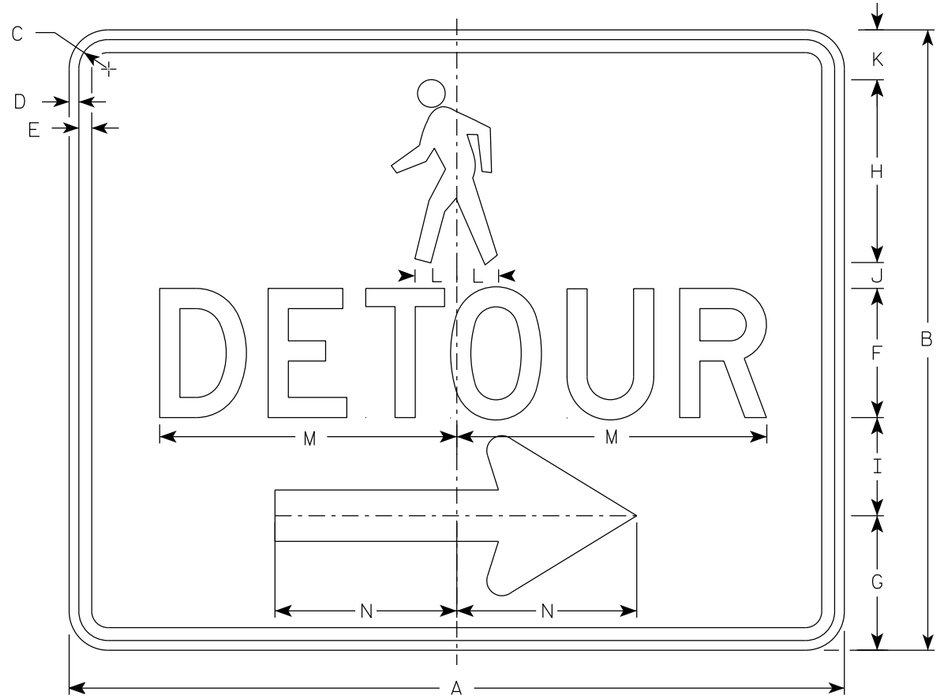

M4-9BR

NOTES

1. Sign is Type II-Type F Reflective
2. Color:
   Background - Orange
   Message - Black
3. Message Series - D
4. Corners may be square or rounded when base material is plywood but borders shall be rounded as shown. When base material is metal, the corners and borders shall be rounded.
5. M4-9BL is the same as M4-9BR except the arrow is reversed.

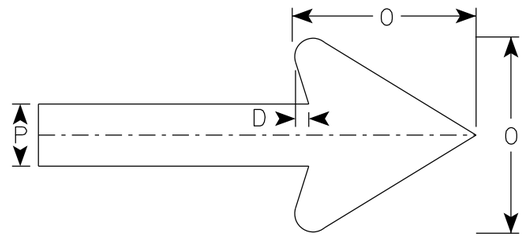

Arrow Detail

SIZE	A	B	C	D	E	F	G	H	I	J	K	L	M	N	O	P	Q	R	S	T	U	V	W	X	Y	Z	Area sq. ft.
1																											
2	30	24	1 1/8	3/8	1/2	5	5 1/4	7 1/8	3 3/4	1	1 1/8	1 5/8	11 3/4	7	6	2											5.00
3																											
4																											
5																											

STANDARD SIGN
M4-9B L&R

WISCONSIN DEPT OF TRANSPORTATION

APPROVED Matthew R Rauch
For State Traffic Engineer

DATE 7/1/19 PLATE NO. M4-9B.2

PROJECT NO: | HWY: | COUNTY: | SHEET NO: 755 | E

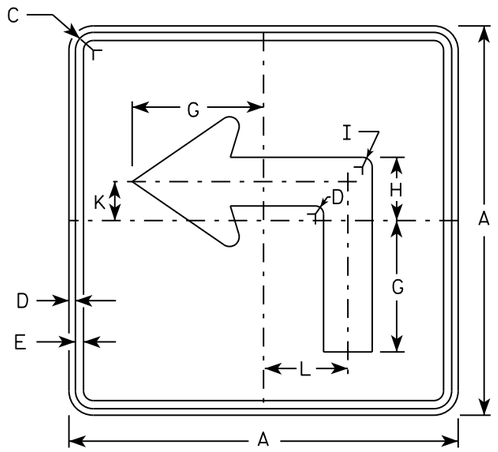

M5-1L
MM5-1L
MO5-1L
MP5-1L

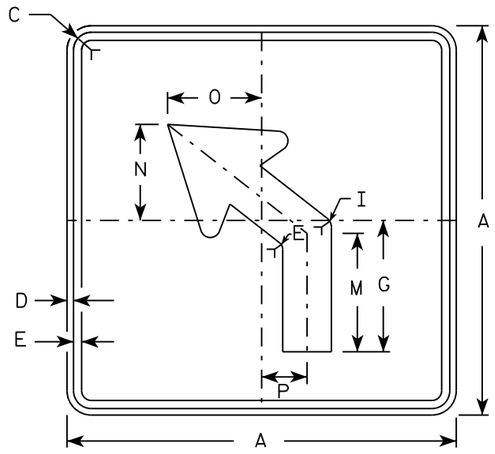

M5-2L
MM5-2L
MO5-2L
MP5-2L

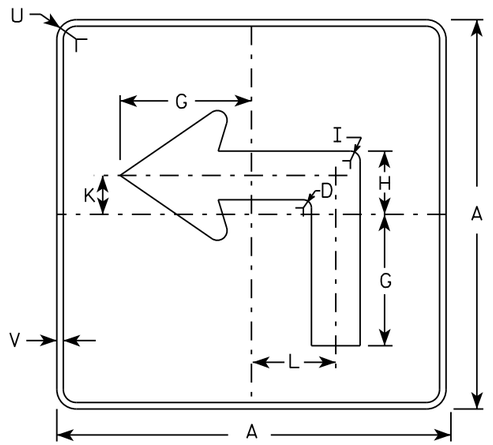

MB5-1L
MK5-1L
MN5-1L
MR5-1L

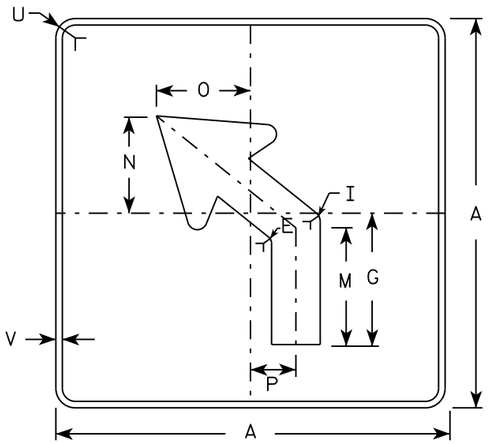

MB5-2L
MK5-2L
MN5-2L
MR5-2L

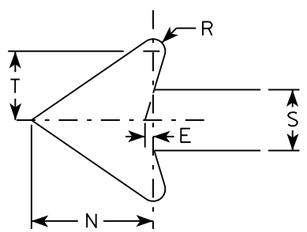

NOTES

1. Signs are Type II - Type H reflective except as shown
2. Color:
   Background - See note 4
   Message - See note 4
3. Corners may be square or rounded when base material is plywood but borders shall be rounded as shown. When base material is metal, the corners and borders shall be rounded.
4. M5-1 and M5-2 Background - White
   Message - Black
   MB5-1 and MB5-2 Background - Blue
   Message - White
   MK5-1 and MK5-2 Background - Green
   Message - White
   MM5-1 and MM5-2 Background - White
   Message - Green
   MN5-1 and MN5-2 Background - Brown
   Message - White
   MO5-1 and MO5-2 Background - Orange - Type F Reflective
   Message - Black
   MP5-1 and MP5-2 Background - White - Type H Reflective
   Message - Blue
   MR5-1 and MR5-2 Background - Brown
   Message - Yellow
5. M5-1R same as M5-1L except arrow points right.
6. M5-2R same as M5-2L except arrow tilts right.

SIZE	A	B	C	D	E	F	G	H	I	J	K	L	M	N	O	P	Q	R	S	T	U	V	W	X	Y	Z	Area sq. ft.
1																											
2	21		1 1/8	3/8	3/8		7	3 3/8	5/8		2 1/8	4 1/2	6 3/8	5 1/4	5	2 1/2		1/2	2 5/8	3	1 1/2	1/2					3.06
3	30		1 3/8	1/2	5/8		10 1/8	4 7/8	7/8		3	6 1/2	9 1/8	7 1/2	7 1/4	3 1/2		3/4	3 3/4	4 1/4	1 7/8	1/2					6.25
4	30		1 3/8	1/2	5/8		10 1/8	4 7/8	7/8		3	6 1/2	9 1/8	7 1/2	7 1/4	3 1/2		3/4	3 3/4	4 1/4	1 7/8	1/2					6.25
5	30		1 3/8	1/2	5/8		10 1/8	4 7/8	7/8		3	6 1/2	9 1/8	7 1/2	7 1/4	3 1/2		3/4	3 3/4	4 1/4	1 7/8	1/2					6.25

STANDARD SIGN
M5-1 & M5-2

WISCONSIN DEPT OF TRANSPORTATION

APPROVED Matthew R Rauch
for State Traffic Engineer

DATE 10/15/15 PLATE NO. M5-1.13

PROJECT NO: | HWY: | COUNTY: | SHEET NO: E

FILE NAME : C:\CAEfiles\Projects\tr_stdplate\M51.DGN PLOT DATE : 01-DEC-2015 18:07 PLOT BY : $$ plotuser $$ PLOT NAME : PLOT SCALE : 11.675051:1.000000

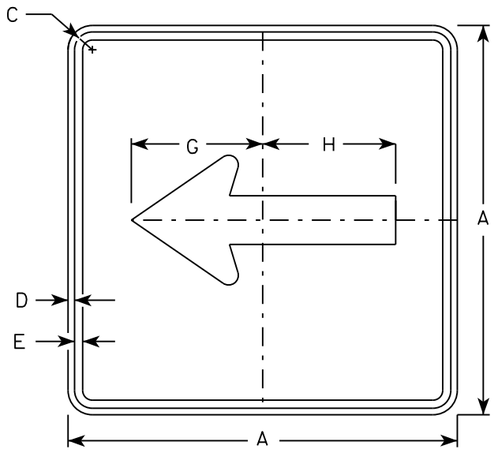

M6-1
MM6-1
MO6-1
MP6-1

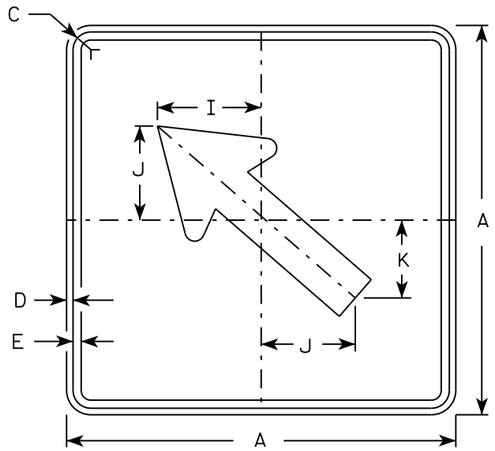

M6-2
MM6-2
MO6-2
MP6-2

NOTES

1. Signs are Type II - Type H except as Shown
2. Color:
   Background - See note 4
   Message - See note 4
3. Corners may be square or rounded when base material is plywood but borders shall be rounded as shown. When base material is metal, the corners and borders shall be rounded.
4. M6-1 and M6-2 Background - White
   Message - Black
   MB6-1 and MB6-2 Background - Blue
   Message - White
   MK6-1 and MK6-2 Background - Green
   Message - White
   MM6-1 and MM6-2 Background - White
   Message - Green
   MN6-1 and MN6-2 Background - Brown
   Message - White
   MO6-1 and MO6-2 Background - Orange - Type F Reflective
   Message - Black
   MP6-1 and MP6-2 Background - White
   Message - Blue
   MR6-1 and MR6-2 Background - Brown
   Message - Yellow

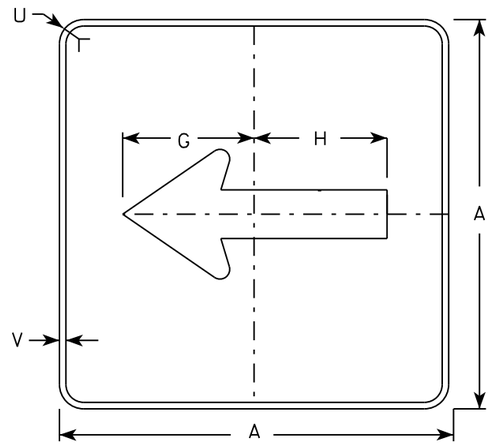

MB6-1
MK6-1
MN6-1
MR6-1

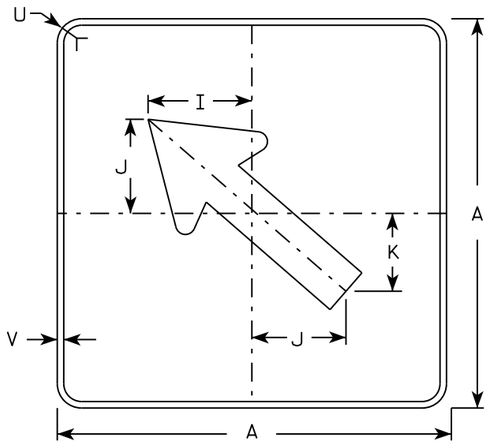

MB6-2
MK6-2
MN6-2
MR6-2

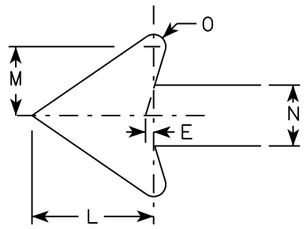

SIZE	A	B	C	D	E	F	G	H	I	J	K	L	M	N	O	P	Q	R	S	T	U	V	W	X	Y	Z	Area sq. ft.
1																											
2	21		1 1/8	3/8	3/8		7 1/2	7 1/8	5 5/8	5	4 1/4	5 1/4	3	2 5/8	1/2						1 1/2	1/2						3.06
3	30		1 3/8	1/2	5/8		10 3/4	10 1/4	8	7 1/4	6	7 1/2	4 1/4	3 3/4	3/4						1 7/8	1/2						6.25
4	30		1 3/8	1/2	5/8		10 3/4	10 1/4	8	7 1/4	6	7 1/2	4 1/4	3 3/4	3/4						1 7/8	1/2						6.25
5	30		1 3/8	1/2	5/8		10 3/4	10 1/4	8	7 1/4	6	7 1/2	4 1/4	3 3/4	3/4						1 7/8	1/2						6.25

STANDARD SIGN
M6-1 & M6-2
SERIES

WISCONSIN DEPT OF TRANSPORTATION

APPROVED Matthew R Rauch
for State Traffic Engineer

DATE 10/15/15 PLATI 757 M6-1.15

PROJECT NO:	HWY:	COUNTY:		SHEET NO:	E

FILE NAME : C:\CAEfiles\Projects\tr_stdplate\M61.DGN PLOT DATE : 01-DEC-2015 17:57 PLOT BY : $$ plotuser $$ PLOT NAME : PLOT SCALE : 11.675051:1.000000

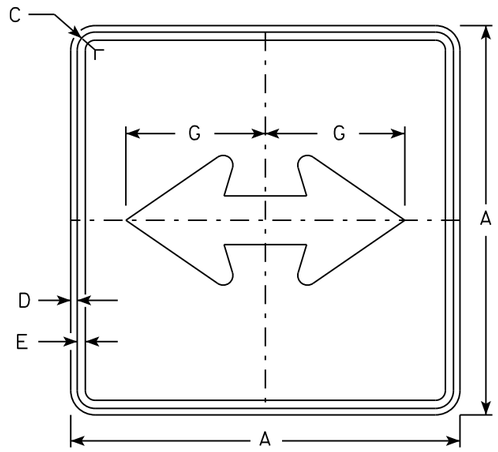

M6-4
MM6-4
MO6-4
MP6-4

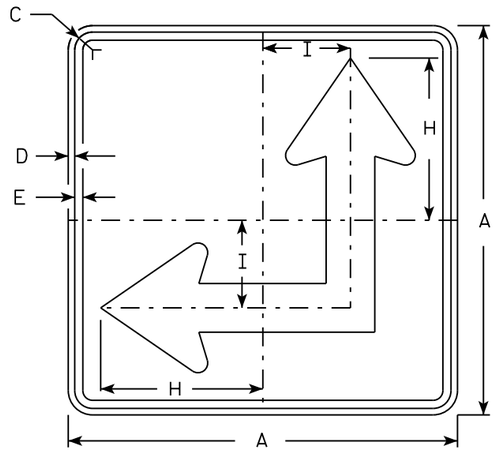

M6-6
MM6-6
MO6-6
MP6-6

NOTES

1. Signs are Type II - Type H except as Shown
2. Color:
   Background - See Note 4
   Message - See Note 4
3. Corners may be square or rounded when base material is plywood but borders shall be rounded as shown. When base material is metal, the corners and borders shall be rounded.
4. M6-4 and M6-6 Background - White
   Message - Black
   MB6-4 and MB6-6 Background - Blue
   Message - White
   MK6-4 and MK6-6 Background - Green
   Message - White
   MM6-4 and MM6-6 Background - White
   Message - Green
   MN6-4 and MN6-6 Background - Brown
   Message - White
   MO6-4 and MO6-6 Background - Orange - Type F Reflective
   Message - Black
   MP6-4 and MP6-6 Background - White
   Message - Blue
   MR6-4 and MR6-6 Background - Brown
   Message - Yellow
5. M6-6R same as M6-6L except arrow points ahead and right.

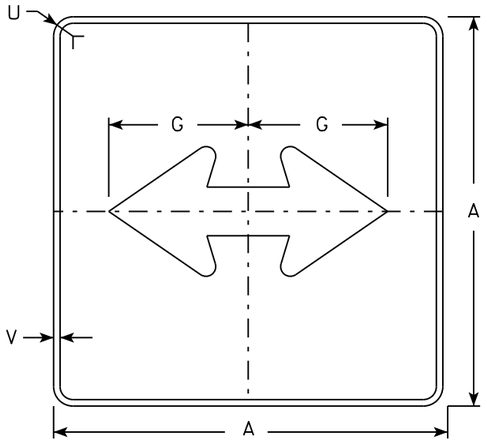

MB6-4
MK6-4
MN6-4
MR6-4

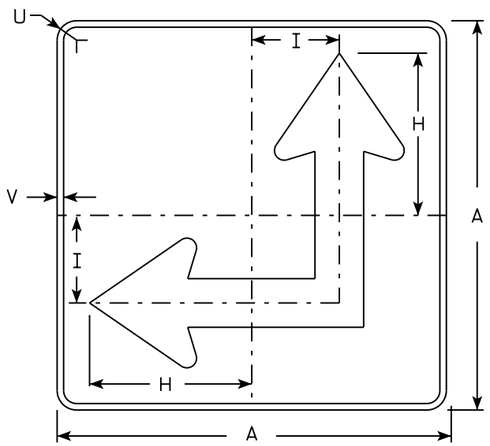

MB6-6
MK6-6
MN6-6
MR6-6

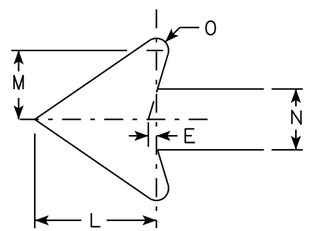

SIZE	A	B	C	D	E	F	G	H	I	J	K	L	M	N	O	P	Q	R	S	T	U	V	W	X	Y	Z	Area sq. ft.
1																											
2	21		1 1/8	3/8	3/8		7 1/2	8 3/4	4 1/4			5 1/4	3	2 5/8	1/2						1 1/2	1/2					3.06
3	30		1 3/8	1/2	5/8		10 3/4	12 1/2	6 3/4			7 1/2	4 1/4	3 3/4	3/4						1 7/8	1/2					6.25
4	30		1 3/8	1/2	5/8		10 3/4	12 1/2	6 3/4			7 1/2	4 1/4	3 3/4	3/4						1 7/8	1/2					6.25
5	30		1 3/8	1/2	5/8		10 3/4	12 1/2	6 3/4			7 1/2	4 1/4	3 3/4	3/4						1 7/8	1/2					6.25

STANDARD SIGN
M6-4 & M6-6
SERIES

WISCONSIN DEPT OF TRANSPORTATION

APPROVED Matthew R Rauch
for State Traffic Engineer

DATE 10/15/15 PLATE 758 M6-4.10

PROJECT NO: | HWY: | COUNTY: | SHEET NO: E

FILE NAME : C:\CAEfiles\Projects\tr_stdplate\M64.DGN PLOT DATE : 01-DEC-2015 17:58 PLOT BY : $$ platuser $$ PLOT NAME : PLOT SCALE : 11.675051:1.000000

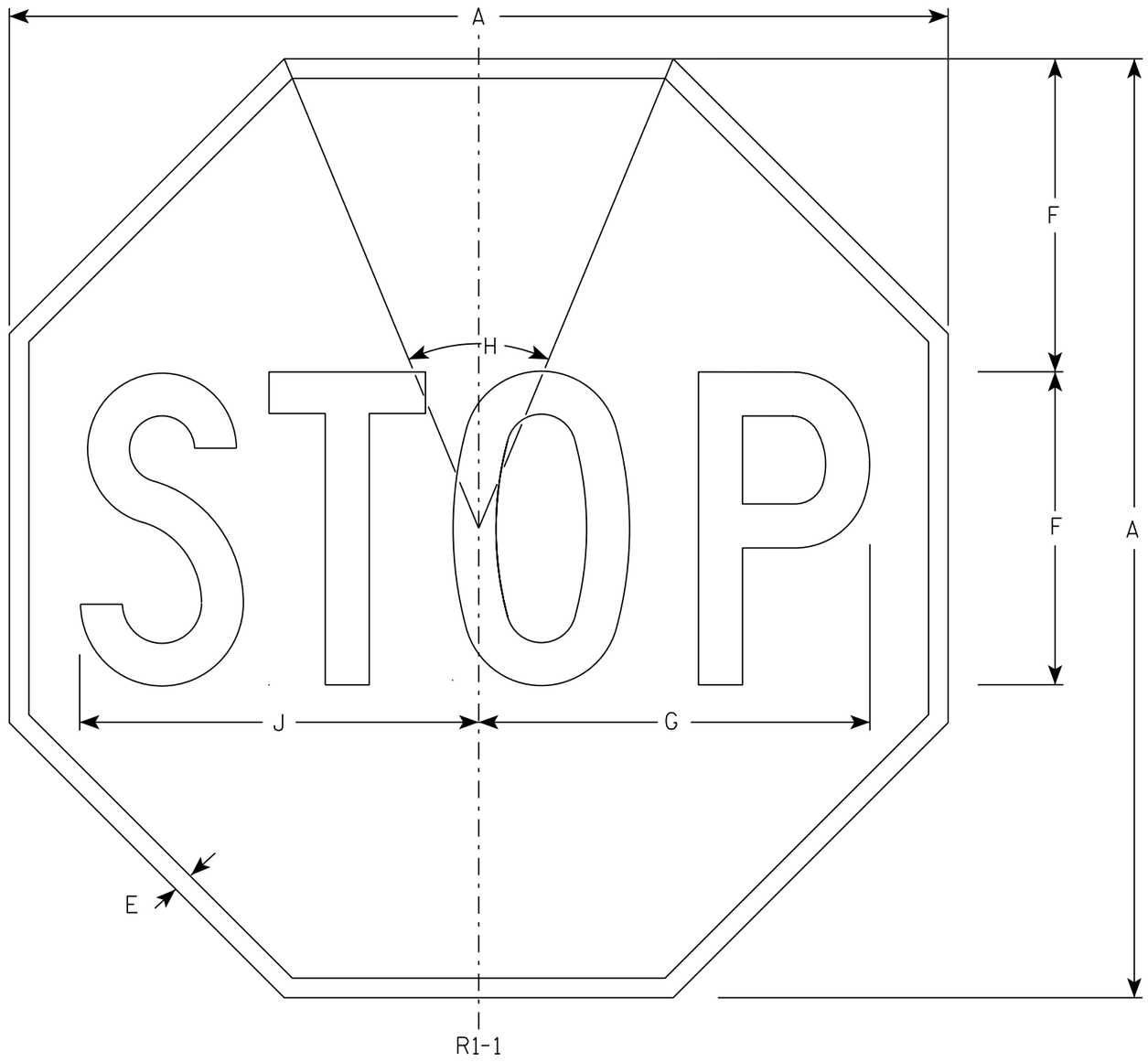

NOTES

1. Sign is Type II - Type H Reflective - reference WIS DOT Standard Specification for HIGHWAY and STRUCTURE CONSTRUCTION latest edition.
2. Color:
   Background - Red
   Message - White
3. Message Series - C

SIZE	A	B	C	D	E	F	G	H	I	J	K	L	M	N	O	P	Q	R	S	T	U	V	W	X	Y	Z	Area sq. ft.
1	30				5/8	10	12 1/2	45°		12 3/4																	5.18
2S	30				5/8	10	12 1/2	45°		12 3/4																	5.18
2M	36				3/4	12	15	45°		15 3/8																	7.46
3	36				3/4	12	15	45°		15 3/8																	7.46
4	48				1	16	20	45°		20 1/2																	13.25
5	48				1	16	20	45°		20 1/2																	13.25
6	18				3/8	6	7 3/4	45°		7 3/4																	1.86
7	12				1/4	4	5	45°		5 1/8																	0.78

STANDARD SIGN

R1-1

WISCONSIN DEPT OF TRANSPORTATION

APPROVED Matthew R Rauch

for State Traffic Engineer

DATE 11/12/15 PLATE NO. R1-1.13

PROJECT NO:	HWY:	COUNTY:		SHEET NO: 759	E

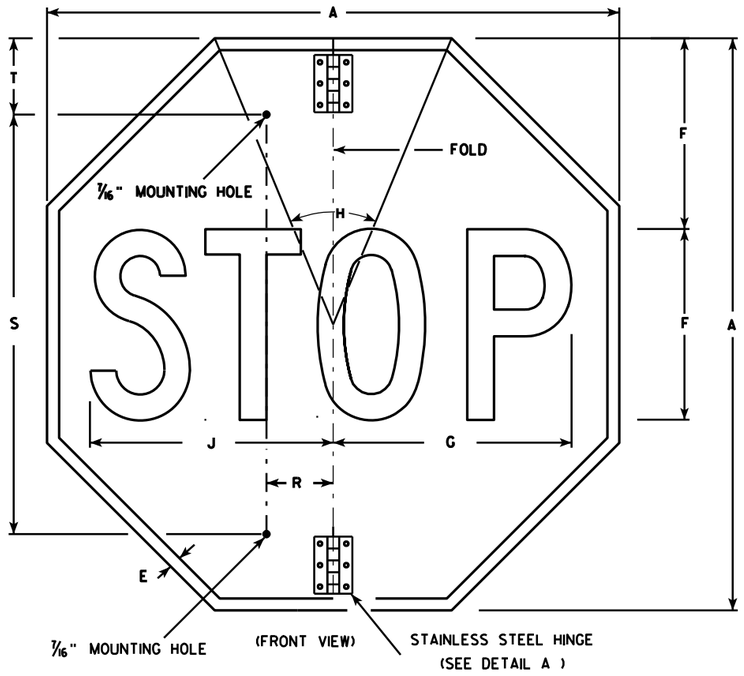

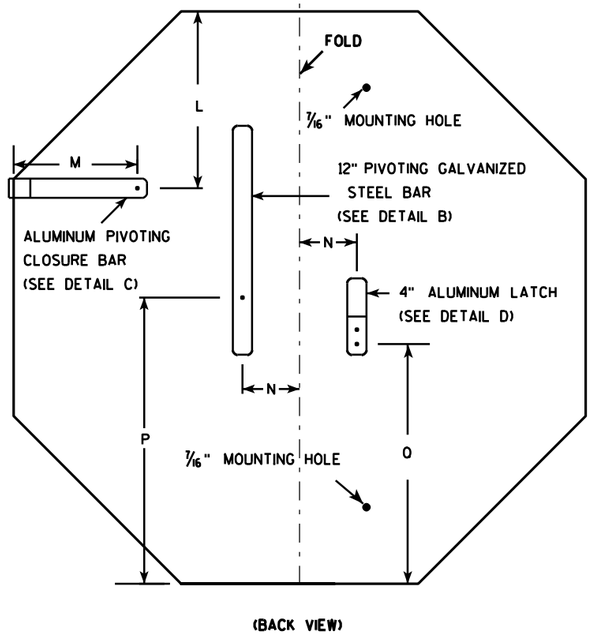

NOTES

1. Sign is Type II - Type H Reflective - reference WIS DOT Standard Specification for HIGHWAY and STRUCTURE CONSTRUCTION latest edition.
2. Color:
   Background - Red
   Message - White
3. Message Series - C
4. All hardware used on the folding STOP sign installation shall conform to 637.2.4 of the WIS DOT Standard Specification.

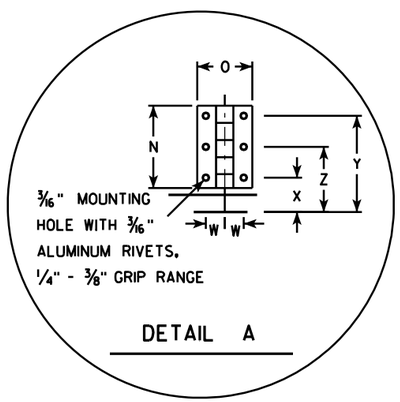

DETAIL A

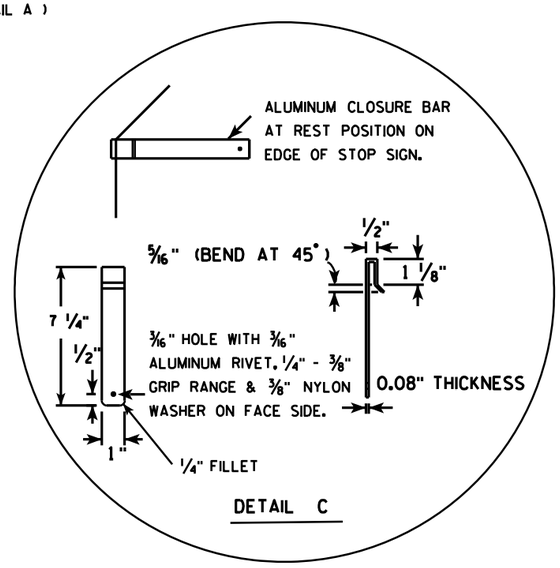

DETAIL C

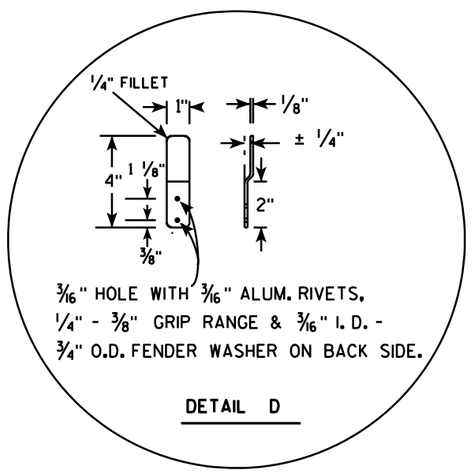

DETAIL D

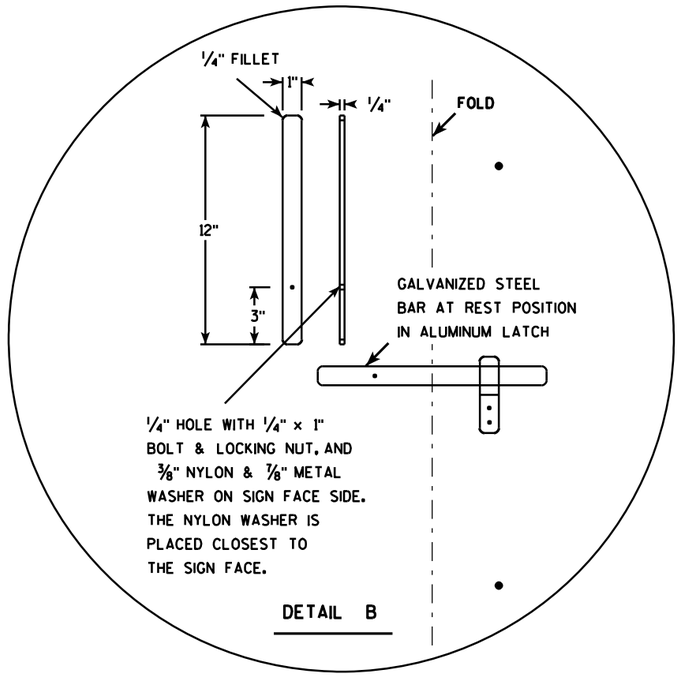

DETAIL B

SIZE	A	B	C	D	E	F	G	H	I	J	K	L	M	N	O	P	O	R	S	T	U	V	W	X	Y	Z	Area sq. ft.
1																											
2S	30				5/8	10	12 1/2	45		12 3/4		9 1/4	6 1/2	3	2	15	12 3/8	2 1/2	22	5			11/16	1 1/4	3 1/2	2 3/8	5.18
2M	36				3/4	12	15	45		15 3/8		11	6 1/2	3	2	18	15 3/8	2 1/2	26	5			11/16	1 1/4	3 1/2	2 3/8	7.46
3	36				3/4	12	15	45		15 3/8		11	6 1/2	3	2	18	15 3/8	2 1/2	26	5			11/16	1 1/4	3 1/2	2 3/8	7.46
4																											
5																											

STANDARD SIGN
R1-1F

WISCONSIN DEPT OF TRANSPORTATION

APPROVED Matthew R Rauch
for State Traffic Engineer

DATE 12/03/10 PLATE NO. R1-1F.3

PROJECT NO:	HWY:	COUNTY:		SHEET NO: 760	E

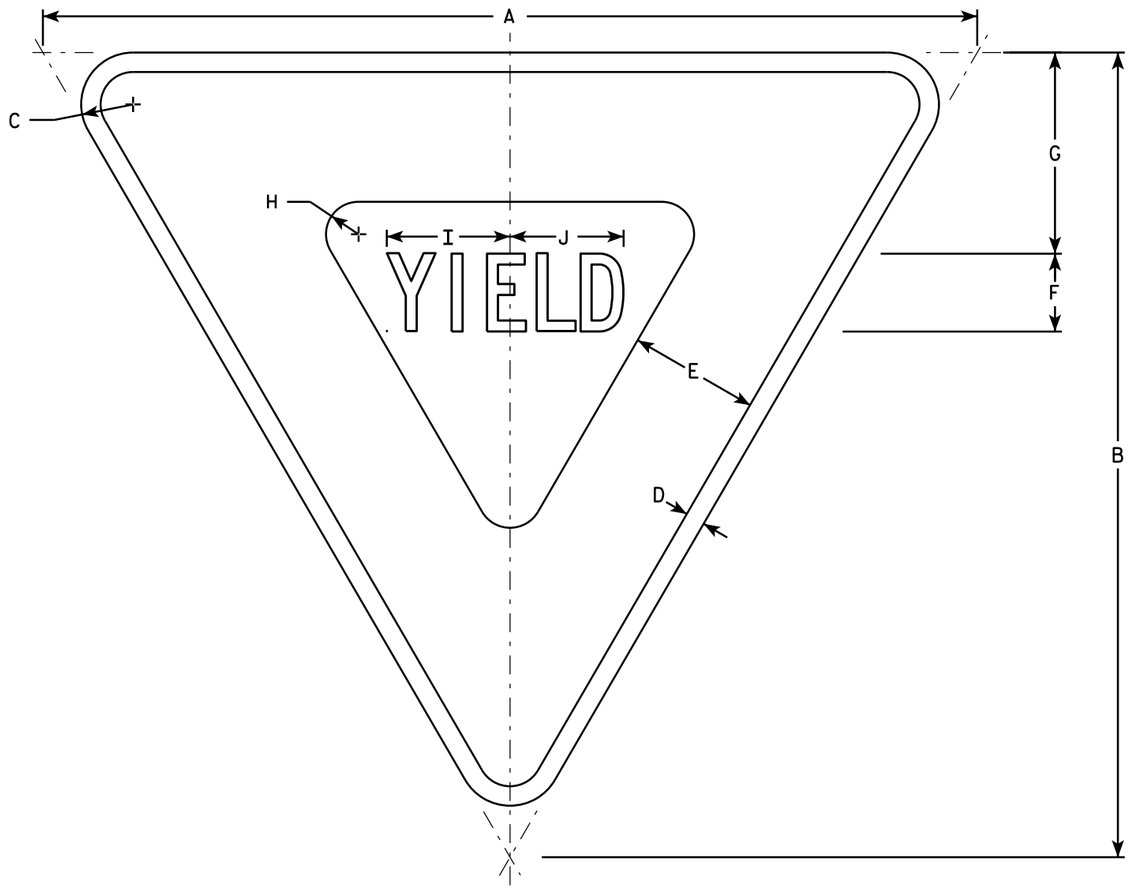

R1-2

NOTES

1. Sign is Type II - Type H Reflective - reference WIS DOT Standard Specification for HIGHWAY and STRUCTURE CONSTRUCTION latest edition.
2. Color:
   Background - White
   Message - See note 5
3. Message Series - C
4. Corners may be square or rounded when base material is plywood but borders shall be rounded as shown. When base material is metal, the corners and borders shall be rounded.
5. The border strip and word message are reflectorized red.

SIZE	A	B	C	D	E	F	G	H	I	J	K	L	M	N	O	P	Q	R	S	T	U	V	W	X	Y	Z	Area sq. ft.
1	30	26	1 1/2	5/8	4	2 1/2	6 3/8	7/8	4	3 5/8																	2.71
2S	36	31	2	3/4	5	3	7 3/4	1 1/4	4 3/4	4 3/8																	3.88
2M	48	42	3	1	6	4	9 3/4	2	6 1/4	5 7/8																	7.00
3	48	42	3	1	6	4	9 3/4	2	6 1/4	5 7/8																	7.00
4	48	42	3	1	6	4	9 3/4	2	6 1/4	5 7/8																	7.00
5	60	52	3	1 1/2	8	5	13	2 1/2	7 7/8	7 1/4																	10.83
6																											
7	18	15 1/2	1	3/8	2 1/2	1 1/2	3 7/8	5/8	2 3/8	2 1/4																	0.97

STANDARD SIGN
R1-2

WISCONSIN DEPT OF TRANSPORTATION

APPROVED Matthew R Rauch
for State Traffic Engineer

DATE 10/13/14 PLATE R1-2.12

PROJECT NO: | HWY: | COUNTY: | SHEET NO: E

FILE NAME : C:\CAEFiles\Projects\tr_stdplate\R12.DGN PLOT DATE : 13-OCT-2014 15:12 PLOT BY : mscsja PLOT NAME : PLOT SCALE : 5.837526:1.000000
WISDOT/CADDS SHEET 42

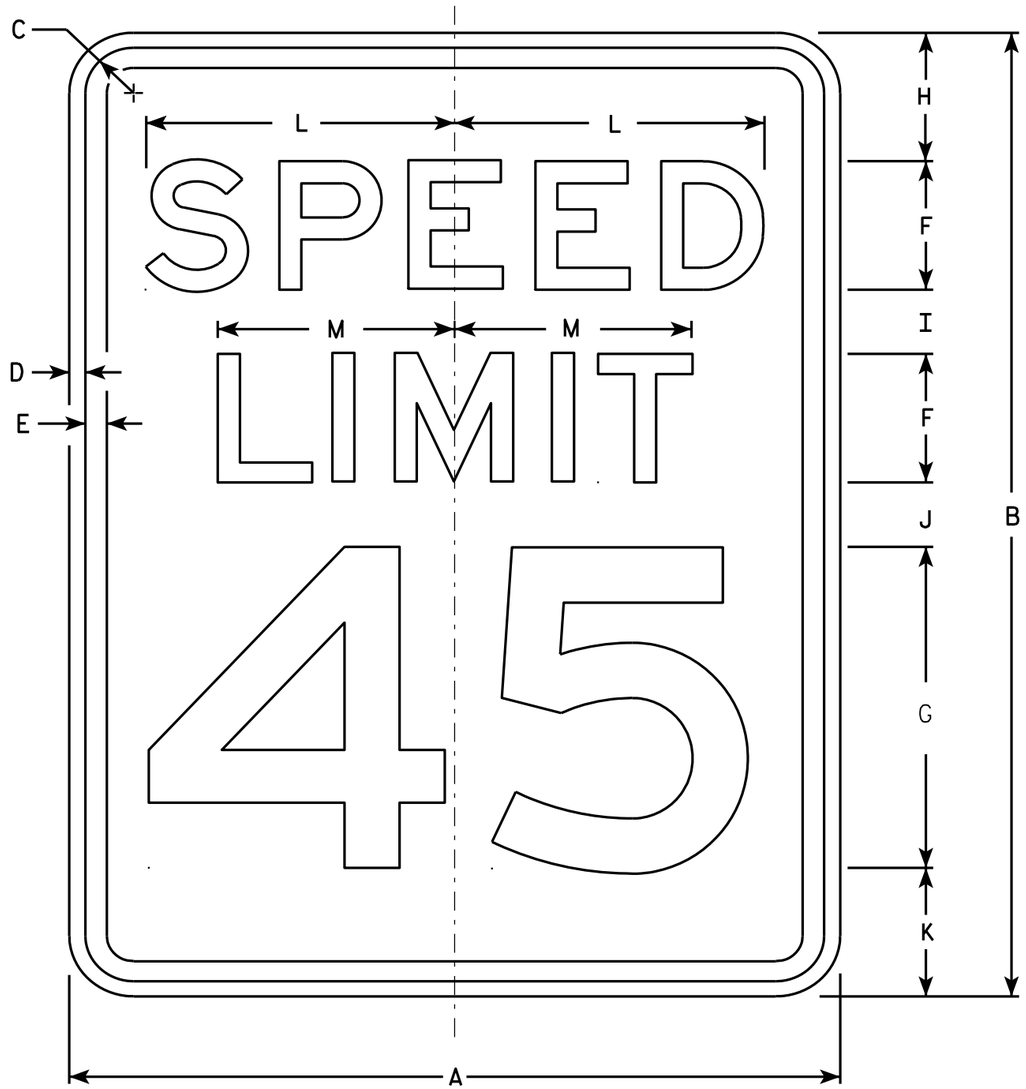

R2-1

NOTES

1. Sign is Type II - Type H Reflective - reference WIS DOT Standard Specification for HIGHWAY and STRUCTURE CONSTRUCTION latest edition.
2. Color:
   Background - White
   Message - Black
3. Message Series - E
4. Corners may be square or rounded when base material is plywood but borders shall be rounded as shown. When base material is metal, the corners and borders shall be rounded.
5. Substitute appropriate numerals and optically adjust spacing to achieve proper balance.

SIZE	A	B	C	D	E	F	G	H	I	J	K	L	M	N	O	P	Q	R	S	T	U	V	W	X	Y	Z	Area sq. ft.
1	18	24	1 1/8	3/8	1/2	3	8	3	2	2	3	7 1/4	5 1/2														3.0
2S	24	30	1 1/8	3/8	1/2	4	10	3	2 1/4	3 3/8	3 3/8	9 5/8	7 3/8														5.0
2M	30	36	1 3/8	1/2	5/8	5	12	5	2 1/2	2 1/2	4	12	9 1/4														7.5
3	36	48	1 3/8	1/2	5/8	6	14	6	5	5	6	14 3/8	11														12.0
4	36	48	1 3/8	1/2	5/8	6	14	6	5	5	6	14 3/8	11														12.0
5	48	60	2 1/4	3/4	1	8	20	6	4 1/2	6 3/4	6 3/4	19 1/4	14 5/8														20.0

STANDARD SIGN
R2-1

WISCONSIN DEPT OF TRANSPORTATION

APPROVED Matthew R Rauch
for State Traffic Engineer

DATE 5/26/10 PLATE NO. R2-1.13

PROJECT NO:	HWY:	COUNTY:		SHEET NO: 762	E

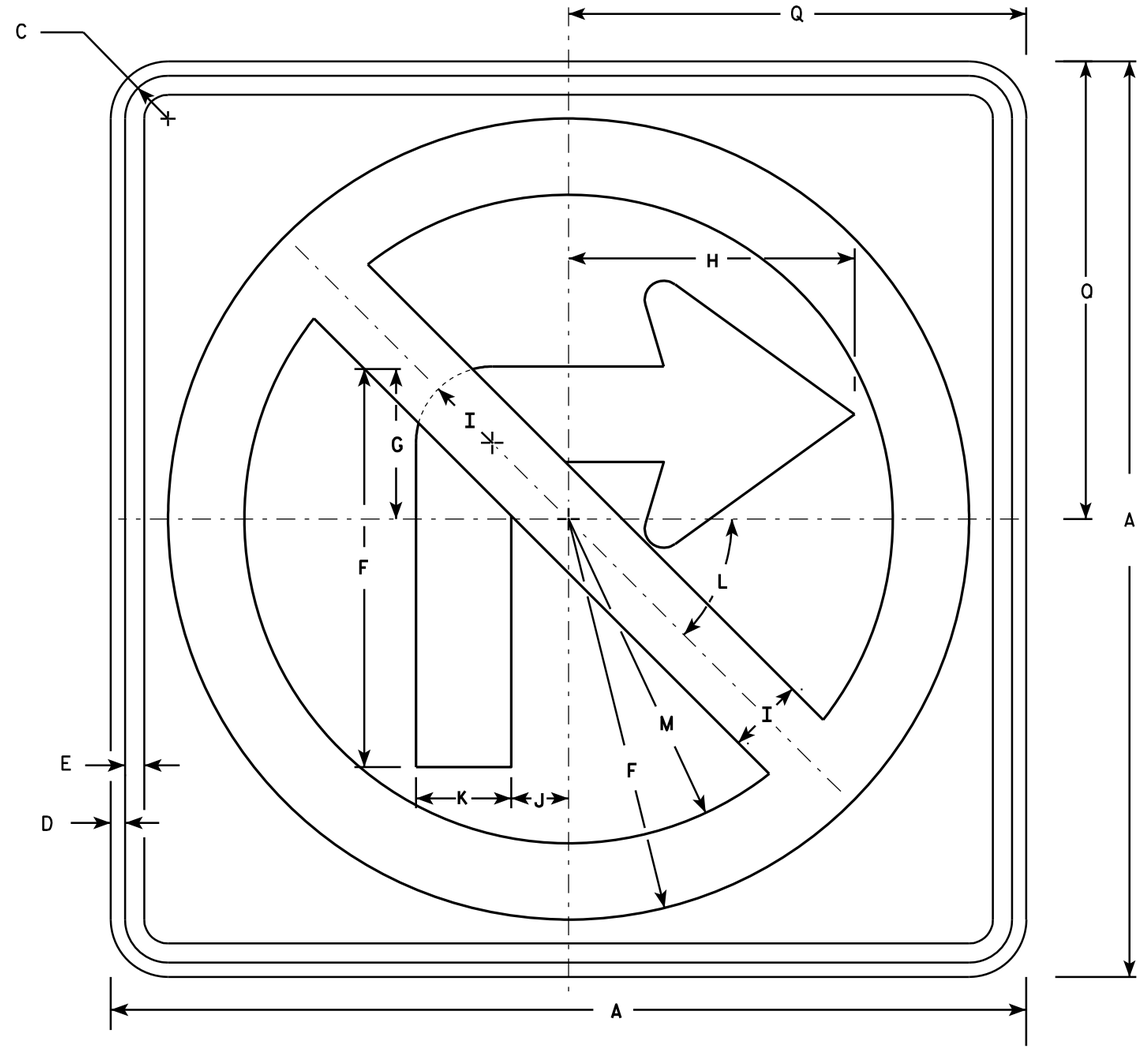

R3-1

NOTES

1. Sign is Type II - Type H Reflective - reference WIS DOT Standard Specification for HIGHWAY and STRUCTURE CONSTRUCTION latest edition.
2. Color:
   Background - White
   Message - See note 4
3. Corners may be square or rounded when base material is plywood but borders shall be rounded as shown. When base material is metal, the corners and borders shall be rounded.
4. Border & Arrow are non reflective black, the circle with diagonal bar is reflective red.

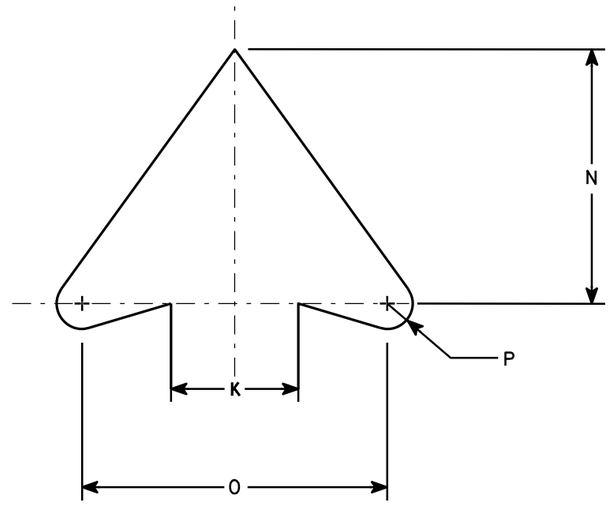

ARROW DETAIL

SIZE	A	B	C	D	E	F	G	H	I	J	K	L	M	N	O	P	Q	R	S	T	U	V	W	X	Y	Z	Area sq. ft.
1	24		1 1/8	3/8	1/2	10 1/2	4	7 1/2	2	1 1/2	2 1/2	45	8 1/2	5	6	1/2	12										4.0
2S	24		1 1/8	3/8	1/2	10 1/2	4	7 1/2	2	1 1/2	2 1/2	45°	8 1/2	5	6	1/2	12										4.0
2M	36		1 5/8	5/8	3/4	15 3/4	6	11 1/4	3	2 1/4	3 3/4	45	12 3/4	7 1/2	9	3/4	18										9.0
3	36		1 5/8	5/8	3/4	15 3/4	6	11 1/4	3	2 1/4	3 3/4	45	12 3/4	7 1/2	9	3/4	18										9.0
4	36		1 5/8	5/8	3/4	15 3/4	6	11 1/4	3	2 1/4	3 3/4	45°	12 3/4	7 1/2	9	3/4	18										9.0
5	48		2 1/4	3/4	1	21	8	15	4	3	5	45°	17	10	12	1	24										16.0

STANDARD SIGN
R3-1

WISCONSIN DEPT OF TRANSPORTATION

APPROVED Matthew R Rauch
for State Traffic Engineer

DATE 12/08/10 PLATE NO. R3-1.5

PROJECT NO:	HWY:	COUNTY:		SHEET NO: 763	E

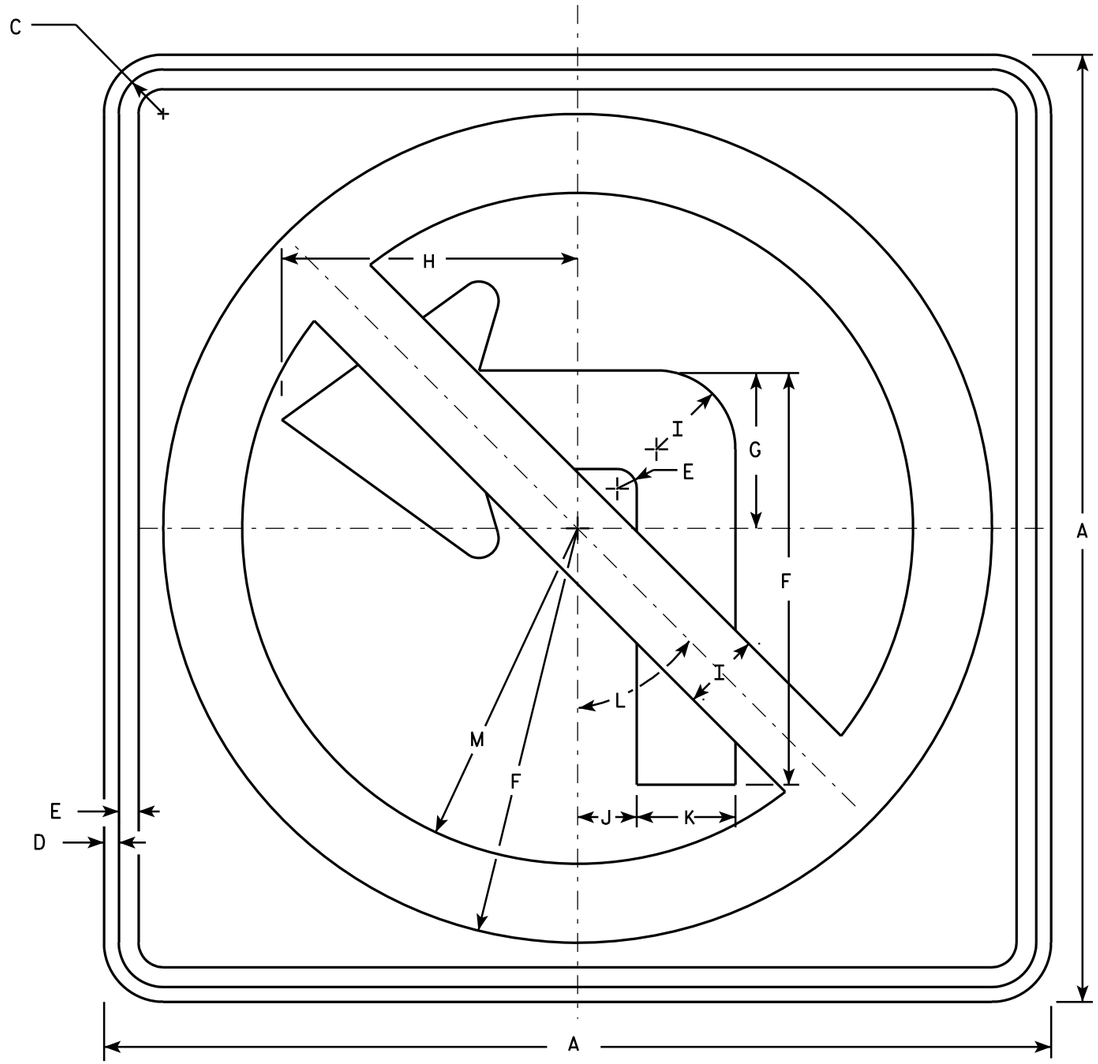

R3-2

NOTES

1. Sign is Type II - Type H Reflective - reference WIS DOT Standard Specification for HIGHWAY and STRUCTURE CONSTRUCTION latest edition.
2. Color:
   Background - White
   Message - See note 4
3. Corners may be square or rounded when base material is plywood but borders shall be rounded as shown. When base material is metal, the corners and borders shall be rounded.
4. Border & Arrow are non reflective black, the circle with diagonal bar is reflective red.

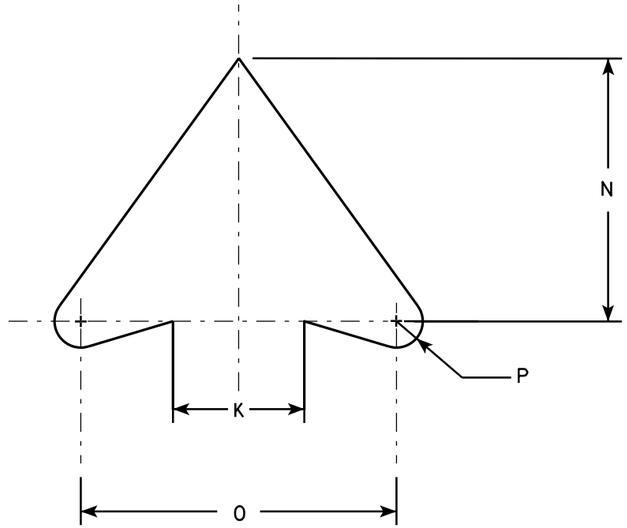

ARROW DETAIL

SIZE	A	B	C	D	E	F	G	H	I	J	K	L	M	N	O	P	Q	R	S	T	U	V	W	X	Y	Z	Area sq. ft.
1	24		1 1/8	3/8	1/2	10 1/2	4	7 1/2	2	1 1/2	2 1/2	45°	8 1/2	5	6	1/2											4.0
2S	24		1 1/8	3/8	1/2	10 1/2	4	7 1/2	2	1 1/2	2 1/2	45°	8 1/2	5	6	1/2											4.0
2M	36		1 5/8	5/8	3/4	15 3/4	6	11 1/4	3	2 1/4	3 3/4	45°	12 3/4	7 1/2	9	3/4											9.0
3	36		1 5/8	5/8	3/4	15 3/4	6	11 1/4	3	2 1/4	3 3/4	45°	12 3/4	7 1/2	9	3/4											9.0
4	36		1 5/8	5/8	3/4	15 3/4	6	11 1/4	3	2 1/4	3 3/4	45°	12 3/4	7 1/2	9	3/4											9.0
5	48		2 1/4	3/4	1	21	8	15	4	3	5	45°	17	10	12	1											16.0

STANDARD SIGN
R3-2

WISCONSIN DEPT OF TRANSPORTATION

APPROVED Matthew R Rauch
for State Traffic Engineer

DATE 12/08/10 PLATE NO. R3-2.10

PROJECT NO:	HWY:	COUNTY:		SHEET NO: 764	E

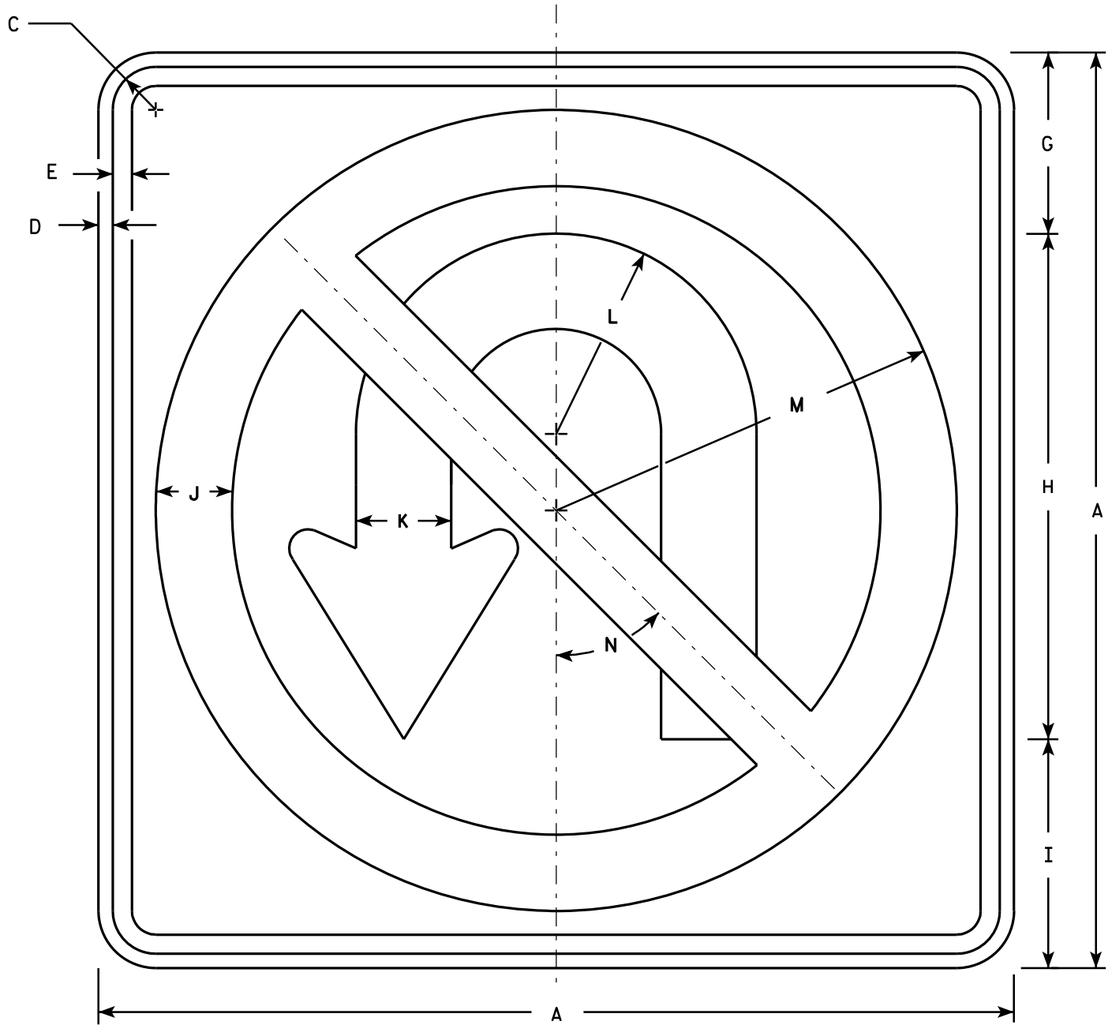

R3-4

NOTES

1. Sign is Type II - Type H Reflective - reference WIS DOT Standard Specification for HIGHWAY and STRUCTURE CONSTRUCTION latest edition.
2. Color:
   Background - White
   Message - See note 4
3. Corners may be square or rounded when base material is plywood but borders shall be rounded as shown. When base material is metal, the corners and borders shall be rounded.
4. Border & Arrow are non reflective black, the circle with diagonal bar is reflective red.

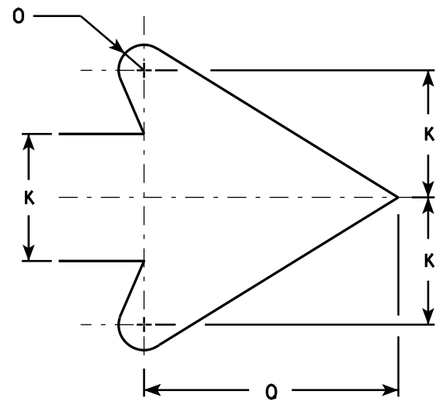

ARROW DETAIL

SIZE	A	B	C	D	E	F	G	H	I	J	K	L	M	N	O	P	Q	R	S	T	U	V	W	X	Y	Z	Area sq. ft.
1																											
2S	24		1 1/8	3/8	1/2		4 3/4	13 1/4	6	2	2 1/2	5 1/4	10 1/2	45°	1/2		5										4.0
2M	36		1 5/8	5/8	3/4		7 1/8	19 7/8	9	3	3 3/4	7 7/8	15 3/4	45°	3/4		7 5/8										9.0
3	36		1 5/8	5/8	3/4		7 1/8	19 7/8	9	3	3 3/4	7 7/8	15 3/4	45°	3/4		7 5/8										9.0
4	36		1 5/8	5/8	3/4		7 1/8	19 7/8	9	3	3 3/4	7 7/8	15 3/4	45°	3/4		7 5/8										9.0
5	36		1 5/8	5/8	3/4		7 1/8	19 7/8	9	3	3 3/4	7 7/8	15 3/4	45°	3/4		7 5/8										9.0

STANDARD SIGN
R3-4

WISCONSIN DEPT OF TRANSPORTATION

APPROVED Matthew R Rauch
for State Traffic Engineer

DATE 12/08/10 PLATE NO. R3-4.11

PROJECT NO:	HWY:	COUNTY:		SHEET NO: 765	E

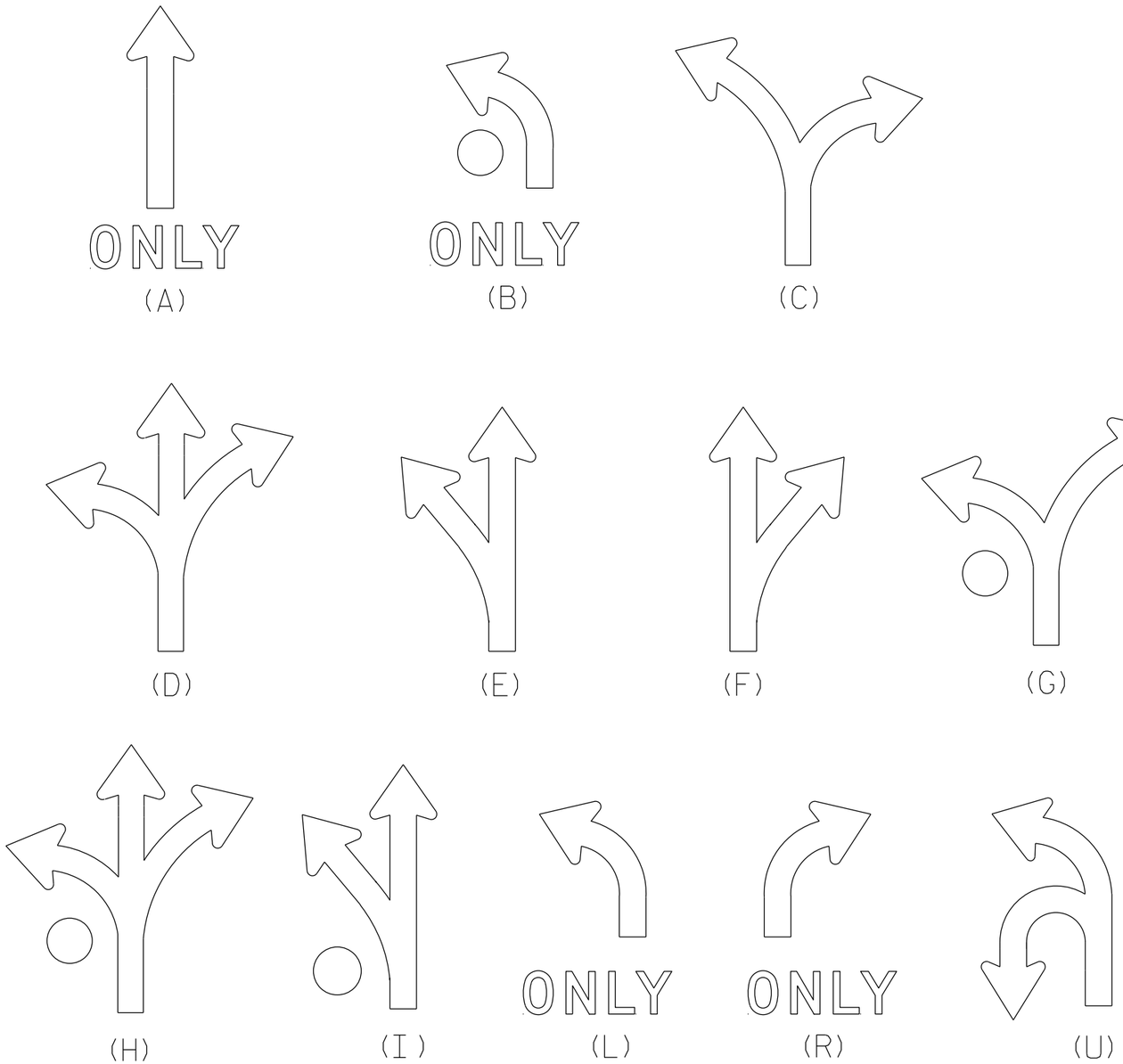

NOTES

1. Sigs are Type II - Type H Reflective
2. Color:
   Background - White
   Message - Black
3. Message Series - D
4. Use appropriate Letter for Sign Code
   Each letter added makes sign wider. Example R3-8EAR
5. Square footage of sign varies by letters

1 Letter =	3.75 sq ft	for Size 2
	6.0 sq ft	for Size 3
	10.0 sq ft	for Size 4 or 5
2 Letters =	7.5 sq ft	for Size 2
	12.0 sq ft	for Size 3
	20.0 sq ft	for Size 4 or 5
3 Letters =	11.25 sq ft	for Size 2
	18.0 sq ft	for Size 3
	30.0 sq ft	for Size 4 or 5
4 Letters =	15.0 sq ft	for Size 2
	24.0 sq ft	for Size 3
	40.0 sq ft	for Size 4 or 5
5 Letters =	18.75 sq ft	for Size 2
	30.0 sq ft	for Size 3
	50.0 sq ft	for Size 4 or 5
6 Letters =	22.5 sq ft	for Size 2
	36.0 sq ft	for Size 3
	60.0 sq ft	for Size 4 or 5

6. When letters C,D,G,H are used on the Left or Right end of the sign the Sq. Ft. changes. Add the amounts when these letters are used:
   1.25 sq ft for Size 2
   1.5 sq ft for Size 3
   2.0 sq ft for Size 4 or 5

STANDARD SIGN
R3-8 Series

WISCONSIN DEPT OF TRANSPORTATION

APPROVED Matthew R Rauch
for State Traffic Engineer

DATE 5/21/19 PLATE NO. R3-8.1

7

7

PROJECT NO:

SHEET NO: 766 E

NOTES

1. Sign is Type II - Type H Reflective
2. Color:
   Background - White
   Message - Black
3. Message Series - D

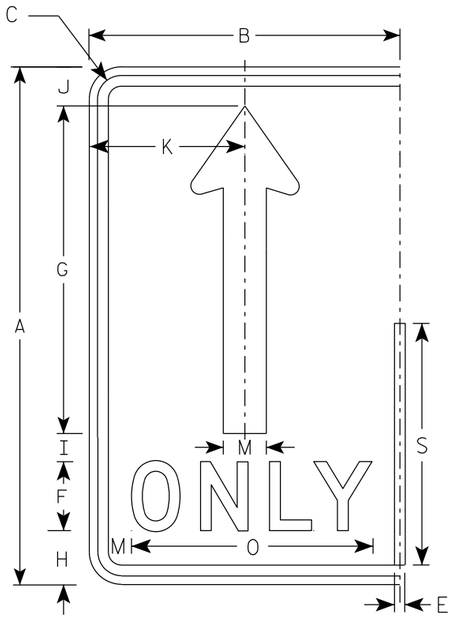

(A)

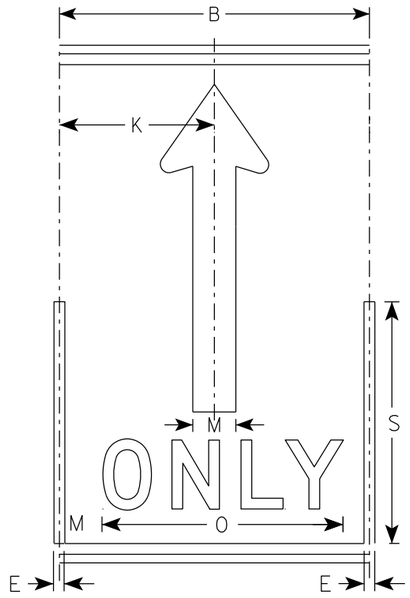

(A)

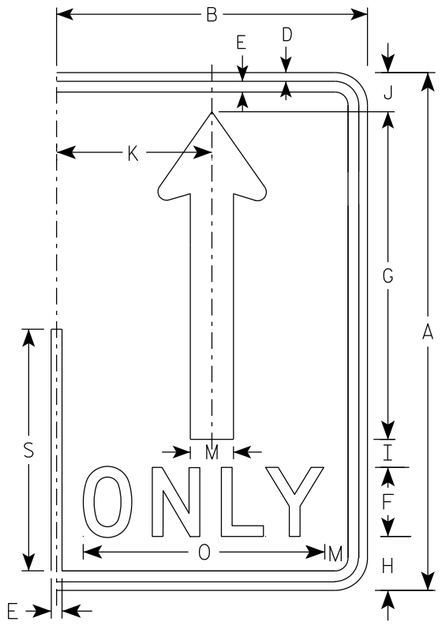

(A)

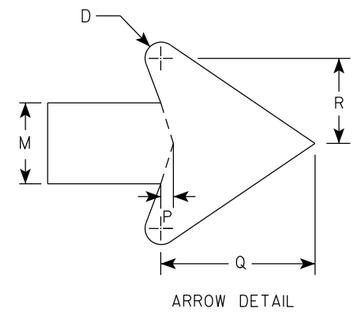

ARROW DETAIL

SIZE	A	B	C	D	E	F	G	H	I	J	K	L	M	N	O	P	Q	R	S	T	U	V	W	X	Y	Z	Area sq. ft.
1																											
2S	30	18	1 3/8	1/2	5/8	4	19	3 1/8	1 5/8	2 1/4	9		2 1/2		14	3/8	4 3/4	2 5/8	14								3.75
2M	30	18	1 3/8	1/2	5/8	4	19	3 1/8	1 5/8	2 1/4	9		2 1/2		14	3/8	4 3/4	2 5/8	14								3.75
3	36	24	1 3/8	1/2	5/8	5	22 3/4	3 3/4	1 3/4	2 3/4	12		3		17 5/8	1/2	5 3/4	3 1/8	16 3/4								6.0
4	48	30	2 1/4	3/4	1	6	30 3/8	5 1/8	2 7/8	3 5/8	15		4		21 3/4	5/8	7 5/8	4 1/4	22 3/8								10.0
5	48	30	2 1/4	3/4	1	6	30 3/8	5 1/8	2 7/8	3 5/8	15		4		21 3/4	5/8	7 5/8	4 1/4	22 3/8								10.0

STANDARD SIGN
R3-8 (A) Arrow

WISCONSIN DEPT OF TRANSPORTATION

APPROVED Matthew R Rauch
for State Traffic Engineer

DATE 5/21/19 PLATE NO. R3-8.1

PROJECT NO:	HWY:	COUNTY:		SHEET NO: 767	E

NOTES

1. Sign is Type II - Type H Reflective
2. Color:
   Background - White
   Message - Black
   Message Series - D

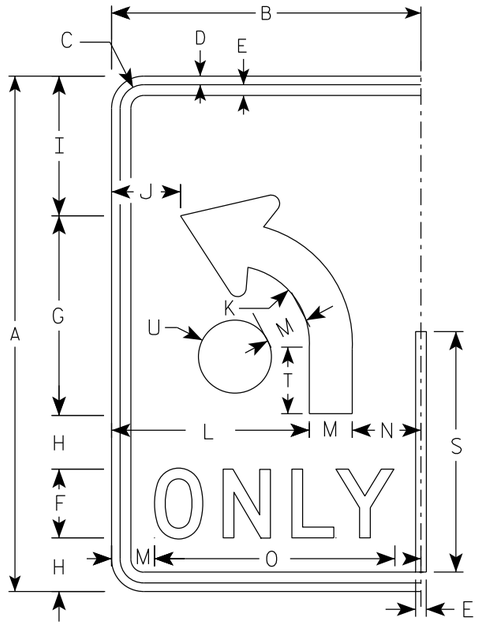

(B)

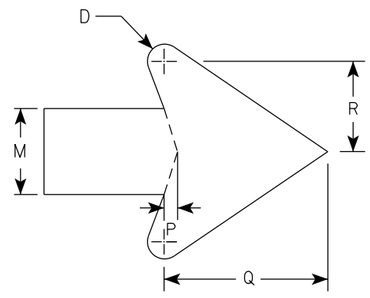

ARROW DETAIL

SIZE	A	B	C	D	E	F	G	H	I	J	K	L	M	N	O	P	Q	R	S	T	U	V	W	X	Y	Z	Area sq. ft.
1																											
2S	30	18	1 3/8	1/2	5/8	4	11 5/8	3 1/8	8 1/8	4	4 1/2	11 1/2	2 1/2	4	14	3/8	4 3/4	2 5/8	14	3 7/8	2 1/8						3.75
2M	30	18	1 3/8	1/2	5/8	4	11 5/8	3 1/8	8 1/8	4	4 1/2	11 1/2	2 1/2	4	14	3/8	4 3/4	2 5/8	14	3 7/8	2 1/8						3.75
3	36	24	1 3/8	1/2	5/8	5	14	3 1/2	9 3/4	6	5 3/8	15	3	6	17 5/8	1/2	5 3/4	3 1/8	16 3/4	4 5/8	2 1/2						6.0
4	48	30	2 1/4	3/4	1	6	18 5/8	5 1/8	13 1/8	6 1/8	7 1/4	18	4	8	21 3/4	5/8	7 5/8	4 1/4	22 3/8	6 1/4	3 3/8						10.0
5	48	30	2 1/4	3/4	1	6	18 5/8	5 1/8	13 1/8	6 1/8	7 1/4	18	4	8	21 3/4	5/8	7 5/8	4 1/4	22 3/8	6 1/4	3 3/8						10.0

STANDARD SIGN

R3-8 (B) Arrow

WISCONSIN DEPT OF TRANSPORTATION

APPROVED Matthew R Rauch

for State Traffic Engineer

DATE 5/21/19 PLATE NO. R3-8.1

PROJECT NO:

SHEET NO: 768 E

NOTES

1. Sign is Type II - Type H Reflective
2. Color:
   Background - White
   Message - Black
3. Message Series - None

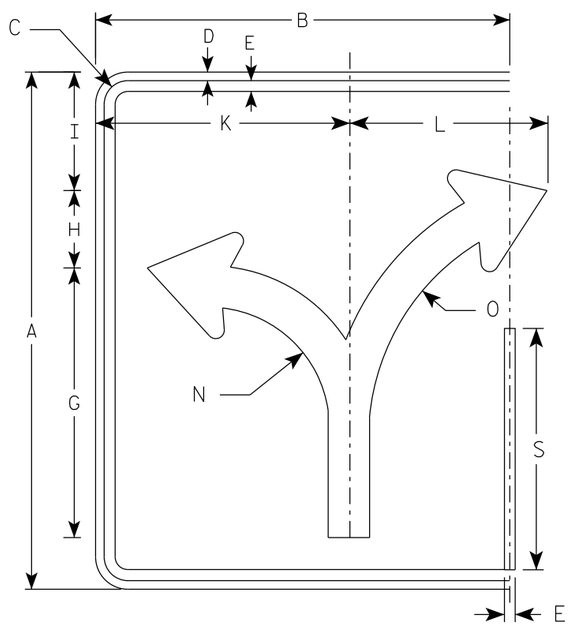

(C)

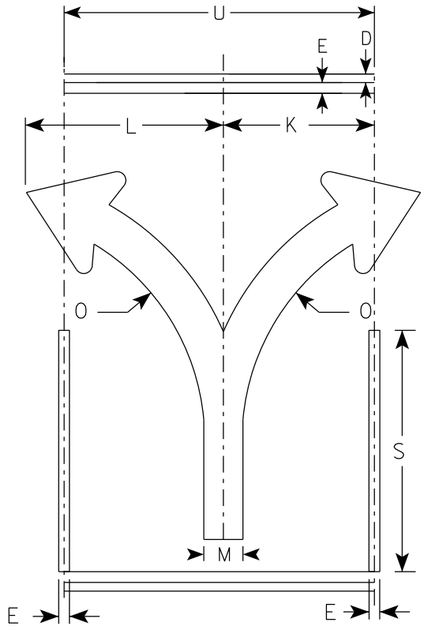

(C)

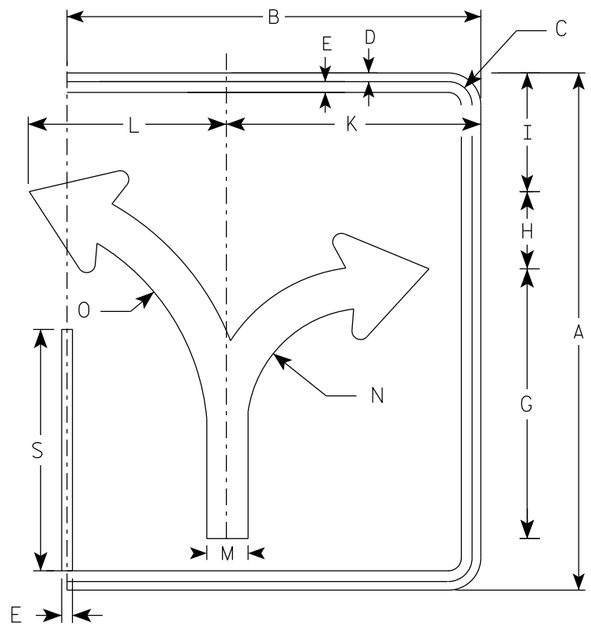

(C)

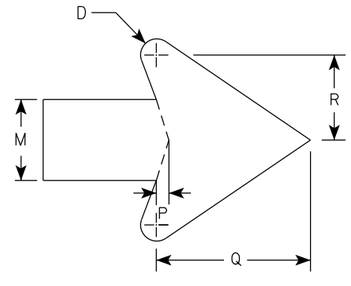

ARROW DETAIL

SIZE	A	B	C	D	E	F	G	H	I	J	K	L	M	N	O	P	Q	R	S	T	U	V	W	X	Y	Z	ENDS Area sq. ft.	MIDDLE Area sq. ft.
1																												
2S	30	24	1 3/8	1/2	5/8		15 5/8	4 1/2	6 7/8		14 3/4	11 1/2	2 3/8	7	13 1/4	3/8	4 1/2	2 1/2	14		18						5.0	3.75
2M	30	24	1 3/8	1/2	5/8		15 5/8	4 1/2	6 7/8		14 3/4	11 1/2	2 3/8	7	13 1/4	3/8	4 1/2	2 1/2	14		18						5.0	3.75
3	36	30	1 3/8	1/2	5/8		18 3/4	5 1/2	8 1/4		17 1/4	17 1/4	2 7/8	8 3/8	16	1/2	5 1/2	3	16 3/4		24						7.5	6.0
4	48	36	2 1/4	3/4	1		24 7/8	7 1/4	11		23 1/8	18	3 3/4	11 1/8	21 1/4	5/8	7 1/8	4	22 3/8		30						12.0	10.0
5	48	36	2 1/4	3/4	1		24 7/8	7 1/4	11		23 1/8	18	3 3/4	11 1/8	21 1/4	5/8	7 1/8	4	22 3/8		30						12.0	10.0

STANDARD SIGN
R3-8 (C) Arrow

WISCONSIN DEPT OF TRANSPORTATION

APPROVED Matthew R Rauch
for State Traffic Engineer

DATE 5/21/19 PLATE NO. R3-8.1

PROJECT NO: | HWY: | COUNTY: | SHEET NO: 769 | E

NOTES

1. Sign is Type II - Type H Reflective
2. Color:
   Background - White
   Message - Black
3. Message Series - None

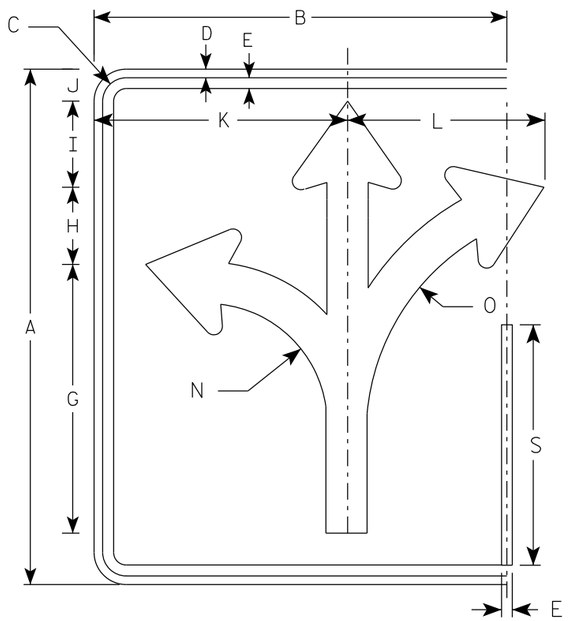

(D)

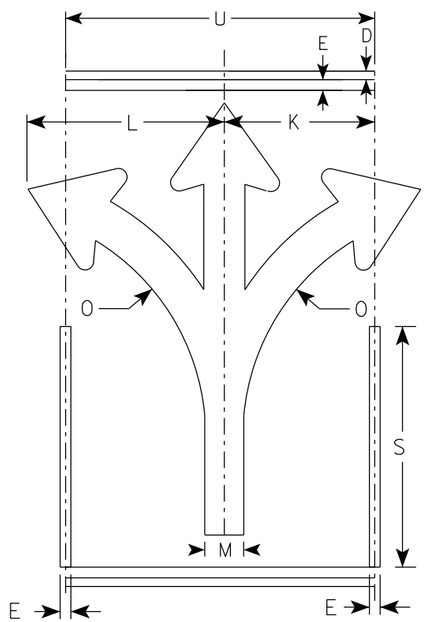

(D)

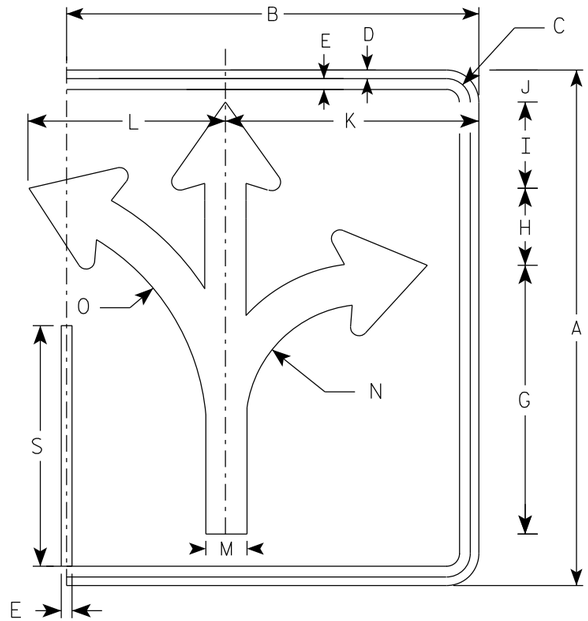

(D)

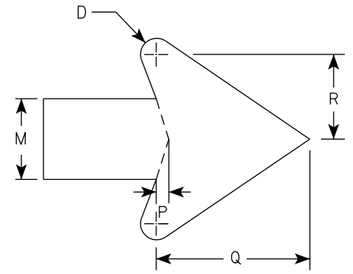

ARROW DETAIL

SIZE	A	B	C	D	E	F	G	H	I	J	K	L	M	N	O	P	Q	R	S	T	U	V	W	X	Y	Z	ENDS Area sq. ft.	MIDDLE Area sq. ft.
1																												
2S	30	24	1 3/8	1/2	5/8		15 5/8	4 1/2	5	1 7/8	14 3/4	11 1/2	2 3/8	7	13 1/4	3/8	4 1/2	2 1/2	14		18						5.0	3.75
2M	30	24	1 3/8	1/2	5/8		15 5/8	4 1/2	5	1 7/8	14 3/4	11 1/2	2 3/8	7	13 1/4	3/8	4 1/2	2 1/2	14		18						5.0	3.75
3	36	30	1 3/8	1/2	5/8		18 3/4	5 1/2	6	2 1/4	17 1/4	17 1/4	2 7/8	8 3/8	16	1/2	5 1/2	3	16 3/4		24						7.5	6.0
4	48	36	2 1/4	3/4	1		24 7/8	7 1/4	7 7/8	3 1/8	23 1/8	18	3 3/4	11 1/8	21 1/4	5/8	7 1/8	4	22 3/8		30						12.0	10.0
5	48	36	2 1/4	3/4	1		24 7/8	7 1/4	7 7/8	3 1/8	23 1/8	18	3 3/4	11 1/8	21 1/4	5/8	7 1/8	4	22 3/8		30						12.0	10.0

STANDARD SIGN
R3-8 (D) Arrow

WISCONSIN DEPT OF TRANSPORTATION

APPROVED Matthew R Rauch
for State Traffic Engineer

DATE 5/21/19 PLATE NO. R3-8.1

PROJECT NO: | HWY: | COUNTY: | SHEET NO: 770 | E

NOTES

1. Sign is Type II - Type H Reflective
2. Color:
   Background - White
   Message - Black
3. Message Series - None

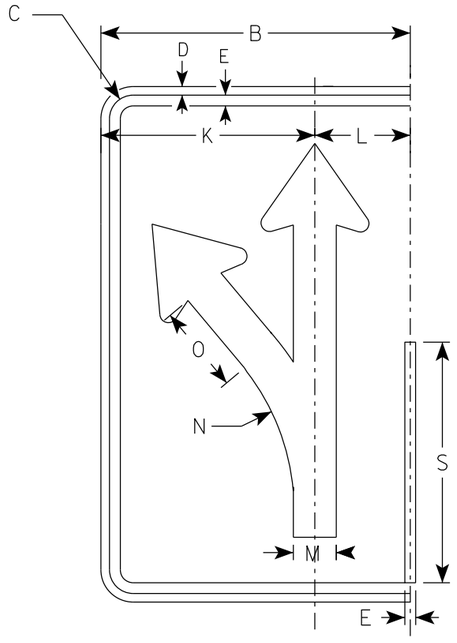

(E)

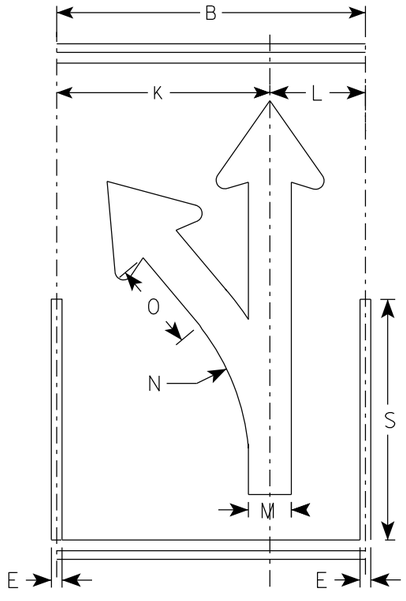

(E)

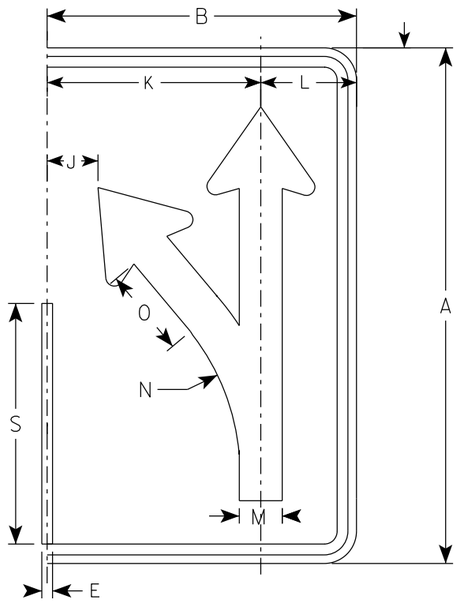

(E)

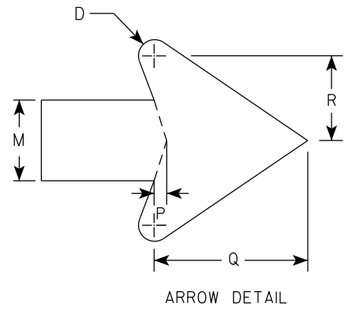

ARROW DETAIL

SIZE	A	B	C	D	E	F	G	H	I	J	K	L	M	N	O	P	Q	R	S	T	U	V	W	X	Y	Z	Area sq. ft.
1																											
2S	30	18	1 3/8	1/2	5/8		18 1/4	4 3/4	3 1/4	3	12 1/2	5 1/2	2 1/2	13 1/4	5 1/8	3/8	4 3/4	2 5/8	14								3.75
2M	30	18	1 3/8	1/2	5/8		18 1/4	4 3/4	3 1/4	3	12 1/2	5 1/2	2 1/2	13 1/4	5 1/8	3/8	4 3/4	2 5/8	14								3.75
3	36	24	1 3/8	1/2	5/8		21 7/8	5 5/8	4	4 7/8	16 1/8	7 3/4	3	15 7/8	6 1/8	1/2	5 3/4	3 1/8	16 3/4								6.0
4	48	30	2 1/4	3/4	1		29 1/8	7 1/2	5 1/4	5 3/8	20 1/2	9 1/2	4	21 1/4	8 1/4	5/8	7 5/8	4 1/4	22 3/8								10.0
5	48	30	2 1/4	3/4	1		29 1/8	7 1/2	5 1/4	5 3/8	20 1/2	9 1/2	4	21 1/4	8 1/4	5/8	7 5/8	4 1/4	22 3/8								10.0

STANDARD SIGN
R3-8 (E) Arrow

WISCONSIN DEPT OF TRANSPORTATION

APPROVED Matthew R Rauch
For State Traffic Engineer

DATE 5/21/19 PLATE NO. R3-8.1

PROJECT NO: | HWY: | COUNTY: | SHEET NO: 771 | E

NOTES

1. Sign is Type II - Type H Reflective
2. Color:
   Background - White
   Message - Black
3. Message Series - None

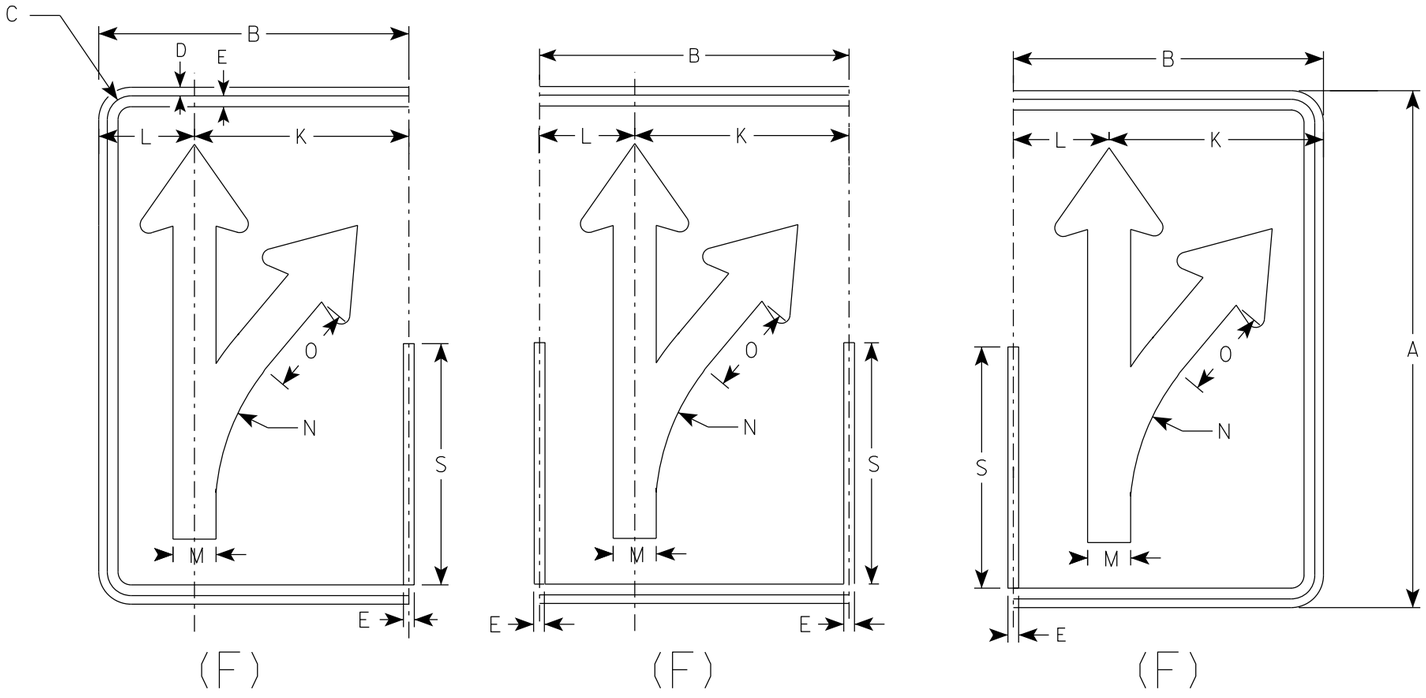

(F) (F) (F)

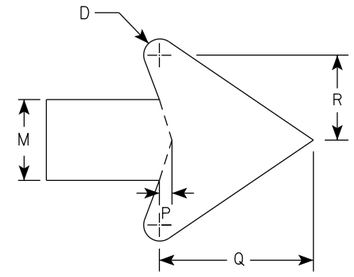

ARROW DETAIL

SIZE	A	B	C	D	E	F	G	H	I	J	K	L	M	N	O	P	Q	R	S	T	U	V	W	X	Y	Z	Area sq. ft.
1																											
2S	30	18	1 3/8	1/2	5/8		18 1/4	4 3/4	3 1/4	3	12 1/2	5 1/2	2 1/2	13 1/4	5 1/8	3/8	4 3/4	2 5/8	14								3.75
2M	30	18	1 3/8	1/2	5/8		18 1/4	4 3/4	3 1/4	3	12 1/2	5 1/2	2 1/2	13 1/4	5 1/8	3/8	4 3/4	2 5/8	14								3.75
3	36	24	1 3/8	1/2	5/8		21 7/8	5 5/8	4	4 7/8	16 1/8	7 3/4	3	15 7/8	6 1/8	1/2	5 3/4	3 1/8	16 3/4								6.0
4	48	30	2 1/4	3/4	1		29 1/8	7 1/2	5 1/4	5 3/8	20 1/2	9 1/2	4	21 1/4	8 1/4	5/8	7 5/8	4 1/4	22 3/8								10.0
5	48	30	2 1/4	3/4	1		29 1/8	7 1/2	5 1/4	5 3/8	20 1/2	9 1/2	4	21 1/4	8 1/4	5/8	7 5/8	4 1/4	22 3/8								10.0

STANDARD SIGN
R3-8 (F) Arrow

WISCONSIN DEPT OF TRANSPORTATION

APPROVED Matthew R Rauch
for State Traffic Engineer

DATE 5/21/19 PLATE NO. R3-8.1

PROJECT NO: | HWY: | COUNTY: | SHEET NO: 772 | E

NOTES

1. Sign is Type II - Type H Reflective
2. Color:
   Background - White
   Message - Black
3. Message Series - None

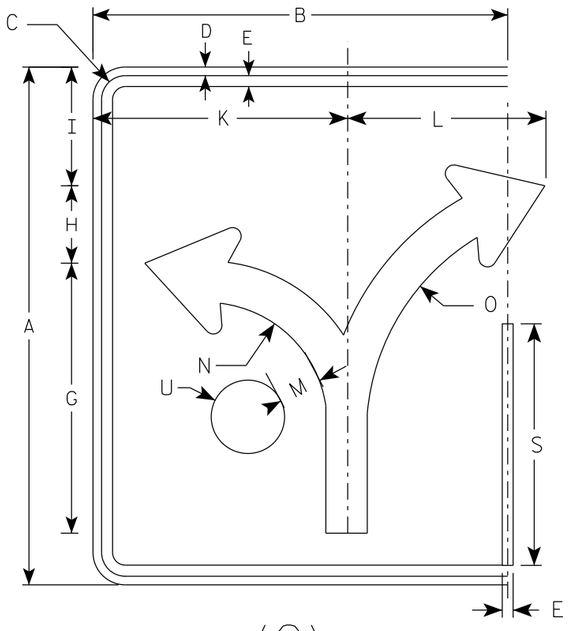

(G)

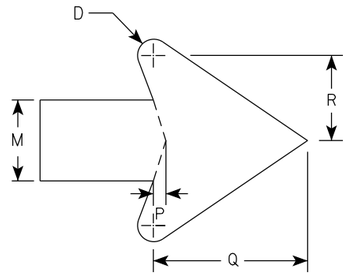

ARROW DETAIL

SIZE	A	B	C	D	E	F	G	H	I	J	K	L	M	N	O	P	Q	R	S	T	U	V	W	X	Y	Z	Area sq. ft.
1																											
2S	30	24	1 3/8	1/2	5/8		15 5/8	4 1/2	6 7/8		14 3/4	11 1/2	2 3/8	7	13 1/4	3/8	4 1/2	2 1/2	14		2 1/8						5.0
2M	30	24	1 3/8	1/2	5/8		15 5/8	4 1/2	6 7/8		14 3/4	11 1/2	2 3/8	7	13 1/4	3/8	4 1/2	2 1/2	14		2 1/8						5.0
3	36	30	1 3/8	1/2	5/8		18 3/4	5 1/2	8 1/4		17 1/4	17 1/4	2 7/8	8 3/8	16	1/2	5 1/2	3	16 3/4		2 1/2						7.5
4	48	36	2 1/4	3/4	1		24 7/8	7 1/4	11		23 1/8	18	3 3/4	11 1/8	21 1/4	5/8	7 1/8	4	22 3/8		3 3/8						12.0
5	48	36	2 1/4	3/4	1		24 7/8	7 1/4	11		23 1/8	18	3 3/4	11 1/8	21 1/4	5/8	7 1/8	4	22 3/8		3 3/8						12.0

STANDARD SIGN
R3-8 (G) Arrow

WISCONSIN DEPT OF TRANSPORTATION

APPROVED Matthew R Rauch
for State Traffic Engineer

DATE 5/21/19 PLATE NO. R3-8.1

PROJECT NO: | HWY: | COUNTY: | SHEET NO: 773 | E

FILE NAME : C:\CAEfiles\Projects\stdplate_R38.dgn PLOT DATE : 21-MAY 2019 4:38 PLOT BY : mscj9h PLOT NAME : PLOT SCALE : $$.....plotscale.....$$

NOTES

1. Sign is Type II - Type H Reflective
2. Color:
   Background - White
   Message - Black
3. Message Series - None

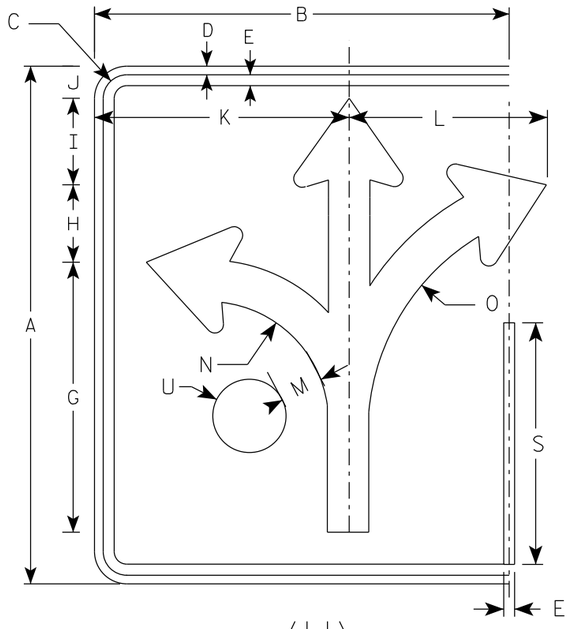

(H)

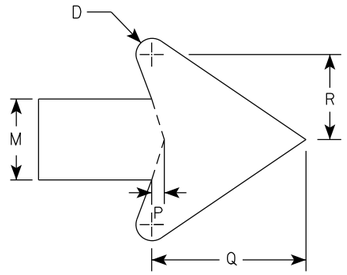

ARROW DETAIL

SIZE	A	B	C	D	E	F	G	H	I	J	K	L	M	N	O	P	Q	R	S	T	U	V	W	X	Y	Z	Area sq. ft.
1																											
2S	30	24	1 3/8	1/2	5/8		15 5/8	4 1/2	5	1 7/8	14 3/4	11 1/2	2 3/8	7	13 1/4	3/8	4 1/2	2 1/2	14		2 1/8						5.0
2M	30	24	1 3/8	1/2	5/8		15 5/8	4 1/2	5	1 7/8	14 3/4	11 1/2	2 3/8	7	13 1/4	3/8	4 1/2	2 1/2	14		2 1/8						5.0
3	36	30	1 3/8	1/2	5/8		18 3/4	5 1/2	6	3 1/8	17 1/4	17 1/4	2 7/8	8 3/8	16	1/2	5 1/2	3	16 3/4		2 1/2						7.5
4	48	36	2 1/4	3/4	1		24 7/8	7 1/4	7 7/8	3 1/8	23 1/8	18	3 3/4	11 1/8	21 1/4	5/8	7 1/8	4	22 3/8		3 3/8						12.0
5	48	36	2 1/4	3/4	1		24 7/8	7 1/4	7 7/8	3 1/8	23 1/8	18	3 3/4	11 1/8	21 1/4	5/8	7 1/8	4	22 3/8		3 3/8						12.0

STANDARD SIGN
R3-8 (H) Arrow

WISCONSIN DEPT OF TRANSPORTATION

APPROVED Matthew R Rauch
for State Traffic Engineer

DATE 5/21/19 PLATE NO. R3-8.1

PROJECT NO:	HWY:	COUNTY:		SHEET NO: 774	E

NOTES

1. Sign is Type II - Type H Reflective
2. Color:
   Background - White
   Message - Black
3. Message Series - None

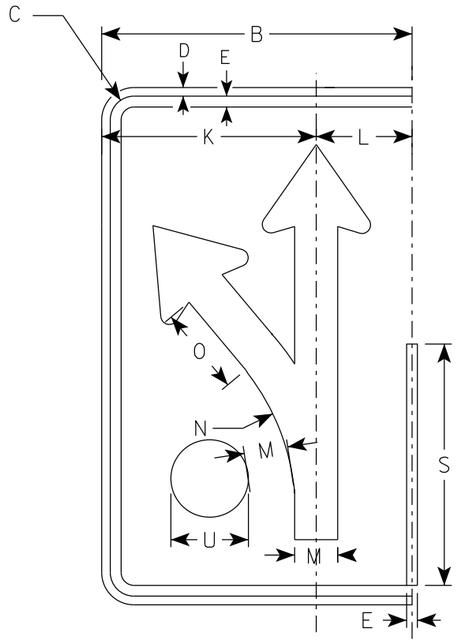

(I)

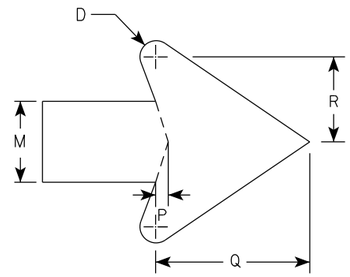

ARROW DETAIL

SIZE	A	B	C	D	E	F	G	H	I	J	K	L	M	N	O	P	Q	R	S	T	U	V	W	X	Y	Z	Area sq. ft.
1																											
2S	30	18	1 3/8	1/2	5/8		18 1/4	4 3/4	3 1/4	3	12 1/2	5 1/2	2 1/2	13 1/4	5 1/8	3/8	4 3/4	2 5/8	14		2 1/8						3.75
2M	30	18	1 3/8	1/2	5/8		18 1/4	4 3/4	3 1/4	3	12 1/2	5 1/2	2 1/2	13 1/4	5 1/8	3/8	4 3/4	2 5/8	14		2 1/8						3.75
3	36	24	1 3/8	1/2	5/8		21 7/8	5 5/8	4	4 7/8	16 1/8	7 3/4	3	15 7/8	6 1/8	1/2	5 3/4	3 1/8	16 3/4		2 1/2						6.0
4	48	30	2 1/4	3/4	1		29 1/8	7 1/2	5 1/4	5 3/8	20 1/2	9 1/2	4	21 1/4	8 1/4	5/8	7 5/8	4 1/4	22 3/8		3 3/8						10.0
5	48	30	2 1/4	3/4	1		29 1/8	7 1/2	5 1/4	5 3/8	20 1/2	9 1/2	4	21 1/4	8 1/4	5/8	7 5/8	4 1/4	22 3/8		3 3/8						10.0

STANDARD SIGN
R3-8 (I) Arrow

WISCONSIN DEPT OF TRANSPORTATION

APPROVED Matthew R Rauch
For State Traffic Engineer

DATE 5/21/19 PLATE NO. R3-8.1

PROJECT NO: | HWY: | COUNTY: | SHEET NO: 775 | E

NOTES

1. Sign is Type II - Type H Reflective
2. Color:
   Background - White
   Message - Black
3. Message Series - D

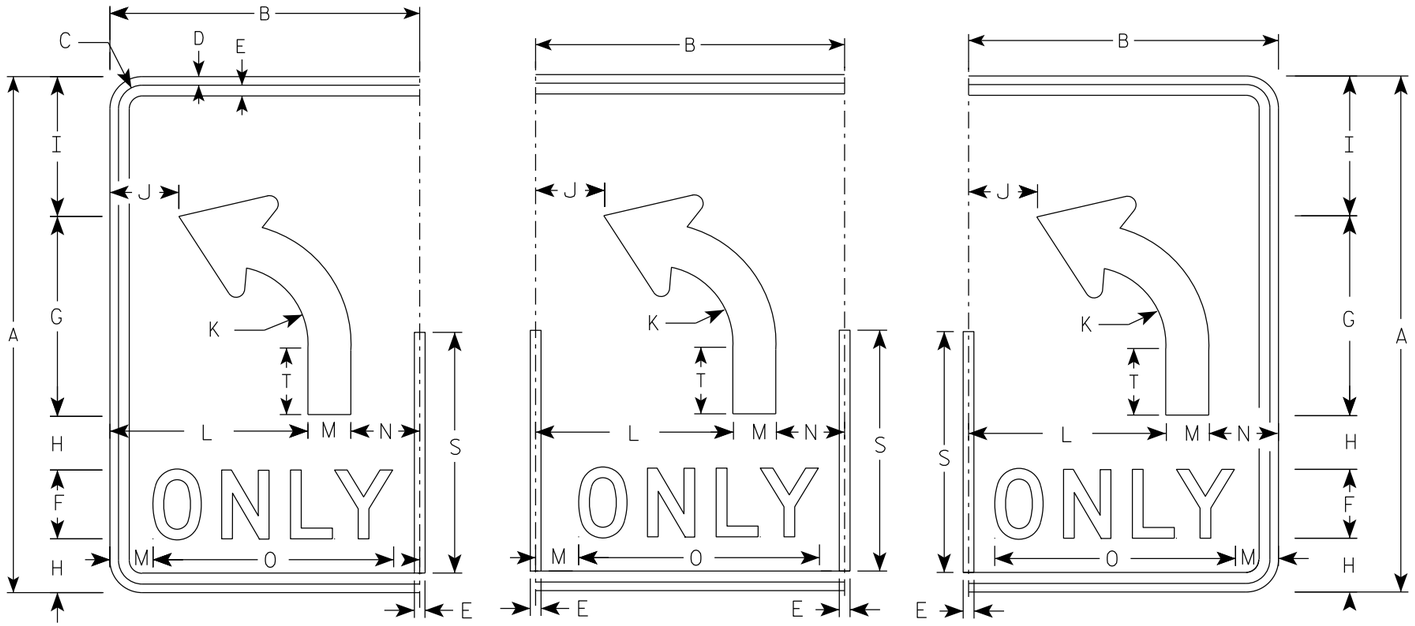

(L) (L) (L)

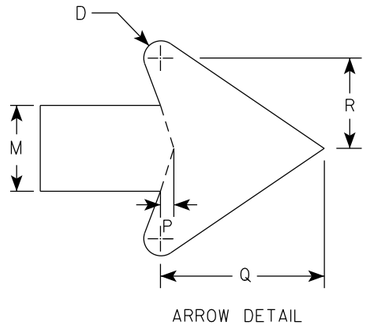

ARROW DETAIL

SIZE	A	B	C	D	E	F	G	H	I	J	K	L	M	N	O	P	Q	R	S	T	U	V	W	X	Y	Z	Area sq. ft.
1																											
2S	30	18	1 3/8	1/2	5/8	4	11 5/8	3 1/8	8 1/8	4	4 1/2	11 1/2	2 1/2	4	14	3/8	4 3/4	2 5/8	14	3 7/8							3.75
2M	30	18	1 3/8	1/2	5/8	4	11 5/8	3 1/8	8 1/8	4	4 1/2	11 1/2	2 1/2	4	14	3/8	4 3/4	2 5/8	14	3 7/8							3.75
3	36	24	1 3/8	1/2	5/8	5	14	3 1/2	9 3/4		5 3/8	15	3	6	17 5/8	1/2	5 3/4	3 1/8	16 3/4	4 5/8							6.0
4	48	30	2 1/4	3/4	1	6	18 5/8	5 1/8	13 1/8	6 1/8	7 1/4	18	4	8	21 3/4	5/8	7 5/8	4 1/4	22 3/8	6 1/4							10.0
5	48	30	2 1/4	3/4	1	6	18 5/8	5 1/8	13 1/8	6 1/8	7 1/4	18	4	8	21 3/4	5/8	7 5/8	4 1/4	22 3/8	6 1/4							10.0

STANDARD SIGN

R3-8 (L) Arrow

WISCONSIN DEPT OF TRANSPORTATION

APPROVED Matthew R Rauch
for State Traffic Engineer

DATE 5/21/19 PLATE NO. R3-8.1

PROJECT NO:

SHEET NO: 776 E

NOTES

1. Sign is Type II - Type H Reflective
2. Color:
   Background - White
   Message - Black
3. Message Series - D

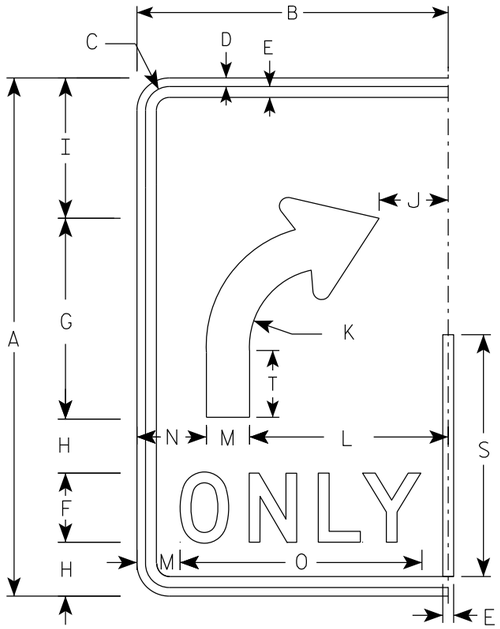

(R)

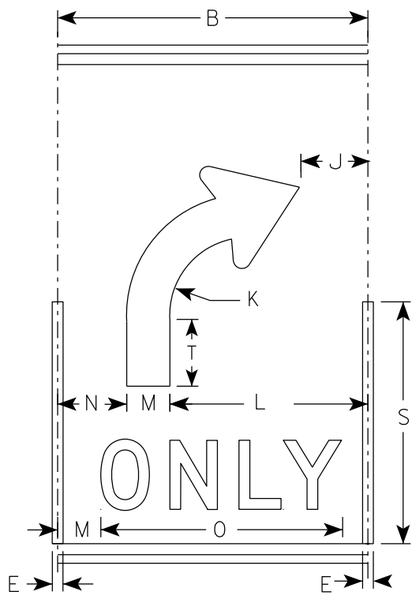

(R)

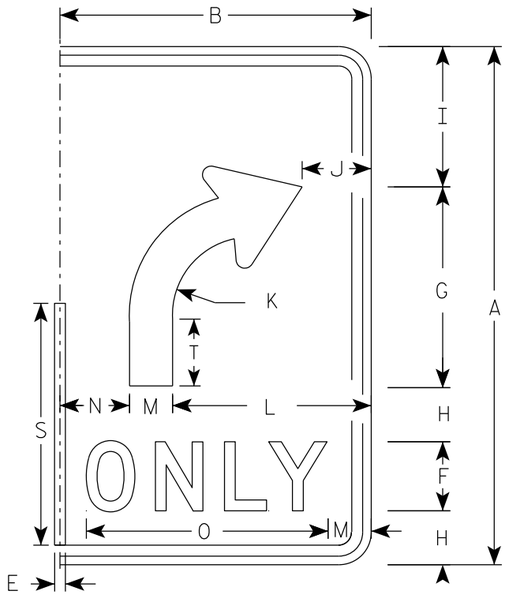

(R)

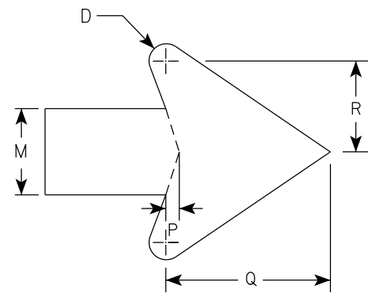

ARROW DETAIL

SIZE	A	B	C	D	E	F	G	H	I	J	K	L	M	N	O	P	Q	R	S	T	U	V	W	X	Y	Z	Area sq. ft.
1																											
2S	30	18	1 3/8	1/2	5/8	4	11 5/8	3 1/8	8 1/8	4	4 1/2	11 1/2	2 1/2	4	14	3/8	4 3/4	2 5/8	14	3 7/8							3.75
2M	30	18	1 3/8	1/2	5/8	4	11 5/8	3 1/8	8 1/8	4	4 1/2	11 1/2	2 1/2	4	14	3/8	4 3/4	2 5/8	14	3 7/8							3.75
3	36	24	1 3/8	1/2	5/8	5	14	3 1/2	9 3/4	6	5 3/8	15	3	6	17 5/8	1/2	5 3/4	3 1/8	16 3/4	4 5/8							6.0
4	48	30	2 1/4	3/4	1	6	18 5/8	5 1/8	13 1/8	6 1/8	7 1/4	18	4	8	21 3/4	5/8	7 5/8	4 1/4	22 3/8	6 1/4							10.0
5	48	30	2 1/4	3/4	1	6	18 5/8	5 1/8	13 1/8	6 1/8	7 1/4	18	4	8	21 3/4	5/8	7 5/8	4 1/4	22 3/8	6 1/4							10.0

STANDARD SIGN
R3-8 (R) Arrow

WISCONSIN DEPT OF TRANSPORTATION

APPROVED Matthew R Rauch
for State Traffic Engineer

DATE 5/21/19 PLATE NO. R3-8.1

PROJECT NO:

SHEET NO: 777 **E**

NOTES

1. Sign is Type II - Type H Reflective
2. Color:
   Background - White
   Message - Black
3. Message Series - None

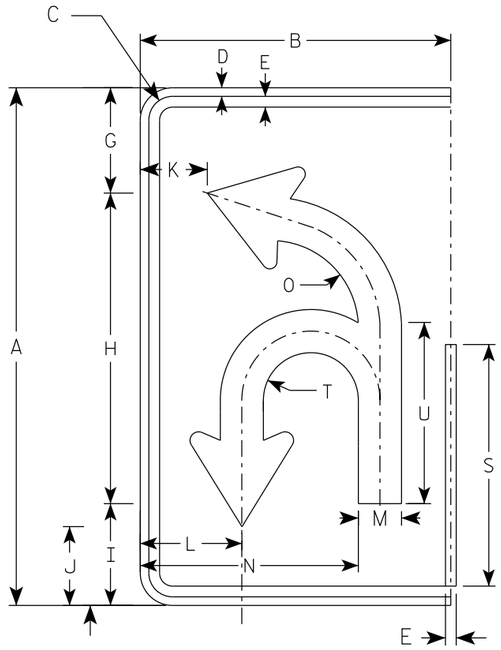

(U)

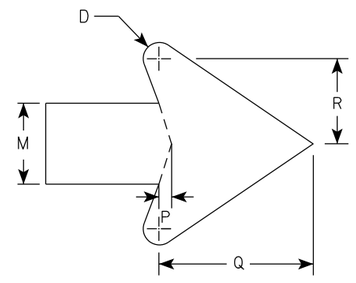

ARROW DETAIL

SIZE	A	B	C	D	E	F	G	H	I	J	K	L	M	N	O	P	Q	R	S	T	U	V	W	X	Y	Z	Area sq. ft.
1																											
2S	30	18	1 3/8	1/2	5/8		6 1/8	18	5 7/8	4 5/8	3 7/8	5 7/8	2 1/2	12 5/8	5 1/8	3/8	4 3/4	2 5/8	14	2 3/4	10 1/2						3.75
2M	30	18	1 3/8	1/2	5/8		6 1/8	18	5 7/8	4 5/8	3 7/8	5 7/8	2 1/2	12 5/8	5 1/8	3/8	4 3/4	2 5/8	14	2 3/4	10 1/2						3.75
3	36	24	1 3/8	1/2	5/8		21 7/8	21 5/8	7 1/8	5 1/2	5 7/8	8 1/4	3	16 3/8	6 1/8	1/2	5 3/4	3 1/8	16 3/4	3 1/4	12 5/8						6.0
4	48	30	2 1/4	3/4	1		29 1/8	28 3/4	9 3/8	7 1/4	6 7/8	10	4	20 7/8	8 1/8	5/8	7 5/8	4 1/4	22 3/8	4 3/8	16 3/4						10.0
5	48	30	2 1/4	3/4	1		29 1/8	28 3/4	9 3/8	7 1/4	6 7/8	10	4	20 7/8	8 1/8	5/8	7 5/8	4 1/4	22 3/8	4 3/8	16 3/4						10.0

STANDARD SIGN
R3-8 (U) Arrow

WISCONSIN DEPT OF TRANSPORTATION

APPROVED Matthew R Rauch
for State Traffic Engineer

DATE 5/21/19 PLATE NO. R3-8.1

PROJECT NO: | HWY: | COUNTY: | SHEET NO: 778 | E

7

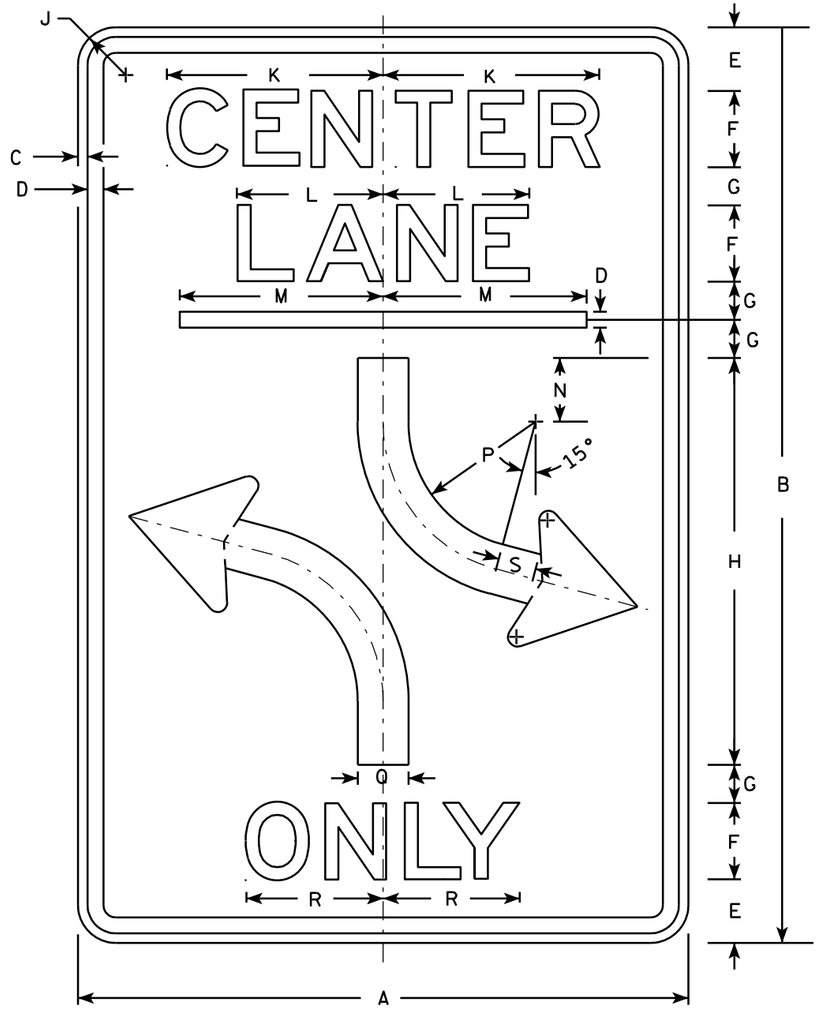

R3-9B

NOTES

1. Sign is Type II - Type H Reflective - reference WIS DOT Standard Specification for HIGHWAY and STRUCTURE CONSTRUCTION latest edition.
2. Color:
   Background - White
   Message - Black
3. Message Series - E
4. Corners may be square or rounded when base material is plywood but borders shall be rounded as shown. When base material is metal, the corners and borders shall be rounded.

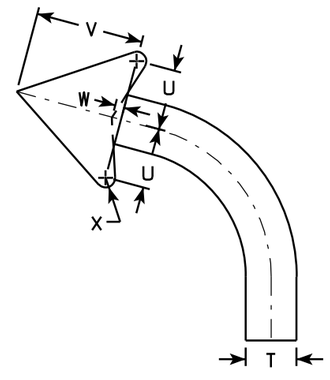

ARROW DETAIL

SIZE	A	B	C	D	E	F	G	H	I	J	K	L	M	N	O	P	Q	R	S	T	U	V	W	X	Y	Z	Area sq. ft.
1																											
2S	24	36	3/8	1/2	2 1/2	3	1 1/2	16		1 1/2	8 1/2	5 3/4	8	2 1/2		6	2	5 1/8	1 1/2		2 3/8	4 3/8	3/8				6.0
2M	24	36	3/8	1/2	2 1/2	3	1 1/2	16		1 1/2	8 1/2	5 3/4	8	2 1/2		6	2	5 1/8	1 1/2		2 3/8	4 3/8	3/8				6.0
3	36	48	5/8	7/8	3 1/2	5	1 1/2	20		2 1/4	14 1/8	9 1/2	12	3		4	3	9 7/8	2		3 1/2	6 1/8	1/2				12.0
4																											
5																											

STANDARD SIGN
R3-9B

WISCONSIN DEPT OF TRANSPORTATION

APPROVED Matthew R Rauch
for State Traffic Engineer

DATE 3/24/2011 PLATE NO. R3-9B.5

PROJECT NO: | HWY: | COUNTY: | SHEET NO: 779 | E

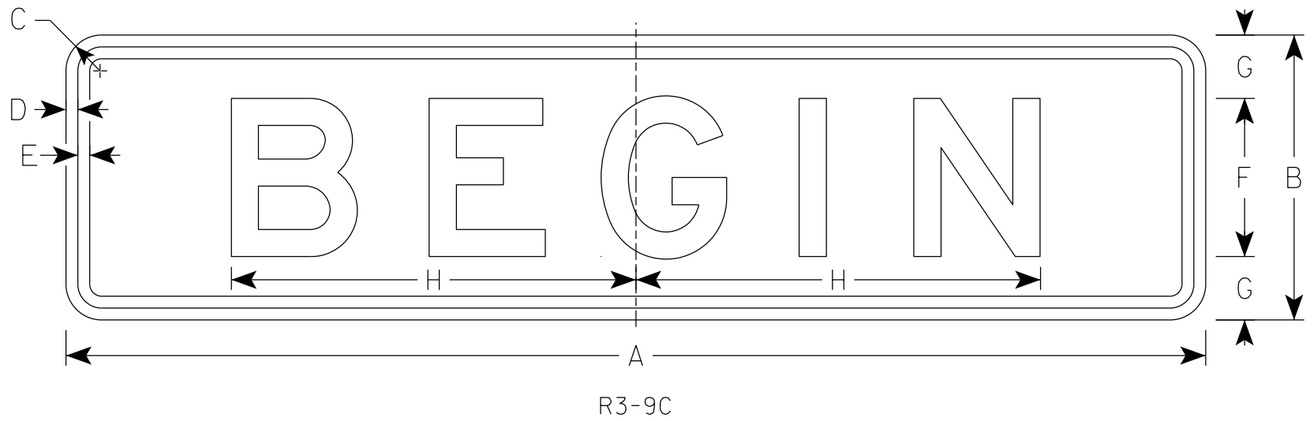

R3-9C

NOTES

1. Sign is Type II - Type H Reflective
2. Color:
   Background - White
   Message - Black
3. Message Series - E

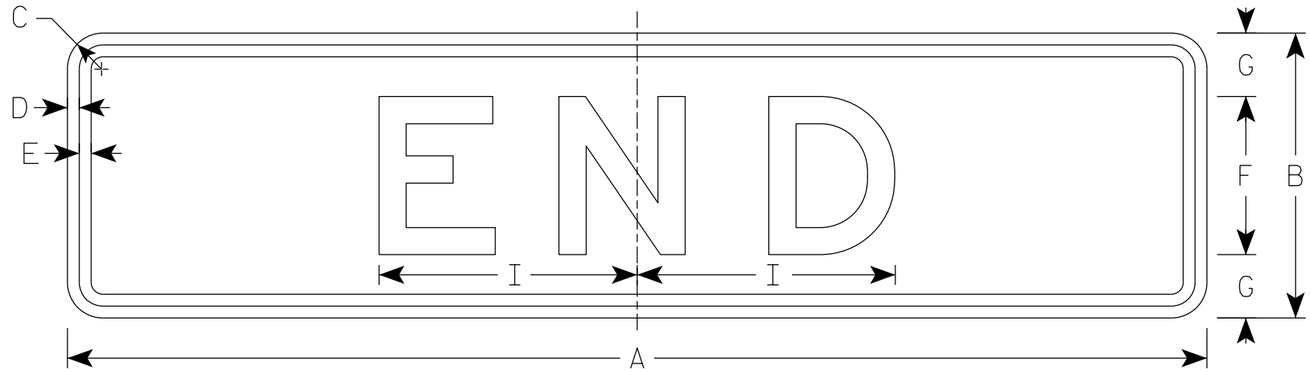

R3-9D

SIZE	A	B	C	D	E	F	G	H	I	J	K	L	M	N	O	P	Q	R	S	T	U	V	W	X	Y	Z	Area sq. ft.
1																											
2S	24	6	1 1/8	3/8	3/8	3	1 1/2	7 3/4	4 7/8																		1.0
2M	24	6	1 1/8	3/8	3/8	3	1 1/2	7 3/4	4 7/8																		1.0
3	36	9	1 1/8	3/8	3/8	5	2	12 3/4	8 1/8																		2.25
4																											
5																											

STANDARD SIGN
R3-9C & R3-9D

WISCONSIN DEPT OF TRANSPORTATION

APPROVED Matthew R Rauch
for State Traffic Engineer

DATE 3/31/2021 PLATE NO. R3-9C.3

PROJECT NO: | HWY: | COUNTY: | SHEET NO: E

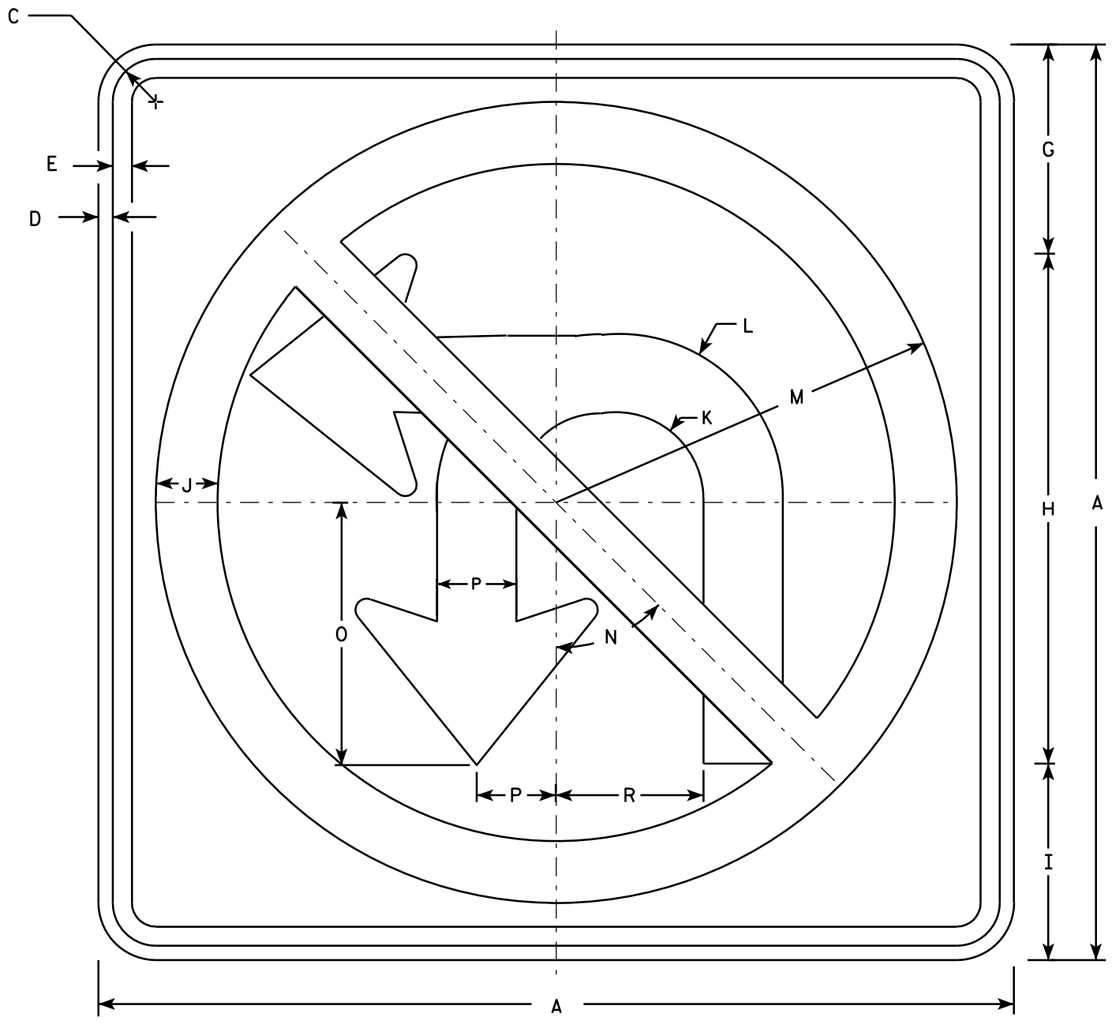

R3-18

NOTES

1. Sign is Type II - Type H Reflective - reference WIS DOT Standard Specification for HIGHWAY and STRUCTURE CONSTRUCTION latest edition.
2. Color:
   Background - White
   Message - See note 4
3. Corners may be square or rounded when base material is plywood but borders shall be rounded as shown. When base material is metal, the corners and borders shall be rounded.
4. Border & Arrow are non reflective black, the circle with diagonal bar is reflective red.

SIZE	A	B	C	D	E	F	G	H	I	J	K	L	M	N	O	P	Q	R	S	T	U	V	W	X	Y	Z	Area sq. ft.
1																											
2S	24		1 1/8	3/8	1/2		5 1/2	13 3/8	5 1/8	1 5/8	2 1/4	4 1/4	10 1/2	45°	6 7/8	2 1/8		3 7/8									4.0
2M	36		1 5/8	5/8	3/4		8 1/4	20	7 3/4	2 1/2	3 3/8	6 1/2	15 3/4	45°	10 3/8	3 1/8		5 3/4									9.0
3	36		1 5/8	5/8	3/4		8 1/4	20	7 3/4	2 1/2	3 3/8	6 1/2	15 3/4	45	10 3/8	3 1/8		5 3/4									9.0
4	36		1 5/8	5/8	3/4		8 1/4	20	7 3/4	2 1/2	3 3/8	6 1/2	15 3/4	45	10 3/8	3 1/8		5 3/4									9.0
5	48		2 1/4	3/4	1		11	26 3/4	10 1/4	3 1/4	4 5/8	8 5/8	21	45°	13 3/4	4 1/8		7 3/4									16.0

STANDARD SIGN
R3-18

WISCONSIN DEPT OF TRANSPORTATION

APPROVED Matthew R Rauch
for State Traffic Engineer

DATE 11/21/10 PLATE NO. R3-18.2

PROJECT NO:	HWY:	COUNTY:		SHEET NO: 781	E

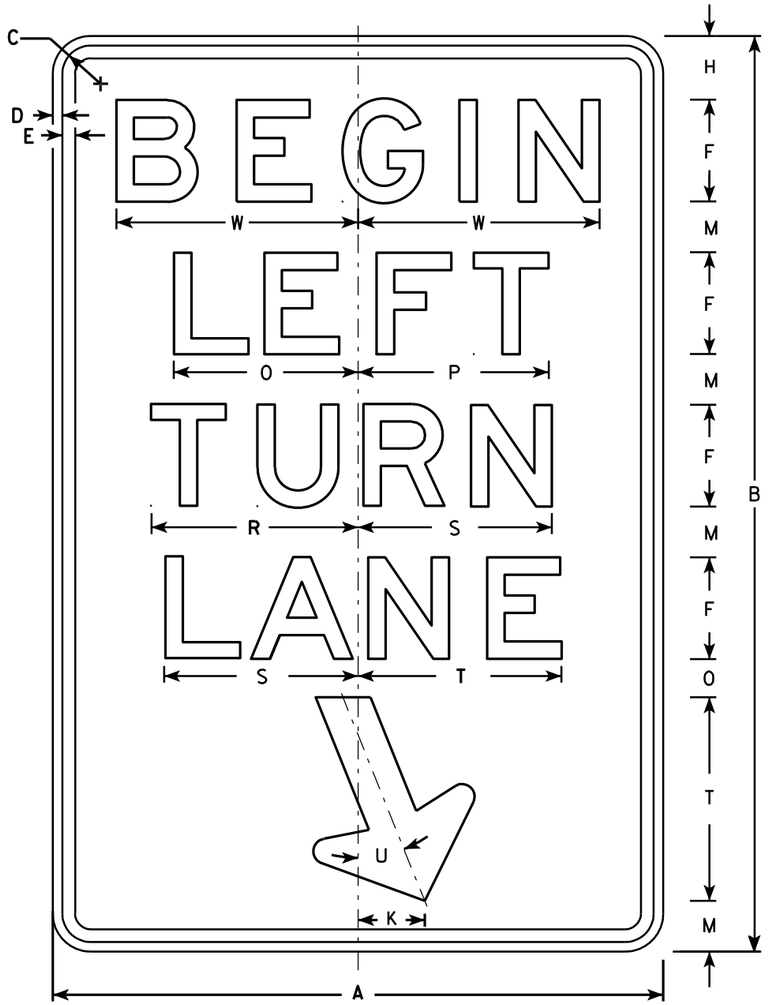

R3-20L

NOTES

1. Sign is Type II - Type H Reflective - reference WIS DOT Standard Specification for HIGHWAY and STRUCTURE CONSTRUCTION latest edition.
2. Color:
   Background - White
   Message - Black
3. Message Series - E
4. Corners may be square or rounded when base material is plywood but borders shall be rounded as shown. When base material is metal, the corners and borders shall be rounded.

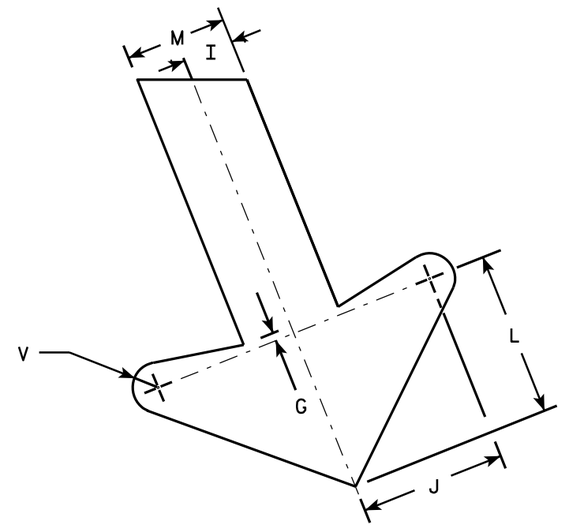

ARROW DETAIL

SIZE	A	B	C	D	E	F	G	H	I	J	K	L	M	N	O	P	Q	R	S	T	U	V	W	X	Y	Z	Area sq. ft.
1																											
2S	24	36	1 1/8	3/8	1/2	4	1/4	2 1/2	1	2 7/8	2 5/8	3 1/4	2	1 1/2	7 1/4	7 1/2		8 1/8	7 5/8	8	22°	1/2	9 1/2				6.0
2M	24	36	1 1/8	3/8	1/2	4	1/4	2 1/2	1	2 7/8	2 5/8	3 1/4	2	1 1/2	7 1/4	7 1/2		8 1/8	7 5/8	8	22°	1/2	9 1/2				6.0
3	36	54	1 3/4	1/2	5/8	6	3/8	3 3/4	1 1/2	4 1/4	4	4 7/8	3	2 1/4	10 7/8	11 1/4		12 1/4	11 1/2	12	22°	3/4	13 1/4				13.5
4																											
5																											

STANDARD SIGN
R3-20L

WISCONSIN DEPT OF TRANSPORTATION

APPROVED Matthew R Rauch
for State Traffic Engineer

DATE 10/18/10 PLATE NO. R3-20L.7

PROJECT NO: | HWY: | COUNTY: | SHEET NO: 782 | E

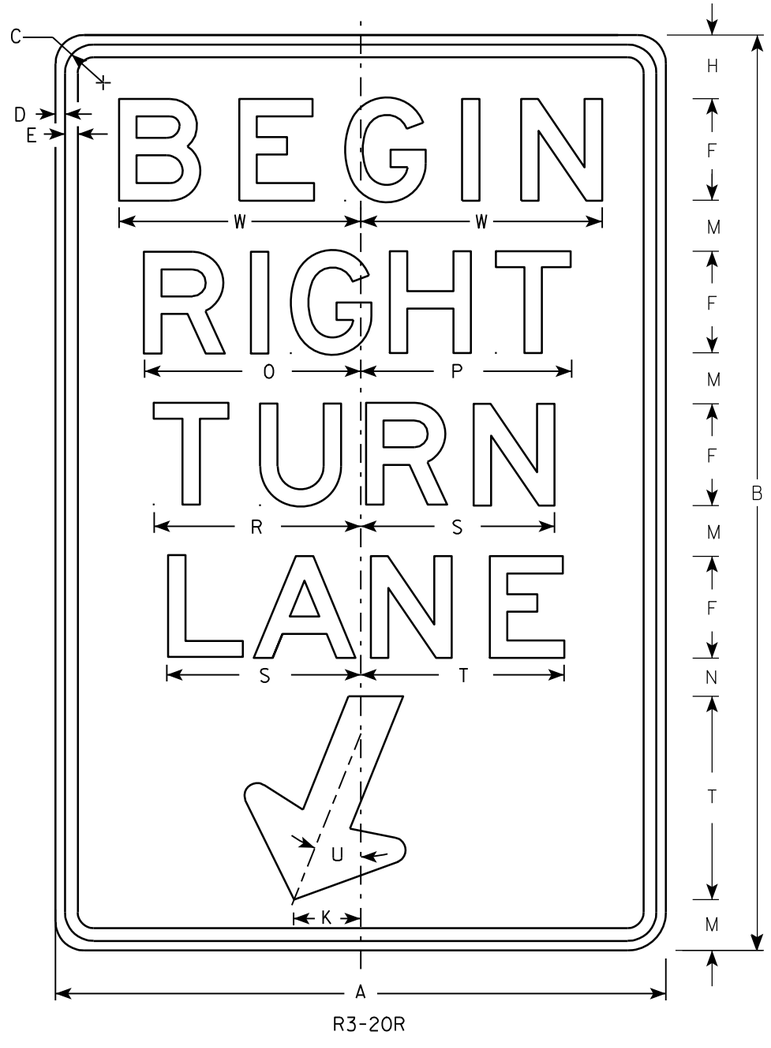

R3-20R

NOTES

1. Sign is Type II - Type H Reflective - reference WIS DOT Standard Specification for HIGHWAY and STRUCTURE CONSTRUCTION latest edition.
2. Color:
   Background - White
   Message - Black
3. Message Series - E
4. Corners may be square or rounded when base material is plywood but borders shall be rounded as shown. When base material is metal, the corners and borders shall be rounded.

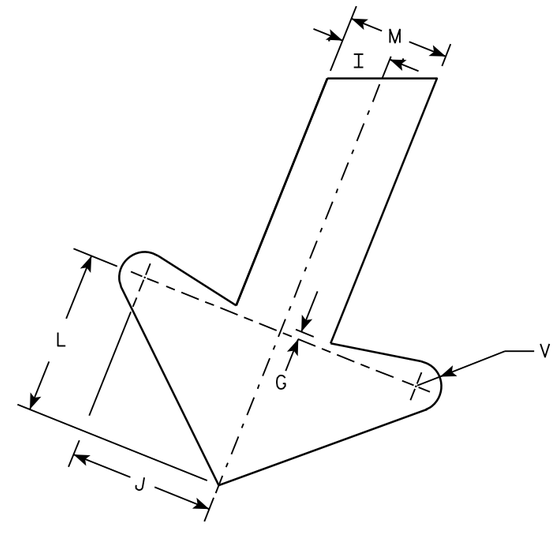

ARROW DETAIL

SIZE	A	B	C	D	E	F	G	H	I	J	K	L	M	N	O	P	Q	R	S	T	U	V	W	X	Y	Z	Area sq. ft.
1																											
2S	24	36	1 1/8	3/8	1/2	4	1/4	2 1/2	1	2 7/8	2 5/8	3 1/4	2	1 1/2	8 1/2	8 1/4		8 1/8	7 5/8	8	22°	1/2	9 1/2				6.0
2M	24	36	1 1/8	3/8	1/2	4	1/4	2 1/2	1	2 7/8	2 5/8	3 1/4	2	1 1/2	8 1/2	8 1/4		8 1/8	7 5/8	8	22°	1/2	9 1/2				6.0
3	36	54	1 3/4	1/2	5/8	6	3/8	3 3/4	1 1/2	4 1/4	4	4 7/8	3	2 1/4	12 3/4	12 1/2		12 1/4	11 1/2	12	22°	3/4	13 1/4				13.5
4																											
5																											

STANDARD SIGN
R3-20R

WISCONSIN DEPT OF TRANSPORTATION

APPROVED Matthew R Rauch
for State Traffic Engineer

DATE 10/18/10 PLATE NO. R3-20R.6

PROJECT NO: | HWY: | COUNTY: | SHEET NO: 783 | E

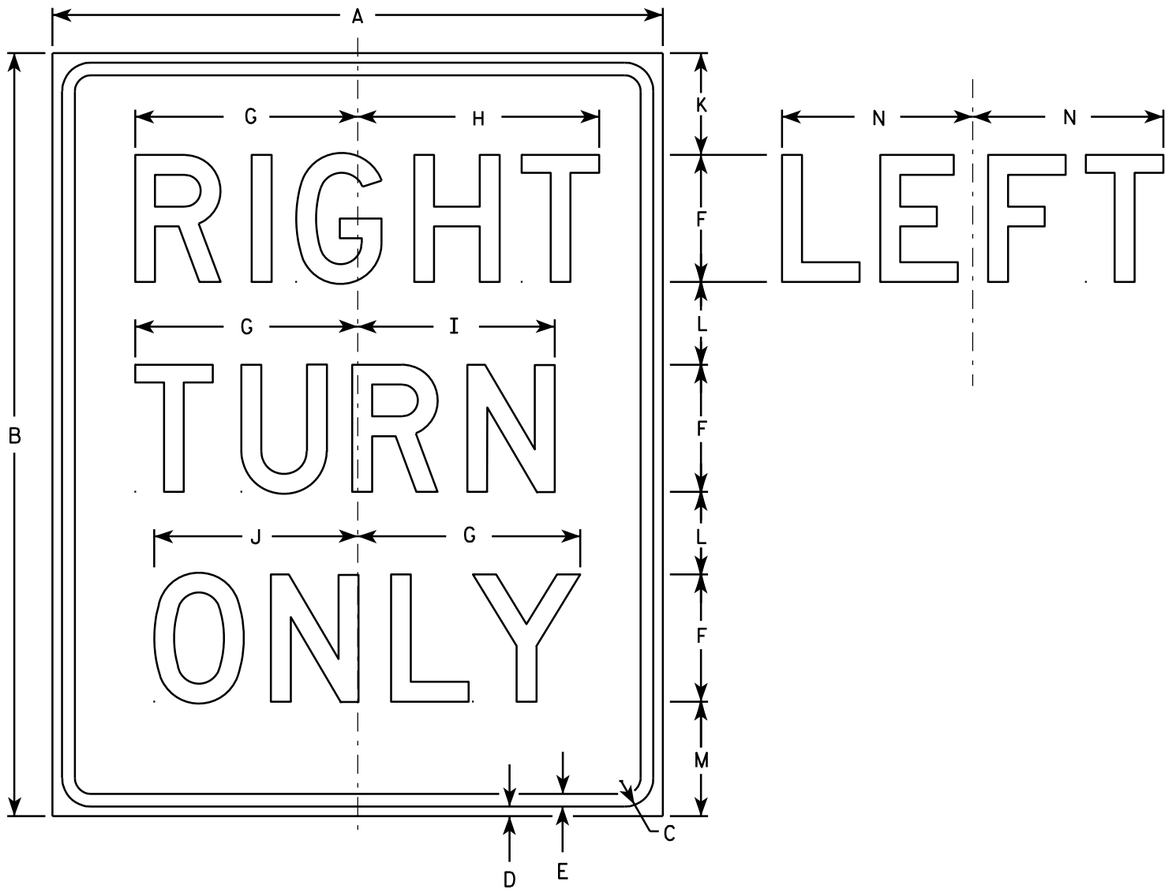

R3-53R

NOTES

1. Sign is Type II - Type H Reflective - reference WIS DOT Standard Specification for HIGHWAY and STRUCTURE CONSTRUCTION latest edition.
2. Color:
   Background - White
   Message - Black
3. Message Series - D
4. Corners may be square or rounded when base material is plywood but borders shall be rounded as shown. When base material is metal, the corners and borders shall be rounded.
5. R3-53L same as R3-53R except LEFT is substituted for RIGHT.

SIZE	A	B	C	D	E	F	G	H	I	J	K	L	M	N	O	P	Q	R	S	T	U	V	W	X	Y	Z	Area sq. ft.
1																											
2S	24	30	1 1/8	3/8	1/2	5	8 3/4	9 1/2	7 3/4	8	4	3 1/4	4 1/2	7 1/2													5.0
2M	24	30	1 1/8	3/8	1/2	5	8 3/4	9 1/2	7 3/4	8	4	3 1/4	4 1/2	7 1/2													5.0
3	24	30	1 1/8	3/8	1/2	5	8 3/4	9 1/2	7 3/4	8	4	3 1/4	4 1/2	7 1/2													5.0
4																											
5																											

STANDARD SIGN
R3-53

WISCONSIN DEPT OF TRANSPORTATION

APPROVED Matthew R Rauch
for State Traffic Engineer
DATE 3/24/2011 PLATE NO. R3-53.8

PROJECT NO: | HWY: | COUNTY: | SHEET NO: 784 | E

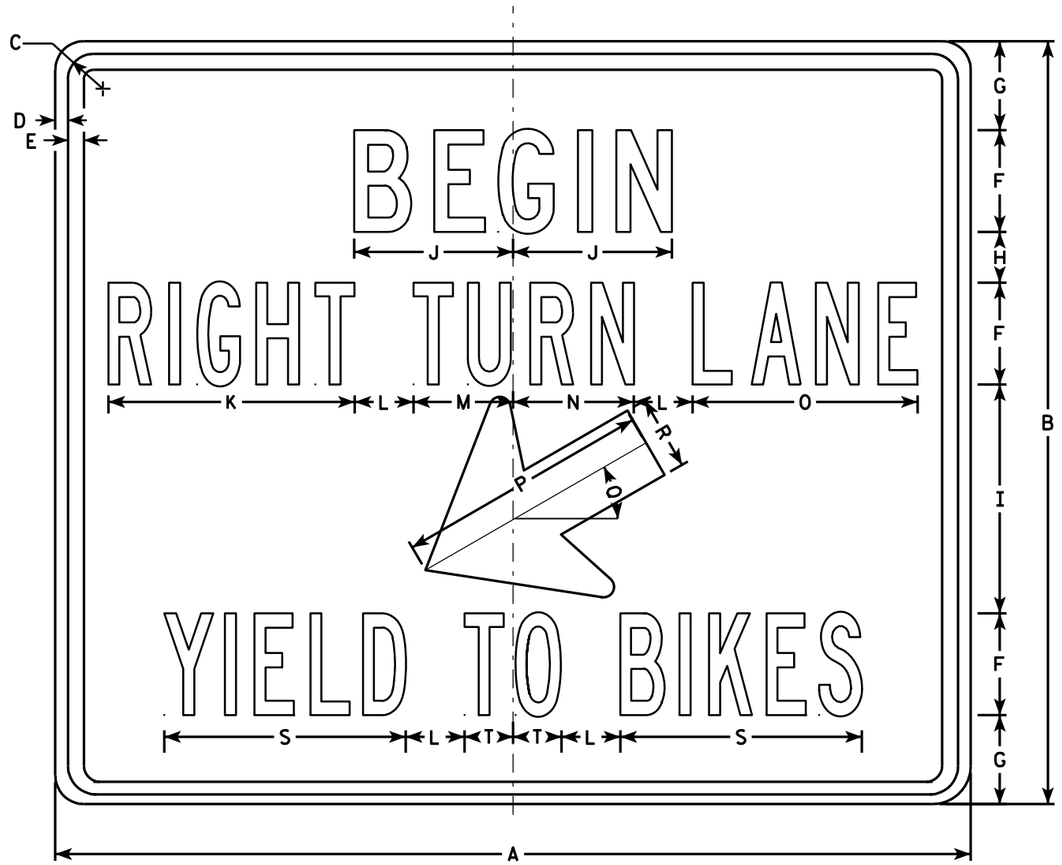

R4-4

NOTES

1. Sign is Type II - Type H Reflective - reference WIS DOT Standard Specification for HIGHWAY and STRUCTURE CONSTRUCTION latest edition.
2. Color:
   Background - White
   Message - Black
3. Message Series - See Note 5
4. Corners may be square or rounded when base material is plywood but borders shall be rounded as shown. When base material is metal, the corners and borders shall be rounded.
5. Line 1 is Series C
   Lines 2 & 3 are Series B

SIZE	A	B	C	D	E	F	G	H	I	J	K	L	M	N	O	P	Q	R	S	T	U	V	W	X	Y	Z	Area sq. ft.
1																											
2S	36	30	1 3/8	1/2	5/8	4	3 1/2	2	9	6 1/4	9 3/4	2 3/8	3 7/8	4 3/4	8 7/8	10	30°	2 7/8	9 1/2	1 7/8							7.5
2M	36	30	1 3/8	1/2	5/8	4	3 1/2	2	9	6 1/4	9 3/4	2 3/8	3 7/8	4 3/4	8 7/8	10	30°	2 7/8	9 1/2	1 7/8							7.5
3																											
4																											
5																											

STANDARD SIGN
R4-4

WISCONSIN DEPT OF TRANSPORTATION

APPROVED Matthew R Rauch
for State Traffic Engineer

DATE 3/25/2011 PLATE NO. R4-4.2

PROJECT NO: | HWY: | COUNTY: | SHEET NO: 785 | E

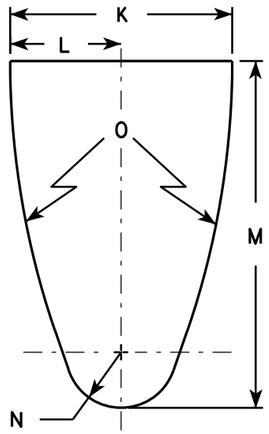

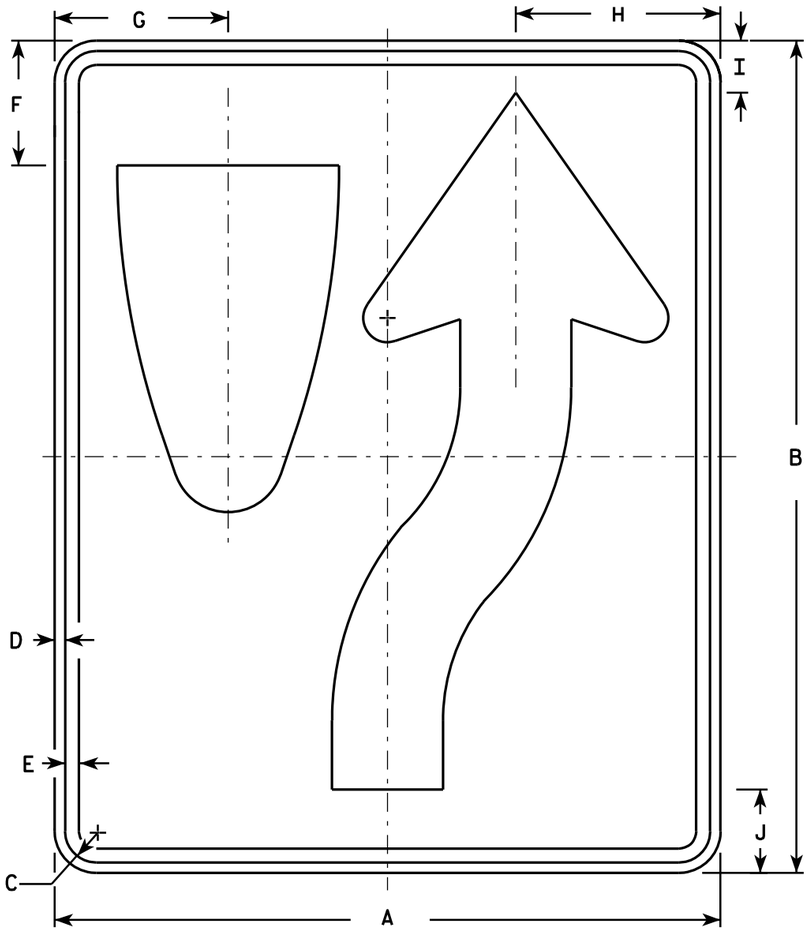

R4-7

NOTES

1. Sign is Type II - Type H Reflective - reference WIS DOT Standard Specification for HIGHWAY and STRUCTURE CONSTRUCTION latest edition. material is plywood but borders shall be rounded
2. Color:
   Background - White
   Message - Black
3. Corners may be square or rounded when base as shown. When base material is metal, the corners and borders shall be rounded.
4. R4-8 is the same as R4-7 except Legend is reversed.

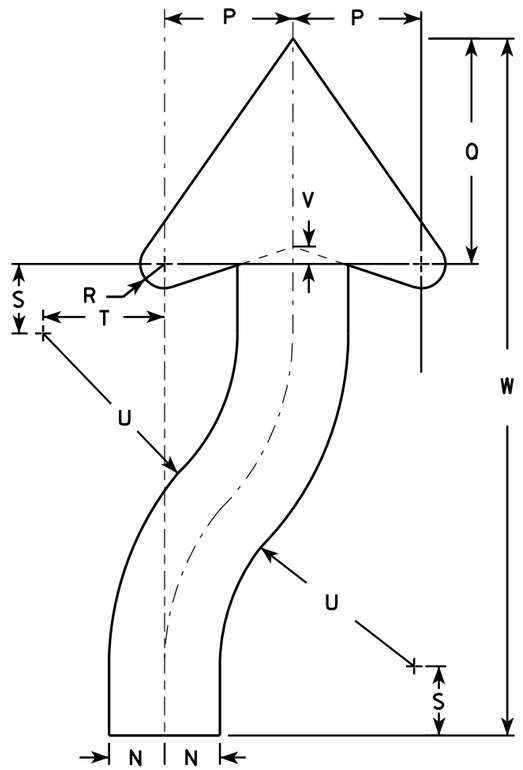

ARROW DETAIL

SIZE	A	B	C	D	E	F	G	H	I	J	K	L	M	N	O	P	Q	R	S	T	U	V	W	X	Y	Z	Area sq. ft.
1	18	24	1 1/8	3/8	1/2	3 3/8	4 3/4	5 1/2	1 3/8	2 1/4	6	3	9 3/8	1 1/2	22 1/2	3 1/2	6 1/8	5/8	1 7/8	3 1/4	6 3/4	1/2	20 3/8				3.0
2S	24	30	1 1/8	3/8	1/2	4 1/2	6 1/4	7 3/8	1 7/8	3	8	4	12 1/2	2	30	4 5/8	8 1/8	7/8	2 1/2	4 3/8	9	5/8	25 1/8				5.0
2M	24	30	1 1/8	3/8	1/2	4 1/2	6 1/4	7 3/8	1 7/8	3	8	4	12 1/2	2	30	4 5/8	8 1/8	7/8	2 1/2	4 3/8	9	5/8	25 1/8				5.0
3	36	48	1 3/4	1/2	5/8	6 3/4	9 3/8	11 1/8	2 7/8	4 1/2	12	6	18 3/4	3	45	6 7/8	12 1/4	1 1/4	3 3/4	6 5/8	13 1/2	1	40 3/4				12.0
4	36	48	1 3/4	1/2	5/8	6 3/4	9 3/8	11 1/8	2 7/8	4 1/2	12	6	18 3/4	3	45	6 7/8	12 1/4	1 1/4	3 3/4	6 5/8	13 1/2	1	40 3/4				12.0
5	48	60	2 1/4	3/4	1	9	12 1/2	14 3/4	3 3/4	6	16	8	25	4	60	9 1/4	16 1/4	1 5/8	5	8 3/4	18	1 1/4	50 1/4				20.0

STANDARD SIGN
R4-7 & R4-8

WISCONSIN DEPT OF TRANSPORTATION

APPROVED Matthew R Rauch for State Traffic Engineer

DATE 3/25/2011 PLATE NO. R4-7.8

PROJECT NO:	HWY:	COUNTY:		SHEET NO: 786	E

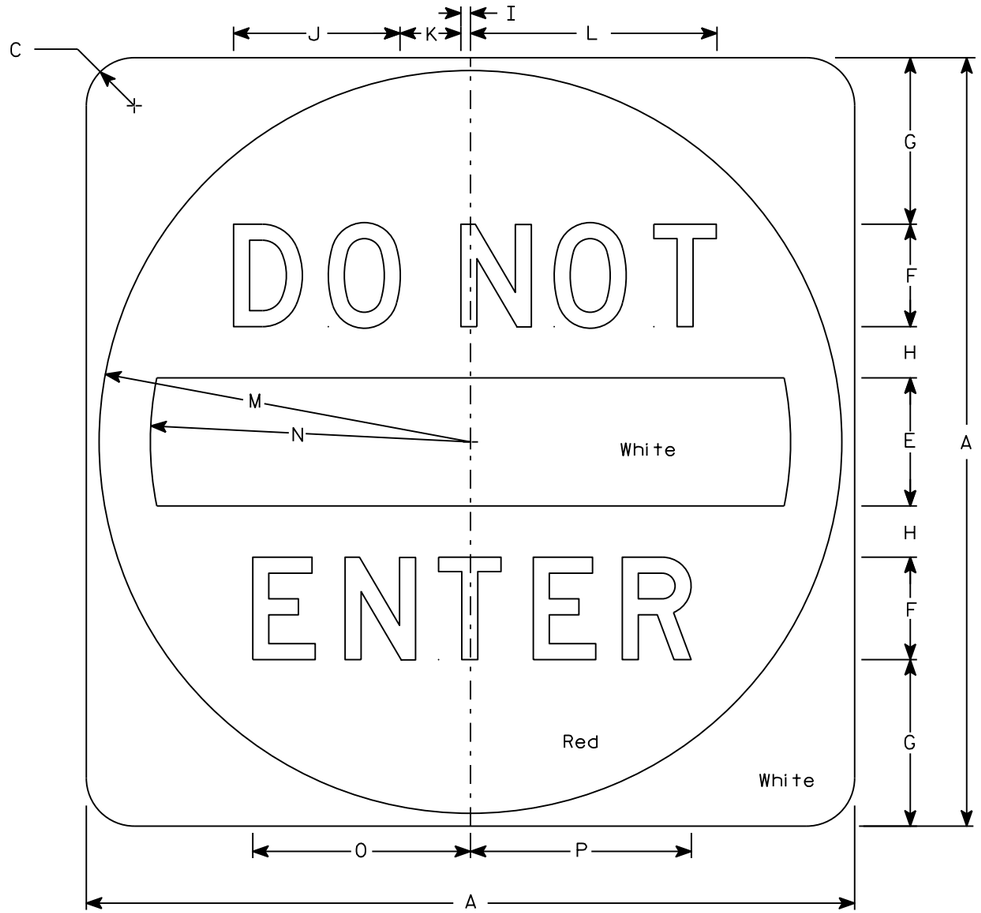

R5-1

NOTES

1. Sign is Type II - Type H Reflective
2. Color:
   Background - See detail
   Message - White
3. Message Series - D

SIZE	A	B	C	D	E	F	G	H	I	J	K	L	M	N	O	P	Q	R	S	T	U	V	W	X	Y	Z	Area sq. ft.
1																											
2S	30		1 7/8		5	4	6 1/2	2	3/8	6 1/2	2 3/8	9 5/8	14 1/2	12 1/2	8 1/2	8 5/8											6.25
2M	36		2 1/4		6	5	7 1/2	2 1/2	1/2	8 1/8	3	12 1/8	17 1/2	15	10 5/8	10 3/4											9.0
3	36		2 1/4		6	5	7 1/2	2 1/2	1/2	8 1/8	3	12 1/8	17 1/2	15	10 5/8	10 3/4											9.0
4	36		2 1/4		6	5	7 1/2	2 1/2	1/2	8 1/8	3	12 1/8	17 1/2	15	10 5/8	10 3/4											9.0
5	48		3		8	6	11	3	5/8	9 3/4	3 5/8	14 1/2	23 1/2	20	12 3/4	12 7/8											16.0

STANDARD SIGN
R5-1

WISCONSIN DEPT OF TRANSPORTATION

APPROVED Matthew R Rauch
for State Traffic Engineer

DATE 3/15/18 PLATE NO. R5-1.16

PROJECT NO: | HWY: | COUNTY: | SHEET NO: 787 | E

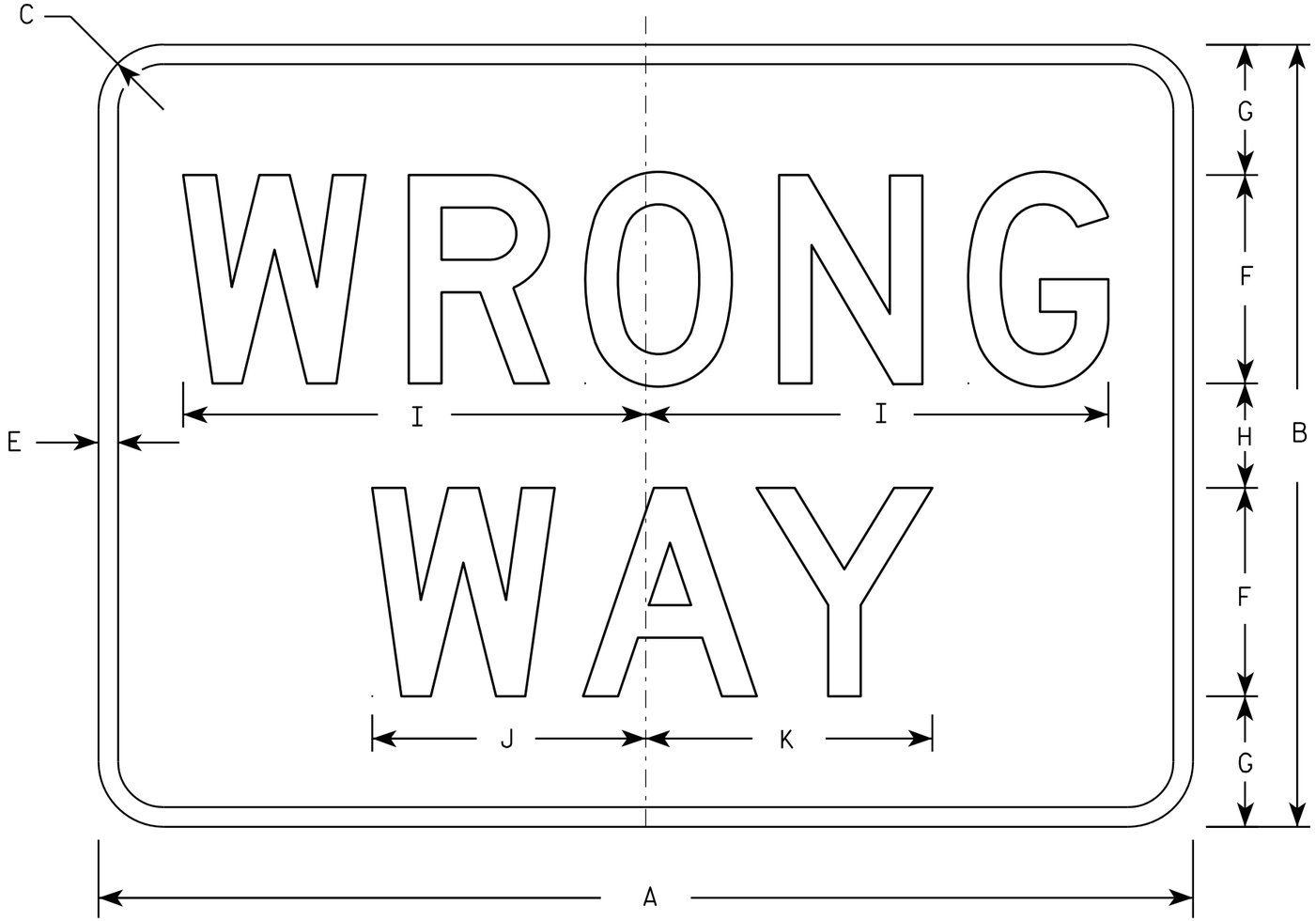

R5-1A

NOTES

1. Sign is Type II - Type H Reflective - reference WIS DOT Standard Specification for HIGHWAY and STRUCTURE CONSTRUCTION latest edition.
2. Color:
   Background - Red
   Message - White
3. Message Series - D
4. Corners may be square or rounded when base material is plywood but borders shall be rounded as shown. When base material is metal, the corners and borders shall be rounded.

SIZE	A	B	C	D	E	F	G	H	I	J	K	L	M	N	O	P	Q	R	S	T	U	V	W	X	Y	Z	Area sq. ft.
1	30	18	1 1/2		1/2	5	3	2	11	6 1/2	6 7/8																3.75
2S	36	24	2		5/8	6	4 1/2	3	13 1/4	7 7/8	8 1/4																6.00
2M	42	30	2 1/2		3/4	8	5	4	17 3/4	10 1/2	11																8.75
3	42	30	2 1/2		3/4	8	5	4	17 3/4	10 1/2	11																8.75
4	42	30	2 1/2		3/4	8	5	4	17 3/4	10 1/2	11																8.75
5	42	30	2 1/2		3/4	8	5	4	17 3/4	10 1/2	11																8.75

STANDARD SIGN
R5-1A

WISCONSIN DEPT OF TRANSPORTATION

APPROVED Matthew R Rauch
for State Traffic Engineer

DATE 12/17/10 PLATE NO. R5-1A.2

PROJECT NO:	HWY:	COUNTY:		SHEET NO: 788	E

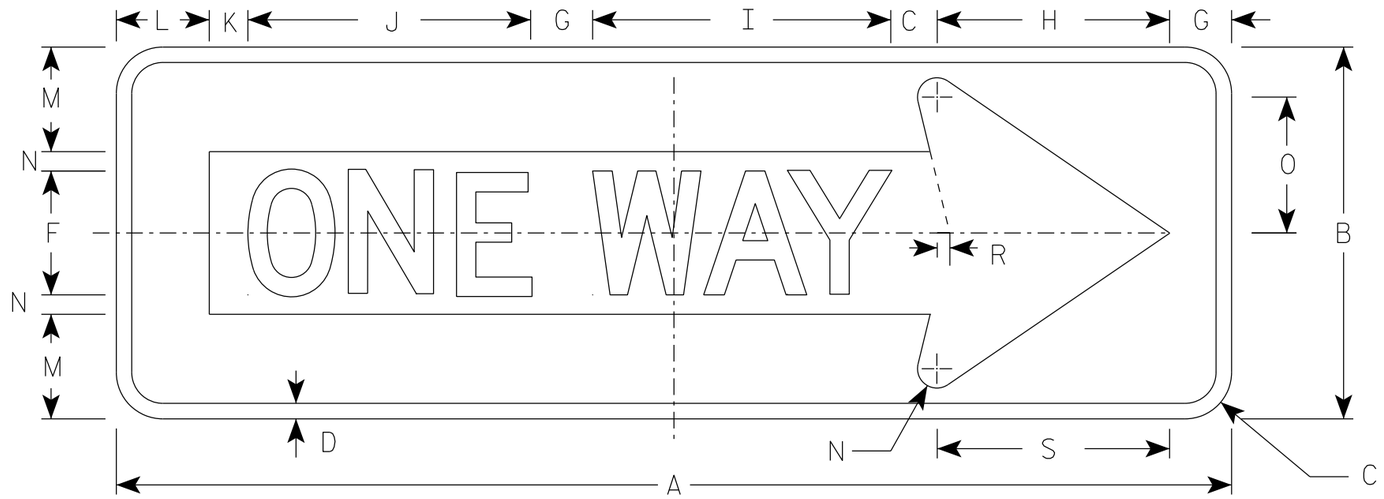

R6-1R

NOTES

1. Sign is Type II - Type H Reflective
2. Color:
   Background - BLACK
   Message - BLACK LEGEND & WHITE ARROW & BORDER
3. Message Series - D

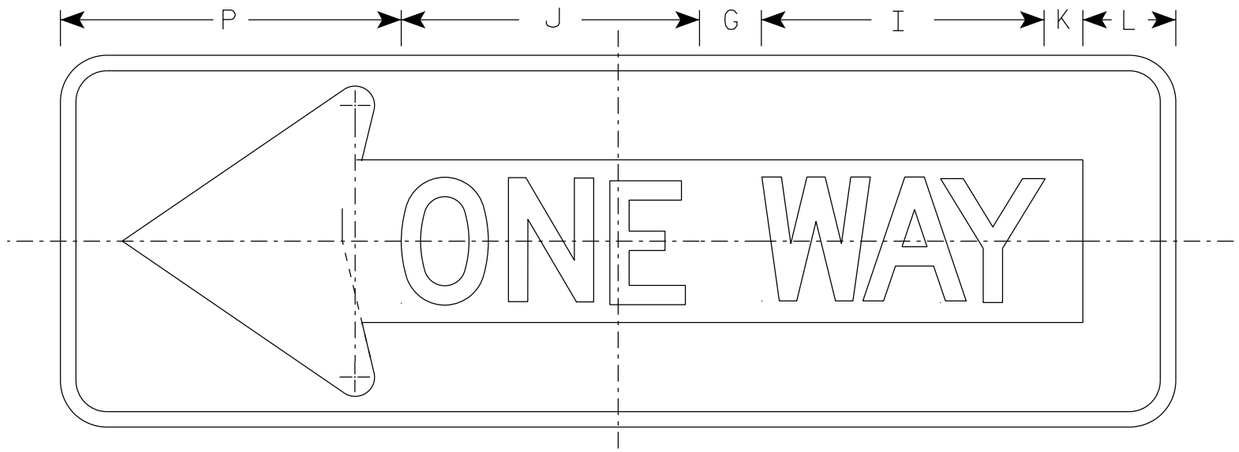

R6-1L

SIZE	A	B	C	D	E	F	G	H	I	J	K	L	M	N	O	P	Q	R	S	T	U	V	W	X	Y	Z	Area sq. ft.
1																											
2S	36	12	1 1/2	1/2		4	2	7 1/2	9 5/8	9 1/8	1 1/4	3	3 3/8	5/8	4 3/8	11		3/8	7 1/2								3.0
2M	54	18	2 1/4	3/4		6	3	11 1/4	13 5/8	14 1/2	1 7/8	4 1/2	5	1	6 1/2	16 1/2		5/8	11 1/4								6.75
3	54	18	2 1/4	3/4		6	3	11 1/4	13 5/8	14 1/2	1 7/8	4 1/2	5	1	6 1/2	16 1/2		5/8	11 1/4								6.75
4	54	18	2 1/4	3/4		6	3	11 1/4	13 5/8	14 1/2	1 7/8	4 1/2	5	1	6 1/2	16 1/2		5/8	11 1/4								6.75
5																											

STANDARD SIGN
R6-1 L & R

WISCONSIN DEPT OF TRANSPORTATION

APPROVED Matthew R Rauch
for State Traffic Engineer

DATE 07/11/18 PLATE NO. R6-1.3

PROJECT NO:

SHEET NO: 789 E

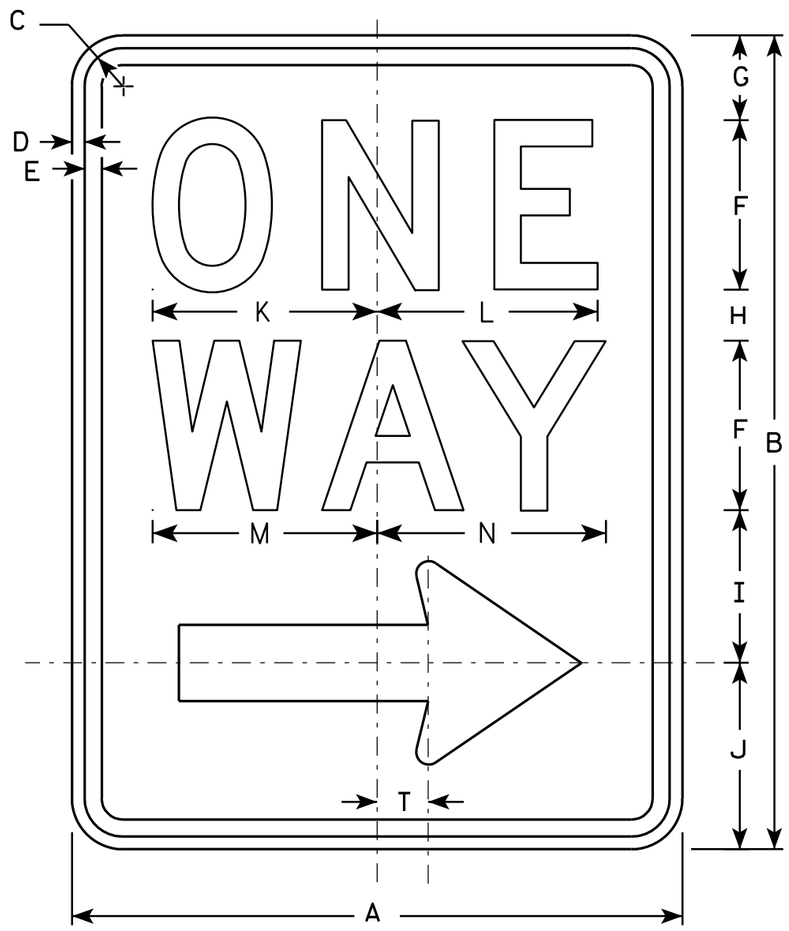

R6-2R

NOTES

1. Sign is Type II - Type H Reflective - reference WIS DOT Standard Specification for HIGHWAY and STRUCTURE CONSTRUCTION latest edition.
2. Color:
   Background - White
   Message - Black
3. Message Series - D
4. Corners may be square or rounded when base material is plywood but borders shall be rounded as shown. When base material is metal, the corners and borders shall be rounded.
5. R6-2L same as R6-2R except arrow points to the left.

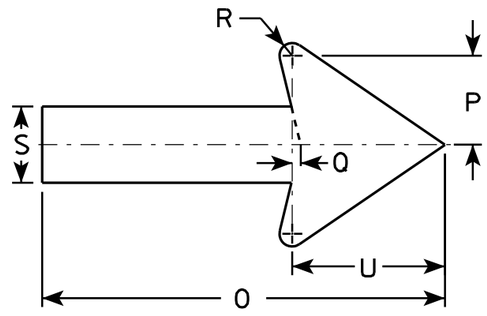

SIZE	A	B	C	D	E	F	G	H	I	J	K	L	M	N	O	P	O	R	S	T	U	V	W	X	Y	Z
1	18	24	1 1/8	3/8	1/2	5	2 1/2	1 1/2	4 1/2	5 1/2	6 5/8	6 1/2	6 5/8	6 3/4	11 7/8	2 5/8	1/4	3/8	2 1/4	1 1/2	4 1/2					
2S	24	30	1 1/8	3/8	1/2	6	3	2 1/2	5 1/2	7	8 1/8	8 1/8	8 1/2	8 5/8	16	3 1/2	3/8	1/2	3	2	6					
2M	30	36	1 3/8	1/2	5/8	8	2 1/2	2 5/8	6 7/8	8	10 1/2	10 1/2	11 1/4	11 1/4	20	4 3/8	1/2	5/8	3 3/4	2 1/2	7 1/2					
3	36	48	1 7/8	1/2	5/8	10	5 1/4	3 1/4	9	10 1/2	12 3/4	12 3/4	13 1/4	13 1/2	24	5 5/8	1/2	3/4	4 3/4	3	9					
4	36	48	1 7/8	1/2	5/8	10	5 1/4	3 1/4	9	10 1/2	12 3/4	12 3/4	13 1/4	13 1/2	24	5 5/8	1/2	3/4	4 3/4	3	9					
5																										

STANDARD SIGN
R6-2 R&L

WISCONSIN DEPT OF TRANSPORTATION

APPROVED Matthew R Rauch
for State Traffic Engineer

DATE 11/2/10 PLATE NO. R6-2.8

PROJECT NO:	HWY:	COUNTY:		SHEET NO: 790	E

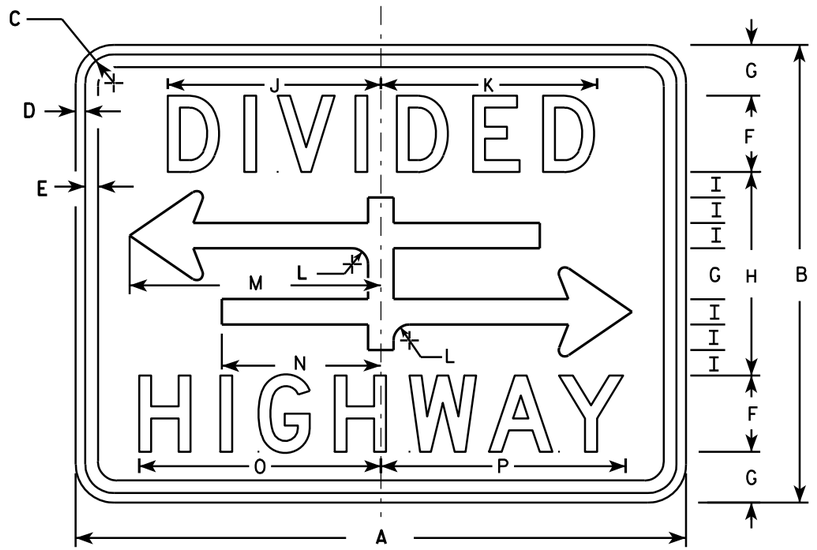

R6-3

NOTES

1. Sign is Type II - Type H Reflective - reference WIS DOT Standard Specification for HIGHWAY and STRUCTURE CONSTRUCTION latest edition.
2. Color:
   Background - White
   Message - Black
3. Message Series - D
4. Corners may be square or rounded when base material is plywood but borders shall be rounded as shown. When base material is metal, the corners and borders shall be rounded.

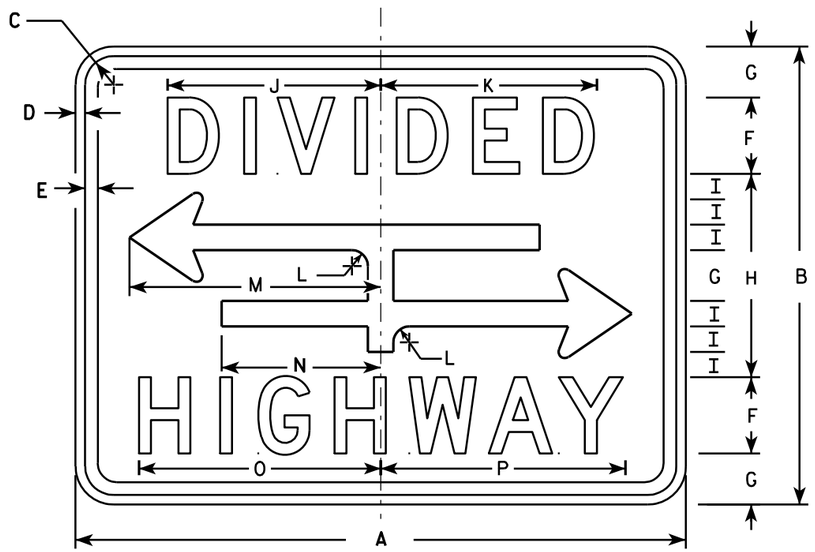

R6-3A

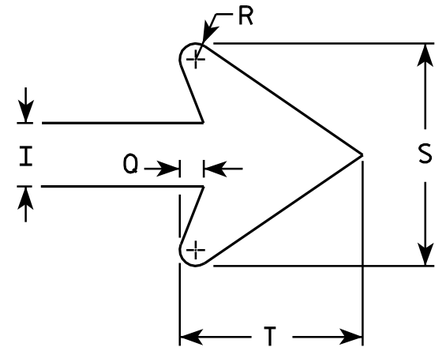

ARROW DETAIL

SIZE	A	B	C	D	E	F	G	H	I	J	K	L	M	N	O	P	Q	R	S	T	U	V	W	X	Y	Z	Area sq. ft.
1	24	18	1 1/8	3/8	3/8	3	2	8	1	8 3/8	8 1/2	5/8	9 7/8	6 1/4	9 1/2	9 5/8	3/8	1/4	3 1/2	2 3/4							3.0
2S	30	24	1 1/8	3/8	1/2	4	2 5/8	10 3/4	1 3/8	10 1/2	10 5/8	7/8	12 1/2	7 7/8	12 1/4	12 3/8	1/2	3/8	4 5/8	3 5/8							5.0
2M	30	24	1 1/8	3/8	1/2	4	2 5/8	10 3/4	1 3/8	10 1/2	10 5/8	7/8	12 1/2	7 7/8	12 1/4	12 3/8	1/2	3/8	4 5/8	3 5/8							5.0
3																											
4																											
5																											

STANDARD SIGN
R6-3 & R6-3A

WISCONSIN DEPT OF TRANSPORTATION

APPROVED Matthew R Rauch
for State Traffic Engineer

DATE 3/31/2011 PLATE NO. R6-3.5

PROJECT NO:

SHEET NO: 791 E

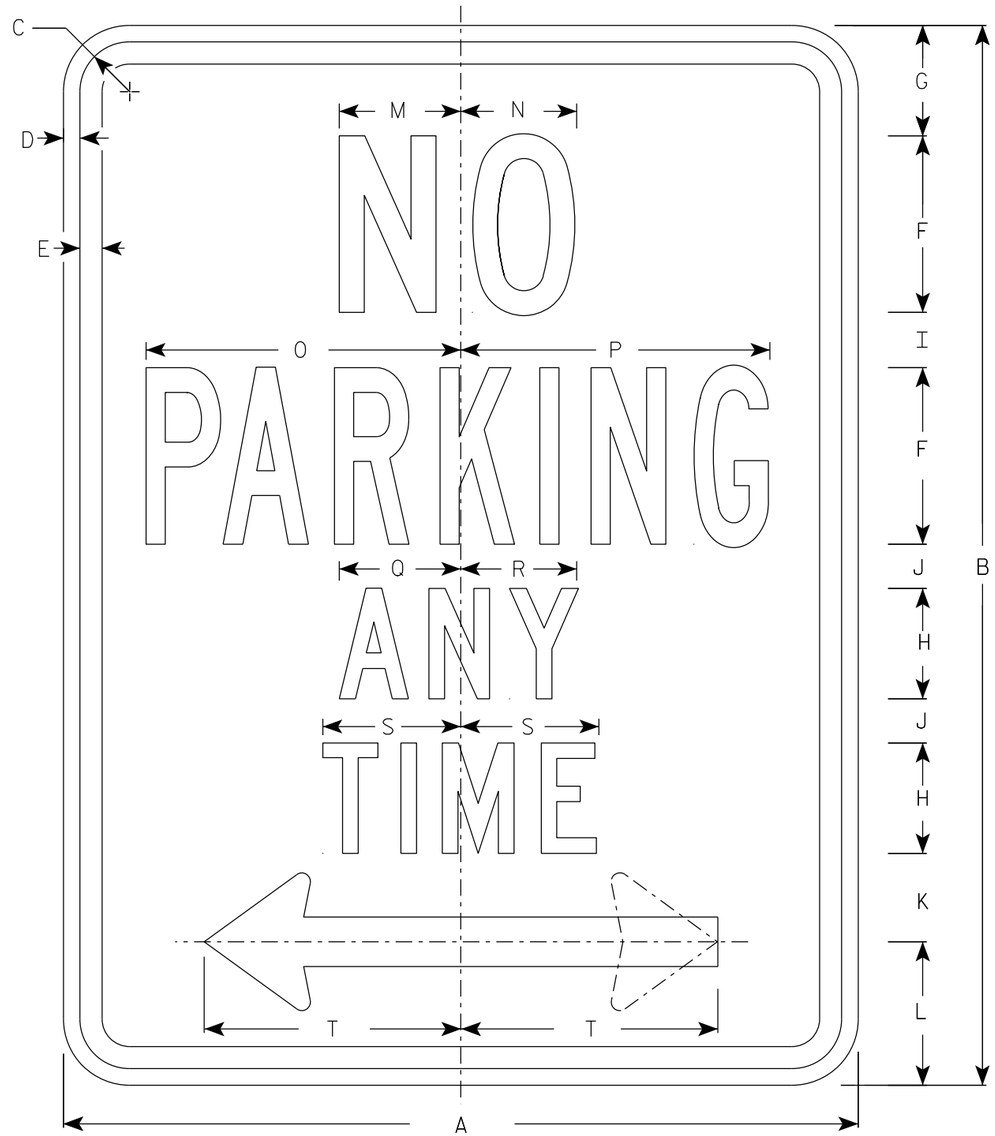

R7-1

NOTES

1. Sign is Type II - Type H Reflective
2. Color:
   Background - White
   Message - Red
3. Message Series - See Note 5
4. Lines 1, 3 and 4 are series C, line 2 is series B.
5. R7-1D (double arrow)
   R7-1L (left arrow)
   R7-1R (right arrow)

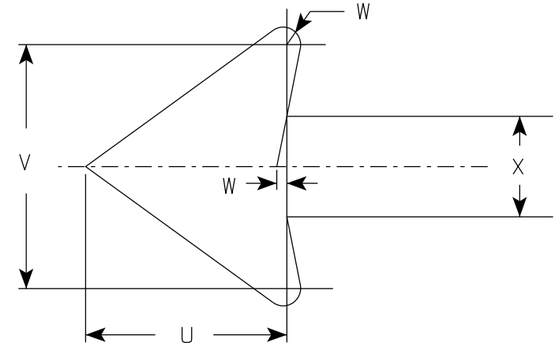

SIZE	A	B	C	D	E	F	G	H	I	J	K	L	M	N	O	P	Q	R	S	T	U	V	W	X	Y	Z	Area sq. ft.
1	12	18	1 1/8	3/8	3/8	3	1 7/8	2	7/8	5/8	1 1/2	2 1/2	2	2	4 7/8	4 7/8	2 1/4	2 1/8	2 1/2	3 7/8	1 1/2	1 3/4	1/8	3/4			1.5
2S	18	24	1 1/8	3/8	1/2	4	2 1/2	2 1/2	1 1/4	1	2	3 1/4	2 3/4	2 5/8	7 1/8	7	2 3/4	2 5/8	3 1/8	5 7/8	2 1/4	2 5/8	1/4	1 1/8			3.0
2M	24	30	1 1/8	3/8	1/2	5	3	3	2	1 1/4	2 1/2	4	3 1/4	3 3/8	9 1/4	9 1/4	3 1/4	3 1/4	3 3/4	7 3/4	3	3 1/2	1/4	1 1/2			5.0
3	24	30	1 1/8	3/8	1/2	5	3	3	2	1 1/4	2 1/2	4	3 1/4	3 3/8	9 1/4	9 1/4	3 1/4	3 1/4	3 3/4	7 3/4	3	3 1/2	1/4	1 1/2			5.0
4																											
5																											

STANDARD SIGN
R7-1

WISCONSIN DEPT OF TRANSPORTATION

APPROVED Matthew R Rauch
for State Traffic Engineer

DATE 3/31/2021 PLATE NO. R7-1.10

PROJECT NO: | HWY: | COUNTY: | SHEET NO: 792 E

7

7

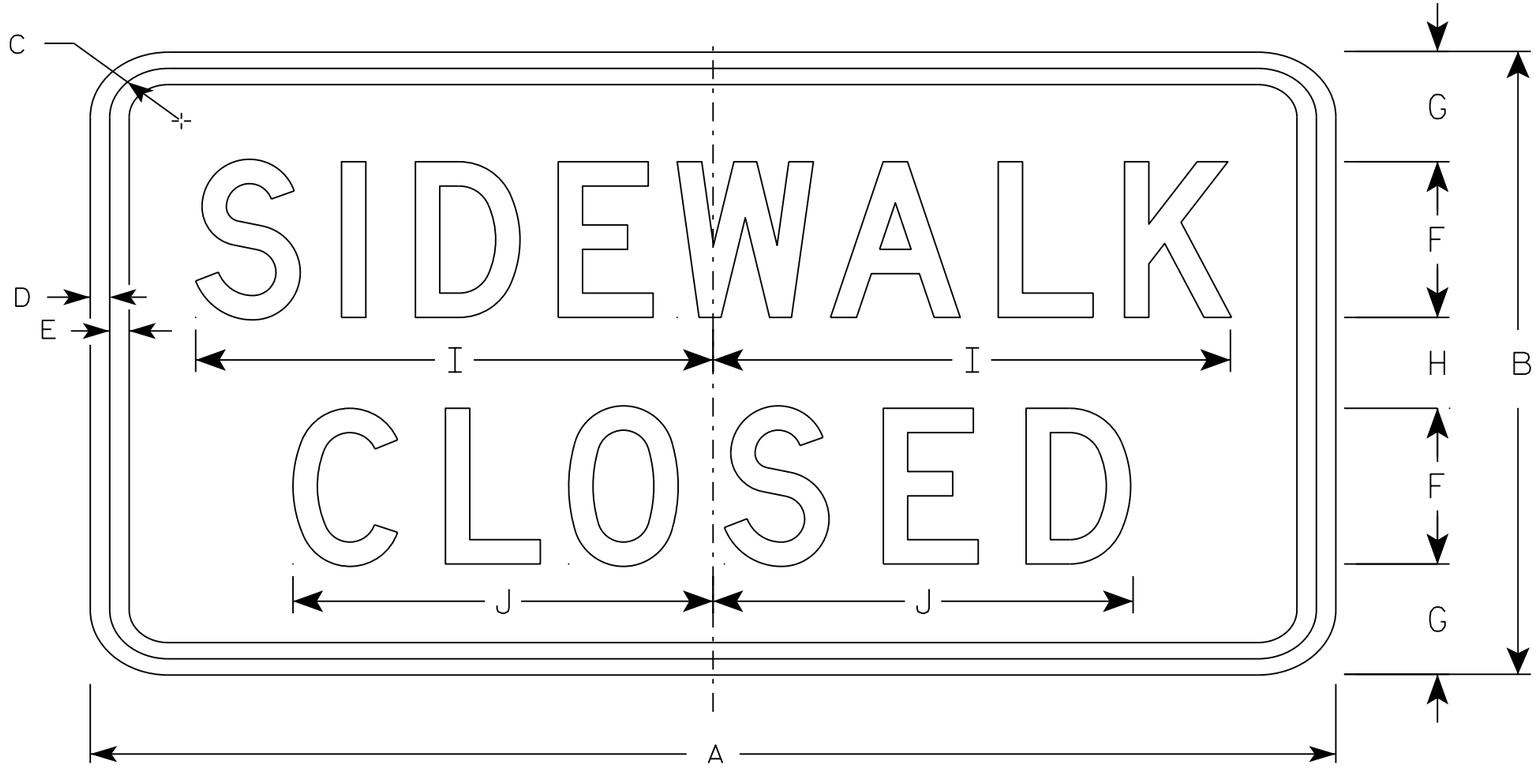

R9-9

NOTES

1. Sign is Type II - Type H Reflective - reference WIS DOT Standard Specification for HIGHWAY and STRUCTURE CONSTRUCTION latest edition.
2. Color:
   Background - White
   Message - Black
3. Message Series - C
4. Corners may be square or rounded when base material is plywood but borders shall be rounded as shown. When base material is metal, the corners and borders shall be rounded.
5. Use Size 2 for Sidewalks. Use Size 3 for Paths and Trails.

SIZE	A	B	C	D	E	F	G	H	I	J	K	L	M	N	O	P	Q	R	S	T	U	V	W	X	Y	Z	Area sq. ft.
1																											
2S	24	12	1 3/4	1/2	1/2	3	2 1/8	1 3/4	10	8 1/8																	2.0
2M	24	12	1 3/4	1/2	1/2	3	2 1/8	1 3/4	10	8 1/8																	2.0
3	30	18	1 3/4	1/2	1/2	4	3 1/2	3	12 1/2	10 1/4																	3.75
4																											
5																											

STANDARD SIGN
R9-9

WISCONSIN DEPT OF TRANSPORTATION

APPROVED Matthew R Rauch
for State Traffic Engineer

DATE 8/11/16 PLATE 793 R9-9.6

PROJECT NO: | HWY: | COUNTY: | SHEET NO: E

FILE NAME : C:\CAEfiles\Projects\tr_stdplate\R99.DGN PLOT DATE : 11-AUG-2016 11:33 PLOT BY : $$ plotuser $$ PLOT NAME : PLOT SCALE : 2.918761:1.000000

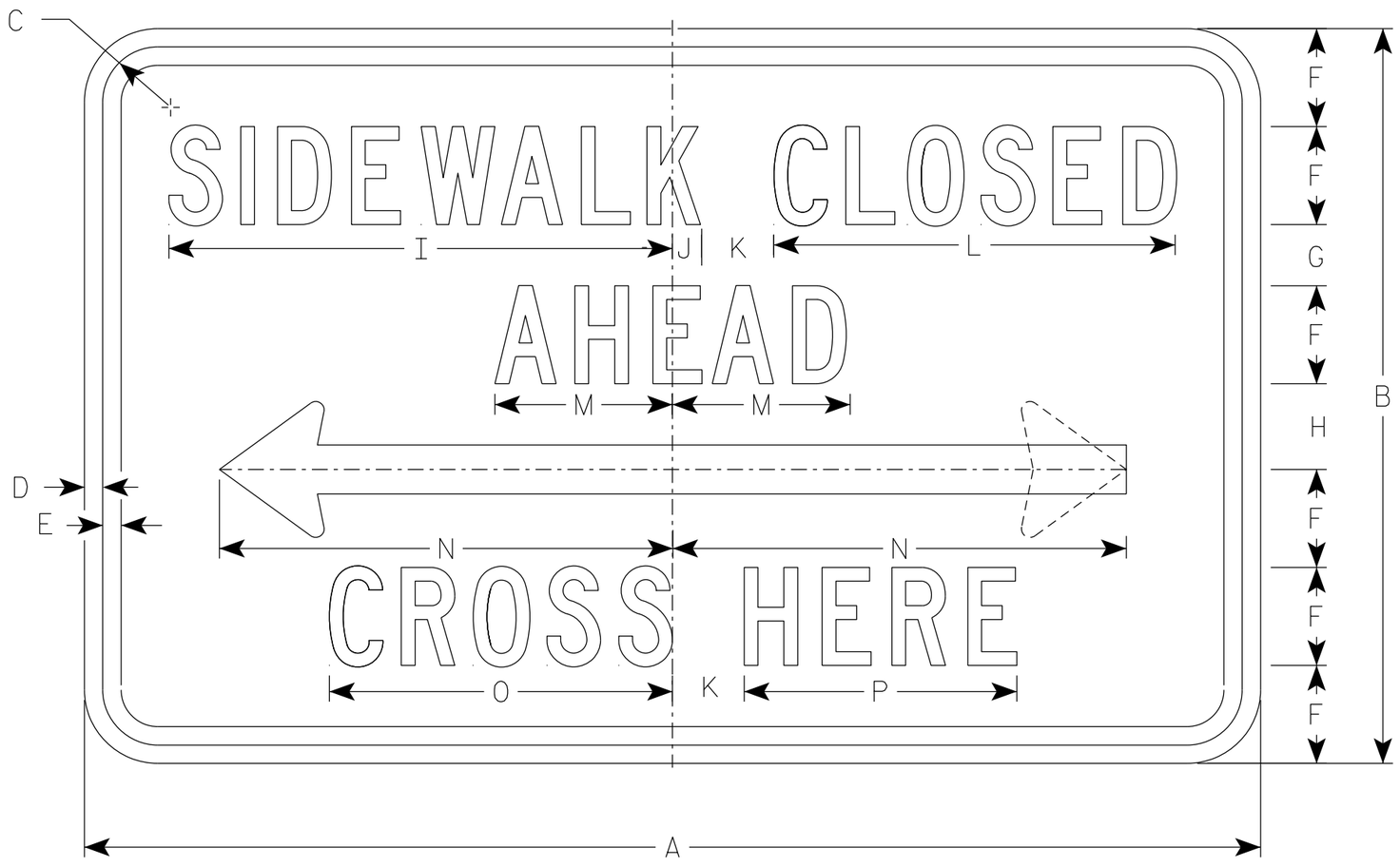

R9-11

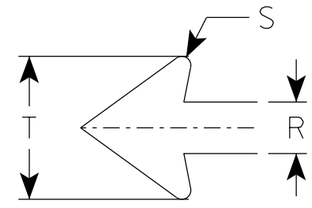

NOTES

1. Sign is Type II - Type H Reflective
2. Color:
   Background - White
   Message - Black
3. Message Series - C except Size 1 is Series D
4. Corners may be square or rounded when base material is plywood but borders shall be rounded as shown. When base material is metal, the corners and borders shall be rounded.
5. Use Size 2 for Sidewalks. Use Size 3 for Paths and Trails.
6. R9-11 D (double arrow)
   R9-11 L (left arrow)
   R9-11 R (right arrow)

SIZE	A	B	C	D	E	F	G	H	I	J	K	L	M	N	O	P	Q	R	S	T	U	V	W	X	Y	Z	Area sq. ft.
1																											
2S	24	12	1 1/8	3/8	3/8	1 1/2	1 1/2	1 1/2	9 3/4	5/8	1 1/2	7 5/8	3 1/2	9 1/4	6 5/8	5 1/8		1	1/8	2 3/4							2.0
2M	24	12	1 1/8	3/8	3/8	1 1/2	1 1/2	1 1/2	9 3/4	5/8	1 1/2	7 5/8	3 1/2	9 1/4	6 5/8	5 1/8		1	1/8	2 3/4							2.0
3	30	15	1 1/8	3/8	1/2	2	1 1/2	1 1/2	13	3/4	2	10 1/4	4 5/8	12 3/8	8 7/8	6 7/8		1 1/4	1/4	3 5/8							3.125
4																											
5																											

STANDARD SIGN
R9-11

WISCONSIN DEPT OF TRANSPORTATION

APPROVED Matthew R Rauch
For State Traffic Engineer

DATE 3/30/2021 PLATE NO. R9-11.4

PROJECT NO: | HWY: | COUNTY: | SHEET NO: 794 | E

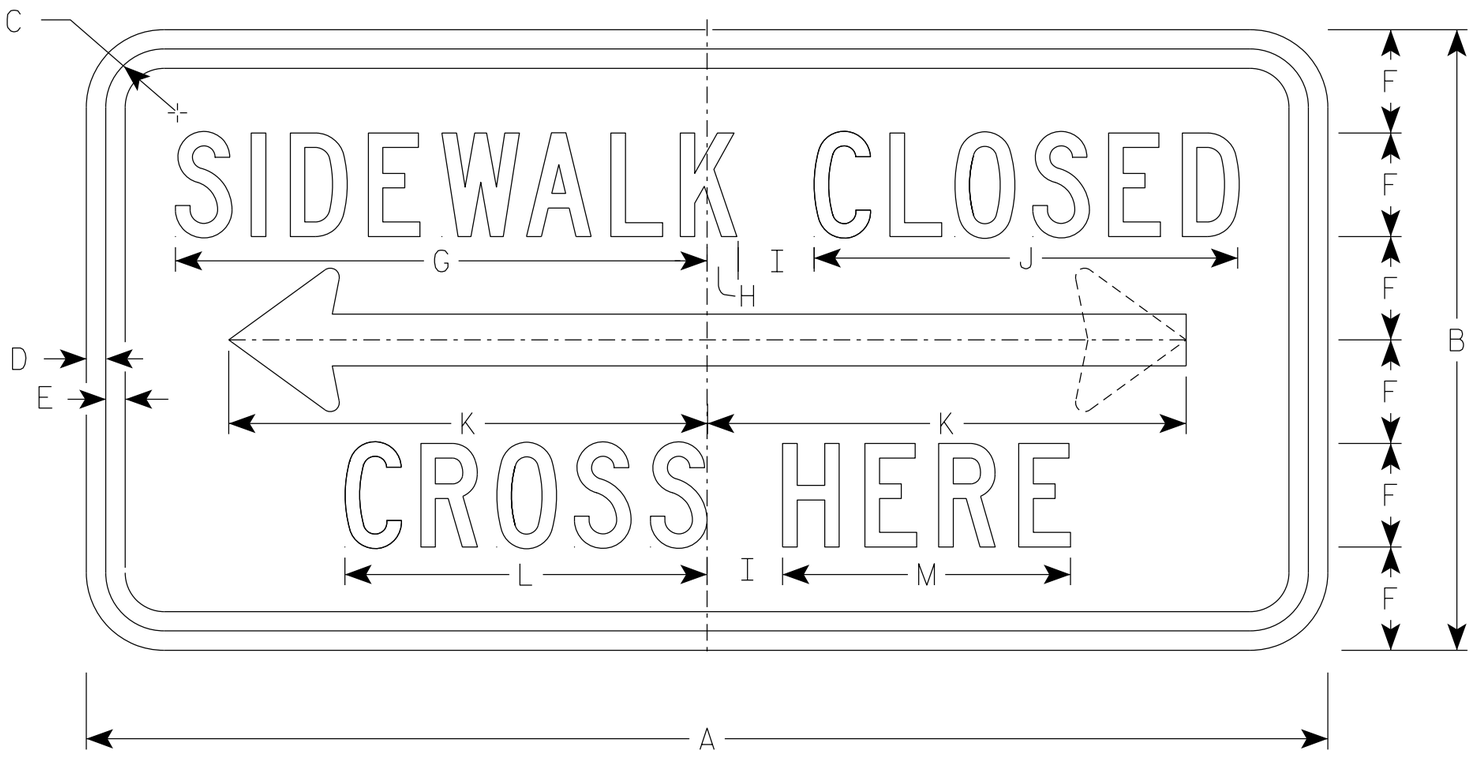

R9-11A

NOTES

1. Sign is Type II - Type H Reflective
2. Color:
   Background - White
   Message - Black
3. Message Series - C
4. Corners may be square or rounded when base material is plywood but borders shall be rounded as shown. When base material is metal, the corners and borders shall be rounded.
5. Use Size 2 for Sidewalks. Use Size 3 for paths and Trails.
6. R9-11AD (double arrow)
   R9-11AL (left arrow)
   R9-11AR (right arrow)

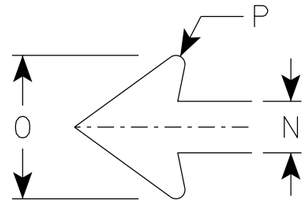

ARROW DETAIL

SIZE	A	B	C	D	E	F	G	H	I	J	K	L	M	N	O	P	Q	R	S	T	U	V	W	X	Y	Z	Area sq. ft.
1																											
2S	24	12	1 1/8	3/8	3/8	2	10 1/4	5/8	1 1/2	8 1/4	9 1/4	7	5 5/8	1	2 3/4	1/8											2.0
2M	24	12	1 1/8	3/8	3/8	2	10 1/4	5/8	1 1/2	8 1/4	9 1/4	7	5 5/8	1	2 3/4	1/8											2.0
3	30	15	1 1/8	3/8	1/2	2 1/2	12 3/4	1/2	2	10 1/4	12 3/8	8 5/8	6 3/4	1 1/4	3 5/8	1/4											3.125
4																											
5																											

STANDARD SIGN
R9-11A

WISCONSIN DEPT OF TRANSPORTATION

APPROVED Matthew R Rauch
for State Traffic Engineer

DATE 3/31/2021 PLATE NO. R9-11A.5

PROJECT NO: | HWY: | COUNTY: | SHEET NO: 795 | E

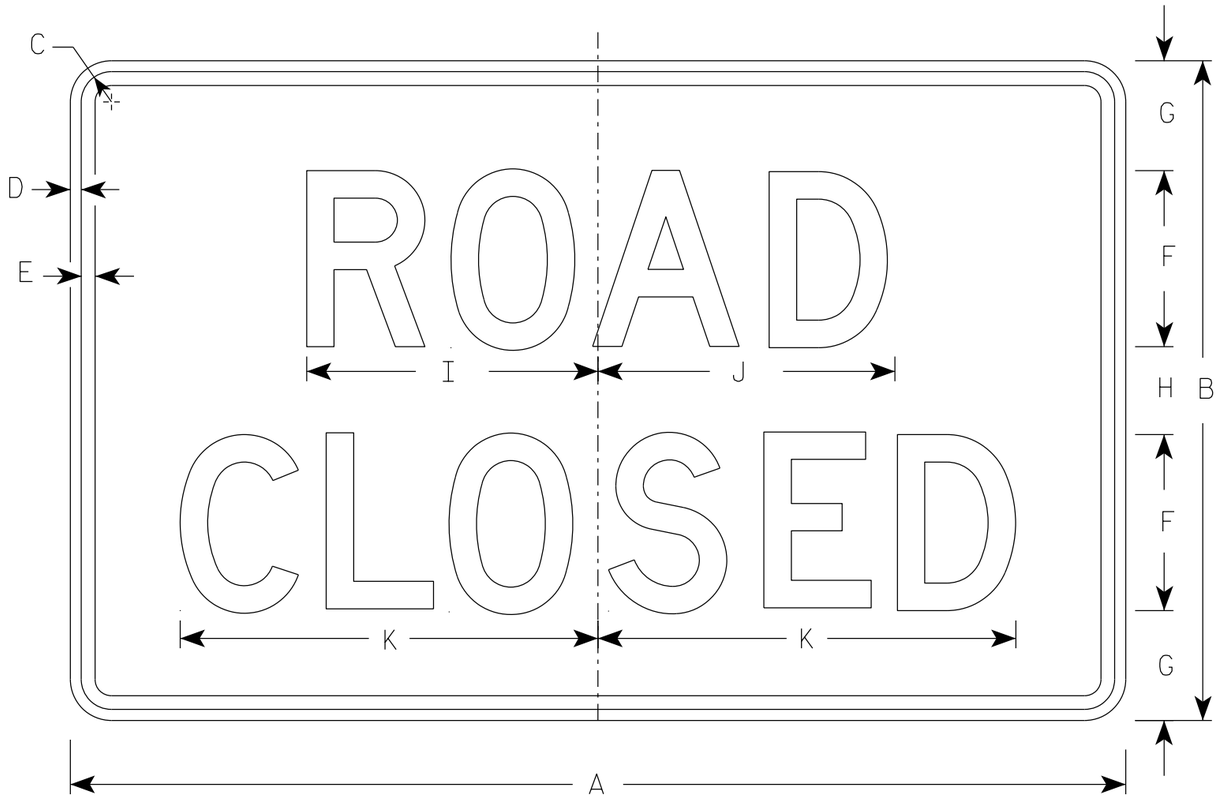

R11-2

NOTES

1. Sign is Type II - Type H Reflective
2. Color:
   Background - White
   Message - Black
3. Message Series - D
4. Corners may be square or rounded when base material is plywood but borders shall be rounded as shown. When base material is metal, the corners and borders shall be rounded.
5. Modify the message as required.

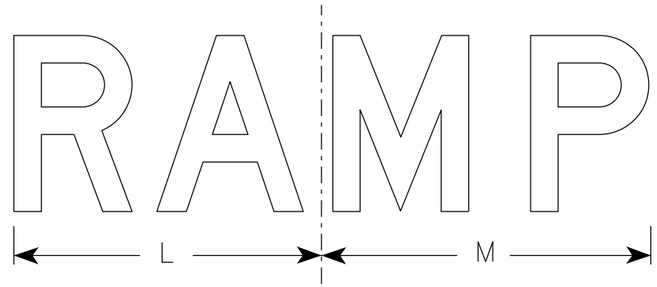

R11-2R

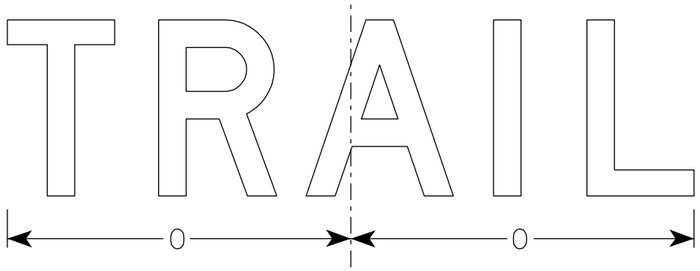

R11-2T

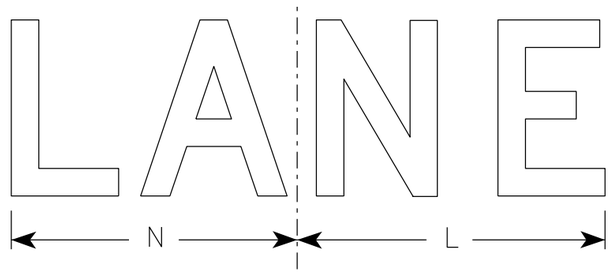

R11-2L

SIZE	A	B	C	D	E	F	G	H	I	J	K	L	M	N	O	P	Q	R	S	T	U	V	W	X	Y	Z	Area sq. ft.
1																											
2S	48	30	1 3/8	1/2	5/8	8	5	4	13 1/4	13 1/2	19	14	15	13	15 5/8												10.0
2M	48	30	1 3/8	1/2	5/8	8	5	4	13 1/4	13 1/2	19	14	15	13	15 5/8												10.0
3	48	30	1 3/8	1/2	5/8	8	5	4	13 1/4	13 1/2	19	14	15	13	15 5/8												10.0
4	48	30	1 3/8	1/2	5/8	8	5	4	13 1/4	13 1/2	19	14	15	13	15 5/8												10.0
5	48	30	1 3/8	1/2	5/8	8	5	4	13 1/4	13 1/2	19	14	15	13	15 5/8												10.0

STANDARD SIGN
R11-2

WISCONSIN DEPT OF TRANSPORTATION

APPROVED Matthew R Rauch
for State Traffic Engineer

DATE 3/29/2021 PLATE NO. R11-2.11

PROJECT NO:	HWY:	COUNTY:		SHEET NO: 796	E

NOTES

1. Sign is Type II - Type H Reflective
2. Color:
   Background - White
   Message - Black
3. Message Series - C
4. Corners may be square or rounded when base material is plywood but borders shall be rounded as shown. When base material is metal, the corners and borders shall be rounded.
5. Substitute appropriate numerals to nearest quarter mile and optically adjust spacing to achieve proper balance.

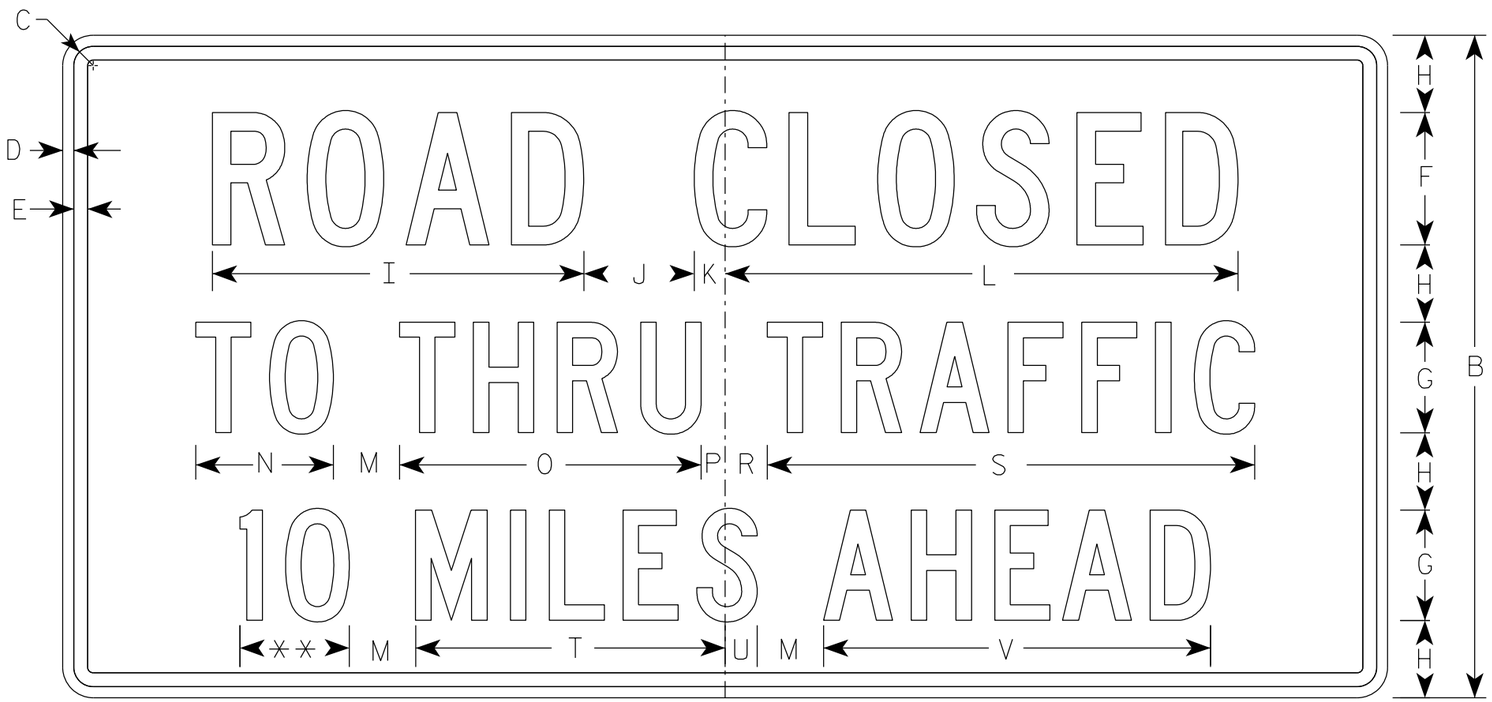

R11-3

** See Note 5

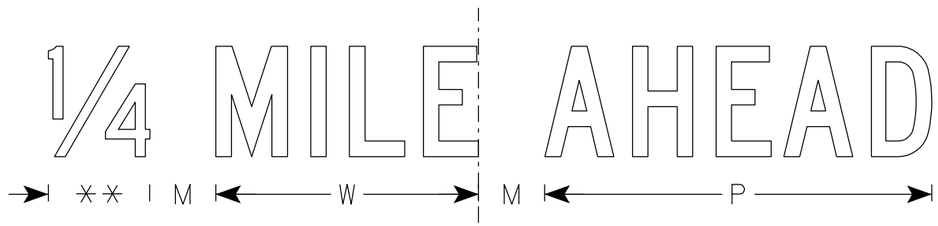

SIZE	A	B	C	D	E	F	G	H	I	J	K	L	M	N	O	P	Q	R	S	T	U	V	W	X	Y	Z	Area sq. ft.
1	36	18	1 1/4	3/8	3/8	4	3	2	11 1/4	3	1 1/8	15 3/8	2	3 3/4	8 1/4	5/8		1 3/8	13 1/4	8 3/8	7/8	10 1/2	7 1/8				4.5
2S	60	30	1 3/8	1/2	5/8	6	5	3 1/2	16 7/8	5	1 3/8	23 1/4	3	6 1/4	13 5/8	1 1/8		1 7/8	22 1/8	14	1 1/2	17 1/2	11 7/8				12.5
2M	60	30	1 3/8	1/2	5/8	6	5	3 1/2	16 7/8	5	1 3/8	23 1/4	3	6 1/4	13 5/8	1 1/8		1 7/8	22 1/8	14	1 1/2	17 1/2	11 7/8				12.5
3																											
4																											
5																											

STANDARD SIGN
R11-3

WISCONSIN DEPT OF TRANSPORTATION

APPROVED Matthew R Rauch
for State Traffic Engineer
DATE 6/14/2021 PLATE NO. R11-3.9

PROJECT NO:	HWY:	COUNTY:		SHEET NO: 797	E

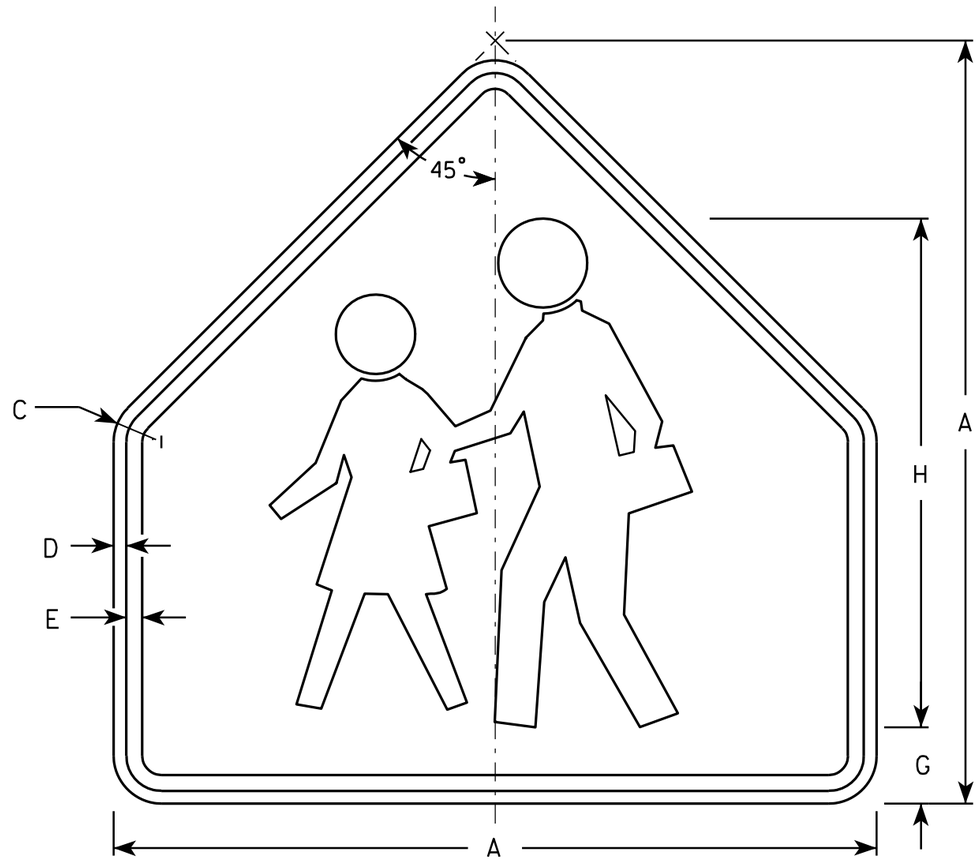

S1-1

NOTES

1. Sign is Type II - Type F Reflective - reference WIS DOT Standard Specification for HIGHWAY and STRUCTURE CONSTRUCTION latest edition.
2. Color:
   Background - Yellow-Green
   Message - Black
3. Corners may be square or rounded when base material is plywood but borders shall be rounded as shown. When base material is metal, the corners and borders shall be rounded.

SIZE	A	B	C	D	E	F	G	H	I	J	K	L	M	N	O	P	Q	R	S	T	U	V	W	X	Y	Z	Area sq. ft.
1	30		1 3/8	1/2	5/8		3	20																			4.69
2	36		1 5/8	5/8	3/4		3 1/2	24																			6.75
3	36		1 5/8	5/8	3/4		3 1/2	24																			6.75
4	48		2 1/4	3/4	1		4 3/4	32																			12
5																											

STANDARD SIGN
S1-1

WISCONSIN DEPT OF TRANSPORTATION

APPROVED Matthew R Rauch
for State Traffic Engineer

DATE 6/30/05 PLATE NO. S1-1.8

PROJECT NO:	HWY:	COUNTY:		SHEET NO: 798	E

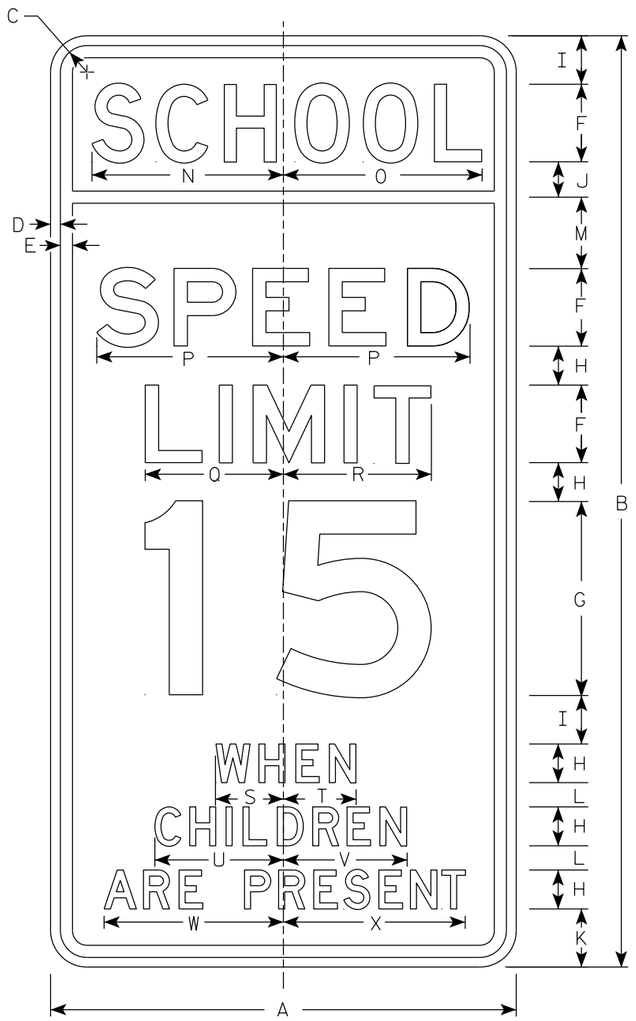

S4-51

NOTES

1. Sign is Type II - See Note 2 for Sheeting Type
2. Color:
   Background - See Note 4
   Message - Black
3. Message Series - See Note 5
4. Top panel (SCHOOL) background - Yellow Green - Type F Reflective
   Lower panel background - White - Type SH Reflective
5. From top to bottom:
   Lines 1, 5, 6 & 7 are series D
   Lines 2, 3 & 4 are series E
6. Line 4 substitute appropriate numerals and adjust spacing to achieve proper balance.

SIZE	A	B	C	D	E	F	G	H	I	J	K	L	M	N	O	P	Q	R	S	T	U	V	W	X	Y	Z	Area sq. ft.
1																											
2	24	48	1 3/8	1/2	5/8	4	10	2	2 1/2	1 3/4	3	1 1/4	3 3/4	9 7/8	10 1/4	9 5/8	7 1/8	7 5/8	3 1/2	3 3/8	6 5/8	6 3/8	9 1/4	9 3/8			8.00
3	36	72	2 1/4	3/4	1	6	15	3	3 3/4	2 3/4	4 1/2	1 7/8	5 1/2	15	15 1/4	14 1/2	11 1/4	11 1/2	5 1/2	5 3/4	10	9 3/4	14	14 1/8			18.00
4																											
5																											

STANDARD SIGN
S4-51

WISCONSIN DEPT OF TRANSPORTATION

APPROVED Matthew R Rauch
for State Traffic Engineer

DATE 7/27/2020 PLATE NO. S4-51.10

PROJECT NO: | HWY: | COUNTY: | SHEET NO: 799 E

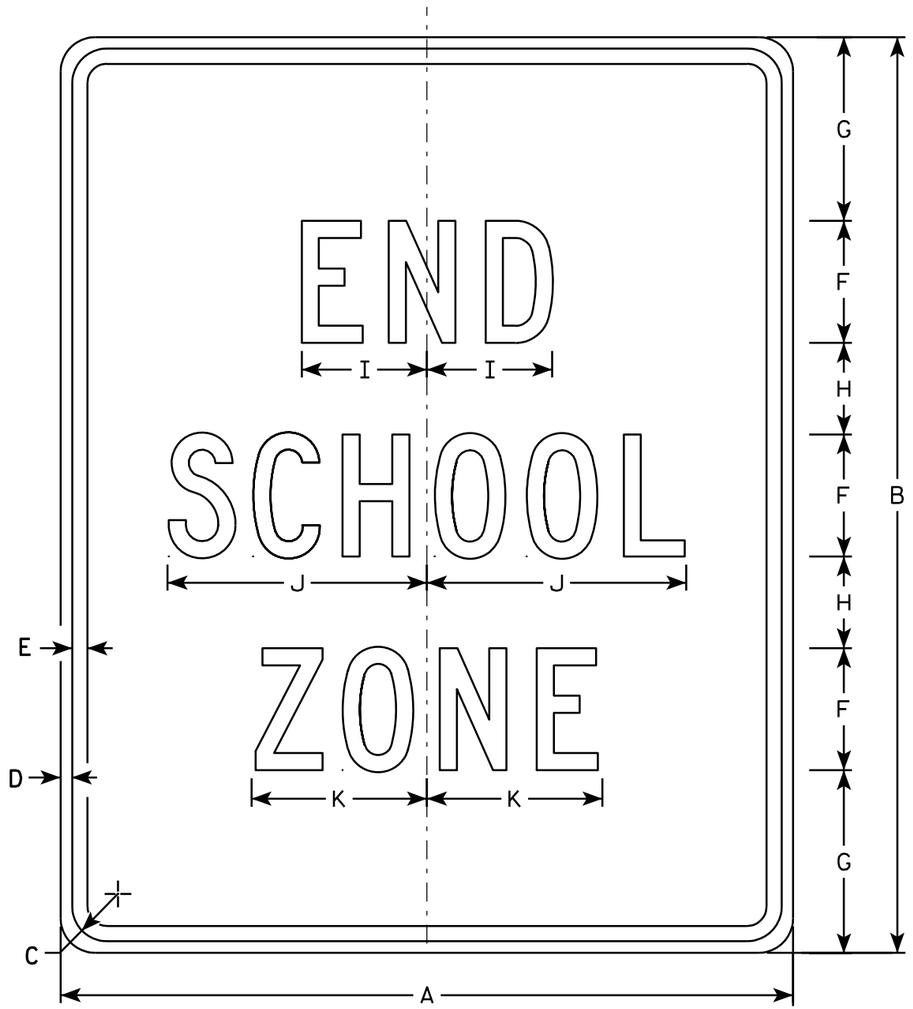

S5-2

NOTES

1. Sign is Type II - Type H Reflective - reference WIS DOT Standard Specification for HIGHWAY and STRUCTURE CONSTRUCTION latest edition.
2. Color:
   Background - White
   Message - Black
3. Message Series - C
4. Corners may be square or rounded when base material is plywood but borders shall be rounded as shown. When base material is metal, the corners and borders shall be rounded.

SIZE	A	B	C	D	E	F	G	H	I	J	K	L	M	N	O	P	Q	R	S	T	U	V	W	X	Y	Z	Area sq. ft.
1																											
2	24	30	1 1/8	3/8	1/2	4	6	3	4 1/8	8 1/2	5 3/4																5.0
3	36	42	1 5/8	5/8	3/4	6	7	5	6 1/8	12 5/8	8 5/8																10.5
4																											
5																											

STANDARD SIGN
S5-2

WISCONSIN DEPT OF TRANSPORTATION

APPROVED Matthew R Rauch
for State Traffic Engineer

DATE 3/8/11 PLATE NO. S5-2.2

PROJECT NO: | HWY: | COUNTY: | SHEET NO: 800 | E

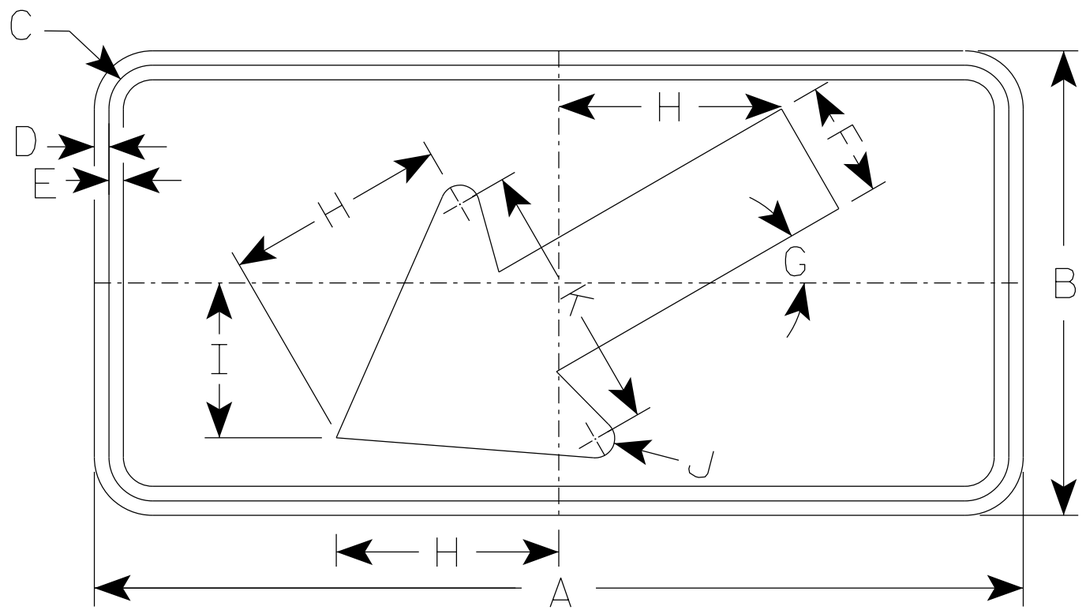

S16-7L

NOTES

1. Sign is Type II - Type F Reflective
2. Color:
   Background - Yellow-Green
   Message - Black
3. S16-7R are the same as S16-7L except the arrow is reversed along the vertical centerline.

SIZE	A	B	C	D	E	F	G	H	I	J	K	L	M	N	O	P	Q	R	S	T	U	V	W	X	Y	Z	Area sq. ft.
1	24	12	1 1/8	3/8	3/8	3	30°	5 3/4	4	1/2	7																2.0
2S	30	18	1 1/8	3/8	1/2	4 1/2	30°	8 1/2	6	5/8	10 1/4																3.75
2M	30	18	1 1/8	3/8	1/2	4 1/2	30°	8 1/2	6	5/8	10 1/4																3.75
3	30	18	1 1/8	3/8	1/2	4 1/2	30°	8 1/2	6	5/8	10 1/4																3.75
4	48	24	1 3/8	1/2	5/8	6	30°	11 1/2	8	1	14																8.0
5																											

STANDARD SIGN
S16-7

WISCONSIN DEPT OF TRANSPORTATION

APPROVED Matthew R Rauch
for State Traffic Engineer

DATE 3/16/2021 PLATE NO. S16-7.2

PROJECT NO: | HWY: | COUNTY: | SHEET NO: 801 E

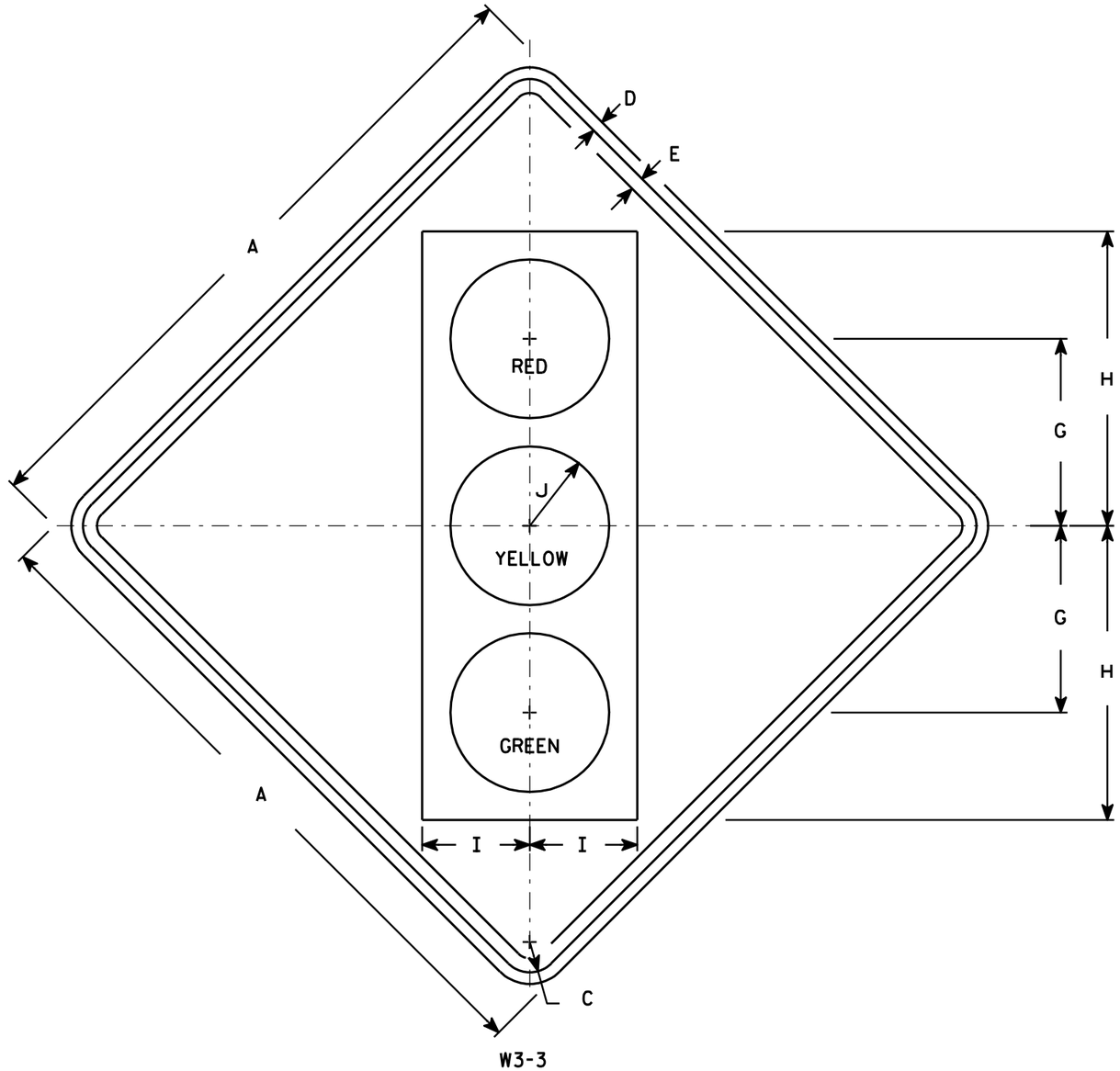

NOTES

1. Sign is Type II - Type F Reflective - reference WIS DOT Standard Specification for HIGHWAY and STRUCTURE CONSTRUCTION latest edition.
2. Color:
   Background - Yellow
   Message - See Note 4
3. Corners may be square or rounded when base material is plywood but borders shall be rounded as shown. When base material is metal, the corners and borders shall be rounded.
4. Symbol and border are non-reflective black.
   Top circle - Type H Reflectorized Red
   Center circle - Same as background
   Bottom circle - Type H Reflectorized Green

SIZE	A	B	C	D	E	F	G	H	I	J	K	L	M	N	O	P	Q	R	S	T	U	V	W	X	Y	Z	Area sq. ft.
1	30		1 3/8	1/2	5/8		8 3/4	13 3/4	5	3 3/4																	6.25
2S	36		1 5/8	5/8	3/4		10	15 3/4	5 3/4	4 1/4																	9.0
2M	36		1 5/8	5/8	3/4		10	15 3/4	5 3/4	4 1/4																	9.0
3	36		1 5/8	5/8	3/4		10	15 3/4	5 3/4	4 1/4																	9.0
4	48		2 1/4	3/4	1		12 1/2	20	7 1/2	5																	16.0
5	48		2 1/4	3/4	1		12 1/2	20	7 1/2	5																	16.0

STANDARD SIGN
W3-3

WISCONSIN DEPT OF TRANSPORTATION

APPROVED Matthew R Rauch for State Traffic Engineer

DATE 6/7/10 PLATE NO. W3-3.11

PROJECT NO: | HWY: | COUNTY: | SHEET NO: 802 | E

7

FILE NAME : C:\Users\PROJECTS\tr_stdplate\W33.DGN PLOT DATE : 07-JUN-2010 13:07 PLOT BY : ditjph PLOT NAME : PLOT SCALE : 7.448805:1.000000

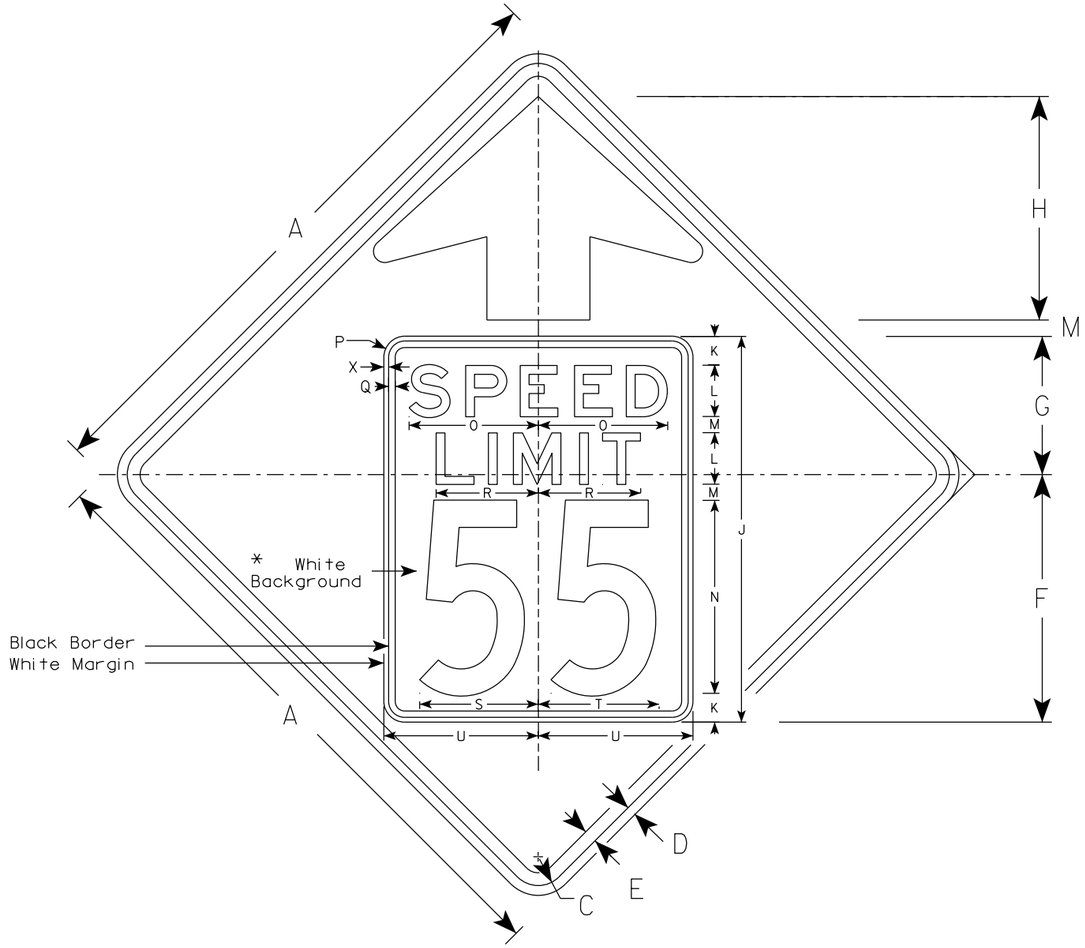

W3-5

NOTES

1. Sign is Type II - See Note 2 for Sheeting Type
2. Color: *
   Background - Yellow* (Type F Reflective)
   Message - Black
3. Message Series - C for numbers Series E for wording
4. Substitute appropriate numerals and optically adjust spacing to achieve proper balance

*Speed Limit Sign shall have a White Background with black message (Type SH Reflective)

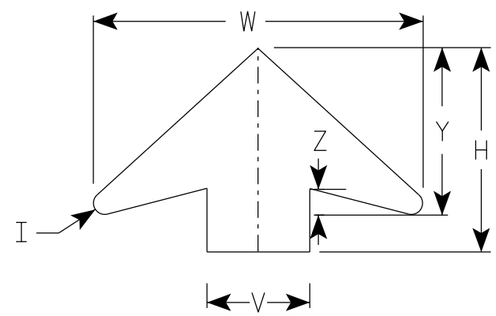

ARROW DETAIL

SIZE	A	B	C	D	E	F	G	H	I	J	K	L	M	N	O	P	Q	R	S	T	U	V	W	X	Y	Z	Area sq. ft.
1																											
2S	36		1 5/8	5/8	3/4	14 1/2	9 1/2	11 1/2	5/8	24	2	3	1	12	7 1/8	1 1/2	3/8	5 3/4	7 1/4	7 1/8	9	6	19 1/4	3/8	9 3/4	1 5/8	9.0
2M	36		1 5/8	5/8	3/4	14 1/2	9 1/2	11 1/2	5/8	24	2	3	1	12	7 1/8	1 1/2	3/8	5 3/4	7 1/4	7 1/8	9	6	19 1/4	3/8	9 3/4	1 5/8	9.0
3	36		1 5/8	5/8	3/4	14 1/2	9 1/2	11 1/2	5/8	24	2	3	1	12	7 1/8	1 1/2	3/8	5 3/4	7 1/4	7 1/8	9	6	19 1/4	3/8	9 3/4	1 5/8	9.0
4	48		2 1/4	3/4	1	19 1/4	10 3/4	17 3/8	7/8	30	2 1/4	4	1 1/4	15	10	1 5/8	1/2	8	9 1/4	9 3/8	12	8	25 5/8	3/8	13	2	16.0
5	48		2 1/4	3/4	1	19 1/4	10 3/4	17 3/8	7/8	30	2 1/4	4	1 1/4	15	10	1 5/8	1/2	8	9 1/4	9 3/8	12	8	25 5/8	3/8	13	2	16.0

STANDARD SIGN
W3-5

WISCONSIN DEPT OF TRANSPORTATION

APPROVED Matthew L Rauch
for State Traffic Engineer

DATE 7/27/2020 PLATE NO. W3-5.6

PROJECT NO:

SHEET NO: 803 E

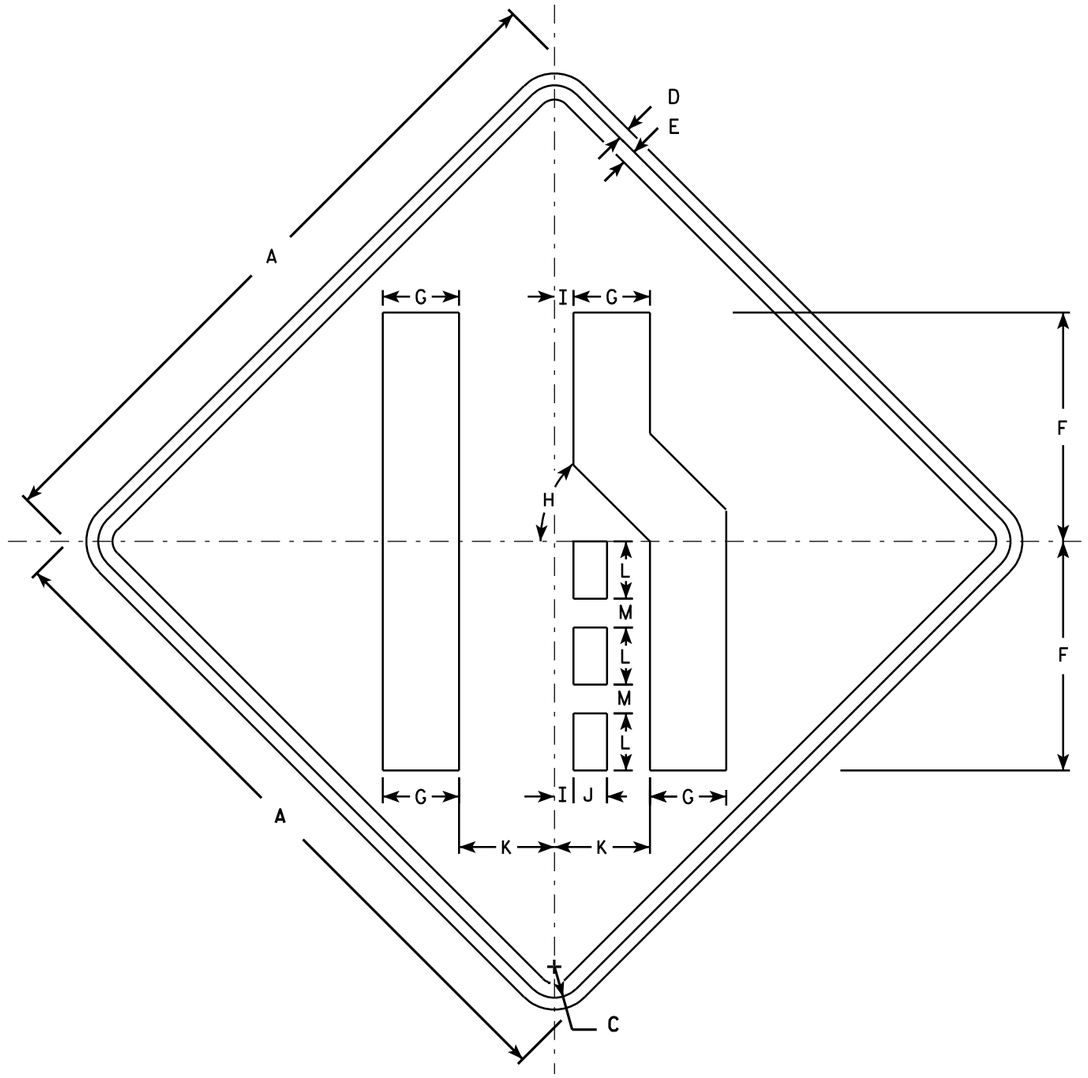

W4-2R

NOTES

1. Sign is Type II - Type F Reflective - reference WIS DOT Standard Specification for HIGHWAY and STRUCTURE CONSTRUCTION latest edition.
2. Color:
   Background - Yellow
   Message - Black
3. Corners may be square or rounded when base material is plywood but borders shall be rounded as shown. When base material is metal, the corners and borders shall be rounded.
4. W4-2L is the same as W4-2R except the symbol is reversed along the vertical centerline.

SIZE	A	B	C	D	E	F	G	H	I	J	K	L	M	N	O	P	Q	R	S	T	U	V	W	X	Y	Z	Area sq. ft.
1	30		1 3/8	1/2	5/8	10	3 3/8	45°	7/8	1 1/2	4 1/4	2 1/2	1 1/4														6.25
2S	36		1 5/8	5/8	3/4	12	4	45°	1	1 3/4	5	3	1 1/2														9.0
2M	36		1 5/8	5/8	3/4	12	4	45°	1	1 3/4	5	3	1 1/2														9.0
3	36		1 5/8	5/8	3/4	12	4	45°	1	1 3/4	5	3	1 1/2														9.0
4	48		2 1/4	3/4	1	16	5 3/8	45°	1 1/4	2 3/8	6 3/4	4	2														16.0
5	48		2 1/4	3/4	1	16	5 3/8	45°	1 1/4	2 3/8	6 3/4	4	2														16.0

STANDARD SIGN
W4-2

WISCONSIN DEPT OF TRANSPORTATION

APPROVED Matthew R Rauch
for State Traffic Engineer

DATE 3/12/13 PLATE NO. W4-2.14

PROJECT NO:

SHEET NO: 804 E

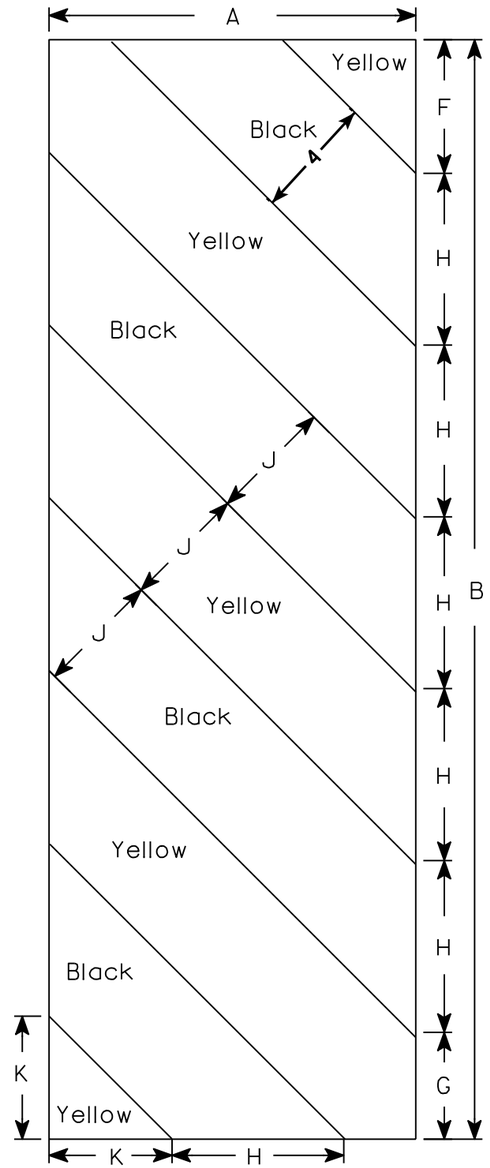

W5-52L

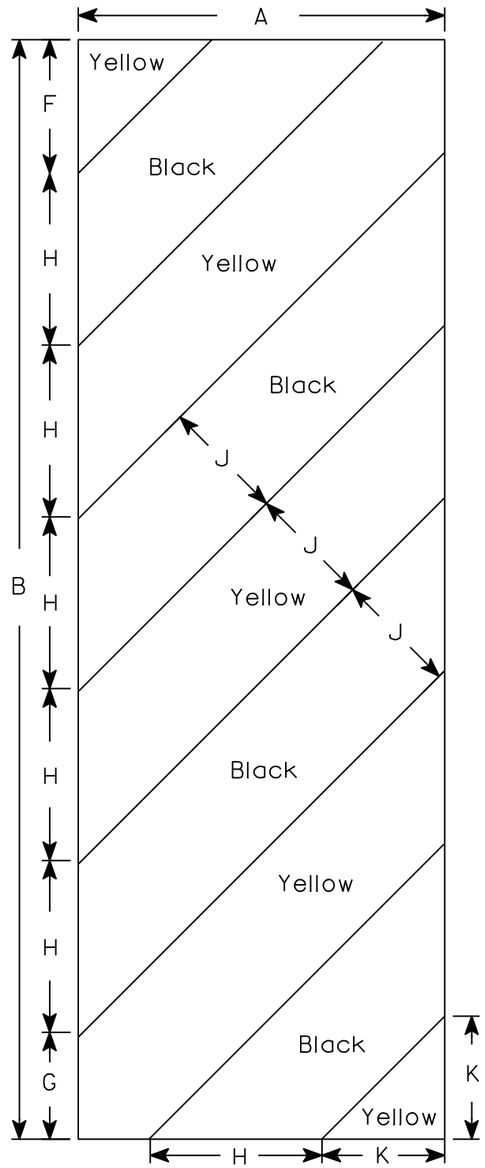

W5-52R

NOTES

1. Sign is Type II - Type F Reflective - reference WIS DOT Standard Specification for HIGHWAY and STRUCTURE CONSTRUCTION latest edition.
2. Color:
   Background - Yellow
   Message - Black
3. Corners may be square or rounded when base material is plywood but borders shall be rounded as shown. When base material is metal, the corners and borders shall be rounded.
4. Alternate colors of stripes as shown.

SIZE	A	B	C	D	E	F	G	H	I	J	K	L	M	N	O	P	Q	R	S	T	U	V	W	X	Y	Z	Area sq. ft.
1																											
2S	12	36				4 3/8	3 1/2	5 5/8	45°	4	4																3.0
2M	12	36				4 3/8	3 1/2	5 5/8	45°	4	4																3.0
3	18	54				6	5 1/2	8 1/2	45°	6	6 9/16																6.75
4																											
5																											

STANDARD SIGN

W5-52L & W5-52R

WISCONSIN DEPT OF TRANSPORTATION

APPROVED Matthew R Rauch
for State Traffic Engineer

DATE 5/29/12 PLATE NO. W5-52.9

PROJECT NO: | HWY: | COUNTY: | SHEET NO: 805 | E

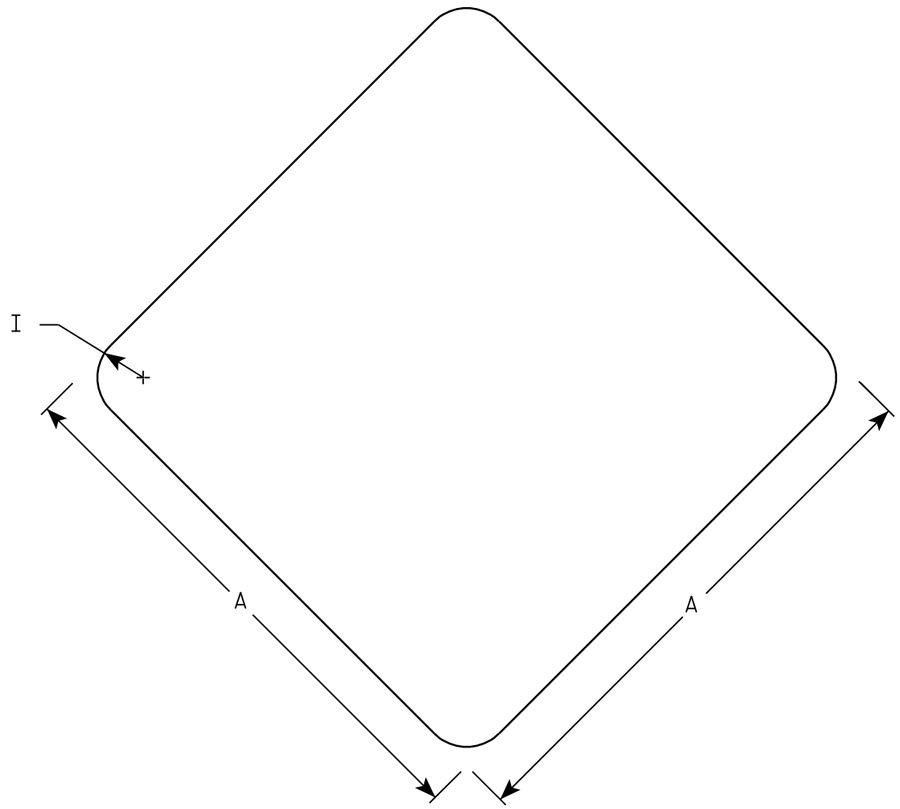

W5-54

NOTES

1. Sign is Type II - Type F Reflective - reference WIS DOT Standard Specification for HIGHWAY and STRUCTURE CONSTRUCTION latest edition.
2. Color:
   Background - Yellow
3. Corners may be square or rounded when base material is plywood. When base material is metal the corners shall be rounded.

SIZE	A	B	C	D	E	F	G	H	I	J	K	L	M	N	O	P	Q	R	S	T	U	V	W	X	Y	Z	Area sq. ft.
1	12								1																		1.0
2S	18								1 ½																		2.25
2M	18								1 ½																		2.25
3																											
4																											
5																											

STANDARD SIGN
W5-54

WISCONSIN DEPT OF TRANSPORTATION

APPROVED Matthew R Rauch
for State Traffic Engineer

DATE 11/3/10 PLATE NO. W5-54.8

PROJECT NO:	HWY:	COUNTY:		SHEET NO: 806	E

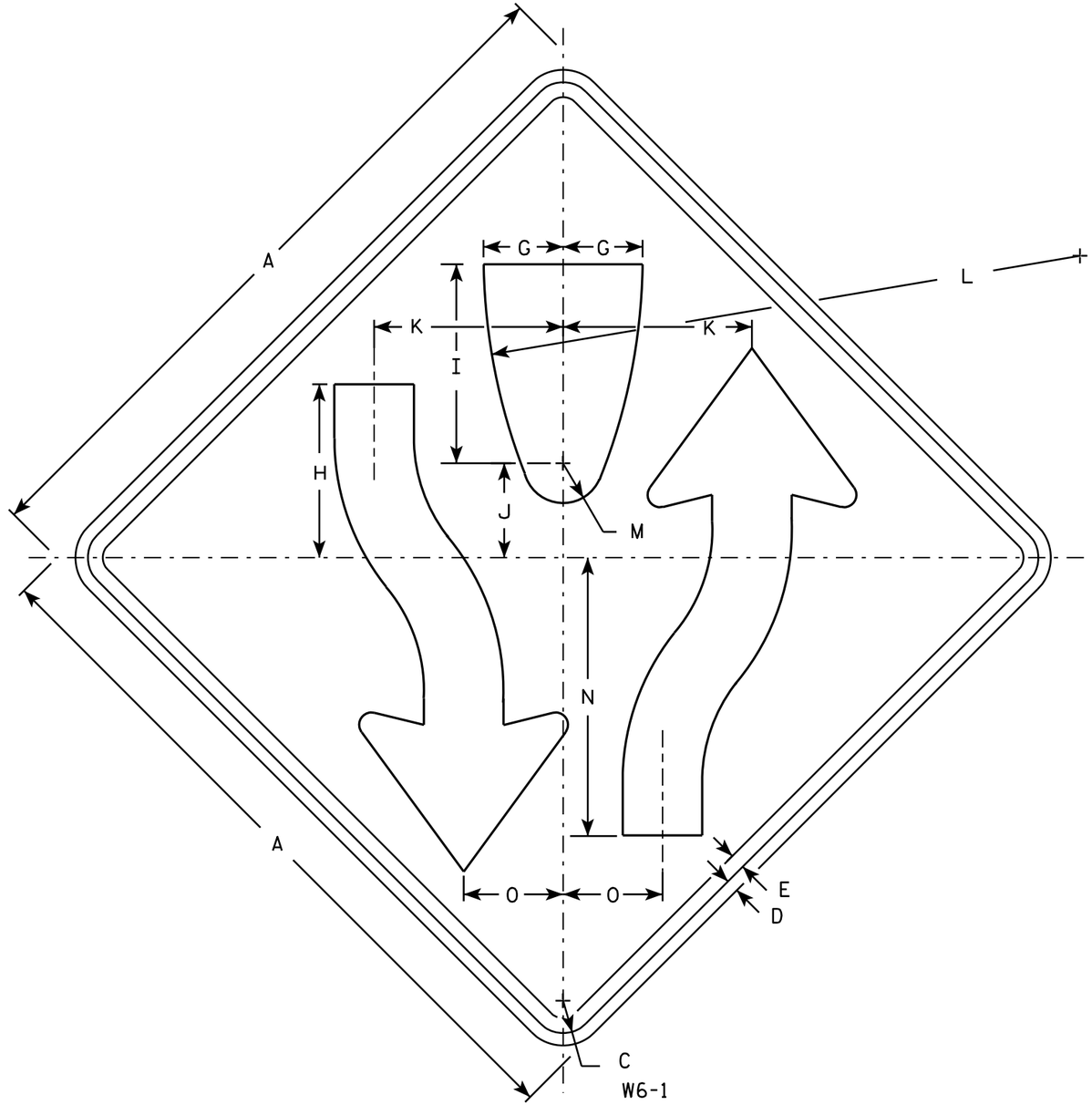

NOTES

1. Sign is Type II - Type F Reflective - reference WIS DOT Standard Specification for HIGHWAY and STRUCTURE CONSTRUCTION latest edition.
2. Color:
   Background - Yellow
   Message - Black
3. Corners may be square or rounded when base material is plywood but borders shall be rounded as shown. When base material is metal, the corners and borders shall be rounded.
4. W6-2 same as W6-1 but is rotated 180° when mounted.

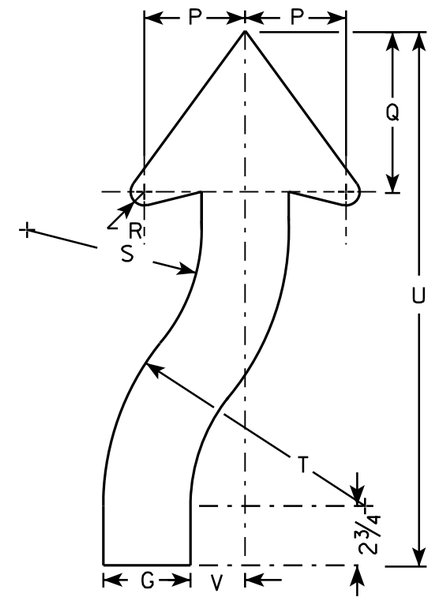

ARROW DETAIL

SIZE	A	B	C	D	E	F	G	H	I	J	K	L	M	N	O	P	Q	R	S	T	U	V	W	X	Y	Z	Area sq. ft.
1	30		1 3/8	1/2	5/8		3 1/4	8	8 1/4	4 1/8	7 7/8	25	1 3/4	11 5/8	4 1/8	3 7/8	6 3/4	5/8	6 5/8	9 7/8	21 5/8	2					6.25
2S	36		1 5/8	5/8	3/4		4	8 3/4	10	4 3/4	9 1/2	30	2	14	5	4 5/8	7 3/8	7/8	8	12	24 1/2	2 1/2					9.0
2M	36		1 5/8	5/8	3/4		4	8 3/4	10	4 3/4	9 1/2	30	2	14	5	4 5/8	7 3/8	7/8	8	12	24 1/2	2 1/2					9.0
3																											
4	48		2 1/4	3/4	1		5 3/8	11 5/8	13 3/8	6 3/8	12 5/8	40	2 5/8	18 5/8	6 5/8	6 1/4	9 7/8	1 1/4	10 5/8	16	32 5/8	3 3/8					16.0
5	48		2 1/4	3/4	1		5 3/8	11 5/8	13 3/8	6 3/8	12 5/8	40	2 5/8	18 5/8	6 5/8	6 1/4	9 7/8	1 1/4	10 5/8	16	32 5/8	3 3/8					16.0

STANDARD SIGN
W6-1 & W6-2

WISCONSIN DEPT OF TRANSPORTATION

APPROVED Matthew R Rauch
for State Traffic Engineer

DATE 03/12/13 PLATE NO. W6-1.14

PROJECT NO:	HWY:	COUNTY:		SHEET NO: 807	E

7

FILE NAME : C:\CAEFiles\Projects\tr_stdplate\W61.DGN PLOT DATE : 12-MAR-2013 14:02 PLOT BY : mscsja PLOT NAME : PLOT SCALE : 6.946657:1.000000
WISDOT/CADDS SHEET 42

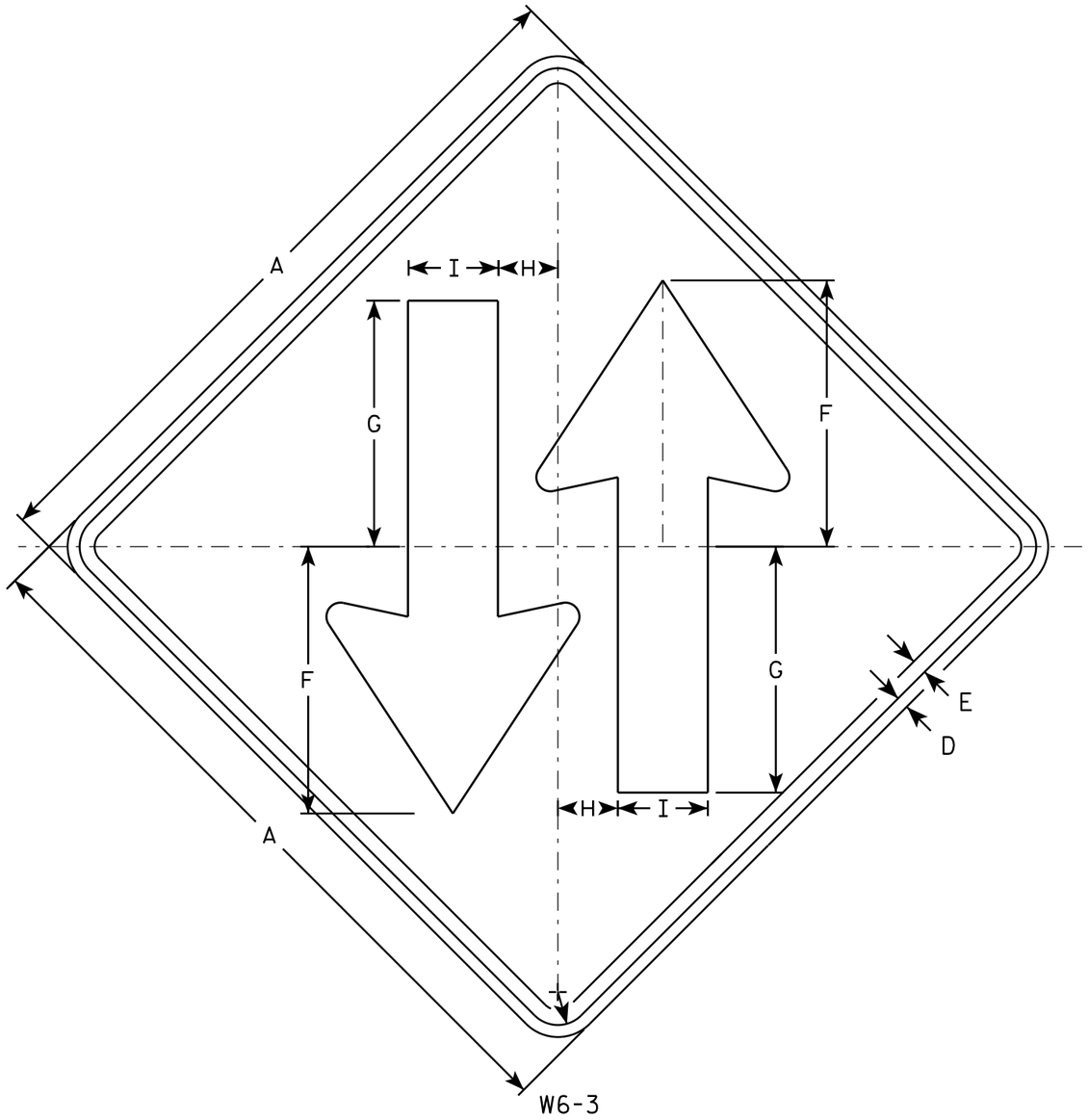

W6-3

NOTES

1. Sign is Type II - Type F Reflective - reference WIS DOT Standard Specification for HIGHWAY and STRUCTURE CONSTRUCTION latest edition.
2. Color:
   Background - Yellow
   Message - Black
3. Corners may be square or rounded when base material is plywood but borders shall be rounded as shown. When base material is metal, the corners and borders shall be rounded.

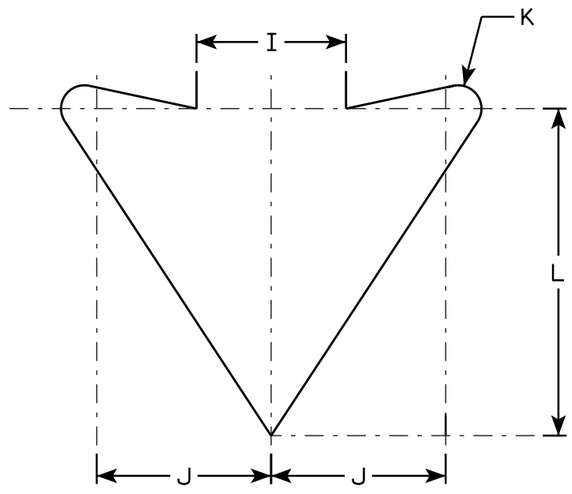

ARROW DETAIL

SIZE	A	B	C	D	E	F	G	H	I	J	K	L	M	N	O	P	Q	R	S	T	U	V	W	X	Y	Z	Area sq. ft.
1	30		1 3/8	1/2	5/8	11 1/8	10 1/4	2 1/2	3 3/4	4 3/8	5/8	8 1/4															6.25
2S	36		1 5/8	5/8	3/4	13 3/8	12 1/4	3	4 1/2	5 1/4	3/4	9 7/8															9.0
2M	36		1 5/8	5/8	3/4	13 3/8	12 1/4	3	4 1/2	5 1/4	3/4	9 7/8															9.0
3																											
4	48		2 1/4	3/4	1	17 3/4	16 3/8	4	6	7	1	13 1/8															16.0
5	48		2 1/4	3/4	1	17 3/4	16 3/8	4	6	7	1	13 1/8															16.0

STANDARD SIGN
W6-3

WISCONSIN DEPT OF TRANSPORTATION

APPROVED Matthew R Rauch
for State Traffic Engineer

DATE 3/10/16 PLATE W6-3.11

PROJECT NO:	HWY:	COUNTY:		SHEET NO:	E

7

FILE NAME : C:\CAEFiles\Projects\tr_stdplate\W63.DGN PLOT DATE : 10-MAR-2016 14:01 PLOT BY : mscsja PLOT NAME : PLOT SCALE : 6.080757:1.000000
WISDOT/CADDS SHEET 42

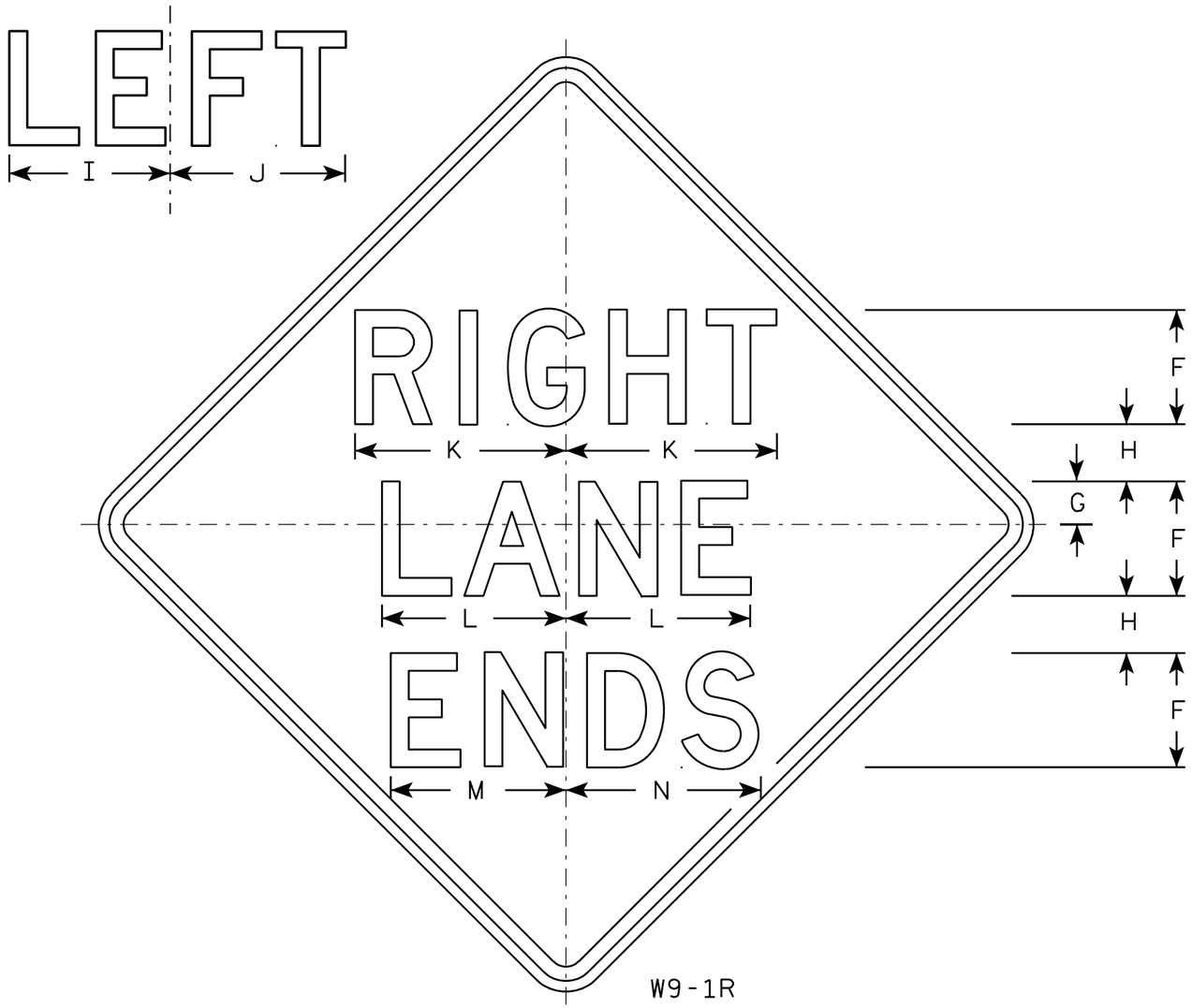

W9-1R

NOTES

1. Sign is Type II - Type F Reflective - reference WIS DOT Standard Specification for HIGHWAY and STRUCTURE CONSTRUCTION latest edition.
2. Color:
   Background - Yellow
   Message - Black
3. Message Series - D
4. Corners may be square or rounded when base material is plywood but borders shall be rounded as shown. When base material is metal, the corners and borders shall be rounded.
5. W9-1L same as W9-1R except the word Left replaces Right.

SIZE	A	B	C	D	E	F	G	H	I	J	K	L	M	N	O	P	Q	R	S	T	U	V	W	X	Y	Z	Area sq. ft.
1	30		1 3/8	1/2	5/8	5	1 1/2	2 1/2	7 1/8	7 5/8	9 1/4	8 1/8	7 5/8	8 5/8													6.25
2S	36		1 5/8	5/8	3/4	6	2	3	8 1/2	9 1/8	11	9 3/4	9	10 3/8													9.0
2M	36		1 5/8	5/8	3/4	6	2	3	8 1/2	9 1/8	11	9 3/4	9	10 3/8													9.0
3	36		1 5/8	5/8	3/4	6	2	3	8 1/2	9 1/8	11	9 3/4	9	10 3/8													9.0
4	36		1 5/8	5/8	3/4	6	2	3	8 1/2	9 1/8	11	9 3/4	9	10 3/8													9.0
5	48		2 1/4	3/4	1	8	3	4	11 1/4	12 1/4	14 3/4	12 7/8	12 1/4	13 5/8													16.0

STANDARD SIGN
W9-1

WISCONSIN DEPT OF TRANSPORTATION

APPROVED Matthew R Rauch for State Traffic Engineer

DATE 03/18/13 PLATE NO. W9-1.8

PROJECT NO:

SHEET NO: 809 E

FILE NAME : C:\CAEFiles\Projects\tr_stdplate\W91.DGN PLOT DATE : 18-MAR-2013 11:42 PLOT BY : mscsja

WISDOT/CADDS SHEET 42

NOTES

1. Sign is Type II - Type F Reflective
2. Color:
   Background - Yellow
   Message - Black

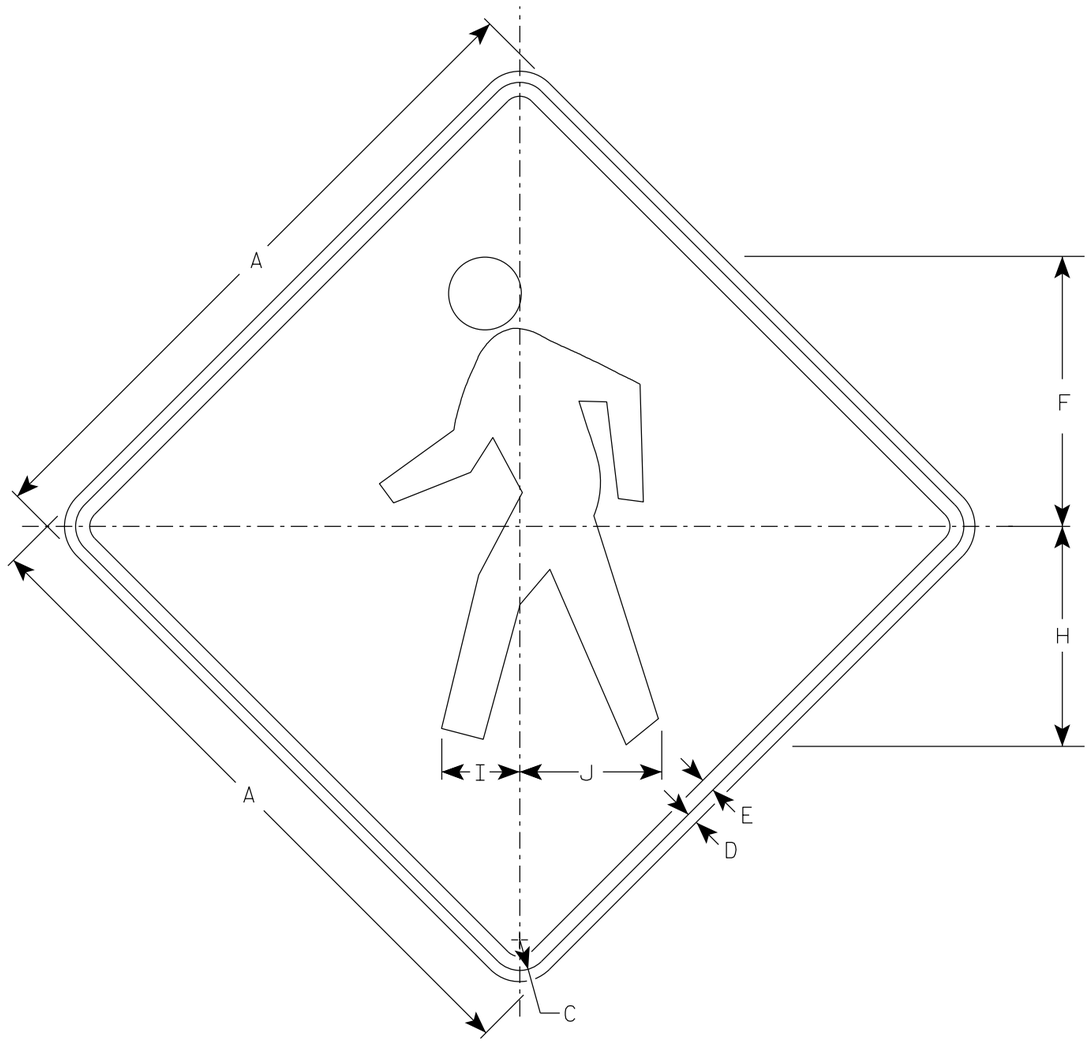

W11-2

SIZE	A	B	C	D	E	F	G	H	I	J	K	L	M	N	O	P	Q	R	S	T	U	V	W	X	Y	Z	Area sq. ft.
1	24		1 1/8	3/8	1/2	9 3/4		7 7/8	2 7/8	5 1/8																	4.0
2S	30		1 3/8	1/2	5/8	12 1/8		9 7/8	3 1/2	6 3/8																	6.25
2M	36		1 5/8	5/8	3/4	14 1/2		11 7/8	4 1/4	7 5/8																	9.0
3	36		1 5/8	5/8	3/4	14 1/2		11 7/8	4 1/4	7 5/8																	9.0
4	48		2 1/4	3/4	1	19 3/8		15 3/4	5 5/8	10 1/4																	16.0
5																											

STANDARD SIGN
W11-2

WISCONSIN DEPT OF TRANSPORTATION

APPROVED Matthew R Rauch
for State Traffic Engineer

DATE 4/8/2020 PLATE NO. W11-2.8

PROJECT NO:	HWY:	COUNTY:		SHEET NO: 810	E

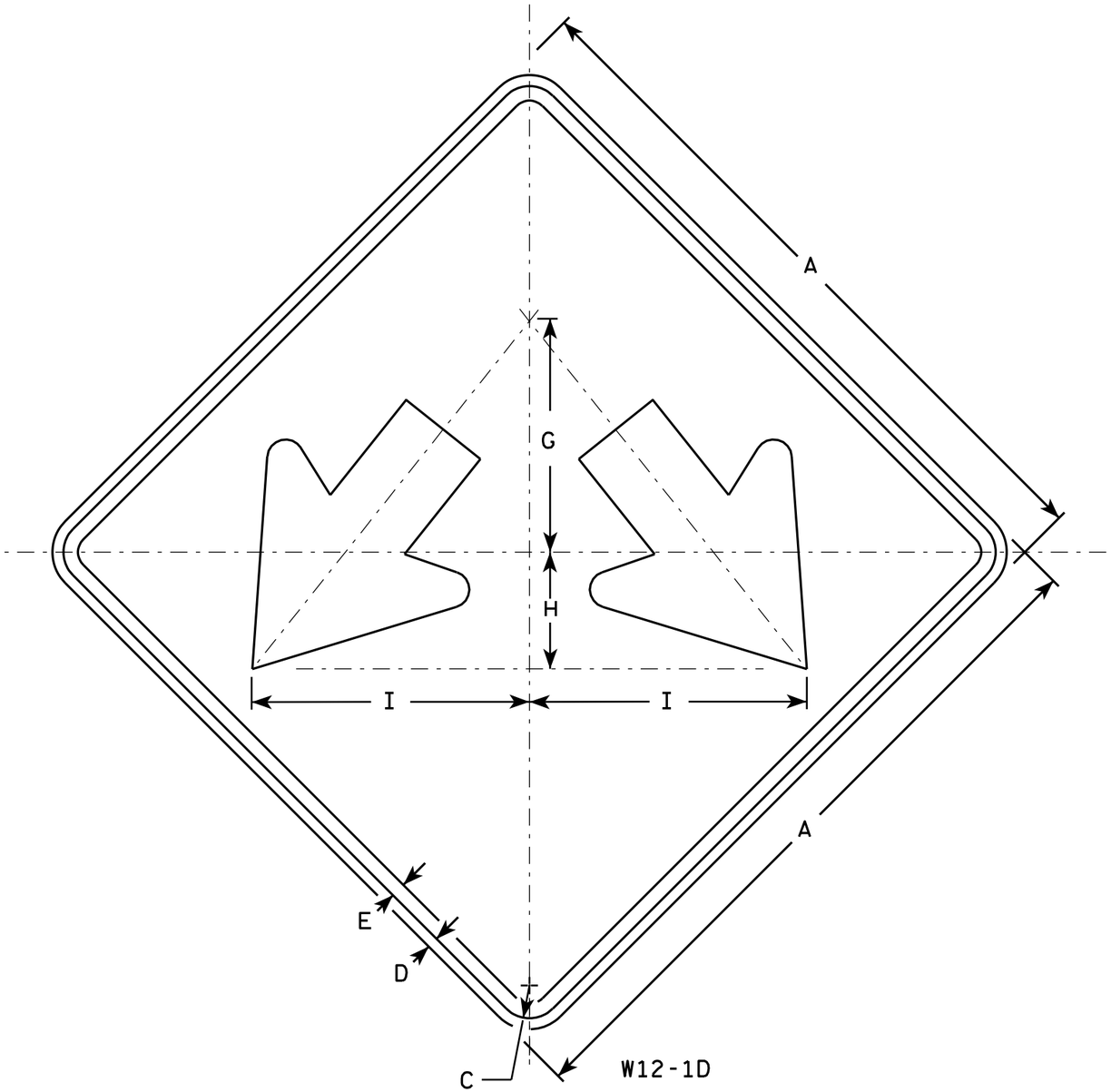

NOTES

1. Sign is Type II - Type F Reflective - reference WIS DOT Standard Specification for HIGHWAY and STRUCTURE CONSTRUCTION latest edition.
2. Color:
   Background - Yellow
   Message - Black
3. Corners may be square or rounded when base material is plywood but borders shall be rounded as shown. When base material is metal, the corners and borders shall be rounded.

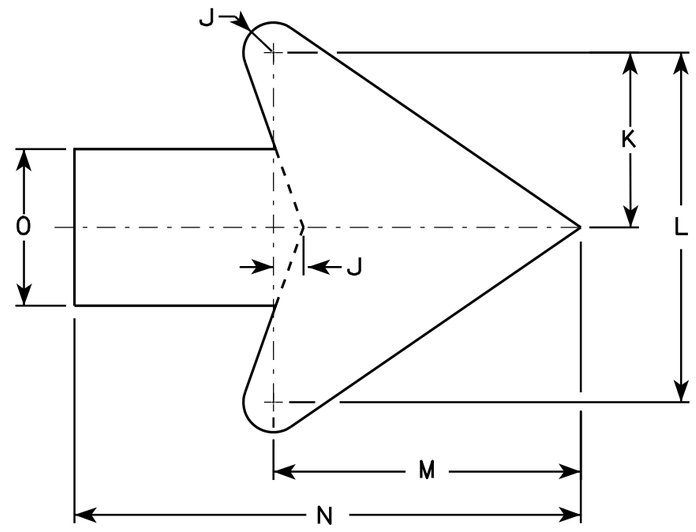

Arrow Detail

SIZE	A	B	C	D	E	F	G	H	I	J	K	L	M	N	O	P	Q	R	S	T	U	V	W	X	Y	Z	Area sq. ft.
1																											
2S	24		1 1/8	1/2	3/8		8	4	9 1/2	3/8	3 3/8	7 1/4	6 3/8	10 3/8	3 1/4												4.0
2M	24		1 1/8	1/2	3/8		8	4	9 1/2	3/8	3 3/8	7 1/4	6 3/8	10 3/8	3 1/4												4.0
3	30		1 3/8	1/2	5/8		10	5	11 7/8	3/4	4 1/2	9	7 7/8	13	4												6.25
4	36		1 3/8	1/2	5/8		12	6	14 1/4	1	5 1/2	10 7/8	9 5/8	15 3/4	4 3/4												9.0
5	48		2 1/4	3/4	1		16	8	19	1 1/4	7 1/4	14 1/2	12 3/4	21	6 1/4												16.0

STANDARD SIGN
W12-1D

WISCONSIN DEPT OF TRANSPORTATION

APPROVED Matthew R Rauch
for State Traffic Engineer

DATE 3/13/13 PLATE NO. W12-1D.15

PROJECT NO:	HWY:	COUNTY:		SHEET NO: 811	E

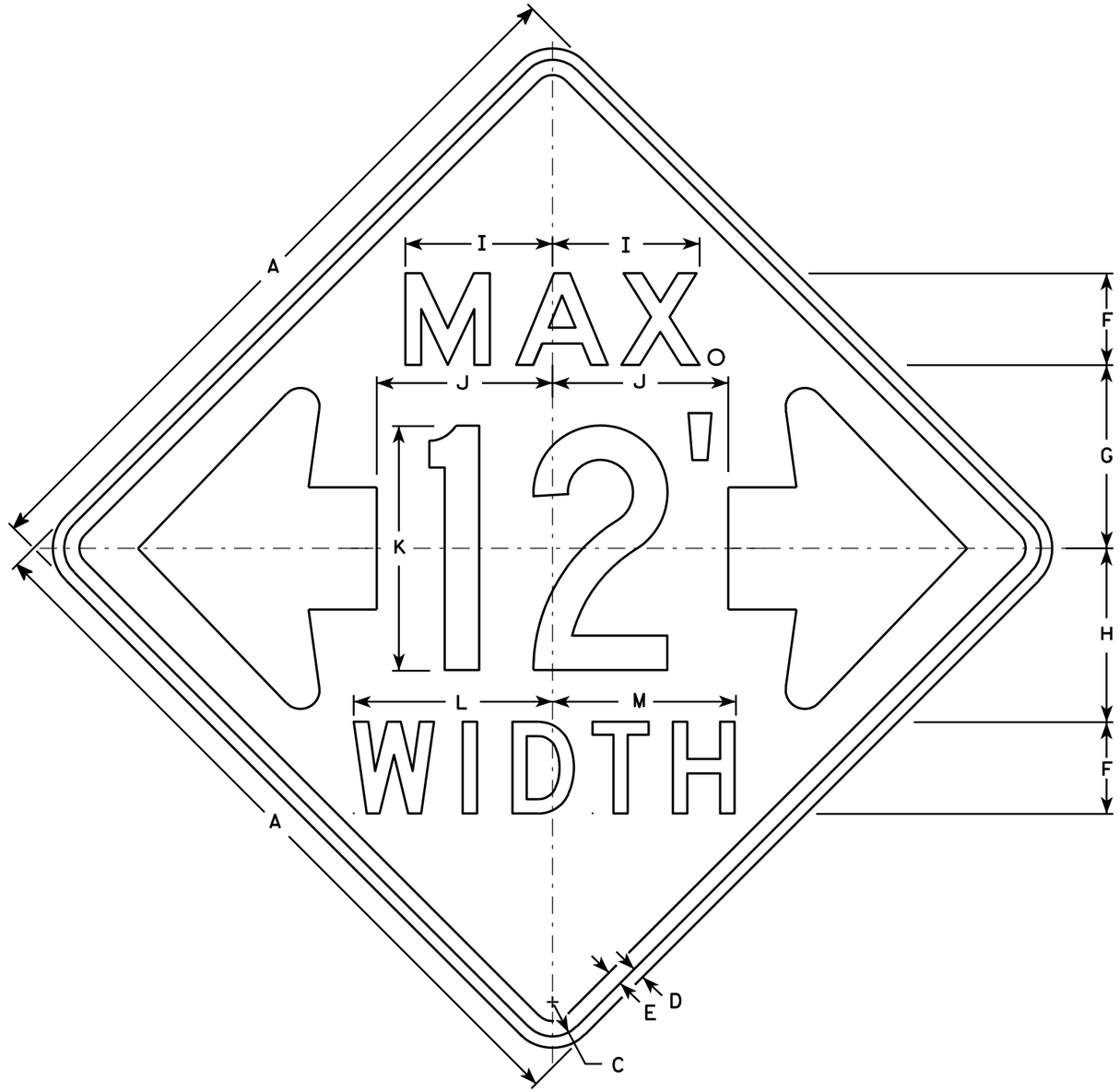

W12-52

NOTES

1. Sign is Type II - Type F Reflective - reference WIS DOT Standard Specification for HIGHWAY and STRUCTURE CONSTRUCTION latest edition.
2. Color:
   Background - Orange
   Message - Black
3. Message Series - See note 5
4. Corners may be square or rounded when base material is plywood but borders shall be rounded as shown. When base material is metal, the corners and borders shall be rounded.
5. The top line is series E, the numerals are series C, and the bottom line is series D.
6. Substitute appropriate numerals and adjust spacing as required.

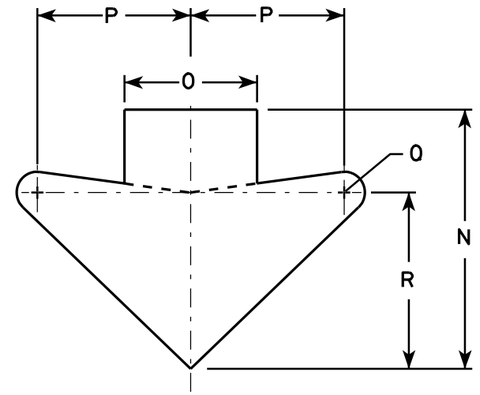

ARROW DETAIL

SIZE	A	B	C	D	E	F	G	H	I	J	K	L	M	N	O	P	O	R	S	T	U	V	W	X	Y	Z	Area sq. ft.
1																											
2S	48		2 1/4	3/4	1	6	12	11 3/8	9 5/8	11 1/2	16	13	12	15 5/8	8	9 1/4	1 1/4	10 5/8									16.0
2M	48		2 1/4	3/4	1	6	12	11 3/8	9 5/8	11 1/2	16	13	12	15 5/8	8	9 1/4	1 1/4	10 5/8									16.0
3																											
4																											
5																											

STANDARD SIGN
W12-52

WISCONSIN DEPT OF TRANSPORTATION

APPROVED Matthew R Rauch
for State Traffic Engineer

DATE 3/16/11 PLATE NO. W12-52.7

PROJECT NO:	HWY:	COUNTY:		SHEET NO: 812	E

NOTES

1. Sign is Type II- Type F Reflective
2. Color:
   Background - Yellow
   Message - Black
3. Message Series - Lines 1 and 2 are Series D.
   Line 3 is series C.
4. Corners and borders shall be rounded on all base materials for this sign.

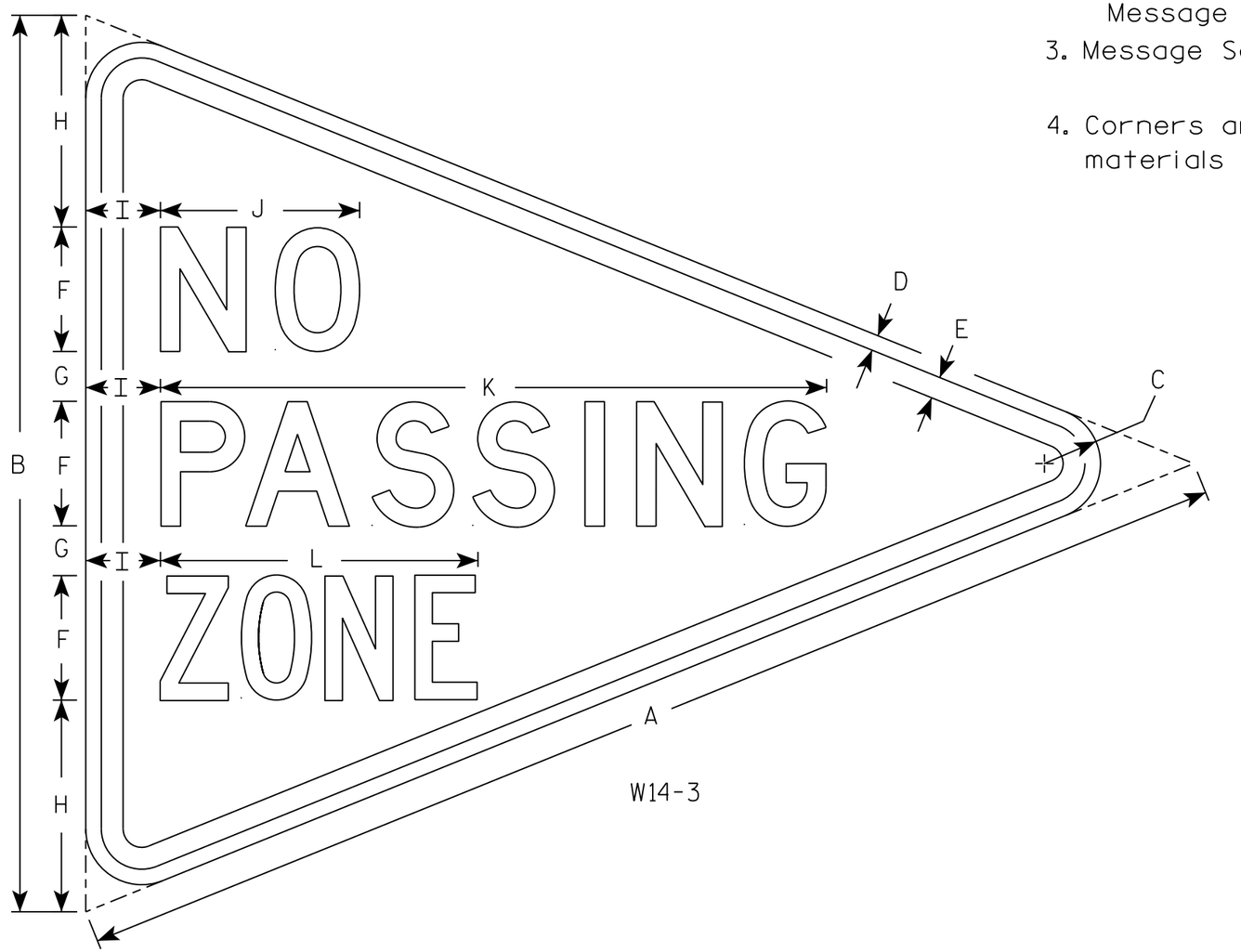

W14-3

SIZE	A	B	C	D	E	F	G	H	I	J	K	L	M	N	O	P	Q	R	S	T	U	V	W	X	Y	Z	Area sq. ft.
1																											
2S	48	36	2 1/4	5/8	7/8	5	2	8 1/2	3	8	26 3/4	12 3/4															5.56
2M																											
3																											
4																											
5																											

STANDARD SIGN
W14-3

WISCONSIN DEPT OF TRANSPORTATION

APPROVED Matthew R Rauch
for State Traffic Engineer

DATE 3/21/17 PLATE NO. W14-3.10

PROJECT NO: | HWY: | COUNTY: | SHEET NO: 813 | E

FILE NAME : C:\CAEfiles\Projects\tr_stdplate\W143.DGN PLOT DATE : 21-MAR-2017 08:48 PLOT BY : $$...plotuser...$$ PLOT NAME : PLOT SCALE : 5.650195:1.000000

WISDOT/CADDS SHEET 42

7

7

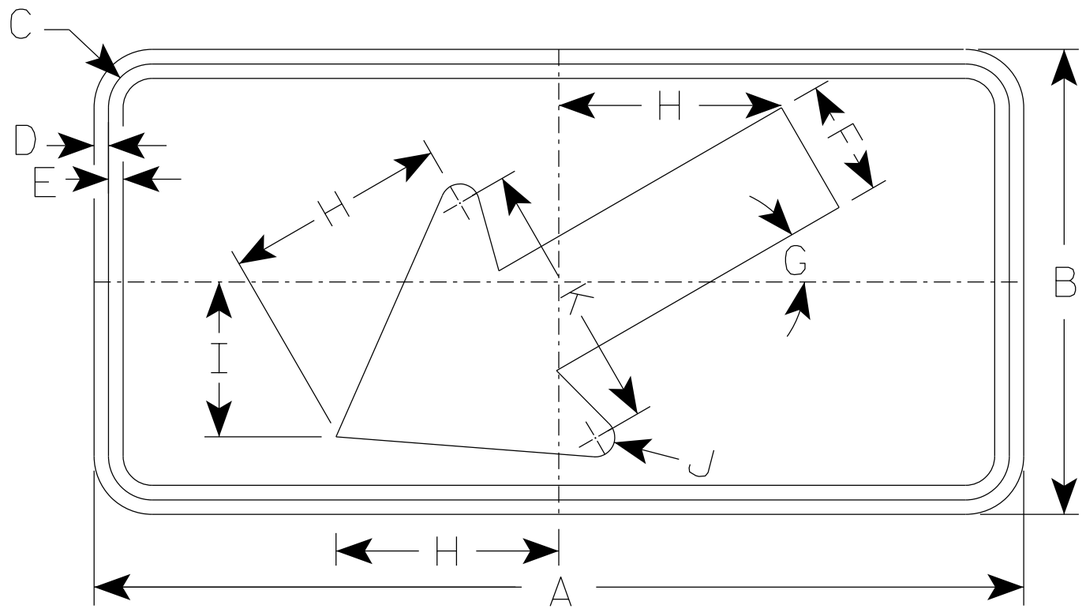

W16-7L

NOTES

1. Sign is Type II - Type F Reflective
2. Color:
   Background - Yellow
   Message - Black
3. W16-7R is the same as W16-7L except the arrow is reversed along the vertical centerline.

* For 36" x 36" Warning Signs, use 30" x 18" W16-7L signs.
* For 48" x 48" Warning Signs, use 48" x 24" W16-7L signs.

SIZE	A	B	C	D	E	F	G	H	I	J	K	L	M	N	O	P	Q	R	S	T	U	V	W	X	Y	Z	Area sq. ft.
1																											
2S	24	12	1 1/8	3/8	3/8	3	30°	5 3/4	4	1/2	7																2.0
* 2M	30	18	1 1/8	3/8	1/2	4 1/2	30°	8 1/2	6	5/8	10 1/4																3.75
* 3	30	18	1 1/8	3/8	1/2	4 1/2	30°	8 1/2	6	5/8	10 1/4																3.75
* 4	48	24	1 3/8	1/2	5/8	6	30°	11 1/2	8	1	14																8.0
5																											

STANDARD SIGN
W16-7

WISCONSIN DEPT OF TRANSPORTATION

APPROVED Matthew R Rauch
for State Traffic Engineer

DATE 3/16/2021 PLATE NO. W16-7.8

PROJECT NO:	HWY:	COUNTY:		SHEET NO: 814	E

NOTES

1. Sign is Type II - Type F Reflective
2. Color:
   Background - Yellow
   Message - Black
3. Message Series - C

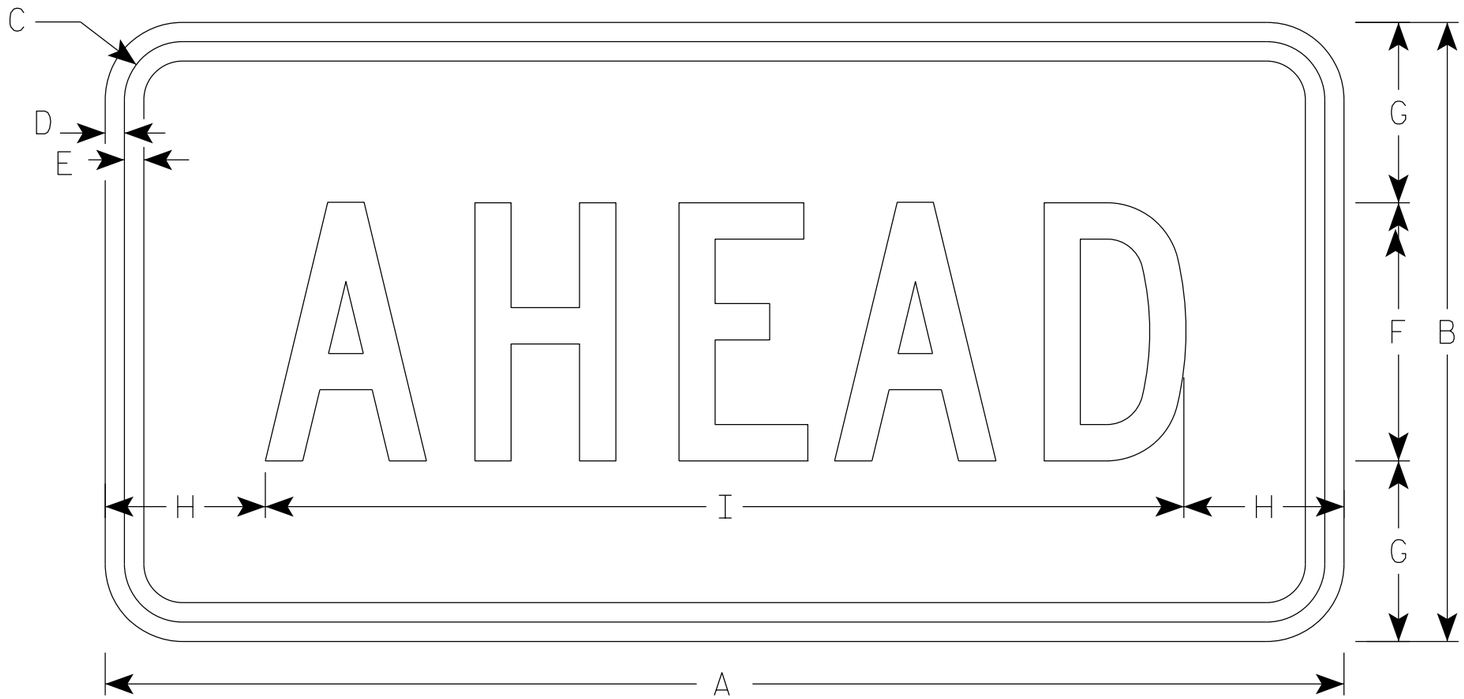

W16-9P

SIZE	A	B	C	D	E	F	G	H	I	J	K	L	M	N	O	P	Q	R	S	T	U	V	W	X	Y	Z	Area sq. ft.
1																											
2S	24	12	1 1/8	3/8	3/8	5	3 1/2	3 1/8	17 3/4																		2.0
2M	30	18	1 1/8	3/8	1/2	7	5 1/2	2 3/4	24 1/2																		3.75
3	30	18	1 1/8	3/8	1/2	7	3 1/2	2 3/4	24 1/2																		3.75
4	48	24	1 3/8	1/2	5/8	10	7	6 1/8	35 3/4																		8.0
5																											

STANDARD SIGN
W16-9P

WISCONSIN DEPT OF TRANSPORTATION

APPROVED Matthew R Rauch
for State Traffic Engineer

DATE 3/7/19 PLATE NO. W16-9P.7

PROJECT NO: | HWY: | COUNTY: | SHEET NO: 815 E

FILE NAME : C:\CAEFiles\Projects\tr_stdplate\W169P.DGN PLOT DATE : 07-MAR-2019 PLOT BY : dotc4c PLOT NAME : PLOT SCALE : $$.....plotscale.....$$

7

NOTES

1. Sign is Type II - Type F Reflective
2. Color:
   Background - Orange
   Message - Black
3. Message Series - C
4. Corners may be square or rounded when base material is plywood but borders shall be rounded as shown. When base material is metal, the corners and borders shall be rounded.

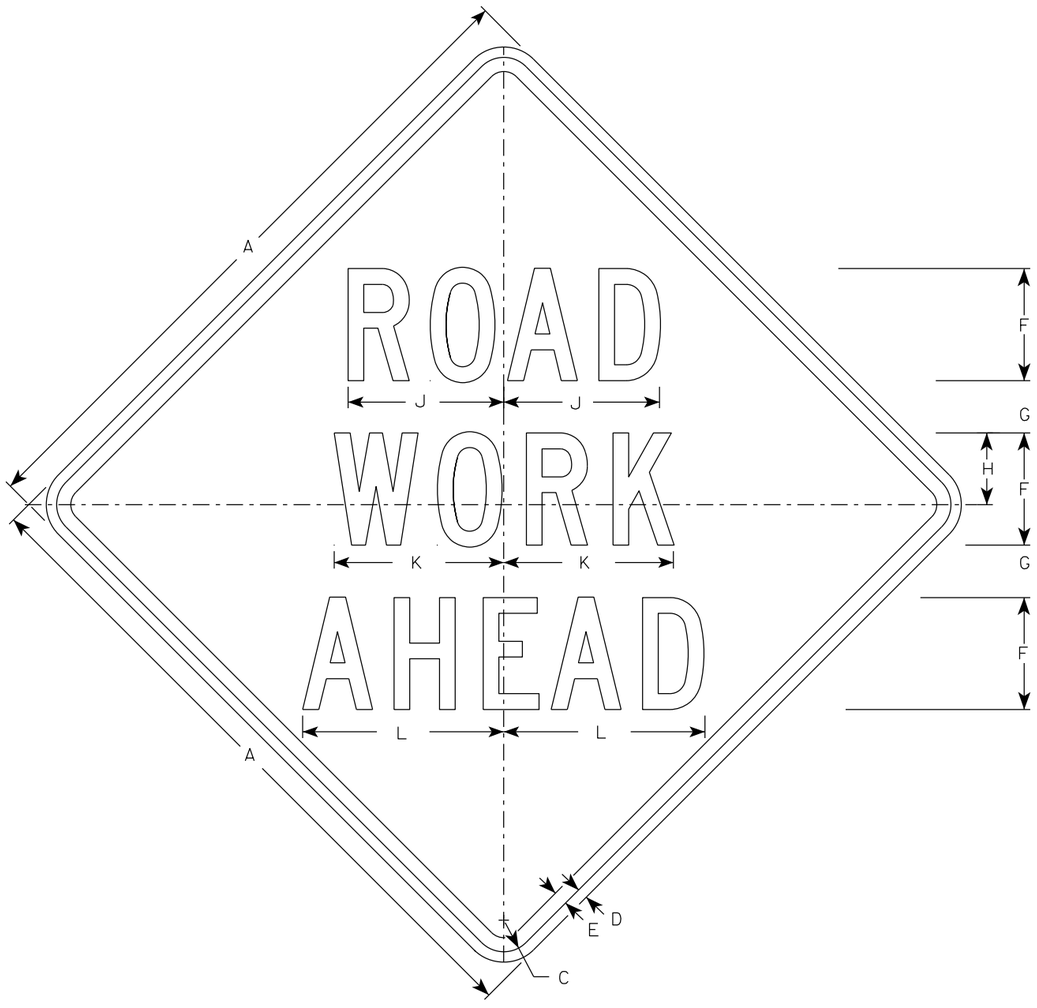

W20-1A

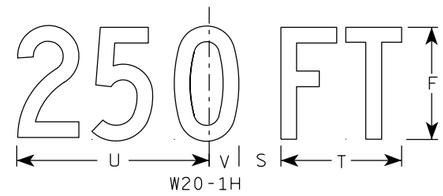

W20-1H

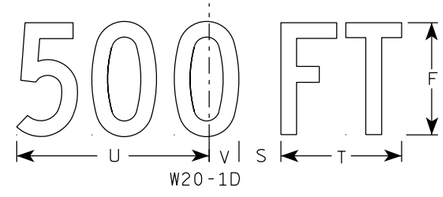

W20-1D



W20-1C

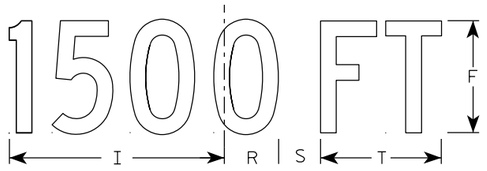

W20-1B

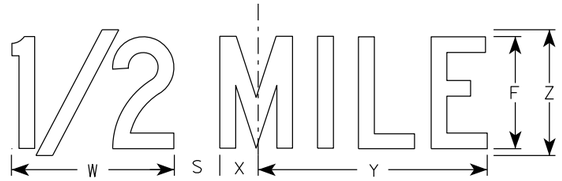

W20-1G

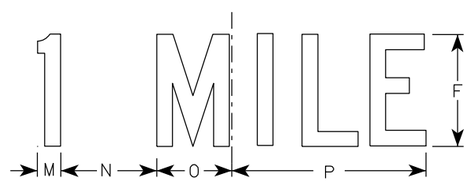

W20-1F

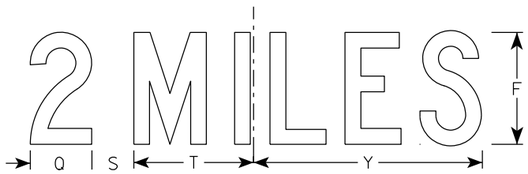

W20-1E

SIZE	A	B	C	D	E	F	G	H	I	J	K	L	M	N	O	P	Q	R	S	T	U	V	W	X	Y	Z	Area sq. ft.
1	36		1 5/8	5/8	3/4	5	2 5/8	3 1/4	10 1/8	7	7 5/8	8 7/8	1 1/8	4 1/2	3 1/2	9	3 1/4	2 1/2	2 1/4	5 5/8	9	1 3/8	8	1 3/4	10 3/4	6	9.0
2S	48		2 1/4	3/4	1	8	3 3/4	5 1/8	15 3/8	11 1/8	12 1/8	14 3/8	1 5/8	6 7/8	5 3/8	13 7/8	4 3/8	3 7/8	3	8 5/8	13 3/4	2 1/8	11 7/8	2 3/4	16 3/8	9	16.0
2M	48		2 1/4	3/4	1	8	3 3/4	5 1/8	15 3/8	11 1/8	12 1/8	14 3/8	1 5/8	6 7/8	5 3/8	13 7/8	4 3/8	3 7/8	3	8 5/8	13 3/4	2 1/8	11 7/8	2 3/4	16 3/8	9	16.0
3	48		2 1/4	3/4	1	8	3 3/4	5 1/8	15 3/8	11 1/8	12 1/8	14 3/8	1 5/8	6 7/8	5 3/8	13 7/8	4 3/8	3 7/8	3	8 5/8	13 3/4	2 1/8	11 7/8	2 3/4	16 3/8	9	16.0
4	48		2 1/4	3/4	1	8	3 3/4	5 1/8	15 3/8	11 1/8	12 1/8	14 3/8	1 5/8	6 7/8	5 3/8	13 7/8	4 3/8	3 7/8	3	8 5/8	13 3/4	2 1/8	11 7/8	2 3/4	16 3/8	9	16.0
5	48		2 1/4	3/4	1	8	3 3/4	5 1/8	15 3/8	11 1/8	12 1/8	14 3/8	1 5/8	6 7/8	5 3/8	13 7/8	4 3/8	3 7/8	3	8 5/8	13 3/4	2 1/8	11 7/8	2 3/4	16 3/8	9	16.0

STANDARD SIGN
W20-1A, B, C, D, E, F, G & H

WISCONSIN DEPT OF TRANSPORTATION

APPROVED Matthew R Rauch
for State Traffic Engineer

DATE 3/25/2020 PLATE NO. W20-1.11

PROJECT NO:

SHEET NO: E

FILE NAME : C:\CAEfiles\Projects\tr_stdplate\W201.DGN PLOT DATE : 25-MARCH-2020 PLOT BY : dotc4c

WISDOT/CADDS SHEET 42

7

7

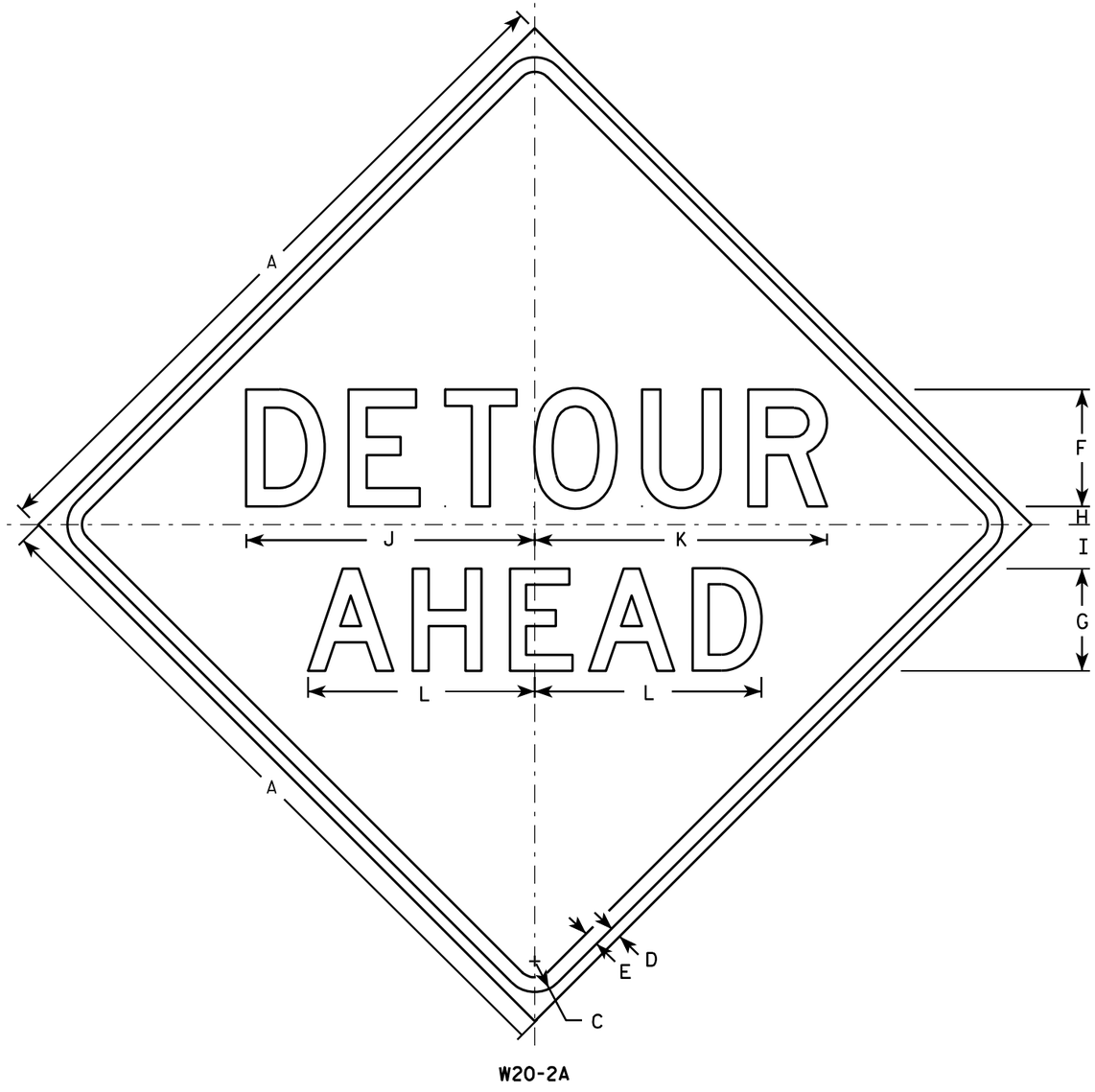

W20-2A

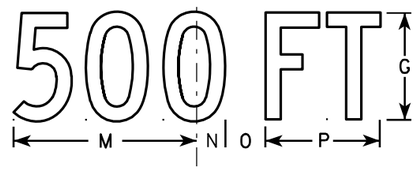

W20-2D

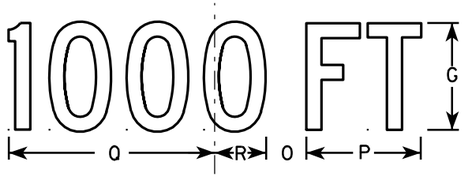

W20-2C

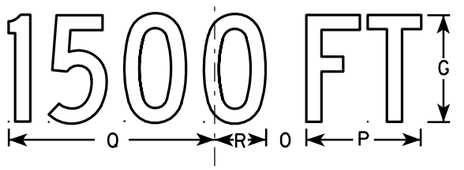

W20-2B

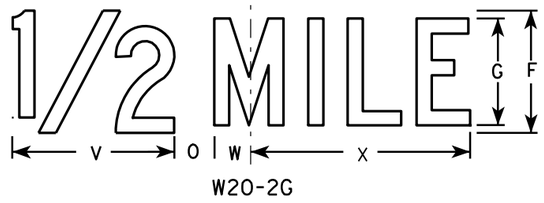

W20-2G

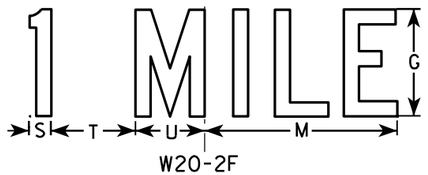

W20-2F

NOTES

1. Sign is Type II - Type F Reflective - reference WIS DOT Standard Specification for HIGHWAY and STRUCTURE CONSTRUCTION latest edition.
2. Color:
   Background - Orange
   Message - Black
3. Message Series - See note 5
4. Corners may be square or rounded when base material is plywood but borders shall be rounded as shown. When base material is metal, the corners and borders shall be rounded.
5. Line 1 is Series D.
   Line 2 is Series D for AHEAD and Series C for all other distances.

SIZE	A	B	C	D	E	F	G	H	I	J	K	L	M	N	O	P	O	R	S	T	U	V	W	X	Y	Z	Area sq. ft.
1	36		1 5/8	5/8	3/4	6	5	1	2 1/4	14 3/4	15	11 5/8	9	1 3/8	1 7/8	5 5/8	10 1/8	2 1/2	1 1/8	4 1/2	3 1/2	8	1 3/4	10 3/4			9.0
2S	48		2 1/4	3/4	1	8	7	1 1/4	3	19 3/4	20	15 1/2	12	1 7/8	2 5/8	7 1/2	13 1/2	3 3/8	1 1/2	6	4 5/8	10 5/8	2 3/8	14 3/8			16.0
2M	48		2 1/4	3/4	1	8	7	1 1/4	3	19 3/4	20	15 1/2	12	1 7/8	2 5/8	7 1/2	13 1/2	3 3/8	1 1/2	6	4 5/8	10 5/8	2 3/8	14 3/8			16.0
3	48		2 1/4	3/4	1	8	7	1 1/4	3	19 3/4	20	15 1/2	12	1 7/8	2 5/8	7 1/2	13 1/2	3 3/8	1 1/2	6	4 5/8	10 5/8	2 3/8	14 3/8			16.0
4	48		2 1/4	3/4	1	8	7	1 1/4	3	19 3/4	20	15 1/2	12	1 7/8	2 5/8	7 1/2	13 1/2	3 3/8	1 1/2	6	4 5/8	10 5/8	2 3/8	14 3/8			16.0
5	48		2 1/4	3/4	1	8	7	1 1/4	3	19 3/4	20	15 1/2	12	1 7/8	2 5/8	7 1/2	13 1/2	3 3/8	1 1/2	6	4 5/8	10 5/8	2 3/8	14 3/8			16.0

STANDARD SIGN
W20-2A,B,C,D,F & G

WISCONSIN DEPT OF TRANSPORTATION

APPROVED Matthew R Rauch
for State Traffic Engineer

DATE 3/18/11 PLATE NO. W20-2.6

PROJECT NO:	HWY:	COUNTY:		SHEET NO: 817	E

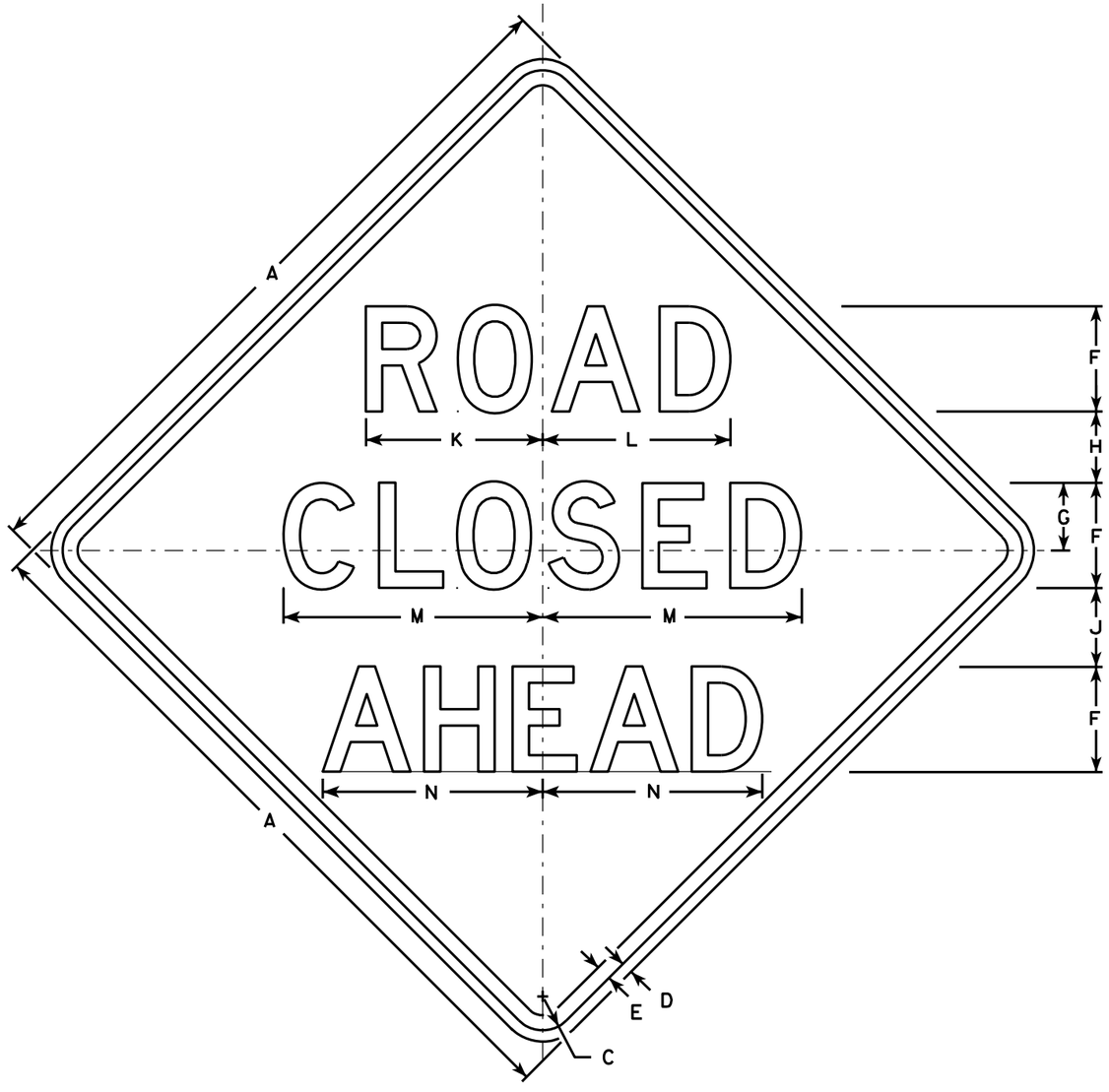

W20-3A

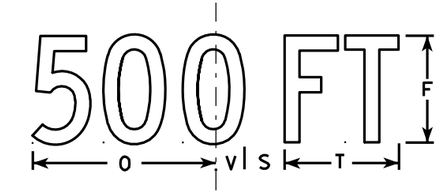

W20-3D

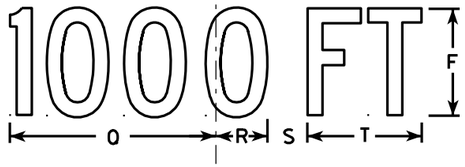

W20-3C

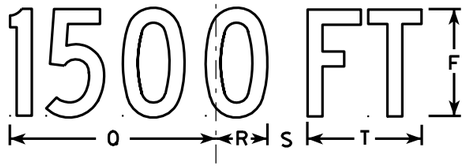

W20-3B

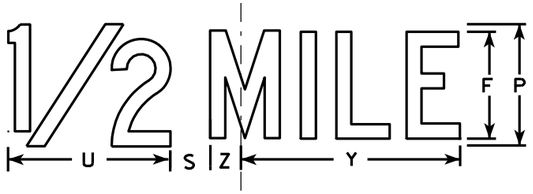

W20-3G

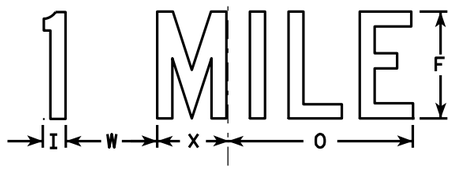

W20-3F

NOTES

1. Sign is Type II - Type F Reflective - reference WIS DOT Standard Specification for HIGHWAY and STRUCTURE CONSTRUCTION latest edition.
2. Color:
   Background - Orange
   Message - Black
3. Message Series - see note 5
4. Corners may be square or rounded when base material is plywood but borders shall be rounded as shown. When base material is metal, the corners and borders shall be rounded.
5. Lines 1 and 2 are Series D.
   Line 3 is Series D for AHEAD and Series C for all other distances.

SIZE	A	B	C	D	E	F	G	H	I	J	K	L	M	N	O	P	Q	R	S	T	U	V	W	X	Y	Z	Area sq. ft.
1	36		1 5/8	5/8	3/4	5	3 3/8	3 1/2	1 1/8	4	8 3/8	8 7/8	12 1/2	11	9	6	10 1/8	2 1/2	1 7/8	5 5/8	8	1 3/8	4 1/2	3 1/2	10 3/4	1 3/4	9.0
2S	48		2 1/4	3/4	1	7	4 1/2	4 3/4	1 1/2	5 1/4	11 3/4	12 1/2	17 1/4	14 5/8	12	8	13 1/2	3 3/8	2 5/8	7 1/2	10 5/8	1 7/8	6	4 5/8	14 3/8	2 3/8	16.0
2M	48		2 1/4	3/4	1	7	4 1/2	4 3/4	1 1/2	5 1/4	11 3/4	12 1/2	17 1/4	14 5/8	12	8	13 1/2	3 3/8	2 5/8	7 1/2	10 5/8	1 7/8	6	4 5/8	14 3/8	2 3/8	16.0
3	48		2 1/4	3/4	1	7	4 1/2	4 3/4	1 1/2	5 1/4	11 3/4	12 1/2	17 1/4	14 5/8	12	8	13 1/2	3 3/8	2 5/8	7 1/2	10 5/8	1 7/8	6	4 5/8	14 3/8	2 3/8	16.0
4	48		2 1/4	3/4	1	7	4 1/2	4 3/4	1 1/2	5 1/4	11 3/4	12 1/2	17 1/4	14 5/8	12	8	13 1/2	3 3/8	2 5/8	7 1/2	10 5/8	1 7/8	6	4 5/8	14 3/8	2 3/8	16.0
5	48		2 1/4	3/4	1	7	4 1/2	4 3/4	1 1/2	5 1/4	11 3/4	12 1/2	17 1/4	14 5/8	12	8	13 1/2	3 3/8	2 5/8	7 1/2	10 5/8	1 7/8	6	4 5/8	14 3/8	2 3/8	16.0

STANDARD SIGN
W20-3A, B, C, D, F & G

WISCONSIN DEPT OF TRANSPORTATION

APPROVED Matthew R Rauch
for State Traffic Engineer
DATE 3/18/11 PLATE NO. W20-3.7

PROJECT NO: | HWY: | COUNTY: | SHEET NO: 818 | E



W20-56A

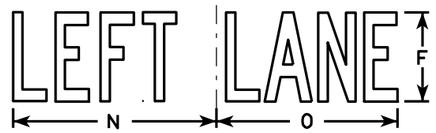

W20-55A

W20-5A

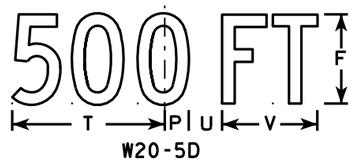

W20-5D

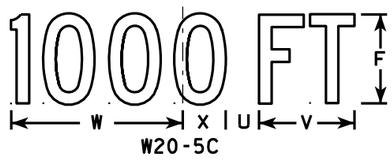

W20-5C

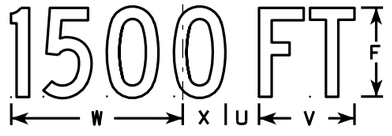

W20-5B



W20-5G



W20-5F

NOTES

1. Sign is Type II - Type F Reflective - reference WIS DOT Standard Specification for HIGHWAY and STRUCTURE CONSTRUCTION latest edition.
2. Color:
   Background - Orange
   Message - Black
3. Message Series - See Note 5
4. Corners may be square or rounded when base material is plywood but borders shall be rounded as shown. When base material is metal, the corners and borders shall be rounded.
5. " _____ LANE" is Series B.
   All other copy is Series C.

SIZE	A	B	C	D	E	F	G	H	I	J	K	L	M	N	O	P	Q	R	S	T	U	V	W	X	Y	Z	Area sq. ft.
1	36	6	1 5/8	5/8	3/4	5	1/8	2 1/2	13 1/8	10 3/4	9 1/2	14 1/4	13 5/8	12	12	1 3/8	1 1/8	4 1/2	3 1/2	9	1 1/8	5 5/8	10 1/8	2 1/2	1 3/4	8	9.0
2S	48	8	2 1/4	3/4	1	7	1 1/4	3 1/4	17 1/2	14 3/8	12 5/8	19	18 3/8	16	14 1/4	1 7/8	1 1/2	6	4 5/8	12	2 5/8	7 1/2	13 1/2	3 3/8	2 3/8	10 5/8	16.0
2M	48	8	2 1/4	3/4	1	7	1 1/4	3 1/4	17 1/2	14 3/8	12 5/8	19	18 3/8	16	14 1/4	1 7/8	1 1/2	6	4 5/8	12	2 5/8	7 1/2	13 1/2	3 3/8	2 3/8	10 5/8	16.0
3	48	8	2 1/4	3/4	1	7	1 1/4	3 1/4	17 1/2	14 3/8	12 5/8	19	18 3/8	16	14 1/4	1 7/8	1 1/2	6	4 5/8	12	2 5/8	7 1/2	13 1/2	3 3/8	2 3/8	10 5/8	16.0
4	48	8	2 1/4	3/4	1	7	1 1/4	3 1/4	17 1/2	14 3/8	12 5/8	19	18 3/8	16	14 1/4	1 7/8	1 1/2	6	4 5/8	12	2 5/8	7 1/2	13 1/2	3 3/8	2 3/8	10 5/8	16.0
5	48	8	2 1/4	3/4	1	7	1 1/4	3 1/4	17 1/2	14 3/8	12 5/8	19	18 3/8	16	14 1/4	1 7/8	1 1/2	6	4 5/8	12	2 5/8	7 1/2	13 1/2	3 3/8	2 3/8	10 5/8	16.0

STANDARD SIGN
W20-5A, B, C, D, F & G

WISCONSIN DEPT OF TRANSPORTATION

APPROVED Matthew R Rauch
for State Traffic Engineer

DATE 3/18/11 PLATE NO. W20-5.11

PROJECT NO:	HWY:	COUNTY:		SHEET NO: 819	E

7

FILE NAME : C:\Users\PROJECTS\tr_stdplate\W205.DGN PLOT DATE : 18-MAR-2011 12:15 PLOT BY : mscj9h PLOT NAME : PLOT SCALE : 11.918087:1.000000
WISDOT/CADDS SHEET 42

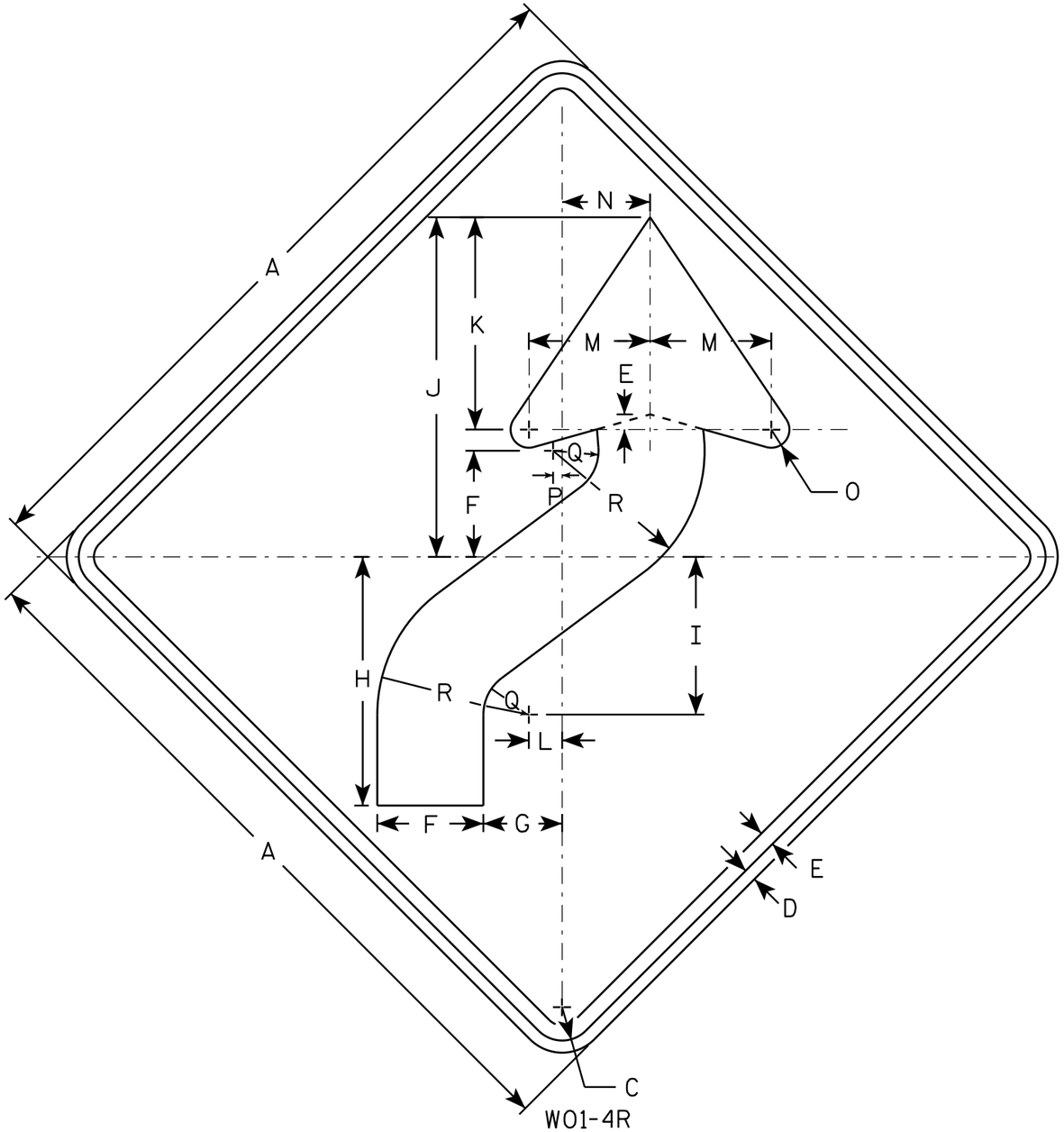

W01-4R

NOTES

1. Sign is Type II - Type F Reflective - reference WIS DOT Standard Specification for HIGHWAY and STRUCTURE CONSTRUCTION latest edition.
2. Color:
   Background - Orange
   Message - Black
3. Corners may be square or rounded when base material is plywood but borders shall be rounded as shown. When base material is metal, the corners and borders shall be rounded.
4. W01-4L is the same as W01-4R except the arrow is reversed along the vertical centerline.

SIZE	A	B	C	D	E	F	G	H	I	J	K	L	M	N	O	P	Q	R	S	T	U	V	W	X	Y	Z	Area sq. ft.
1	36		1 5/8	5/8	3/4	5 1/4	4	12 3/8	7 7/8	16 7/8	10 1/2	1 5/8	6	4 1/2	1	1/2	2 1/4	7 1/2									9.0
2S	48		2 1/4	3/4	1	7	5 1/4	16 1/2	10 1/2	22 1/2	14	2 1/4	8	6	1 1/4	5/8	3	10									16.0
2M	48		2 1/4	3/4	1	7	5 1/4	16 1/2	10 1/2	22 1/2	14	2 1/4	8	6	1 1/4	5/8	3	10									16.0
3	48		2 1/4	3/4	1	7	5 1/4	16 1/2	10 1/2	22 1/2	14	2 1/4	8	6	1 1/4	5/8	3	10									16.0
4	48		2 1/4	3/4	1	7	5 1/4	16 1/2	10 1/2	22 1/2	14	2 1/4	8	6	1 1/4	5/8	3	10									16.0
5	48		2 1/4	3/4	1	7	5 1/4	16 1/2	10 1/2	22 1/2	14	2 1/4	8	6	1 1/4	5/8	3	10									16.0

STANDARD SIGN
W01-4

WISCONSIN DEPT OF TRANSPORTATION

APPROVED Matthew R Rauch
for State Traffic Engineer

DATE 11/18/13 PLATE NO W01-4.1

PROJECT NO: | HWY: | COUNTY: | SHEET NO: E

FILE NAME : C:\CAEfiles\Projects\tr_stdplate\W014.DGN PLOT DATE : 28-FEB-2014 11:35 PLOT BY : mscj9h PLOT NAME : PLOT SCALE : 6.755110:1.000000 WISDOT/CADDS SHEET 42

7

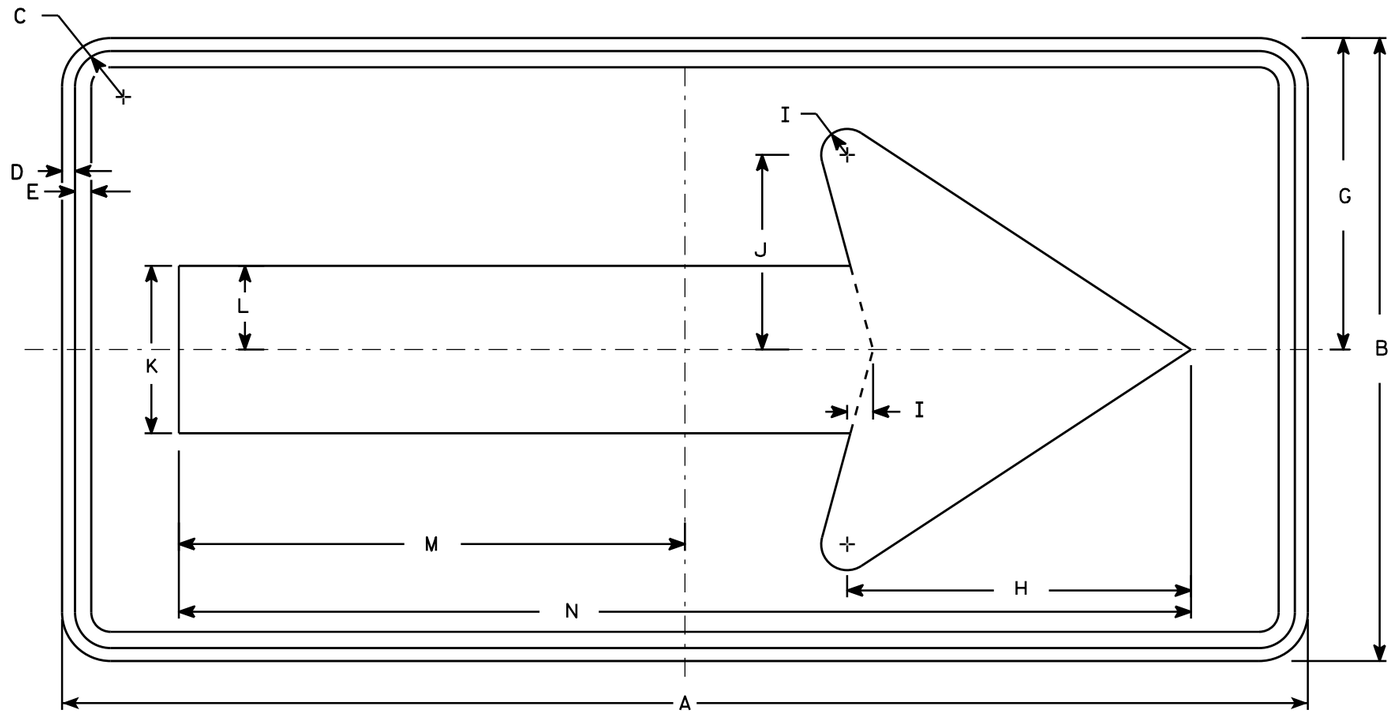

W01-6

NOTES

1. Sign is Type II - Type F Reflective - reference WIS DOT Standard Specification for HIGHWAY and STRUCTURE CONSTRUCTION latest edition.
2. Color:
   Background - Orange
   Message - Black
3. Corners may be square or rounded when base material is plywood but borders shall be rounded as shown. When base material is metal, the corners and borders shall be rounded.

SIZE	A	B	C	D	E	F	G	H	I	J	K	L	M	N	O	P	Q	R	S	T	U	V	W	X	Y	Z	Area sq. ft.
1																											
2S	48	24	1 3/8	1/2	5/8		12	13 1/4	1	7 1/2	6 1/2	3 1/4	19 1/2	39													8.0
2M	48	24	1 3/8	1/2	5/8		12	13 1/4	1	7 1/2	6 1/2	3 1/4	19 1/2	39													8.0
3	60	30	1 3/8	1/2	5/8		15	16 1/4	1 1/4	9 1/4	8	4	24 3/8	48 3/4													12.5
4	60	30	1 3/8	1/2	5/8		15	16 1/4	1 1/4	9 1/4	8	4	24 3/8	48 3/4													12.5
5	60	30	1 3/8	1/2	5/8		15	16 1/4	1 1/4	9 1/4	8	4	24 3/8	48 3/4													12.5

STANDARD SIGN
W01-6

WISCONSIN DEPT OF TRANSPORTATION

APPROVED Matthew R Rauch
for State Traffic Engineer

DATE 11/18/13 PLATE NO. W01-6.1

PROJECT NO:	HWY:	COUNTY:		SHEET NO:	E

FILE NAME : C:\CAEfiles\Projects\tr_stdplate\W016.DGN PLOT DATE : 28-FEB-2014 11:37 PLOT BY : mscj9h PLOT NAME : PLOT SCALE : 5.837526:1.000000 WISDOT/CADDS SHEET 42

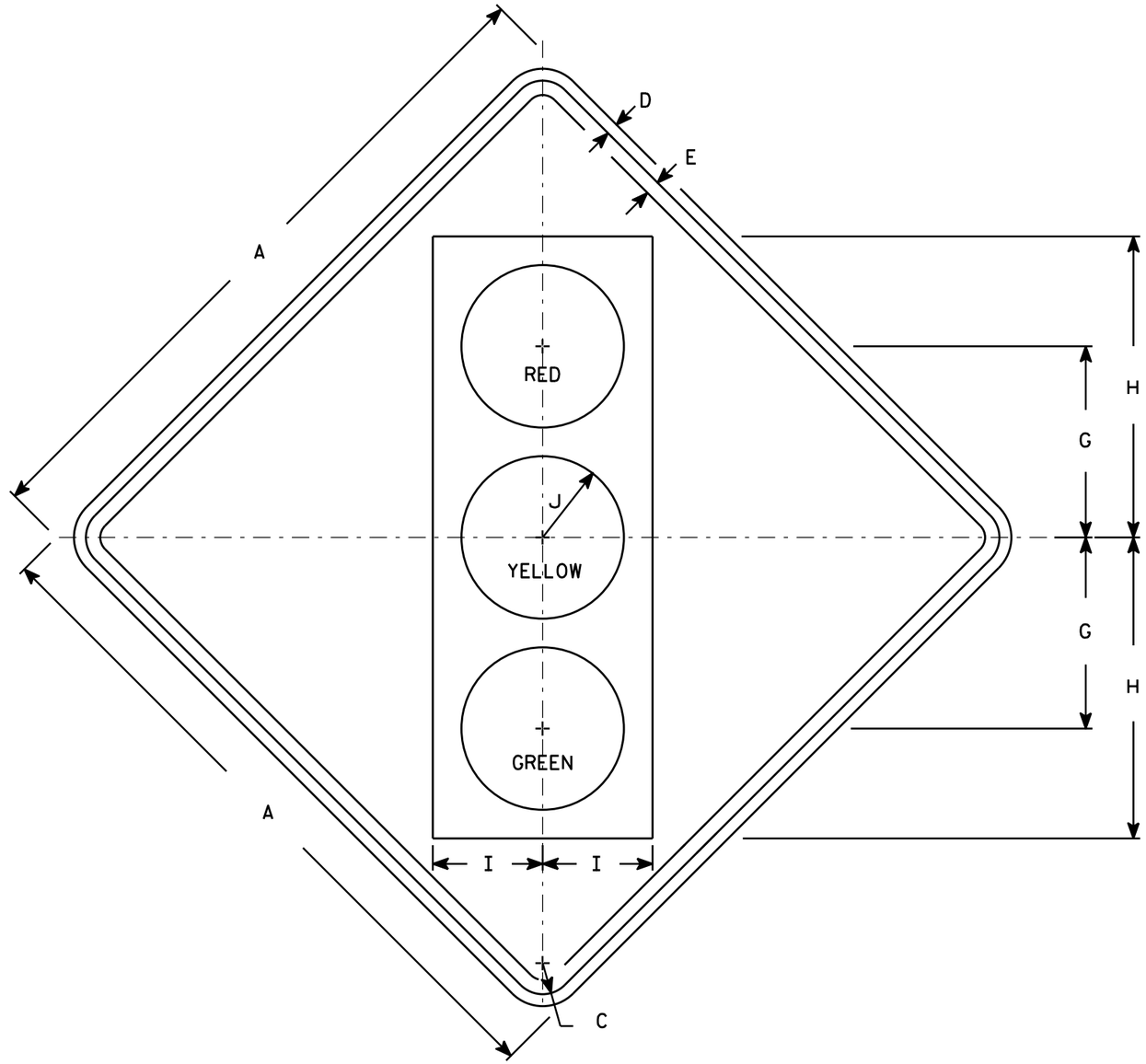

W03-3

NOTES

1. Sign is Type II - Type F Reflective - reference WIS DOT Standard Specification for HIGHWAY and STRUCTURE CONSTRUCTION latest edition.
2. Color:
   Background - Orange
   Message - See Note 4
3. Corners may be square or rounded when base material is plywood but borders shall be rounded as shown. When base material is metal, the corners and borders shall be rounded.
4. Symbol and border are non-reflective black.
   Top circle - Type H Reflectorized Red
   Center circle - Same as background
   Bottom circle - Type H Reflectorized Green

SIZE	A	B	C	D	E	F	G	H	I	J	K	L	M	N	O	P	Q	R	S	T	U	V	W	X	Y	Z	Area sq. ft.
1	36		1 5/8	5/8	3/4		10	15 3/4	5 3/4	4 1/4																	9.0
2S	48		2 1/4	3/4	1		12 1/2	20	7 1/2	5																	16.0
2M	48		2 1/4	3/4	1		12 1/2	20	7 1/2	5																	16.0
3	48		2 1/4	3/4	1		12 1/2	20	7 1/2	5																	16.0
4	48		2 1/4	3/4	1		12 1/2	20	7 1/2	5																	16.0
5	48		2 1/4	3/4	1		12 1/2	20	7 1/2	5																	16.0

STANDARD SIGN
W03-3

WISCONSIN DEPT OF TRANSPORTATION

APPROVED Matthew R Rauch
for State Traffic Engineer

DATE 11/20/13 PLAT 822 W03-3.1

PROJECT NO:	HWY:	COUNTY:		SHEET NO:	E

FILE NAME : C:\CAEFiles\Projects\tr_stdplate\W033.DGN PLOT DATE : 20-NOV-2013 11:26 PLOT BY : mscsja PLOT NAME : PLOT SCALE : 7.296908:1.000000

WISDOT/CADDS SHEET 42

7

7

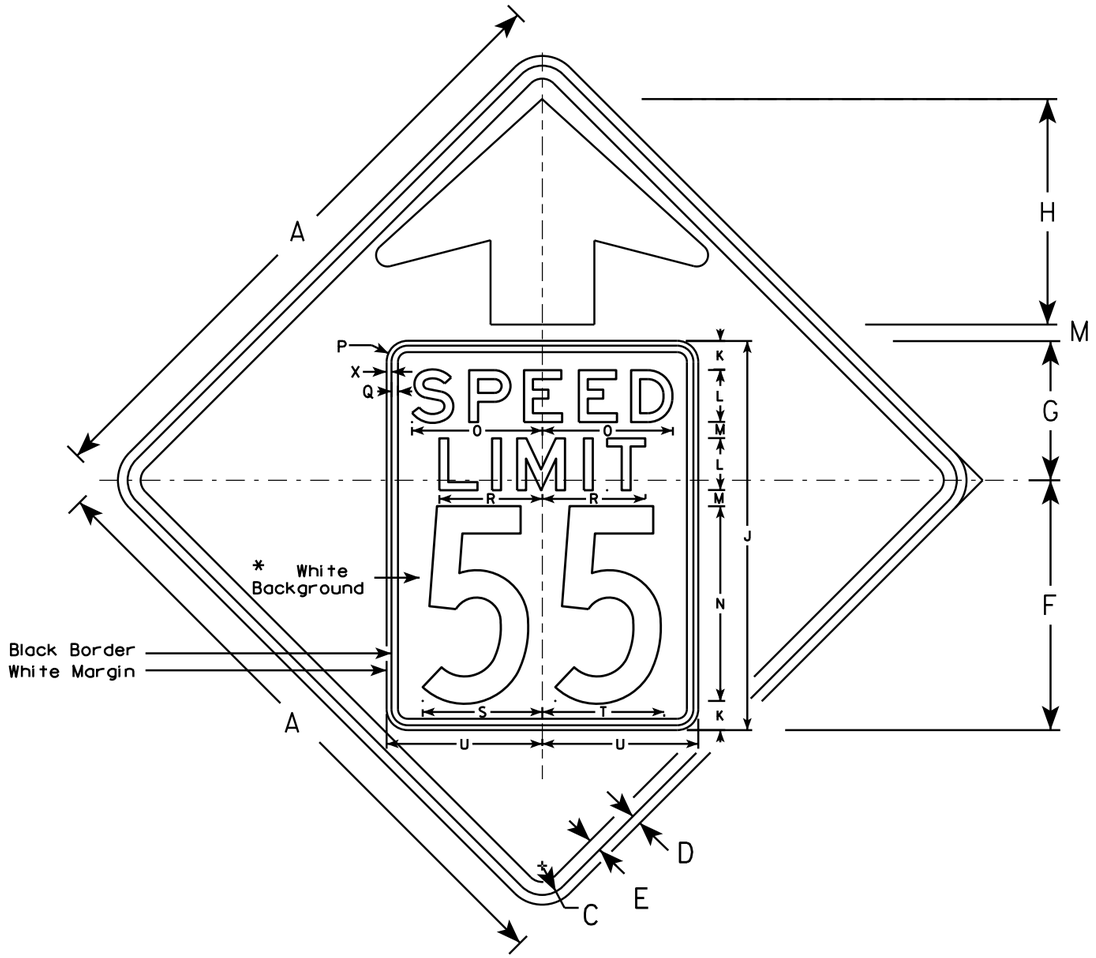

W03-5

NOTES

1. Sign is Type II - Type F Reflective - reference WIS DOT Standard Specification for HIGHWAY and STRUCTURE CONSTRUCTION latest edition.
2. Color: *
   Background - ORANGE*
   Message - BLACK
3. Message Series - C for numbers Series E for wording
4. Substitute appropriate numerals and optically adjust spacing to achieve proper balance

*Speed Limit Sign shall have a White Background

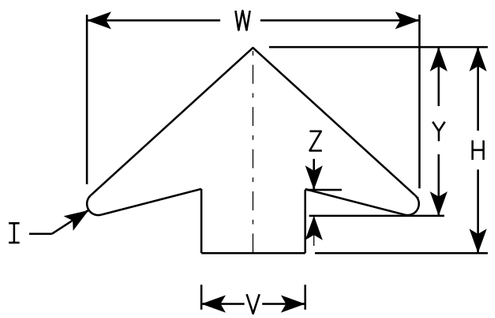

ARROW DETAIL

SIZE	A	B	C	D	E	F	G	H	I	J	K	L	M	N	O	P	Q	R	S	T	U	V	W	X	Y	Z	Area sq. ft.
1	36		1 5/8	5/8	3/4	14 1/2	9 1/2	11 1/2	5/8	24	2	3	1	12	7 1/8	1 1/2	3/8	5 3/4	7 1/4	7 1/8	9	6	19 1/4	3/8	9 3/4	1 5/8	9.0
2S	48		2 1/4	3/4	1	19 1/4	10 3/4	17 3/8	7/8	30	2 1/4	4	1 1/4	15	10	1 5/8	1/2	8	9 1/4	9 3/8	12	8	25 5/8	3/8	13	2	16.0
2M	48		2 1/4	3/4	1	19 1/4	10 3/4	17 3/8	7/8	30	2 1/4	4	1 1/4	15	10	1 5/8	1/2	8	9 1/4	9 3/8	12	8	25 5/8	3/8	13	2	16.0
3	48		2 1/4	3/4	1	19 1/4	10 3/4	17 3/8	7/8	30	2 1/4	4	1 1/4	15	10	1 5/8	1/2	8	9 1/4	9 3/8	12	8	25 5/8	3/8	13	2	16.0
4	48		2 1/4	3/4	1	19 1/4	10 3/4	17 3/8	7/8	30	2 1/4	4	1 1/4	15	10	1 5/8	1/2	8	9 1/4	9 3/8	12	8	25 5/8	3/8	13	2	16.0
5	48		2 1/4	3/4	1	19 1/4	10 3/4	17 3/8	7/8	30	2 1/4	4	1 1/4	15	10	1 5/8	1/2	8	9 1/4	9 3/8	12	8	25 5/8	3/8	13	2	16.0

STANDARD SIGN
W03-5

WISCONSIN DEPT OF TRANSPORTATION

APPROVED Matthew R Rauch
for State Traffic Engineer

DATE 11/20/13 PLATE W03-5.1

PROJECT NO: SHEET NO: E

FILE NAME : C:\CAEFiles\Projects\tr_stdplate\W035.DGN PLOT DATE : 20-NOV-2013 11:32 PLOT BY : mscsja

WISDOT/CADDS SHEET 42

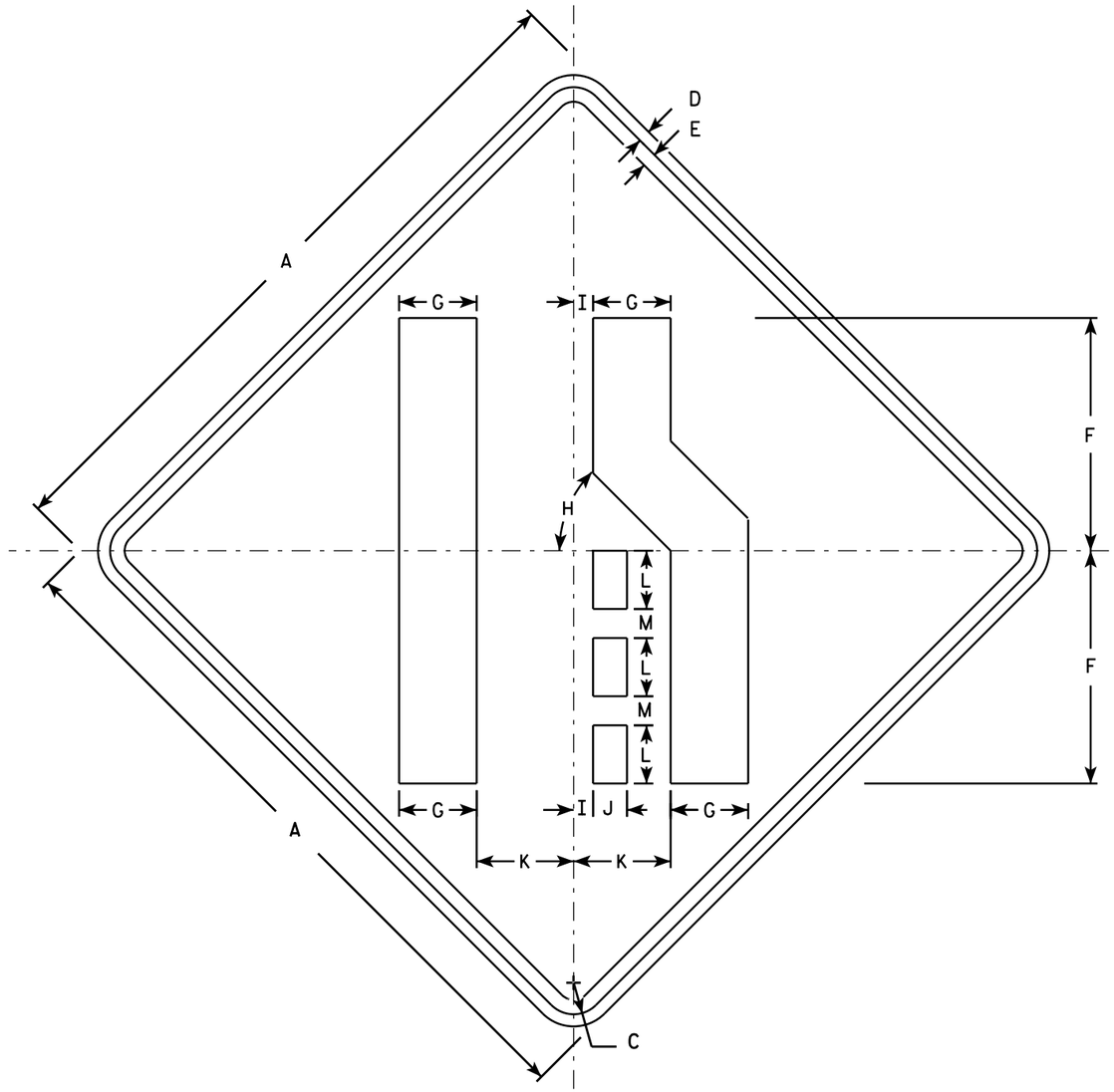

W04-2R

NOTES

1. Sign is Type II - Type F Reflective - reference WIS DOT Standard Specification for HIGHWAY and STRUCTURE CONSTRUCTION latest edition.
2. Color:
   Background - Orange
   Message - Black
3. Corners may be square or rounded when base material is plywood but borders shall be rounded as shown. When base material is metal, the corners and borders shall be rounded.
4. W04-2L is the same as W04-2R except the symbol is reversed along the vertical centerline.

SIZE	A	B	C	D	E	F	G	H	I	J	K	L	M	N	O	P	Q	R	S	T	U	V	W	X	Y	Z	Area sq. ft.
1	36		1 5/8	5/8	3/4	12	4	45°	1	1 3/4	5	3	1 1/2														9.0
2S	48		2 1/4	3/4	1	16	5 3/8	45°	1 1/4	2 3/8	6 3/4	4	2														16.0
2M	48		2 1/4	3/4	1	16	5 3/8	45°	1 1/4	2 3/8	6 3/4	4	2														16.0
3	48		2 1/4	3/4	1	16	5 3/8	45°	1 1/4	2 3/8	6 3/4	4	2														16.0
4	48		2 1/4	3/4	1	16	5 3/8	45°	1 1/4	2 3/8	6 3/4	4	2														16.0
5	48		2 1/4	3/4	1	16	5 3/8	45°	1 1/4	2 3/8	6 3/4	4	2														16.0

STANDARD SIGN
W04-2

WISCONSIN DEPT OF TRANSPORTATION

APPROVED Matthew R Rauch
for State Traffic Engineer

DATE 11/20/13 PLATE 824 W04-2.1

PROJECT NO: | SHEET NO: E

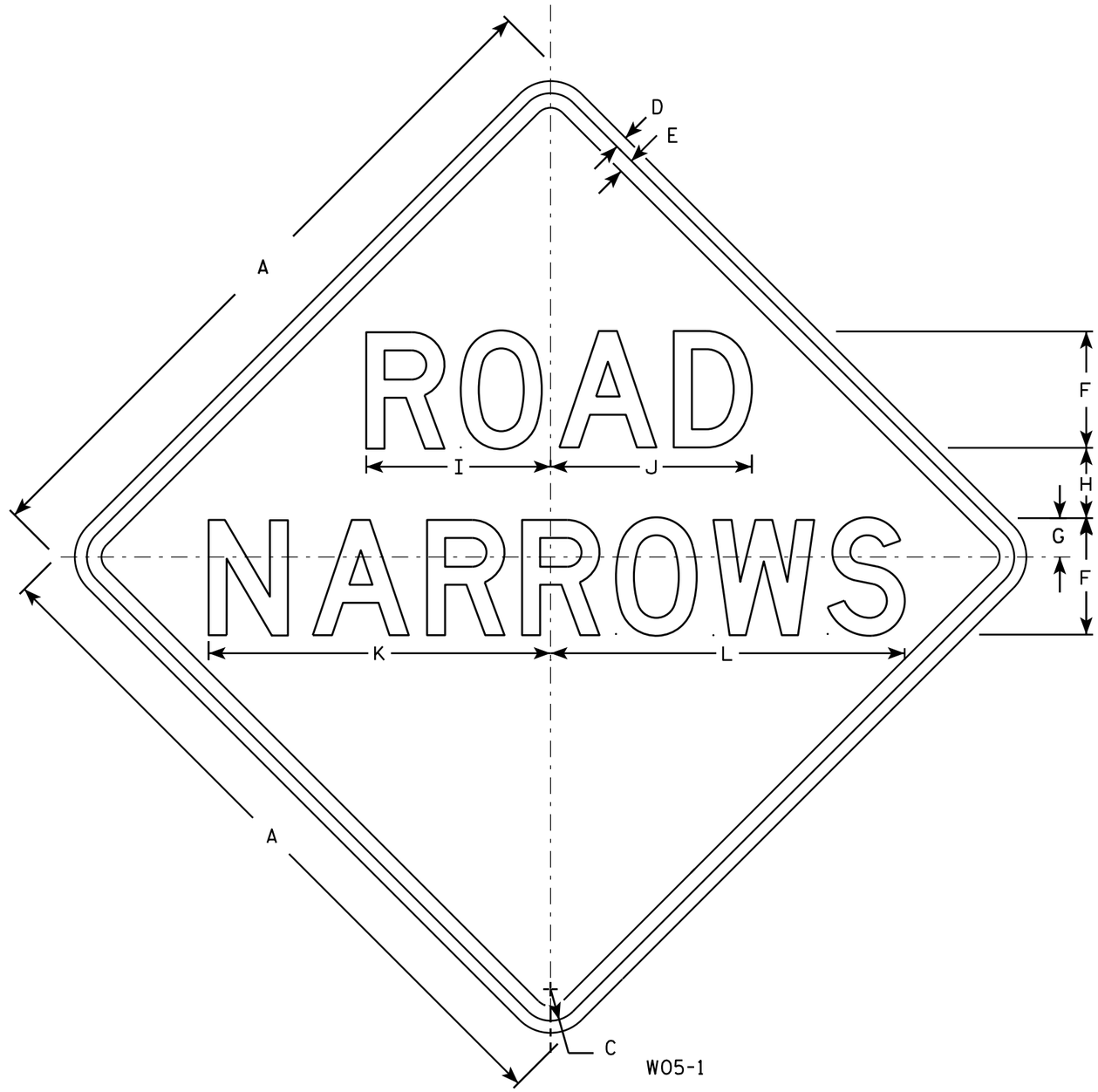

NOTES

1. Sign is Type II - Type F Reflective - reference WIS DOT Standard Specification for HIGHWAY and STRUCTURE CONSTRUCTION latest edition.
2. Color:
   Background - Orange
   Message - Black
3. Message Series - D
4. Corners may be square or rounded when base material is plywood but borders shall be rounded as shown. When base material is metal, the corners and borders shall be rounded.

SIZE	A	B	C	D	E	F	G	H	I	J	K	L	M	N	O	P	Q	R	S	T	U	V	W	X	Y	Z	Area sq. ft.
1	36		1 5/8	5/8	3/4	6	2	3 1/2	9 1/2	10 3/8	17 5/8	18 1/4															9.0
2S	48		2 1/4	3/4	1	8	3	4	12 3/4	13 3/4	23 1/2	24 3/8															16.0
2M	48		2 1/4	3/4	1	8	3	4	12 3/4	13 3/4	23 1/2	24 3/8															16.0
3	48		2 1/4	3/4	1	8	3	4	12 3/4	13 3/4	23 1/2	24 3/8															16.0
4	48		2 1/4	3/4	1	8	3	4	12 3/4	13 3/4	23 1/2	24 3/8															16.0
5	48		2 1/4	3/4	1	8	3	4	12 3/4	13 3/4	23 1/2	24 3/8															16.0

STANDARD SIGN
W05-1

WISCONSIN DEPT OF TRANSPORTATION

APPROVED Matthew R Rauch
for State Traffic Engineer

DATE 11/20/13 PLATE No. W05-1.1

PROJECT NO:	HWY:	COUNTY:		SHEET NO:	E

FILE NAME : C:\CAEFiles\Projects\tr_stdplate\W051.DGN PLOT DATE : 20-NOV-2013 11:56 PLOT BY : mscsja PLOT NAME : PLOT SCALE : 6.810445:1.000000
WISDOT/CADDS SHEET 42

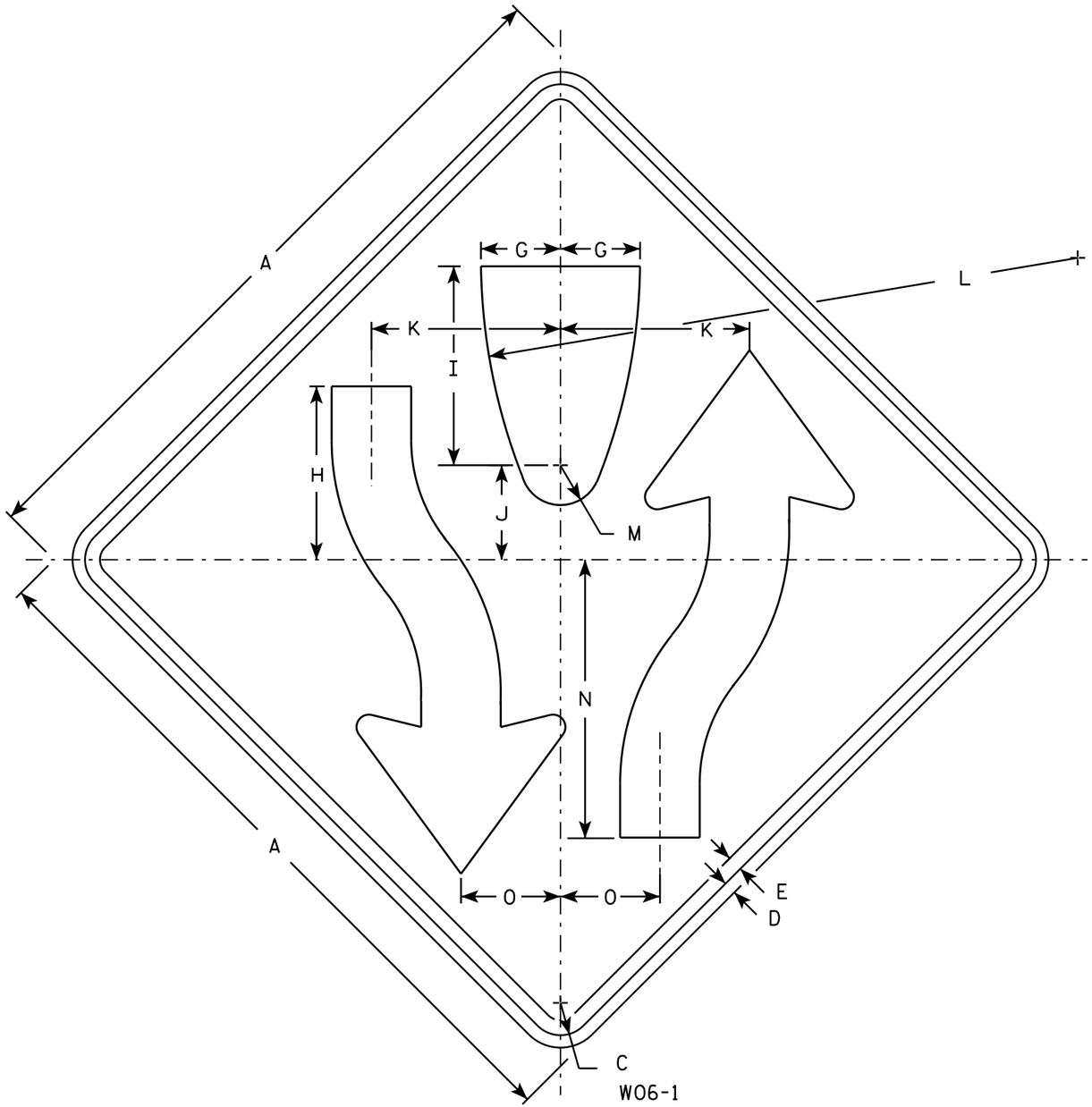

W06-1

NOTES

1. Sign is Type II - Type F Reflective - reference WIS DOT Standard Specification for HIGHWAY and STRUCTURE CONSTRUCTION latest edition.
2. Color:
   Background - Orange
   Message - Black
3. Corners may be square or rounded when base material is plywood but borders shall be rounded as shown. When base material is metal, the corners and borders shall be rounded.
4. W06-2 same as W06-1 but is rotated 180° when mounted.

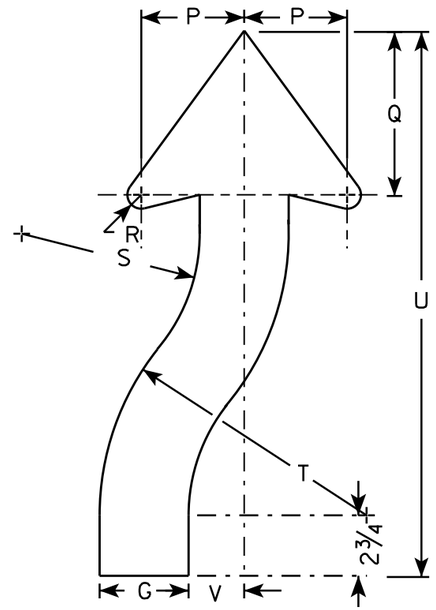

ARROW DETAIL

SIZE	A	B	C	D	E	F	G	H	I	J	K	L	M	N	O	P	Q	R	S	T	U	V	W	X	Y	Z	Area sq. ft.
1	36		1 5/8	5/8	3/4		4	8 3/4	10	4 3/4	9 1/2	30	2	14	5	4 5/8	7 3/8	7/8	8	12	24 1/2	2 1/2					9.0
2S	48		2 1/4	3/4	1		5 3/8	11 5/8	13 3/8	6 3/8	12 5/8	40	2 5/8	18 5/8	6 5/8	6 1/4	9 7/8	1 1/4	10 5/8	16	32 5/8	3 3/8					16.0
2M	48		2 1/4	3/4	1		5 3/8	11 5/8	13 3/8	6 3/8	12 5/8	40	2 5/8	18 5/8	6 5/8	6 1/4	9 7/8	1 1/4	10 5/8	16	32 5/8	3 3/8					16.0
3	48		2 1/4	3/4	1		5 3/8	11 5/8	13 3/8	6 3/8	12 5/8	40	2 5/8	18 5/8	6 5/8	6 1/4	9 7/8	1 1/4	10 5/8	16	32 5/8	3 3/8					16.0
4	48		2 1/4	3/4	1		5 3/8	11 5/8	13 3/8	6 3/8	12 5/8	40	2 5/8	18 5/8	6 5/8	6 1/4	9 7/8	1 1/4	10 5/8	16	32 5/8	3 3/8					16.0
5	48		2 1/4	3/4	1		5 3/8	11 5/8	13 3/8	6 3/8	12 5/8	40	2 5/8	18 5/8	6 5/8	6 1/4	9 7/8	1 1/4	10 5/8	16	32 5/8	3 3/8					16.0

STANDARD SIGN
W06-1 & W06-2

WISCONSIN DEPT OF TRANSPORTATION

APPROVED Matthew R Rauch
for State Traffic Engineer

DATE 11/20/13 PLATE NO W06-1.1

PROJECT NO: | HWY: | COUNTY: | SHEET NO: E

FILE NAME : C:\CAEFiles\Projects\tr_stdplate\W061.DGN PLOT DATE : 20-NOV-2013 12:09 PLOT BY : mscsja PLOT NAME : PLOT SCALE : 6.810449:1.000000
WISDOT/CADDS SHEET 42

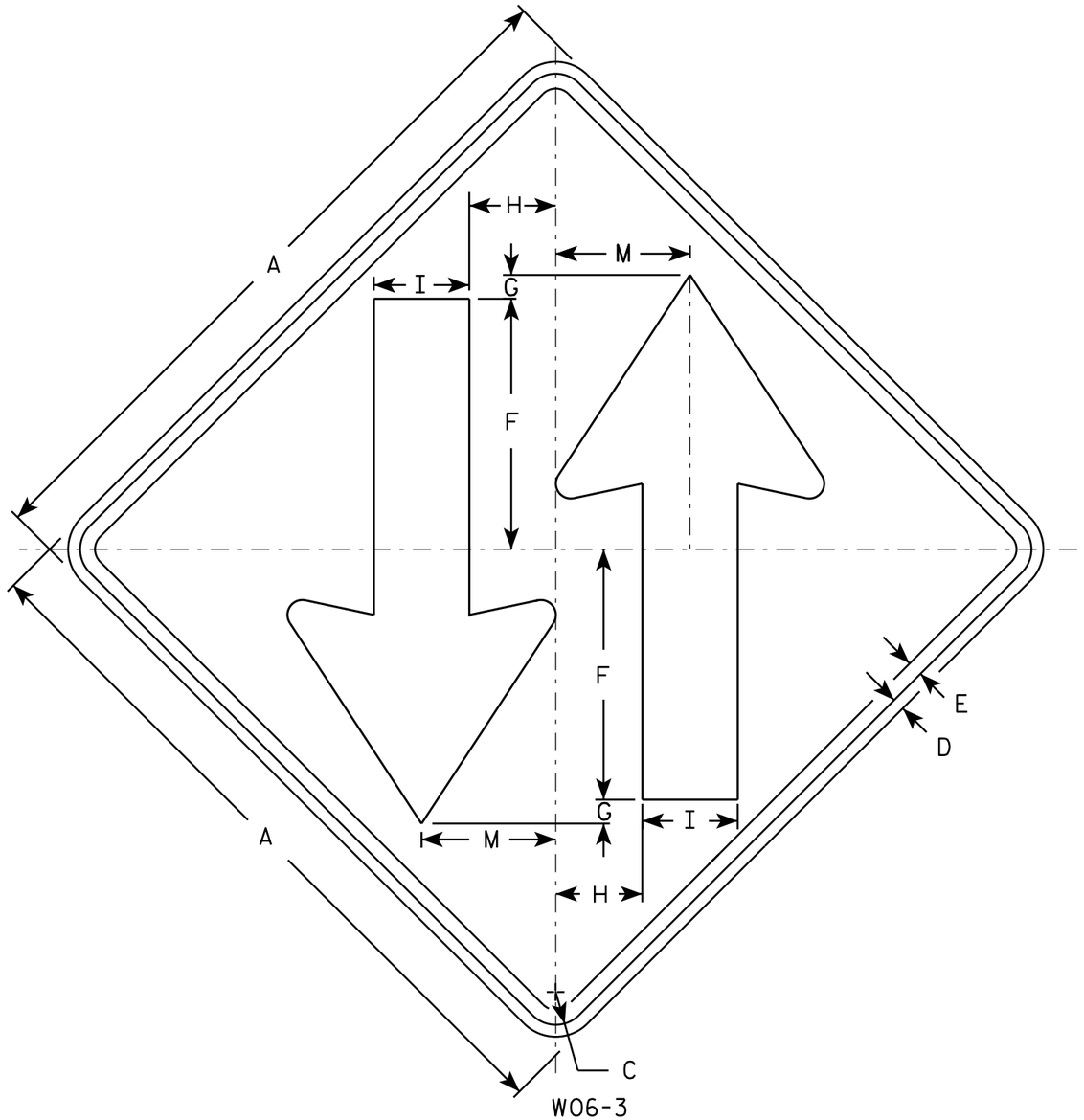

W06-3

NOTES

1. Sign is Type II - Type F Reflective - reference WIS DOT Standard Specification for HIGHWAY and STRUCTURE CONSTRUCTION latest edition.
2. Color:
   Background - Orange
   Message - Black
3. Corners may be square or rounded when base material is plywood but borders shall be rounded as shown. When base material is metal, the corners and borders shall be rounded.

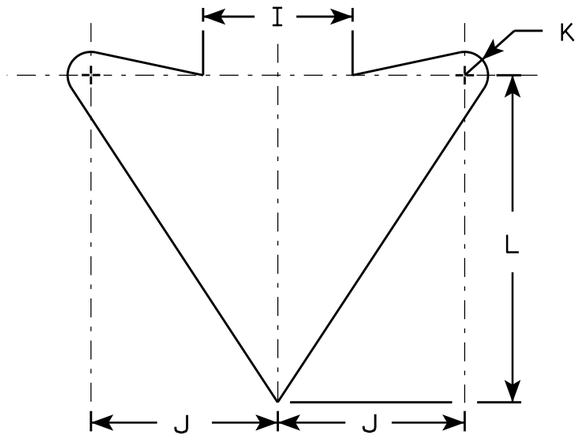

ARROW DETAIL

SIZE	A	B	C	D	E	F	G	H	I	J	K	L	M	N	O	P	Q	R	S	T	U	V	W	X	Y	Z	Area sq. ft.
1	36		1 5/8	5/8	3/4	12	1	4 1/4	5	6	3/4	10 1/2	6 3/4														9.0
2S	48		2 1/4	3/4	1	15 1/2	1	6	6	8	1	14	9														16.0
2M	48		2 1/4	3/4	1	15 1/2	1	6	6	8	1	14	9														16.0
3	48		2 1/4	3/4	1	15 1/2	1	6	6	8	1	14	9														16.0
4	48		2 1/4	3/4	1	15 1/2	1	6	6	8	1	14	9														16.0
5	48		2 1/4	3/4	1	15 1/2	1	6	6	8	1	14	9														16.0

STANDARD SIGN
W06-3

WISCONSIN DEPT OF TRANSPORTATION

APPROVED Matthew R Rauch
for State Traffic Engineer

DATE 11/20/13 PLATE 827 W06-3.1

PROJECT NO:	HWY:	COUNTY:		SHEET NO:	E

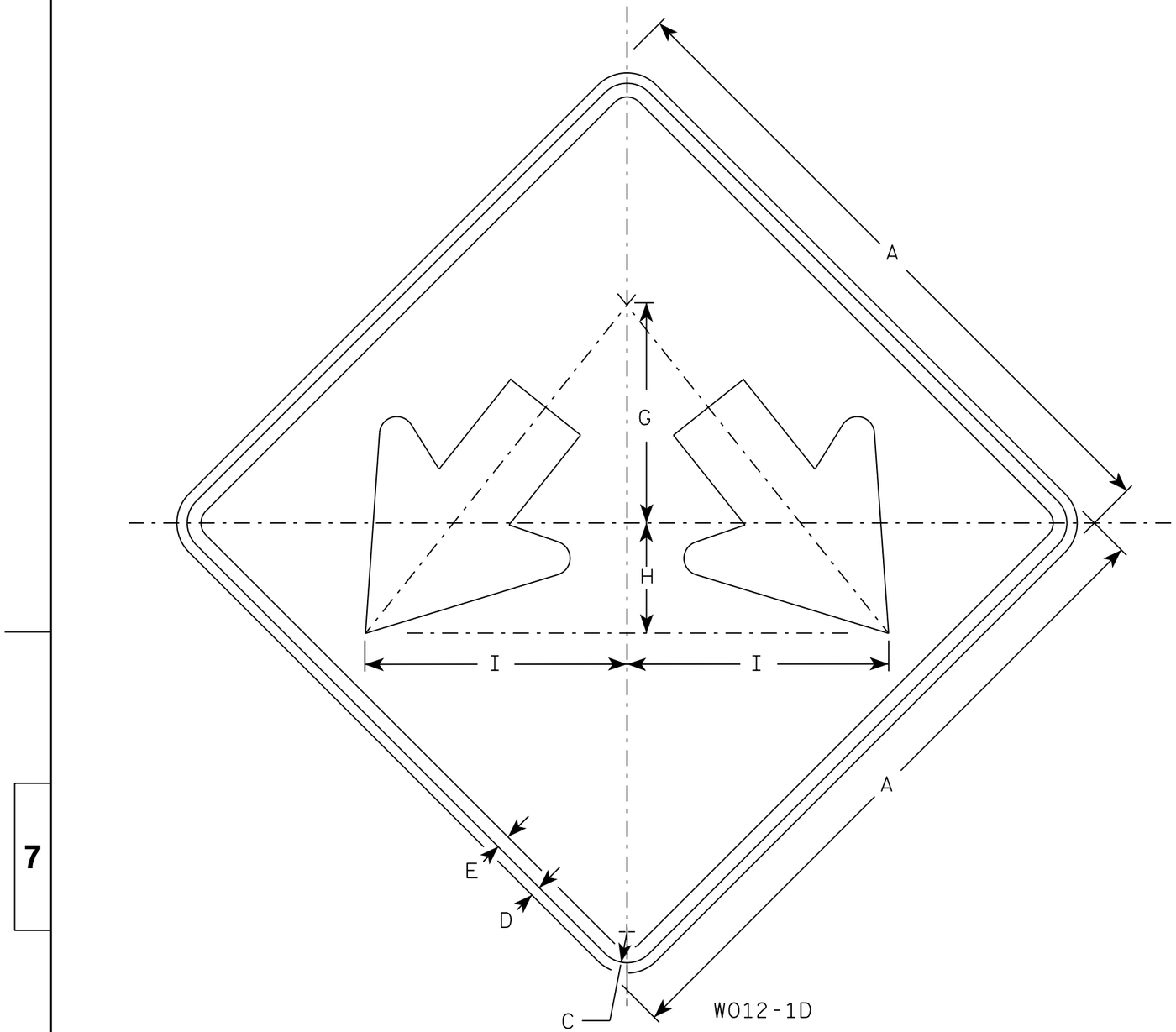

W012-1D

NOTES

1. Sign is Type II - Type F Reflective
2. Color:
   Background - Orange
   Message - Black
3. Corners may be square or rounded when base material is plywood but borders shall be rounded as shown. When base material is metal, the corners and borders shall be rounded.

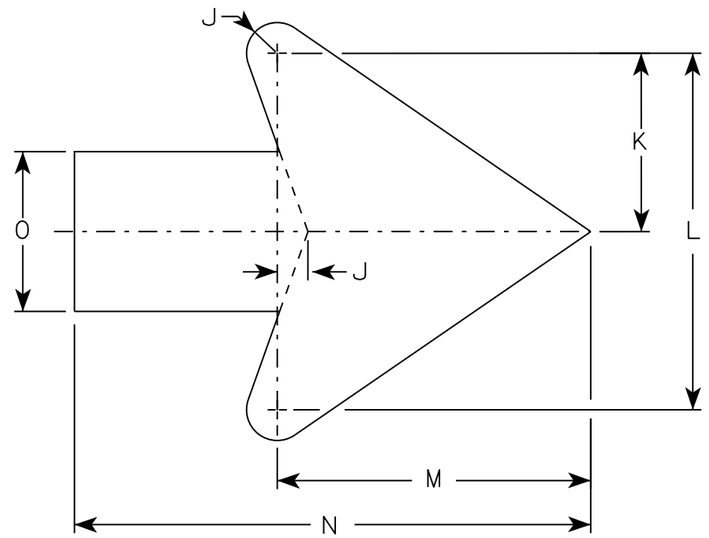

Arrow Detail

SIZE	A	B	C	D	E	F	G	H	I	J	K	L	M	N	O	P	Q	R	S	T	U	V	W	X	Y	Z	Area sq. ft.
1	24		1 1/8	1/2	3/8		8	4	9 1/2	3/8	3 3/8	7 1/4	6 3/8	10 3/8	3 1/4												4.0
2S	24		1 1/8	1/2	3/8		8	4	9 1/2	3/8	3 3/8	7 1/4	6 3/8	10 3/8	3 1/4												4.0
2M	24		1 1/8	1/2	3/8		8	4	9 1/2	3/8	3 3/8	7 1/4	6 3/8	10 3/8	3 1/4												4.0
3	30		1 3/8	1/2	5/8		10	5	11 7/8	3/4	4 1/2	9	7 7/8	13	4												6.25
4	36		1 3/8	1/2	5/8		12	6	14 1/4	1	5 1/2	10 7/8	9 5/8	15 3/4	4 3/4												9.0
5	36		1 3/8	1/2	5/8		12	6	14 1/4	1	5 1/2	10 7/8	9 5/8	15 3/4	4 3/4												9.0

STANDARD SIGN
W012-1D

WISCONSIN DEPT OF TRANSPORTATION

APPROVED Matthew R Rauch
for State Traffic Engineer

DATE 7/28/16 PLATE NO W012-1D.2

828

PROJECT NO: | HWY: | COUNTY: | SHEET NO: E

FILE NAME : C:\CADfiles\Projects\tr_stdplate\W0121D.DGN PLOT DATE : 11-AUG-2016 11:28 PLOT BY : $$ plotuser $$ PLOT NAME : PLOT SCALE : 4.621375:1.000000

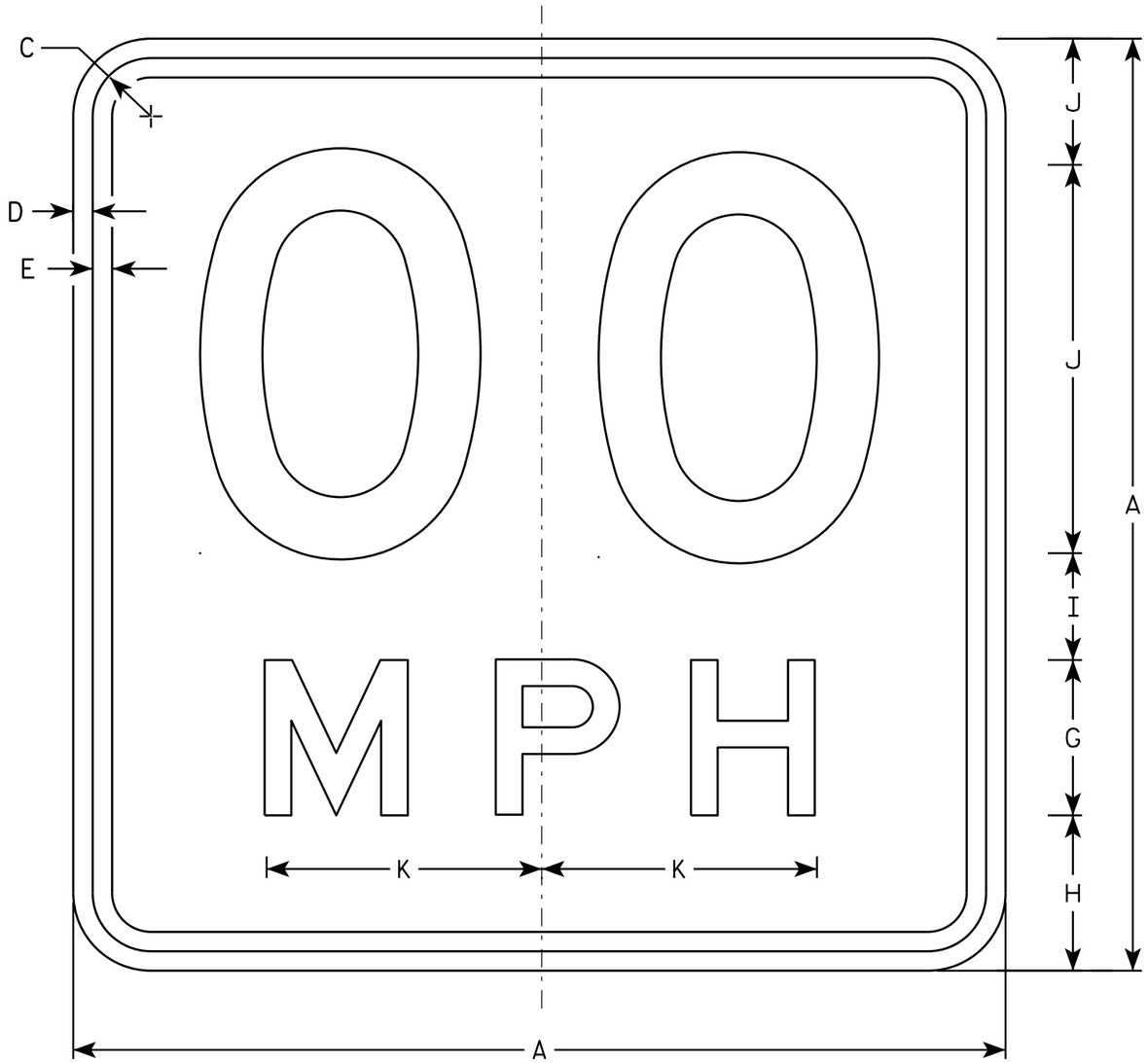

W013-1

NOTES

1. Sign is Type II - Type F Reflective - reference WIS DOT Standard Specification for HIGHWAY and STRUCTURE CONSTRUCTION latest edition.
2. Color:
   Background - Orange
   Message - Black
3. Message Series - See Note 6
4. Corners may be square or rounded when base material is plywood but borders shall be rounded as shown. When base material is metal, the corners and borders shall be rounded.
5. Substitute appropriate numerals and optically space about centerline to achieve proper balance.
6. Line 1 is Series D
   Line 2 is Series E

SIZE	A	B	C	D	E	F	G	H	I	J	K	L	M	N	O	P	Q	R	S	T	U	V	W	X	Y	Z	Area sq. ft.
1	24		1 1/8	3/8	1/2	10	4	4	2 3/4	3 1/4	7 1/8																4.00
2S	36		1 5/8	5/8	3/4	16	6	5 1/2	4	4 1/2	10 5/8																9.00
2M	36		1 5/8	5/8	3/4	16	6	5 1/2	4	4 1/2	10 5/8																9.00
3	36		1 5/8	5/8	3/4	16	6	5 1/2	4	4 1/2	10 5/8																9.00
4	36		1 5/8	5/8	3/4	16	6	5 1/2	4	4 1/2	10 5/8																9.00
5	36		1 5/8	5/8	3/4	16	6	5 1/2	4	4 1/2	10 5/8																9.00

STANDARD SIGN
W013-1

WISCONSIN DEPT OF TRANSPORTATION

APPROVED Matthew R Rauch
for State Traffic Engineer

DATE 11/21/13 PLATE 829 W013-1.1

PROJECT NO: | HWY: | COUNTY: | SHEET NO: E

FILE NAME : C:\CAEFiles\Projects\tr_stdplate\W0131.DGN PLOT DATE : 02-DEC-2013 13:55 PLOT BY : mscsja PLOT NAME : PLOT SCALE : 3.794391:1.000000
WISDOT/CADDS SHEET 42

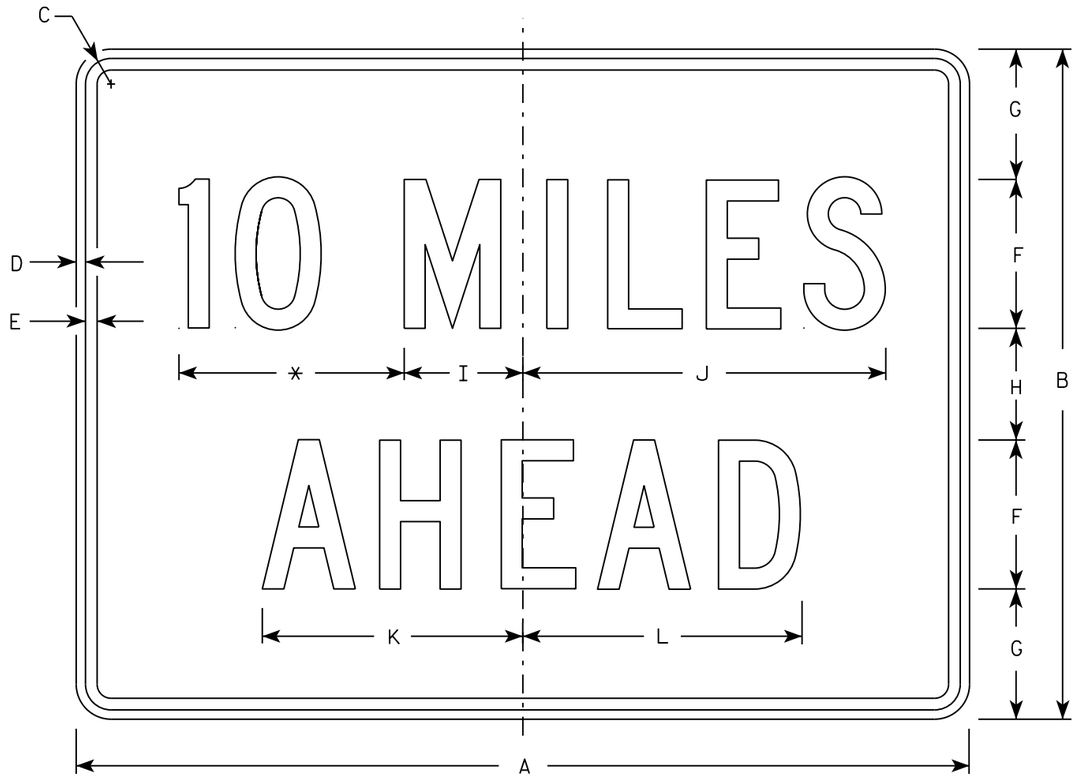

W057-52

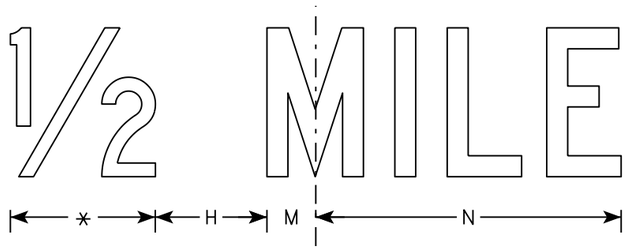

NOTES

1. Sign is Type II - Type F Reflective
2. Color:
   Background - Orange
   Message - Black
3. Message Series - C
4. Corners may be square or rounded when base material is plywood but borders shall be rounded as shown. When base material is metal, the corners and borders shall be rounded.
5. Substitute appropriate numerals to the nearest quarter mile and optically adjust spacing to achieve proper balance.

* See note 5

SIZE	A	B	C	D	E	F	G	H	I	J	K	L	M	N	O	P	Q	R	S	T	U	V	W	X	Y	Z	Area sq. ft.
1	36	24	1 1/8	3/8	1/2	6	4 1/2	3	4 3/4	14 5/8	10 5/8	11 3/8	2	12													6.0
2S	48	36	1 3/8	1/2	5/8	8	7	6	6 3/8	19 1/2	14	15	2 3/4	16 3/8													12.0
2M	48	36	1 3/8	1/2	5/8	8	7	6	6 3/8	19 1/2	14	15	2 3/4	16 3/8													12.0
3	48	36	1 3/8	1/2	5/8	8	7	6	6 3/8	19 1/2	14	15	2 3/4	16 3/8													12.0
4	48	36	1 3/8	1/2	5/8	8	7	6	6 3/8	19 1/2	14	15	2 3/4	16 3/8													12.0
5	48	36	1 3/8	1/2	5/8	8	7	6	6 3/8	19 1/2	14	15	2 3/4	16 3/8													12.0

STANDARD SIGN
W057-52

WISCONSIN DEPT OF TRANSPORTATION

APPROVED Matthew R Rauch
for State Traffic Engineer

DATE 3/21/17 PLATE NO. W057-52.2

PROJECT NO:	HWY:	COUNTY:		SHEET NO: 830	E

$PRFNAME$
I:±42±76-0103.00 - Kenosha Co. STH 50 Retaining Wall±Structure±FINAL±R-30-70±R-30-70 gp.dgn
DATE:
DRAWN BY: DATE:
CHECKED BY: DATE:
BACK CHECKED BY: DATE:
CORRECTED BY: DATE:

STATE PROJECT NUMBER

1310-04-70

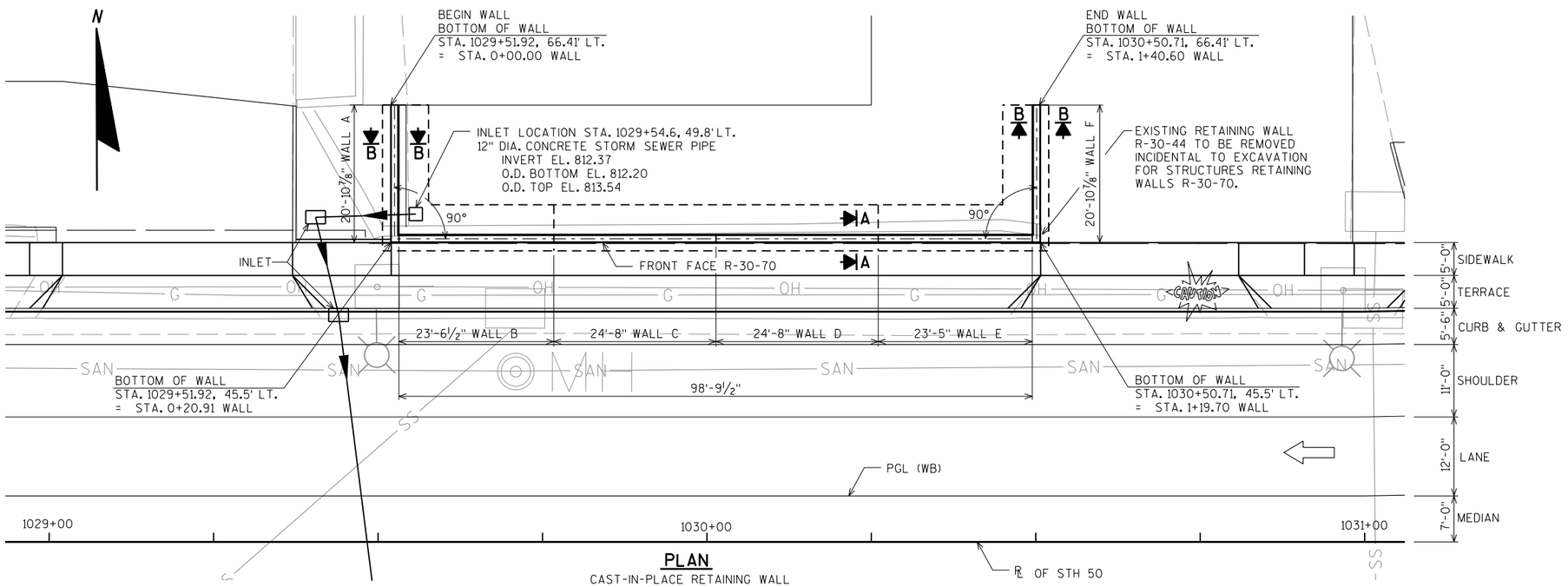

PLAN

CAST-IN-PLACE RETAINING WALL
ALL DIMENSIONS MEASURED ALONG FRONT FACE
FOR DETAIL OF SECTION A-A & B-B, SEE SHEET 2

NOTE:
STORM SEWER INLET TO BE PLACED THROUGH RETAINING WALL FOOTING

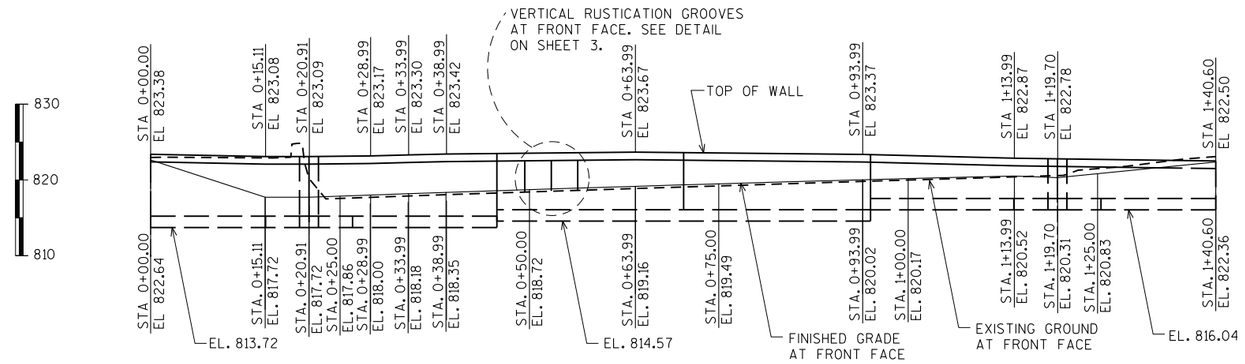

NOTE:
PARAPET AND CHAIN LINK FENCE NOT SHOWN.

ELEVATION

(LOOKING AT FRONT FACE OF WALL)

LIST OF DRAWINGS

1. RETAINING WALL LAYOUT
2. RETAINING WALL DETAILS
3. RETAINING WALL DETAILS
4. WALL A DETAILS
5. WALL B DETAILS
6. WALLS C & D DETAILS
7. WALL E DETAILS
8. WALL F DETAILS
9. WALL DETAILS & BILL OF BARS
10. VERTICAL FACE PARAPET "A"
11. CHAIN LINK FENCE DETAILS
12. SUBSURFACE EXPLORATION

FOR GENERAL NOTES AND DESIGN DATA SEE SHEET 2

GEOMETRY TABLE

WALL STATION	ROADWAY STATION	OFFSET TO F.F. WALL	TOP OF WALL EL.	FINISHED GRADE EL.
0+00.00	1029+51.92	66.41'	823.38	822.64
0+15.11	1029+51.92	51.30'	823.08	817.72
0+20.91	1029+51.92	45.5'	823.09	817.72
0+25.00	1029+56.01	45.5'	823.13	817.86
0+28.99	1029+60.00	45.5'	823.17	818.00
0+33.99	1029+65.00	45.5'	823.30	818.18
0+38.99	1029+70.00	45.5'	823.42	818.35
0+50.00	1029+81.01	45.5'	823.53	818.72
0+63.99	1029+95.00	45.5'	823.67	819.16
0+75.00	1030+06.01	45.5'	823.56	819.49
0+93.99	1030+25.00	45.5'	823.37	820.02
1+00.00	1030+31.01	45.5'	823.22	820.17
1+13.99	1030+45.00	45.5'	822.87	820.52
1+19.70	1030+50.71	45.5'	822.78	820.31
1+25.00	1030+50.71	50.80'	822.71	820.83
1+40.60	1030+50.71	66.41'	822.50	822.36

TOTAL ESTIMATED QUANTITIES

ITEM NUMBER	BID ITEMS	UNIT
206.3000	EXCAVATION FOR STRUCTURES RETAINING WALLS R-30-70	1 LS
210.1500	BACKFILL STRUCTURE TYPE A	575 TON
502.3210	PIGMENTED SURFACE SEALER	235 SY
504.0500	CONCRETE MASONRY RETAINING WALLS	131 CY
505.0400	BAR STEEL REINFORCEMENT HS STRUCTURES	2,940 LB
505.0600	BAR STEEL REINFORCEMENT HS COATED STRUCTURES	8,050 LB
516.0500	RUBBERIZED MEMBRANE WATERPROOFING	6 SY
612.0406	PIPE UNDERDRAIN WRAPPED 6-INCH	160 LF
616.0204	FENCE CHAIN LINK 4-FT	137 LF

WISCONSIN
ARLEN E. BEAUDETTE
E-36829
EAU CLAIRE
WI
PROFESSIONAL ENGINEER

08/31/2021

BRIDGE OFFICE CONTACT:
AARON BONK
(608)-261-0261

CONSULTANT CONTACT:
ARLEN BEAUDETTE
(715)-834-3161

NO.	DATE	REVISION	BY

ORIGINAL PLANS PREPARED BY
AYRES 3433 Oakwood Hills Parkway Eau Claire, WI 54701 www.AyresAssociates.com

STATE OF WISCONSIN
DEPARTMENT OF TRANSPORTATION

ACCEPTED SDR 02/23/22
CHIEF STRUCTURES DESIGN ENGINEER DATE

STRUCTURE R-30-70

RETAINING WALL ALONG STH 50

COUNTY KENOSHA | ~~TOWN/CITY/~~ VILLAGE PADDOCK LAKE

DESIGN SPEC. AASHTO LRFD BRIDGE DESIGN SPECIFICATIONS

DESIGNED BY	DESIGN CK'D.	DRAWN BY	PLANS CK'D.
ZSS	JLB	CLP	AEB

RETAINING WALL LAYOUT

SHEET 1 OF 12
831

8

8

STATE PROJECT NUMBER
1310-04-70

SOIL PARAMETERS

SOIL DESCRIPTION	FRICTION ANGLE ϕ	MOIST UNIT WEIGHT	COHESION, c_u	FACTORED BEARING RESISTANCE
GRANULAR BACKFILL	30°	130 pcf	0 psf	1,500 psf
RETAINED SOIL	30°	130 pcf	0 psf	1,500 psf

GENERAL NOTES

DRAWINGS SHALL NOT BE SCALED.

BAR STEEL REINFORCEMENT SHALL BE EMBEDDED 2" CLEAR UNLESS SHOWN OR NOTED OTHERWISE.

THE FIRST DIGIT OF A THREE DIGIT BAR NO. AND THE FIRST TWO DIGITS OF A FOUR DIGIT BAR NO. SIGNIFIES THE BAR SIZE.

JOINT FILLER SHALL CONFORM TO THE REQUIREMENTS OF A.A.S.H.T.O. DESIGNATION M 153, TYPE I, II OR III OR A.A.S.H.T.O. DESIGNATION M 213.

AT THE BACK FACE OF THE RETAINING WALL ALL SPACES EXCAVATED AND NOT OCCUPIED BY THE NEW STRUCTURE SHALL BE BACKFILLED WITH BACKFILL STRUCTURE.

THE UPPER LIMITS OF "EXCAVATION FOR STRUCTURES RETAINING WALLS R-30-70" SHALL BE THE EXISTING GROUND LINE.

THE BACKFILL QUANTITIES ARE BASED ON THE PAY LIMITS SHOWN ON THE PLANS AND MAY NOT REFLECT ACTUAL PLACED QUANTITIES. "BACKFILL STRUCTURE TYPE A" REQUIRED FOR THE ENTIRE WALL LENGTH. BACKFILL PLACED BEYOND PAY LIMITS OR EXCEEDING PLAN QUANTITIES SHALL BE INCIDENTAL TO EXCAVATION FOR STRUCTURES.

STORM SEWER INLET TO BE PLACED THROUGH RETAINING WALL FOOTING.

PIGMENTED SURFACE SEALER IS TO BE APPLIED AS SHOWN IN DETAIL ON THIS SHEET.

THE EXISTING RETAINING WALL, R-30-44, IS A LIMESTONE BLOCK RETAINING WALL APPROXIMATELY 5-FEET TALL AND 120-FEET LONG. REMOVAL OF THE WALL IS INCIDENTAL TO "EXCAVATION FOR STRUCTURES RETAINING WALLS R-30-70".

DESIGN DATA

LIVE LOAD:

100 psf SURCHARGE

MATERIAL PROPERTIES:

CONCRETE MASONRY ——— f'_c = 3,500 p.s.i.

HIGH STRENGTH BAR STEEL REINFORCEMENT (GRADE 60) ——— f_y = 60,000 p.s.i.

FOUNDATION DATA:

RETAINING WALL TO BE SUPPORTED ON MATERIAL WITH A MINIMUM FACTORED BEARING RESISTANCE OF 1,500 psf. A GEOTECHNICAL ENGINEER WILL DETERMINE THE FACTORED BEARING RESISTANCE BY VISUAL INSPECTION PRIOR TO CONSTRUCTION OF THE RETAINING WALL FOOTING.

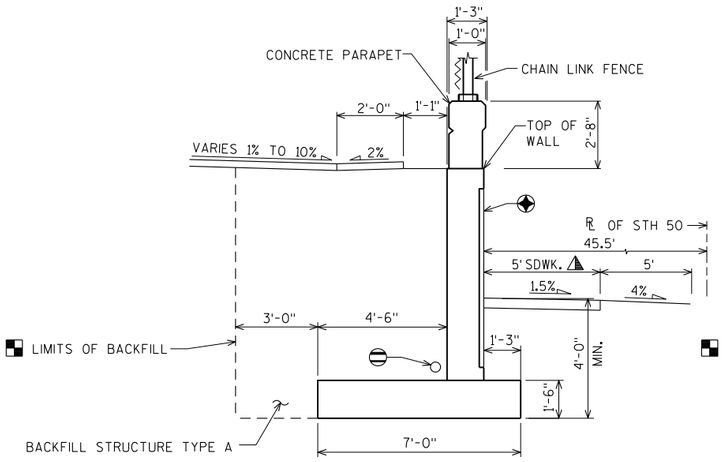

SECTION A-A

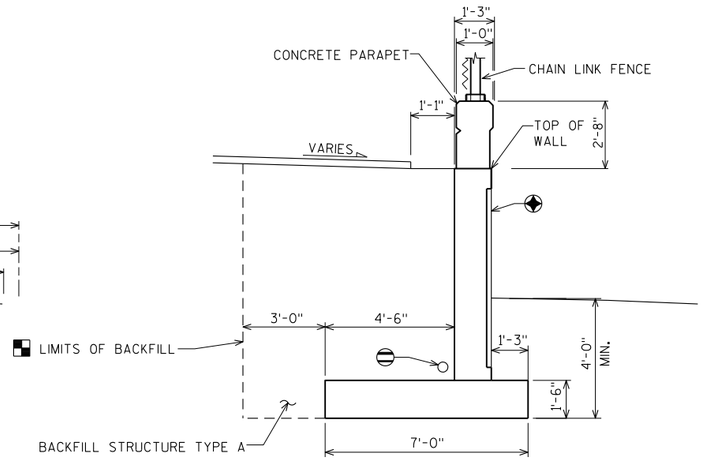

SECTION B-B

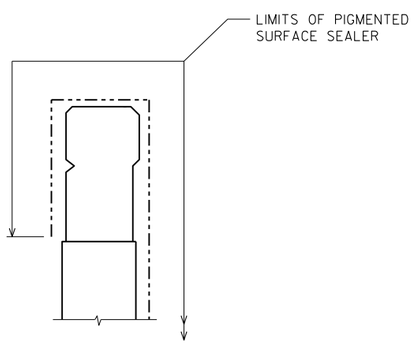

PIGMENTED SURFACE SEALER DETAIL

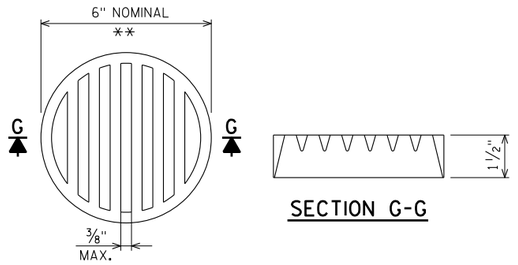

SECTION G-G

** DIMENSIONS ARE APPROXIMATE. THE GRATE IS SIZED TO FIT INTO A PIPE COUPLING. ORIENT SO SLOTS ARE VERTICAL.

THE RODENT SHIELD, PIPE COUPLING AND SCREWS SHALL BE CONSIDERED INCIDENTAL TO THE BID ITEM "PIPE UNDERDRAIN WRAPPED 6-INCH".

THE RODENT SHIELD SHALL BE A PVC GRATE SIMILAR TO THIS DETAIL. THE GRATE IS COMMERCIALLY AVAILABLE AS A FLOOR STRAINER. A PIPE COUPLING IS REQUIRED FOR THE ATTACHMENT OF THIS SHIELD TO THE EXPOSED END OF THE PIPE UNDERDRAIN. THE SHIELD SHALL BE FASTENED TO THE PIPE COUPLING WITH TWO OR MORE NO. 10 x 1-INCH STAINLESS STEEL SHEET METAL SCREWS.

RODENT SHIELD DETAIL

VERTICAL RUSTICATION GROOVES FOR DETAIL SEE SHEET 3.

BACKFILL PAY LIMITS. BACKFILL BEYOND BACKFILL LIMITS SHALL BE INCIDENTAL TO EXCAVATION FOR STRUCTURES. LIMITS OF EXCAVATION SHALL BE DETERMINED BY THE CONTRACTOR.

PIPE UNDERDRAIN WRAPPED 6-INCH. SLOPE 0.5% MIN. TO SUITABLE DRAINAGE. ATTACH RODENT SHIELD AT ENDS OF PIPE UNDERDRAIN AS DETAILED ON THIS SHEET.

±0.5% CONSTRUCTION TOLERANCE IN SIDEWALK CROSS SLOPE. THE SIDEWALK CROSS SLOPE SHALL NOT EXCEED 2% WITHOUT PRIOR APPROVAL FROM THE ENGINEER.

FOR LOCATIONS OF SECTION A-A & B-B, SEE SHEET 1

NO.	DATE	REVISION	BY

STATE OF WISCONSIN
DEPARTMENT OF TRANSPORTATION

STRUCTURE R-30-70

DRAWN BY CLP | PLANS CK'D. JLB

RETAINING WALL DETAILS

SHEET 2 OF 12
832

ORIGINAL PLANS PREPARED BY
AYRES
3433 Oakwood Hills Parkway
Eau Claire, WI 54701
www.AyresAssociates.com

7/28/2021
PENTABLE:BReau_shd_util.tbl

8

8

I:±42±76-0103.00 - Kenosha Co. STH 50 Retaining Wall±Structure±FINAL±R-30-70±R-30-70 details.dgn

STATE PROJECT NUMBER
1310-04-70

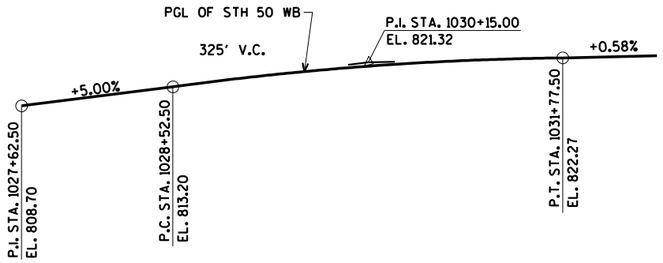

PROFILE GRADE LINE
(STH 50 WB)

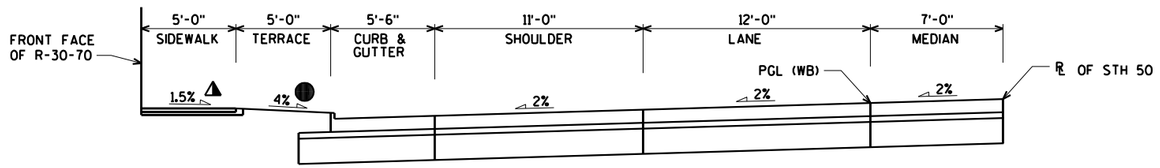

ROADWAY TYPICAL HALF SECTION

▲ ±0.5% CONSTRUCTION TOLERANCE IN SIDEWALK CROSS SLOPE. THE SIDEWALK CROSS SLOPE SHALL NOT EXCEED 2% WITHOUT PRIOR APPROVAL FROM THE ENGINEER.

● SLOPE VARIES FROM 4% TO 11% AT DRIVEWAY AT EAST END OF WALL AS CURB HEAD HEIGHT IS REDUCED.

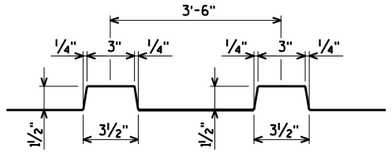

VERTICAL RUSTICATION GROOVES

NO.	DATE	REVISION	BY

STATE OF WISCONSIN
DEPARTMENT OF TRANSPORTATION

STRUCTURE R-30-70

DRAWN BY CLP | PLANS CK'D. JLB

RETAINING WALL DETAILS

SHEET 3 OF 12
833

ORIGINAL PLANS PREPARED BY
AYRES
3433 Oakwood Hills Parkway
Eau Claire, WI 54701
www.AyresAssociates.com

8

8

7/26/2021
PENTABLE:BRdet_shd_util.tbl

I:±42±76-0103.00 - Kenosha Co. STH 50 Retaining Wall±Structure±FINAL±R-30-70±R-30-70 details.dgn

STATE PROJECT NUMBER

1310-04-70

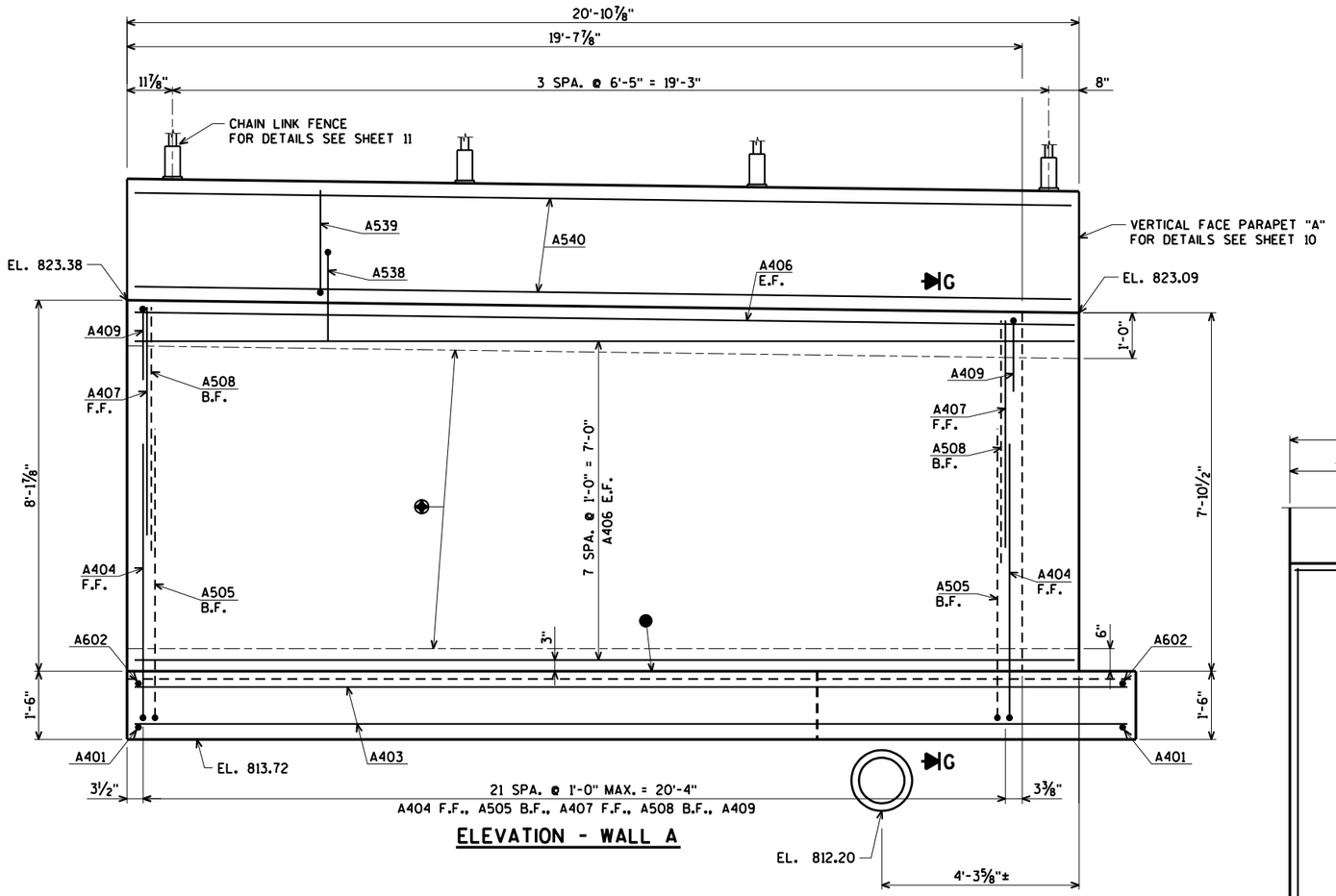

ELEVATION - WALL A

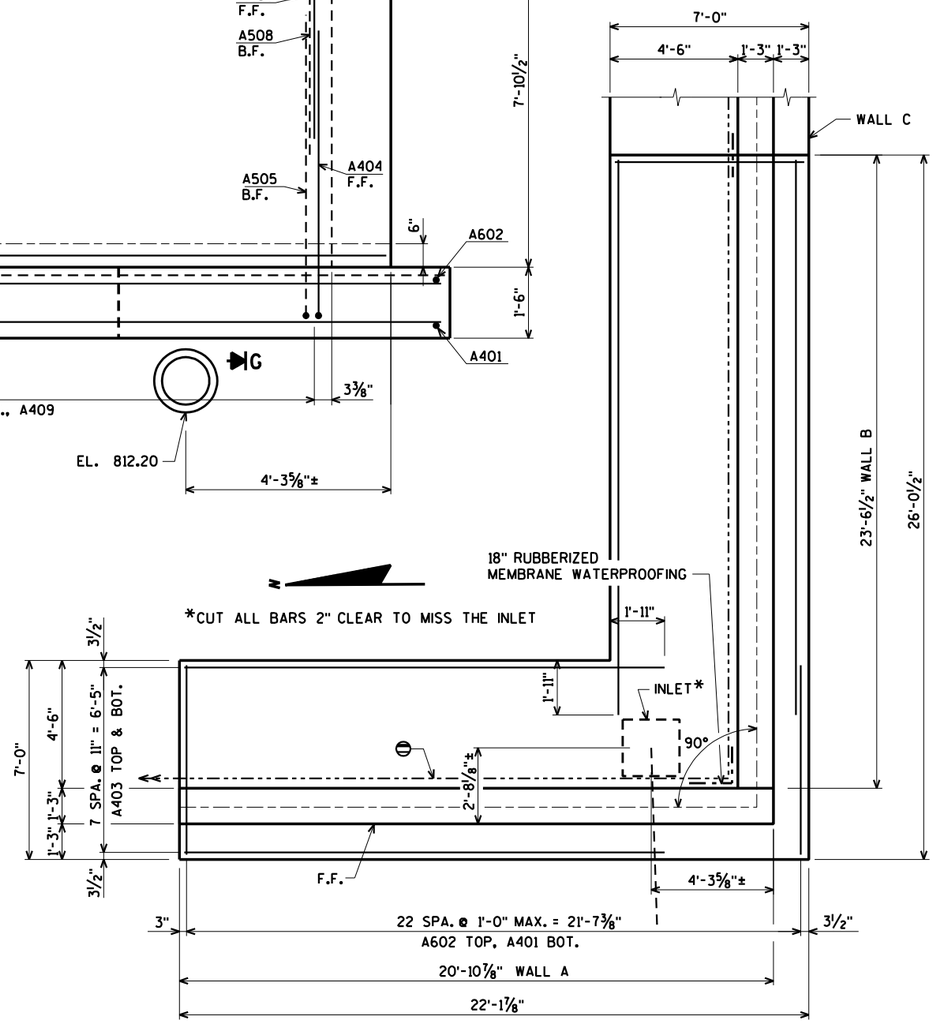

FOOTING PLAN - WALL A

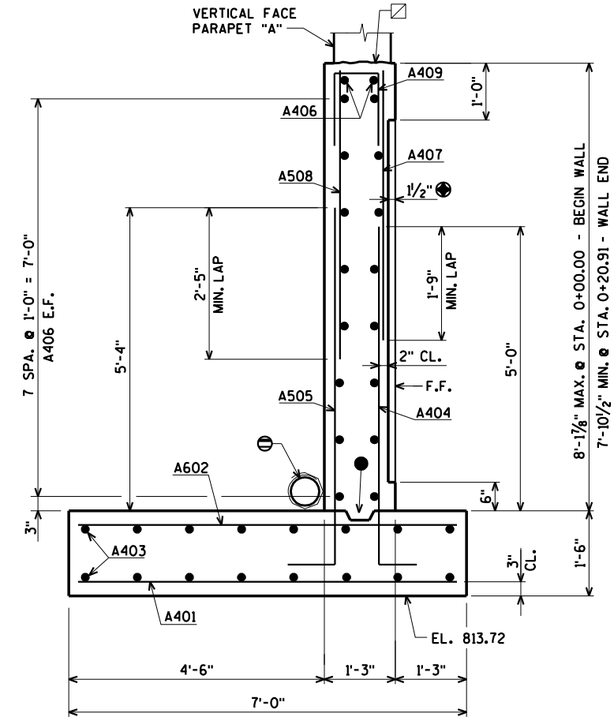

SECTION G

- CONST. JOINT - STRIKE OFF AS SHOWN AND LEAVE ROUGH.
- VERTICAL RUSTICATION GROOVES. FOR DETAIL SEE SHEET 3.
- PIPE UNDERDRAIN WRAPPED 6-INCH. SLOPE 0.5% MIN. TO SUITABLE DRAINAGE. ATTACH RODENT SHIELD AT ENDS OF PIPE UNDERDRAIN. SEE DETAIL ON SHEET 2.
- CONST. JOINT FORMED BY SURFACED BEVELED 2" x 6".

NO.	DATE	REVISION	BY

STATE OF WISCONSIN
DEPARTMENT OF TRANSPORTATION

STRUCTURE R-30-70

DRAWN BY CLP | PLANS CK'D. JLB

WALL A DETAILS

SHEET 4 OF 12
834

ORIGINAL PLANS PREPARED BY
AYRES
3433 Oakwood Hills Parkway
Eau Claire, WI 54701
www.AyresAssociates.com

8

8

7/27/2021
PENTABLE:BReau_shd_util.tbl

I:±42±76-0103.00 - Kenosha Co. STH 50 Retaining Wall±Structure±FINAL±R-30-70±R-30-70 walls.dgn

STATE PROJECT NUMBER

1310-04-70

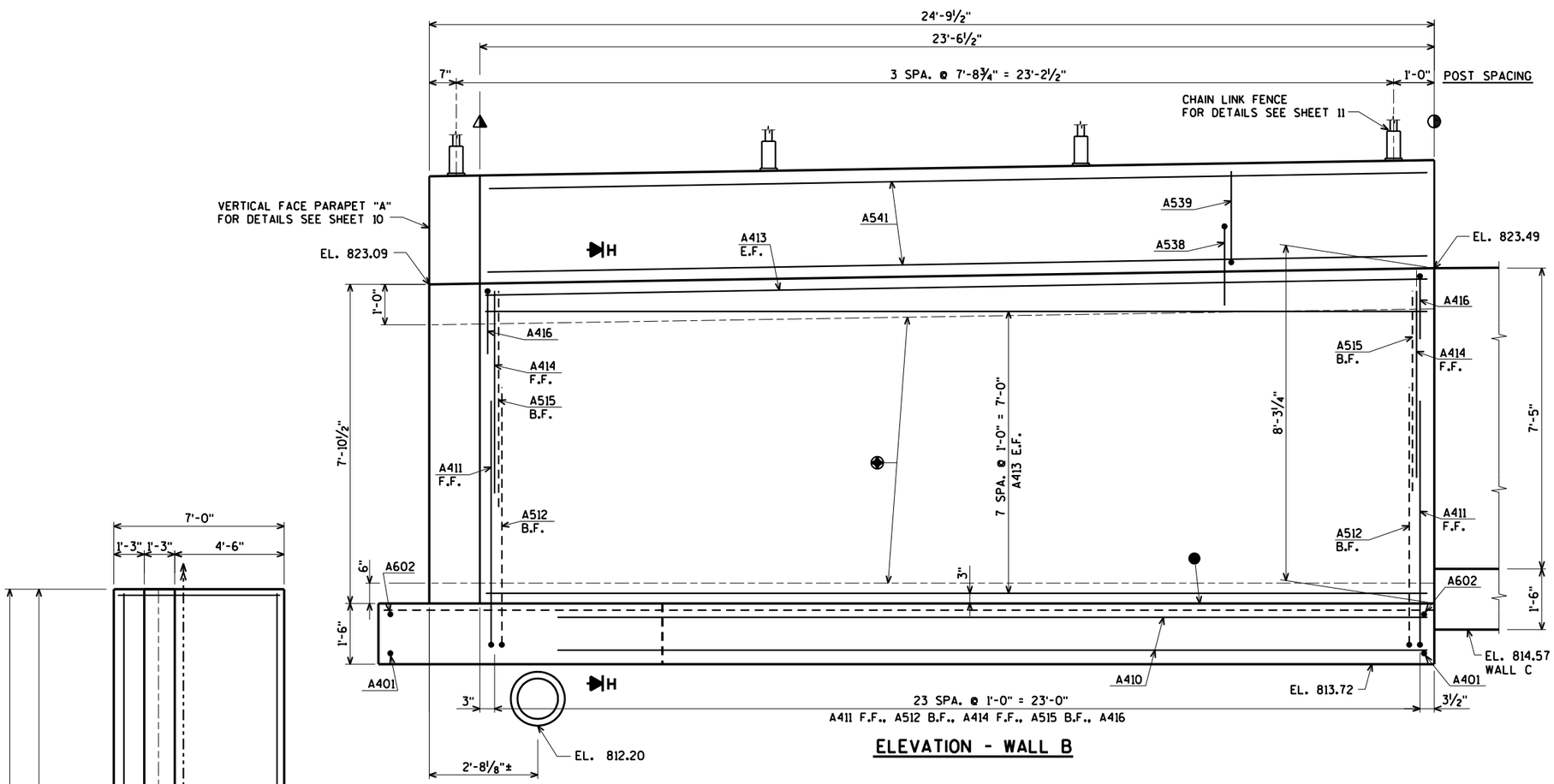

ELEVATION - WALL B

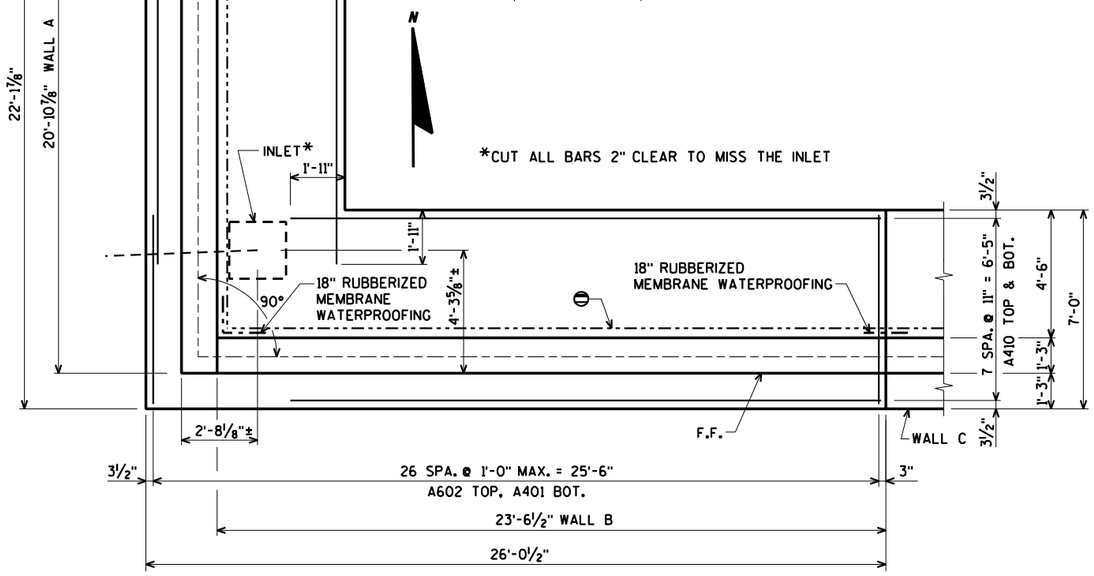

FOOTING PLAN - WALL B

N

*CUT ALL BARS 2" CLEAR TO MISS THE INLET

- CONST. JOINT - STRIKE OFF AS SHOWN AND LEAVE ROUGH.
- VERTICAL RUSTICATION GROOVES. FOR DETAIL SEE SHEET 3.
- PIPE UNDERDRAIN WRAPPED 6-INCH. SLOPE 0.5% MIN. TO SUITABLE DRAINAGE. ATTACH RODENT SHIELD AT ENDS OF PIPE UNDERDRAIN. SEE DETAIL ON SHEET 2.
- CONST. JOINT FORMED BY SURFACED BEVELED 2" x 6".
- DENOTES VERTICAL CONTRACTION JOINT. SEE DETAIL ON SHEET 9.
- DENOTES VERTICAL EXPANSION JOINT. SEE DETAIL ON SHEET 9.

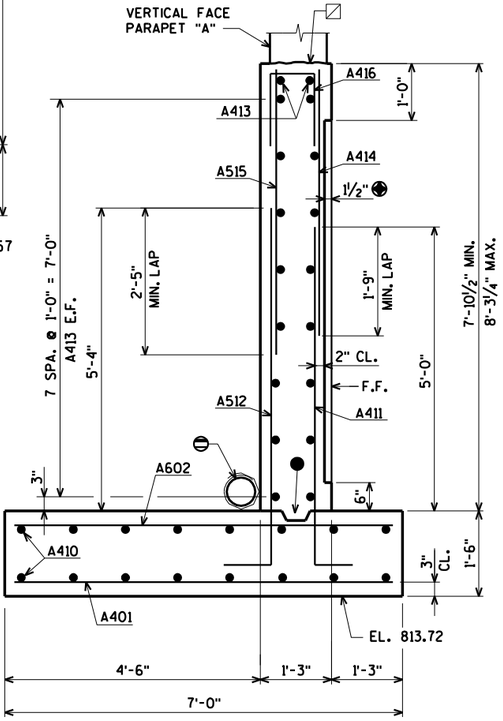

SECTION H

NO.	DATE	REVISION	BY

STATE OF WISCONSIN
DEPARTMENT OF TRANSPORTATION

STRUCTURE R-30-70

DRAWN BY CLP | PLANS CK'D. JLB

WALL B DETAILS

SHEET 5 OF 12
835

ORIGINAL PLANS PREPARED BY
AYRES
3433 Oakwood Hills Parkway
Eau Claire, WI 54701
www.AyresAssociates.com

8

8

7/27/2021
PENTABLE:BReau_shd_util.tbl

I:±42±76-0103.00 - Kenosha Co. STH 50 Retaining Wall±Structure±FINAL±R-30-70±R-30-70 walls.dgn

STATE PROJECT NUMBER

1310-04-70

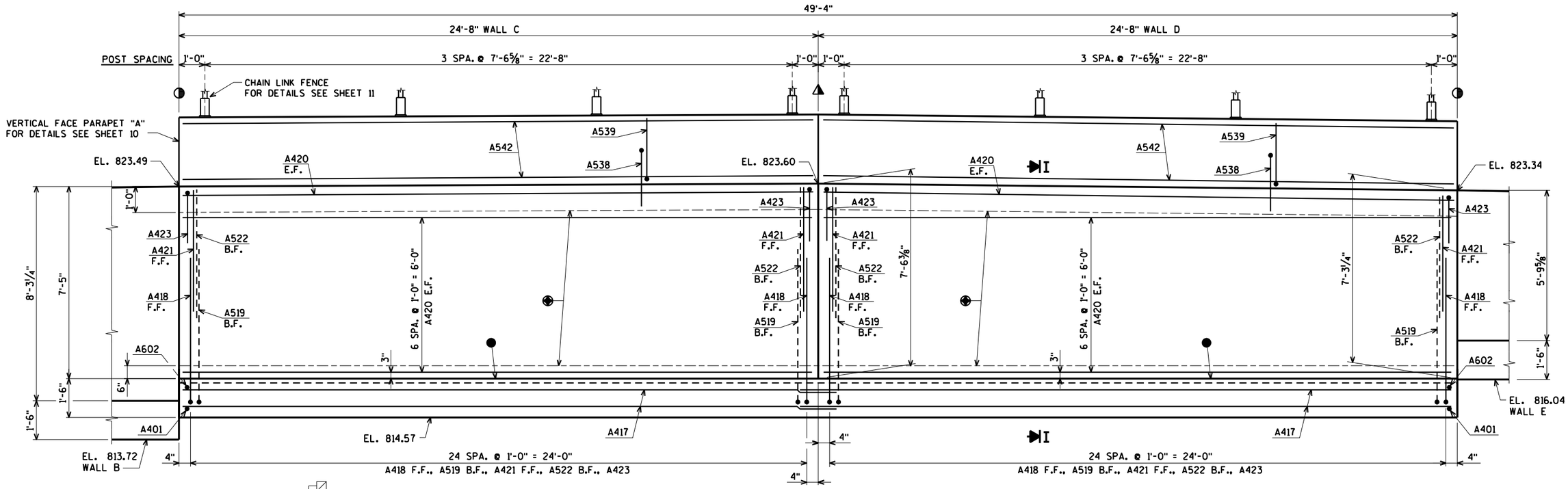

ELEVATION - WALLS C & D

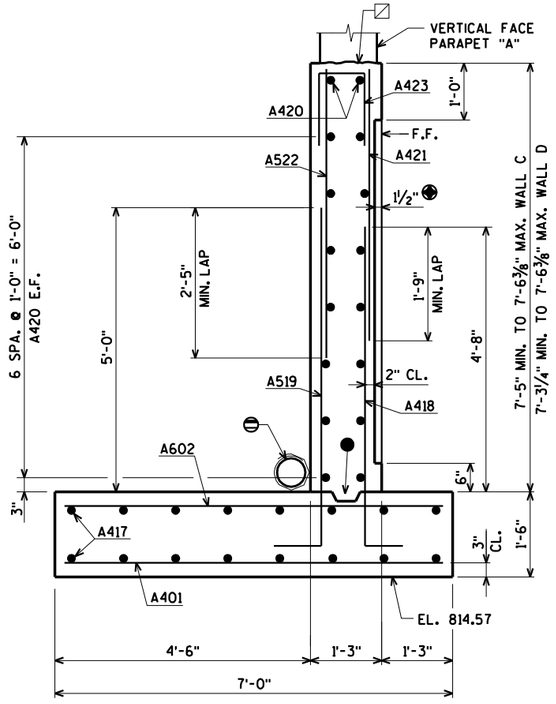

SECTION I

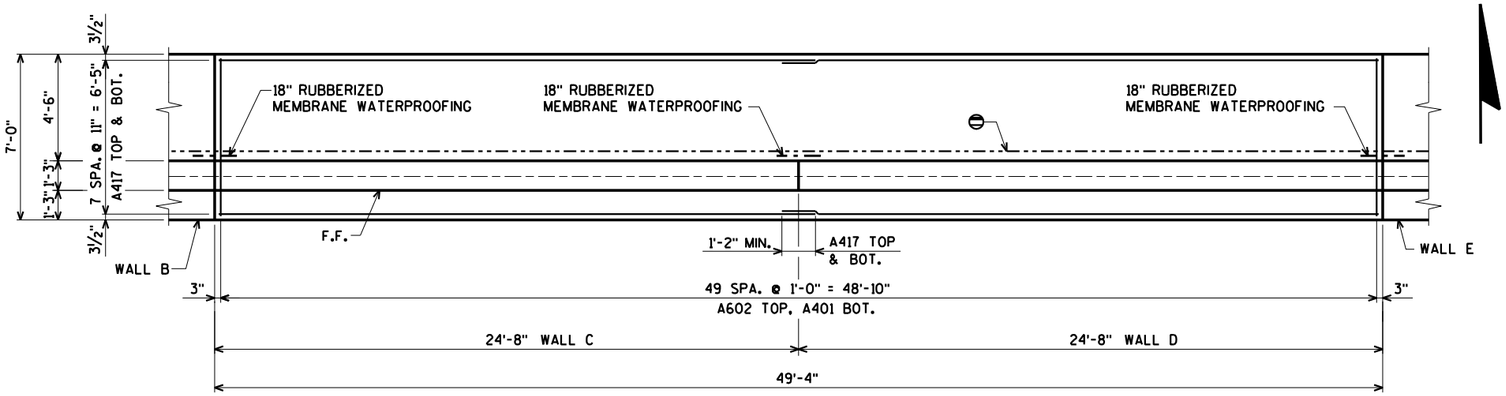

FOOTING PLAN - WALLS C & D

CONST. JOINT - STRIKE OFF AS SHOWN AND LEAVE ROUGH.

VERTICAL RUSTICATION GROOVES. FOR DETAIL SEE SHEET 3.

PIPE UNDERDRAIN WRAPPED 6-INCH. SLOPE 0.5% MIN. TO SUITABLE DRAINAGE. ATTACH RODENT SHIELD AT ENDS OF PIPE UNDERDRAIN. SEE DETAIL ON SHEET 2.

CONST. JOINT FORMED BY SURFACED BEVELED 2" x 6".

DENOTES VERTICAL CONTRACTION JOINT. SEE DETAIL ON SHEET 9.

DENOTES VERTICAL EXPANSION JOINT. SEE DETAIL ON SHEET 9.

NO.	DATE	REVISION	BY

STATE OF WISCONSIN
DEPARTMENT OF TRANSPORTATION

STRUCTURE R-30-70

DRAWN BY CLP | PLANS CK'D. JLB

ORIGINAL PLANS PREPARED BY
AYRES
3433 Oakwood Hills Parkway
Eau Claire, WI 54701
www.AyresAssociates.com

WALLS C & D DETAILS

SHEET 6 OF 12
836

8

8

7/27/2021
PENTABLE:BReau_shd_util.tbl

I:±42±76-0103.00 - Kenosha Co. STH 50 Retaining Wall±Structure±FINAL±R-30-70±R-30-70 walls.dgn

STATE PROJECT NUMBER

1310-04-70

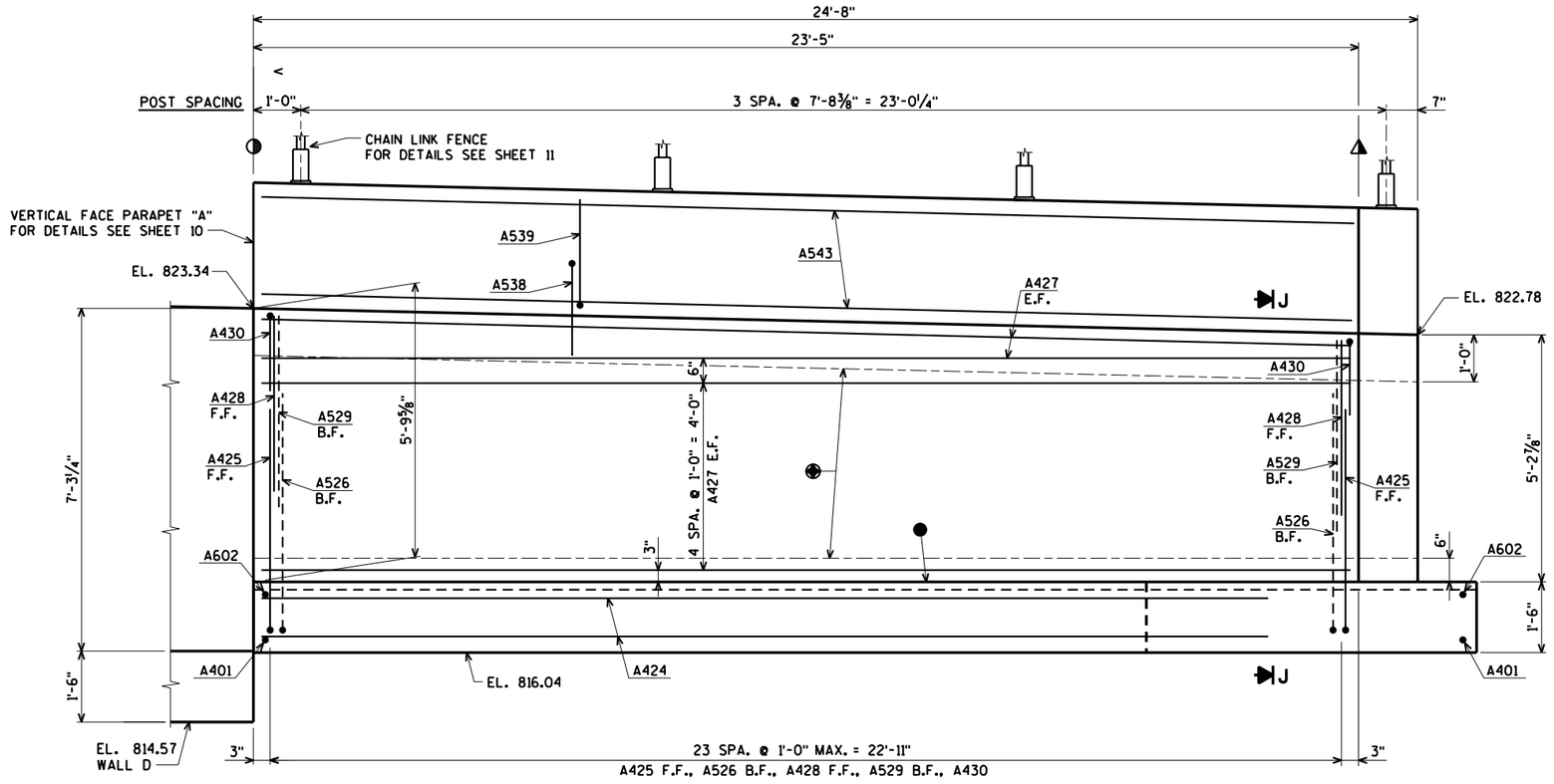

ELEVATION - WALL E

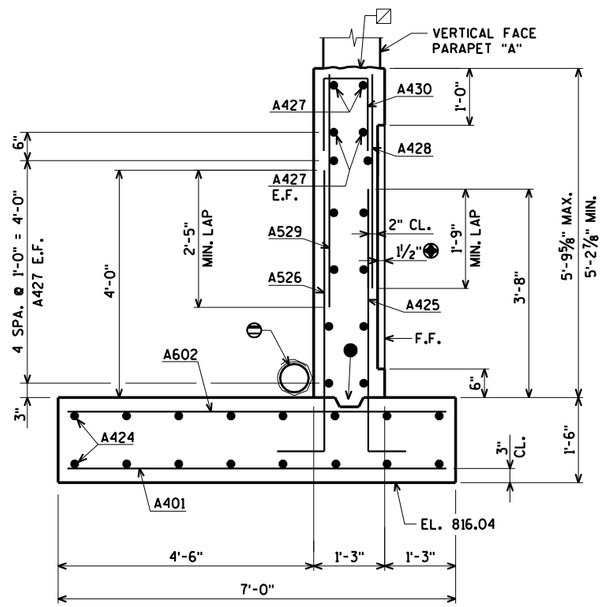

SECTION J

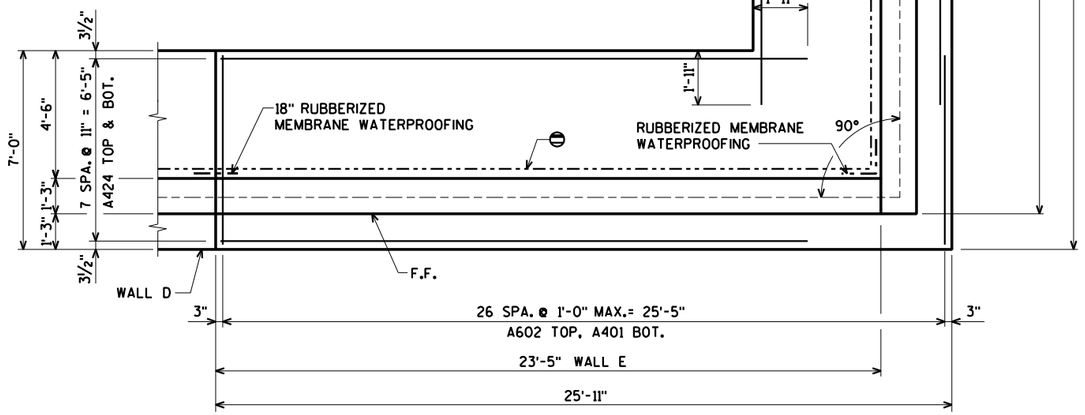

FOOTING PLAN - WALL E

- CONST. JOINT - STRIKE OFF AS SHOWN AND LEAVE ROUGH.
- VERTICAL RUSTICATION GROOVES. FOR DETAIL SEE SHEET 3.
- PIPE UNDERDRAIN WRAPPED 6-INCH. SLOPE 0.5% MIN. TO SUITABLE DRAINAGE. ATTACH RODENT SHIELD AT ENDS OF PIPE UNDERDRAIN. SEE DETAIL ON SHEET 2.
- CONST. JOINT FORMED BY SURFACED BEVELED 2" x 6".
- DENOTES VERTICAL CONTRACTION JOINT. SEE DETAIL ON SHEET 9.
- DENOTES VERTICAL EXPANSION JOINT. SEE DETAIL ON SHEET 9.

NO.	DATE	REVISION	BY

STATE OF WISCONSIN
DEPARTMENT OF TRANSPORTATION

STRUCTURE R-30-70

DRAWN BY CLP | PLANS CK'D. JLB

WALL E DETAILS

SHEET 7 OF 12
837

ORIGINAL PLANS PREPARED BY
AYRES
3433 Oakwood Hills Parkway
Eau Claire, WI 54701
www.AyresAssociates.com

7/27/2021
PENTABLE:BRReau_shd_util.tbl

8

8

STATE PROJECT NUMBER

1310-04-70

☒ CONST. JOINT - STRIKE OFF AS SHOWN AND LEAVE ROUGH.

◈ VERTICAL RUSTICATION GROOVES. FOR DETAIL SEE SHEET 3.

⊖ PIPE UNDERDRAIN WRAPPED 6-INCH. SLOPE 0.5% MIN. TO SUITABLE DRAINAGE. ATTACH RODENT SHIELD AT ENDS OF PIPE UNDERDRAIN. SEE DETAIL ON SHEET 2.

● CONST. JOINT FORMED BY SURFACED BEVELED 2" x 6".

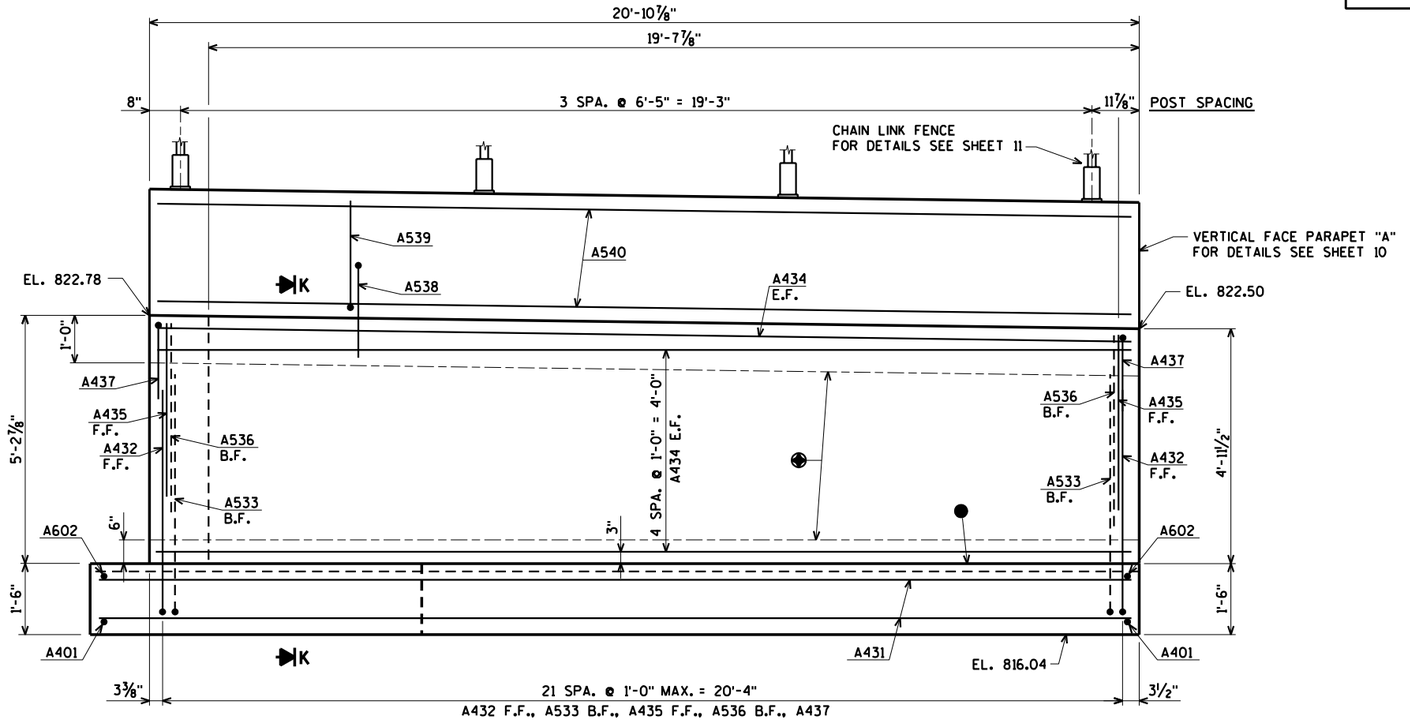

ELEVATION - WALL F

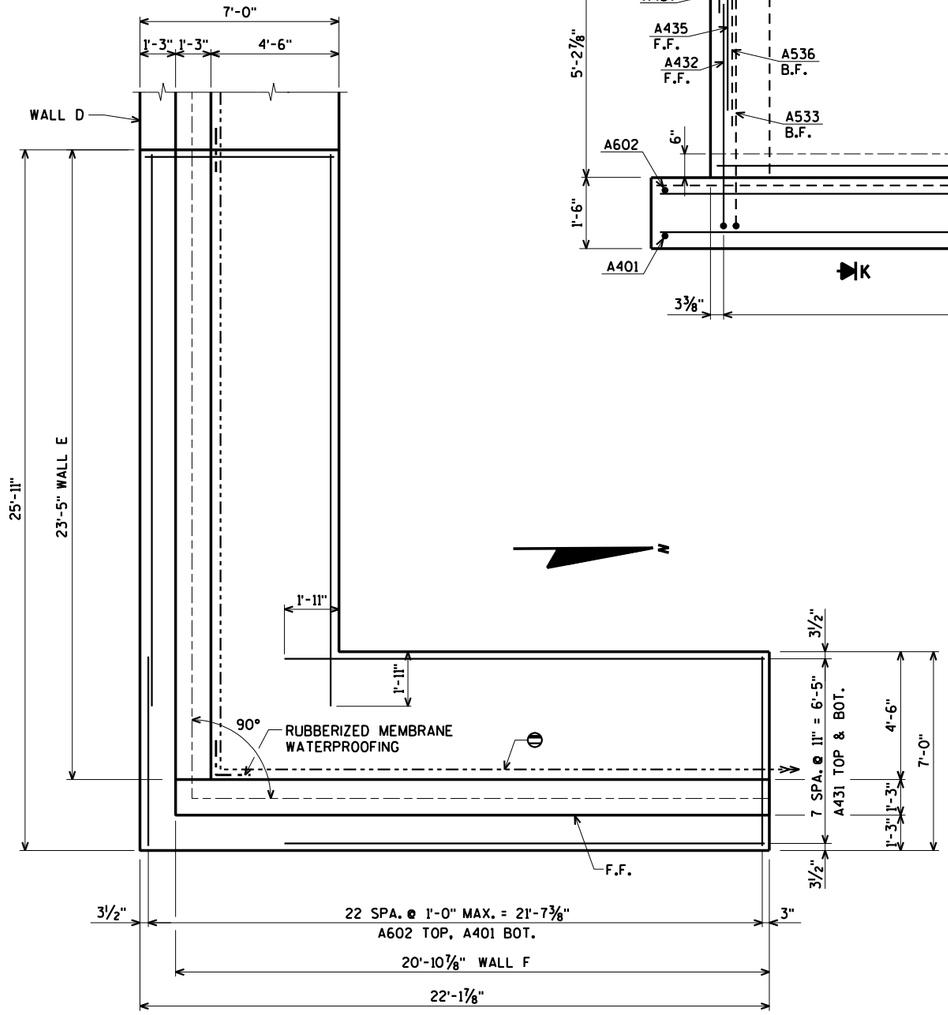

FOOTING PLAN - WALL F

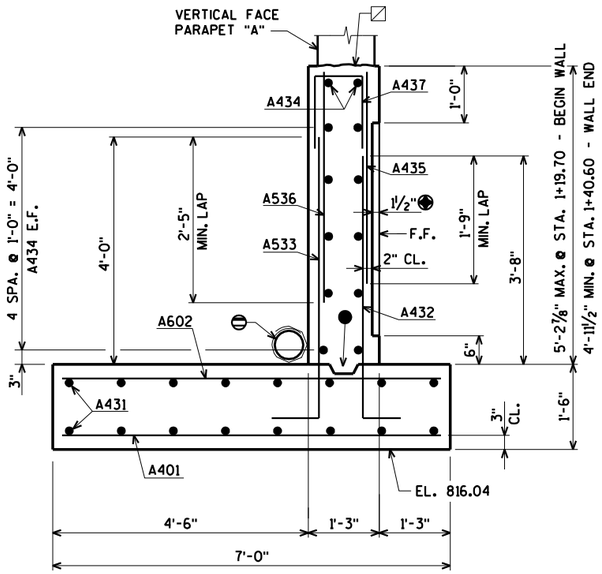

SECTION K

NO.	DATE	REVISION	BY

STATE OF WISCONSIN
DEPARTMENT OF TRANSPORTATION

STRUCTURE R-30-70

DRAWN BY CLP | PLANS CK'D. JLB

WALL F DETAILS

SHEET 8 OF 12
838

ORIGINAL PLANS PREPARED BY
AYRES
3433 Oakwood Hills Parkway
Eau Claire, WI 54701
www.AyresAssociates.com

8

8

7/27/2021
PENTABLE:BRea_shd_util.tbl

I:±42±76-0103.00 - Kenosha Co. STH 50 Retaining Wall±Structure±FINAL±R-30-70±R-30-70 walls.dgn

7/27/2021
PENTABLE:BReau_shd_util.tbl

BILL OF BARS

BAR NO.	COATED BAR	NO. REQ'D.	LENGTH	BENT BAR	BUNDLED BAR SERIES	8.050" COATED 2.940" UNCOATED LOCATION
A401		150	6-8			WALL FOOTING BOT. ALL WALLS
A602		150	6-8			WALL FOOTING TOP ALL WALLS
A403		16	16-11			WALL FOOTING TOP & BOT. WALL A
A404	X	22	6-9	X		WALL DOWELS F.F. WALL A
A505	X	22	7-3	X		WALL DOWELS B.F. WALL A
A406	X	18	20-6			WALL HORIZ. E.F. WALL A
A407	X	22	4-9			WALL VERT. F.F. WALL A
A508	X	22	5-1			WALL VERT. B.F. WALL A
A409	X	22	3-3	X		WALL VERT. TOP WALL A
A410		16	20-10			WALL FOOTING TOP & BOT. WALL B
A411	X	24	6-9	X		WALL DOWELS F.F. WALL B
A512	X	24	7-3	X		WALL DOWELS B.F. WALL B
A413	X	18	23-2			WALL HORIZ. E.F. WALL B
A414	X	24	4-10			WALL VERT. F.F. WALL B
A515	X	24	5-2			WALL VERT. B.F. WALL B
A416	X	24	3-3	X		WALL VERT. TOP WALL B
A417		32	24-11			WALL FOOTING TOP & BOT. WALL C & D
A418	X	50	6-5	X		WALL DOWELS F.F. WALL C & D
A519	X	50	6-11	X		WALL DOWELS B.F. WALL C & D
A420	X	32	24-4			WALL HORIZ. E.F. WALL C & D
A421	X	50	4-8			WALL VERT. F.F. WALL C & D
A522	X	50	5-0			WALL VERT. B.F. WALL C & D
A423	X	50	3-3	X		WALL VERT. TOP WALL C & D
A424		16	20-8			WALL FOOTING TOP & BOT. WALL E
A425	X	24	5-5	X		WALL DOWELS F.F. WALL E
A526	X	24	5-11	X		WALL DOWELS B.F. WALL E
A427	X	14	23-1			WALL HORIZ. E.F. WALL E
A428	X	24	3-9			WALL VERT. F.F. WALL E
A529	X	24	4-1			WALL VERT. B.F. WALL E
A430	X	24	3-3	X		WALL VERT. TOP WALL E
A431		16	16-11			WALL FOOTING TOP & BOT. WALL F
A432	X	22	5-5	X		WALL DOWELS F.F. WALL F
A533	X	22	5-11	X		WALL DOWELS B.F. WALL F
A434	X	12	20-6			WALL HORIZ. E.F. WALL F
A435	X	22	3-2			WALL VERT. F.F. WALL F
A536	X	22	3-6			WALL VERT. B.F. WALL F
A437	X	22	3-3	X		WALL VERT. TOP WALL F
A538	X	170	6-1	X		WALL PARAPET VERT.
A539	X	170	4-9	X		WALL PARAPET VERT.
A540	X	16	20-6			WALL PARAPET HORIZ. WALL A & F
A541	X	8	23-2			WALL PARAPET HORIZ. WALL B
A542	X	16	24-4			WALL PARAPET HORIZ. WALL C & D
A543	X	8	24-4			WALL PARAPET HORIZ. WALL E

BENDING DIMENSIONS ARE OUT TO OUT OF BARS.

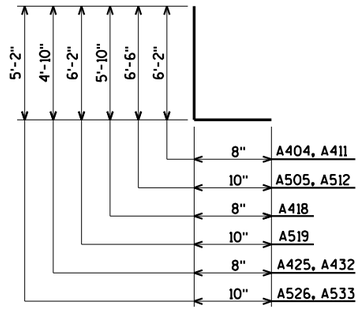

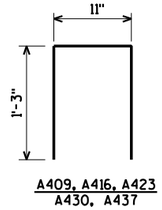

A409, A416, A423
A430, A437

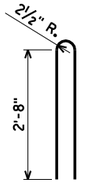

A538

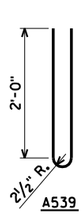

A539

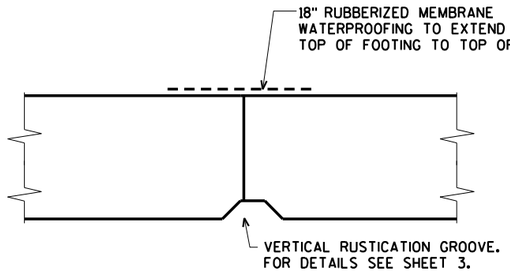

VERTICAL CONTRACTION JOINT DETAIL

DO NOT RUN ANY BAR STEEL THRU JOINT

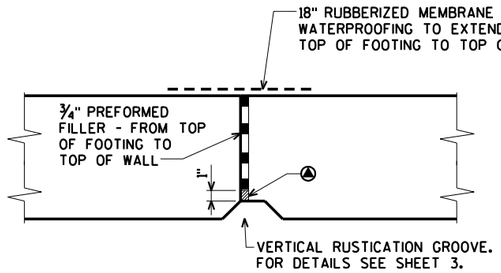

VERTICAL EXPANSION JOINT DETAIL

DO NOT RUN ANY BAR STEEL THRU JOINT

(A) FILL WITH NON-STAINING GRAY SINGLE COMPONENT NON-BITUMINOUS JOINT SEALER. FROM 1'-0" BELOW GROUND LINE TO TOP OF WALL.

NO.	DATE	REVISION	BY

STATE OF WISCONSIN
DEPARTMENT OF TRANSPORTATION

STRUCTURE R-30-70

DRAWN BY CLP | PLANS CK'D. JLB

WALL DETAILS & BILL OF BARS

SHEET 9 OF 12
839

ORIGINAL PLANS PREPARED BY
AYRES
3433 Oakwood Hills Parkway
Eau Claire, WI 54701
www.AyresAssociates.com

STATE PROJECT NUMBER
1310-04-70

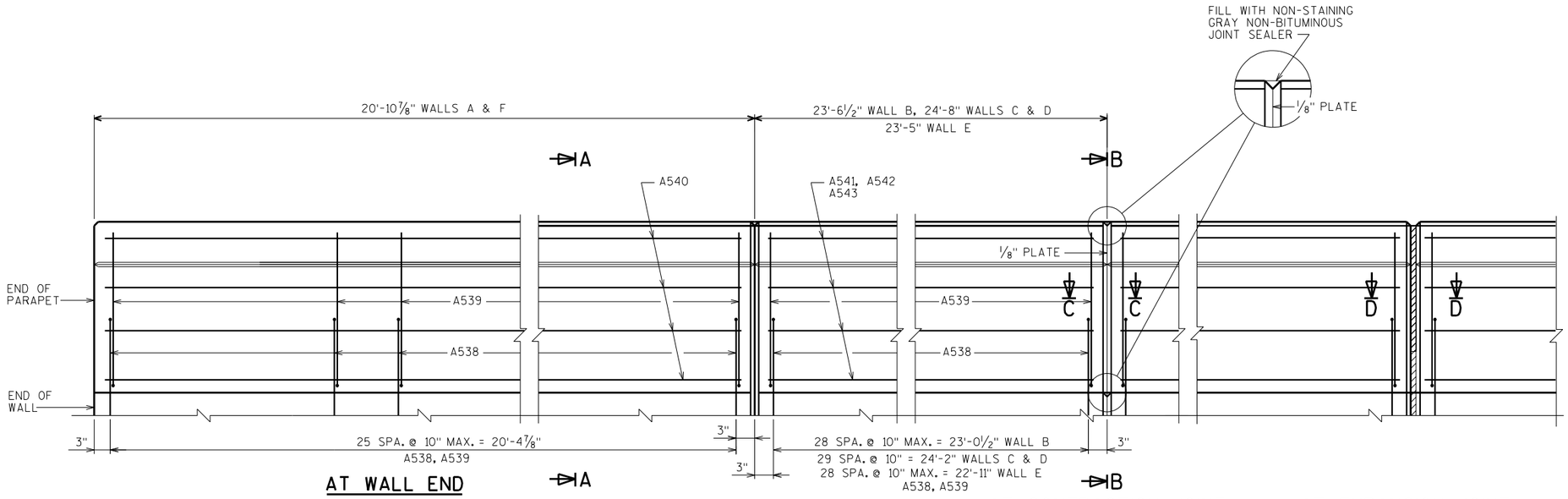

ELEVATION OF PARAPET

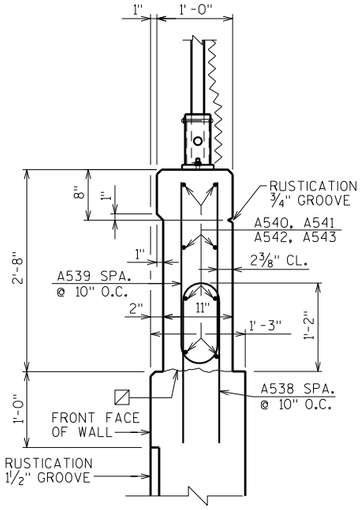

SECTION A-A

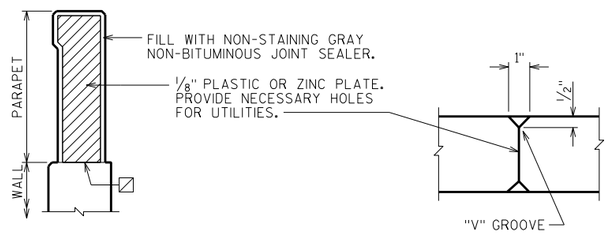

SECTION B-B

(SHOWING CONTRACTION JOINT IN PARAPET)

SECTION C-C

WHEN PARAPETS ARE POURED CONTINUOUSLY FROM END TO END, THEY SHALL BE SEPARATED AT THE DEFLECTION JOINTS BY A PIECE OF 1/8" ZINC OR PLASTIC PLATE CUT AS SHOWN IN SECTION B-B BY SHADED AREA. IF CONSTRUCTION JOINTS IN PARAPETS ARE USED AT THE DEFLECTION JOINTS, ONE SIDE OF JOINT SHALL BE COATED WITH AN APPROVED LIQUID BOND BREAKER AND PLATE SEPARATORS MAY BE OMITTED.

☒ CONST. JOINT - STRIKE OFF AS SHOWN AND LEAVE ROUGH.

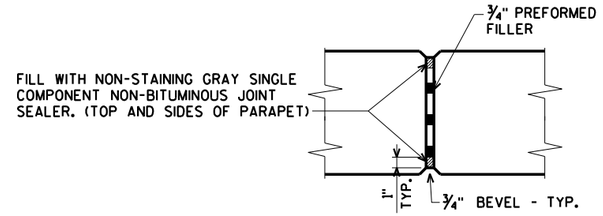

SECTION D-D

(SHOWING EXPANSION JOINT IN PARAPET)

NO.	DATE	REVISION	BY

STATE OF WISCONSIN
DEPARTMENT OF TRANSPORTATION

STRUCTURE R-30-70

DRAWN BY CLP | PLANS CK'D. JLB

VERTICAL FACE PARAPET "A"

SHEET 10 OF 12
840

ORIGINAL PLANS PREPARED BY
AYRES
3433 Oakwood Hills Parkway
Eau Claire, WI 54701
www.AyresAssociates.com

8

8

7/26/2021
PENTABLE:BReau_shd_util.tbl

I:±42±76-0103.00 - Kenosha Co. STH 50 Retaining Wall±Structure±FINAL±R-30-70±R-30-70 para.dgn

STATE PROJECT NUMBER

1310-04-70

FENCE MEMBER SIZE & WEIGHT

STEEL FENCE MEMBER	OUTSIDE DIAMETER (INCHES)	WEIGHT (LB/FT)
RAILS	1.660	2.27
END POST	2.875	5.80
OVERHANG POST	2.875	5.80
LINE POST	2.375	3.65
POST SLEEVE	4.000	9.12

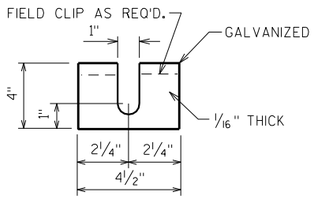

POST SHIM DETAILS

SHIMS REQUIRED ONLY WHEN END POSTS AND LINE POSTS ARE WELDED TO BASE PLATES. PROVIDE 4 SHIMS PER POST. USE WHERE REQUIRED FOR ALIGNMENT.

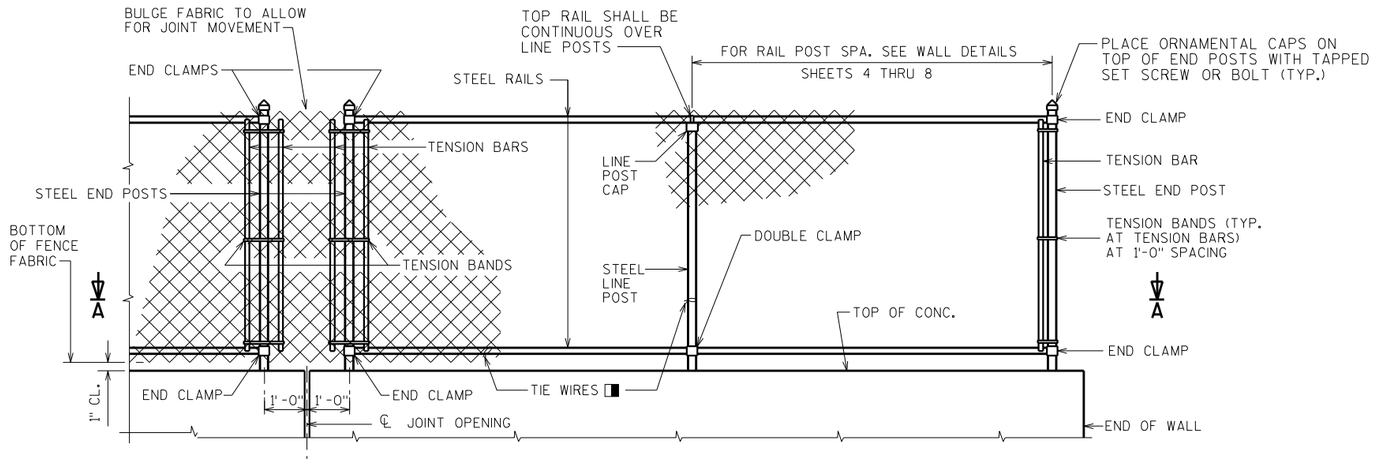

FENCE PART ELEVATION

VIEWING FABRIC SIDE

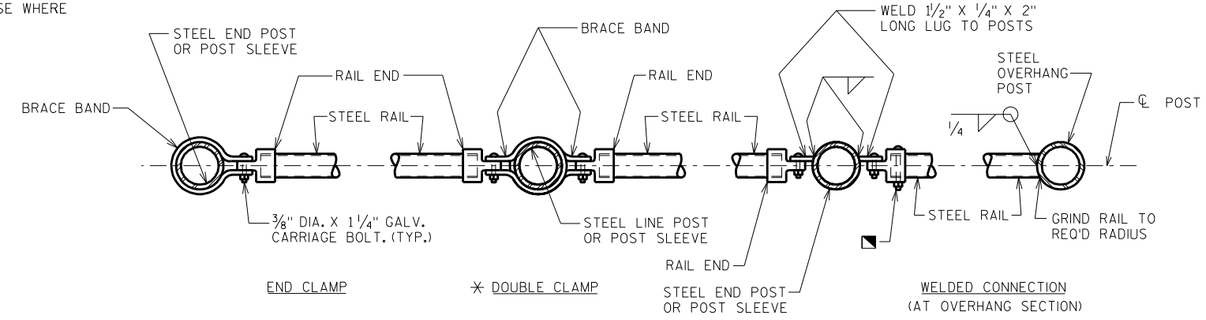

SECTION A-A

NOTE: PLACE ALL BOLT HEADS ON SIDE OF FENCE ADJACENT TO PEDESTRIANS

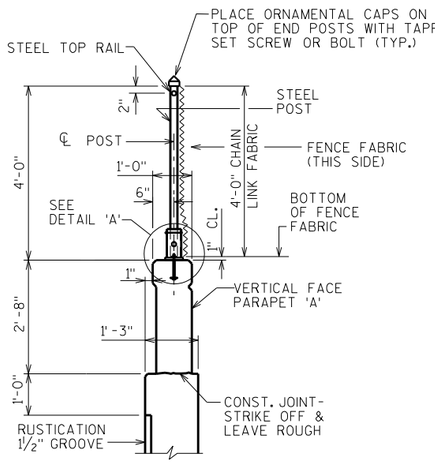

SECTION THRU FENCE

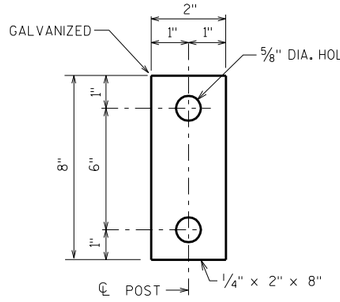

ANCHOR PLATE

✩NOTE: ANCHOR PLATE NOT REQUIRED WHEN ADHESIVE ANCHORS ARE USED.

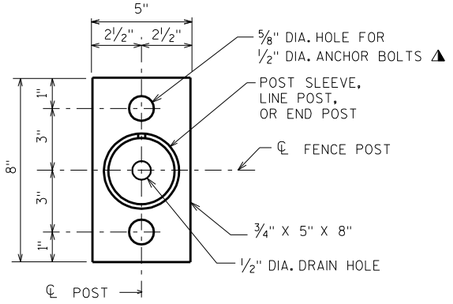

BASE PLATE

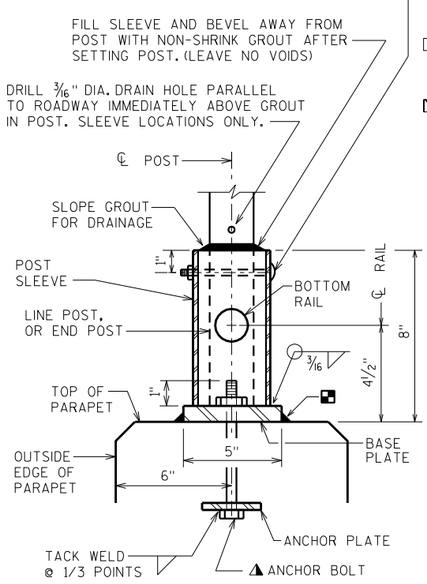

DETAIL 'A'

UNIT SHALL BE GALVANIZED AFTER FABRICATION

NOTE: IN LIEU OF USING THE POST SLEEVE, THE FENCE POST MAY BE WELDED TO THE BASE PLATE.

NOTES

POSTS ARE TO BE SET VERTICAL.

ALL FENCE COMPONENTS SHALL BE GALVANIZED STEEL, EXCEPT THE FENCE FABRIC WHICH MAY BE ALUMINUM-COATED STEEL OR GALVANIZED STEEL.

FABRIC SHALL CONFORM TO ASTM A491 OR A392, CLASS 2. STEEL RAILS, POSTS AND POST SLEEVES SHALL CONFORM TO ASTM F1083, STANDARD WEIGHT PIPE (SCHEDULE 40). FITTINGS SHALL CONFORM TO ASTM F626.

THE BID ITEM SHALL BE "FENCE CHAIN LINK 4- FT."

COMPLETE ANY REQUIRED WELDING OF COMPONENTS BEFORE GALVANIZING.

POST BASE PLATES SHALL BE FLAT WITH ALL SURFACES SMOOTH AND FREE FROM WARP AND ALL EDGES SMOOTH, STRAIGHT AND VERTICAL. ALL PLATE CUTS SHALL BE MACHINE OR MACHINE FLAME CUT.

BASE PLATES, ANCHOR PLATES AND SHIMS SHALL BE ASTM A709, GRADE 36.

ALL POST SPACINGS ARE MEASURED HORIZONTALLY ALONG THE C/L OF THE POST.

▪ CAULK AROUND PERIMETER OF BASE PLATE AND FILL PORTION OF SLOTTED HOLE AROUND ANCHOR BOLT IN SHIM WITH NON-STAINING GRAY NON-BITUMINOUS JOINT SEALER.

✳ ALTERNATE TO DOUBLE CLAMP: USE LINE RAIL CLAMP (BOULEVARD) OR 180° BRACE BAND, WHICH MAY BE USED WHEN THE POSTS ARE EITHER BOLTED TO THE POST SLEEVES OR DIRECTLY WELDED TO THE BASE PLATE.

◭ ANCHOR BOLTS, NUTS AND WASHERS SHALL BE EITHER STAINLESS STEEL OR ASTM 307. IF 307 IS USED, ANCHOR BOLTS, NUTS AND WASHERS SHALL BE GALVANIZED. ✩

✩ ALTERNATIVE ANCHORAGE: CONCRETE ADHESIVE ANCHORS 1/2-INCH. EMBED 7" IN CONCRETE. ADHESIVE ANCHORS SHALL CONFORM TO SECTIONS 502.2.12 AND 502.3.14 OF THE STANDARD SPECIFICATIONS.

◨ ATTACH FABRIC TO RAILS, AND TO POSTS WITHOUT TENSION BANDS, WITH TIE WIRES (ROUND, 9-GAGE) SPACED AT 1'-0".

◥ BOLT RAIL TO RAIL END TO SECURE OVERHANG SECTION. ALTERNATE IS TO WELD RAIL DIRECTLY TO END POST.

MINIMUM LENGTH OF TOP RAIL BETWEEN SPLICES SHALL BE 20'-0". LOCATE SPLICES NEAR 1/4 POINT OF POST SPACING.

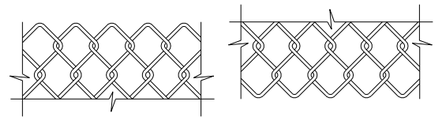

FENCE FABRIC

FENCE FABRIC WOVEN OF 9-GAGE WIRE IN 2" DIAMOND PATTERN MESH WITH BOTH THE TOP AND BOTTOM SELVAGES KNUCKLED.

NO.	DATE	REVISION	BY

STATE OF WISCONSIN
DEPARTMENT OF TRANSPORTATION

STRUCTURE R-30-70

DRAWN BY CLP | PLANS CK'D. JLB

CHAIN LINK FENCE DETAILS

SHEET 11 OF 12
841

ORIGINAL PLANS PREPARED BY
AYRES
3433 Oakwood Hills Parkway
Eau Claire, WI 54701
www.AyresAssociates.com

8

8

7/26/2021
PENTABLE:BReau_shd_utl.tbl

I:±42±76-0103.00 - Kenosha Co. STH 50 Retaining Wall±Structure±FINAL±R-30-70±R-30-70 chainlnk.dgn

BORING #	DATE COMPLETED	NORTHING (Y)	EASTING (X)
4	OCTOBER 1, 2019	128261.34	552562.79
5	OCTOBER 1, 2019	128261.61	552622.79
BORINGS COMPLETED BY: WISDOT			
REPORT COMPLETED BY: WISDOT			
ALL COORDINATES REFERENCED TO WCCS NAD 83(91) KENOSHA COUNTY			

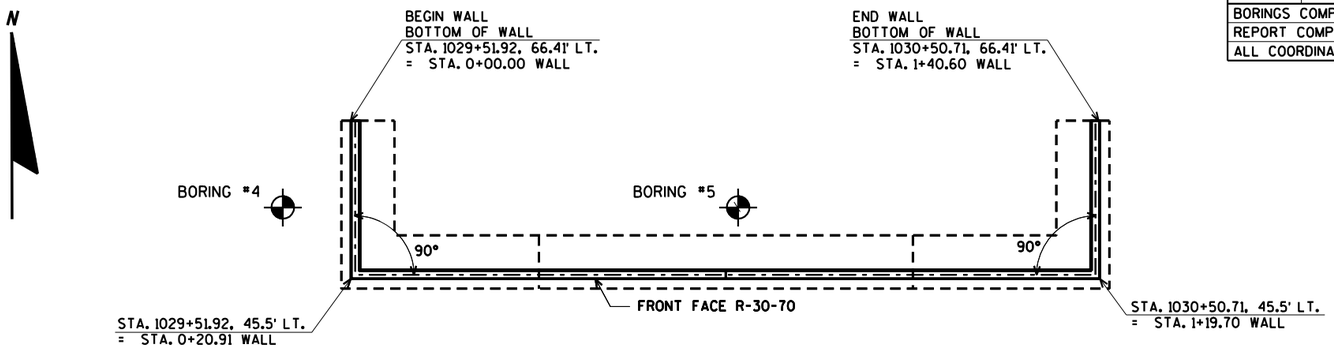

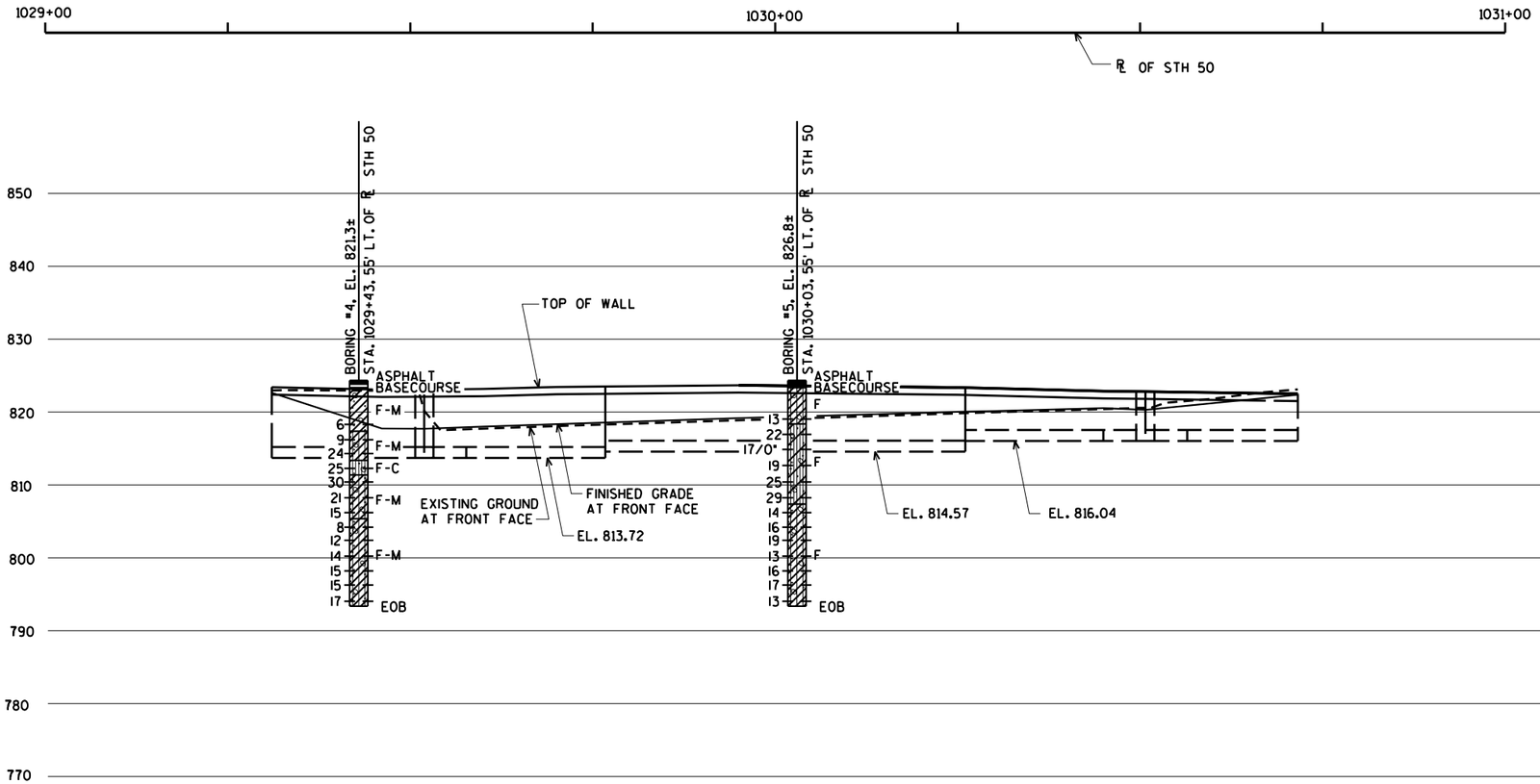

STATE PROJECT NUMBER

1310-04-70

MATERIAL SYMBOLS

ASPHALT	TOPSOIL	PEAT
CONCRETE	FILL	GRAVEL
SAND	CLAY	SILT
BOULDERS OR COBBLES	LIMESTONE	BEDROCK (UNKNOWN)
SHALE	SANDSTONE	IGNEOUS/ META

LEGEND OF BORING

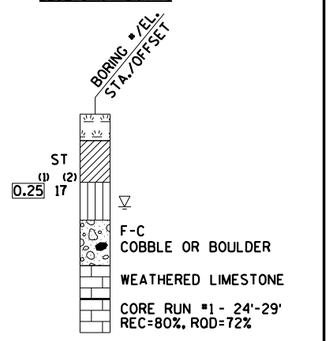

(1) UNCONFINED STRENGTH, AS DETERMINED BY A POCKET PENETROMETER (TSF)

(2) UNLESS OTHERWISE, SPECIFIED THE SPT 'N' VALUE IS BASED ON AASHTO T-206, STANDARD PENETRATION TEST. THE SPT 'N' VALUE PRESENTED HAS NOT BEEN CORRECTED FOR OVERBURDEN PRESSURE OR HAMMER EFFICIENCY.

GROUND WATER ELEVATION

- AT TIME OF DRILLING
- END OF DRILLING
- AFTER DRILLING

ABBREVIATIONS

F-FINE M-MEDIUM C-COARSE ST-SHELBY TUBE

SUBSURFACE EXPLORATION FOR FOUNDATION DESIGN AND BIDDERS INFORMATION

BORINGS WERE COMPLETED AT POINTS APPROXIMATELY AS INDICATED ON THIS DRAWING TO OBTAIN INFORMATION CONCERNING THE CHARACTER OF SUBSURFACE MATERIALS FOUND AT THE SITE. BECAUSE THE INVESTIGATED DEPTHS ARE LIMITED AND THE AREA OF THE BORINGS IS VERY SMALL IN RELATION TO THE ENTIRE SITE, THE WISCONSIN DEPARTMENT OF TRANSPORTATION DOES NOT WARRANT SIMILAR SUBSURFACE CONDITIONS BELOW, BETWEEN, OR BEYOND THESE BORINGS. VARIATIONS IN SOIL CONDITIONS SHOULD BE EXPECTED AND FLUCTUATIONS IN GROUNDWATER LEVELS MAY OCCUR.

NO.	DATE	REVISION	BY

STATE OF WISCONSIN
DEPARTMENT OF TRANSPORTATION

STRUCTURE R-30-70

DRAWN BY CLP | PLANS CK'D. JLB

SUBSURFACE EXPLORATION

SHEET 12 OF 12
842

8

8

7/26/2021
PENTABLE:BReau_shd_util.tbl

I:\42\76-0103.00 - Kenosha Co. STH 50 Retaining Wall\Structure\FINAL\R-30-70\R-30-70 soils.dgn

$PRFNAME$
DATE:
DATE:
DATE:
CHECKED BY:
BACK CHECKED BY:
CORRECTED BY:
I:\42\76-0103.00 - Kenosha Co. STH 50 Retaining Wall\Structure\FINAL\R-30-71\R-30-71 gp.dgn

STATE PROJECT NUMBER
1310-04-70

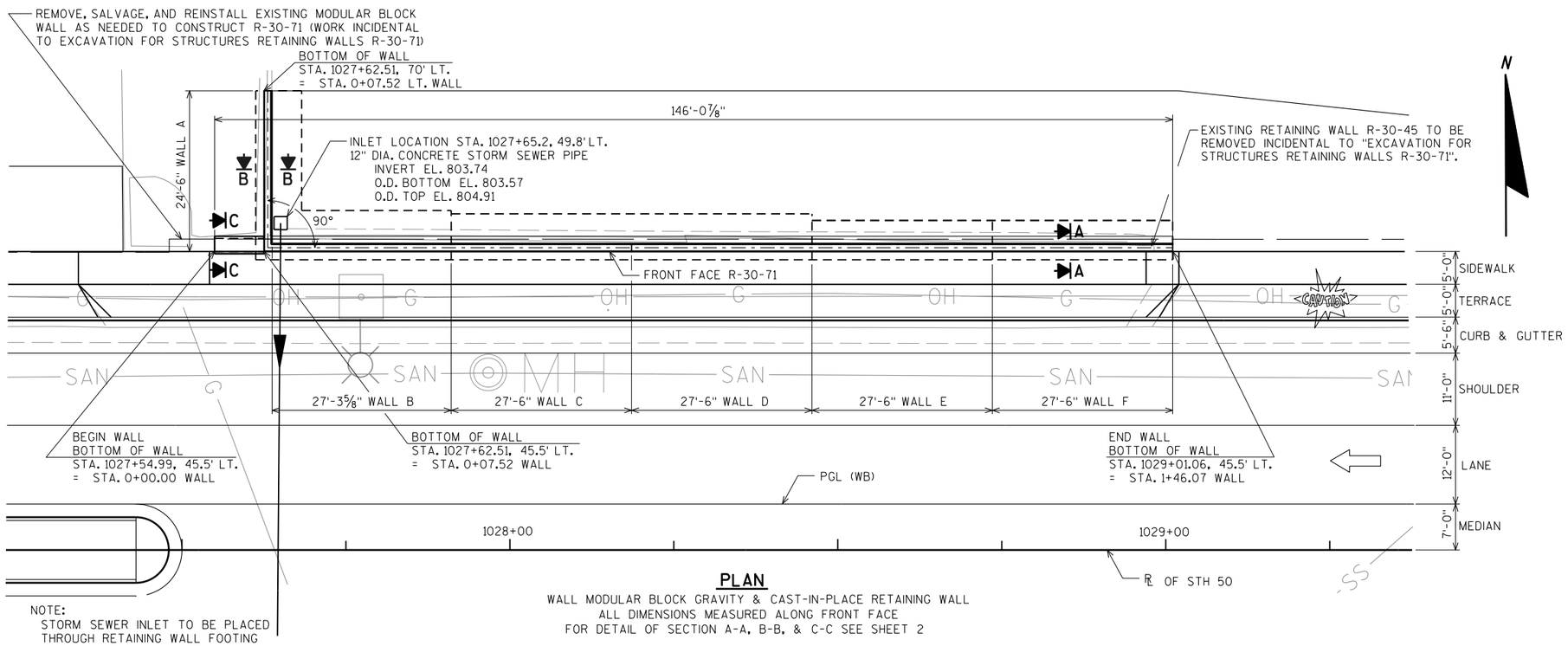

NOTE:
STORM SEWER INLET TO BE PLACED THROUGH RETAINING WALL FOOTING

PLAN

WALL MODULAR BLOCK GRAVITY & CAST-IN-PLACE RETAINING WALL
ALL DIMENSIONS MEASURED ALONG FRONT FACE
FOR DETAIL OF SECTION A-A, B-B, & C-C SEE SHEET 2

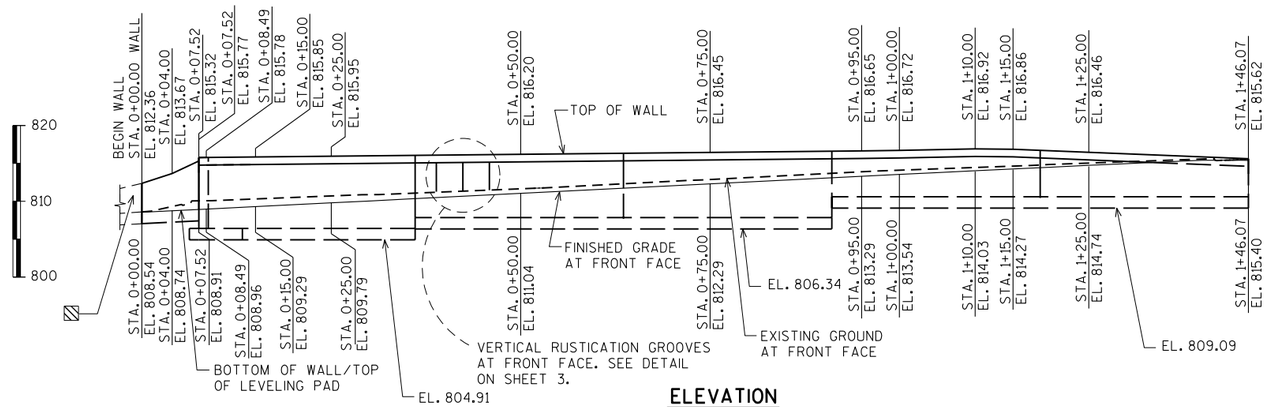

ELEVATION

(LOOKING AT FRONT FACE OF WALL)

▨ REMOVE, SALVAGE, AND REINSTALL EXISTING MODULAR BLOCK WALL AS NEEDED TO CONSTRUCT R-30-71 (WORK INCIDENTAL TO REMOVING RETAINING WALL R-30-45)

NOTE:
PARAPET AND CHAIN LINK FENCE NOT SHOWN.

LIST OF DRAWINGS

1. RETAINING WALL LAYOUT
2. RETAINING WALL DETAILS
3. RETAINING WALL DETAILS
4. WALL A DETAILS
5. WALL B DETAILS
6. WALLS C & D DETAILS
7. WALLS E & F DETAILS
8. WALL DETAILS
9. WALL DETAILS & BILL OF BARS
10. VERTICAL FACE PARAPET "A"
11. CHAIN LINK FENCE DETAILS
12. SUBSURFACE EXPLORATION

FOR GENERAL NOTES AND DESIGN DATA SEE SHEET 2

GEOMETRY TABLE

WALL STATION	ROADWAY STATION	OFFSET TO F.F. WALL	TOP OF WALL EL.	FINISHED GRADE EL.
0+00.00	1027+54.99	45.5'	812.36	808.54
0+04.00	1027+58.99	45.5'	813.67	808.74
0+07.52	1027+62.51	45.5'	815.32	808.91
0+07.52	1027+62.51	45.5'	815.77	808.91
0+08.49	1027+63.48	45.5'	815.78	808.96
0+15.00	1027+69.99	45.5'	815.85	809.29
0+25.00	1027+79.99	45.5'	815.95	809.79
0+50.00	1028+04.99	45.5'	816.20	811.04
0+75.00	1028+29.99	45.5'	816.45	812.29
0+95.00	1028+49.99	45.5'	816.65	813.29
1+00.00	1028+54.99	45.5'	816.72	813.54
1+10.00	1028+64.99	45.5'	816.92	814.03
1+15.00	1028+69.99	45.5'	816.86	814.27
1+25.00	1028+79.99	45.5'	816.46	814.74
1+46.07	1029+01.06	45.5'	815.62	815.40

TOTAL ESTIMATED QUANTITIES

ITEM NUMBER	BID ITEMS		UNIT
206.3000	EXCAVATION FOR STRUCTURES RETAINING WALLS R-30-71	1	LS
210.1500	BACKFILL STRUCTURE TYPE A	710	TON
502.3210	PIGMENTED SURFACE SEALER	260	SY
504.0500	CONCRETE MASONRY RETAINING WALLS	145	CY
505.0400	BAR STEEL REINFORCEMENT HS STRUCTURES	3,860	LB
505.0600	BAR STEEL REINFORCEMENT HS COATED STRUCTURES	9,240	LB
516.0500	RUBBERIZED MEMBRANE WATERPROOFING	8	SY
612.0406	PIPE UNDERDRAIN WRAPPED 6-INCH	210	LF
616.0204	FENCE CHAINLINK 4-FT	160	LF
SPV.0165.03	WALL MODULAR BLOCK GRAVITY R-30-71	50	SF



08/31/2021

BRIDGE OFFICE CONTACT:
AARON BONK
(608)-261-0261

CONSULTANT CONTACT:
ARLEN BEAUDETTE
(715)-834-3161

NO.	DATE	REVISION	BY

ORIGINAL PLANS PREPARED BY
AYRES
3433 Oakwood Hills Parkway
Eau Claire, WI 54701
www.AyresAssociates.com

STATE OF WISCONSIN
DEPARTMENT OF TRANSPORTATION

ACCEPTED _____ SDR 02/23/22
CHIEF STRUCTURES DESIGN ENGINEER DATE

STRUCTURE R-30-71

RETAINING WALL ALONG STH 50

COUNTY	~~TOWN/CITY/~~ VILLAGE
KENOSHA	PADDOCK LAKE

DESIGN SPEC.
AASHTO LRFD BRIDGE DESIGN SPECIFICATIONS

DESIGNED BY	ZSS	DESIGN CK'D.	JLB	DRAWN BY	CLP	PLANS CK'D.	AEB

RETAINING WALL LAYOUT

SHEET 1 OF 12
843

I.D. DATE:

STATE PROJECT NUMBER
1310-04-70

GENERAL NOTES

DRAWINGS SHALL NOT BE SCALED.

BAR STEEL REINFORCEMENT SHALL BE EMBEDDED 2" CLEAR UNLESS SHOWN OR NOTED OTHERWISE.

THE FIRST DIGIT OF A THREE DIGIT BAR NO. AND THE FIRST TWO DIGITS OF A FOUR DIGIT BAR NO. SIGNIFIES THE BAR SIZE.

JOINT FILLER SHALL CONFORM TO THE REQUIREMENTS OF A.A.S.H.T.O. DESIGNATION M 153, TYPE I, II OR III OR A.A.S.H.T.O. DESIGNATION M 213.

AT THE BACK FACE OF THE RETAINING WALL ALL SPACES EXCAVATED AND NOT OCCUPIED BY THE NEW STRUCTURE SHALL BE BACKFILLED WITH BACKFILL STRUCTURE.

THE UPPER LIMITS OF "EXCAVATION FOR STRUCTURES RETAINING WALLS R-30-71" SHALL BE THE EXISTING GROUND LINE.

THE BACKFILL QUANTITIES ARE BASED ON THE PAY LIMITS SHOWN ON THE PLANS AND MAY NOT REFLECT ACTUAL PLACED QUANTITIES. "BACKFILL STRUCTURE TYPE A" REQUIRED FOR THE ENTIRE WALL LENGTH. BACKFILL PLACED BEYOND PAY LIMITS OR EXCEEDING PLAN QUANTITIES SHALL BE INCIDENTAL TO EXCAVATION FOR STRUCTURES.

THE PLAN QUANTITY FOR THE BID ITEM "WALL MODULAR BLOCK GRAVITY" IS BASED ON A WALL HEIGHT MEASURED FROM THE TOP OF WALL TO A CONSTANT DEPTH OF 1'-6" BELOW FINISHED GRADE.

STORM SEWER INLET TO BE PLACED THROUGH RETAINING WALL FOOTING.

PIGMENTED SURFACE SEALER IS TO BE APPLIED AS SHOWN IN DETAIL ON SHEET 3.

THE QUANTITY OF CONCRETE MASONRY, COATED REINFORCING STEEL, AND RUBBERIZED MEMBRANE WATERPROOFING FOR THE CAST-IN-PLACE COPING IS INCIDENTAL TO BID ITEM "WALL MODULAR BLOCK GRAVITY".

THE EXISTING RETAINING WALL, R-30-45, IS A LIMESTONE BLOCK RETAINING WALL APPROXIMATELY 5-FEET TALL AND 170-FEET LONG. REMOVAL OF THE WALL IS INCIDENTAL TO "EXCAVATION FOR STRUCTURES RETAINING WALLS R-30-71".

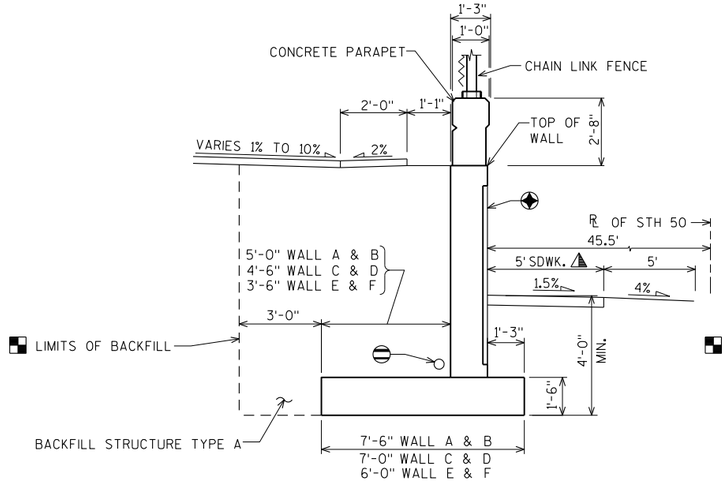

SECTION A-A

STA. 0+07.52 TO STA. 1+46.07

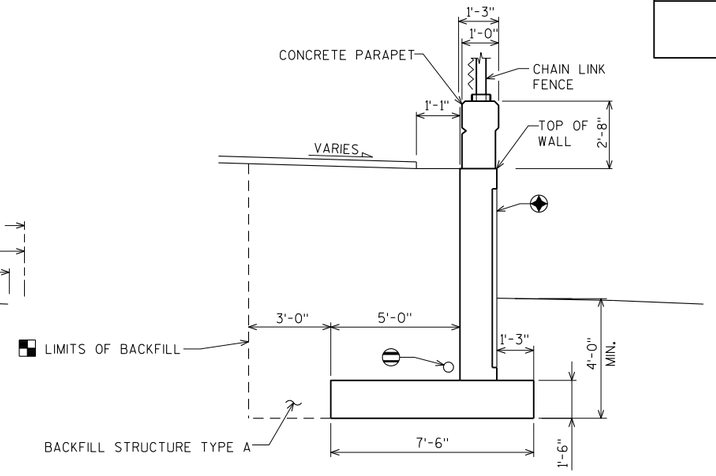

SECTION B-B

STA. 0+07.52 LT.

◈ VERTICAL RUSTICATION GROOVES FOR DETAIL SEE SHEET 3.

DESIGN DATA

THE CONTRACTOR SHALL PROVIDE COMPLETE DESIGN PLANS, DETAILS, SPECIFICATIONS AND SHOP DRAWINGS FOR THE RETAINING WALLS IN ACCORDANCE WITH THE SPECIAL PROVISIONS. THE RETAINING WALL MANUFACTURER SHALL PROVIDE TECHNICAL ASSISTANCE TO THE CONTRACTOR DURING CONSTRUCTION. THE COST OF FURNISHING THESE ITEMS SHALL BE INCLUDED IN THE BID ITEM "WALL MODULAR BLOCK GRAVITY".

PLANS, ELEVATIONS AND DETAILS SHOWN ON THESE DRAWINGS ARE INTENDED TO INDICATE WALL LOCATIONS, LENGTHS, HEIGHTS AND DETAILS COMMON TO ANY WALL SYSTEM SELECTED. THE CONTRACTOR SHALL VERIFY THAT THE WALL SYSTEM SELECTED WILL CONFORM TO THE REQUIRED ALIGNMENTS AND DETAILS.

THE RETAINIING WALL IS TO BE DESIGNED USING THE ELEVATIONS GIVEN ON SHEET 1.

DESIGN FOR RETAINING WALL TO PROVIDE FOR FINISHED GRADE SLOPED BEHIND WALL AND RAILING AS SHOWN.

LIVE LOAD:
100 psf SURCHARGE

MATERIAL PROPERTIES:

CONCRETE MASONRY ——— f'_c = 3,500 p.s.i.
HIGH STRENGTH BAR STEEL REINFORCEMENT (GRADE 60) ——— f_y = 60,000 p.s.i.

FOUNDATION DATA:

RETAINING WALL TO BE SUPPORTED ON MATERIAL WITH A MINIMUM FACTORED BEARING RESISTANCE OF 1,500 psf. A GEOTECHNICAL ENGINEER WILL DETERMINE THE FACTORED BEARING RESISTANCE BY VISUAL INSPECTION PRIOR TO CONSTRUCTION OF THE RETAINING WALL FOOTING.

SOIL PARAMETERS

STRATUM LOCATIONS AND SOIL DESCRIPTIONS	TOTAL UNIT WEIGHT (PCF)	FRICTION ANGLE (DEGREES)	COHESION (PCF)	FACTORED BEARING RESISTANCE (PSF)
GRANULAR BACKFILL (REINFORCING ZONE OR BACKFILL)	130	30	0	1,500
RETAINED SOIL ⊛	130	30	0	1,500

⊛ DESIGN WALL FOR THESE VALUES

NOTES

☆ THE LENGTHS PROVIDED IN THE TABLE ARE THE MINIMUM REQUIRED REINFORCMENT LENGTHS BASED ON OVERALL STABILITY PERFORMED BY THE WALL DESIGNER. COMPOUND STABILITY IS THE CONTRACTORS RESPONSIBILITY.

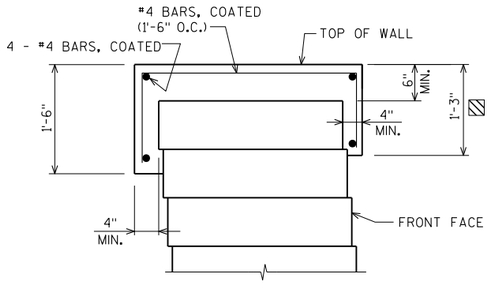

COPING DETAIL

▨ THIS DIMENSION MAY CHANGE DEPENDING ON HEIGHT OF BLOCKS. THIS DIMENSION TO BE CONSTANT FOR ENTIRE LENGTH OF WALL. MAXIMUM ALLOWABLE HEIGHT OF BLOCKS TO BE 9 INCHES.

MAINTAIN 2" MINIMUM COVER ON ALL REBAR.

WALL EXTERNAL & OVERALL STABILITY EVALUATION

DIMENSIONS	EVALUATED LOCATIONS
WALL HEIGHT (FEET)	7.91
EXPOSED WALL HEIGHT (FEET)	6.41
WALL STATION 0+00.00 - 0+07.52	
BORING USED	#2 & #3
CAPACITY TO DEMAND RATIO (CDR)	
SLIDING (CDR>1.0)	
ECCENTRICITY (CDR>1.0)	
OVERALL STABILITY (CDR>1.0) ☆	
BEARING RESISTANCE (CDR>1.0)	
FACTORED BEARING RESISTANCE (psf)	1,500

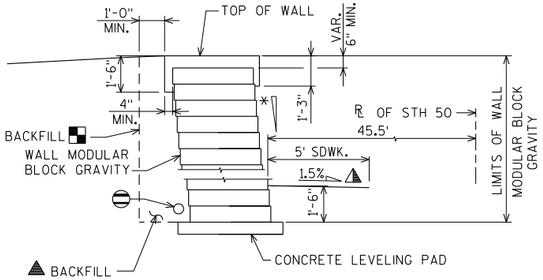

SECTION C-C

STA. 0+00 TO STA. 0+07.52

* SET BLOCK VARIES BY MANUFACTURER, MAX. FRONT FACE FROM VERTICAL BLOCK IS 1 HORIZ. TO 12 VERT.

▪ BACKFILL LIMITS. BACKFILL BEYOND BACKFILL LIMITS SHALL BE INCIDENTAL TO EXCAVATION FOR STRUCTURES. LIMITS OF EXCAVATION SHALL BE DETERMINED BY THE CONTRACTOR.

▲ INCIDENTAL TO BID ITEM "WALL MODULAR BLOCK GRAVITY".

⊖ PIPE UNDERDRAIN WRAPPED 6-INCH. SLOPE 0.5% MIN. TO SUITABLE DRAINAGE. ATTACH RODENT SHIELD AT ENDS OF PIPE UNDERDRAIN AS DETAILED ON SHEET 3.

⚠ ±0.5% CONSTRUCTION TOLERANCE IN SIDEWALK CROSS SLOPE. THE SIDEWALK CROSS SLOPE SHALL NOT EXCEED 2% WITHOUT PRIOR APPROVAL FROM THE ENGINEER.

FOR LOCATIONS OF SECTION A-A, B-B, & C-C SEE SHEET 1

NO.	DATE	REVISION	BY

STATE OF WISCONSIN
DEPARTMENT OF TRANSPORTATION

STRUCTURE R-30-71

DRAWN BY CLP | PLANS CK'D. JLB

RETAINING WALL DETAILS

SHEET 2 OF 12
844

ORIGINAL PLANS PREPARED BY
AYRES
3433 Oakwood Hills Parkway
Eau Claire, WI 54701
www.AyresAssociates.com

8

8

7/28/2021
PENTABLE:BReau_shd_utl1.tbl

I:±42±76-0103.00 - Kenosha Co. STH 50 Retaining Wall±Structure±FINAL±R-30-71±R-30-71 details.dgn

STATE PROJECT NUMBER

1310-04-70

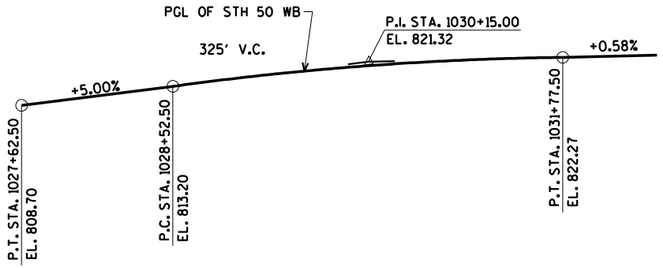

PROFILE GRADE LINE
(STH 50 WB)

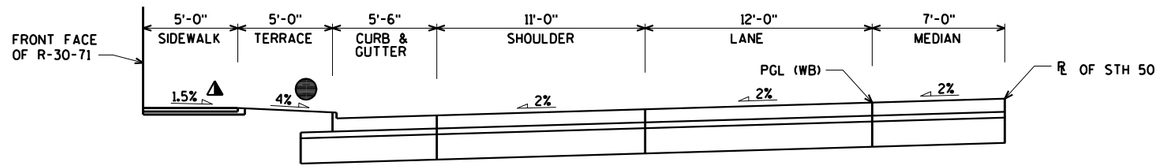

ROADWAY TYPICAL HALF SECTION

⚠ ±0.5% CONSTRUCTION TOLERANCE IN SIDEWALK CROSS SLOPE. THE SIDEWALK CROSS SLOPE SHALL NOT EXCEED 2% WITHOUT PRIOR APPROVAL FROM THE ENGINEER.

● SLOPE VARIES FROM 4% TO 11% AT DRIVEWAY AT EAST END OF WALL AS CURB HEAD HEIGHT IS REDUCED.

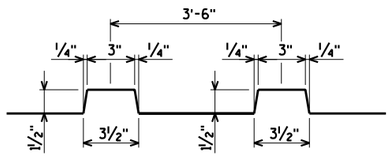

VERTICAL RUSTICATION GROOVES

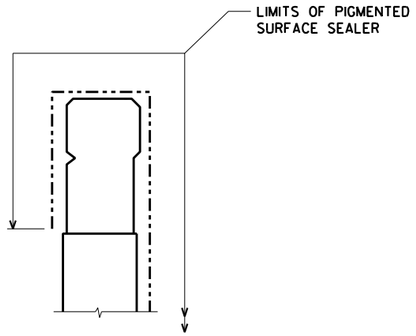

PIGMENTED SURFACE SEALER DETAIL

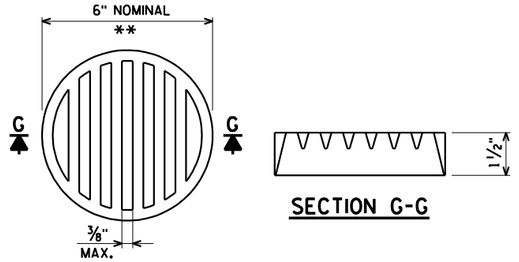

SECTION G-G

** DIMENSIONS ARE APPROXIMATE. THE GRATE IS SIZED TO FIT INTO A PIPE COUPLING. ORIENT SO SLOTS ARE VERTICAL.

THE RODENT SHIELD, PIPE COUPLING AND SCREWS SHALL BE CONSIDERED INCIDENTAL TO THE BID ITEM "PIPE UNDERDRAIN WRAPPED 6-INCH".

THE RODENT SHIELD SHALL BE A PVC GRATE SIMILAR TO THIS DETAIL. THE GRATE IS COMMERCIALLY AVAILABLE AS A FLOOR STRAINER. A PIPE COUPLING IS REQUIRED FOR THE ATTACHMENT OF THIS SHIELD TO THE EXPOSED END OF THE PIPE UNDERDRAIN. THE SHIELD SHALL BE FASTENED TO THE PIPE COUPLING WITH TWO OR MORE NO. 10 x 1-INCH STAINLESS STEEL SHEET METAL SCREWS.

RODENT SHIELD DETAIL

NO.	DATE	REVISION	BY

STATE OF WISCONSIN
DEPARTMENT OF TRANSPORTATION

STRUCTURE R-30-71

DRAWN BY CLP | PLANS CK'D. JLB

RETAINING WALL DETAILS

SHEET 3 OF 12
845

ORIGINAL PLANS PREPARED BY
AYRES
3433 Oakwood Hills Parkway
Eau Claire, WI 54701
www.AyresAssociates.com

8

8

7/26/2021
PENTABLE:BReau_shd_util.tbl

I:±42±76-0103.00 - Kenosha Co. STH 50 Retaining Wall±Structure±FINAL±R-30-71±R-30-71 details.dgn

STATE PROJECT NUMBER

1310-04-70

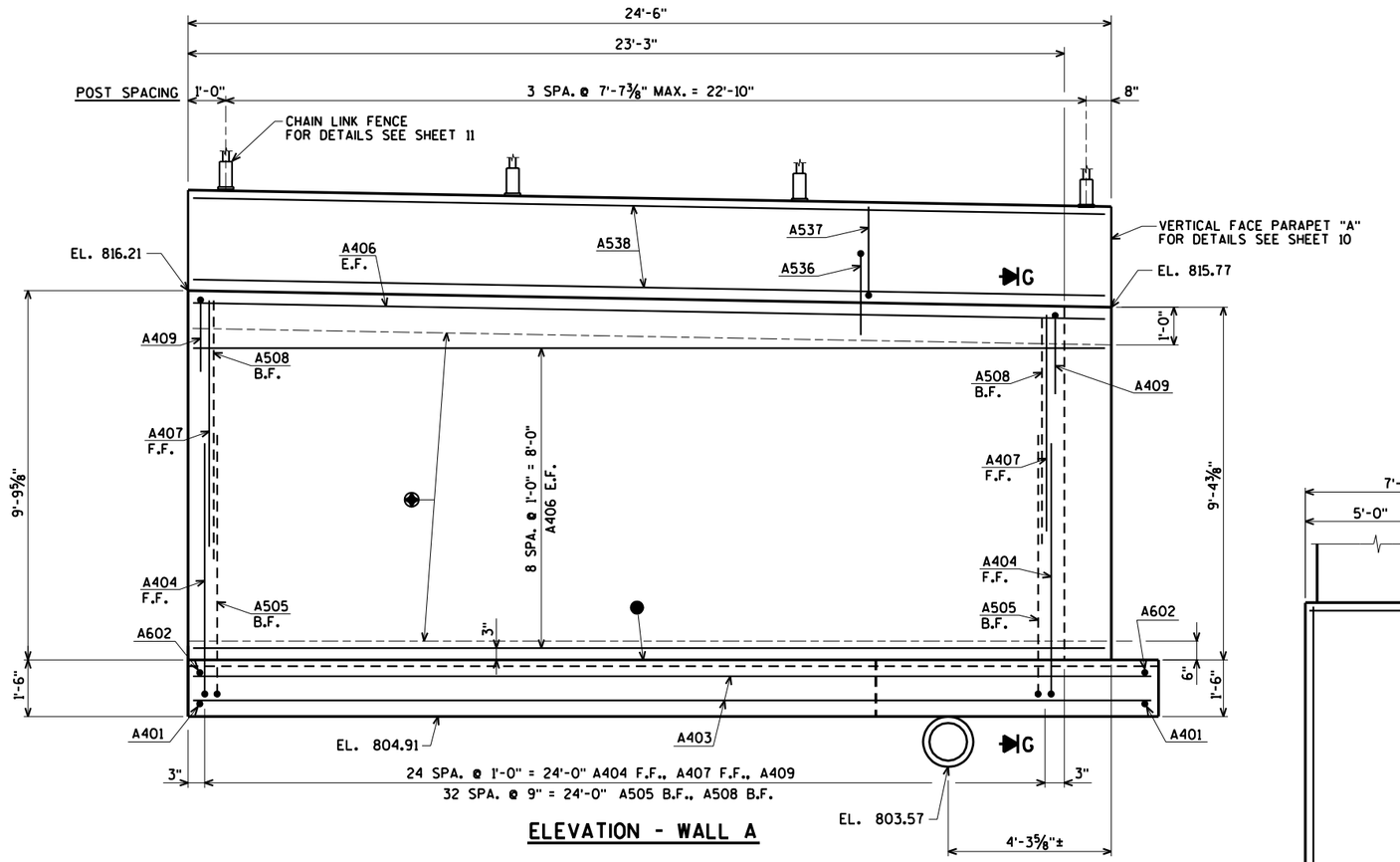

ELEVATION - WALL A

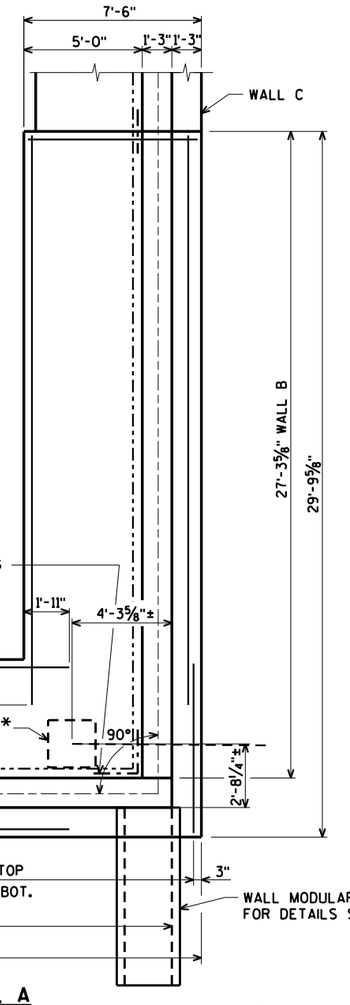

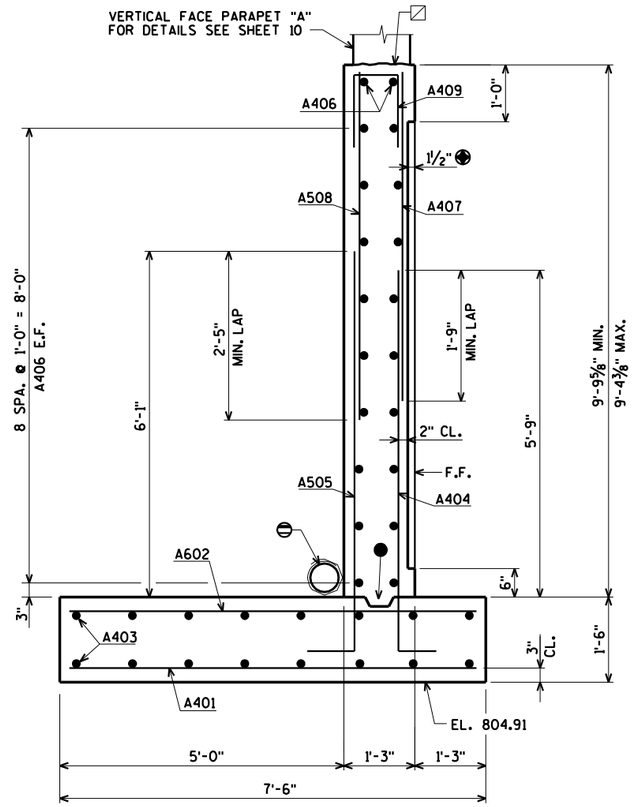

SECTION G

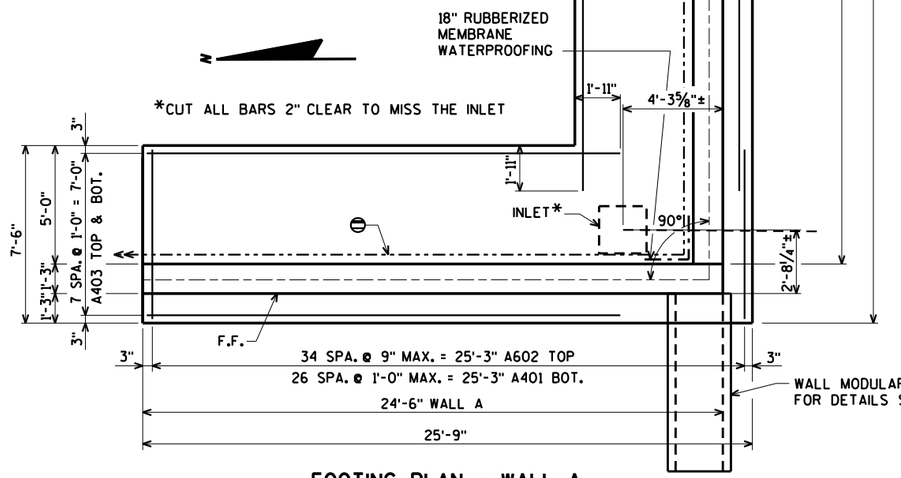

FOOTING PLAN - WALL A

- CONST. JOINT - STRIKE OFF AS SHOWN AND LEAVE ROUGH.
- VERTICAL RUSTICATION GROOVES. FOR DETAIL SEE SHEET 3.
- PIPE UNDERDRAIN WRAPPED 6-INCH. SLOPE 0.5% MIN. TO SUITABLE DRAINAGE. ATTACH RODENT SHIELD AT ENDS OF PIPE UNDERDRAIN. SEE DETAIL ON SHEET 3.
- CONST. JOINT FORMED BY SURFACED BEVELED 2" x 6".

NO.	DATE	REVISION	BY

STATE OF WISCONSIN
DEPARTMENT OF TRANSPORTATION

STRUCTURE R-30-71

DRAWN BY CLP | PLANS CK'D. JLB

WALL A DETAILS

SHEET 4 OF 12
846

ORIGINAL PLANS PREPARED BY
AYRES
3433 Oakwood Hills Parkway
Eau Claire, WI 54701
www.AyresAssociates.com

8

8

7/27/2021
PENTABLE:BRdet_shd_util.tbl

I:±42±76-0103.00 - Kenosha Co. STH 50 Retaining Wall±Structure±FINAL±R-30-71±R-30-71 walls.dgn

STATE PROJECT NUMBER

1310-04-70

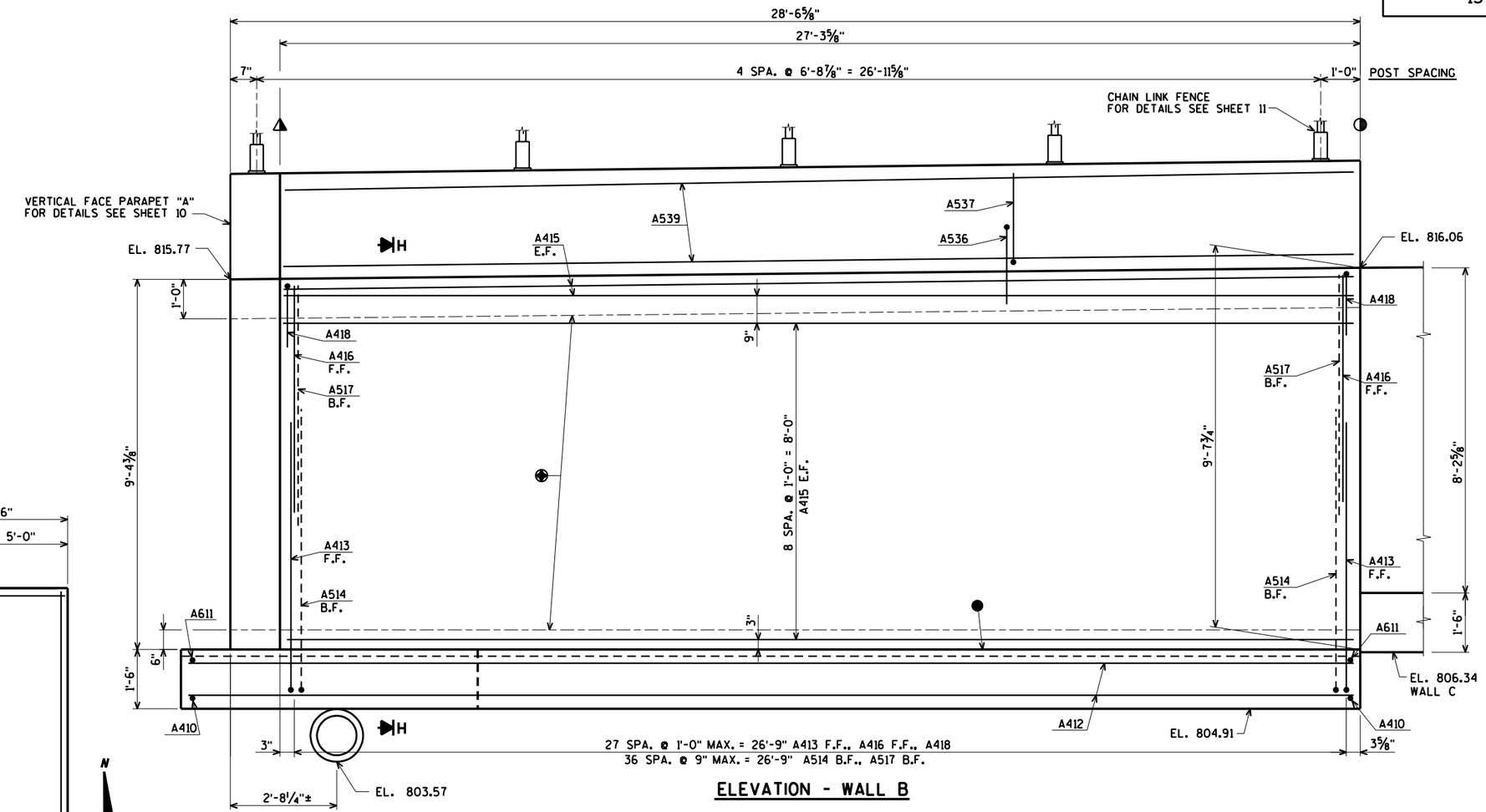

ELEVATION - WALL B

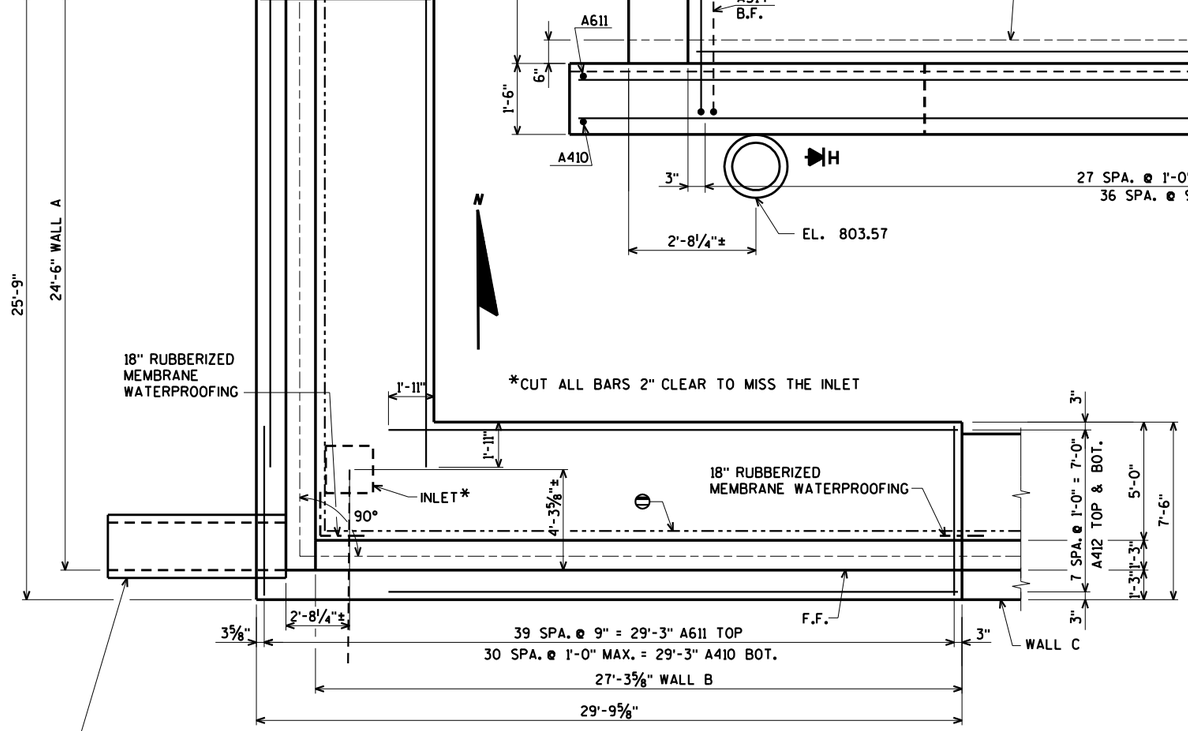

WALL MODULAR BLOCK GRAVITY R-30-71.
FOR DETAILS SEE SHEET 2

FOOTING PLAN - WALL B

FOR DETAIL OF SECTION H SEE SHEET 8.

VERTICAL RUSTICATION GROOVES.
FOR DETAIL SEE SHEET 3.

PIPE UNDERDRAIN WRAPPED 6-INCH. SLOPE 0.5% MIN. TO SUITABLE DRAINAGE. ATTACH RODENT SHIELD AT ENDS OF PIPE UNDERDRAIN. SEE DETAIL ON SHEET 3.

CONST. JOINT FORMED BY SURFACED BEVELED 2" x 6".

DENOTES VERTICAL CONTRACTION JOINT. SEE DETAIL ON SHEET 9.

DENOTES VERTICAL EXPANSION JOINT. SEE DETAIL ON SHEET 9.

NO.	DATE	REVISION	BY

STATE OF WISCONSIN
DEPARTMENT OF TRANSPORTATION

STRUCTURE R-30-71

DRAWN BY CLP | PLANS CK'D. JLB

WALL B
DETAILS

SHEET 5 OF 12
847

ORIGINAL PLANS PREPARED BY
AYRES
3433 Oakwood Hills Parkway
Eau Claire, WI 54701
www.AyresAssociates.com

8

8

7/27/2021
PENTABLE:tBreau_shd_util.tbl

I:±42±76-0103.00 - Kenosha Co. STH 50 Retaining Wall±Structure±FINAL±R-30-71±R-30-71 walls.dgn

STATE PROJECT NUMBER
1310-04-70

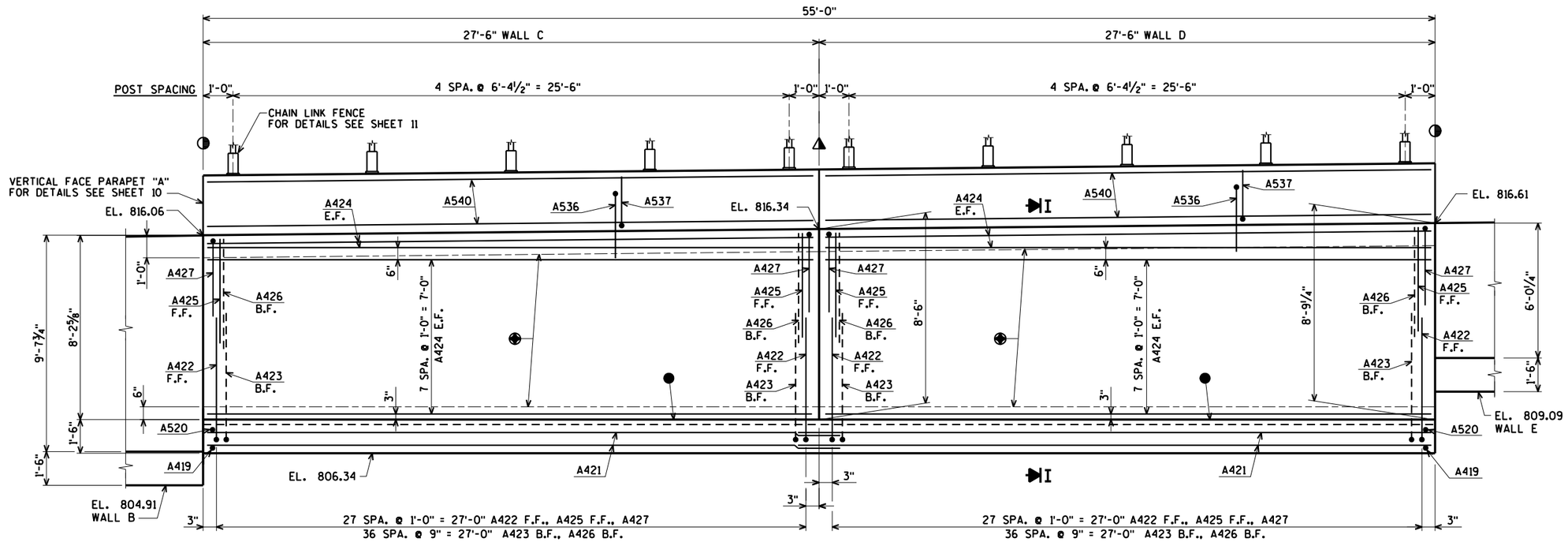

ELEVATION - WALLS C & D

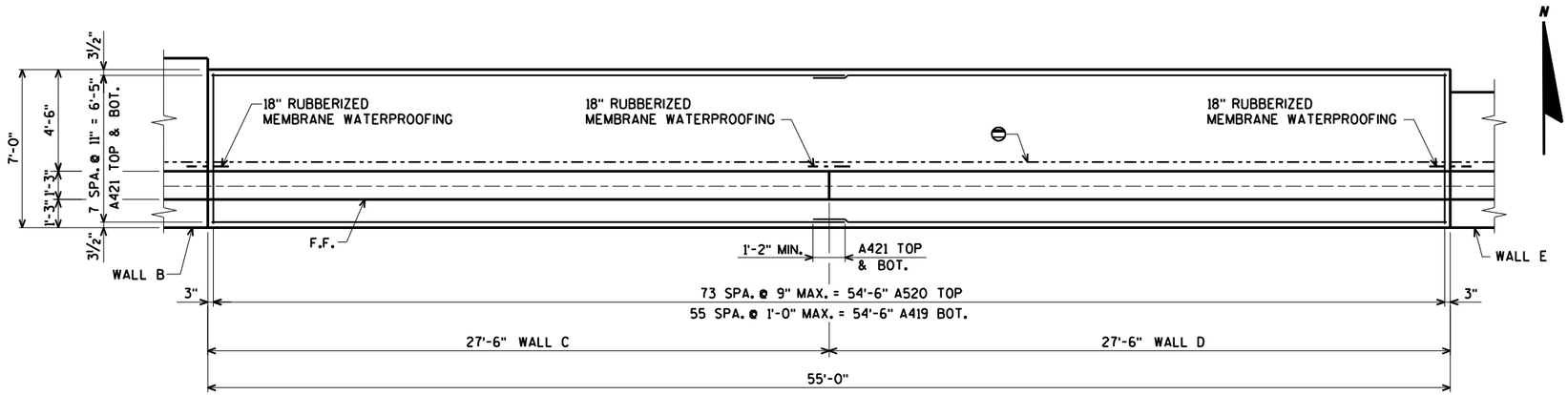

FOOTING PLAN - WALLS C & D

FOR DETAIL OF SECTION I SEE SHEET 8.

- VERTICAL RUSTICATION GROOVES. FOR DETAIL SEE SHEET 3.
- PIPE UNDERDRAIN WRAPPED 6-INCH. SLOPE 0.5% MIN. TO SUITABLE DRAINAGE. ATTACH RODENT SHIELD AT ENDS OF PIPE UNDERDRAIN. SEE DETAIL ON SHEET 3.
- CONST. JOINT FORMED BY SURFACED BEVELED 2" x 6".
- DENOTES VERTICAL CONTRACTION JOINT. SEE DETAIL ON SHEET 9.
- DENOTES VERTICAL EXPANSION JOINT. SEE DETAIL ON SHEET 9.

NO.	DATE	REVISION	BY

STATE OF WISCONSIN
DEPARTMENT OF TRANSPORTATION

STRUCTURE R-30-71

DRAWN BY CLP | PLANS CK'D. JLB

WALLS C & D DETAILS

SHEET 6 OF 12
848

ORIGINAL PLANS PREPARED BY
AYRES
3433 Oakwood Hills Parkway
Eau Claire, WI 54701
www.AyresAssociates.com

8

8

7/27/2021
PENTABLE:BRea_shd_util.tbl

I:±42±76-0103.00 - Kenosha Co. STH 50 Retaining Wall±Structure±FINAL±R-30-71±R-30-71 walls.dgn

STATE PROJECT NUMBER

1310-04-70

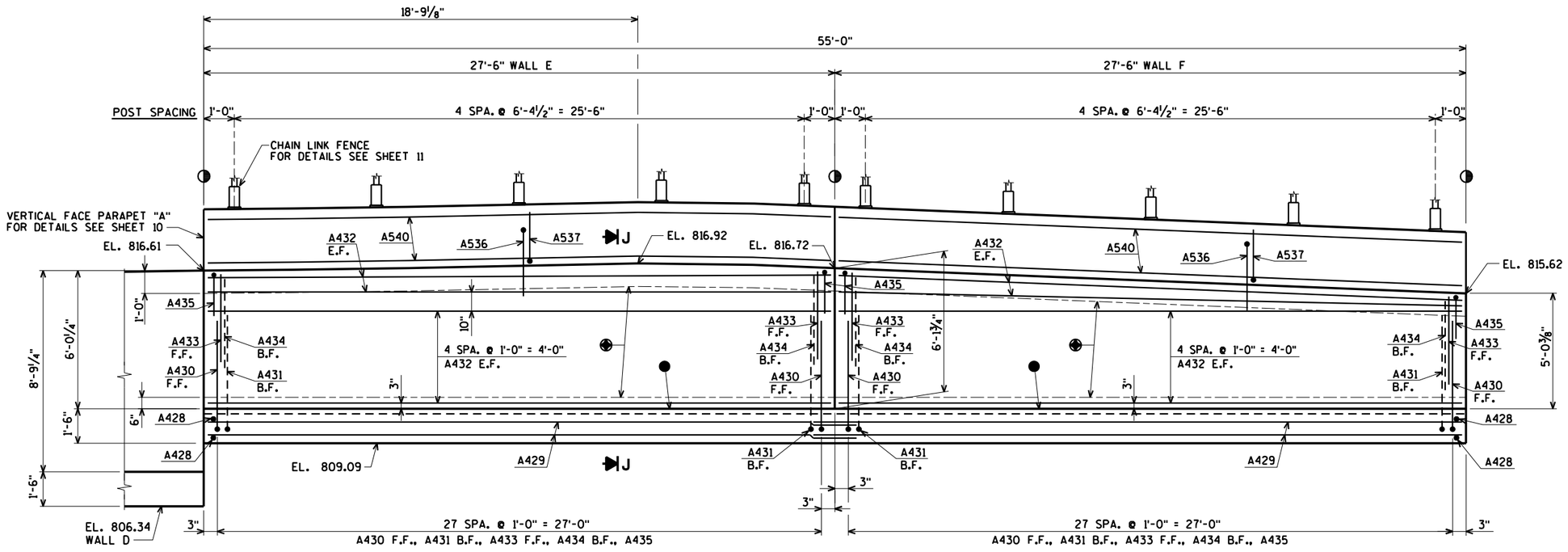

ELEVATION - WALLS E & F

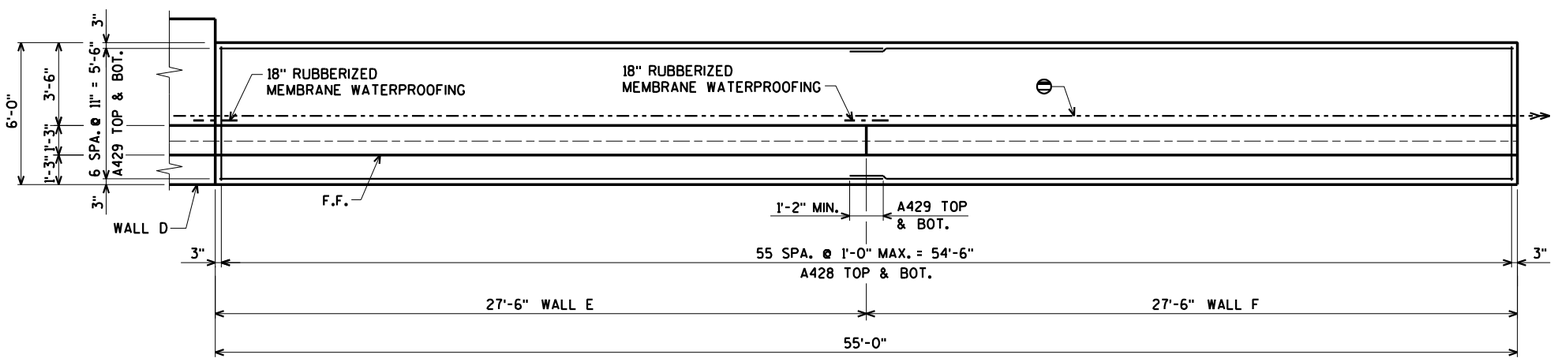

FOOTING PLAN - WALLS E & F

N

FOR DETAIL OF SECTION J SEE SHEET 8.

◈ VERTICAL RUSTICATION GROOVES. FOR DETAIL SEE SHEET 3.

⊖ PIPE UNDERDRAIN WRAPPED 6-INCH. SLOPE 0.5% MIN. TO SUITABLE DRAINAGE. ATTACH RODENT SHIELD AT ENDS OF PIPE UNDERDRAIN. SEE DETAIL ON SHEET 3.

● CONST. JOINT FORMED BY SURFACED BEVELED 2" x 6".

◑ DENOTES VERTICAL CONTRACTION JOINT. SEE DETAIL ON SHEET 9.

8

8

NO.	DATE	REVISION	BY

STATE OF WISCONSIN
DEPARTMENT OF TRANSPORTATION

STRUCTURE R-30-71

DRAWN BY CLP | PLANS CK'D. JLB

WALLS E & F DETAILS

SHEET 7 OF 12
849

ORIGINAL PLANS PREPARED BY
AYRES
3433 Oakwood Hills Parkway
Eau Claire, WI 54701
www.AyresAssociates.com

7/27/2021
PENTABLE:BReau_shd_util.tbl

I:±42±76-0103.00 - Kenosha Co. STH 50 Retaining Wall±Structure±FINAL±R-30-71±R-30-71 walls.dgn

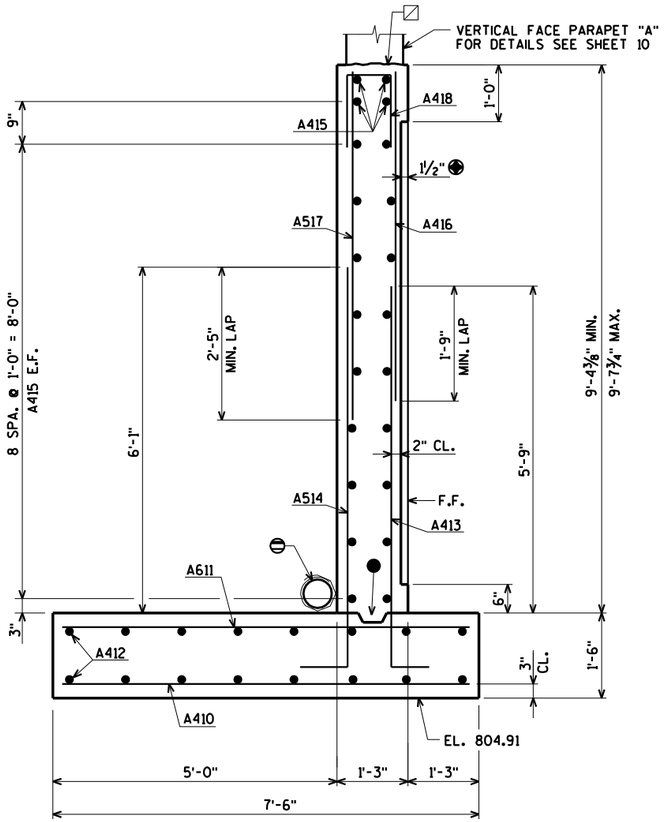

SECTION H

FOR LOCATION OF SECTION H SEE SHEET 5

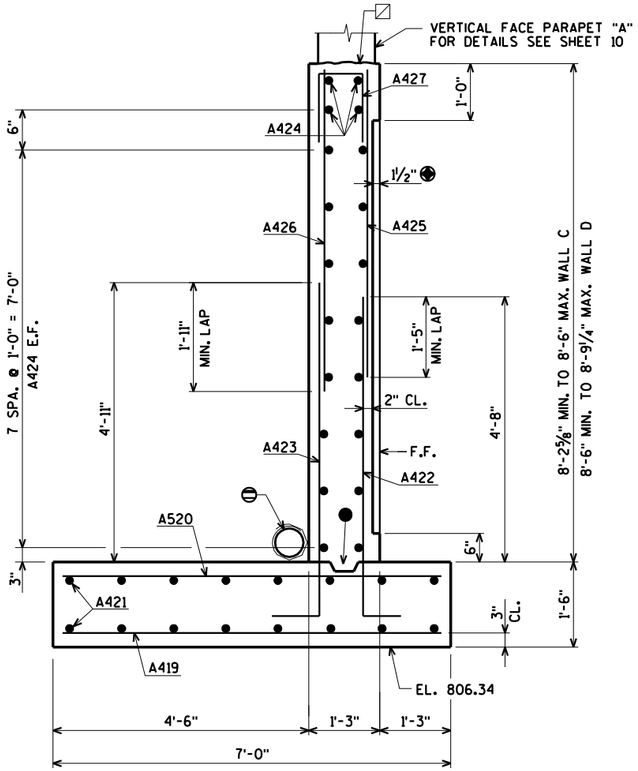

SECTION I

FOR LOCATION OF SECTION I SEE SHEET 6

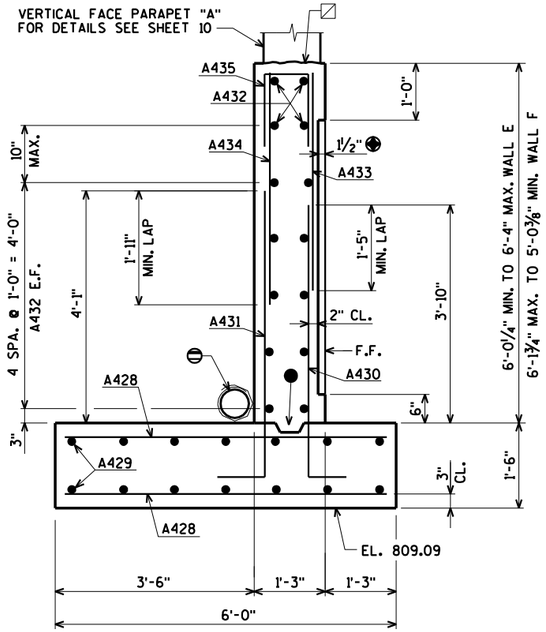

SECTION J

FOR LOCATION OF SECTION J SEE SHEET 7

☒ CONST. JOINT - STRIKE OFF AS SHOWN AND LEAVE ROUGH.

◈ VERTICAL RUSTICATION GROOVES. FOR DETAIL SEE SHEET 3.

⊖ PIPE UNDERDRAIN WRAPPED 6-INCH. SLOPE 0.5% MIN. TO SUITABLE DRAINAGE. ATTACH RODENT SHIELD AT ENDS OF PIPE UNDERDRAIN. SEE DETAIL ON SHEET 3.

● CONST. JOINT FORMED BY SURFACED BEVELED 2" x 6".

NO.	DATE	REVISION	BY

STATE OF WISCONSIN
DEPARTMENT OF TRANSPORTATION

STRUCTURE R-30-71

DRAWN BY CLP | PLANS CK'D. JLB

WALL DETAILS

SHEET 8 OF 12
850

ORIGINAL PLANS PREPARED BY
AYRES
3433 Oakwood Hills Parkway
Eau Claire, WI 54701
www.AyresAssociates.com

8

8

7/27/2021
PENTABLE:BBReau_shd_util.tbl

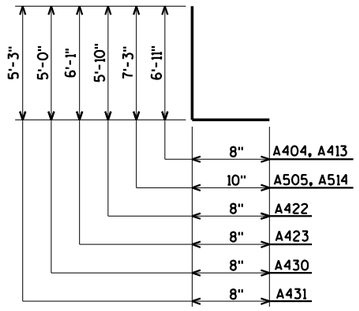

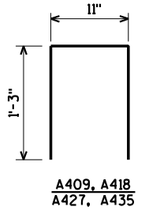

A409, A418
A427, A435

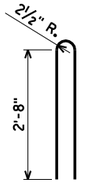

A536

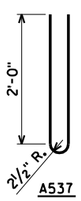

A537

BILL OF BARS

BAR NO.	COATED BAR	NO. REQ'D.	LENGTH	BENT BAR	BUNDLED BAR SERIES	9,240# COATED 3,860# UNCOATED LOCATION
A401		27	7-2			WALL FOOTING BOT. WALL A
A602		35	7-2			WALL FOOTING TOP WALL A
A403		16	20-0			WALL FOOTING TOP & BOT. WALL A
A404	X	25	7-6	X		WALL DOWELS F.F. WALL A
A505	X	33	8-0	X		WALL DOWELS B.F. WALL A
A406	X	20	24-2			WALL HORIZ. E.F. WALL A
A407	X	25	5-9			WALL VERT. F.F. WALL A
A508	X	33	6-1			WALL VERT. B.F. WALL A
A409	X	25	3-3	X		WALL VERT. TOP WALL A
A410		31	7-2			WALL FOOTING BOT. WALL B
A611		40	7-2			WALL FOOTING TOP WALL B
A412		16	24-1			WALL FOOTING TOP & BOT. WALL B
A413	X	28	7-6	X		WALL DOWELS F.F. WALL B
A514	X	37	8-0	X		WALL DOWELS B.F. WALL B
A415	X	22	26-11			WALL HORIZ. E.F. WALL B
A416	X	28	5-7			WALL VERT. F.F. WALL B
A517	X	37	5-11			WALL VERT. B.F. WALL B
A418	X	28	3-3	X		WALL VERT. TOP WALL B
A419		56	6-8			WALL FOOTING BOT. WALL C & D
A520		74	6-8			WALL FOOTING TOP WALL C & D
A421		32	27-11			WALL FOOTING TOP & BOT. WALL C & D
A422	X	56	6-5	X		WALL DOWELS F.F. WALL C & D
A423	X	74	6-8	X		WALL DOWELS B.F. WALL C & D
A424	X	40	27-2			WALL HORIZ. E.F. WALL C & D
A425	X	56	5-5			WALL VERT. F.F. WALL C & D
A426	X	74	5-8			WALL VERT. B.F. WALL C & D
A427	X	56	3-3	X		WALL VERT. TOP WALL C & D
A428		112	5-8			WALL FOOTING TOP & BOT. WALL E & F
A429		28	27-11			WALL FOOTING TOP & BOT. WALL E & F
A430	X	56	5-7	X		WALL DOWELS F.F. WALL E & F
A431	X	56	5-10	X		WALL DOWELS B.F. WALL E & F
A432	X	28	27-2			WALL HORIZ. E.F. WALL E & F
A433	X	56	3-8			WALL VERT. F.F. WALL E & F
A434	X	56	3-5			WALL VERT. B.F. WALL E & F
A435	X	56	3-3	X		WALL VERT. TOP WALL E & F
A536	X	200	6-1	X		WALL PARAPET VERT.
A537	X	200	4-9	X		WALL PARAPET VERT.
A538	X	8	24-2	X		WALL PARAPET HORIZ. WALL A
A539	X	8	26-11	X		WALL PARAPET HORIZ. WALL B
A540	X	32	27-2	X		WALL PARAPET HORIZ. WALL C, D, E & F

BENDING DIMENSIONS ARE OUT TO OUT OF BARS.

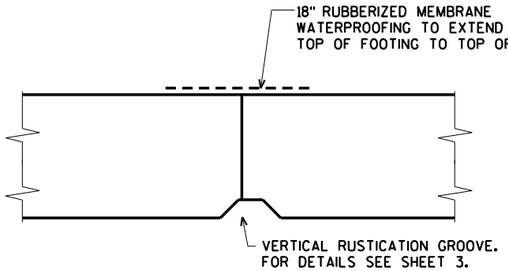

VERTICAL CONTRACTION JOINT DETAIL

DO NOT RUN ANY BAR STEEL THRU JOINT

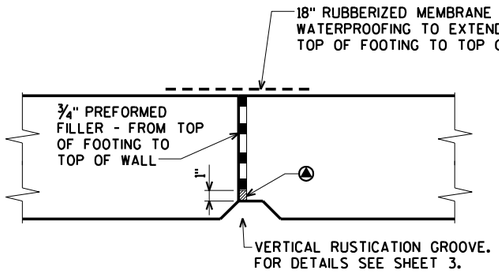

VERTICAL EXPANSION JOINT DETAIL

DO NOT RUN ANY BAR STEEL THRU JOINT

(A) FILL WITH NON-STAINING GRAY SINGLE COMPONENT NON-BITUMINOUS JOINT SEALER. FROM 1'-0" BELOW GROUND LINE TO TOP OF WALL.

NO.	DATE	REVISION	BY

STATE OF WISCONSIN
DEPARTMENT OF TRANSPORTATION

STRUCTURE R-30-71

DRAWN BY CLP | PLANS CK'D. JLB

WALL DETAILS & BILL OF BARS

SHEET 9 OF 12
851

ORIGINAL PLANS PREPARED BY
AYRES
3433 Oakwood Hills Parkway
Eau Claire, WI 54701
www.AyresAssociates.com

7/27/2021
PENTABLE:\Beau_shd_util.tbl

STATE PROJECT NUMBER
1310-04-70

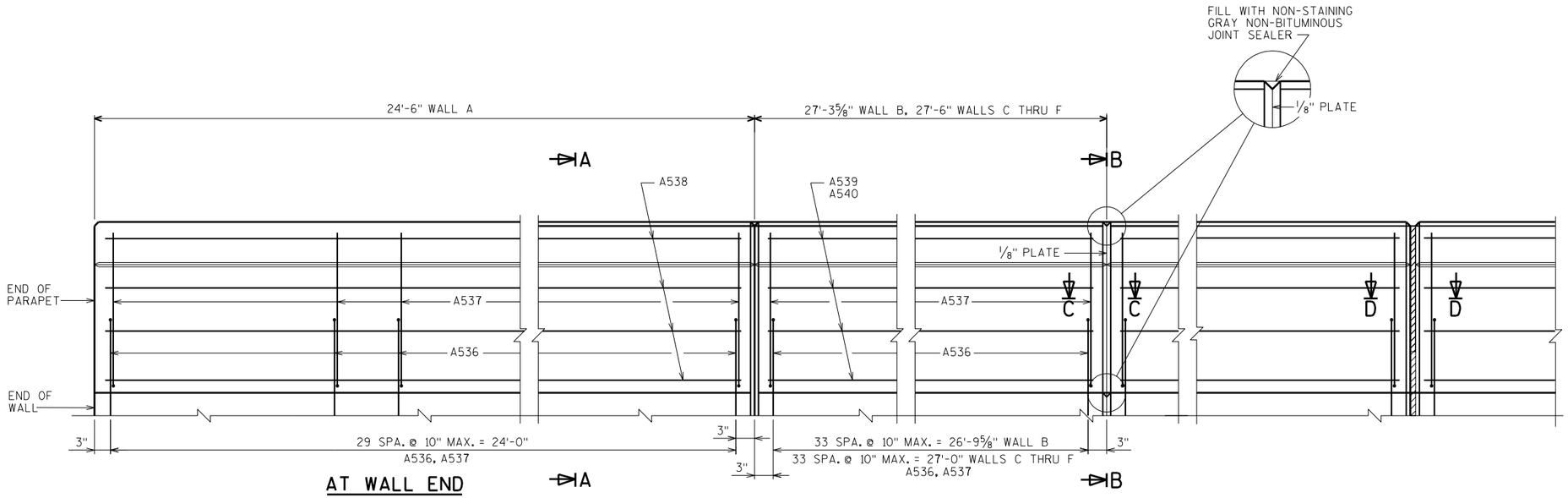

ELEVATION OF PARAPET

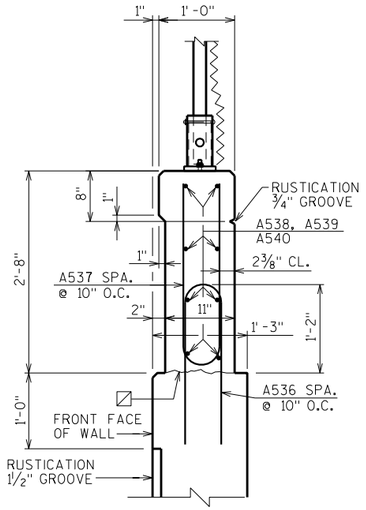

SECTION A-A

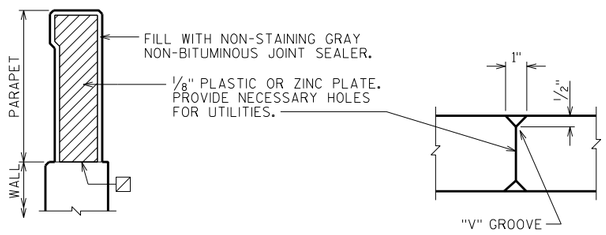

SECTION B-B

(SHOWING CONTRACTION JOINT IN PARAPET)

SECTION C-C

WHEN PARAPETS ARE POURED CONTINUOUSLY FROM END TO END, THEY SHALL BE SEPARATED AT THE DEFLECTION JOINTS BY A PIECE OF ⅛" ZINC OR PLASTIC PLATE CUT AS SHOWN IN SECTION B-B BY SHADED AREA. IF CONSTRUCTION JOINTS IN PARAPETS ARE USED AT THE DEFLECTION JOINTS, ONE SIDE OF JOINT SHALL BE COATED WITH AN APPROVED LIQUID BOND BREAKER AND PLATE SEPARATORS MAY BE OMITTED.

▨ CONST. JOINT - STRIKE OFF AS SHOWN AND LEAVE ROUGH.

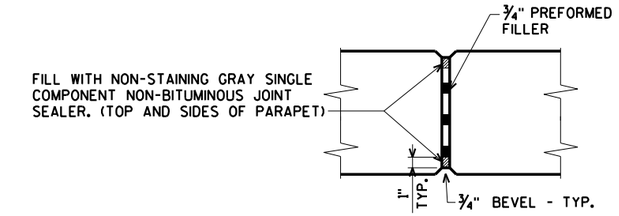

SECTION D-D

(SHOWING EXPANSION JOINT IN PARAPET)

NO.	DATE	REVISION	BY

STATE OF WISCONSIN
DEPARTMENT OF TRANSPORTATION

STRUCTURE R-30-71

DRAWN BY CLP | PLANS CK'D. JLB

VERTICAL FACE PARAPET "A"

SHEET 10 OF 12
852

ORIGINAL PLANS PREPARED BY
AYRES 3433 Oakwood Hills Parkway Eau Claire, WI 54701 www.AyresAssociates.com

8

8

7/26/2021
PENTABLE:BReau_shd_utl.tbl

I:±42±76-0103.00 - Kenosha Co. STH 50 Retaining Wall±Structure±FINAL±R-30-71±R-30-71para.dgn

STATE PROJECT NUMBER

1310-04-70

FENCE MEMBER SIZE & WEIGHT

STEEL FENCE MEMBER	OUTSIDE DIAMETER (INCHES)	WEIGHT (LB/FT)
RAILS	1.660	2.27
END POST	2.875	5.80
OVERHANG POST	2.875	5.80
LINE POST	2.375	3.65
POST SLEEVE	4.000	9.12

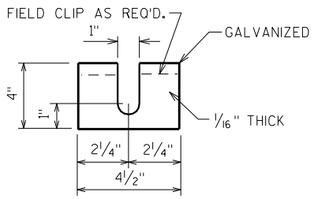

POST SHIM DETAILS

SHIMS REQUIRED ONLY WHEN END POSTS AND LINE POSTS ARE WELDED TO BASE PLATES. PROVIDE 4 SHIMS PER POST. USE WHERE REQUIRED FOR ALIGNMENT.

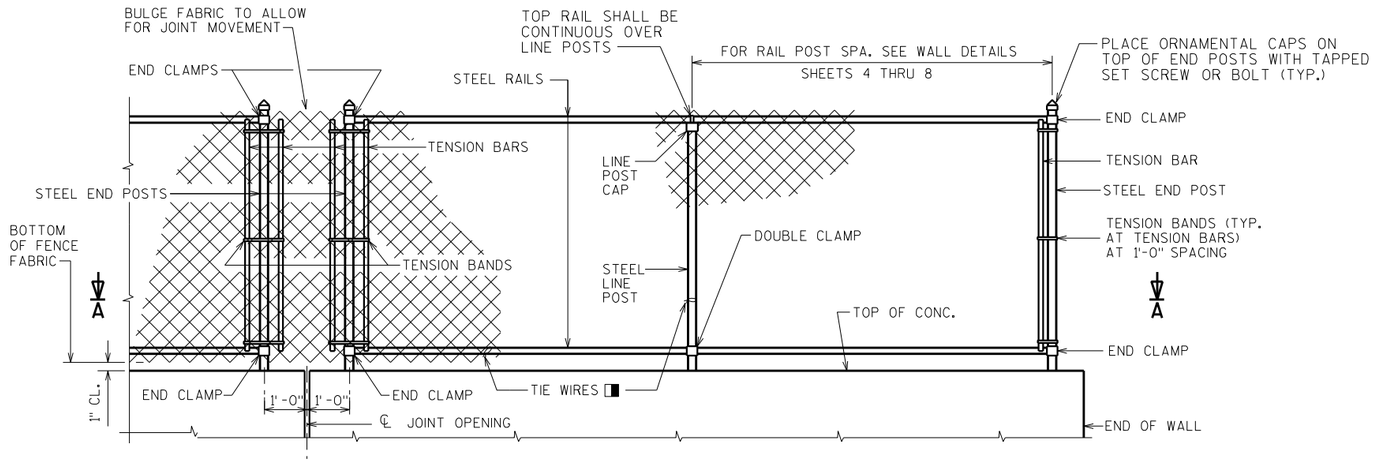

FENCE PART ELEVATION

VIEWING FABRIC SIDE

NOTES

POSTS ARE TO BE SET VERTICAL.

ALL FENCE COMPONENTS SHALL BE GALVANIZED STEEL, EXCEPT THE FENCE FABRIC WHICH MAY BE ALUMINUM-COATED STEEL OR GALVANIZED STEEL.

FABRIC SHALL CONFORM TO ASTM A491 OR A392, CLASS 2. STEEL RAILS, POSTS AND POST SLEEVES SHALL CONFORM TO ASTM F1083, STANDARD WEIGHT PIPE (SCHEDULE 40). FITTINGS SHALL CONFORM TO ASTM F626.

THE BID ITEM SHALL BE "FENCE CHAIN LINK 4- FT."

COMPLETE ANY REQUIRED WELDING OF COMPONENTS BEFORE GALVANIZING.

POST BASE PLATES SHALL BE FLAT WITH ALL SURFACES SMOOTH AND FREE FROM WARP AND ALL EDGES SMOOTH, STRAIGHT AND VERTICAL. ALL PLATE CUTS SHALL BE MACHINE OR MACHINE FLAME CUT.

BASE PLATES, ANCHOR PLATES AND SHIMS SHALL BE ASTM A709, GRADE 36.

ALL POST SPACINGS ARE MEASURED HORIZONTALLY ALONG THE C/L OF THE POST.

◪ CAULK AROUND PERIMETER OF BASE PLATE AND FILL PORTION OF SLOTTED HOLE AROUND ANCHOR BOLT IN SHIM WITH NON-STAINING GRAY NON-BITUMINOUS JOINT SEALER.

✳ ALTERNATE TO DOUBLE CLAMP: USE LINE RAIL CLAMP (BOULEVARD) OR 180° BRACE BAND, WHICH MAY BE USED WHEN THE POSTS ARE EITHER BOLTED TO THE POST SLEEVES OR DIRECTLY WELDED TO THE BASE PLATE.

◭ ANCHOR BOLTS, NUTS AND WASHERS SHALL BE EITHER STAINLESS STEEL OR ASTM 307. IF 307 IS USED, ANCHOR BOLTS, NUTS AND WASHERS SHALL BE GALVANIZED. ✩

✩ ALTERNATIVE ANCHORAGE: CONCRETE ADHESIVE ANCHORS 1/2-INCH. EMBED 7" IN CONCRETE. ADHESIVE ANCHORS SHALL CONFORM TO SECTIONS 502.2.12 AND 502.3.14 OF THE STANDARD SPECIFICATIONS.

◨ ATTACH FABRIC TO RAILS, AND TO POSTS WITHOUT TENSION BANDS, WITH TIE WIRES (ROUND, 9-GAGE) SPACED AT 1'-0".

◹ BOLT RAIL TO RAIL END TO SECURE OVERHANG SECTION. ALTERNATE IS TO WELD RAIL DIRECTLY TO END POST.

MINIMUM LENGTH OF TOP RAIL BETWEEN SPLICES SHALL BE 20'-0". LOCATE SPLICES NEAR 1/4 POINT OF POST SPACING.

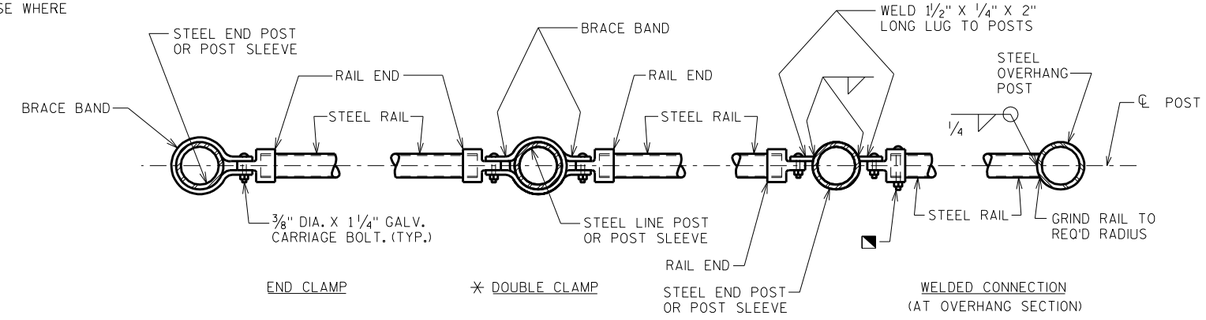

SECTION A-A

NOTE: PLACE ALL BOLT HEADS ON SIDE OF FENCE ADJACENT TO PEDESTRIANS

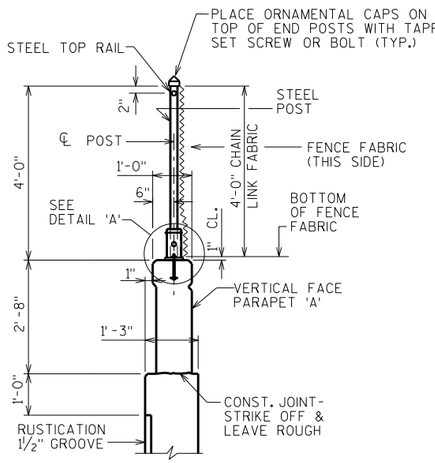

SECTION THRU FENCE

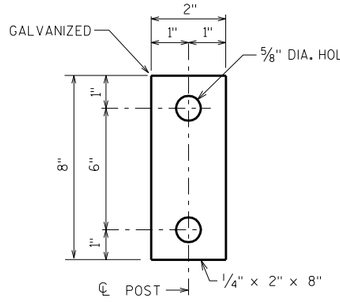

ANCHOR PLATE

✩NOTE: ANCHOR PLATE NOT REQUIRED WHEN ADHESIVE ANCHORS ARE USED.

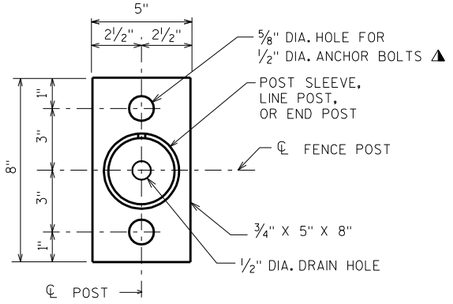

BASE PLATE

3/8" DIA. GALV. CARRIAGE BOLT WITH LOCKING NUT. (TO BE SUPPLIED WITH ASSEMBLY)

FILL SLEEVE AND BEVEL AWAY FROM POST WITH NON-SHRINK GROUT AFTER SETTING POST. (LEAVE NO VOIDS)

DRILL 3/16" DIA. DRAIN HOLE PARALLEL TO ROADWAY IMMEDIATELY ABOVE GROUT IN POST. SLEEVE LOCATIONS ONLY.

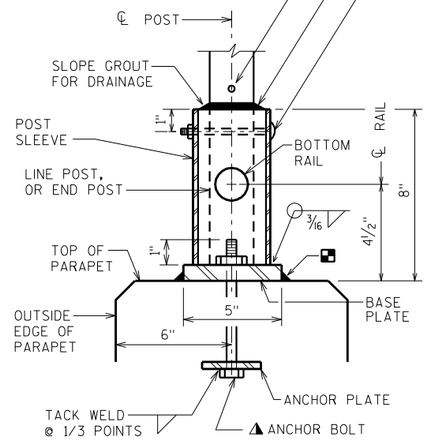

DETAIL 'A'

UNIT SHALL BE GALVANIZED AFTER FABRICATION

NOTE: IN LIEU OF USING THE POST SLEEVE, THE FENCE POST MAY BE WELDED TO THE BASE PLATE.

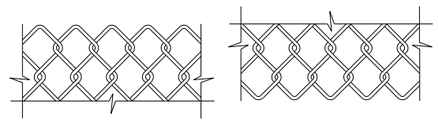

TOP DETAIL BOTTOM DETAIL

FENCE FABRIC

FENCE FABRIC WOVEN OF 9-GAGE WIRE IN 2" DIAMOND PATTERN MESH WITH BOTH THE TOP AND BOTTOM SELVAGES KNUCKLED.

NO.	DATE	REVISION	BY

STATE OF WISCONSIN
DEPARTMENT OF TRANSPORTATION

STRUCTURE R-30-71

DRAWN BY CLP | PLANS CK'D. JLB

CHAIN LINK FENCE DETAILS

SHEET 11 OF 12
853

ORIGINAL PLANS PREPARED BY
AYRES
3433 Oakwood Hills Parkway
Eau Claire, WI 54701
www.AyresAssociates.com

8

8

7/26/2021
PENTABLE:BReau_shd_util.tbl

I:±42±76-0103.00 - Kenosha Co. STH 50 Retaining Wall±Structure±FINAL±R-30-71±R-30-71 chainlnk.dgn

BORING #	DATE COMPLETED	NORTHING (Y)	EASTING (X)
2	OCTOBER 3, 2019	128260.55	552391.79
3	OCTOBER 2, 2019	128261.00	552489.79
BORINGS COMPLETED BY: WISDOT			
REPORT COMPLETED BY: WISDOT			
ALL COORDINATES REFERENCED TO WCCS NAD 83(91) KENOSHA COUNTY			

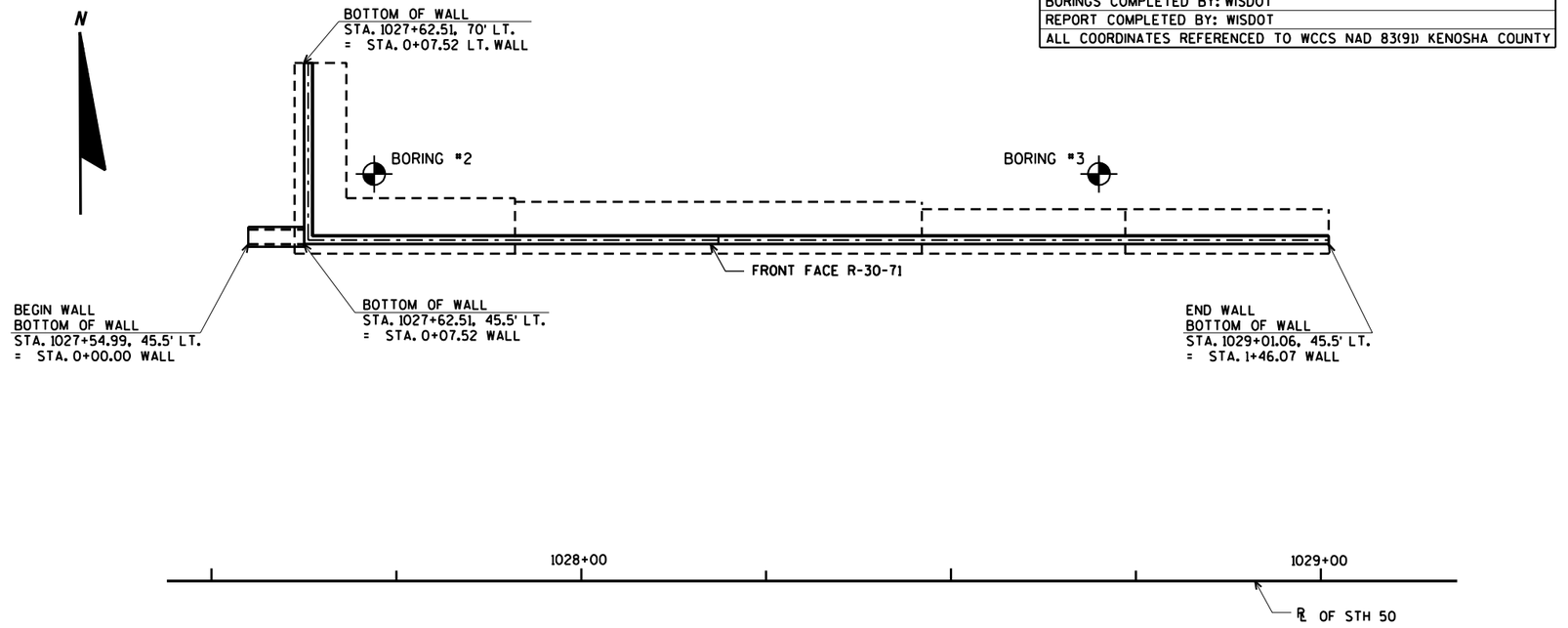

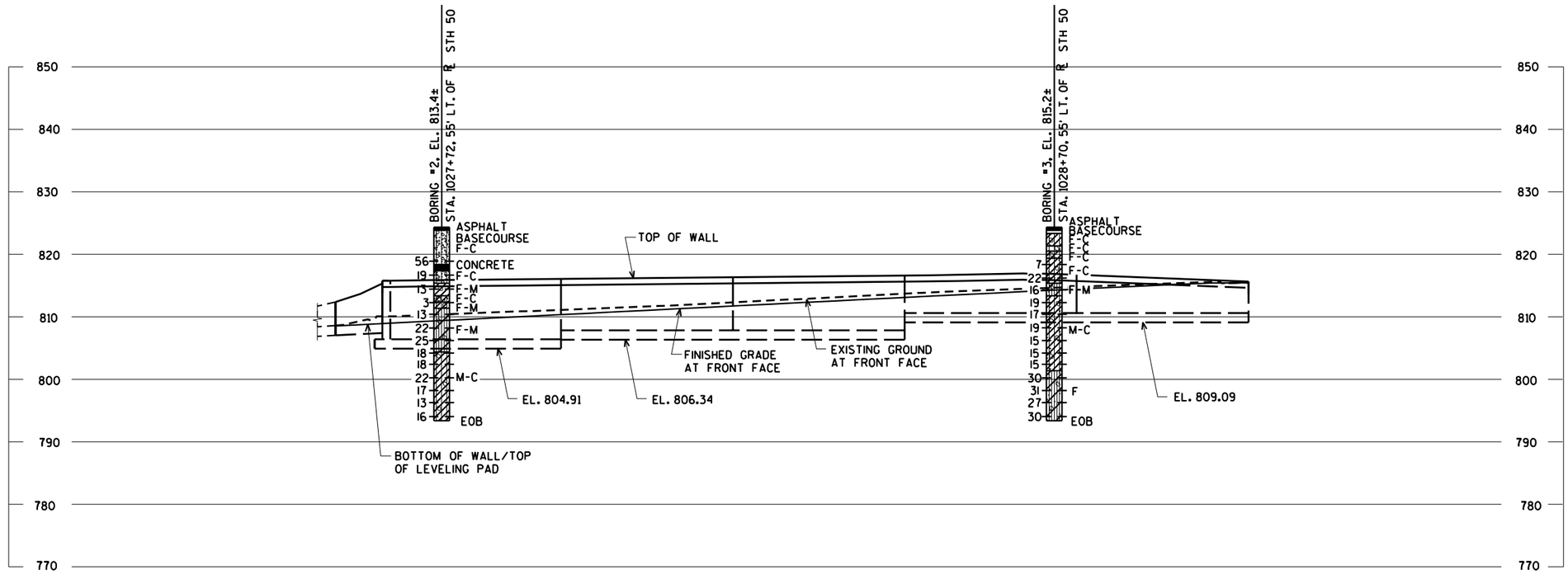

STATE PROJECT NUMBER

1310-04-70

MATERIAL SYMBOLS

ASPHALT	TOPSOIL	PEAT
CONCRETE	FILL	GRAVEL
SAND	CLAY	SILT
BOULDERS OR COBBLES	LIMESTONE	BEDROCK (UNKNOWN)
SHALE	SANDSTONE	IGNEOUS/ META

LEGEND OF BORING

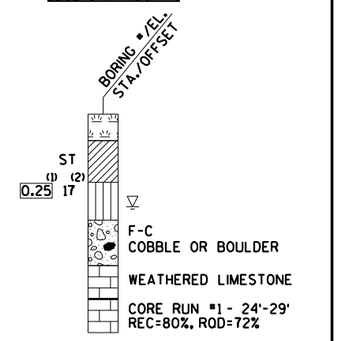

(1) UNCONFINED STRENGTH, AS DETERMINED BY A POCKET PENETROMETER (TSF)

(2) UNLESS OTHERWISE, SPECIFIED THE SPT 'N' VALUE IS BASED ON AASHTO T-206, STANDARD PENETRATION TEST. THE SPT 'N' VALUE PRESENTED HAS NOT BEEN CORRECTED FOR OVERBURDEN PRESSURE OR HAMMER EFFICIENCY.

GROUND WATER ELEVATION

- AT TIME OF DRILLING
- END OF DRILLING
- AFTER DRILLING

ABBREVIATIONS

F-FINE M-MEDIUM C-COARSE ST-SHELBY TUBE

SUBSURFACE EXPLORATION FOR FOUNDATION DESIGN AND BIDDERS INFORMATION

BORINGS WERE COMPLETED AT POINTS APPROXIMATELY AS INDICATED ON THIS DRAWING TO OBTAIN INFORMATION CONCERNING THE CHARACTER OF SUBSURFACE MATERIALS FOUND AT THE SITE. BECAUSE THE INVESTIGATED DEPTHS ARE LIMITED AND THE AREA OF THE BORINGS IS VERY SMALL IN RELATION TO THE ENTIRE SITE, THE WISCONSIN DEPARTMENT OF TRANSPORTATION DOES NOT WARRANT SIMILAR SUBSURFACE CONDITIONS BELOW, BETWEEN, OR BEYOND THESE BORINGS. VARIATIONS IN SOIL CONDITIONS SHOULD BE EXPECTED AND FLUCTUATIONS IN GROUNDWATER LEVELS MAY OCCUR.

NO.	DATE	REVISION	BY

STATE OF WISCONSIN
DEPARTMENT OF TRANSPORTATION

STRUCTURE R-30-71

DRAWN BY CLP | PLANS CK'D. JLB

SUBSURFACE EXPLORATION

SHEET 12 OF 12
854

8

8

7/26/2021
PENTABLE:BReau_shd_util.tbl

I:±42±76-0103.00 - Kenosha Co. STH 50 Retaining Wall±Structure±FINAL±R-30-71±R-30-71 soils.dgn

$PRFNAME$
I:±42±76-0103.00 - Kenosha Co. STH 50 Retaining Wall±Structure±FINAL±R-30-73±R-30-73 gp.dgn
DATE:
DRAWN BY:
DATE:
CHECKED BY:
DATE:
BACK CHECKED BY:
DATE:
CORRECTED BY:

STATE PROJECT NUMBER
1310-04-70

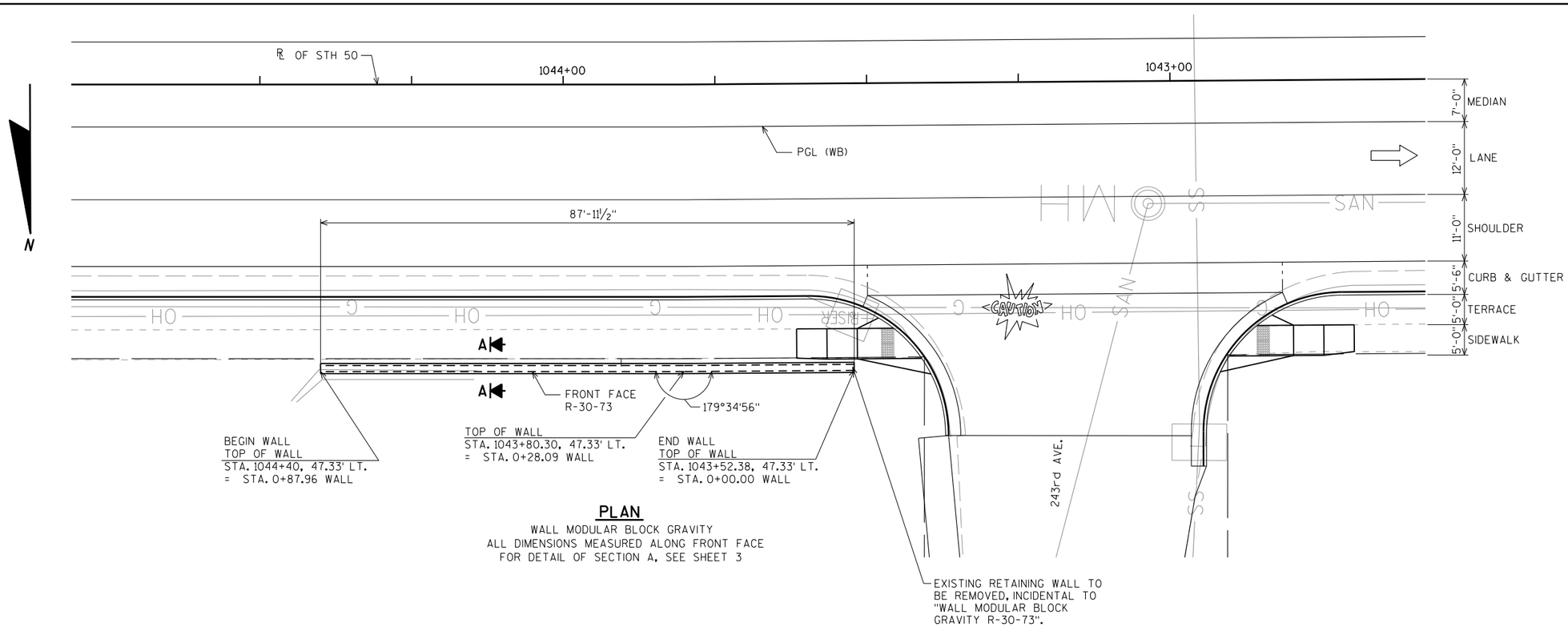

PLAN

WALL MODULAR BLOCK GRAVITY
ALL DIMENSIONS MEASURED ALONG FRONT FACE
FOR DETAIL OF SECTION A, SEE SHEET 3

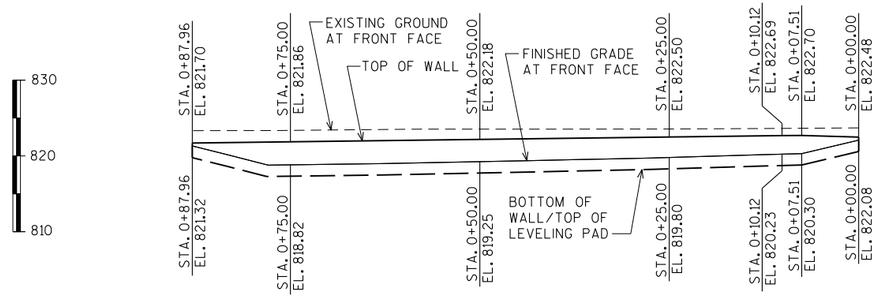

ELEVATION

(LOOKING AT FRONT FACE OF WALL)

LIST OF DRAWINGS

1. RETAINING WALL LAYOUT
2. RETAINING WALL DETAILS
3. RETAINING WALL DETAILS
4. CHAIN LINK FENCE DETAILS
5. SUBSURFACE EXPLORATION

FOR GENERAL NOTES AND DESIGN DATA SEE SHEET 2

GEOMETRY TABLE

WALL STATION	ROADWAY STATION	OFFSET TO F.F. WALL	TOP OF WALL EL.	FINISHED GRADE EL.
0+00.00	1043+52.38	47.33'	822.48	822.08
0+07.51	1043+59.89	47.33'	822.70	820.30
0+10.12	1043+62.50	47.33'	822.69	820.23
0+25.00	1043+77.04	47.33'	822.50	819.80
0+50.00	1044+02.04	47.33'	822.18	819.25
0+75.00	1044+27.04	47.33'	821.86	818.82
0+87.96	1044+40.00	47.33'	821.70	821.32

TOTAL ESTIMATED QUANTITIES

ITEM NUMBER	BID ITEMS	UNIT
612.0406	PIPE UNDERDRAIN WRAPPED 6-INCH	110 LF
616.0204	FENCE CHAIN LINK 4-FT.	87 LF
SPV.0165.03	WALL MODULAR BLOCK GRAVITY R-30-73	355 SF

WISCONSIN
ARLEN E. BEAUDETTE
E-36829
EAU CLAIRE
PROFESSIONAL ENGINEER
08/31/2021

BRIDGE OFFICE CONTACT:
AARON BONK
(608)-261-0261

CONSULTANT CONTACT:
ARLEN BEAUDETTE
(715)-834-3161

NO.	DATE	REVISION	BY

ORIGINAL PLANS PREPARED BY
AYRES
3433 Oakwood Hills Parkway
Eau Claire, WI 54701
www.AyresAssociates.com

STATE OF WISCONSIN
DEPARTMENT OF TRANSPORTATION

ACCEPTED _____ SDR 02/23/22
CHIEF STRUCTURES DESIGN ENGINEER — DATE

STRUCTURE R-30-73

RETAINING WALL ALONG STH 50

COUNTY	~~TOWN/CITY~~ VILLAGE
KENOSHA	PADDOCK LAKE

DESIGN SPEC.
AASHTO LRFD BRIDGE DESIGN SPECIFICATIONS

DESIGNED BY	KLW	DESIGN CK'D.	JLB	DRAWN BY	CLP	PLANS CK'D.	AEB

RETAINING WALL LAYOUT

SHEET 1 OF 5
855

I.D.
DATE:

8

STATE PROJECT NUMBER
1310-04-70

GENERAL NOTES

THE PLAN QUANTITY FOR THE BID ITEM "WALL MODULAR BLOCK GRAVITY" IS BASED ON A WALL HEIGHT MEASURED FROM THE TOP OF WALL TO A CONSTANT DEPTH OF 1'-6" BELOW FINISHED GRADE.

DRAWINGS SHALL NOT BE SCALED.

THE QUANTITY OF CONCRETE MASONRY, COATED REINFORCING STEEL, AND RUBBERIZED MEMBRANE WATERPROOFING FOR CAST-IN-PLACE COPING IS INCIDENTAL TO BID ITEM "WALL MODULAR BLOCK GRAVITY".

THE EXISTING RETAINING WALL IS A MASONRY BLOCK RETAINING WALL APPROXIMATELY 3-FEET TALL AND 88-FEET LONG. REMOVAL OF THE WALL IS INCIDENTAL TO "WALL MODULAR BLOCK GRAVITY R-30-73".

DESIGN DATA

THE CONTRACTOR SHALL PROVIDE COMPLETE DESIGN PLANS, DETAILS, SPECIFICATIONS AND SHOP DRAWINGS FOR THE RETAINING WALLS IN ACCORDANCE WITH THE SPECIAL PROVISIONS. THE RETAINING WALL MANUFACTURER SHALL PROVIDE TECHNICAL ASSISTANCE TO THE CONTRACTOR DURING CONSTRUCTION. THE COST OF FURNISHING THESE ITEMS SHALL BE INCLUDED IN THE BID ITEM "WALL MODULAR BLOCK GRAVITY".

PLANS, ELEVATIONS AND DETAILS SHOWN ON THESE DRAWINGS ARE INTENDED TO INDICATE WALL LOCATIONS, LENGTHS, HEIGHTS AND DETAILS COMMON TO ANY WALL SYSTEM SELECTED. THE CONTRACTOR SHALL VERIFY THAT THE WALL SYSTEM SELECTED WILL CONFORM TO THE REQUIRED ALIGNMENTS AND DETAILS.

BAR STEEL REINFORCEMENT SHALL BE EMBEDDED 2" CLEAR UNLESS SHOWN OR NOTED OTHERWISE.

THE RETAINIING WALL IS TO BE DESIGNED USING THE ELEVATIONS GIVEN ON SHEET 1.

DESIGN FOR RETAINING WALL TO PROVIDE FOR FINISHED GRADE SLOPED BEHIND WALL AND RAILING AS SHOWN.

DESIGN RETAINING WALL FOR A LIVE LOAD SURCHARGE OF 100 psf.

ULTIMATE DESIGN STRESSES:

CONCRETE MASONRY (COPING, ANCHOR SLAB, PARAPET) ——— f'_c = 3,500 p.s.i.
HIGH STRENGTH BAR STEEL REINFORCEMENT (GRADE 60) ——— f_y = 60,000 p.s.i.

NOTE

☆ COMPOUND STABILITY IS THE CONTRACTORS RESPONSIBILITY.

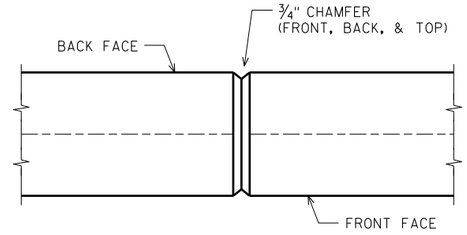

COPING CONTRACTION JOINT

DO NOT RUN BAR STEEL THRU JOINT
MAXIMUM SPACING OF JOINT = 12'

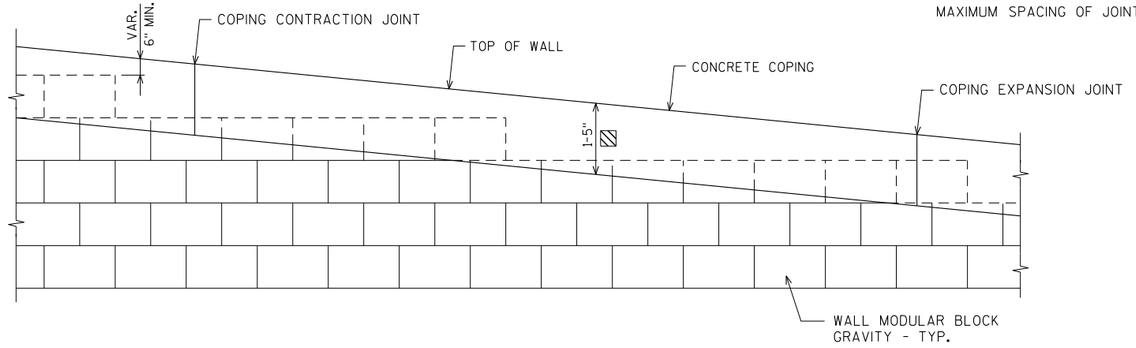

RETAINING WALL FACE & CONCRETE COPING DETAIL

▨ THIS DIMENSION MAY CHANGE DEPENDING ON HEIGHT OF BLOCKS. THIS DIMENSION TO BE CONSTANT FOR ENTIRE LENGTH OF WALL. MAXIMUM ALLOWABLE HEIGHT OF BLOCKS TO BE 9 INCHES.

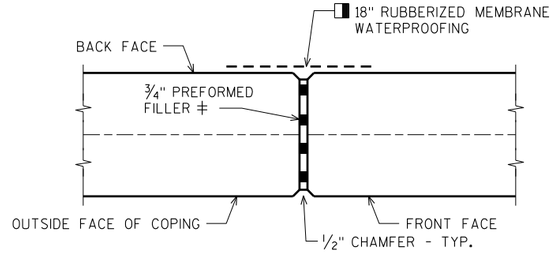

COPING EXPANSION JOINT

DO NOT RUN BAR STEEL THRU JOINT
MAXIMUM SPACING OF JOINT = 50'

◨ MEMBRANE WATERPROOFING TO EXTEND FROM TOP OF COPING TO 6" BELOW TOP OF PANELS.

‡ SEAL ALL EXPOSED HORIZ. & VERT. SURFACES OF FILLER WITH NON-STAINING GRAY NON-BITUMINOUS JOINT SEALER. (1" DEEP AND HOLD ⅛" BELOW SURFACE OF CONC.)

PLACE EXPANSION JOINTS AT EVERY THIRD JOINT AND AT ALL WALL RADIUS PC/PT POINTS AND BEND POINTS.

SOIL PARAMETERS

STRATUM LOCATIONS AND SOIL DESCRIPTIONS	TOTAL UNIT WEIGHT (PCF)	FRICTION ANGLE (DEGREES)	COHESION (PCF)
GRANULAR BACKFILL (REINFORCING ZONE OR BACKFILL)	130	30	0
RETAINED SOIL ⊛	130	30	0

⊛ DESIGN WALL FOR THESE VALUES

WALL EXTERNAL & OVERALL STABILITY EVALUATION

DIMENSIONS	EVALUATED LOCATIONS
WALL HEIGHT (FEET)	4.54
EXPOSED WALL HEIGHT (FEET)	3.04
WALL STATION 0+00.00 - 0+87.96	
BORING USED	#11
CAPACITY TO DEMAND RATIO (CDR)	
SLIDING (CDR>1.0)	
ECCENTRICITY (CDR>1.0)	
OVERALL STABILITY (CDR>1.0) ☆	
BEARING RESISTANCE (CDR>1.0)	
FACTORED BEARING RESISTANCE (psf)	1,500

NO.	DATE	REVISION	BY

STATE OF WISCONSIN
DEPARTMENT OF TRANSPORTATION

STRUCTURE R-30-73

DRAWN BY CLP | PLANS CK'D. JLB

RETAINING WALL DETAILS

SHEET 2 OF 5
856

ORIGINAL PLANS PREPARED BY
AYRES
3433 Oakwood Hills Parkway
Eau Claire, WI 54701
www.AyresAssociates.com

8

8

7/28/2021
PENTABLE:BReau_shd_utfl.tbl

I:±42±76-0103.00 - Kenosha Co. STH 50 Retaining Wall±Structure±FINAL±R-30-73±R-30-73 details.dgn

STATE PROJECT NUMBER

1310-04-70

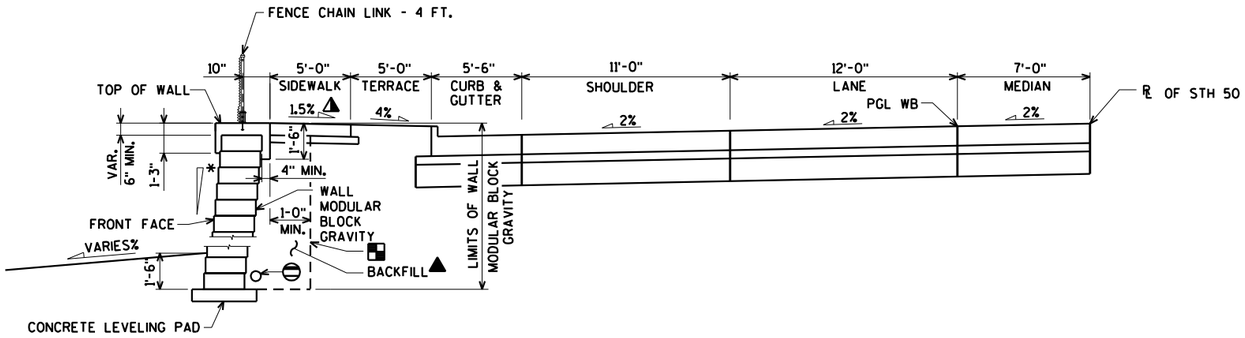

SECTION A-A

STA. 0+00.00 TO 0+87.96

* SET BLOCK VARIES BY MANUFACTURER, MAX. FRONT FACE FROM VERTICAL BLOCK IS 1 HORIZ. TO 12 VERT.

BACKFILL LIMITS. BACKFILL BEYOND BACKFILL LIMITS SHALL BE INCIDENTAL TO WALL MODULAR BLOCK GRAVITY. LIMITS OF EXCAVATION SHALL BE DETERMINED BY THE CONTRACTOR.

▲ INCIDENTAL TO BID ITEM "WALL MODULAR BLOCK GRAVITY".

PIPE UNDERDRAIN WRAPPED 6-INCH. SLOPE 0.5% MIN. TO SUITABLE DRAINAGE. ATTACH RODENT SHIELD AT ENDS OF PIPE UNDERDRAIN AS DETAILED ON THIS SHEET.

⚠ ±0.5% CONSTRUCTION TOLERANCE IN SIDEWALK CROSS SLOPE. THE SIDEWALK CROSS SLOPE SHALL NOT EXCEED 2% WITHOUT PRIOR APPROVAL FROM THE ENGINEER.

FOR LOCATION OF SECTION A, SEE SHEET 1

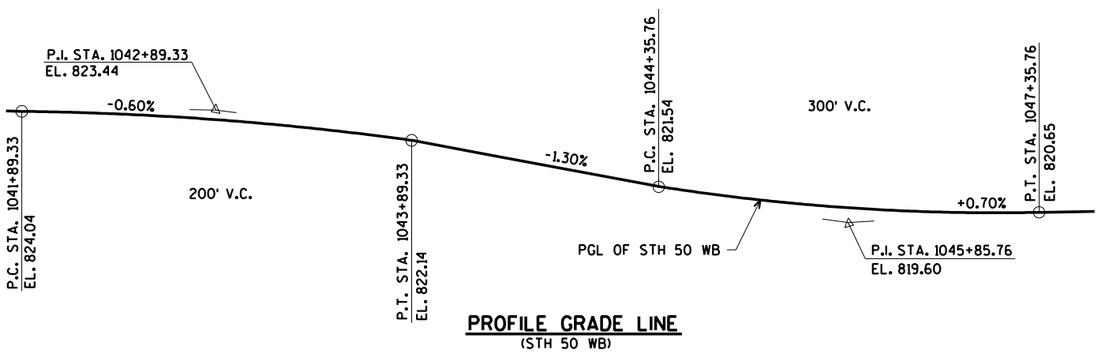

PROFILE GRADE LINE
(STH 50 WB)

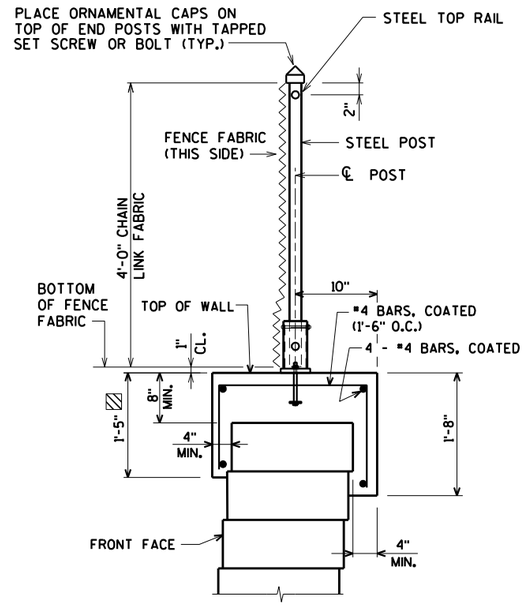

COPING DETAIL

▨ THIS DIMENSION MAY CHANGE DEPENDING ON HEIGHT OF BLOCKS. THIS DIMENSION TO BE CONSTANT FOR ENTIRE LENGTH OF WALL. MAXIMUM ALLOWABLE HEIGHT OF BLOCKS TO BE 9 INCHES.

MAINTAIN 2" MINIMUM COVER ON ALL REBAR.

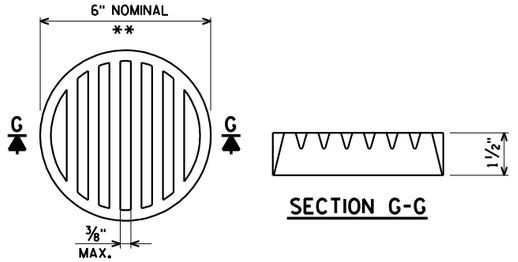

SECTION G-G

** DIMENSIONS ARE APPROXIMATE. THE GRATE IS SIZED TO FIT INTO A PIPE COUPLING. ORIENT SO SLOTS ARE VERTICAL.

THE RODENT SHIELD, PIPE COUPLING AND SCREWS SHALL BE CONSIDERED INCIDENTAL TO THE BID ITEM "PIPE UNDERDRAIN WRAPPED 6-INCH".

THE RODENT SHIELD SHALL BE A PVC GRATE SIMILAR TO THIS DETAIL. THE GRATE IS COMMERCIALLY AVAILABLE AS A FLOOR STRAINER. A PIPE COUPLING IS REQUIRED FOR THE ATTACHMENT OF THIS SHIELD TO THE EXPOSED END OF THE PIPE UNDERDRAIN. THE SHIELD SHALL BE FASTENED TO THE PIPE COUPLING WITH TWO OR MORE NO. 10 x 1-INCH STAINLESS STEEL SHEET METAL SCREWS.

RODENT SHIELD DETAIL

NO.	DATE	REVISION	BY

STATE OF WISCONSIN
DEPARTMENT OF TRANSPORTATION

STRUCTURE R-30-73

DRAWN BY CLP | PLANS CK'D. JLB

RETAINING WALL DETAILS

SHEET 3 OF 5
857

ORIGINAL PLANS PREPARED BY
AYRES
3433 Oakwood Hills Parkway
Eau Claire, WI 54701
www.AyresAssociates.com

8

8

7/27/2021
PENTABLE:BReau_shd_util.tbl

I:±42±76-0103.00 - Kenosha Co. STH 50 Retaining Wall±Structure±FINAL±R-30-73±R-30-73 details.dgn

STATE PROJECT NUMBER

1310-04-70

FENCE MEMBER SIZE & WEIGHT

STEEL FENCE MEMBER	OUTSIDE DIAMETER (INCHES)	WEIGHT (LB/FT)
RAILS	1.660	2.27
END POST	2.875	5.80
OVERHANG POST	2.875	5.80
LINE POST	2.375	3.65
POST SLEEVE	4.000	9.12

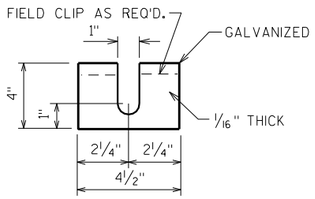

POST SHIM DETAILS

SHIMS REQUIRED ONLY WHEN END POSTS AND LINE POSTS ARE WELDED TO BASE PLATES. PROVIDE 4 SHIMS PER POST. USE WHERE REQUIRED FOR ALIGNMENT.

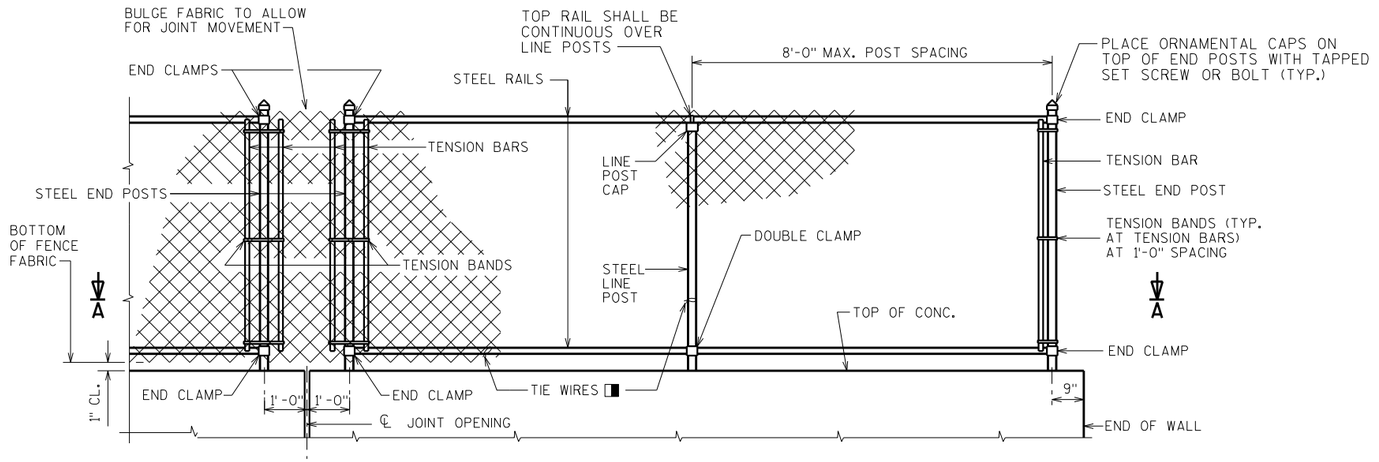

FENCE PART ELEVATION

VIEWING FABRIC SIDE

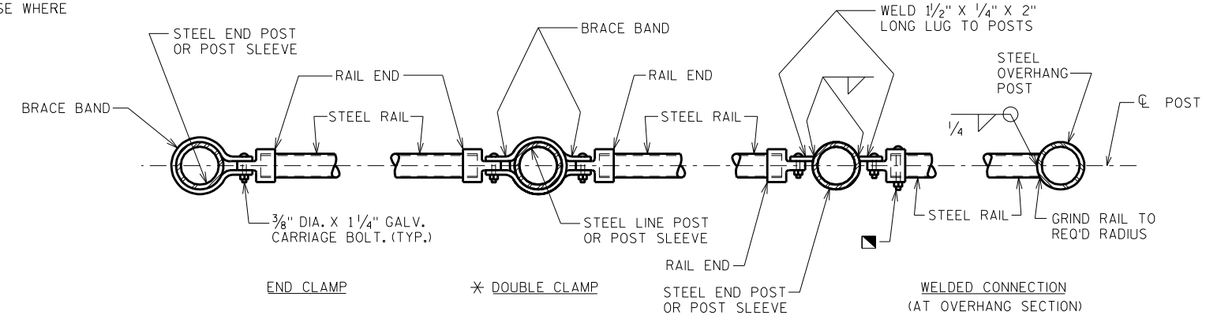

SECTION A-A

NOTE: PLACE ALL BOLT HEADS ON SIDE OF FENCE ADJACENT TO PEDESTRIANS

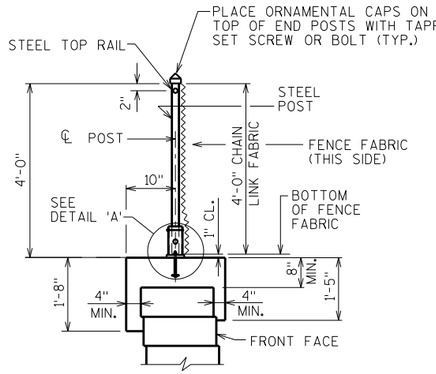

SECTION THRU FENCE

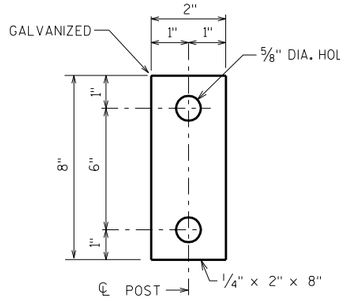

ANCHOR PLATE

✪NOTE: ANCHOR PLATE NOT REQUIRED WHEN ADHESIVE ANCHORS ARE USED.

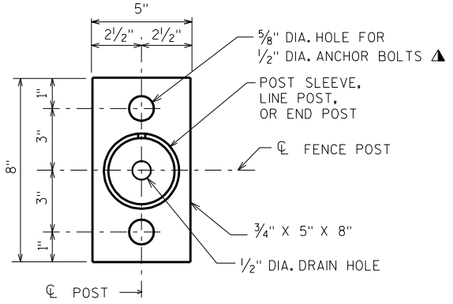

BASE PLATE

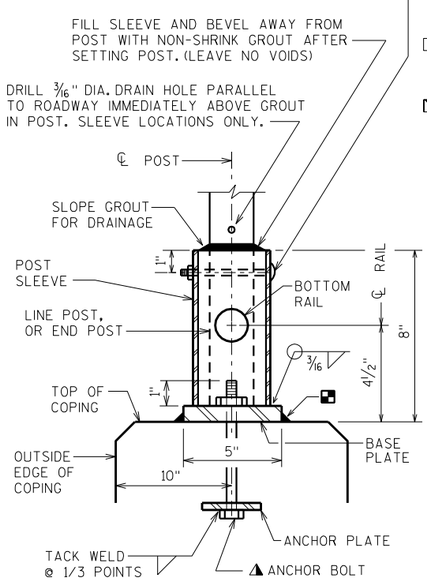

DETAIL 'A'

UNIT SHALL BE GALVANIZED AFTER FABRICATION

NOTE: IN LIEU OF USING THE POST SLEEVE, THE FENCE POST MAY BE WELDED TO THE BASE PLATE.

NOTES

POSTS ARE TO BE SET VERTICAL.

ALL FENCE COMPONENTS SHALL BE GALVANIZED STEEL, EXCEPT THE FENCE FABRIC WHICH MAY BE ALUMINUM-COATED STEEL OR GALVANIZED STEEL.

FABRIC SHALL CONFORM TO ASTM A491 OR A392, CLASS 2. STEEL RAILS, POSTS AND POST SLEEVES SHALL CONFORM TO ASTM F1083, STANDARD WEIGHT PIPE (SCHEDULE 40). FITTINGS SHALL CONFORM TO ASTM F626.

THE BID ITEM SHALL BE "FENCE CHAIN LINK 4- FT."

COMPLETE ANY REQUIRED WELDING OF COMPONENTS BEFORE GALVANIZING.

POST BASE PLATES SHALL BE FLAT WITH ALL SURFACES SMOOTH AND FREE FROM WARP AND ALL EDGES SMOOTH, STRAIGHT AND VERTICAL. ALL PLATE CUTS SHALL BE MACHINE OR MACHINE FLAME CUT.

BASE PLATES, ANCHOR PLATES AND SHIMS SHALL BE ASTM A709, GRADE 36.

ALL POST SPACINGS ARE MEASURED HORIZONTALLY ALONG THE C/L OF THE POST.

◪ CAULK AROUND PERIMETER OF BASE PLATE AND FILL PORTION OF SLOTTED HOLE AROUND ANCHOR BOLT IN SHIM WITH NON-STAINING GRAY NON-BITUMINOUS JOINT SEALER.

✳ ALTERNATE TO DOUBLE CLAMP: USE LINE RAIL CLAMP (BOULEVARD) OR 180° BRACE BAND, WHICH MAY BE USED WHEN THE POSTS ARE EITHER BOLTED TO THE POST SLEEVES OR DIRECTLY WELDED TO THE BASE PLATE.

◭ ANCHOR BOLTS, NUTS AND WASHERS SHALL BE EITHER STAINLESS STEEL OR ASTM 307. IF 307 IS USED, ANCHOR BOLTS, NUTS AND WASHERS SHALL BE GALVANIZED. ✪

✪ ALTERNATIVE ANCHORAGE: CONCRETE ADHESIVE ANCHORS 1/2-INCH. EMBED 7" IN CONCRETE. ADHESIVE ANCHORS SHALL CONFORM TO SECTIONS 502.2.12 AND 502.3.14 OF THE STANDARD SPECIFICATIONS.

◨ ATTACH FABRIC TO RAILS, AND TO POSTS WITHOUT TENSION BANDS, WITH TIE WIRES (ROUND, 9-GAGE) SPACED AT 1'-0".

◥ BOLT RAIL TO RAIL END TO SECURE OVERHANG SECTION. ALTERNATE IS TO WELD RAIL DIRECTLY TO END POST.

MINIMUM LENGTH OF TOP RAIL BETWEEN SPLICES SHALL BE 20'-0". LOCATE SPLICES NEAR 1/4 POINT OF POST SPACING.

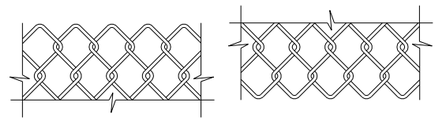

FENCE FABRIC

FENCE FABRIC WOVEN OF 9-GAGE WIRE IN 2" DIAMOND PATTERN MESH WITH BOTH THE TOP AND BOTTOM SELVAGES KNUCKLED.

NO.	DATE	REVISION	BY

STATE OF WISCONSIN
DEPARTMENT OF TRANSPORTATION

STRUCTURE R-30-73

DRAWN BY CLP | PLANS CK'D. JLB

CHAIN LINK FENCE DETAILS

SHEET 4 OF 5
858

ORIGINAL PLANS PREPARED BY
AYRES 3433 Oakwood Hills Parkway Eau Claire, WI 54701 www.AyresAssociates.com

8

8

7/27/2021
PENTABLE:BReau_shd_utl1.tbl

I:±42±76-0103.00 - Kenosha Co. STH 50 Retaining Wall±Structure±FINAL±R-30-73±R-30-73 chainlnk.dgn



BORING #	DATE COMPLETED	NORTHING (Y)	EASTING (X)
11	JANUARY 7, 2020	128234.51	554119.90

BORINGS COMPLETED BY: WISDOT
REPORT COMPLETED BY: WISDOT
ALL COORDINATES REFERENCED TO WCCS NAD 83(91) KENOSHA COUNTY

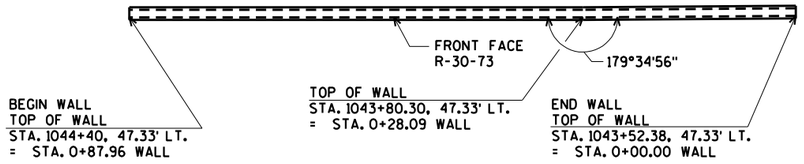

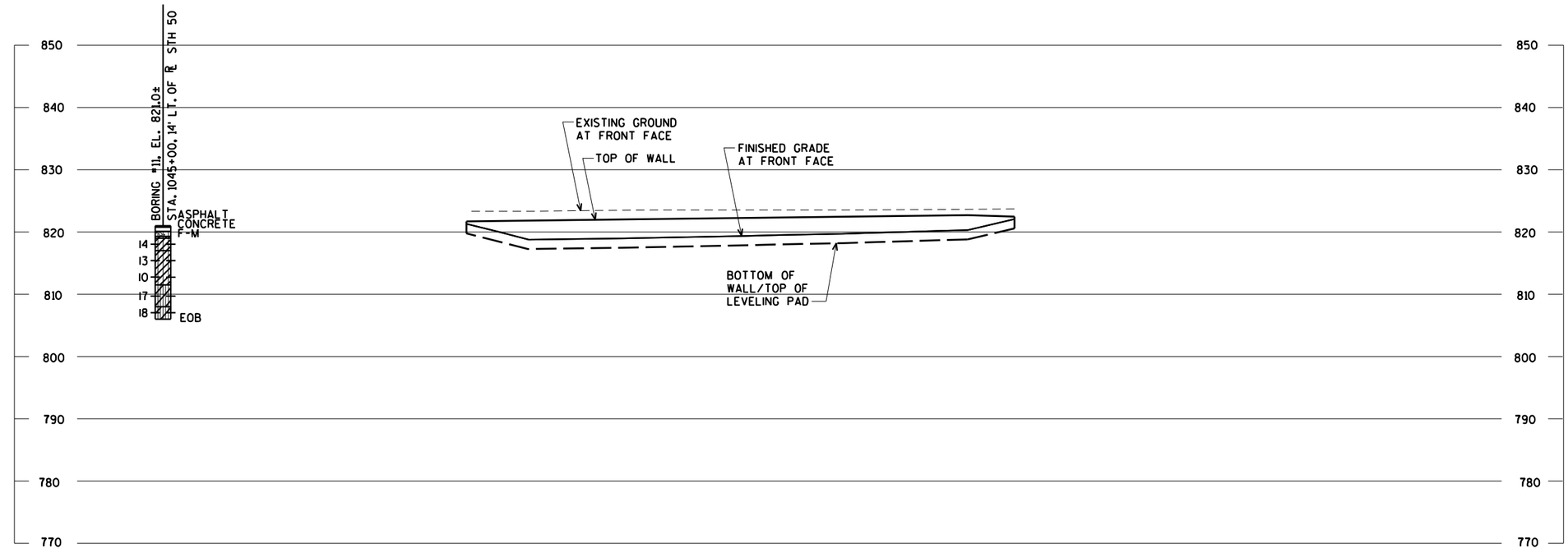

STATE PROJECT NUMBER

1310-04-70

MATERIAL SYMBOLS

ASPHALT	TOPSOIL	PEAT
CONCRETE	FILL	GRAVEL
SAND	CLAY	SILT
BOULDERS OR COBBLES	LIMESTONE	BEDROCK (UNKNOWN)
SHALE	SANDSTONE	IGNEOUS/ META

LEGEND OF BORING

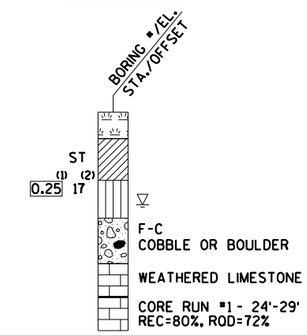

(1) UNCONFINED STRENGTH, AS DETERMINED BY A POCKET PENETROMETER (TSF)

(2) UNLESS OTHERWISE, SPECIFIED THE SPT 'N' VALUE IS BASED ON AASHTO T-206, STANDARD PENETRATION TEST. THE SPT 'N' VALUE PRESENTED HAS NOT BEEN CORRECTED FOR OVERBURDEN PRESSURE OR HAMMER EFFICIENCY.

GROUND WATER ELEVATION

- AT TIME OF DRILLING
- END OF DRILLING
- AFTER DRILLING

ABBREVIATIONS

F-FINE M-MEDIUM C-COARSE ST-SHELBY TUBE

SUBSURFACE EXPLORATION FOR FOUNDATION DESIGN AND BIDDERS INFORMATION

BORINGS WERE COMPLETED AT POINTS APPROXIMATELY AS INDICATED ON THIS DRAWING TO OBTAIN INFORMATION CONCERNING THE CHARACTER OF SUBSURFACE MATERIALS FOUND AT THE SITE. BECAUSE THE INVESTIGATED DEPTHS ARE LIMITED AND THE AREA OF THE BORINGS IS VERY SMALL IN RELATION TO THE ENTIRE SITE, THE WISCONSIN DEPARTMENT OF TRANSPORTATION DOES NOT WARRANT SIMILAR SUBSURFACE CONDITIONS BELOW, BETWEEN, OR BEYOND THESE BORINGS. VARIATIONS IN SOIL CONDITIONS SHOULD BE EXPECTED AND FLUCTUATIONS IN GROUNDWATER LEVELS MAY OCCUR.

NO.	DATE	REVISION	BY

STATE OF WISCONSIN
DEPARTMENT OF TRANSPORTATION

STRUCTURE R-30-73

DRAWN BY CLP PLANS CK'D. JLB

SUBSURFACE EXPLORATION

SHEET 5 OF 5

859

8

8

7/27/2021
PENTABLE:BReau_shd_util.tbl

I:±42±76-0103.00 - Kenosha Co. STH 50 Retaining Wall±Structure±FINAL±R-30-73±R-30-73 soils.dgn

WEST CROSSOVER - STAGE 1A		AREA (SF)		Incremental Vol (CY) (Unadjusted)		Cumulative Vol (CY)		
						Cut 1.00	Expanded Fill 1.2	Mass Ordinate
STATION	Distance	Cut	Fill	Note 1 Cut	Note 3 Fill	Note 1	Note 9	Note 10
984+23	0	16.41	0.00					
984+50	27	15.39	0.00	16	0	16	0	16
984+79	29	24.94	0.58	22	0	38	0	38
985+00	21	25.34	2.46	20	1	58	1	57
985+50	50	25.01	3.83	47	6	105	8	97
986+00	50	28.52	3.87	50	7	155	17	138
986+50	50	28.30	0.91	53	4	208	22	186
987+00	50	30.16	0.00	54	1	262	23	239
987+50	50	34.17	0.00	60	0	322	23	299
988+00	50	36.85	0.00	66	0	388	23	365
988+30	30	3.05	0.00	22	0	410	23	387
GAP								
989+08	0	7.92	0.05	0	0	410	23	387
989+50	42	9.98	0.02	14	0	424	23	401
990+00	50	8.19	0.10	17	0	441	23	418
990+15	15	8.10	0.13	5	0	446	23	423
			Totals	446	19			

EAST CROSSOVER - STAGE 1A		AREA (SF)		Incremental Vol (CY) (Unadjusted)		Cumulative Vol (CY)		
						Cut 1.00	Expanded Fill 1.2	Mass Ordinate
STATION	Distance	Cut	Fill	Note 1 Cut	Note 3 Fill	Note 1	Note 9	Note 10
1071+38	0	14.29	0.00					
1071+50	12	14.49	0.00	6	0	6	0	6
1071+88	38	27.30	0.00	29	0	35	0	35
1072+00	12	27.41	0.00	12	0	47	0	47
1072+50	50	27.35	0.68	51	1	98	1	97
1073+00	50	31.01	3.27	54	4	152	6	146
1073+50	50	37.28	3.46	63	6	215	13	202
1074+00	50	42.10	0.00	73	3	288	17	271
1074+50	50	35.19	0.32	72	0	360	17	343
1075+00	50	28.44	4.43	59	4	419	22	397
1075+50	50	28.96	7.34	53	11	472	35	437
1076+00	50	29.34	8.34	54	15	526	53	473
1076+50	50	26.28	10.69	51	18	577	74	503
1077+00	50	25.09	17.48	48	26	625	106	519
1077+50	50	23.57	28.06	45	42	670	156	514
1078+00	50	16.51	3.52	37	29	707	191	516
1078+10	10	18.61	1.20	7	1	714	192	522
			Totals	714	160			

STH 50 - STAGE 1B		AREA (SF)		Incremental Vol (CY) (Unadjusted)		Cumulative Vol (CY)			
						Cut 1.00	HazMat Cut 1.00	Expanded Fill 1.2	Mass Ordinate
				Note 1	Note 3				
STATION	Distance	Cut	Fill	Cut	Fill	Note 1	Note 7	Note 9	Note 10
996+50	0	4.69	0.00						
997+00	50	8.85	0.00	13	0	13	0	0	13
997+50	50	13.17	0.00	20	0	33	0	0	33
998+00	50	17.91	0.00	29	0	62	0	0	62
998+50	50	18.20	0.00	33	0	95	0	0	95
			Totals	95	0				

STH 50 - STAGE 1B		AREA (SF)		Incremental Vol (CY) (Unadjusted)		Cumulative Vol (CY)			
						Cut 1.00	HazMat Cut 1.00	Expanded Fill 1.2	Mass Ordinate
				Note 1	Note 3				
STATION	Distance	Cut	Fill	Cut	Fill	Note 1	Note 7	Note 9	Note 10
1000+00	0	16.42	0.00						
1000+50	50	16.23	0.00	30	0	30	0	0	30
1001+00	50	6.67	0.00	21	0	51	0	0	51
1001+50	50	18.55	0.00	23	0	74	0	0	74
1002+00	50	16.77	0.00	33	0	107	0	0	107
			Totals	107	0				

STH 50 - STAGE 1B		AREA (SF)		Incremental Vol (CY) (Unadjusted)		Cumulative Vol (CY)			
						Cut 1.00	HazMat Cut 1.00	Expanded Fill 1.2	Mass Ordinate
				Note 1	Note 3				
STATION	Distance	Cut	Fill	Cut	Fill	Note 1	Note 7	Note 9	Note 10
1003+50	0	6.87	0.00						
1004+00	50	13.88	0.00	19	0	19	0	0	19
1004+50	50	16.58	0.00	28	0	47	0	0	47
			Totals	47	0				

STH 50 - STAGE 1B		AREA (SF)		Incremental Vol (CY) (Unadjusted)		Cumulative Vol (CY) Cut 1.00	HazMat Cut 1.00	Expanded Fill 1.2	Mass Ordinate
				Note 1	Note 3				
STATION	Distance	Cut	Fill	Cut	Fill	Note 1	Note 7	Note 9	Note 10
1006+50	0	16.36	0.00						
1007+00	50	15.52	0.00	30	0	30	0	0	30
1007+50	50	8.76	0.00	22	0	52	0	0	52
1008+00	50	8.76	0.00	16	0	68	0	0	68
1008+50	50	8.76	0.00	16	0	84	0	0	84
1009+00	50	8.76	0.00	16	0	100	0	0	100
1009+50	50	8.76	0.00	16	0	116	0	0	116
1010+00	50	8.76	0.00	16	0	132	0	0	132
1010+50	50	8.76	0.00	16	0	148	0	0	148
			Totals	148	0				

STH 50 - STAGE 1B		AREA (SF)		Incremental Vol (CY) (Unadjusted)		Cumulative Vol (CY) Cut 1.00	HazMat Cut 1.00	Expanded Fill 1.2	Mass Ordinate
				Note 1	Note 3				
STATION	Distance	Cut	Fill	Cut	Fill	Note 1	Note 7	Note 9	Note 10
1033+00	0	13.17	0.00						
1033+50	50	16.16	0.00	27	0	27	0	0	27
			Totals	27	0				

STH 50 - STAGE 1B		AREA (SF)		Incremental Vol (CY) (Unadjusted)		Cumulative Vol (CY) Cut 1.00	HazMat Cut 1.00	Expanded Fill 1.2	Mass Ordinate
				Note 1	Note 3				
STATION	Distance	Cut	Fill	Cut	Fill	Note 1	Note 7	Note 9	Note 10
1035+00	0	15.68	0.00						
1035+50	50	15.24	0.00	29	0	29	0	0	29
1036+00	50	12.56	0.00	26	0	55	0	0	55
			Totals	55	0				

STH 50 - STAGE 1B		AREA (SF)		Incremental Vol (CY) (Unadjusted)		Cumulative Vol (CY) Cut 1.00	HazMat Cut 1.00	Expanded Fill 1.2	Mass Ordinate
				Note 1	Note 3				
STATION	Distance	Cut	Fill	Cut	Fill	Note 1	Note 7	Note 9	Note 10
1049+50	0	9.20	0.00						
1050+00	50	9.01	0.00	17	0	17	0	0	17
1050+50	50	4.96	0.00	13	0	30	0	0	30
			Totals	30	0				

STH 50 - STAGE 1B		AREA (SF)		Incremental Vol (CY) (Unadjusted)		Cumulative Vol (CY) Cut 1.00	HazMat Cut 1.00	Expanded Fill 1.2	Mass Ordinate
				Note 1	Note 3				
STATION	Distance	Cut	Fill	Cut	Fill	Note 1	Note 7	Note 9	Note 10
1058+00	0	5.18	0.00						
1058+50	50	10.54	0.00	15	0	15	0	0	15
1059+00	50	13.98	0.00	23	0	38	0	0	38
1059+50	50	18.76	0.00	30	0	68	0	0	68
1060+00	50	21.36	0.00	37	0	105	0	0	105
1060+50	50	18.97	0.00	37	0	142	0	0	142
1061+00	50	17.27	0.00	34	0	176	0	0	176
1061+50	50	17.00	0.00	32	0	208	0	0	208
			Totals	208	0				

STH 50 - STAGE 1B		AREA (SF)		Incremental Vol (CY) (Unadjusted)		Cumulative Vol (CY) Cut 1.00	HazMat Cut 1.00	Expanded Fill 1.2	Mass Ordinate
				Note 1	Note 3				
STATION	Distance	Cut	Fill	Cut	Fill	Note 1	Note 7	Note 9	Note 10
1063+00	0	19.93	0.00						
1063+50	50	17.20	0.00	34	0	34	0	0	34
1064+00	50	13.69	0.00	29	0	63	0	0	63
			Totals	63	0				

STAGE 1B TOTALS	780	0

STH 50 - STAGE 2		AREA (SF)			Incremental Vol (CY) (Unadjusted)			Cumulative Vol (CY) Cut 1.00	HazMat Cut 1.00	Expanded Fill 1.2	Mass Ordinate
STATION	Distance	Cut	HazMat Cut	Fill	Note 1 Cut	Note 7 HazMat	Note 3 Fill	Note 1	Note 7	Note 9	Note 10
994+21	0	94.30	0.00	21.06							
994+50	29	97.62	0.00	46.46	103	0	36	103	0	44	59
995+00	50	94.14	0.00	38.96	178	0	79	281	0	138	143
995+50	50	98.11	0.00	37.12	178	0	70	459	0	223	236
996+00	50	103.95	0.00	34.23	187	0	66	646	0	302	344
996+50	50	95.47	0.00	27.18	185	0	57	831	0	370	461
997+00	50	108.22	0.00	23.07	189	0	47	1020	0	426	594
997+50	50	119.72	0.00	10.75	211	0	31	1231	0	464	767
998+00	50	137.48	0.00	0.00	238	0	10	1469	0	476	993
998+50	50	194.95	0.00	0.00	308	0	0	1777	0	476	1301
999+00	50	217.32	0.00	0.00	382	0	0	2159	0	476	1683
999+50	50	188.60	0.00	0.00	376	0	0	2535	0	476	2059
1000+00	50	104.52	0.00	20.53	271	0	19	2806	0	499	2307
1000+50	50	84.71	0.00	5.95	175	0	25	2981	0	528	2453
1001+00	50	76.86	0.00	1.20	150	0	7	3131	0	536	2595
1001+50	50	99.97	0.00	0.44	164	0	2	3295	0	538	2757
1002+00	50	108.81	0.00	0.05	193	0	0	3488	0	538	2950
1002+50	50	102.24	0.00	0.00	195	0	0	3683	0	538	3145
1003+00	50	95.98	0.00	0.00	184	0	0	3867	0	538	3329
1003+50	50	94.78	0.00	0.00	177	0	0	4044	0	538	3506
1004+00	50	93.20	0.00	0.00	174	0	0	4218	0	538	3680
1004+50	50	127.42	0.00	0.00	204	0	0	4422	0	538	3884
1005+00	50	91.73	0.00	0.00	203	0	0	4625	0	538	4087
1005+50	50	101.57	0.00	0.39	179	0	0	4804	0	539	4265
1006+00	50	119.45	0.00	0.00	205	0	0	5009	0	539	4470
1006+50	50	86.47	0.00	0.00	191	0	0	5200	0	539	4661
1007+00	50	98.07	0.00	0.00	171	0	0	5371	0	539	4832
1007+50	50	74.59	0.00	9.27	160	0	9	5531	0	550	4981
1008+00	50	79.63	0.00	2.23	143	0	11	5674	0	562	5112
1008+50	50	85.14	0.00	1.75	153	0	4	5827	0	567	5260
1009+00	50	82.20	0.00	2.76	155	0	4	5982	0	572	5410
1009+50	50	83.16	0.00	0.00	153	0	3	6135	0	575	5560
1010+00	50	83.06	0.00	0.00	154	0	0	6289	0	575	5714
1010+50	50	84.20	0.00	0.00	155	0	0	6444	0	575	5869
1011+00	50	85.77	0.00	0.00	157	0	0	6601	0	575	6026
1011+50	50	100.72	0.00	0.00	173	0	0	6774	0	575	6199
1012+00	50	108.92	0.00	0.00	194	0	0	6968	0	575	6393
1012+50	50	113.67	0.00	0.00	206	0	0	7174	0	575	6599

STH 50 - STAGE 2 CONTINUES		AREA (SF)			Incremental Vol (CY) (Unadjusted)			Cumulative Vol (CY)			
								Cut 1.00	HazMat Cut 1.00	Expanded Fill 1.2	Mass Ordinate
STATION	Distance	Cut	HazMat Cut	Fill	Note 1 Cut	Note 7 HazMat	Note 3 Fill	Note 1	Note 7	Note 9	Note 10
1013+00	50	113.99	0.00	0.00	211	0	0	7385	0	575	6810
1013+50	50	113.44	0.00	0.00	211	0	0	7596	0	575	7021
1014+00	50	125.81	0.00	0.00	222	0	0	7818	0	575	7243
1014+50	50	119.27	0.00	0.00	227	0	0	8045	0	575	7470
1015+00	50	94.16	0.00	0.00	198	0	0	8243	0	575	7668
1015+50	50	94.12	0.00	0.00	174	0	0	8417	0	575	7842
1016+00	50	95.06	0.00	0.00	175	0	0	8592	0	575	8017
1016+50	50	93.28	0.00	0.00	174	0	0	8766	0	575	8191
1017+00	50	99.36	0.00	0.00	178	0	0	8944	0	575	8369
1017+50	50	86.76	0.00	0.01	172	0	0	9116	0	575	8541
1018+00	50	79.48	0.00	0.13	154	0	0	9270	0	575	8695
1018+50	50	73.25	0.00	0.51	141	0	1	9411	0	576	8835
1019+00	50	72.16	0.00	0.51	135	0	1	9546	0	577	8969
1019+50	50	72.53	0.00	1.59	134	0	2	9680	0	579	9101
1020+00	50	71.91	0.00	5.65	134	0	7	9814	0	587	9227
1020+50	50	70.11	0.00	3.66	131	0	9	9945	0	598	9347
1021+00	50	71.29	0.00	8.08	131	0	11	10076	0	611	9465
1021+50	50	77.49	0.00	8.31	138	0	15	10214	0	629	9585
1022+00	50	81.75	0.00	28.61	147	0	34	10361	0	670	9691
1022+50	50	86.74	0.00	14.15	156	0	40	10517	0	717	9800
1023+00	50	95.08	0.00	0.04	168	0	13	10685	0	733	9952
1023+50	50	99.28	0.00	0.12	180	0	0	10865	0	733	10132
1024+00	50	93.72	0.00	6.94	179	0	7	11044	0	741	10303
1024+50	50	59.23	0.00	29.20	142	0	33	11186	0	781	10405
1025+00	50	46.39	0.00	31.90	98	0	57	11284	0	849	10435
1025+50	50	120.90	0.00	0.00	155	0	30	11439	0	885	10554
1026+00	50	75.57	0.00	0.00	182	0	0	11621	0	885	10736
1026+50	50	88.34	0.00	0.00	152	0	0	11773	0	885	10888
1027+00	50	90.67	0.00	0.00	166	0	0	11939	0	885	11054
1027+50	50	87.56	0.00	0.00	165	0	0	12104	0	885	11219
1028+00	50	88.14	0.00	0.00	163	0	0	12267	0	885	11382
1028+50	50	84.31	0.00	0.00	160	0	0	12427	0	885	11542
1029+00	50	80.83	0.00	0.00	153	0	0	12580	0	885	11695
1029+50	50	77.67	0.00	0.00	147	0	0	12727	0	885	11842
1030+00	50	75.99	0.00	0.03	142	0	0	12869	0	885	11984
1030+50	50	78.83	0.00	0.00	143	0	0	13012	0	885	12127
1031+00	50	91.94	0.00	0.00	158	0	0	13170	0	885	12285
1031+50	50	97.09	0.00	0.00	175	0	0	13345	0	885	12460

STH 50 - STAGE 2 CONTINUES		AREA (SF)			Incremental Vol (CY) (Unadjusted)			Cumulative Vol (CY) Cut 1.00	HazMat Cut 1.00	Expanded Fill 1.2	Mass Ordinate
STATION	Distance	Cut	HazMat Cut	Fill	Note 1 Cut	Note 7 HazMat	Note 3 Fill	Note 1	Note 7	Note 9	Note 10
1032+00	50	104.03	0.00	0.00	186	0	0	13531	0	885	12646
1032+50	50	106.01	0.00	0.00	194	0	0	13725	0	885	12840
1033+00	50	106.28	0.00	0.00	197	0	0	13922	0	885	13037
1033+50	50	99.18	0.00	0.00	190	0	0	14112	0	885	13227
1034+00	50	160.08	0.00	0.39	240	0	0	14352	0	885	13467
1034+50	50	96.14	0.00	0.00	237	0	0	14589	0	885	13704
1035+00	50	74.48	0.00	0.81	158	0	1	14747	0	887	13860
1035+50	50	62.03	0.00	1.91	126	0	3	14873	0	890	13983
1036+00	50	57.87	0.00	0.52	111	0	2	14984	0	893	14091
1036+50	50	50.89	0.00	0.07	101	0	1	15085	0	894	14191
1037+00	50	47.06	0.00	5.01	91	0	5	15176	0	900	14276
1037+50	50	50.79	0.00	1.15	91	0	6	15267	0	907	14360
1038+00	50	58.62	0.00	0.00	101	0	1	15368	0	908	14460
1038+50	50	36.12	27.98	3.35	88	0	3	15456	0	912	14544
1039+00	50	21.84	56.56	0.56	54	78	4	15510	78	917	14593
1039+50	50	37.24	47.55	0.76	55	96	1	15565	174	918	14647
1040+00	50	61.24	113.10	0.00	91	149	1	15656	323	919	14737
1040+50	50	89.86	0.00	0.07	140	0	0	15796	323	919	14877
1041+00	50	93.61	0.00	0.00	170	0	0	15966	323	919	15047
1041+50	50	82.88	0.00	0.00	163	0	0	16129	323	919	15210
1042+00	50	81.46	0.00	0.03	152	0	0	16281	323	919	15362
1042+50	50	79.42	0.00	1.25	149	0	1	16430	323	920	15510
1043+00	50	78.25	0.00	0.10	146	0	1	16576	323	921	15655
1043+50	50	86.01	0.00	0.00	152	0	0	16728	323	921	15807
1044+00	50	100.41	0.00	0.00	173	0	0	16901	323	921	15980
1044+50	50	108.03	0.00	0.00	193	0	0	17094	323	921	16173
1045+00	50	95.91	0.00	0.00	189	0	0	17283	323	921	16362
1045+50	50	103.31	0.00	0.00	184	0	0	17467	323	921	16546
1046+00	50	88.08	0.00	0.00	177	0	0	17644	323	921	16723
1046+50	50	95.30	0.00	0.00	170	0	0	17814	323	921	16893
1047+00	50	155.58	0.00	0.00	232	0	0	18046	323	921	17125
1047+50	50	103.05	0.00	0.00	239	0	0	18285	323	921	17364
1048+00	50	93.32	0.00	0.00	182	0	0	18467	323	921	17546
1048+50	50	93.60	0.00	0.00	173	0	0	18640	323	921	17719
1049+00	50	89.47	0.00	0.00	170	0	0	18810	323	921	17889
1049+50	50	86.21	0.00	0.36	163	0	0	18973	323	921	18052
1050+00	50	83.03	0.00	0.86	157	0	1	19130	323	923	18207
1050+50	50	80.94	0.00	0.94	152	0	2	19282	323	925	18357

STH 50 - STAGE 2 CONTINUES		AREA (SF)			Incremental Vol (CY) (Unadjusted)			Cumulative Vol (CY) Cut 1.00	HazMat Cut 1.00	Expanded Fill 1.2	Mass Ordinate
STATION	Distance	Cut	HazMat Cut	Fill	Note 1 Cut	Note 7 HazMat	Note 3 Fill	Note 1	Note 7	Note 9	Note 10
1051+00	50	81.76	0.00	0.72	151	0	2	19433	323	927	18506
1051+50	50	83.80	0.00	0.11	153	0	1	19586	323	929	18657
1052+00	50	87.39	0.00	0.00	159	0	0	19745	323	929	18816
1052+50	50	95.13	0.00	0.00	169	0	0	19914	323	929	18985
1053+00	50	87.14	0.00	0.95	169	0	1	20083	323	930	19153
1053+50	50	87.46	0.00	0.76	162	0	2	20245	323	932	19313
1054+00	50	87.76	0.00	0.00	162	0	1	20407	323	933	19474
1054+50	50	88.00	0.00	0.00	163	0	0	20570	323	933	19637
1055+00	50	92.28	0.00	0.00	167	0	0	20737	323	933	19804
1055+50	50	128.15	0.00	0.00	204	0	0	20941	323	933	20008
1056+00	50	113.75	0.00	0.00	224	0	0	21165	323	933	20232
1056+50	50	109.71	0.00	0.00	207	0	0	21372	323	933	20439
1057+00	50	107.74	0.00	0.00	201	0	0	21573	323	933	20640
1057+50	50	108.43	0.00	0.00	200	0	0	21773	323	933	20840
1058+00	50	106.02	0.00	0.28	199	0	0	21972	323	933	21039
1058+50	50	105.13	0.00	0.67	196	0	1	22168	323	935	21233
1059+00	50	89.53	0.00	1.31	180	0	2	22348	323	937	21411
1059+50	50	90.18	0.00	0.99	166	0	2	22514	323	939	21575
1060+00	50	89.80	0.00	0.32	167	0	1	22681	323	941	21740
1060+50	50	89.03	0.00	0.12	166	0	0	22847	323	941	21906
1061+00	50	90.60	0.00	0.00	166	0	0	23013	323	941	22072
1061+50	50	91.23	0.00	0.00	168	0	0	23181	323	941	22240
1062+00	50	100.29	0.00	0.00	177	0	0	23358	323	941	22417
1062+50	50	101.73	0.00	0.24	187	0	0	23545	323	941	22604
1063+00	50	85.21	0.00	1.25	173	0	1	23718	323	942	22776
1063+50	50	84.19	0.00	1.11	157	0	2	23875	323	944	22931
1064+00	50	82.70	0.00	1.54	155	0	2	24030	323	947	23083
1064+50	50	82.81	0.00	1.74	153	0	3	24183	323	950	23233
1065+00	50	78.06	0.00	3.57	149	0	5	24332	323	956	23376
1065+50	50	89.21	0.00	6.01	155	0	9	24487	323	967	23520
1066+00	50	89.84	0.00	5.34	166	0	11	24653	323	980	23673
1066+50	50	88.10	0.00	5.76	165	0	10	24818	323	992	23826
1067+00	50	88.70	0.00	5.09	164	0	10	24982	323	1004	23978
1067+50	50	91.17	0.00	3.84	167	0	8	25149	323	1014	24135
1068+00	50	100.33	0.00	2.04	177	0	5	25326	323	1020	24306
1068+21	21	110.47	0.00	0.92	82	0	1	25408	323	1021	24387
				Totals	25,408	323	851				

CTH F - STAGE 2		AREA (SF)		Incremental Vol (CY) (Unadjusted)		Cumulative Vol (CY)		
						Cut 1.00	Expanded Fill 1.2	Mass Ordinate
STATION	Distance	Cut	Fill	Note 1 Cut	Note 3 Fill	Note 1	Note 9	Note 10
3+04	0	114.83	2.17					
3+50	46	142.26	2.70	219	4	219	5	214
4+00	50	250.23	8.31	363	10	469	17	452
4+25	25	286.71	1.17	249	4	756	22	734
			Totals	831	18			

DETENTION POND - STAGE 2		AREA (SF)		Incremental Vol (CY) (Unadjusted)		Cumulative Vol (CY)		
						Cut 1.00	Expanded Fill 1.2	Mass Ordinate
STATION	Distance	Cut	Fill	Note 1 Cut	Note 3 Fill	Note 1	Note 9	Note 10
100+32	0	0.00	0.00					
100+50	18	262.17	0.00	87	0	87	0	87
100+75	25	772.64	0.00	479	0	566	0	566
101+00	25	882.40	0.00	766	0	1332	0	1332
101+25	25	975.77	0.00	860	0	2192	0	2192
101+50	25	975.70	0.00	903	0	3095	0	3095
101+75	25	977.95	0.61	904	0	3999	0	3999
102+00	25	971.49	0.00	903	0	4902	0	4902
102+25	25	899.38	5.65	866	3	5768	4	5764
102+50	25	798.33	166.90	786	80	6554	100	6454
102+75	25	396.69	224.12	553	181	7107	317	6790
103+00	25	4.23	79.92	186	141	7293	486	6807
				Totals	7,293	405		

STH 83 - STAGE 2		AREA (SF)		Incremental Vol (CY) (Unadjusted)		Cumulative Vol (CY)		
						Cut 1.00	Expanded Fill 1.2	Mass Ordinate
STATION	Distance	Cut	Fill	Note 1 Cut	Note 3 Fill	Note 1	Note 9	Note 10
44+69		20.42	0.00					
45+00	31	28.02	0.00	28	0	28	0	28
45+02	2	28.51	0.00	2	0	30	0	30
45+60	58	66.89	0.11	102	0	132	0	132
46+00	40	98.37	0.19	122	0	254	0	254
46+50	50	127.88	0.05	209	0	463	0	463
47+00	50	147.31	3.31	255	3	718	4	714
47+50	50	151.22	4.21	276	7	994	12	982
47+69	19	212.01	0.69	128	2	1122	14	1108
48+00	31	209.90	3.68	242	3	1364	18	1346
48+08	8	298.34	2.28	75	1	1439	19	1420
48+50	42	277.98	2.45	448	4	1887	24	1863
49+00	50	263.44	0.98	501	3	2388	28	2360
49+25	25	273.28	1.47	248	1	2636	29	2607
			Totals	2,636	24			

W HIGH SCHOOL DWY - STAGE 2		AREA (SF)		Incremental Vol (CY) (Unadjusted)		Cumulative Vol (CY)		
						Cut 1.00	Expanded Fill 1.2	Mass Ordinate
STATION	Distance	Cut	Fill	Note 1 Cut	Note 3 Fill	Note 1	Note 9	Note 10
18+50	0	90.16	0.91					
18+75	25	86.20	7.76	82	4	82	5	77
19+00	25	60.62	33.47	68	19	150	28	122
19+10	10	59.44	45.73	22	15	172	46	126
19+30	20	67.82	20.50	47	25	219	76	143
			Totals	219	63			

242ND AVE - STAGE 2		AREA (SF)		Incremental Vol (CY) (Unadjusted)		Cumulative Vol (CY)		
						Cut 1.00	Expanded Fill 1.2	Mass Ordinate
STATION	Distance	Cut	Fill	Note 1 Cut	Note 3 Fill	Note 1	Note 9	Note 10
78+95	0	111.28	0.00					
79+00	5	115.71	0.00	21	0	21	0	21
79+40	40	140.08	0.00	189	0	161	0	161
			Totals	210	0			

STH 50 - STAGE 3		AREA (SF)		Incremental Vol (CY) (Unadjusted)		Cumulative Vol (CY)			
						Cut 1.00	HazMat Cut 1.00	Expanded Fill 1.2	Mass Ordinate
STATION	Distance	Cut	Fill	Note 1 Cut	Note 3 Fill	Note 1	Note 7	Note 9	Note 10
996+50	0	7.80	0.00						
997+00	50	11.73	0.00	18	0	18	0	0	18
997+50	50	16.46	0.00	26	0	44	0	0	44
998+00	50	21.88	0.00	35	0	79	0	0	79
998+50	50	22.62	0.00	41	0	120	0	0	120
999+00	50	77.45	0.00	93	0	213	0	0	213
999+50	50	73.13	0.00	139	0	352	0	0	352
1000+00	50	15.77	0.00	82	0	434	0	0	434
1000+50	50	15.01	0.00	28	0	462	0	0	462
1001+00	50	10.92	0.00	24	0	486	0	0	486
1001+50	50	11.93	0.00	21	0	507	0	0	507
1002+00	50	13.40	0.00	23	0	530	0	0	530
1002+50	50	17.48	0.00	29	0	559	0	0	559
1003+00	50	27.76	0.00	42	0	601	0	0	601
1003+50	50	24.60	0.00	48	0	649	0	0	649
1004+00	50	19.77	0.00	41	0	690	0	0	690
1004+50	50	18.89	0.00	36	0	726	0	0	726
1005+00	50	33.69	0.00	49	0	775	0	0	775
1005+50	50	44.95	0.00	73	0	848	0	0	848
1006+00	50	44.80	0.00	83	0	931	0	0	931
1006+50	50	33.76	0.00	73	0	1004	0	0	1004
1007+00	50	35.63	0.00	64	0	1068	0	0	1068
1007+50	50	39.01	0.00	69	0	1137	0	0	1137
1008+00	50	43.35	0.00	76	0	1213	0	0	1213
1008+50	50	44.39	0.00	81	0	1294	0	0	1294
1009+00	50	45.28	0.00	83	0	1377	0	0	1377
1009+50	50	47.36	0.00	86	0	1463	0	0	1463
1010+00	50	49.53	0.00	90	0	1553	0	0	1553
1010+50	50	51.46	0.00	94	0	1647	0	0	1647
1011+00	50	56.50	0.00	100	0	1747	0	0	1747
1011+50	50	40.20	0.00	90	0	1837	0	0	1837
1012+00	50	39.67	0.00	74	0	1911	0	0	1911
1012+50	50	41.60	0.00	75	0	1986	0	0	1986
1013+00	50	67.93	0.00	101	0	2087	0	0	2087

STH 50 - STAGE 3 CONTINUES		AREA (SF)		Incremental Vol (CY) (Unadjusted)		Cumulative Vol (CY) Cut 1.00	HazMat Cut 1.00	Expanded Fill 1.2	Mass Ordinate
				Note 1	Note 3				
STATION	Distance	Cut	Fill	Cut	Fill	Note 1	Note 7	Note 9	Note 10
1013+50	50	67.61	0.00	125	0	2212	0	0	2212
1014+00	50	18.08	0.00	79	0	2291	0	0	2291
1014+50	50	20.17	0.00	35	0	2326	0	0	2326
1015+00	50	50.79	0.00	66	0	2392	0	0	2392
1015+50	50	48.94	0.00	92	0	2484	0	0	2484
1016+00	50	35.80	0.00	78	0	2562	0	0	2562
1016+50	50	32.06	0.00	63	0	2625	0	0	2625
1017+00	50	52.35	0.00	78	0	2703	0	0	2703
1017+50	50	41.65	0.00	87	0	2790	0	0	2790
1018+00	50	34.80	0.00	71	0	2861	0	0	2861
			Totals	2,861	0				

STH 50 - STAGE 3		AREA (SF)		Incremental Vol (CY) (Unadjusted)		Cumulative Vol (CY) Cut 1.00	HazMat Cut 1.00	Expanded Fill 1.2	Mass Ordinate
				Note 1	Note 3				
STATION	Distance	Cut	Fill	Cut	Fill	Note 1	Note 7	Note 9	Note 10
1018+50	0	0.00	0.00						
1019+00	50	1.62	0.00	2	0	2	0	0	2
1019+50	50	8.97	0.00	10	0	12	0	0	12
1020+00	50	13.56	0.00	21	0	33	0	0	33
1020+50	50	3.43	0.00	16	0	49	0	0	49
			Totals	49	0				
			STAGE 3 TOTALS =	2,910	0				

STH 50 - STAGE 4A		AREA (SF)		Incremental Vol (CY) (Unadjusted)		Cumulative Vol (CY)			
						Cut 1.00	HazMat Cut	Expanded Fill 1.2	Mass Ordinate
STATION	Distance	Cut	Fill	Note 1 Cut	Note 3 Fill	Note 1	Note 7	Note 9	Note 10
1003+50	0	83.42	0.00						
1004+00	50	73.46	0.00	145	0	145	0	0	145
1004+50	50	76.18	0.00	139	0	284	0	0	284
1005+00	50	153.59	0.00	213	0	497	0	0	497
1005+50	50	118.06	0.00	252	0	749	0	0	749
1006+00	50	85.37	0.00	188	0	937	0	0	937
1006+50	50	71.19	0.00	145	0	1082	0	0	1082
			Totals	1,082	0				

STH 75 - STAGE 4A		AREA (SF)		Incremental Vol (CY) (Unadjusted)		Cumulative Vol (CY)		
						Cut 1.00	Expanded Fill 1.2	Mass Ordinate
STATION	Distance	Cut	Fill	Note 1 Cut	Note 3 Fill	Note 1	Note 9	Note 10
50+75	0	221.87	3.51					
51+00	25	283.56	1.48	234	2	234	2	232
51+42	42	233.12	1.11	402	2	636	5	631
51+50	8	159.99	0.00	58	0	694	5	689
51+90	40	154.69	0.00	233	0	927	5	922
52+00	10	63.59	0.00	40	0	967	5	962
52+50	50	66.50	0.00	120	0	1087	5	1082
53+00	50	69.80	0.00	126	0	1213	5	1208
53+32	32	60.39	0.00	77	0	1290	5	1285
			Totals	1,290	4			

STH 50 - STAGE 4B		AREA (SF)			Incremental Vol (CY) (Unadjusted)			Cumulative Vol (CY)			
								Cut 1.00	HazMat Cut 1.00	Expanded Fill 1.2	Mass Ordinate
STATION	Distance	Cut	HazMat Cut	Fill	Note 1 Cut	Note 7 HazMat	Note 3 Fill	Note 1	Note 7	Note 9	Note 10
1021+00		30.95	0.00	0.00							
1021+50	50	32.70	0.00	0.00	59	0	0	59	0	0	59
1022+00	50	32.42	0.00	0.00	60	0	0	119	0	0	119
1022+50	50	33.79	0.00	0.00	61	0	0	180	0	0	180
1023+00	50	36.52	0.00	0.00	65	0	0	245	0	0	245
1023+50	50	39.71	0.00	0.00	71	0	0	316	0	0	316
1024+00	50	39.02	0.00	0.00	73	0	0	389	0	0	389
1024+50	50	33.31	0.00	0.00	67	0	0	456	0	0	456
1025+00	50	28.77	0.00	0.00	57	0	0	513	0	0	513
1025+50	50	29.14	0.00	0.00	54	0	0	567	0	0	567
1026+00	50	34.02	0.00	0.00	58	0	0	625	0	0	625
				Totals	625	0	0				

STH 50 - STAGE 4B		AREA (SF)			Incremental Vol (CY) (Unadjusted)			Cumulative Vol (CY)			
								Cut 1.00	HazMat Cut 1.00	Expanded Fill 1.2	Mass Ordinate
STATION	Distance	Cut	HazMat Cut	Fill	Note 1 Cut	Note 7 HazMat	Note 3 Fill	Note 1	Note 7	Note 9	Note 10
1027+50	0	37.55	0.00	0.00							
1028+00	50	37.18	0.00	0.00	69	0	0	69	0	0	69
1028+50	50	35.51	0.00	0.00	67	0	0	136	0	0	136
1029+00	50	34.51	0.00	0.00	65	0	0	201	0	0	201
1029+50	50	34.22	0.00	0.00	64	0	0	265	0	0	265
1030+00	50	33.61	0.00	0.00	63	0	0	328	0	0	328
1030+50	50	34.58	0.00	0.00	63	0	0	391	0	0	391
1031+00	50	37.38	0.00	0.00	67	0	0	458	0	0	458
1031+50	50	7.72	0.00	0.00	42	0	0	500	0	0	500
1032+00	50	15.68	0.00	0.00	22	0	0	522	0	0	522
1032+50	50	36.57	0.00	0.00	48	0	0	570	0	0	570
1033+00	50	37.56	0.00	0.00	69	0	0	639	0	0	639
1033+50	50	47.48	0.00	0.00	79	0	0	718	0	0	718
1034+00	50	69.21	0.00	0.00	108	0	0	826	0	0	826
1034+50	50	65.81	18.97	0.00	125	18	0	951	18	0	951
1035+00	50	12.65	18.35	0.00	73	35	0	1024	53	0	1024
1035+50	50	12.43	15.88	0.00	23	32	0	1047	85	0	1047
1036+00	50	12.21	14.42	0.00	23	28	0	1070	113	0	1070
1036+50	50	11.99	15.03	0.00	22	27	0	1092	140	0	1092
1037+00	50	11.87	0.00	0.00	22	14	0	1114	154	0	1114

STH 50 - STAGE 4B CONTINUES		AREA (SF)			Incremental Vol (CY) (Unadjusted)			Cumulative Vol (CY)			
								Cut 1.00	HazMat Cut 1.00	Expanded Fill 1.2	Mass Ordinate
STATION	Distance	Cut	HazMat Cut	Fill	Note 1 Cut	Note 7 HazMat	Note 3 Fill	Note 1	Note 7	Note 9	Note 10
1037+50	50	3.67	0.00	0.00	14	0	0	1128	154	0	1128
1038+00	50	4.83	0.00	0.00	8	0	0	1136	154	0	1136
1038+50	50	7.18	0.00	0.00	11	0	0	1147	154	0	1147
1039+00	50	-2.63	10.08	0.00	4	0	0	1151	154	0	1151
1039+50	50	25.51	11.37	0.00	21	20	0	1172	174	0	1172
1040+00	50	25.13	12.07	0.00	47	22	0	1219	196	0	1219
1040+50	50	37.99	0.00	0.00	58	0	0	1277	196	0	1277
1041+00	50	40.09	0.00	0.00	72	0	0	1349	196	0	1349
1041+50	50	37.86	0.00	0.00	72	0	0	1421	196	0	1421
1042+00	50	35.19	0.00	0.00	68	0	0	1489	196	0	1489
1042+50	50	34.58	0.00	0.00	65	0	0	1554	196	0	1554
1043+00	50	43.70	0.00	0.00	72	0	0	1626	196	0	1626
1043+50	50	38.83	0.00	0.00	76	0	0	1702	196	0	1702
1044+00	50	41.94	0.00	0.00	75	0	0	1777	196	0	1777
1044+50	50	43.67	0.00	0.00	79	0	0	1856	196	0	1856
1045+00	50	44.29	0.00	0.00	81	0	0	1937	196	0	1937
1045+50	50	44.01	0.00	0.00	82	0	0	2019	196	0	2019
1046+00	50	42.40	0.00	0.00	80	0	0	2099	196	0	2099
1046+50	50	52.03	14.13	0.00	87	13	0	2186	209	0	2186
1047+00	50	54.89	14.92	0.00	99	27	0	2285	236	0	2285
1047+50	50	53.68	13.93	0.00	101	27	0	2386	263	0	2386
1048+00	50	12.83	0.00	0.00	62	13	0	2448	276	0	2448
1048+50	50	13.07	0.00	0.00	24	0	0	2472	276	0	2472
1049+00	50	13.41	0.00	0.00	25	0	0	2497	276	0	2497
1049+50	50	13.77	0.00	0.00	25	0	0	2522	276	0	2522
1050+00	50	17.51	0.00	0.00	29	0	0	2551	276	0	2551
1050+50	50	30.84	0.00	0.00	45	0	0	2596	276	0	2596
1051+00	50	30.22	0.00	0.00	57	0	0	2653	276	0	2653
1051+50	50	29.21	0.00	0.00	55	0	0	2708	276	0	2708
1052+00	50	29.73	0.00	0.00	55	0	0	2763	276	0	2763
1052+50	50	49.83	0.00	0.00	74	0	0	2837	276	0	2837
1053+00	50	53.06	0.00	0.00	95	0	0	2932	276	0	2932
1053+50	50	55.41	0.00	0.00	100	0	0	3032	276	0	3032
1054+00	50	55.94	0.00	0.00	103	0	0	3135	276	0	3135
1054+50	50	56.96	0.00	0.00	105	0	0	3240	276	0	3240
1055+00	50	46.30	0.00	0.00	96	0	0	3336	276	0	3336
				Totals	3336	276	0				

STH 50 - STAGE 4B		AREA (SF)			Incremental Vol (CY) (Unadjusted)			Cumulative Vol (CY)			
								Cut 1.00	HazMat Cut	Expanded Fill	Mass Ordinate
STATION	Distance	Cut	HazMat Cut	Fill	Note 1 Cut	Note 7 HazMat	Note 3 Fill	Note 1	1.00 Note 7	1.2 Note 9	Note 10
1058+75	0	21.31	0.00	0.00							
1059+00	25	31.49	0.00	0.00	24	0	0	24	0	0	24
1059+50	50	39.67	0.00	0.00	66	0	0	90	0	0	90
1060+00	50	37.57	0.00	0.00	72	0	0	162	0	0	162
1060+50	50	37.11	0.00	0.00	69	0	0	231	0	0	231
1061+00	50	37.66	0.00	0.00	69	0	0	300	0	0	300
1061+50	50	36.69	0.00	0.00	69	0	0	369	0	0	369
1062+00	50	68.32	0.00	0.00	97	0	0	466	0	0	466
1062+50	50	65.99	0.00	0.00	124	0	0	590	0	0	590
1063+00	50	16.22	0.00	0.00	76	0	0	666	0	0	666
1063+50	50	48.61	0.00	0.00	60	0	0	726	0	0	726
1064+00	50	35.69	0.00	0.00	78	0	0	804	0	0	804
1064+50	50	53.34	0.00	0.00	82	0	0	886	0	0	886
1065+00	50	53.91	0.00	0.00	99	0	0	985	0	0	985
				Totals	985	0	0				

STAGE 4B TOTALS =	4,946	276	0

STH 50 - STAGE 4C			AREA (SF)			Incremental Vol (CY) (Unadjusted)			Cumulative Vol (CY)			
									Cut 1.00	HazMat Cut 1.00	Expanded Fill 1.2	Mass Ordinate
STATION	Real Station	Distance	Cut	HazMat Cut	Fill	Note 1 Cut	HazMat Cut	Note 3 Fill	Note 1	Note 7	Note 9	Note 10
994+21	99421	0	95.22	0.00	0.21							
994+50	99450	29	95.63	0.00	0.29	102	0	0	102	0	0	102
995+00	99500	50	97.04	0.00	0.15	178	0	0	280	0	0	280
995+50	99550	50	107.16	0.00	0.00	189	0	0	469	0	0	469
996+00	99600	50	125.17	0.00	0.00	215	0	0	684	0	0	684
996+50	99650	50	123.79	0.00	0.00	231	0	0	915	0	0	915
997+00	99700	50	133.29	0.00	0.00	238	0	0	1153	0	0	1153
997+50	99750	50	122.92	0.00	0.00	237	0	0	1390	0	0	1390
998+00	99800	50	126.05	0.00	0.00	231	0	0	1621	0	0	1621
998+50	99850	50	104.87	0.00	0.00	214	0	0	1835	0	0	1835
999+00	99900	50	104.38	0.00	0.00	194	0	0	2029	0	0	2029
999+50	99950	50	97.46	0.00	0.00	187	0	0	2216	0	0	2216
1000+00	100000	50	89.35	0.00	1.22	173	0	1	2389	0	1	2388
1000+50	100050	50	83.95	0.00	0.86	160	0	2	2549	0	4	2545
1001+00	100100	50	80.48	0.00	1.43	152	0	2	2701	0	6	2695
1001+50	100150	50	79.55	0.00	0.69	148	0	2	2849	0	8	2841
1002+00	100200	50	80.26	0.00	1.56	148	0	2	2997	0	11	2986
1002+50	100250	50	80.56	0.00	0.28	149	0	2	3146	0	13	3133
1003+00	100300	50	87.56	0.00	0.63	156	0	1	3302	0	14	3288
1003+50	100350	50	83.42	0.00	1.57	158	0	2	3460	0	17	3443
GAP												
1006+50	100650	0	71.19	0.00	0.18				3460	0	17	3443
1007+00	100700	50	77.51	0.00	0.98	138	0	1	3598	0	18	3580
1007+50	100750	50	81.97	0.00	0.20	148	0	1	3746	0	19	3727
1008+00	100800	50	82.34	0.00	0.18	152	0	0	3898	0	19	3879
1008+50	100850	50	83.99	0.00	0.00	154	0	0	4052	0	19	4033
1009+00	100900	50	84.53	0.00	0.00	156	0	0	4208	0	19	4189
1009+50	100950	50	87.84	0.00	0.00	160	0	0	4368	0	19	4349
1010+00	101000	50	88.64	0.00	0.17	163	0	0	4531	0	19	4512
1010+50	101050	50	89.27	0.00	0.00	165	0	0	4696	0	19	4677
1011+00	101100	50	90.10	0.00	0.00	166	0	0	4862	0	19	4843
1011+50	101150	50	119.45	0.00	0.00	194	0	0	5056	0	19	5037
1012+00	101200	50	126.55	0.00	0.88	228	0	1	5284	0	20	5264
1012+50	101250	50	131.69	0.00	0.00	239	0	1	5523	0	22	5501
1013+00	101300	50	132.54	0.00	0.00	245	0	0	5768	0	22	5746
1013+50	101350	50	130.59	0.00	0.00	244	0	0	6012	0	22	5990
1014+00	101400	50	122.90	0.00	0.00	235	0	0	6247	0	22	6225

STH 50 - STAGE 4C CONTINUES			AREA (SF)			Incremental Vol (CY) (Unadjusted)			Cumulative Vol (CY) Cut 1.00	HazMat Cut 1.00	Expanded Fill 1.2	Mass Ordinate
STATION	Real Station	Distance	Cut	HazMat Cut	Fill	Note 1 Cut	HazMat Cut	Note 3 Fill	Note 1	Note 7	Note 9	Note 10
1014+50	101450	50	112.07	0.00	0.16	218	0	0	6465	0	22	6443
1015+00	101500	50	106.05	0.00	0.00	202	0	0	6667	0	22	6645
1015+50	101550	50	109.75	0.00	0.00	200	0	0	6867	0	22	6845
1016+00	101600	50	115.48	0.00	0.00	209	0	0	7076	0	22	7054
1016+50	101650	50	112.05	0.00	0.00	211	0	0	7287	0	22	7265
1017+00	101700	50	103.34	0.00	0.00	199	0	0	7486	0	22	7464
1017+50	101750	50	95.95	0.00	0.84	185	0	1	7671	0	23	7648
1018+00	101800	50	73.08	0.00	0.96	157	0	2	7828	0	25	7803
1018+50	101850	50	66.45	0.00	8.67	129	0	9	7957	0	36	7921
1019+00	101900	50	65.07	0.00	3.13	122	0	11	8079	0	49	8030
1019+50	101950	50	63.03	0.00	2.15	119	0	5	8198	0	55	8143
1020+00	102000	50	66.90	0.00	0.58	120	0	3	8318	0	59	8259
1020+50	102050	50	67.25	0.00	1.02	124	0	1	8442	0	60	8382
1021+00	102100	50	64.04	0.00	1.62	122	0	2	8564	0	62	8502
1021+50	102150	50	64.81	0.00	2.02	119	0	3	8683	0	66	8617
1022+00	102200	50	67.40	0.00	1.85	122	0	4	8805	0	71	8734
1022+50	102250	50	71.67	0.00	1.61	129	0	3	8934	0	74	8860
1023+00	102300	50	79.44	0.00	0.63	140	0	2	9074	0	77	8997
1023+50	102350	50	91.21	0.00	0.00	158	0	1	9232	0	78	9154
1024+00	102400	50	100.75	0.00	0.00	178	0	0	9410	0	78	9332
1024+50	102450	50	85.70	0.00	0.35	173	0	0	9583	0	78	9505
1025+00	102500	50	80.23	0.00	0.66	154	0	1	9737	0	79	9658
1025+50	102550	50	150.05	0.00	0.00	213	0	1	9950	0	80	9870
1026+00	102600	50	81.49	0.00	1.30	214	0	1	10164	0	82	10082
1026+50	102650	50	81.53	0.00	1.46	151	0	3	10315	0	85	10230
1027+00	102700	50	86.42	0.00	0.00	156	0	1	10471	0	86	10385
1027+50	102750	50	87.58	0.00	0.00	161	0	0	10632	0	86	10546
1028+00	102800	50	108.46	0.00	0.00	182	0	0	10814	0	86	10728
1028+50	102850	50	102.15	0.00	0.00	195	0	0	11009	0	86	10923
1029+00	102900	50	112.21	0.00	0.00	198	0	0	11207	0	86	11121
1029+50	102950	50	149.17	0.00	0.33	242	0	0	11449	0	86	11363
1030+00	103000	50	97.84	0.00	0.37	229	0	1	11678	0	88	11590
1030+50	103050	50	0.00	0.00	0.00	91	0	0	11769	0	88	11681
1031+00	103100	50	86.62	0.00	1.67	80	0	2	11849	0	90	11759
1031+50	103150	50	107.97	0.00	0.00	180	0	2	12029	0	92	11937
1032+00	103200	50	123.19	0.00	0.00	214	0	0	12243	0	92	12151
1032+50	103250	50	118.38	0.00	0.00	224	0	0	12467	0	92	12375

STH 50 - STAGE 4C CONTINUES			AREA (SF)			Incremental Vol (CY) (Unadjusted)			Cumulative Vol (CY) Cut 1.00	HazMat Cut 1.00	Expanded Fill 1.2	Mass Ordinate
STATION	Real Station	Distance	Cut	HazMat Cut	Fill	Note 1 Cut	HazMat Cut	Note 3 Fill	Note 1	Note 7	Note 9	Note 10
1033+00	103300	50	105.77	0.00	0.00	208	0	0	12675	0	92	12583
1033+50	103350	50	94.05	0.00	1.09	185	0	1	12860	0	94	12766
1034+00	103400	50	109.10	0.00	1.33	188	0	2	13048	0	96	12952
1034+50	103450	50	39.53	50.73	0.25	138	47	1	13186	47	97	13089
1035+00	103500	50	36.26	40.90	0.71	70	85	1	13256	132	98	13158
1035+50	103550	50	40.61	32.34	0.86	71	68	1	13327	200	100	13227
1036+00	103600	50	50.69	29.16	0.57	85	57	1	13412	257	101	13311
1036+50	103650	50	34.38	27.35	17.13	79	52	16	13491	309	120	13371
1037+00	103700	50	62.13	0.00	13.95	89	25	29	13580	334	155	13425
1037+50	103750	50	60.73	0.00	2.08	114	0	15	13694	334	173	13521
1038+00	103800	50	60.68	0.00	4.50	112	0	6	13806	334	180	13626
1038+50	103850	50	70.19	0.00	1.25	121	0	5	13927	334	186	13741
1039+00	103900	50	82.85	0.00	0.32	142	0	1	14069	334	187	13882
1039+50	103950	50	89.62	0.00	0.00	160	0	0	14229	334	187	14042
1040+00	104000	50	94.26	0.00	0.00	170	0	0	14399	334	187	14212
1040+50	104050	50	89.44	0.00	0.00	170	0	0	14569	334	187	14382
1041+00	104100	50	92.29	0.00	0.00	168	0	0	14737	334	187	14550
1041+50	104150	50	81.26	0.00	0.00	161	0	0	14898	334	187	14711
1042+00	104200	50	95.76	0.00	0.00	164	0	0	15062	334	187	14875
1042+50	104250	50	81.95	0.00	0.13	165	0	0	15227	334	187	15040
1043+00	104300	50	133.53	0.00	0.00	200	0	0	15427	334	187	15240
1043+50	104350	50	92.97	0.00	1.08	210	0	1	15637	334	188	15449
1044+00	104400	50	107.10	0.00	0.00	185	0	1	15822	334	190	15632
1044+50	104450	50	97.46	0.00	0.00	189	0	0	16011	334	190	15821
1045+00	104500	50	98.58	0.00	0.00	182	0	0	16193	334	190	16003
1045+50	104550	50	97.94	0.00	0.00	182	0	0	16375	334	190	16185
1046+00	104600	50	106.46	0.00	0.00	189	0	0	16564	334	190	16374
1046+50	104650	50	37.52	58.42	0.00	133	54	0	16697	388	190	16507
1047+00	104700	50	36.49	61.54	0.00	69	111	0	16766	499	190	16576
1047+50	104750	50	37.83	59.82	0.00	69	112	0	16835	611	190	16645
1048+00	104800	50	85.82	0.00	0.00	114	55	0	16949	666	190	16759
1048+50	104850	50	85.86	0.00	0.00	159	0	0	17108	666	190	16918
1049+00	104900	50	84.60	0.00	0.00	158	0	0	17266	666	190	17076
1049+50	104950	50	85.07	0.00	0.00	157	0	0	17423	666	190	17233
1050+00	105000	50	81.05	0.00	0.00	154	0	0	17577	666	190	17387
1050+50	105050	50	98.57	0.00	0.00	166	0	0	17743	666	190	17553
1051+00	105100	50	97.81	0.00	0.00	182	0	0	17925	666	190	17735

STH 50 - STAGE 4C CONTINUES			AREA (SF)			Incremental Vol (CY) (Unadjusted)			Cumulative Vol (CY) Cut 1.00	HazMat Cut 1.00	Expanded Fill 1.2	Mass Ordinate
STATION	Real Station	Distance	Cut	HazMat Cut	Fill	Note 1 Cut	HazMat Cut	Note 3 Fill	Note 1	Note 7	Note 9	Note 10
1051+50	105150	50	97.24	0.00	0.12	181	0	0	18106	666	190	17916
1052+00	105200	50	99.57	0.00	0.00	182	0	0	18288	666	190	18098
1052+50	105250	50	99.87	0.00	0.00	185	0	0	18473	666	190	18283
1053+00	105300	50	103.29	0.00	0.00	188	0	0	18661	666	190	18471
1053+50	105350	50	89.42	0.00	0.00	178	0	0	18839	666	190	18649
1054+00	105400	50	87.91	0.00	0.00	164	0	0	19003	666	190	18813
1054+50	105450	50	86.70	0.00	0.00	162	0	0	19165	666	190	18975
1055+00	105500	50	86.64	0.00	0.00	161	0	0	19326	666	190	19136
1055+50	105550	50	104.84	0.00	0.00	177	0	0	19503	666	190	19313
1056+00	105600	50	109.83	0.00	0.00	199	0	0	19702	666	190	19512
1056+50	105650	50	109.65	0.00	0.00	203	0	0	19905	666	190	19715
1057+00	105700	50	109.22	0.00	0.00	203	0	0	20108	666	190	19918
1057+50	105750	50	109.02	0.00	0.00	202	0	0	20310	666	190	20120
1058+00	105800	50	107.24	0.00	0.00	200	0	0	20510	666	190	20320
1058+50	105850	50	109.48	0.00	0.00	201	0	0	20711	666	190	20521
1059+00	105900	50	109.16	0.00	0.00	202	0	0	20913	666	190	20723
1059+50	105950	50	115.37	0.00	0.00	208	0	0	21121	666	190	20931
1060+00	106000	50	117.98	0.00	0.00	216	0	0	21337	666	190	21147
1060+50	106050	50	113.94	0.00	0.00	215	0	0	21552	666	190	21362
1061+00	106100	50	115.73	0.00	0.00	213	0	0	21765	666	190	21575
1061+50	106150	50	115.87	0.00	0.00	214	0	0	21979	666	190	21789
1062+00	106200	50	188.22	0.00	0.00	282	0	0	22261	666	190	22071
1062+50	106250	50	206.26	0.00	0.00	365	0	0	22626	666	190	22436
1063+00	106300	50	109.08	0.00	16.06	292	0	15	22918	666	208	22710
1063+50	106350	50	116.10	0.00	0.72	208	0	16	23126	666	227	22899
1064+00	106400	50	51.48	0.00	2.51	155	0	3	23281	666	230	23051
1064+50	106450	50	82.04	0.00	1.72	124	0	4	23405	666	235	23170
1065+00	106500	50	83.24	0.00	0.16	153	0	2	23558	666	238	23320
1065+50	106550	50	89.49	0.00	10.05	160	0	9	23718	666	248	23470
1066+00	106600	50	88.79	0.00	14.11	165	0	22	23883	666	275	23608
1066+50	106650	50	90.04	0.00	2.88	166	0	16	24049	666	294	23755
1067+00	106700	50	88.70	0.00	12.10	166	0	14	24215	666	311	23904
1067+50	106750	50	95.50	0.00	3.53	171	0	14	24386	666	328	24058
1068+00	106800	50	103.01	0.00	0.80	184	0	4	24570	666	332	24238
1068+21	106821	21	105.79	0.00	3.02	81	0	1	24651	666	334	24317
					Totals	24,651	666	278				

250TH AVE - STAGE 4C		AREA (SF)		Incremental Vol (CY) (Unadjusted)		Cumulative Vol (CY) Cut 1.00	Expanded Fill 1.2	Mass Ordinate
STATION	Distance	Cut	Fill	Note 1 Cut	Note 3 Fill	Note 1	Note 9	Note 10
10+50	0	97.59	4.01					
10+75	25	121.78	1.67	102	3	102	4	98
10+91	16	105.59	0.32	67	1	208	5	203
			Totals	169	4			

74TH PL - STAGE 4C		AREA (SF)		Incremental Vol (CY) (Unadjusted)		Cumulative Vol (CY) Cut 1.00	Expanded Fill 1.2	Mass Ordinate
STATION	Distance	Cut	Fill	Note 1 Cut	Note 3 Fill	Note 1	Note 9	Note 10
90+50	0	103.20	0.00					
90+70	20	67.53	0.22	63	0	63	0	63
			Totals	63	0			

246TH AVE - STAGE 4C		AREA (SF)		Incremental Vol (CY) (Unadjusted)		Cumulative Vol (CY) Cut 1.00	Expanded Fill 1.2	Mass Ordinate
STATION	Distance	Cut	Fill	Note 1 Cut	Note 3 Fill	Note 1	Note 9	Note 10
40+55	0	111.13	3.97					
40+75	20	114.30	6.53	83	4	83	5	78
40+88	13	117.86	5.11	56	3	201	8	192
41+00	12	124.33	3.47	54	2	325	11	314
			Totals	193	9			

236TH AVE - STAGE 4C		AREA (SF)		Incremental Vol (CY) (Unadjusted)		Cumulative Vol (CY) Cut 1.00	Expanded Fill 1.2	Mass Ordinate
STATION	Distance	Cut	Fill	Note 1 Cut	Note 3 Fill	Note 1	Note 9	Note 10
95+75	0	200.96	1.97					
96+00	25	166.96	1.08	170	1	170	2	168
96+25	25	154.47	0.09	149	1	324	2	322
			Totals	319	2			

243RD AVE - STAGE 4C		AREA (SF)		Incremental Vol (CY) (Unadjusted)		Cumulative Vol (CY) Cut 1.00	Expanded Fill 1.2	Mass Ordinate
STATION	Distance	Cut	Fill	Note 1 Cut	Note 3 Fill	Note 1	Note 9	Note 10
70+60	0	120.48	0.00					
70+85	25	111.68	0.32	107	0	107	0	107
			Totals	107	0			

STH 50 - STAGE 5		AREA (SF)		Incremental Vol (CY) (Unadjusted)			Cumulative Vol (CY) Cut 1.00	HazMat Cut 1.00	Expanded Fill 1.2	Mass Ordinate
STATION	Distance	Cut	Fill	Note 1 Cut	HazMat Cut	Note 3 Fill	Note 1	Note 7	Note 9	Note 10
996+50	0	11.61	0.00							
997+00	50	11.78	0.00	22	0	0	22	0	0	22
997+50	50	11.81	0.00	22	0	0	44	0	0	44
998+00	50	11.83	0.00	22	0	0	66	0	0	66
998+50	50	26.96	0.00	36	0	0	102	0	0	102
			Totals	102	0	0				

STH 50 - STAGE 5		AREA (SF)		Incremental Vol (CY) (Unadjusted)			Cumulative Vol (CY) Cut 1.00	HazMat Cut 1.00	Expanded Fill 1.2	Mass Ordinate
STATION	Distance	Cut	Fill	Note 1 Cut	HazMat Cut	Note 3 Fill	Note 1	Note 7	Note 9	Note 10
999+50	0	60.27	0.00							
1000+00	50	55.63	0.00	107	0	0	107	0	0	107
1000+50	50	56.97	0.00	104	0	0	211	0	0	211
1001+00	50	55.86	0.00	104	0	0	315	0	0	315
1001+50	50	55.64	0.00	103	0	0	418	0	0	418
1002+00	50	56.02	0.00	103	0	0	521	0	0	521
1002+50	50	39.99	0.00	89	0	0	610	0	0	610
			Totals	610	0	0				

STH 50 - STAGE 5		AREA (SF)		Incremental Vol (CY) (Unadjusted)			Cumulative Vol (CY) Cut 1.00	HazMat Cut 1.00	Expanded Fill 1.2	Mass Ordinate
STATION	Distance	Cut	Fill	Note 1 Cut	HazMat Cut	Note 3 Fill	Note 1	Note 7	Note 9	Note 10
1003+50	0	15.89	0.00							
1004+00	50	26.13	0.00	39	0	0	39	0	0	39
1004+50	50	26.65	0.00	49	0	0	88	0	0	88
1005+00	50	26.44	0.00	49	0	0	137	0	0	137
			Totals	137	0	0				

STH 50 - STAGE 5		AREA (SF)		Incremental Vol (CY) (Unadjusted)			Cumulative Vol (CY) Cut 1.00	HazMat Cut 1.00	Expanded Fill 1.2	Mass Ordinate
STATION	Distance	Cut	Fill	Note 1 Cut	HazMat Cut	Note 3 Fill	Note 1	Note 7	Note 9	Note 10
1006+50	0	26.29	0.00							
1007+00	50	26.54	0.00	49	0	0	49	0	0	49
1007+50	50	26.67	0.00	49	0	0	98	0	0	98
1008+00	50	26.95	0.00	50	0	0	148	0	0	148
1008+50	50	26.62	0.00	50	0	0	198	0	0	198
1009+00	50	26.65	0.00	49	0	0	247	0	0	247
1009+50	50	26.65	0.00	49	0	0	296	0	0	296
1010+00	50	26.67	0.00	49	0	0	345	0	0	345
1010+50	50	26.54	0.00	49	0	0	394	0	0	394
1011+00	50	26.59	0.00	49	0	0	443	0	0	443
			Totals	443	0	0				

STH 50 - STAGE 5		AREA (SF)		Incremental Vol (CY) (Unadjusted)			Cumulative Vol (CY) Cut 1.00	HazMat Cut 1.00	Expanded Fill 1.2	Mass Ordinate
STATION	Distance	Cut	Fill	Note 1 Cut	HazMat Cut	Note 3 Fill	Note 1	Note 7	Note 9	Note 10
1018+00	0	34.80	0.00							
1018+50	50	28.89	0.00	59	0	0	59	0	0	59
1019+00	50	32.11	0.00	56	0	0	115	0	0	115
1019+50	50	33.09	0.00	60	0	0	175	0	0	175
1020+00	50	32.68	0.00	61	0	0	236	0	0	236
1020+50	50	32.85	0.00	61	0	0	297	0	0	297
1021+00	50	30.95	0.00	59	0	0	356	0	0	356
			Totals	356	0	0				

STH 50 - STAGE 5		AREA (SF)		Incremental Vol (CY) (Unadjusted)			Cumulative Vol (CY) Cut 1.00	HazMat Cut 1.00	Expanded Fill 1.2	Mass Ordinate
STATION	Distance	Cut	Fill	Note 1 Cut	HazMat Cut	Note 3 Fill	Note 1	Note 7	Note 9	Note 10
1026+00	0	34.02	0.00							
1026+50	50	39.57	0.00	68	0	0	68	0	0	68
1027+00	50	40.05	0.00	74	0	0	142	0	0	142
1027+50	50	37.55	0.00	72	0	0	214	0	0	214
			Totals	214	0	0				

STH 50 - STAGE 5		AREA (SF)		Incremental Vol (CY) (Unadjusted)			Cumulative Vol (CY) Cut 1.00	HazMat Cut 1.00	Expanded Fill 1.2	Mass Ordinate
STATION	Distance	Cut	Fill	Note 1 Cut	HazMat Cut	Note 3 Fill	Note 1	Note 7	Note 9	Note 10
1031+00	0	37.38	0.00							
1031+50	50	19.39	0.00	53	0	0	53	0	0	53
1032+00	50	20.16	0.00	37	0	0	90	0	0	90
1032+50	50	20.76	0.00	38	0	0	128	0	0	128
1033+00	50	21.31	0.00	39	0	0	167	0	0	167
1033+50	50	23.01	0.00	41	0	0	208	0	0	208
1034+00	50	20.99	0.00	41	0	0	249	0	0	249
1034+50	50	47.27	0.00	63	0	0	312	0	0	312
1035+00	50	50.97	0.00	91	0	0	403	0	0	403
1035+50	50	51.92	0.00	95	0	0	498	0	0	498
1036+00	50	53.84	0.00	98	0	0	596	0	0	596
1036+50	50	55.77	0.00	101	0	0	697	0	0	697
1037+00	50	56.88	0.00	104	0	0	801	0	0	801
1037+50	50	56.84	0.00	105	0	0	906	0	0	906
1038+00	50	53.60	0.00	102	0	0	1008	0	0	1008
1038+50	50	19.39	2.02	68	0	2	1076	0	2	1074
1039+00	50	23.70	6.59	40	16	8	1116	16	12	1104
1039+50	50	36.88	0.00	56	12	6	1172	28	19	1153
			Totals	1,172	28	16				

STH 50 - STAGE 5		AREA (SF)		Incremental Vol (CY) (Unadjusted)			Cumulative Vol (CY) Cut 1.00	HazMat Cut 1.00	Expanded Fill 1.2	Mass Ordinate
STATION	Distance	Cut	Fill	Note 1 Cut	HazMat Cut	Note 3 Fill	Note 1	Note 7	Note 9	Note 10
1047+50	0	45.15	0.00							
1048+00	50	48.12	0.00	86	0	0	86	0	0	86
1048+50	50	50.61	0.00	91	0	0	177	0	0	177
1049+00	50	51.45	0.00	95	0	0	272	0	0	272
1049+50	50	51.00	0.00	95	0	0	367	0	0	367
1050+00	50	31.30	0.00	76	0	0	443	0	0	443
			Totals	443	0	0				
			STAGE 5 TOTALS =	3,477	28	16				

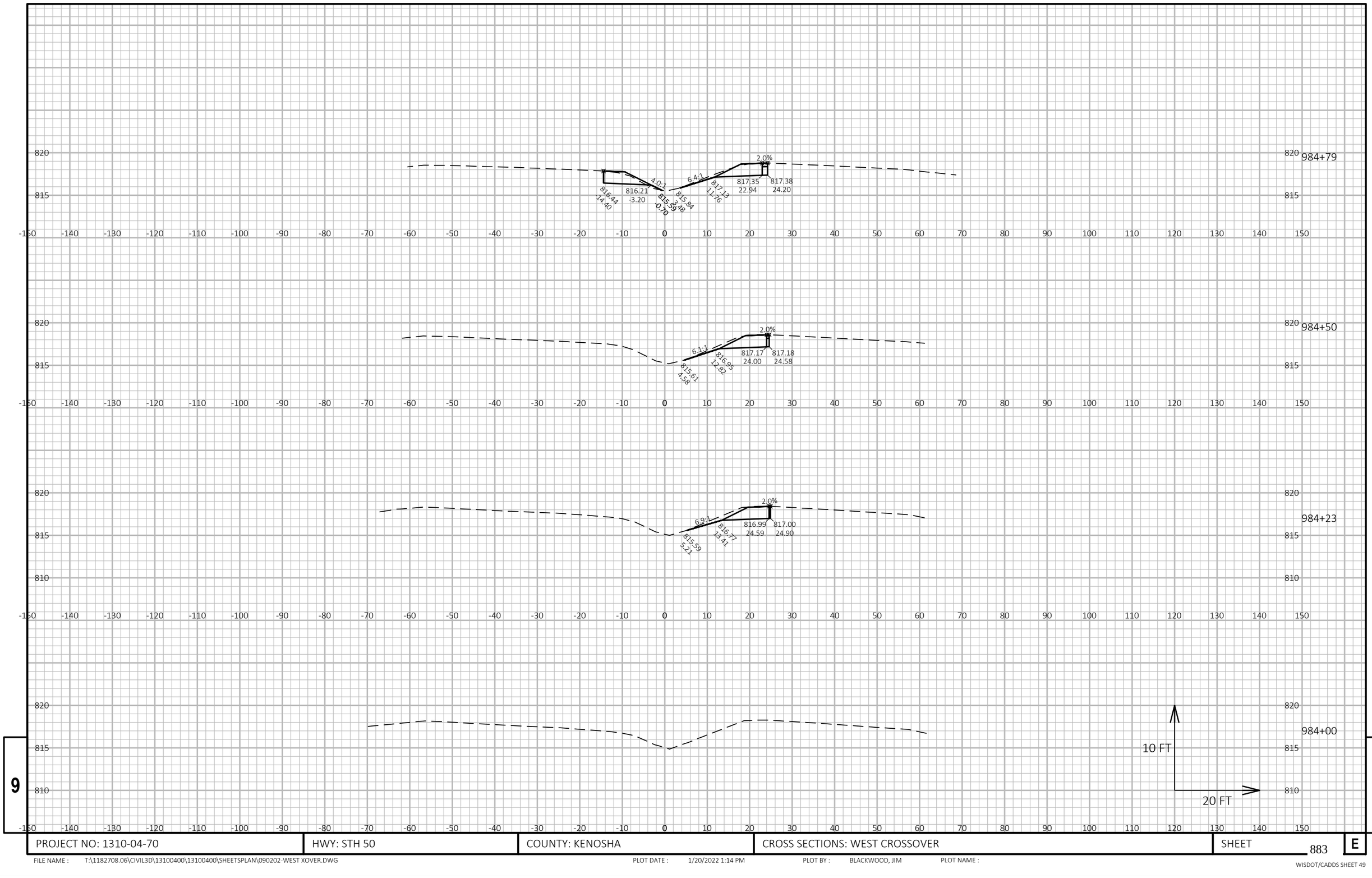

9

9

PROJECT NO: 1310-04-70	HWY: STH 50	COUNTY: KENOSHA	CROSS SECTIONS: WEST CROSSOVER	SHEET 883	E

FILE NAME : T:\1182708.06\CIVIL3D\13100400\13100400\SHEETSPLAN\090202-WEST XOVER.DWG PLOT DATE : 1/20/2022 1:14 PM PLOT BY : BLACKWOOD, JIM PLOT NAME :

WISDOT/CADDS SHEET 49

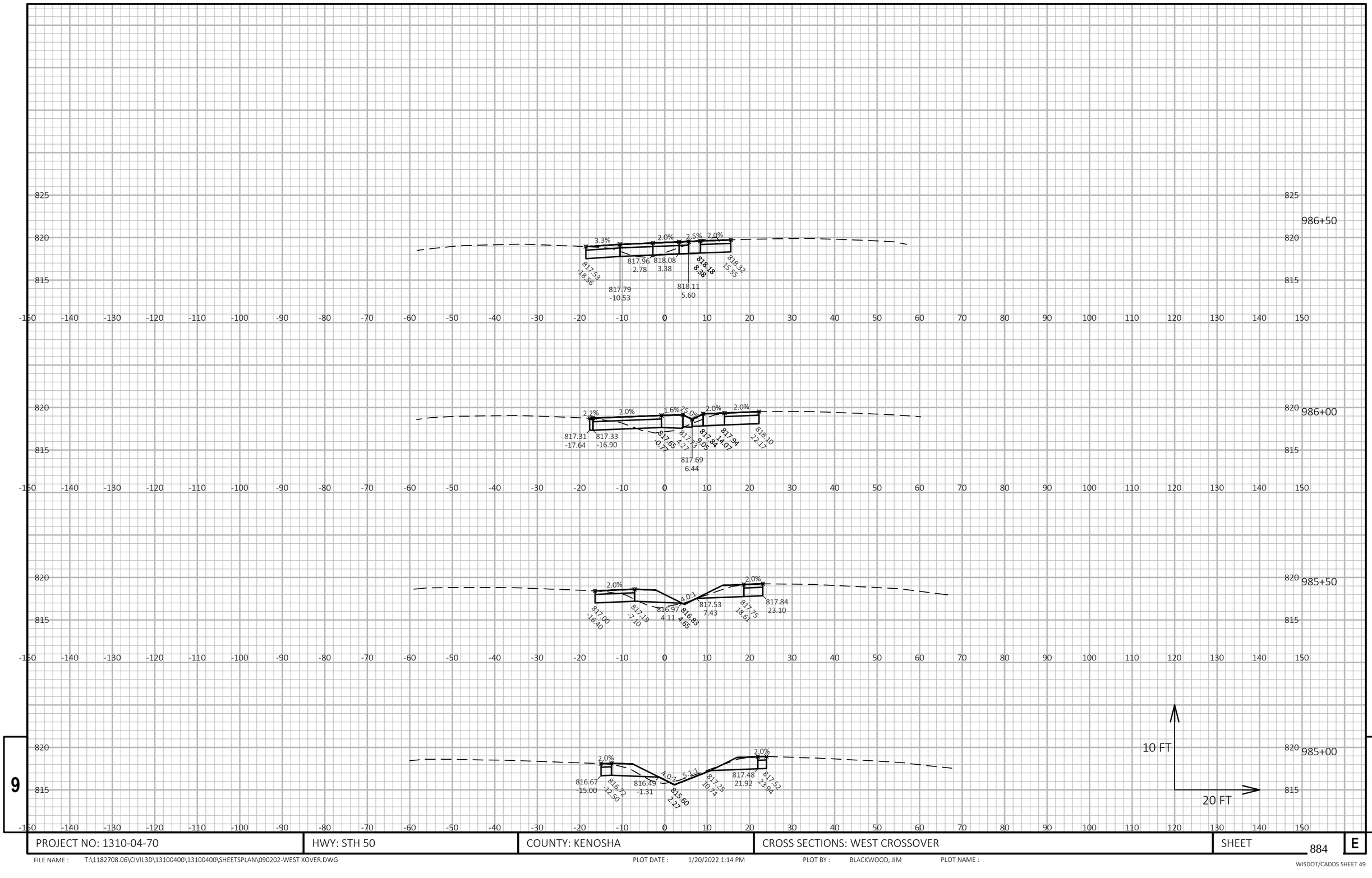

9

9

PROJECT NO: 1310-04-70	HWY: STH 50	COUNTY: KENOSHA	CROSS SECTIONS: WEST CROSSOVER	SHEET 884	E

FILE NAME : T:\1182708.06\CIVIL3D\13100400\13100400\SHEETSPLAN\090202-WEST XOVER.DWG PLOT DATE : 1/20/2022 1:14 PM PLOT BY : BLACKWOOD, JIM PLOT NAME :

WISDOT/CADDS SHEET 49

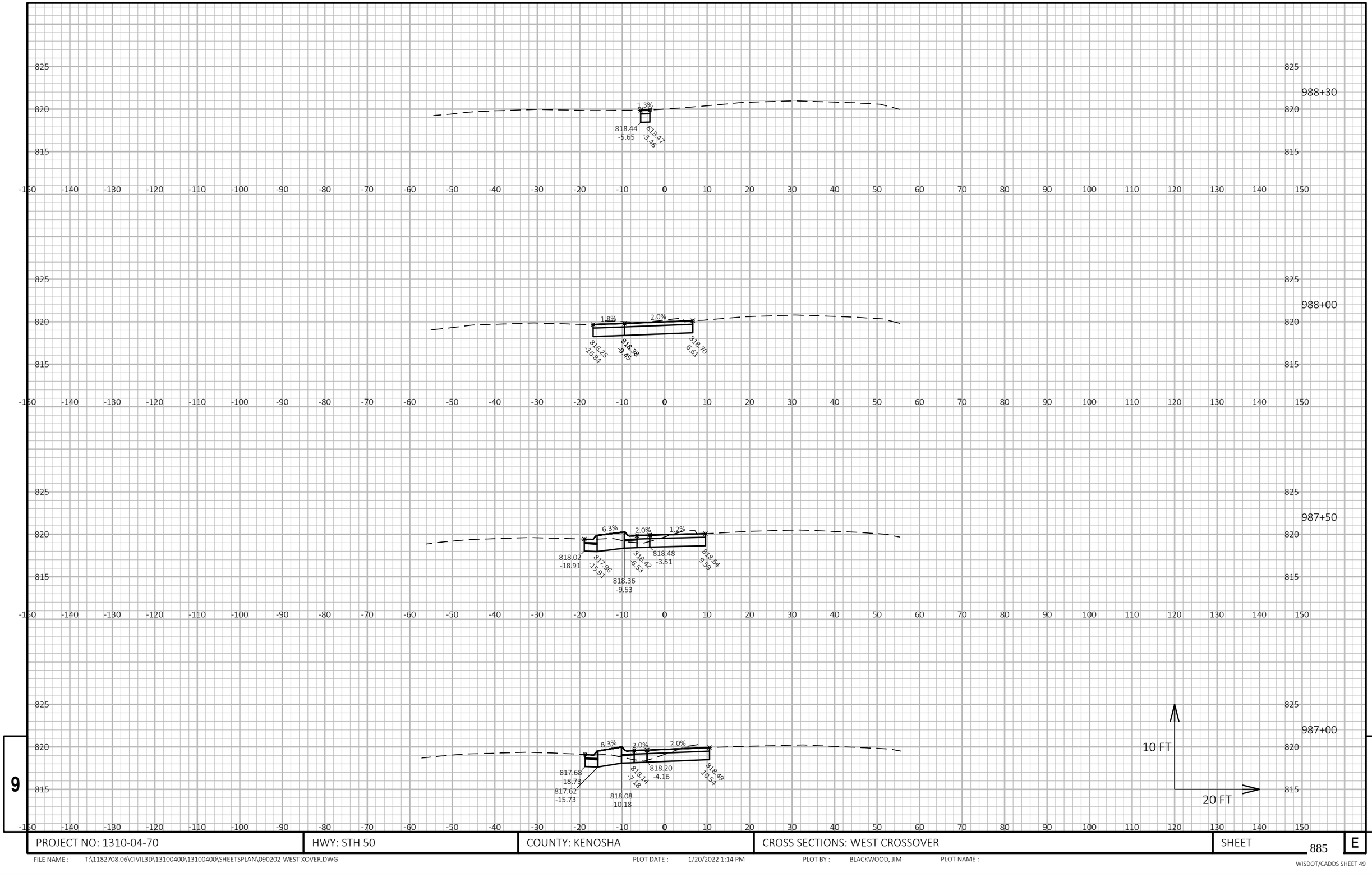

9

9

PROJECT NO: 1310-04-70	HWY: STH 50	COUNTY: KENOSHA	CROSS SECTIONS: WEST CROSSOVER	SHEET 885	E

FILE NAME : T:\1182708.06\CIVIL3D\13100400\13100400\SHEETSPLAN\090202-WEST XOVER.DWG PLOT DATE : 1/20/2022 1:14 PM PLOT BY : BLACKWOOD, JIM PLOT NAME :

WISDOT/CADDS SHEET 49

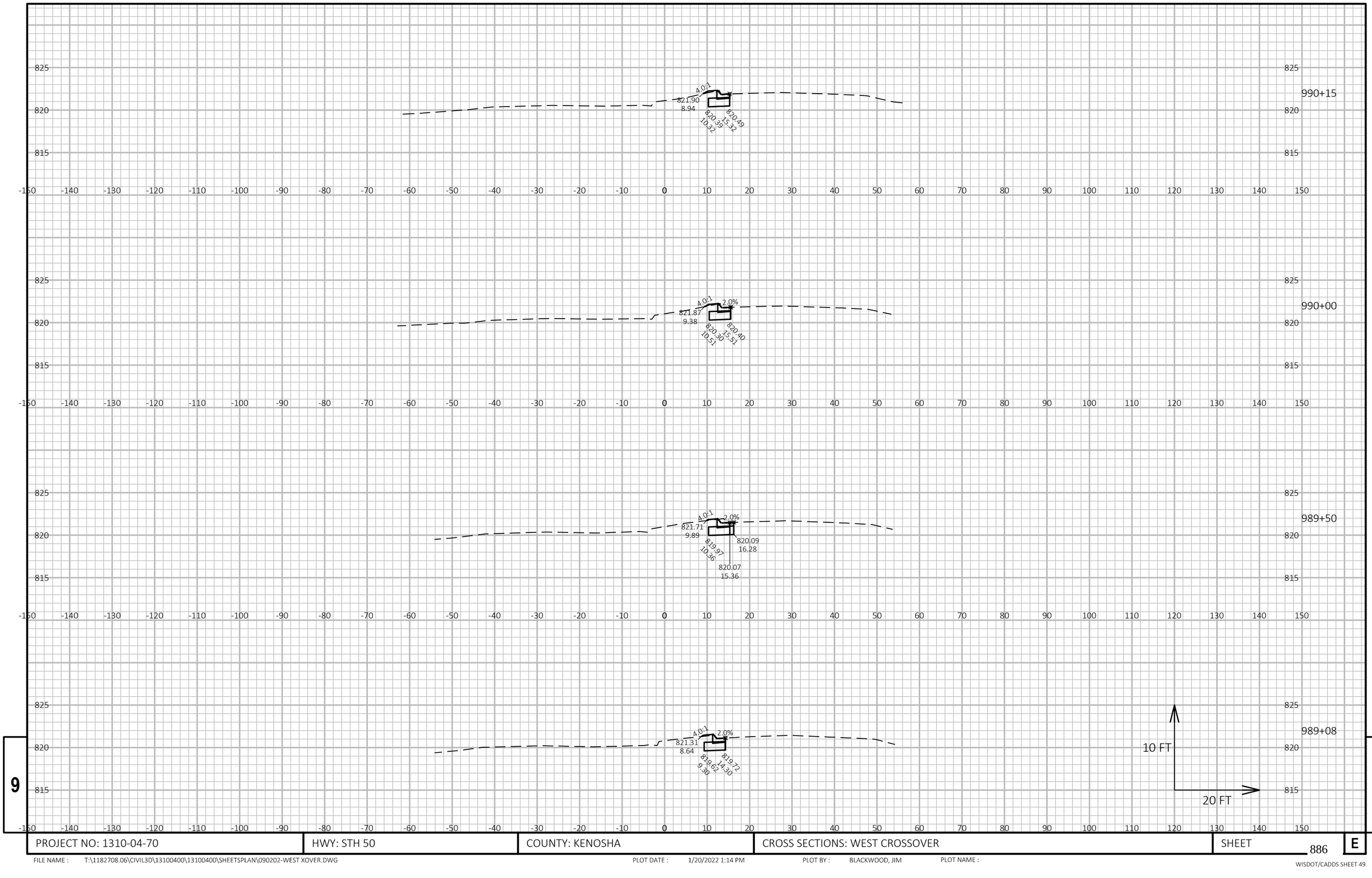

9

9

PROJECT NO: 1310-04-70	HWY: STH 50	COUNTY: KENOSHA	CROSS SECTIONS: WEST CROSSOVER	SHEET 886	E

FILE NAME : T:\1182708.06\CIVIL3D\13100400\13100400\SHEETSPLAN\090202-WEST XOVER.DWG PLOT DATE : 1/20/2022 1:14 PM PLOT BY : BLACKWOOD, JIM PLOT NAME :

WISDOT/CADDS SHEET 49

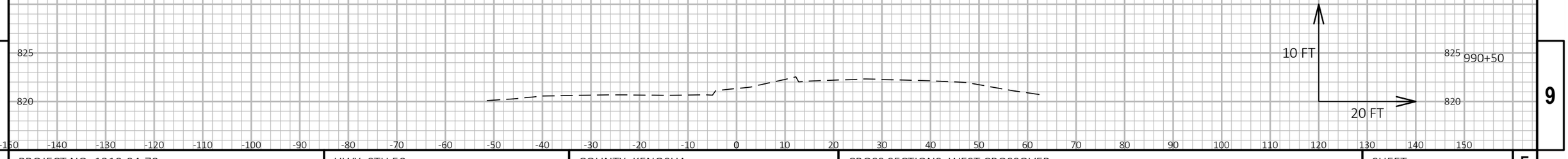

9

9

PROJECT NO: 1310-04-70	HWY: STH 50	COUNTY: KENOSHA	CROSS SECTIONS: WEST CROSSOVER	SHEET 887	E

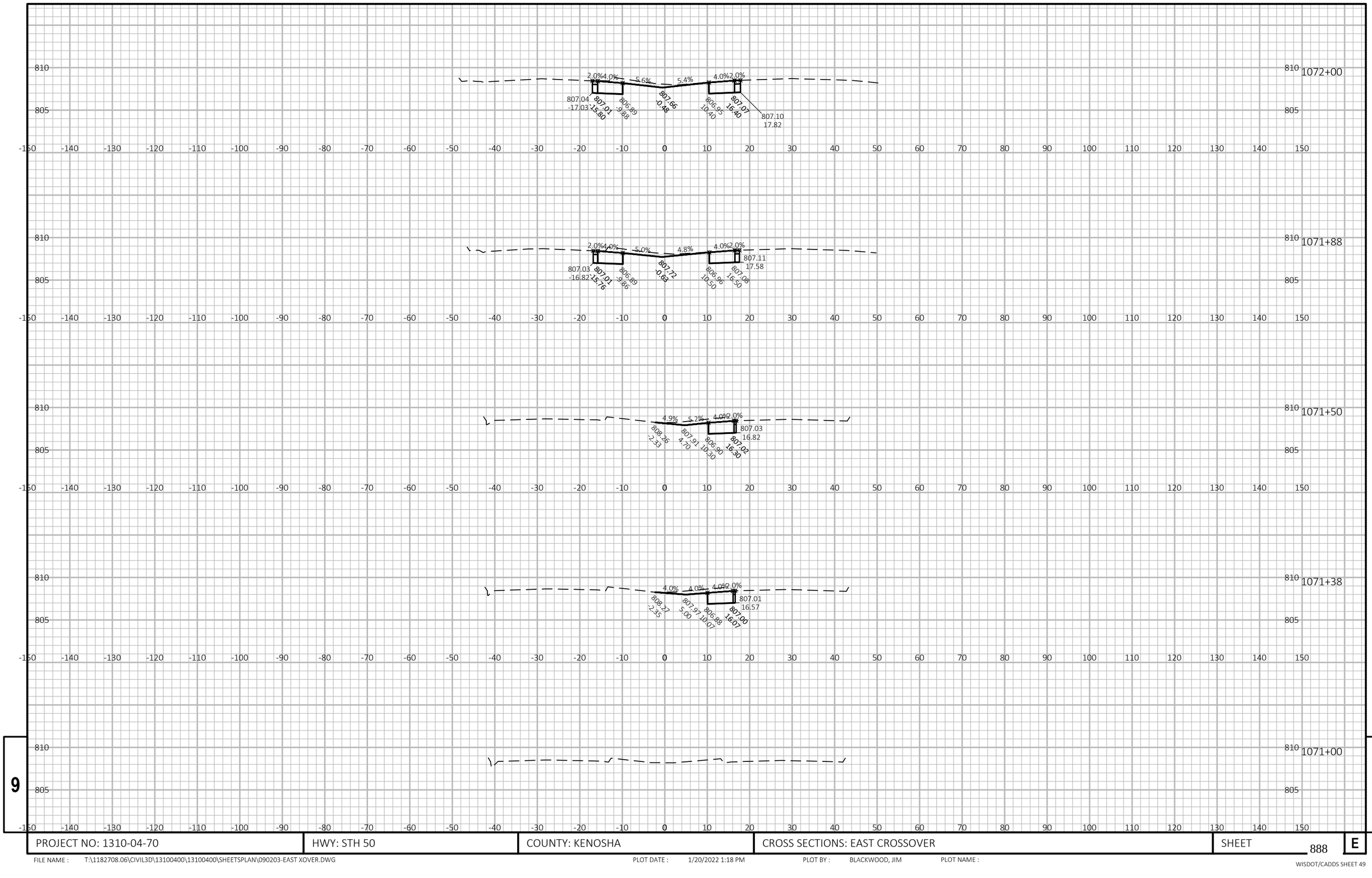

9

9

PROJECT NO: 1310-04-70	HWY: STH 50	COUNTY: KENOSHA	CROSS SECTIONS: EAST CROSSOVER	SHEET 888	E

FILE NAME : T:\1182708.06\CIVIL3D\13100400\13100400\SHEETSPLAN\090203-EAST XOVER.DWG PLOT DATE : 1/20/2022 1:18 PM PLOT BY : BLACKWOOD, JIM PLOT NAME :

WISDOT/CADDS SHEET 49

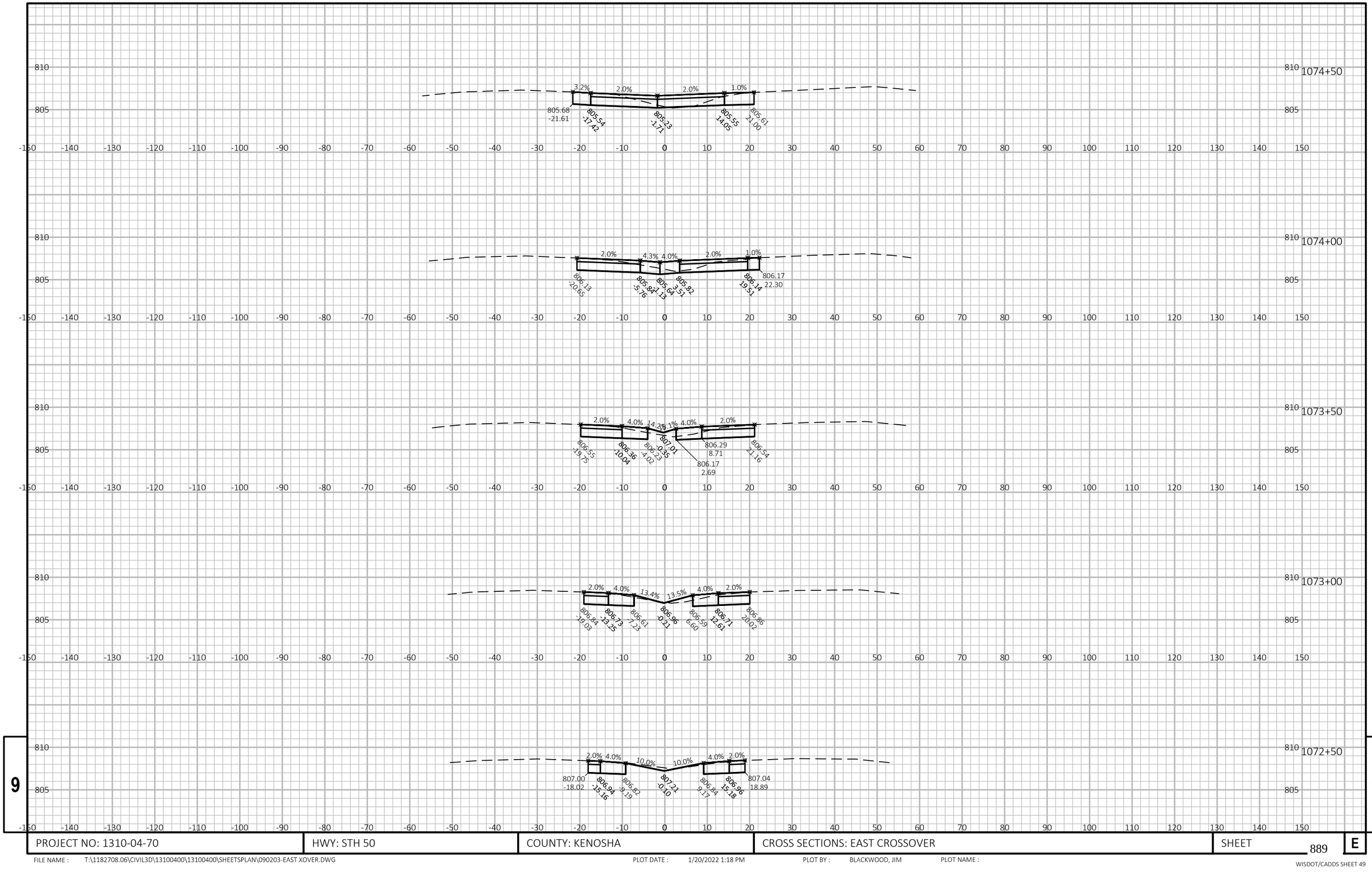

9

9

PROJECT NO: 1310-04-70	HWY: STH 50	COUNTY: KENOSHA	CROSS SECTIONS: EAST CROSSOVER	SHEET 889	E

FILE NAME : T:\1182708.06\CIVIL3D\13100400\13100400\SHEETSPLAN\090203-EAST XOVER.DWG PLOT DATE : 1/20/2022 1:18 PM PLOT BY : BLACKWOOD, JIM PLOT NAME :

WISDOT/CADDS SHEET 49

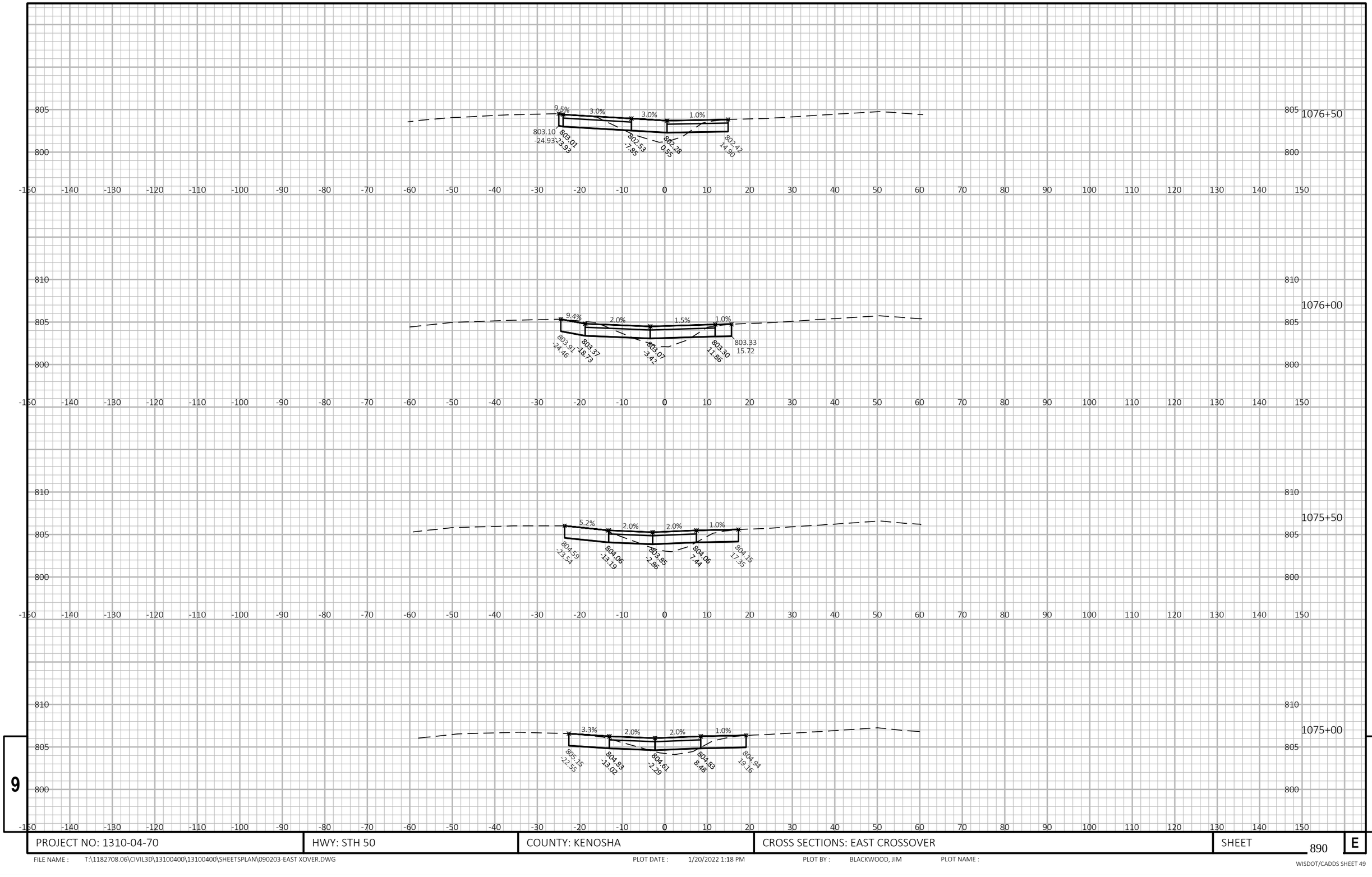

9

9

PROJECT NO: 1310-04-70	HWY: STH 50	COUNTY: KENOSHA	CROSS SECTIONS: EAST CROSSOVER	SHEET 890	E

FILE NAME : T:\1182708.06\CIVIL3D\13100400\13100400\SHEETSPLAN\090203-EAST XOVER.DWG PLOT DATE : 1/20/2022 1:18 PM PLOT BY : BLACKWOOD, JIM PLOT NAME :

WISDOT/CADDS SHEET 49

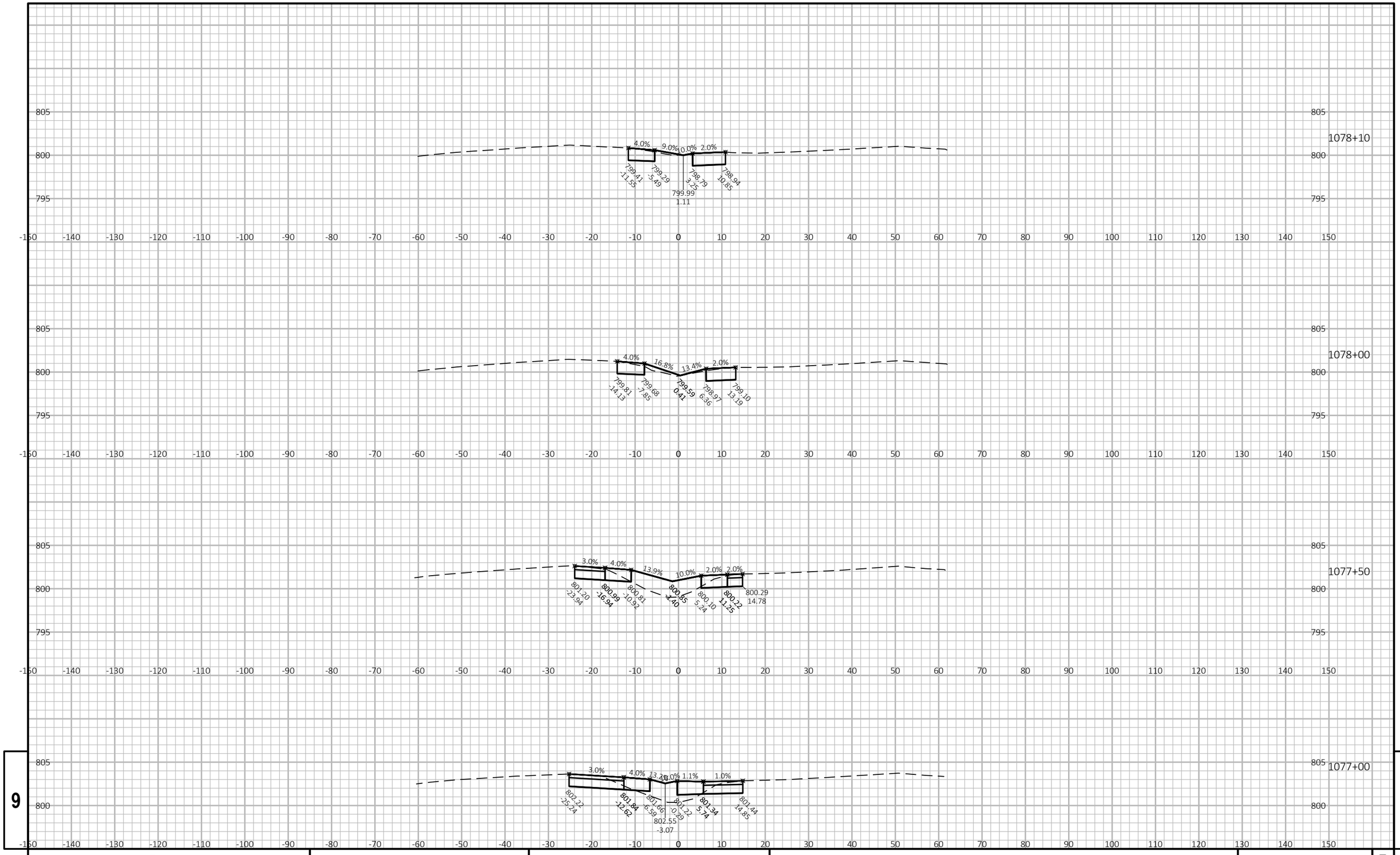

9

9

PROJECT NO: 1310-04-70	HWY: STH 50	COUNTY: KENOSHA	CROSS SECTIONS: EAST CROSSOVER	SHEET 891	E

FILE NAME : T:\1182708.06\CIVIL3D\13100400\13100400\SHEETSPLAN\090203-EAST XOVER.DWG PLOT DATE : 1/20/2022 1:18 PM PLOT BY : BLACKWOOD, JIM PLOT NAME :

WISDOT/CADDS SHEET 49

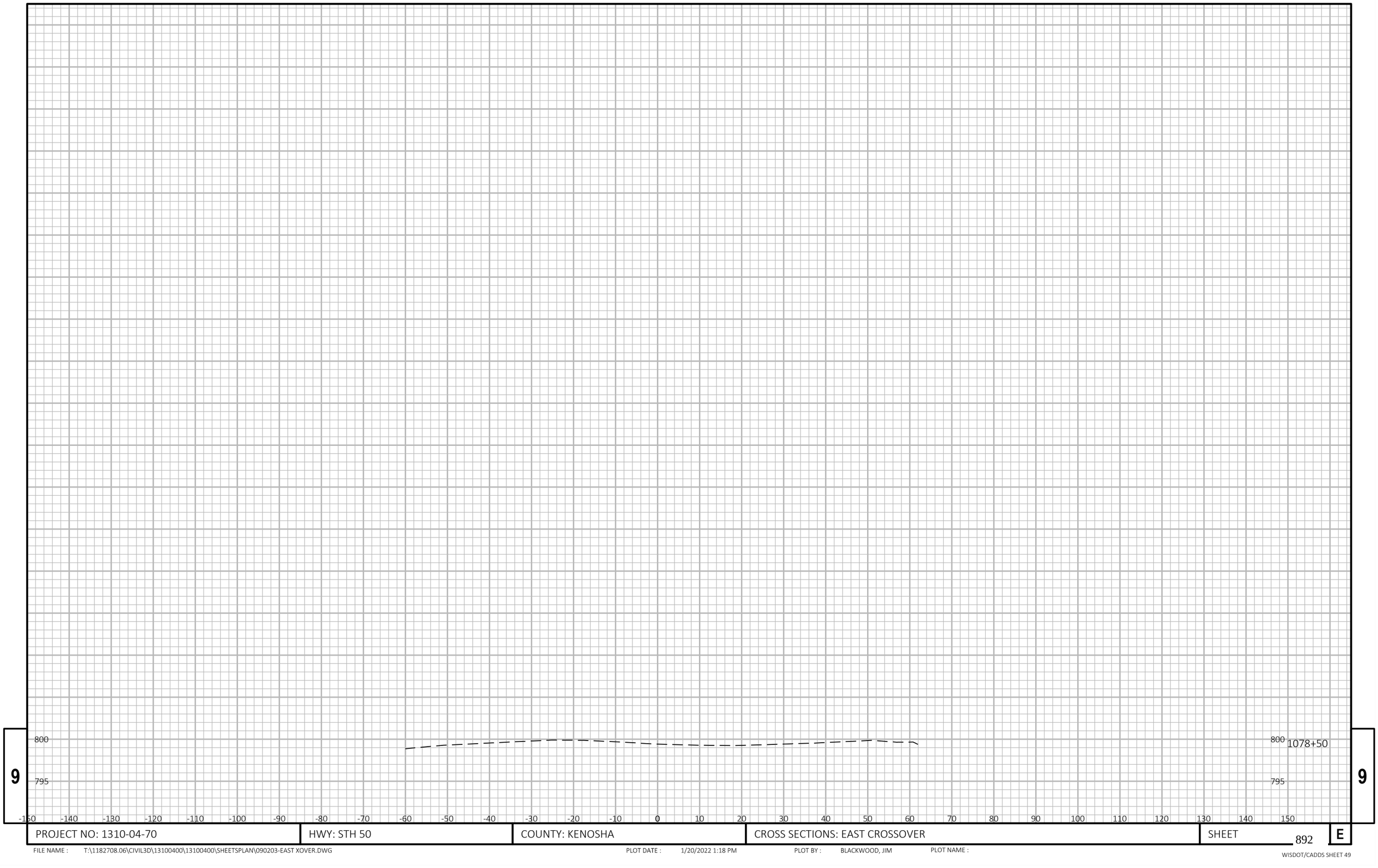

9

9

PROJECT NO: 1310-04-70	HWY: STH 50	COUNTY: KENOSHA	CROSS SECTIONS: EAST CROSSOVER	SHEET 892	E

FILE NAME : T:\1182708.06\CIVIL3D\13100400\13100400\SHEETSPLAN\090203-EAST XOVER.DWG PLOT DATE : 1/20/2022 1:18 PM PLOT BY : BLACKWOOD, JIM PLOT NAME :

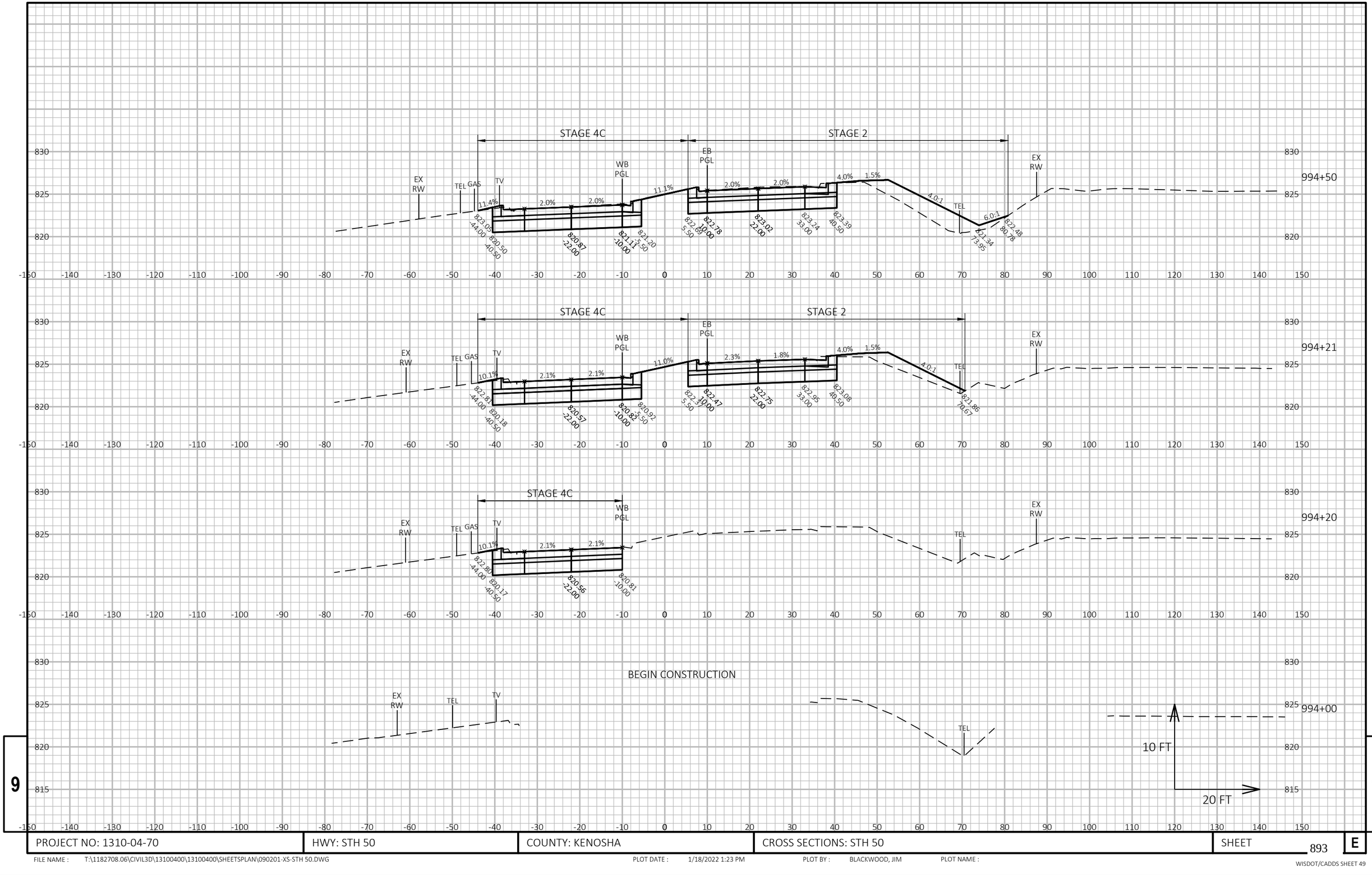

PROJECT NO: 1310-04-70	HWY: STH 50	COUNTY: KENOSHA	CROSS SECTIONS: STH 50	SHEET 893	E

FILE NAME : T:\1182708.06\CIVIL3D\13100400\13100400\SHEETSPLAN\090201-XS-STH 50.DWG PLOT DATE : 1/18/2022 1:23 PM PLOT BY : BLACKWOOD, JIM PLOT NAME :

WISDOT/CADDS SHEET 49

PROJECT NO: 1310-04-70	HWY: STH 50	COUNTY: KENOSHA	CROSS SECTIONS: STH 50	SHEET 894	E

FILE NAME : T:\1182708.06\CIVIL3D\13100400\13100400\SHEETSPLAN\090201-XS-STH 50.DWG PLOT DATE : 1/18/2022 1:23 PM PLOT BY : BLACKWOOD, JIM PLOT NAME :

WISDOT/CADDS SHEET 49

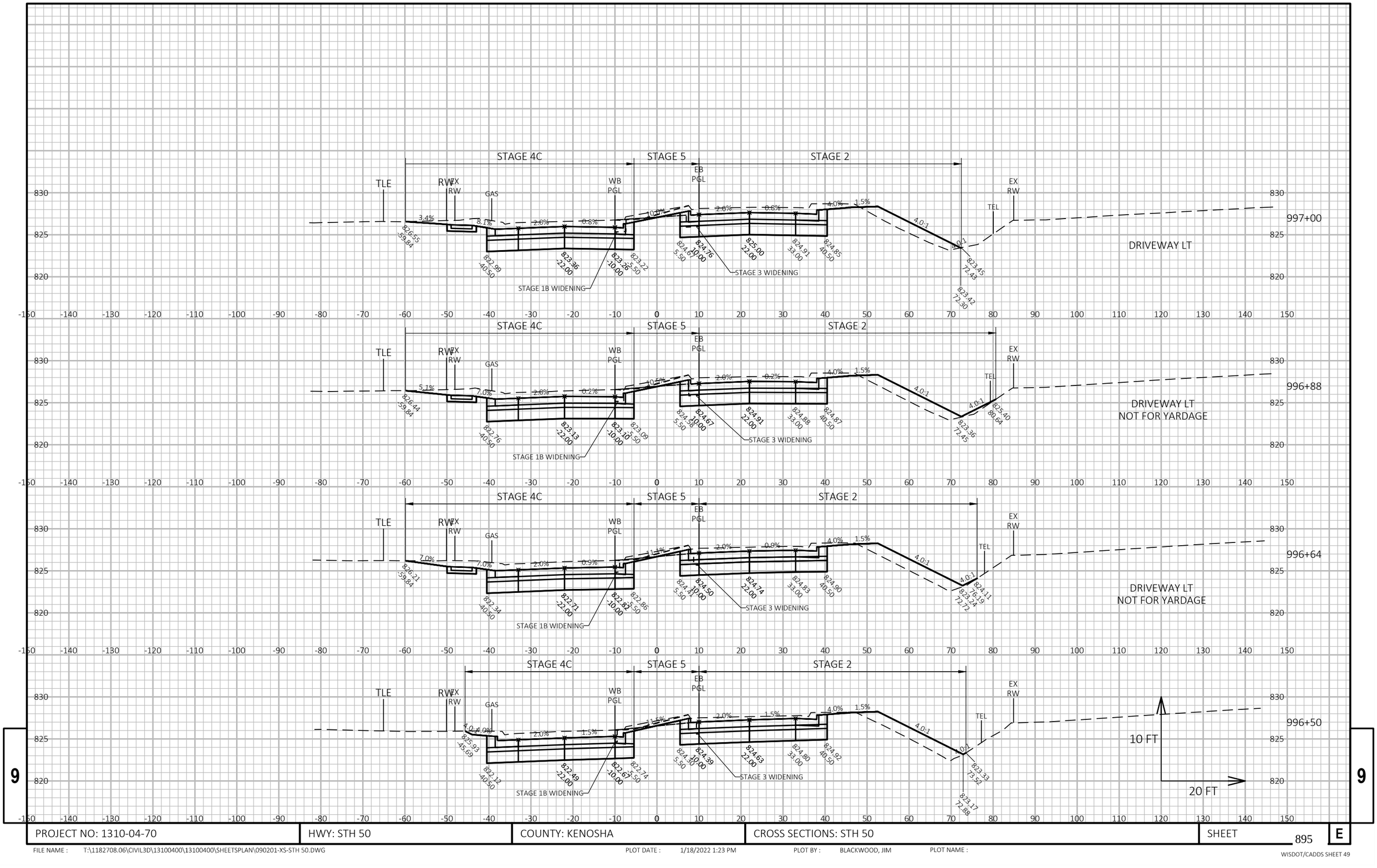

PROJECT NO: 1310-04-70	HWY: STH 50	COUNTY: KENOSHA	CROSS SECTIONS: STH 50	SHEET 895	E

FILE NAME : T:\1182708.06\CIVIL3D\13100400\13100400\SHEETSPLAN\090201-XS-STH 50.DWG PLOT DATE : 1/18/2022 1:23 PM PLOT BY : BLACKWOOD, JIM PLOT NAME :

WISDOT/CADDS SHEET 49

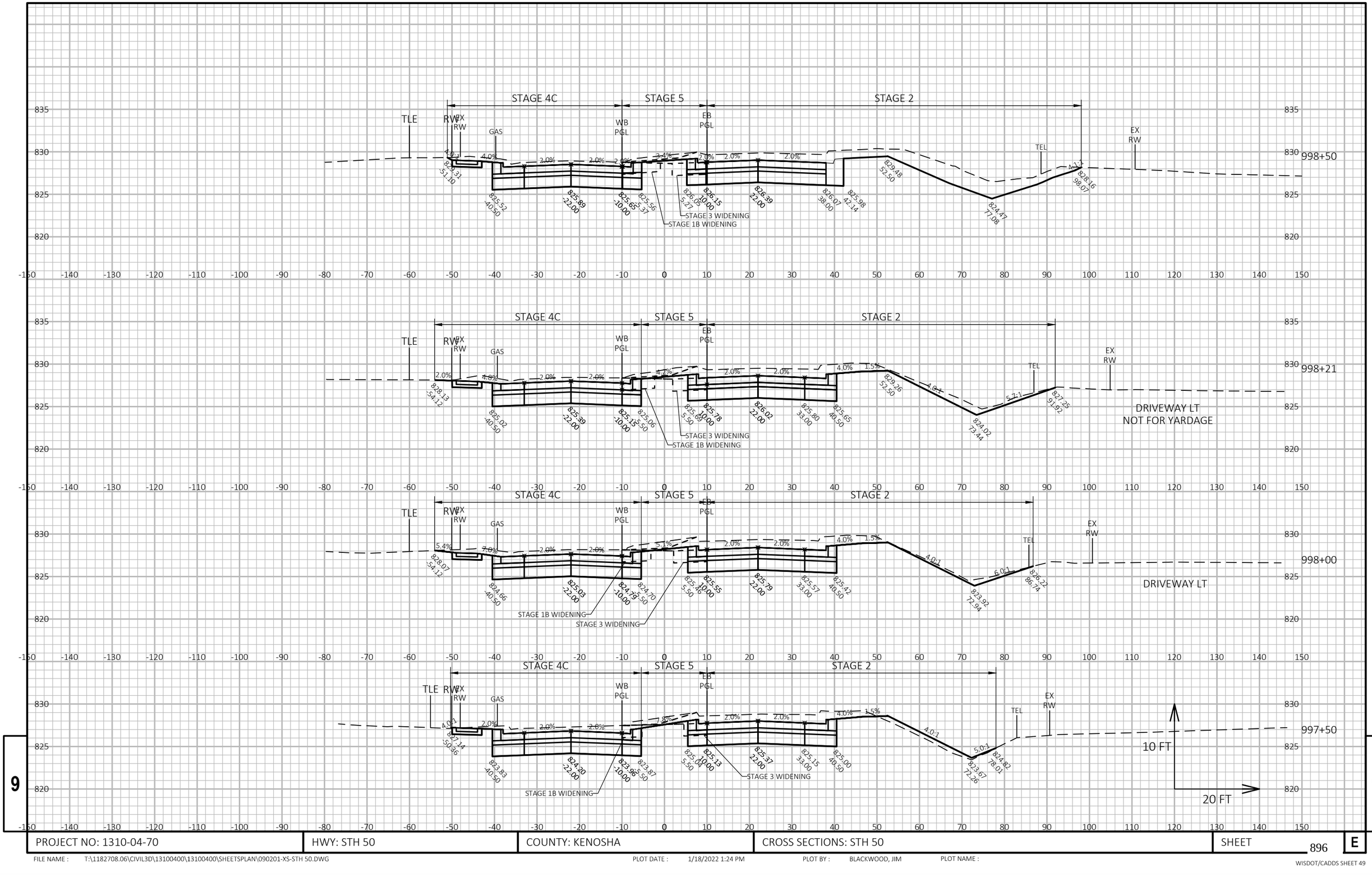

PROJECT NO: 1310-04-70	HWY: STH 50	COUNTY: KENOSHA	CROSS SECTIONS: STH 50	SHEET 896 E

FILE NAME : T:\1182708.06\CIVIL3D\13100400\13100400\SHEETSPLAN\090201-XS-STH 50.DWG PLOT DATE : 1/18/2022 1:24 PM PLOT BY : BLACKWOOD, JIM PLOT NAME :

WISDOT/CADDS SHEET 49

9

9

PROJECT NO: 1310-04-70	HWY: STH 50	COUNTY: KENOSHA	CROSS SECTIONS: STH 50	SHEET 897	E

FILE NAME : T:\1182708.06\CIVIL3D\13100400\13100400\SHEETSPLAN\090201-XS-STH 50.DWG PLOT DATE : 1/18/2022 1:24 PM PLOT BY : BLACKWOOD, JIM PLOT NAME :

WISDOT/CADDS SHEET 49

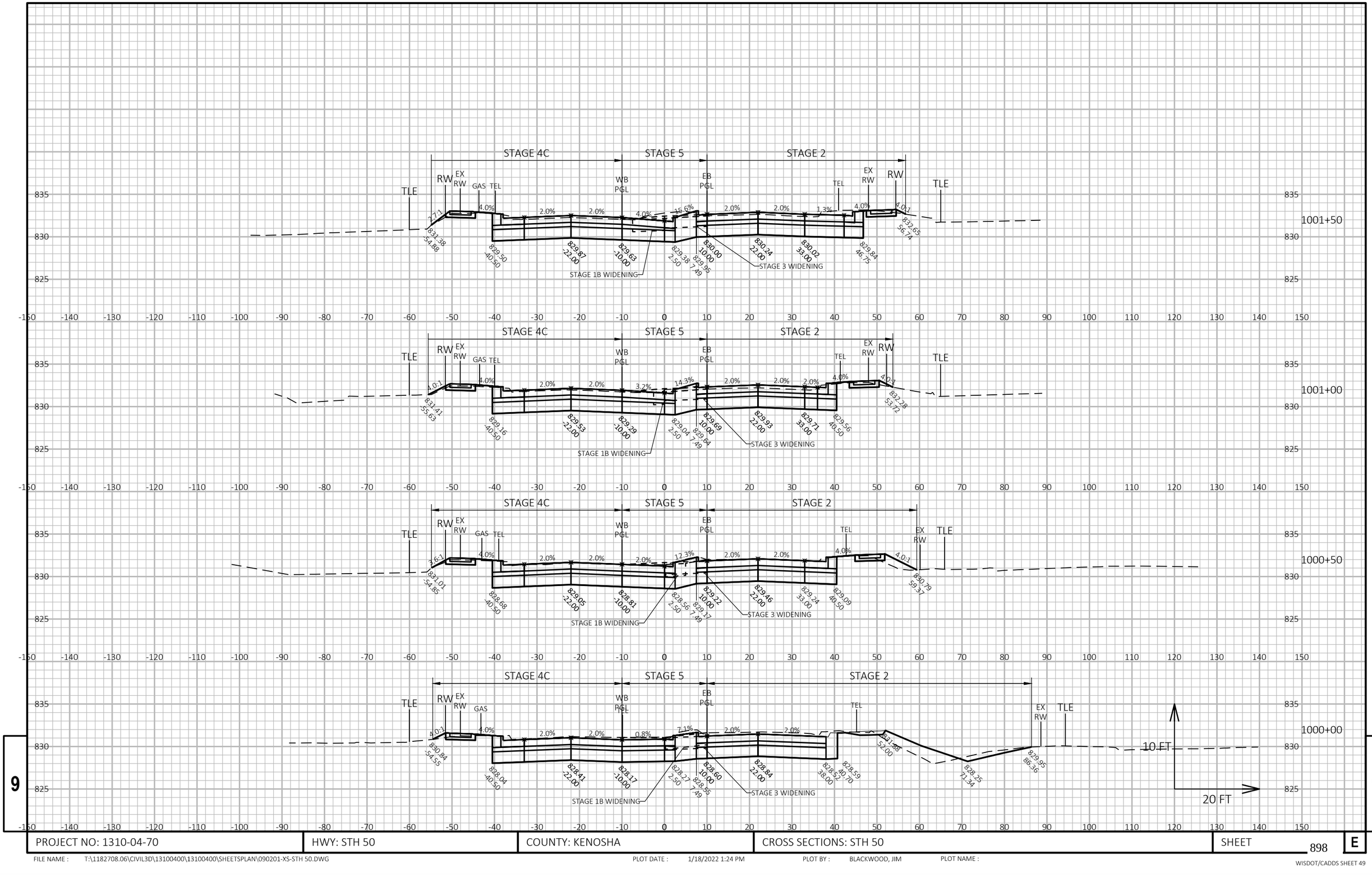

PROJECT NO: 1310-04-70	HWY: STH 50	COUNTY: KENOSHA	CROSS SECTIONS: STH 50	SHEET 898	E

FILE NAME : T:\1182708.06\CIVIL3D\13100400\13100400\SHEETSPLAN\090201-XS-STH 50.DWG PLOT DATE : 1/18/2022 1:24 PM PLOT BY : BLACKWOOD, JIM PLOT NAME :

WISDOT/CADDS SHEET 49

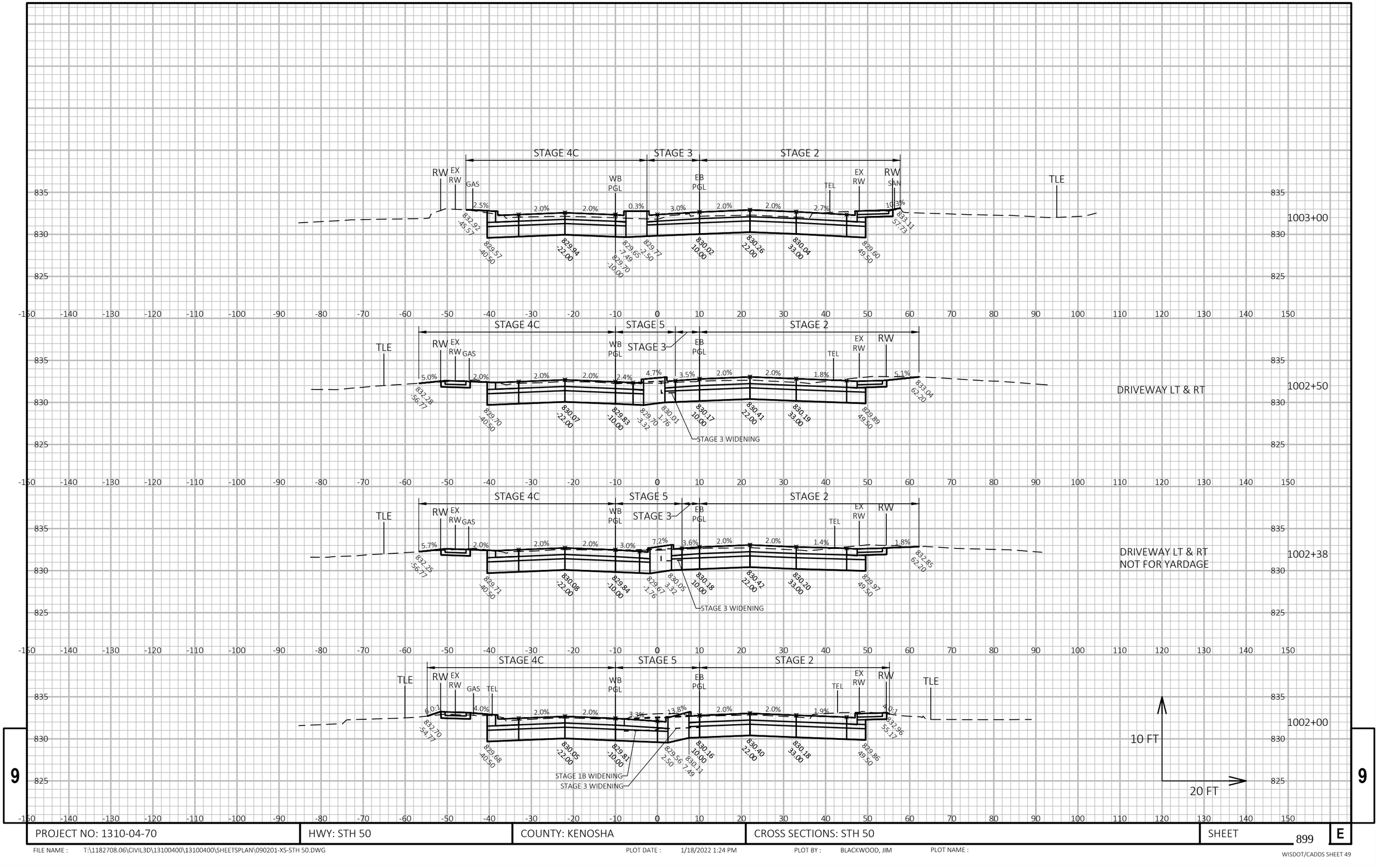

9

9

PROJECT NO: 1310-04-70	HWY: STH 50	COUNTY: KENOSHA	CROSS SECTIONS: STH 50	SHEET 899	E

FILE NAME : T:\1182708.06\CIVIL3D\13100400\13100400\SHEETSPLAN\090201-XS-STH 50.DWG PLOT DATE : 1/18/2022 1:24 PM PLOT BY : BLACKWOOD, JIM PLOT NAME :

WISDOT/CADDS SHEET 49

PROJECT NO: 1310-04-70	HWY: STH 50	COUNTY: KENOSHA	CROSS SECTIONS: STH 50	SHEET 900 E

FILE NAME : T:\1182708.06\CIVIL3D\13100400\13100400\SHEETSPLAN\090201-XS-STH 50.DWG PLOT DATE : 1/18/2022 1:24 PM PLOT BY : BLACKWOOD, JIM PLOT NAME :

WISDOT/CADDS SHEET 49

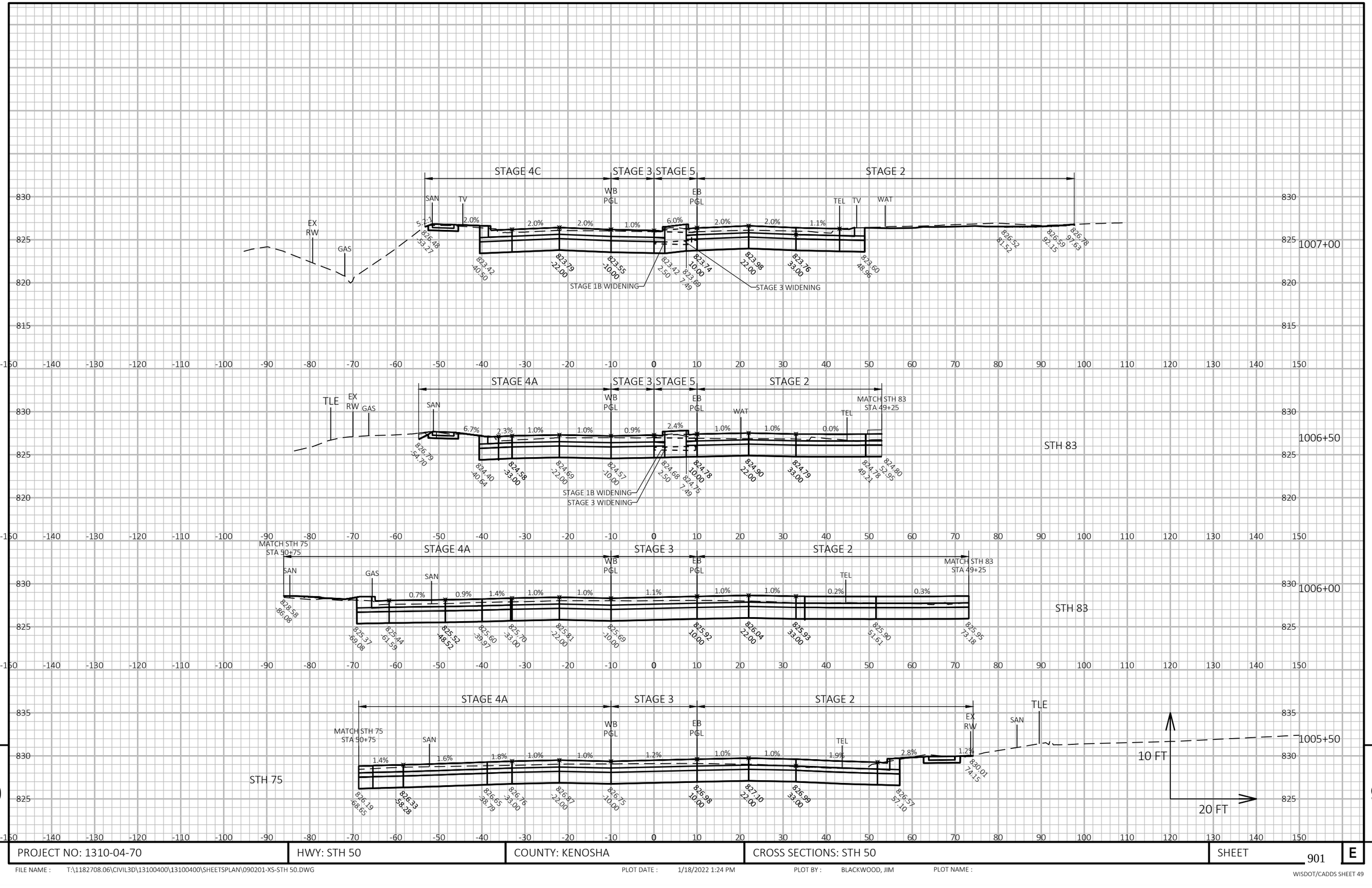

PROJECT NO: 1310-04-70	HWY: STH 50	COUNTY: KENOSHA	CROSS SECTIONS: STH 50	SHEET 901 E

FILE NAME : T:\1182708.06\CIVIL3D\13100400\13100400\SHEETSPLAN\090201-XS-STH 50.DWG PLOT DATE : 1/18/2022 1:24 PM PLOT BY : BLACKWOOD, JIM PLOT NAME :

WISDOT/CADDS SHEET 49

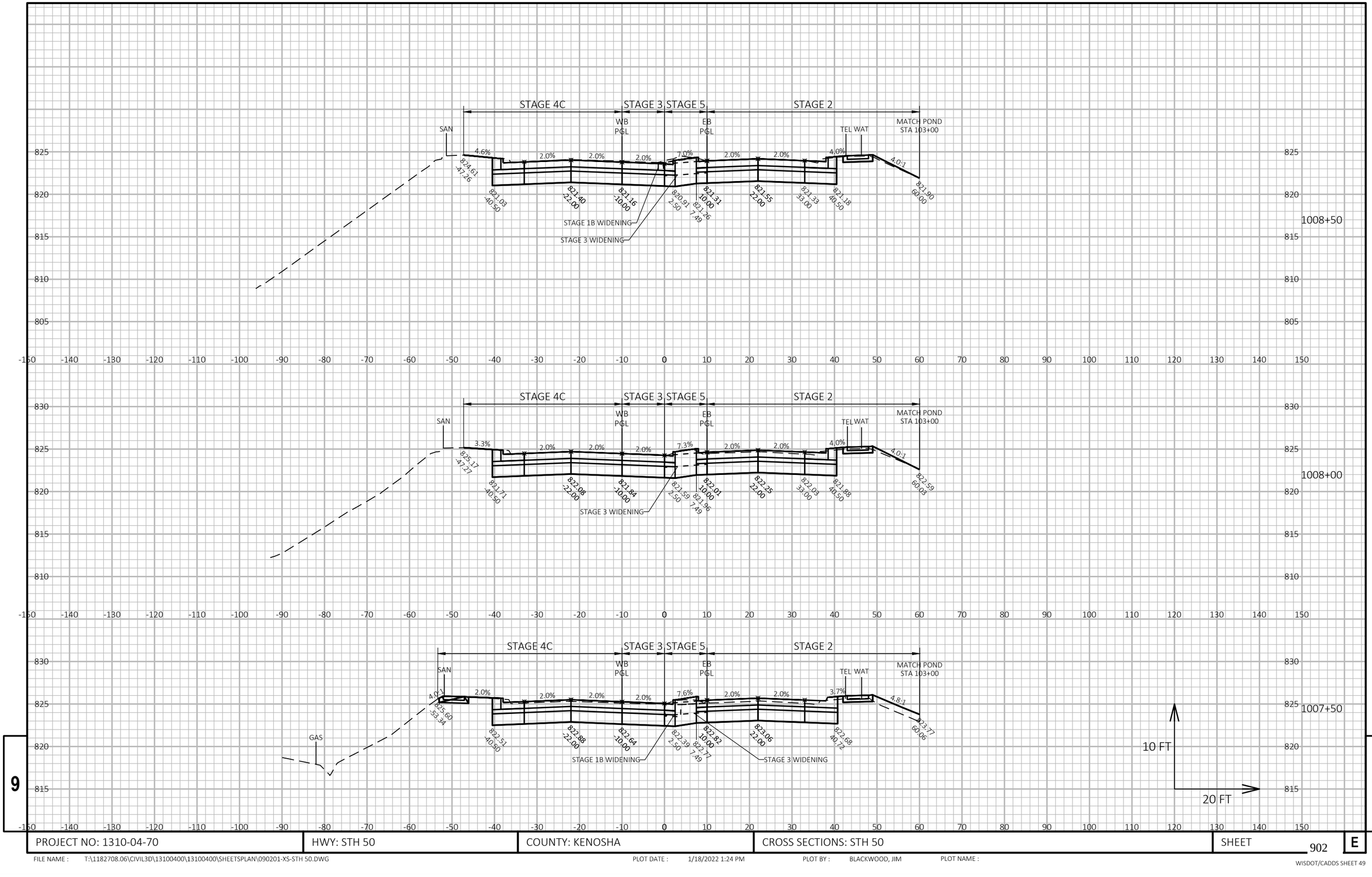

9

9

PROJECT NO: 1310-04-70	HWY: STH 50	COUNTY: KENOSHA	CROSS SECTIONS: STH 50	SHEET 902	E

FILE NAME : T:\1182708.06\CIVIL3D\13100400\13100400\SHEETSPLAN\090201-XS-STH 50.DWG PLOT DATE : 1/18/2022 1:24 PM PLOT BY : BLACKWOOD, JIM PLOT NAME :
WISDOT/CADDS SHEET 49

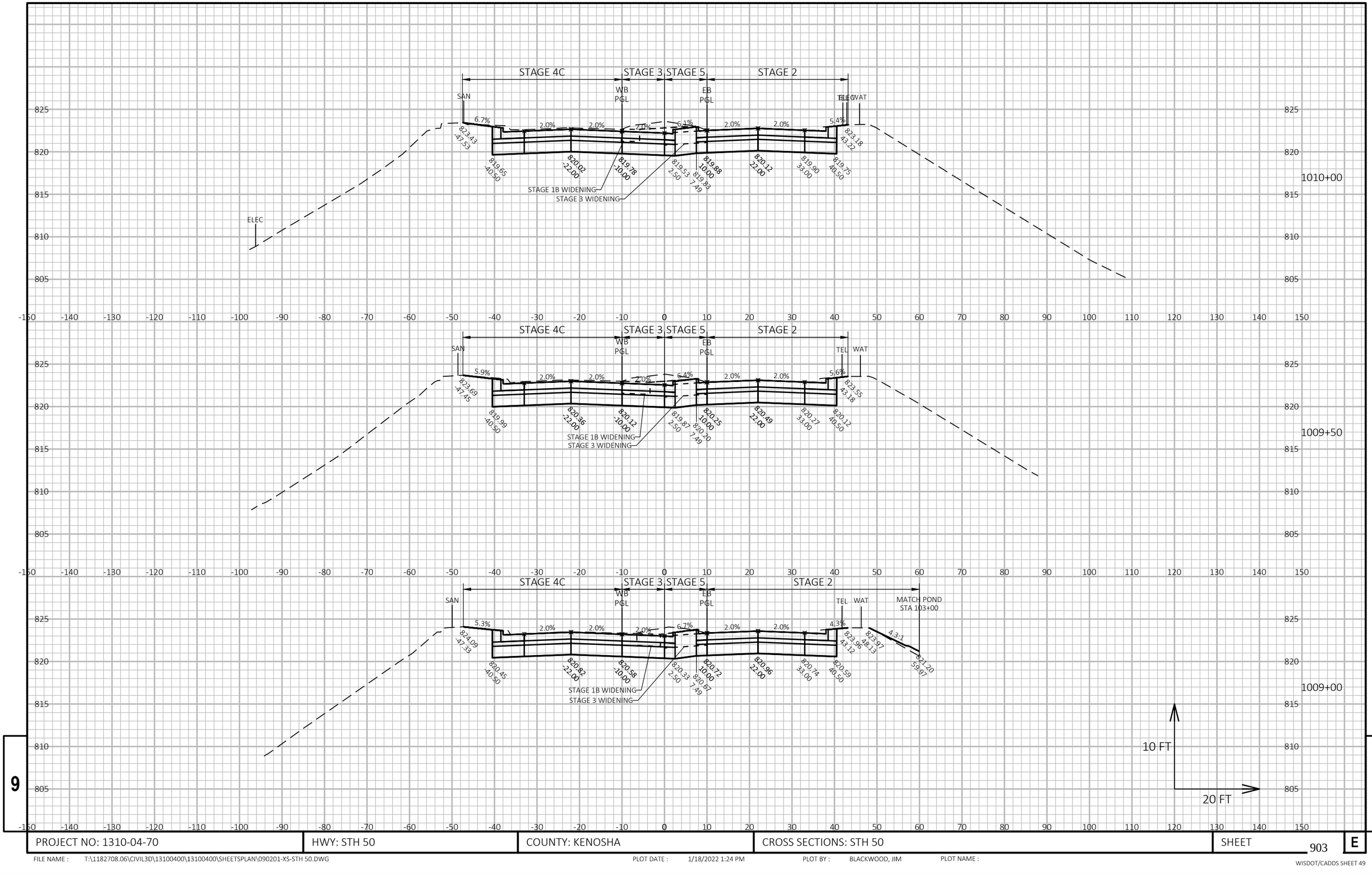

9

9

PROJECT NO: 1310-04-70	HWY: STH 50	COUNTY: KENOSHA	CROSS SECTIONS: STH 50	SHEET 903	E

FILE NAME : T:\1182708.06\CIVIL3D\13100400\13100400\SHEETSPLAN\090201-XS-STH 50.DWG PLOT DATE : 1/18/2022 1:24 PM PLOT BY : BLACKWOOD, JIM PLOT NAME :

WISDOT/CADDS SHEET 49

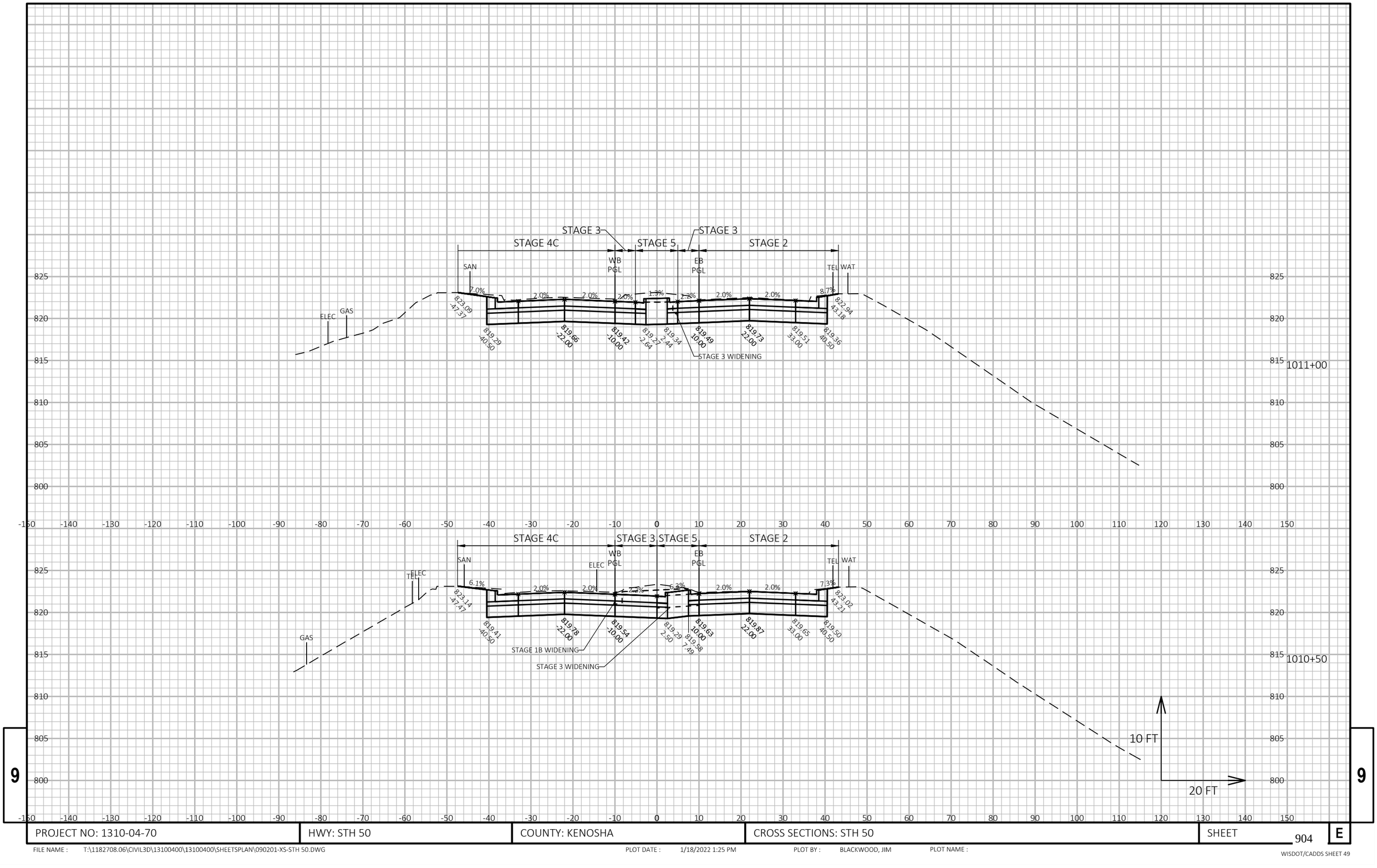

9

9

PROJECT NO: 1310-04-70	HWY: STH 50	COUNTY: KENOSHA	CROSS SECTIONS: STH 50	SHEET 904	E

FILE NAME : T:\1182708.06\CIVIL3D\13100400\13100400\SHEETSPLAN\090201-XS-STH 50.DWG PLOT DATE : 1/18/2022 1:25 PM PLOT BY : BLACKWOOD, JIM PLOT NAME :

WISDOT/CADDS SHEET 49

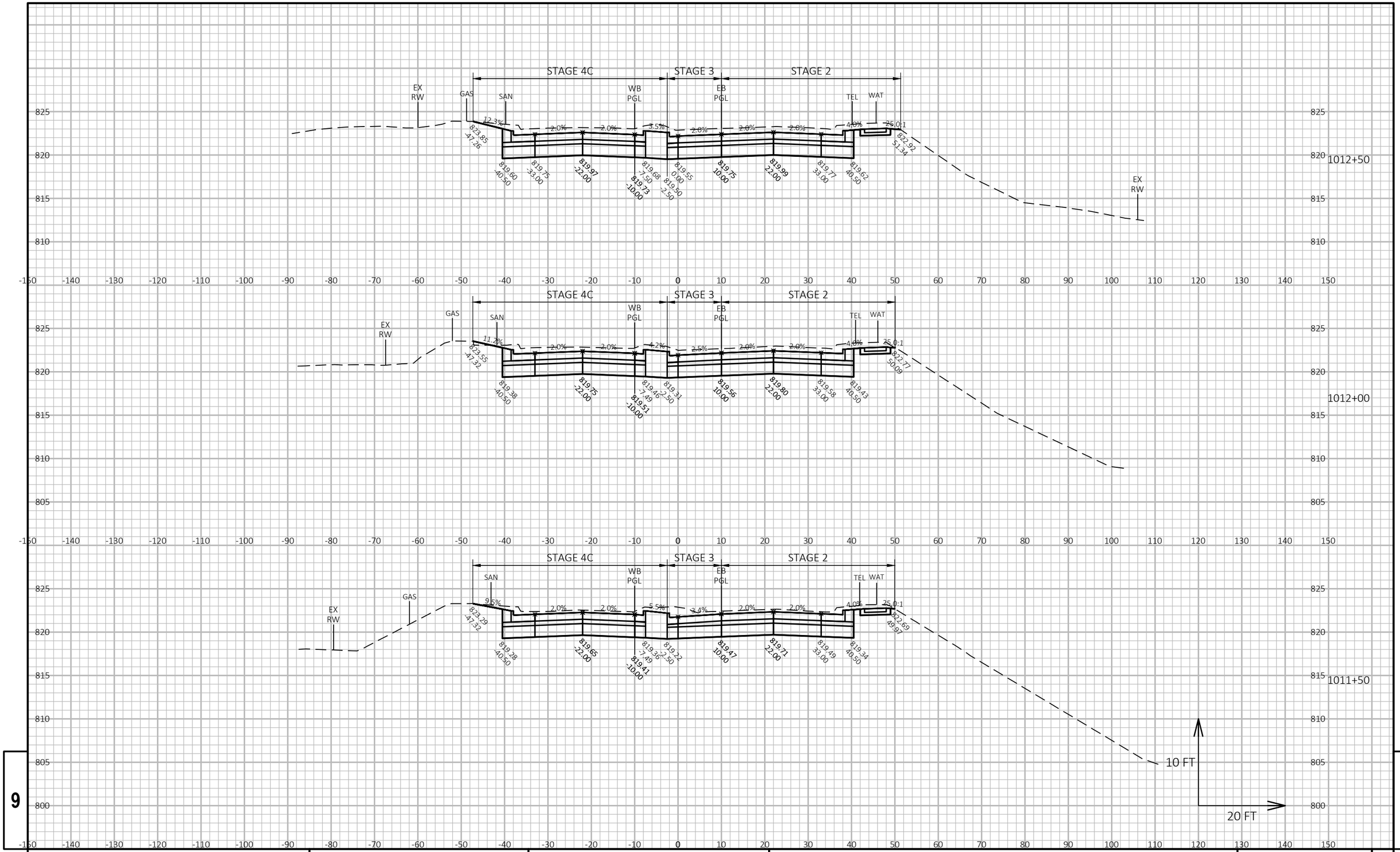

PROJECT NO: 1310-04-70	HWY: STH 50	COUNTY: KENOSHA	CROSS SECTIONS: STH 50	SHEET 905 E

FILE NAME : T:\1182708.06\CIVIL3D\13100400\13100400\SHEETSPLAN\090201-XS-STH 50.DWG PLOT DATE : 1/18/2022 1:25 PM PLOT BY : BLACKWOOD, JIM PLOT NAME :

WISDOT/CADDS SHEET 49

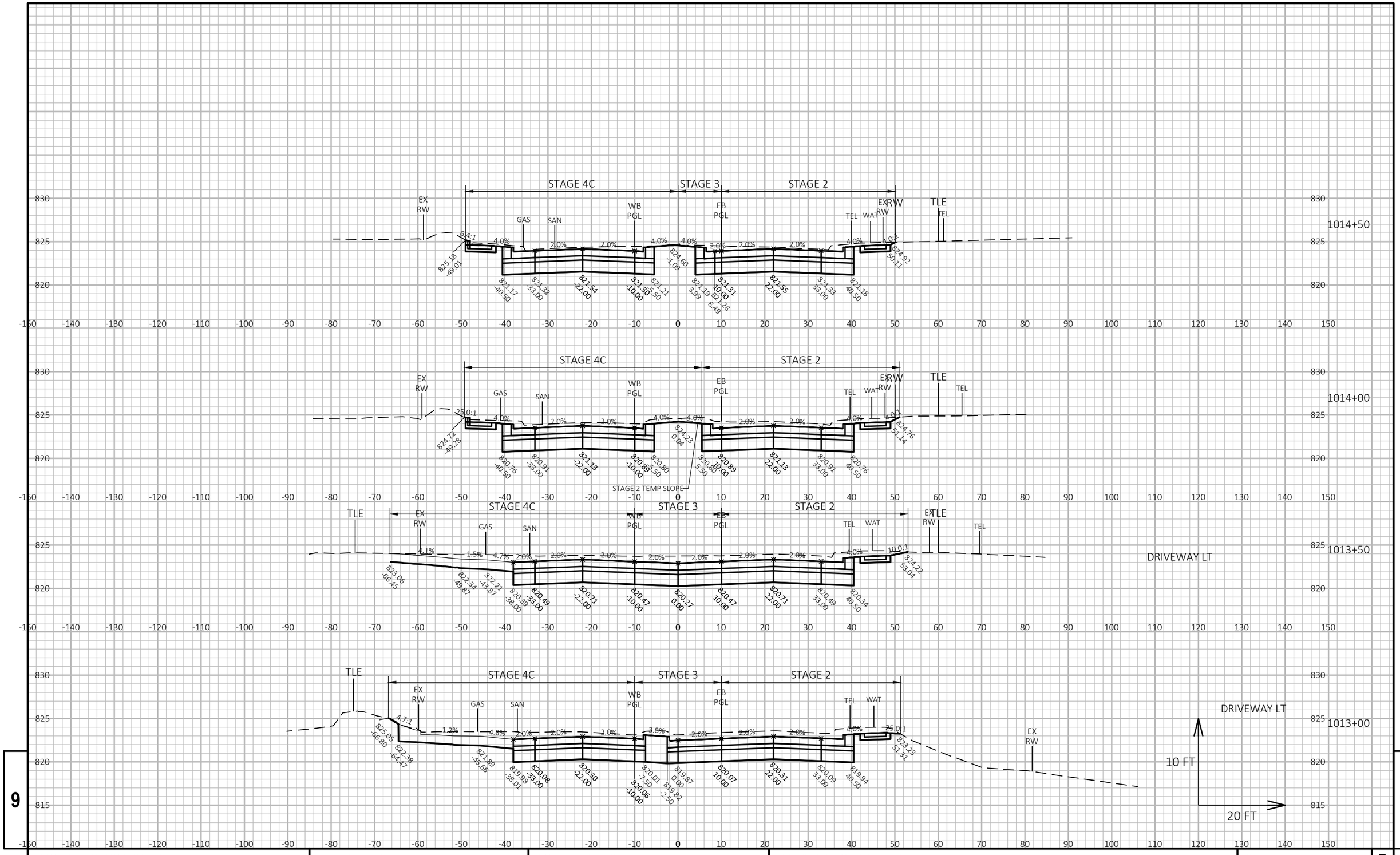

PROJECT NO: 1310-04-70	HWY: STH 50	COUNTY: KENOSHA	CROSS SECTIONS: STH 50	SHEET 906 E

FILE NAME : T:\1182708.06\CIVIL3D\13100400\13100400\SHEETSPLAN\090201-XS-STH 50.DWG PLOT DATE : 1/18/2022 1:25 PM PLOT BY : BLACKWOOD, JIM PLOT NAME :

WISDOT/CADDS SHEET 49

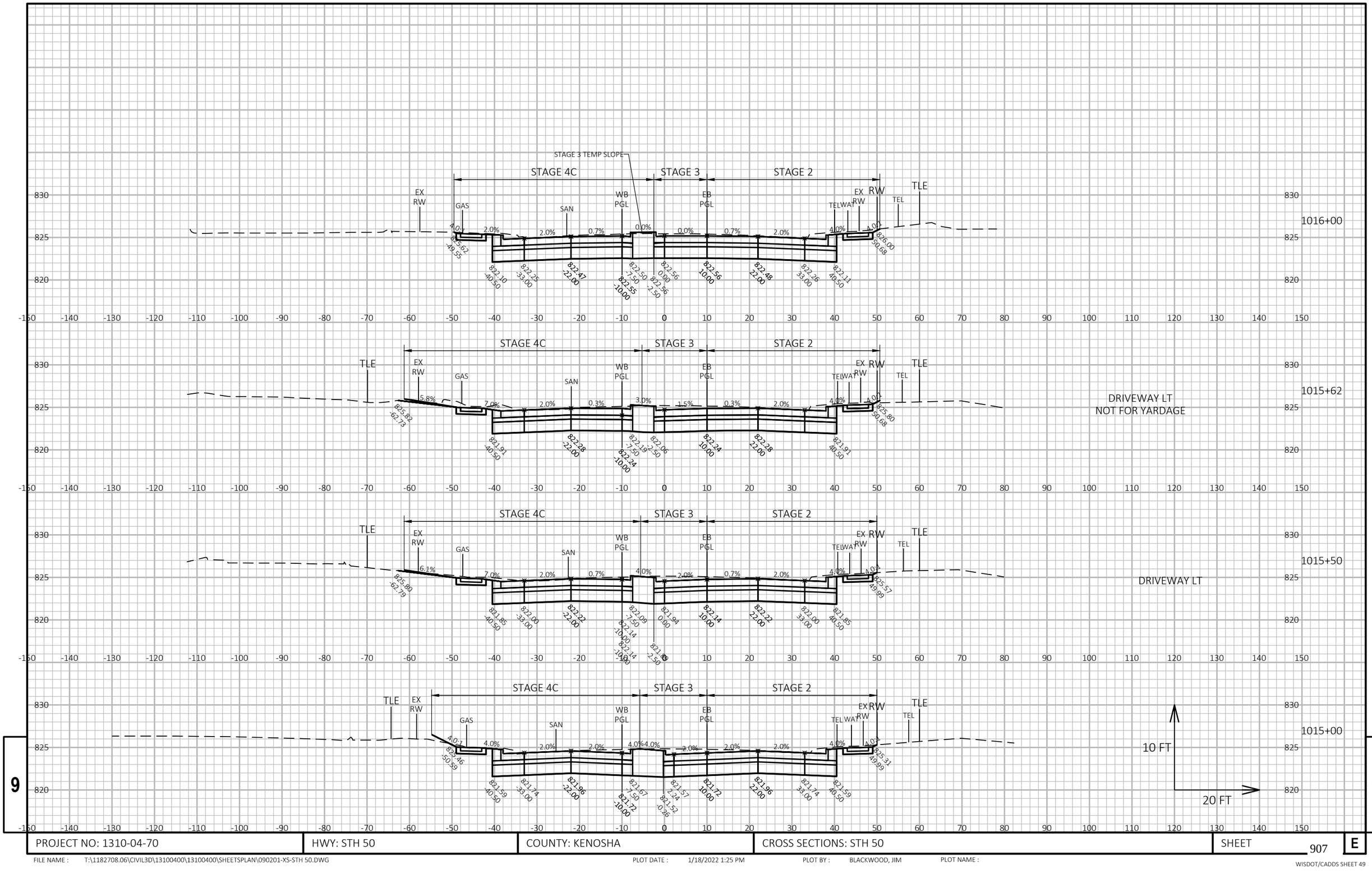

PROJECT NO: 1310-04-70	HWY: STH 50	COUNTY: KENOSHA	CROSS SECTIONS: STH 50	SHEET 907	E

FILE NAME : T:\1182708.06\CIVIL3D\13100400\13100400\SHEETSPLAN\090201-XS-STH 50.DWG PLOT DATE : 1/18/2022 1:25 PM PLOT BY : BLACKWOOD, JIM PLOT NAME :

WISDOT/CADDS SHEET 49

PROJECT NO: 1310-04-70	HWY: STH 50	COUNTY: KENOSHA	CROSS SECTIONS: STH 50	SHEET 908	E

FILE NAME : T:\1182708.06\CIVIL3D\13100400\13100400\SHEETSPLAN\090201-XS-STH 50.DWG PLOT DATE : 1/18/2022 1:25 PM PLOT BY : BLACKWOOD, JIM PLOT NAME :

WISDOT/CADDS SHEET 49

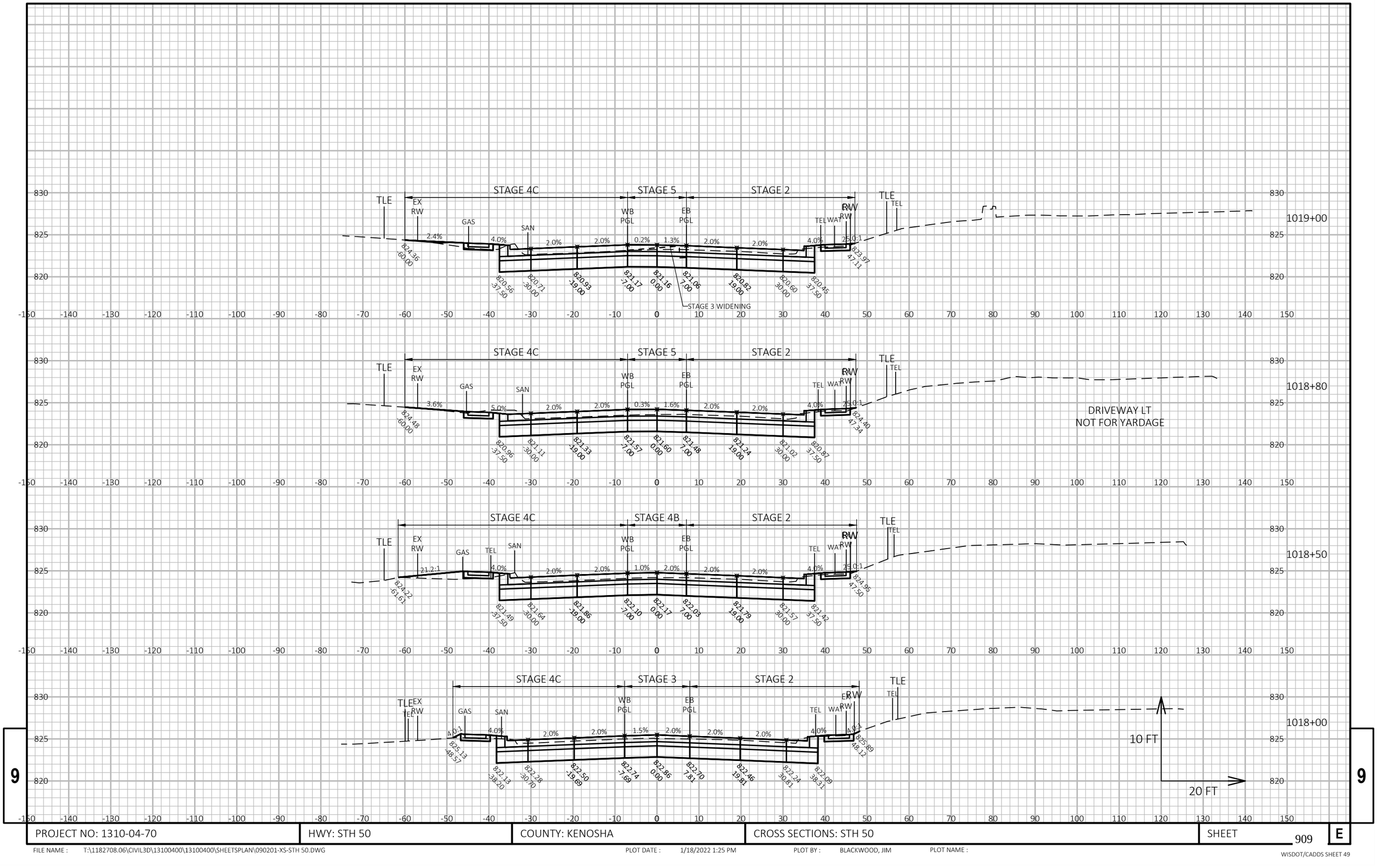

9

9

PROJECT NO: 1310-04-70	HWY: STH 50	COUNTY: KENOSHA	CROSS SECTIONS: STH 50	SHEET 909	E

FILE NAME : T:\1182708.06\CIVIL3D\13100400\13100400\SHEETSPLAN\090201-XS-STH 50.DWG PLOT DATE : 1/18/2022 1:25 PM PLOT BY : BLACKWOOD, JIM PLOT NAME :

WISDOT/CADDS SHEET 49

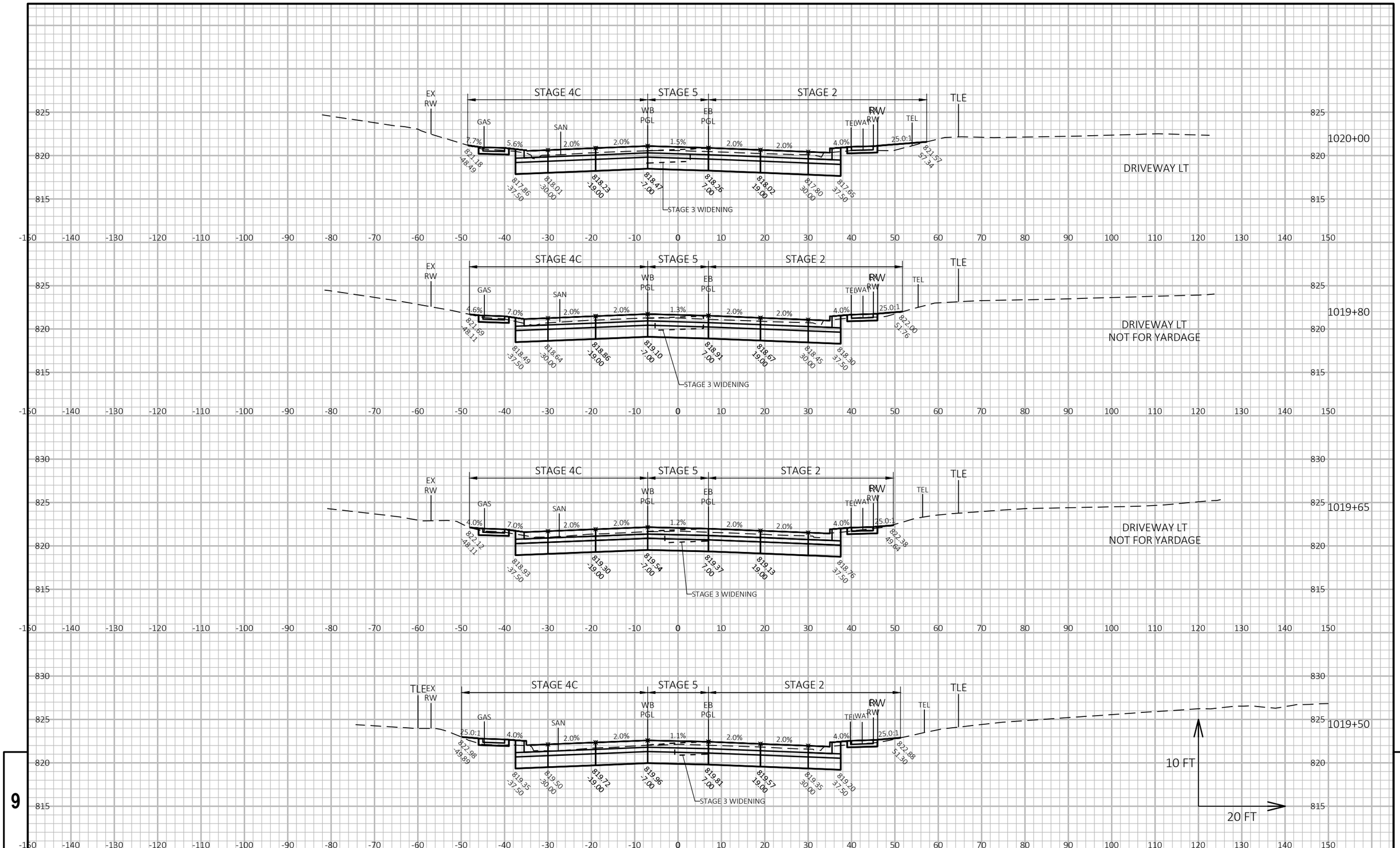

PROJECT NO: 1310-04-70	HWY: STH 50	COUNTY: KENOSHA	CROSS SECTIONS: STH 50	SHEET 910 E

FILE NAME : T:\1182708.06\CIVIL3D\13100400\13100400\SHEETSPLAN\090201-XS-STH 50.DWG PLOT DATE : 1/18/2022 1:25 PM PLOT BY : BLACKWOOD, JIM PLOT NAME :

WISDOT/CADDS SHEET 49

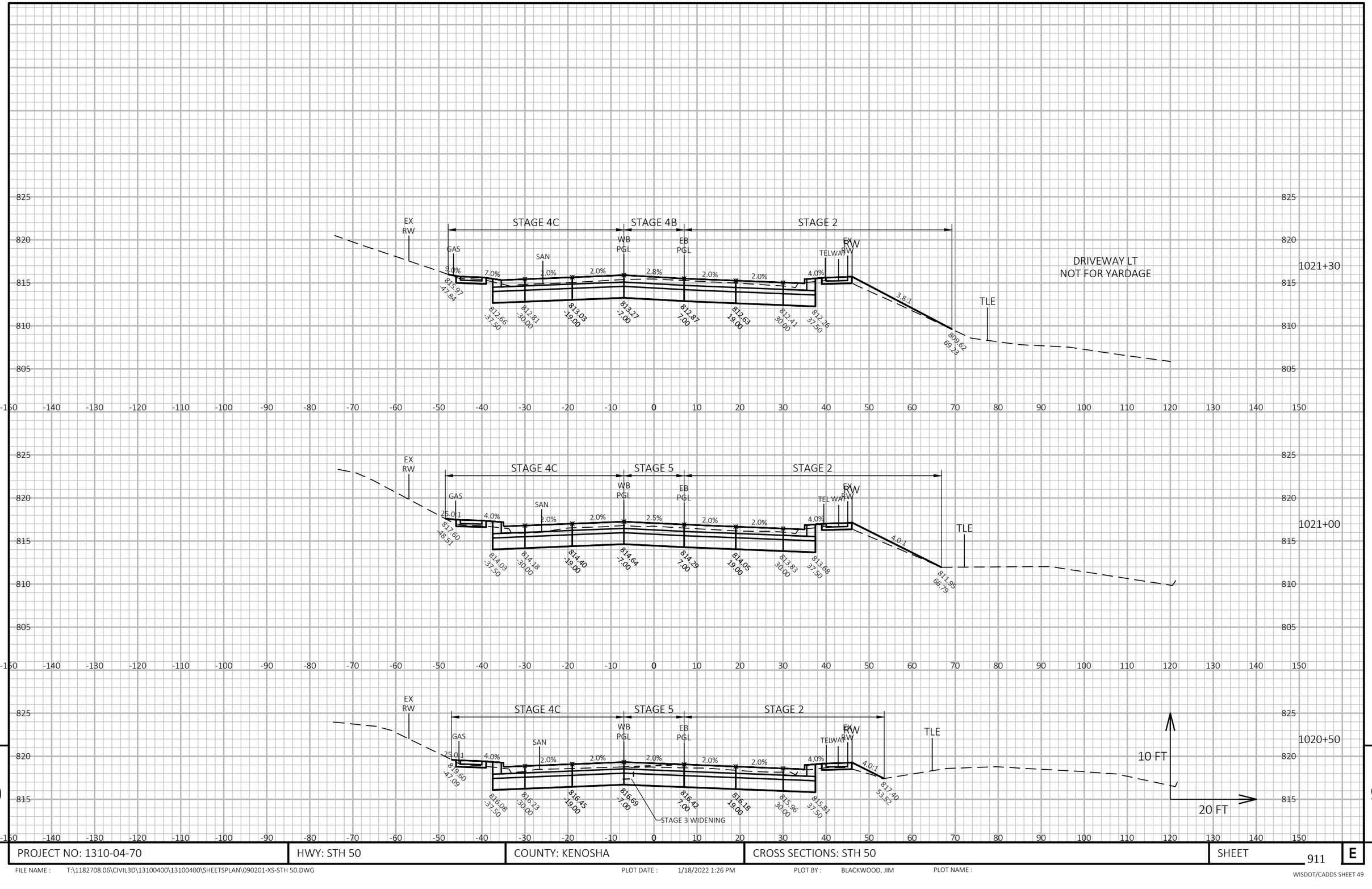

9

9

PROJECT NO: 1310-04-70	HWY: STH 50	COUNTY: KENOSHA	CROSS SECTIONS: STH 50	SHEET 911	E

FILE NAME : T:\1182708.06\CIVIL3D\13100400\13100400\SHEETSPLAN\090201-XS-STH 50.DWG PLOT DATE : 1/18/2022 1:26 PM PLOT BY : BLACKWOOD, JIM PLOT NAME :

WISDOT/CADDS SHEET 49

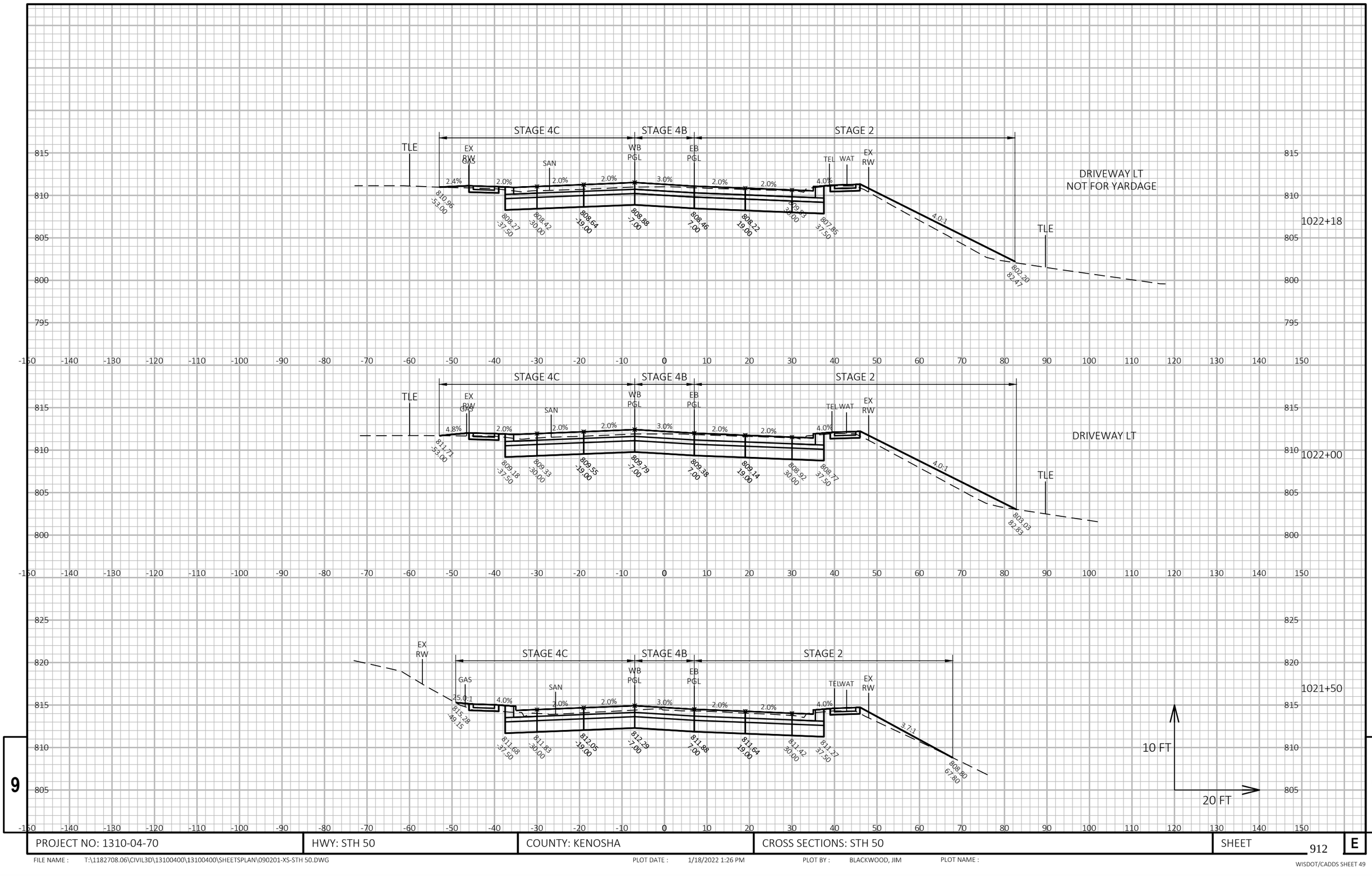

PROJECT NO: 1310-04-70	HWY: STH 50	COUNTY: KENOSHA	CROSS SECTIONS: STH 50	SHEET 912	E

FILE NAME : T:\1182708.06\CIVIL3D\13100400\13100400\SHEETSPLAN\090201-XS-STH 50.DWG PLOT DATE : 1/18/2022 1:26 PM PLOT BY : BLACKWOOD, JIM PLOT NAME :

WISDOT/CADDS SHEET 49

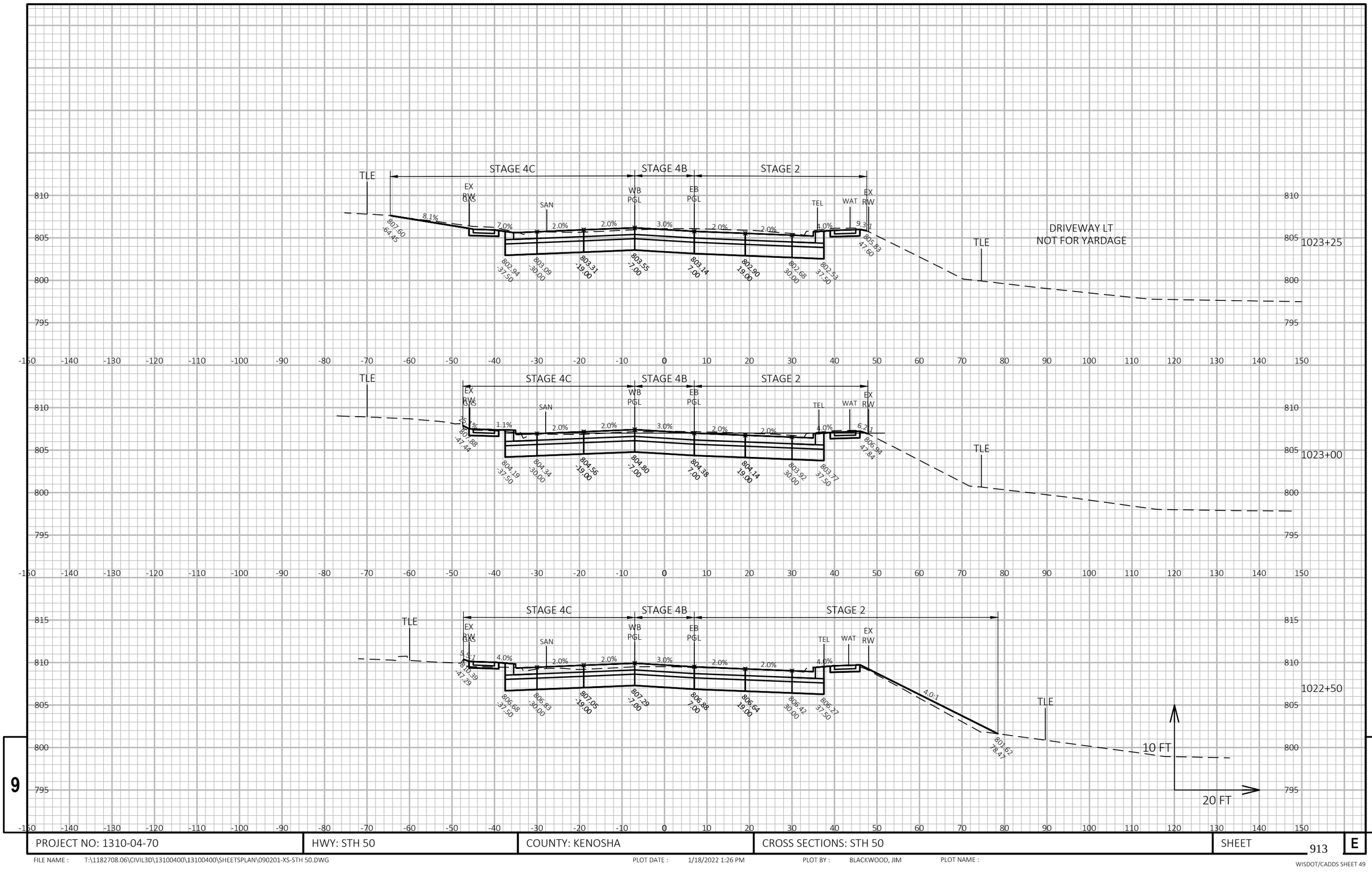

PROJECT NO: 1310-04-70	HWY: STH 50	COUNTY: KENOSHA	CROSS SECTIONS: STH 50	SHEET 913	E

FILE NAME : T:\1182708.06\CIVIL3D\13100400\13100400\SHEETSPLAN\090201-XS-STH 50.DWG PLOT DATE : 1/18/2022 1:26 PM PLOT BY : BLACKWOOD, JIM PLOT NAME :

WISDOT/CADDS SHEET 49

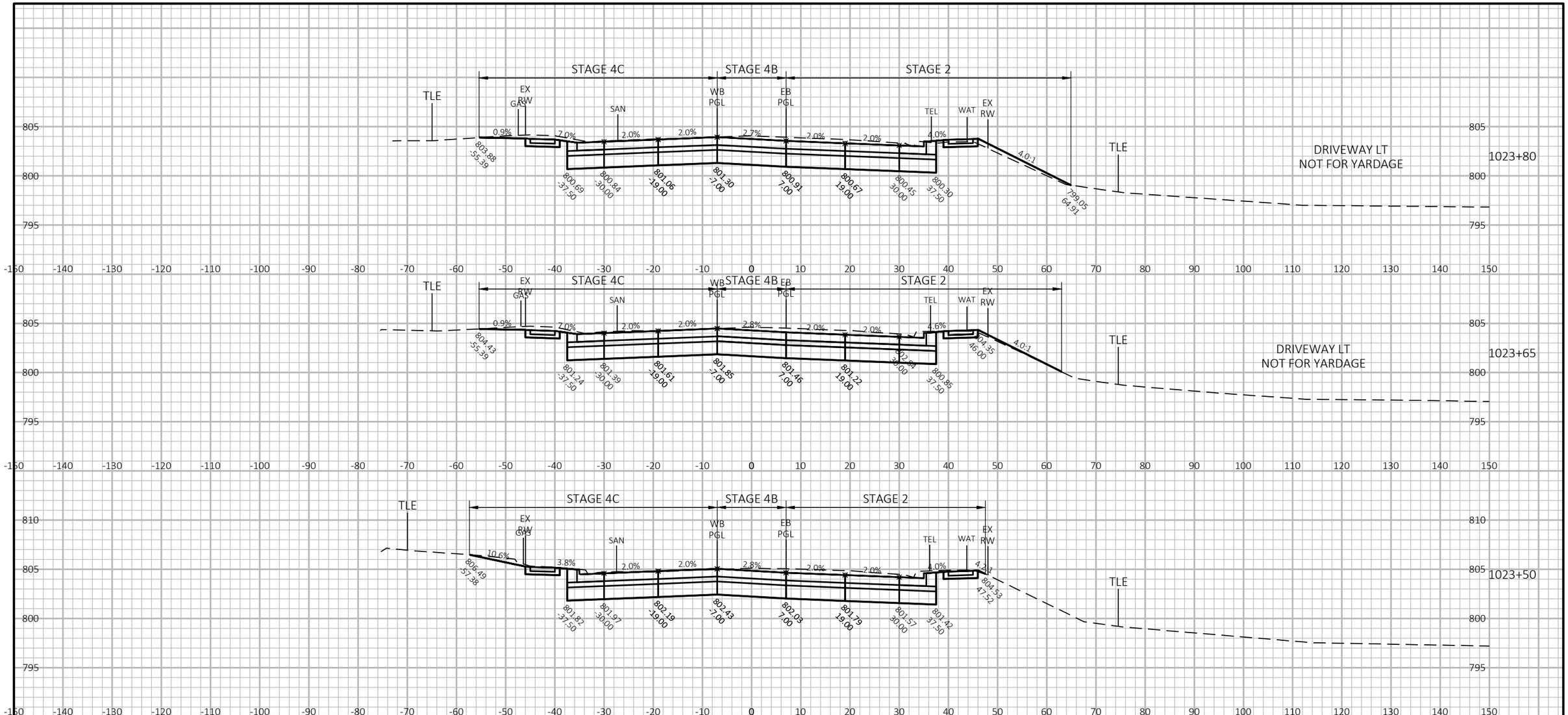

PROJECT NO: 1310-04-70	HWY: STH 50	COUNTY: KENOSHA	CROSS SECTIONS: STH 50	SHEET 914	E

FILE NAME : T:\1182708.06\CIVIL3D\13100400\13100400\SHEETSPLAN\090201-XS-STH 50.DWG PLOT DATE : 1/18/2022 1:26 PM PLOT BY : BLACKWOOD, JIM PLOT NAME :

WISDOT/CADDS SHEET 49

9

9

PROJECT NO: 1310-04-70	HWY: STH 50	COUNTY: KENOSHA	CROSS SECTIONS: STH 50	SHEET 915	E

FILE NAME : T:\1182708.06\CIVIL3D\13100400\13100400\SHEETSPLAN\090201-XS-STH 50.DWG PLOT DATE : 1/18/2022 1:26 PM PLOT BY : BLACKWOOD, JIM PLOT NAME :

WISDOT/CADDS SHEET 49

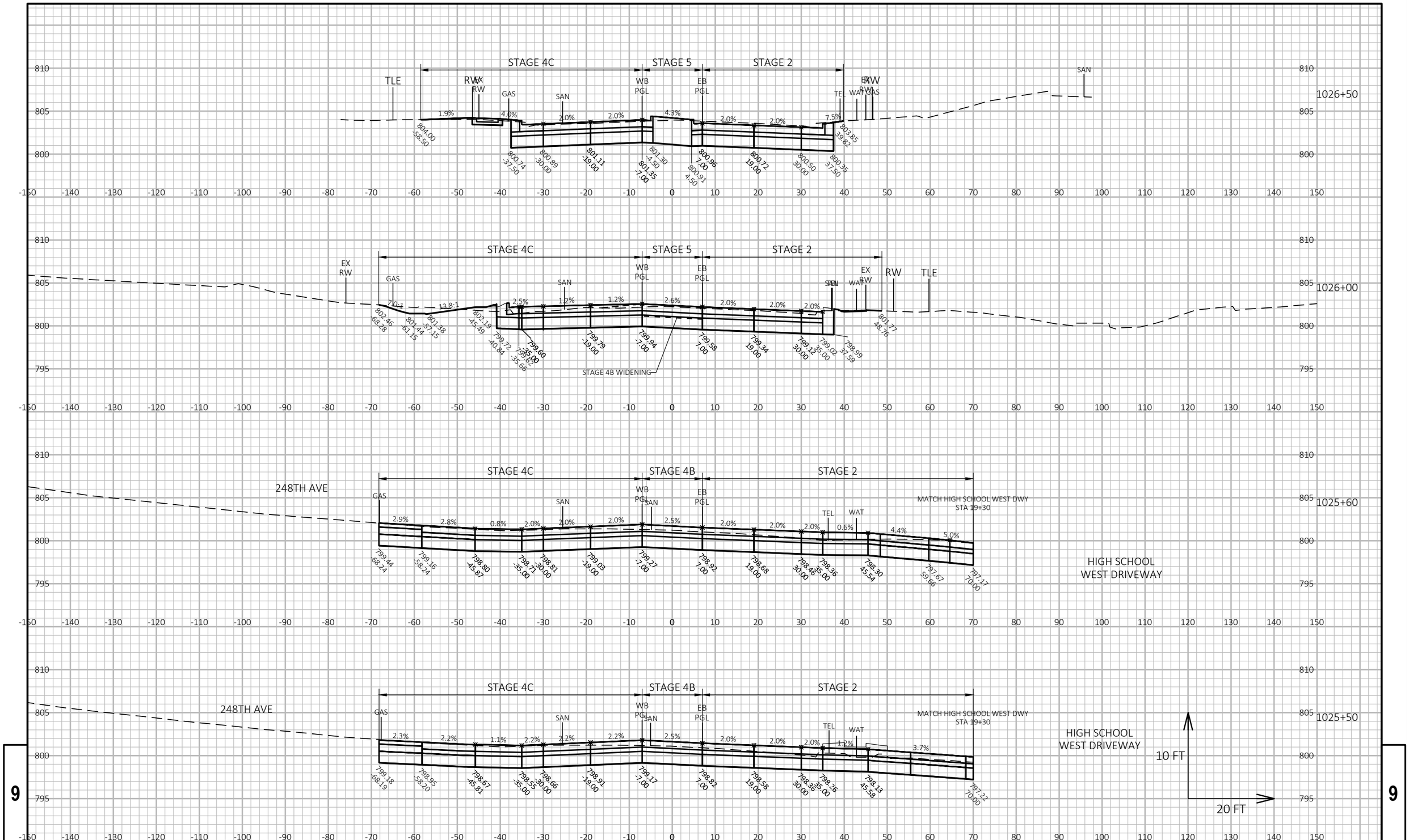

PROJECT NO: 1310-04-70	HWY: STH 50	COUNTY: KENOSHA	CROSS SECTIONS: STH 50	SHEET 916 E

FILE NAME : T:\1182708.06\CIVIL3D\13100400\13100400\SHEETSPLAN\090201-XS-STH 50.DWG PLOT DATE : 1/18/2022 1:26 PM PLOT BY : BLACKWOOD, JIM PLOT NAME :

WISDOT/CADDS SHEET 49

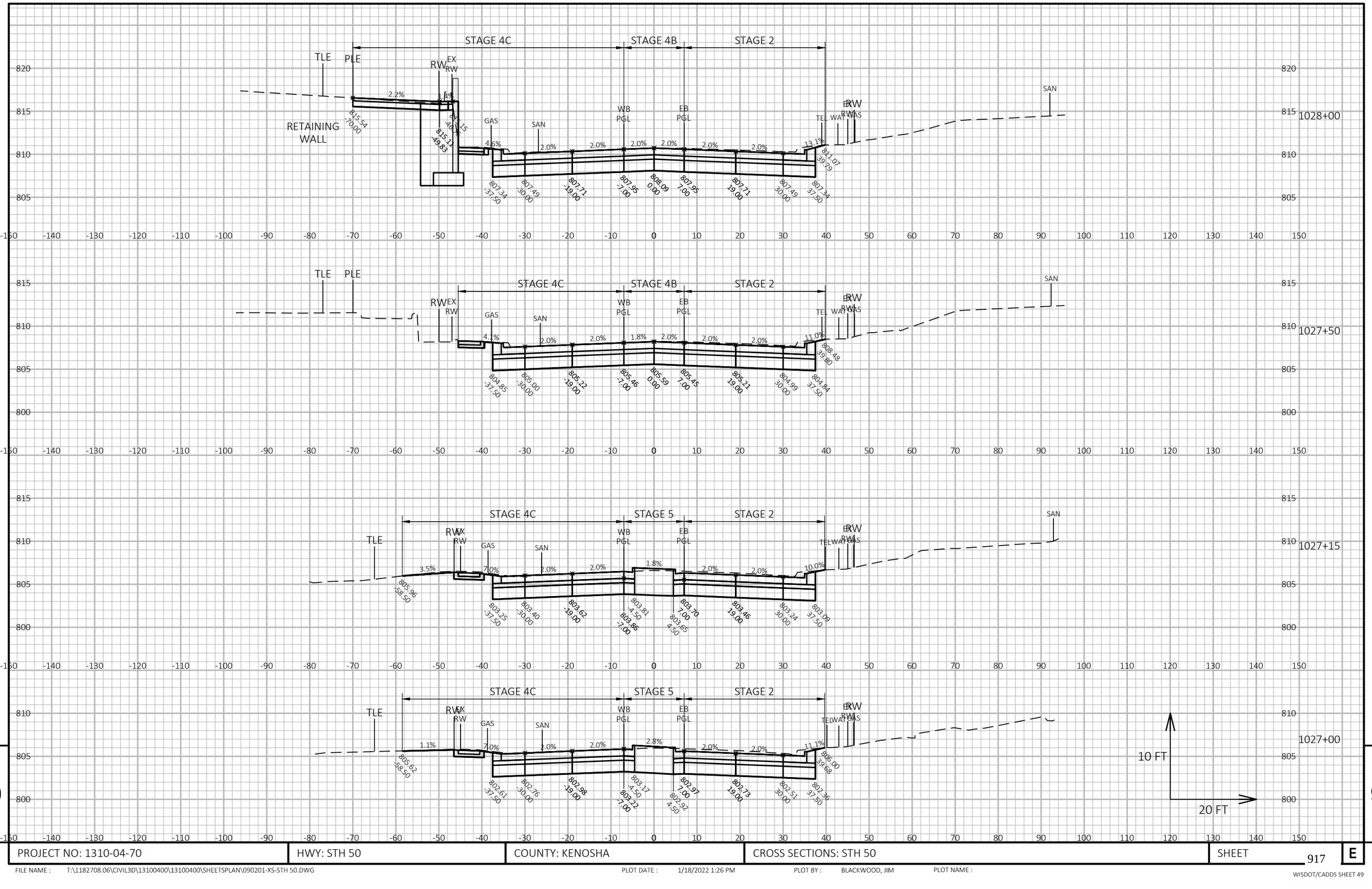

9

9

PROJECT NO: 1310-04-70	HWY: STH 50	COUNTY: KENOSHA	CROSS SECTIONS: STH 50	SHEET 917	E

FILE NAME : T:\1182708.06\CIVIL3D\13100400\13100400\SHEETSPLAN\090201-XS-STH 50.DWG PLOT DATE : 1/18/2022 1:26 PM PLOT BY : BLACKWOOD, JIM PLOT NAME :

WISDOT/CADDS SHEET 49

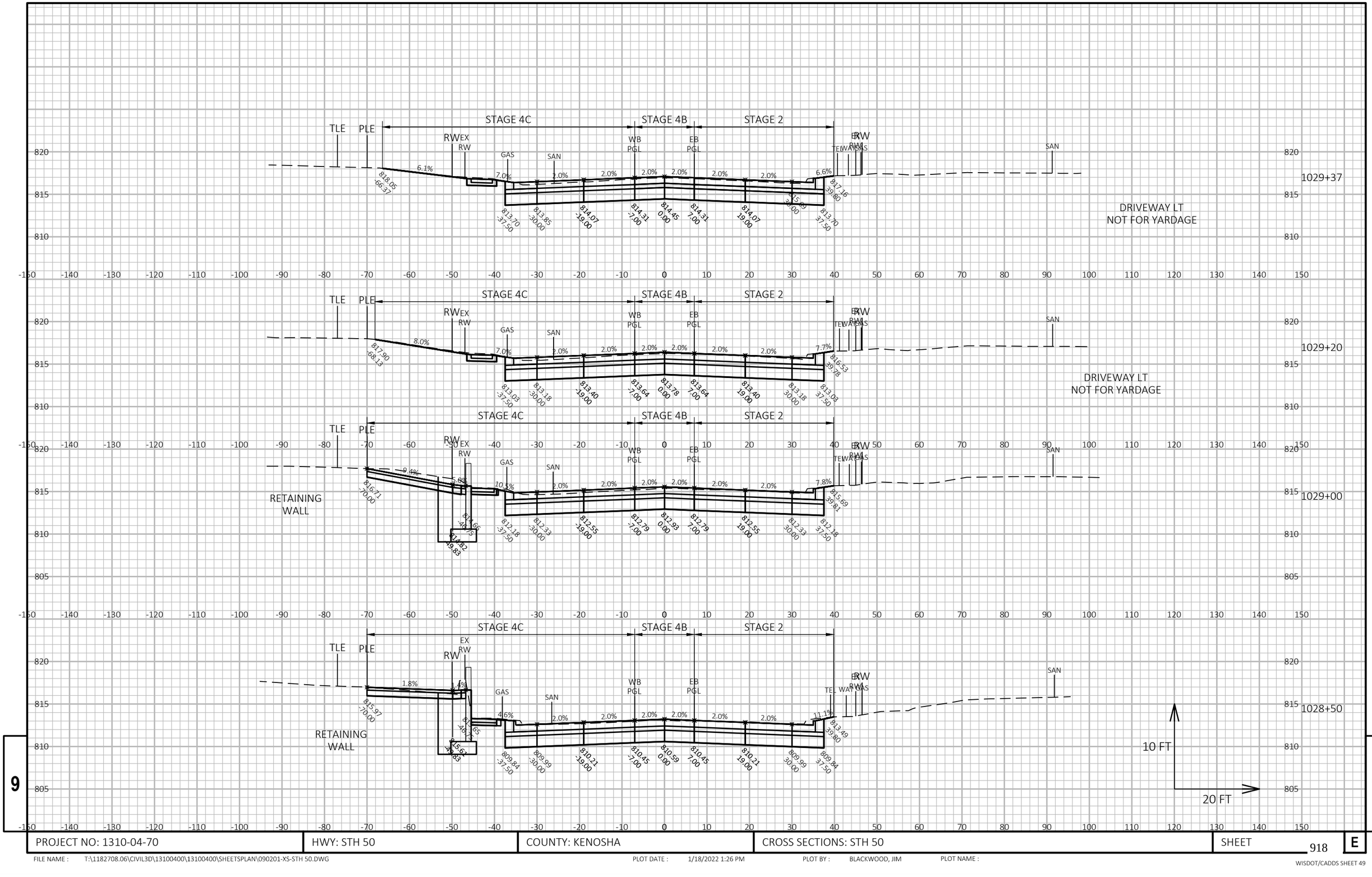

9

9

PROJECT NO: 1310-04-70	HWY: STH 50	COUNTY: KENOSHA	CROSS SECTIONS: STH 50	SHEET 918	E

FILE NAME : T:\1182708.06\CIVIL3D\13100400\13100400\SHEETSPLAN\090201-XS-STH 50.DWG PLOT DATE : 1/18/2022 1:26 PM PLOT BY : BLACKWOOD, JIM PLOT NAME :

WISDOT/CADDS SHEET 49

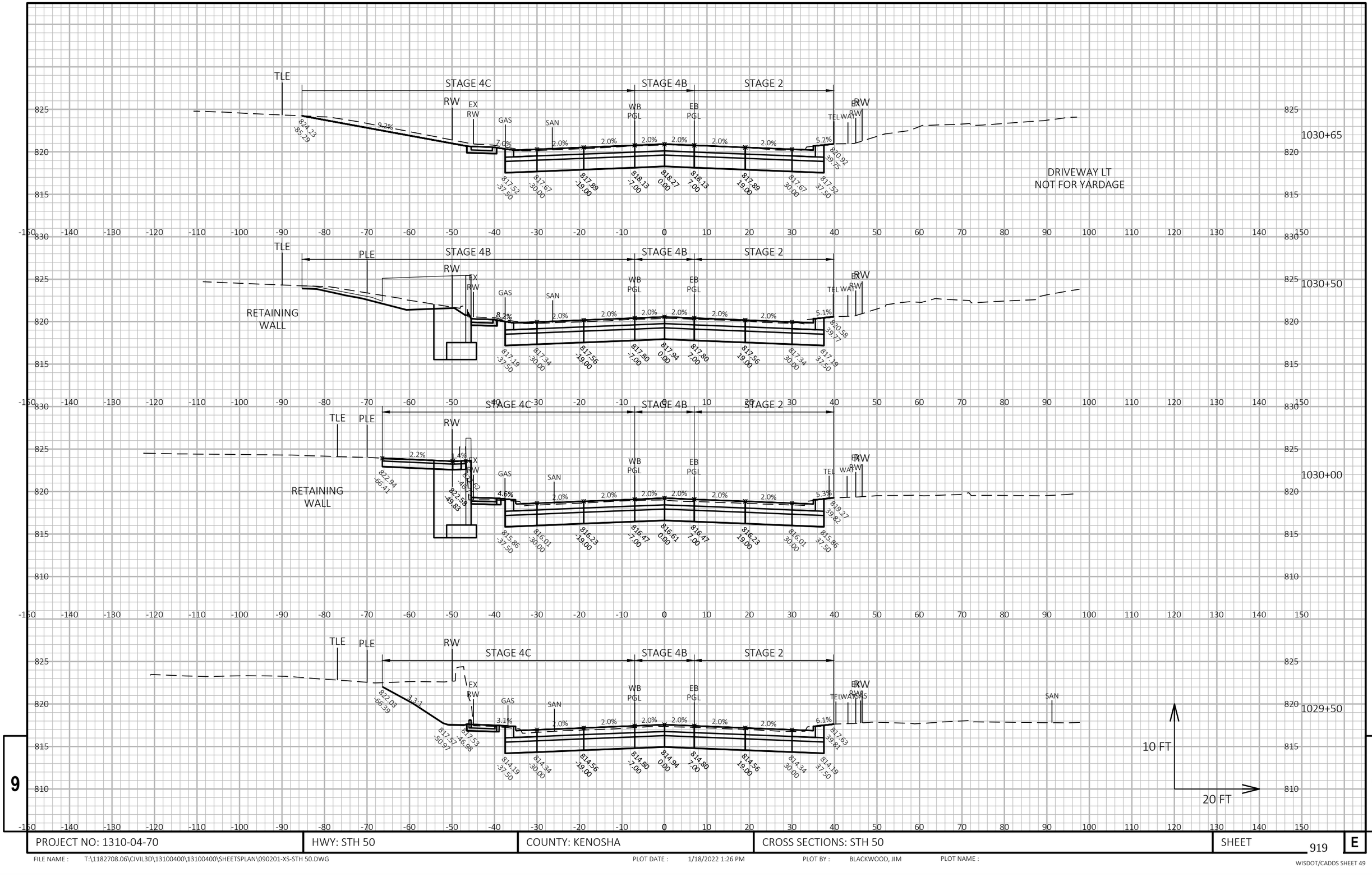

PROJECT NO: 1310-04-70	HWY: STH 50	COUNTY: KENOSHA	CROSS SECTIONS: STH 50	SHEET 919	E

FILE NAME : T:\1182708.06\CIVIL3D\13100400\13100400\SHEETSPLAN\090201-XS-STH 50.DWG PLOT DATE : 1/18/2022 1:26 PM PLOT BY : BLACKWOOD, JIM PLOT NAME :

WISDOT/CADDS SHEET 49

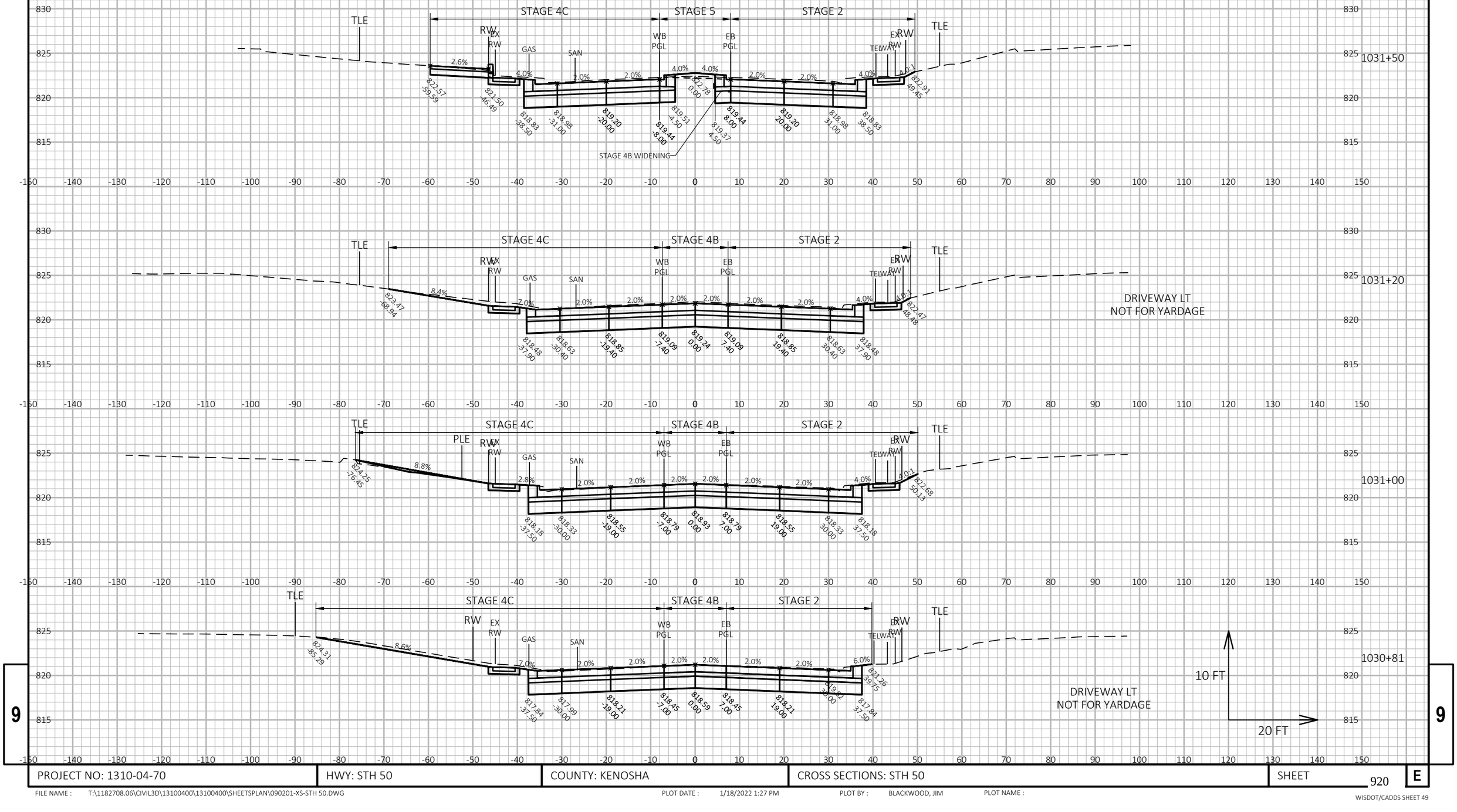

PROJECT NO: 1310-04-70	HWY: STH 50	COUNTY: KENOSHA	CROSS SECTIONS: STH 50	SHEET 920	E

FILE NAME : T:\1182708.06\CIVIL3D\13100400\13100400\SHEETSPLAN\090201-XS-STH 50.DWG PLOT DATE : 1/18/2022 1:27 PM PLOT BY : BLACKWOOD, JIM PLOT NAME :

WISDOT/CADDS SHEET 49

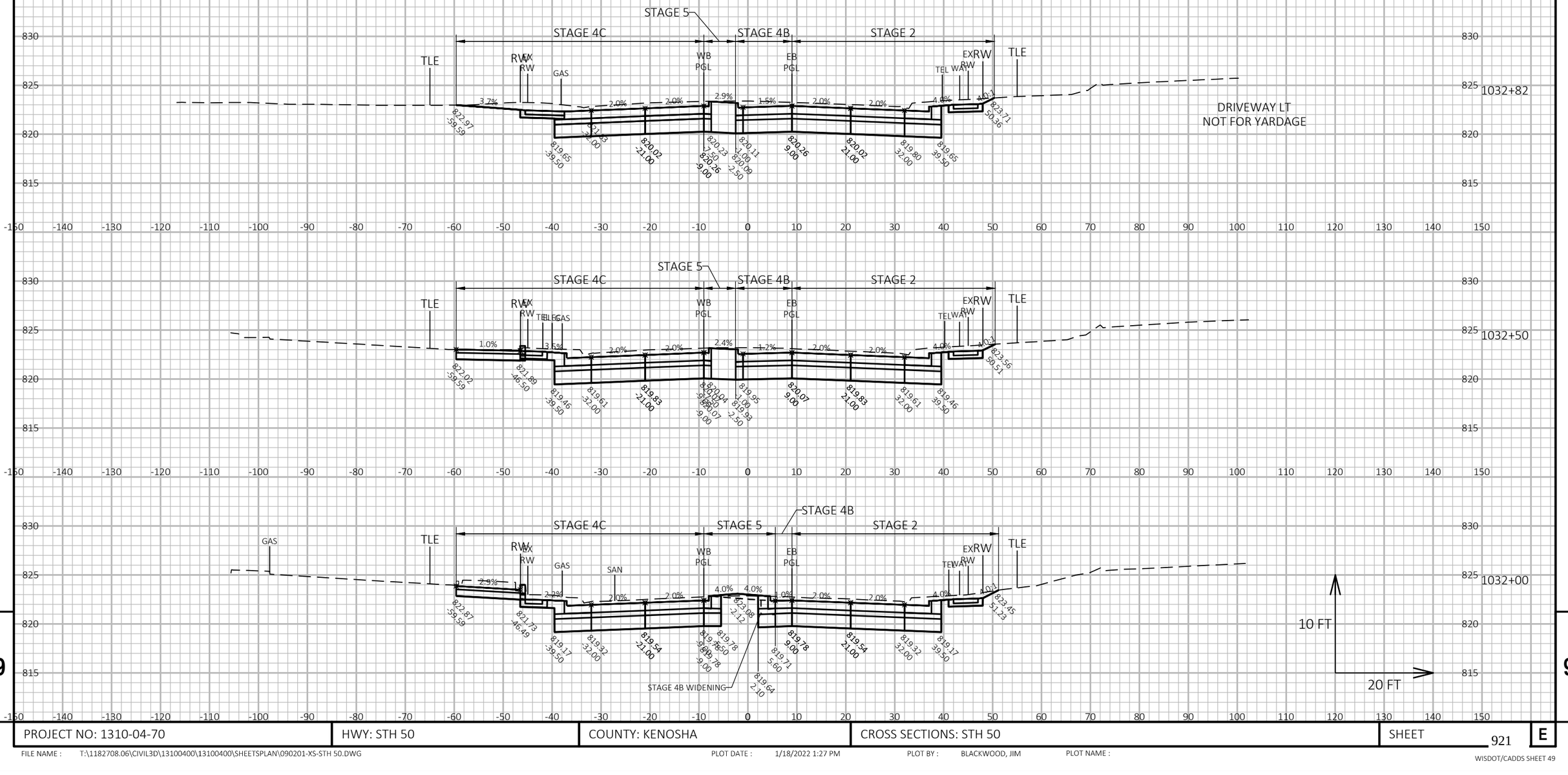

9

9

PROJECT NO: 1310-04-70	HWY: STH 50	COUNTY: KENOSHA	CROSS SECTIONS: STH 50	SHEET 921	E

FILE NAME : T:\1182708.06\CIVIL3D\13100400\13100400\SHEETSPLAN\090201-XS-STH 50.DWG PLOT DATE : 1/18/2022 1:27 PM PLOT BY : BLACKWOOD, JIM PLOT NAME :

WISDOT/CADDS SHEET 49

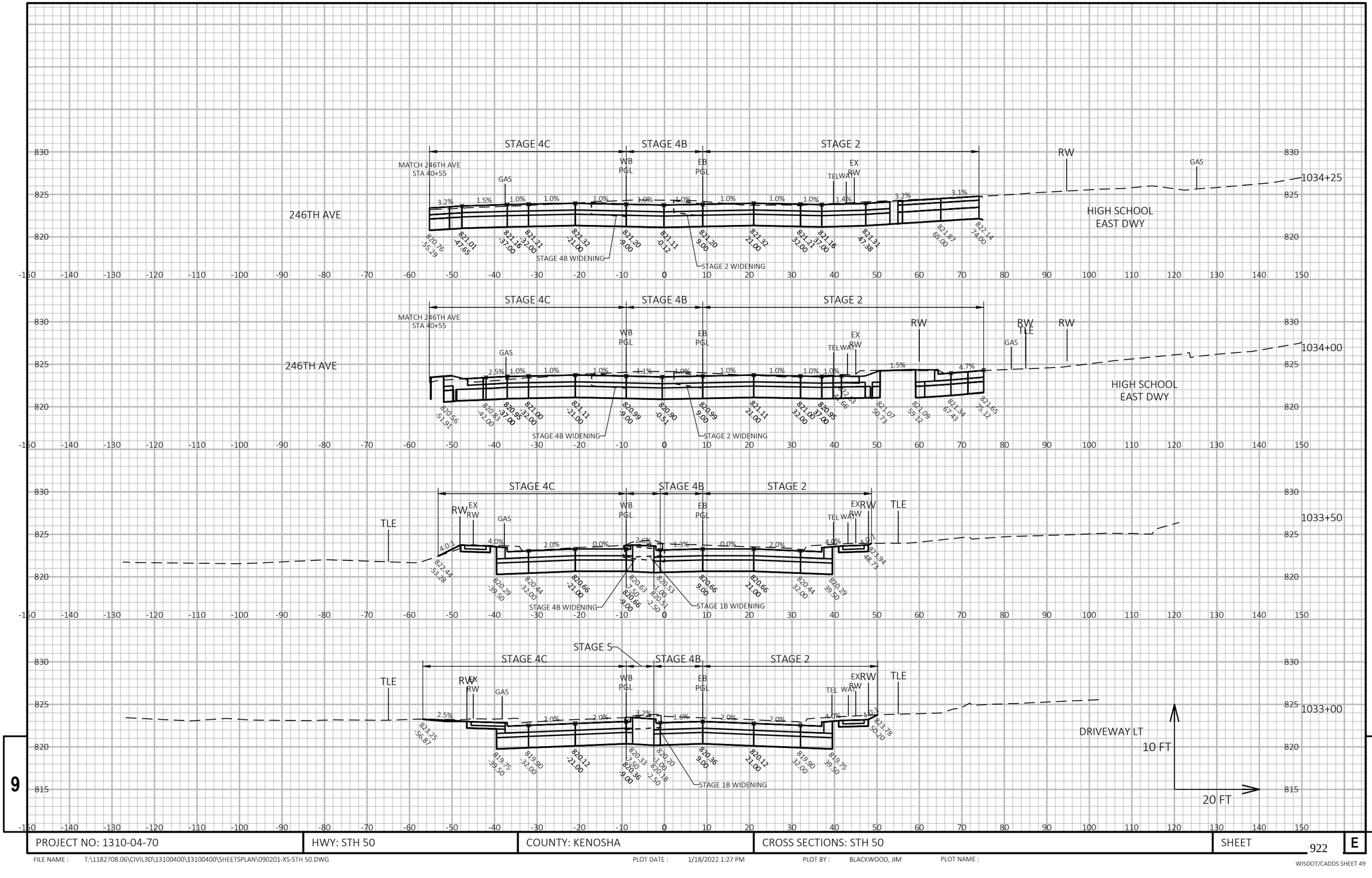

PROJECT NO: 1310-04-70	HWY: STH 50	COUNTY: KENOSHA	CROSS SECTIONS: STH 50	SHEET 922	E

FILE NAME : T:\1182708.06\CIVIL3D\13100400\13100400\SHEETSPLAN\090201-XS-STH 50.DWG PLOT DATE : 1/18/2022 1:27 PM PLOT BY : BLACKWOOD, JIM PLOT NAME :

WISDOT/CADDS SHEET 49

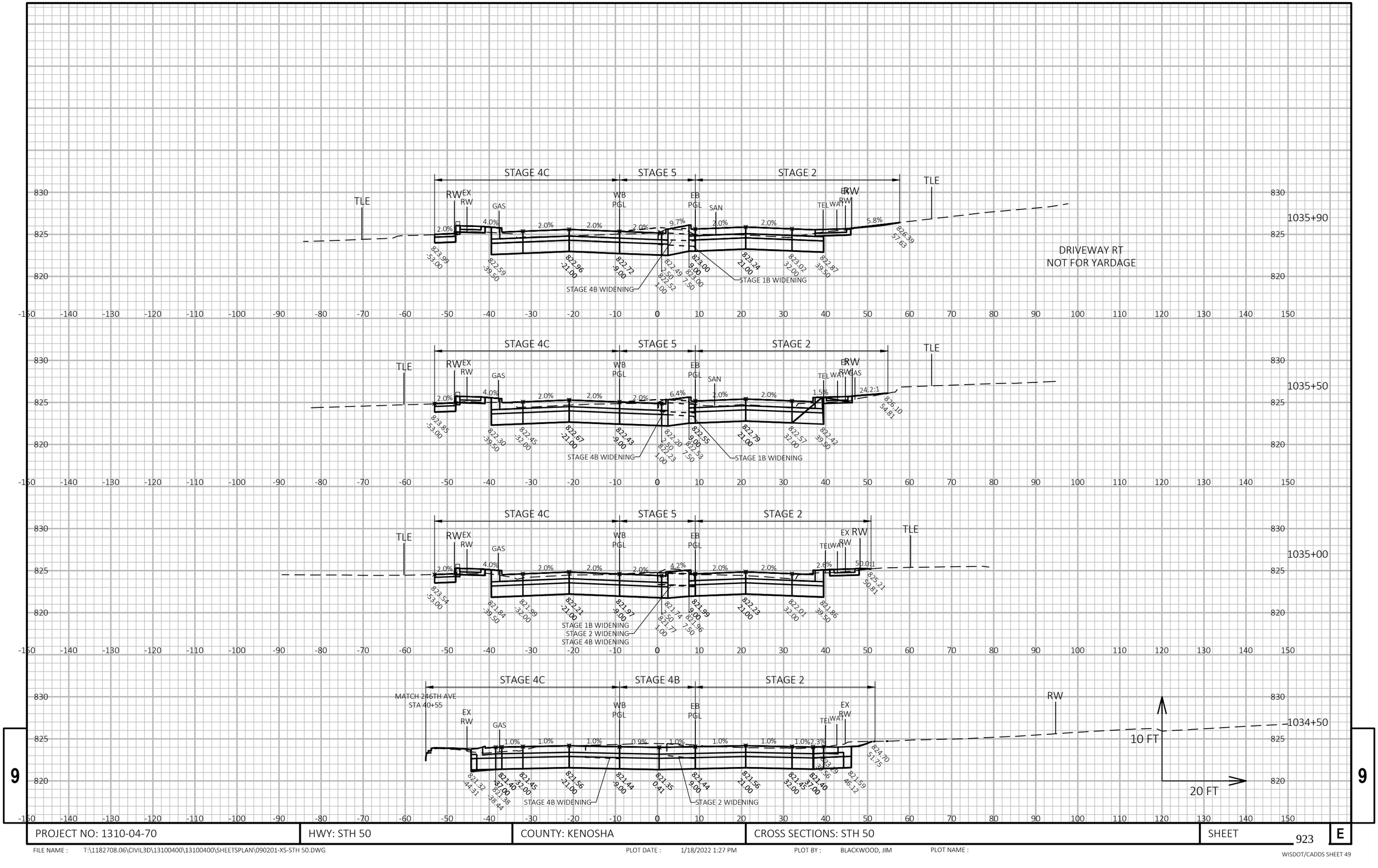

PROJECT NO: 1310-04-70	HWY: STH 50	COUNTY: KENOSHA	CROSS SECTIONS: STH 50	SHEET 923	E

FILE NAME : T:\1182708.06\CIVIL3D\13100400\13100400\SHEETSPLAN\090201-XS-STH 50.DWG PLOT DATE : 1/18/2022 1:27 PM PLOT BY : BLACKWOOD, JIM PLOT NAME :

WISDOT/CADDS SHEET 49

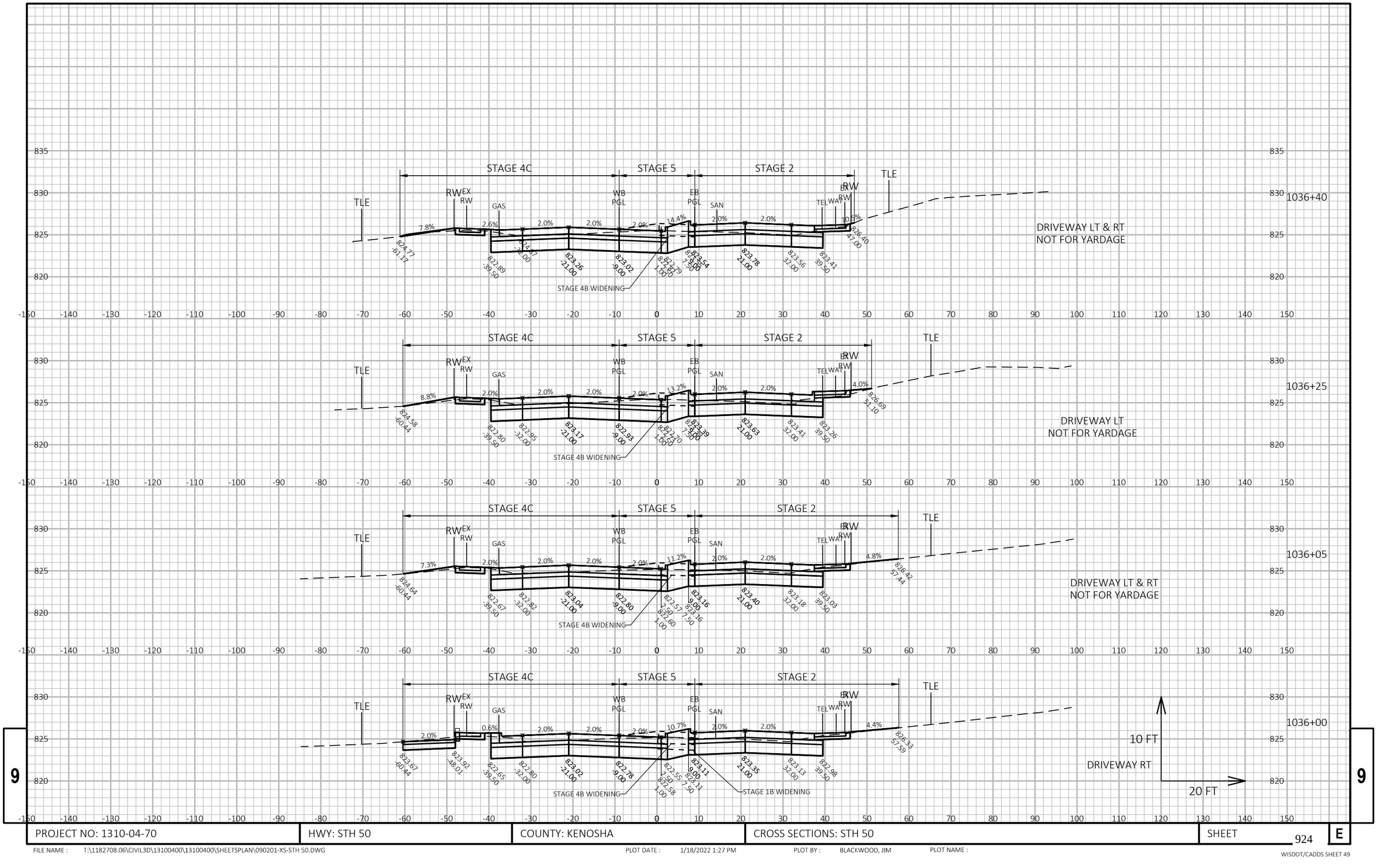

9

PROJECT NO: 1310-04-70	HWY: STH 50	COUNTY: KENOSHA	CROSS SECTIONS: STH 50	SHEET 924	E

FILE NAME : T:\1182708.06\CIVIL3D\13100400\13100400\SHEETSPLAN\090201-XS-STH 50.DWG PLOT DATE : 1/18/2022 1:27 PM PLOT BY : BLACKWOOD, JIM PLOT NAME :

WISDOT/CADDS SHEET 49

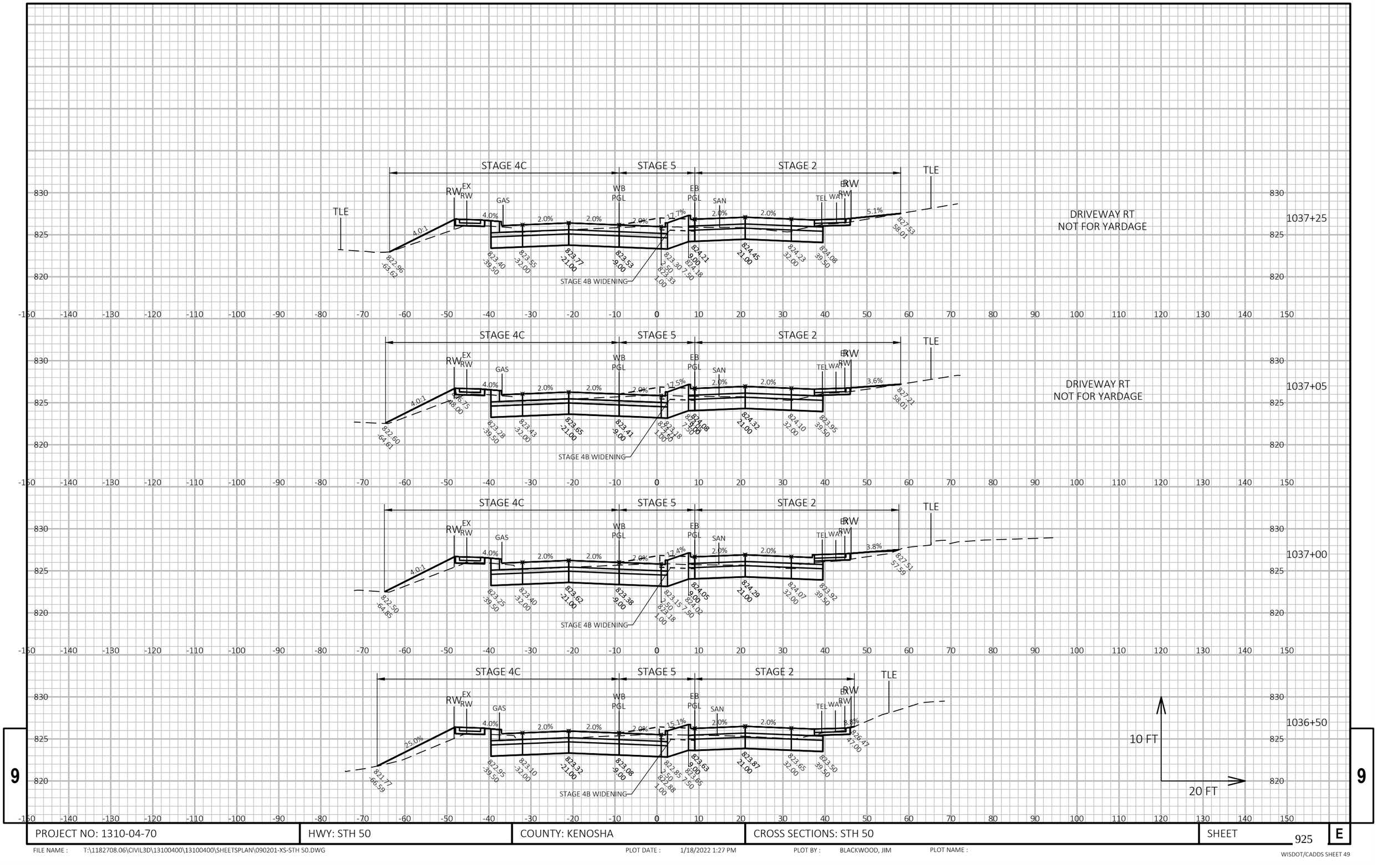

9

9

PROJECT NO: 1310-04-70	HWY: STH 50	COUNTY: KENOSHA	CROSS SECTIONS: STH 50	SHEET 925	E

FILE NAME : T:\1182708.06\CIVIL3D\13100400\13100400\SHEETSPLAN\090201-XS-STH 50.DWG PLOT DATE : 1/18/2022 1:27 PM PLOT BY : BLACKWOOD, JIM PLOT NAME :

WISDOT/CADDS SHEET 49

9

9

PROJECT NO: 1310-04-70	HWY: STH 50	COUNTY: KENOSHA	CROSS SECTIONS: STH 50	SHEET 926	E

FILE NAME : T:\1182708.06\CIVIL3D\13100400\13100400\SHEETSPLAN\090201-XS-STH 50.DWG PLOT DATE : 1/18/2022 1:27 PM PLOT BY : BLACKWOOD, JIM PLOT NAME :

WISDOT/CADDS SHEET 49

PETROLEUM CONTAMINATED SOIL

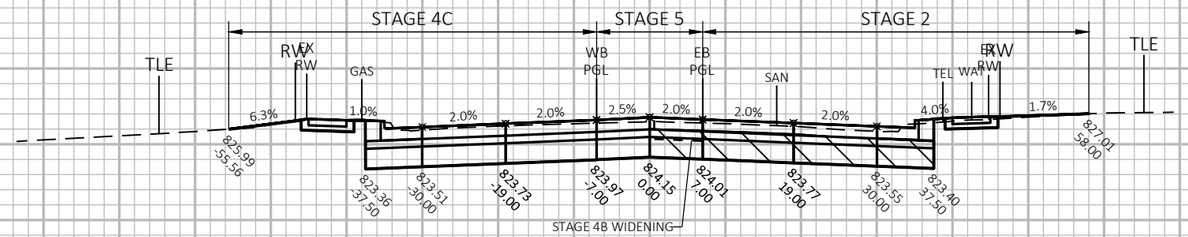

1039+00

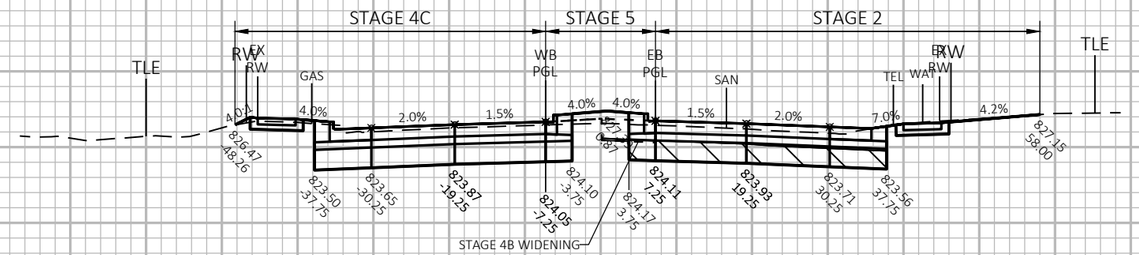

1038+88

DRIVEWAY RT
NOT FOR YARDAGE

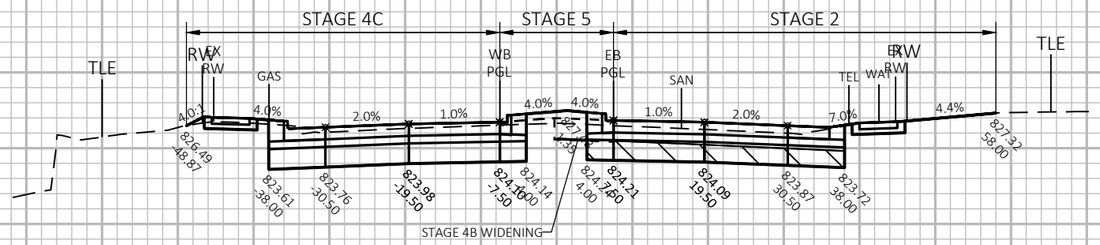

1038+75

DRIVEWAY RT
NOT FOR YARDAGE

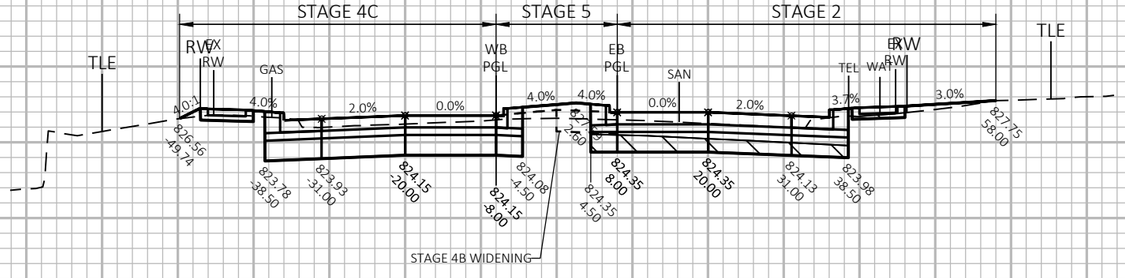

1038+50

10 FT
20 FT

9

9

PROJECT NO: 1310-04-70	HWY: STH 50	COUNTY: KENOSHA	CROSS SECTIONS: STH 50	SHEET 927	E

FILE NAME : T:\1182708.06\CIVIL3D\13100400\13100400\SHEETSPLAN\090201-XS-STH 50.DWG PLOT DATE : 1/18/2022 1:27 PM PLOT BY : BLACKWOOD, JIM PLOT NAME :

WISDOT/CADDS SHEET 49

PETROLEUM CONTAMINATED SOIL

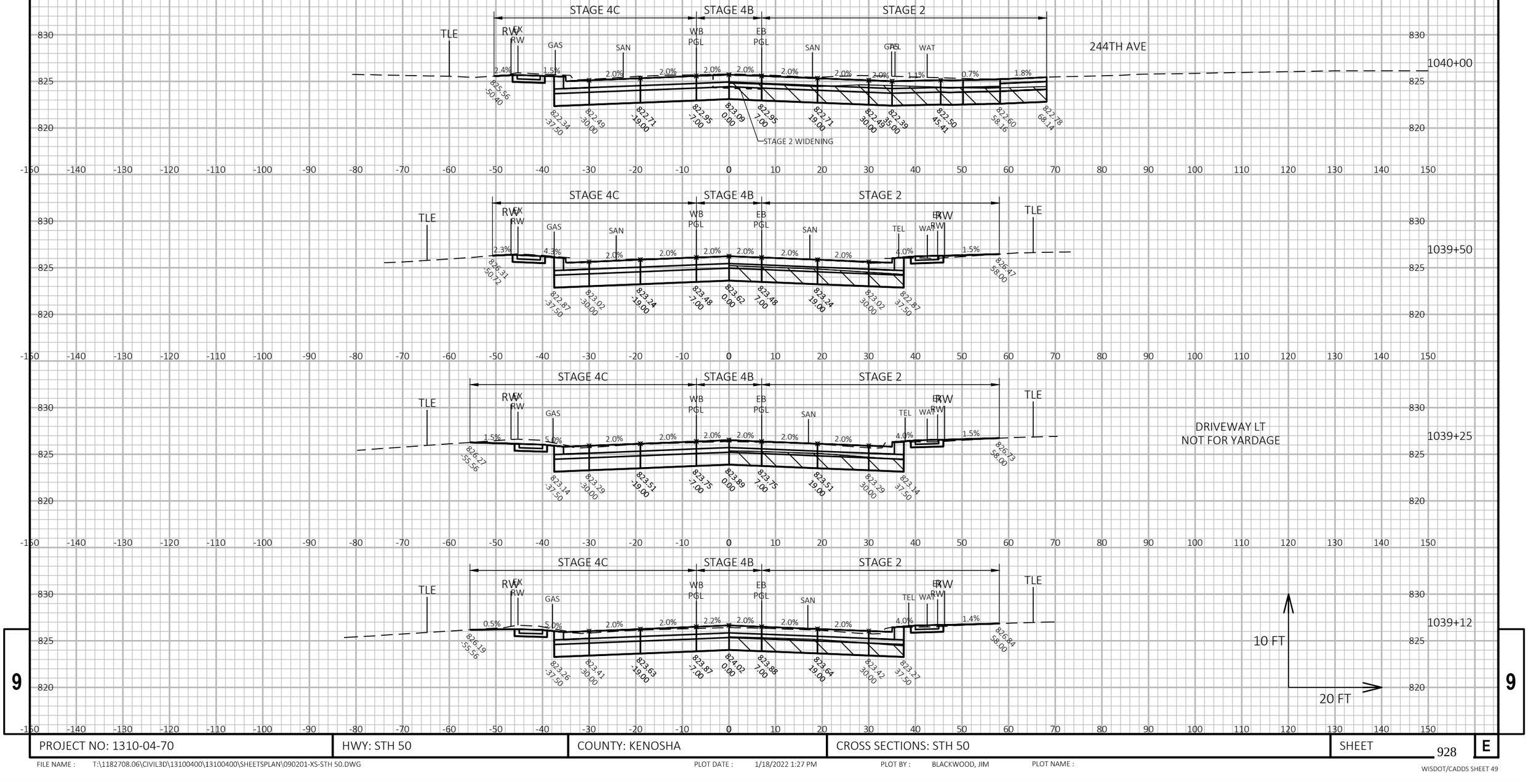

PROJECT NO: 1310-04-70	HWY: STH 50	COUNTY: KENOSHA	CROSS SECTIONS: STH 50	SHEET 928	E

FILE NAME : T:\1182708.06\CIVIL3D\13100400\13100400\SHEETSPLAN\090201-XS-STH 50.DWG PLOT DATE : 1/18/2022 1:27 PM PLOT BY : BLACKWOOD, JIM PLOT NAME :

WISDOT/CADDS SHEET 49

PETROLEUM CONTAMINATED SOIL

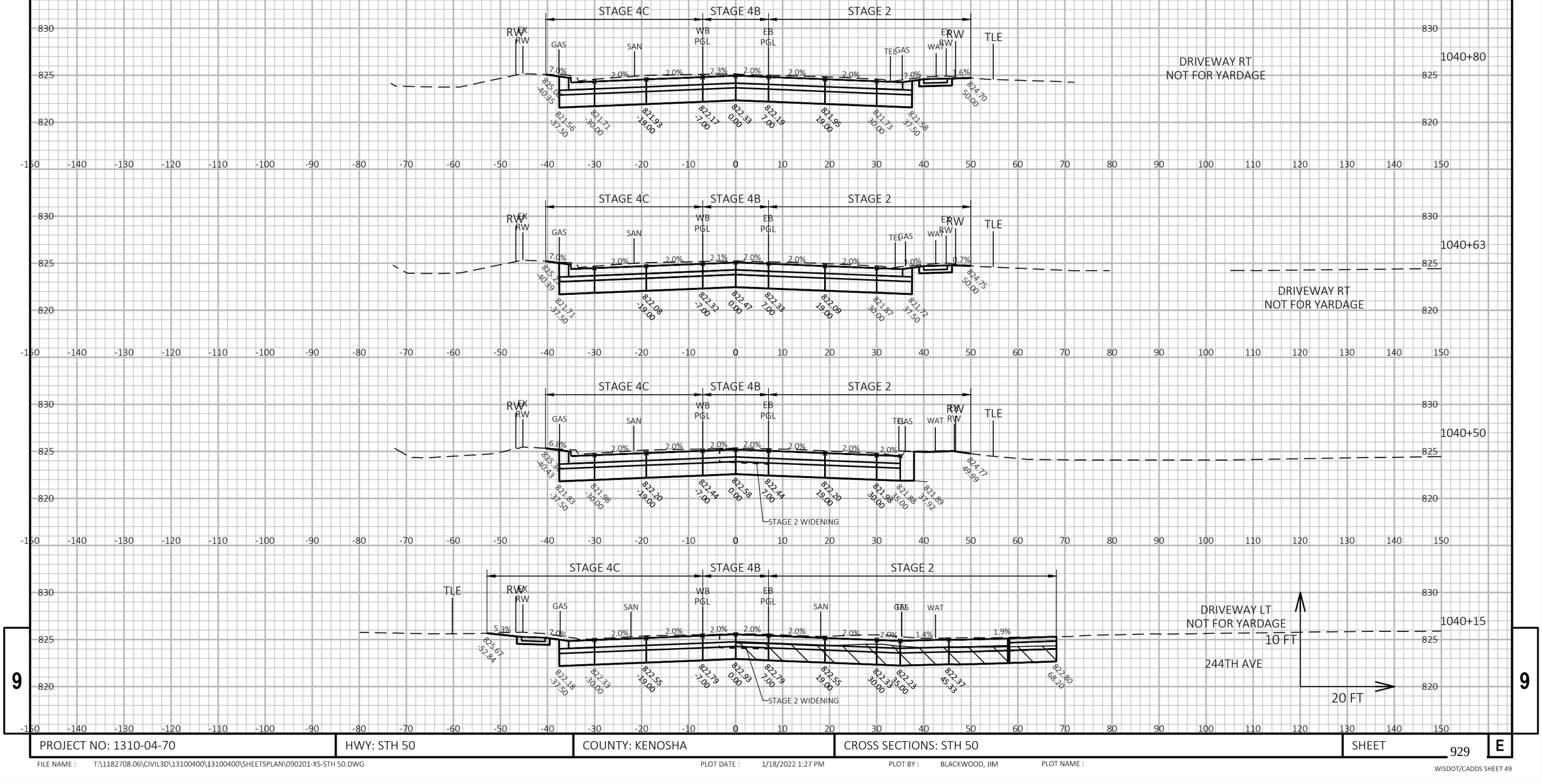

9

9

PROJECT NO: 1310-04-70	HWY: STH 50	COUNTY: KENOSHA	CROSS SECTIONS: STH 50	SHEET 929	E

FILE NAME : T:\1182708.06\CIVIL3D\13100400\13100400\SHEETSPLAN\090201-XS-STH 50.DWG PLOT DATE : 1/18/2022 1:27 PM PLOT BY : BLACKWOOD, JIM PLOT NAME :

WISDOT/CADDS SHEET 49

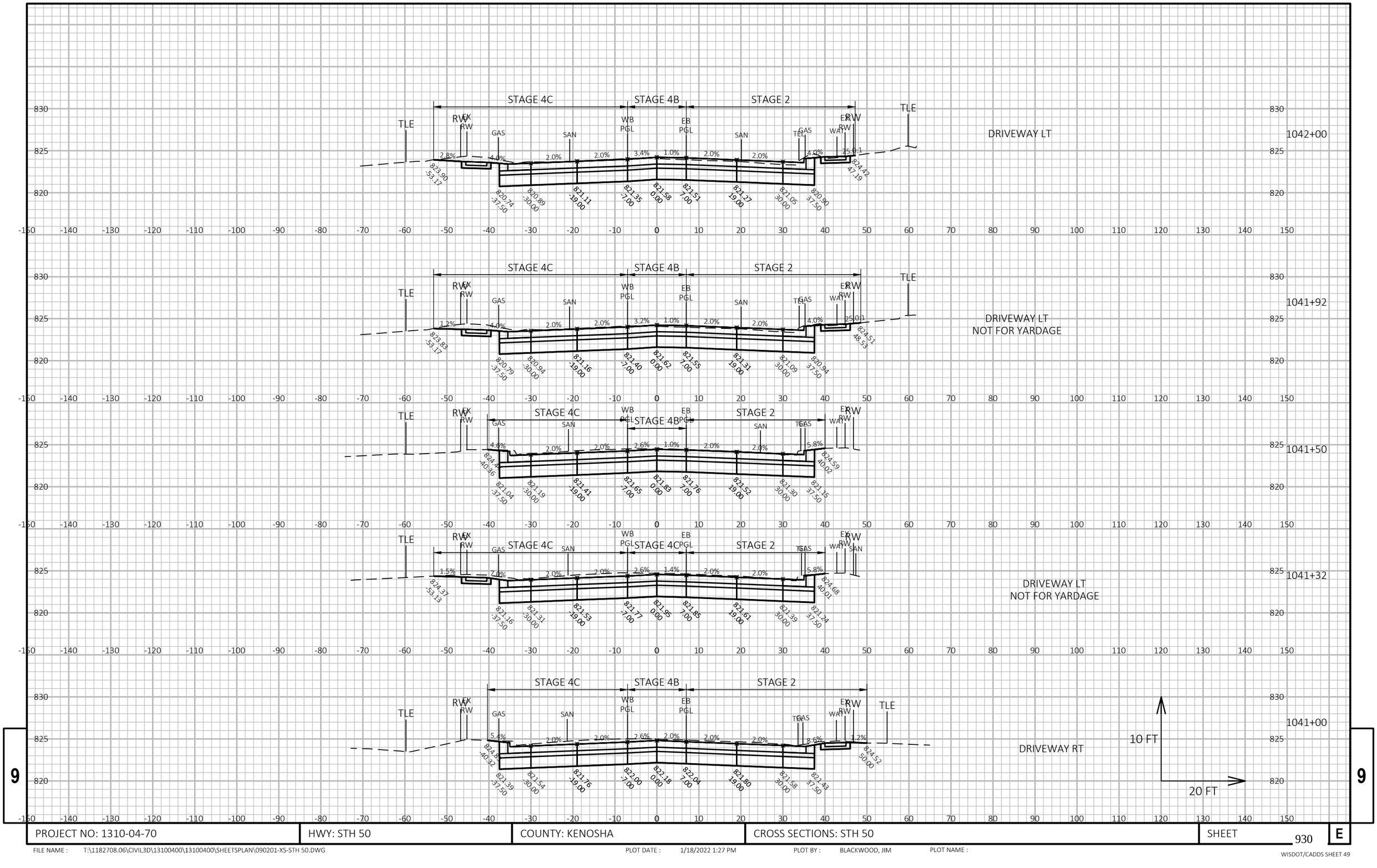

PROJECT NO: 1310-04-70	HWY: STH 50	COUNTY: KENOSHA	CROSS SECTIONS: STH 50	SHEET 930	E

FILE NAME : T:\1182708.06\CIVIL3D\13100400\13100400\SHEETSPLAN\090201-XS-STH 50.DWG PLOT DATE : 1/18/2022 1:27 PM PLOT BY : BLACKWOOD, JIM PLOT NAME :

WISDOT/CADDS SHEET 49

9

PROJECT NO: 1310-04-70	HWY: STH 50	COUNTY: KENOSHA	CROSS SECTIONS: STH 50	SHEET 931	E

FILE NAME : T:\1182708.06\CIVIL3D\13100400\13100400\SHEETSPLAN\090201-XS-STH 50.DWG PLOT DATE : 1/18/2022 1:27 PM PLOT BY : BLACKWOOD, JIM PLOT NAME :

WISDOT/CADDS SHEET 49

9

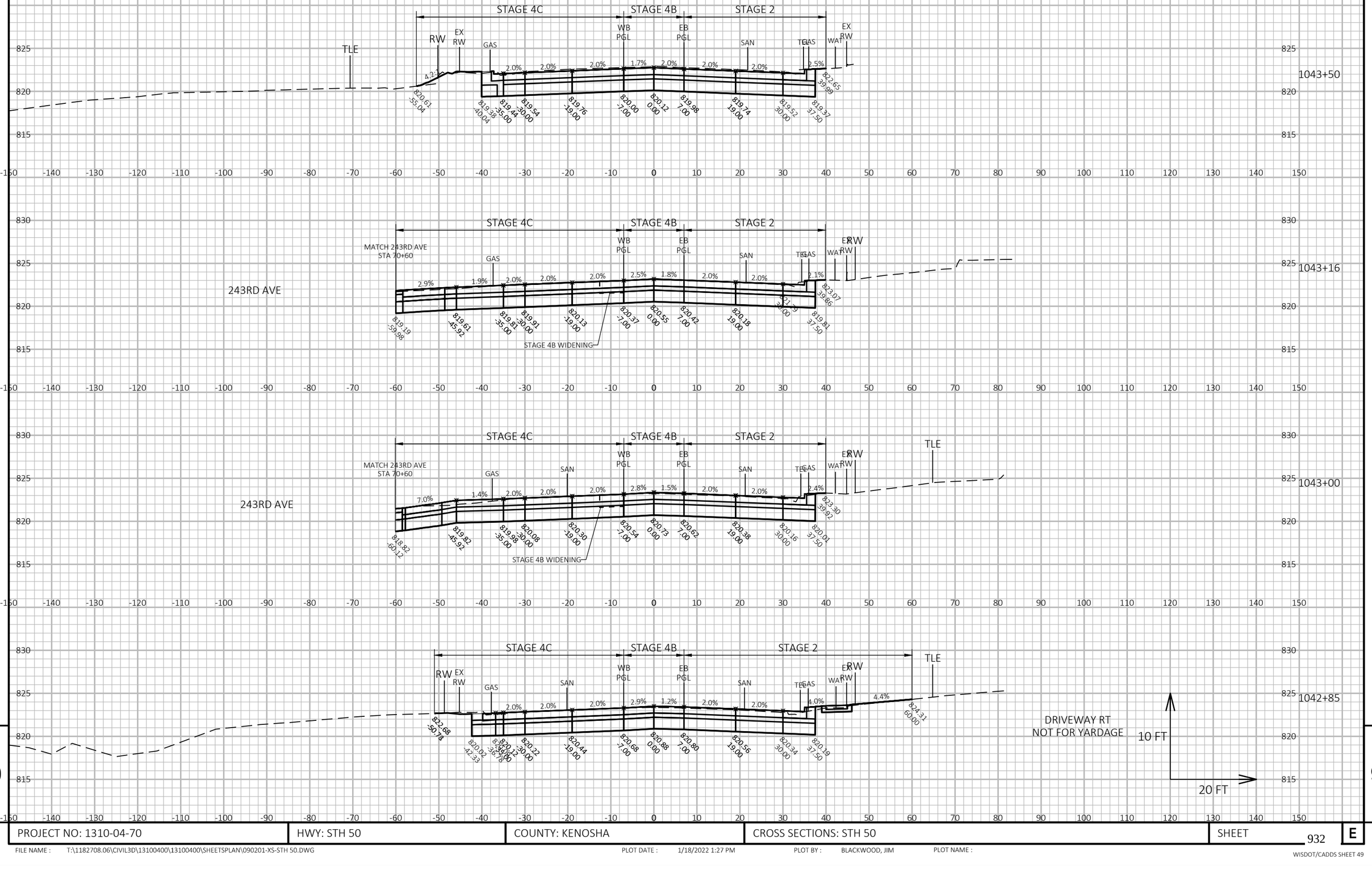

9

9

PROJECT NO: 1310-04-70	HWY: STH 50	COUNTY: KENOSHA	CROSS SECTIONS: STH 50	SHEET 932	E

FILE NAME : T:\1182708.06\CIVIL3D\13100400\13100400\SHEETSPLAN\090201-XS-STH 50.DWG PLOT DATE : 1/18/2022 1:27 PM PLOT BY : BLACKWOOD, JIM PLOT NAME :

WISDOT/CADDS SHEET 49

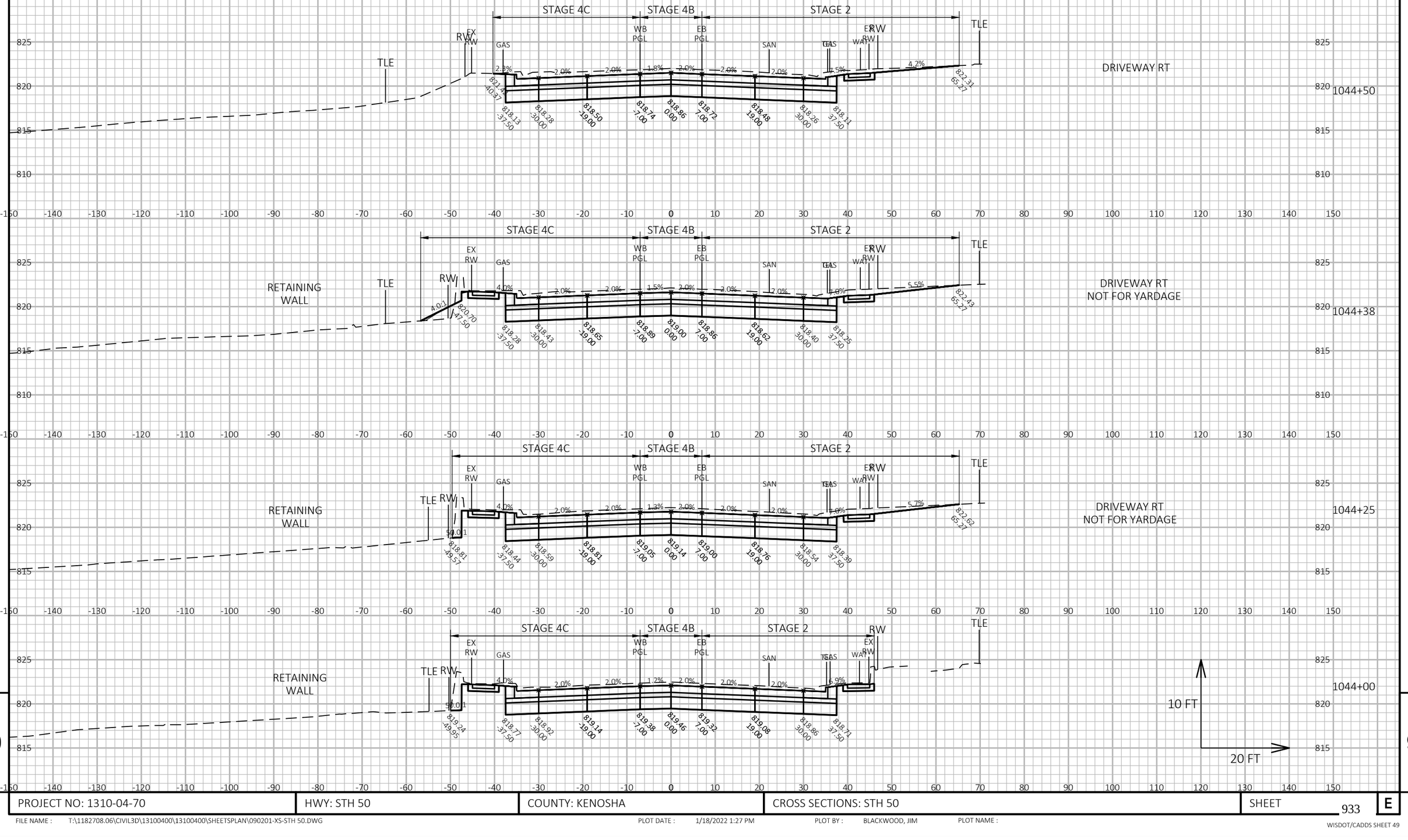

PROJECT NO: 1310-04-70	HWY: STH 50	COUNTY: KENOSHA	CROSS SECTIONS: STH 50	SHEET 933 E

FILE NAME : T:\1182708.06\CIVIL3D\13100400\13100400\SHEETSPLAN\090201-XS-STH 50.DWG PLOT DATE : 1/18/2022 1:27 PM PLOT BY : BLACKWOOD, JIM PLOT NAME :

WISDOT/CADDS SHEET 49

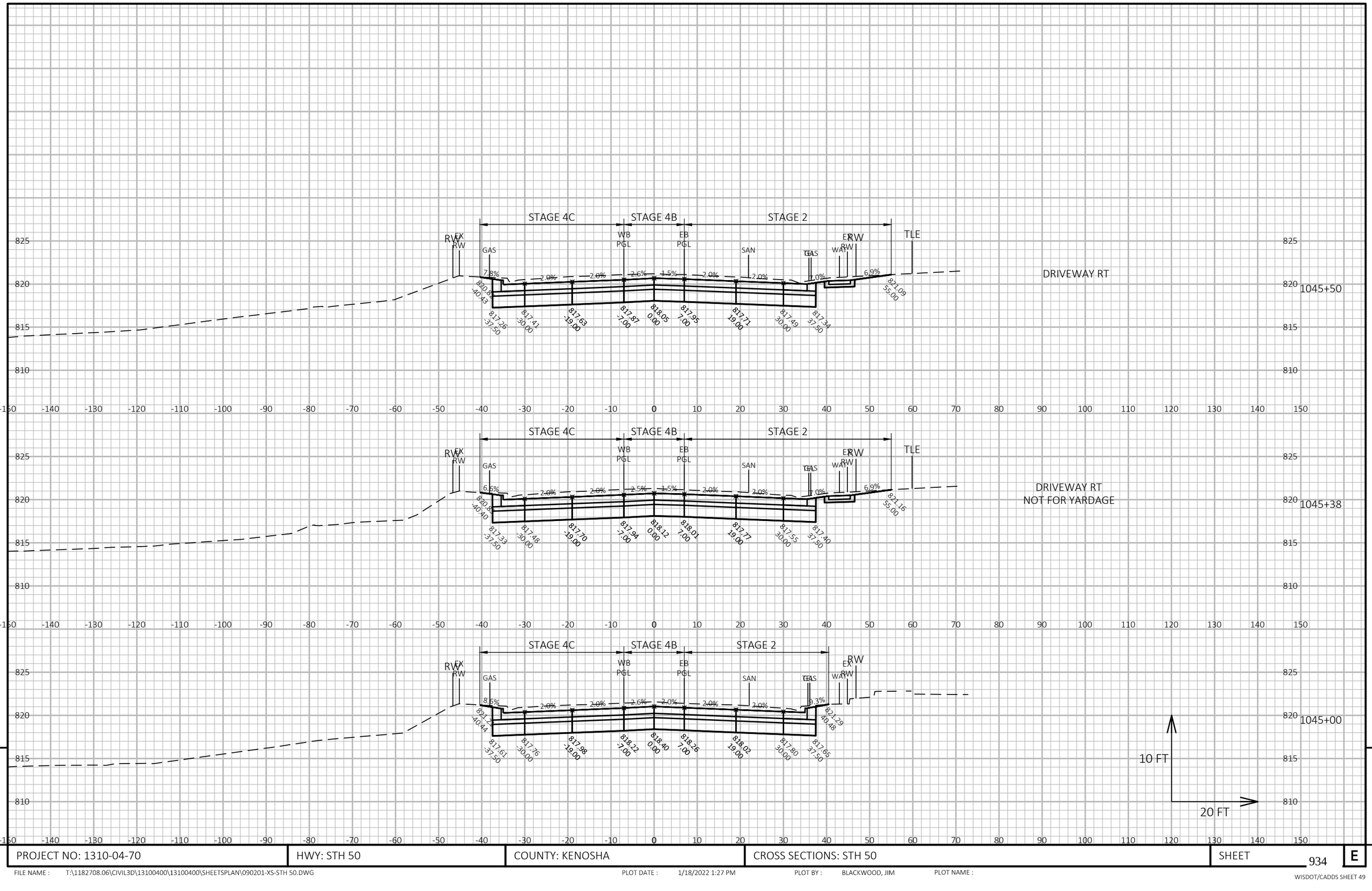

9

9

PROJECT NO: 1310-04-70	HWY: STH 50	COUNTY: KENOSHA	CROSS SECTIONS: STH 50	SHEET 934	E

FILE NAME : T:\1182708.06\CIVIL3D\13100400\13100400\SHEETSPLAN\090201-XS-STH 50.DWG PLOT DATE : 1/18/2022 1:27 PM PLOT BY : BLACKWOOD, JIM PLOT NAME :

WISDOT/CADDS SHEET 49

PROJECT NO: 1310-04-70	HWY: STH 50	COUNTY: KENOSHA	CROSS SECTIONS: STH 50	SHEET 935 E

FILE NAME : T:\1182708.06\CIVIL3D\13100400\13100400\SHEETSPLAN\090201-XS-STH 50.DWG PLOT DATE : 1/18/2022 1:27 PM PLOT BY : BLACKWOOD, JIM PLOT NAME :

WISDOT/CADDS SHEET 49

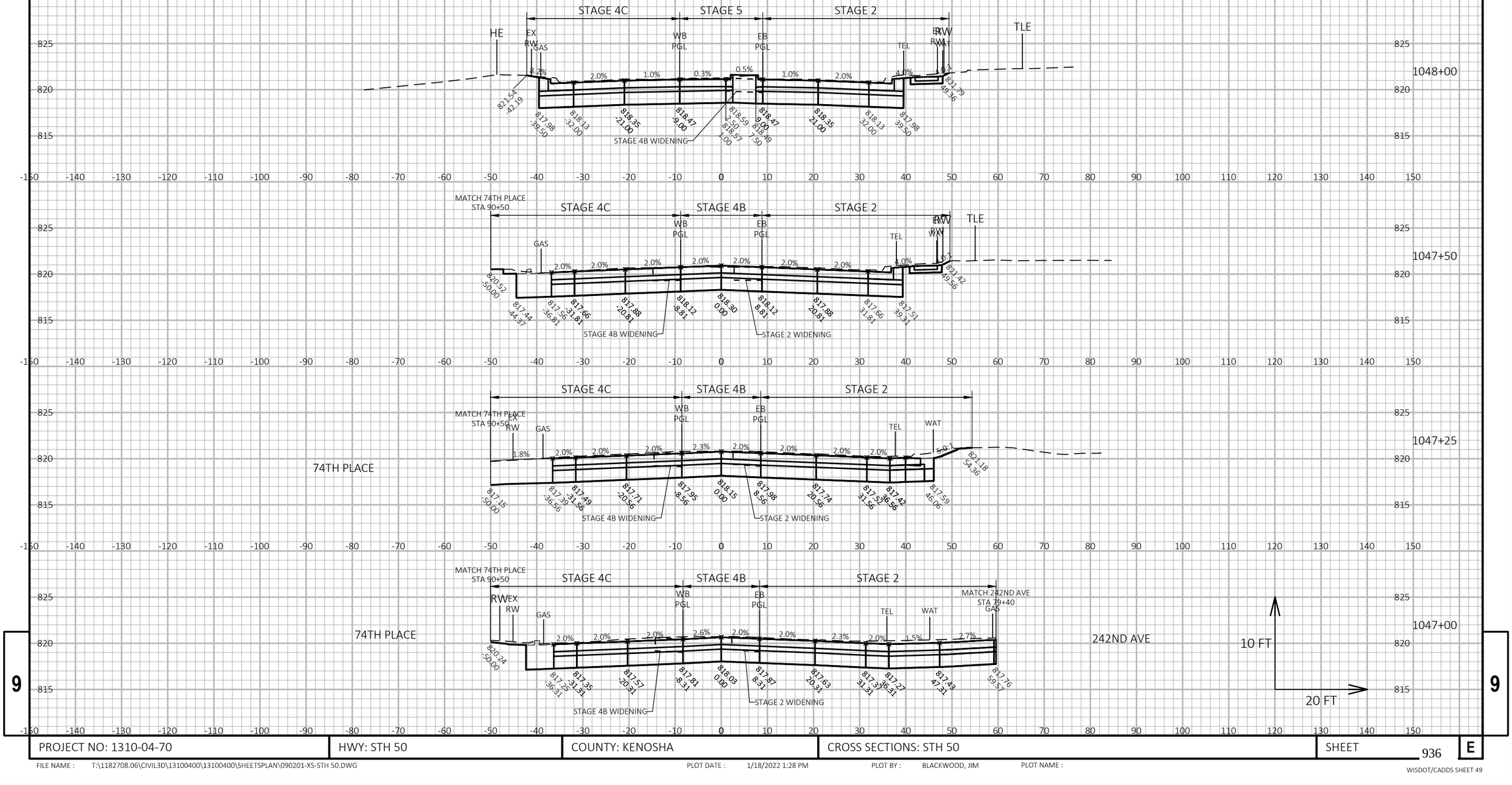

PROJECT NO: 1310-04-70	HWY: STH 50	COUNTY: KENOSHA	CROSS SECTIONS: STH 50	SHEET 936	E

FILE NAME : T:\1182708.06\CIVIL3D\13100400\13100400\SHEETSPLAN\090201-XS-STH 50.DWG PLOT DATE : 1/18/2022 1:28 PM PLOT BY : BLACKWOOD, JIM PLOT NAME :

WISDOT/CADDS SHEET 49

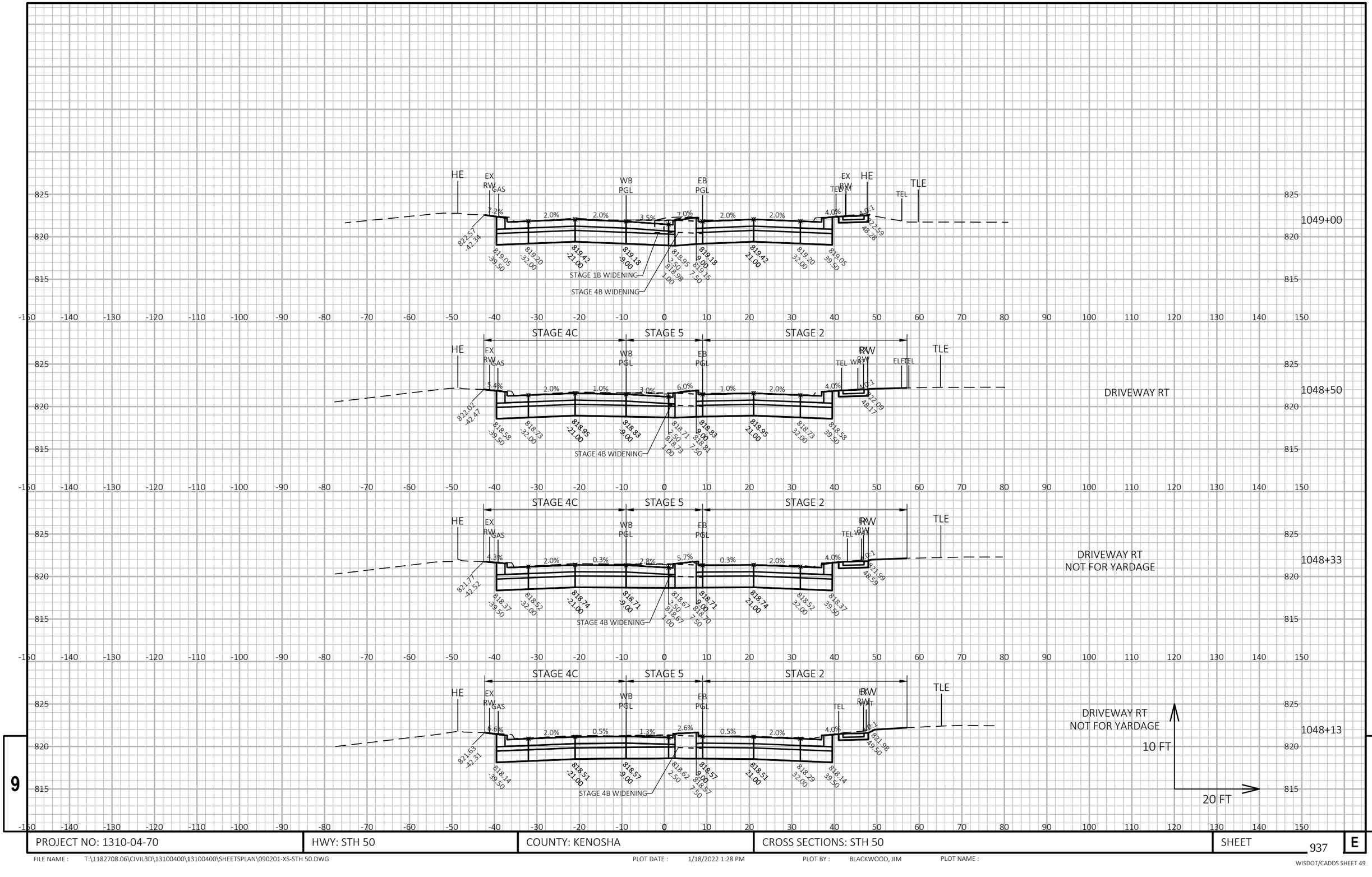

PROJECT NO: 1310-04-70	HWY: STH 50	COUNTY: KENOSHA	CROSS SECTIONS: STH 50	SHEET 937 E

FILE NAME : T:\1182708.06\CIVIL3D\13100400\13100400\SHEETSPLAN\090201-XS-STH 50.DWG PLOT DATE : 1/18/2022 1:28 PM PLOT BY : BLACKWOOD, JIM PLOT NAME :

WISDOT/CADDS SHEET 49

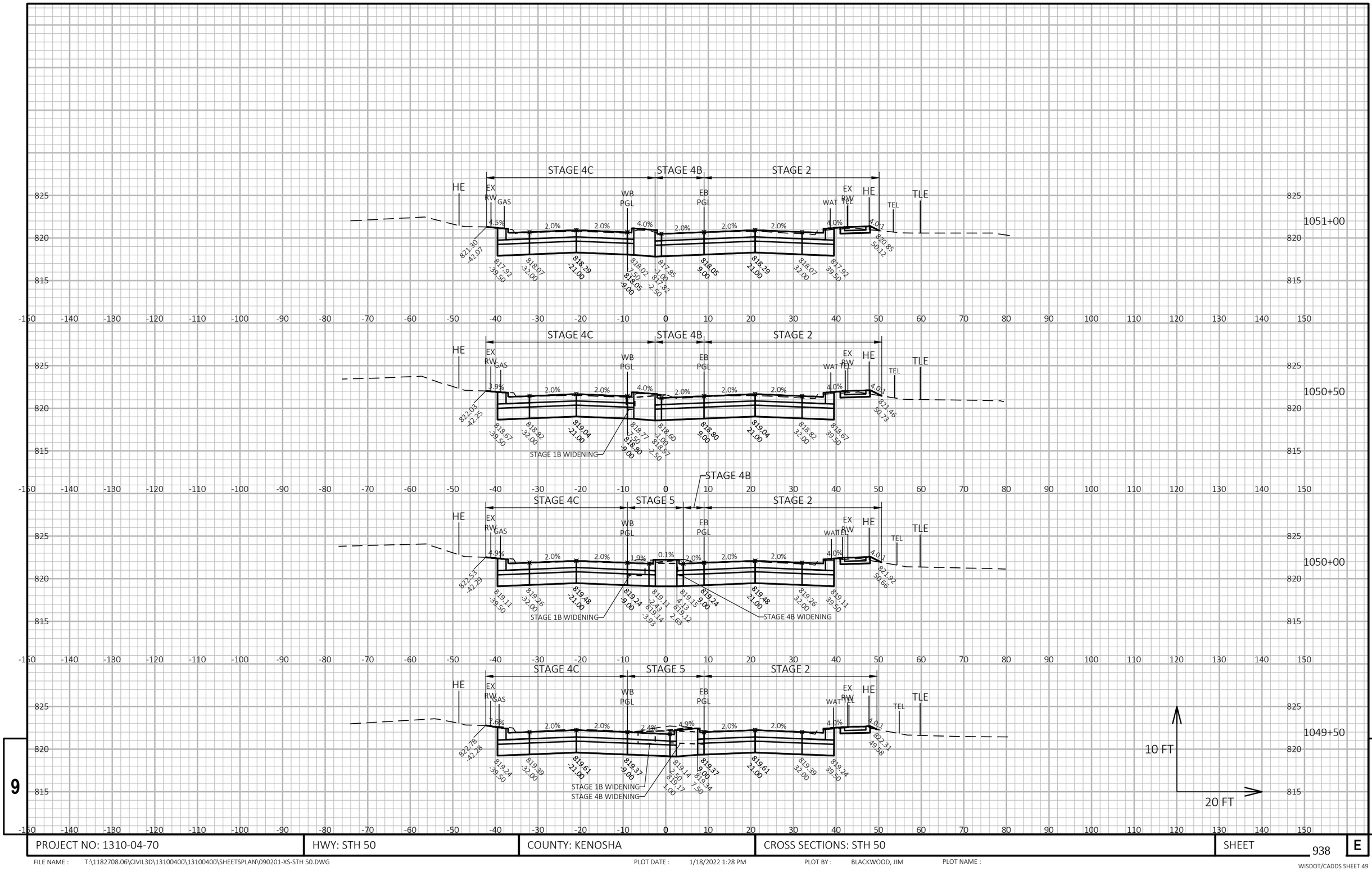

PROJECT NO: 1310-04-70	HWY: STH 50	COUNTY: KENOSHA	CROSS SECTIONS: STH 50	SHEET 938 E

FILE NAME : T:\1182708.06\CIVIL3D\13100400\13100400\SHEETSPLAN\090201-XS-STH 50.DWG PLOT DATE : 1/18/2022 1:28 PM PLOT BY : BLACKWOOD, JIM PLOT NAME :

WISDOT/CADDS SHEET 49

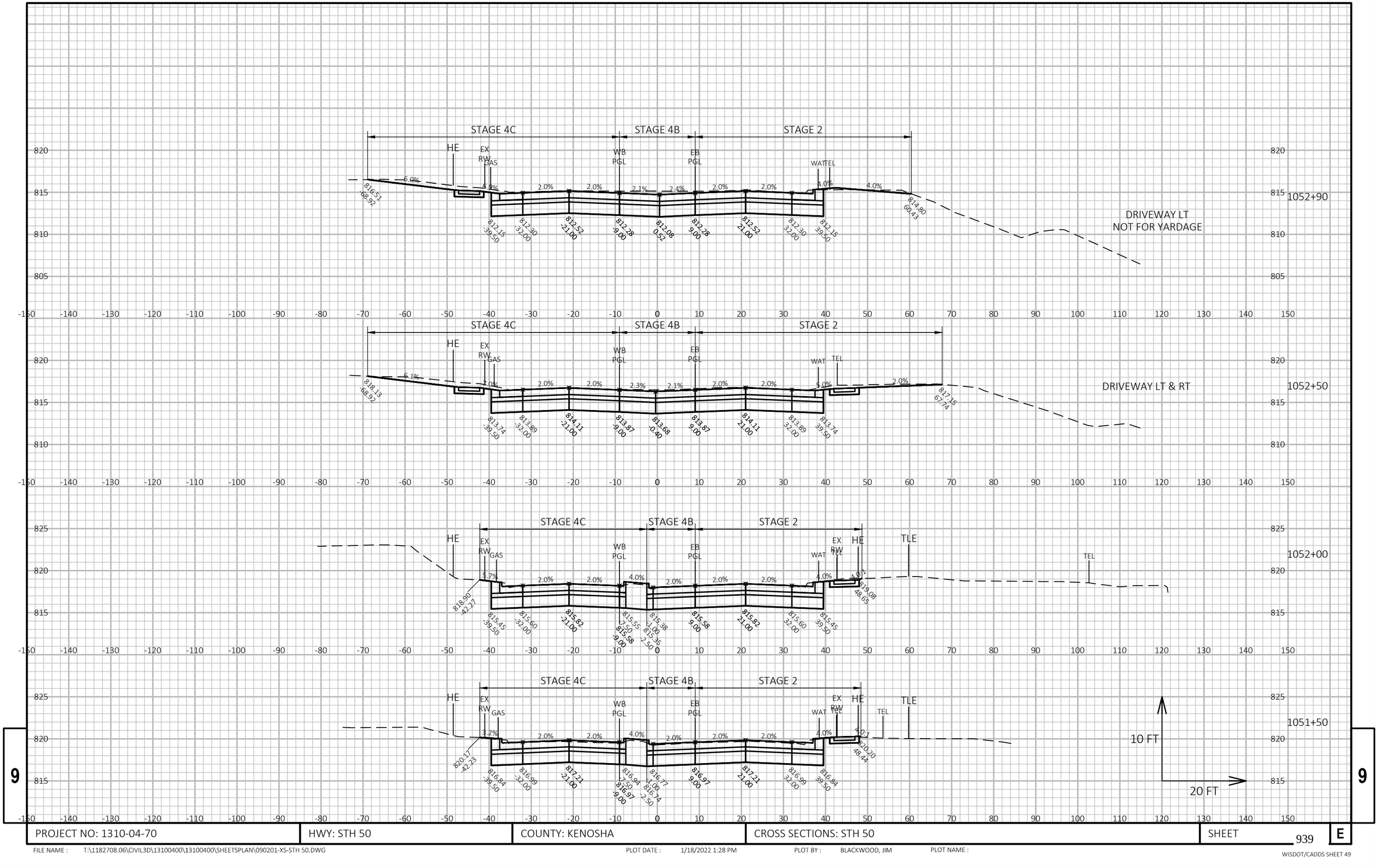

PROJECT NO: 1310-04-70	HWY: STH 50	COUNTY: KENOSHA	CROSS SECTIONS: STH 50	SHEET 939 E

FILE NAME : T:\1182708.06\CIVIL3D\13100400\13100400\SHEETSPLAN\090201-XS-STH 50.DWG PLOT DATE : 1/18/2022 1:28 PM PLOT BY : BLACKWOOD, JIM PLOT NAME :

WISDOT/CADDS SHEET 49

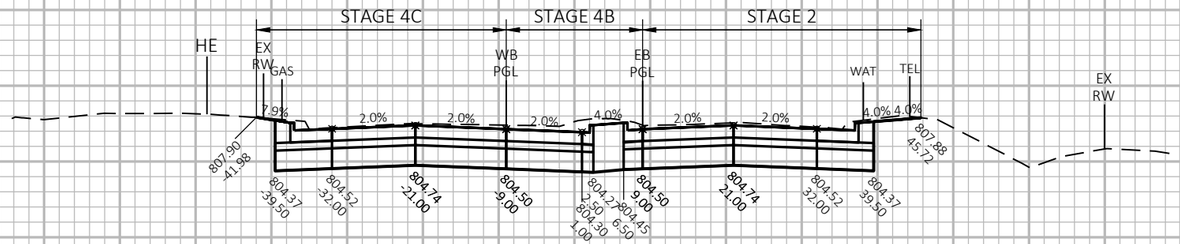

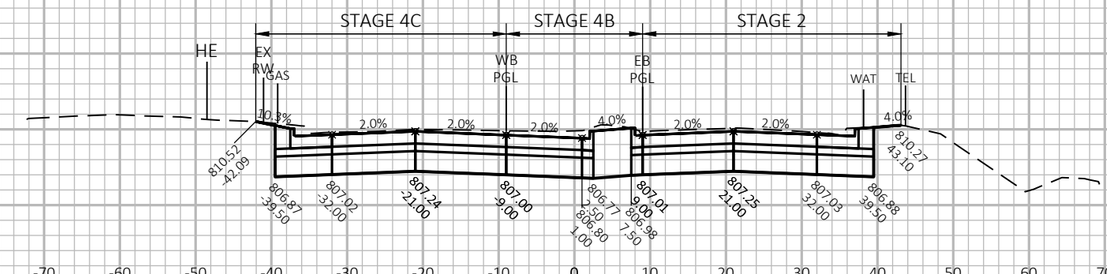

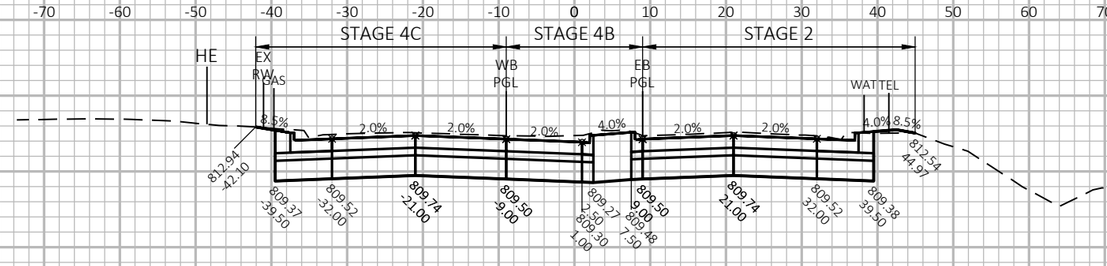

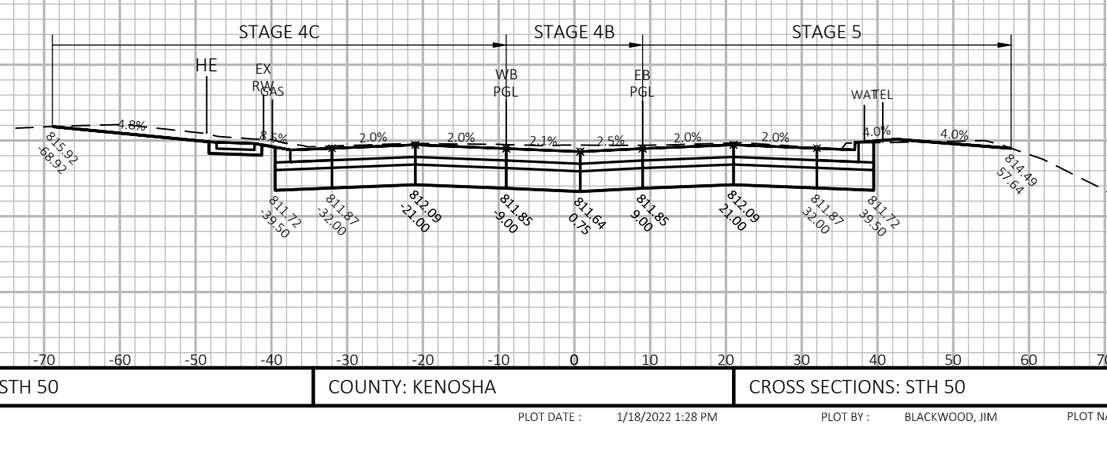

PROJECT NO: 1310-04-70	HWY: STH 50	COUNTY: KENOSHA	CROSS SECTIONS: STH 50	SHEET 940	E

FILE NAME : T:\1182708.06\CIVIL3D\13100400\13100400\SHEETSPLAN\090201-XS-STH 50.DWG PLOT DATE : 1/18/2022 1:28 PM PLOT BY : BLACKWOOD, JIM PLOT NAME :

WISDOT/CADDS SHEET 49

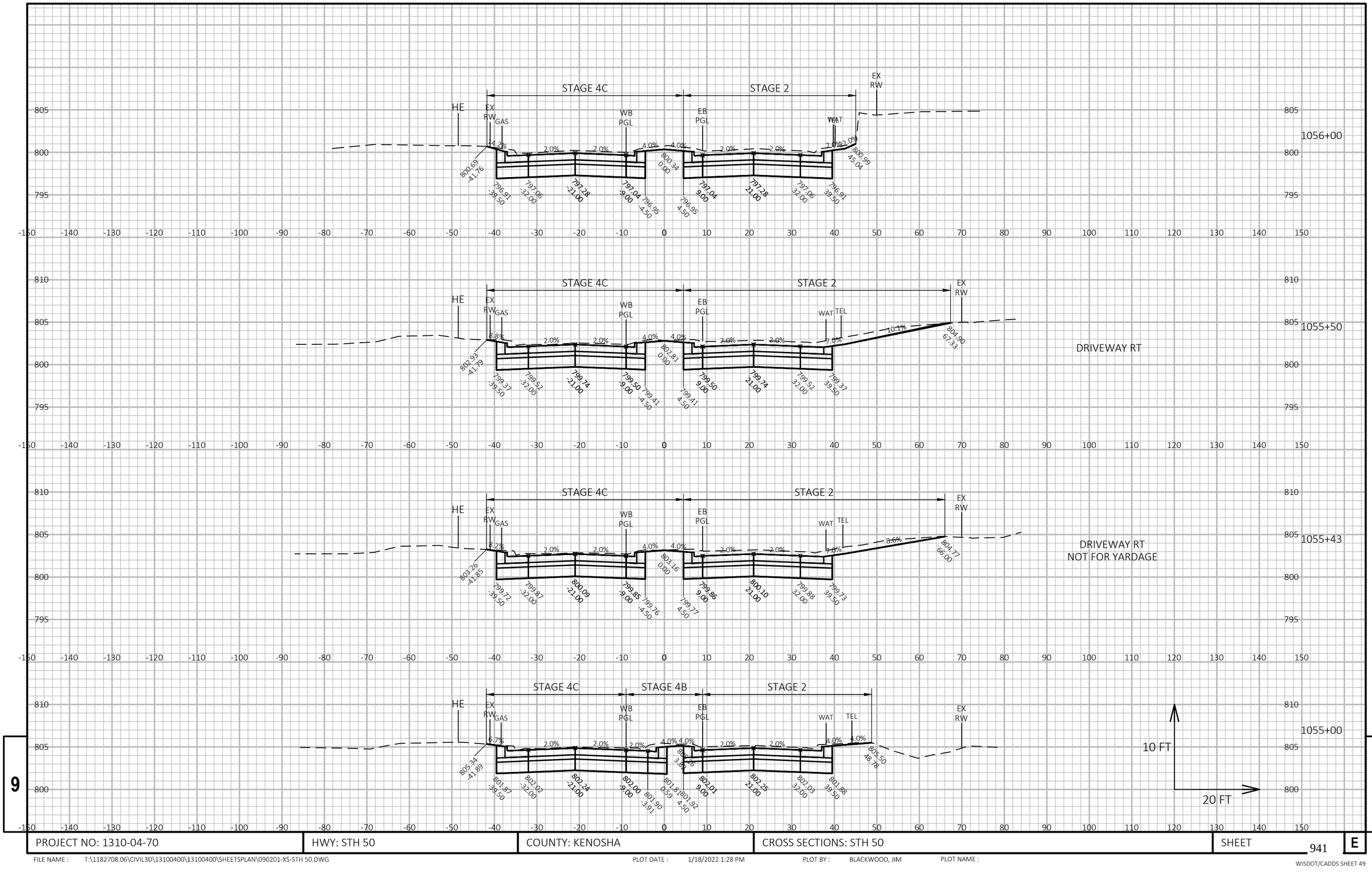

PROJECT NO: 1310-04-70	HWY: STH 50	COUNTY: KENOSHA	CROSS SECTIONS: STH 50	SHEET 941	E

FILE NAME : T:\1182708.06\CIVIL3D\13100400\13100400\SHEETSPLAN\090201-XS-STH 50.DWG PLOT DATE : 1/18/2022 1:28 PM PLOT BY : BLACKWOOD, JIM PLOT NAME :

WISDOT/CADDS SHEET 49

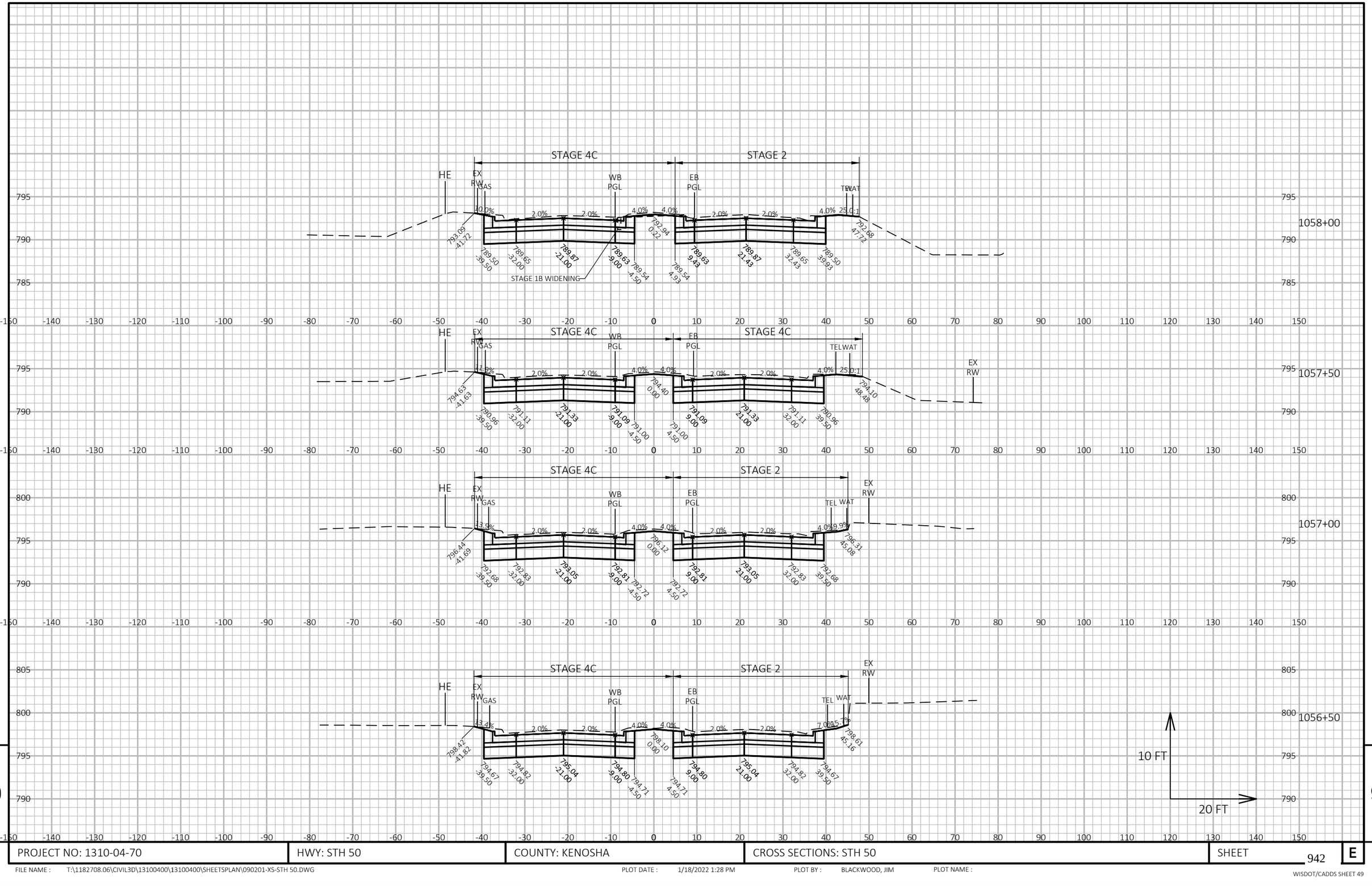

PROJECT NO: 1310-04-70	HWY: STH 50	COUNTY: KENOSHA	CROSS SECTIONS: STH 50	SHEET 942 E

FILE NAME : T:\1182708.06\CIVIL3D\13100400\13100400\SHEETSPLAN\090201-XS-STH 50.DWG PLOT DATE : 1/18/2022 1:28 PM PLOT BY : BLACKWOOD, JIM PLOT NAME :

WISDOT/CADDS SHEET 49

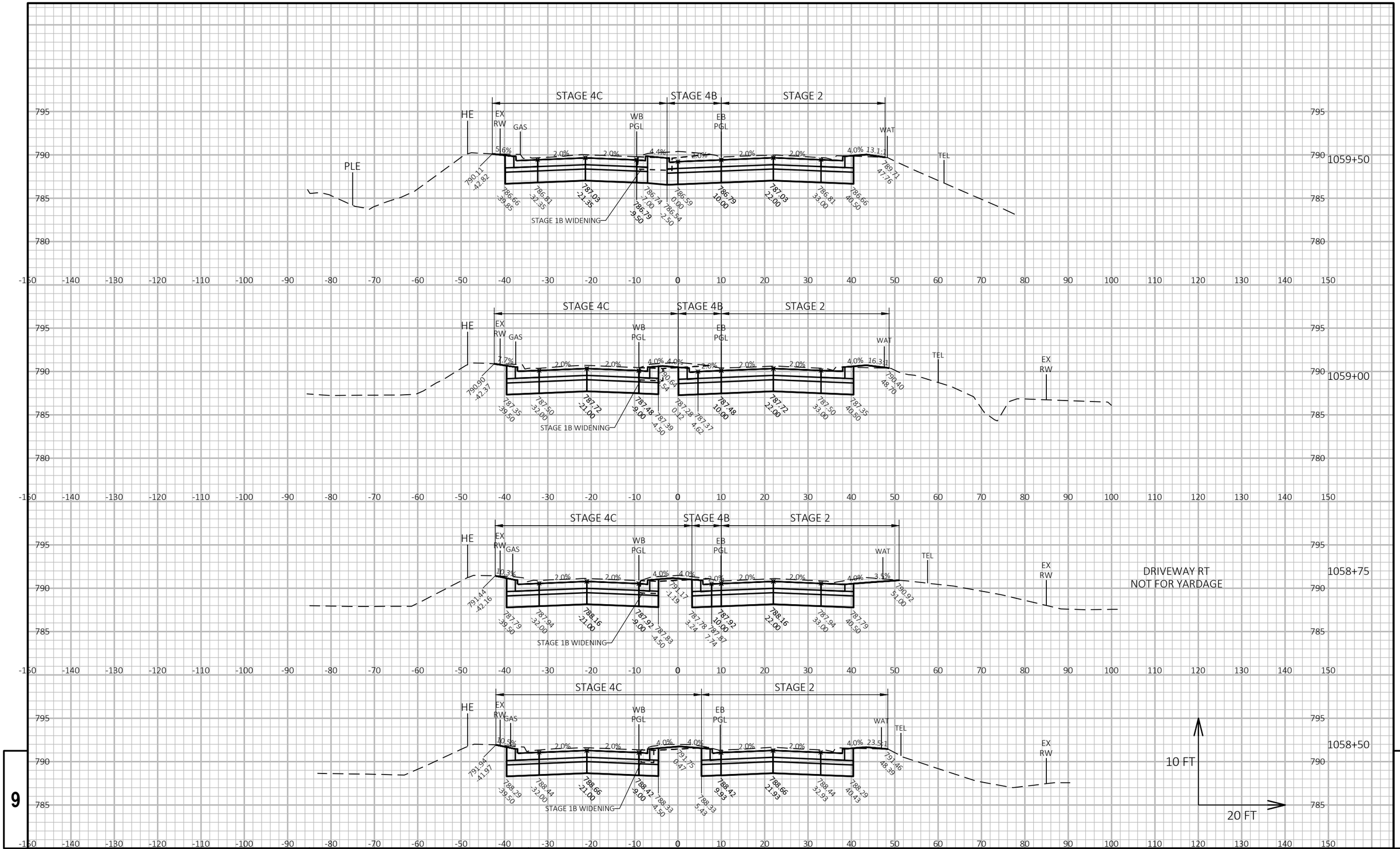

PROJECT NO: 1310-04-70	HWY: STH 50	COUNTY: KENOSHA	CROSS SECTIONS: STH 50	SHEET 943 E

FILE NAME : T:\1182708.06\CIVIL3D\13100400\13100400\SHEETSPLAN\090201-XS-STH 50.DWG PLOT DATE : 1/18/2022 1:28 PM PLOT BY : BLACKWOOD, JIM PLOT NAME :

WISDOT/CADDS SHEET 49

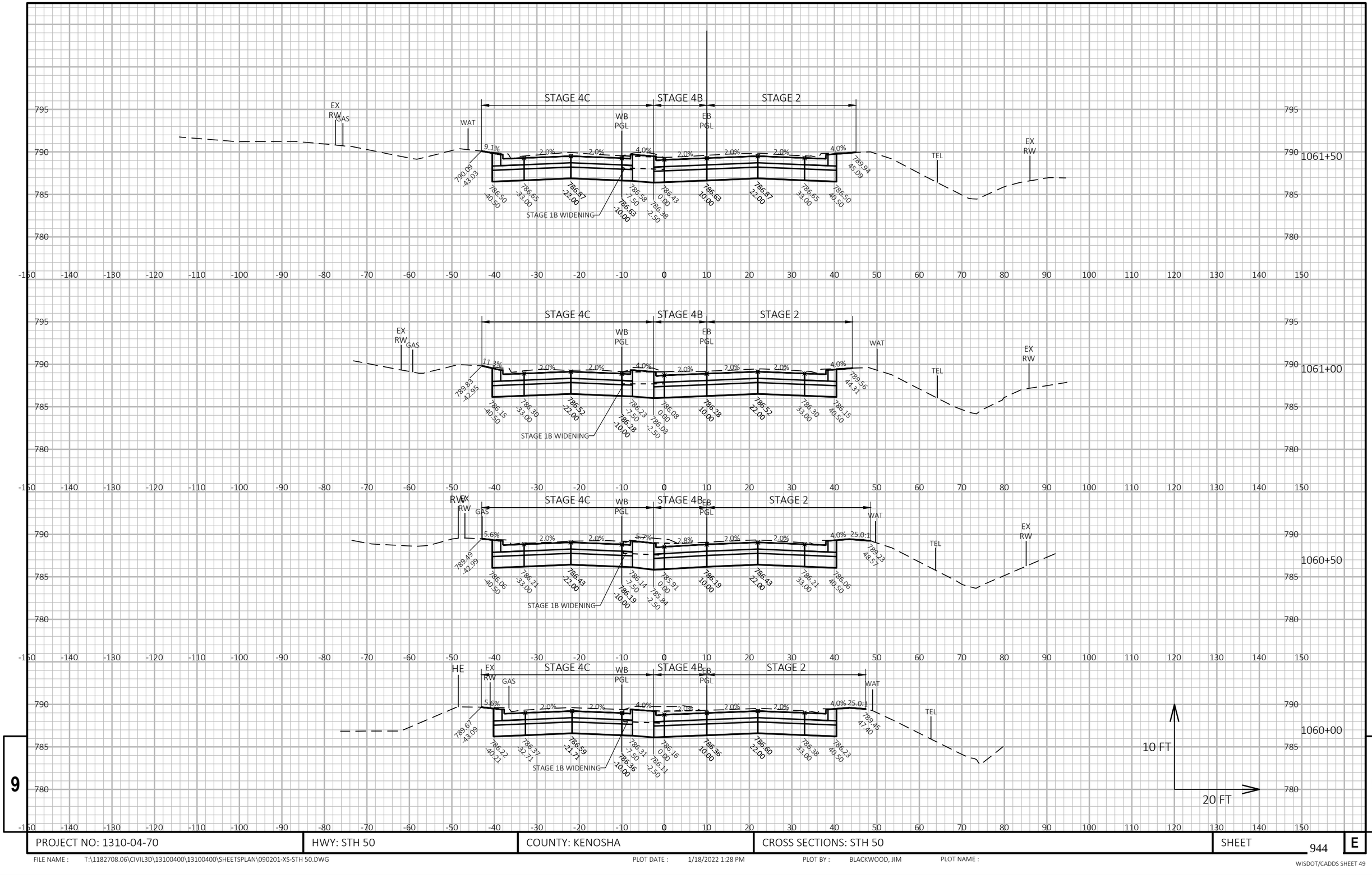

PROJECT NO: 1310-04-70	HWY: STH 50	COUNTY: KENOSHA	CROSS SECTIONS: STH 50	SHEET 944 E

FILE NAME : T:\1182708.06\CIVIL3D\13100400\13100400\SHEETSPLAN\090201-XS-STH 50.DWG PLOT DATE : 1/18/2022 1:28 PM PLOT BY : BLACKWOOD, JIM PLOT NAME :

WISDOT/CADDS SHEET 49

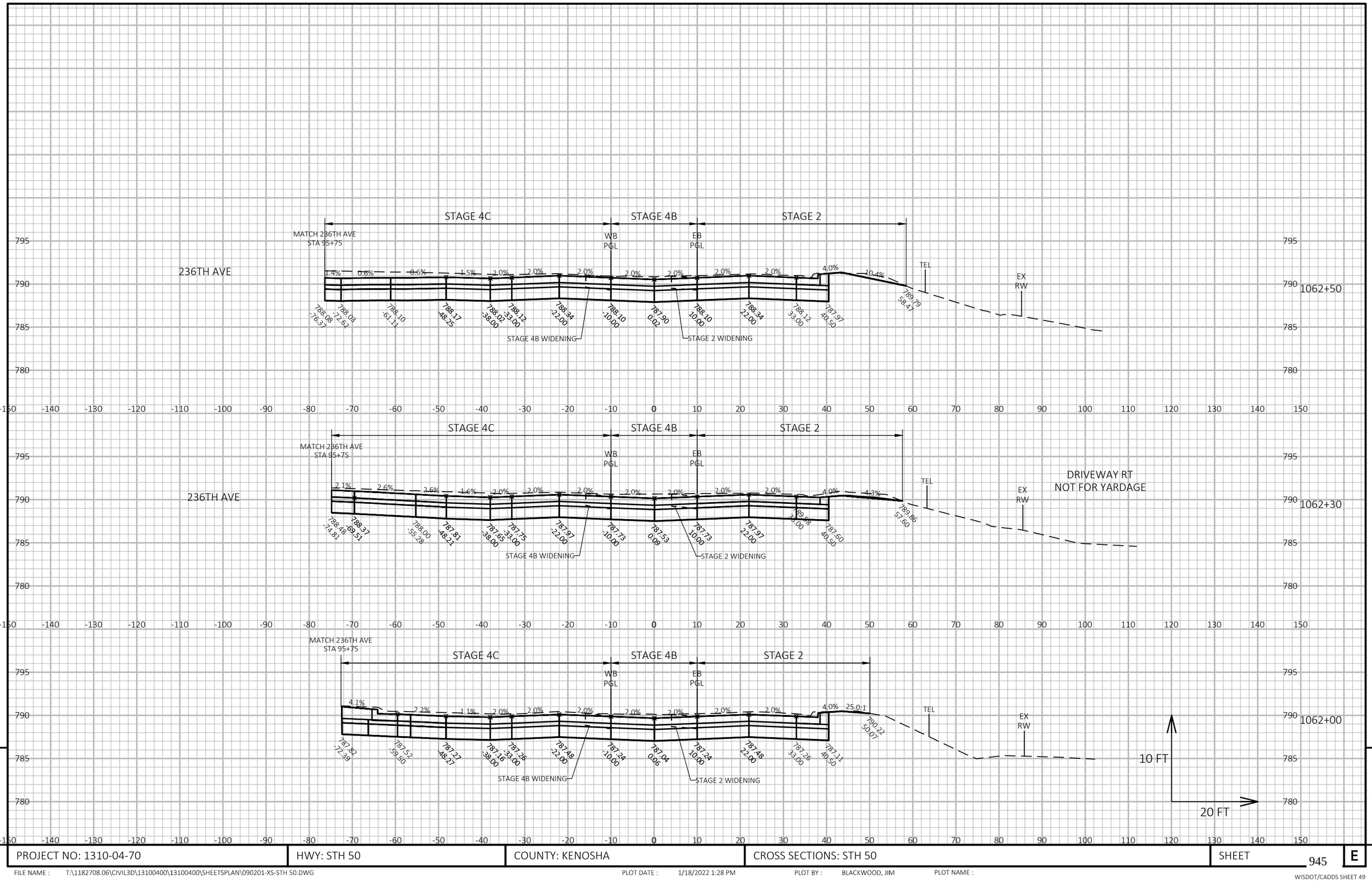

PROJECT NO: 1310-04-70	HWY: STH 50	COUNTY: KENOSHA	CROSS SECTIONS: STH 50	SHEET 945	E

FILE NAME : T:\1182708.06\CIVIL3D\13100400\13100400\SHEETSPLAN\090201-XS-STH 50.DWG PLOT DATE : 1/18/2022 1:28 PM PLOT BY : BLACKWOOD, JIM PLOT NAME :

WISDOT/CADDS SHEET 49

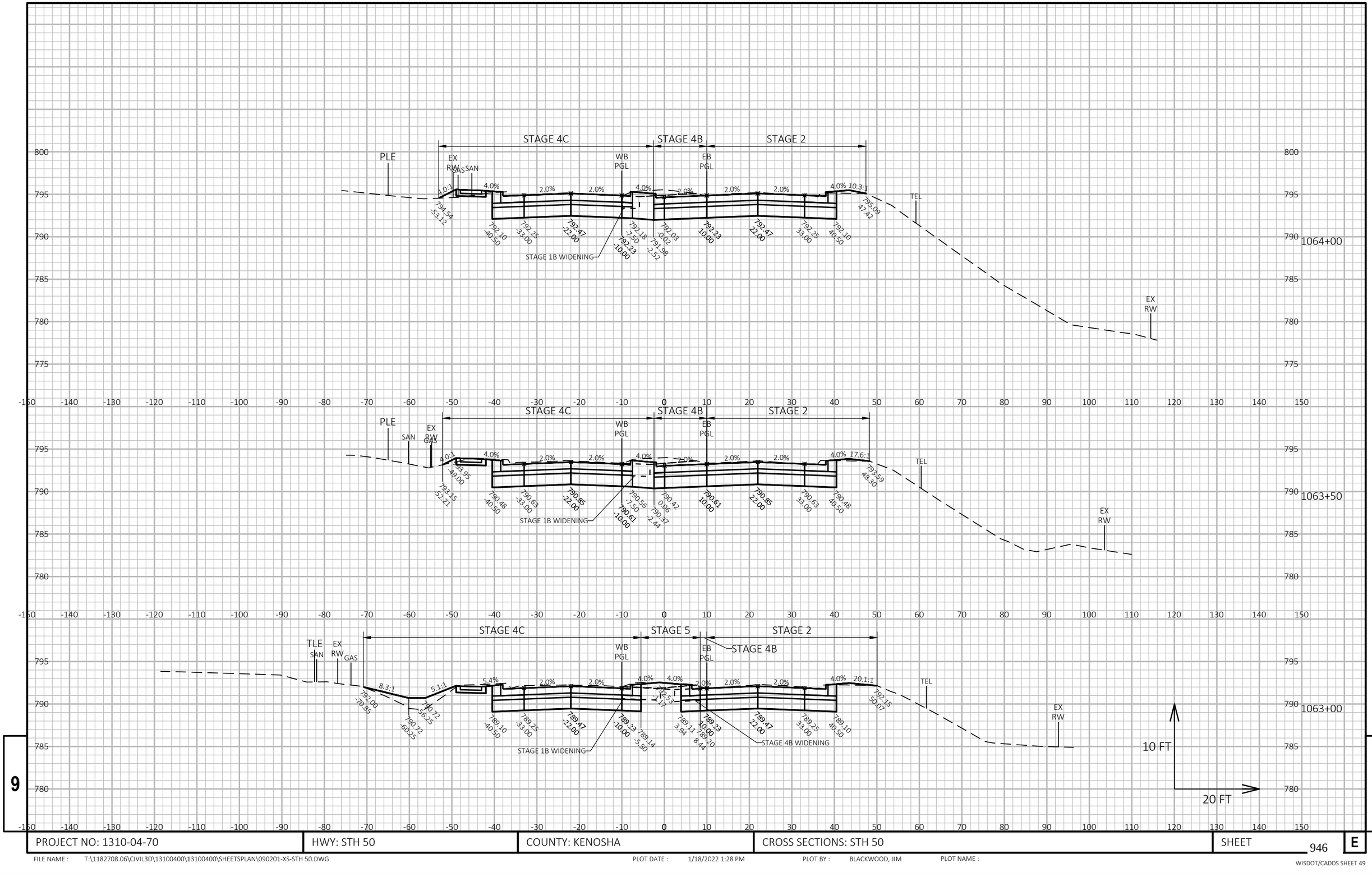

PROJECT NO: 1310-04-70	HWY: STH 50	COUNTY: KENOSHA	CROSS SECTIONS: STH 50	SHEET 946	E

FILE NAME : T:\1182708.06\CIVIL3D\13100400\13100400\SHEETSPLAN\090201-XS-STH 50.DWG PLOT DATE : 1/18/2022 1:28 PM PLOT BY : BLACKWOOD, JIM PLOT NAME :

WISDOT/CADDS SHEET 49

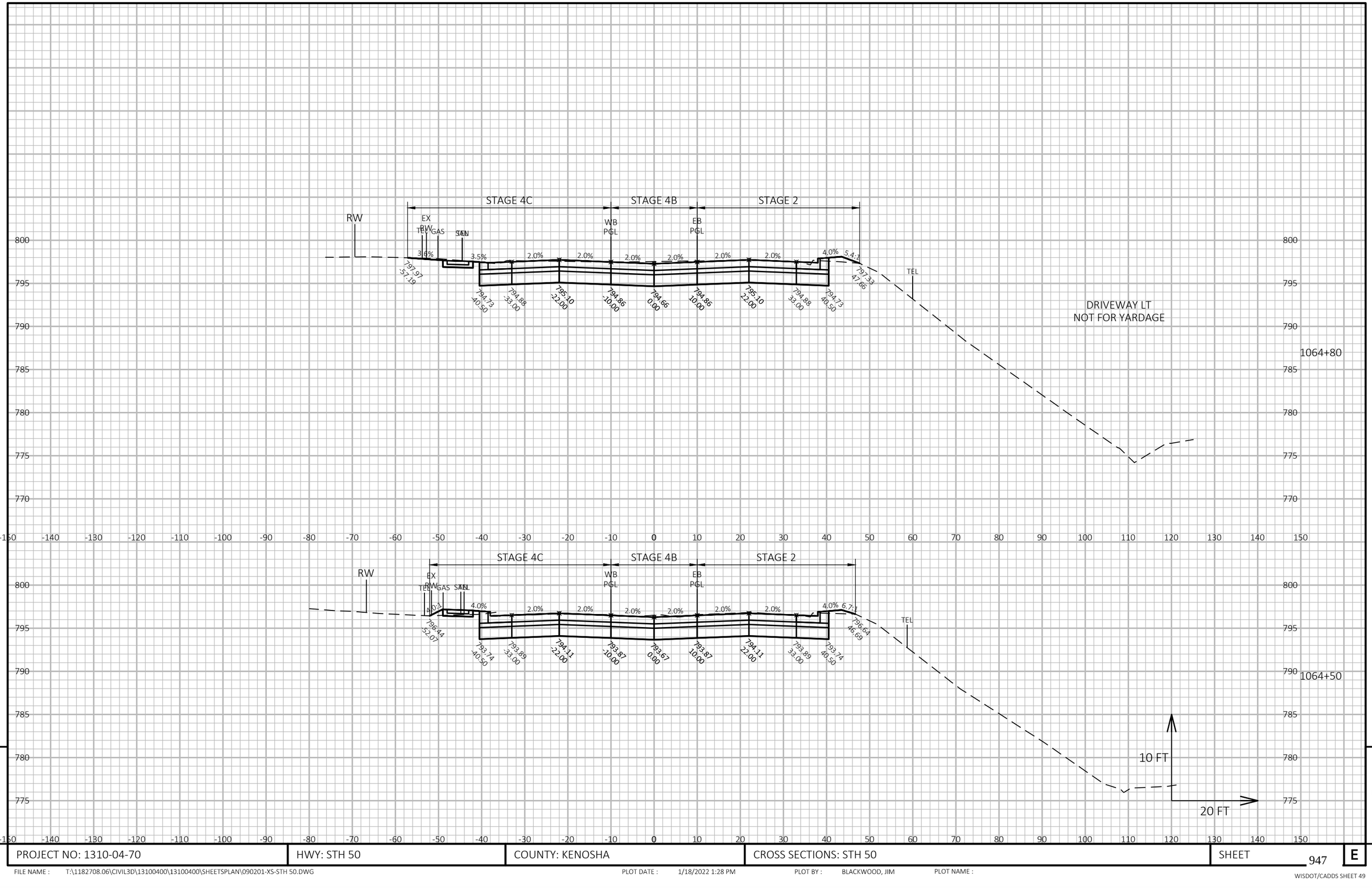

9

9

PROJECT NO: 1310-04-70	HWY: STH 50	COUNTY: KENOSHA	CROSS SECTIONS: STH 50	SHEET 947	E

FILE NAME : T:\1182708.06\CIVIL3D\13100400\13100400\SHEETSPLAN\090201-XS-STH 50.DWG PLOT DATE : 1/18/2022 1:28 PM PLOT BY : BLACKWOOD, JIM PLOT NAME :

WISDOT/CADDS SHEET 49

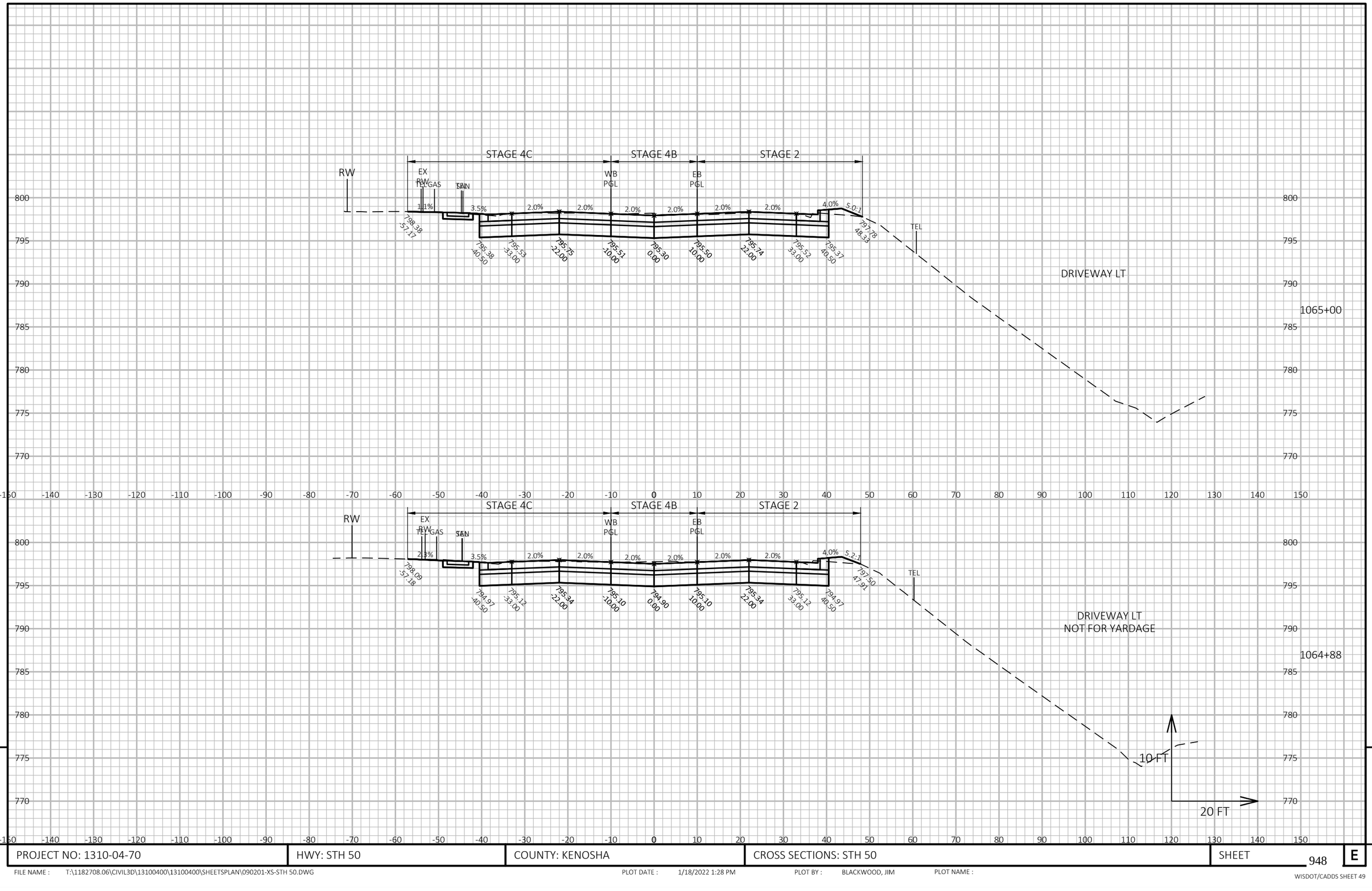

9

9

PROJECT NO: 1310-04-70	HWY: STH 50	COUNTY: KENOSHA	CROSS SECTIONS: STH 50	SHEET 948	E

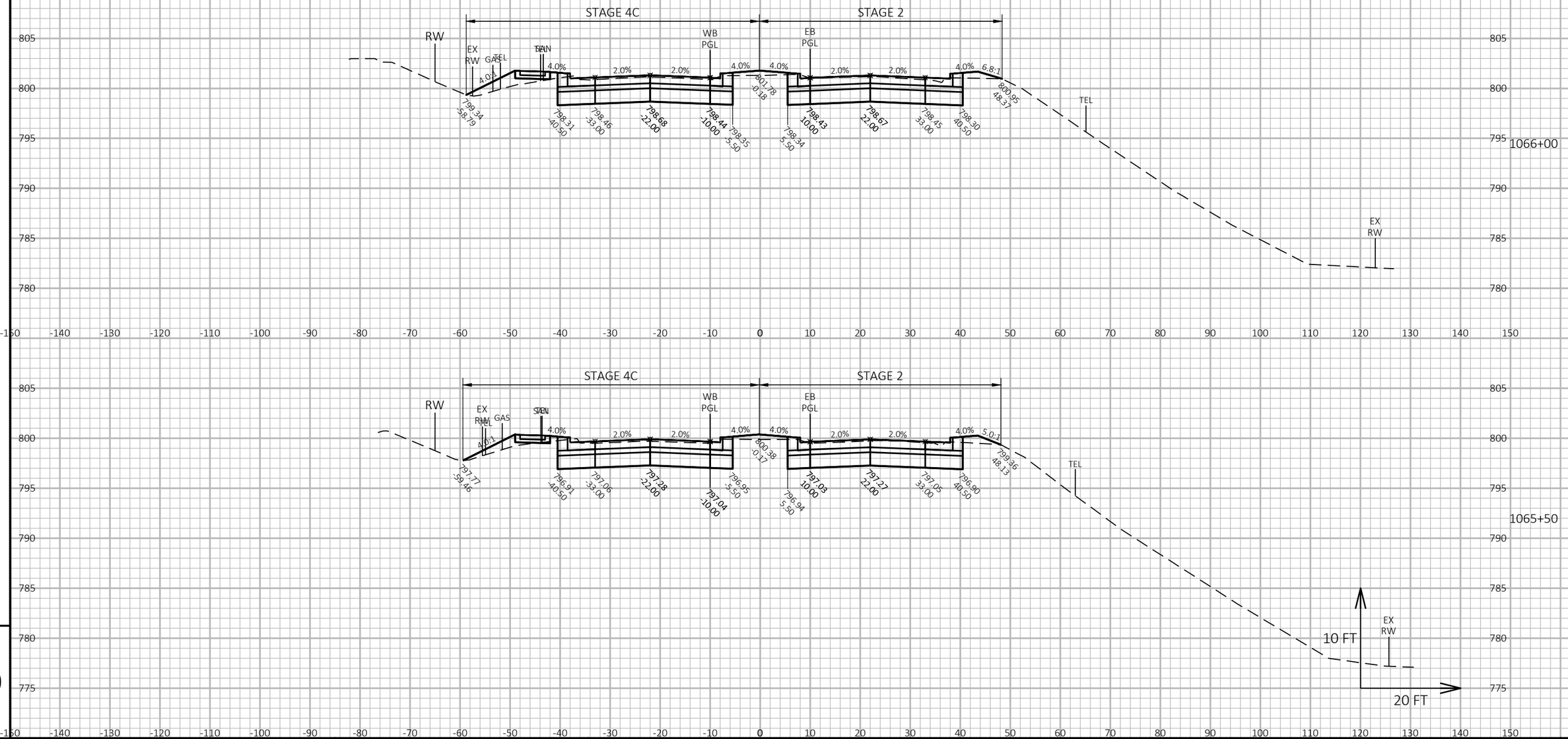

PROJECT NO: 1310-04-70	HWY: STH 50	COUNTY: KENOSHA	CROSS SECTIONS: STH 50	SHEET 949	E

FILE NAME : T:\1182708.06\CIVIL3D\13100400\13100400\SHEETSPLAN\090201-XS-STH 50.DWG PLOT DATE : 1/18/2022 1:28 PM PLOT BY : BLACKWOOD, JIM PLOT NAME :

WISDOT/CADDS SHEET 49

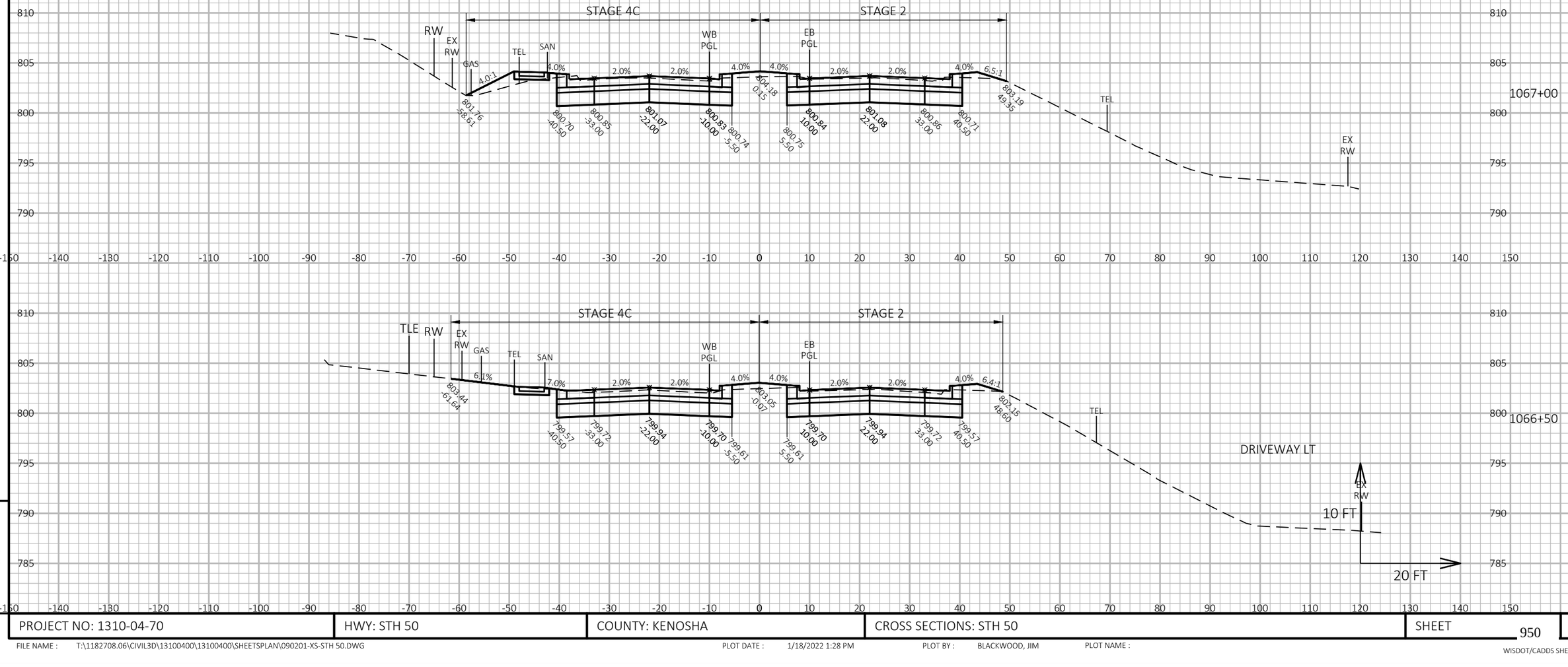

PROJECT NO: 1310-04-70	HWY: STH 50	COUNTY: KENOSHA	CROSS SECTIONS: STH 50	SHEET 950	E

FILE NAME : T:\1182708.06\CIVIL3D\13100400\13100400\SHEETSPLAN\090201-XS-STH 50.DWG PLOT DATE : 1/18/2022 1:28 PM PLOT BY : BLACKWOOD, JIM PLOT NAME :

WISDOT/CADDS SHEET 49

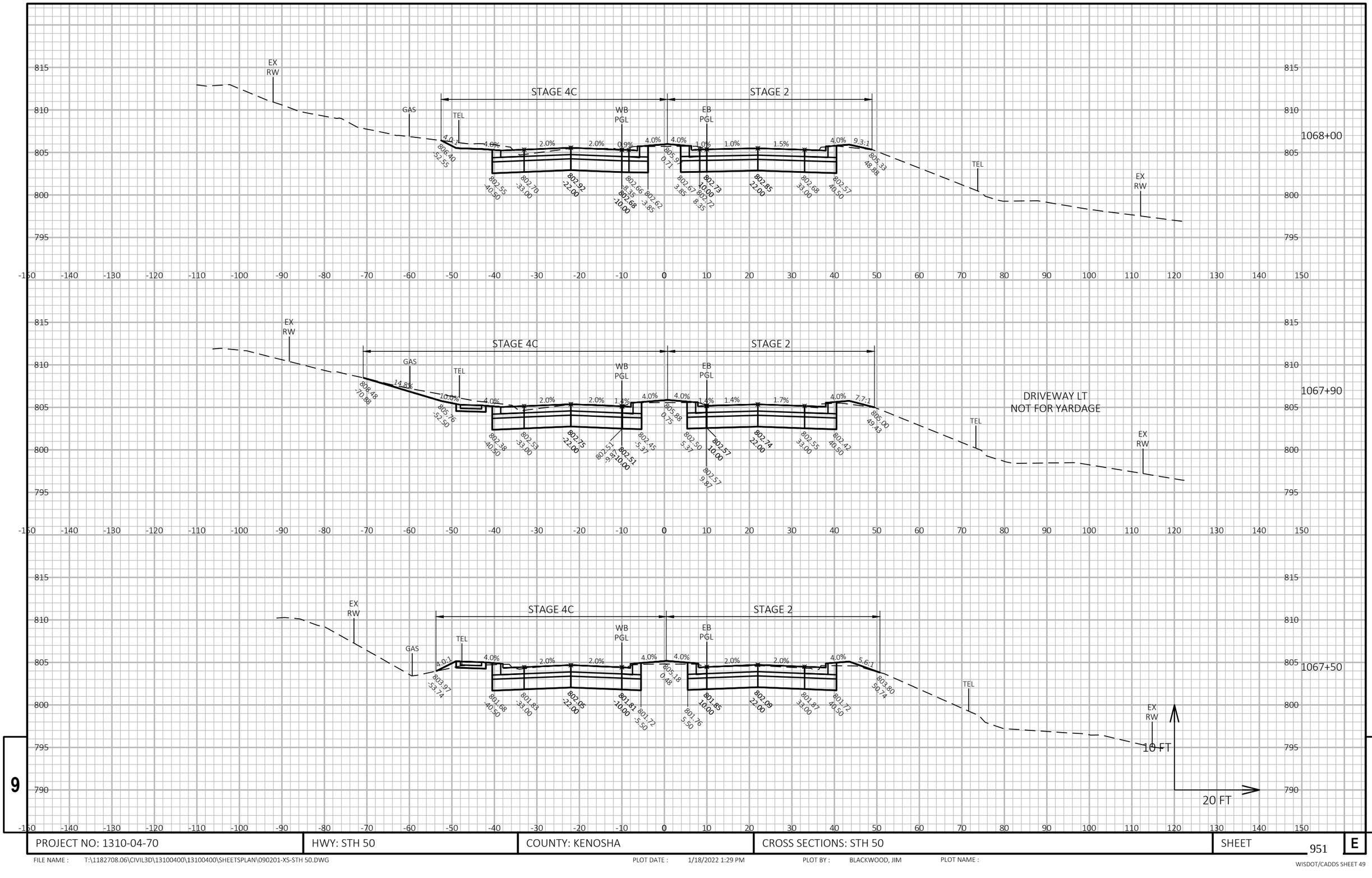

PROJECT NO: 1310-04-70	HWY: STH 50	COUNTY: KENOSHA	CROSS SECTIONS: STH 50	SHEET 951	E

FILE NAME : T:\1182708.06\CIVIL3D\13100400\13100400\SHEETSPLAN\090201-XS-STH 50.DWG PLOT DATE : 1/18/2022 1:29 PM PLOT BY : BLACKWOOD, JIM PLOT NAME :

WISDOT/CADDS SHEET 49

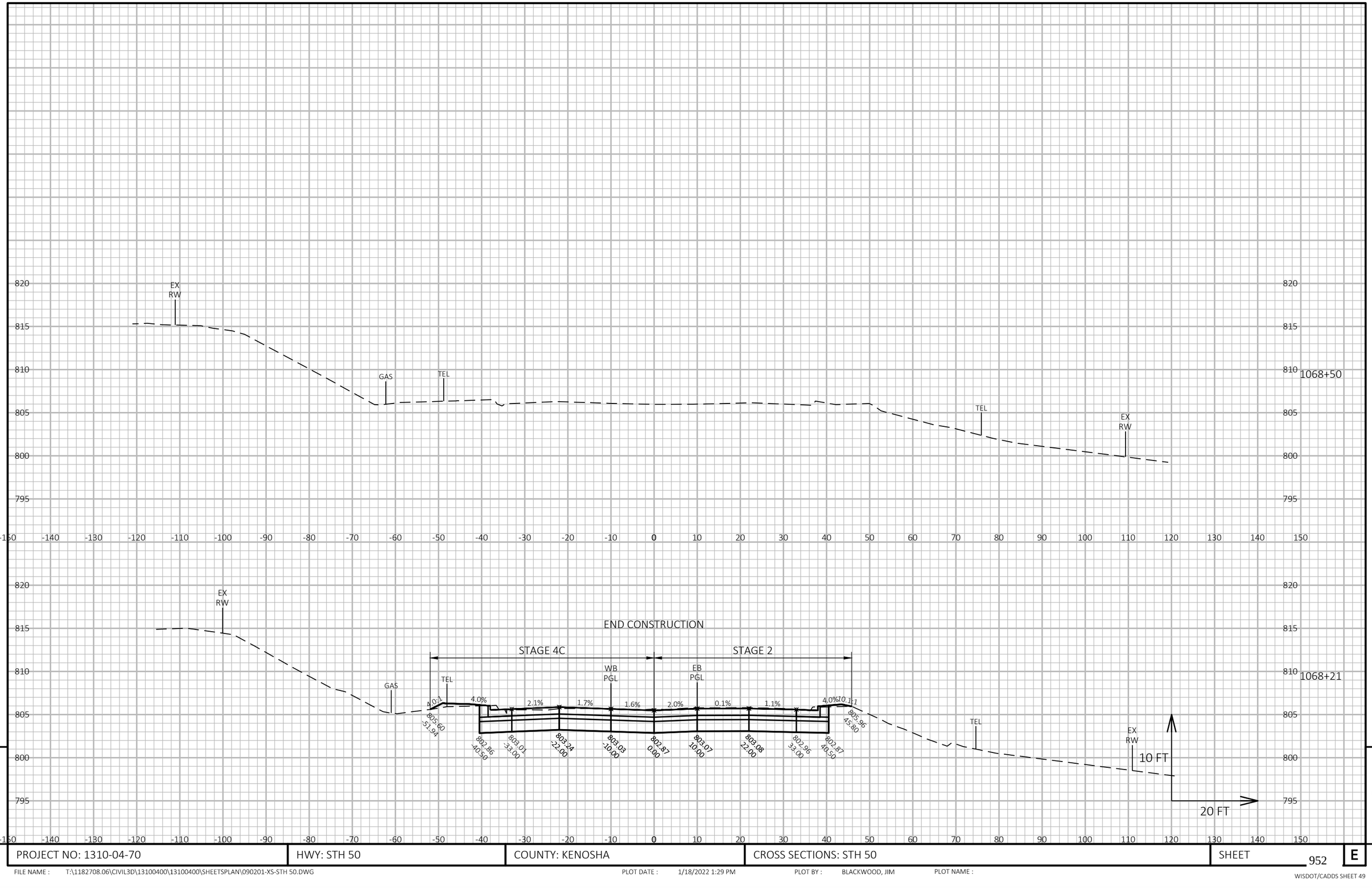

9

9

PROJECT NO: 1310-04-70	HWY: STH 50	COUNTY: KENOSHA	CROSS SECTIONS: STH 50	SHEET 952	E

FILE NAME : T:\1182708.06\CIVIL3D\13100400\13100400\SHEETSPLAN\090201-XS-STH 50.DWG PLOT DATE : 1/18/2022 1:29 PM PLOT BY : BLACKWOOD, JIM PLOT NAME :

WISDOT/CADDS SHEET 49

ALL SECTIONS THIS SHEET
CONSTRUCTED DURING STAGE 2

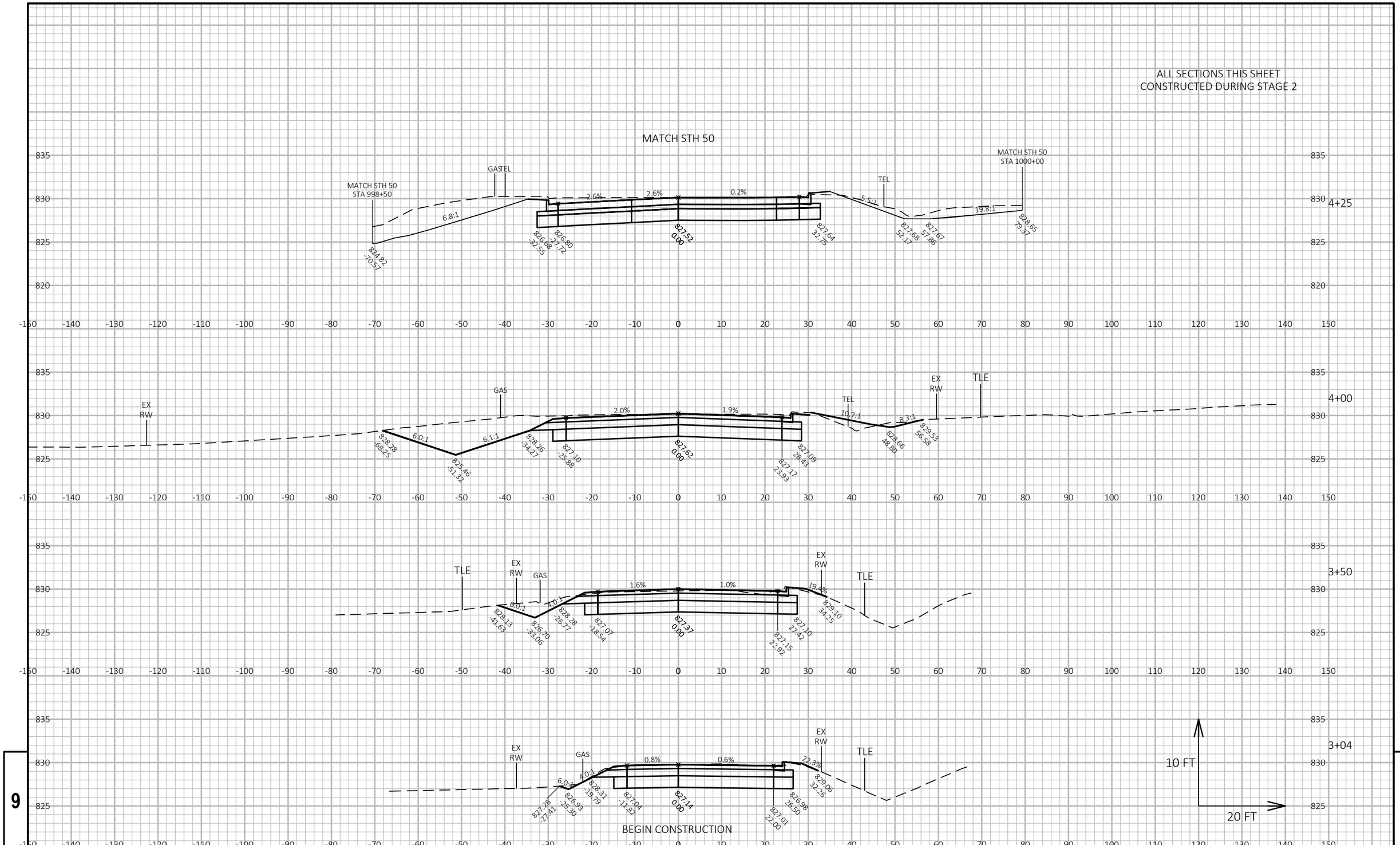

PROJECT NO: 1310-04-70	HWY: STH 50	COUNTY: KENOSHA	CROSS SECTIONS: CTH F	SHEET 953	E

FILE NAME : T:\1182708.06\CIVIL3D\13100400\13100400\SHEETSPLAN\090201-XS-STH 50.DWG PLOT DATE : 1/20/2022 9:51 AM PLOT BY : BLACKWOOD, JIM PLOT NAME :

WISDOT/CADDS SHEET 49

ALL SECTIONS THIS SHEET
CONSTRUCTED DURING STAGE 2

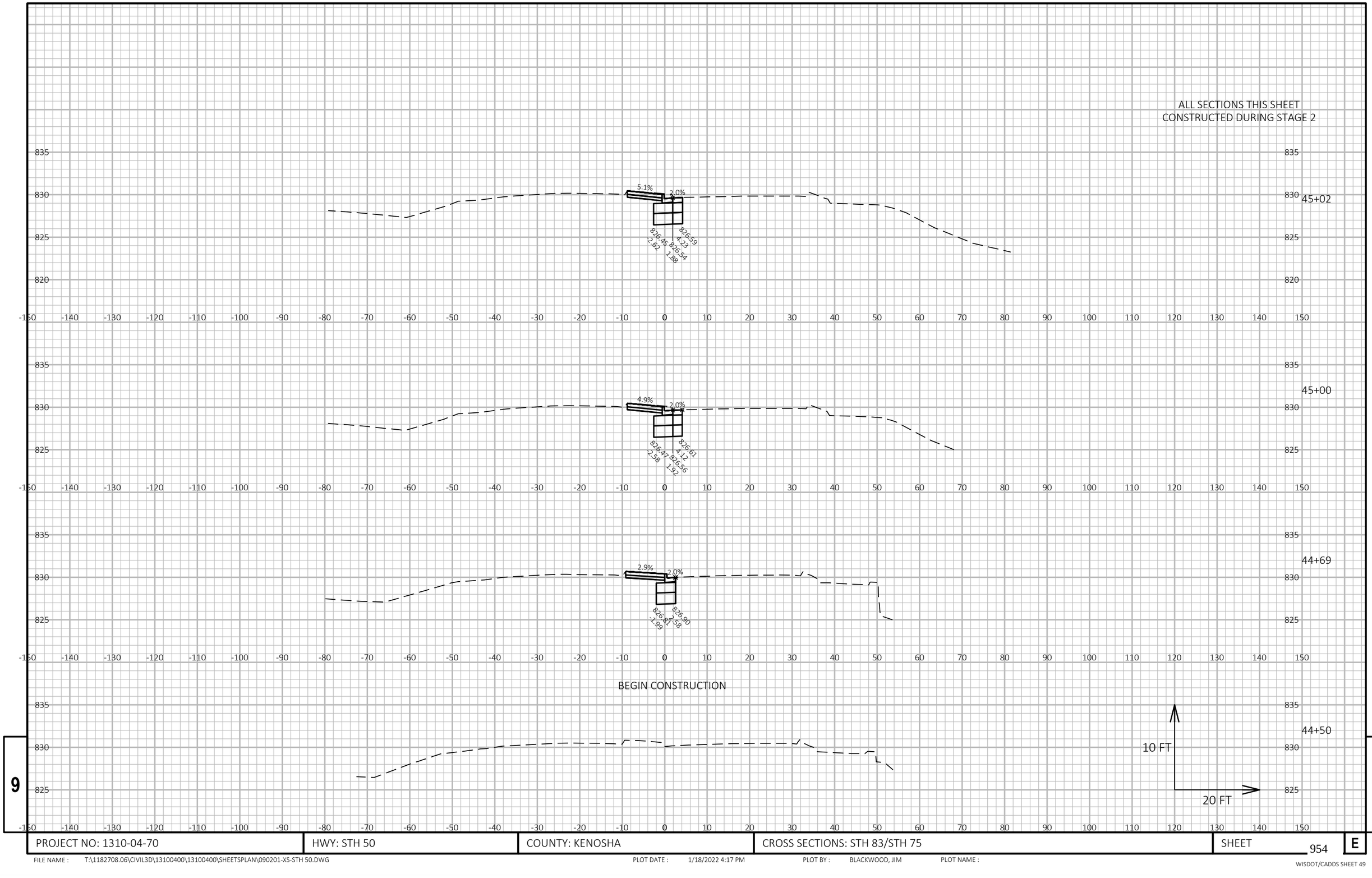

PROJECT NO: 1310-04-70	HWY: STH 50	COUNTY: KENOSHA	CROSS SECTIONS: STH 83/STH 75	SHEET 954	E

FILE NAME : T:\1182708.06\CIVIL3D\13100400\13100400\SHEETSPLAN\090201-XS-STH 50.DWG PLOT DATE : 1/18/2022 4:17 PM PLOT BY : BLACKWOOD, JIM PLOT NAME :

WISDOT/CADDS SHEET 49

ALL SECTIONS THIS SHEET
CONSTRUCTED DURING STAGE 2

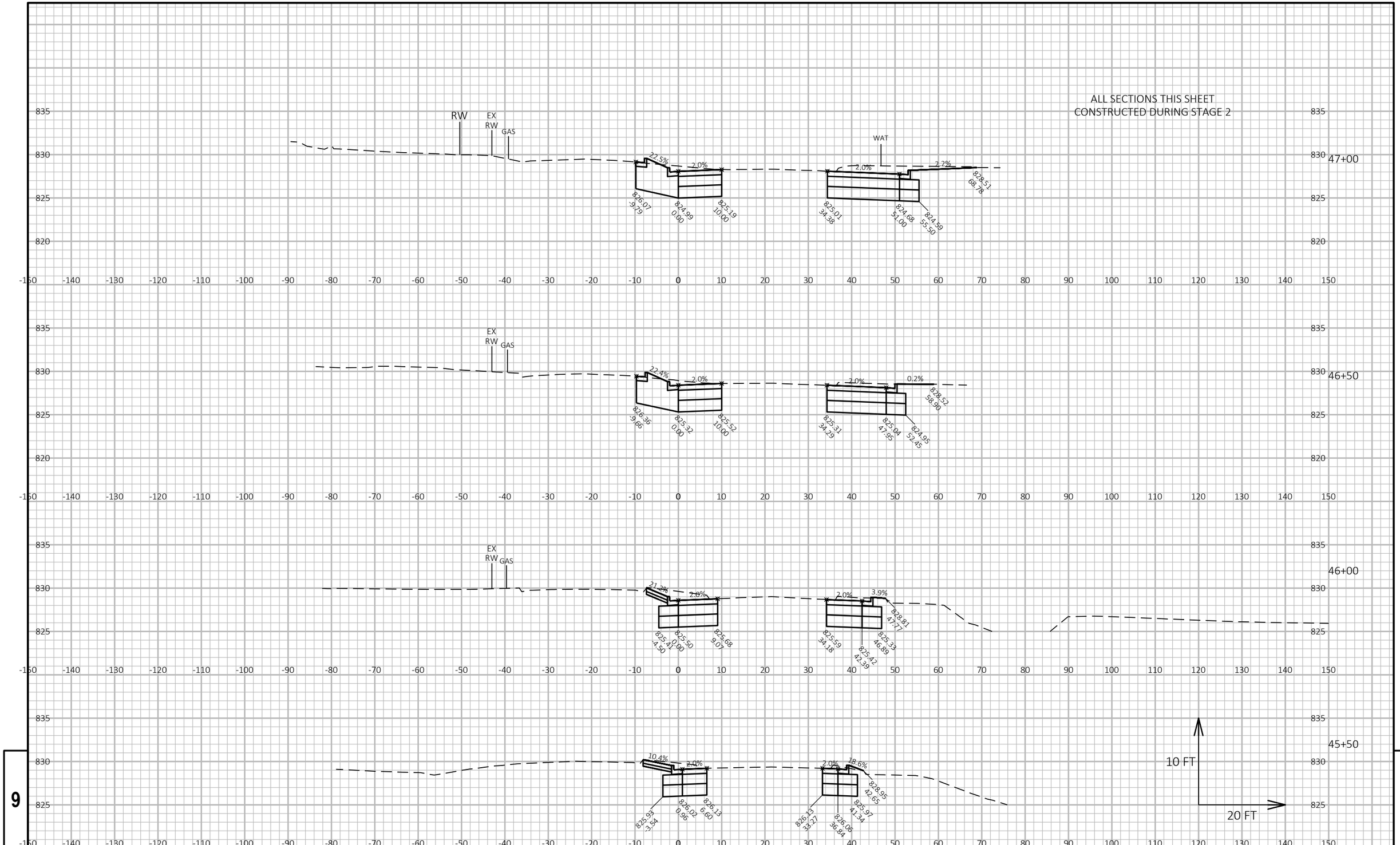

9

9

PROJECT NO: 1310-04-70	HWY: STH 50	COUNTY: KENOSHA	CROSS SECTIONS: STH 83/STH 75	SHEET 955	E

ALL SECTIONS THIS SHEET
CONSTRUCTED DURING STAGE 2

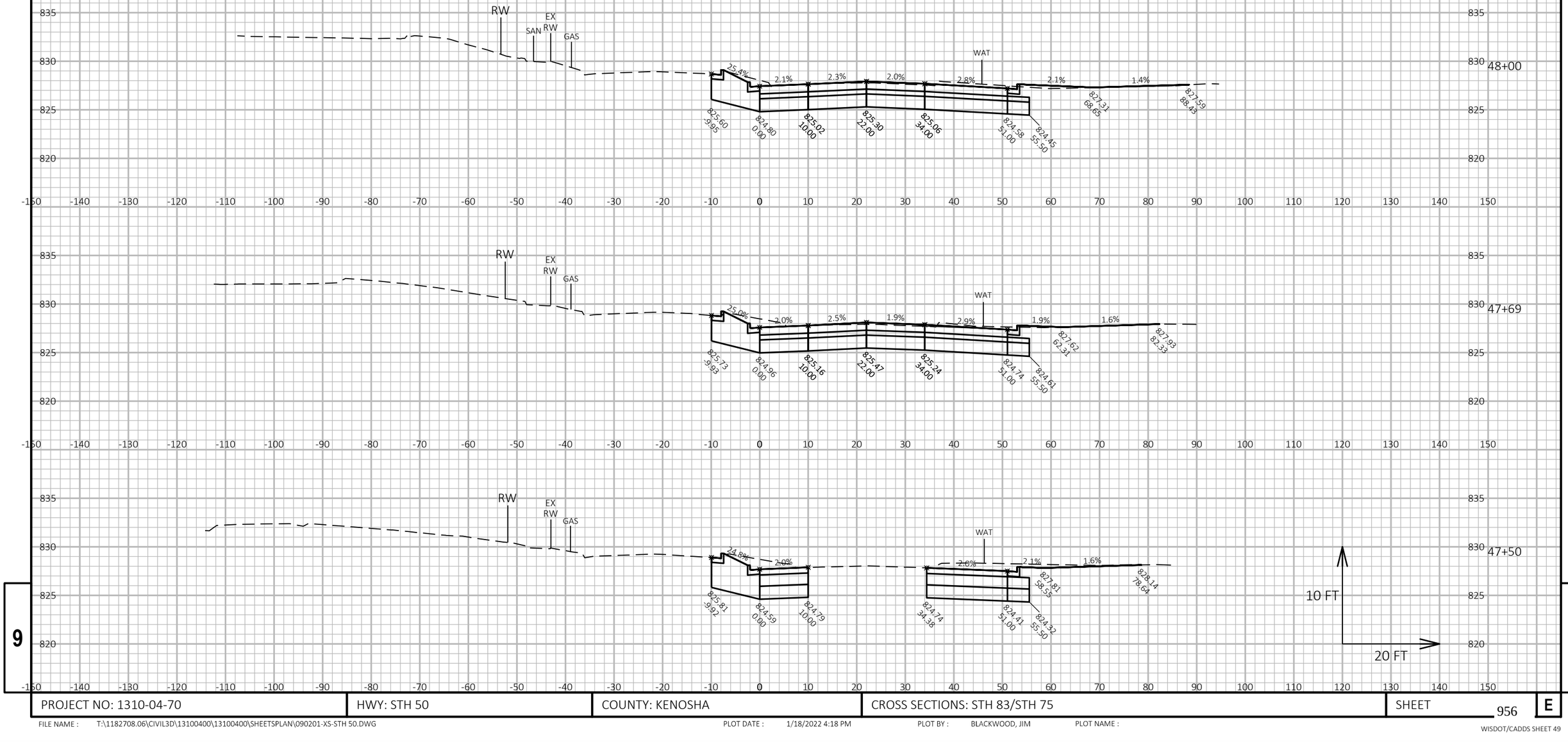

9

9

PROJECT NO: 1310-04-70	HWY: STH 50	COUNTY: KENOSHA	CROSS SECTIONS: STH 83/STH 75	SHEET 956	E

FILE NAME : T:\1182708.06\CIVIL3D\13100400\13100400\SHEETSPLAN\090201-XS-STH 50.DWG PLOT DATE : 1/18/2022 4:18 PM PLOT BY : BLACKWOOD, JIM PLOT NAME :

WISDOT/CADDS SHEET 49

ALL SECTIONS THIS SHEET
CONSTRUCTED DURING STAGE 2

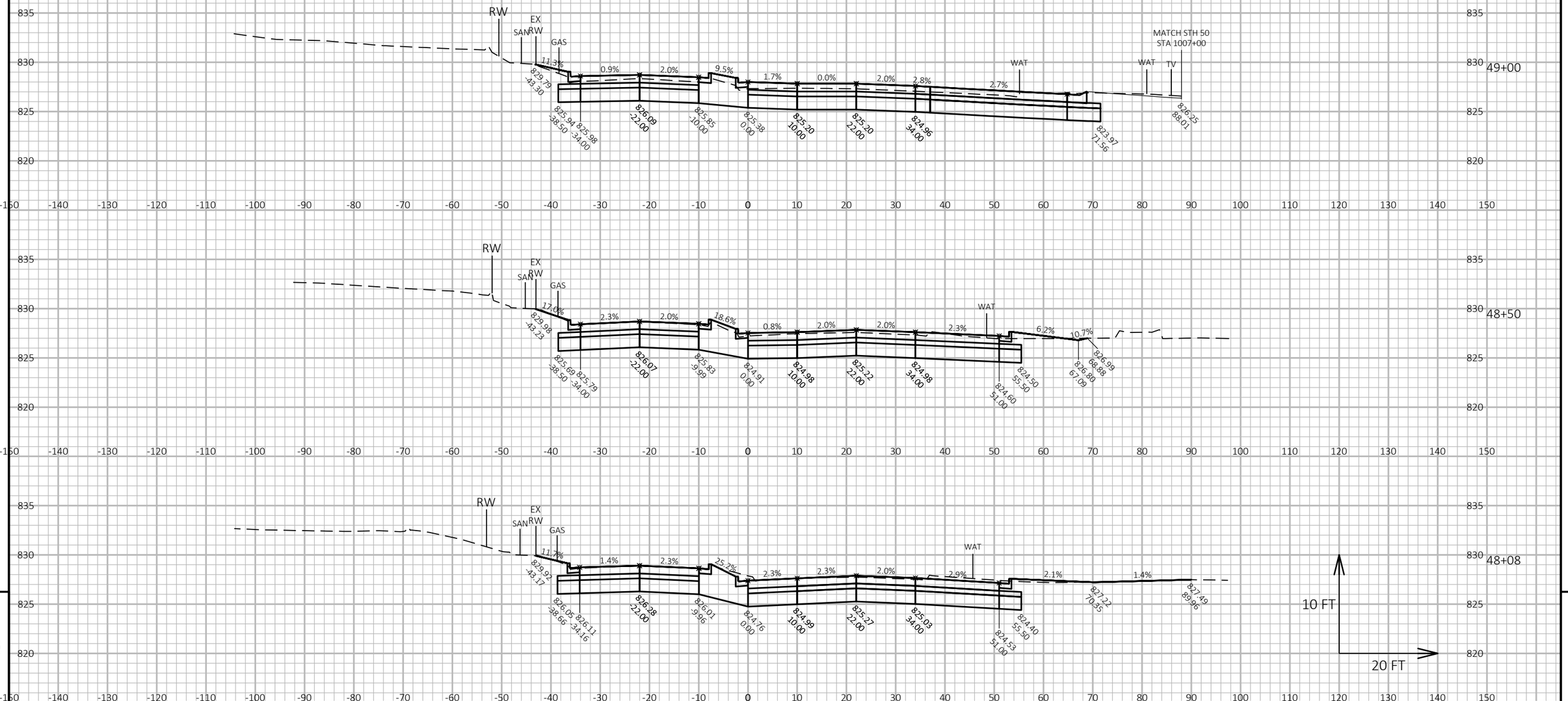

9

9

PROJECT NO: 1310-04-70	HWY: STH 50	COUNTY: KENOSHA	CROSS SECTIONS: STH 83/STH 75	SHEET 957	E

FILE NAME : T:\1182708.06\CIVIL3D\13100400\13100400\SHEETSPLAN\090201-XS-STH 50.DWG PLOT DATE : 1/18/2022 4:18 PM PLOT BY : BLACKWOOD, JIM PLOT NAME :

WISDOT/CADDS SHEET 49

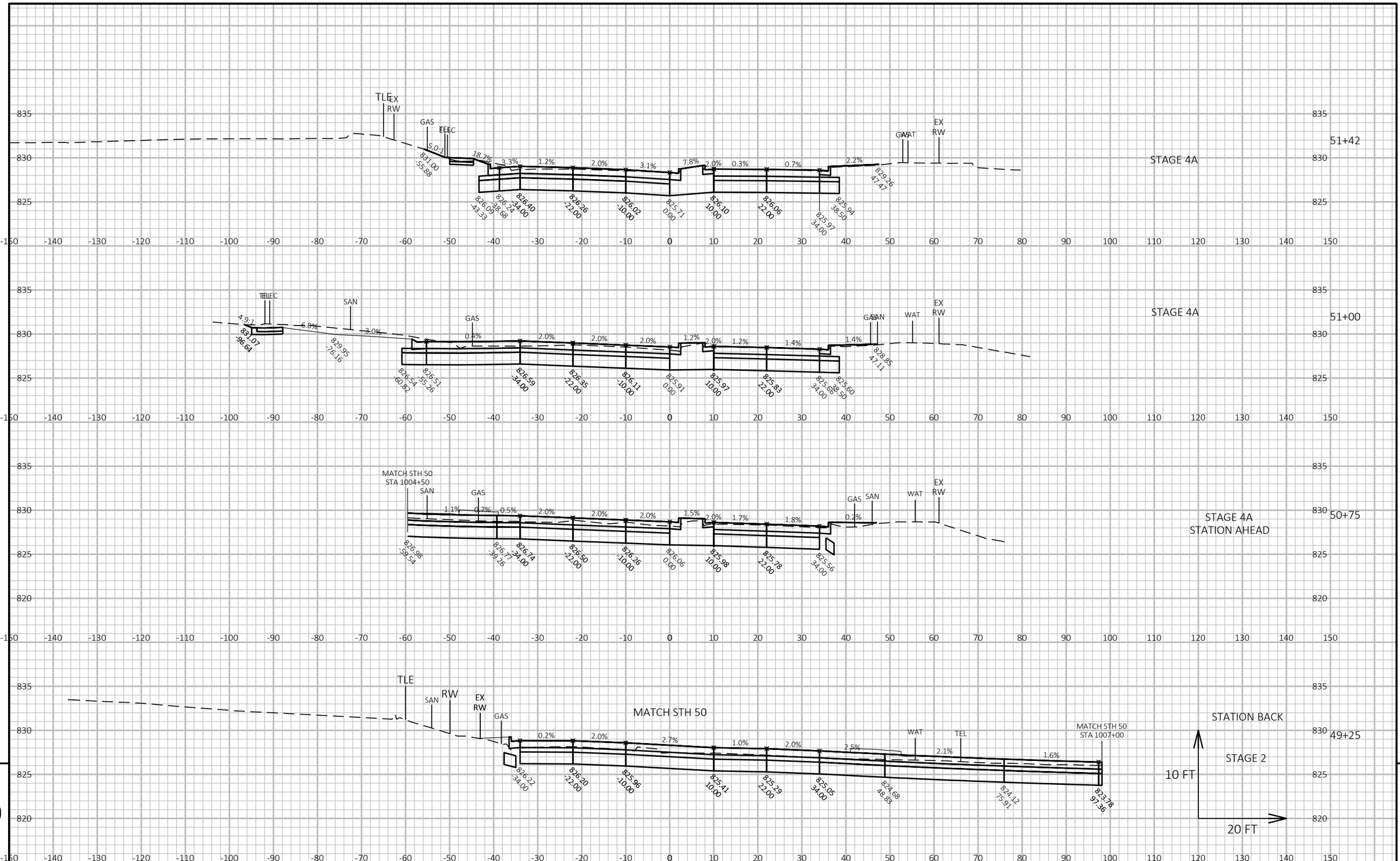

9

9

PROJECT NO: 1310-04-70	HWY: STH 50	COUNTY: KENOSHA	CROSS SECTIONS: STH 83/STH 75	SHEET 958	E

FILE NAME : T:\1182708.06\CIVIL3D\13100400\13100400\SHEETSPLAN\090201-XS-STH 50.DWG PLOT DATE : 1/18/2022 4:18 PM PLOT BY : BLACKWOOD, JIM PLOT NAME :

WISDOT/CADDS SHEET 49

ALL SECTIONS THIS SHEET
CONSTRUCTED DURING STAGE 4A

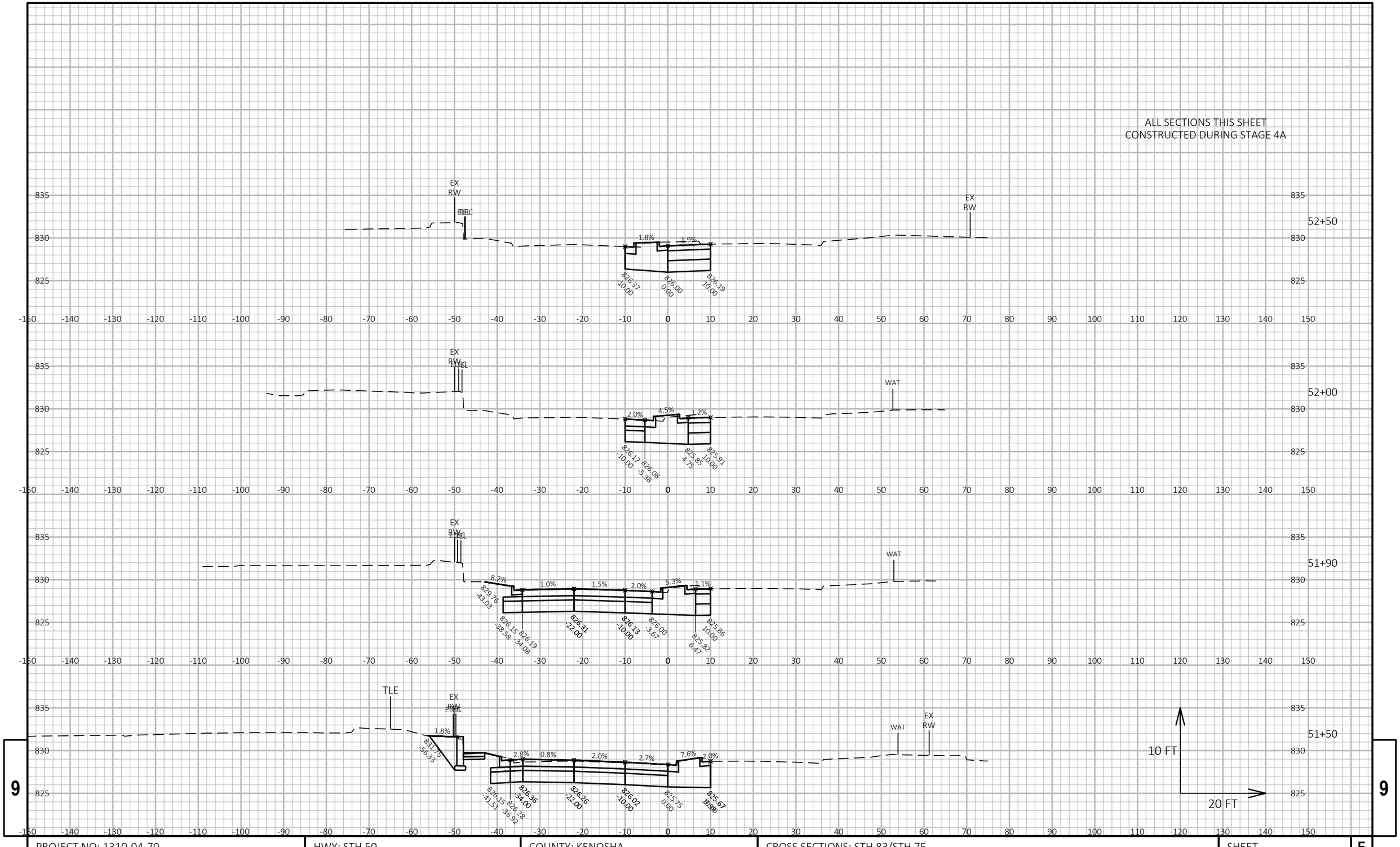

9

9

PROJECT NO: 1310-04-70	HWY: STH 50	COUNTY: KENOSHA	CROSS SECTIONS: STH 83/STH 75	SHEET 959	E

53+50

EX RW

835
830
825

-150 -140 -130 -120 -110 -100 -90 -80 -70 -60 -50 -40 -30 -20 -10 0 10 20 30 40 50 60 70 80 90 100 110 120 130 140 150

END CONSTRUCTION

53+32

EX RW

1.2%

826.60 -10.00

826.84 10.00

EX RW

ALL SECTIONS THIS SHEET CONSTRUCTED DURING STAGE 4A

53+00

EX RW

TELEC

2.1%

1.1%

826.72 -10.00

826.37 0.00

826.48 10.00

EX RW

10 FT

20 FT

9

9

PROJECT NO: 1310-04-70	HWY: STH 50	COUNTY: KENOSHA	CROSS SECTIONS: STH 83/STH 75	SHEET 960	E

FILE NAME : T:\1182708.06\CIVIL3D\13100400\13100400\SHEETSPLAN\090201-XS-STH 50.DWG PLOT DATE : 1/18/2022 4:18 PM PLOT BY : BLACKWOOD, JIM PLOT NAME :

WISDOT/CADDS SHEET 49

ALL SECTIONS THIS SHEET
CONSTRUCTED DURING STAGE 2

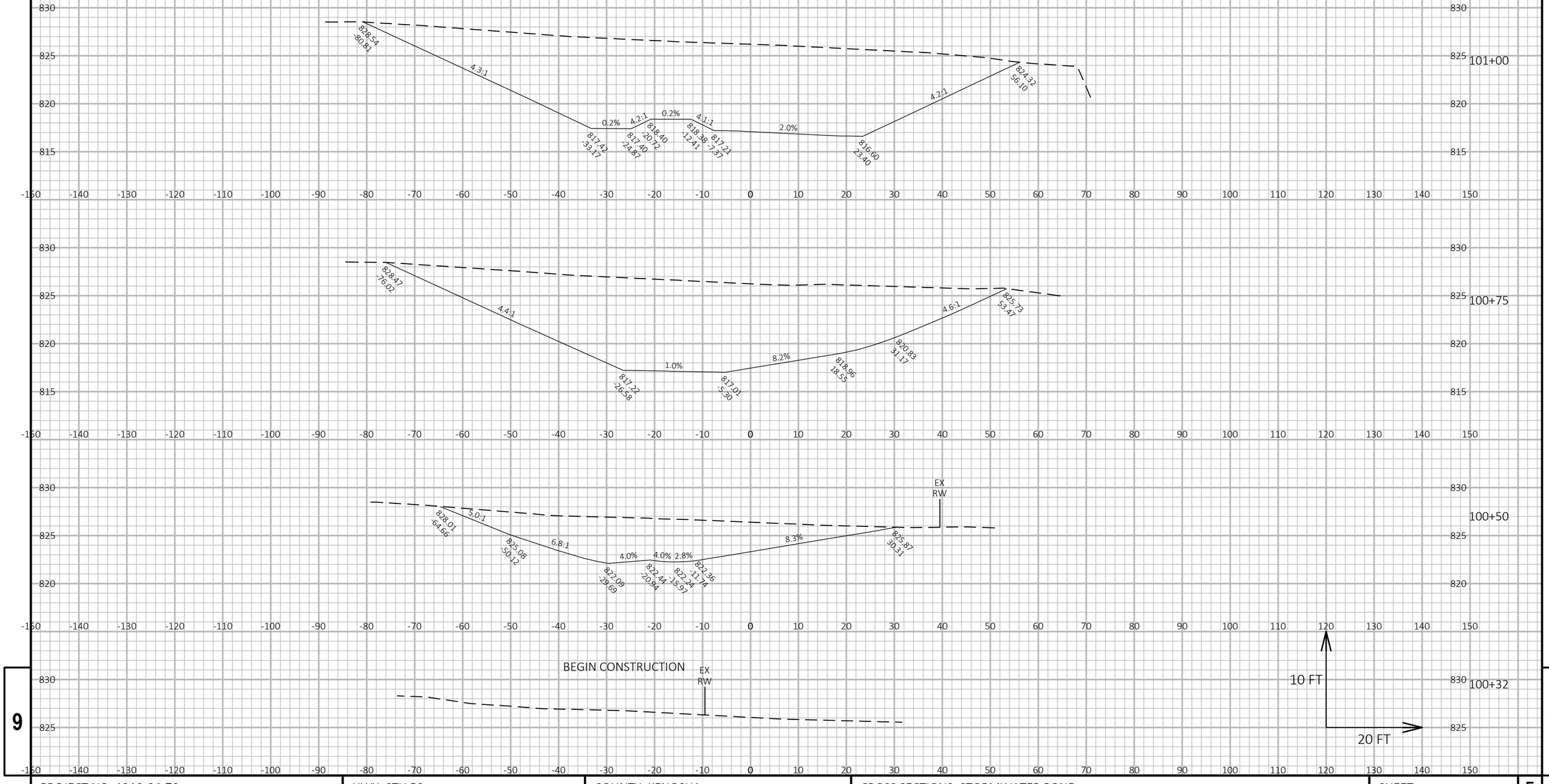

PROJECT NO: 1310-04-70	HWY: STH 50	COUNTY: KENOSHA	CROSS SECTIONS: STORMWATER POND	SHEET 961	E

FILE NAME : T:\1182708.06\CIVIL3D\13100400\13100400\SHEETSPLAN\090201-XS-STH 50.DWG PLOT DATE : 1/18/2022 5:15 PM PLOT BY : BLACKWOOD, JIM PLOT NAME :

WISDOT/CADDS SHEET 49

ALL SECTIONS THIS SHEET
CONSTRUCTED DURING STAGE 2

101+75

827.95
-95.03
4.1:1
847.95
-54.05
0.2%
847.92
-45.75
4.2:1
818.93
-41.60
0.2%
818.91
-33.29
4.1:1
816.39
-23.09
1.0%
816.83
-35.62
4.0:1
820.00
-50.29
0.0%
820.00
-58.30

101+50

828.19
-90.32
4.1:1
817.77
-47.09
0.2%
817.76
-36.79
4.2:1
818.75
-34.64
0.2%
818.73
-26.33
4.1:1
816.59
-17.53
1.0%
816.08
-35.90
4.0:1
820.00
-49.57
9.2:1
821.01
-59.35

101+25

828.37
-85.56
4.2:1
817.59
-40.13
0.2%
817.58
-31.83
4.2:1
818.57
-27.68
0.2%
818.56
-19.97
4.1:1
816.86
-12.46
1.2%
816.34
-30.81
4.2:1
823.43
-60.84

10 FT
20 FT

9

PROJECT NO: 1310-04-70	HWY: STH 50	COUNTY: KENOSHA	CROSS SECTIONS: STORMWATER POND	SHEET 962	E

FILE NAME : T:\1182708.06\CIVIL3D\13100400\13100400\SHEETSPLAN\090201-XS-STH 50.DWG
PLOT DATE : 1/18/2022 5:15 PM
PLOT BY : BLACKWOOD, JIM
PLOT NAME :

ALL SECTIONS THIS SHEET
CONSTRUCTED DURING STAGE 2

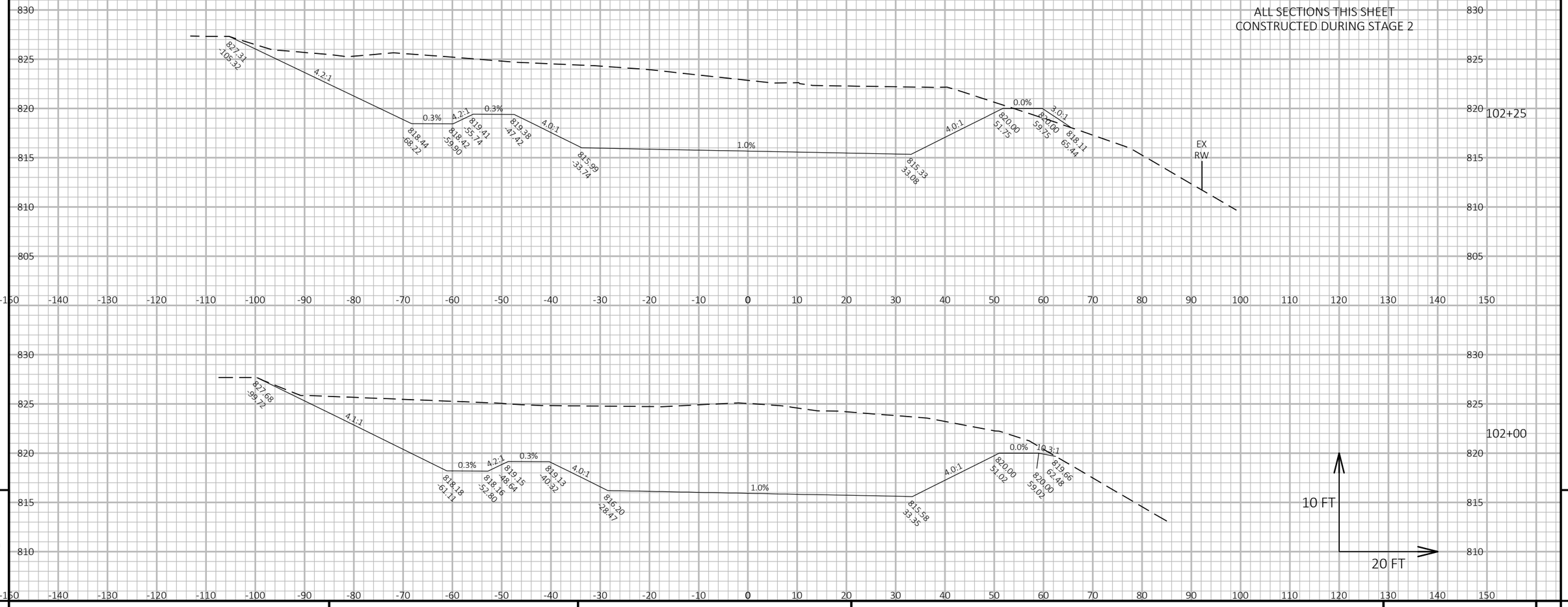

9

9

PROJECT NO: 1310-04-70	HWY: STH 50	COUNTY: KENOSHA	CROSS SECTIONS: STORMWATER POND	SHEET 963	E

FILE NAME : T:\1182708.06\CIVIL3D\13100400\13100400\SHEETSPLAN\090201-XS-STH 50.DWG PLOT DATE : 1/18/2022 5:15 PM PLOT BY : BLACKWOOD, JIM PLOT NAME :

WISDOT/CADDS SHEET 49

MATCH STH 50

ALL SECTIONS THIS SHEET
CONSTRUCTED DURING STAGE 2

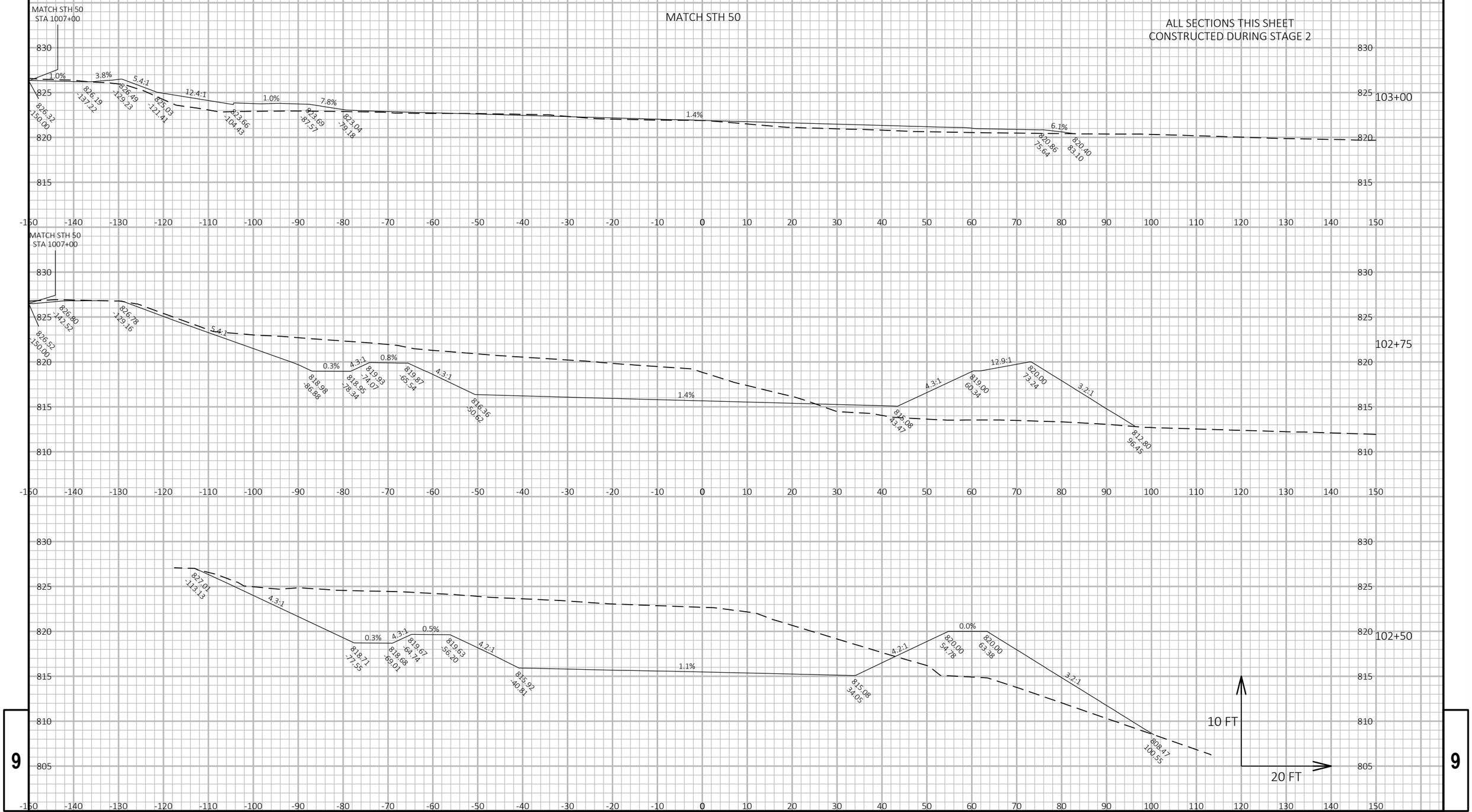

PROJECT NO: 1310-04-70	HWY: STH 50	COUNTY: KENOSHA	CROSS SECTIONS: STORMWATER POND	SHEET 964	E

FILE NAME : T:\1182708.06\CIVIL3D\13100400\13100400\SHEETSPLAN\090201-XS-STH 50.DWG PLOT DATE : 1/18/2022 5:15 PM PLOT BY : BLACKWOOD, JIM PLOT NAME :

WISDOT/CADDS SHEET 49

ALL SECTIONS THIS SHEET
CONSTRUCTED DURING STAGE 4C

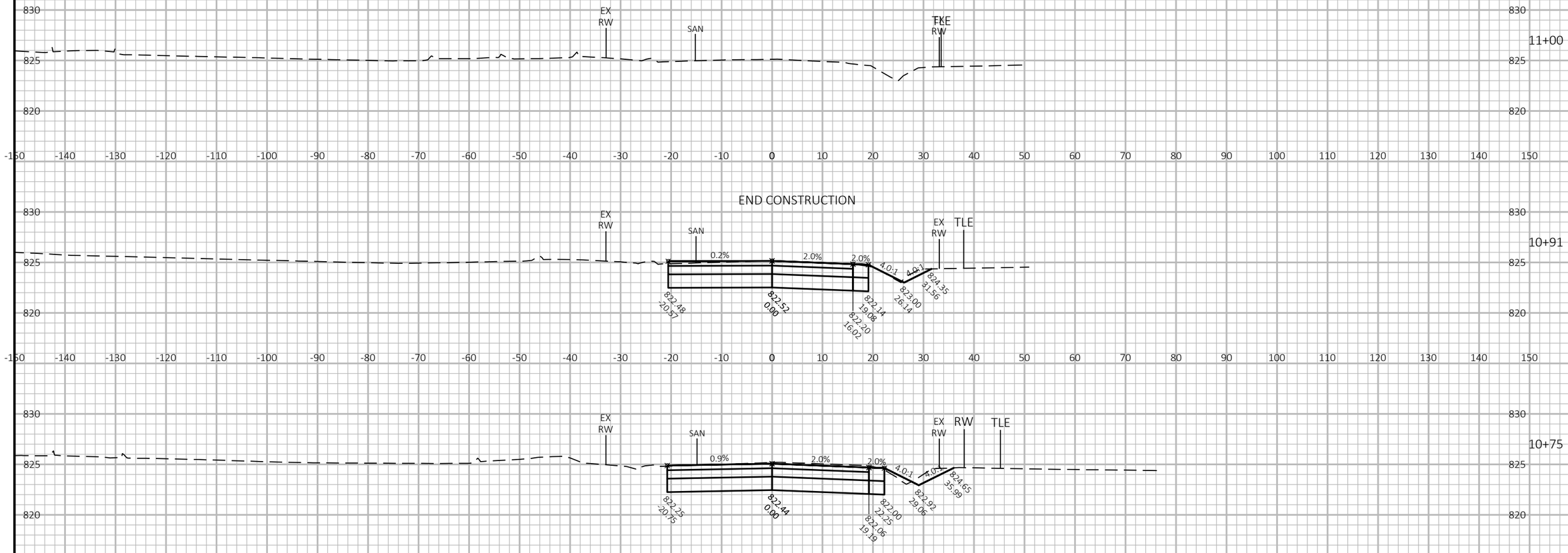

PROJECT NO: 1310-04-70	HWY: STH 50	COUNTY: KENOSHA	CROSS SECTIONS: 250TH AVENUE	SHEET 965	E

FILE NAME : T:\1182708.06\CIVIL3D\13100400\13100400\SHEETSPLAN\090201-XS-STH 50.DWG
PLOT DATE : 1/18/2022 5:18 PM
PLOT BY : BLACKWOOD, JIM
PLOT NAME :

WISDOT/CADDS SHEET 49

ALL SECTIONS THIS SHEET
CONSTRUCTED DURING STAGE 2

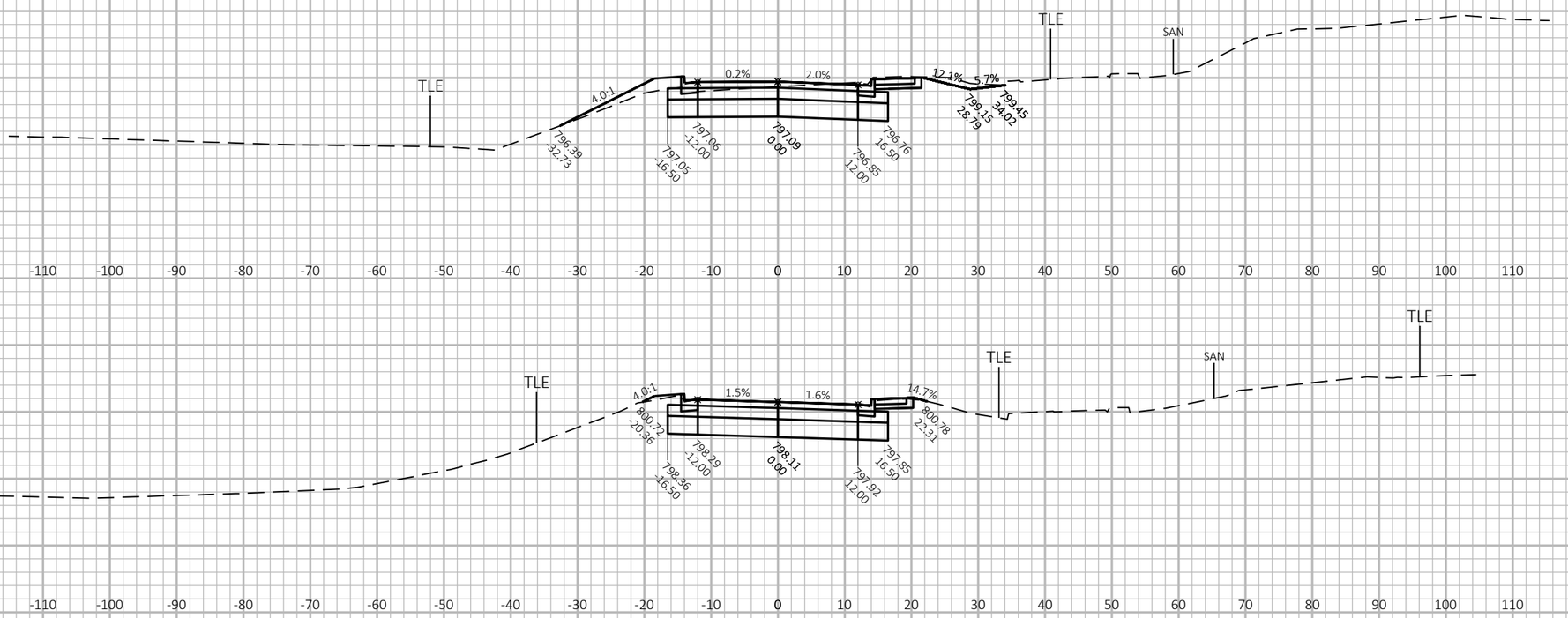

9

9

PROJECT NO: 1310-04-70	HWY: STH 50	COUNTY: KENOSHA	CROSS SECTIONS: HIGH SCHOOL WEST DRIVEWAY	SHEET 966	E

FILE NAME : T:\1182708.06\CIVIL3D\13100400\13100400\SHEETSPLAN\090201-XS-STH 50.DWG PLOT DATE : 1/18/2022 5:19 PM PLOT BY : BLACKWOOD, JIM PLOT NAME :

WISDOT/CADDS SHEET 49

ALL SECTIONS THIS SHEET
CONSTRUCTED DURING STAGE 2

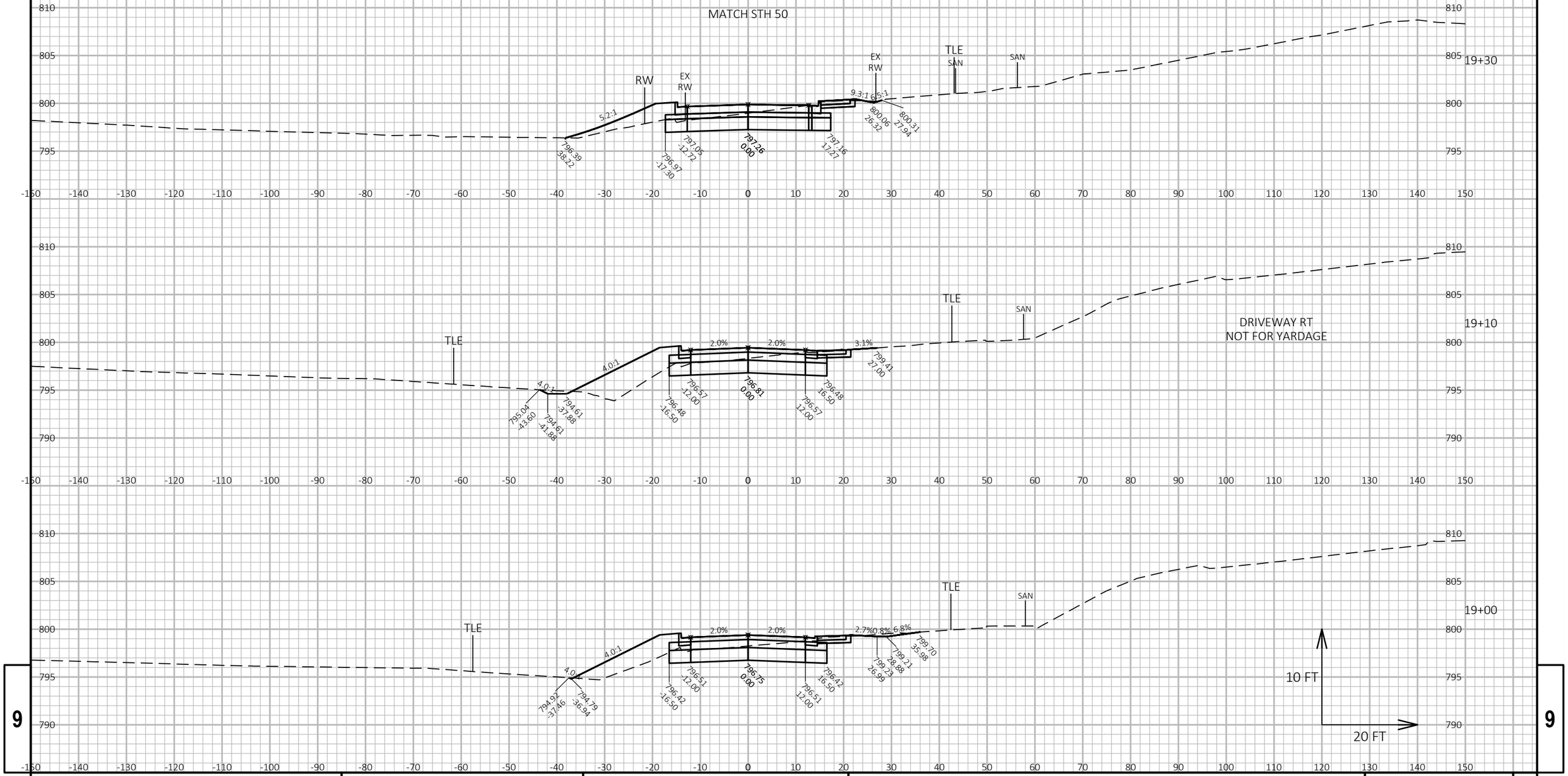

9

9

PROJECT NO: 1310-04-70	HWY: STH 50	COUNTY: KENOSHA	CROSS SECTIONS: HIGH SCHOOL WEST DRIVEWAY	SHEET 967	E

FILE NAME : T:\1182708.06\CIVIL3D\13100400\13100400\SHEETSPLAN\090201-XS-STH 50.DWG PLOT DATE : 1/18/2022 5:19 PM PLOT BY : BLACKWOOD, JIM PLOT NAME :

WISDOT/CADDS SHEET 49

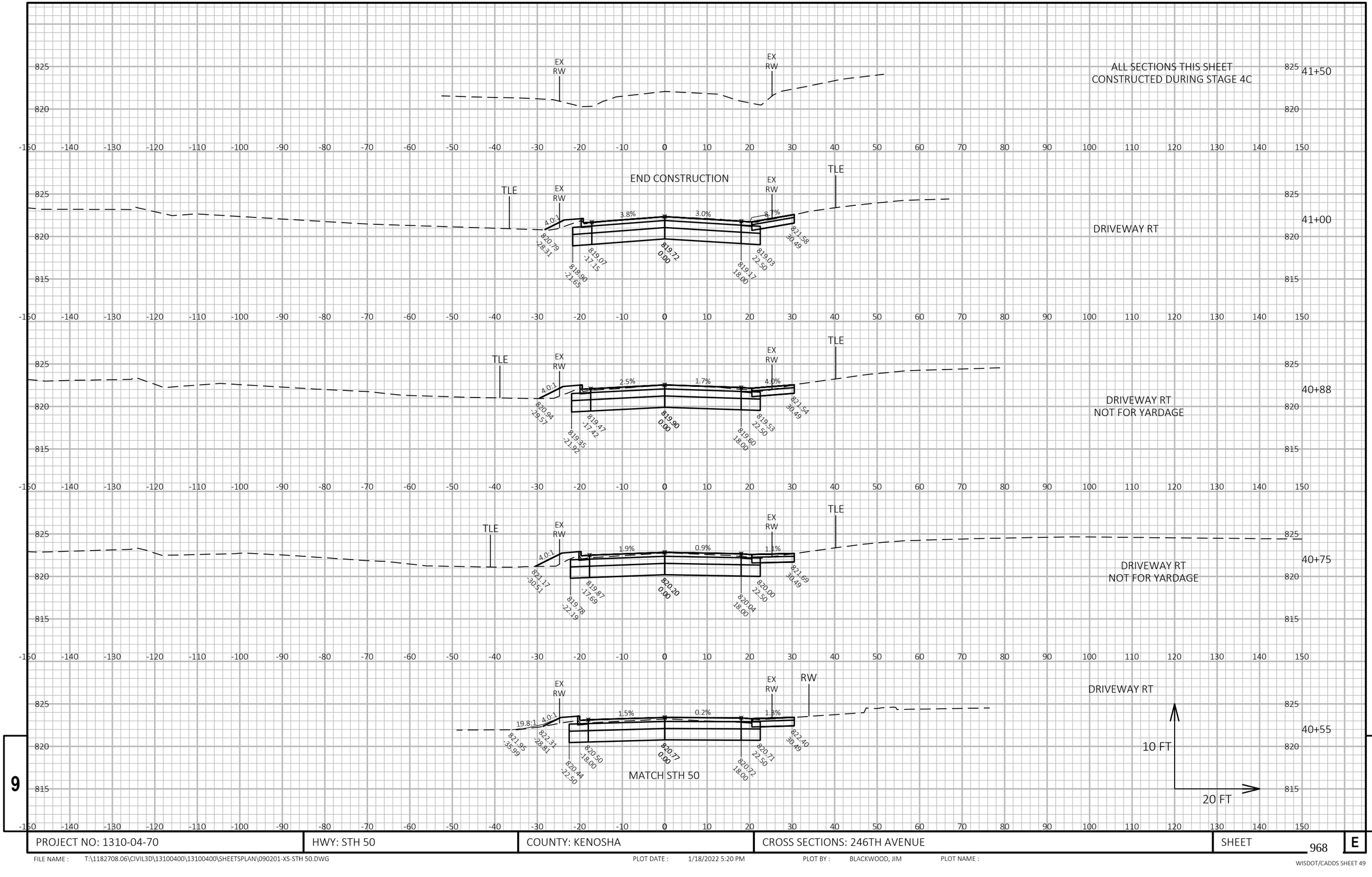

PROJECT NO: 1310-04-70	HWY: STH 50	COUNTY: KENOSHA	CROSS SECTIONS: 246TH AVENUE	SHEET 968	E

ALL SECTIONS THIS SHEET
CONSTRUCTED DURING STAGE 4C

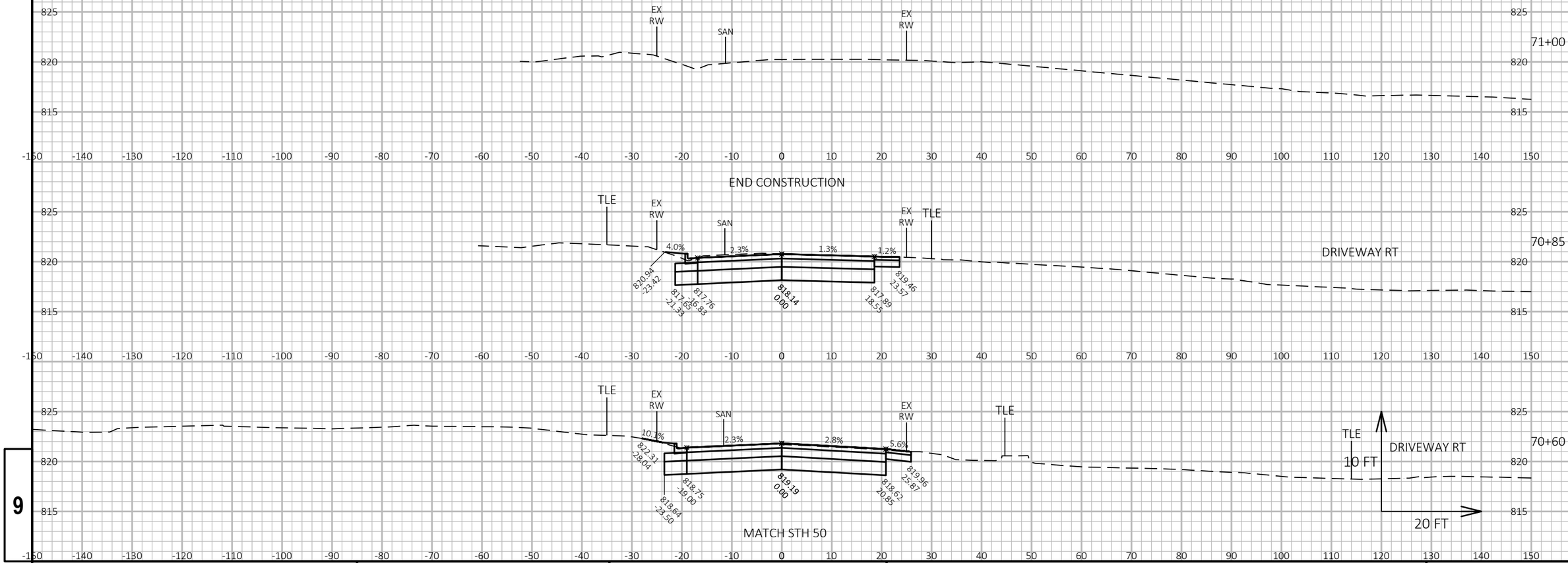

PROJECT NO: 1310-04-70	HWY: STH 50	COUNTY: KENOSHA	CROSS SECTIONS: 243RD AVENUE	SHEET 969	E

FILE NAME : T:\1182708.06\CIVIL3D\13100400\13100400\SHEETSPLAN\090201-XS-STH 50.DWG PLOT DATE : 1/18/2022 5:21 PM PLOT BY : BLACKWOOD, JIM PLOT NAME :

WISDOT/CADDS SHEET 49

ALL SECTIONS THIS SHEET
CONSTRUCTED DURING STAGE 2

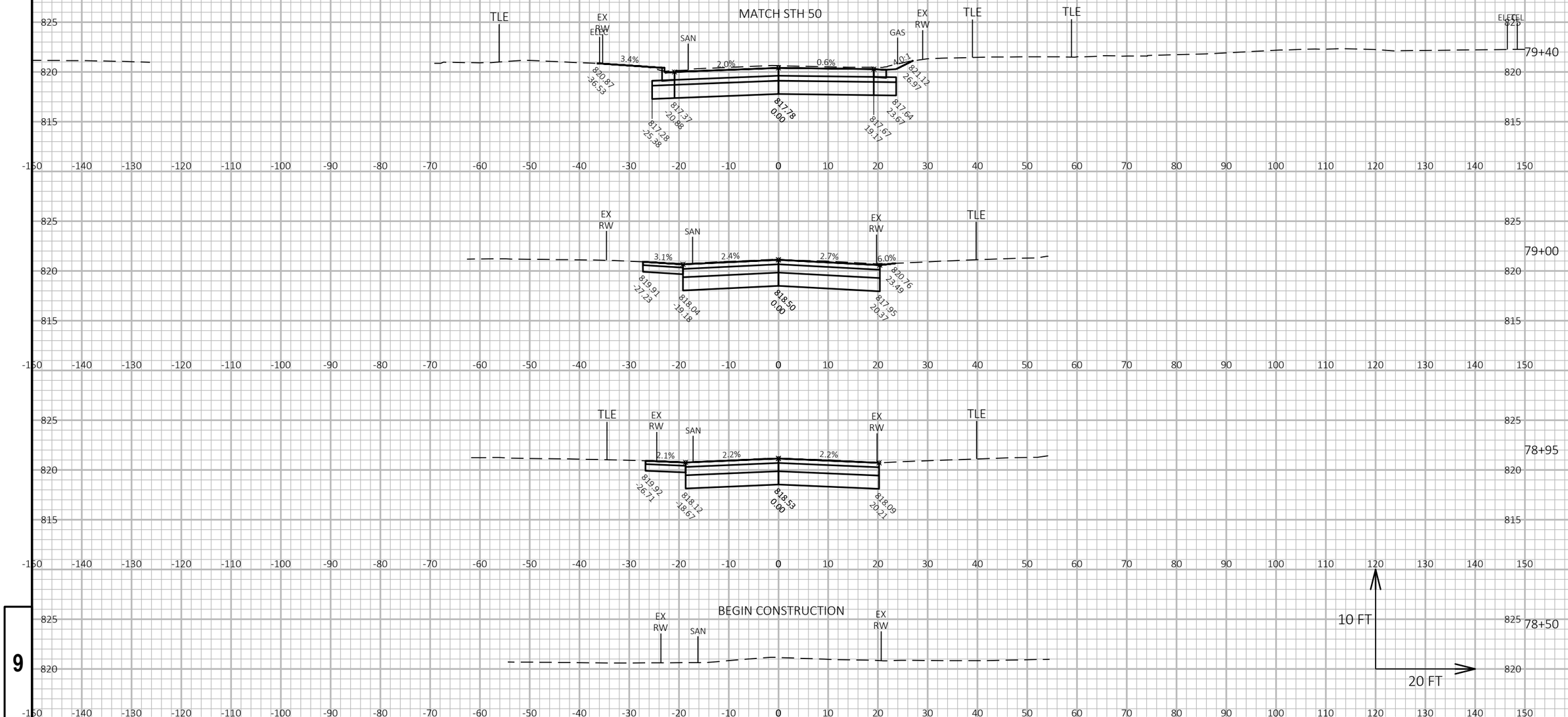

9	PROJECT NO: 1310-04-70	HWY: STH 50	COUNTY: KENOSHA	CROSS SECTIONS: 242ND AVENUE	SHEET 970 E

FILE NAME : T:\1182708.06\CIVIL3D\13100400\13100400\SHEETSPLAN\090201-XS-STH 50.DWG PLOT DATE : 1/18/2022 5:22 PM PLOT BY : BLACKWOOD, JIM PLOT NAME :

WISDOT/CADDS SHEET 49

ALL SECTIONS THIS SHEET
CONSTRUCTED DURING STAGE 4C

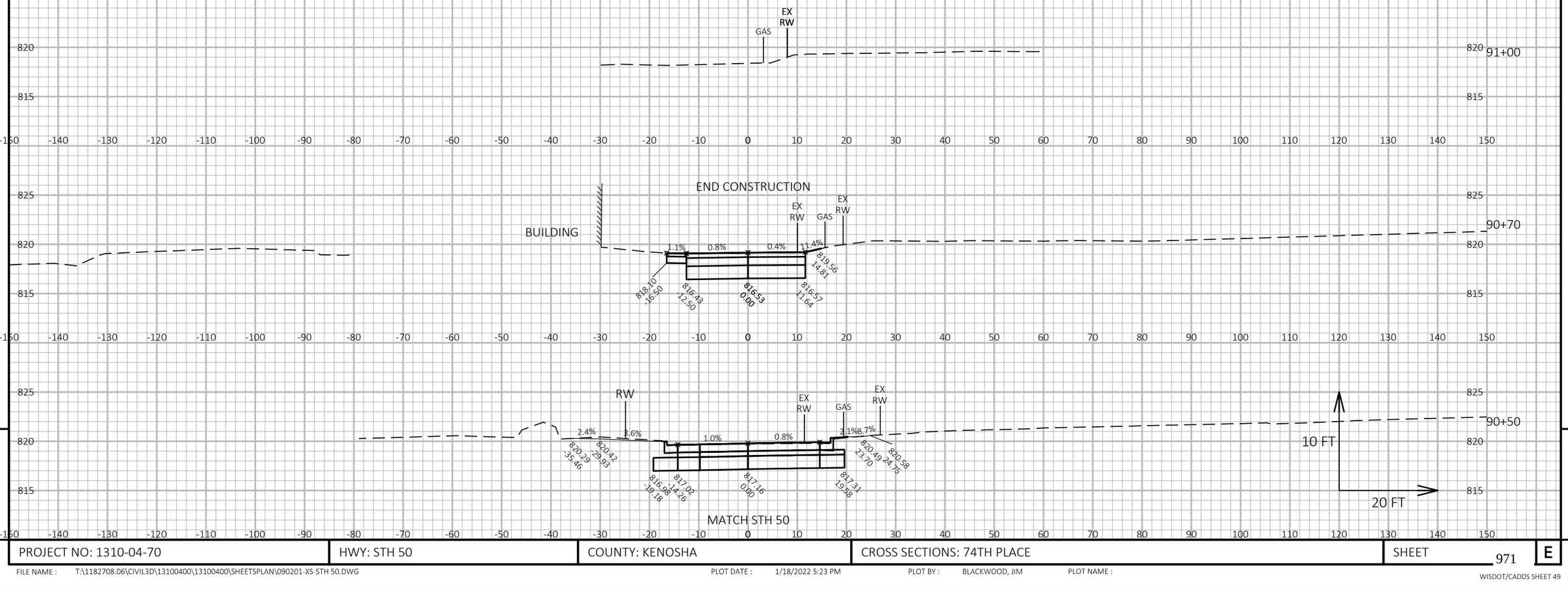

9

9

PROJECT NO: 1310-04-70	HWY: STH 50	COUNTY: KENOSHA	CROSS SECTIONS: 74TH PLACE	SHEET 971	E

FILE NAME : T:\1182708.06\CIVIL3D\13100400\13100400\SHEETSPLAN\090201-XS-STH 50.DWG PLOT DATE : 1/18/2022 5:23 PM PLOT BY : BLACKWOOD, JIM PLOT NAME :

WISDOT/CADDS SHEET 49

ALL SECTIONS THIS SHEET
CONSTRUCTED DURING STAGE 4C

END CONSTRUCTION

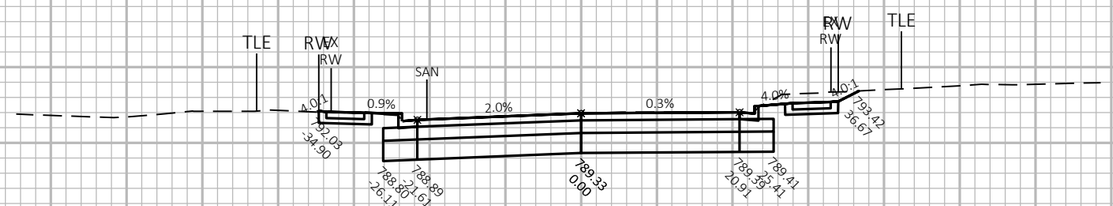

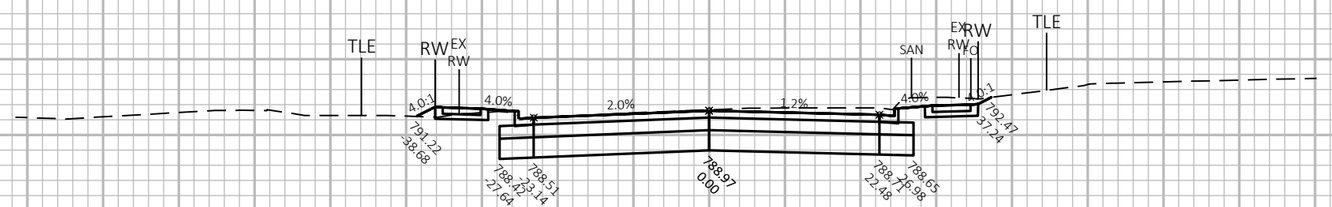

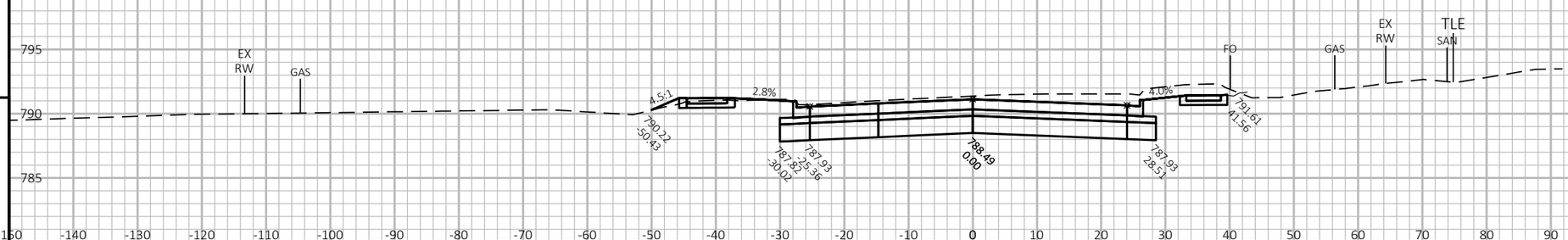

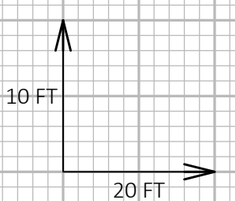

96+25

96+00

95+75

PROJECT NO: 1310-04-70	HWY: STH 50	COUNTY: KENOSHA	CROSS SECTIONS: 236TH AVENUE	SHEET 972	E

FILE NAME : T:\1182708.06\CIVIL3D\13100400\13100400\SHEETSPLAN\090201-XS-STH 50.DWG
PLOT DATE : 1/18/2022 5:24 PM
PLOT BY : BLACKWOOD, JIM
PLOT NAME :

WISDOT/CADDS SHEET 49

Notes

Wisconsin Department of Transportation

Dedicated people creating transportation solutions
through innovation and exceptional service.

http://www.dot.wisconsin.gov