MAD

FEBRUARY 2023

PROJECT ID: 1204-08-65

WITH: N/A

COUNTY: DANE

02

ORDER OF SHEETS

Section No.	1	Title
Section No.	2	Typical Sections and Details
Section No.	3	Estimate of Quantities
Section No.	3	Miscellaneous Quantities
~~Section No.~~	~~4~~	~~Right of Way Plat~~
Section No.	5	Plan and Profile
Section No.	6	Standard Detail Drawings
Section No.	7	Sign Plates
Section No.	8	Structure Plans
Section No.	9	Computer Earthwork Data
Section No.	9	Cross Sections

TOTAL SHEETS = 874

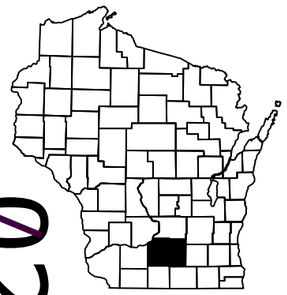

N

STATE OF WISCONSIN
DEPARTMENT OF TRANSPORTATION

PLAN OF PROPOSED IMPROVEMENT

MOUNT HOREB - MADISON

TOWN HALL ROAD TO CTH PD

USH 18/151

DANE COUNTY

STATE PROJECT NUMBER
1204-08-65

STATE PROJECT	FEDERAL PROJECT	
	PROJECT	CONTRACT
1204-08-65	WISC 2023004	1

DESIGN DESIGNATION

A.A.D.T. (YEAR 2023)	=	22,000 - 39,600
A.A.D.T. (YEAR 2043)	=	25,400 - 50,300
D.H.V.	=	5,100
D.D.	=	59/41
T.	=	8.7%
DESIGN SPEED	=	70 MPH
ESALS	=	13,000,000 (RIGID) 8,100,000 (FLEXIBLE)

CONVENTIONAL SYMBOLS

PLAN

- CORPORATE LIMITS
- PROPERTY LINE
- LOT LINE
- LIMITED HIGHWAY EASEMENT
- EXISTING RIGHT OF WAY
- PROPOSED OR NEW R/W LINE
- SLOPE INTERCEPT
- REFERENCE LINE (300'EB')
- EXISTING CULVERT
- PROPOSED CULVERT (Box or Pipe)
- COMBUSTIBLE FLUIDS (CAUTION)
- MARSH AREA
- WOODED OR SHRUB AREA

PROFILE

- GRADE LINE
- ORIGINAL GROUND
- MARSH OR ROCK PROFILE (To be noted as such) (ROCK)
- SPECIAL DITCH (LABEL)
- GRADE ELEVATION (95.36)
- CULVERT (Profile View)

UTILITIES

- ELECTRIC (E)
- FIBER OPTIC (FO)
- GAS (G)
- SANITARY SEWER (SAN)
- STORM SEWER (SS)
- TELEPHONE (T)
- WATER (W)
- UTILITY PEDESTAL
- POWER POLE
- TELEPHONE POLE

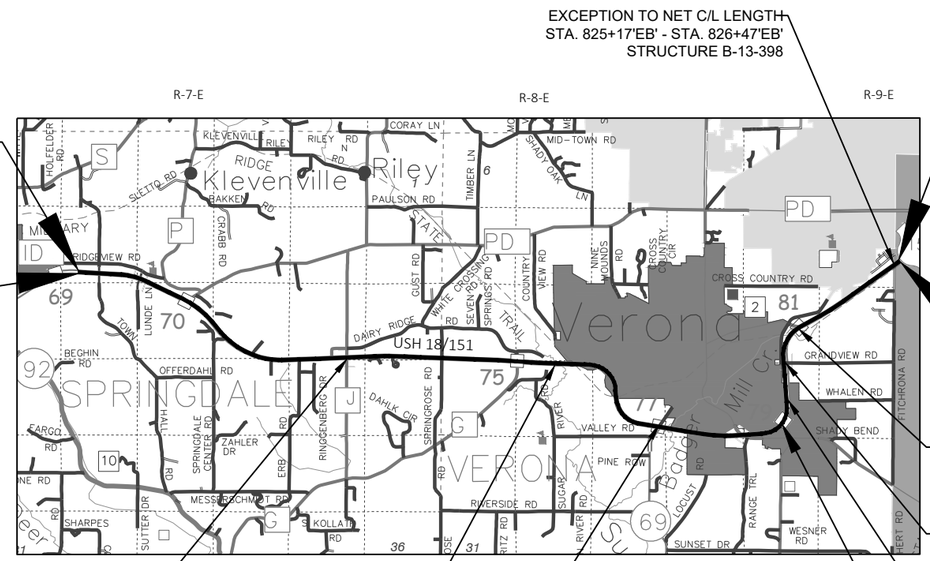

BEGIN CONSTRUCTION
STA. 156+00.00'WB'

BEGIN PROJECT
STA. 153+50.00'EB'
Y = 457341.37
X = 739043.24

END CONSTRUCTION
STA. 825+80.47'WB'

END PROJECT
STA. 826+67.75'EB'

EXCEPTION TO NET C/L LENGTH
STA. 825+17'EB' - STA. 826+47'EB'
STRUCTURE B-13-398

EXCEPTION TO NET C/L LENGTH
STA. 342+86'EB' - STA. 344+62'EB'
STRUCTURE B-13-051

EXCEPTION TO NET C/L LENGTH
STA. 487+80'EB' - STA. 489+53'EB'
STRUCTURE B-13-383

EXCEPTION TO NET C/L LENGTH
STA. 584+55'EB' - STA. 586+46'EB'
STRUCTURE B-13-407

EXCEPTION TO NET C/L LENGTH
STA. 744+44'EB' - STA. 745+95'EB'
STRUCTURE B-13-417

EXCEPTION TO NET C/L LENGTH
STA. 717+50'EB' - STA. 718+94'EB'
STRUCTURE B-13-415

EXCEPTION TO NET C/L LENGTH
STA. 691+29'EB' - STA. 692+49'EB'
STRUCTURE B-13-413

STRUCTURES B-13-411
AND B-13-412

LAYOUT

SCALE 0 2 MI

TOTAL NET LENGTH OF CENTERLINE = 12.544 MI

HORIZONTAL POSITIONS SHOWN ON THIS PLAN ARE WISCONSIN COORDINATE REFERENCE SYSTEM (WISCRS), DANE COUNTY, NAD83 (2011), IN U.S. SURVEY FEET. POSITIONS SHOWN ARE GRID COORDINATES, GRID BEARINGS, AND GRID DISTANCES. GRID DISTANCES ARE THE SAME AS GROUND DISTANCES. ELEVATIONS ARE REFERENCED TO NAVD 88 (2012). GPS DERIVED ELEVATIONS ARE BASED ON GEOID 12A.

ORIGINAL PLANS PREPARED BY

KL Engineering
[A] Better Experience

WISCONSIN
DANIEL J. RYAN
E-40769
MADISON
WI
PROFESSIONAL ENGINEER

DATE: 12/2/2022 (Professional Engineer Signature)

STATE OF WISCONSIN
DEPARTMENT OF TRANSPORTATION

PREPARED BY

Surveyor	WISDOT/KL ENGINEERING
Designer	KL ENGINEERING
Project Manager	DEREK POTTER
Regional Examiner	SW REGION
Regional Supervisor	CHAD SCHROEDER

APPROVED FOR THE DEPARTMENT

DATE: 12/2/22 (Signature)

E

FILE NAME : G:\WDOTSW\20007-000 USH 18\CIVIL 3D\SHEETSPLAN\010101-TI.DWG PLOT DATE : 7/12/2022 9:21 AM PLOT BY : NATHAN RULLMAN PLOT NAME :

ABBREVIATIONS

BAD	BASE AGGREGATE DENSE
BM	BENCH MARK
BLDG.	BUILDING
CBTP	CONCRETE BARRIER TEMPORARY PRECAST
CTR	CENTER
C/L	CENTERLINE
C.E.	COMMERCIAL ENTRANCE
CONC.	CONCRETE
CSW	CONCRETE SIDEWALK
CMCP	CORRUGATED METAL CULVERT PIPE
CP	CULVERT PIPE
CPCS	CULVERT PIPE CORRUGATED STEEL
CPRC	CULVERT PIPE REINFORCED CONCRETE
CPRCHE	CULVERT PIPE REINFORCED CONCRETE HORIZONTAL ELLIPTICAL
CPT	CONSTRUCTION PERMIT
DMS	DYNAMIC MESSAGE SIGN
EAT	ENERGY ABSORBING TERMINAL
EB	EASTBOUND
ELEC	ELECTRIC
IE	INVERT ELEVATION
EX. OR EXIST	EXISTING
FO	FIBER OPTIC
F.E.	FIELD ENTRANCE
GAS	GAS
HMA	HOT MIX ASPHALT
HSE.	HOUSE
LHF	LEFT HAND FORWARD
MH	MANHOLE
MAX.	MAXIMUM
MIN.	MINIMUM
NOR.	NORMAL
NTS	NOT TO SCALE
PLE	PERMANENT LIMITED EASEMENT
P.E.	PRIVATE ENTRANCE
P.L.	PROPERTY LINE
PRW	PROPOSED RIGHT-OF-WAY
RAD OR R	RADIUS
R/L	REFERENCE LINE
REQ'D.	REQUIRED
RHF	RIGHT HAND FORWARD
RW	RIGHT-OF-WAY LINE
SAN	SANITARY SEWER
SHLD	SHOULDER
SW	SIDEWALK
SF	SQUARE FEET
SY	SQUARE YARD
S.D.D.	STANDARD DETAIL DRAWING
STA	STATION
SS	STORM SEWER
TEL	TELEPHONE
TLE	TEMPORARY LIMITED EASEMENT
TYP	TYPICAL
WAT	WATER
WB	WESTBOUND

DIGGERS HOTLINE
Dial 811 or (800) 242-8511
www.DiggersHotline.com

UTILITY CONTACTS

COMMUNICATIONS

COLE FAUCETT
ASTREA
105 KENT ST
P.O. BOX 190
IRON MOUNTAIN, MI 49801
(906) 221-0800
cole.faucett@astreaconnect.com

SHAD GARCIA
EVERSTREAM
324 E WISCONSIN AVE, SUITE 730
MILWAUKEE, WI 53202
(414) 522-6685
sgarcia@everstream.net

JASON BUSSE
LEVEL 3 COMMUNICATIONS LLC
3235 INTERTECH DR. SUITE #600
BROOKFIELD, WI 53045
(414) 224-6713 OR (715) 415-3214 (CELL)
jason.busse@lumen.com

RJ CICATELLO JR.
MCI
15725 WEST RYERSON RD
NEW BERLIN, WI 53151
(262) 232-1323
randy.cicatello@verizon.com

KEVIN MAYNE
MOUNT HOREB TELEPHONE COMPANY
200 E MAIN ST
MT HOREB, WI 53572
(608) 437-5551
kevin.mayne@mhtcinc.com

JERRY MYERS
TDS TELECOM
525 JUNCTION RD
MADISON, WI 53717
(608) 664-4404
jerry.myers@tdstelecom.com

COMMUNICATIONS

DAN PARENTEAU
UNIVERSITY OF WISCONSIN
1210 W DAYTON ST
MADISON, WI 53706
608-262-9501
dan.parenteau@wisc.edu

ELECTRIC TRANSMISSION

DOUG VOSBERG
ATC MANAGEMENT, INC.
2489 RINDEN RD
COTTAGE GROVE, WI 53527
608-877-7650
dvosberg@atcllc.com

ELECTRICITY

NICHOLAS DACHNIWSKYJ
ALLIANT ENERGY
935 WBR TOWNLINE RD
BELOIT, WI 53511
(608) 364-6566 OR (608) 444-9362
nicholasdachniwskyj@alliantenergy.com

TONY SANFRATELLO
MADISON GAS AND ELECTRIC COMPANY (MG&E)
623 RAILROAD STREET
MADISON, WI 53701-1231
(608) 931-1284
ASANFRATELLO@mge.com

GAS

ROGER AHLES
MADISON GAS AND ELECTRIC COMPANY (MG&E)
623 RAILROAD STREET
MADISON, WI 53701
(608) 252-5682
rahles@mge.com

SEWER

JON BUBLITZ
CITY OF VERONA
410 INVESTMENT CT
VERONA, WI 53593
(608) 848-6804
jon.bublitz@ci.verona.wi.us

RAY SCHNEIDER
MADISON METROPOLITAN SEWERAGE DISTRICT (MMSD)
1610 MOORLAND RD
MADISON, WI 53713
(608) 222-1201 OR (608) 347-3628
locates@madsewer.org

CHRIS BARNES
TOWN OF VERONA
7669 COUNTY HIGHWAY PD
VERONA, WI 53593
(608) 807-4471
cbarnes@town.verona.wi.us

WATER

JON BUBLITZ
CITY OF VERONA
410 INVESTMENT CT
VERONA, WI 53593
(608) 848-6804
jon.bublitz@ci.verona.wi.us

WISDOT CONTACT

DEREK POTTER, P.E.
WISDOT SW REGION
2101 WRIGHT STREET
MADISON, WI 53704
(608) 246-3861
derek.potter@dot.wi.gov

DESIGN CONTACT

DAN RYAN, P.E.
KL ENGINEERING, INC.
5400 KING JAMES WAY
SUITE 200
MADISON, WI 53719
(608) 663-1218
dryan@klengineering.com

DNR LIAISON

ERIC HEGGELUND
DNR SOUTH CENTRAL REGION HEADQUARTERS
3911 FISH HATCHERY ROAD
FITCHBURG, WI 53711
(608) 228-7927
eric.heggelund@wisconsin.gov

GENERAL NOTES

THE LOCATION OF EXISTING AND PROPOSED UTILITY INSTALLATIONS AS SHOWN ON THE PLANS ARE APPROXIMATE. THERE MAY BE OTHER UTILITY INSTALLATIONS WITHIN THE PROJECT AREA THAT ARE NOT SHOWN. THE CONTRACTOR SHALL COORDINATE THEIR CONSTRUCTION ACTIVITIES WITH A CALL TO DIGGERS HOTLINE AND/OR A DIRECT CALL TO THE UTILITIES THAT HAVE FACILITIES IN THE AREA. NOT ALL UTILITIES ARE MEMBERS OF DIGGERS HOTLINE. UTILITY LOCATION MARKERS ON THE CROSS SECTIONS ARE FOR APPROXIMATE HORIZONTAL REFERENCE ONLY.

MATCH GRADING IN AND AROUND EXISTING UNDERDRAIN OUTFALL ENDWALLS EXCEPT WHERE OUTFALL PIPES ARE BEING EXTENDED.

REMOVAL ITEMS REQUIRING RESTORATION OF CONCRETE OR ASPHALT SHALL BE REMOVED TO AN EXISTING JOINT OR SAWED AS DETERMINED BY THE ENGINEER.

EROSION CONTROL FEATURES AS SHOWN IN THE PLANS ARE AT SUGGESTED LOCATIONS. THE ENGINEER MAY MODIFY LOCATIONS AS NEEDED. ALL EROSION CONTROL MEASURES SHALL BE MAINTAINED UNTIL SUCH TIME AS THE ENGINEER DETERMINES THE MEASURE IS NO LONGER NECESSARY.

NO TREES AND/OR SHRUBS ARE TO BE REMOVED WITHOUT THE APPROVAL OF THE ENGINEER.

PIPE ELEVATIONS, LENGTHS, AND LOCATIONS AS SHOWN ON THE PLANS, MAY BE ADJUSTED TO FIT EXISTING FIELD CONDITIONS AS APPROVED BY THE ENGINEER.

JOINT TIES FOR CONCRETE PIPE SHALL BE PROVIDED AT ALL REINFORCED CONCRETE APRON ENDWALL LOCATIONS. APRON ENDWALLS SHALL BE TIED FOR THE LAST THREE JOINTS AT PIPE ENDS. THE COST OF THESE TIES SHALL BE INCLUDED IN THE CONTRACT UNIT PRICE FOR THE REINFORCED CONCRETE PIPE.

STATIONING AND OFFSETS TO APRON ENDWALLS FOR CULVERT PIPES ARE SHOWN TO THE END OF THE PIPE.

CONTRACTOR IS RESPONSIBLE FOR RESHAPING AND FINISHING ANY PREVIOUSLY GRASSED AREAS WHICH ARE DISTURBED BY THEIR OPERATION OUTSIDE THE NORMAL CONSTRUCTION LIMITS.

THE CONTRACTOR'S HMA PAVING OPERATION SHALL BE CONSISTENT WITH THE TYPICAL SECTIONS AND CONSTRUCTED TO PREVENT LONGITUDINAL JOINTS FROM BEING LOCATED WITHIN A DRIVING, TURNING, PASSING OR PARKING LANE.

THE HMA PAVEMENT WEIGHT CALCULATIONS ARE BASED ON 112 LBS/SY/IN.

CONCRETE PAVEMENT REPAIR AND REPLACEMENT LOCATIONS IN THE PLAN ARE APPROXIMATE. VERIFY LOCATIONS WITH ENGINEER.

BASE PATCHING CONCRETE LOCATIONS IN THE PLAN ARE APPROXIMATE. VERIFY LOCATIONS WITH ENGINEER.

SAWING CONCRETE WILL BE MEASURED AND PAID FOR ONLY ONCE, WHEN THE REPAIRS ARE ADJACENT ALONG THE CENTERLINES OF THE LANES.

OVER-SAWING INTO PAVEMENT THAT IS TO REMAIN TO FACILITATE REMOVAL OF REPAIR AREAS SHALL BE SEALED WITH AN APPROVED EPOXY.

WITHIN CONCRETE PAVEMENT REPLACEMENT SECTIONS, THE NEW CONTRACTION JOINTS MAY NOT MATCH ABUTTING EXISTING JOINTS BECAUSE OF CHANGES TO STANDARDS AND PRIOR REPAIRS. ADJUST NEW JOINTS TO MATCH EXISTING JOINTS WHERE PRACTICAL. DO NOT EXCEED THE MAXIMUM CONTRACTION JOINT SPACING OF 15'.

2

2

ORDER OF DETAIL SHEETS

PROJECT OVERVIEW
TYPICAL SECTIONS
- EXISTING
- PROPOSED
- TEMPORARY

CONSTRUCTION DETAILS
REMOVAL PLAN
PLAN DETAILS
- PERMANENT
- TEMPORARY

PAVING DETAILS
EROSION CONTROL PLAN
SIGNING PLAN
PAVEMENT MARKING PLAN
ELECTRICAL PLANS
- TRAFFIC SIGNAL REMOVAL
- TEMPORARY TRAFFIC SIGNAL
- TRAFFIC SIGNAL

TRAFFIC CONTROL PLAN
ALIGNMENT DIAGRAM
BENCHMARKS AND CONTROL POINTS

ROADWAY IDENTIFIER

IDENTIFIER	DESCRIPTION
'EB'	USH 18/151 EASTBOUND
'WB'	USH 18/151 WESTBOUND
'DA'	CTH PD WESTBOUND OFF-RAMP
'DB'	CTH PD EASTBOUND ON-RAMP
'DC'	CTH PD EASTBOUND OFF-RAMP
'DD'	CTH PD WESTBOUND ON-RAMP
'SD'	SPRINGDALE CENTER ROAD
'BR'	BEAT ROAD
'ER'	ERB ROAD
'DR'	DAIRY RIDGE ROAD
'WO'	WINDY OAK LANE
'SC'	SPRING ROSE CIRCLE
'SR'	SPRING ROSE ROAD
'GA'	CTH G WESTBOUND OFF-RAMP
'GB'	CTH G EASTBOUND ON-RAMP
'GC'	CTH G EASTBOUND OFF-RAMP
'GD'	CTH G WESTBOUND ON-RAMP
'WE'	WEST VERONA AVE OFF-RAMP
'WW'	WEST VERONA AVE ON-RAMP
'EV'	EPIC LANE EASTBOUND ON-RAMP
'EP'	EPIC LANE WESTBOUND OFF-RAMP
'SA'	STH 69 WESTBOUND OFF-RAMP
'SB'	STH 69 EASTBOUND ON-RAMP
'SC'	STH 69 EASTBOUND OFF-RAMP
'SD'	STH 69 WESTBOUND ON-RAMP
'PA'	CTH PB WESTBOUND OFF-RAMP
'PB'	CTH PB EASTBOUND ON-RAMP
'PC'	CTH PB EASTBOUND OFF-RAMP
'PD'	CTH PB WESTBOUND ON-RAMP
'EE'	EAST VERONA AVE ON-RAMP
'EW'	EAST VERONA AVE OFF-RAMP
'SS'	STH 69 SOUTHBOUND
'PBN'	CTH PB NORTHBOUND
'PBS'	CTH PB SOUTHBOUND

HMA PAVEMENT, WHEN INDICATED ON THE PLANS, SHALL CONSIST OF COURSE THICKNESS AS FOLLOWS:

ALIGNMENT	LOCATION	TOTAL DEPTH	LAYERS	HMA MIXTURE	CONSTRUCTION PHASE
EB & WB	MEDIAN & OUTSIDE SHOULDER	4.5-INCHES	4.50" SINGLE	3 HT 58-28 H	PHASES 1 & 2
EB & WB	MEDIAN SHOULDER & THRU LANES	4-INCHES	1.75" UPPER 2.25" LOWER	4 SMA 58-28 V 3 HT 58-28 H	PHASES 3, 4 & 5
EB & WB	OUTSIDE SHOULDER	4-INCHES	1.75" UPPER 2.25" LOWER	4 HT 58-28 H 3 HT 58-28 H	PHASES 3 & 5
PA,PB,PC, PD,EE,EW	N/A	4.5-INCHES	1.75" UPPER 1.75" MIDDLE 1.00" LOWER	4 HT 58-28 H 4 HT 58-28 H HMA PAVT. INTERLAYER	N/A
DB,DC,DD GA,GD,PA PB,PC,PD EE,EW,SA SB,SC,SD	N/A	4-INCHES	1.75" UPPER 2.25" LOWER	4 HT 58-28 H 4 HT 58-28 H	N/A
DA,GB,GC, WE,WW	SHOULDERS	3.5-INCHES	1.75" UPPER 1.75" LOWER	4 HT 58-28 H 4 HT 58-28 H	N/A

2

PROJECT NO: 1204-08-65	HWY: USH 18/151	COUNTY: DANE	GENERAL NOTES	SHEET 3	E

FILE NAME : G:\WDOTSW\20007-000 USH 18\CIVIL 3D\SHEETSPLAN\020101_GN.DWG
LAYOUT NAME - Sheet - (2)
PLOT DATE : 7/20/2022 9:08 PM
PLOT BY : KL ENGINEERING
PLOT NAME :
PLOT SCALE : 1 IN:100 FT
WISDOT/CADDS SHEET 42

2

N

BEGIN PROJECT 1204-08-65
STA. 153+50.00'EB'

BEGIN CONSTRUCTION 1204-08-65
STA. 156+00.00'WB'

STRUCTURE B-13-377

STRUCTURE B-13-378

STRUCTURE B-13-379

STRUCTURE B-13-380

STRUCTURE B-13-051

CTH ID

TOWN HALL RD

LUNDE LN

CTH PD

RAMP 'DD'

RAMP 'DA'

RAMP 'DC'

RAMP 'DB'

DESPINS DR

ENVIRONMENTALLY SENSITIVE AREA

SPRINGDALE CENTER RD

USH 18/151 'WB'

USH 18/151 'EB'

USH 18/151

DAIRY RIDGE RD

CTH J

BEAT RD

ERB RD

WINDY OAK LN

SPRING ROSE CIR

SPRING ROSE RD

100

150

200

250

300

350

400

MATCH LINE STA. 430+00EB

PROJECT NO: 1204-08-65	HWY: USH 18/151	COUNTY: DANE	PROJECT OVERVIEW	SHEET 4	E

FILE NAME : G:\WDOTSW\20007-000 USH 18\CIVIL 3D\SHEETSPLAN\020201-PO.DWG
LAYOUT NAME - 02021

PLOT DATE : 6/30/2022 9:09 AM PLOT BY : NATHAN RULLMAN PLOT NAME : _____ PLOT SCALE : 1 IN:2000 FT

2

2

CITY OF MADISON

CITY OF VERONA

CITY OF FITCHBURG

N

MATCH LINE STA. 430+00EB

END PROJECT 1204-08-65
STA. 826+67.75'EB'

END CONSTRUCTION 1204-08-65
STA. 825+80.47'WB'

STRUCTURE B-13-397

FITCHRONA ROAD

STRUCTURE B-13-398

800

EXISTING CATTLE PASS
STA 802+50'EB'

STRUCTURE B-13-426

RAMP 'EW'

E VERONA AVE

750

STRUCTURE B-13-418

STRUCTURE B-13-425
C-13-117

RAMP 'EE'

STRUCTURE B-13-417

BADGER MILL CREEK

STRUCTURE B-13-416

GRANDVIEW RD

STRUCTURE B-13-415

STRUCTURE B-13-414

700

STRUCTURE B-13-413

WHALEN RD

RAMP 'PA'

STRUCTURE B-13-412

RAMP 'PD'

RAMP 'PB'

CTH PB 'PBN'

CTH PB

STRUCTURE B-13-410

CTH M

650

RAMP 'PC'

STRUCTURE B-13-411

CTH PB 'PBS'

DAIRY RIDGE RD

ENVIRONMENTALLY SENSITIVE AREA

STRUCTURE B-13-403

RAMP 'GD'

450

RAMP 'GA'

RAMP 'GB'

RAMP 'GC'

CTH G

STRUCTURE B-13-383

SUGAR RIVER

STRUCTURE B-13-052

STRUCTURE C-13-111

500

RAMP 'WW'

EPIC LN

W VERONA AVE

RAMP 'WE'

RAMP 'EP'

STRUCTURE B-13-404

AUXILIARY LANE

STRUCTURE B-13-573

STRUCTURE C-13-121

RAMP 'EV'

550

STRUCTURE B-13-408

RAMP 'SD'

STH 69

BADGER MILL CREEK

RAMP 'SA'

USH 18/151 'WB'

600

RAMP 'SC'

RAMP 'SB'

STRUCTURE B-13-407

USH 18/151 'EB'

STRUCTURE B-13-409

LOCUST ST

PROJECT NO: 1204-08-65	HWY: USH 18/151	COUNTY: DANE	PROJECT OVERVIEW	SHEET : 5	E

FILE NAME : G:\WDOTSW\20007-000 USH 18\CIVIL 3D\SHEETSPLAN\020201-PO.DWG
LAYOUT NAME - 020201

PLOT DATE : 6/30/2022 9:10 AM PLOT BY : NATHAN RULLMAN PLOT NAME : _____ PLOT SCALE : 1 IN:2000 FT

WISDOT/CADDS SHEET 42

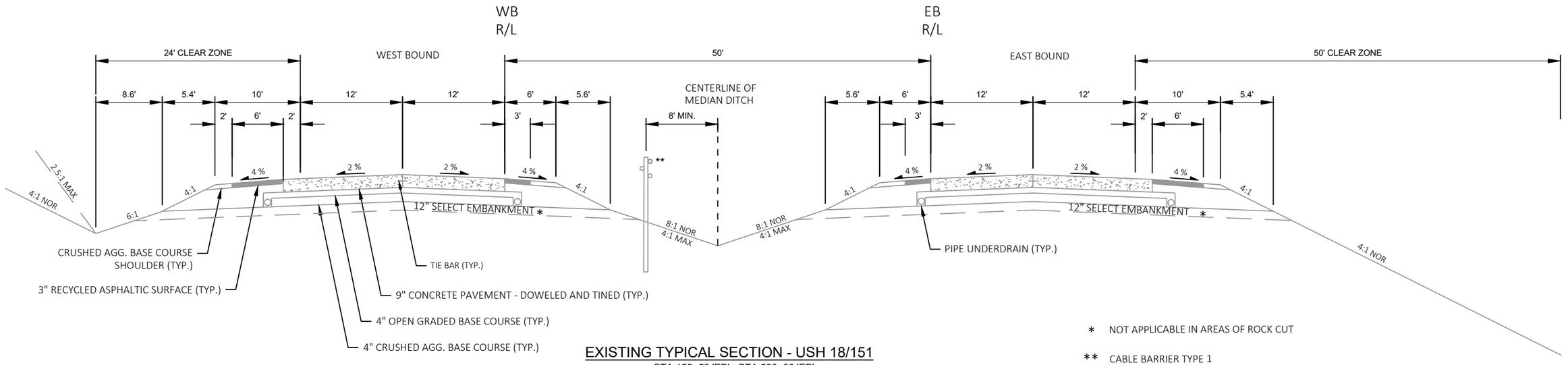

EXISTING TYPICAL SECTION - USH 18/151

STA 153+50 'EB' - STA 500+00 'EB'
STA 156+00 'WB' - STA 500+00 'WB'

* NOT APPLICABLE IN AREAS OF ROCK CUT

** CABLE BARRIER TYPE 1
STA 182+19 - STA 254+15
STA 292+00 - STA 309+81
STA 311+69 - STA 316+87
STA 412+59 - STA 486+86
STA 490+94 - STA 544+41
STA 545+38 - STA 583+38
STA 587+58 - STA 630+25
STA 631+04 - STA 675+13

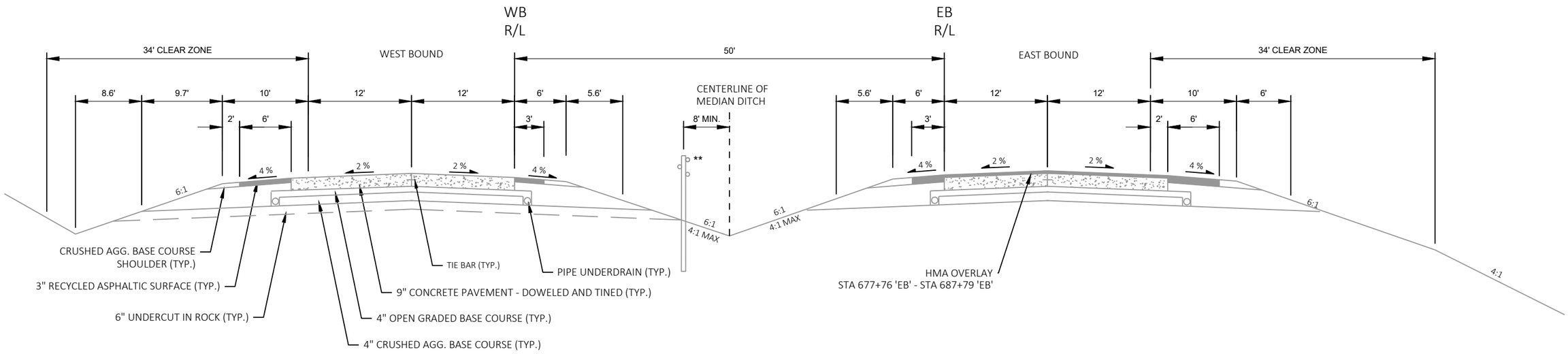

EXISTING TYPICAL SECTION - USH 18/151

STA 500+00 'WB' - STA 532+37 'WB'
STA 573+66 'WB' - STA 675+50 'WB'
STA 500+00 'EB' - STA 687+83 'EB'

PROJECT NO: 1204-08-65	HWY: USH 18/151	COUNTY: DANE	EXISTING TYPICAL SECTIONS	SHEET 6	E

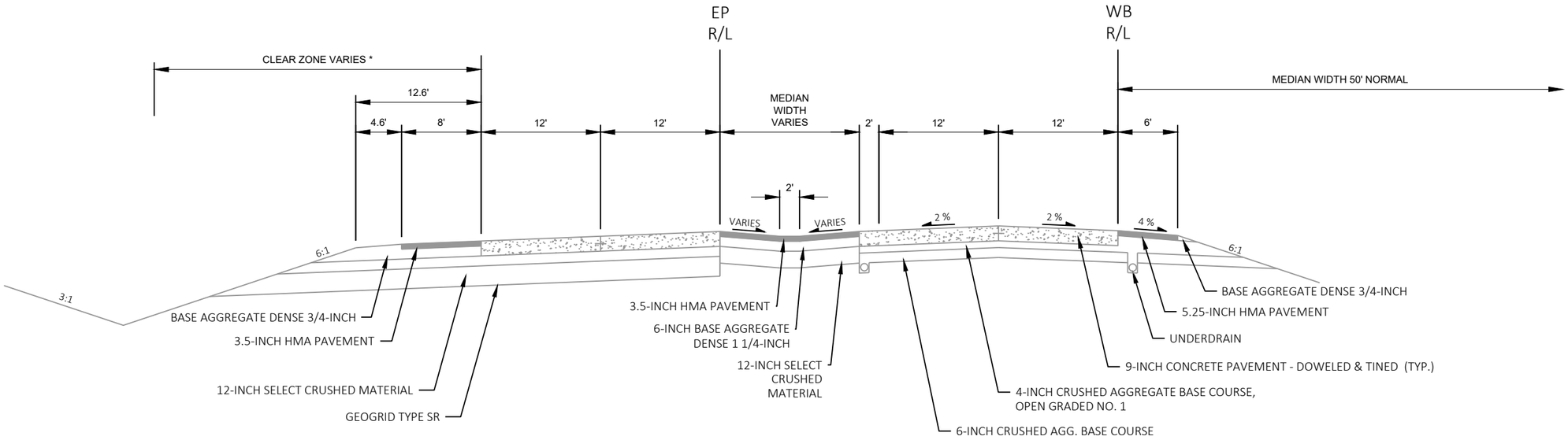

* STA 531+48 - STA 534+48 = 18' CLEAR ZONE
STA 534+48 - STA 542+05 = 22' CLEAR ZONE
STA 542+05 - STA 544+38 = 30' CLEAR ZONE

EXISTING TYPICAL SECTION - USH 18/151

STA 532+37 'WB' - STA 546+33 'WB'

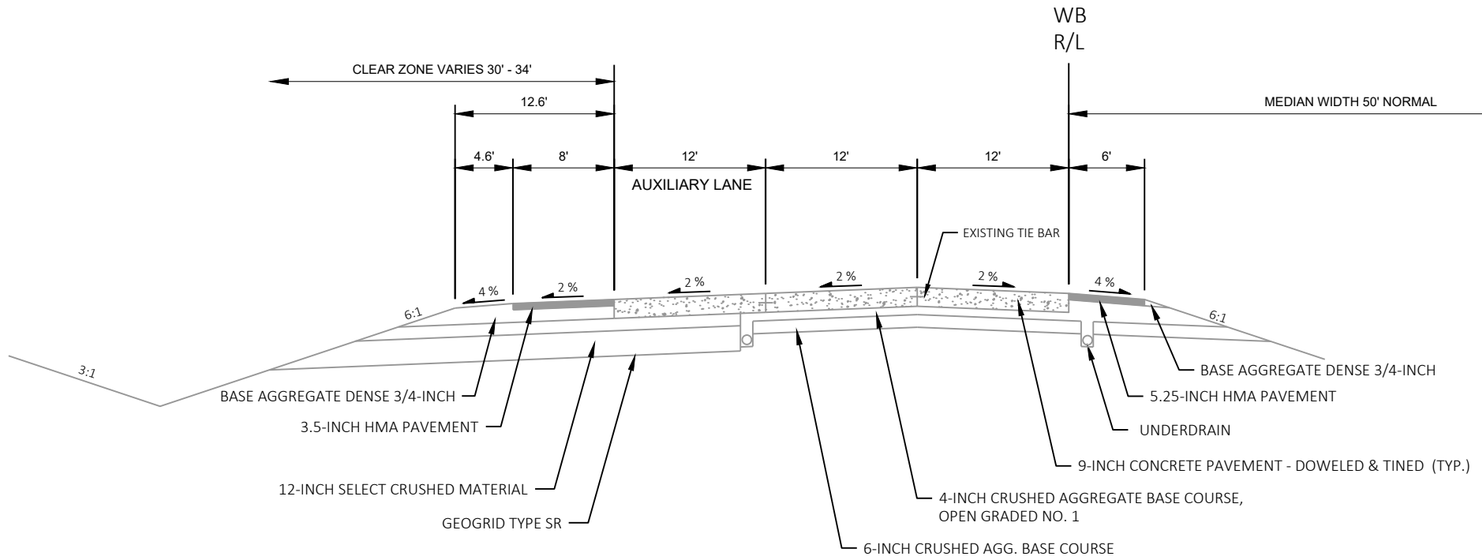

EXISTING TYPICAL SECTION - USH 18/151

STA 546+33 'WB' - STA 573+66 'WB'

PROJECT NO: 1204-08-65	HWY: USH 18/151	COUNTY: DANE	EXISTING TYPICAL SECTIONS	SHEET 7	E

2

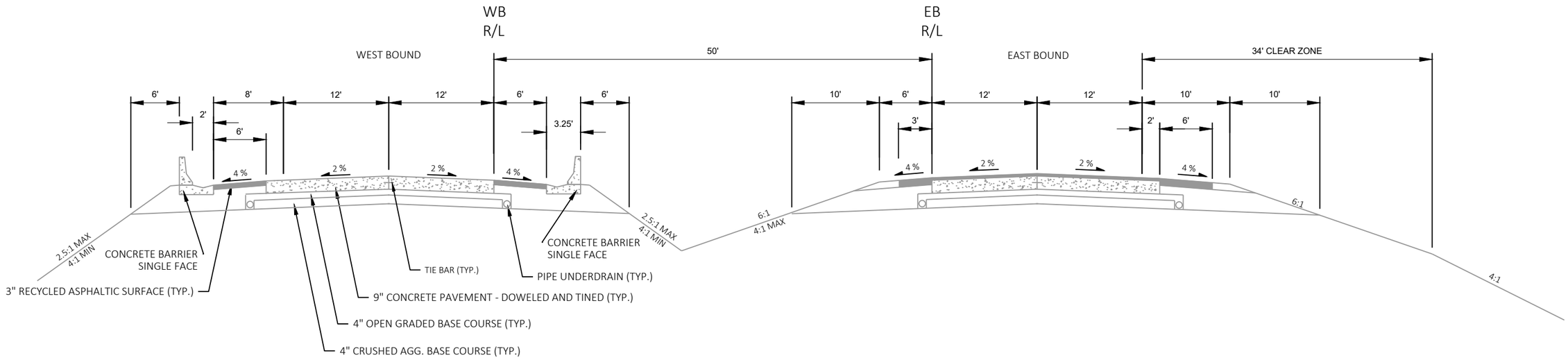

EXISTING TYPICAL SECTION - USH 18/151

STA 675+50 'WB' - STA 683+61 'WB'

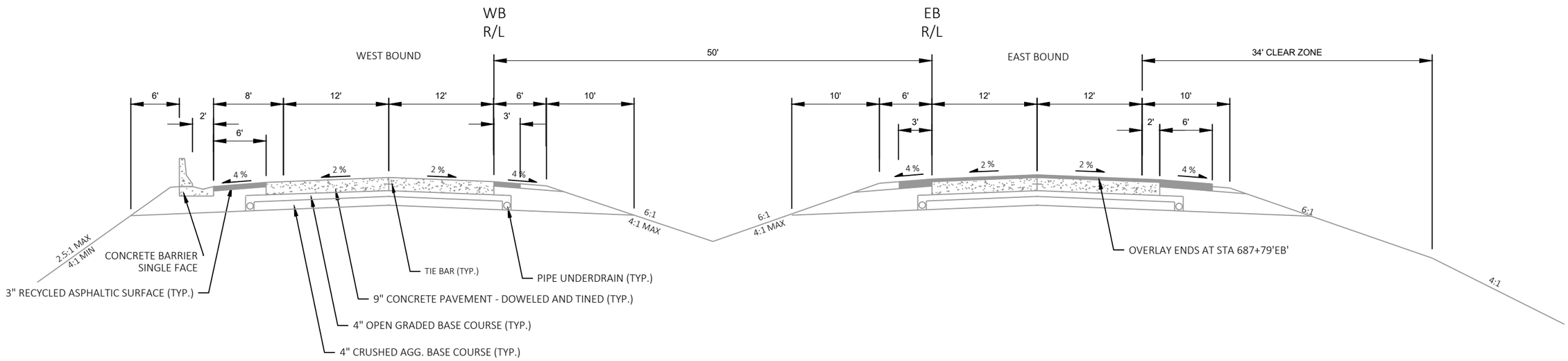

EXISTING TYPICAL SECTION - USH 18/151

STA 683+61 'WB' - STA 688+13 'WB'

PROJECT NO: 1204-08-65	HWY: USH 18/151	COUNTY: DANE	EXISTING TYPICAL SECTIONS	SHEET 8	E

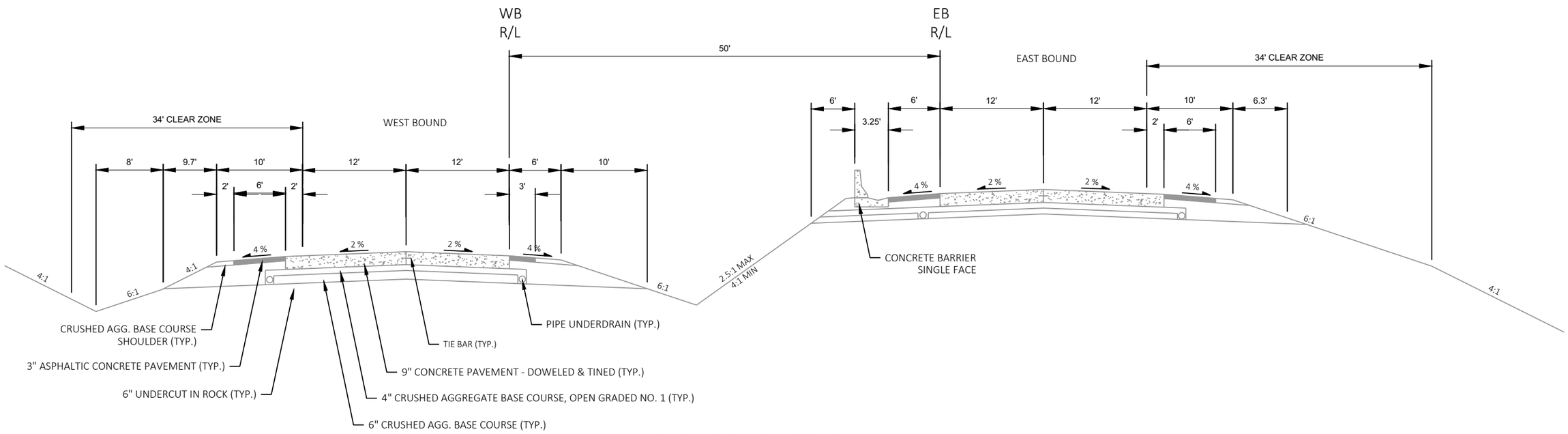

EXISTING TYPICAL SECTION - USH 18/151

STA 687+83 'EB' - STA 751+00 'EB'
STA 688+13 'WB' - STA 751+00 'WB'

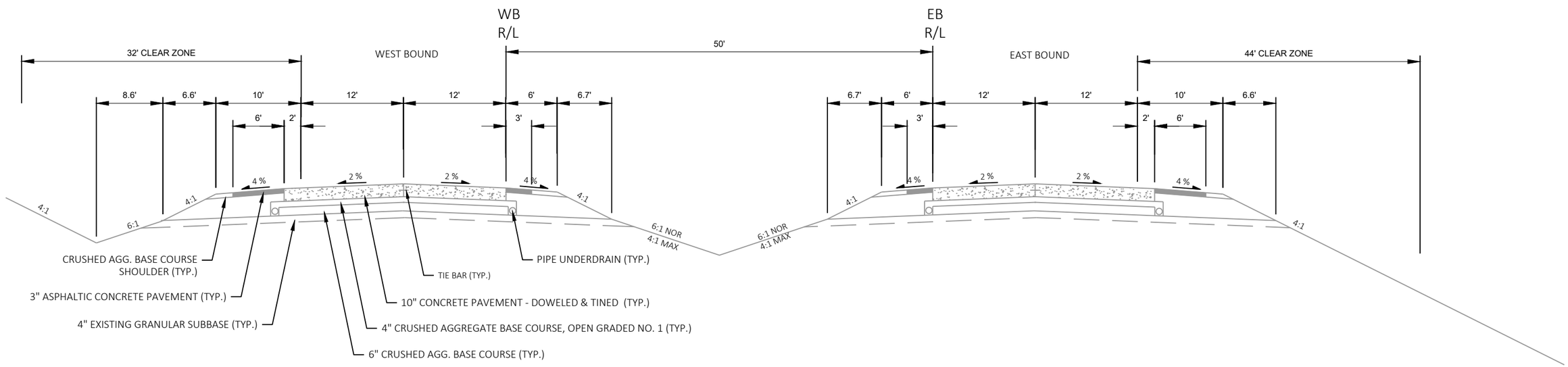

EXISTING TYPICAL SECTION - USH 18/151

STA 751+00 'EB' - STA 826+68 'EB'
STA 751+00 'WB' - STA 825+80 'WB'

PROJECT NO: 1204-08-65	HWY: USH 18/151	COUNTY: DANE	EXISTING TYPICAL SECTIONS	SHEET 9	E

2

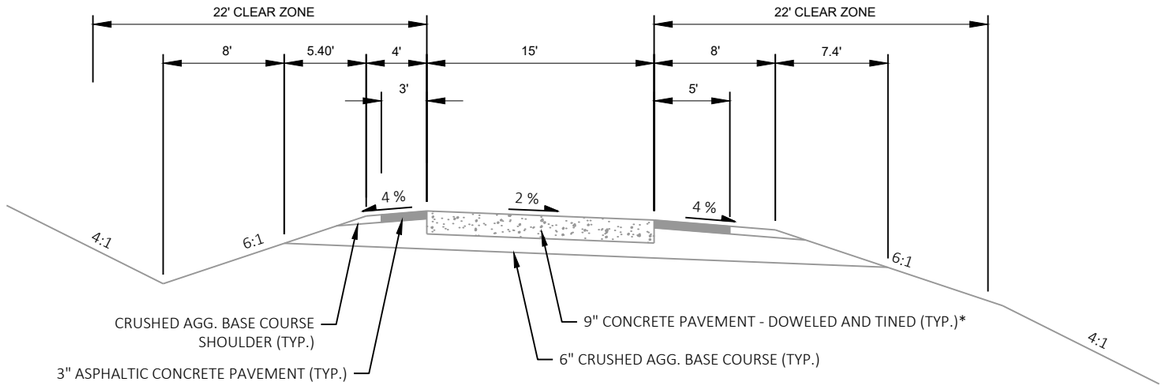

EXISTING TYPICAL SECTION

(ONE LANE RAMP SECTION)
(SHOWN IN DIRECTION OF TRAVEL)
CTH PD RAMPS
CTH G RAMPS
W VERONA AVE RAMPS
EPIC LANE ON RAMP
STH 69 RAMPS
CTH PB RAMPS
E VERONA AVE RAMPS

NOTE: *CTH PD RAMPS - 8-INCH CONCRETE PAVEMENT

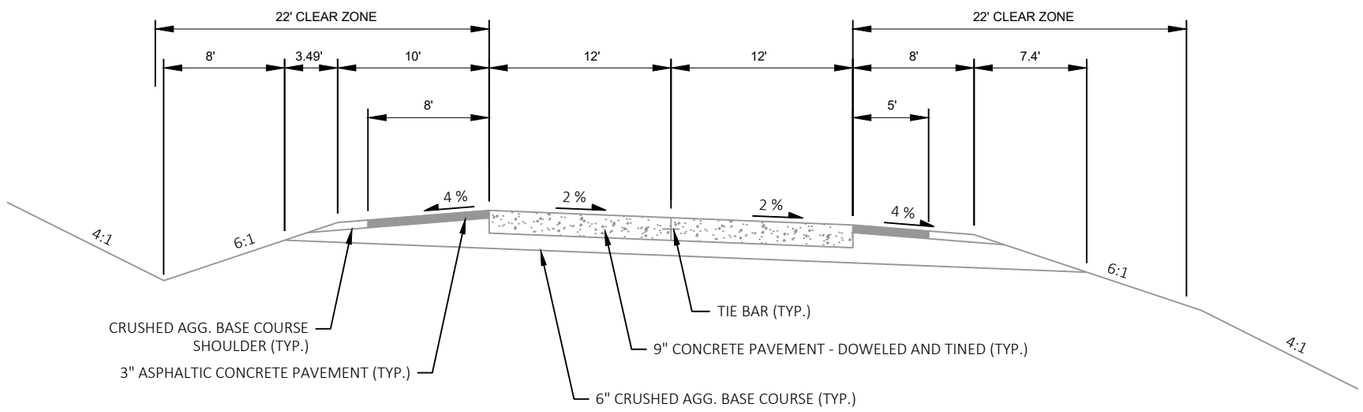

EXISTING TYPICAL SECTION

(TWO LANE RAMP SECTION)
(SHOWN IN DIRECTION OF TRAVEL)
W VERONA AVE RAMPS
EPIC LANE OFF RAMP
CTH PB RAMPS
E. VERONA AVE RAMPS

NOTE: RAMP PA - 500' HMA OVERLAY

2

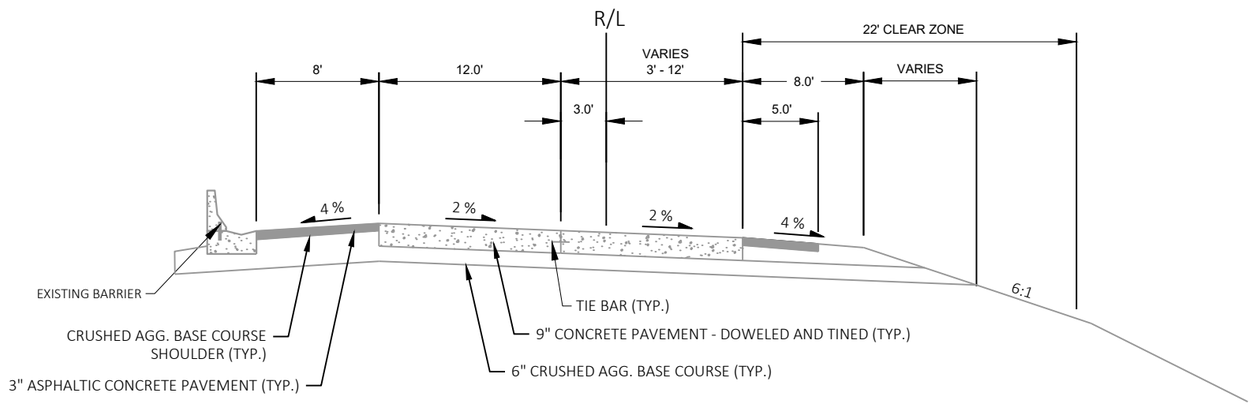

EXISTING TYPICAL SECTION

(TWO LANE RAMP SECTION)
(SHOWN IN DIRECTION OF TRAVEL)
CTH PB OFF-RAMP (RAMP PA)

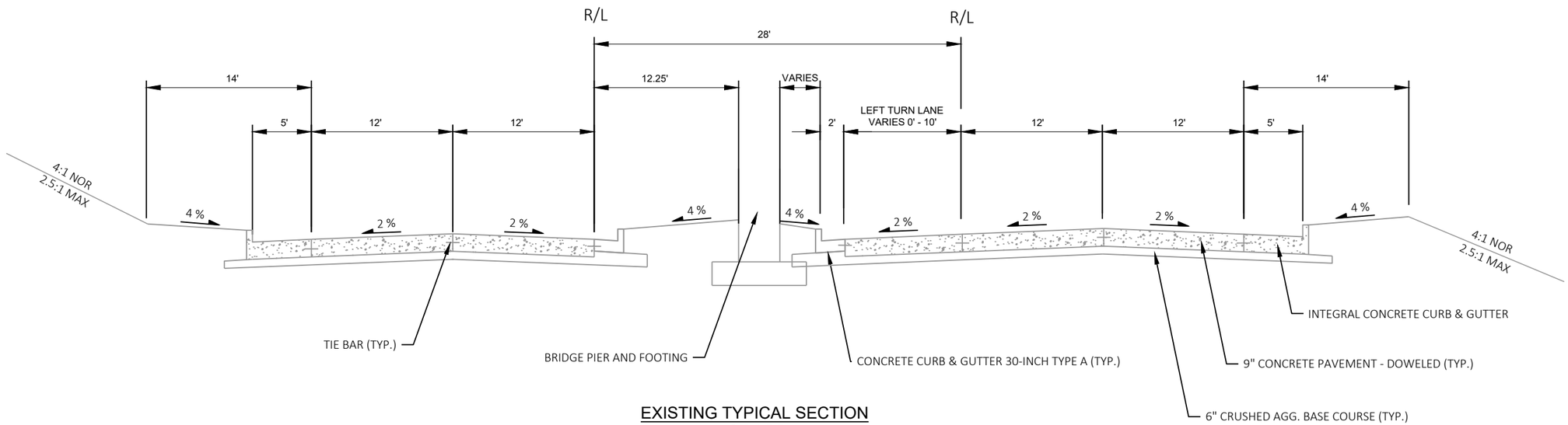

EXISTING TYPICAL SECTION

CTH PB
STA 144+19 'PBS' - STA 155+26 'PBS'
STH 69
STA 45+00 'PS' - STA 55+00 'PS'

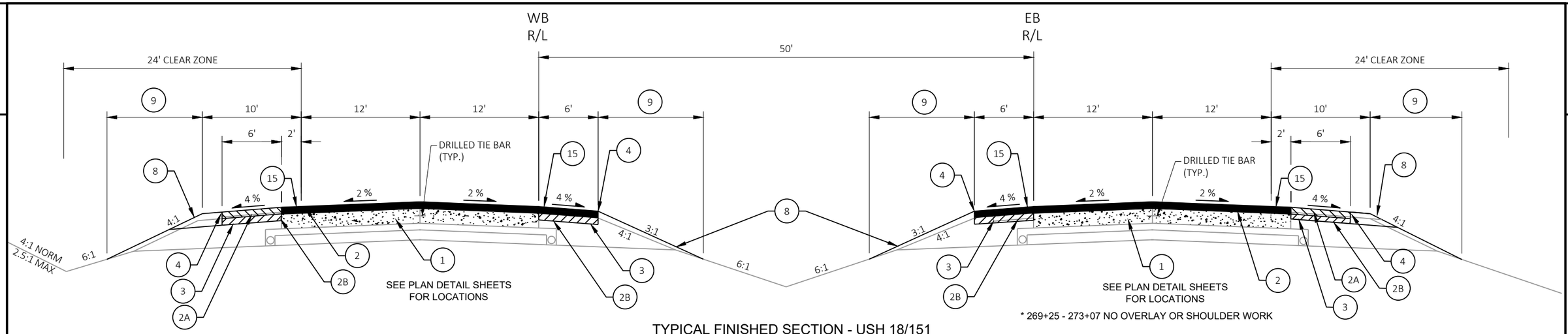

* 269+25 - 273+07 NO OVERLAY OR SHOULDER WORK

TYPICAL FINISHED SECTION - USH 18/151

STA 153+50 'EB' - STA 500+00 'EB'
STA 156+00 'WB' - STA 500+00 'WB'

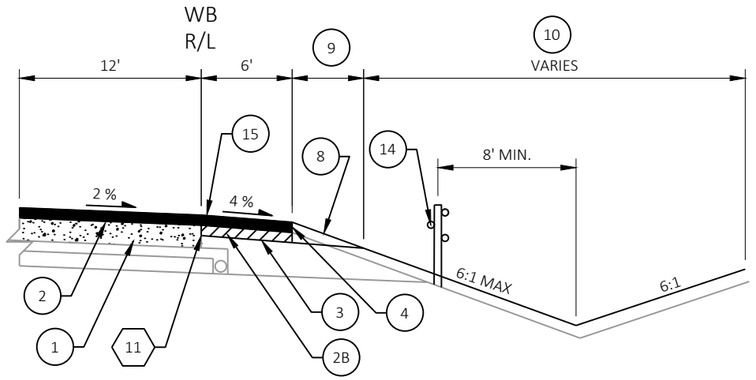

PARTIAL FINISHED SECTION - CABLE GUARD

STA 182+37 'WB' - STA 254+15 'WB'
STA 412+59 'WB' - STA 486+60 'WB'
STA 490+94 'WB' - STA 500+00 'WB'

LEGEND

1	BASE PATCHING CONCRETE
2	HMA PAVEMENT - 4-INCH UPPER 1.75-INCH 4 SMA 58-28 V LOWER 2.25-INCH 3 HT 58-28 H
2A	HMA PAVEMENT - 4-INCH UPPER 1.75-INCH 4 HT 58-28 H LOWER 2.25-INCH 3 HT 58-28 H
2B	HMA PAVEMENT - 4.5-INCH SINGLE LAYER 4.50-INCH 3 HT 58-28 H
3	PREPARE FOUNDATION FOR ASPHALTIC SHOULDERS
4	SAFETY EDGE TREATMENT
5A	CONCRETE PAVEMENT 10.5 INCH
6	CONCRETE PAVEMENT REPAIR/REPLACEMENT
7	BASE AGGREGATE DENSE 1 1/4-INCH
8	BASE AGGREGATE DENSE 3/4-INCH
9	SEEDING MIXTURE NO. 30 AND FERTILIZER TYPE A
10	SALVAGED TOPSOIL, SEEDING MIXTURE NO. 30, FERTILIZER TYPE A, AND MULCH
11	POINT REFERRED TO ON CROSS SECTIONS
12	POINT REFERRED TO ON PROFILE
13	PREPARE FOUNDATION FOR CONCRETE PAVEMENT
14	CABLE GUARD SAFENCE TL-3, 4 CABLE
15	ASPHALTIC SHOULDER RUMBLE STRIPS

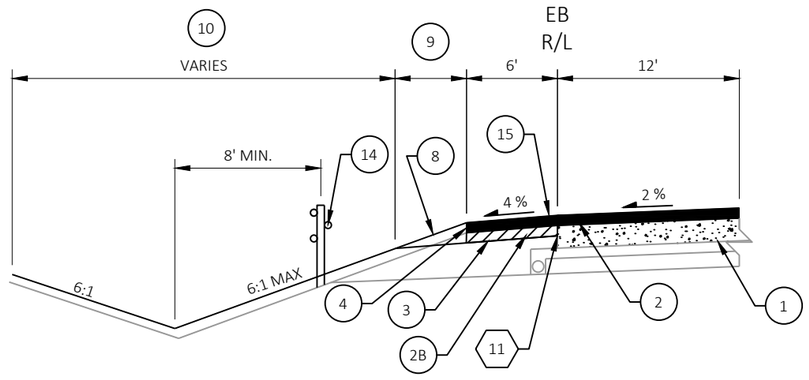

PARTIAL FINISHED SECTION - CABLE GUARD

STA 292+00 'EB' - STA 309+81 'EB'
STA 311+69 'EB' - STA 316+87 'EB'

PROJECT NO: 1204-08-65	HWY: USH 18/151	COUNTY: DANE	TYPICAL SECTION	SHEET 12	E

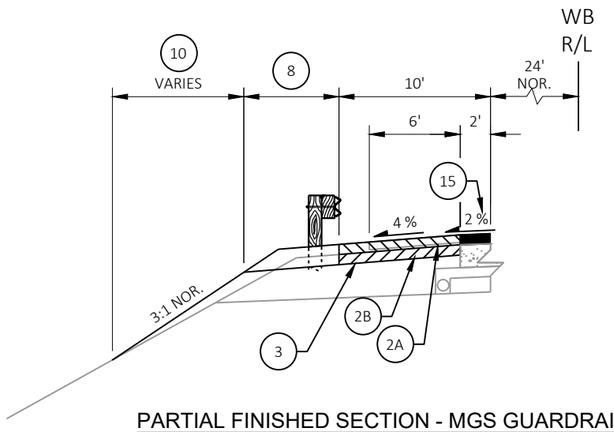

PARTIAL FINISHED SECTION - MGS GUARDRAIL

STA 344+86 'WB' - STA 347+00 'WB', LT
STA 490+40 'WB' - STA 494+75 'WB', LT

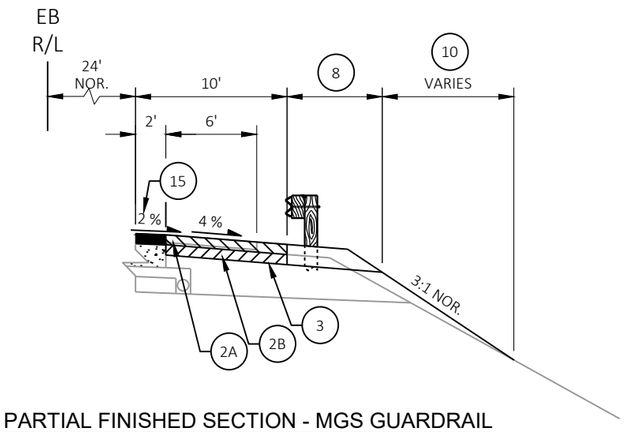

PARTIAL FINISHED SECTION - MGS GUARDRAIL

STA 340+65 'EB' - STA 342+65 'EB', RT
STA 364+65 'EB' - STA 369+15 'EB', RT
STA 380+20 'EB' - STA 382+46 'EB', RT
STA 485+67 'EB' - STA 487+57 'EB', RT

LEGEND

1	BASE PATCHING CONCRETE
2	HMA PAVEMENT - 4-INCH UPPER 1.75-INCH 4 SMA 58-28 V LOWER 2.25-INCH 3 HT 58-28 H
2A	HMA PAVEMENT - 4-INCH UPPER 1.75-INCH 4 HT 58-28 H LOWER 2.25-INCH 3 HT 58-28 H
2B	HMA PAVEMENT - 4.5-INCH SINGLE LAYER 4.50-INCH 3 HT 58-28 H
3	PREPARE FOUNDATION FOR ASPHALTIC SHOULDERS
4	SAFETY EDGE TREATMENT
5A	CONCRETE PAVEMENT 10.5 INCH
6	CONCRETE PAVEMENT REPAIR/REPLACEMENT
7	BASE AGGREGATE DENSE 1 1/4-INCH
8	BASE AGGREGATE DENSE 3/4-INCH
9	SEEDING MIXTURE NO. 30 AND FERTILIZER TYPE A
10	SALVAGED TOPSOIL, SEEDING MIXTURE NO. 30, FERTILIZER TYPE A, AND MULCH
11	POINT REFERRED TO ON CROSS SECTIONS
12	POINT REFERRED TO ON PROFILE
13	PREPARE FOUNDATION FOR CONCRETE PAVEMENT
14	CABLE GUARD SAFENCE TL-3, 4 CABLE
15	ASPHALTIC SHOULDER RUMBLE STRIPS
20	ROUTE AND SEAL

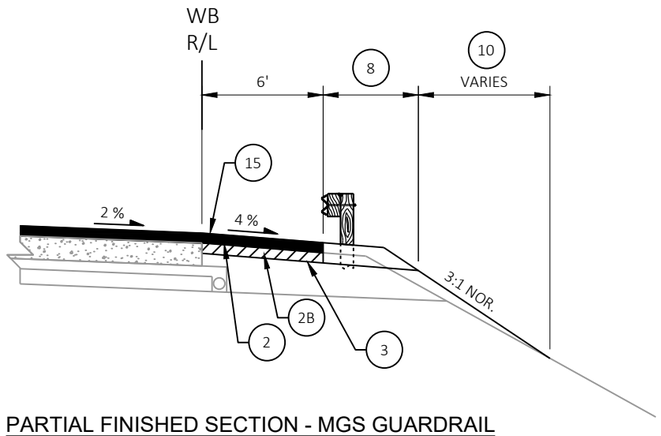

PARTIAL FINISHED SECTION - MGS GUARDRAIL

STA 342+23 'WB' - STA 343+00 'WB', RT
STA 344+88 'WB' - STA 346+64 'WB', RT
STA 490+40 'WB' - STA 491+63 'WB', RT

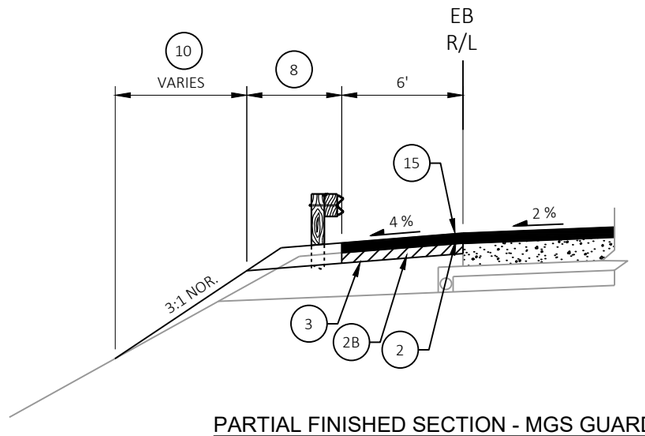

PARTIAL FINISHED SECTION - MGS GUARDRAIL

STA 340+52 'EB' - STA 342+65 'EB', LT
STA 485+32 'EB' - STA 487+57 'EB', LT

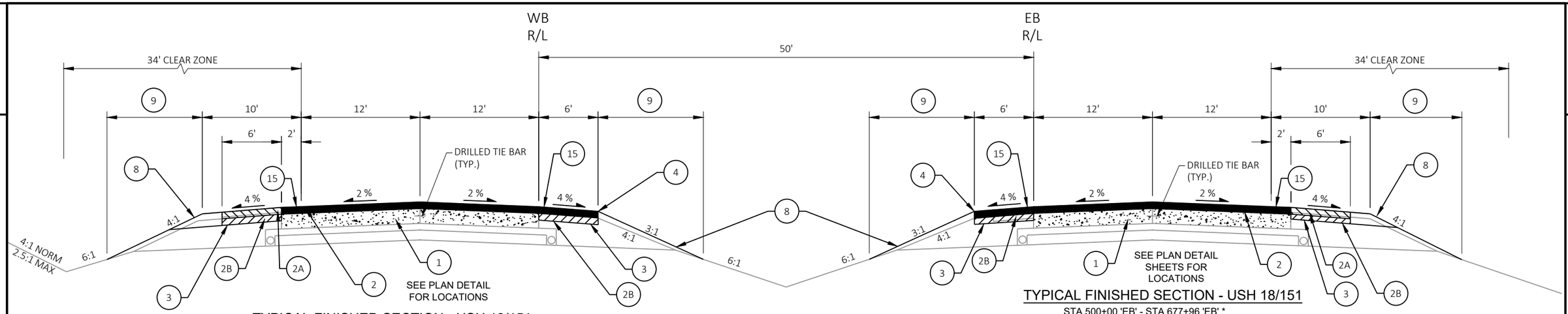

TYPICAL FINISHED SECTION - USH 18/151

STA 500+00 'WB' - STA 532+37 'WB' *
STA 573+66 'WB' - STA 675+50 'WB'
STA 688+13 'WB' - STA 825+80 'WB'

* STA 500+58 - STA 505+37 NO OVERLAY

TYPICAL FINISHED SECTION - USH 18/151

STA 500+00 'EB' - STA 677+96 'EB' *
STA 751+00 'EB' - STA 826+68 'EB'

* STA 499+18 - STA 503+94 NO HMA OVERLAY
* STA 528+00 - STA 530+00 NO HMA OVERLAY
* STA 643+50 - STA 646+25 NO HMA OVERLAY

LEGEND

1	BASE PATCHING CONCRETE
2	HMA PAVEMENT - 4-INCH UPPER 1.75-INCH 4 SMA 58-28 V LOWER 2.25-INCH 3 HT 58-28 H
2A	HMA PAVEMENT - 4-INCH UPPER 1.75-INCH 4 HT 58-28 H LOWER 2.25-INCH 3 HT 58-28 H
2B	HMA PAVEMENT - 4.5-INCH SINGLE LAYER 4.50-INCH 3 HT 58-28 H
3	PREPARE FOUNDATION FOR ASPHALTIC SHOULDERS
4	SAFETY EDGE TREATMENT
5A	CONCRETE PAVEMENT 10.5 INCH
6	CONCRETE PAVEMENT REPAIR/REPLACEMENT
7	BASE AGGREGATE DENSE 1 1/4-INCH
8	BASE AGGREGATE DENSE 3/4-INCH
9	SEEDING MIXTURE NO. 30 AND FERTILIZER TYPE A
10	SALVAGED TOPSOIL, SEEDING MIXTURE NO. 30, FERTILIZER TYPE A, AND MULCH
11	POINT REFERRED TO ON CROSS SECTIONS
12	POINT REFERRED TO ON PROFILE
13	PREPARE FOUNDATION FOR CONCRETE PAVEMENT
14	CABLE GUARD SAFENCE TL-3, 4 CABLE
15	ASPHALTIC SHOULDER RUMBLE STRIPS
20	ROUTE AND SEAL

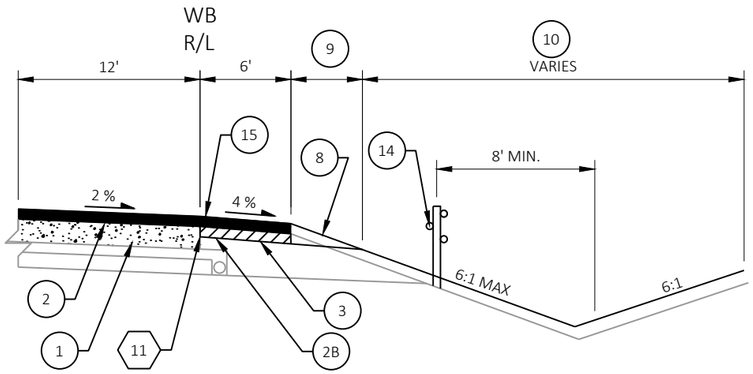

PARTIAL FINISHED SECTION - CABLE GUARD

STA. 500+00 - STA. 544+41'WB'

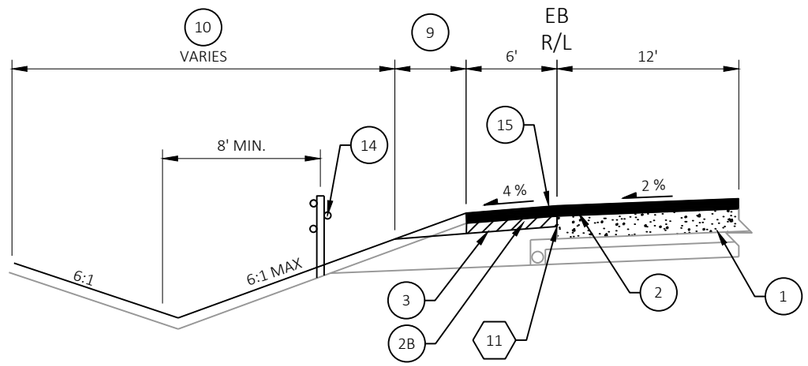

PARTIAL FINISHED SECTION - CABLE GUARD

STA 545+38 'EB' - STA 583+17 'EB'
STA 587+58 'EB' - STA 630+25 'EB'
STA 631+04 'EB' - STA 675+00 'EB'

PROJECT NO: 1204-08-65	HWY: USH 18/151	COUNTY: DANE	TYPICAL SECTION	SHEET 14	E

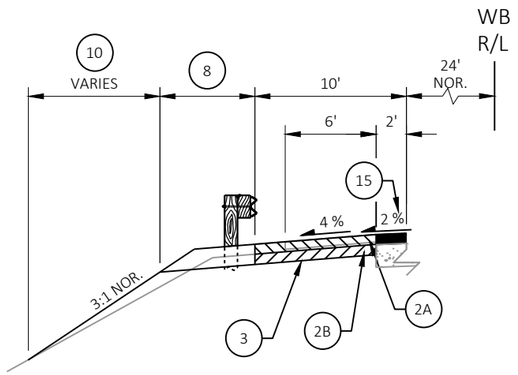

PARTIAL FINISHED SECTION - MGS GUARDRAIL

STA 586+88 'WB' - STA 589+36 'WB', LT
STA 674+00 'WB' - STA 676+57 'WB', LT
STA 693+05 'WB' - STA 695+30 'WB', LT
STA 719+13 'WB' - STA 721+38 'WB', LT
STA 743+57 'WB' - STA 744+50 'WB', LT
STA 746+56 'WB' - STA 748+22 'WB', LT
STA 823+57 'WB' - STA 825+83 'WB', LT

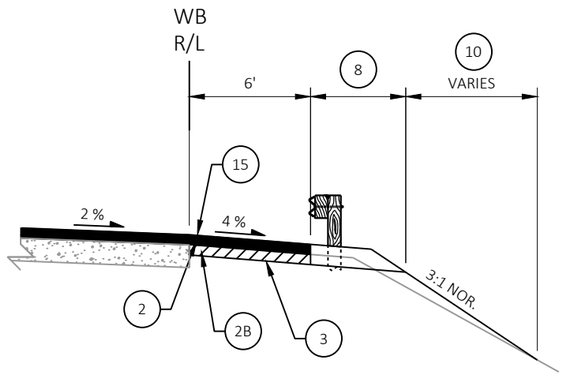

PARTIAL FINISHED SECTION - MGS GUARDRAIL

STA 500+75 'WB' - STA 504+35 'WB', RT
STA 587+04 'WB' - STA 589+29 'WB', RT
STA 683+60 'WB' - STA 689+90 'WB', RT
STA 693+10 'WB' - STA 695+30 'WB', RT
STA 719+17 'WB' - STA 720+91 'WB', RT
STA 746+25 'WB' - STA 750+55 'WB', RT

LEGEND

1	BASE PATCHING CONCRETE
2	HMA PAVEMENT - 4-INCH UPPER 1.75-INCH 4 SMA 58-28 V LOWER 2.25-INCH 3 HT 58-28 H
2A	HMA PAVEMENT - 4-INCH UPPER 1.75-INCH 4 HT 58-28 H LOWER 2.25-INCH 3 HT 58-28 H
2B	HMA PAVEMENT - 4.5-INCH SINGLE LAYER 4.50-INCH 3 HT 58-28 H
3	PREPARE FOUNDATION FOR ASPHALTIC SHOULDERS
4	SAFETY EDGE TREATMENT
5A	CONCRETE PAVEMENT 10.5 INCH
6	CONCRETE PAVEMENT REPAIR/REPLACEMENT
7	BASE AGGREGATE DENSE 1 1/4-INCH
8	BASE AGGREGATE DENSE 3/4-INCH
9	SEEDING MIXTURE NO. 30 AND FERTILIZER TYPE A
10	SALVAGED TOPSOIL, SEEDING MIXTURE NO. 30, FERTILIZER TYPE A, AND MULCH
11	POINT REFERRED TO ON CROSS SECTIONS
12	POINT REFERRED TO ON PROFILE
13	PREPARE FOUNDATION FOR CONCRETE PAVEMENT
14	CABLE GUARD SAFENCE TL-3, 4 CABLE
15	ASPHALTIC SHOULDER RUMBLE STRIPS
20	ROUTE AND SEAL

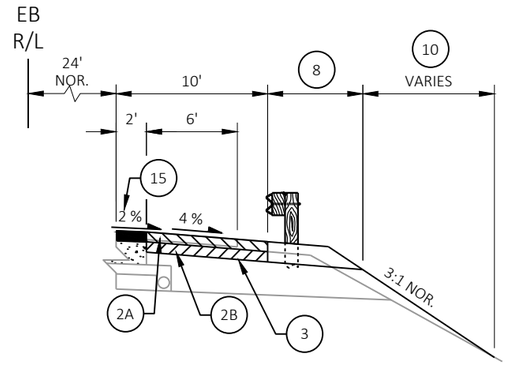

PARTIAL FINISHED SECTION - MGS GUARDRAIL

STA 500+10 - STA 503+75, RT
STA 543+52 'EV' - STA 545+67 'EV', RT
STA 582+25 - STA 584+00, RT
STA 673+75 - STA 675+70, RT
STA 715+73 - STA 717+25, RT
STA 741+43 - STA 744+63, RT
STA 819+55 - STA 824+56, RT

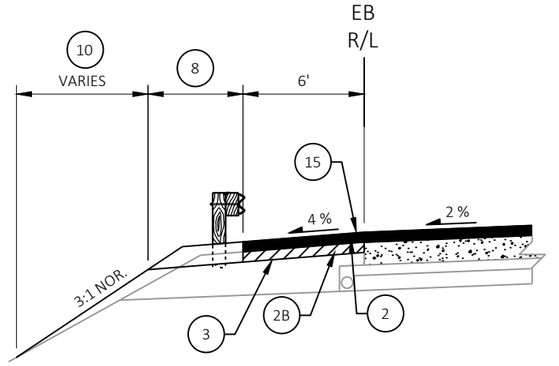

PARTIAL FINISHED SECTION - MGS GUARDRAIL

STA 582+00 - STA 584+22, LT
STA 673+10 - STA 675+46, LT
STA 685+12 - STA 687+83, LT
STA 822+00 - STA 824+85, LT

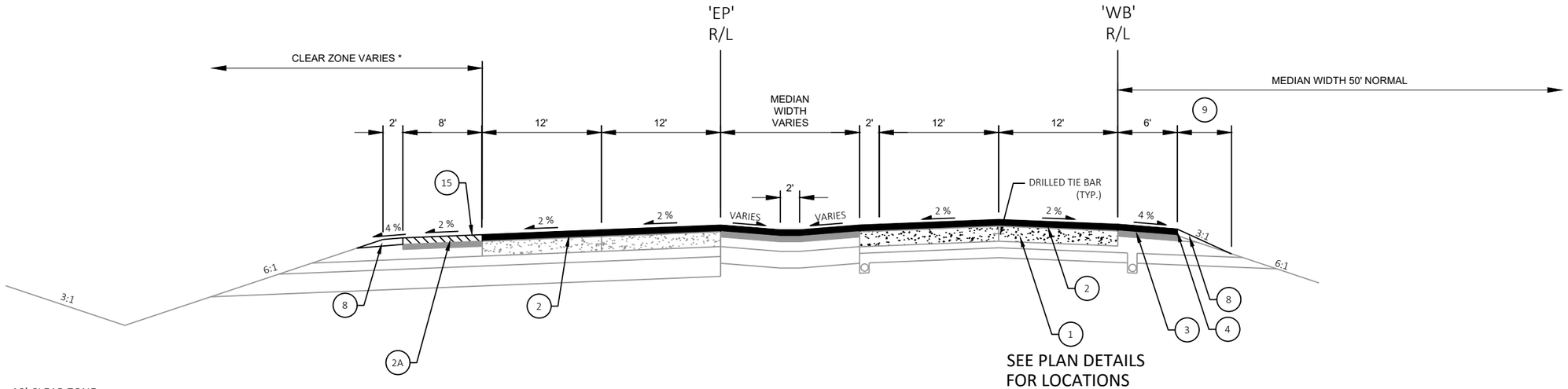

* STA 531+48 - STA 534+48 = 18' CLEAR ZONE
STA 534+48 - STA 542+05 = 22' CLEAR ZONE
STA 542+05 - STA 544+38 = 30' CLEAR ZONE

LEGEND

1	BASE PATCHING CONCRETE
2	HMA PAVEMENT - 4-INCH UPPER 1.75-INCH 4 SMA 58-28 V LOWER 2.25-INCH 3 HT 58-28 H
2A	HMA PAVEMENT - 4-INCH UPPER 1.75-INCH 4 HT 58-28 H LOWER 2.25-INCH 3 HT 58-28 H
2B	HMA PAVEMENT - 4.5-INCH SINGLE LAYER 4.50-INCH 3 HT 58-28 H
3	PREPARE FOUNDATION FOR ASPHALTIC SHOULDERS
4	SAFETY EDGE TREATMENT
5A	CONCRETE PAVEMENT 10.5 INCH
6	CONCRETE PAVEMENT REPAIR/REPLACEMENT
7	BASE AGGREGATE DENSE 1 1/4-INCH
8	BASE AGGREGATE DENSE 3/4-INCH
9	SEEDING MIXTURE NO. 30 AND FERTILIZER TYPE A
10	SALVAGED TOPSOIL, SEEDING MIXTURE NO. 30, FERTILIZER TYPE A, AND MULCH
11	POINT REFERRED TO ON CROSS SECTIONS
12	POINT REFERRED TO ON PROFILE
13	PREPARE FOUNDATION FOR CONCRETE PAVEMENT
14	CABLE GUARD SAFENCE TL-3, 4 CABLE
15	ASPHALTIC SHOULDER RUMBLE STRIPS
20	ROUTE AND SEAL

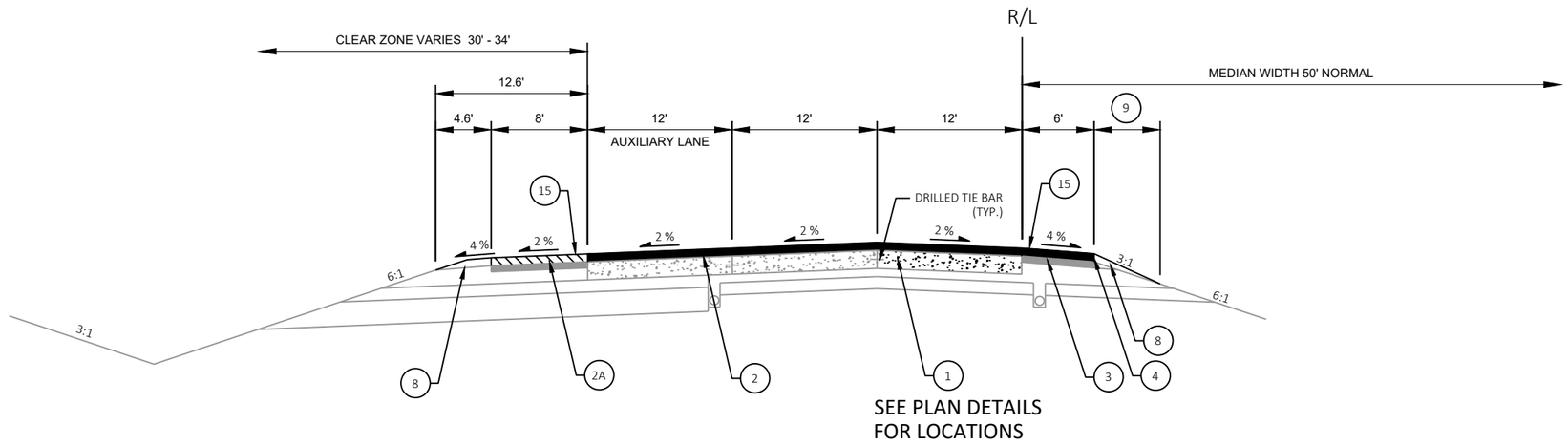

TYPICAL FINISHED SECTION - USH 18/151
STA 546+33 'WB' - STA 573+66 'WB'

PROJECT NO: 1204-08-65	HWY: USH 18/151	COUNTY: DANE	TYPICAL SECTION	SHEET 16	E

FILE NAME : G:\WDOTSW\20007-000 USH 18\CIVIL 3D\SHEETSPLAN\020301-TS_PROP.DWG
LAYOUT NAME - USH 18 (Prop) (3)
PLOT DATE : 7/14/2022 1:26 PM PLOT BY : KL ENGINEERING PLOT NAME : PLOT SCALE : 1:12

2

LEGEND

1	BASE PATCHING CONCRETE
2	HMA PAVEMENT - 4-INCH UPPER 1.75-INCH 4 SMA 58-28 V LOWER 2.25-INCH 3 HT 58-28 H
2A	HMA PAVEMENT - 4-INCH UPPER 1.75-INCH 4 HT 58-28 H LOWER 2.25-INCH 3 HT 58-28 H
2B	HMA PAVEMENT - 4.5-INCH SINGLE LAYER 4.50-INCH 3 HT 58-28 H
3	PREPARE FOUNDATION FOR ASPHALTIC SHOULDERS
4	SAFETY EDGE TREATMENT
5A	CONCRETE PAVEMENT 10.5 INCH
6	CONCRETE PAVEMENT REPAIR/REPLACEMENT
7	BASE AGGREGATE DENSE 1 1/4-INCH
8	BASE AGGREGATE DENSE 3/4-INCH
9	SEEDING MIXTURE NO. 30 AND FERTILIZER TYPE A
10	SALVAGED TOPSOIL, SEEDING MIXTURE NO. 30, FERTILIZER TYPE A, AND MULCH
11	POINT REFERRED TO ON CROSS SECTIONS
12	POINT REFERRED TO ON PROFILE
13	PREPARE FOUNDATION FOR CONCRETE PAVEMENT
14	CABLE GUARD SAFENCE TL-3, 4 CABLE
15	ASPHALTIC SHOULDER RUMBLE STRIPS
20	ROUTE AND SEAL

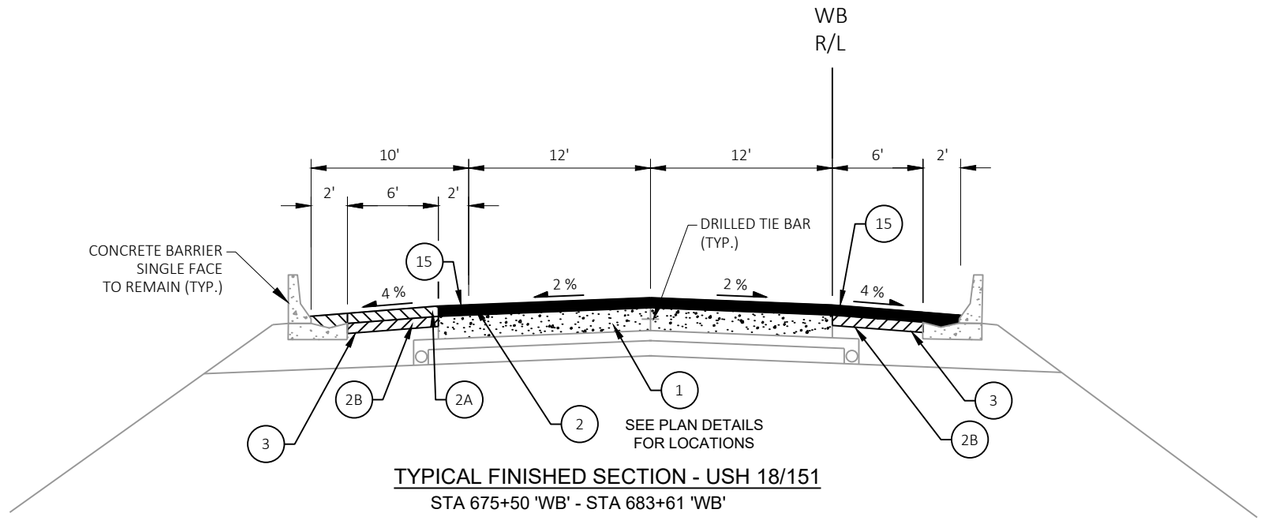

TYPICAL FINISHED SECTION - USH 18/151

STA 675+50 'WB' - STA 683+61 'WB'

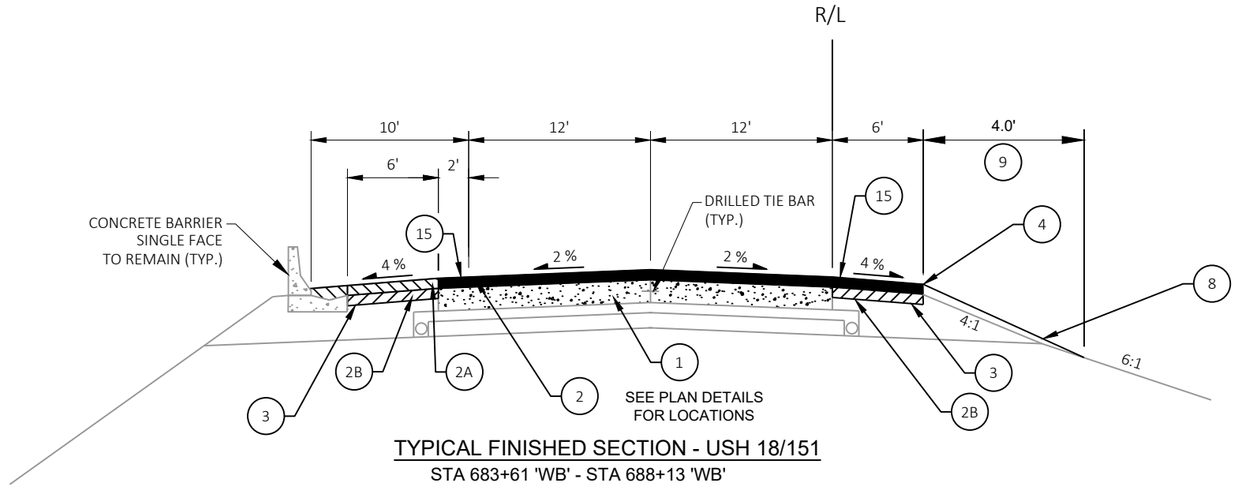

TYPICAL FINISHED SECTION - USH 18/151

STA 683+61 'WB' - STA 688+13 'WB'

2

LEGEND

1	BASE PATCHING CONCRETE
2	HMA PAVEMENT - 4-INCH UPPER 1.75-INCH 4 SMA 58-28 V LOWER 2.25-INCH 3 HT 58-28 H
2A	HMA PAVEMENT - 4-INCH UPPER 1.75-INCH 4 HT 58-28 H LOWER 2.25-INCH 3 HT 58-28 H
2B	HMA PAVEMENT - 4.5-INCH SINGLE LAYER 4.50-INCH 3 HT 58-28 H
3	PREPARE FOUNDATION FOR ASPHALTIC SHOULDERS
4	SAFETY EDGE TREATMENT
5A	CONCRETE PAVEMENT 10.5 INCH
6	CONCRETE PAVEMENT REPAIR/REPLACEMENT
7	BASE AGGREGATE DENSE 1 1/4-INCH
8	BASE AGGREGATE DENSE 3/4-INCH
9	SEEDING MIXTURE NO. 30 AND FERTILIZER TYPE A
10	SALVAGED TOPSOIL, SEEDING MIXTURE NO. 30, FERTILIZER TYPE A, AND MULCH
11	POINT REFERRED TO ON CROSS SECTIONS
12	POINT REFERRED TO ON PROFILE
13	PREPARE FOUNDATION FOR CONCRETE PAVEMENT
14	CABLE GUARD SAFENCE TL-3, 4 CABLE
15	ASPHALTIC SHOULDER RUMBLE STRIPS
20	ROUTE AND SEAL

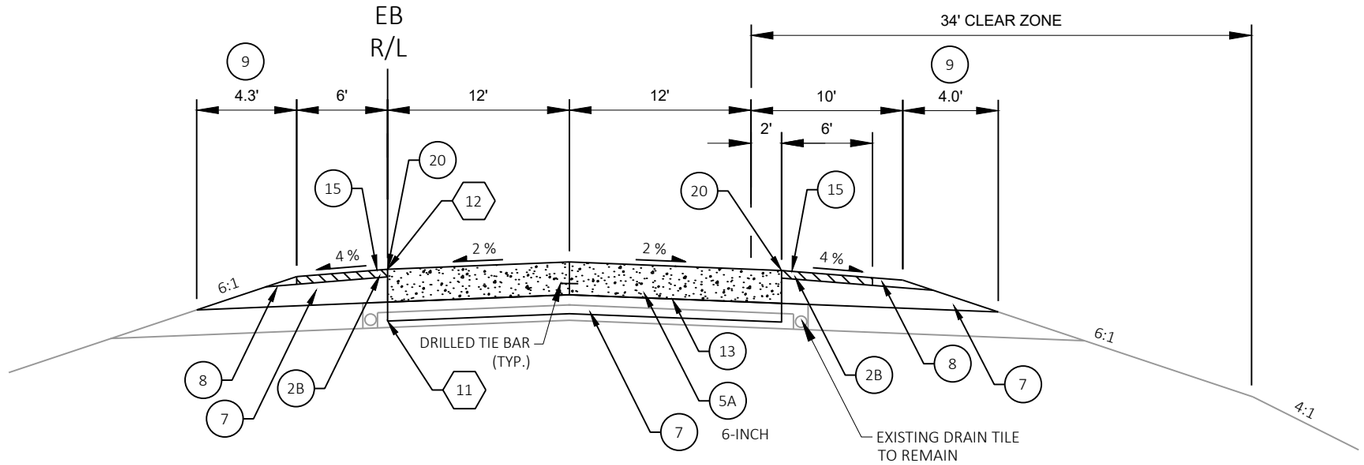

TYPICAL FINISHED SECTION USH 18/151

STA 677+96 'EB' - STA 687+83 'EB'

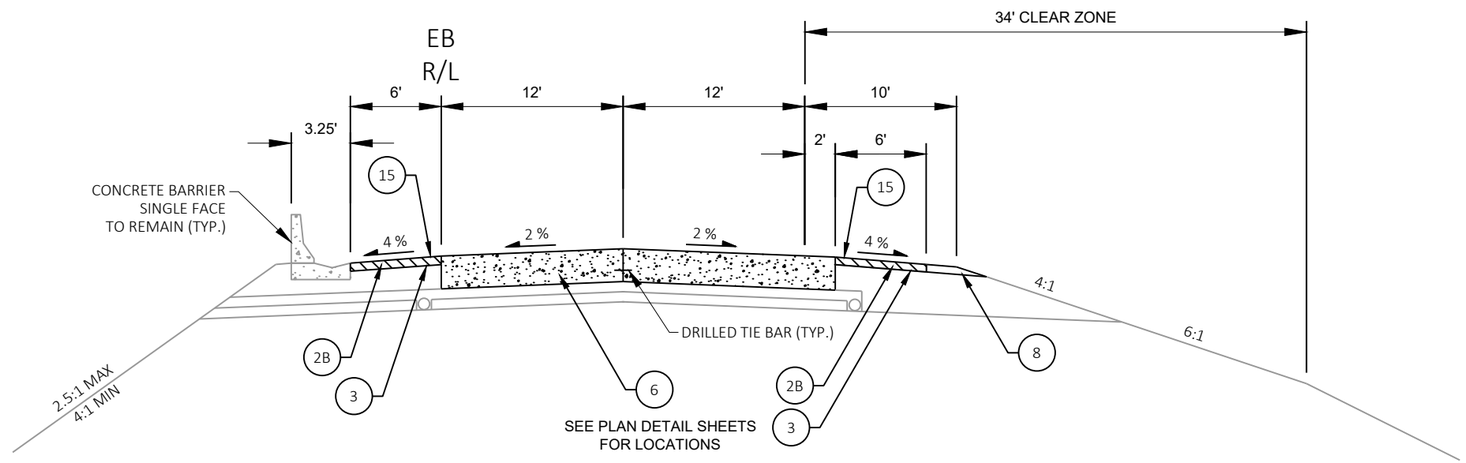

TYPICAL FINISHED SECTION USH 18/151

STA 687+83 'EB' - STA 691+10 'EB'

PROJECT NO: 1204-08-65	HWY: USH 18/151	COUNTY: DANE	TYPICAL SECTION	SHEET 18	E

2

LEGEND

- (1) BASE PATCHING CONCRETE
- (2) HMA PAVEMENT - 4-INCH
UPPER 1.75-INCH 4 SMA 58-28 V
LOWER 2.25-INCH 3 HT 58-28 H
- (2A) HMA PAVEMENT - 4-INCH
UPPER 1.75-INCH 4 HT 58-28 H
LOWER 2.25-INCH 3 HT 58-28 H
- (2B) HMA PAVEMENT - 4.5-INCH
SINGLE LAYER 4.50-INCH 3 HT 58-28 H
- (3) PREPARE FOUNDATION FOR ASPHALTIC SHOULDERS
- (4) SAFETY EDGE TREATMENT
- (5A) CONCRETE PAVEMENT 10.5 INCH
- (6) CONCRETE PAVEMENT REPAIR/REPLACEMENT
- (7) BASE AGGREGATE DENSE 1 1/4-INCH
- (8) BASE AGGREGATE DENSE 3/4-INCH
- (9) SEEDING MIXTURE NO. 30 AND FERTILIZER TYPE A
- (10) SALVAGED TOPSOIL, SEEDING MIXTURE
NO. 30, FERTILIZER TYPE A, AND MULCH
- (11) POINT REFERRED TO ON CROSS SECTIONS
- (12) POINT REFERRED TO ON PROFILE
- (13) PREPARE FOUNDATION FOR CONCRETE PAVEMENT
- (14) CABLE GUARD SAFENCE TL-3, 4 CABLE
- (15) ASPHALTIC SHOULDER RUMBLE STRIPS
- (20) ROUTE AND SEAL

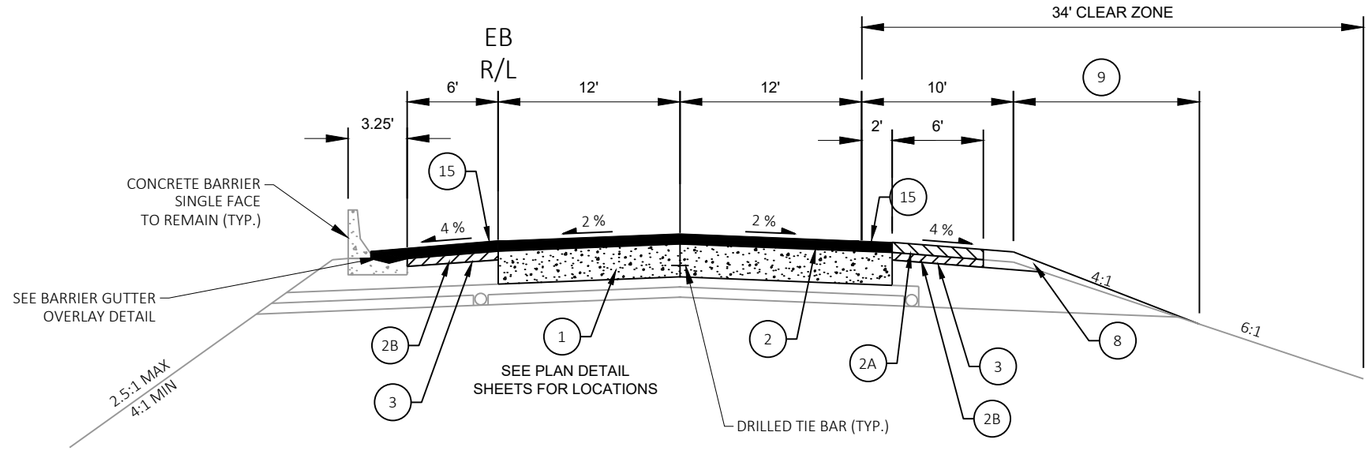

TYPICAL FINISHED SECTION

STA. 691+10 'EB' - STA. 751+00 'EB'

PROJECT NO: 1204-08-65	HWY: USH 18/151	COUNTY: DANE	TYPICAL SECTION	SHEET 19	E

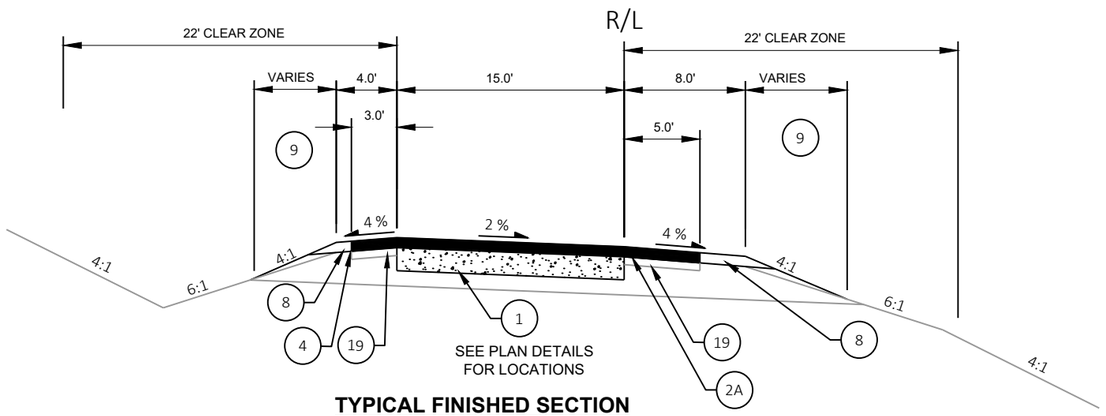

TYPICAL FINISHED SECTION

STA 216+39 'DB' - STA 226+96 'DB'
STA 205+04 'DC' - STA 215+21 'DC'
STA 208+10 'DD' - STA 218+47 'DD'
STA 463+07 'GA' - STA 472+81 'GA'
STA 451+39 'GD' - STA 461+95 'GD'
STA 587+32 'SA' - STA 597+19 'SA'
STA 584+83 'SB' - STA 595+75 'SB'
STA 573+00 'SC' - STA 583+97 'SC'
STA 574+55 'SD' - STA 586+77 'SD'

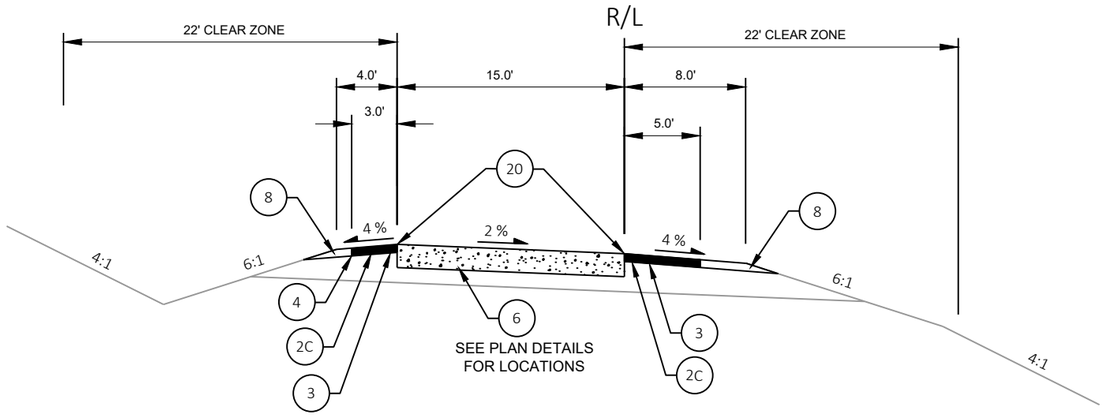

TYPICAL FINISHED SECTION

STA 454+42 'GC' - STA 462+37 'GC'
STA 511+65 'WE' - STA 527+47 'WE'
STA 515+37 'WW' - STA 526+62 'WW'

LEGEND

1	BASE PATCHING CONCRETE
2A	HMA PAVEMENT - 4-INCH UPPER 1.75-INCH 4 HT 58-28 H LOWER 2.25-INCH 4 HT 58-28 H
2C	HMA PAVEMENT - 3.5-INCH UPPER 1.75-INCH 4 HT 58-28 H LOWER 1.75-INCH 4 HT 58-28 H
3	PREPARE FOUNDATION FOR ASPHALTIC SHOULDERS
4	SAFETY EDGE TREATMENT
5B	CONCRETE PAVEMENT 9-INCH
6	CONCRETE PAVEMENT REPAIR/REPLACEMENT
7	BASE AGGREGATE DENSE 1 1/4-INCH
8	BASE AGGREGATE DENSE 3/4-INCH
9	SEEDING MIXTURE NO. 30 AND FERTILIZER TYPE A
10	TOPSOIL, SEEDING MIXTURE NO. 30, FERTILIZER TYPE A, AND MULCH
11	POINT REFERRED TO ON CROSS SECTIONS
12	POINT REFERRED TO ON PROFILE
13	PREPARE FOUNDATION FOR CONCRETE PAVEMENT
14	CABLE GUARD SAFENCE TL-3, 4 CABLE
16	COARSE AGGREGATE SIZE NO. 1
17	PIPE UNDERDRAIN (6-INCH) WITH GEOTEXTILE FABRIC AND AGGREGATE
19	MILL AND RELAY
20	ROUTE AND SEAL

2

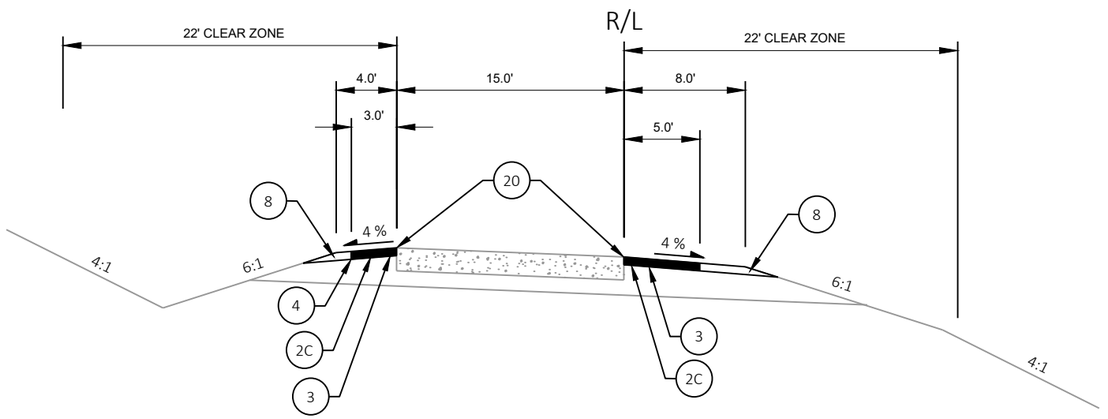

TYPICAL FINISHED SECTION

STA 219+39 'DA' - STA 226+80 'DA'
STA 463+40 'GB' - STA 472+72 'GB'

LEGEND

1	BASE PATCHING CONCRETE
2A	HMA PAVEMENT - 4-INCH UPPER 1.75-INCH 4 HT 58-28 H LOWER 2.25-INCH 4 HT 58-28 H
2C	HMA PAVEMENT - 3.5-INCH UPPER 1.75-INCH 4 HT 58-28 H LOWER 1.75-INCH 4 HT 58-28 H
3	PREPARE FOUNDATION FOR ASPHALTIC SHOULDERS
4	SAFETY EDGE TREATMENT
5B	CONCRETE PAVEMENT 9-INCH
6	CONCRETE PAVEMENT REPAIR/REPLACEMENT
7	BASE AGGREGATE DENSE 1 1/4-INCH
8	BASE AGGREGATE DENSE 3/4-INCH
9	SEEDING MIXTURE NO. 30 AND FERTILIZER TYPE A
10	TOPSOIL, SEEDING MIXTURE NO. 30, FERTILIZER TYPE A, AND MULCH
11	POINT REFERRED TO ON CROSS SECTIONS
12	POINT REFERRED TO ON PROFILE
13	PREPARE FOUNDATION FOR CONCRETE PAVEMENT
14	CABLE GUARD SAFENCE TL-3, 4 CABLE
16	COARSE AGGREGATE SIZE NO. 1
17	PIPE UNDERDRAIN (6-INCH) WITH GEOTEXTILE FABRIC AND AGGREGATE
19	MILL AND RELAY
20	ROUTE AND SEAL

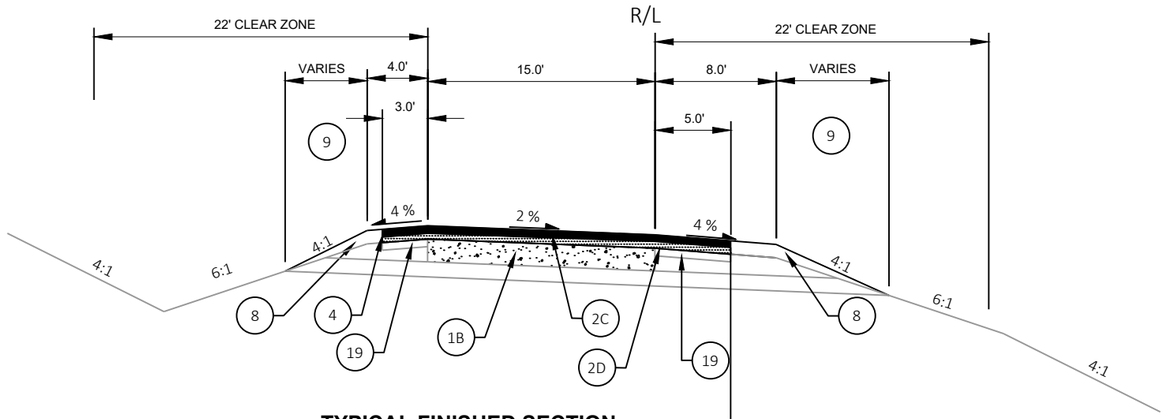

TYPICAL FINISHED SECTION

STA 674+96 'PB' - STA 686+96 'PB'
STA 660+98 'PC' - STA 674+75 'PC'
STA 662+93 'PD' - STA 676+35 'PD'

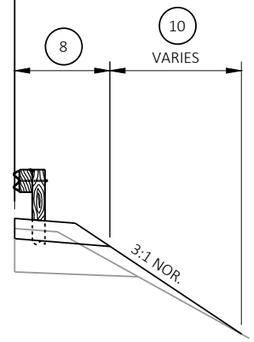

PARTIAL FINISHED SECTION - MGS GUARDRAIL

STA 688+14 'PB' - STA 690+14 'PB'

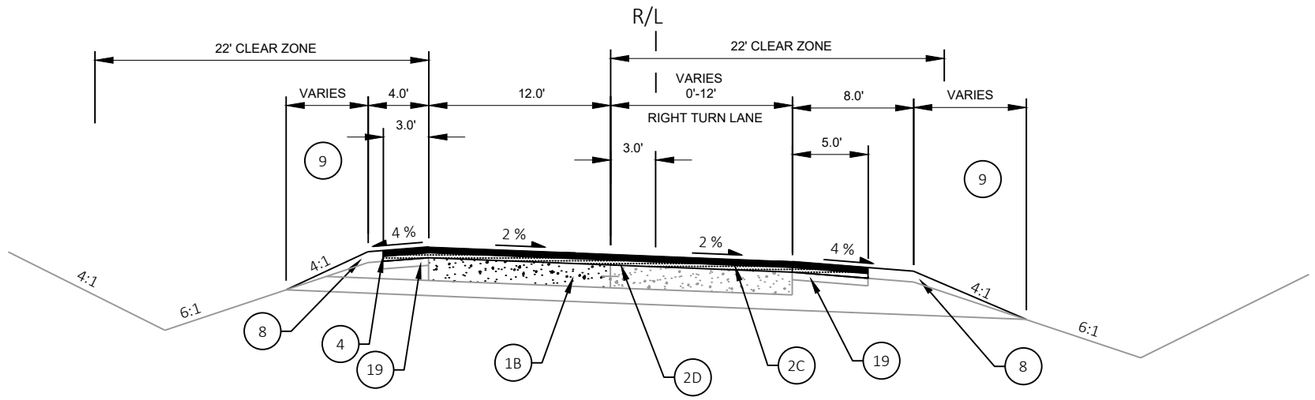

TYPICAL FINISHED SECTION

STA 674+75 'PC' - STA 676+24 'PC'

LEGEND

1	BASE PATCHING CONCRETE
1B	BASE PATCHING CONCRETE AND TRANSVERSE JOINT AND CRACK PLUNGE MILLING AND PATCHING
2C	HMA PAVEMENT - 3.5-INCH UPPER 1.75-INCH 4 HT 58-28 H LOWER 1.75-INCH 4 HT 58-28 H
2D	HMA PAVEMENT INTERLAYER - 1-INCH
3	PREPARE FOUNDATION FOR ASPHALTIC SHOULDERS
4	SAFETY EDGE TREATMENT
5B	CONCRETE PAVEMENT 9-INCH
6	CONCRETE PAVEMENT REPAIR/REPLACEMENT
7	BASE AGGREGATE DENSE 1 1/4-INCH
8	BASE AGGREGATE DENSE 3/4-INCH
9	SEEDING MIXTURE NO. 30 AND FERTILIZER TYPE A
10	TOPSOIL, SEEDING MIXTURE NO. 30, FERTILIZER TYPE A, AND MULCH
11	POINT REFERRED TO ON CROSS SECTIONS
12	POINT REFERRED TO ON PROFILE
13	PREPARE FOUNDATION FOR CONCRETE PAVEMENT
14	CABLE GUARD SAFENCE TL-3, 4 CABLE
19	MILL AND RELAY
20	ROUTE AND SEAL

2

LEGEND

1	BASE PATCHING CONCRETE
2A	HMA PAVEMENT - 4-INCH UPPER 1.75-INCH 4 HT 58-28 H LOWER 2.25-INCH 4 HT 58-28 H
2C	HMA PAVEMENT - 3.5-INCH UPPER 1.75-INCH 4 HT 58-28 H LOWER 1.75-INCH 4 HT 58-28 H
3	PREPARE FOUNDATION FOR ASPHALTIC SHOULDERS
4	SAFETY EDGE TREATMENT
5B	CONCRETE PAVEMENT 9-INCH
6	CONCRETE PAVEMENT REPAIR/REPLACEMENT
7	BASE AGGREGATE DENSE 1 1/4-INCH
8	BASE AGGREGATE DENSE 3/4-INCH
9	SEEDING MIXTURE NO. 30 AND FERTILIZER TYPE A
10	TOPSOIL, SEEDING MIXTURE NO. 30, FERTILIZER TYPE A, AND MULCH
11	POINT REFERRED TO ON CROSS SECTIONS
12	POINT REFERRED TO ON PROFILE
13	PREPARE FOUNDATION FOR CONCRETE PAVEMENT
14	CABLE GUARD SAFENCE TL-3, 4 CABLE
16	COARSE AGGREGATE SIZE NO. 1
17	PIPE UNDERDRAIN (6-INCH) WITH GEOTEXTILE FABRIC AND AGGREGATE
19	MILL AND RELAY
20	ROUTE AND SEAL

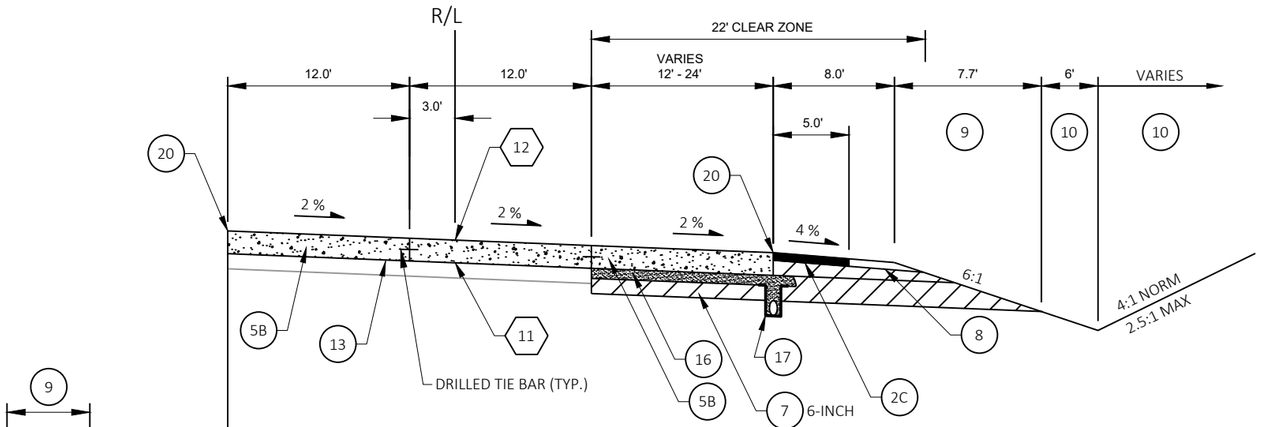

FINISHED TYPICAL SECTION
STA 679+30 'PA' - STA 681+41 'PA'

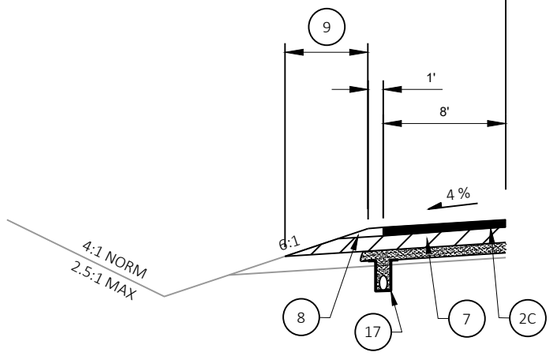

LEFT SHOULDER
RAMP PA
STA 679+30 'PA' - STA 680+79 'PA'

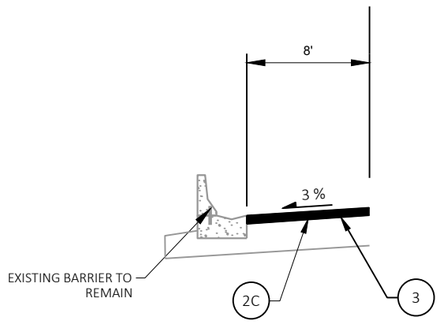

LEFT SHOULDER
RAMP PA
STA 680+79 'PA' - STA 681+41 'PA'

PROJECT NO: 1204-08-65	HWY: USH 18/151	COUNTY: DANE	TYPICAL SECTION	SHEET 23	E

2

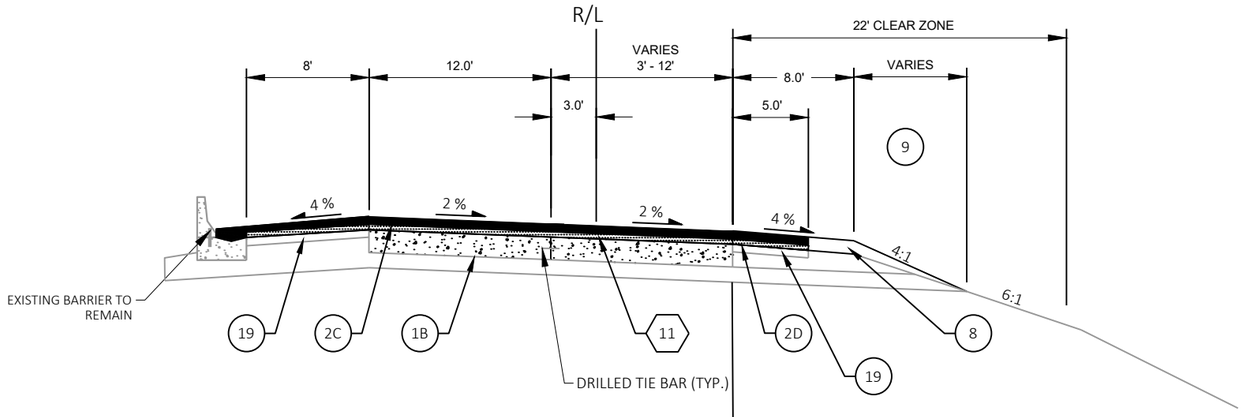

TYPICAL FINISHED SECTION - INTERLAYER

STA 681+41 'PA' - STA 688+57 'PA'

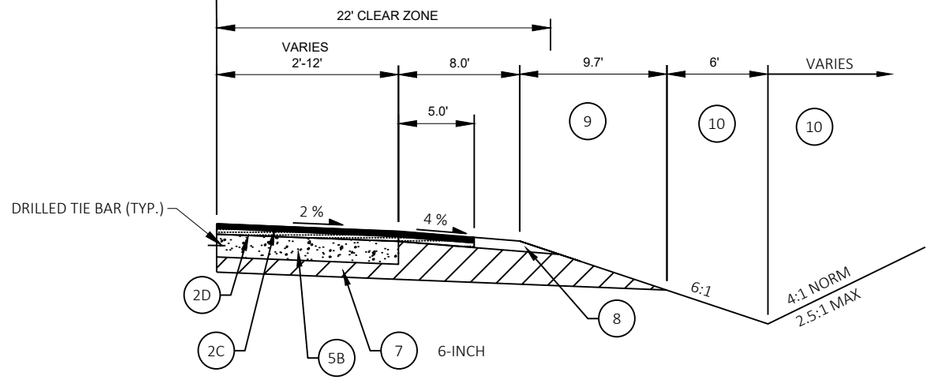

RIGHT TURN LANE

RAMP PA

STA 681+41 'PA' - STA 685+22 'PA'

LEGEND

1	BASE PATCHING CONCRETE
1B	BASE PATCHING CONCRETE AND TRANSVERSE JOINT AND CRACK PLUNGE MILLING AND PATCHING
2C	HMA PAVEMENT - 3.5-INCH UPPER 1.75-INCH 4 HT 58-28 H LOWER 1.75-INCH 4 HT 58-28 H
2D	HMA PAVEMENT INTERLAYER - 1-INCH
3	PREPARE FOUNDATION FOR ASPHALTIC SHOULDERS
4	SAFETY EDGE TREATMENT
5B	CONCRETE PAVEMENT 9-INCH
6	CONCRETE PAVEMENT REPAIR/REPLACEMENT
7	BASE AGGREGATE DENSE 1 1/4-INCH
8	BASE AGGREGATE DENSE 3/4-INCH
9	SEEDING MIXTURE NO. 30 AND FERTILIZER TYPE A
10	TOPSOIL, SEEDING MIXTURE NO. 30, FERTILIZER TYPE A, AND MULCH
11	POINT REFERRED TO ON CROSS SECTIONS
12	POINT REFERRED TO ON PROFILE
13	PREPARE FOUNDATION FOR CONCRETE PAVEMENT
14	CABLE GUARD SAFENCE TL-3, 4 CABLE
19	MILL AND RELAY
20	ROUTE AND SEAL

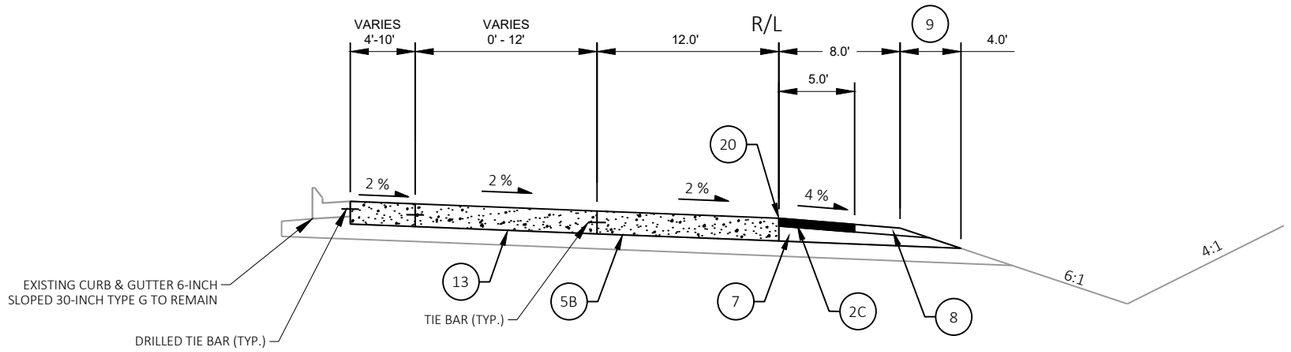

TYPICAL FINISHED SECTION
STA 740+86 'EW' - STA 742+55 'EW'
STA 737+67 'EE' - STA. 739+26 'EE'

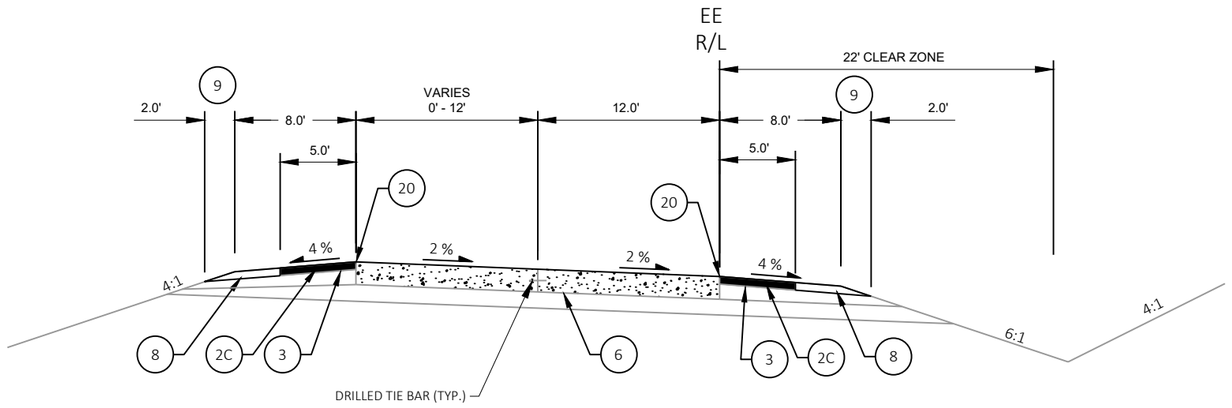

TYPICAL FINISHED SECTION
STA 739+26 - 744+50 'EE'

LEGEND

1	BASE PATCHING CONCRETE
1B	BASE PATCHING ASPHALTIC FOR HMA INTERLAYER
2C	HMA PAVEMENT - 3.5-INCH UPPER 1.75-INCH 4 HT 58-28 H LOWER 1.75-INCH 4 HT 58-28 H
2D	PAVEMENT INTERLAYER - 1-INCH
3	PREPARE FOUNDATION FOR ASPHALTIC SHOULDERS
4	SAFETY EDGE TREATMENT
5B	CONCRETE PAVEMENT 9-INCH
6	CONCRETE PAVEMENT REPAIR/REPLACEMENT
7	BASE AGGREGATE DENSE 1 1/4-INCH
8	BASE AGGREGATE DENSE 3/4-INCH
9	SEEDING MIXTURE NO. 30 AND FERTILIZER TYPE A
10	TOPSOIL, SEEDING MIXTURE NO. 30, FERTILIZER TYPE A, AND MULCH
11	POINT REFERRED TO ON CROSS SECTIONS
12	POINT REFERRED TO ON PROFILE
13	PREPARE FOUNDATION FOR CONCRETE PAVEMENT
14	CABLE GUARD SAFENCE TL-3, 4 CABLE
19	MILL AND RELAY
20	ROUTE AND SEAL

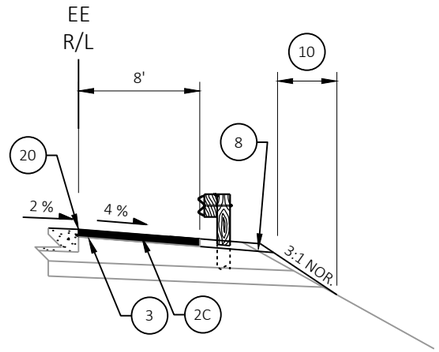

PARTIAL FINISHED SECTION
STA 741+75 - 742+67 'EE'
STA 757+47 'EE' - STA 763+00 'EE'

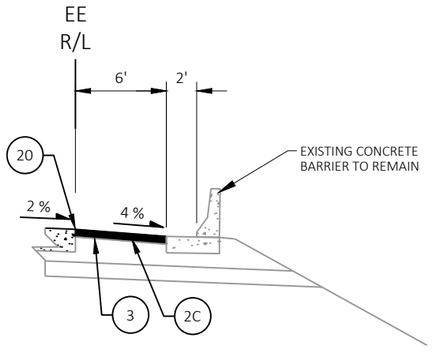

PARTIAL FINISHED SECTION
STA 742+67 - 744+15 'EE'

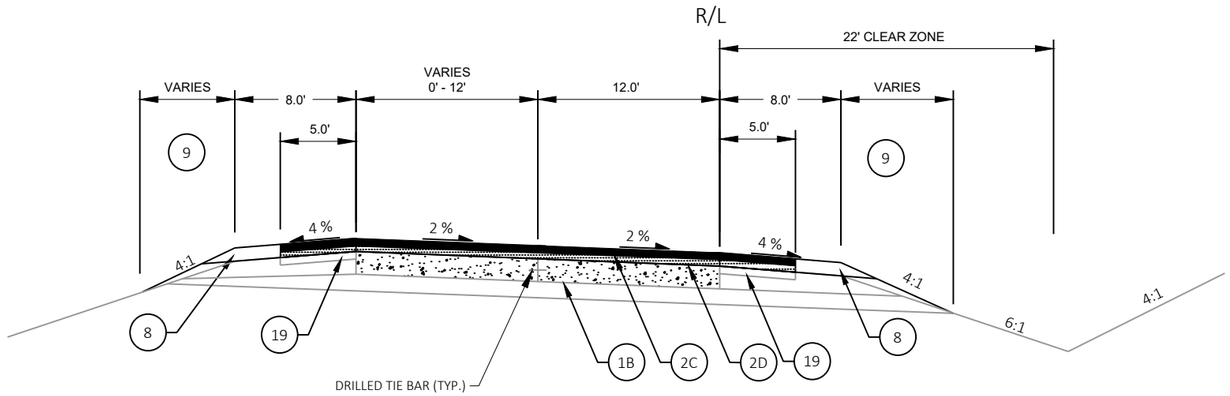

TYPICAL FINISHED SECTION - INTERLAYER

STA 742+00 - 758+60 'EW'
STA 737+67 - 761+24 'EE'

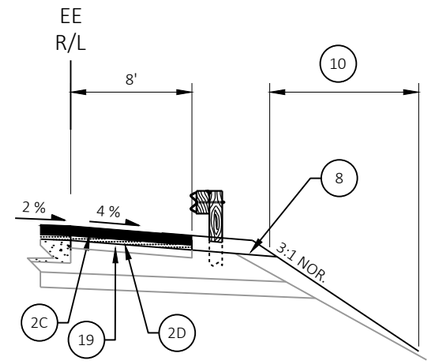

PARTIAL FINISHED SECTION

STA 756+94 - 763+00 'EE'

LEGEND

1	BASE PATCHING CONCRETE
1B	BASE PATCHING CONCRETE AND TRANSVERSE JOINT AND CRACK PLUNGE MILLING AND PATCHING
2C	HMA PAVEMENT - 3.5-INCH UPPER 1.75-INCH 4 HT 58-28 H LOWER 1.75-INCH 4 HT 58-28 H
2D	HMA PAVEMENT INTERLAYER - 1-INCH
3	PREPARE FOUNDATION FOR ASPHALTIC SHOULDERS
4	SAFETY EDGE TREATMENT
5B	CONCRETE PAVEMENT 9-INCH
6	CONCRETE PAVEMENT REPAIR/REPLACEMENT
7	BASE AGGREGATE DENSE 1 1/4-INCH
8	BASE AGGREGATE DENSE 3/4-INCH
9	SEEDING MIXTURE NO. 30 AND FERTILIZER TYPE A
10	TOPSOIL, SEEDING MIXTURE NO. 30, FERTILIZER TYPE A, AND MULCH
11	POINT REFERRED TO ON CROSS SECTIONS
12	POINT REFERRED TO ON PROFILE
13	PREPARE FOUNDATION FOR CONCRETE PAVEMENT
14	CABLE GUARD SAFENCE TL-3, 4 CABLE
19	MILL AND RELAY
20	ROUTE AND SEAL

2

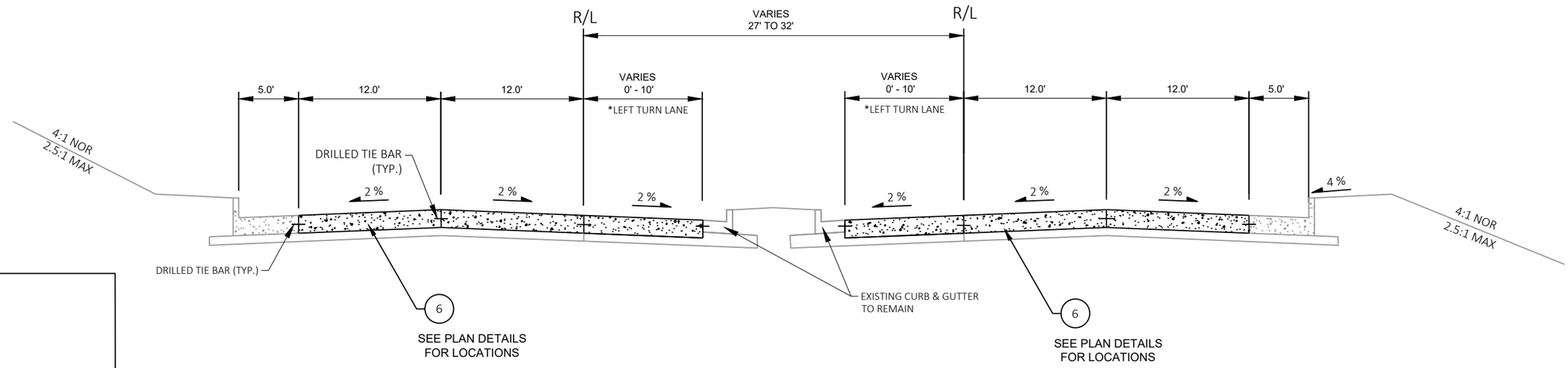

LEGEND

- (1) BASE PATCHING CONCRETE
- (1A) BASE PATCHING
- (2C) HMA PAVEMENT - 3.5-INCH
  UPPER 1.75-INCH 4 HT 58-28 H
  LOWER 1.75-INCH 4 HT 58-28 H
- (2D) HMA PAVEMENT INTERLAYER - 1-INCH
- (3) PREPARE FOUNDATION FOR ASPHALTIC SHOULDERS
- (4) SAFETY EDGE TREATMENT
- (5B) CONCRETE PAVEMENT 9-INCH
- (6) CONCRETE PAVEMENT REPAIR/REPLACEMENT
- (7) BASE AGGREGATE DENSE 1 1/4-INCH
- (8) BASE AGGREGATE DENSE 3/4-INCH
- (9) SEEDING MIXTURE NO. 30 AND FERTILIZER TYPE A
- (10) TOPSOIL, SEEDING MIXTURE NO. 30,
  FERTILIZER TYPE A, AND MULCH
- (11) POINT REFERRED TO ON CROSS SECTIONS
- (12) POINT REFERRED TO ON PROFILE
- (13) PREPARE FOUNDATION FOR CONCRETE PAVEMENT
- (14) CABLE GUARD SAFENCE TL-3, 4 CABLE
- (18) CONCRETE CURB & GUTTER INTEGRAL 30-INCH TYPE A

PROPOSED TYPICAL SECTION

CTH PB

STA 144+19 'PBS' - STA 155+26 'PBS'
*STA 146+90 'PBN' - STA 149+25 'PBN'
*STA 150+39 'PBS' - STA 152+70 'PBS'

STH 69

STA 45+00 'PS' - STA 55+00 'PS'
*STA 47+49 'PS' - STA 49+97 'PS'
*STA 49+74 'PS' - STA 52+20 'PS'

2

LEGEND

- (1) BASE PATCHING CONCRETE
- (2) HMA PAVEMENT - 4-INCH
UPPER 1.75-INCH 4 SMA 58-28 V
LOWER 2.25-INCH 3 HT 58-28 H
- (2A) HMA PAVEMENT - 4-INCH
UPPER 1.75-INCH 4 HT 58-28 H
LOWER 2.25-INCH 3 HT 58-28 H
- (2B) HMA PAVEMENT - 4.5-INCH
SINGLE LAYER 4.50-INCH 3 HT 58-28 H
- (3) PREPARE FOUNDATION FOR ASPHALTIC SHOULDERS
- (4) SAFETY EDGE TREATMENT
- (5A) CONCRETE PAVEMENT 10.5 INCH
- (6) CONCRETE PAVEMENT REPAIR/REPLACEMENT
- (7) BASE AGGREGATE DENSE 1 1/4-INCH
- (8) BASE AGGREGATE DENSE 3/4-INCH
- (9) SEEDING MIXTURE NO. 30 AND FERTILIZER TYPE A
- (10) SALVAGED TOPSOIL, SEEDING MIXTURE
NO. 30, FERTILIZER TYPE A, AND MULCH
- (11) POINT REFERRED TO ON CROSS SECTIONS
- (12) POINT REFERRED TO ON PROFILE
- (13) PREPARE FOUNDATION FOR CONCRETE PAVEMENT
- (14) CABLE GUARD SAFENCE TL-3, 4 CABLE
- (15) ASPHALTIC SHOULDER RUMBLE STRIPS

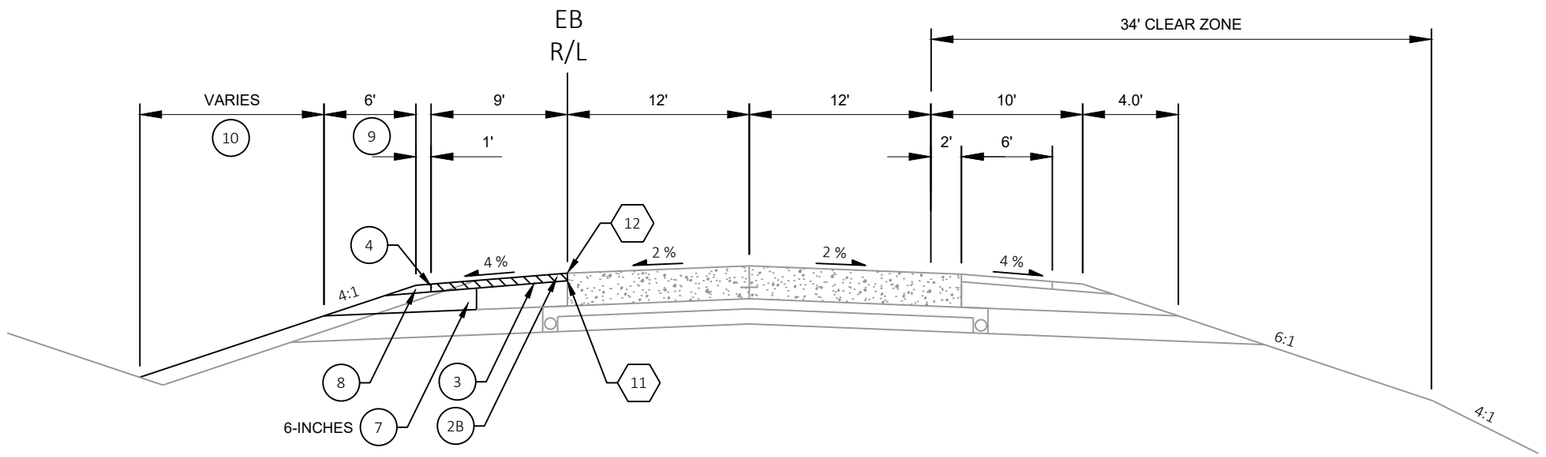

NOTE: TEMPORARY PAVEMENT TO BE CONSTRUCTED CONCURRENT WITH NEW CONCRETE IN STAGE 2, PHASE 2.

TEMPORARY WIDENING FINISHED SECTION USH 18/151

STA 677+96 'EB' - STA 687+79 'EB'

PROJECT NO: 1204-08-65	HWY: USH 18/151	COUNTY: DANE	TYPICAL SECTION	SHEET 28	E

FILE NAME : G:\WDOTSW\20007-000 USH 18\CIVIL 3D\SHEETSPLAN\020301-TS_PROP.DWG
LAYOUT NAME - USH 18 (Temp)
PLOT DATE : 7/7/2022 9:57 AM
PLOT BY : KL ENGINEERING
PLOT NAME :
PLOT SCALE : 1 IN:10 FT

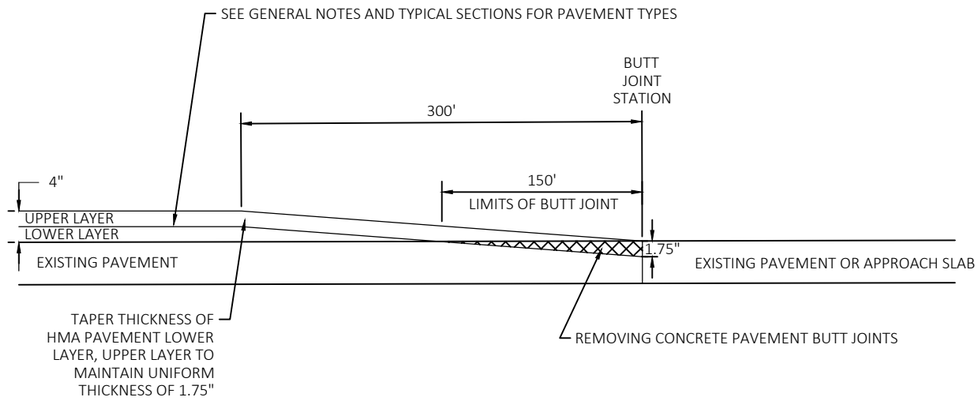

MAINLINE BUTT JOINT DETAIL

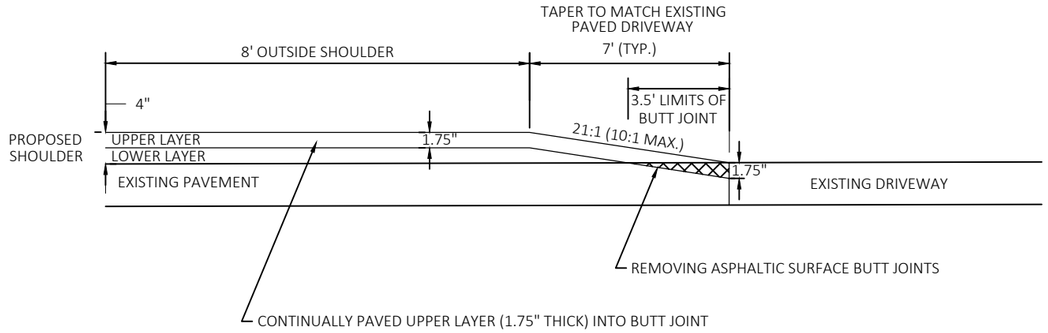

PAVED DRIVEWAY BUTT JOINT DETAIL

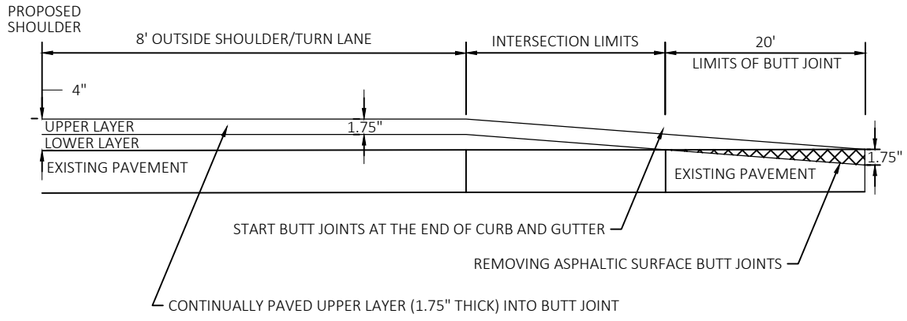

INTERSECTION BUTT JOINT DETAIL

2

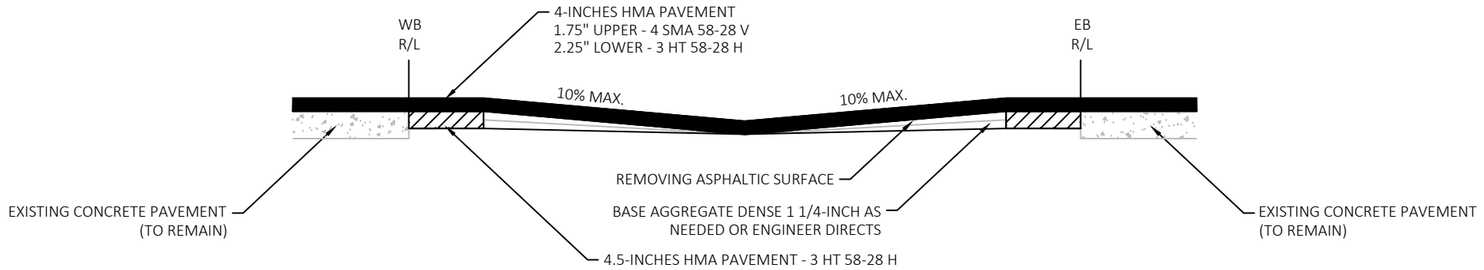

SECTION A-A

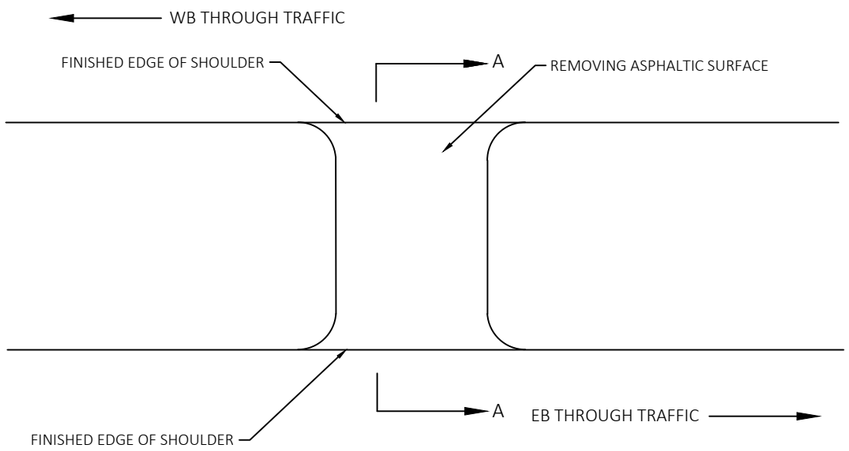

PLAN VIEW

PAVING DETAIL FOR MAINTENANCE CROSSOVER

STA 545+00 'EB'
STA 630+60 'EB'
STA 797+95 'EB'

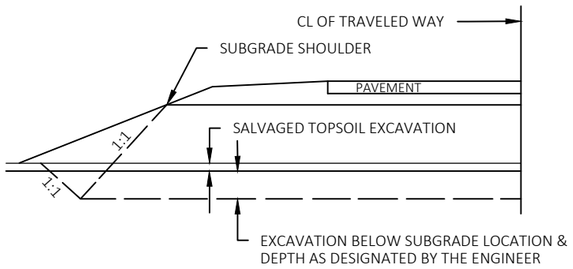

DETAIL FOR EXCAVATION BELOW SUBGRADE

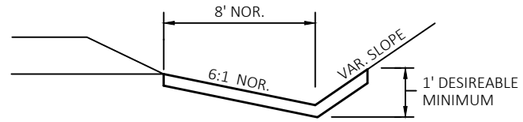

EROSION MAT DETAIL FOR DITCHES

SEE PLAN DETAILS FOR LOCATIONS

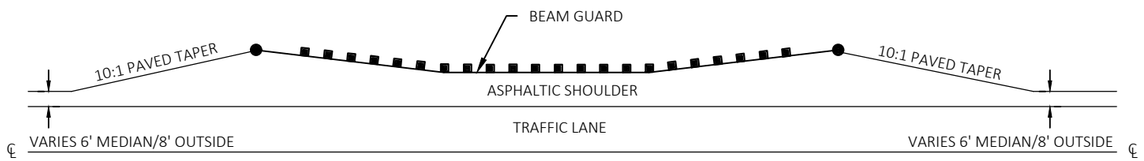

DETAIL FOR ASPHALTIC SHOULDER AT BEAM GUARD

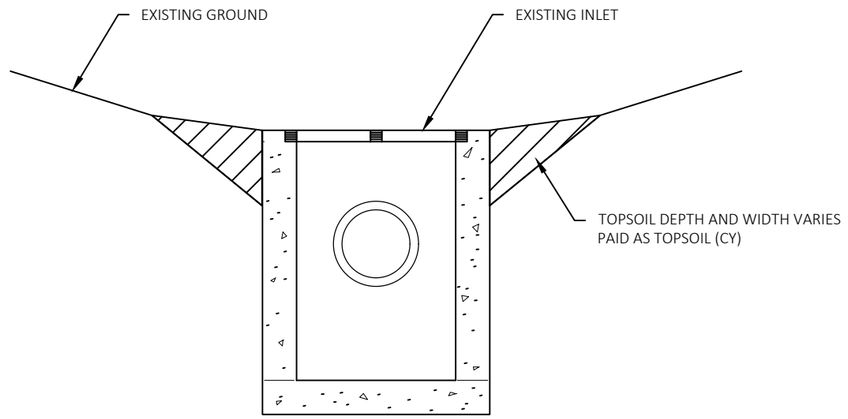

BACKFILL AROUND INLET

STA 325+00EB
STA 367+73EB
STA 708+40WB

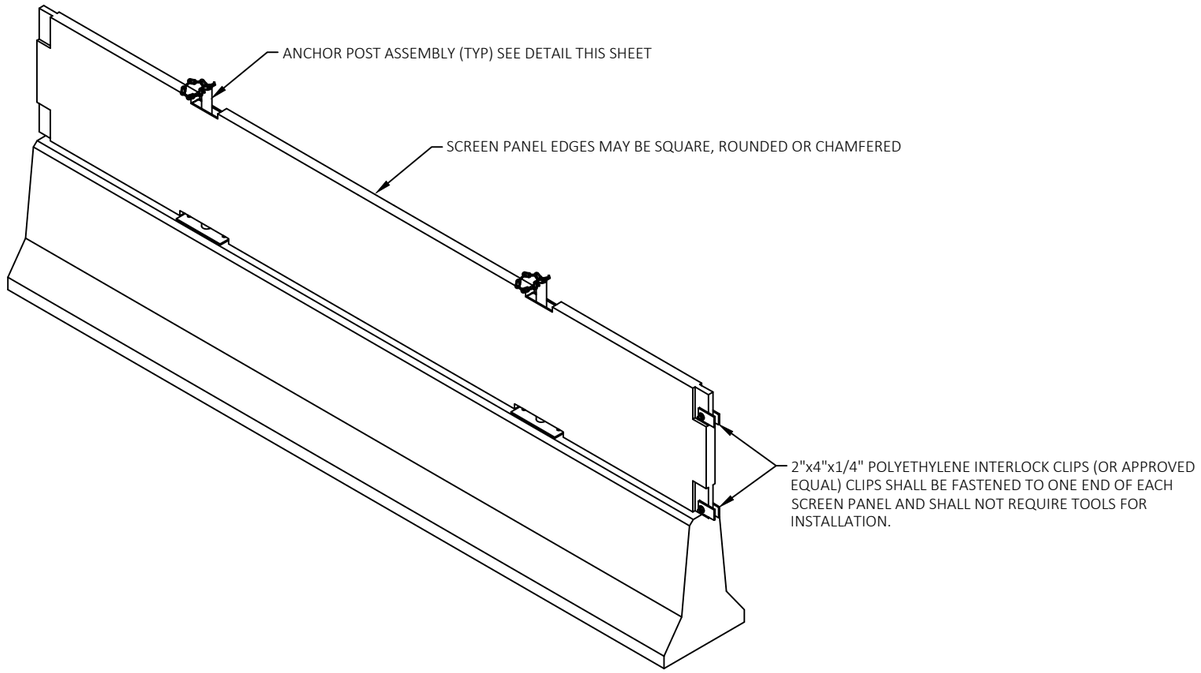

NOTE:

THE DESIGN OF THIS ITEM, WHICH INCLUDES ALL ASPECTS SHOWN, SHALL BE DESIGNED SO THAT THE SCREEN IS CAPABLE OF REMAINING IN PLACE FROM TRAFFIC GUSTS, WIND GUSTS, AND OTHER OUTDOOR ELEMENTS THAT MAY MOVE OR DISPLACE THE SCREEN.

VENT HOLES THROUGH THE SCREEN PANEL ARE PERMITTED BUT NOT REQUIRED. IF VENT HOLES ARE USED, THE HOLES SHALL NOT EXCEED 3-INCHES IN DIAMETER AND SHALL BE LIMITED TO 24 OR LESS PER PANEL.

SCREEN PANELS SHALL HAVE A NON-REFLECTIVE MAT OR FLAT GRAY FINISH OR PAINTED SURFACE.

SHOP DRAWINGS WITH A FULL SIZE SAMPLE SHALL BE PROVIDED TO THE CMT (CORRIDOR MANAGEMENT TEAM) FOR APPROVAL PRIOR TO USE.

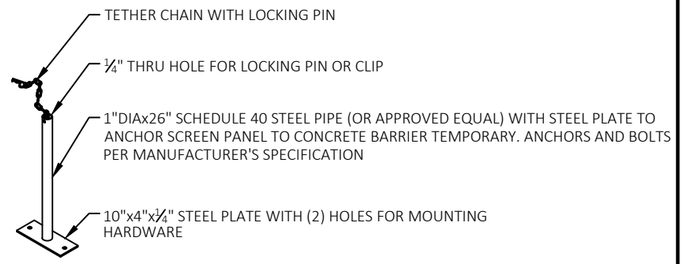

ANCHOR POST ASSEMBLY

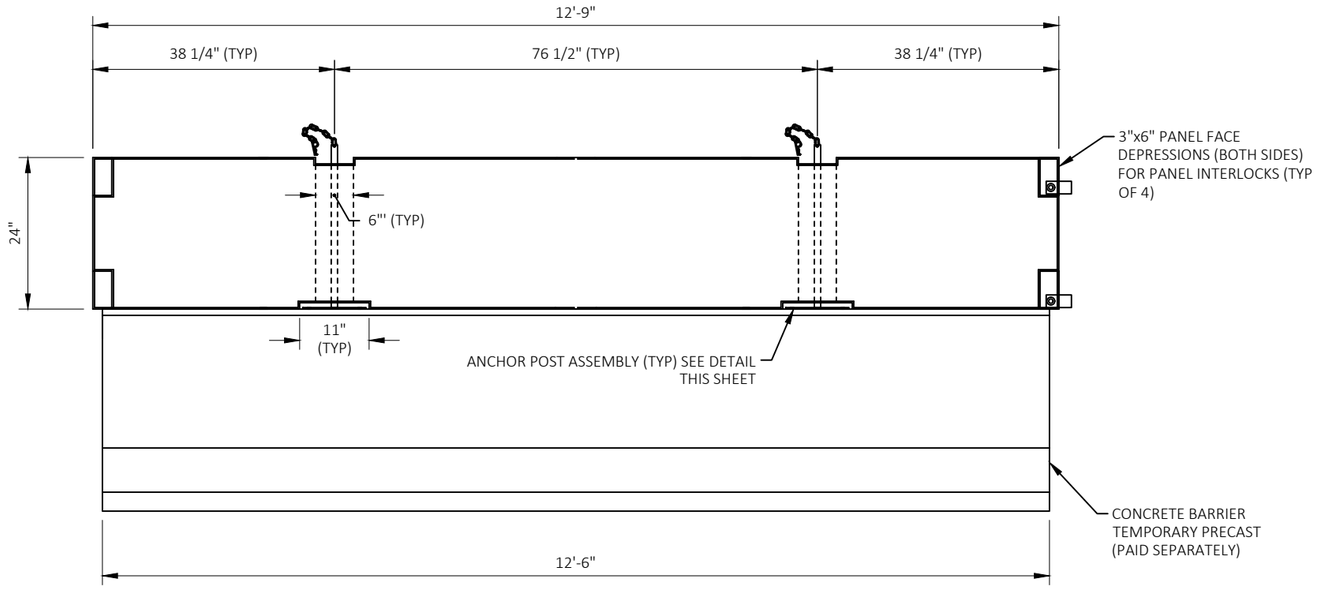

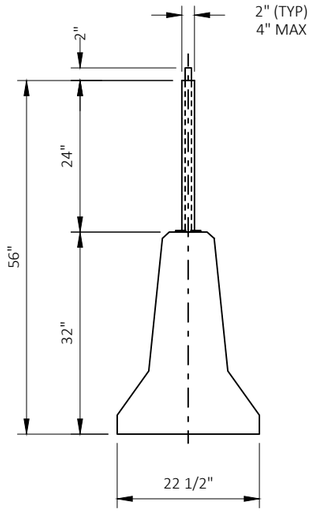

TRAFFIC CONTROL GAWK SCREEN

(SEE TRAFFIC CONTROL PLANS FOR LOCATIONS)

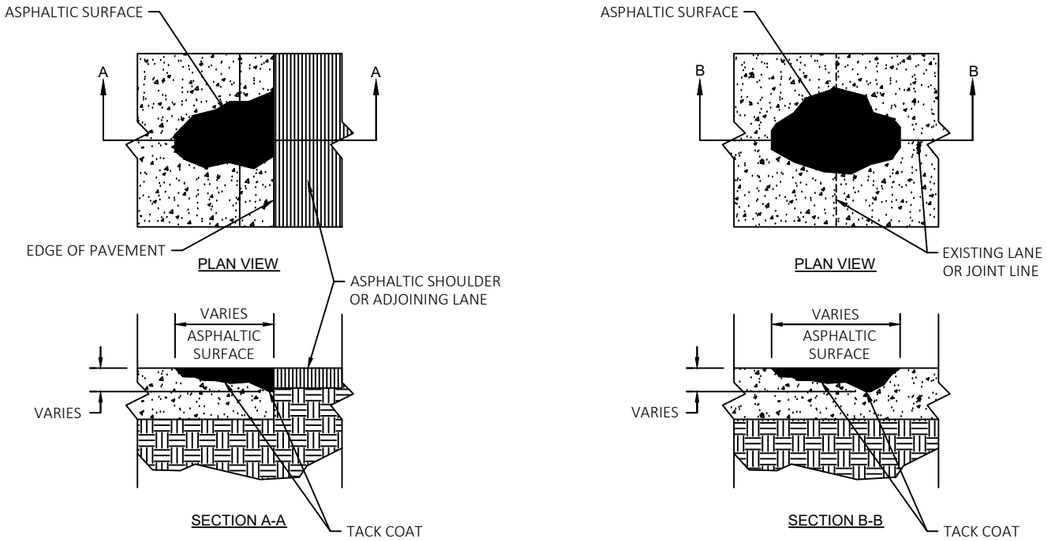

NOTES:
1. REPAIR THE NARROW JOINT/CRACK DETERIORATION IN THE CONCRETE PAVEMENT WITH THE SPECIAL PROVISION ITEM CONCRETE JOINT AND CRACK CLEANING.
2. THIS ITEM INCLUDES THE REMOVAL OF LOOSE CONCRETE, ASPHALT AND/OR CONTAMINANTS FROM THE JOINT OR CRACK.
3. BLOW OUT REPAIR AREA WITH 80 P.S.I MINIMUM COMPRESS AIR. THE AREA IS THEN CLEANED, TACK COAT APPLIED AND FILLED WITH ASPHALT. ASPHALTIC SURFACE AND TACK COAT ARE INCIDENTAL TO CONCRETE JOINT AND CRACK CLEANING.
4. THESE ARE PARTIAL DEPTH REPAIRS.

CONCRETE JOINT AND CRACK CLEANING

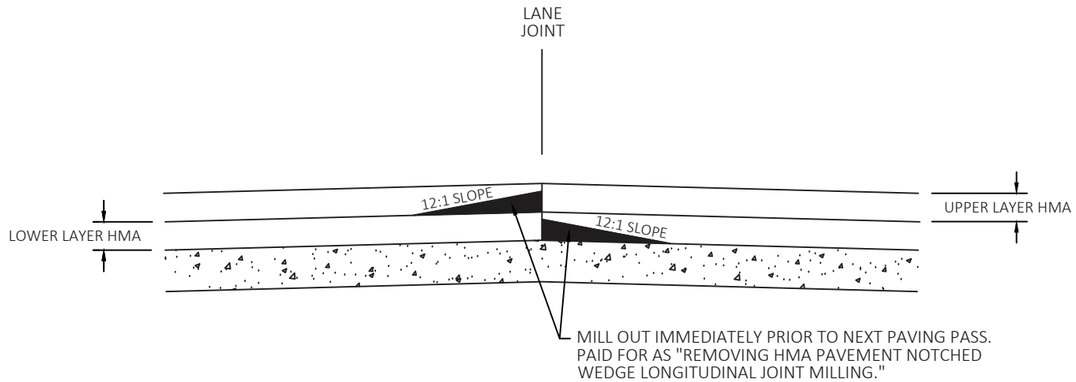

TYPICAL PAVEMENT CROSS SECTIONS OF TAPERED & NOTCHED LONGITUDINAL JOINTS

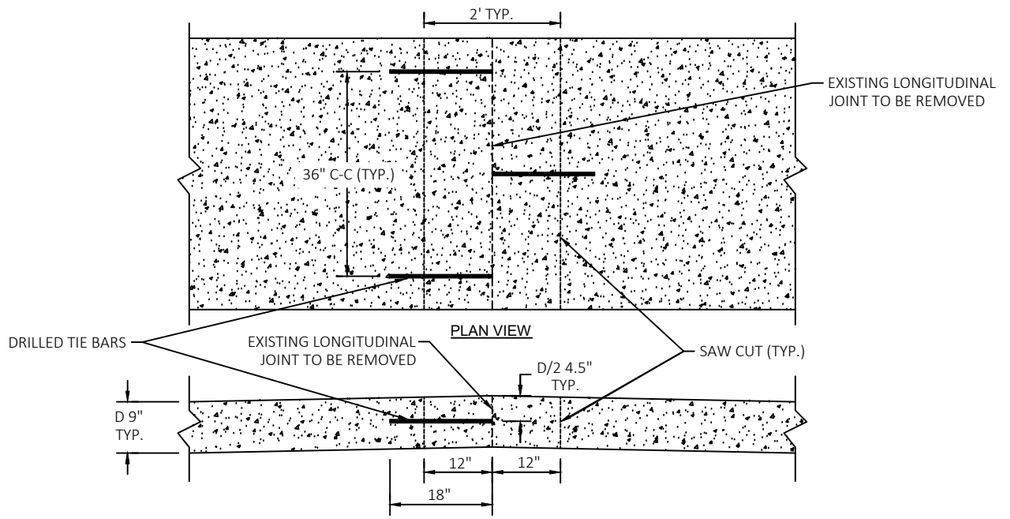

NOTES:
1. REPAIR LONGITUDINAL JOINT DISTRESS THAT IS WIDE AND APPROACHING FULL DEPTH WITH THE SPECIAL PROVISION ITEM CONCRETE PAVEMENT REPAIR LONGITUDINAL JOINT.
2. THIS REPAIR IS 2' WIDE AND STRADDLES THE LONGITUDINAL JOINT BETWEEN DRIVING LANES. THESE ARE FULL DEPTH REPAIRS THAT INCLUDE SAWING CONCRETE, DRILLED TIE BARS AND ARE FILLED WITH CONCRETE. SAWING CONCRETE, DRILLED TIE BARS, AND CONCRETE USED TO FILL JOINT ARE INCIDENTAL TO CONCRETE PAVEMENT REPAIR LONGITUDINAL JOINT.
3. TIE BAR MAY BE DRILLED AT AN ANGLE, THEN BENT PERPENDICULAR TO JOINT AFTER INSTALLATION.

CONCRETE PAVEMENT REPAIR LONGITUDINAL JOINT

2

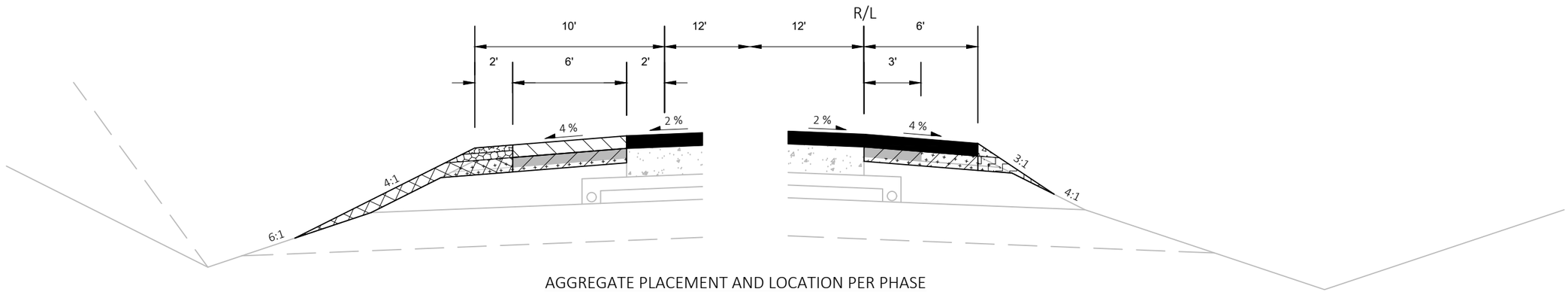

AGGREGATE PLACEMENT AND LOCATION PER PHASE

LEGEND

- EXISTING ASPHALT PAVEMENT
- SALVAGEABLE BASE AGGREGATE
- PHASE 1 BASE AGGREGATE
- PHASE 2 BASE AGGREGATE
- PHASE 3 BASE AGGREGATE
- PHASE 4 BASE AGGREGATE
- PHASE 5 BASE AGGREGATE

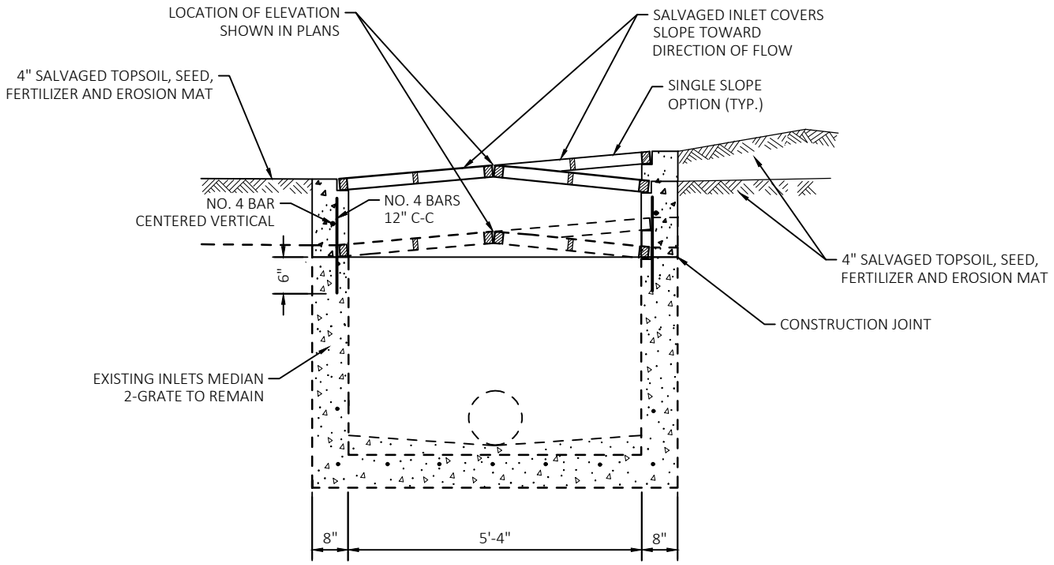

RECONSTRUCTING INLETS

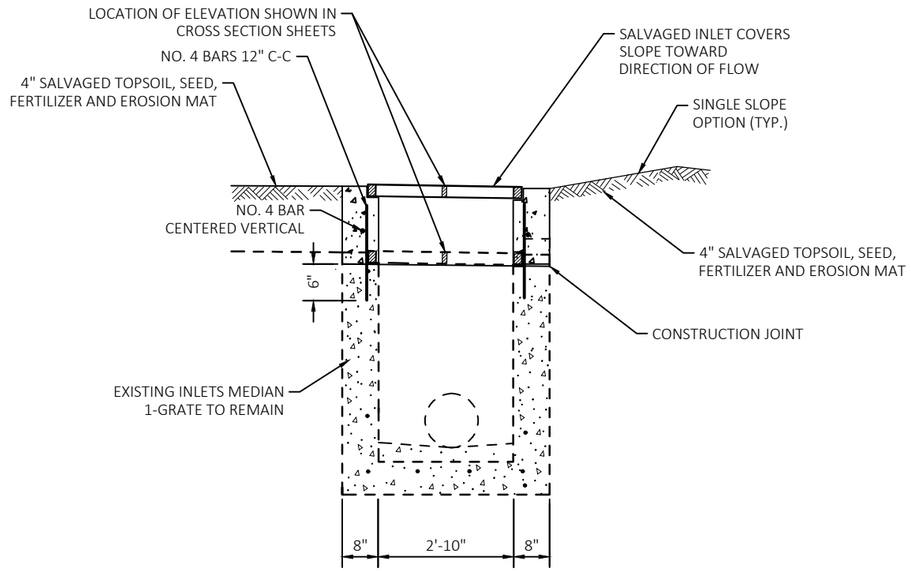

RECONSTRUCTING INLETS

GENERAL NOTES

DETAILS OF CONSTRUCTION, MATERIALS AND WORKMANSHIP NOT SHOWN ON THIS DRAWING SHALL CONFORM TO THE PERTINENT REQUIREMENTS OF THE STANDARD SPECIFICATIONS AND THE APPLICABLE SPECIAL PROVISIONS.

ALL BAR STEEL REINFORCEMENT SHALL BE EMBEDDED 2 INCHES CLEAR UNLESS OTHERWISE SHOWN OR NOTED.

SEE S.D.D. "INLETS MEDIAN 1 & 2 GRATE" FOR MORE INFORMATION

2

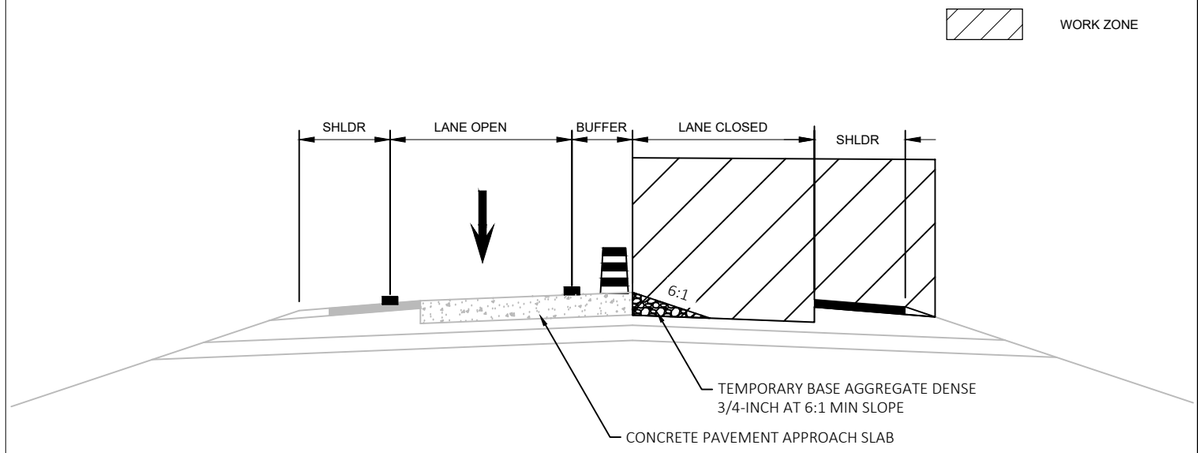

TEMPORARY SAFETY WEDGE AT CONCRETE PAVEMENT APPROACH SLABS

SUBSEQUENT TO THE REMOVAL OF AN EXISTING CONCRETE PAVEMENT APPROACH SLAB, THE CONTRACTOR SHALL PROVIDE A TEMPORARY SAFETY WEDGE (BASE AGGREGATE DENSE 3/4-INCH) ALONG THE LENGTH OF THE LANE FROM THE TOP OF THE ADJOINING APPROACH SLAB DOWN TO THE EXISTING BASE. THE GRAVEL SLOPE SHALL NOT BE STEEPER THAN A 6:1.

PROVIDING, PLACING, AND REMOVING THE TEMPORARY AGGREGATE (BASE AGGREGATE DENSE 3/4-INCH) SHALL BE INCIDENTAL TO THE CONCRETE PAVEMENT APPROACH SLAB BID ITEM.

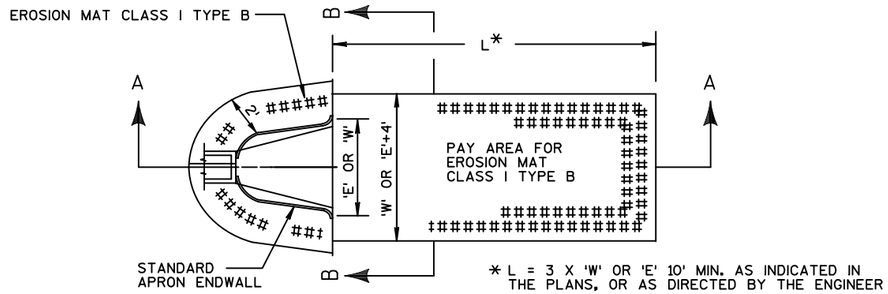

* L = 3 X 'W' OR 'E' 10' MIN. AS INDICATED IN THE PLANS, OR AS DIRECTED BY THE ENGINEER

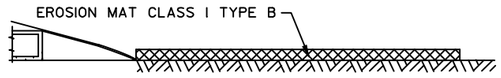

SECTION A-A

NOTES: REFER TO S.D.D. FOR 'E' OR 'W' DIMENSIONS

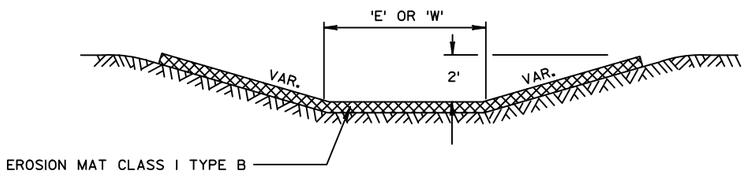

SECTION B-B

EROSION MAT TREATMENT AT PIPE ENDWALL DETAIL

SEE EROSION CONTROL PLAN FOR LOCATIONS

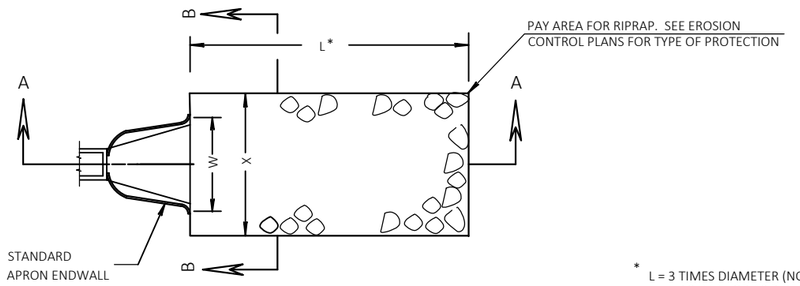

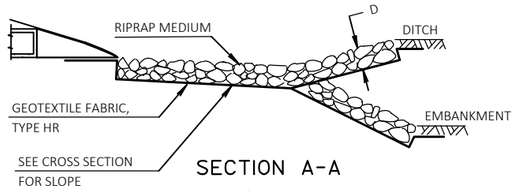

SECTION A-A

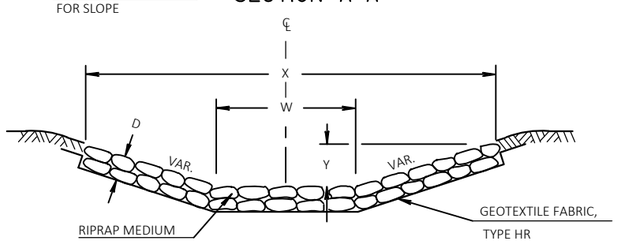

SECTION B-B

* L = 3 TIMES DIAMETER (NOR.) OR 10' MIN. OR AS DIRECTED BY THE ENGINEER

D = 18" FOR RIPRAP MEDIUM

X = 'W+2' FOR TYPICAL CULVERT DISCHARGE INTO DITCH
'W+5' FOR CULVERT DISCHARGE DOWN EMBANKMENT SLOPE

Y = 0" FOR TYPICAL CULVERT DISCHARGE INTO DITCH
12" FOR CULVERT DISCHARGE DOWN EMBANKMENT SLOPE

RIPRAP TREATMENT AT PIPE ENDWALL

SEE EROSION CONTROL PLAN FOR LOCATIONS

2

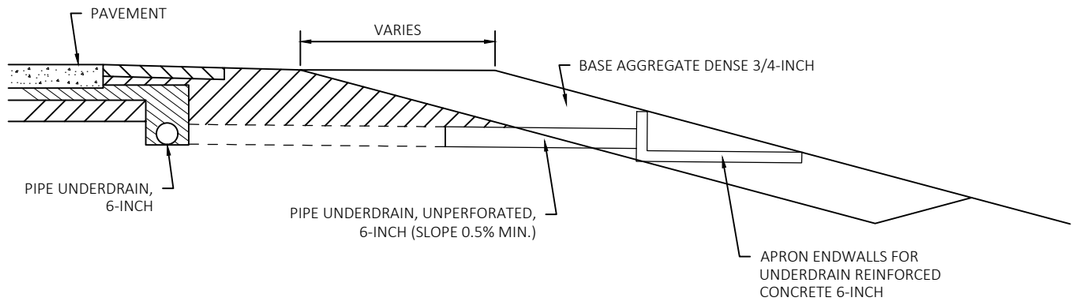

EXTENDING PIPE UNDERDRAIN OUTFALL DETAIL

SEE PLANS FOR LOCATIONS

RUNOFF COEFFICIENT TABLE

	HYDROLOGIC SOIL GROUP											
	A			B			C			D		
	SLOPE RANGE (PERCENT)			SLOPE RANGE (PERCENT)			SLOPE RANGE (PERCENT)			SLOPE RANGE (PERCENT)		
LAND USE:	0-2	2-6	6 & OVER	0-2	2-6	6 & OVER	0-2	2-6	6 & OVER	0-2	2-6	6 & OVER
ROW CROPS	.08 .22	.16 .30	.22 .38	.12 .26	.20 .34	.27 .44	.15 .30	.24 .37	.33 .50	.19 .34	.28 .41	.38 .56
MEDIAN STRIP-TURF	.19 .24	.20 .26	.24 .30	.19 .25	.22 .28	.26 .33	.20 .26	.23 .30	.30 .37	.20 .27	.25 .32	.30 .40
SIDE SLOPE-TURF			.25 .32			.27 .34			.28 .36			.30 .38
PAVEMENT:												
ASPHALT	.70 - .95											
CONCRETE	.80 - .95											
BRICK	.70 - .80											
DRIVES, WALKS	.75 - .85											
ROOFS	.75 - .95											
GRAVEL ROADS, SHOULDERS	.40 - .60											

TOTAL PROJECT AREA = 646 ACRES
TOTAL AREA EXPECTED TO BE DISTURBED BY CONSTRUCTION ACTIVITIES = 55.2 ACRES

2

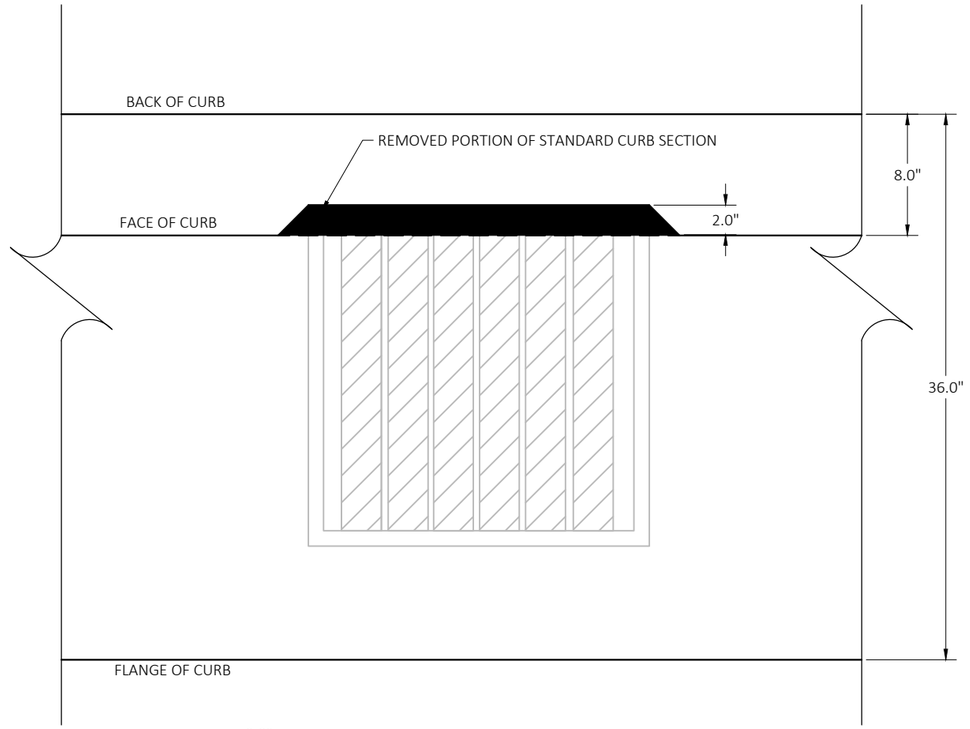

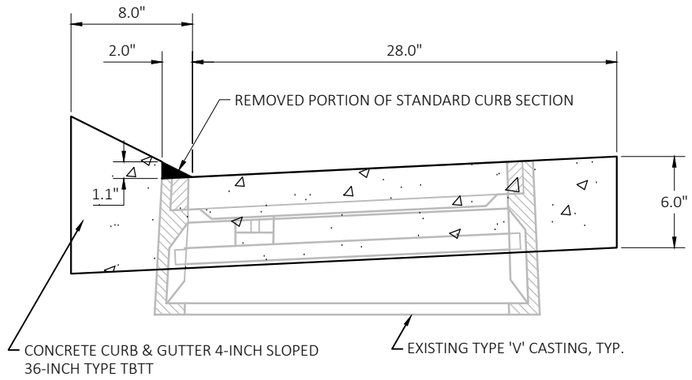

TYPE TBTT CURB AND GUTTER AT TYPE V CASTING DETAIL

NOTES

THE MODIFICATION TO THE STANDARD SECTION SHALL BE INCIDENTAL TO THE CONCRETE CURB & GUTTER 4-INCH SLOPED 36-INCH TYPE TBTT ITEM.

SEE S.D.D.'S FOR DETAILS NOT SHOWN.

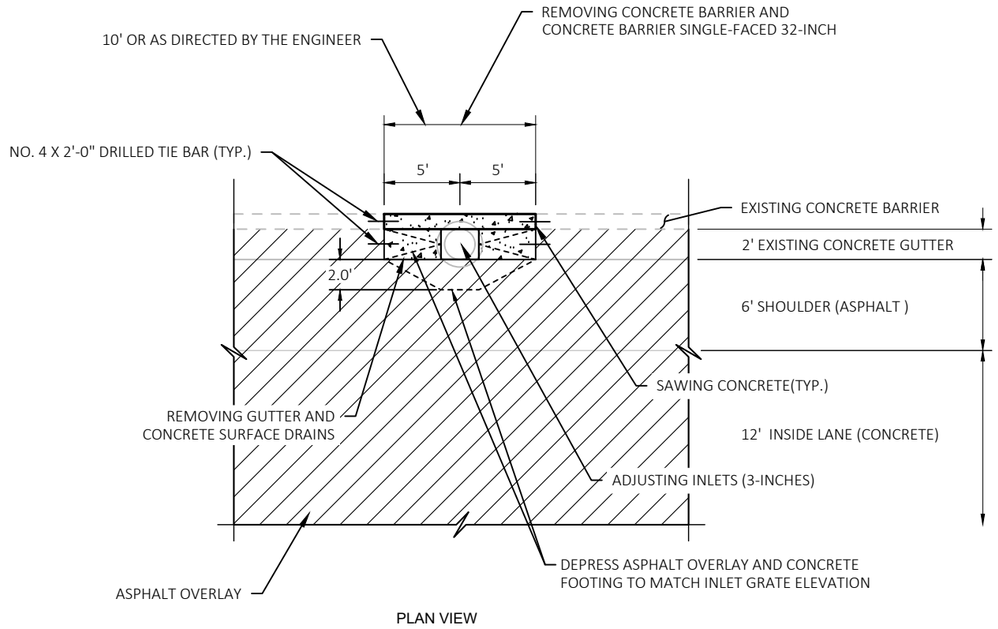

PLAN VIEW

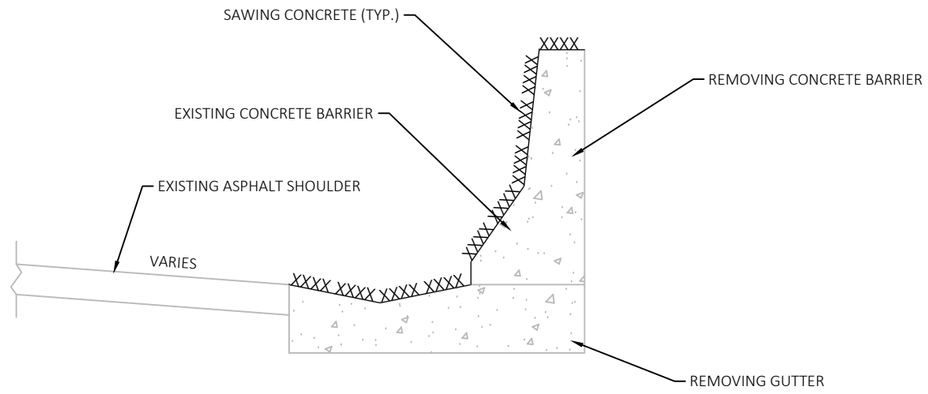

EXISTING SECTION VIEW

ADJUSTING INLETS ADJACENT TO CONCRETE BARRIER

STA 680+23 WB, LT	STA 715+29 EB, LT
STA 682+70 WB, LT	STA 717+21 EB, LT
STA 684+96 WB, LT	STA 717+30 EB, LT
STA 687+87 WB, LT	STA 717+40 EB, LT
STA 700+40 EB, LT	STA 722+41 EB, LT
STA 702+85 EB, LT	STA 722+85 EB, LT
STA 705+31 EB, LT	STA 722+96 EB, LT
STA 708+42 EB, LT	STA 729+30 EB, LT
STA 710+32 EB, LT	
STA 712+80 EB, LT	

NOTES

TOP OF CONCRETE BARRIER TO MATCH TOP OF EXISTING CONCRETE BARRIER.

TYPE AND SIZE OF CONCRETE BARRIER TO MATCH EXISTING.

COST FOR INLET ADJUSTMENT TO BE PAID UNDER THE ADJUSTING INLET BID ITEM.

COST FOR BARRIER REMOVAL, GUTTER REMOVAL, SAW CUTS FOR BARRIER OR GUTTER REMOVAL, CONCRETE BARRIER, AND DRILLED TIE BARS TO BE PAID UNDER THE RESPECTIVE BID ITEMS.

SEE BARRIER GUTTER OVERLAY DETAIL FOR ADDITIONAL INFORMATION

SEE S.D.D. CONCRETE BARRIER, SINGLE FACED (WITH ANCHORAGE) FOR DETAILS NOT SHOWN.

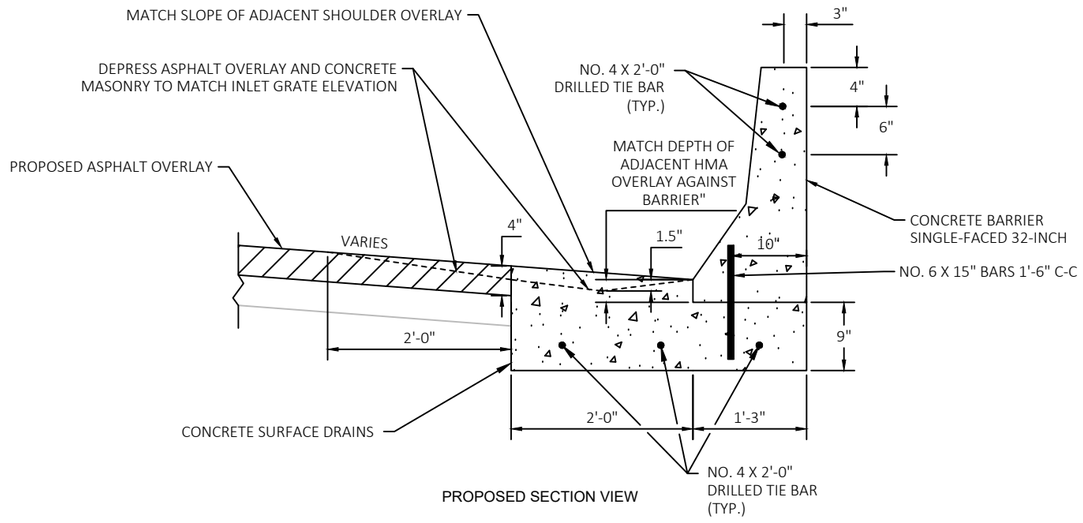

PROPOSED SECTION VIEW

NOTE: MAXIMUM HEIGHT OF HMA OVERLAY AGAINST BARRIER SHALL BE 3-INCHES.

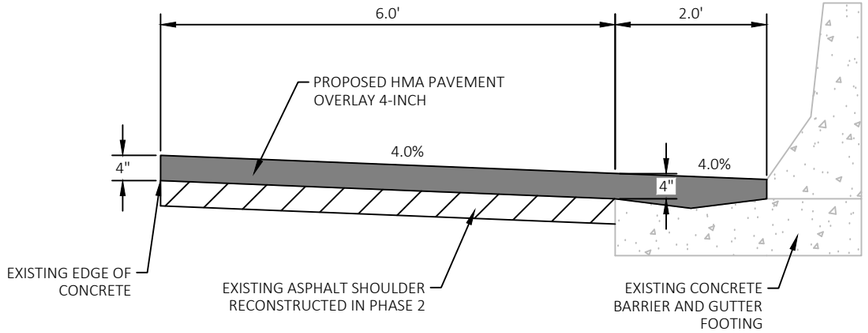

NORMAL CROWN SECTION

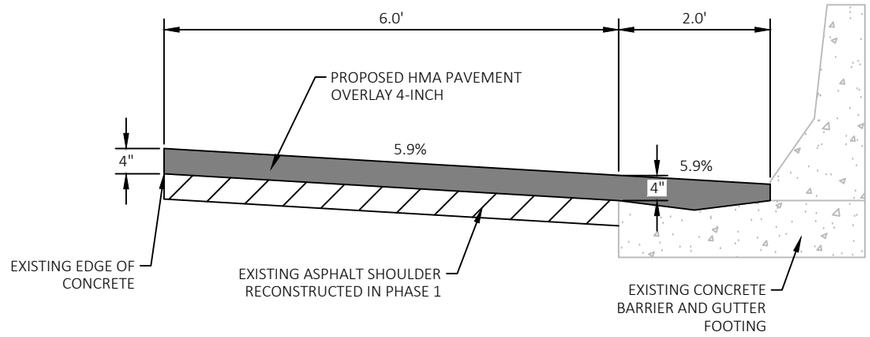

SUPERELEVATED SECTION - LOW SIDE

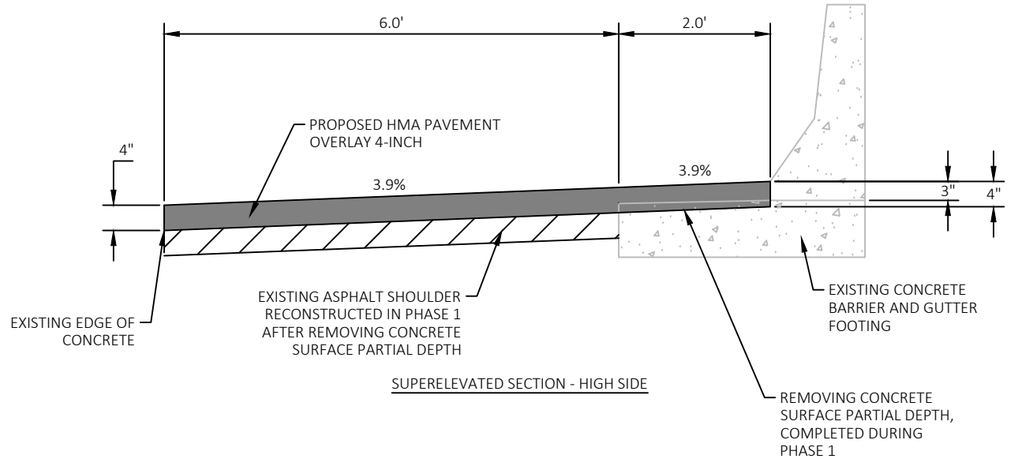

SUPERELEVATED SECTION - HIGH SIDE

BARRIER GUTTER OVERLAY DETAIL

SEE TYPICAL SECTIONS AND PLAN SHEETS FOR LOCATIONS

SEE ADJUSTING INLETS ADJACENT TO CONCRETE BARRIER DETAIL FOR ADDITIONAL INFORMATION

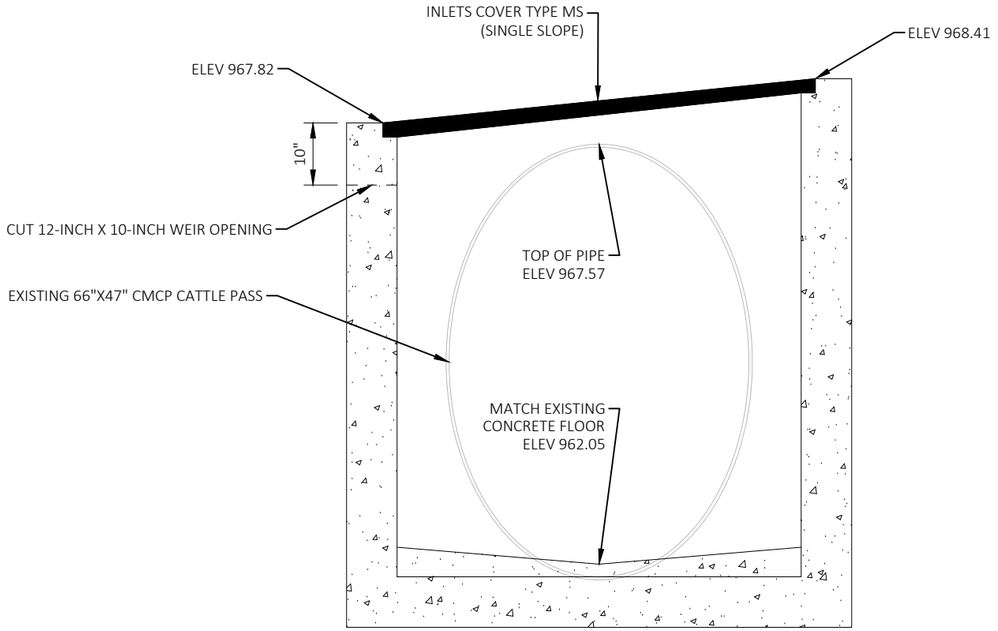

SECTION VIEW
(LOOKING NORTH)

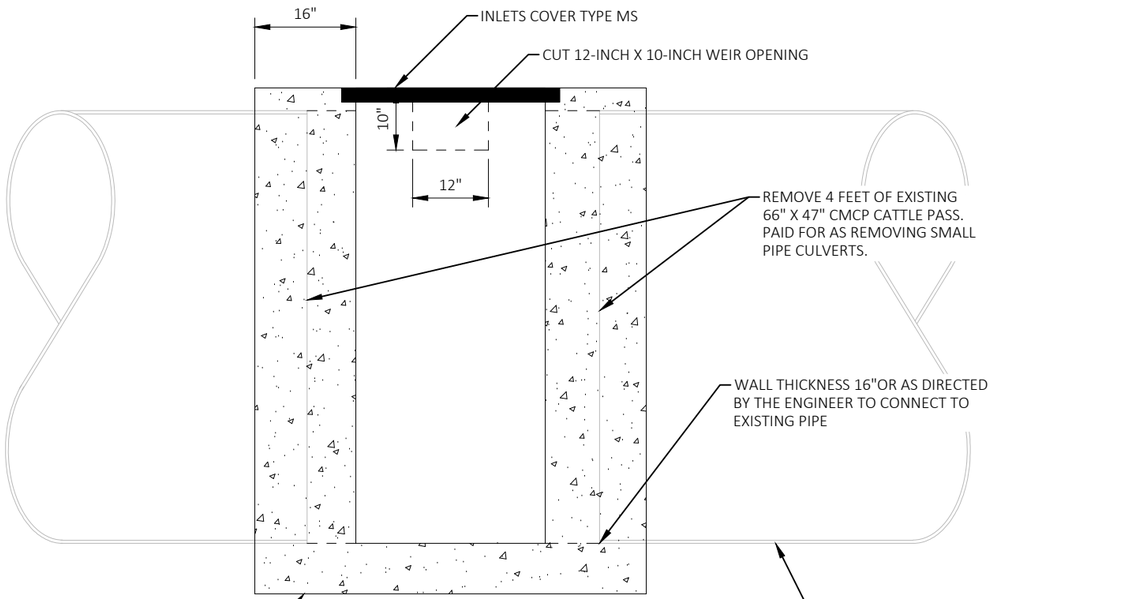

PROFILE VIEW

MEDIAN INLET DETAIL FOR CATTLE PASS - INLETS MEDIAN 2 GRATE

STA 802+50 'EB'

- VERIFY EXISTING ELEVATIONS AND CONDITION OF EXISTING PIPE PRIOR TO BEGINNING CONSTRUCTION.
- INLET WALL THICKNESS CONNECTING TO EXISTING PIPE SHALL BE 16" OR AS REQUIRED TO CONNECT TO EXISTING PIPE AS DIRECTED BY THE ENGINEER. ADDITIONAL WALL THICKNESS INCIDENTAL TO INLETS MEDIAN 2 GRATE.
- SEE S.D.D. INLETS MEDIAN 1 AND 2 GRATE AND S.D.D. INLET COVERS TYPE B, B-A, C, MS, MS-A, AND WM FOR DETAILS NOT SHOWN.

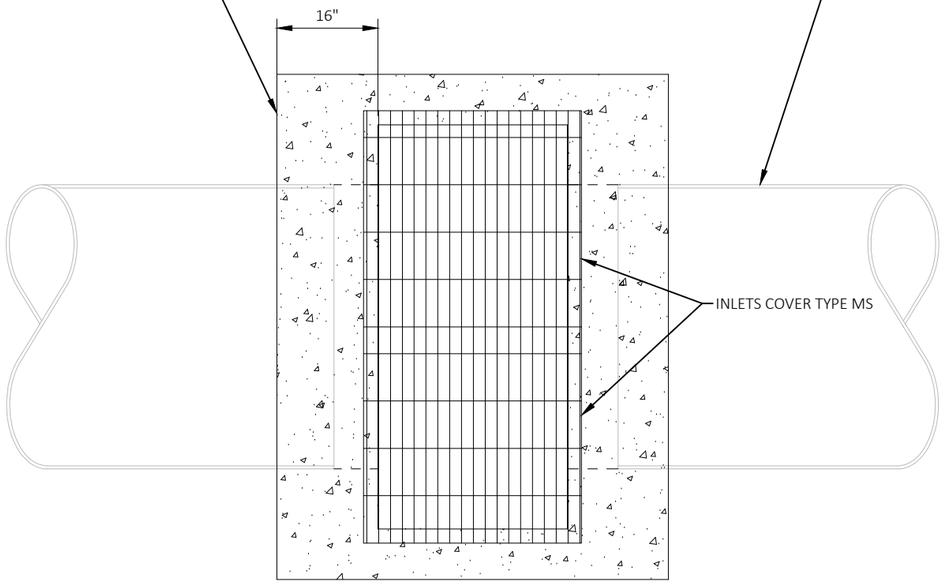

PLAN VIEW

PROJECT NO:1204-08-65	HWY: USH 18/151	COUNTY: DANE	CONSTRUCTION DETAILS	SHEET 41 E

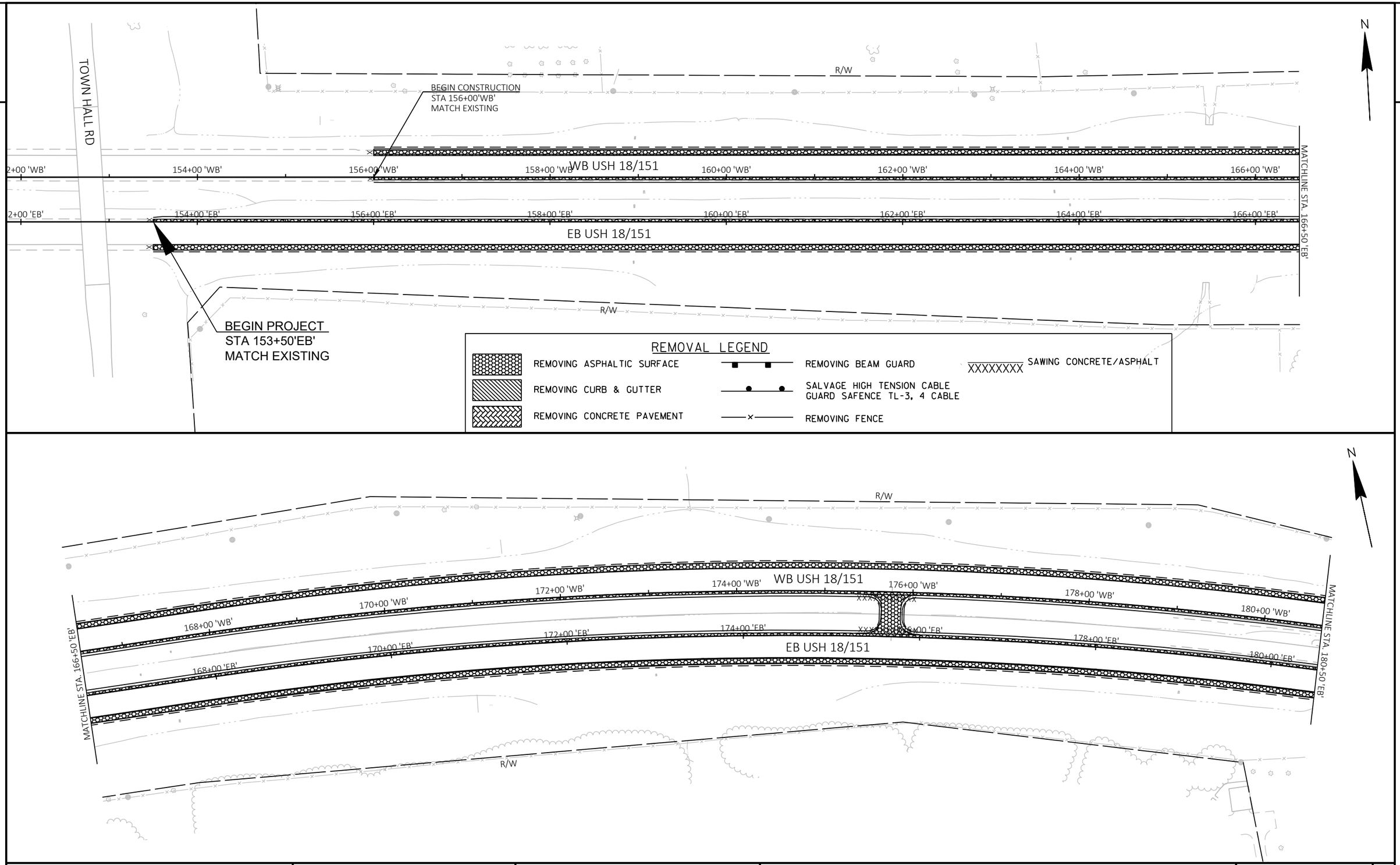

PROJECT NO: 1204-08-65	HWY: USH 18/151	COUNTY: DANE	REMOVAL PLANS	SHEET 42	E

2

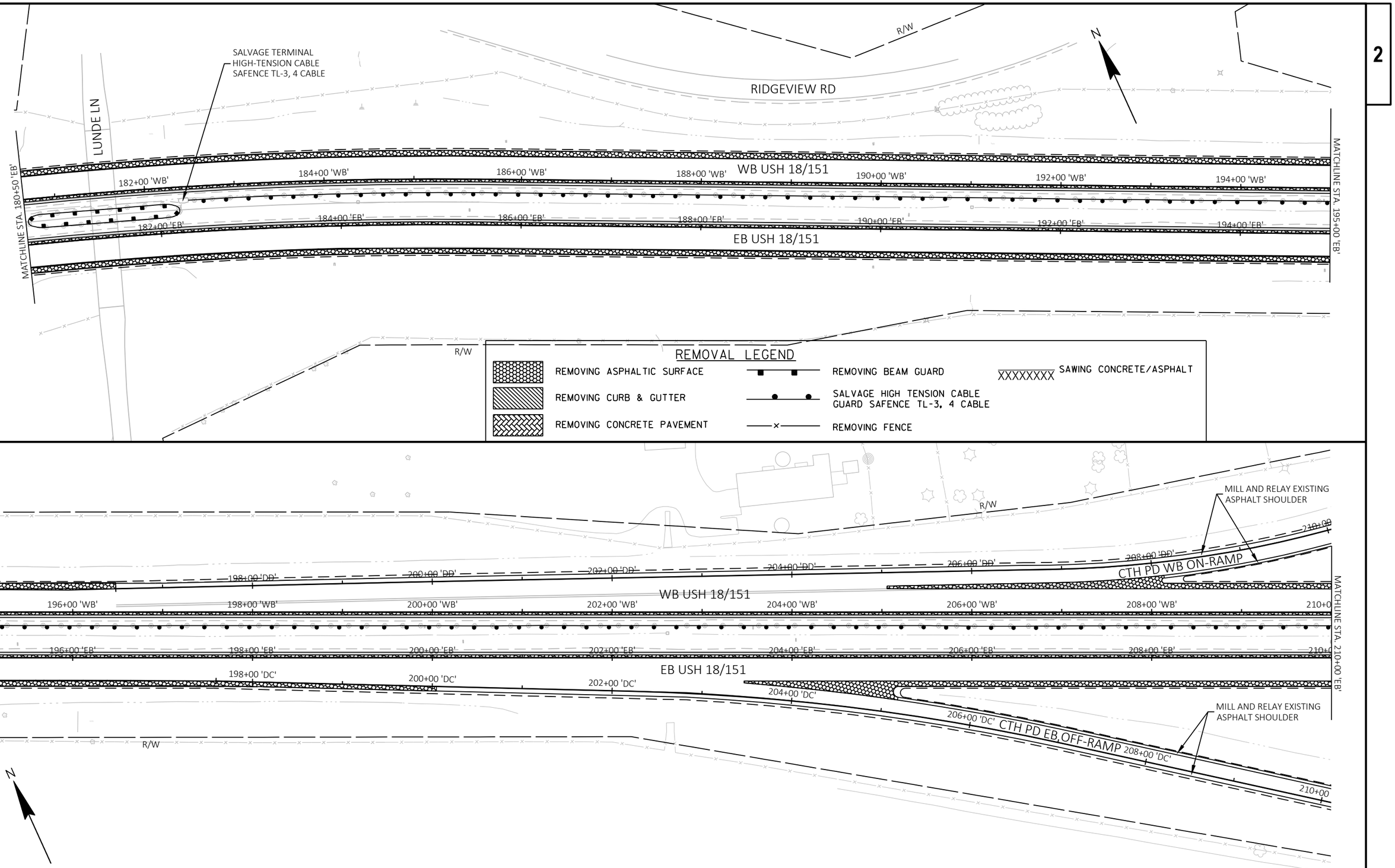

PROJECT NO: 1204-08-65	HWY: USH 18/151	COUNTY: DANE	REMOVAL PLANS	SHEET 43	E

FILE NAME : G:\WDOTSW\20007-000 USH 18\CIVIL 3D\SHEETSPLAN\020201-RM.DWG
LAYOUT NAME - 02

PLOT DATE : 11/17/2022 11:31 AM PLOT BY : ERIC ANDRITSCH PLOT NAME : PLOT SCALE : 1 IN:100 FT

2

REMOVAL LEGEND

- REMOVING ASPHALTIC SURFACE
- REMOVING CURB & GUTTER
- REMOVING CONCRETE PAVEMENT
- REMOVING BEAM GUARD
- SALVAGE HIGH TENSION CABLE GUARD SAFENCE TL-3, 4 CABLE
- REMOVING FENCE
- XXXXXXXX SAWING CONCRETE/ASPHALT

N

R/W

MILL AND RELAY EXISTING ASPHALT SHOULDER

CTH PD WB ON-RAMP

CTH PD

CTH PD WB OFF-RAMP

WB USH 18/151

EB USH 18/151

MATCHLINE STA. 210+00 'EB'

MATCHLINE STA. 224+50 'EB'

MILL AND RELAY EXISTING ASPHALT SHOULDER

CTH PD EB OFF-RAMP

MILL AND RELAY EXISTING ASPHALT SHOULDER

CTH PD EB ON-RAMP

R/W

PROJECT NO: 1204-08-65	HWY: USH 18/151	COUNTY: DANE	REMOVAL PLANS	SHEET 44	E

FILE NAME : G:\WDOTSW\20007-000 USH 18\CIVIL 3D\SHEETSPLAN\020201-RM.DWG
LAYOUT NAME - 03

PLOT DATE : 11/17/2022 11:31 AM PLOT BY : ERIC ANDRITSCH PLOT NAME : PLOT SCALE : ##########

WISDOT/CADDS SHEET 42

2

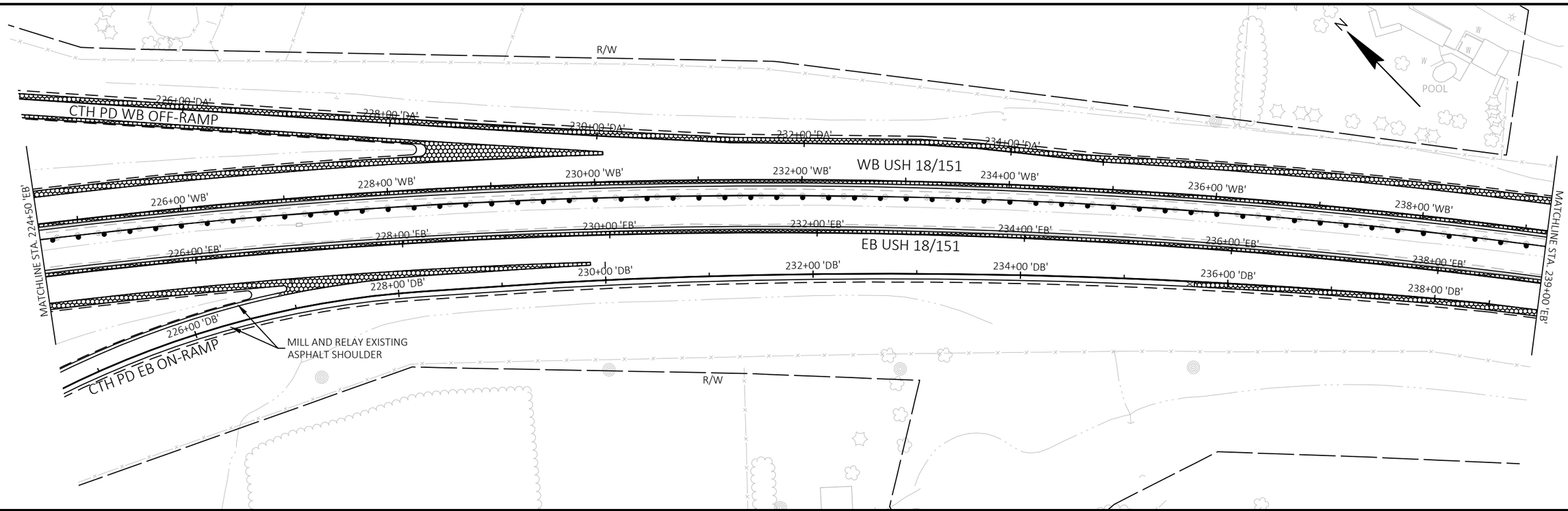

REMOVAL LEGEND

- REMOVING ASPHALTIC SURFACE
- REMOVING CURB & GUTTER
- REMOVING CONCRETE PAVEMENT
- REMOVING BEAM GUARD
- SALVAGE HIGH TENSION CABLE GUARD SAFENCE TL-3, 4 CABLE
- REMOVING FENCE
- XXXXXXXX SAWING CONCRETE/ASPHALT

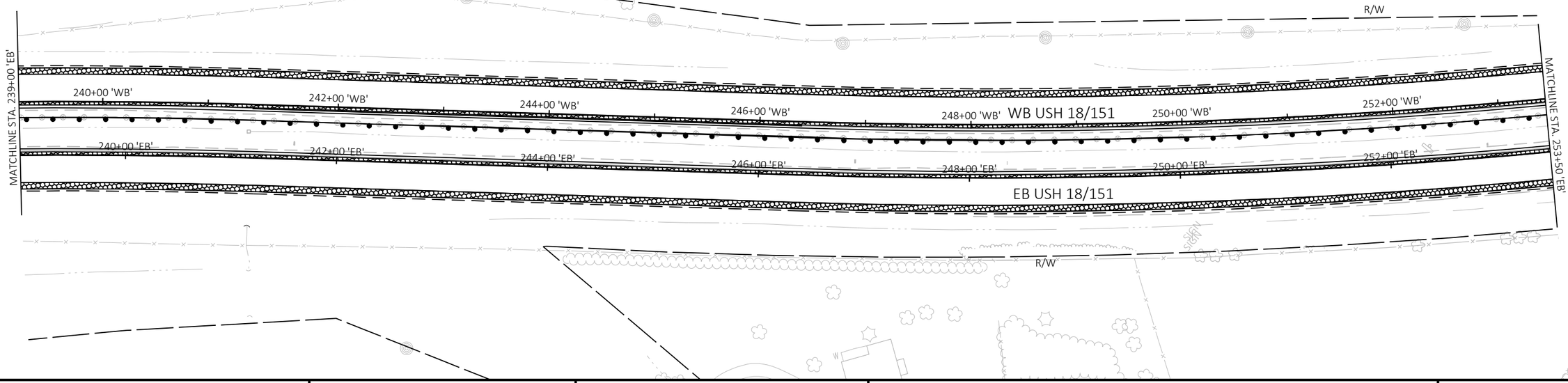

PROJECT NO: 1204-08-65	HWY: USH 18/151	COUNTY: DANE	REMOVAL PLANS	SHEET 45	E

FILE NAME : G:\WDOTSW\20007-000 USH 18\CIVIL 3D\SHEETSPLAN\020201-RM.DWG
LAYOUT NAME - 04

PLOT DATE : 7/14/2022 3:29 PM PLOT BY : ERIC ANDRITSCH PLOT NAME : PLOT SCALE : ##########

REMOVAL LEGEND

- REMOVING ASPHALTIC SURFACE
- REMOVING CURB & GUTTER
- REMOVING CONCRETE PAVEMENT
- REMOVING BEAM GUARD
- SALVAGE HIGH TENSION CABLE GUARD SAFENCE TL-3, 4 CABLE
- REMOVING FENCE
- XXXXXXXX SAWING CONCRETE/ASPHALT

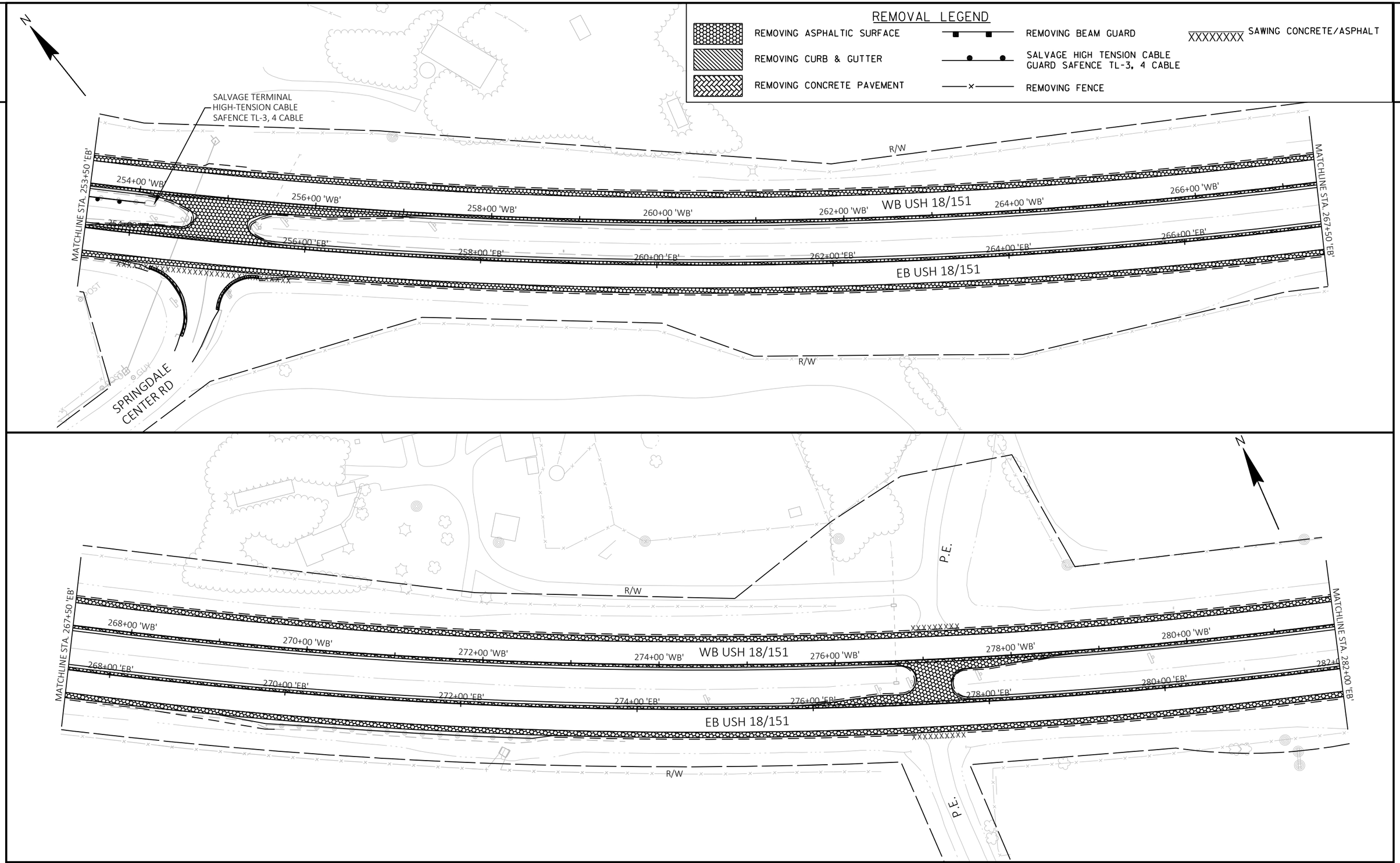

PROJECT NO: 1204-08-65	HWY: USH 18/151	COUNTY: DANE	REMOVAL PLANS	SHEET 46	E

FILE NAME : G:\WDOTSW\20007-000 USH 18\CIVIL 3D\SHEETSPLAN\020201-RM.DWG
LAYOUT NAME - 05

PLOT DATE : 7/14/2022 3:30 PM PLOT BY : ERIC ANDRITSCH PLOT NAME : PLOT SCALE : ##########

REMOVAL LEGEND

- REMOVING ASPHALTIC SURFACE
- REMOVING CURB & GUTTER
- REMOVING CONCRETE PAVEMENT
- REMOVING BEAM GUARD
- SALVAGE HIGH TENSION CABLE GUARD SAFENCE TL-3, 4 CABLE
- REMOVING FENCE
- XXXXXXXX SAWING CONCRETE/ASPHALT

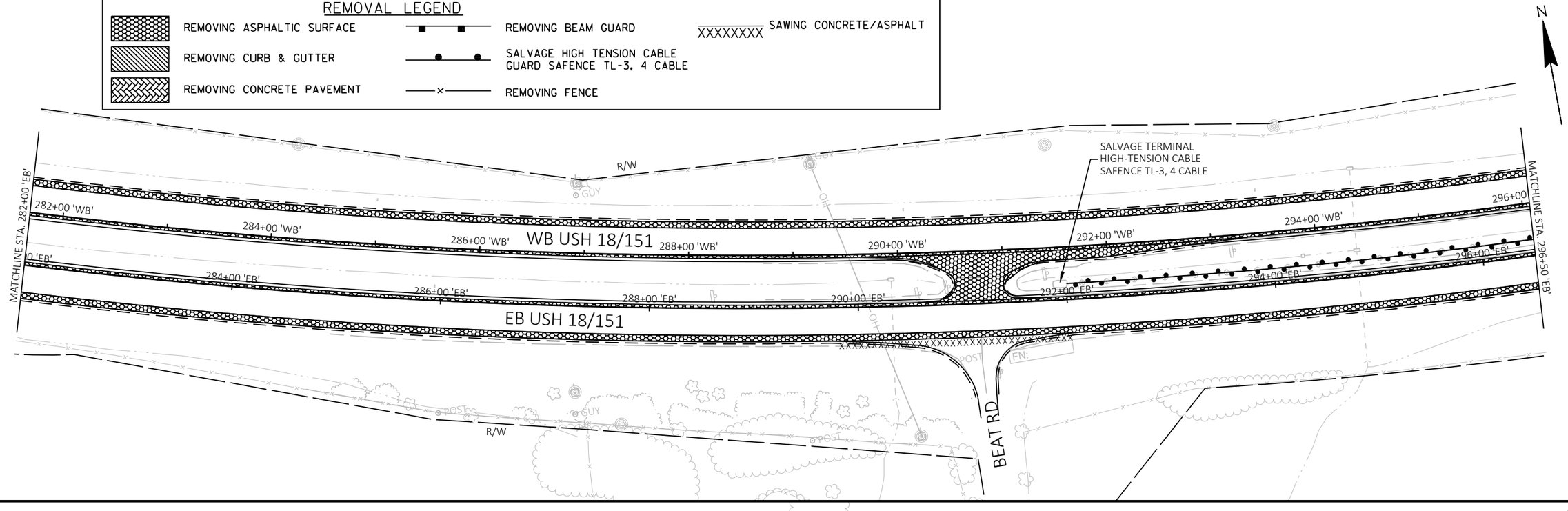

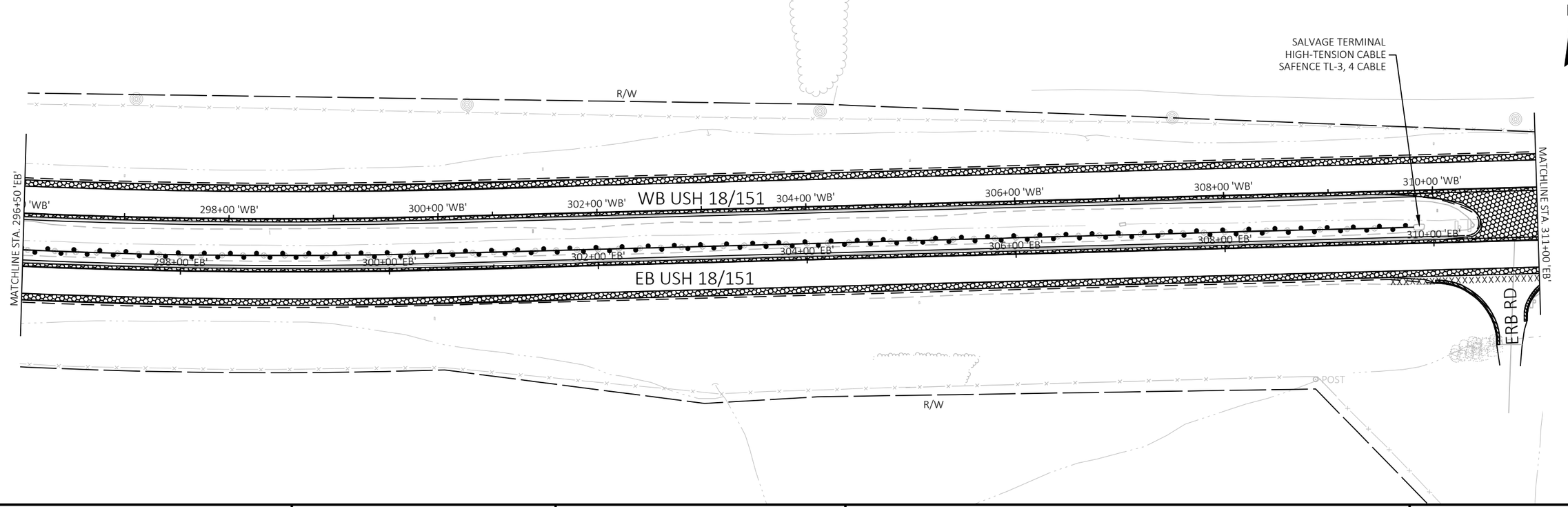

PROJECT NO: 1204-08-65	HWY: USH 18/151	COUNTY: DANE	REMOVAL PLANS	SHEET 47	E

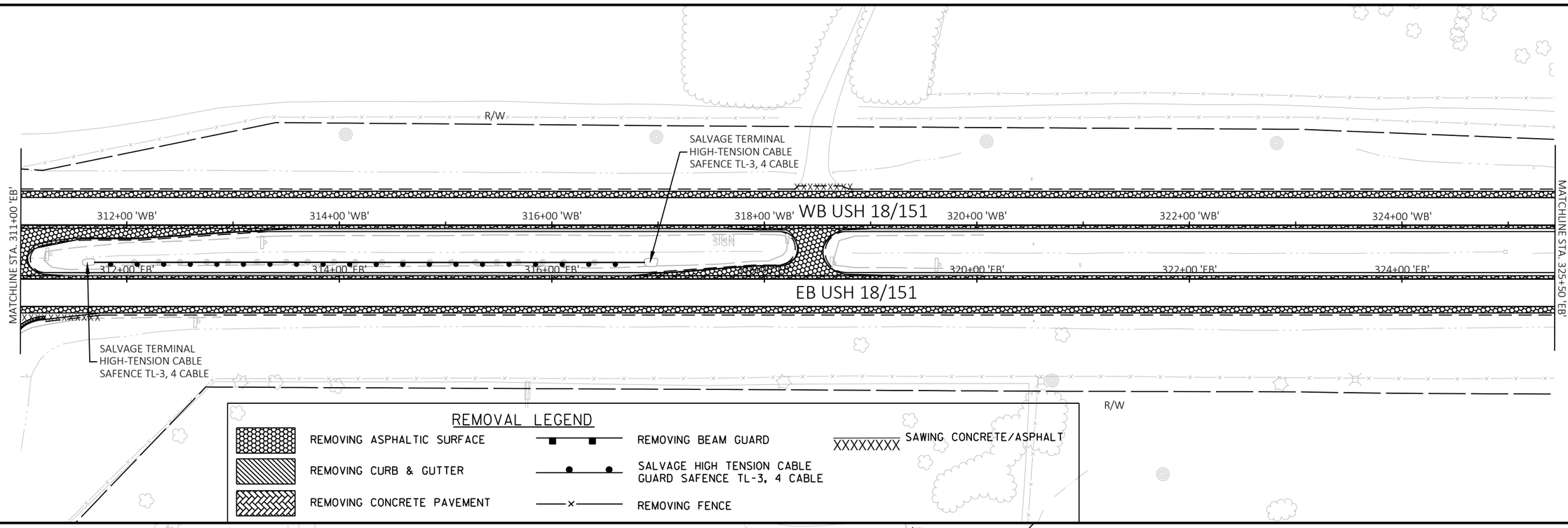

PROJECT NO: 1204-08-65	HWY: USH 18/151	COUNTY: DANE	REMOVAL PLANS	SHEET 48	E

FILE NAME : G:\WDOTSW\20007-000 USH 18\CIVIL 3D\SHEETSPLAN\020201-RM.DWG
LAYOUT NAME - 07
PLOT DATE : 7/14/2022 3:31 PM
PLOT BY : ERIC ANDRITSCH
PLOT NAME :
PLOT SCALE : ##########
WISDOT/CADDS SHEET 44

2

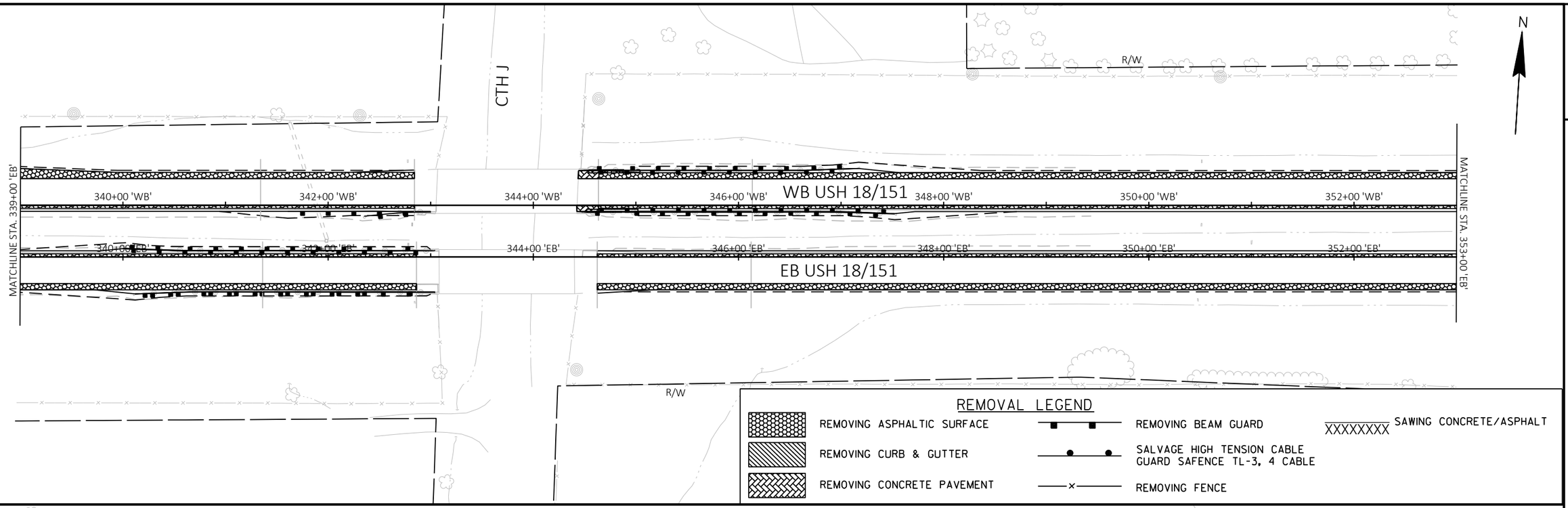

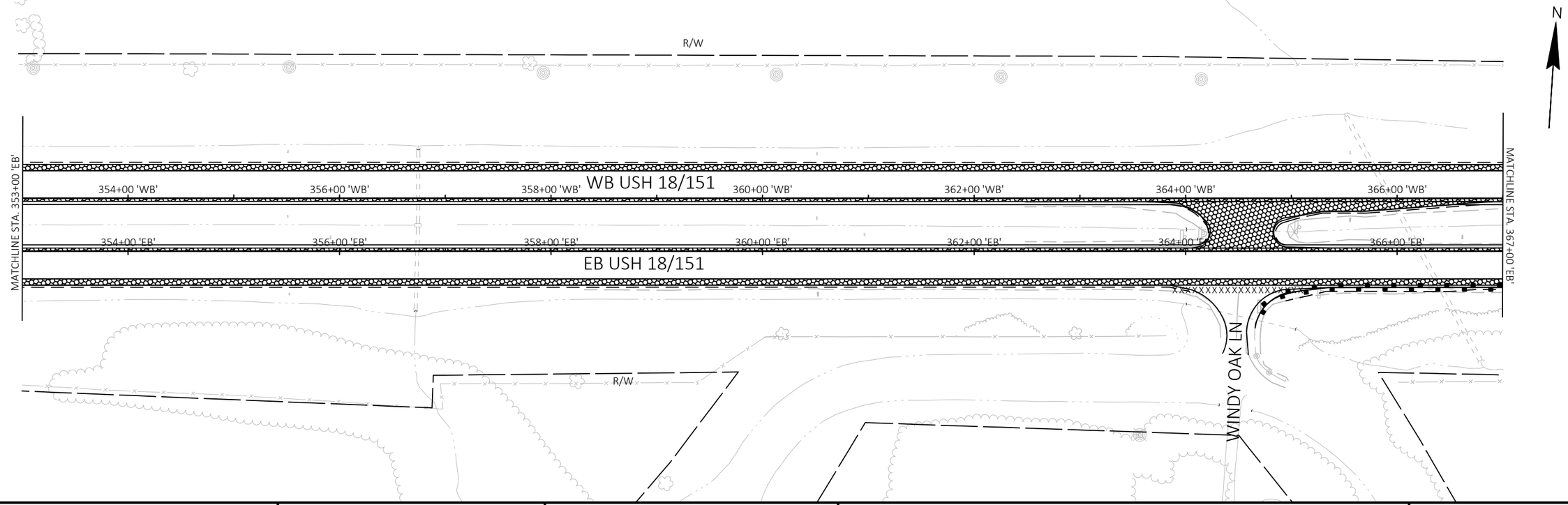

PROJECT NO: 1204-08-65	HWY: USH 18/151	COUNTY: DANE	REMOVAL PLANS	SHEET 49	E

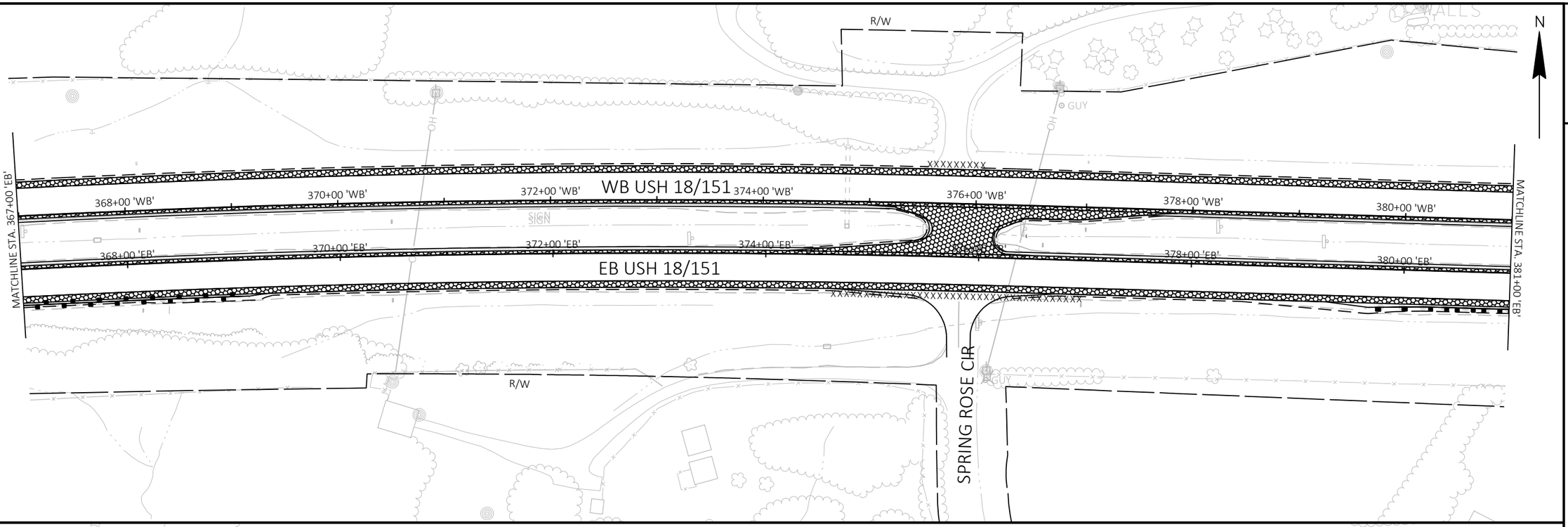

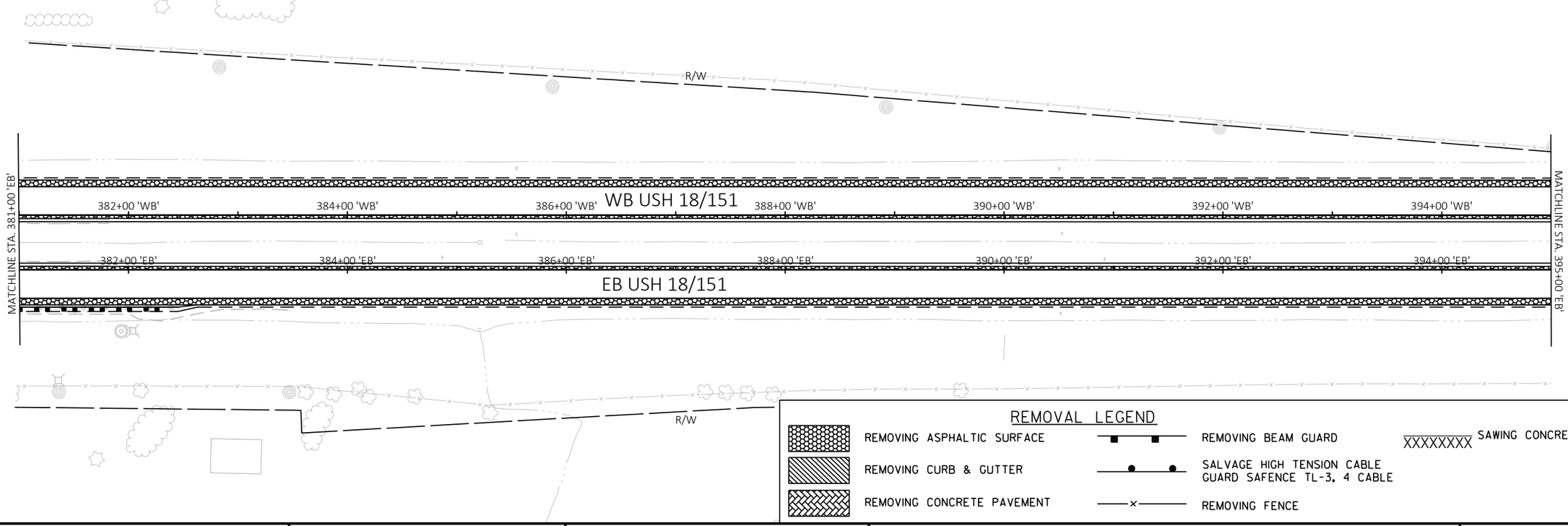

REMOVAL LEGEND

- REMOVING ASPHALTIC SURFACE
- REMOVING CURB & GUTTER
- REMOVING CONCRETE PAVEMENT
- REMOVING BEAM GUARD
- SALVAGE HIGH TENSION CABLE GUARD SAFENCE TL-3, 4 CABLE
- REMOVING FENCE
- XXXXXXXX SAWING CONCRETE/ASPHALT

PROJECT NO: 1204-08-65	HWY: USH 18/151	COUNTY: DANE	REMOVAL PLANS	SHEET 50	E

FILE NAME : G:\WDOTSW\20007-000 USH 18\CIVIL 3D\SHEETSPLAN\020201-RM.DWG
LAYOUT NAME - 09
PLOT DATE : 7/14/2022 3:32 PM
PLOT BY : ERIC ANDRITSCH
PLOT NAME :
PLOT SCALE : ##########
WISDOT/CADDS SHEET 44

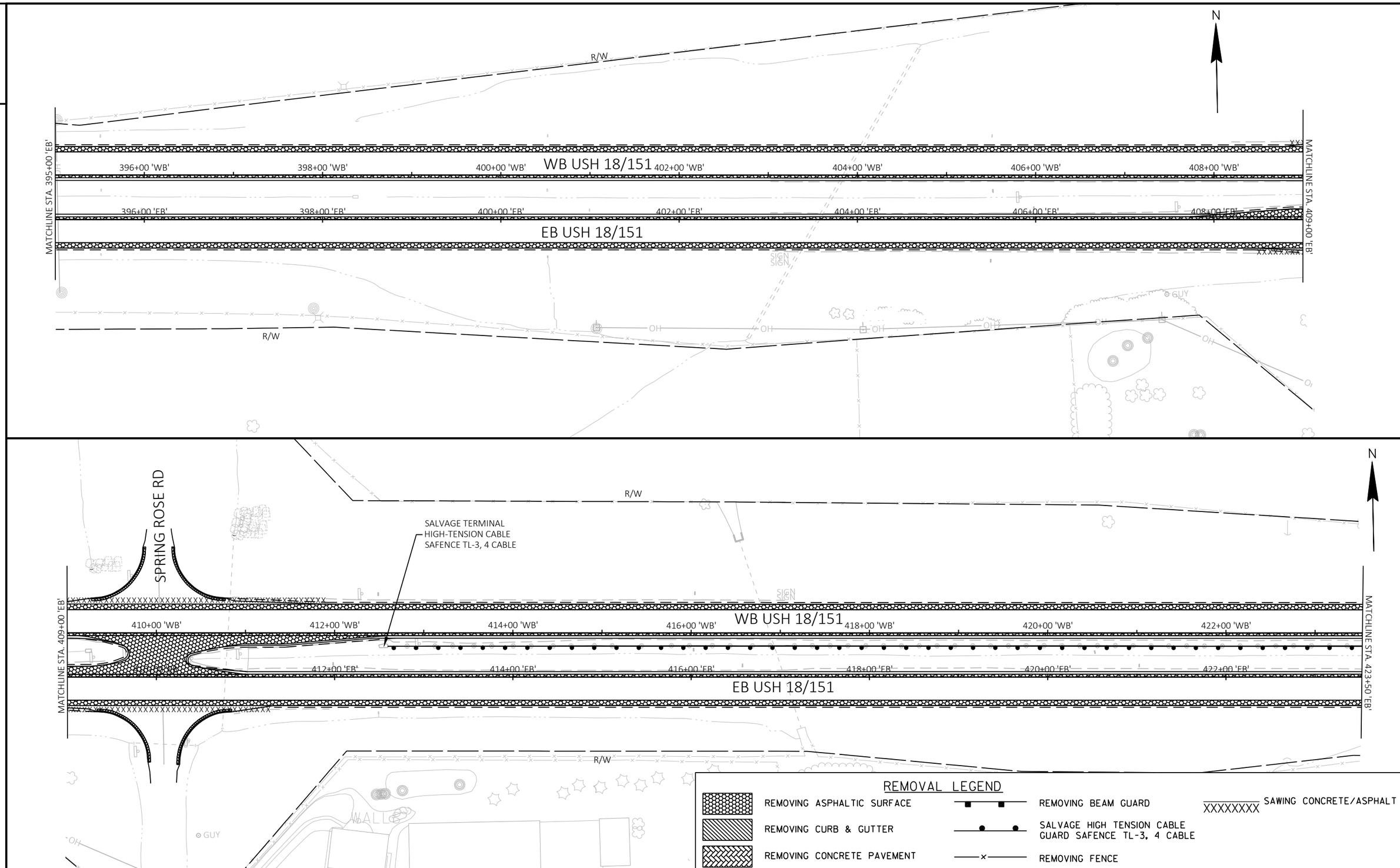

PROJECT NO: 1204-08-65	HWY: USH 18/151	COUNTY: DANE	REMOVAL PLANS	SHEET 51	E

FILE NAME : G:\WDOTSW\20007-000 USH 18\CIVIL 3D\SHEETSPLAN\020201-RM.DWG
LAYOUT NAME - 10
PLOT DATE : 7/14/2022 3:33 PM
PLOT BY : ERIC ANDRITSCH
PLOT NAME :
PLOT SCALE : ###########
WISDOT/CADDS SHEET 44

2

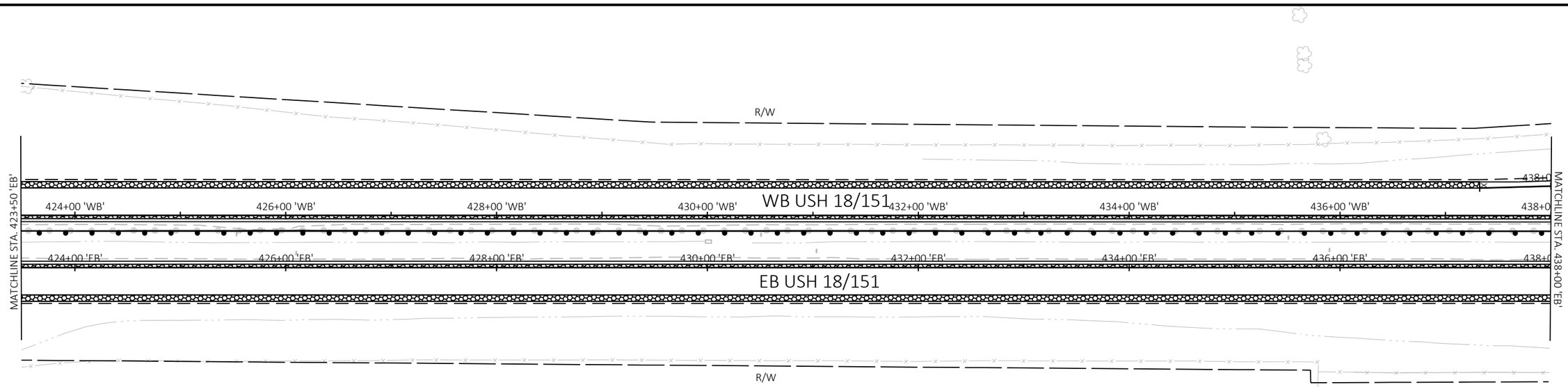

REMOVAL LEGEND

- REMOVING ASPHALTIC SURFACE
- REMOVING CURB & GUTTER
- REMOVING CONCRETE PAVEMENT
- REMOVING BEAM GUARD
- SALVAGE HIGH TENSION CABLE GUARD SAFENCE TL-3, 4 CABLE
- REMOVING FENCE
- XXXXXXXX SAWING CONCRETE/ASPHALT

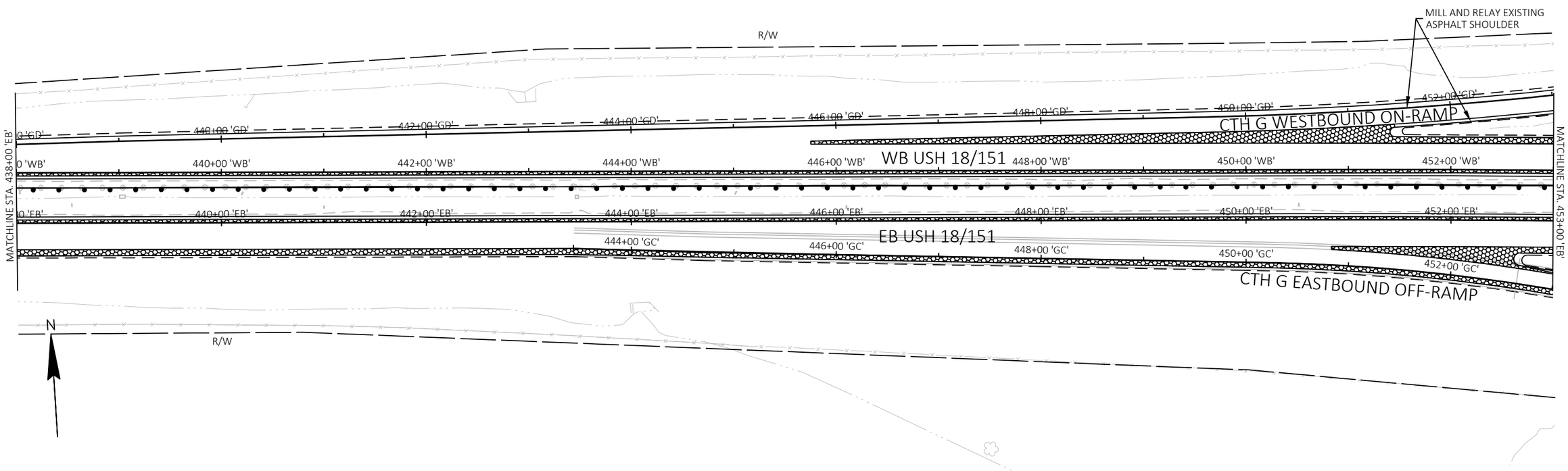

PROJECT NO: 1204-08-65	HWY: USH 18/151	COUNTY: DANE	REMOVAL PLANS	SHEET 52	E

REMOVAL LEGEND

- REMOVING ASPHALTIC SURFACE
- REMOVING CURB & GUTTER
- REMOVING CONCRETE PAVEMENT
- REMOVING BEAM GUARD
- SALVAGE HIGH TENSION CABLE GUARD SAFENCE TL-3, 4 CABLE
- REMOVING FENCE
- XXXXXXXX SAWING CONCRETE/ASPHALT

N

MILL AND RELAY EXISTING ASPHALT SHOULDER

MILL AND RELAY EXISTING ASPHALT SHOULDER

R/W

454+00 'GD'
456+00 'GD'
458+00 'GD'
460+00 'GD'
462+00 'GD'

CTH G WESTBOUND ON-RAMP

464+00 'GA'
466+00 'GA'

CTH G WESTBOUND OFF-RAMP

MATCHLINE STA. 453+00 'EB'

454+00 'WB'
456+00 'WB'
458+00 'WB'
460+00 'WB'
462+00 'WB'
464+00 'WB'
466+00 'WB'

WB USH 18/151

454+00 'EB'
456+00 'EB'
458+00 'EB'
460+00 'EB'
462+00 'EB'
464+00 'EB'
466+00 'EB'

EB USH 18/151

MATCHLINE STA. 468+00 'EB'

TNL

454+00 'GC'
456+00 'GC'
458+00 'GC'
460+00 'GC'
462+00 'GC'

CTH G EASTBOUND OFF-RAMP

CTH G

464+00 'GB'
466+00 'GB'

CTH G EASTBOUND ON-RAMP

R/W

PROJECT NO: 1204-08-65	HWY: USH 18/151	COUNTY: DANE	REMOVAL PLANS	SHEET 53	E

FILE NAME : G:\WDOTSW\20007-000 USH 18\CIVIL 3D\SHEETSPLAN\020201-RM.DWG
LAYOUT NAME - 12

PLOT DATE : 7/14/2022 3:34 PM PLOT BY : ERIC ANDRITSCH PLOT NAME : PLOT SCALE : ############

WISDOT/CADDS SHEET 42

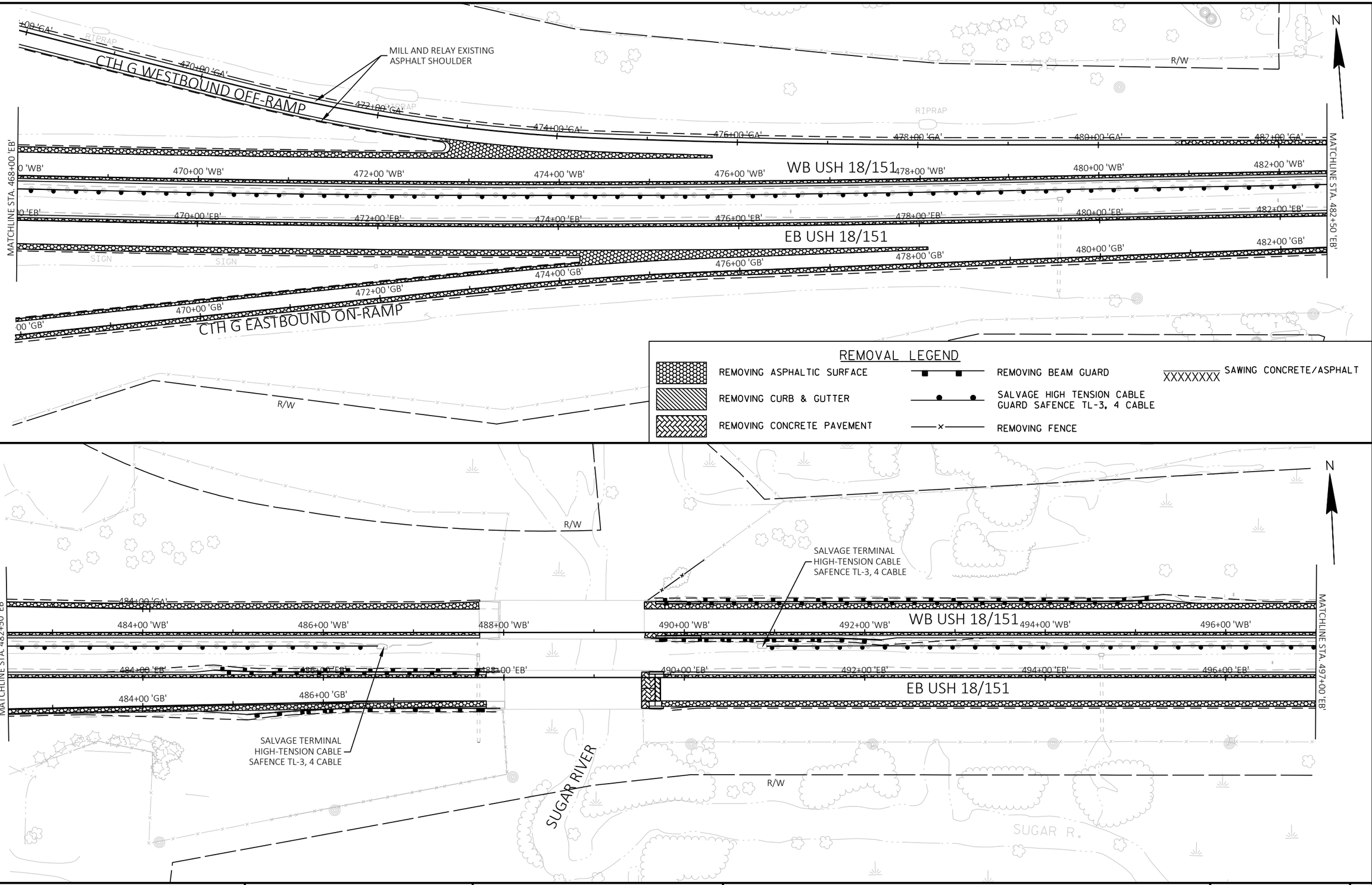

REMOVAL LEGEND

- REMOVING ASPHALTIC SURFACE
- REMOVING CURB & GUTTER
- REMOVING CONCRETE PAVEMENT
- REMOVING BEAM GUARD
- SALVAGE HIGH TENSION CABLE GUARD SAFENCE TL-3, 4 CABLE
- REMOVING FENCE
- XXXXXXXX SAWING CONCRETE/ASPHALT

PROJECT NO: 1204-08-65	HWY: USH 18/151	COUNTY: DANE	REMOVAL PLANS	SHEET 54	E

FILE NAME : G:\WDOTSW\20007-000 USH 18\CIVIL 3D\SHEETSPLAN\020201-RM.DWG
LAYOUT NAME - 13

PLOT DATE : 7/14/2022 3:35 PM PLOT BY : ERIC ANDRITSCH PLOT NAME : PLOT SCALE : 1 IN:100 FT

2

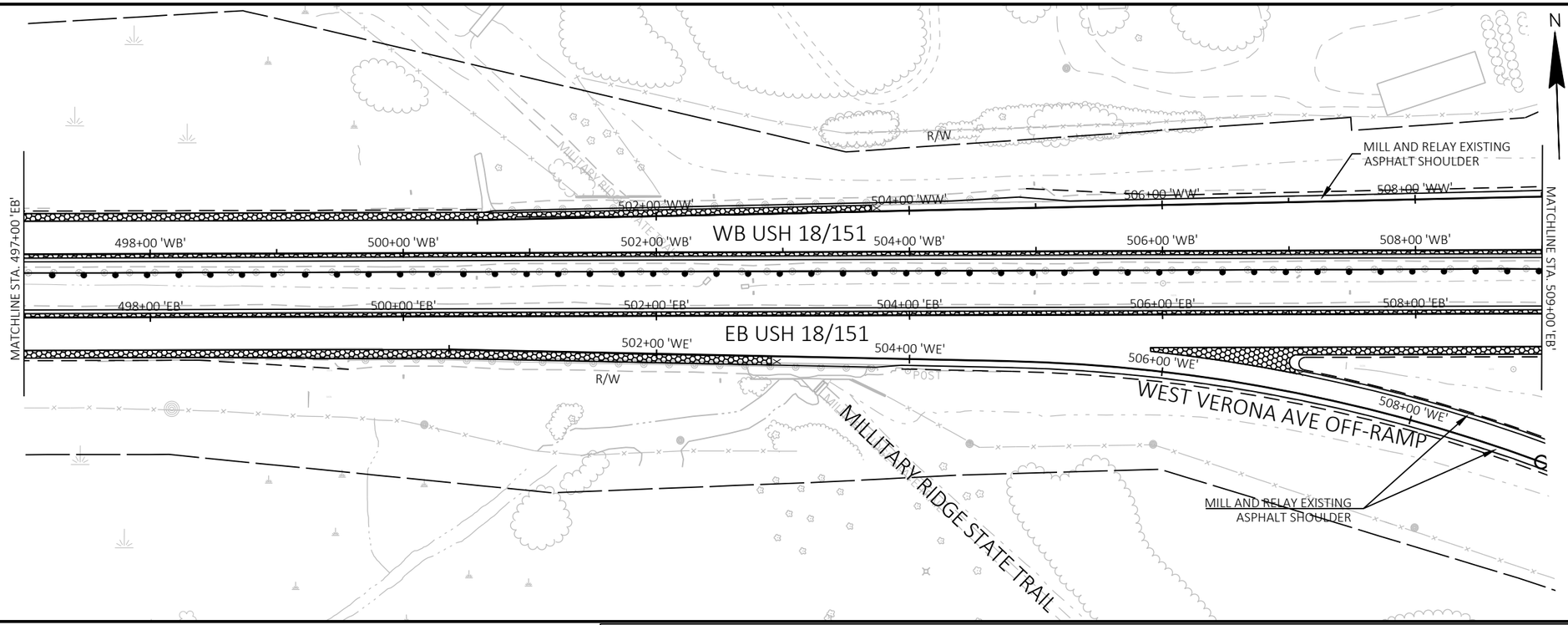

REMOVAL LEGEND

- REMOVING ASPHALTIC SURFACE
- REMOVING CURB & GUTTER
- REMOVING CONCRETE PAVEMENT
- REMOVING BEAM GUARD
- SALVAGE HIGH TENSION CABLE GUARD SAFENCE TL-3, 4 CABLE
- REMOVING FENCE
- XXXXXXXX SAWING CONCRETE/ASPHALT

PROJECT NO: 1204-08-65	HWY: USH 18/151	COUNTY: DANE	REMOVAL PLANS	SHEET 55	E

2

REMOVAL LEGEND

- REMOVING ASPHALTIC SURFACE
- REMOVING CURB & GUTTER
- REMOVING CONCRETE PAVEMENT
- REMOVING BEAM GUARD
- SALVAGE HIGH TENSION CABLE GUARD SAFENCE TL-3, 4 CABLE
- REMOVING FENCE
- XXXXXXXX SAWING CONCRETE/ASPHALT

WEST VERONA AVE ON-RAMP
WEST VERONA AVE OFF-RAMP
MATCHLINE STA. 526+00 'WE'
MATCHLINE STA. 526+00 'WE'
R/W
WEST VERONA AVE ON-RAMP
WEST VERONA AVE OFF-RAMP
MATCHLINE STA. 526+00 'WE'
MILL AND RELAY EXISTING ASPHALT SHOULDER
WB USH 18/151
EB USH 18/151
RIPRAP
MATCHLINE STA. 509+00 'EB'
MATCHLINE STA. 523+50 'EB'
MILL AND RELAY EXISTING ASPHALT SHOULDER
R/W
N

PROJECT NO: 1204-08-65	HWY: USH 18/151	COUNTY: DANE	REMOVAL PLANS	SHEET 56	E

FILE NAME : G:\WDOTSW\20007-000 USH 18\CIVIL 3D\SHEETSPLAN\020201-RM.DWG
LAYOUT NAME - 15
PLOT DATE : 7/14/2022 3:36 PM
PLOT BY : ERIC ANDRITSCH
PLOT NAME :
PLOT SCALE : ##########

2

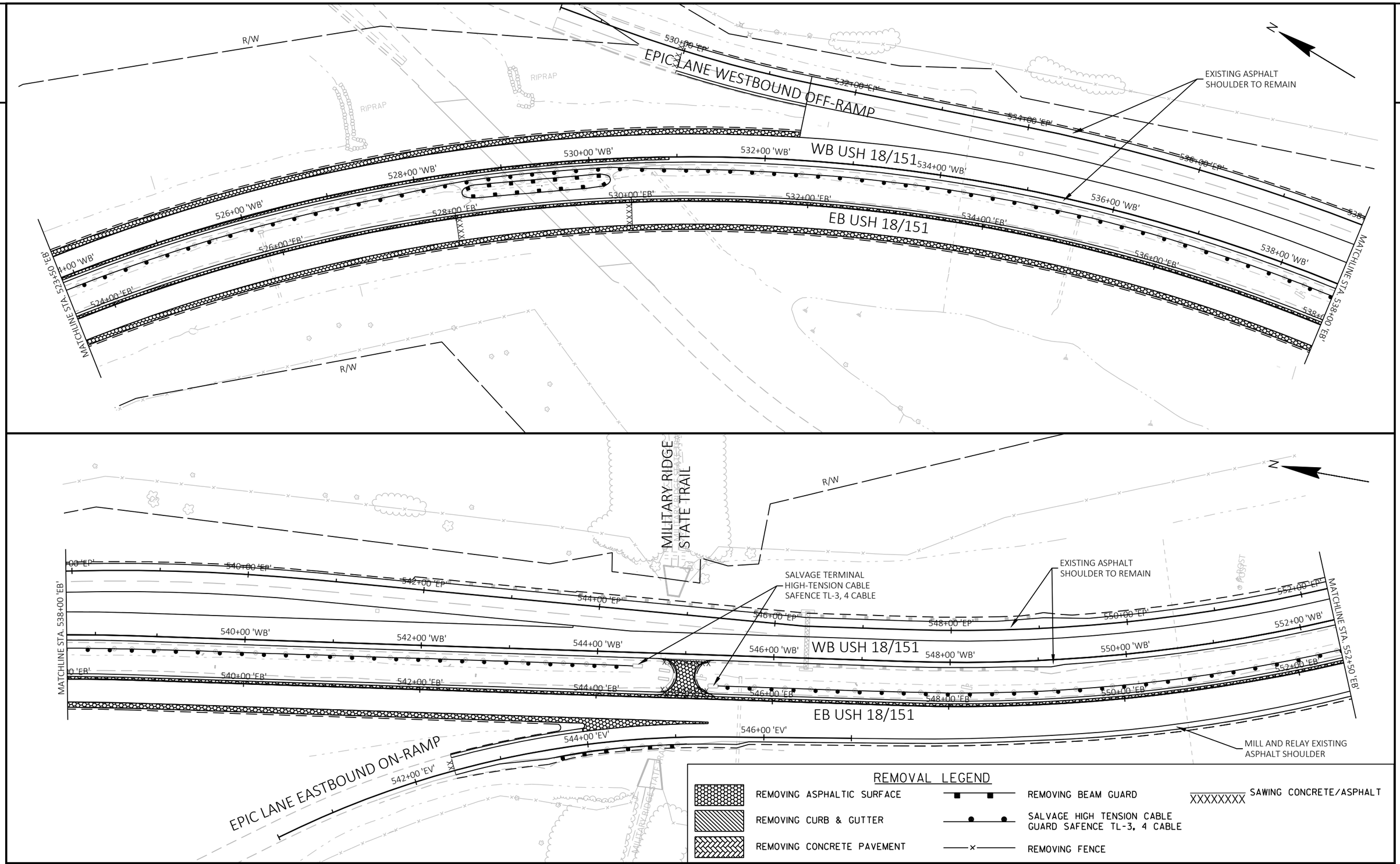

PROJECT NO: 1204-08-65	HWY: USH 18/151	COUNTY: DANE	REMOVAL PLANS	SHEET 57	E

2

REMOVAL LEGEND

- REMOVING ASPHALTIC SURFACE
- REMOVING CURB & GUTTER
- REMOVING CONCRETE PAVEMENT
- REMOVING BEAM GUARD
- SALVAGE HIGH TENSION CABLE GUARD SAFENCE TL-3, 4 CABLE
- REMOVING FENCE
- XXXXXXXX SAWING CONCRETE/ASPHALT

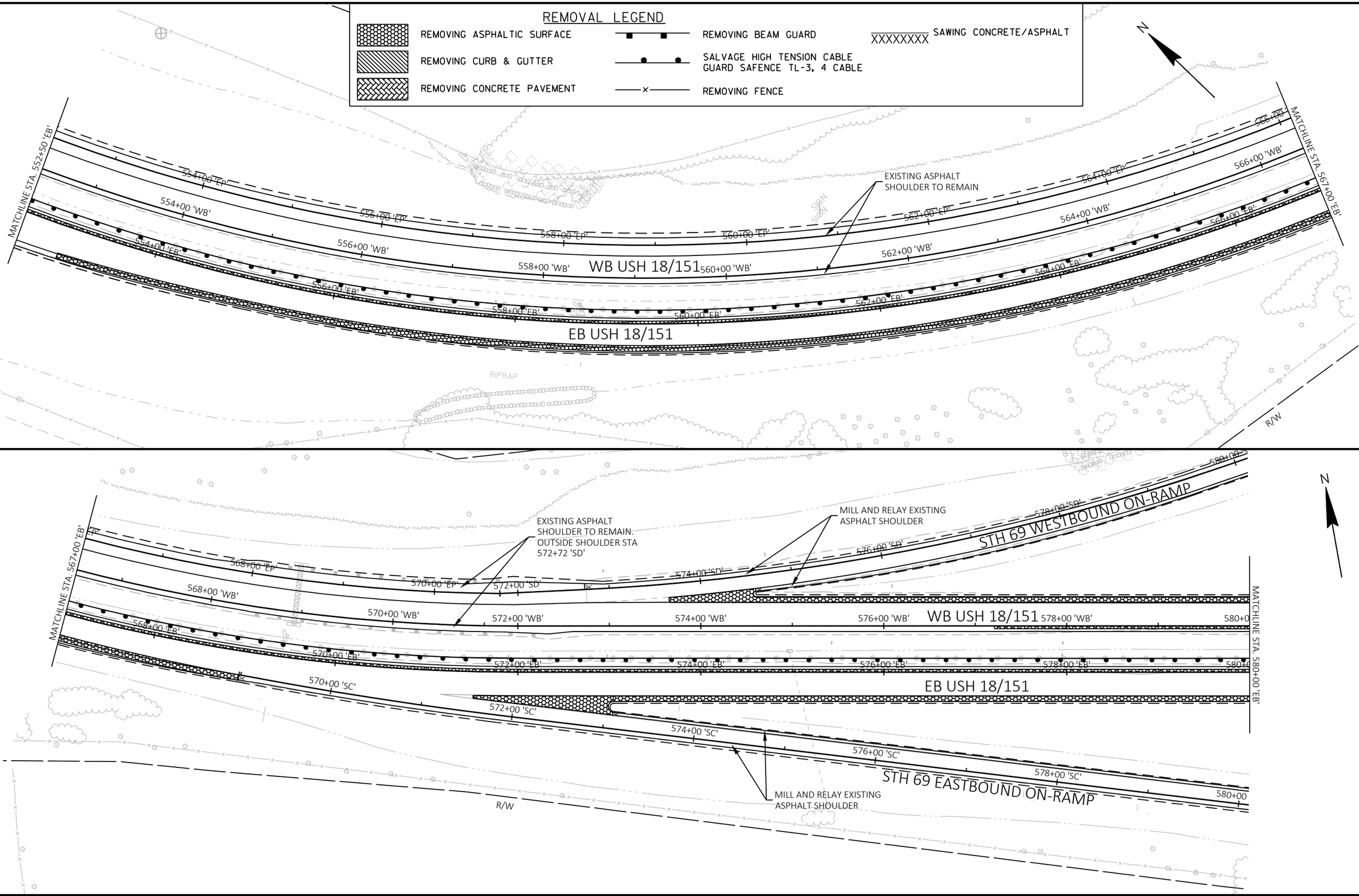

PROJECT NO: 1204-08-65	HWY: USH 18/151	COUNTY: DANE	REMOVAL PLANS	SHEET 58	E

2

N

MILL AND RELAY EXISTING ASPHALT SHOULDER

582+00 'SD'

584+00 'SD'

586+00 'SD'

STH 69 WESTBOUND ON-RAMP

R/W

588+00 'SA'

MILL AND RELAY EXISTING ASPHALT SHOULDER

590+00 'SA'

592+00 'SA'

STH 69 WESTBOUND OFF-RAMP

MATCHLINE STA. 580+00 'EB'

0 'WB'

582+00 'WB'

584+00 'WB'

586+00 'WB'

588+00 'WB'

590+00 'WB'

WB USH 18/151

592+00 'WB'

MATCHLINE STA. 594+00 'EB'

0 'EB'

582+00 'EB'

584+00 'EB'

586+00 'EB'

588+00 'EB'

590+00 'EB'

592+00 'EB'

EB USH 18/151

SALVAGE TERMINAL HIGH-TENSION CABLE SAFENCE TL-3, 4 CABLE

STH 69

REMOVE CONCRETE SURFACE DRAIN

SALVAGE TERMINAL HIGH-TENSION CABLE SAFENCE TL-3, 4 CABLE

MILL AND RELAY EXISTING ASPHALT SHOULDER

592+00 'SB'

MILL AND RELAY EXISTING ASPHALT SHOULDER

'SC'

582+00 'SC'

STH 69 EASTBOUND OFF-RAMP

STH 69 EASTBOUND ON-RAMP

588+00 'SB'

590+00 'SB'

586+00 'SB'

R/W

REMOVAL LEGEND

- REMOVING ASPHALTIC SURFACE
- REMOVING CURB & GUTTER
- REMOVING CONCRETE PAVEMENT
- REMOVING BEAM GUARD
- SALVAGE HIGH TENSION CABLE GUARD SAFENCE TL-3, 4 CABLE
- REMOVING FENCE
- XXXXXXXX SAWING CONCRETE/ASPHALT

PROJECT NO: 1204-08-65	HWY: USH 18/151	COUNTY: DANE	REMOVAL PLANS	SHEET 59	E

2

REMOVAL LEGEND

- REMOVING ASPHALTIC SURFACE
- REMOVING CURB & GUTTER
- REMOVING CONCRETE PAVEMENT
- REMOVING BEAM GUARD
- SALVAGE HIGH TENSION CABLE GUARD SAFENCE TL-3, 4 CABLE
- REMOVING FENCE
- XXXXXXXX SAWING CONCRETE/ASPHALT

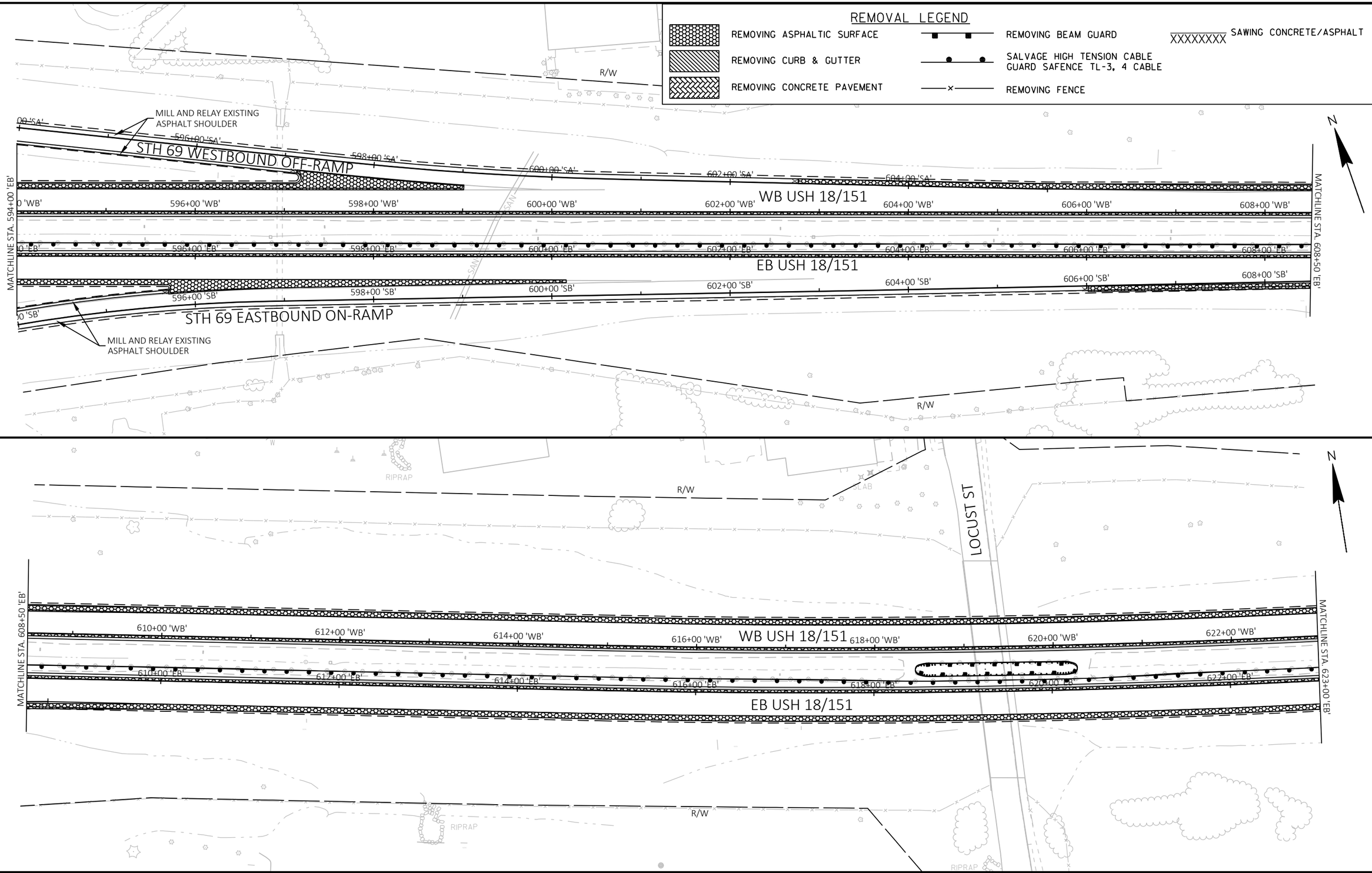

PROJECT NO: 1204-08-65	HWY: USH 18/151	COUNTY: DANE	REMOVAL PLANS	SHEET 60	E

FILE NAME : G:\WDOTSW\20007-000 USH 18\CIVIL 3D\SHEETSPLAN\020201-RM.DWG
LAYOUT NAME - 19
PLOT DATE : 7/14/2022 3:38 PM
PLOT BY : ERIC ANDRITSCH
PLOT NAME :
PLOT SCALE : ##########
WISDOT/CADDS SHEET 44

2

N

R/W

SALVAGE TERMINAL
HIGH-TENSION CABLE
SAFENCE TL-3, 4 CABLE

MATCHLINE STA. 623+00 'EB'

624+00 'WB'
626+00 'WB'
628+00 'WB'
WB USH 18/151
630+00 'WB'
632+00 'WB'
634+00 'WB'
636+00 'WB'
638

624+00 'EB'
626+00 'EB'
628+00 'EB'
630+00 'EB'
632+00 'EB'
634+00 'EB'
636+00 'EB'

EB USH 18/151

MATCHLINE STA. 638+00 'EB'

R/W

RIPRAP

POST

N

CTH M

R/W

REMOVAL LEGEND

- REMOVING ASPHALTIC SURFACE
- REMOVING CURB & GUTTER
- REMOVING CONCRETE PAVEMENT
- REMOVING BEAM GUARD
- SALVAGE HIGH TENSION CABLE GUARD SAFENCE TL-3, 4 CABLE
- REMOVING FENCE
- XXXXXXXX SAWING CONCRETE/ASPHALT

MILL AND RELAY EXISTING
ASPHALT SHOULDER

MATCHLINE STA. 638+00 'WB'

640+00 'WB'
642+00 'WB'
644+00 'WB'
646+00 'WB'
648+00 'WB'
WB USH 18/151
650+00 'WB'
652+00 'WB'

648+00 'PD'
650+00 'PD'
652+00 'PD'

640+00 'EB'
642+00 'EB'
644+00 'EB'
646+00 'EB'
648+00 'EB'
650+00 'EB'
652+00 'EB'

EB USH 18/151

650+00 'PC'
652+00 'PC'

MATCHLINE STA. 653+00 'EB'

MILL AND RELAY EXISTING
ASPHALT SHOULDER

RIPRAP

POST

R/W

PROJECT NO: 1204-08-65	HWY: USH 18/151	COUNTY: DANE	REMOVAL PLANS	SHEET 61	E

FILE NAME : G:\WDOTSW\20007-000 USH 18\CIVIL 3D\SHEETSPLAN\020201-RM.DWG
LAYOUT NAME - 20

PLOT DATE : 11/17/2022 11:33 AM PLOT BY : ERIC ANDRITSCH PLOT NAME : PLOT SCALE : ##########

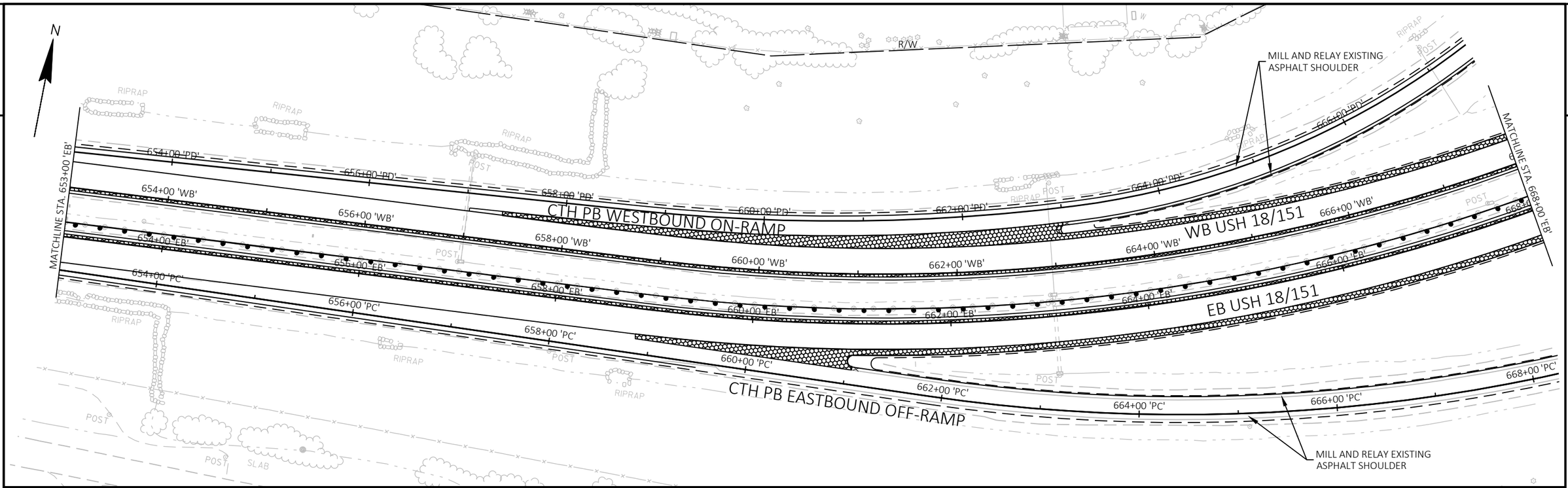

REMOVAL LEGEND

- REMOVING ASPHALTIC SURFACE
- REMOVING CURB & GUTTER
- REMOVING CONCRETE PAVEMENT
- REMOVING BEAM GUARD
- SALVAGE HIGH TENSION CABLE GUARD SAFENCE TL-3, 4 CABLE
- REMOVING FENCE
- XXXXXXXX SAWING CONCRETE/ASPHALT

PROJECT NO: 1204-08-65	HWY: USH 18/151	COUNTY: DANE	REMOVAL PLANS	SHEET 62	E

FILE NAME : G:\WDOTSW\20007-000 USH 18\CIVIL 3D\SHEETSPLAN\020201-RM.DWG
LAYOUT NAME - 21

PLOT DATE : 7/14/2022 3:39 PM PLOT BY : ERIC ANDRITSCH PLOT NAME : PLOT SCALE : ##########

WISDOT/CADDS SHEET 44

2

2

R/W

MILL AND RELAY EXISTING ASPHALT SHOULDER

668+00 'PB'

670+00 'PB'

672+00 'PB'

674+00 'PB'

676+00 'PB'

CTH PB WESTBOUND ON-RAMP

682+00 'PA'

CTH PB WESTBOUND OFF-RAMP

MATCHLINE STA. 668+00 'EB'

68+00 'WB'

670+00 'WB'

WB USH 18/151

672+00 'WB'

674+00 'WB'

676+00 'WB'

680+00 'WB'

682+00 'WB'

MATCHLINE STA. 683+00 'EB'

SALVAGE TERMINAL
HIGH-TENSION CABLE
SAFENCE TL-3, 4 CABLE

670+00 'EB'

672+00 'EB'

674+00 'EB'

676+00 'EB'

678+00 'EB'

680+00 'EB'

682+00 'EB'

EB USH 18/151

670+00 'PC'

MILL AND RELAY EXISTING ASPHALT SHOULDER

672+00 'PC'

CTH PB EASTBOUND OFF-RAMP

674+00 'PC'

676+00 'PC'

CTH PB

680+00 'PB'

678+00 'PB'

676+00 'PB'

CTH PB EASTBOUND ON-RAMP

MILL AND RELAY EXISTING ASPHALT SHOULDER

REMOVAL LEGEND

- REMOVING ASPHALTIC SURFACE
- REMOVING CURB & GUTTER
- REMOVING CONCRETE PAVEMENT
- REMOVING BEAM GUARD
- SALVAGE HIGH TENSION CABLE GUARD SAFENCE TL-3, 4 CABLE
- REMOVING FENCE
- XXXXXXXX SAWING CONCRETE/ASPHALT

PROJECT NO: 1204-08-65	HWY: USH 18/151	COUNTY: DANE	REMOVAL PLANS	SHEET 63	E

FILE NAME : G:\WDOTSW\20007-000 USH 18\CIVIL 3D\SHEETSPLAN\020201-RM.DWG
LAYOUT NAME - 22

PLOT DATE : 7/14/2022 3:40 PM PLOT BY : ERIC ANDRITSCH PLOT NAME : PLOT SCALE : ##########

WISDOT/CADDS SHEET 42

2

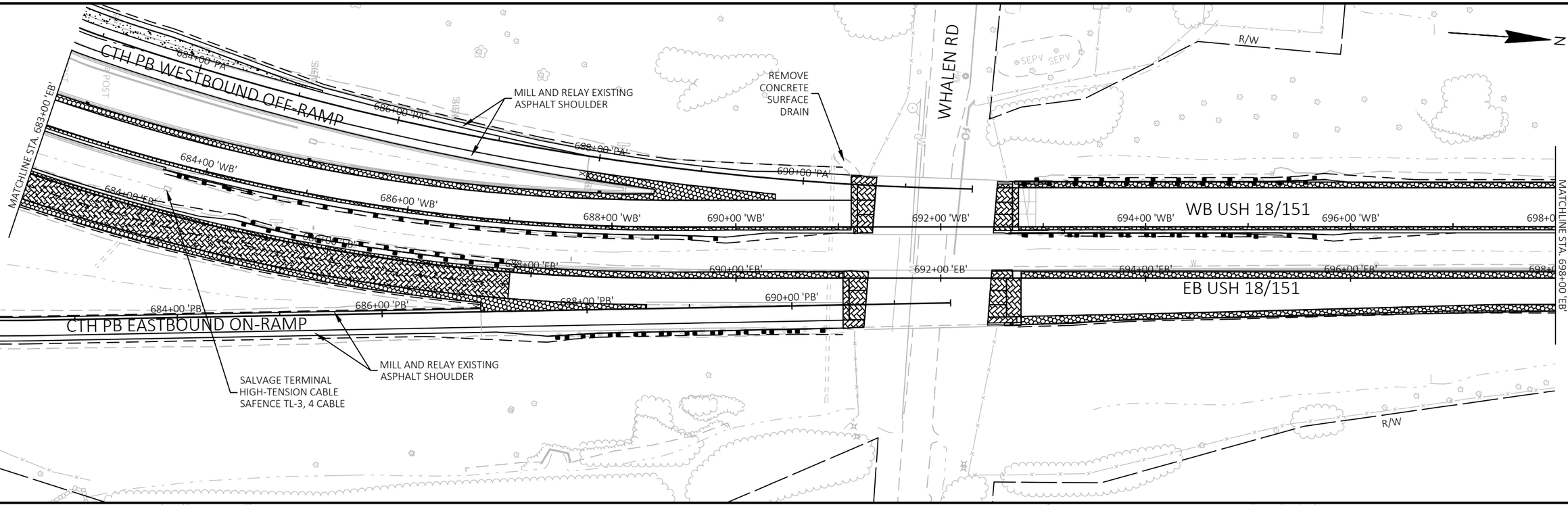

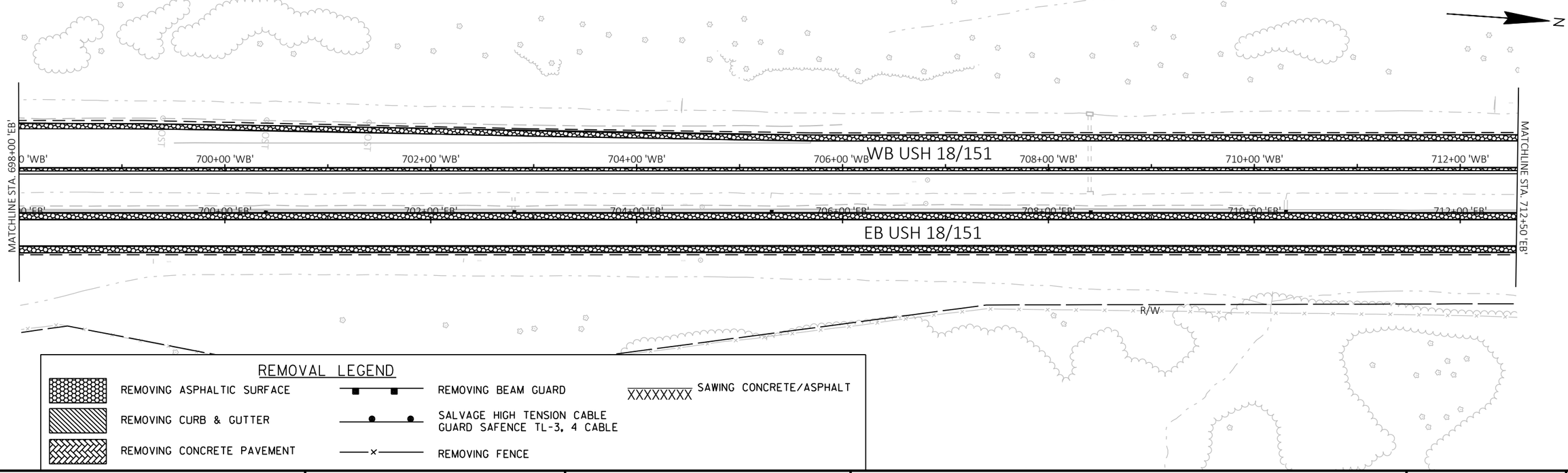

REMOVAL LEGEND

- REMOVING ASPHALTIC SURFACE
- REMOVING CURB & GUTTER
- REMOVING CONCRETE PAVEMENT
- REMOVING BEAM GUARD
- SALVAGE HIGH TENSION CABLE GUARD SAFENCE TL-3, 4 CABLE
- REMOVING FENCE
- XXXXXXXX SAWING CONCRETE/ASPHALT

PROJECT NO: 1204-08-65	HWY: USH 18/151	COUNTY: DANE	REMOVAL PLANS	SHEET 64	E

FILE NAME : G:\WDOTSW\20007-000 USH 18\CIVIL 3D\SHEETSPLAN\020201-RM.DWG
LAYOUT NAME - 23
PLOT DATE : 7/14/2022 3:40 PM
PLOT BY : ERIC ANDRITSCH
PLOT NAME :
PLOT SCALE : ##########

2

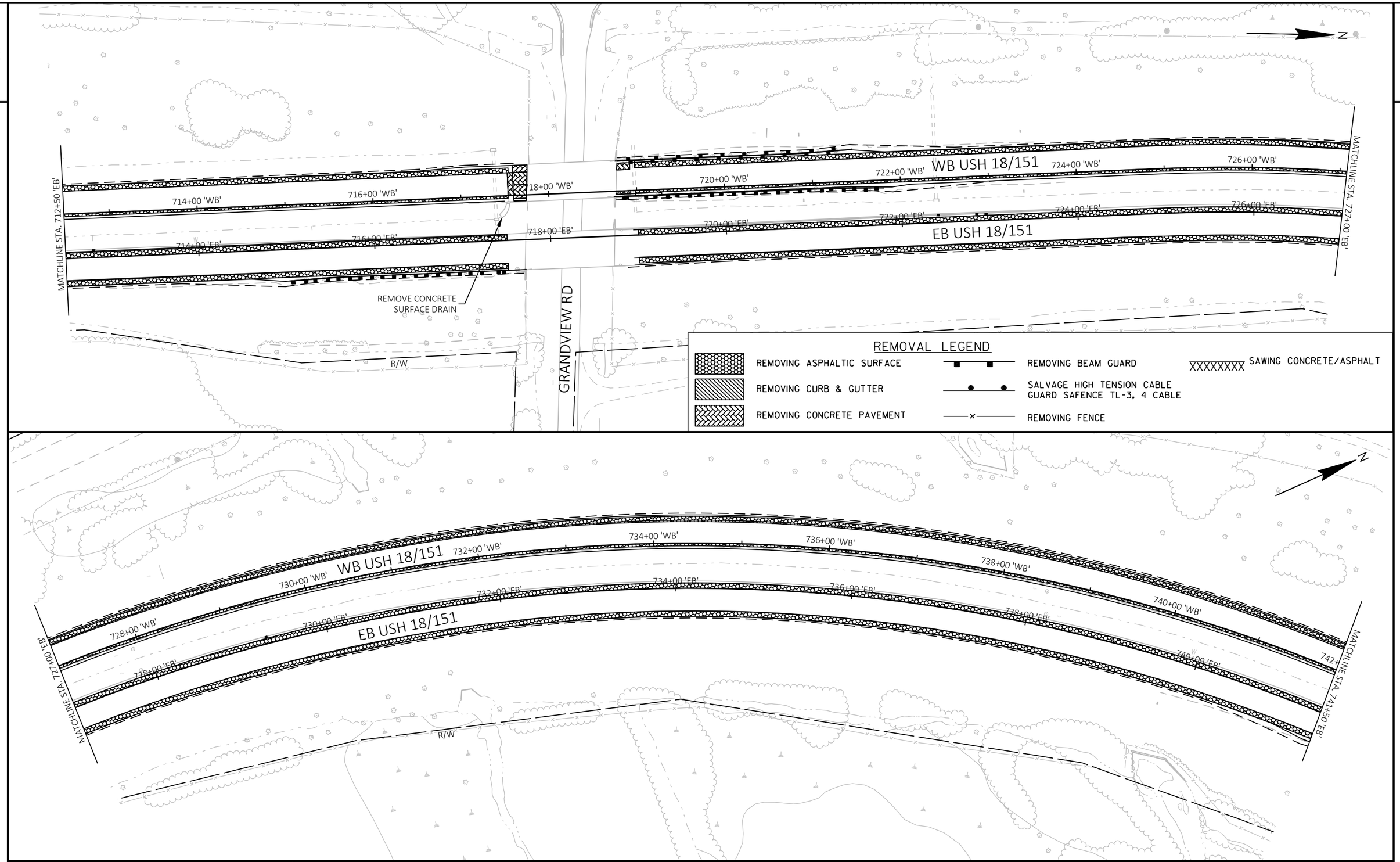

PROJECT NO: 1204-08-65	HWY: USH 18/151	COUNTY: DANE	REMOVAL PLANS	SHEET 65	E

FILE NAME : G:\WDOTSW\20007-000 USH 18\CIVIL 3D\SHEETSPLAN\020201-RM.DWG
LAYOUT NAME - 24
PLOT DATE : 7/14/2022 3:41 PM
PLOT BY : ERIC ANDRITSCH
PLOT NAME :
PLOT SCALE : ##########
WISDOT/CADDS SHEET 44

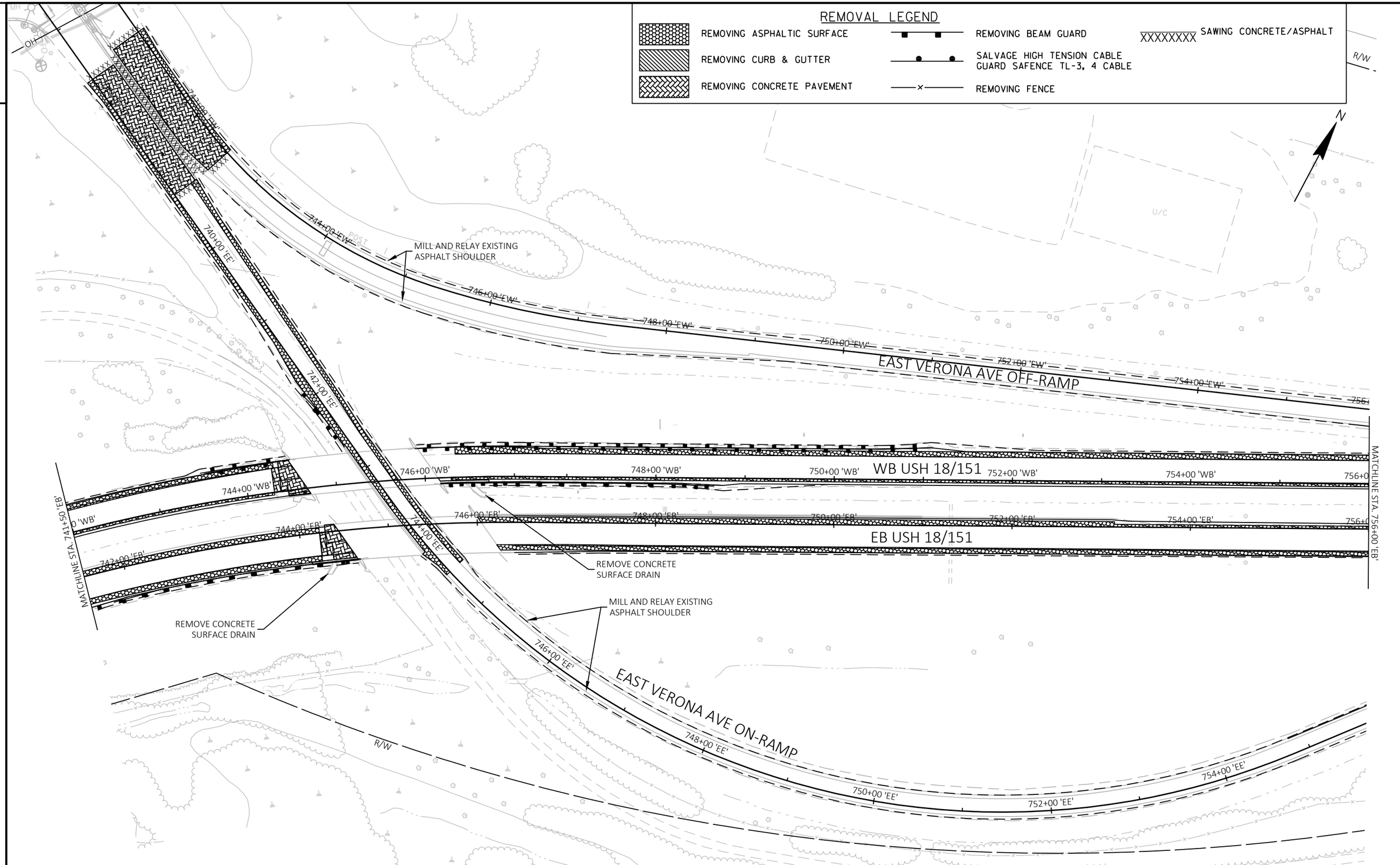

PROJECT NO: 1204-08-65	HWY: USH 18/151	COUNTY: DANE	REMOVAL PLANS	SHEET 66	E

FILE NAME : G:\WDOTSW\20007-000 USH 18\CIVIL 3D\SHEETSPLAN\020201-RM.DWG
LAYOUT NAME - 25
PLOT DATE : 7/14/2022 3:42 PM
PLOT BY : ERIC ANDRITSCH
PLOT NAME :
PLOT SCALE : ###########
WISDOT/CADDS SHEET 42

2

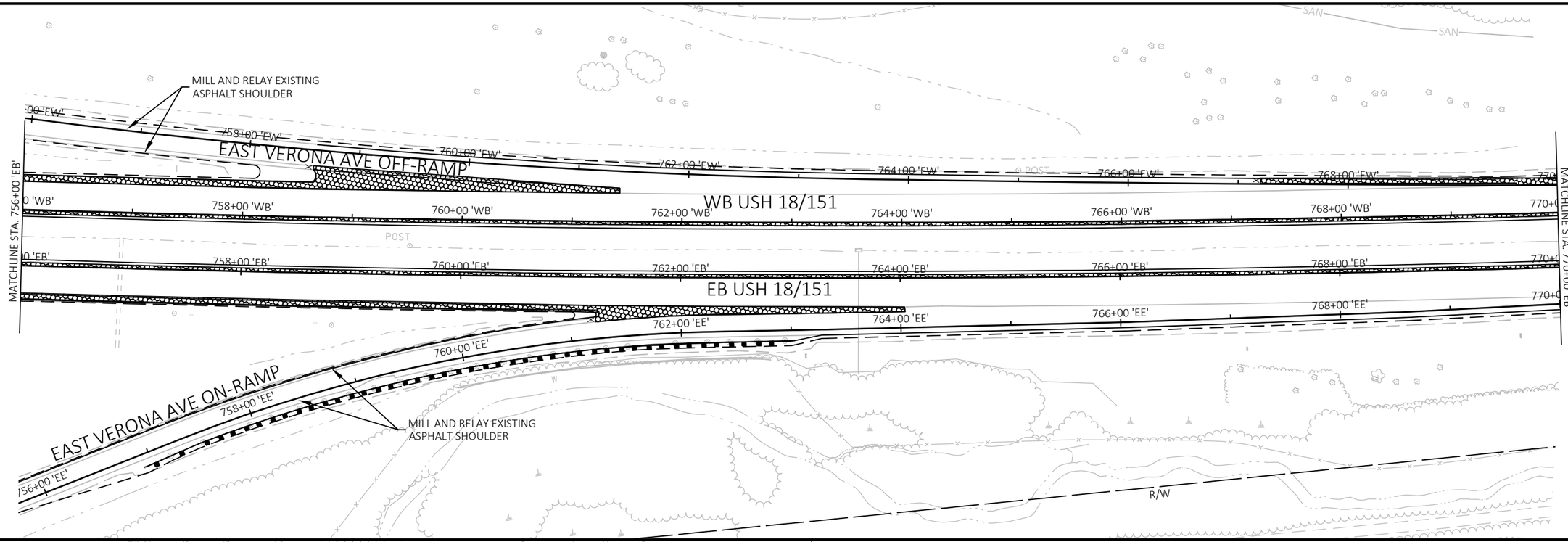

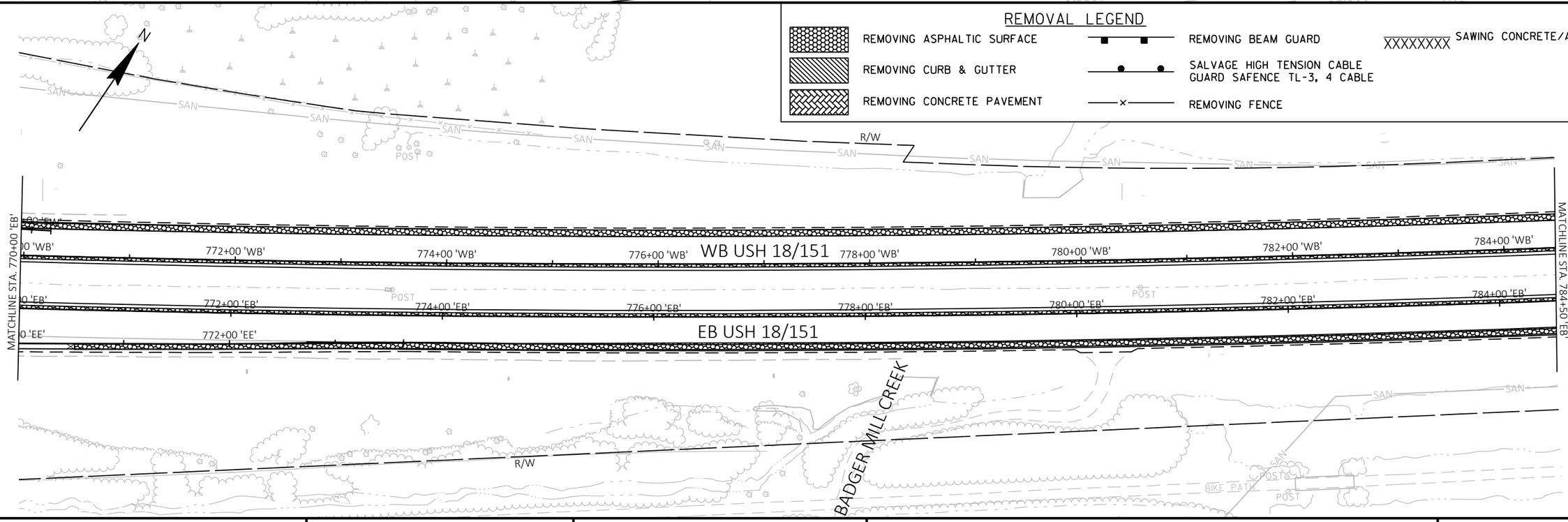

PROJECT NO: 1204-08-65	HWY: USH 18/151	COUNTY: DANE	REMOVAL PLANS	SHEET 67	E

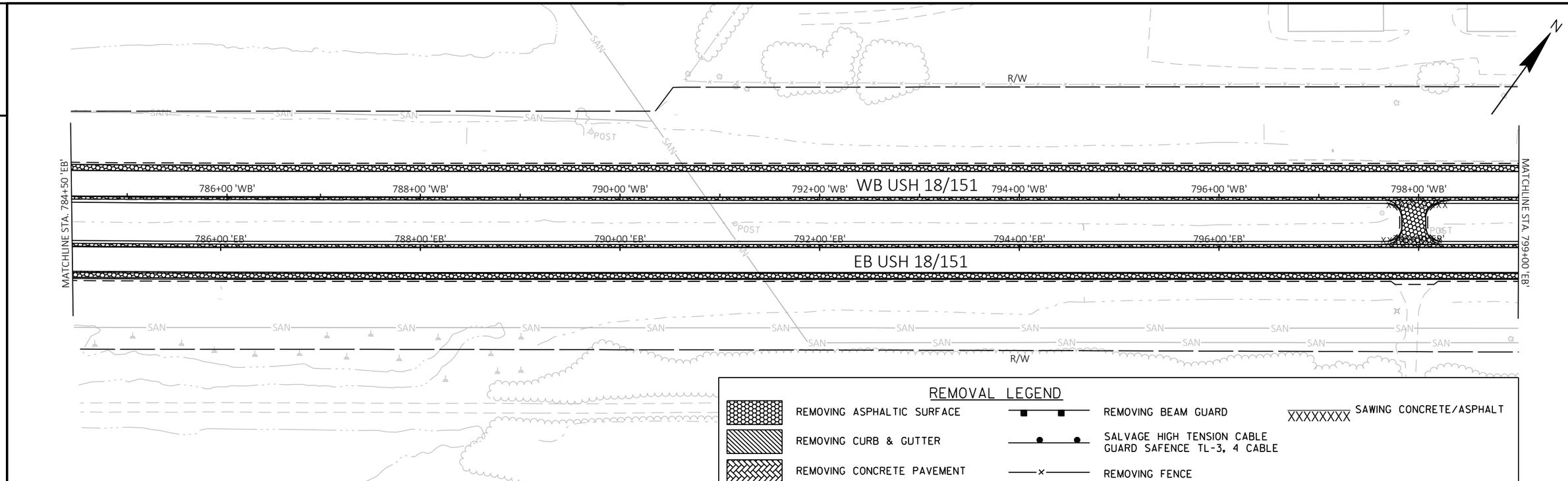

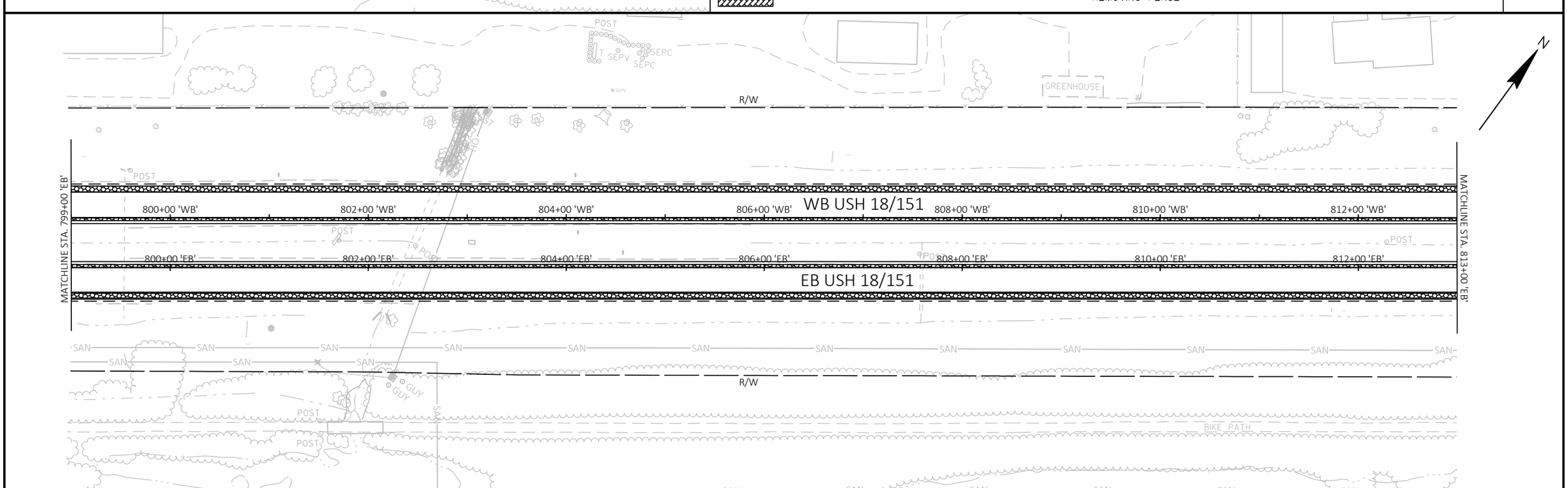

PROJECT NO: 1204-08-65	HWY: USH 18/151	COUNTY: DANE	REMOVAL PLANS	SHEET 68	E

FILE NAME : G:\WDOTSW\20007-000 USH 18\CIVIL 3D\SHEETSPLAN\020201-RM.DWG
LAYOUT NAME - 27
PLOT DATE : 7/14/2022 3:43 PM
PLOT BY : ERIC ANDRITSCH
PLOT NAME :
PLOT SCALE : 1 IN:100 FT
WISDOT/CADDS SHEET 44

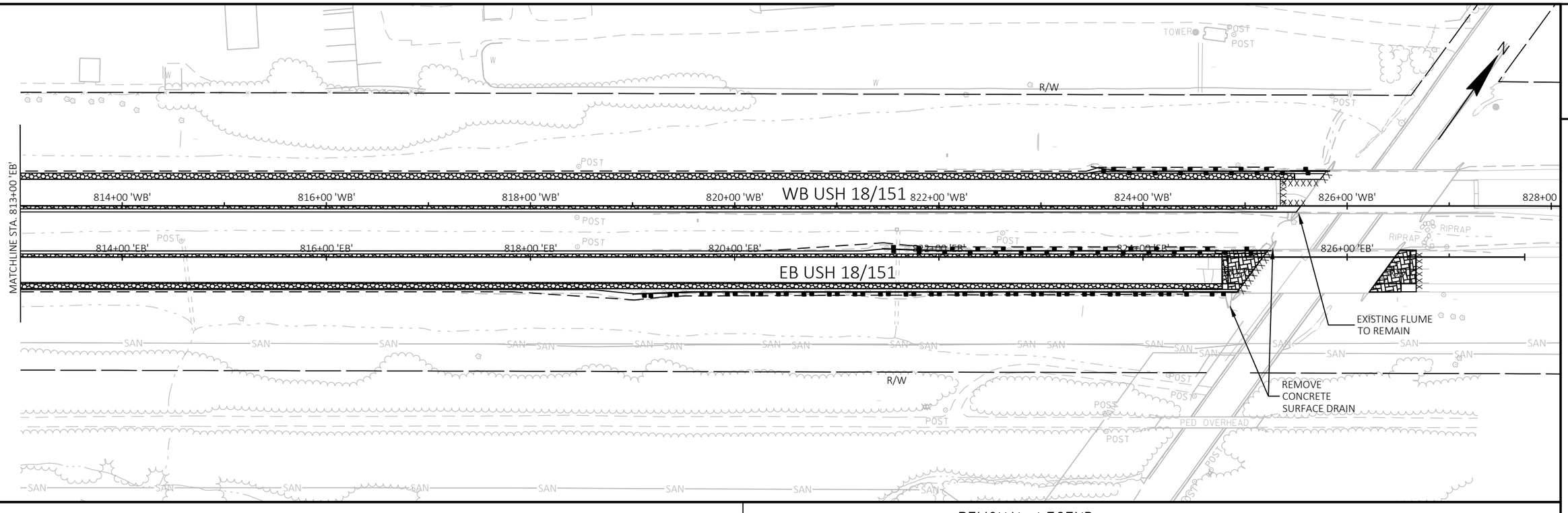

REMOVAL LEGEND

- REMOVING ASPHALTIC SURFACE
- REMOVING CURB & GUTTER
- REMOVING CONCRETE PAVEMENT
- REMOVING BEAM GUARD
- SALVAGE HIGH TENSION CABLE GUARD SAFENCE TL-3, 4 CABLE
- REMOVING FENCE
- XXXXXXXX SAWING CONCRETE/ASPHALT

PROJECT NO: 1204-08-65	HWY: USH 18/151	COUNTY: DANE	REMOVAL PLANS	SHEET 69	E

FILE NAME : G:\WDOTSW\20007-000 USH 18\CIVIL 3D\SHEETSPLAN\020201-RM.DWG
LAYOUT NAME - 28

PLOT DATE : 7/18/2022 1:38 PM PLOT BY : JOSH MERCIER PLOT NAME : PLOT SCALE : 1 IN:100 FT

WISDOT/CADDS SHEET 44

2

STATION & OFFSET TABLE							
POINT	STATION	OFFSET	STATION	OFFSET	Y COORDS	X COORDS	RADIUS (FT)
1	175+40.76 'EB'	-6.00 LT	175+49.21 'WB'	44.70 RT	457134.170	741222.378	
2	175+55.69 'EB'	-20.94 LT	175+64.31 'WB'	29.77 RT	457145.173	741240.442	
3C	175+40.76 'EB'	-21.00 LT	175+49.21 'WB'	29.70 RT	457148.756	741225.876	15
4	175+55.71 'EB'	-29.64 LT	175+64.33 'WB'	21.07 RT	457153.622	741242.521	
5	175+40.98 'EB'	-44.70 LT	175+49.44 'WB'	6.00 RT	457171.751	741231.619	
6C	175+40.81 'EB'	-29.70 LT	175+49.26 'WB'	21.00 RT	457157.206	741227.955	15
7	175+94.51 'EB'	-6.00 LT	176+03.56 'WB'	44.71 RT	457121.311	741274.643	
8	175+79.58 'EB'	-20.94 LT	175+88.46 'WB'	29.77 RT	457139.439	741263.747	
9C	175+94.51 'EB'	-21.00 LT	176+03.56 'WB'	29.71 RT	457135.855	741278.312	15
10	175+79.56 'EB'	-29.64 LT	175+88.44 'WB'	21.06 RT	457147.894	741265.827	
11	175+94.46 'EB'	-44.71 LT	176+03.51 'WB'	6.00 RT	457158.855	741284.060	
12C	175+94.46 'EB'	-29.71 LT	176+03.51 'WB'	21.00 RT	457144.311	741280.393	15



PROJECT NO: 1204-08-65	HWY: USH 18/151	COUNTY: DANE	INTERSECTION DETAILS - MAINTENANCE CROSSOVER	SHEET 70	E

FILE NAME : G:\WDOTSW\20007-000 USH 18\CIVIL 3D\SHEETSPLAN\021101-ID.DWG
LAYOUT NAME - (1)

PLOT DATE : 7/14/2022 1:45 PM PLOT BY : ERIC ANDRITSCH PLOT NAME : PLOT SCALE : 1 IN:40 FT

WISDOT/CADDS SHEET 42

2

STATION & OFFSET TABLE					
POINT	STATION	OFFSET	STATION	OFFSET	RADIUS (FT)
23	253+74.92 'EB'	-6.00 LT	253+68.44 'WB'	44.46 RT	
24	254+24.58 'EB'	-11.00 LT	254+17.67 'WB'	39.47 RT	
25	254+58.61 'EB'	-11.00 LT	254+51.40 'WB'	39.47 RT	
26	254+63.47 'EB'	-33.98 LT	254+56.21 'WB'	16.49 RT	
27C	254+58.61 'EB'	-23.00 LT	254+51.40 'WB'	27.47 RT	12
28	254+10.23 'EB'	-44.47 LT	254+03.45 'WB'	6.00 RT	
29C	254+13.18 'EB'	81.99 RT	254+06.36 'WB'	132.46 RT	126

STATION & OFFSET TABLE					
POINT	STATION	OFFSET	STATION	OFFSET	RADIUS (FT)
30	255+64.39 'EB'	-6.05 LT	255+56.24 'WB'	44.43 RT	
31	255+38.28 'EB'	-12.85 LT	255+30.36 'WB'	37.63 RT	
32	255+63.44 'EB'	-55.04 LT	255+55.30 'WB'	-4.56 LT	
33	255+37.57 'EB'	-26.16 LT	255+29.66 'WB'	24.31 RT	
34C	255+42.30 'EB'	-19.69 LT	255+34.34 'WB'	30.78 RT	8
35	255+66.74 'EB'	-38.48 LT	255+58.57 'WB'	12.00 RT	
36C	255+77.79 'EB'	28.44 RT	255+69.52 'WB'	78.92 RT	68
37	256+24.84 'EB'	-38.48 LT	256+16.16 'WB'	12.00 RT	
38	256+96.31 'EB'	-44.49 LT	256+87.00 'WB'	6.00 RT	

2

DESPINS LN

N

R/W

14+00'SD'

5' TYP.

2'

6'

CABLE GUARD SAFENCE TL-3, 4 CABLE

CABLE GUARD END TERMINAL SAFENCE TL-3, 4 CABLE

WB USH 18/151

WB USH 18/151 'WB' R/L

252'WB'

253'WB'

254'WB'

255'WB'

256'WB'

257'WB'

6'

26'

32C

38

37

35

12'

2'

STA 254+93.23 'WB' =
STA 13+27.22 'SD'

13+00'SD'

28

26

27C

24

25

23

2'

11'

33

34C

31

30

252'EB'

253'EB'

254'EB'

255'EB'

256'EB'

257'EB'

EB USH 18/151

26'

EB USH 18/151 R/L

SAWING ASPHALT, TYP. (PHASE 1)

STA 254+96.57 'EB' =
STA 12+76.56 'SD'

36C

22

13

14

10.0' TYP.

20

19

15

ALLIANT ENERGY (ELEC)(OH)

12+00'SD'

18

21C

29C

17C

+88.60
14.67'

16

R/W

CONCRETE CURB & GUTTER 4-INCH SLOPED 36-INCH TYPE D

SPRINGDALE CENTER RD

STA 11+40'SD'
REMOVING ASPHALTIC SURFACE BUTT JOINTS REQUIRED.
MATCH EXISTING

LEGEND

REMOVING ASPHALTIC SURFACE BUTT JOINTS

.XXXXX. SAWING ASPHALT OR CONCRETE

STATION & OFFSET TABLE								
POINT	STATION	OFFSET	STATION	OFFSET	Y COORDS	X COORDS	RADIUS (FT)	ELEV
13	253+89.16 'EB'	32.02 RT	12+36.70 'SD'	-105.06 LT	452850.079	747620.012		
14	254+26.88 'EB'	35.06 RT	12+36.23 'SD'	-67.00 LT	452821.262	747644.873		1176.34
15	254+63.27 'EB'	58.16 RT	12+15.91 'SD'	-28.71 LT	452779.112	747655.017		1175.78
16	254+71.77 'EB'	110.54 RT	11+61.17 'SD'	-12.09 LT	452735.471	747624.807		1175.10
17C	254+16.08 'EB'	93.29 RT	11+59.25 'SD'	-71.31 LT	452787.388	747596.269	59	
18	255+06.28 'EB'	76.22 RT	12+01.44 'SD'	16.13 RT	452735.940	747673.877		1176.50
19	255+17.62 'EB'	46.50 RT	12+32.02 'SD'	25.00 RT	452749.556	747702.670		1177.16
20	255+50.54 'EB'	34.30 RT	12+47.15 'SD'	56.93 RT	452735.655	747735.152		1177.96
21C	255+46.51 'EB'	74.88 RT	12+06.36 'SD'	56.62 RT	452708.873	747704.389	41	
22	255+88.39 'EB'	32.00 RT	12+53.07 'SD'	94.61 RT	452711.361	747764.550		

PROJECT NO: 1204-08-65	HWY: USH 18/151	COUNTY: DANE	INTERSECTION DETAILS - SPRINGDALE CENTER ROAD	SHEET 71	E

2

STATION & OFFSET TABLE					
POINT	STATION	OFFSET	STATION	OFFSET	RADIUS (FT)
39	276+20.58 'EB'	-6.00 LT	275+94.26 'WB'	44.59 RT	
40	276+73.11 'EB'	-12.00 LT	276+46.33 'WB'	38.59 RT	
41	277+01.98 'EB'	-12.00 LT	276+74.94 'WB'	38.59 RT	
42	277+01.98 'EB'	-44.59 LT	276+74.94 'WB'	6.00 RT	
43C	277+01.98 'EB'	-28.30 LT	276+74.94 'WB'	22.30 RT	16
44	277+74.48 'EB'	-6.00 LT	277+46.80 'WB'	44.60 RT	
45	277+74.48 'EB'	-38.60 LT	277+46.80 'WB'	12.00 RT	
46C	277+74.48 'EB'	-22.30 LT	277+46.80 'WB'	28.30 RT	16
47	278+01.66 'EB'	-38.60 LT	277+73.75 'WB'	12.00 RT	
48	278+53.76 'EB'	-44.60 LT	278+25.38 'WB'	6.00 RT	

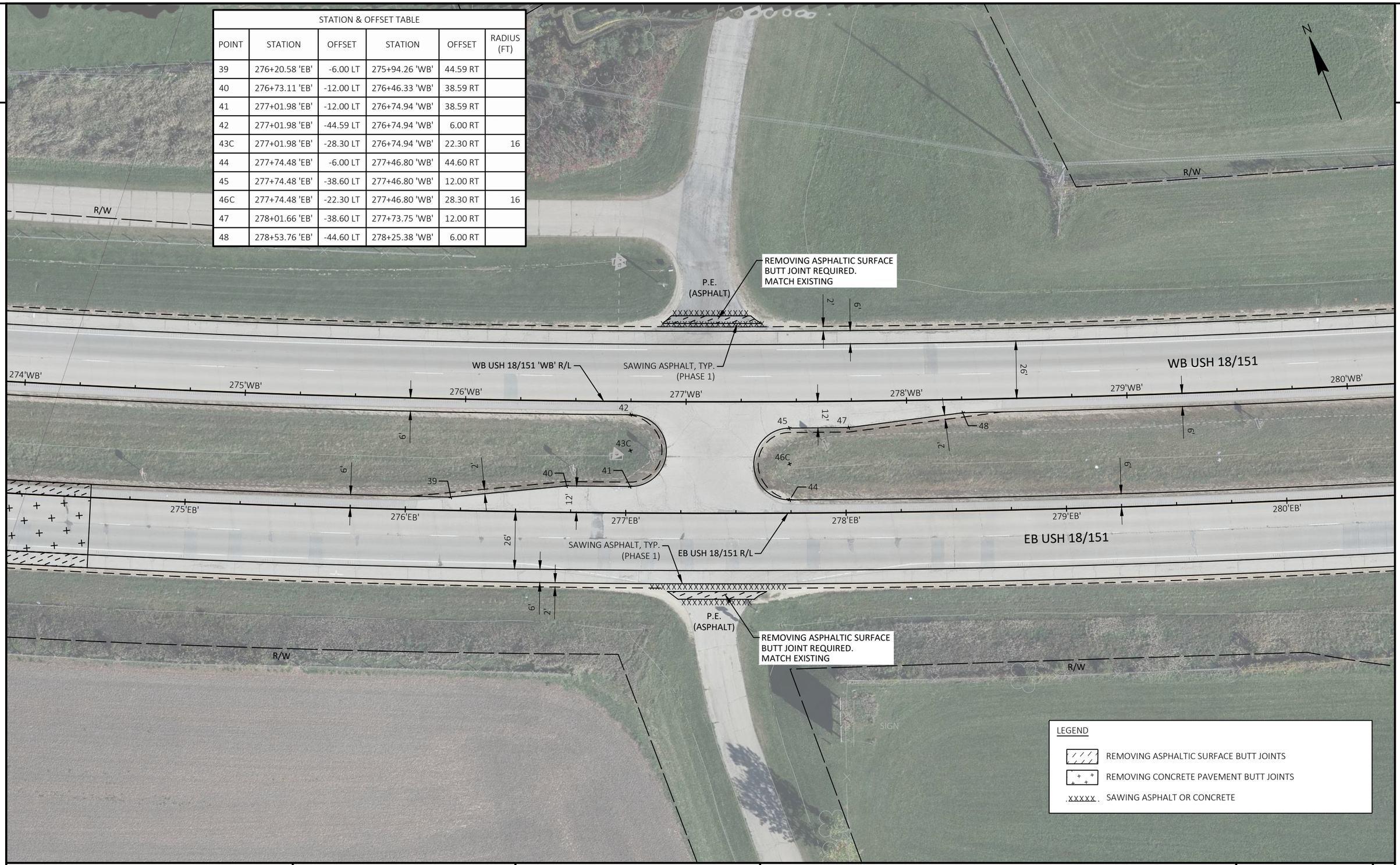

PROJECT NO: 1204-08-65	HWY: USH 18/151	COUNTY: DANE	INTERSECTION DETAILS - PRIVATE DRIVE	SHEET 72	E

2

STATION & OFFSET TABLE					
POINT	STATION	OFFSET	STATION	OFFSET	RADIUS (FT)
59	290+80.40 'EB'	-6.00 LT	290+41.17 'WB'	44.63 RT	
60	290+86.72 'EB'	-30.38 LT	290+47.43 'WB'	20.25 RT	
61C	290+80.40 'EB'	-19.00 LT	290+41.17 'WB'	31.63 RT	13
62	290+31.21 'EB'	-44.62 LT	289+92.42 'WB'	6.00 RT	
63C	290+28.42 'EB'	69.38 RT	289+89.65 'WB'	120.00 RT	116

STATION & OFFSET TABLE					
POINT	STATION	OFFSET	STATION	OFFSET	RADIUS (FT)
64	291+51.63 'EB'	-6.00 LT	291+11.77 'WB'	44.63 RT	
65	291+45.84 'EB'	-28.52 LT	291+06.03 'WB'	22.10 RT	
66C	291+51.63 'EB'	-18.00 LT	291+11.77 'WB'	32.63 RT	12
67	291+85.47 'EB'	-38.63 LT	291+45.31 'WB'	12.00 RT	
68C	291+85.47 'EB'	44.37 RT	291+45.31 'WB'	95.00 RT	83
69	292+37.58 'EB'	-38.63 LT	291+96.95 'WB'	12.00 RT	
70	293+20.59 'EB'	-44.63 LT	292+79.23 'WB'	6.00 RT	

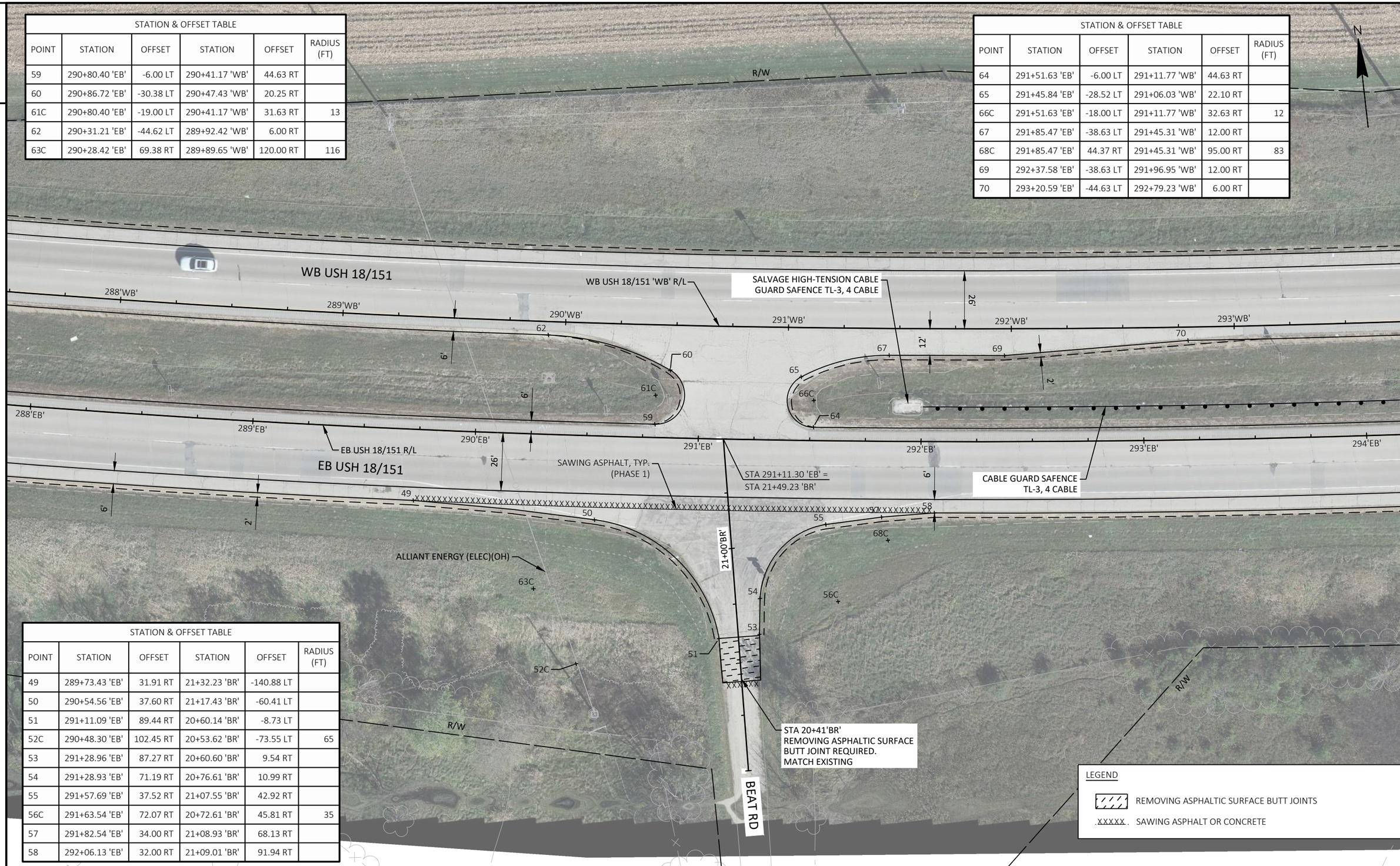

STATION & OFFSET TABLE					
POINT	STATION	OFFSET	STATION	OFFSET	RADIUS (FT)
49	289+73.43 'EB'	31.91 RT	21+32.23 'BR'	-140.88 LT	
50	290+54.56 'EB'	37.60 RT	21+17.43 'BR'	-60.41 LT	
51	291+11.09 'EB'	89.44 RT	20+60.14 'BR'	-8.73 LT	
52C	290+48.30 'EB'	102.45 RT	20+53.62 'BR'	-73.55 LT	65
53	291+28.96 'EB'	87.27 RT	20+60.60 'BR'	9.54 RT	
54	291+28.93 'EB'	71.19 RT	20+76.61 'BR'	10.99 RT	
55	291+57.69 'EB'	37.52 RT	21+07.55 'BR'	42.92 RT	
56C	291+63.54 'EB'	72.07 RT	20+72.61 'BR'	45.81 RT	35
57	291+82.54 'EB'	34.00 RT	21+08.93 'BR'	68.13 RT	
58	292+06.13 'EB'	32.00 RT	21+09.01 'BR'	91.94 RT	

PROJECT NO: 1204-08-65	HWY: USH 18/151	COUNTY: DANE	INTERSECTION DETAILS - BEAT ROAD	SHEET 73	E

2

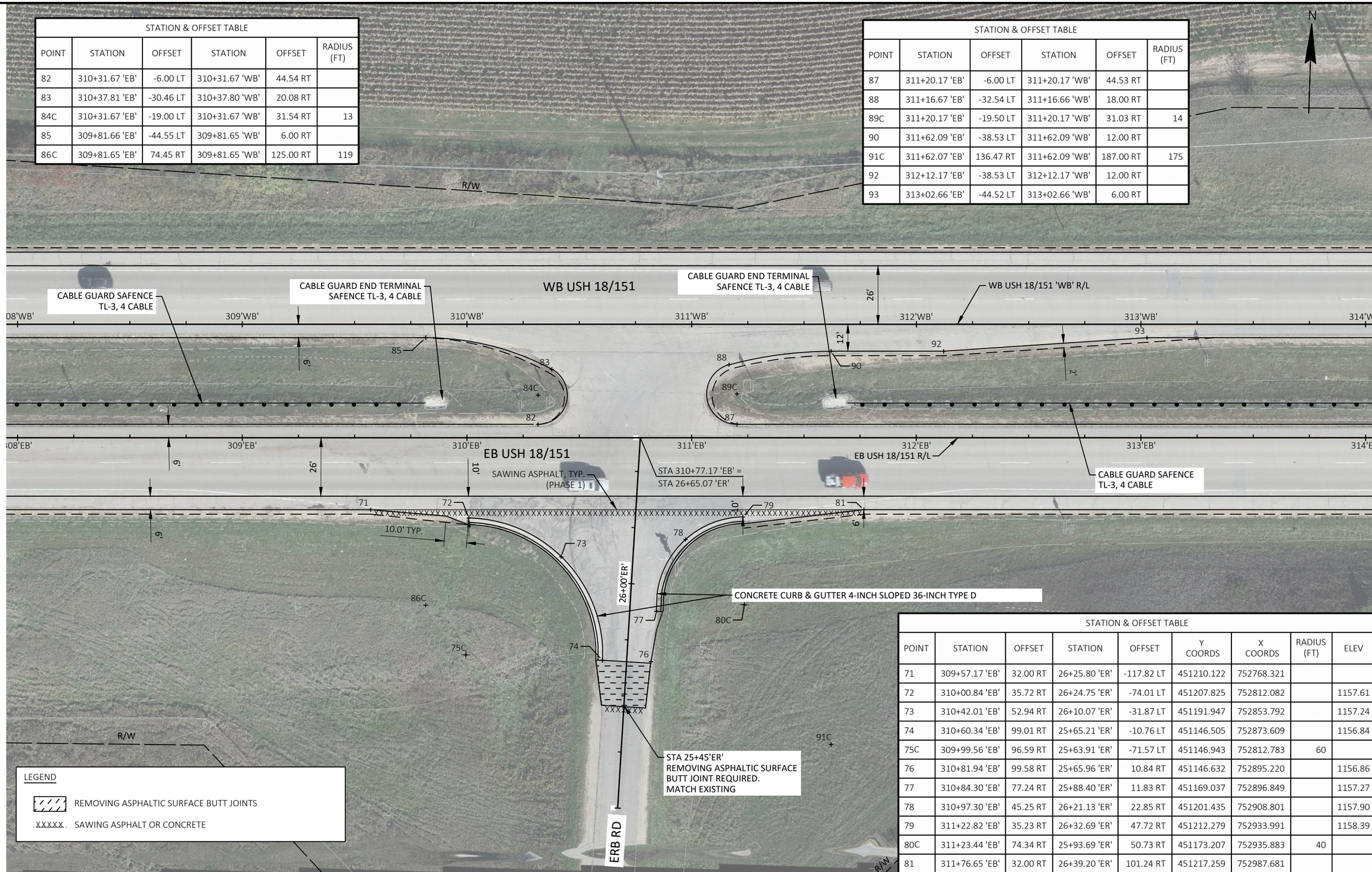

STATION & OFFSET TABLE

POINT	STATION	OFFSET	STATION	OFFSET	RADIUS (FT)
82	310+31.67 'EB'	-6.00 LT	310+31.67 'WB'	44.54 RT	
83	310+37.81 'EB'	-30.46 LT	310+37.80 'WB'	20.08 RT	
84C	310+31.67 'EB'	-19.00 LT	310+31.67 'WB'	31.54 RT	13
85	309+81.66 'EB'	-44.55 LT	309+81.65 'WB'	6.00 RT	
86C	309+81.65 'EB'	74.45 RT	309+81.65 'WB'	125.00 RT	119

STATION & OFFSET TABLE

POINT	STATION	OFFSET	STATION	OFFSET	RADIUS (FT)
87	311+20.17 'EB'	-6.00 LT	311+20.17 'WB'	44.53 RT	
88	311+16.67 'EB'	-32.54 LT	311+16.66 'WB'	18.00 RT	
89C	311+20.17 'EB'	-19.50 LT	311+20.17 'WB'	31.03 RT	14
90	311+62.09 'EB'	-38.53 LT	311+62.09 'WB'	12.00 RT	
91C	311+62.07 'EB'	136.47 RT	311+62.09 'WB'	187.00 RT	175
92	312+12.17 'EB'	-38.53 LT	312+12.17 'WB'	12.00 RT	
93	313+02.66 'EB'	-44.52 LT	313+02.66 'WB'	6.00 RT	

STATION & OFFSET TABLE

POINT	STATION	OFFSET	STATION	OFFSET	Y COORDS	X COORDS	RADIUS (FT)	ELEV
71	309+57.17 'EB'	32.00 RT	26+25.80 'ER'	-117.82 LT	451210.122	752768.321		
72	310+00.84 'EB'	35.72 RT	26+24.75 'ER'	-74.01 LT	451207.825	752812.082		1157.61
73	310+42.01 'EB'	52.94 RT	26+10.07 'ER'	-31.87 LT	451191.947	752853.792		1157.24
74	310+60.34 'EB'	99.01 RT	25+65.21 'ER'	-10.76 LT	451146.505	752873.609		1156.84
75C	309+99.56 'EB'	96.59 RT	25+63.91 'ER'	-71.57 LT	451146.943	752812.783	60	
76	310+81.94 'EB'	99.58 RT	25+65.96 'ER'	10.84 RT	451146.632	752895.220		1156.86
77	310+84.30 'EB'	77.24 RT	25+88.40 'ER'	11.83 RT	451169.037	752896.849		1157.27
78	310+97.30 'EB'	45.25 RT	26+21.13 'ER'	22.85 RT	451201.435	752908.801		1157.90
79	311+22.82 'EB'	35.23 RT	26+32.69 'ER'	47.72 RT	451212.279	752933.991		1158.39
80C	311+23.44 'EB'	74.34 RT	25+93.69 'ER'	50.73 RT	451173.207	752935.883	40	
81	311+76.65 'EB'	32.00 RT	26+39.20 'ER'	101.24 RT	451217.259	752987.681		

PROJECT NO: 1204-08-65	HWY: USH 18/151	COUNTY: DANE	INTERSECTION DETAILS - ERB ROAD	SHEET 74	E

FILE NAME : G:\WDOTSW\20007-000 USH 18\CIVIL 3D\SHEETSPLAN\021101-ID.DWG
LAYOUT NAME - ERB RD
PLOT DATE : 7/14/2022 1:48 PM
PLOT BY : ERIC ANDRITSCH
PLOT NAME :
PLOT SCALE : 1 IN:40 FT
WISDOT/CADDS SHEET 42

2

STATION & OFFSET TABLE					
POINT	STATION	OFFSET	STATION	OFFSET	RADIUS (FT)
94	317+15.66 'EB'	-6.00 LT	317+15.66 'WB'	44.48 RT	
95	317+89.34 'EB'	-12.00 LT	317+89.34 'WB'	38.48 RT	
96	318+14.88 'EB'	-12.00 LT	318+14.88 'WB'	38.48 RT	
97	318+14.88 'EB'	-44.48 LT	318+14.87 'WB'	6.00 RT	
98C	318+14.88 'EB'	-28.24 LT	318+14.87 'WB'	22.24 RT	16
99	318+74.35 'EB'	-6.00 LT	318+74.35 'WB'	44.47 RT	
100	318+74.35 'EB'	-44.47 LT	318+74.35 'WB'	6.00 RT	
101C	318+74.35 'EB'	-25.24 LT	318+74.35 'WB'	25.24 RT	19

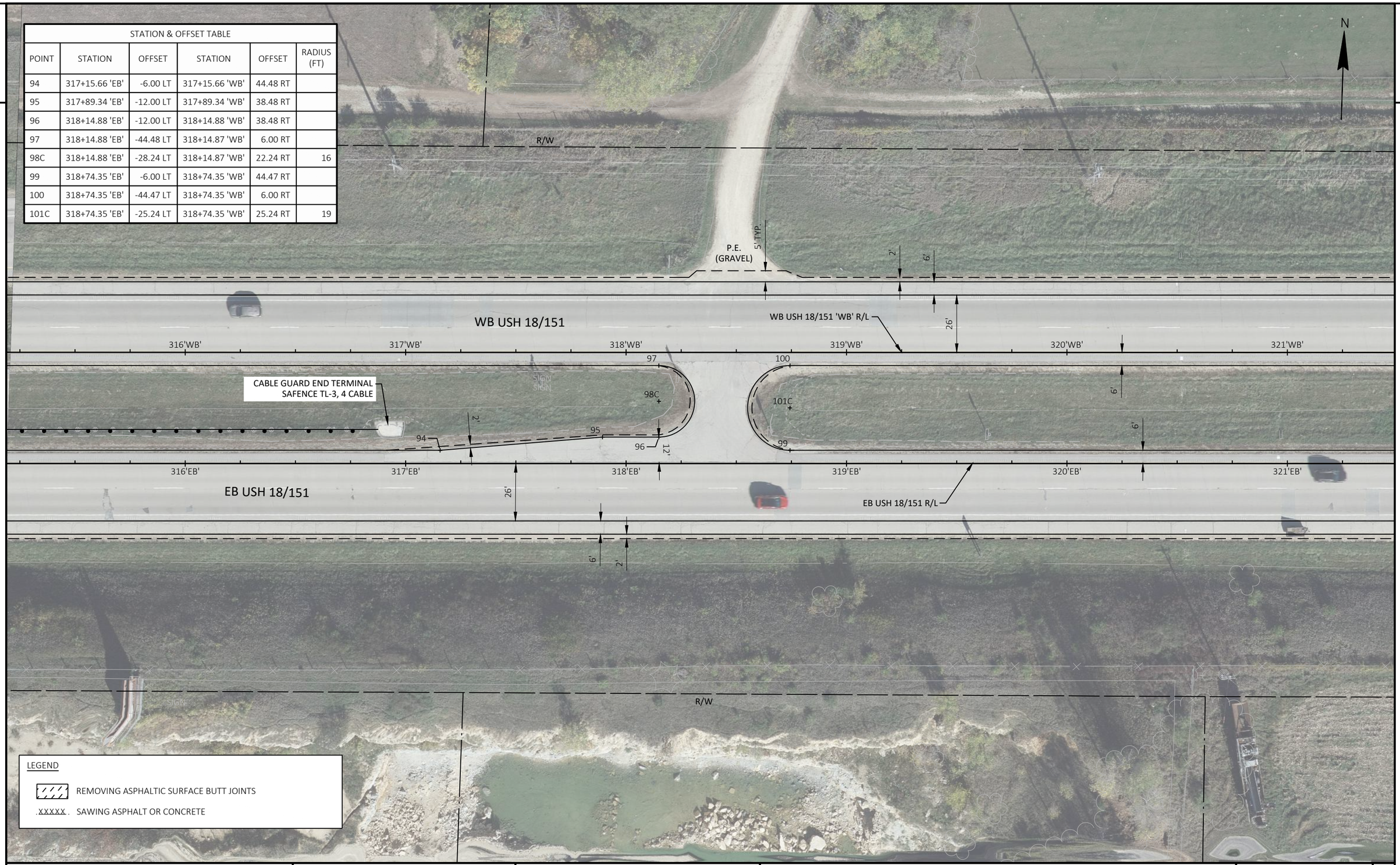

PROJECT NO: 1204-08-65	HWY: USH 18/151	COUNTY: DANE	INTERSECTION DETAILS	SHEET 75	E

FILE NAME : G:\WDOTSW\20007-000 USH 18\CIVIL 3D\SHEETSPLAN\021101-ID.DWG
LAYOUT NAME - (3)
PLOT DATE : 7/14/2022 1:49 PM
PLOT BY : ERIC ANDRITSCH
PLOT NAME :
PLOT SCALE : 1 IN:40 FT

STATION & OFFSET TABLE								
POINT	STATION	OFFSET	STATION	OFFSET	Y COORDS	X COORDS	RADIUS (FT)	ELEV
102	332+19.36 'WB'	-32.00 LT	30+33.00 'DR'	-106.90 LT	451397.981	755025.598		
103	332+69.16 'WB'	-35.76 LT	30+36.30 'DR'	-57.07 LT	451403.354	755075.250		1138.58
104	332+97.79 'WB'	-46.87 LT	30+47.14 'DR'	-28.34 LT	451415.390	755103.503		1138.06
105	333+10.16 'WB'	-74.98 LT	30+75.13 'DR'	-15.69 LT	451443.881	755114.963		1137.55
106C	332+70.06 'WB'	-75.86 LT	30+76.39 'DR'	-55.79 LT	451443.464	755074.853	40	
107	333+40.05 'WB'	-96.26 LT	30+96.13 'DR'	14.39 RT	451466.119	755144.142		1137.88
108	333+57.55 'WB'	-53.63 LT	30+53.33 'DR'	31.48 RT	451424.077	755163.012		1136.85
109	333+99.98 'WB'	-35.66 LT	30+34.97 'DR'	73.75 RT	451407.496	755206.009		1135.82
110C	334+00.59 'WB'	-96.20 LT	30+95.50 'DR'	74.93 RT	451468.023	755204.654	61	

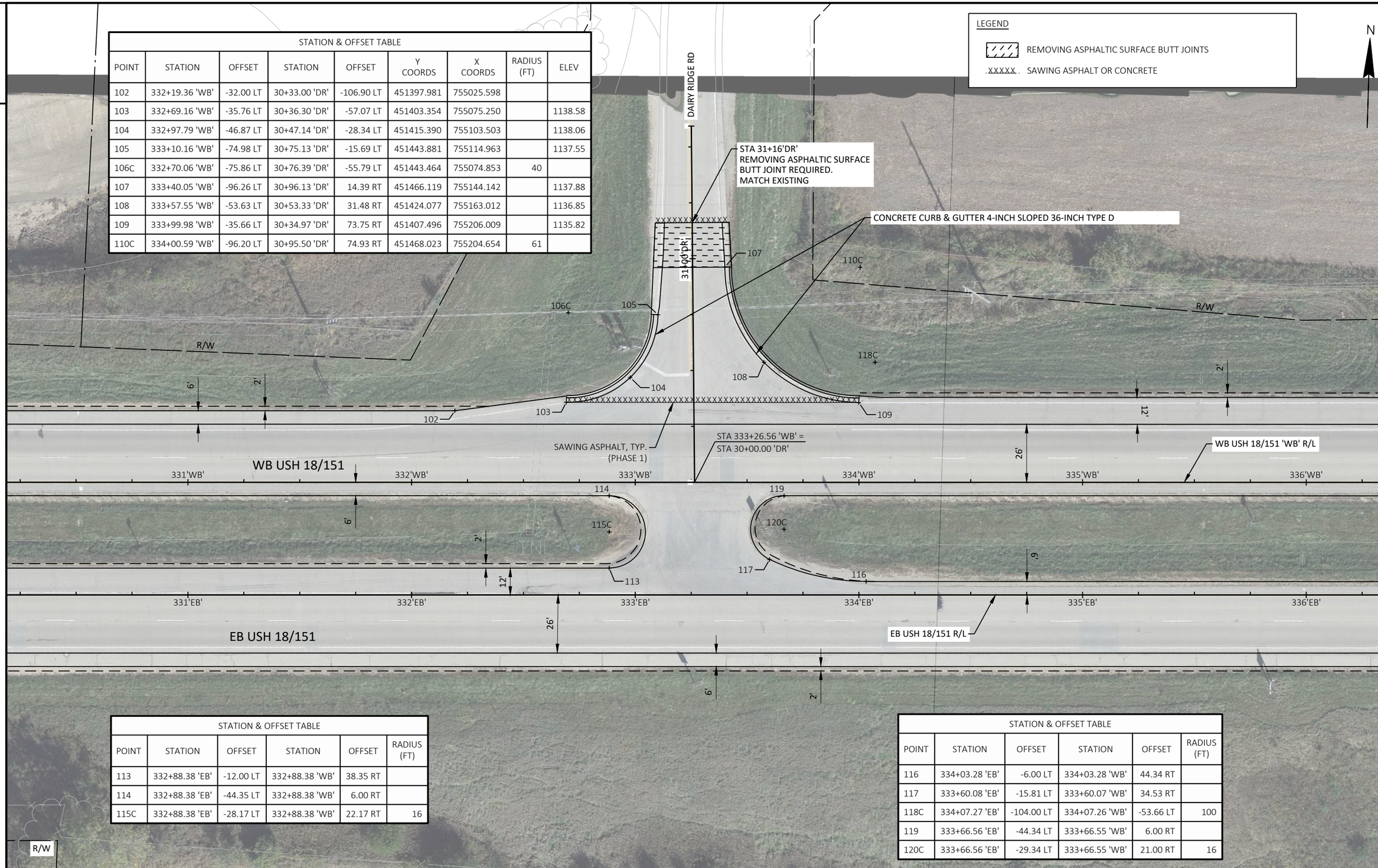

STATION & OFFSET TABLE					
POINT	STATION	OFFSET	STATION	OFFSET	RADIUS (FT)
113	332+88.38 'EB'	-12.00 LT	332+88.38 'WB'	38.35 RT	
114	332+88.38 'EB'	-44.35 LT	332+88.38 'WB'	6.00 RT	
115C	332+88.38 'EB'	-28.17 LT	332+88.38 'WB'	22.17 RT	16

STATION & OFFSET TABLE					
POINT	STATION	OFFSET	STATION	OFFSET	RADIUS (FT)
116	334+03.28 'EB'	-6.00 LT	334+03.28 'WB'	44.34 RT	
117	333+60.08 'EB'	-15.81 LT	333+60.07 'WB'	34.53 RT	
118C	334+07.27 'EB'	-104.00 LT	334+07.26 'WB'	-53.66 LT	100
119	333+66.56 'EB'	-44.34 LT	333+66.55 'WB'	6.00 RT	
120C	333+66.56 'EB'	-29.34 LT	333+66.55 'WB'	21.00 RT	16

2

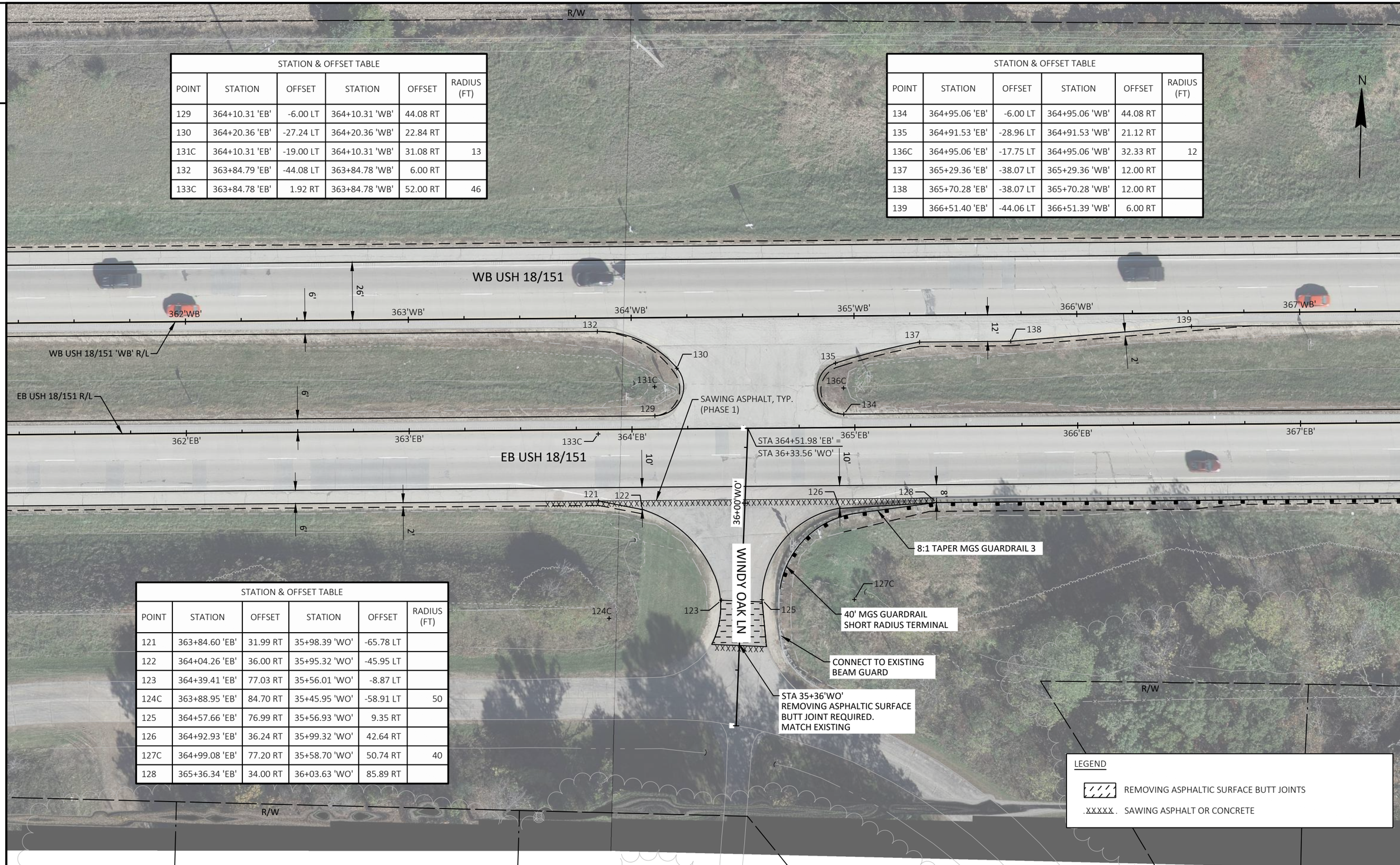

STATION & OFFSET TABLE

POINT	STATION	OFFSET	STATION	OFFSET	RADIUS (FT)
129	364+10.31 'EB'	-6.00 LT	364+10.31 'WB'	44.08 RT	
130	364+20.36 'EB'	-27.24 LT	364+20.36 'WB'	22.84 RT	
131C	364+10.31 'EB'	-19.00 LT	364+10.31 'WB'	31.08 RT	13
132	363+84.79 'EB'	-44.08 LT	363+84.78 'WB'	6.00 RT	
133C	363+84.78 'EB'	1.92 RT	363+84.78 'WB'	52.00 RT	46

STATION & OFFSET TABLE

POINT	STATION	OFFSET	STATION	OFFSET	RADIUS (FT)
134	364+95.06 'EB'	-6.00 LT	364+95.06 'WB'	44.08 RT	
135	364+91.53 'EB'	-28.96 LT	364+91.53 'WB'	21.12 RT	
136C	364+95.06 'EB'	-17.75 LT	364+95.06 'WB'	32.33 RT	12
137	365+29.36 'EB'	-38.07 LT	365+29.36 'WB'	12.00 RT	
138	365+70.28 'EB'	-38.07 LT	365+70.28 'WB'	12.00 RT	
139	366+51.40 'EB'	-44.06 LT	366+51.39 'WB'	6.00 RT	

STATION & OFFSET TABLE

POINT	STATION	OFFSET	STATION	OFFSET	RADIUS (FT)
121	363+84.60 'EB'	31.99 RT	35+98.39 'WO'	-65.78 LT	
122	364+04.26 'EB'	36.00 RT	35+95.32 'WO'	-45.95 LT	
123	364+39.41 'EB'	77.03 RT	35+56.01 'WO'	-8.87 LT	
124C	363+88.95 'EB'	84.70 RT	35+45.95 'WO'	-58.91 LT	50
125	364+57.66 'EB'	76.99 RT	35+56.93 'WO'	9.35 RT	
126	364+92.93 'EB'	36.24 RT	35+99.32 'WO'	42.64 RT	
127C	364+99.08 'EB'	77.20 RT	35+58.70 'WO'	50.74 RT	40
128	365+36.34 'EB'	34.00 RT	36+03.63 'WO'	85.89 RT	

2

PROJECT NO: 1204-08-65	HWY: USH 18/151	COUNTY: DANE	INTERSECTION DETAILS - WINDY OAK LANE	SHEET 77	E

FILE NAME : G:\WDOTSW\20007-000 USH 18\CIVIL 3D\SHEETSPLAN\021101-ID.DWG
LAYOUT NAME - WINDY OAK
PLOT DATE : 7/14/2022 1:50 PM PLOT BY : ERIC ANDRITSCH PLOT NAME : PLOT SCALE : 1 IN:40 FT
WISDOT/CADDS SHEET 42

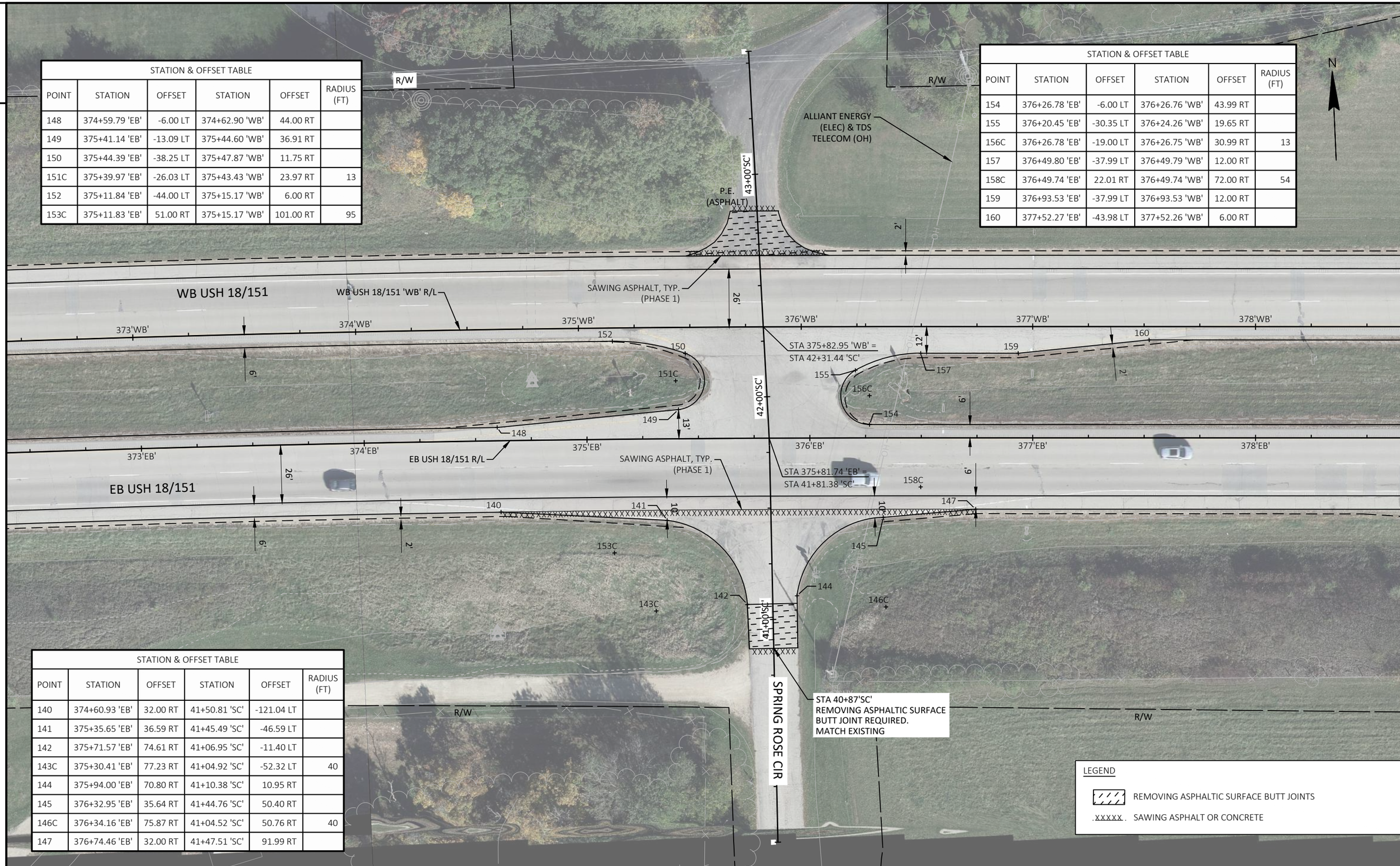

STATION & OFFSET TABLE

POINT	STATION	OFFSET	STATION	OFFSET	RADIUS (FT)
148	374+59.79 'EB'	-6.00 LT	374+62.90 'WB'	44.00 RT	
149	375+41.14 'EB'	-13.09 LT	375+44.60 'WB'	36.91 RT	
150	375+44.39 'EB'	-38.25 LT	375+47.87 'WB'	11.75 RT	
151C	375+39.97 'EB'	-26.03 LT	375+43.43 'WB'	23.97 RT	13
152	375+11.84 'EB'	-44.00 LT	375+15.17 'WB'	6.00 RT	
153C	375+11.83 'EB'	51.00 RT	375+15.17 'WB'	101.00 RT	95

STATION & OFFSET TABLE

POINT	STATION	OFFSET	STATION	OFFSET	RADIUS (FT)
154	376+26.78 'EB'	-6.00 LT	376+26.76 'WB'	43.99 RT	
155	376+20.45 'EB'	-30.35 LT	376+24.26 'WB'	19.65 RT	
156C	376+26.78 'EB'	-19.00 LT	376+26.75 'WB'	30.99 RT	13
157	376+49.80 'EB'	-37.99 LT	376+49.79 'WB'	12.00 RT	
158C	376+49.74 'EB'	22.01 RT	376+49.74 'WB'	72.00 RT	54
159	376+93.53 'EB'	-37.99 LT	376+93.53 'WB'	12.00 RT	
160	377+52.27 'EB'	-43.98 LT	377+52.26 'WB'	6.00 RT	

STATION & OFFSET TABLE

POINT	STATION	OFFSET	STATION	OFFSET	RADIUS (FT)
140	374+60.93 'EB'	32.00 RT	41+50.81 'SC'	-121.04 LT	
141	375+35.65 'EB'	36.59 RT	41+45.49 'SC'	-46.59 LT	
142	375+71.57 'EB'	74.61 RT	41+06.95 'SC'	-11.40 LT	
143C	375+30.41 'EB'	77.23 RT	41+04.92 'SC'	-52.32 LT	40
144	375+94.00 'EB'	70.80 RT	41+10.38 'SC'	10.95 RT	
145	376+32.95 'EB'	35.64 RT	41+44.76 'SC'	50.40 RT	
146C	376+34.16 'EB'	75.87 RT	41+04.52 'SC'	50.76 RT	40
147	376+74.46 'EB'	32.00 RT	41+47.51 'SC'	91.99 RT	

PROJECT NO: 1204-08-65	HWY: USH 18/151	COUNTY: DANE	INTERSECTION DETAILS - SPRING ROSE CIRCLE	SHEET 78	E

STATION & OFFSET TABLE								
POINT	STATION	OFFSET	STATION	OFFSET	Y COORDS	X COORDS	RADIUS (FT)	ELEV
189	408+80.55 'WB'	-32.00 LT	47+58.26 'SR'	-123.08 LT	451361.405	762687.773		
190	409+27.35 'WB'	-35.87 LT	47+60.90 'SR'	-76.20 LT	451363.177	762734.695		1018.32
191	409+70.01 'WB'	-53.60 LT	47+77.50 'SR'	-33.08 LT	451378.973	762778.114		1015.82
192	409+87.86 'WB'	-96.21 LT	48+19.64 'SR'	-14.12 LT	451420.748	762797.853		1013.32
193C	409+27.12 'WB'	-96.71 LT	48+21.73 'SR'	-74.83 LT	451423.968	762737.197	60	
194	410+17.28 'WB'	-96.27 LT	48+18.92 'SR'	15.29 RT	451419.481	762827.248		1013.31
195	410+34.67 'WB'	-53.61 LT	47+75.82 'SR'	31.55 RT	451376.090	762842.702		1013.54
196	410+77.26 'WB'	-36.08 LT	47+57.18 'SR'	73.67 RT	451356.667	762884.467		1013.78
197C	410+76.89 'WB'	-95.69 LT	48+16.78 'SR'	74.86 RT	451416.233	762886.770	60	
198	411+91.82 'WB'	-32.13 LT	47+50.23 'SR'	188.09 RT	451347.587	762998.740		

STATION & OFFSET TABLE					
POINT	STATION	OFFSET	STATION	OFFSET	RADIUS (FT)
172	408+09.96 'EB'	-6.00 LT	408+09.96 'WB'	43.57 RT	
173	408+86.08 'EB'	-12.00 LT	408+86.08 'WB'	37.56 RT	
174	409+25.08 'EB'	-12.00 LT	409+25.07 'WB'	37.55 RT	

STATION & OFFSET TABLE					
POINT	STATION	OFFSET	STATION	OFFSET	RADIUS (FT)
175	409+63.52 'EB'	-20.13 LT	409+63.52 'WB'	29.42 RT	
176C	409+25.08 'EB'	-107.00 LT	409+25.06 'WB'	-57.45 LT	95
177	409+62.72 'EB'	-35.06 LT	409+62.72 'WB'	14.48 RT	
178C	409+60.29 'EB'	-27.44 LT	409+60.28 'WB'	22.11 RT	8
179	409+08.27 'EB'	-43.56 LT	409+08.26 'WB'	6.00 RT	
180C	409+02.70 'EB'	131.44 RT	409+02.72 'WB'	181.00 RT	179
181	411+01.67 'EB'	-6.00 LT	411+01.67 'WB'	43.53 RT	
182	410+40.57 'EB'	-10.92 LT	410+40.57 'WB'	38.61 RT	
183	410+39.03 'EB'	-26.41 LT	410+39.03 'WB'	23.13 RT	
184C	410+41.65 'EB'	-18.85 LT	410+41.65 'WB'	30.69 RT	8
185	411+04.94 'EB'	-35.53 LT	411+04.93 'WB'	14.00 RT	
186C	411+04.23 'EB'	202.03 RT	411+04.25 'WB'	251.56 RT	238
187	411+45.46 'EB'	-35.52 LT	411+45.46 'WB'	14.00 RT	
188	412+43.49 'EB'	-43.51 LT	412+43.49 'WB'	6.00 RT	

STATION & OFFSET TABLE								
POINT	STATION	OFFSET	STATION	OFFSET	Y COORDS	X COORDS	RADIUS (FT)	ELEV
161	408+45.48 'WB'	81.56 RT	46+45.65 'SR'	-161.11 LT	451249.526	762647.649		
162	409+33.70 'WB'	85.60 RT	46+39.30 'SR'	-73.03 LT	451241.537	762735.602		1018.10
163	409+73.24 'WB'	100.40 RT	46+23.47 'SR'	-33.89 LT	451224.983	762774.442		1016.80
164	409+93.09 'WB'	137.67 RT	45+85.70 'SR'	-15.02 LT	451186.867	762792.601		1015.40
165C	409+33.92 'WB'	145.27 RT	45+79.65 'SR'	-74.38 LT	451181.924	762733.143	60	
166	409+93.52 'WB'	144.80 RT	45+78.56 'SR'	-14.79 LT	451179.726	762792.704		1015.15

STATION & OFFSET TABLE								
POINT	STATION	OFFSET	STATION	OFFSET	Y COORDS	X COORDS	RADIUS (FT)	ELEV
167	410+22.93 'WB'	147.74 RT	45+74.85 'SR'	14.54 RT	451175.471	762821.956		1014.84
168	410+40.35 'WB'	103.49 RT	46+18.63 'SR'	33.11 RT	451218.891	762841.340		1014.28
169	410+84.44 'WB'	85.68 RT	46+35.27 'SR'	77.66 RT	451234.705	762886.184		1013.73
170C	410+83.11 'WB'	145.88 RT	45+75.14 'SR'	74.75 RT	451174.632	762882.158	60	
171	411+32.06 'WB'	81.53 RT	46+38.18 'SR'	125.37 RT	451236.726	762933.946		

SPRING ROSE RD
49+00'SR'
48+00'SR'
47+00'SR'
STA 48+39'SR'
REMOVING ASPHALTIC SURFACE
BUTT JOINT REQUIRED.
MATCH EXISTING
CONCRETE CURB & GUTTER
4-INCH SLOPED 36-INCH
TYPE D
CABLE GUARD END TERMINAL
SAFENCE TL-3, 4 CABLE
WB USH 18/151
WB USH 18/151 'WB' R/L
SAWING ASPHALT, TYP.
(PHASE 1)
STA 410+04.51 'WB' =
STA 47+22.89 'SR'
TDS TELECOM (FO)
CABLE GUARD SAFAENCE
TL-3, CABLE
EB USH 18/151
EB USH 18/151 R/L
STA 410+05.81 'EB' =
STA 46+73.46 'SR'
10.0' TYP.
CONCRETE CURB & GUTTER
4-INCH SLOPED 36-INCH TYPE D
STA 45+57'SR'
REMOVING ASPHALTIC SURFACE
BUTT JOINT REQUIRED.
MATCH EXISTING
COGO POINT 186 IS OFF SHEET
ATC MANAGEMENT, INC. (OH)
R/W
N
407'WB' 408'WB' 409'WB' 410'WB' 411'WB' 412'WB' 413'WB'
407'EB' 408'EB' 409'EB' 410'EB' 411'EB' 412'EB' 413'EB'

PROJECT NO: 1204-08-65	HWY: USH 18/151	COUNTY: DANE	INTERSECTION DETAILS - SPRING ROSE ROAD	SHEET 79	E

2

2

N

R/W

R/W

R/W

MILITARY RIDGE STATE TRAIL

4'

10'

24'

5'

10'

12'

24'

26'

6'

WB USH 18/151 'WB' R/L

SAWING ASPHALT, TYP. (PHASE 2)

WB USH 18/151

542'WB' 543'WB' 544'WB' 545'WB' 546'WB' 547'WB'

200 203

201C 204C

199 202

CABLE GUARD SAFAENCE TL-3, CABLE

CABLE GUARD END TERMINAL SAFENCE TL-3, 4 CABLE

CABLE GUARD END TERMINAL SAFENCE TL-3, 4 CABLE

CABLE GUARD SAFAENCE TL-3, CABLE

542'EB' 543'EB' 544'EB' 545'EB' 546'EB' 547'EB'

9'

6'

EB USH 18/151

EB USH 18/151 R/L

24'

15'

6'

2'

15'

LEGEND

REMOVING ASPHALTIC SURFACE BUTT JOINTS

REMOVING CONCRETE PAVEMENT BUTT JOINTS

XXXXX SAWING ASPHALT OR CONCRETE

STATION & OFFSET TABLE

POINT	STATION	OFFSET	STATION	OFFSET	RADIUS (FT)
199	544+71.09 'EB'	-6.00 LT	544+71.09 'WB'	44.09 RT	
200	544+72.12 'EB'	-44.09 LT	544+72.11 'WB'	6.00 RT	
201C	544+71.08 'EB'	-25.06 LT	544+71.08 'WB'	25.03 RT	19
202	545+30.11 'EB'	-6.00 LT	545+30.11 'WB'	44.08 RT	
203	545+29.05 'EB'	-44.08 LT	545+29.04 'WB'	6.00 RT	
204C	545+30.13 'EB'	-25.06 LT	545+30.12 'WB'	25.03 RT	19

PROJECT NO: 1204-08-65	HWY: USH 18/151	COUNTY: DANE	INTERSECTION DETAILS - MAINTENANCE CROSSOVER	SHEET 80	E

FILE NAME : G:\WDOTSW\20007-000 USH 18\CIVIL 3D\SHEETSPLAN\021101-ID.DWG
LAYOUT NAME - (4)

PLOT DATE : 11/29/2022 10:10 AM PLOT BY : BRIAN ST. VINCENT PLOT NAME : PLOT SCALE : 1 IN:40 FT

WISDOT/CADDS SHEET 42

2

2

LEGEND

REMOVING ASPHALTIC SURFACE BUTT JOINTS

.XXXXX. SAWING ASPHALT OR CONCRETE

N

R/W

WB USH 18/151 'WB' R/L

WB USH 18/151

SAWING ASPHALT, TYP. (PHASE 2)

26'

6'

2'

628'WB' 629'WB' 630'WB' 631'WB' 632'WB' 633'WB'

211 XXXX

2

2

LEGEND

REMOVING ASPHALTIC SURFACE BUTT JOINTS

.XXXXX. SAWING ASPHALT OR CONCRETE

R/W

WB USH 18/151 'WB' R/L

WB USH 18/151

795'WB' 796'WB' 797'WB' 798'WB' 799'WB' 800'WB' 801'WB'

SAWING ASPHALT, TYP.
(PHASE 2)

223 229

222

224C 230C

228

221C 227C

226

220

219 225

26' 6' 2'

6'

795'EB' 796'EB' 797'EB' 798'EB' 799'EB' 800'EB' 801'EB'

EB USH 18/151

EB USH 18/151 R/L

26' 6'

P.E.
(GRAVEL)

5' TYP.

6' 2'

R/W

BIKE PATH

STATION & OFFSET TABLE					
POINT	STATION	OFFSET	STATION	OFFSET	RADIUS (FT)
219	797+67.94 'EB'	-6.00 LT	797+67.94 'WB'	44.28 RT	
220	797+82.94 'EB'	-21.00 LT	797+82.94 'WB'	29.28 RT	
221C	797+67.94 'EB'	-21.00 LT	797+67.94 'WB'	29.28 RT	15
222	797+82.94 'EB'	-29.28 LT	797+82.94 'WB'	21.00 RT	
223	797+67.94 'EB'	-44.28 LT	797+67.94 'WB'	6.00 RT	
224C	797+67.94 'EB'	-29.28 LT	797+67.94 'WB'	21.00 RT	15
225	798+21.94 'EB'	-6.00 LT	798+21.94 'WB'	44.27 RT	
226	798+06.94 'EB'	-21.00 LT	798+06.94 'WB'	29.27 RT	
227C	798+21.94 'EB'	-21.00 LT	798+21.94 'WB'	29.27 RT	15
228	798+06.94 'EB'	-29.27 LT	798+06.94 'WB'	21.00 RT	
229	798+21.94 'EB'	-44.27 LT	798+21.94 'WB'	6.00 RT	
230C	798+21.94 'EB'	-29.27 LT	798+21.94 'WB'	21.00 RT	15

PROJECT NO: 1204-08-65	HWY: USH 18/151	COUNTY: DANE	INTERSECTION DETAILS	SHEET 82	E

NOTES:
1. RS = REINFORCED CONCRETE SLAB, PAID FOR AS 'CONCRETE PAVEMENT APPROACH SLAB'
2. NRS = NON-REINFORCED CONCRETE SLAB, PAID FOR AS 'CONCRETE PAVEMENT APPROACH SLAB'
3. PS = DRAINAGE SLAB PAID FOR AS 'CONCRETE SURFACE DRAINS'
4. FINAL PLACEMENT OF THE CONCRETE SURFACE DRAINS MUST MAINTAIN THE MINIMUM POST SEPARATION AS SHOWN IN SDD 'CONCRETE SURFACE DRAINS, FLUME TYPE AT STRUCTURES'.
5. FOR DETAILS NOT SHOWN SEE SDD 'CONCRETE APPROACH SLAB' AND 'CONCRETE SURFACE DRAINS, FLUME TYPE AT STRUCTURES'.
6. SAW CUTS FOR APPROACH SLABS QUANTIFIED IN MISCELLANEOUS QUANTITIES.

MATERIALS:
- AP01 HMA PAVEMENT
- CG01 CONCRETE CURB & GUTTER 4-INCH SLOPED 36-INCH TYPE TBT
- CG02 CONCRETE CURB & GUTTER 4-INCH SLOPED 36-INCH TYPE TBTT
- CP01 CONCRETE PAVEMENT 9-INCH
- CSO1 CONCRETE SURFACE DRAINS

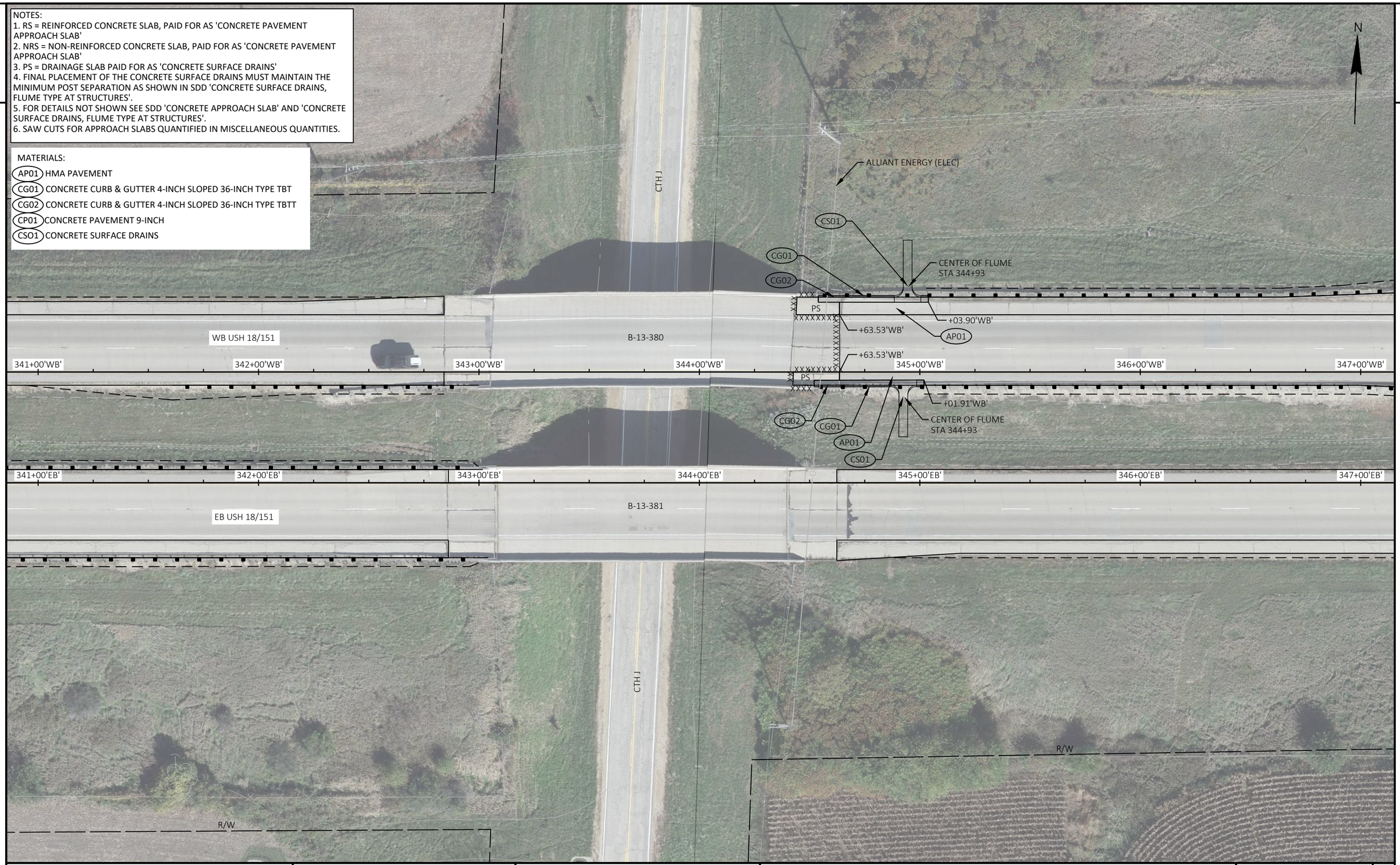

PROJECT NO: 1204-08-65	HWY: USH 18/151	COUNTY: DANE	PLAN DETAILS - BRIDGE APPROACHES - CTH J	SHEET 83	E

NOTES:
1. RS = REINFORCED CONCRETE SLAB, PAID FOR AS 'CONCRETE PAVEMENT APPROACH SLAB'
2. NRS = NON-REINFORCED CONCRETE SLAB, PAID FOR AS 'CONCRETE PAVEMENT APPROACH SLAB'
3. PS = DRAINAGE SLAB PAID FOR AS 'CONCRETE SURFACE DRAINS'
4. FINAL PLACEMENT OF THE CONCRETE SURFACE DRAINS MUST MAINTAIN THE MINIMUM POST SEPARATION AS SHOWN IN SDD 'CONCRETE SURFACE DRAINS, FLUME TYPE AT STRUCTURES'.
5. FOR DETAILS NOT SHOWN SEE SDD 'CONCRETE APPROACH SLAB' AND 'CONCRETE SURFACE DRAINS, FLUME TYPE AT STRUCTURES'.

MATERIALS:
- AP01 HMA PAVEMENT
- CG01 CONCRETE CURB & GUTTER 4-INCH SLOPED 36-INCH TYPE TBT
- CG02 CONCRETE CURB & GUTTER 4-INCH SLOPED 36-INCH TYPE TBTT
- CP01 CONCRETE PAVEMENT 9-INCH
- CSO1 CONCRETE SURFACE DRAINS

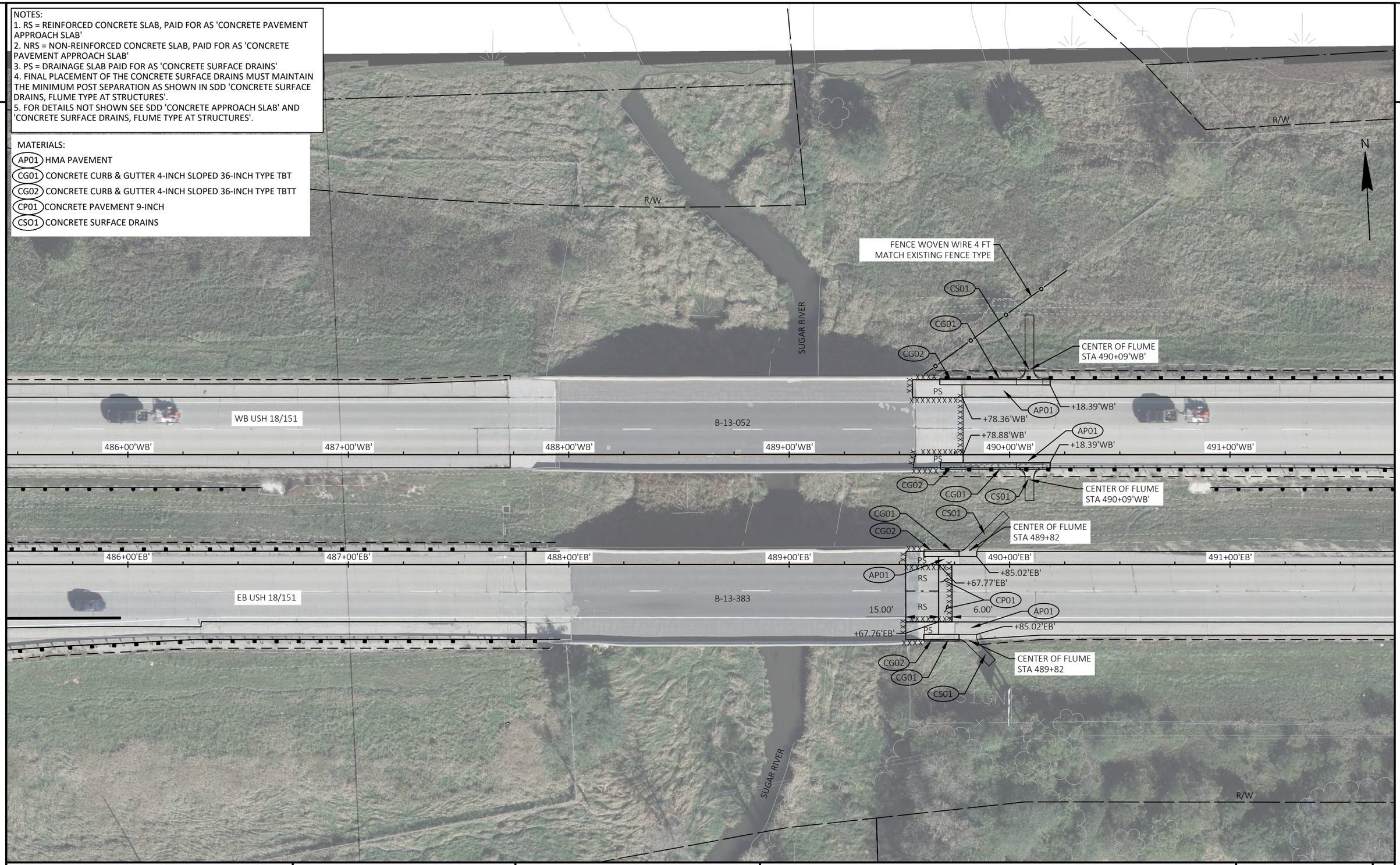

PROJECT NO: 1204-08-65	HWY: USH 18/151	COUNTY: DANE	PLAN DETAILS - BRIDGE APPROACHES - SUGAR RIVER	SHEET 84	E

NOTES:
1. RS = REINFORCED CONCRETE SLAB, PAID FOR AS 'CONCRETE PAVEMENT APPROACH SLAB'
2. NRS = NON-REINFORCED CONCRETE SLAB, PAID FOR AS 'CONCRETE PAVEMENT APPROACH SLAB'
3. PS = DRAINAGE SLAB PAID FOR AS 'CONCRETE SURFACE DRAINS'
4. FINAL PLACEMENT OF THE CONCRETE SURFACE DRAINS MUST MAINTAIN THE MINIMUM POST SEPARATION AS SHOWN IN SDD 'CONCRETE SURFACE DRAINS, FLUME TYPE AT STRUCTURES'.
5. FOR DETAILS NOT SHOWN SEE SDD 'CONCRETE APPROACH SLAB' AND 'CONCRETE SURFACE DRAINS, FLUME TYPE AT STRUCTURES'.

MATERIALS:
- AP01 HMA PAVEMENT
- CG01 CONCRETE CURB & GUTTER 4-INCH SLOPED 36-INCH TYPE TBT
- CG02 CONCRETE CURB & GUTTER 4-INCH SLOPED 36-INCH TYPE TBTT
- CP01 CONCRETE PAVEMENT 9-INCH
- CSO1 CONCRETE SURFACE DRAINS

ALLIANT ENERGY (ELEC)

N

AP01 +58.84'WB' +64.79'WB' PS 12.0' CP01 NRS RS RS PS AP01

584+00'WB' 585+00'WB' 586+00'WB' 587+00'WB' 588+00'WB' 589+00'WB'

B-13-408

WB USH 18/151

CG02 +19.54'WB' PS +92.11'WB' CG01 CS01 CS01 CG01

CENTER OF FLUME STA 586+73

CENTER OF FLUME STA 587+10

AP01 +27.39'EB' +34.37'EB' PS CP01 NRS RS RS 15.0' PS AP01

584+00'EB' 585+00'EB' 586+00'EB' 587+00'EB' 588+00'EB' 589+00'EB'

B-13-407

EB USH 18/151

AP01 CG02 +82.06'EB' PS RS RS NRS 12.0' PS CP01 AP01 CG02 +61.55'EB' +55.82'EB'

ADJUSTING INLET COVERS

STH 69 STH 69

PROJECT NO: 1204-08-65	HWY: USH 18/151	COUNTY: DANE	PLAN DETAILS - BRIDGE APPROACHES - STH 69	SHEET 85	E

FILE NAME : G:\WDOTSW\20007-000 USH 18\CIVIL 3D\SHEETSPLAN\021201-PD - BRIDGE APPROACH.DWG
LAYOUT NAME - B-13-408

PLOT DATE : 7/18/2022 1:03 PM PLOT BY : KL ENGINEERING PLOT NAME : PLOT SCALE : 1 IN:40 FT

2

NOTES:
1. RS = REINFORCED CONCRETE SLAB, PAID FOR AS 'CONCRETE PAVEMENT APPROACH SLAB'
2. NRS = NON-REINFORCED CONCRETE SLAB, PAID FOR AS 'CONCRETE PAVEMENT APPROACH SLAB'
3. PS = DRAINAGE SLAB PAID FOR AS 'CONCRETE SURFACE DRAINS'
4. FINAL PLACEMENT OF THE CONCRETE SURFACE DRAINS MUST MAINTAIN THE MINIMUM POST SEPARATION AS SHOWN IN SDD 'CONCRETE SURFACE DRAINS, FLUME TYPE AT STRUCTURES'.
5. FOR DETAILS NOT SHOWN SEE SDD 'CONCRETE APPROACH SLAB' AND 'CONCRETE SURFACE DRAINS, FLUME TYPE AT STRUCTURES'.

MATERIALS:
- AP01 HMA PAVEMENT
- CG01 CONCRETE CURB & GUTTER 4-INCH SLOPED 36-INCH TYPE TBT
- CG02 CONCRETE CURB & GUTTER 4-INCH SLOPED 36-INCH TYPE TBTT
- CP01 CONCRETE PAVEMENT 9-INCH
- CP02 CONCRETE PAVEMENT 10.5-INCH
- CSO1 CONCRETE SURFACE DRAINS

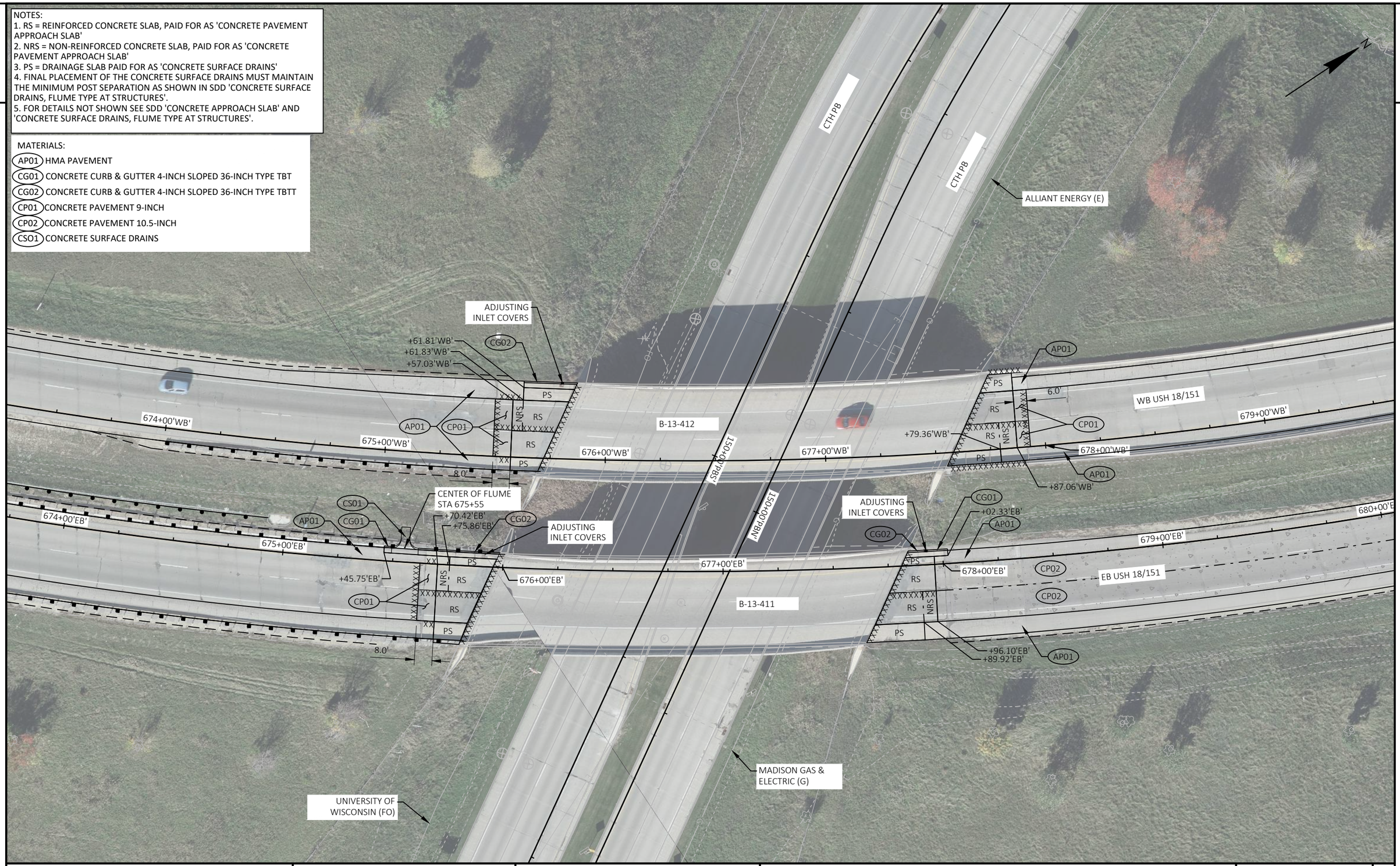

PROJECT NO: 1204-08-65	HWY: USH 18/151	COUNTY: DANE	PLAN DETAILS - BRIDGE APPROACHES - CTH PB	SHEET 86	E

FILE NAME : G:\WDOTSW\20007-000 USH 18\CIVIL 3D\SHEETSPLAN\021201-PD - BRIDGE APPROACH.DWG
LAYOUT NAME - B-13-411
PLOT DATE : 7/18/2022 1:04 PM PLOT BY : KL ENGINEERING PLOT NAME : PLOT SCALE : 1 IN:40 FT

NOTES:
1. RS = REINFORCED CONCRETE SLAB, PAID FOR AS 'CONCRETE PAVEMENT APPROACH SLAB'
2. NRS = NON-REINFORCED CONCRETE SLAB, PAID FOR AS 'CONCRETE PAVEMENT APPROACH SLAB'
3. PS = DRAINAGE SLAB PAID FOR AS 'CONCRETE SURFACE DRAINS'
4. FINAL PLACEMENT OF THE CONCRETE SURFACE DRAINS MUST MAINTAIN THE MINIMUM POST SEPARATION AS SHOWN IN SDD 'CONCRETE SURFACE DRAINS, FLUME TYPE AT STRUCTURES'.
5. FOR DETAILS NOT SHOWN SEE SDD 'CONCRETE APPROACH SLAB' AND 'CONCRETE SURFACE DRAINS, FLUME TYPE AT STRUCTURES'.

MATERIALS:
- AP01 HMA PAVEMENT
- CG01 CONCRETE CURB & GUTTER 4-INCH SLOPED 36-INCH TYPE TBT
- CG02 CONCRETE CURB & GUTTER 4-INCH SLOPED 36-INCH TYPE TBTT
- CP01 CONCRETE PAVEMENT 9-INCH
- CSO1 CONCRETE SURFACE DRAINS

N

R/W

MG&E (GAS)

TDS TELECOM (FO)

CENTER OF ASPHALTIC FLUME STA 691+14'WB'

CENTER OF FLUME STA 693+16'WB'

REMOVING INLET AND REMOVING SMALL PIPE CULVERTS

+10.83'WB'
+12.67'WB'
+18.67'WB'
+75.99'WB'
+24.15'WB'
+20.76'WB'

B-13-414

WB USH 18/151

690+00'WB' 691+00'WB' 692+00'WB' 693+00'WB' 694+00'WB' 695+00'WB

6.00'
6.0'

REMOVING INLET AND REMOVING SMALL PIPE CULVERTS

CENTER OF FLUME STA 693+11'WB'

+05.62'EB'
+10.50'EB'
+04.53'EB'
+70.13'EB'
+64.13'EB'
+74.25'EB'
+78.54'EB'

689+00'EB' 690+00'EB' 691+00'EB' 692+00'EB' 693+00'EB' 694+00'EB' 695+00'EB

B-13-413

EB USH 18/151

ASTREA (FO)

WHALEN RD

ADJUSTING INLET COVERS

ASTREA (FO)

R/W

R/W

PROJECT NO: 1204-08-65	HWY: USH 18/151	COUNTY: DANE	PLAN DETAILS - BRIDGE APPROACHES - WHALEN RD	SHEET 87	E

FILE NAME : G:\WDOTSW\20007-000 USH 18\CIVIL 3D\SHEETSPLAN\021201-PD - BRIDGE APPROACH.DWG
LAYOUT NAME - B-13-413

PLOT DATE : 7/18/2022 1:04 PM PLOT BY : KL ENGINEERING PLOT NAME : PLOT SCALE : 1 IN:40 FT

WISDOT/CADDS SHEET 42

NOTES:
1. RS = REINFORCED CONCRETE SLAB, PAID FOR AS 'CONCRETE PAVEMENT APPROACH SLAB'
2. NRS = NON-REINFORCED CONCRETE SLAB, PAID FOR AS 'CONCRETE PAVEMENT APPROACH SLAB'
3. PS = DRAINAGE SLAB PAID FOR AS 'CONCRETE SURFACE DRAINS'
4. FINAL PLACEMENT OF THE CONCRETE SURFACE DRAINS MUST MAINTAIN THE MINIMUM POST SEPARATION AS SHOWN IN SDD 'CONCRETE SURFACE DRAINS, FLUME TYPE AT STRUCTURES'.
5. FOR DETAILS NOT SHOWN SEE SDD 'CONCRETE APPROACH SLAB' AND 'CONCRETE SURFACE DRAINS, FLUME TYPE AT STRUCTURES'.

MATERIALS:

- AP01 HMA PAVEMENT
- CG01 CONCRETE CURB & GUTTER 4-INCH SLOPED 36-INCH TYPE TBT
- CG02 CONCRETE CURB & GUTTER 4-INCH SLOPED 36-INCH TYPE TBTT
- CP01 CONCRETE PAVEMENT 9-INCH
- CSO1 CONCRETE SURFACE DRAINS

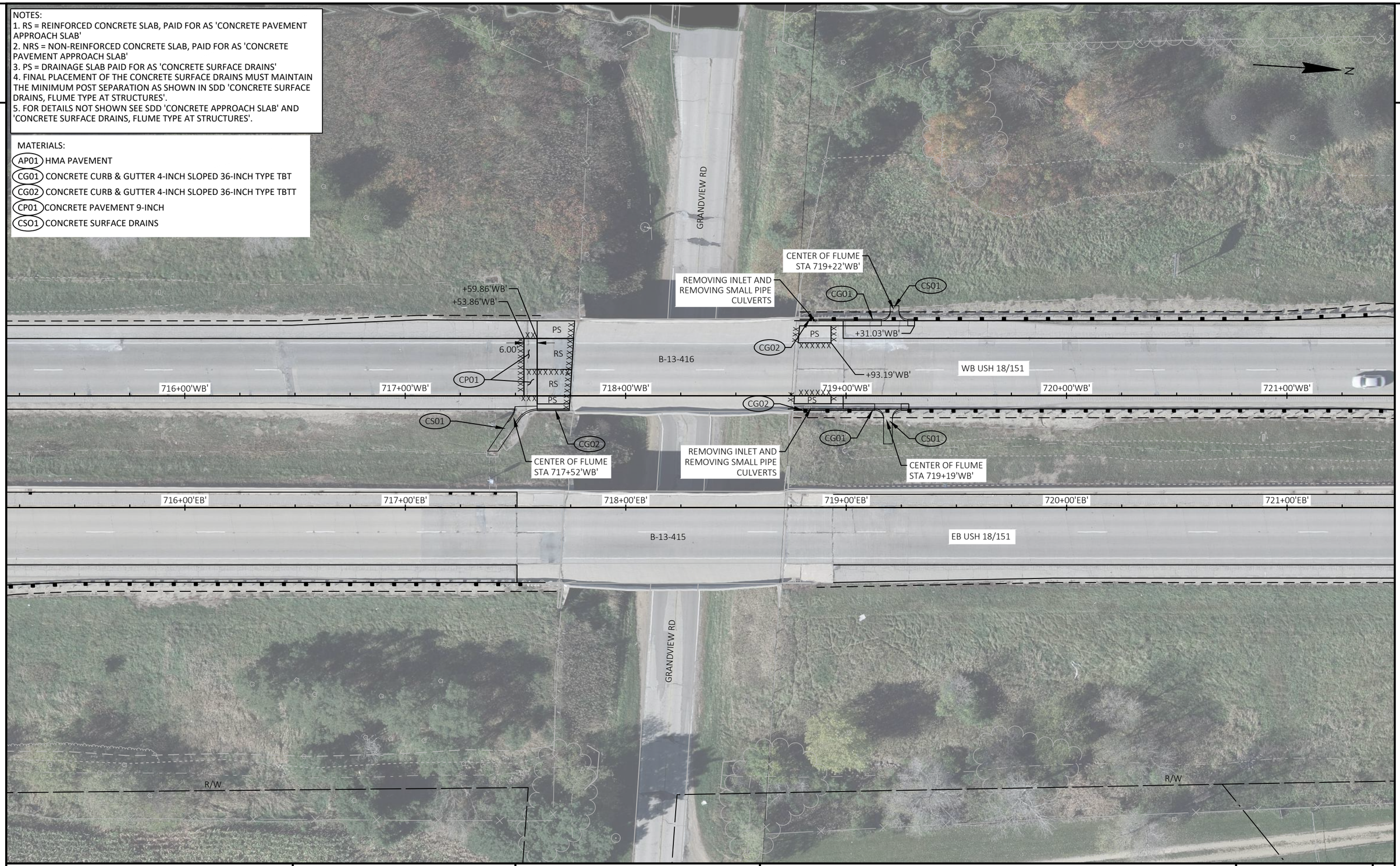

PROJECT NO: 1204-08-65	HWY: USH 18/151	COUNTY: DANE	PLAN DETAILS - BRIDGE APPROACHES - GRANDVIEW RD	SHEET 88	E

FILE NAME : G:\WDOTSW\20007-000 USH 18\CIVIL 3D\SHEETSPLAN\021201-PD - BRIDGE APPROACH.DWG
LAYOUT NAME - B-13-415
PLOT DATE : 7/18/2022 1:05 PM PLOT BY : KL ENGINEERING PLOT NAME : PLOT SCALE : 1 IN:40 FT

NOTES:
1. RS = REINFORCED CONCRETE SLAB, PAID FOR AS 'CONCRETE PAVEMENT APPROACH SLAB'
2. NRS = NON-REINFORCED CONCRETE SLAB, PAID FOR AS 'CONCRETE PAVEMENT APPROACH SLAB'
3. PS = DRAINAGE SLAB PAID FOR AS 'CONCRETE SURFACE DRAINS'
4. FINAL PLACEMENT OF THE CONCRETE SURFACE DRAINS MUST MAINTAIN THE MINIMUM POST SEPARATION AS SHOWN IN SDD 'CONCRETE SURFACE DRAINS, FLUME TYPE AT STRUCTURES'.
5. FOR DETAILS NOT SHOWN SEE SDD 'CONCRETE APPROACH SLAB' AND 'CONCRETE SURFACE DRAINS, FLUME TYPE AT STRUCTURES'.

MATERIALS:
- AP01 HMA PAVEMENT
- CG01 CONCRETE CURB & GUTTER 4-INCH SLOPED 36-INCH TYPE TBT
- CG02 CONCRETE CURB & GUTTER 4-INCH SLOPED 36-INCH TYPE TBTT
- CP01 CONCRETE PAVEMENT 9-INCH
- CSO1 CONCRETE SURFACE DRAINS

RAMP 'EW'

N

+38.01'WB'
PS
8.00'
RS
NRS
RS
PS
AP01
CP01
+45.82'WB'
744+00'WB'
743+00'WB'
+45.82'WB'
CG02
ADJUSTING INLET COVERS
B-13-418
745+00'WB'
+29.15'WB'
WB USH 18/151
746+00'WB'
71.49'WB'
PS
CG02
CG01
CS01
CENTER OF FLUME STA 746+62'WB'
747+00'WB'
747+00'WB'
748+00'WB'

+28.90'EB'
PS
744+00'EB'
743+00'EB'
AP01
CP01
+10.54'EB'
6.0'
RS
NRS
RS
+35.53'EB'
PS
745+00'EB'
B-13-417
746+00'EB'
747+00'EB'
748+00'EB'
EB USH 18/151
CG01
CS01
CG02
CENTER OF FLUME STA 744+19

RAMP 'EE'

R/W

PROJECT NO: 1204-08-65	HWY: USH 18/151	COUNTY: DANE	PLAN DETAILS - BRIDGE APPROACHES - RAMP 'EE'	SHEET 89	E

FILE NAME : G:\WDOTSW\20007-000 USH 18\CIVIL 3D\SHEETSPLAN\021201-PD - BRIDGE APPROACH.DWG
LAYOUT NAME - B-13-417
PLOT DATE : 7/18/2022 1:06 PM
PLOT BY : KL ENGINEERING
PLOT NAME :
PLOT SCALE : 1 IN:40 FT

2

NOTES:
1. RS = REINFORCED CONCRETE SLAB, PAID FOR AS 'CONCRETE PAVEMENT APPROACH SLAB'
2. NRS = NON-REINFORCED CONCRETE SLAB, PAID FOR AS 'CONCRETE PAVEMENT APPROACH SLAB'
3. PS = DRAINAGE SLAB PAID FOR AS 'CONCRETE SURFACE DRAINS'
4. FINAL PLACEMENT OF THE CONCRETE SURFACE DRAINS MUST MAINTAIN THE MINIMUM POST SEPARATION AS SHOWN IN SDD 'CONCRETE SURFACE DRAINS, FLUME TYPE AT STRUCTURES'.
5. FOR DETAILS NOT SHOWN SEE SDD 'CONCRETE APPROACH SLAB' AND 'CONCRETE SURFACE DRAINS, FLUME TYPE AT STRUCTURES'.

MATERIALS:
- AP01 HMA PAVEMENT
- CG01 CONCRETE CURB & GUTTER 4-INCH SLOPED 36-INCH TYPE TBT
- CG02 CONCRETE CURB & GUTTER 4-INCH SLOPED 36-INCH TYPE TBTT
- CP01 CONCRETE PAVEMENT 9-INCH
- CSO1 CONCRETE SURFACE DRAINS

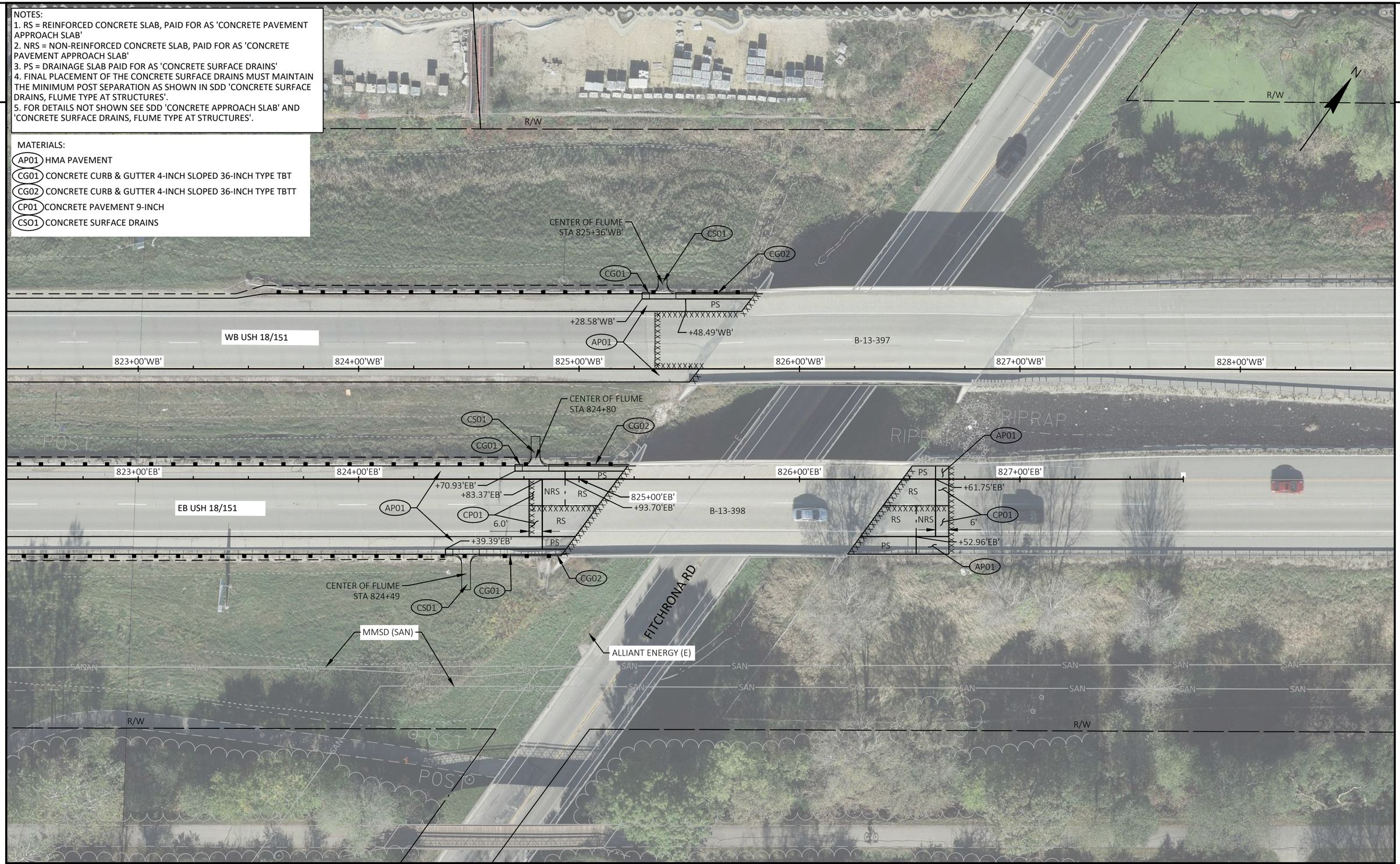

PROJECT NO: 1204-08-65	HWY: USH 18/151	COUNTY: DANE	PLAN DETAILS - BRIDGE APPROACHES - FITCHRONA RD	SHEET 90	E

FILE NAME : G:\WDOTSW\20007-000 USH 18\CIVIL 3D\SHEETSPLAN\021201-PD - BRIDGE APPROACH.DWG
LAYOUT NAME - B-13-397
PLOT DATE : 7/18/2022 1:06 PM
PLOT BY : KL ENGINEERING
PLOT NAME :
PLOT SCALE : 1 IN:40 FT

2

STATION & OFFSET TABLE				
POINT	STATION	OFFSET	Y COORDS	X COORDS
25	180+57.33	20.70 LT	456999.312	741722.524
26	180+69.39	19.58 LT	456994.114	741733.520
27	180+57.50	29.94 LT	457007.940	741725.840
28	180+69.57	30.64 LT	457004.435	741737.487
29	182+18.37	20.48 LT	456941.277	741873.512
30	182+06.31	19.40 LT	456944.783	741861.866
31	182+18.22	29.73 LT	456949.906	741876.829
32	182+06.16	30.45 LT	456955.104	741865.833

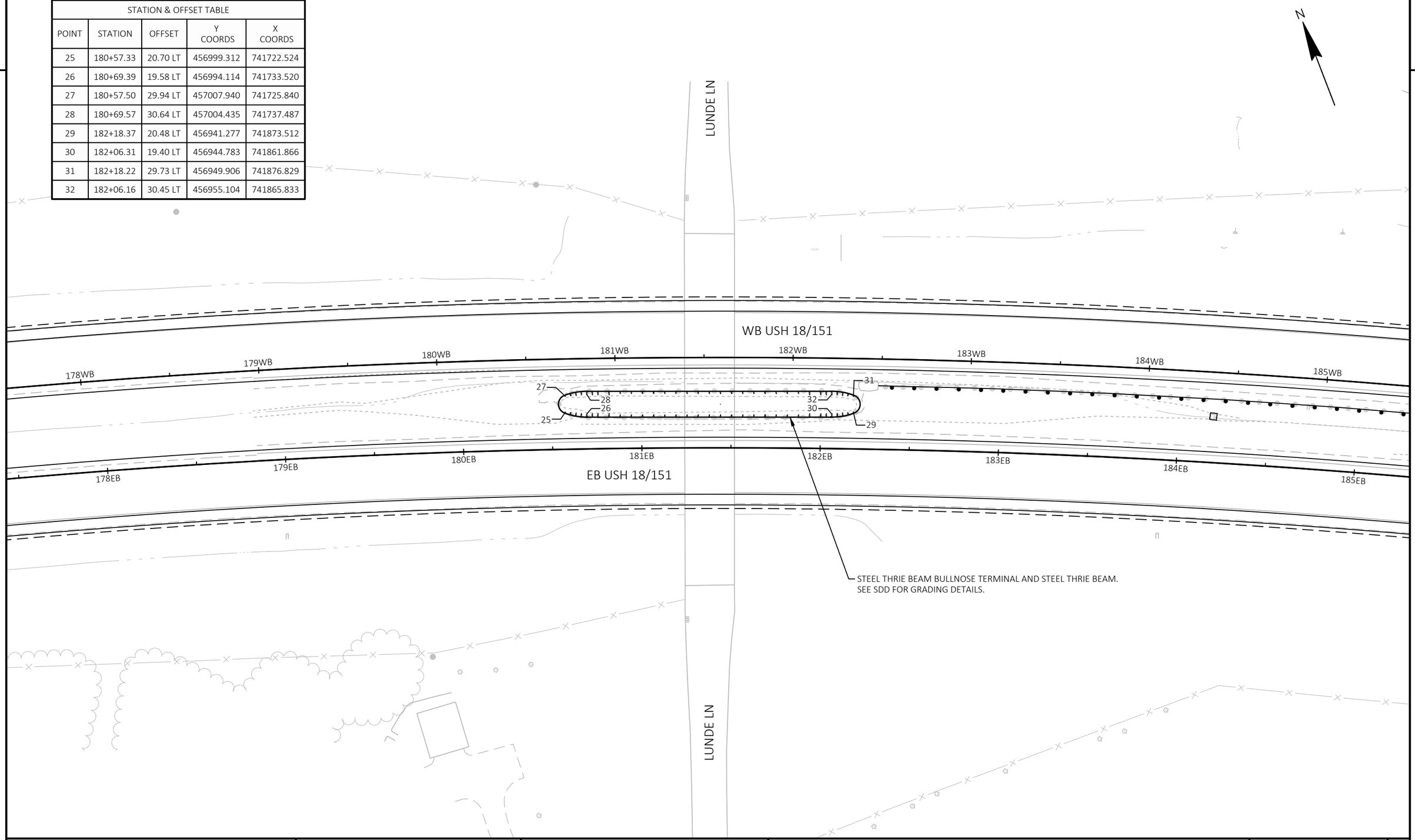

2

PROJECT NO: 1204-08-65	HWY: USH 18/151	COUNTY: DANE	BULLNOSE & CABLE BARRIER DETAILS	SHEET 91	E

FILE NAME : G:\WDOTSW\20007-000 USH 18\CIVIL 3D\SHEETSPLAN\021205-PD - BULLNOSE.DWG
LAYOUT NAME - Bull00

PLOT DATE : 11/29/2022 10:19 AM PLOT BY : BRIAN ST. VINCENT PLOT NAME : PLOT SCALE : 1 IN:50 FT

WISDOT/CADDS SHEET 42

2

2

N

CTH PD

REDUCE CABLE GUARD SAFENCE TL-3, 4 CABLE POST SPACING PER MANUFACTURES STANDARDS FOR 5-FEET MINIMUM WORKING WIDTH AT BULL NOSE TERMINAL.

WB USH 18/151

+10, 15.00' RT

+50, 13.00' RT

5.5'

+25, 13.00' RT

+65, 15.00' RT

15' TYP.

214WB 215WB 216WB 217WB 218WB 219WB 220WB 221WB

35 36 34 33 40 39 38 37

214EB 215EB 216EB 217EB 218EB 219EB 220EB 221EB

EB USH 18/151

INL

STEEL THRIE BEAM BULLNOSE TERMINAL AND STEEL THRIE BEAM. NO GRADING REQUIRED. INSTALL PER SDD.

CTH PD

STATION & OFFSET TABLE				
POINT	STATION	OFFSET	Y COORDS	X COORDS
33	216+55.64	20.86 LT	455435.676	744965.448
34	216+67.71	19.81 LT	455429.105	744975.682
35	216+55.76	30.10 LT	455443.806	744969.848
36	216+67.83	30.87 LT	455438.829	744980.946
37	218+16.81	21.04 LT	455358.672	745107.700
38	218+04.74	19.96 LT	455363.649	745096.602
39	218+16.67	30.28 LT	455366.802	745112.101
40	218+04.60	31.02 LT	455373.373	745101.866

PROJECT NO: 1204-08-65	HWY: USH 18/151	COUNTY: DANE	BULLNOSE & CABLE BARRIER DETAILS	SHEET 92	E

FILE NAME : G:\WDOTSW\20007-000 USH 18\CIVIL 3D\SHEETSPLAN\021205-PD - BULLNOSE.DWG
LAYOUT NAME - Bull01

PLOT DATE : 11/29/2022 10:19 AM PLOT BY : BRIAN ST. VINCENT PLOT NAME : PLOT SCALE : 1 IN:50 FT

2

RAMP GD

RAMP GA

N

CTH G

SIGN

SIGN

REDUCE CABLE GUARD SAFENCE TL-3, 4 CABLE POST SPACING PER MANUFACTURES STANDARDS FOR 5-FEET MINIMUM WORKING WIDTH AT BULL NOSE TERMINAL.

STA BACK = 459+78.34WB

STA AHEAD = 459+76.40 WB

WB USH 18/151

459WB 460WB +25, 15.00' RT 461WB +85, 12.00' RT 462WB 5.5' 463WB +45, 12.00' RT 464WB +95, 15.00' RT 465WB 15' TYP. 466WB

459EB 460EB 461EB 462EB 463EB 464EB 465EB 466EB

EB USH 18/151

STEEL THRIE BEAM BULLNOSE TERMINAL AND STEEL THRIE BEAM. SEE SDD AND CROSS SECTIONS FOR GRADING DETAILS.

SIGN

SIGN

CTH G

RAMP GB

RAMP GC

STATION & OFFSET TABLE				
POINT	STATION	OFFSET	Y COORDS	X COORDS
1	461+82.22	20.22 RT	451045.866	767981.372
2	461+82.22	29.46 RT	451036.654	767980.595
3	461+94.34	19.31 RT	451045.750	767993.534
4	461+94.34	30.37 RT	451034.732	767992.605
5	463+44.34	19.31 RT	451033.140	768143.003
6	463+44.34	30.37 RT	451022.122	768142.074
7	463+56.47	20.22 RT	451031.217	768155.013
8	463+56.47	29.46 RT	451022.005	768154.236

PROJECT NO: 1204-08-65	HWY: USH 18/151	COUNTY: DANE	BULLNOSE & CABLE BARRIER DETAILS	SHEET 93	E

FILE NAME : G:\WDOTSW\20007-000 USH 18\CIVIL 3D\SHEETSPLAN\021205-PD - BULLNOSE.DWG
LAYOUT NAME - Bull02

PLOT DATE : 11/29/2022 10:19 AM PLOT BY : BRIAN ST. VINCENT PLOT NAME : PLOT SCALE : 1 IN:50 FT

WISDOT/CADDS SHEET 42

STATION & OFFSET TABLE				
POINT	STATION	OFFSET	Y COORDS	X COORDS
9	518+69.28	17.94 RT	450649.859	773638.468
10	518+68.84	27.18 RT	450641.383	773634.780
11	518+81.55	17.58 RT	450645.851	773649.951
12	518+81.09	28.62 RT	450635.712	773645.539
13	520+20.37	18.31 RT	450590.987	773776.032
14	520+20.71	29.36 RT	450580.848	773771.620
15	520+32.64	18.81 RT	450585.317	773786.791
16	520+32.98	28.04 RT	450576.840	773783.103

2

RAMP WW

RAMP WE

POST

RIPRAP

N

REDUCE CABLE GUARD SAFENCE TL-3, 4 CABLE POST SPACING PER MANUFACTURES STANDARDS FOR 5-FEET MINIMUM WORKING WIDTH AT BULL NOSE TERMINAL.

CONTRACTOR SHALL FIELD VERIFY THAT THE STEEL THRIE BEAM BULLNOSE TERMINAL POST LOCATIONS AVOID DAMAGE TO EXISTING INLET AND PIPE

WB USH 18/151

516WB 517WB +85, 13.00' RT 518WB +75, 11.00' RT 5.0' 519WB +25, 11.00' RT 520WB 521WB +75, 15.00' RT 522WB 15' TYP. 523WB

9 10 11 12 13 14 15 16

516EB 517EB 518EB 519EB 520EB 521EB 522EB 523EB

EB USH 18/151

STEEL THRIE BEAM BULLNOSE TERMINAL AND STEEL THRIE BEAM. SEE SDD AND CROSS SECTIONS FOR GRADING DETAILS.

RAMP WE

PROJECT NO: 1204-08-65	HWY: USH 18/151	COUNTY: DANE	BULLNOSE & CABLE BARRIER DETAILS	SHEET 94	E

FILE NAME : G:\WDOTSW\20007-000 USH 18\CIVIL 3D\SHEETSPLAN\021205-PD - BULLNOSE.DWG
LAYOUT NAME - Bull03

PLOT DATE : 11/29/2022 10:20 AM PLOT BY : BRIAN ST. VINCENT PLOT NAME : PLOT SCALE : 1 IN:50 FT

2

STATION & OFFSET TABLE				
POINT	STATION	OFFSET	Y COORDS	X COORDS
41	528+13.86	22.37 LT	450083.619	774418.742
42	528+25.81	20.95 LT	450073.431	774425.386
43	528+14.28	31.60 LT	450089.232	774426.087
44	528+26.23	32.00 LT	450080.145	774434.172
45	529+73.79	21.84 LT	449955.090	774516.954
46	529+61.84	20.50 LT	449964.177	774508.870
47	529+73.44	31.08 LT	449960.703	774524.300
48	529+61.48	31.55 LT	449970.890	774517.656

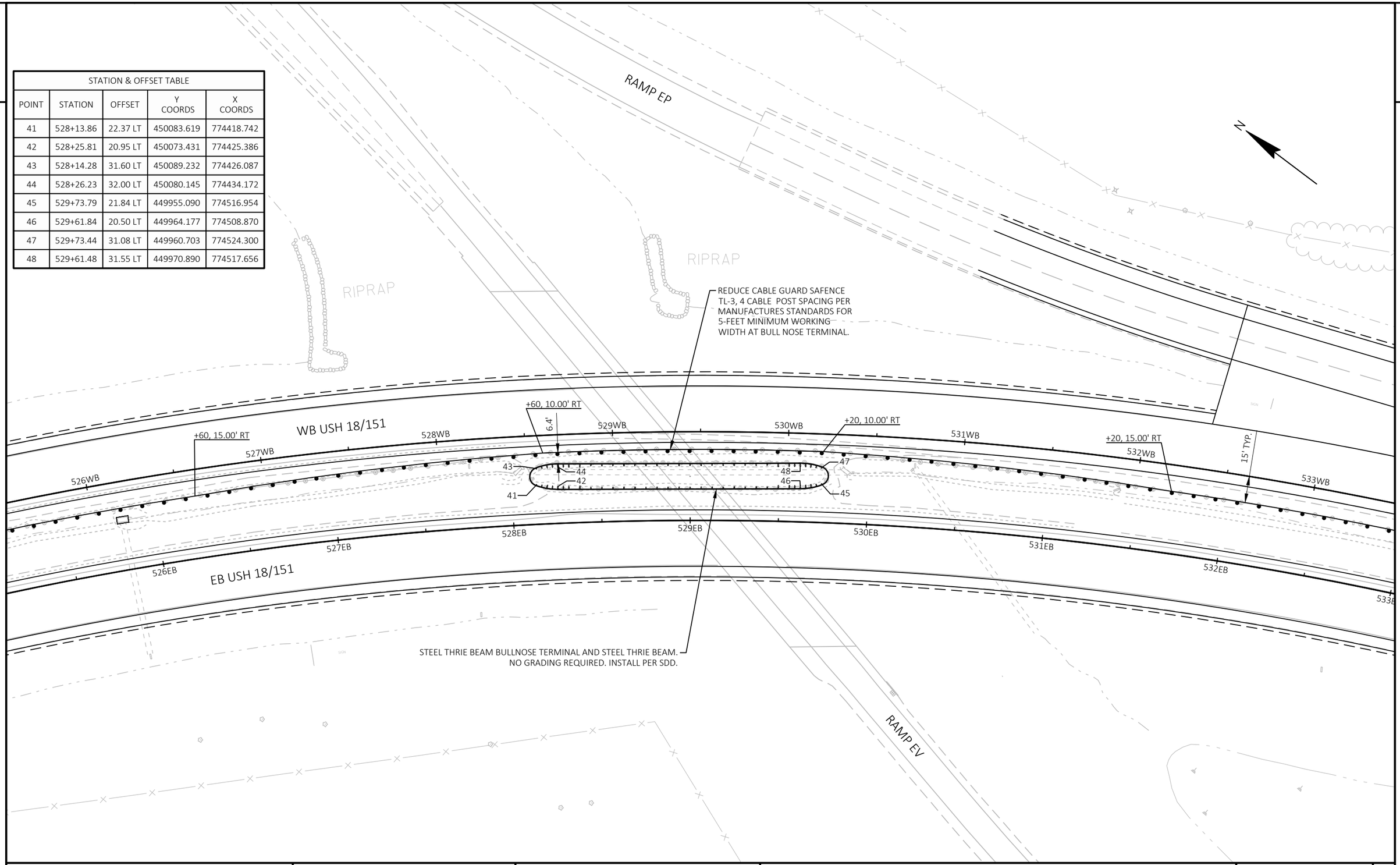

PROJECT NO: 1204-08-65	HWY: USH 18/151	COUNTY: DANE	BULLNOSE & CABLE BARRIER DETAILS	SHEET 95	E

FILE NAME : G:\WDOTSW\20007-000 USH 18\CIVIL 3D\SHEETSPLAN\021205-PD - BULLNOSE.DWG
LAYOUT NAME - Bull04
PLOT DATE : 11/29/2022 10:20 AM PLOT BY : BRIAN ST. VINCENT PLOT NAME : PLOT SCALE : 1 IN:50 FT

WISDOT/CADDS SHEET 42

2

SLAB

LOCUST DR

N

WB USH 18/151

616WB 617WB 618WB 619WB 620WB 621WB 622WB 623WB

+00, -15.00' LT

17 19 20 18

+50, -12.50' LT

5.3'

21 22 23 24

+50, -12.48' LT

+00, -15.00' LT

15' TYP.

616EB 617EB 618EB 619EB 620EB 621EB 622EB 623EB

EB USH 18/151

STEEL THRIE BEAM BULLNOSE TERMINAL AND STEEL THRIE BEAM. SEE SDD AND CROSS SECTIONS FOR GRADING DETAILS.

REDUCE CABLE GUARD SAFENCE TL-3, 4 CABLE POST SPACING PER MANUFACTURES STANDARDS FOR 5-FEET MINIMUM WORKING WIDTH AT BULL NOSE TERMINAL.

RIPRAP

STATION & OFFSET TABLE				
POINT	STATION	OFFSET	Y COORDS	X COORDS
17	618+50.32	29.52 LT	445859.017	781131.415
18	618+50.39	20.28 LT	445849.851	781130.213
19	618+62.48	30.51 LT	445858.340	781143.558
20	618+62.54	19.45 LT	445847.376	781142.121
21	620+12.88	30.41 LT	445838.845	781292.286
22	620+12.80	19.35 LT	445827.882	781290.849
23	620+25.03	29.41 LT	445836.370	781304.194
24	620+24.96	20.16 LT	445827.204	781302.992

PROJECT NO: 1204-08-65	HWY: USH 18/151	COUNTY: DANE	BULLNOSE & CABLE BARRIER DETAILS	SHEET 96	E

FILE NAME : G:\WDOTSW\20007-000 USH 18\CIVIL 3D\SHEETSPLAN\021205-PD - BULLNOSE.DWG
LAYOUT NAME - Bull05
PLOT DATE : 11/29/2022 10:21 AM PLOT BY : BRIAN ST. VINCENT PLOT NAME : PLOT SCALE : 1 IN:50 FT
WISDOT/CADDS SHEET 42

2

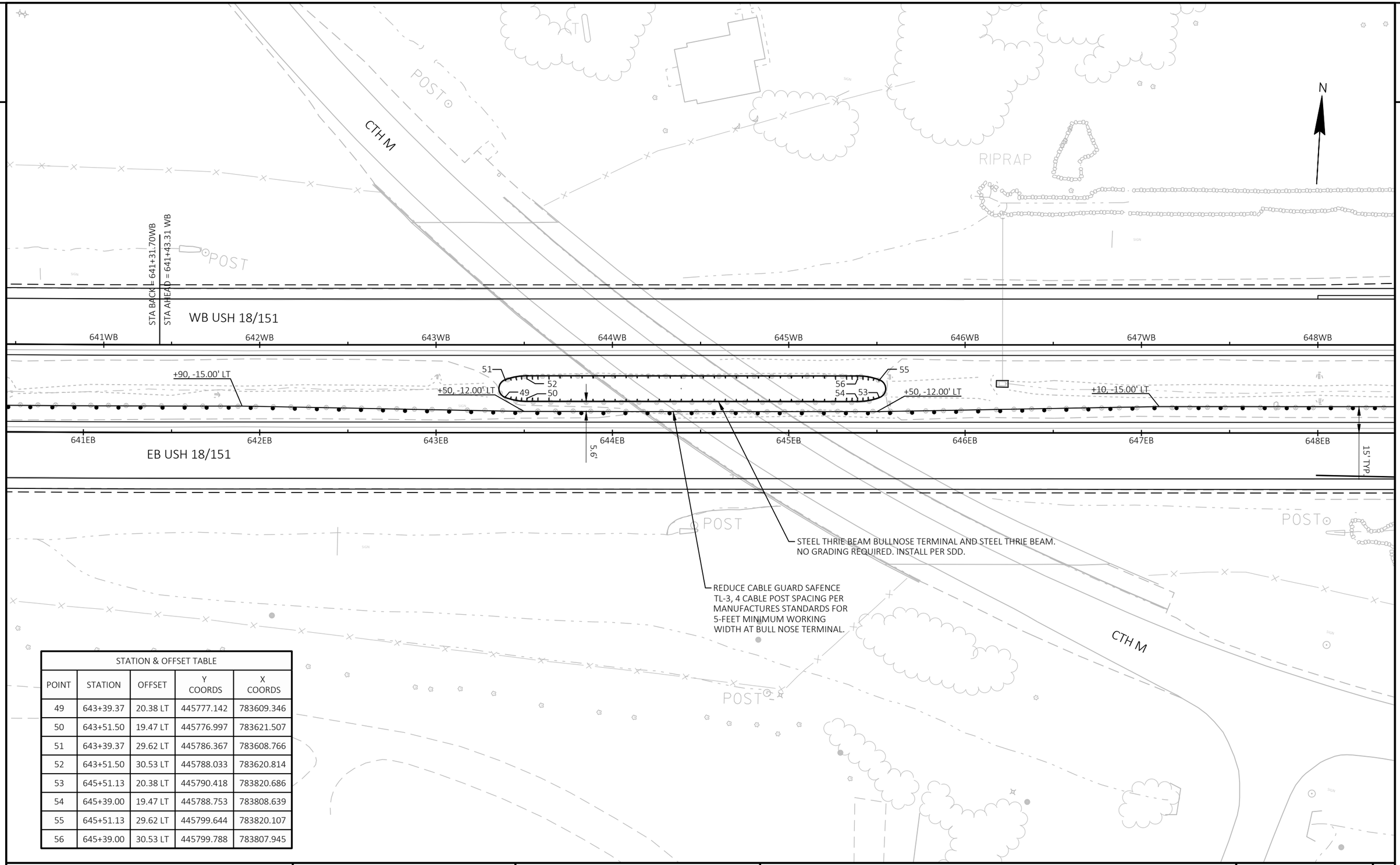

STATION & OFFSET TABLE				
POINT	STATION	OFFSET	Y COORDS	X COORDS
49	643+39.37	20.38 LT	445777.142	783609.346
50	643+51.50	19.47 LT	445776.997	783621.507
51	643+39.37	29.62 LT	445786.367	783608.766
52	643+51.50	30.53 LT	445788.033	783620.814
53	645+51.13	20.38 LT	445790.418	783820.686
54	645+39.00	19.47 LT	445788.753	783808.639
55	645+51.13	29.62 LT	445799.644	783820.107
56	645+39.00	30.53 LT	445799.788	783807.945

PROJECT NO: 1204-08-65	HWY: USH 18/151	COUNTY: DANE	BULLNOSE & CABLE BARRIER DETAILS	SHEET 97	E

FILE NAME : G:\WDOTSW\20007-000 USH 18\CIVIL 3D\SHEETSPLAN\021205-PD - BULLNOSE.DWG
LAYOUT NAME - Bull06
PLOT DATE : 11/29/2022 10:21 AM
PLOT BY : BRIAN ST. VINCENT
PLOT NAME :
PLOT SCALE : 1 IN:50 FT
WISDOT/CADDS SHEET 42

2

2

MADISON GAS & ELECTRIC (G)

BEGIN PAVEMENT REPLACEMENT
STA 677+96

677+00EB
679+00EB
680+00EB
681+00EB
682+00EB
683+00EB

EB USH 18/151 R/L

12'
14'
9"
9"
2'

EB USH 18/151

CP01
CP01

AP01
AP01
AG01

CONCRETE APPROACH SLAB (TYP.)
SEE BRIDGE APPROACH DETAIL AND SDD

MATCH LINE STA. 683+50 EB

N

LEGEND

AP01 HMA PAVEMENT 4 1/2-INCH

AG01 BASE AGGREGATE DENSE 3/4-INCH

CP01 CONCRETE PAVEMENT 10 1/2-INCH

MATCH LINE STA. 683+50 EB

684+00EB
685+00EB
686+00EB
687+00EB
688+00EB
689+00EB

EB USH 18/151 R/L

AG01
AP01

12'
14'
6'
2'
8"

EB USH 18/151

CP01
CP01

AP01
AG01
AP01

RAMP PB

END PAVEMENT REPLACEMENT
STA 687+79 EB
MATCH EXISTING
SAW CUT REQ'D

N

PROJECT NO: 1204-08-65	HWY: USH 18/151	COUNTY: DANE	PLAN DETAILS - USH 18/151 EB PAVEMENT REPLACEMENT	SHEET 98	E

FILE NAME : G:\WDOTSW\20007-000 USH 18\CIVIL 3D\SHEETSPLAN\021201-PD - USH 18.DWG
LAYOUT NAME - EB

PLOT DATE : 7/14/2022 9:15 AM PLOT BY : KL ENGINEERING PLOT NAME : PLOT SCALE : 1 IN:40 FT

WISDOT/CADDS SHEET 42

2

N

RAMP 'SA'

588SA+00

WB USH 18/151

AP01

AP01

AP02

STA 587+62'SA'
BEGIN BASE PATCHING CONCRETE
BEGIN 3.5-INCH HMA OVERLAY
REMOVING CONCRETE PAVEMENT BUTT
JOINTS REQ'D

NB STH 69

CONCRETE PAVEMENT REPAIR
LONGITUDINAL JOINT (TYP)

SB STH 69

44SS+00

45SS+00

46SS+00

47SS+00

SB STH 69
SS R/L

48SS+00

49SS+00

MATCH LINE STA. 49+75'SS'

2

AP02

STA 586+47'SD'
END BASE PATCHING CONCRETE
END 3.5-INCH HMA OVERLAY
REMOVING CONCRETE PAVEMENT BUTT
JOINTS REQ'D

AP01

RAMP 'SD'

585SD+00

MATCH LINE STA. 585+50'SD'

LEGEND

- CONCRETE PAVEMENT REPLACEMENT
- CONCRETE PAVEMENT REPAIR
- REMOVING CONCRETE PAVEMENT BUTT JOINTS
- REMOVING ASPHALTIC SURFACE BUTT JOINT
- CONCRETE PAVEMENT REPAIR LONGITUDINAL JOINT
- AG01 BASE AGGREGATE DENSE 3/4-INCH
- AP02 4 HT 58-28 3.5-INCH 2 LAYERS 1.75" EACH

PROJECT NO: 1204-08-65	HWY: USH 18/151	COUNTY: DANE	PLAN DETAILS - STH 69	SHEET 99	E

FILE NAME : G:\WDOTSW\20007-000 USH 18\CIVIL 3D\SHEETSPLAN\021201-PD - STH69.DWG
LAYOUT NAME - STH 69

PLOT DATE : 11/29/2022 11:15 AM PLOT BY : KL ENGINEERING PLOT NAME : PLOT SCALE : 1 IN:40 FT

2

2

LEGEND

- CONCRETE PAVEMENT REPLACEMENT
- CONCRETE PAVEMENT REPAIR
- REMOVING CONCRETE PAVEMENT BUTT JOINTS
- REMOVING ASPHALTIC SURFACE BUTT JOINT
- CONCRETE PAVEMENT REPAIR LONGITUDINAL JOINT
- AG01 BASE AGGREGATE DENSE 3/4-INCH
- AP02 4 HT 58-28 3.5-INCH 2 LAYERS 1.75" EACH

MATCH LINE STA. 585+50'SB'

3' 1' 15' 3' 5'

58SB+00

STA 584+83'SB'
BEGIN BASE PATCHING CONCRETE
BEGIN 3.5-INCH HMA OVERLAY
REMOVING CONCRETE PAVEMENT BUTT JOINTS REQ'D

N

CONCRETE CURB & GUTTER INTEGRAL 30-INCH TYPE D

NB STH 69

MH

MATCH LINE STA. 49+75'SS'

12' 12' 10' 12' 12'

50SS+00 51SS+00 52SS+00 53SS+00 54SS+00 55SS+00

SB STH 69
SS R/L

SB STH 69

CONCRETE CURB & GUTTER INTEGRAL 30-INCH TYPE D

END CONSTRUCTION
STA 54+93'SS'

2' 3' 15' 2' 5' 15'

AG01 AP02 AP02 AG01

RAMP SC

583SC+00

STA 583+17'SC'
END BASE PATCHING CONCRETE
END 3.5-INCH HMA OVERLAY
REMOVING CONCRETE PAVEMENT BUTT JOINTS REQ'D

WB USH 18/151

EB USH 18/151

MATCH LINE STA. 582+75'SC'

PROJECT NO: 1204-08-65	HWY: USH 18/151	COUNTY: DANE	PLAN DETAILS - STH 69	SHEET 100	E

FILE NAME : G:\WDOTSW\20007-000 USH 18\CIVIL 3D\SHEETSPLAN\021201-PD - STH69.DWG
LAYOUT NAME - STH 69 (2)

PLOT DATE : 11/29/2022 11:16 AM PLOT BY : KL ENGINEERING PLOT NAME : PLOT SCALE : 1 IN:40 FT

2

MATCH LINE STA. 680+75'PA'

RAMP PA R/L

PIPE UNDERDRAIN (6-INCH) WITH GEOTEXTILE FABRIC AND AGGREGATE

APRON ENDWALLS FOR UNDERDRAIN REINFORCED CONCRETE 6-INCH AND PIPE UNDERDRAIN UNPERFORATE 6-INCH

+46.81, -22.95' LT

+86.51, -171.00' LT

150 FEET RADIUS

+16.06, -27.46' LT

RAMP 'PA'

680+00'PA'

+00.23, -31.11' LT

+00.01, -99.91' LT

82.5 FEET RADIUS

BEGIN CONSTRUCTION
STA 144+17'PBN'
MATCH EXISTING

CG02
REVERSE SLOPE GUTTER

BEGIN CONSTRUCTION
STA 143+40'PBS'

144+00'PBN'

144+00'PBS'

+40.00

+50.00

+54.99

145+00'PBN'

145+00'PBS'

146+00'PBN'

146+00'PBS'

NB CTH PB
PBN R/L

SB CTH PB
PBS R/L

+15.69

147+00'PBN'

147+00'PBS'

148+00'PBN'

148+00'PBS'

149+00'PBN'

149+00'PBS'

+25.42

NB CTH PB

SB CTH PB

WB USH 18/151

MATCH LINE STA. 149+40'PBN'

SEE TRAFFIC SIGNAL PLAN FOR LOOP DETECTOR DETAILS
SAWING ASPHALT REQ'D.
REMOVE AND REPLACE ASPHALT PAVEMENT
TO THE EXISTING DEPTH WITH TWO EQUAL LAYERS
OF 4 HT 58-28.

+04.50

+16.20

+01.89

+82.01

RAMP PD R/L

RAMP 'PD'

677+00'PD'

676+00'PD'

STA 676+35'PD'
END HMA PAVEMENT INTERLAYER 1-INCH
END 3.5-INCH HMA OVERLAY
REMOVING CONCRETE PAVEMENT BUTT JOINTS REQ'D

MATCH LINE STA. 675+75'PD'

STATION & OFFSET TABLE					
POINT	STATION	OFFSET	Y COORDS	X COORDS	RADIUS
1	679+91.72 PA	17.21 LT	447152.345	786554.026	
2	679+84.65 PA	15.32 LT	447148.097	786548.066	1.5'
3	679+41.91 PA	41.45 LT	447157.590	786498.879	
4	679+37.35 PA	42.08 LT	447156.571	786494.386	
5	679+41.17 PA	35.94 LT	447152.164	786500.121	2.5'
6	679+33.70 PA	9.15 LT	447124.460	786502.512	
7	679+38.90 PA	16.52 LT	447133.179	786504.803	2.5'
8	679+76.97 PA	20.78 LT	447150.519	786538.956	
9	679+91.14 PA	8.91 LT	447144.368	786556.394	

LEGEND

- BASE PATCHING CONCRETE
- TRANSVERSE JOINT AND CRACK PLUNGE MILLING AND PATCHING
- CONCRETE PAVEMENT REPAIR
- AG01 — BASE AGGREGATE DENSE 3/4-INCH
- AP01 — PAVEMENT INTERLAYER 1-INCH AND HMA OVERLAY 4 HT 58-28 3.5-INCH 2 LAYERS 1.75" EACH
- AP02 — 4 HT 58-28 3.5-INCH 2 LAYERS 1.75" EACH
- CP01 — CONCRETE PAVEMENT 9-INCH
- CG01 — CONCRETE CURB & GUTTER INTEGRAL 30-INCH TYPE J
- CG02 — CONCRETE CURB & GUTTER 6-INCH SLOPED 30-INCH TYPE G
- SW01 — CONCRETE SIDEWALK 5-INCH

PROJECT NO: 1204-08-65	HWY: USH 18/151	COUNTY: DANE	PLAN DETAILS - CTH PB	SHEET 101	E

FILE NAME : G:\WDOTSW\20007-000 USH 18\CIVIL 3D\SHEETSPLAN\021201-PD - CTHPB.DWG
LAYOUT NAME - CTH PB

PLOT DATE : 11/30/2022 9:42 AM PLOT BY : KL ENGINEERING PLOT NAME : PLOT SCALE : 1 IN:40 FT

WISDOT/CADDS SHEET 42

2

LEGEND

- BASE PATCHING CONCRETE
- TRANSVERSE JOINT AND CRACK PLUNGE MILLING AND PATCHING
- CONCRETE PAVEMENT REPAIR
- AG01 BASE AGGREGATE DENSE 3/4-INCH
- AP01 PAVEMENT INTERLAYER 1-INCH AND HMA OVERLAY 4 HT 58-28 3.5-INCH 2 LAYERS 1.75" EACH
- AP02 4 HT 58-28 3.5-INCH 2 LAYERS 1.75" EACH
- CP01 CONCRETE PAVEMENT 9-INCH

MATCH LINE STA. 149+40'PBN'

MATCH LINE STA. 675+50'PB'

CONCRETE REPAIR LONGITUDINAL JOINT

STA 674+97'PB'
BEGIN HMA PAVEMENT INTERLAYER 1-INCH
BEGIN 3.5-INCH HMA OVERLAY
REMOVING CONCRETE PAVEMENT BUTT JOINTS REQ'D

RAMP PB R/L

END CONSTRUCTION
STA 155+12'PBN'
MATCH EXISTING

NB CTH PB

NB CTH PB PBN R/L

150+00'PBN' 151+00'PBN' 152+00'PBN' 153+00'PBN' 154+00'PBN' 155+00'PBN'

150+00'PBS' 151+00'PBS' 152+00'PBS' 153+00'PBS' 154+00'PBS' 155+00'PBS'

+39.49

SB CTH PB

SB CTH PB PBS R/L

+60.39

677+00'PC'

+22.79

END CONSTRUCTION
STA 155+00'PBS'
MATCH EXISTING

+00.57

WB USH 18/151

EB USH 18/151

+22.74

RAMP PC R/L

676+00'PC'

+20.11

STA 676+23'PC'
END HMA PAVEMENT INTERLAYER 1-INCH
END 3.5-INCH HMA OVERLAY
REMOVING CONCRETE PAVEMENT BUTT JOINTS REQ'D

+81.06

RAMP PC

MATCH LINE STA. 675+25'PC'

N

PROJECT NO: 1204-08-65	HWY: USH 18/151	COUNTY: DANE	PLAN DETAILS - CTH PB	SHEET 102	E

FILE NAME : G:\WDOTSW\20007-000 USH 18\CIVIL 3D\SHEETSPLAN\021201-PD - CTHPB.DWG
LAYOUT NAME - CTH PB (2)

PLOT DATE : 11/29/2022 12:26 PM PLOT BY : KL ENGINEERING PLOT NAME : PLOT SCALE : 1 IN:40 FT

WISDOT/CADDS SHEET 42

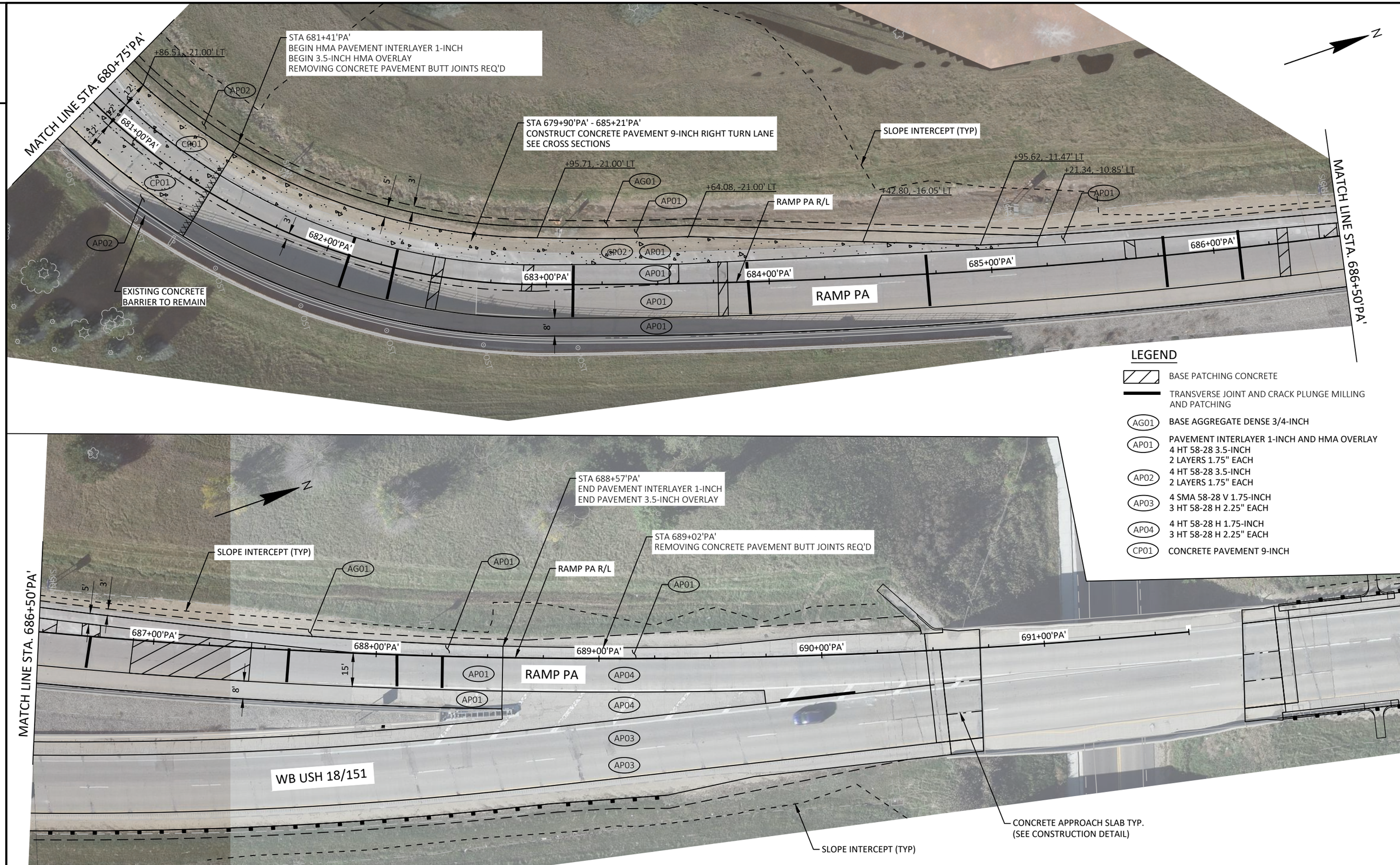

PROJECT NO: 1204-08-65	HWY: USH 18/151	COUNTY: DANE	PLAN DETAILS - RAMP PA	SHEET 103	E

FILE NAME : G:\WDOTSW\20007-000 USH 18\CIVIL 3D\SHEETSPLAN\021201-PD - CTHPB.DWG
LAYOUT NAME - RAMP PA
PLOT DATE : 11/29/2022 12:27 PM PLOT BY : KL ENGINEERING PLOT NAME : PLOT SCALE : 1 IN:40 FT
WISDOT/CADDS SHEET 42

2

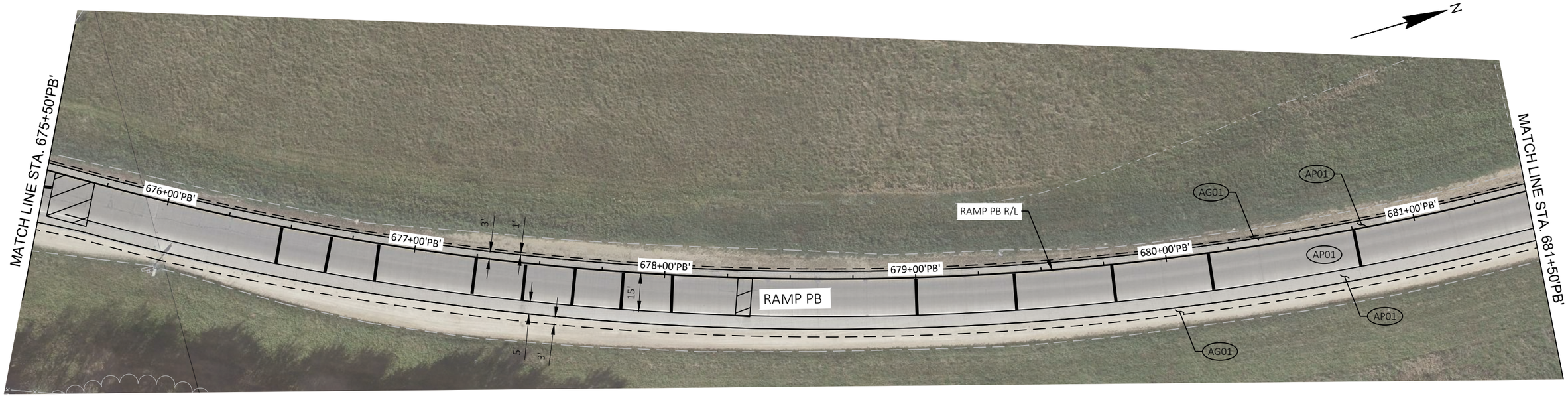

LEGEND

- BASE PATCHING CONCRETE
- TRANSVERSE JOINT AND CRACK PLUNGE MILLING AND PATCHING
- CONCRETE PAVEMENT REPAIR
- AG01 — BASE AGGREGATE DENSE 3/4-INCH
- AP01 — PAVEMENT INTERLAYER 1-INCH AND HMA OVERLAY
  4 HT 58-28 3.5-INCH
  2 LAYERS 1.75" EACH

PROJECT NO: 1204-08-65	HWY: USH 18/151	COUNTY: DANE	PLAN DETAILS - RAMP PB	SHEET 104	E

FILE NAME : G:\WDOTSW\20007-000 USH 18\CIVIL 3D\SHEETSPLAN\021201-PD - CTHPB.DWG
LAYOUT NAME - RAMP PB (1)

PLOT DATE : 11/29/2022 12:28 PM PLOT BY : KL ENGINEERING PLOT NAME : PLOT SCALE : ##########

2

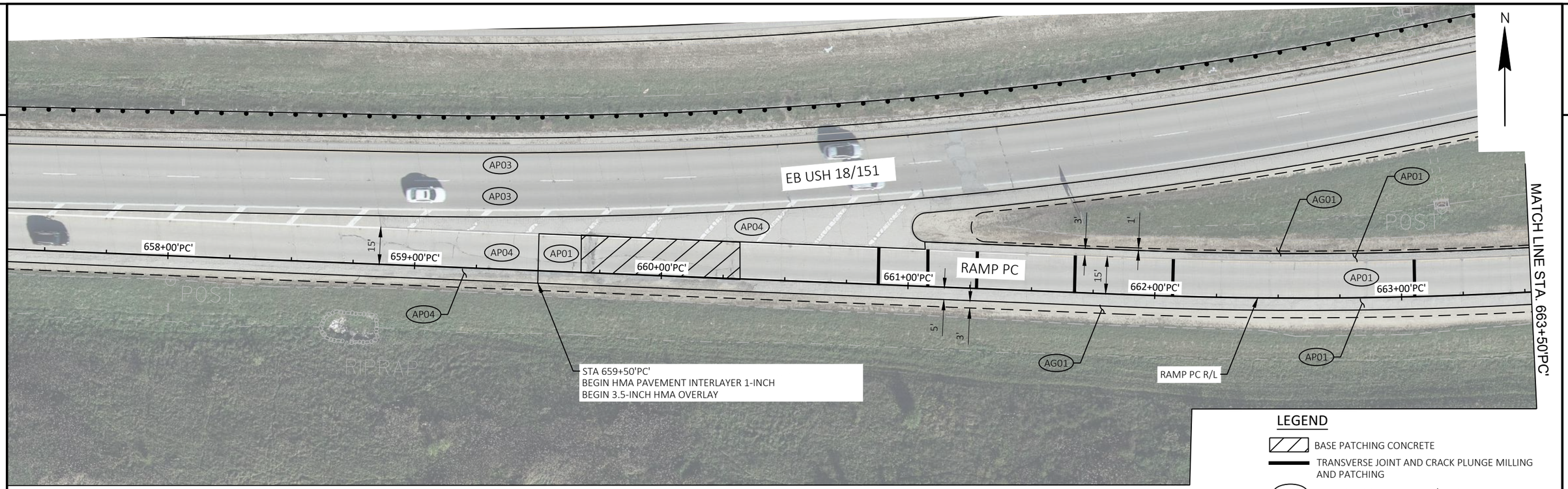

LEGEND

- BASE PATCHING CONCRETE
- TRANSVERSE JOINT AND CRACK PLUNGE MILLING AND PATCHING
- AG01 — BASE AGGREGATE DENSE 3/4-INCH
- AP01 — PAVEMENT INTERLAYER 1-INCH AND HMA OVERLAY 4 HT 58-28 3.5-INCH 2 LAYERS 1.75" EACH
- AP03 — 4 SMA 58-28 V 1.75-INCH 3 HT 58-28 H 2.25" EACH
- AP04 — 4 HT 58-28 H 1.75-INCH 3 HT 58-28 H 2.25" EACH

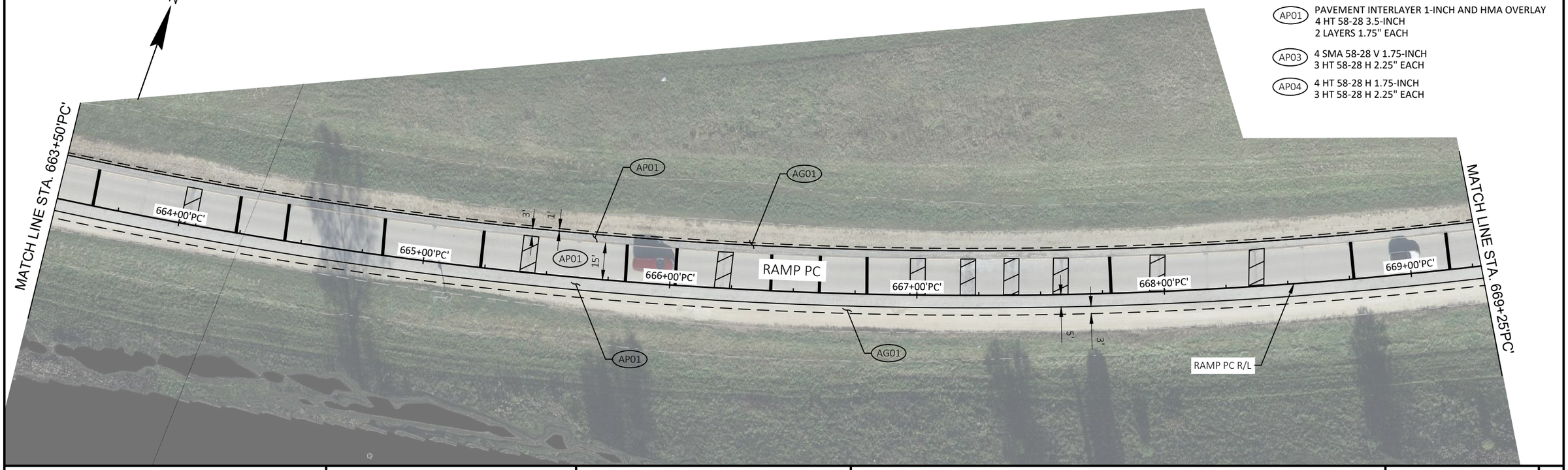

PROJECT NO: 1204-08-65	HWY: USH 18/151	COUNTY: DANE	PLAN DETAILS - RAMP ' PC'	SHEET 105	E

FILE NAME : G:\WDOTSW\20007-000 USH 18\CIVIL 3D\SHEETSPLAN\021201-PD - CTHPB.DWG
LAYOUT NAME - RAMP PC (2)

PLOT DATE : 11/29/2022 12:29 PM PLOT BY : KL ENGINEERING PLOT NAME : PLOT SCALE : ##########

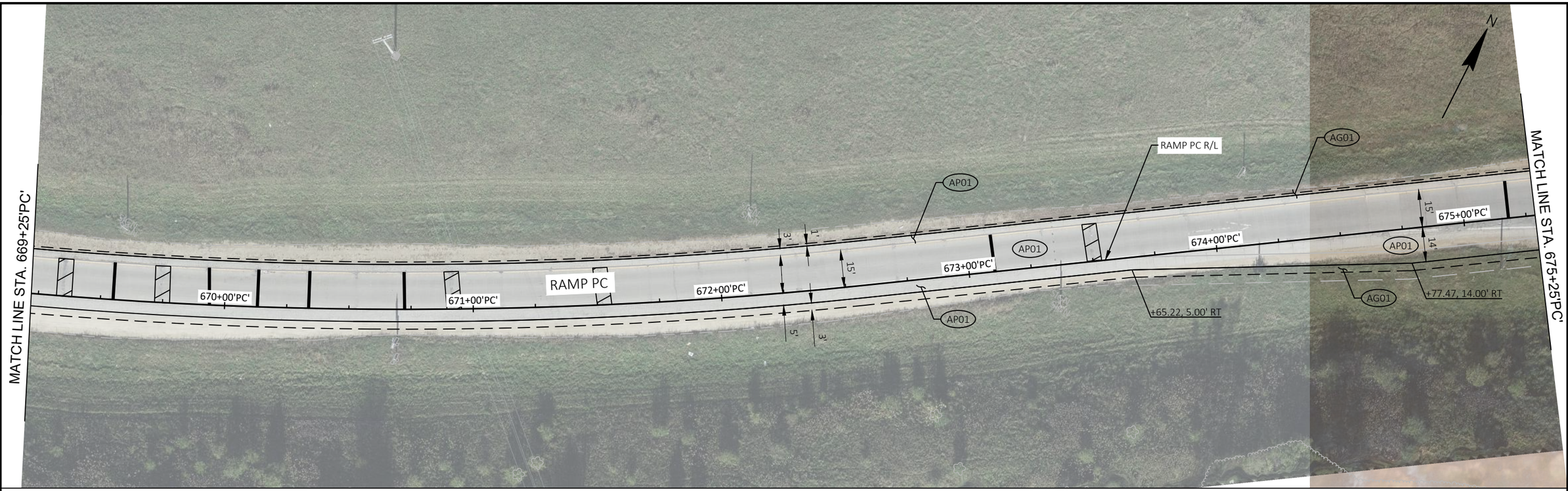

2

LEGEND

- BASE PATCHING CONCRETE
- TRANSVERSE JOINT AND CRACK PLUNGE MILLING AND PATCHING
- (AG01) BASE AGGREGATE DENSE 3/4-INCH
- (AP01) PAVEMENT INTERLAYER 1-INCH AND HMA OVERLAY
  4 HT 58-28 3.5-INCH
  2 LAYERS 1.75" EACH
- (AP03) 4 SMA 58-28 V 1.75-INCH
  3 HT 58-28 H 2.25" EACH
- (AP04) 4 HT 58-28 H 1.75-INCH
  3 HT 58-28 H 2.25" EACH

PROJECT NO: 1204-08-65	HWY: USH 18/151	COUNTY: DANE	PLAN DETAILS - RAMP PC	SHEET 106	E

FILE NAME : G:\WDOTSW\20007-000 USH 18\CIVIL 3D\SHEETSPLAN\021201-PD - CTHPB.DWG
LAYOUT NAME - RAMP PC (3)
PLOT DATE : 11/29/2022 12:30 PM
PLOT BY : KL ENGINEERING
PLOT NAME :
PLOT SCALE : 1 IN:40 FT
WISDOT/CADDS SHEET 42

2

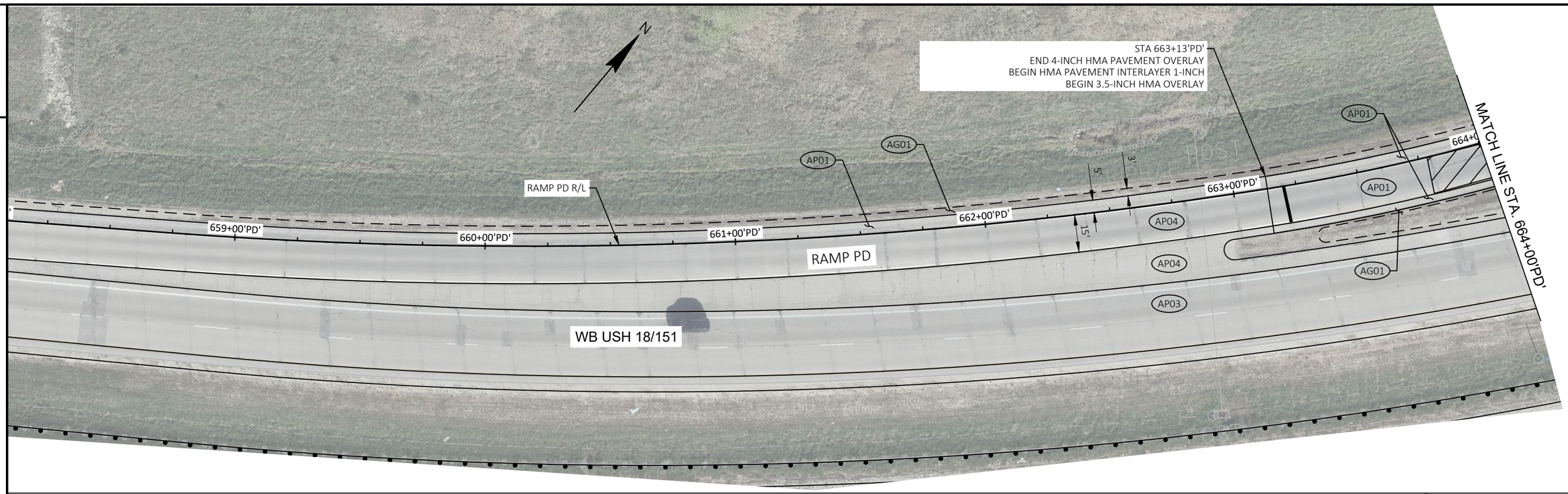

LEGEND

- BASE PATCHING CONCRETE
- TRANSVERSE JOINT AND CRACK PLUNGE MILLING AND PATCHING
- AG01 — BASE AGGREGATE DENSE 3/4-INCH
- AP01 — PAVEMENT INTERLAYER 1-INCH AND HMA OVERLAY
  4 HT 58-28 3.5-INCH
  2 LAYERS 1.75" EACH
- AP03 — 4 SMA 58-28 V 1.75-INCH
  3 HT 58-28 H 2.25" EACH
- AP04 — 4 HT 58-28 H 1.75-INCH
  3 HT 58-28 H 2.25" EACH

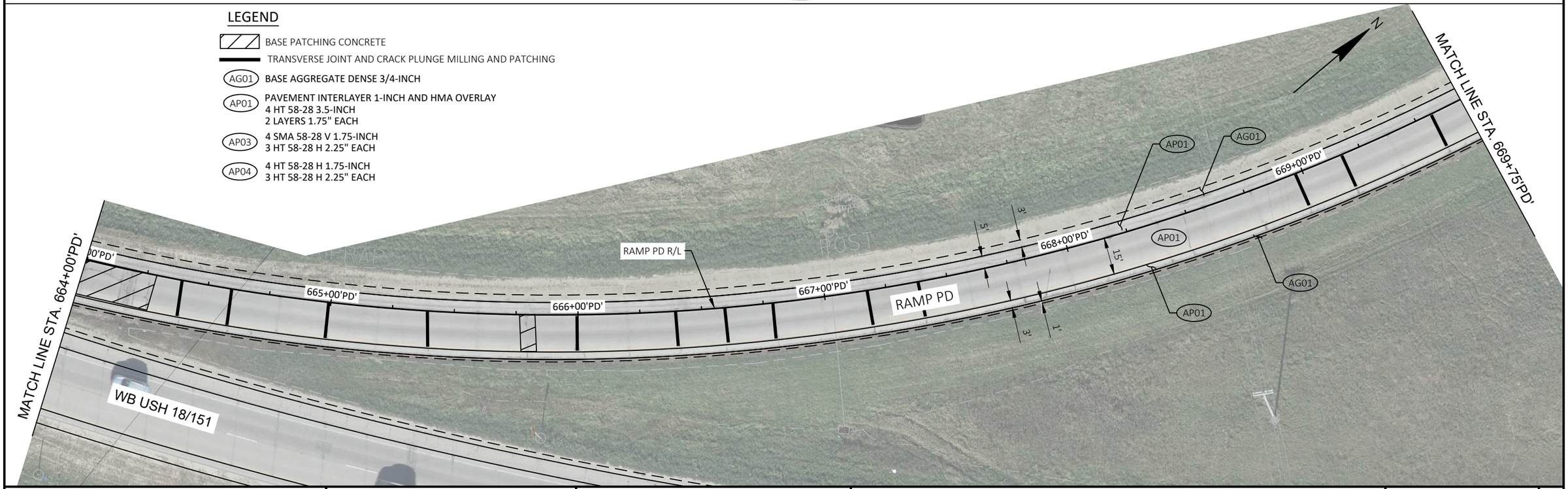

PROJECT NO: 1204-08-65	HWY: USH 18/151	COUNTY: DANE	PLAN DETAILS - RAMP PD	SHEET 107	E

FILE NAME : G:\WDOTSW\20007-000 USH 18\CIVIL 3D\SHEETSPLAN\021201-PD - CTHPB.DWG
LAYOUT NAME - RAMP PD (2)
PLOT DATE : 11/29/2022 12:31 PM
PLOT BY : KL ENGINEERING
PLOT NAME :
PLOT SCALE : ##########
WISDOT/CADDS SHEET 42

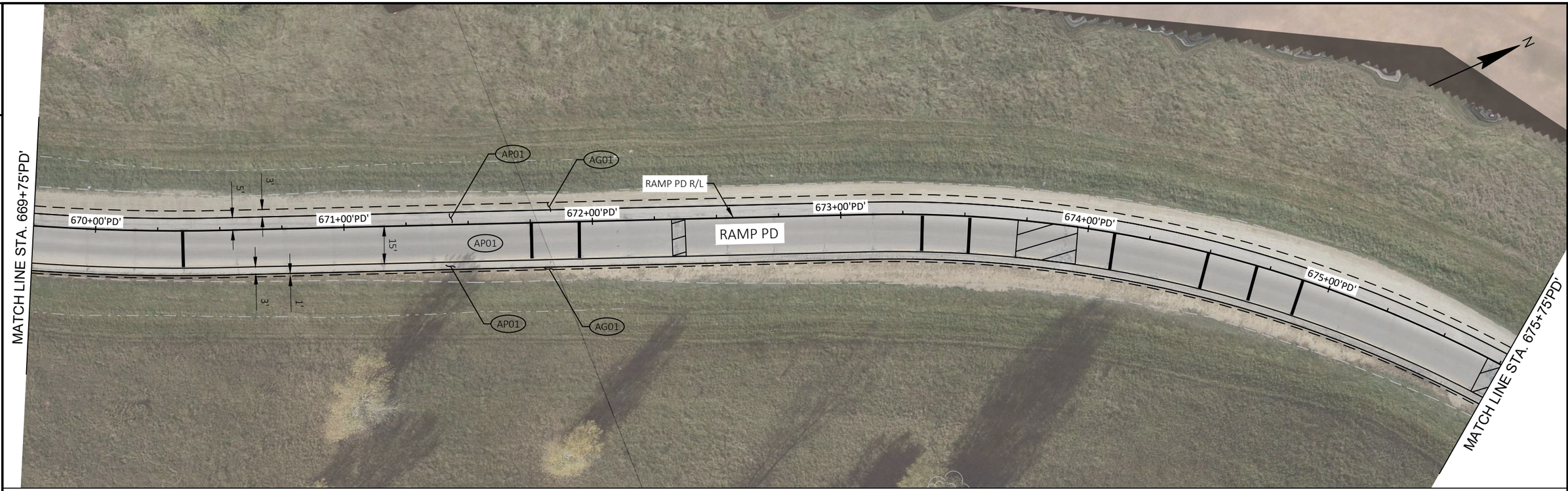

LEGEND

- BASE PATCHING CONCRETE
- TRANSVERSE JOINT AND CRACK PLUNGE MILLING AND PATCHING
- AG01 — BASE AGGREGATE DENSE 3/4-INCH
- AP01 — PAVEMENT INTERLAYER 1-INCH AND HMA OVERLAY
  4 HT 58-28 3.5-INCH
  2 LAYERS 1.75" EACH

PROJECT NO: 1204-08-65	HWY: USH 18/151	COUNTY: DANE	PLAN DETAILS - RAMP PD	SHEET 108	E

FILE NAME : G:\WDOTSW\20007-000 USH 18\CIVIL 3D\SHEETSPLAN\021201-PD - CTHPB.DWG
LAYOUT NAME - RAMP PD (3)
PLOT DATE : 11/29/2022 12:32 PM PLOT BY : KL ENGINEERING PLOT NAME : PLOT SCALE : 1 IN:40 FT

2

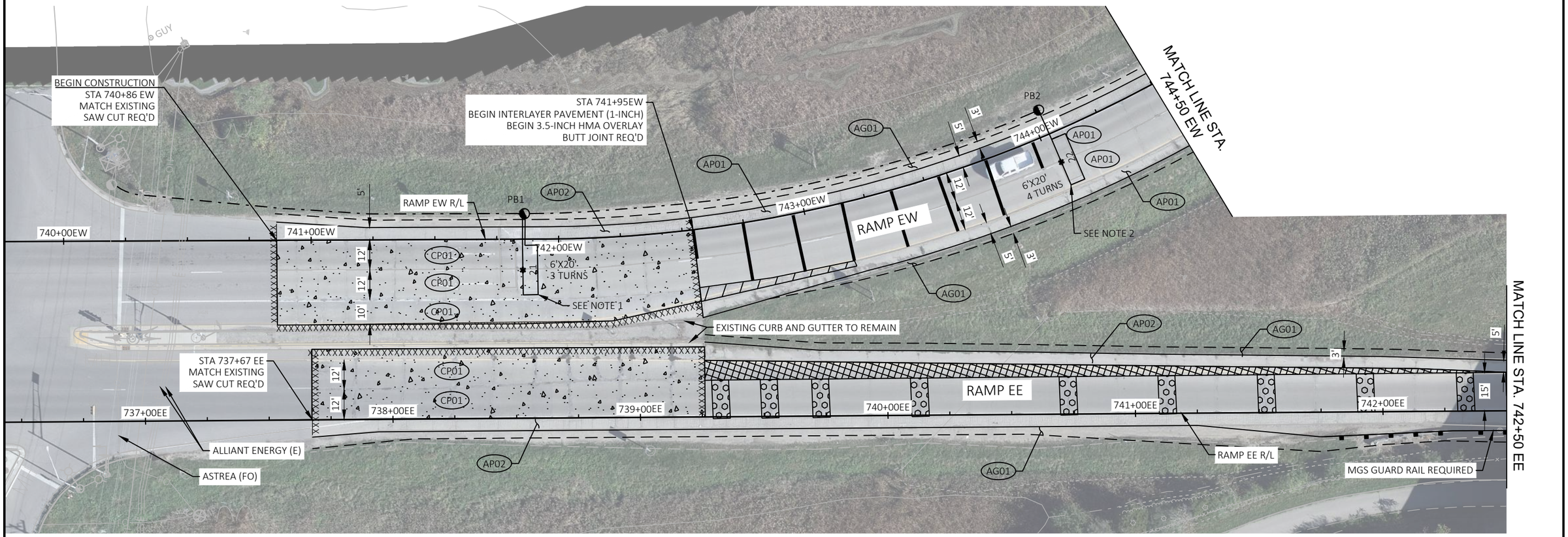

LEGEND

- NONMETALLIC CONDUIT 2", UNLESS OTHERWISE NOTED
- LOOP DETECTOR IN 1" NONMETALLIC CONDUIT
- PULL BOX NON-CONDUCTIVE, 24"X36"
- BASE PATCHING CONCRETE
- CONCRETE PAVEMENT REPAIR
- CONCRETE PAVEMENT REPLACEMENT
- TRANSVERSE JOINT AND CRACK PLUNGE MILLING AND PATCHING
- AG01 — BASE AGGREGATE DENSE 3/4-INCH
- AP01 — PAVEMENT INTERLAYER 1-INCH AND HMA OVERLAY
  4 HT 58-28 3.5-INCH
  2 LAYERS 1.75" EACH
- AP02 — 4 HT 58-28 3.5-INCH
  2 LAYERS 1.75" EACH
- CP01 — CONCRETE PAVEMENT 9-INCH

NOTES:

1) INSTALL LOOP DETECTOR ACCORDING TO SDD: "LOOP DETECTOR INSTALLED IN BASE COURSE WITH PULL (SPLICE) BOX OFF ROADWAY (OPTION 2)". LOOP SHALL BE WIRED WITH 3 TURNS OF LOOP DETECTOR WIRE. VERIFY THAT LOOP FUNCTIONS AND MAKE ADJUSTMENTS TO IN-CABINET EQUIPMENT IF REQUIRED TO RESTORE FUNCTIONALITY OF PREVIOUS LOOP.

2) INSTALL LOOP DETECTOR ACCORDING TO SDD: "LOOP DETECTOR INSTALLED IN EXISTING CONCRETE PAVEMENT WITH NEW ASPHALTIC OVERLAY". LOOP SHALL BE WIRED WITH 4 TURNS OF LOOP DETECTOR WIRE. VERIFY THAT LOOP FUNCTIONS AND MAKE ADJUSTMENTS TO IN-CABINET EQUIPMENT IF REQUIRED TO RESTORE FUNCTIONALITY OF PREVIOUS LOOP.

PROJECT NO: 1204-08-65	HWY: USH 18/151	COUNTY: DANE	PLAN DETAILS - RAMP EE & RAMP EW	SHEET 109	E

FILE NAME : G:\WDOTSW\20007-000 USH 18\CIVIL 3D\SHEETSPLAN\021201-PD - E VERONA RAMPS LOOP REPLACEMENT.DWG
LAYOUT NAME - RAMP EE
PLOT DATE : 11/29/2022 1:05 PM PLOT BY : KL ENGINEERING PLOT NAME : PLOT SCALE : 1 IN:40 FT
WISDOT/CADDS SHEET 42

2

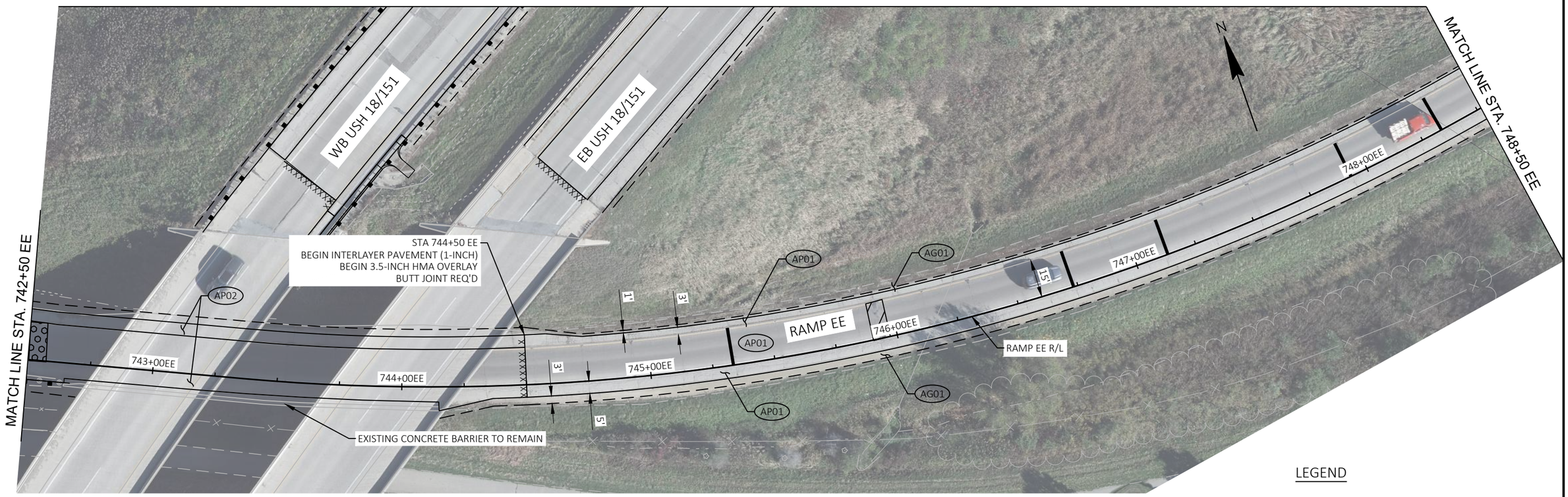

LEGEND

- BASE PATCHING CONCRETE
- TRANSVERSE JOINT AND CRACK PLUNGE MILLING AND PATCHING
- CONCRETE PAVEMENT REPAIR
- CONCRETE PAVEMENT REPLACEMENT
- AG01 — BASE AGGREGATE DENSE 3/4-INCH
- AP01 — PAVEMENT INTERLAYER 1-INCH AND HMA OVERLAY
  4 HT 58-28 3.5-INCH
  2 LAYERS 1.75" EACH
- AP02 — 4 HT 58-28 3.5-INCH
  2 LAYERS 1.75" EACH
- CP01 — CONCRETE PAVEMENT 9-INCH

PROJECT NO: 1204-08-65	HWY: USH 18/151	COUNTY: DANE	PLAN DETAILS - RAMP EE	SHEET 110	E

FILE NAME : G:\WDOTSW\20007-000 USH 18\CIVIL 3D\SHEETSPLAN\021201-PD - E VERONA RAMPS.DWG
LAYOUT NAME - RAMP EE

PLOT DATE : 11/29/2022 1:20 PM PLOT BY : KL ENGINEERING PLOT NAME : PLOT SCALE : 1 IN:40 FT

2

2

MATCH LINE STA. 748+50 EE

MATCH LINE STA. 754+50 EE

N

AP01

AG01

RAMP EE R/L

RAMP EE

3'

1"

18'

5'

749+00EE

750+00EE

751+00EE

752+00EE

753+00EE

754+00EE

MATCH LINE STA. 754+50 EE

MATCH LINE STA. 760+50 EE

N

755+00EE

756+00EE

757+00EE

758+00EE

759+00EE

760+00EE

RAMP EE

GUARD RAIL REQUIRED

LEGEND

BASE PATCHING CONCRETE

TRANSVERSE JOINT AND CRACK PLUNGE MILLING AND PATCHING

AG01 BASE AGGREGATE DENSE 3/4-INCH

AP01 PAVEMENT INTERLAYER 1-INCH AND HMA OVERLAY
4 HT 58-28 3.5-INCH
2 LAYERS 1.75" EACH

PROJECT NO: 1204-08-65	HWY: USH 18/151	COUNTY: DANE	PLAN DETAILS - RAMP EE	SHEET 111	E

FILE NAME : G:\WDOTSW\20007-000 USH 18\CIVIL 3D\SHEETSPLAN\021201-PD - E VERONA RAMPS.DWG
LAYOUT NAME - RAMP EE (2)

PLOT DATE : 11/29/2022 1:21 PM PLOT BY : KL ENGINEERING PLOT NAME : PLOT SCALE : 1 IN:40 FT

WISDOT/CADDS SHEET 42

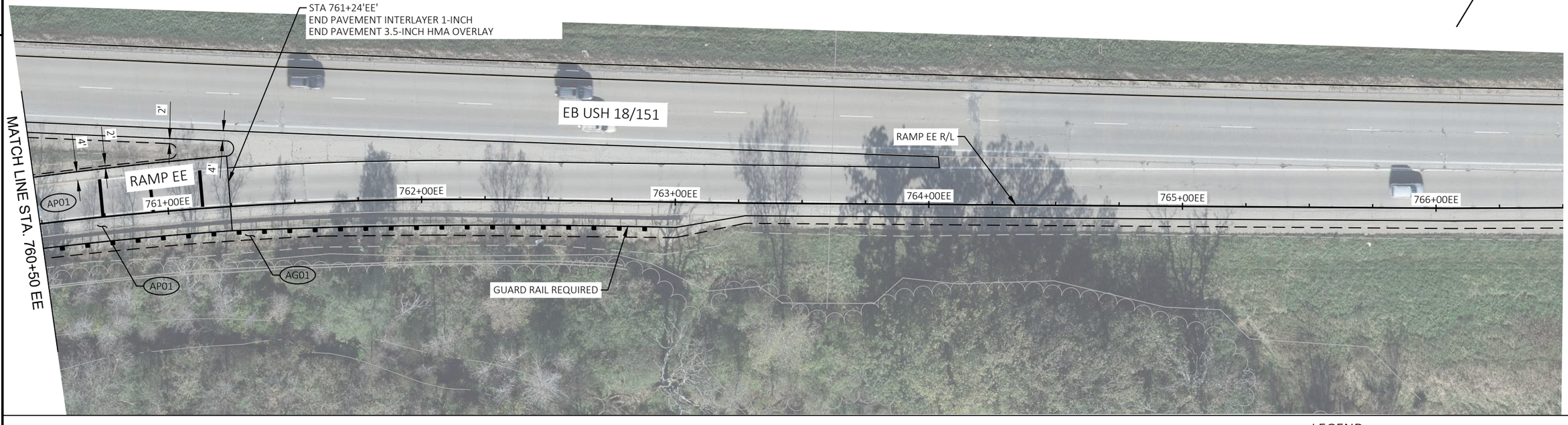

LEGEND

- BASE PATCHING CONCRETE
- TRANSVERSE JOINT AND CRACK PLUNGE MILLING AND PATCHING
- AG01 — BASE AGGREGATE DENSE 3/4-INCH
- AP01 — PAVEMENT INTERLAYER 1-INCH AND HMA OVERLAY
  4 HT 58-28 3.5-INCH
  2 LAYERS 1.75" EACH

PROJECT NO: 1204-08-65	HWY: USH 18/151	COUNTY: DANE	PLAN DETAILS - RAMP EE	SHEET 112	E

FILE NAME : G:\WDOTSW\20007-000 USH 18\CIVIL 3D\SHEETSPLAN\021201-PD - E VERONA RAMPS.DWG
LAYOUT NAME - RAMP EE (3)
PLOT DATE : 11/29/2022 1:22 PM PLOT BY : KL ENGINEERING PLOT NAME : PLOT SCALE : 1 IN:40 FT

LEGEND

BASE PATCHING CONCRETE

TRANSVERSE JOINT AND CRACK PLUNGE MILLING AND PATCHING

AG01 BASE AGGREGATE DENSE 3/4-INCH

AP01 PAVEMENT INTERLAYER 1-INCH AND HMA OVERLAY
4 HT 58-28 3.5-INCH
2 LAYERS 1.75" EACH

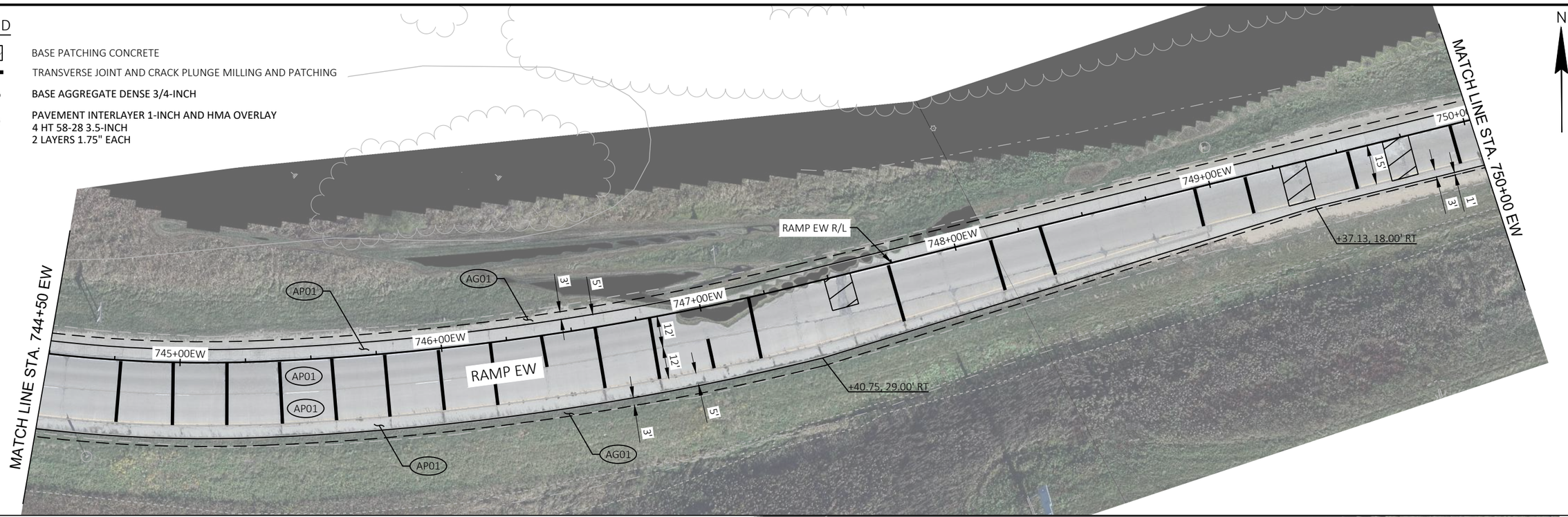

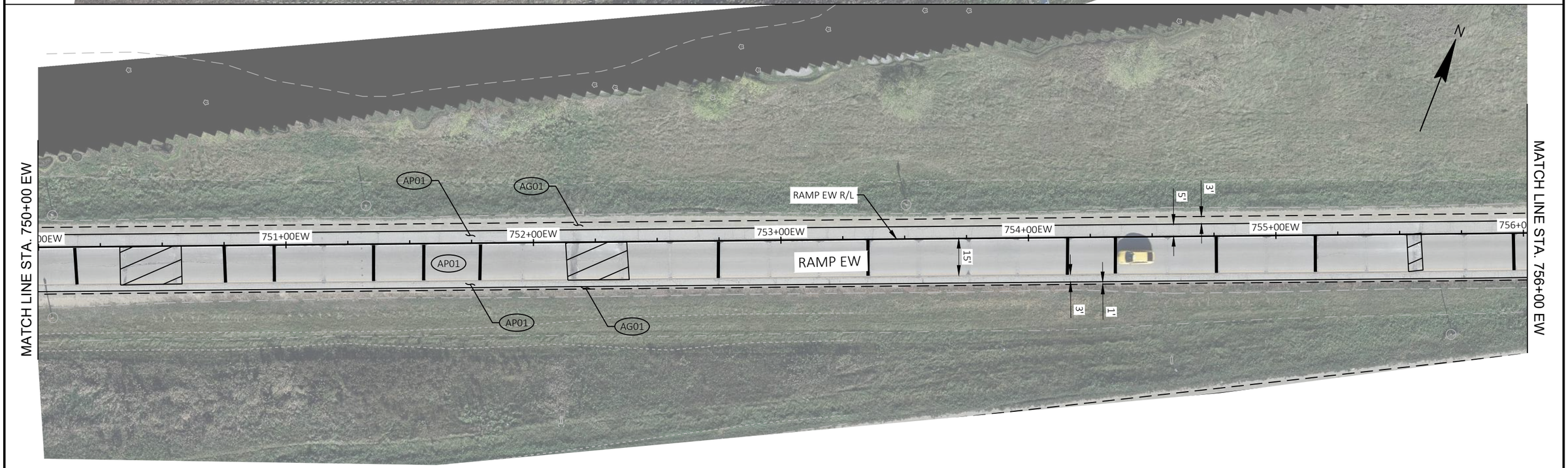

PROJECT NO: 1204-08-65	HWY: USH 18/151	COUNTY: DANE	PLAN DETAILS - RAMP EW	SHEET 113	E

FILE NAME : G:\WDOTSW\20007-000 USH 18\CIVIL 3D\SHEETSPLAN\021201-PD - E VERONA RAMPS.DWG
LAYOUT NAME - RAMP EW

PLOT DATE : 11/29/2022 1:23 PM PLOT BY : KL ENGINEERING PLOT NAME : PLOT SCALE : 1 IN:40 FT

WISDOT/CADDS SHEET 42

2

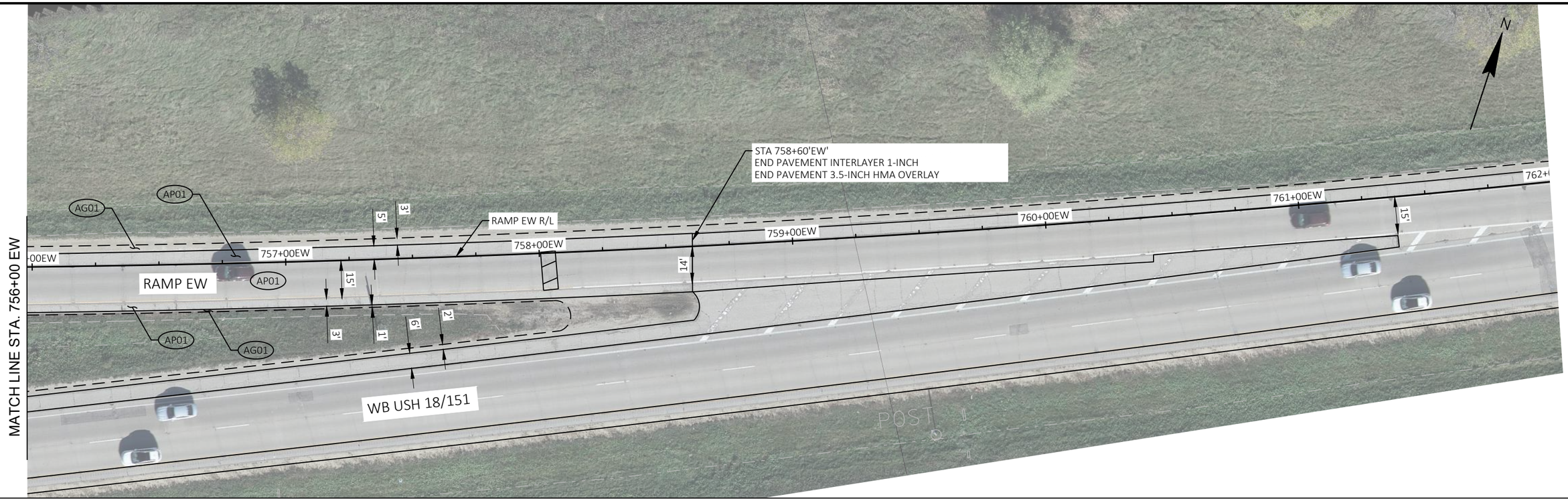

LEGEND

- BASE PATCHING CONCRETE
- TRANSVERSE JOINT AND CRACK PLUNGE MILLING AND PATCHING
- AG01 — BASE AGGREGATE DENSE 3/4-INCH
- AP01 — PAVEMENT INTERLAYER 1-INCH AND HMA OVERLAY
  4 HT 58-28 3.5-INCH
  2 LAYERS 1.75" EACH

PROJECT NO: 1204-08-65	HWY: USH 18/151	COUNTY: DANE	PLAN DETAILS - RAMP EW	SHEET 114	E

FILE NAME : G:\WDOTSW\20007-000 USH 18\CIVIL 3D\SHEETSPLAN\021201-PD - E VERONA RAMPS.DWG
LAYOUT NAME - RAMP EW (2)
PLOT DATE : 11/29/2022 1:24 PM PLOT BY : KL ENGINEERING PLOT NAME : PLOT SCALE : 1 IN:40 FT

NOTES:

- MATCH EXISTING ELEVATIONS AT ALL SAW CUT LOCATIONS.
- ALL ELEVATIONS ARE MEASURED AT EDGE OF PAVEMENT, CURB FLANGE, AND JOINTS.
- VERIFY EXISTING ELEVATIONS PRIOR TO BEGINNING CONSTRUCTION.

SB CTH PB

NB CTH PB

149+00'PBS'

149+00'PBN'

RAMP 'PA'

682+00'PA'

683+00'

N

WB USH 18/151

677+00'WB'

678+00'WB'

679+00'WB'

680+00'WB'

681+00'WB'

682+00'WB'

MATCH LINE STA. 683+25'EB'

EB USH 18/151

678+00'EB'	679+00'EB'	680+00'EB'	681+00'EB'	682+00'EB'	683+00'EB'
1048.58	1048.37	1048.16	1048.05	1047.91	1047.76	1047.60	1047.43	1047.23	1047.04	1046.82	1046.61	1046.37	1046.16	1045.93	1045.71	1045.28	1045.49
1048.52	1048.28	1048.05	1047.91	1047.76	1047.60	1047.43	1047.23	1047.04	1046.82	1046.61	1046.37	1046.16	1045.93	1045.71	1045.49	1046.00	1046.21
1048.45	1048.16	1047.91	1047.76	1047.60	1047.43	1047.23	1047.04	1046.82	1046.61	1046.37	1046.16	1045.93	1045.71	1045.49	1045.28	1046.00	1046.21
1049.30	1049.09	1048.88	1048.77	1048.63	1048.48	1048.32	1048.15	1047.95	1047.76	1047.54	1047.33	1047.09	1046.88	1046.65	1046.44	1046.21	1046.00
1049.24	1049.00	1048.77	1048.63	1048.48	1048.32	1048.15	1047.95	1047.76	1047.54	1047.33	1047.09	1046.88	1046.65	1046.44	1046.21	1046.00	1045.83
1049.17	1048.88	1048.63	1048.48	1048.32	1048.15	1047.95	1047.76	1047.54	1047.33	1047.09	1046.88	1046.65	1046.44	1046.21	1046.00	1045.83	1045.71
1050.14	1049.93	1049.72	1049.61	1049.47	1049.32	1049.16	1048.99	1048.79	1048.60	1048.38	1048.17	1047.93	1047.72	1047.49	1047.27	1047.05	1046.83
1050.08	1049.84	1049.61	1049.47	1049.32	1049.16	1048.99	1048.79	1048.60	1048.38	1048.17	1047.93	1047.72	1047.49	1047.27	1047.05	1046.83	1046.61
1050.01	1049.72	1049.47	1049.32	1049.16	1048.99	1048.79	1048.60	1048.38	1048.17	1047.93	1047.72	1047.49	1047.27	1047.05	1046.83	1046.61	1046.39

SIGN

682+00'PB'

681+00'PB'

RAMP 'PB'

PROJECT NO: 1204-08-65	HWY: USH 18/151	COUNTY: DANE	PAVING DETAILS - USH 18 EB	SHEET 115	E

FILE NAME : G:\WDOTSW\20007-000 USH 18\CIVIL 3D\SHEETSPLAN\021300-PV - USH 18 EB.DWG
LAYOUT NAME - EB 18

PLOT DATE : 7/14/2022 8:17 AM PLOT BY : KL ENGINEERING PLOT NAME : PLOT SCALE : 1 IN:40 FT

WISDOT/CADDS SHEET 42

NOTES:

- MATCH EXISTING ELEVATIONS AT ALL SAW CUT LOCATIONS.
- ALL ELEVATIONS ARE MEASURED AT EDGE OF PAVEMENT, CURB FLANGE, AND JOINTS.
- VERIFY EXISTING ELEVATIONS PRIOR TO BEGINNING CONSTRUCTION.

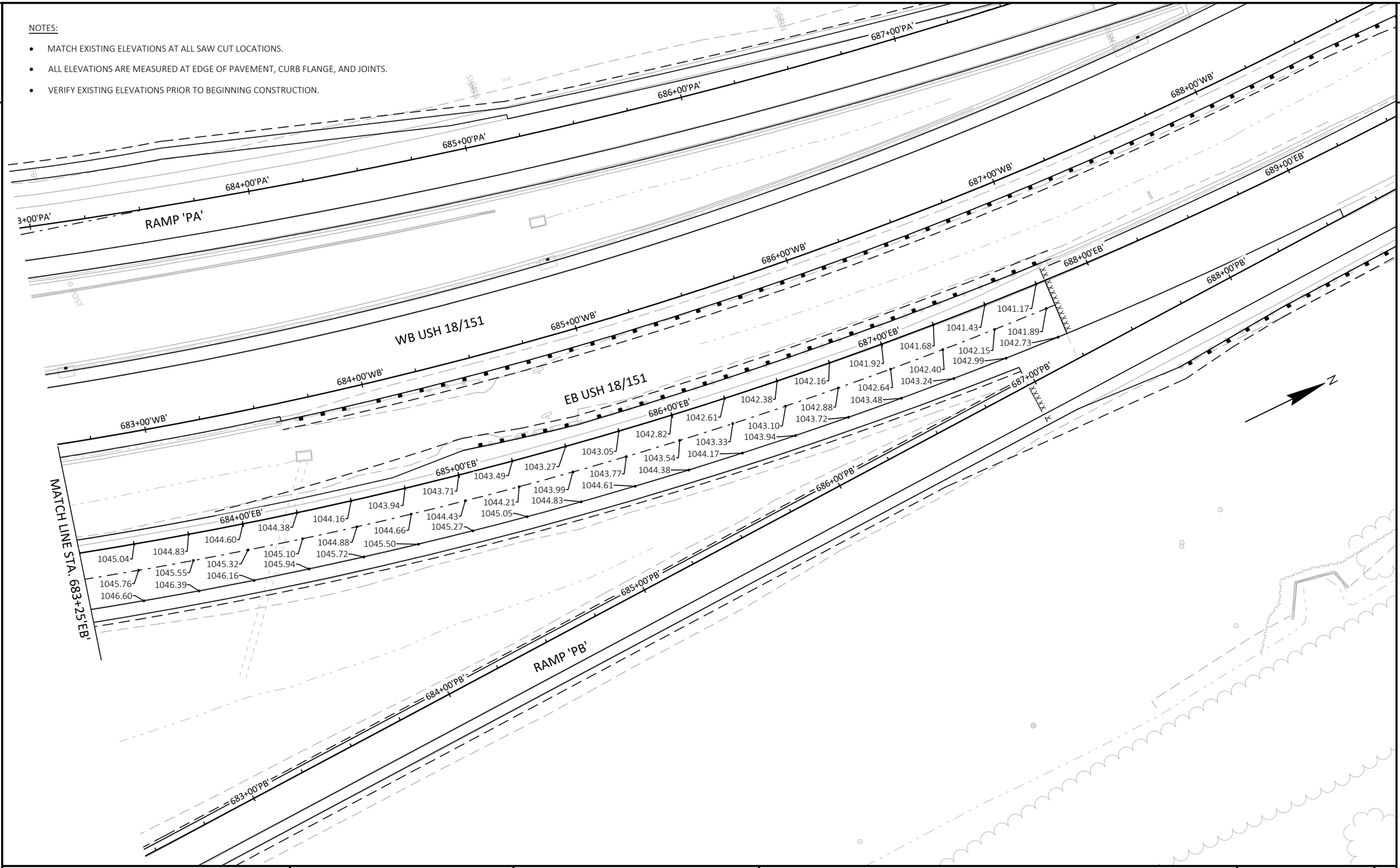

PROJECT NO: 1204-08-65	HWY: USH 18/151	COUNTY: DANE	PAVING DETAILS - USH 18 EB	SHEET 116	E

FILE NAME : G:\WDOTSW\20007-000 USH 18\CIVIL 3D\SHEETSPLAN\021300-PV - USH 18 EB.DWG
LAYOUT NAME - EB 18 (2)

PLOT DATE : 7/14/2022 8:17 AM PLOT BY : KL ENGINEERING PLOT NAME : PLOT SCALE : 1 IN:40 FT

WISDOT/CADDS SHEET 42

NOTES:

- MATCH EXISTING ELEVATIONS AT ALL SAW CUT LOCATIONS.
- ALL ELEVATIONS ARE MEASURED AT EDGE OF PAVEMENT, CURB FLANGE, AND JOINTS.
- VERIFY EXISTING ELEVATIONS PRIOR TO BEGINNING CONSTRUCTION.

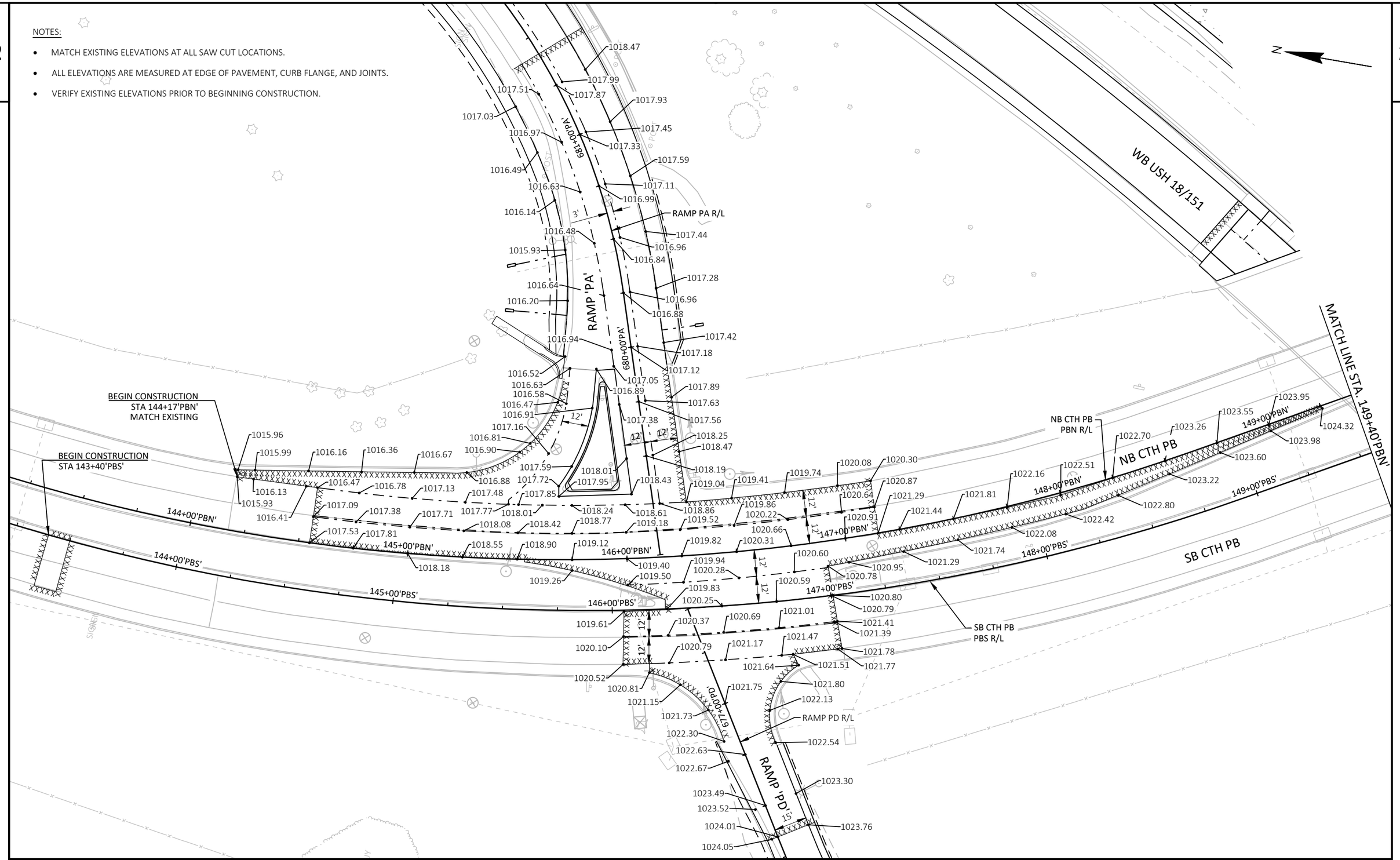

PROJECT NO: 1204-08-65	HWY: USH 18/151	COUNTY: DANE	PAVING DETAILS - CTH PB	SHEET 117	E

FILE NAME : G:\WDOTSW\20007-000 USH 18\CIVIL 3D\SHEETSPLAN\021301-PV - CTHPB.DWG
LAYOUT NAME - CTH PB
PLOT DATE : 7/18/2022 3:58 PM
PLOT BY : KL ENGINEERING
PLOT NAME :
PLOT SCALE : 1 IN:40 FT
WISDOT/CADDS SHEET 42

2

NOTES:

- MATCH EXISTING ELEVATIONS AT ALL SAW CUT LOCATIONS.
- ALL ELEVATIONS ARE MEASURED AT EDGE OF PAVEMENT, CURB FLANGE, AND JOINTS.
- VERIFY EXISTING ELEVATIONS PRIOR TO BEGINNING CONSTRUCTION.

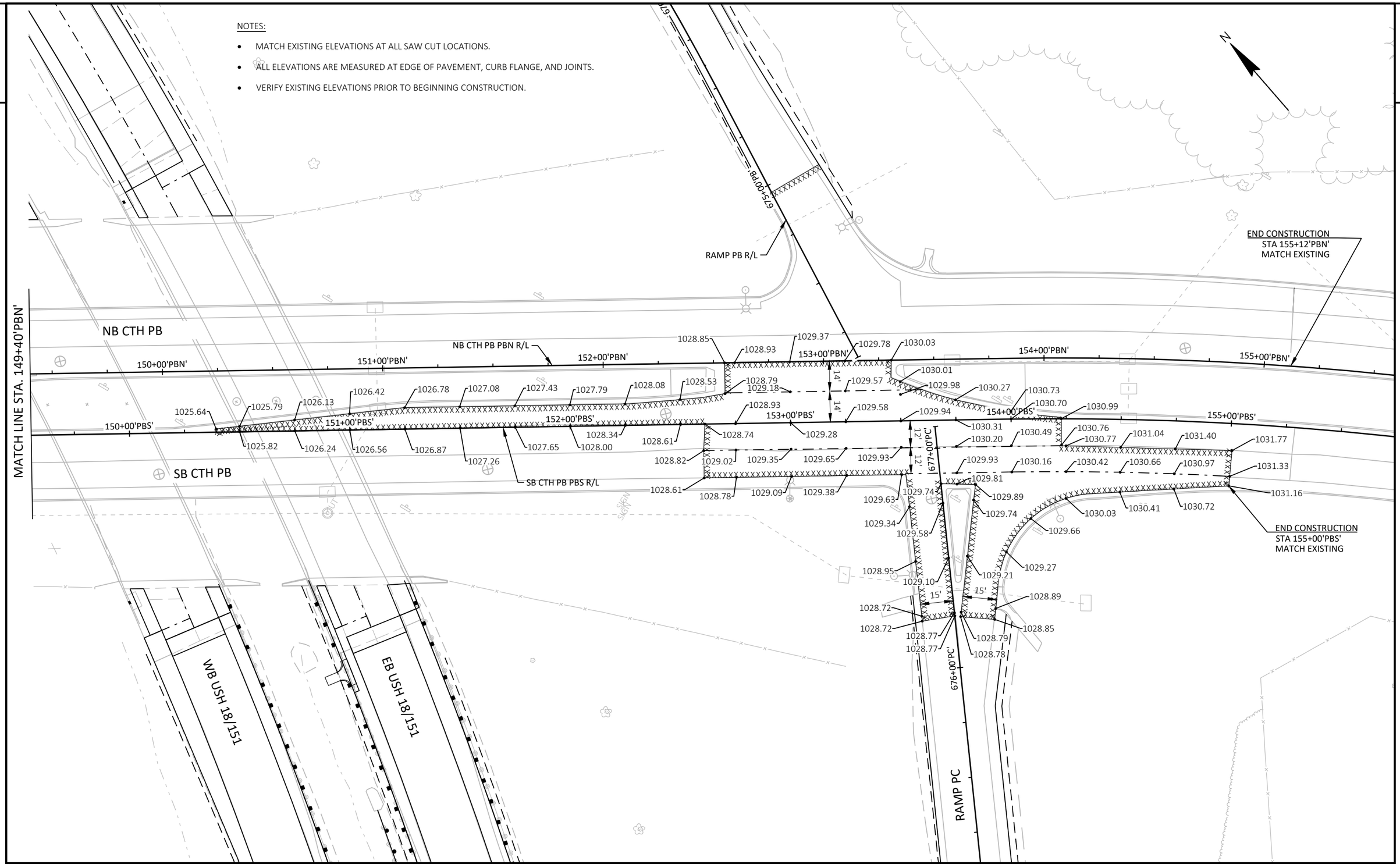

PROJECT NO: 1204-08-65	HWY: USH 18/151	COUNTY: DANE	PAVING DETAILS - CTH PB	SHEET 118	E

NOTES:

- MATCH EXISTING ELEVATIONS AT ALL SAW CUT LOCATIONS.
- ALL ELEVATIONS ARE MEASURED AT EDGE OF PAVEMENT, CURB FLANGE, AND JOINTS.
- VERIFY EXISTING ELEVATIONS PRIOR TO BEGINNING CONSTRUCTION.

BEGIN CONSTRUCTION
STA 740+86 EW
MATCH EXISTING
SAW CUT REQ'D

RAMP EW R/L

RAMP EW

740+00EW
741+00EW
742+00EW
743+00EW
744+00EW
745+00EW
746+00EW

955.38
955.58
955.87
955.87
955.24
955.14
954.85
955.26
955.05
954.85
954.65
954.49
954.41
954.37
954.35
955.52
955.37
955.29
955.20
955.15
955.10
955.08
955.07
955.73
955.67
955.67
955.66
955.66
955.70
955.73
955.74
955.86
955.87
955.93
956.01
956.10
956.20
956.06
956.04
955.18
954.97
954.81
954.65
954.54
954.45
954.37
954.37
955.09
954.88
954.71
954.55
954.44
954.36
954.26
954.25
954.81
954.63
954.49
954.35
954.26
954.18
954.08
954.08
954.62
954.56
954.38
954.26
954.14
953.98
953.85
953.77
953.77

12'
12'
10'
4'
12'
9'
12'
15'

737+00EE
738+00EE
739+00EE
740+00EE
741+00EE
742+00EE

RAMP EE

RAMP EE R/L

744+00WB'

N

PROJECT NO: 1204-08-65	HWY: USH 18/151	COUNTY: DANE	PAVING DETAILS - RAMP EE & RAMP EW	SHEET 119	E

FILE NAME : G:\WDOTSW\20007-000 USH 18\CIVIL 3D\SHEETSPLAN\021302-PV - E VERONA RAMPS.DWG
LAYOUT NAME - RAMP EE

PLOT DATE : 7/14/2022 8:31 AM PLOT BY : KL ENGINEERING PLOT NAME : PLOT SCALE : 1 IN:40 FT

WISDOT/CADDS SHEET 42

2

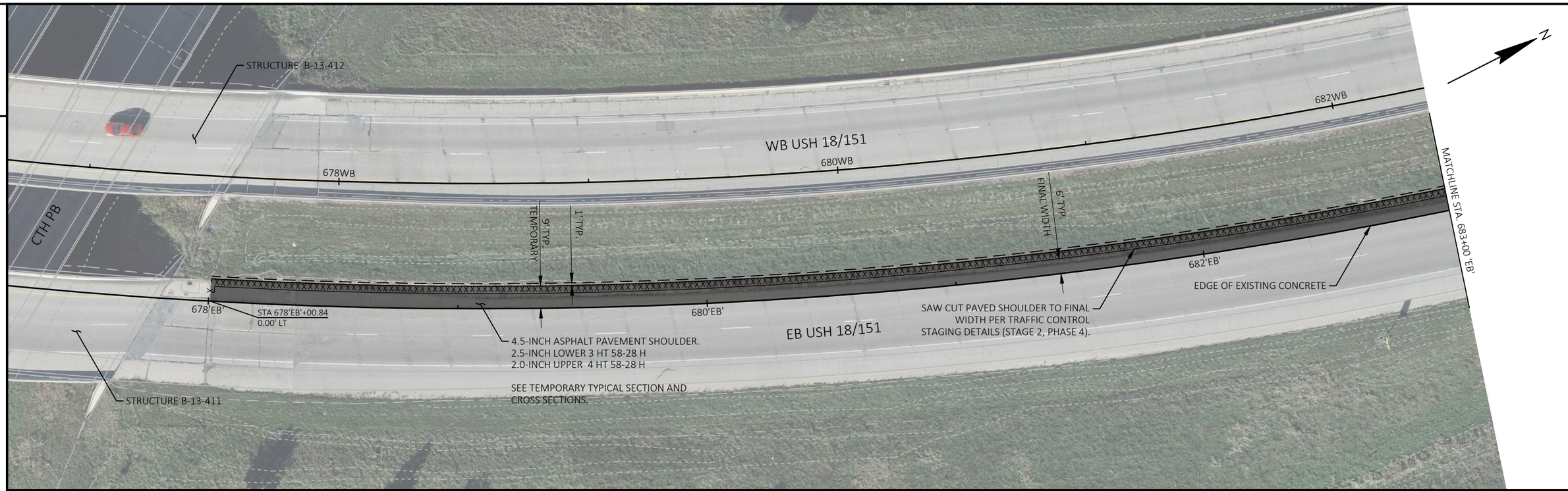

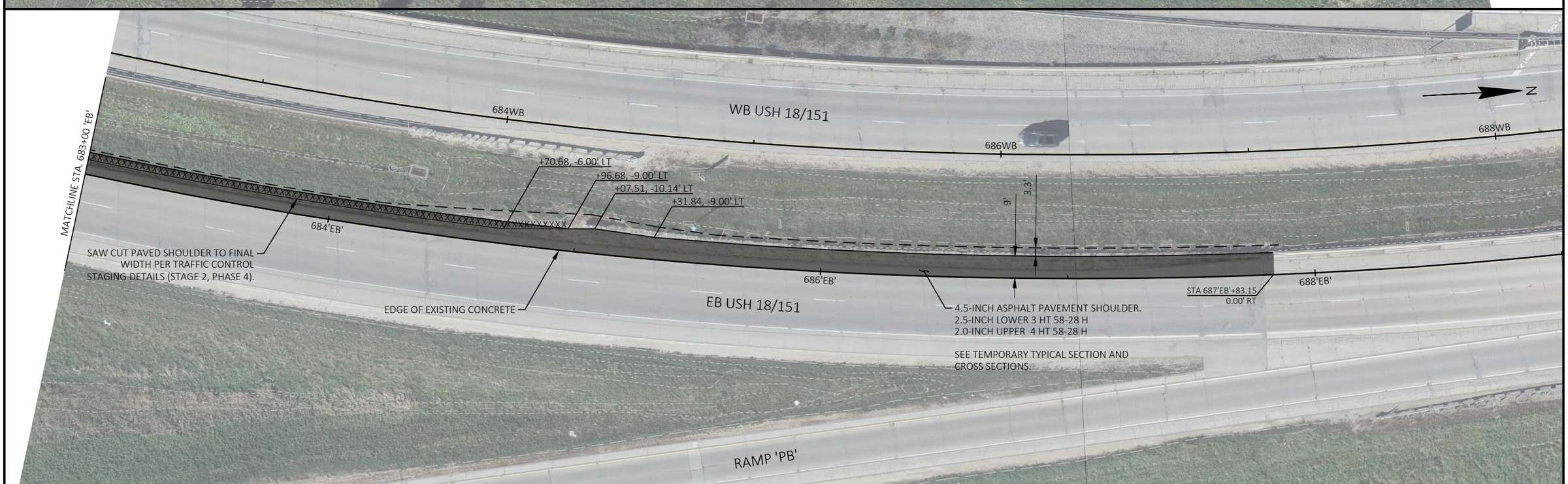

PROJECT NO: 1204-08-65	HWY: USH 18/151	COUNTY: DANE	USH 18 EB TEMPORARY PAVEMENT DETAILS	SHEET 120	E

FILE NAME : G:\WDOTSW\20007-000 USH 18\CIVIL 3D\SHEETSPLAN\021206-PD - TEMPPAVEMENT.DWG
LAYOUT NAME - USH18 TEMP_PAVE
PLOT DATE : 7/14/2022 2:18 PM PLOT BY : ERIC ANDRITSCH PLOT NAME : PLOT SCALE : 1 IN:40 FT
WISDOT/CADDS SHEET 44

2

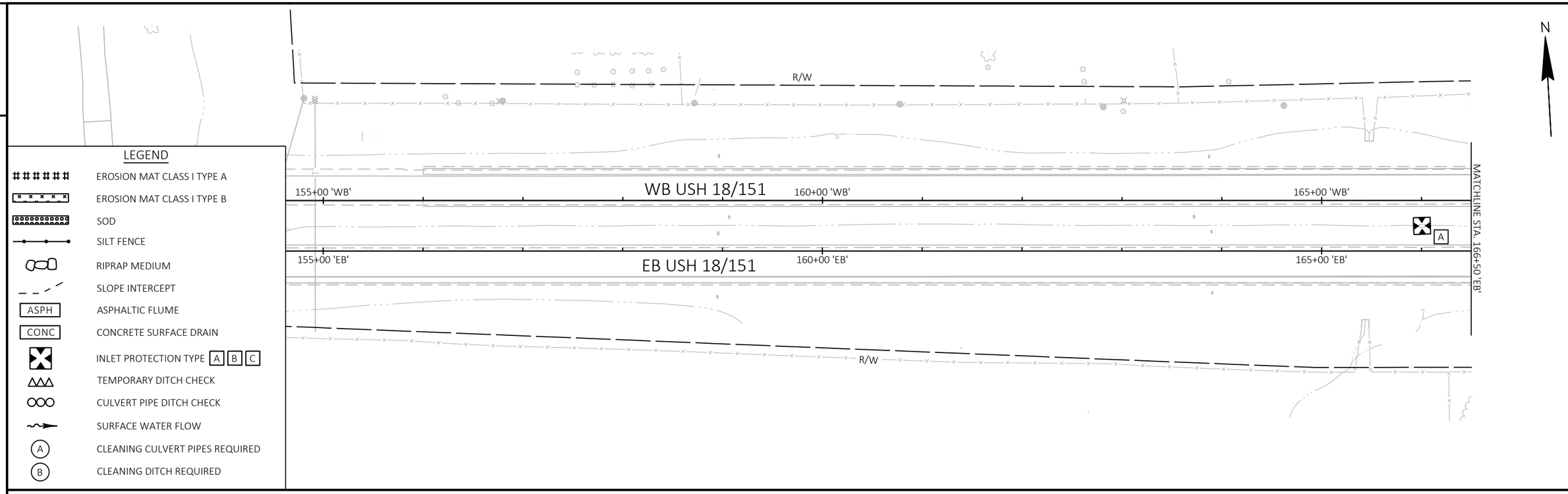

2

PROJECT NO: 1204-08-65	HWY: USH 18/151	COUNTY: DANE	EROSION CONTROL	SHEET 121	E

FILE NAME : G:\WDOTSW\20007-000 USH 18\CIVIL 3D\SHEETSPLAN\022001-EC.DWG
LAYOUT NAME - 01
PLOT DATE : 7/29/2022 3:01 PM
PLOT BY : ERIC ANDRITSCH
PLOT NAME :
PLOT SCALE : 1 IN:100 FT
WISDOT/CADDS SHEET 44

2

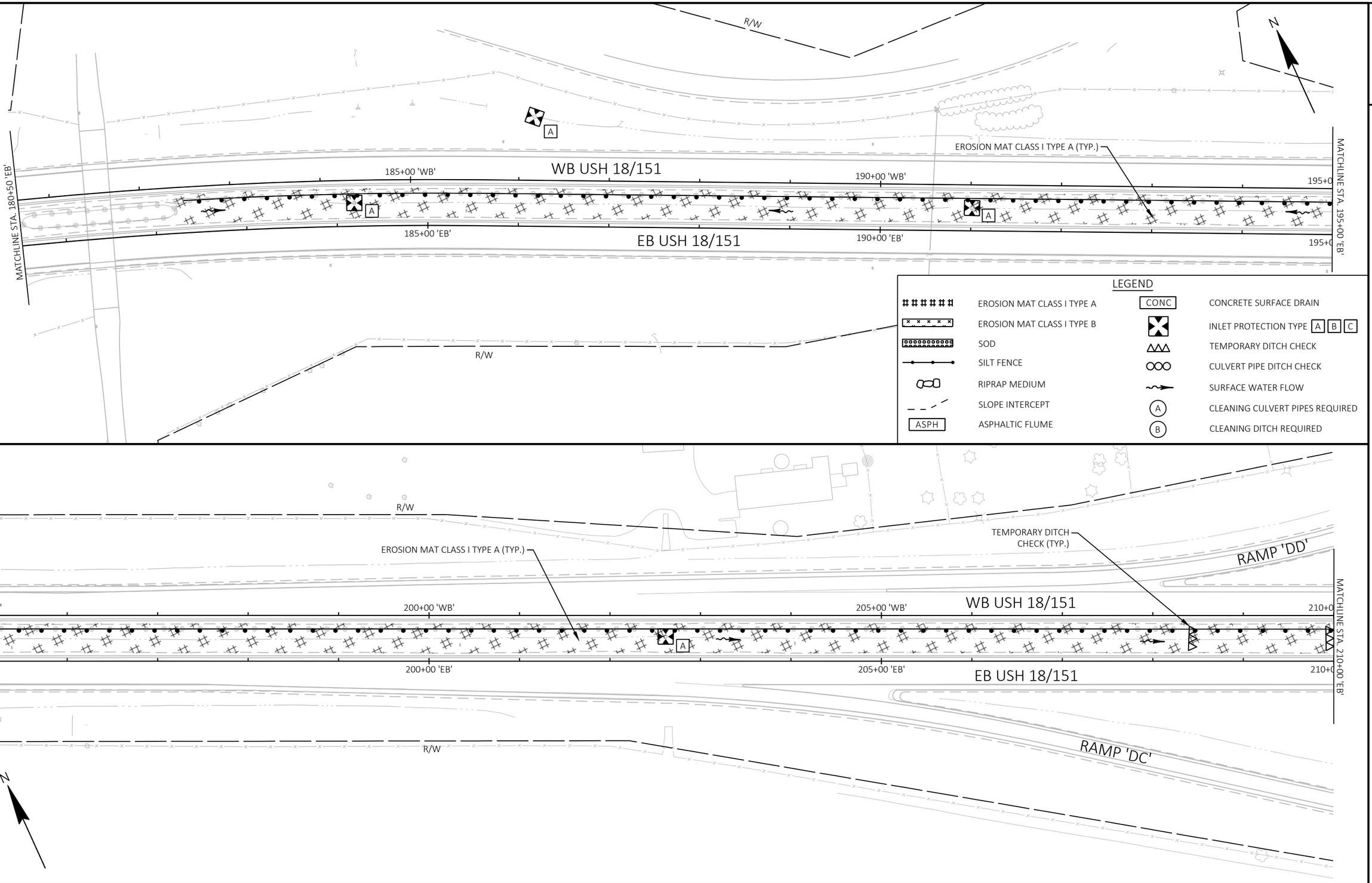

PROJECT NO: 1204-08-65	HWY: USH 18/151	COUNTY: DANE	EROSION CONTROL	SHEET 122	E

2

LEGEND

- EROSION MAT CLASS I TYPE A
- EROSION MAT CLASS I TYPE B
- SOD
- SILT FENCE
- RIPRAP MEDIUM
- SLOPE INTERCEPT
- ASPH — ASPHALTIC FLUME
- CONC — CONCRETE SURFACE DRAIN
- INLET PROTECTION TYPE [A] [B] [C]
- TEMPORARY DITCH CHECK
- CULVERT PIPE DITCH CHECK
- SURFACE WATER FLOW
- (A) CLEANING CULVERT PIPES REQUIRED
- (B) CLEANING DITCH REQUIRED

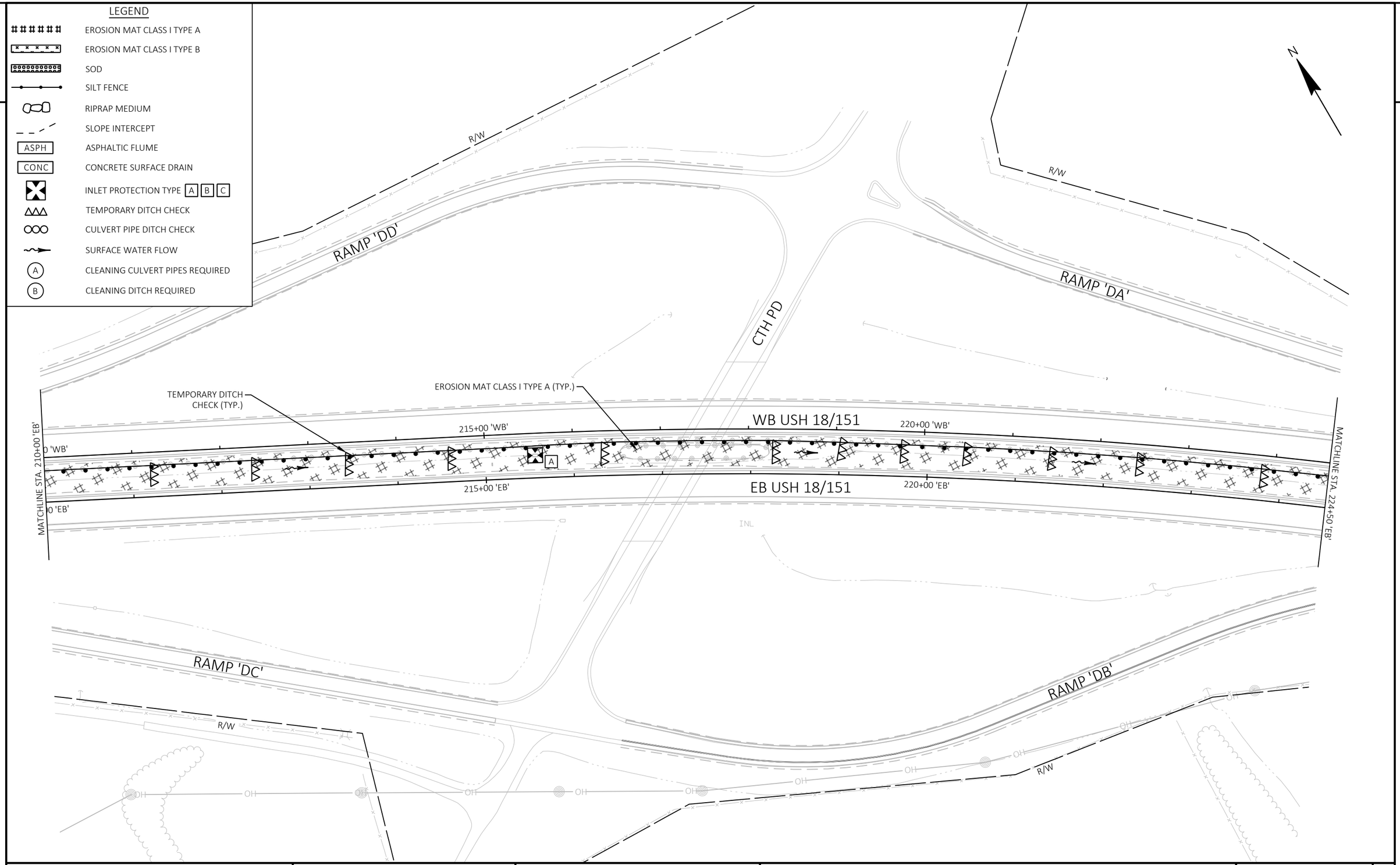

2

PROJECT NO: 1204-08-65	HWY: USH 18/151	COUNTY: DANE	EROSION CONTROL	SHEET 123	E

FILE NAME : G:\WDOTSW\20007-000 USH 18\CIVIL 3D\SHEETSPLAN\022001-EC.DWG
LAYOUT NAME - 03

PLOT DATE : 7/29/2022 3:02 PM PLOT BY : ERIC ANDRITSCH PLOT NAME : PLOT SCALE : 1 IN:100 FT

2

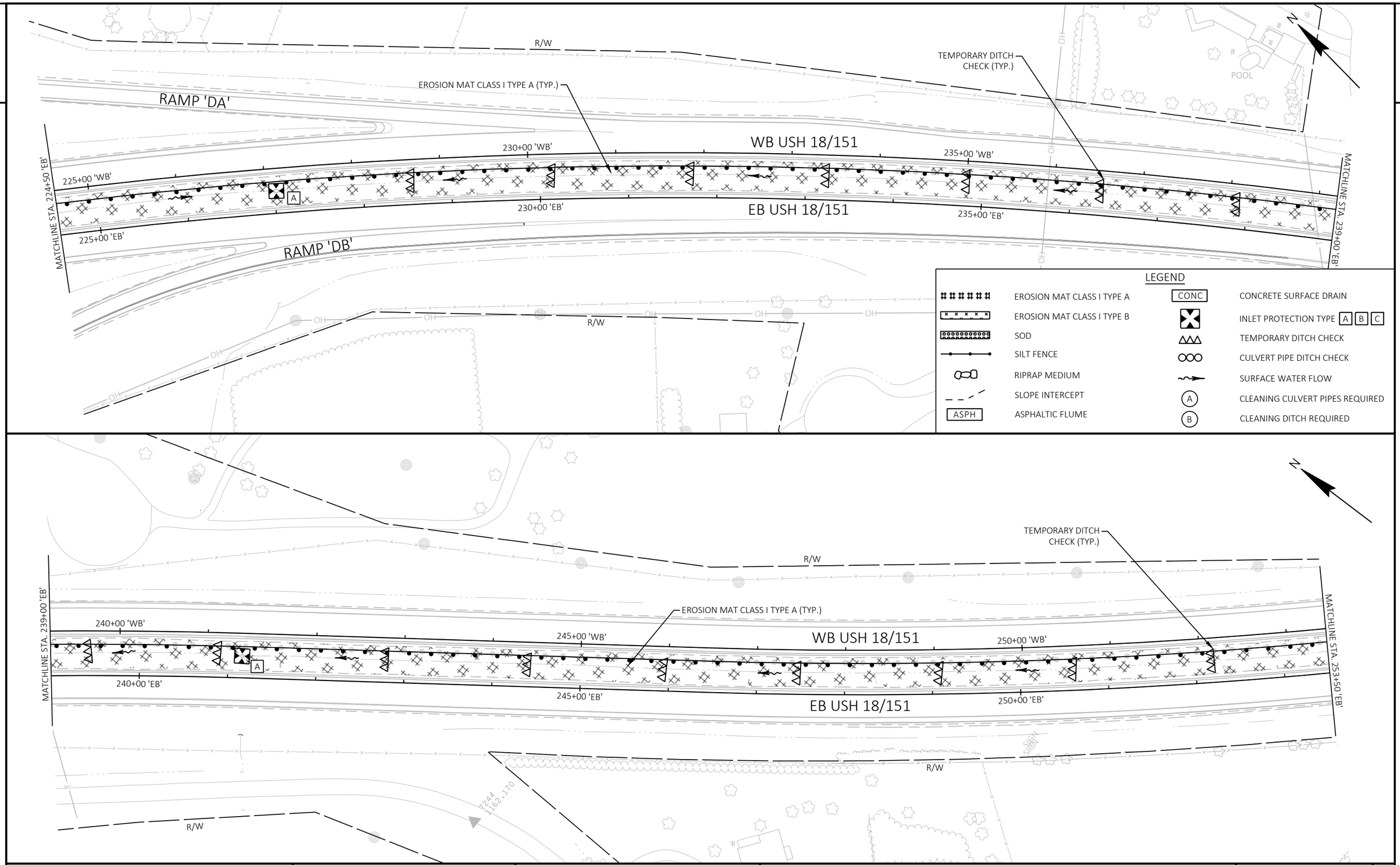

PROJECT NO: 1204-08-65	HWY: USH 18/151	COUNTY: DANE	EROSION CONTROL	SHEET 124	E

FILE NAME : G:\WDOTSW\20007-000 USH 18\CIVIL 3D\SHEETSPLAN\022001-EC.DWG
LAYOUT NAME - 04

PLOT DATE : 7/29/2022 3:02 PM PLOT BY : ERIC ANDRITSCH PLOT NAME : PLOT SCALE : 1 IN:100 FT

2

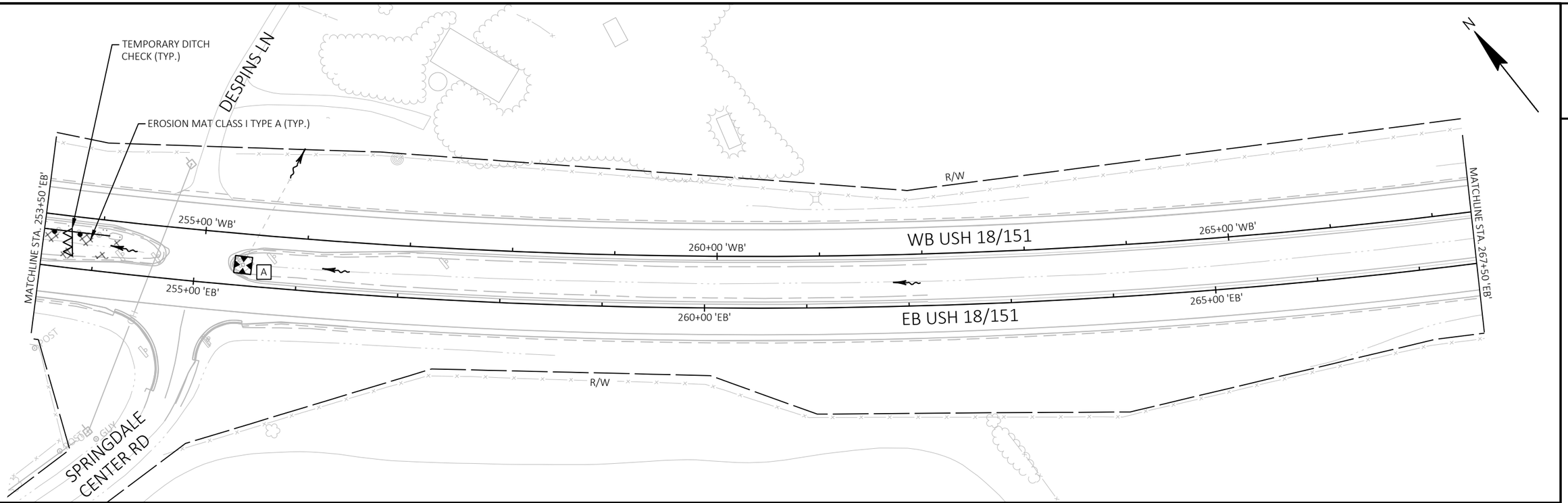

LEGEND

######	EROSION MAT CLASS I TYPE A	CONC	CONCRETE SURFACE DRAIN
x x x x x	EROSION MAT CLASS I TYPE B	A B C	INLET PROTECTION TYPE
	SOD		TEMPORARY DITCH CHECK
	SILT FENCE		CULVERT PIPE DITCH CHECK
	RIPRAP MEDIUM		SURFACE WATER FLOW
	SLOPE INTERCEPT	A	CLEANING CULVERT PIPES REQUIRED
ASPH	ASPHALTIC FLUME	B	CLEANING DITCH REQUIRED

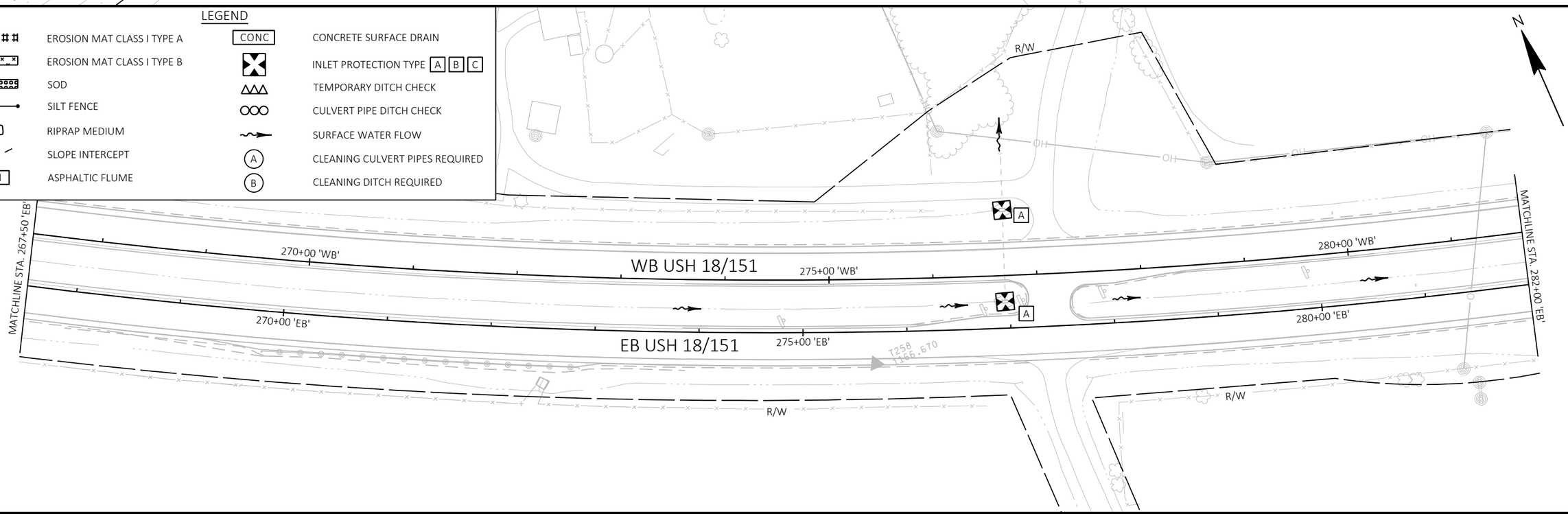

PROJECT NO: 1204-08-65	HWY: USH 18/151	COUNTY: DANE	EROSION CONTROL	SHEET 125	E

FILE NAME : G:\WDOTSW\20007-000 USH 18\CIVIL 3D\SHEETSPLAN\022001-EC.DWG
LAYOUT NAME - 05
PLOT DATE : 7/29/2022 3:03 PM
PLOT BY : ERIC ANDRITSCH
PLOT NAME :
PLOT SCALE : 1 IN:100 FT
WISDOT/CADDS SHEET 44

2

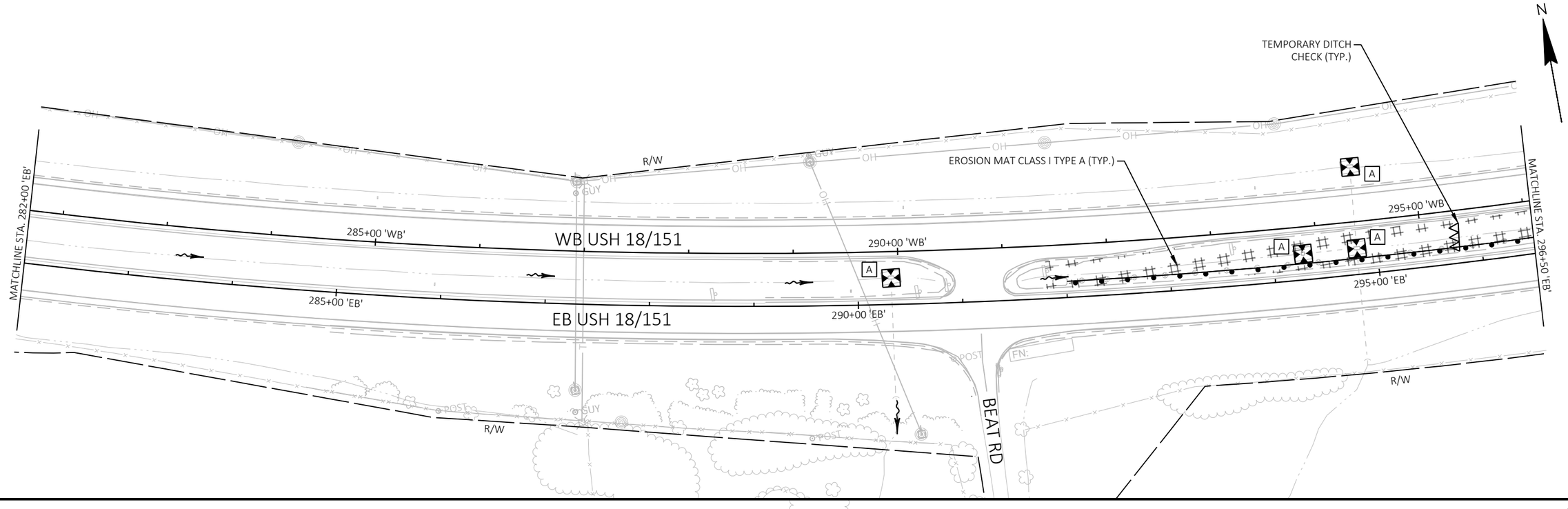

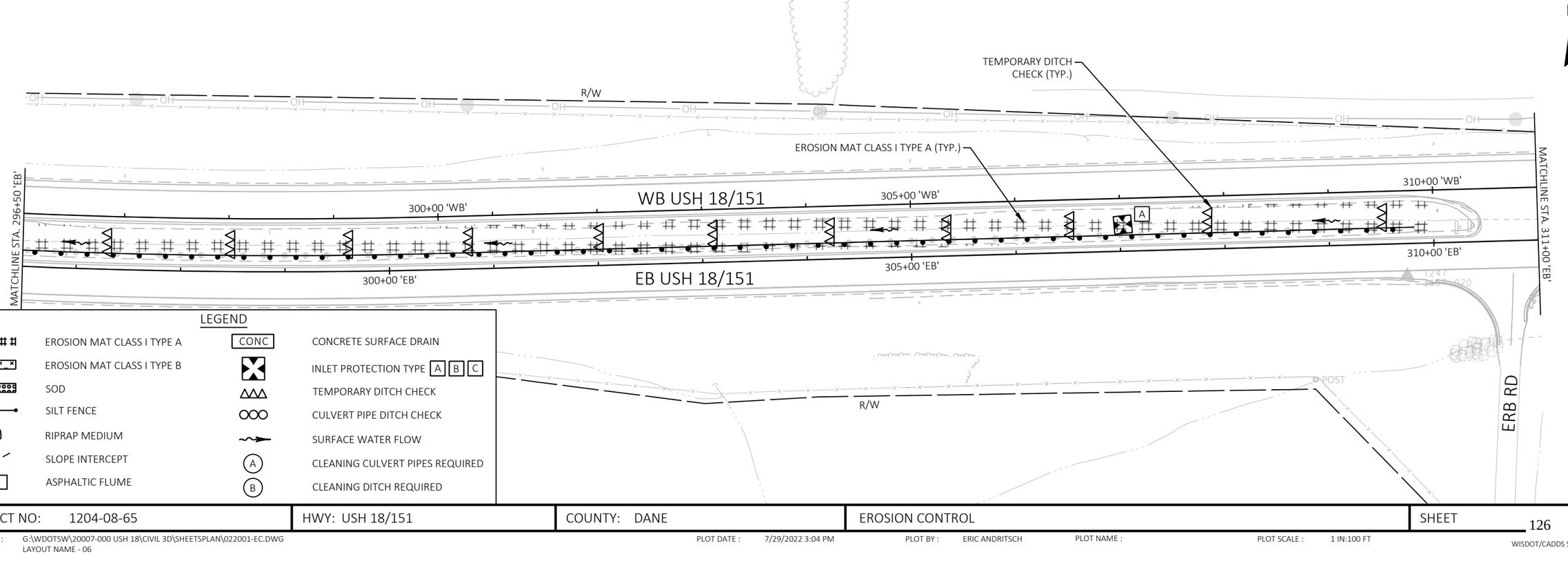

LEGEND

EROSION MAT CLASS I TYPE A		CONC	CONCRETE SURFACE DRAIN
EROSION MAT CLASS I TYPE B			INLET PROTECTION TYPE A B C
SOD			TEMPORARY DITCH CHECK
SILT FENCE			CULVERT PIPE DITCH CHECK
RIPRAP MEDIUM			SURFACE WATER FLOW
SLOPE INTERCEPT		A	CLEANING CULVERT PIPES REQUIRED
ASPH	ASPHALTIC FLUME	B	CLEANING DITCH REQUIRED

PROJECT NO: 1204-08-65	HWY: USH 18/151	COUNTY: DANE	EROSION CONTROL	SHEET 126 E

FILE NAME : G:\WDOTSW\20007-000 USH 18\CIVIL 3D\SHEETSPLAN\022001-EC.DWG
LAYOUT NAME - 06

PLOT DATE : 7/29/2022 3:04 PM PLOT BY : ERIC ANDRITSCH PLOT NAME : PLOT SCALE : 1 IN:100 FT

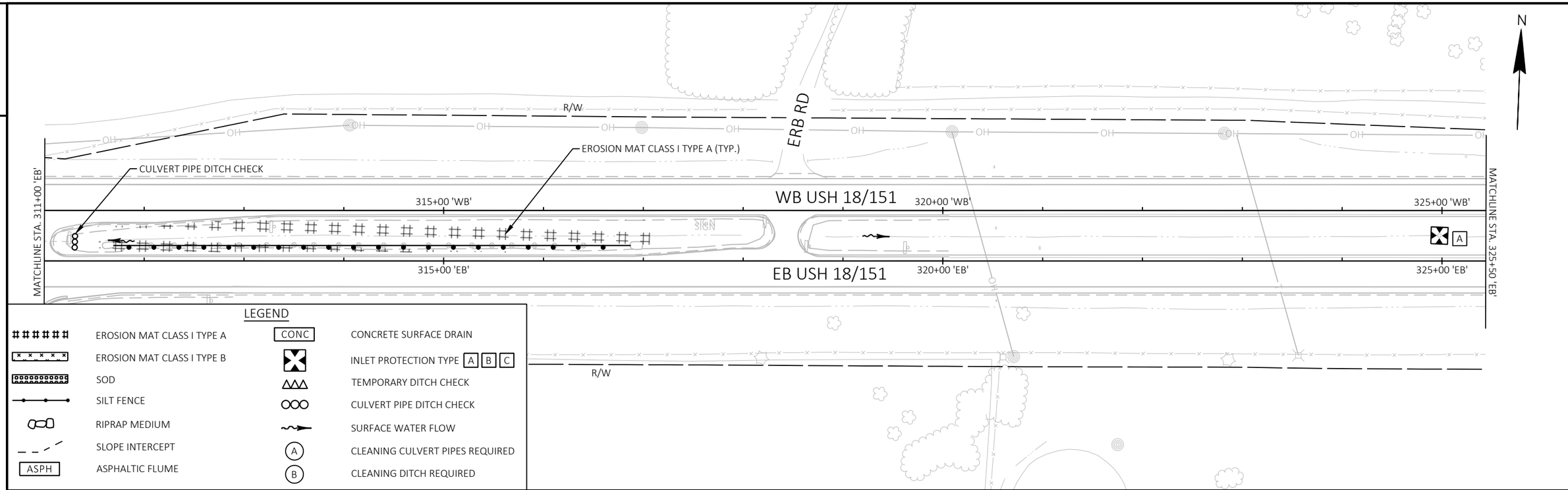

PROJECT NO: 1204-08-65	HWY: USH 18/151	COUNTY: DANE	EROSION CONTROL	SHEET 127	E

FILE NAME : G:\WDOTSW\20007-000 USH 18\CIVIL 3D\SHEETSPLAN\022001-EC.DWG
LAYOUT NAME - 07
PLOT DATE : 7/29/2022 3:04 PM
PLOT BY : ERIC ANDRITSCH
PLOT NAME :
PLOT SCALE : 1 IN:100 FT
WISDOT/CADDS SHEET 44

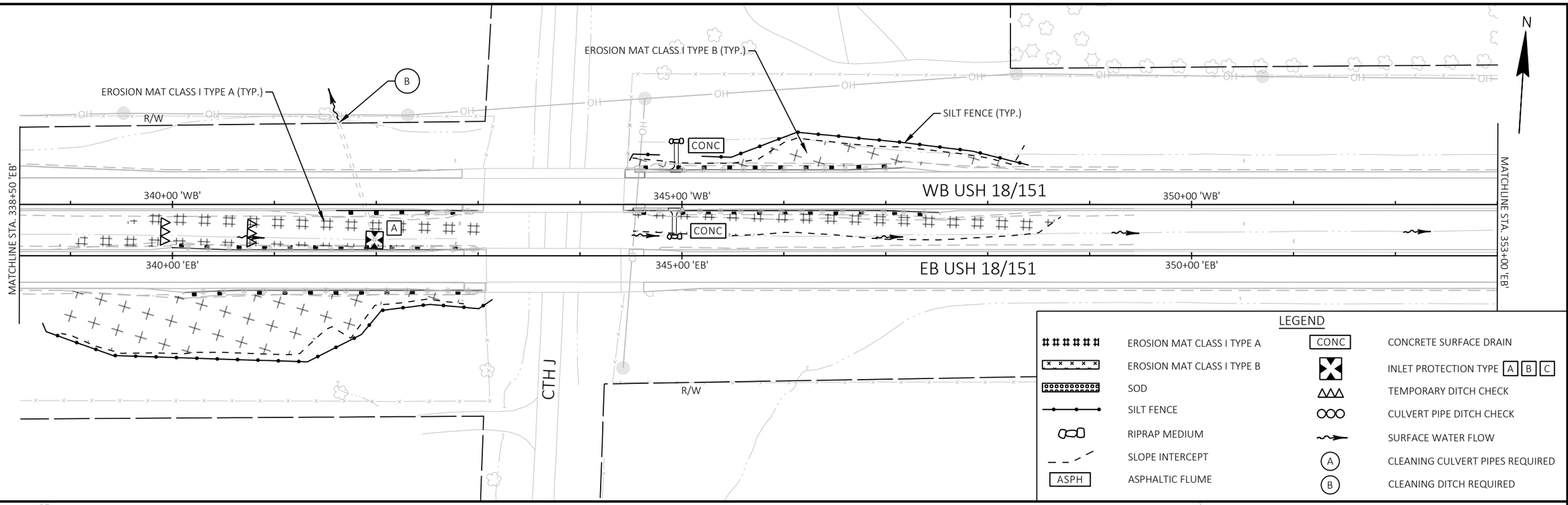

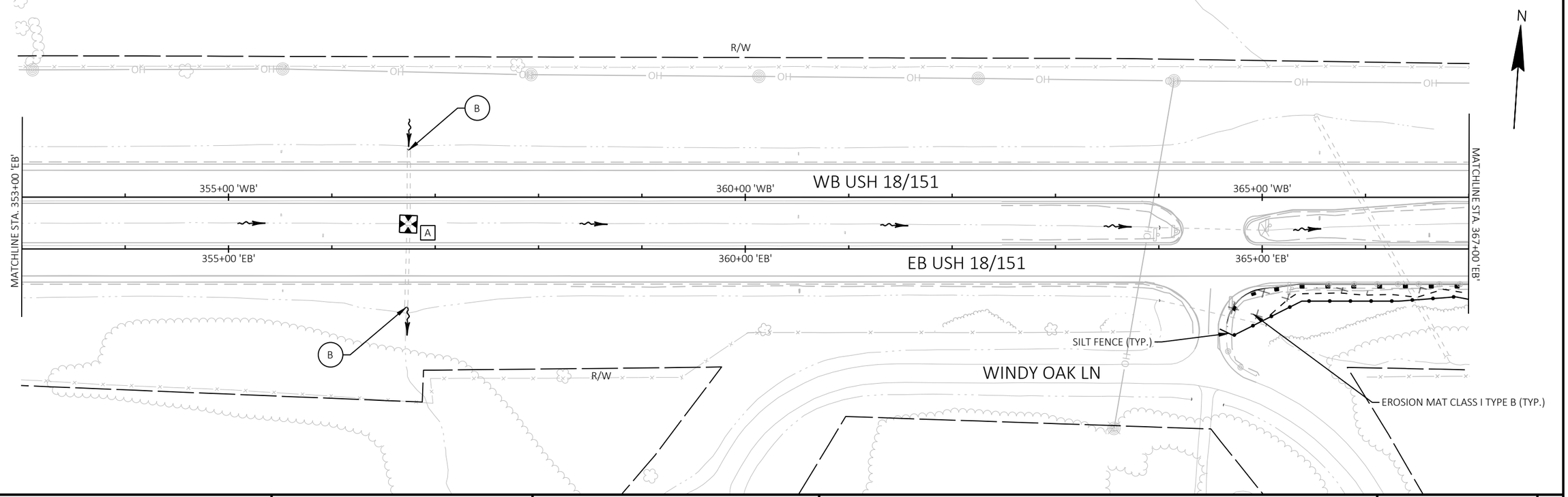

PROJECT NO: 1204-08-65	HWY: USH 18/151	COUNTY: DANE	EROSION CONTROL	SHEET 128	E

FILE NAME : G:\WDOTSW\20007-000 USH 18\CIVIL 3D\SHEETSPLAN\022001-EC.DWG
LAYOUT NAME - 08

PLOT DATE : 7/29/2022 3:05 PM PLOT BY : ERIC ANDRITSCH PLOT NAME : PLOT SCALE : 1 IN:100 FT

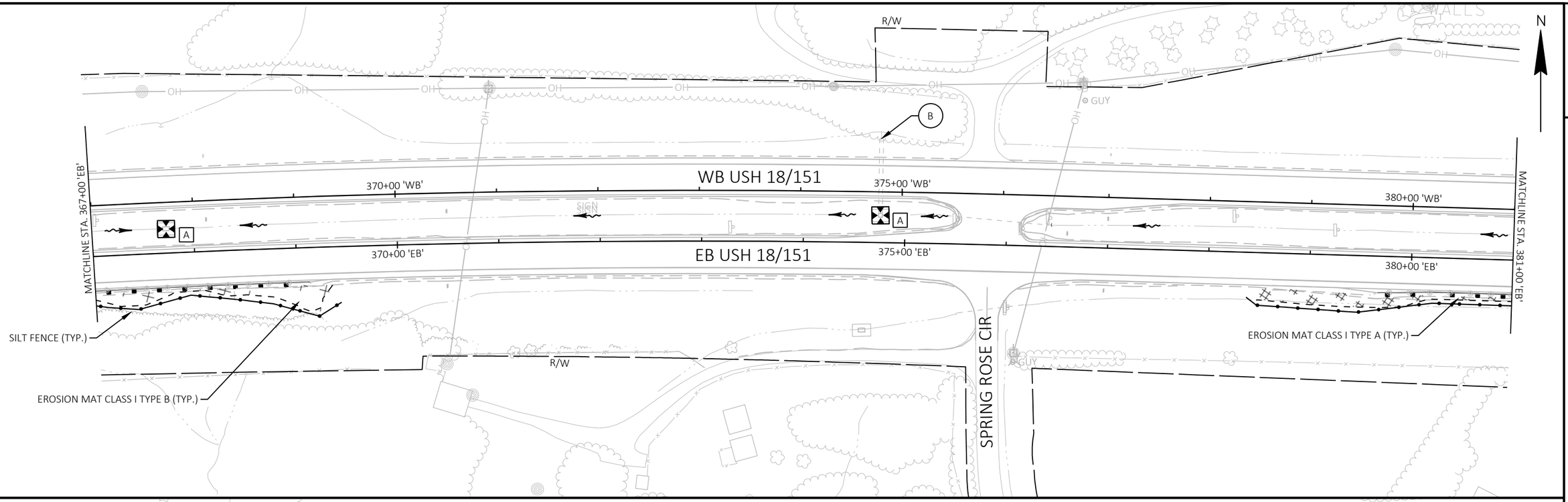

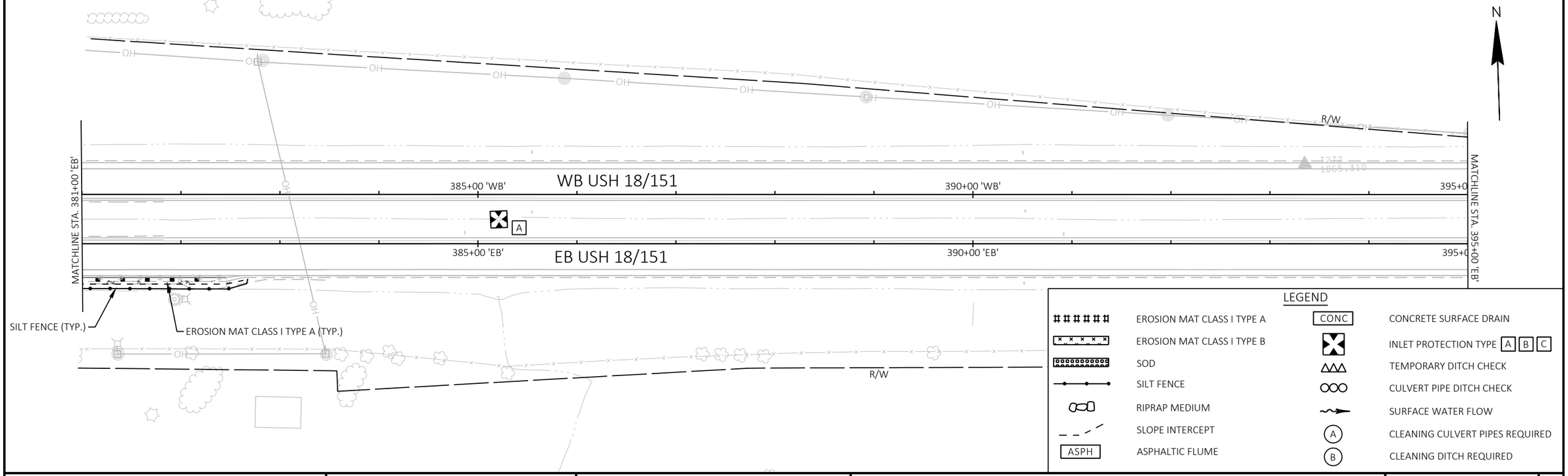

PROJECT NO: 1204-08-65	HWY: USH 18/151	COUNTY: DANE	EROSION CONTROL	SHEET 129	E

FILE NAME : G:\WDOTSW\20007-000 USH 18\CIVIL 3D\SHEETSPLAN\022001-EC.DWG
LAYOUT NAME - 09

PLOT DATE : 7/29/2022 3:06 PM PLOT BY : ERIC ANDRITSCH PLOT NAME : PLOT SCALE : 1 IN:100 FT

2

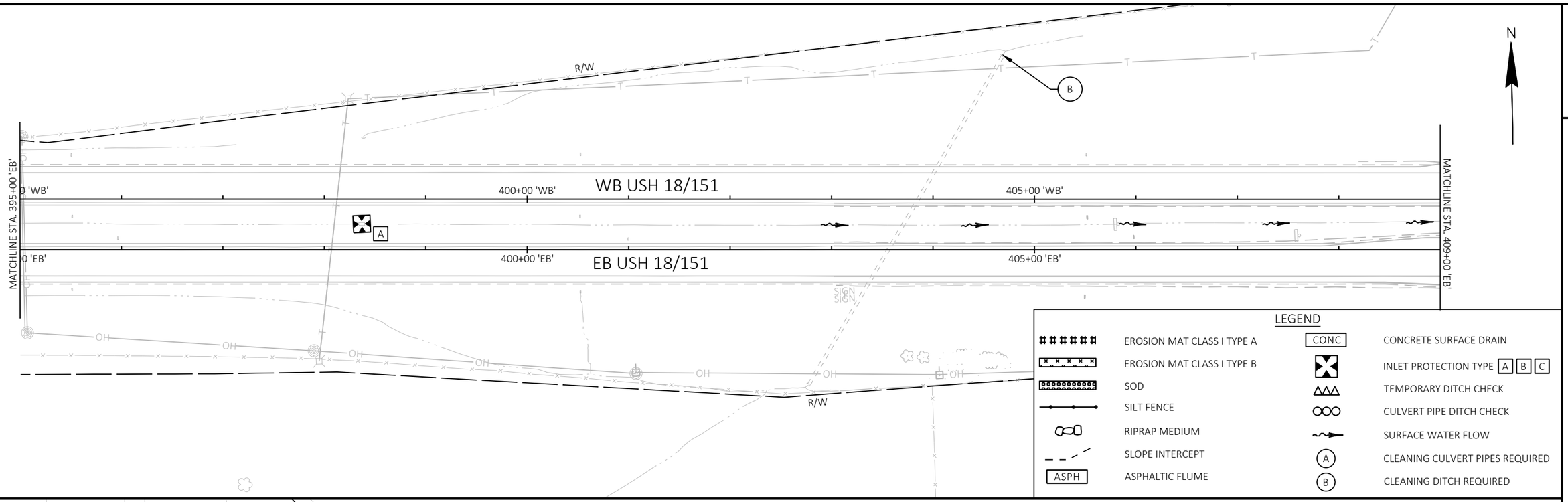

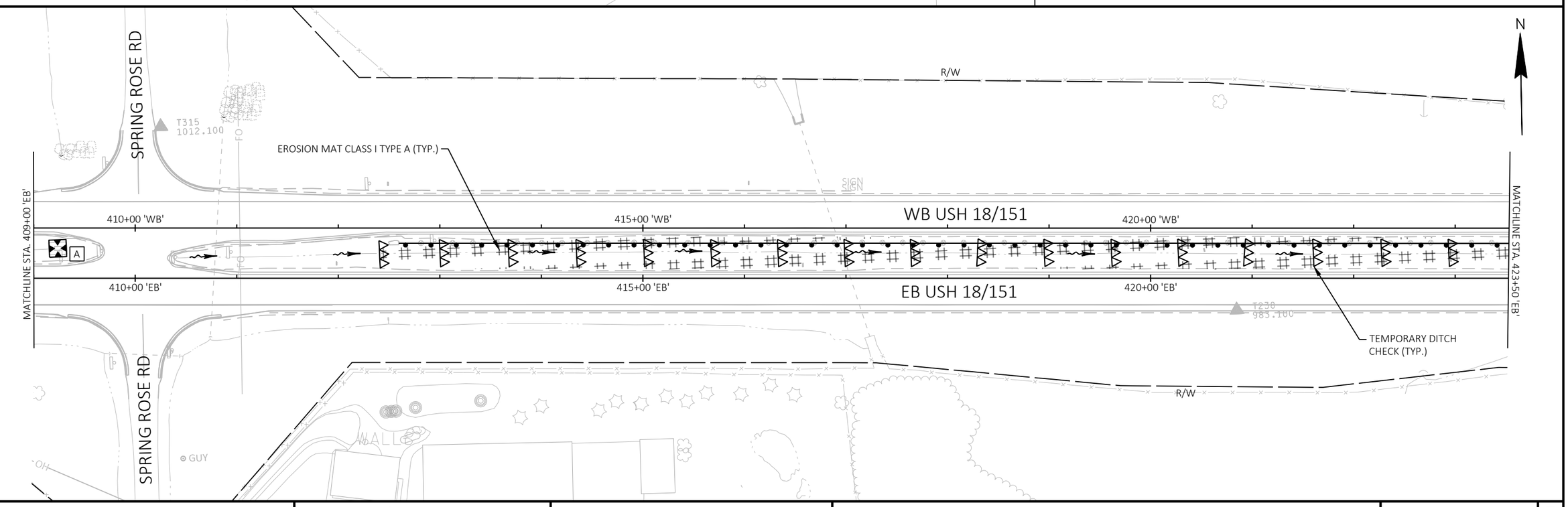

PROJECT NO: 1204-08-65	HWY: USH 18/151	COUNTY: DANE	EROSION CONTROL	SHEET 130	E

FILE NAME : G:\WDOTSW\20007-000 USH 18\CIVIL 3D\SHEETSPLAN\022001-EC.DWG
LAYOUT NAME - 10

PLOT DATE : 7/29/2022 3:06 PM PLOT BY : ERIC ANDRITSCH PLOT NAME : PLOT SCALE : 1 IN:100 FT

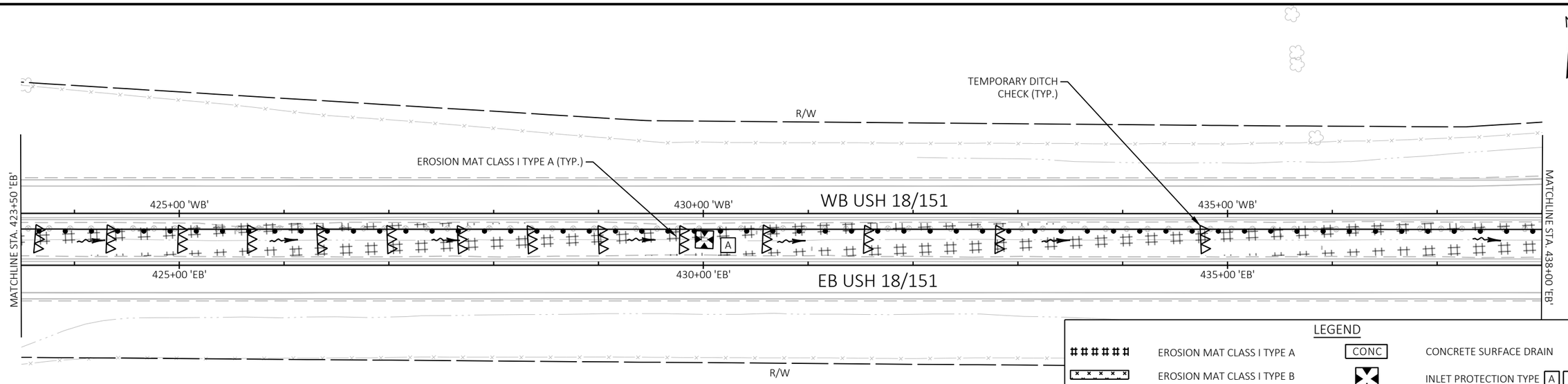

LEGEND

######	EROSION MAT CLASS I TYPE A	CONC	CONCRETE SURFACE DRAIN
	EROSION MAT CLASS I TYPE B		INLET PROTECTION TYPE A B C
	SOD		TEMPORARY DITCH CHECK
	SILT FENCE		CULVERT PIPE DITCH CHECK
	RIPRAP MEDIUM		SURFACE WATER FLOW
	SLOPE INTERCEPT	A	CLEANING CULVERT PIPES REQUIRED
ASPH	ASPHALTIC FLUME	B	CLEANING DITCH REQUIRED

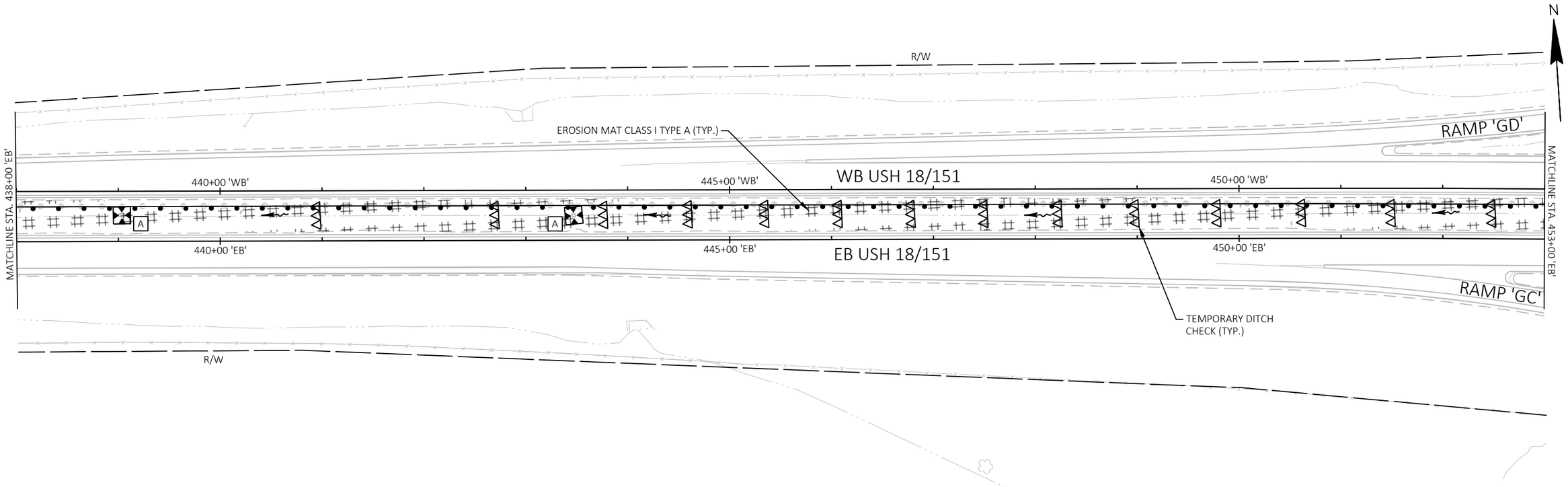

PROJECT NO: 1204-08-65	HWY: USH 18/151	COUNTY: DANE	EROSION CONTROL	SHEET 131	E

2

LEGEND

- EROSION MAT CLASS I TYPE A
- EROSION MAT CLASS I TYPE B
- SOD
- SILT FENCE
- RIPRAP MEDIUM
- SLOPE INTERCEPT
- ASPH — ASPHALTIC FLUME
- CONC — CONCRETE SURFACE DRAIN
- INLET PROTECTION TYPE [A] [B] [C]
- TEMPORARY DITCH CHECK
- CULVERT PIPE DITCH CHECK
- SURFACE WATER FLOW
- (A) CLEANING CULVERT PIPES REQUIRED
- (B) CLEANING DITCH REQUIRED

N

2

R/W

RAMP 'GD'

T307
1012.000

RIPRAP

RAMP 'GA'

TEMPORARY DITCH CHECK (TYP.)

EROSION MAT CLASS I TYPE A (TYP.)

A

MATCHLINE STA. 453+00 'EB'

455+00 'WB'

460+00 'WB'

WB USH 18/151

465+00 'WB'

455+00 'EB'

460+00 'EB'

EB USH 18/151

465+00 'EB'

MATCHLINE STA. 468+00 'EB'

CTH G

RAMP 'GC'

RAMP 'GB'

R/W

R/W

R/W

PROJECT NO: 1204-08-65	HWY: USH 18/151	COUNTY: DANE	EROSION CONTROL	SHEET 132	E

FILE NAME : G:\WDOTSW\20007-000 USH 18\CIVIL 3D\SHEETSPLAN\022001-EC.DWG
LAYOUT NAME - 12

PLOT DATE : 7/29/2022 3:07 PM PLOT BY : ERIC ANDRITSCH PLOT NAME : PLOT SCALE : 1 IN:100 FT

2

RAMP 'GA'

RIPRAP

RIPRAP

R/W

TEMPORARY DITCH CHECK (TYP.)

EROSION MAT CLASS I TYPE A (TYP.)

MATCHLINE STA. 468+00 'EB'

470+00 'WB'

475+00 'WB'

WB USH 18/151

480+00 'WB'

MATCHLINE STA. 482+50 'EB'

470+00 'EB'

475+00 'EB'

EB USH 18/151

480+00 'EB'

SIGN

SIGN

A

RAMP 'GB'

B

OH

R/W

N

LEGEND

######	EROSION MAT CLASS I TYPE A	CONC	CONCRETE SURFACE DRAIN
× × × × ×	EROSION MAT CLASS I TYPE B		INLET PROTECTION TYPE A B C
	SOD		TEMPORARY DITCH CHECK
	SILT FENCE		CULVERT PIPE DITCH CHECK
	RIPRAP MEDIUM		SURFACE WATER FLOW
	SLOPE INTERCEPT	A	CLEANING CULVERT PIPES REQUIRED
ASPH	ASPHALTIC FLUME	B	CLEANING DITCH REQUIRED

R/W

TEMPORARY DITCH CHECK (TYP.)

EROSION MAT CLASS I TYPE A (TYP.)

RIPRAP MEDIUM (TYP.)

EROSION MAT CLASS I TYPE B (TYP.)

CONC

MATCHLINE STA. 482+50 'EB'

485+00 'WB'

490+00 'WB'

WB USH 18/151

495+00 'WB'

MATCHLINE STA. 497+00 'EB'

485+00 'EB'

490+00 'EB'

EB USH 18/151

495+00 'EB'

SILT FENCE (TYP.)

OH

SUGAR RIVER

SUGAR R.

R/W

N

PROJECT NO: 1204-08-65	HWY: USH 18/151	COUNTY: DANE	EROSION CONTROL	SHEET 133	E

FILE NAME : G:\WDOTSW\20007-000 USH 18\CIVIL 3D\SHEETSPLAN\022001-EC.DWG
LAYOUT NAME - 13

PLOT DATE : 7/29/2022 3:08 PM PLOT BY : ERIC ANDRITSCH PLOT NAME : PLOT SCALE : 1 IN:100 FT

2

LEGEND

- EROSION MAT CLASS I TYPE A
- EROSION MAT CLASS I TYPE B
- SOD
- SILT FENCE
- RIPRAP MEDIUM
- SLOPE INTERCEPT
- ASPH — ASPHALTIC FLUME
- CONC — CONCRETE SURFACE DRAIN
- INLET PROTECTION TYPE [A] [B] [C]
- TEMPORARY DITCH CHECK
- CULVERT PIPE DITCH CHECK
- SURFACE WATER FLOW
- (A) CLEANING CULVERT PIPES REQUIRED
- (B) CLEANING DITCH REQUIRED

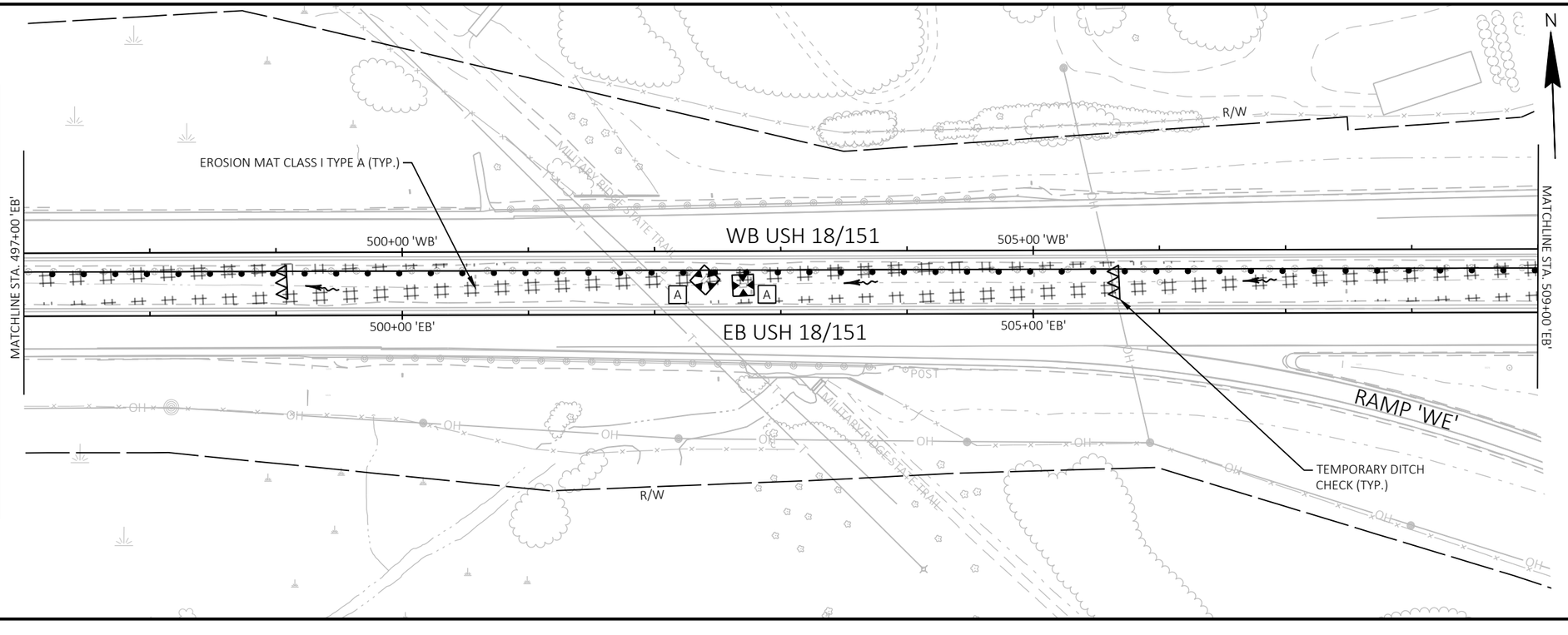

PROJECT NO: 1204-08-65	HWY: USH 18/151	COUNTY: DANE	EROSION CONTROL	SHEET 134	E

FILE NAME : G:\WDOTSW\20007-000 USH 18\CIVIL 3D\SHEETSPLAN\022001-EC.DWG
LAYOUT NAME - 14

PLOT DATE : 7/29/2022 3:09 PM PLOT BY : ERIC ANDRITSCH PLOT NAME : PLOT SCALE : 1 IN:100 FT

2

LEGEND

- EROSION MAT CLASS I TYPE A
- EROSION MAT CLASS I TYPE B
- SOD
- SILT FENCE
- RIPRAP MEDIUM
- SLOPE INTERCEPT
- ASPH — ASPHALTIC FLUME
- CONC — CONCRETE SURFACE DRAIN
- INLET PROTECTION TYPE [A] [B] [C]
- TEMPORARY DITCH CHECK
- CULVERT PIPE DITCH CHECK
- SURFACE WATER FLOW
- (A) CLEANING CULVERT PIPES REQUIRED
- (B) CLEANING DITCH REQUIRED

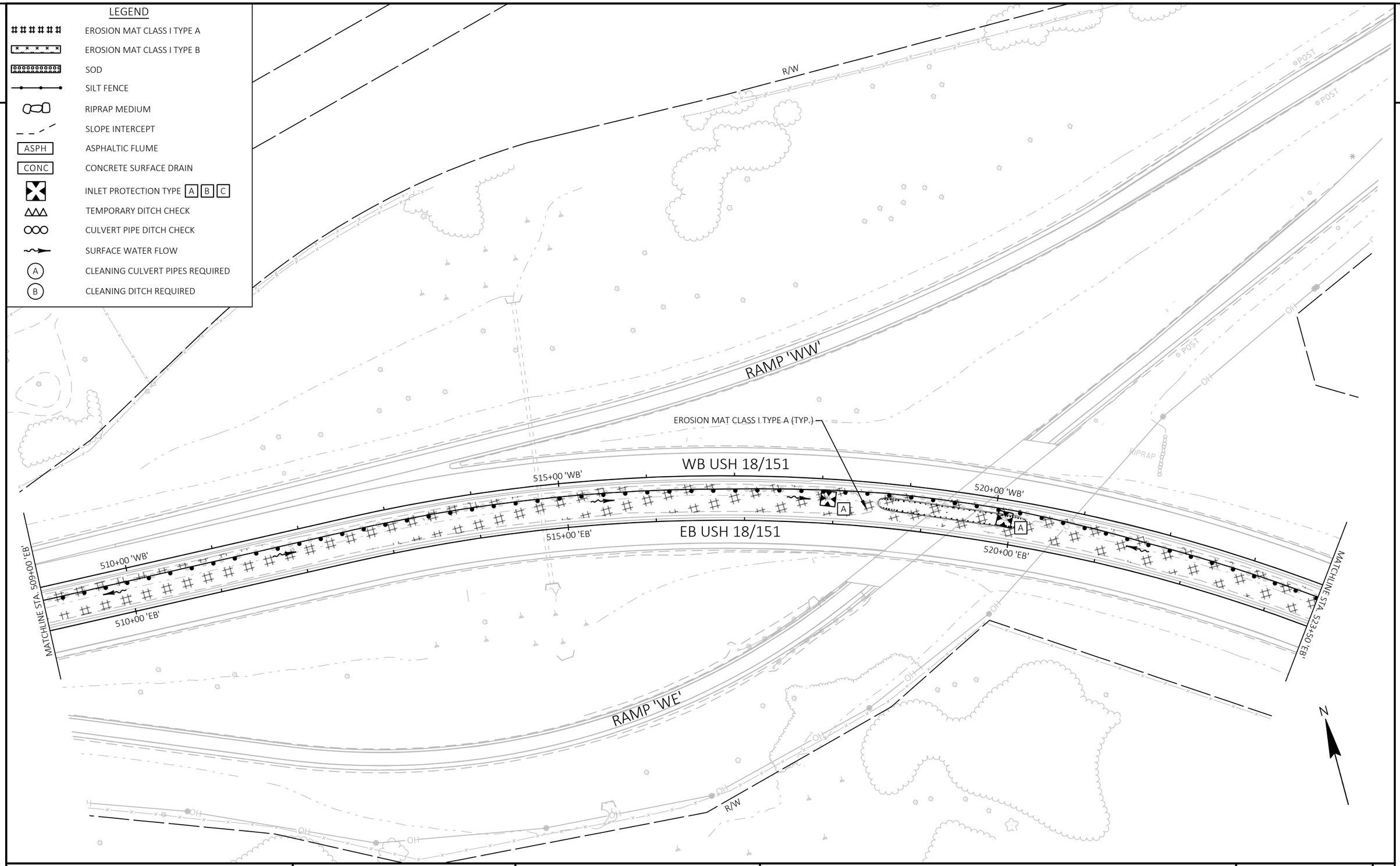

PROJECT NO: 1204-08-65	HWY: USH 18/151	COUNTY: DANE	EROSION CONTROL	SHEET 135	E

FILE NAME : G:\WDOTSW\20007-000 USH 18\CIVIL 3D\SHEETSPLAN\022001-EC.DWG
LAYOUT NAME - 15

PLOT DATE : 7/29/2022 3:09 PM PLOT BY : ERIC ANDRITSCH PLOT NAME : PLOT SCALE : 1 IN:100 FT

WISDOT/CADDS SHEET 42

2

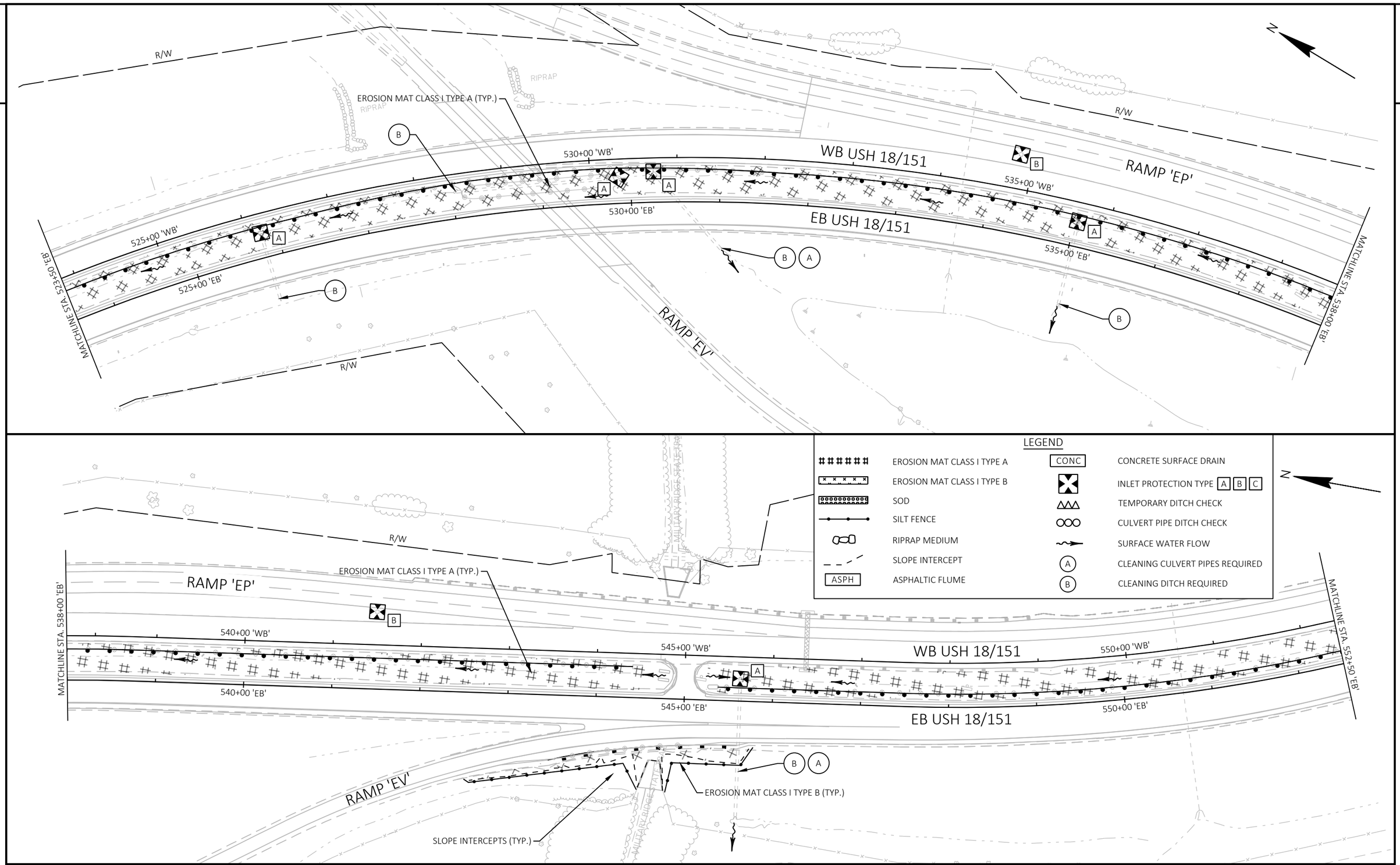

PROJECT NO: 1204-08-65	HWY: USH 18/151	COUNTY: DANE	EROSION CONTROL	SHEET 136	E

2

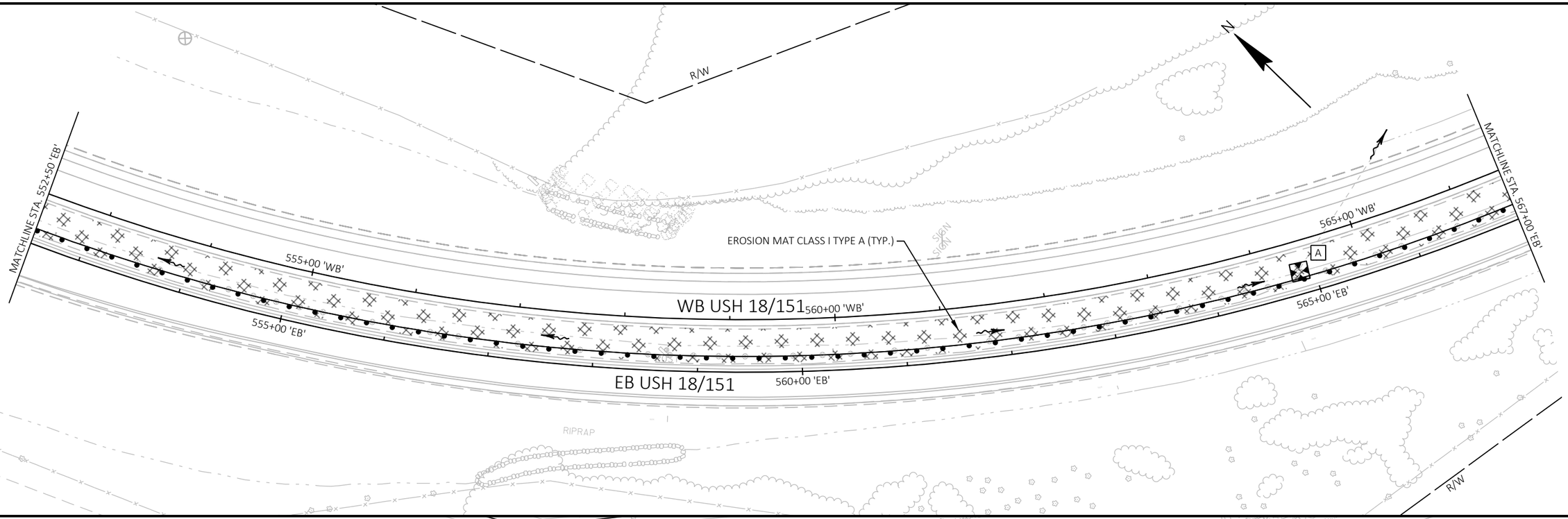

LEGEND

EROSION MAT CLASS I TYPE A		CONC	CONCRETE SURFACE DRAIN
EROSION MAT CLASS I TYPE B		A B C	INLET PROTECTION TYPE
SOD			TEMPORARY DITCH CHECK
SILT FENCE			CULVERT PIPE DITCH CHECK
RIPRAP MEDIUM			SURFACE WATER FLOW
SLOPE INTERCEPT		A	CLEANING CULVERT PIPES REQUIRED
ASPH	ASPHALTIC FLUME	B	CLEANING DITCH REQUIRED

PROJECT NO: 1204-08-65	HWY: USH 18/151	COUNTY: DANE	EROSION CONTROL	SHEET 137	E

FILE NAME : G:\WDOTSW\20007-000 USH 18\CIVIL 3D\SHEETSPLAN\022001-EC.DWG
LAYOUT NAME - 17
PLOT DATE : 7/29/2022 3:10 PM
PLOT BY : ERIC ANDRITSCH
PLOT NAME :
PLOT SCALE : 1 IN:100 FT
WISDOT/CADDS SHEET 44

2

2

N

R/W

RAMP 'SD'

STH 69

RAMP 'SA'

EROSION MAT CLASS I TYPE B (TYP.)

EROSION MAT CLASS I TYPE A (TYP.)

MATCHLINE STA. 580+00 'EB'

0 'WB'

585+00 'WB'

WB USH 18/151

590+00 'WB'

CONC

CONC

0 'EB'

585+00 'EB'

EB USH 18/151

590+00 'EB'

MATCHLINE STA. 594+00 'EB'

RIPRAP MEDIUM (TYP.)

TEMPORARY DITCH CHECK (TYP.)

SILT FENCE (TYP.)

RAMP 'SC'

RAMP 'SB'

R/W

R/W

R/W

LEGEND

- EROSION MAT CLASS I TYPE A
- EROSION MAT CLASS I TYPE B
- SOD
- SILT FENCE
- RIPRAP MEDIUM
- SLOPE INTERCEPT
- ASPH — ASPHALTIC FLUME
- CONC — CONCRETE SURFACE DRAIN
- INLET PROTECTION TYPE A B C
- TEMPORARY DITCH CHECK
- CULVERT PIPE DITCH CHECK
- SURFACE WATER FLOW
- A — CLEANING CULVERT PIPES REQUIRED
- B — CLEANING DITCH REQUIRED

PROJECT NO: 1204-08-65	HWY: USH 18/151	COUNTY: DANE	EROSION CONTROL	SHEET 138	E

FILE NAME : G:\WDOTSW\20007-000 USH 18\CIVIL 3D\SHEETSPLAN\022001-EC.DWG
LAYOUT NAME - 18

PLOT DATE : 7/29/2022 3:11 PM PLOT BY : ERIC ANDRITSCH PLOT NAME : PLOT SCALE : 1 IN:100 FT

WISDOT/CADDS SHEET 42

2

2

R/W

EROSION MAT CLASS I TYPE A (TYP.)

RAMP 'SA'

MATCHLINE STA. 594+00 'EB'

595+00 'WB'

600+00 'WB'

WB USH 18/151

605+00 'WB'

MATCHLINE STA. 608+50 'EB'

595+00 'EB'

600+00 'EB'

EB USH 18/151

605+00 'EB'

RAMP 'SB'

R/W

N

LEGEND

######	EROSION MAT CLASS I TYPE A	CONC	CONCRETE SURFACE DRAIN
x x x x x	EROSION MAT CLASS I TYPE B		INLET PROTECTION TYPE A B C
	SOD		TEMPORARY DITCH CHECK
	SILT FENCE		CULVERT PIPE DITCH CHECK
	RIPRAP MEDIUM		SURFACE WATER FLOW
	SLOPE INTERCEPT	A	CLEANING CULVERT PIPES REQUIRED
ASPH	ASPHALTIC FLUME	B	CLEANING DITCH REQUIRED

R/W

N

EROSION MAT CLASS I TYPE A (TYP.)

MATCHLINE STA. 608+50 'EB'

610+00 'WB'

615+00 'WB'

WB USH 18/151

620+00 'WB'

MATCHLINE STA. 623+00 'EB'

610+00 'EB'

615+00 'EB'

EB USH 18/151

620+00 'EB'

LOCUST DR

R/W

RIPRAP

RIPRAP

PROJECT NO: 1204-08-65	HWY: USH 18/151	COUNTY: DANE	EROSION CONTROL	SHEET 139	E

FILE NAME : G:\WDOTSW\20007-000 USH 18\CIVIL 3D\SHEETSPLAN\022001-EC.DWG
LAYOUT NAME - 19

PLOT DATE : 7/29/2022 3:11 PM PLOT BY : ERIC ANDRITSCH PLOT NAME : PLOT SCALE : 1 IN:100 FT

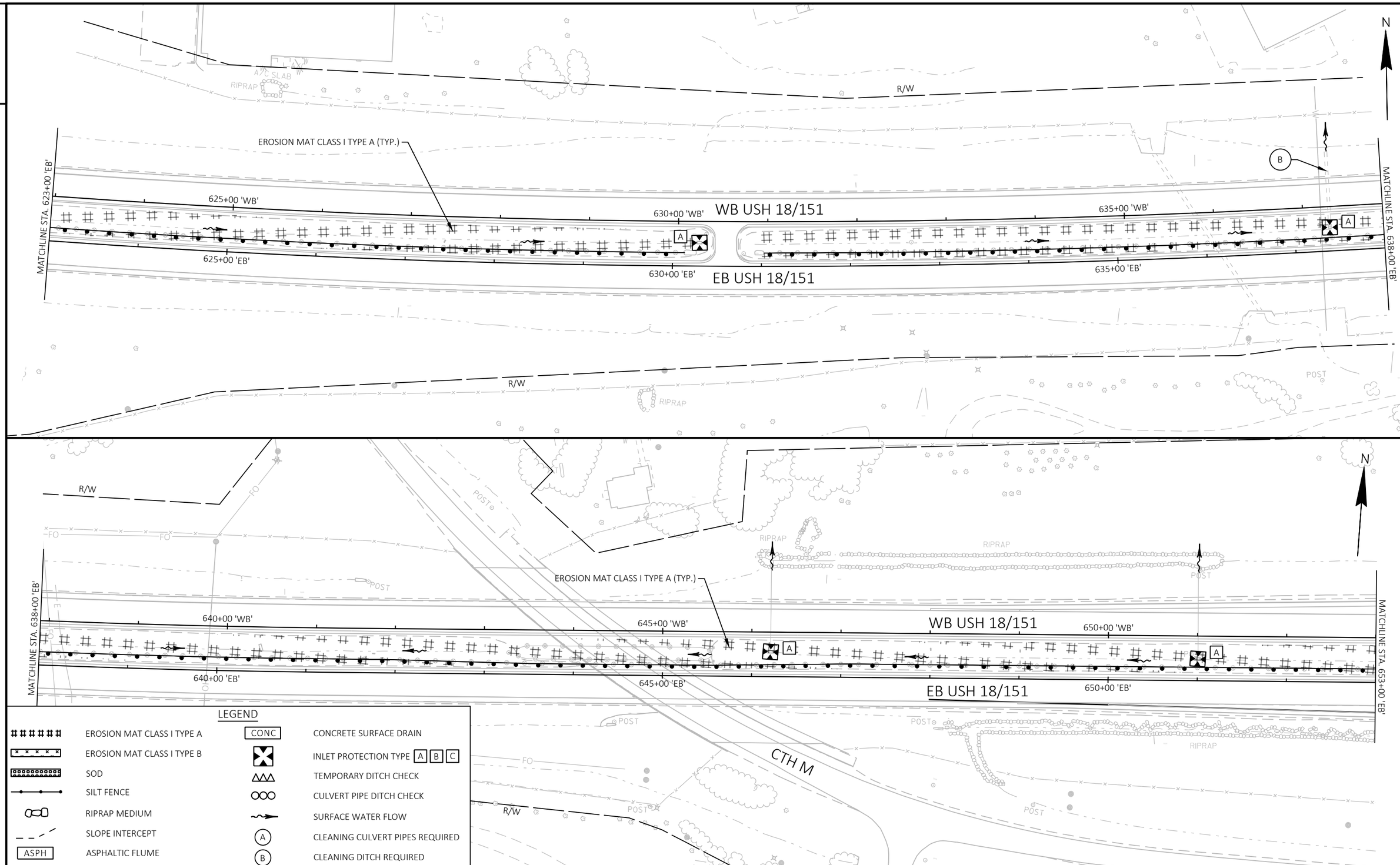

PROJECT NO: 1204-08-65	HWY: USH 18/151	COUNTY: DANE	EROSION CONTROL	SHEET 140	E

FILE NAME : G:\WDOTSW\20007-000 USH 18\CIVIL 3D\SHEETSPLAN\022001-EC.DWG
LAYOUT NAME - 20
PLOT DATE : 7/29/2022 3:12 PM
PLOT BY : ERIC ANDRITSCH
PLOT NAME :
PLOT SCALE : 1 IN:100 FT
WISDOT/CADDS SHEET 44

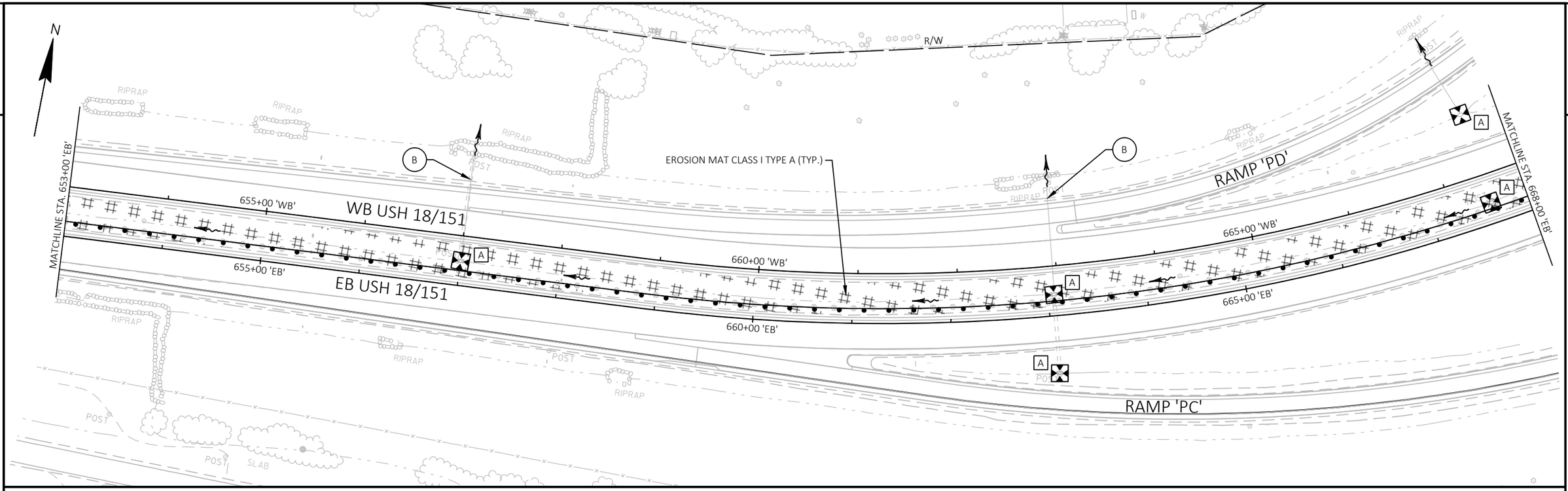

LEGEND

######	EROSION MAT CLASS I TYPE A	CONC	CONCRETE SURFACE DRAIN
× × × × ×	EROSION MAT CLASS I TYPE B		INLET PROTECTION TYPE A B C
	SOD		TEMPORARY DITCH CHECK
	SILT FENCE		CULVERT PIPE DITCH CHECK
	RIPRAP MEDIUM		SURFACE WATER FLOW
	SLOPE INTERCEPT	A	CLEANING CULVERT PIPES REQUIRED
ASPH	ASPHALTIC FLUME	B	CLEANING DITCH REQUIRED

PROJECT NO: 1204-08-65	HWY: USH 18/151	COUNTY: DANE	EROSION CONTROL	SHEET 141	E

FILE NAME : G:\WDOTSW\20007-000 USH 18\CIVIL 3D\SHEETSPLAN\022001-EC.DWG
LAYOUT NAME - 21

PLOT DATE : 7/29/2022 3:12 PM PLOT BY : ERIC ANDRITSCH PLOT NAME : PLOT SCALE : 1 IN:100 FT

WISDOT/CADDS SHEET 44

2

2

R/W

OH

RAMP 'PD'

680+00 'PA'

RAMP 'PA'

SEE NEXT SHEET FOR ADDITIONAL EROSION CONTROL DETAILS ON RAMP 'PA'

MATCHLINE STA. 668+00 'EB'

MATCHLINE STA. 683+00 'EB'

670+00 'WB'

WB USH 18/151

670+00 'EB'

EB USH 18/151

EROSION MAT CLASS I TYPE A (TYP.)

675+00 'WB'

CONC

RIPRAP MEDIUM (TYP.)

675+00 'EB'

680+00 'WB'

680+00 'EB'

EROSION MAT CLASS I TYPE B (TYP.)

SILT FENCE (TYP.)

RAMP 'PC'

CTH PB

RAMP 'PB'

R/W

R/W

R/W

LEGEND

- EROSION MAT CLASS I TYPE A
- EROSION MAT CLASS I TYPE B
- SOD
- SILT FENCE
- RIPRAP MEDIUM
- SLOPE INTERCEPT
- ASPH — ASPHALTIC FLUME
- CONC — CONCRETE SURFACE DRAIN
- INLET PROTECTION TYPE A B C
- TEMPORARY DITCH CHECK
- CULVERT PIPE DITCH CHECK
- SURFACE WATER FLOW
- (A) CLEANING CULVERT PIPES REQUIRED
- (B) CLEANING DITCH REQUIRED

PROJECT NO: 1204-08-65	HWY: USH 18/151	COUNTY: DANE	EROSION CONTROL	SHEET 142	E

FILE NAME : G:\WDOTSW\20007-000 USH 18\CIVIL 3D\SHEETSPLAN\022001-EC.DWG
LAYOUT NAME - 22

PLOT DATE : 7/29/2022 3:13 PM PLOT BY : ERIC ANDRITSCH PLOT NAME : PLOT SCALE : 1 IN:100 FT

WISDOT/CADDS SHEET 42

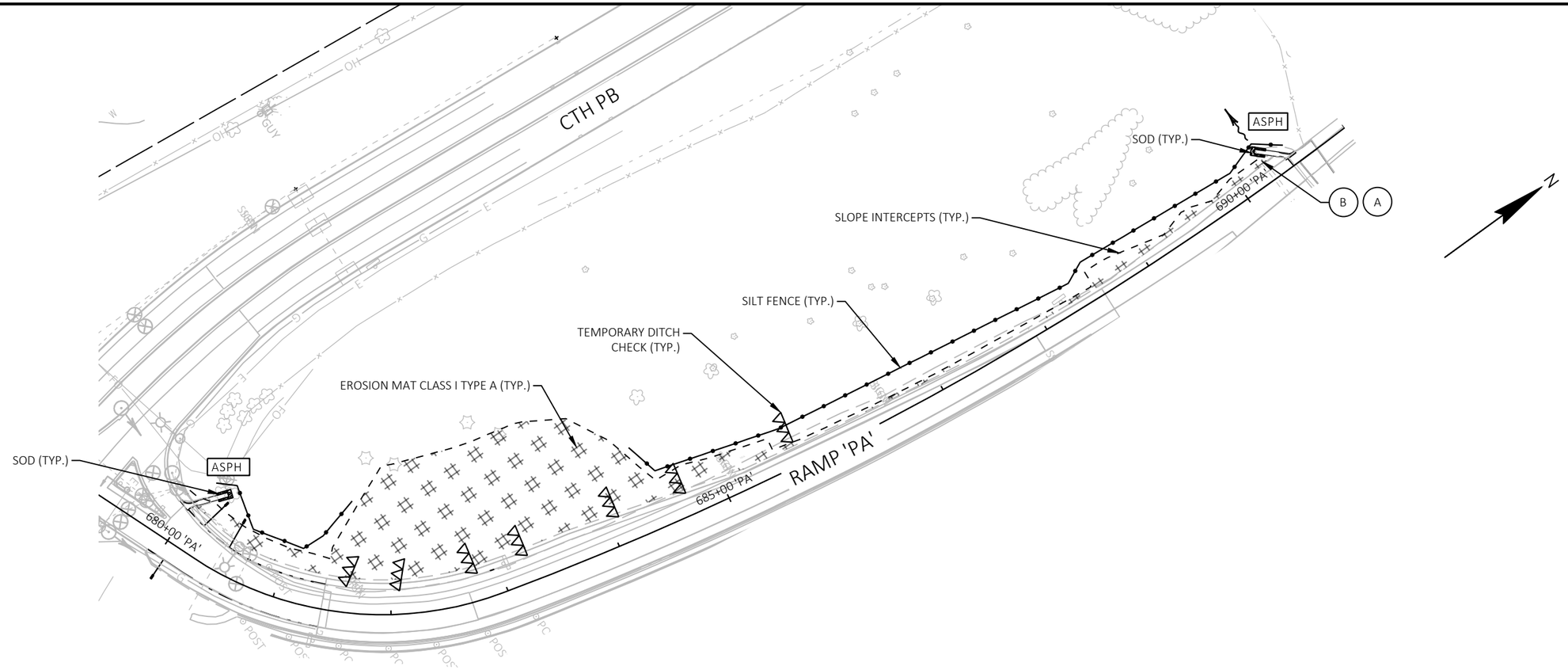

LEGEND

- EROSION MAT CLASS I TYPE A
- EROSION MAT CLASS I TYPE B
- SOD
- SILT FENCE
- RIPRAP MEDIUM
- SLOPE INTERCEPT
- ASPH — ASPHALTIC FLUME
- CONC — CONCRETE SURFACE DRAIN
- INLET PROTECTION TYPE [A] [B] [C]
- TEMPORARY DITCH CHECK
- CULVERT PIPE DITCH CHECK
- SURFACE WATER FLOW
- (A) CLEANING CULVERT PIPES REQUIRED
- (B) CLEANING DITCH REQUIRED

PROJECT NO: 1204-08-65	HWY: USH 18/151	COUNTY: DANE	EROSION CONTROL	SHEET 143	E

2

SEE PREVIOUS SHEET FOR ADDITIONAL EROSION CONTROL DETAILS ON RAMP 'PA'

MATCHLINE STA. 683+00 'EB'

RAMP 'PA'

685+00 'WB'

685+00 'EB'

EROSION MAT CLASS I TYPE A (TYP.)

690+00 'WB'

690+00 'EB'

RAMP 'PB'

EROSION MAT CLASS I TYPE B (TYP.)

WHALEN RD

R/W

RIPRAP MEDIUM (TYP.)

SILT FENCE (TYP.)

CONC

695+00 'WB'

695+00 'EB'

WB USH 18/151

EB USH 18/151

MATCHLINE STA. 698+00 'EB'

N

MATCHLINE STA. 698+00 'EB'

700+00 'WB'

705+00 'WB'

710+00 'WB'

700+00 'EB'

705+00 'EB'

710+00 'EB'

WB USH 18/151

EB USH 18/151

MATCHLINE STA. 712+50 'EB'

R/W

N

LEGEND

######	EROSION MAT CLASS I TYPE A	CONC	CONCRETE SURFACE DRAIN
	EROSION MAT CLASS I TYPE B		INLET PROTECTION TYPE A B C
	SOD		TEMPORARY DITCH CHECK
	SILT FENCE		CULVERT PIPE DITCH CHECK
	RIPRAP MEDIUM		SURFACE WATER FLOW
	SLOPE INTERCEPT	A	CLEANING CULVERT PIPES REQUIRED
ASPH	ASPHALTIC FLUME	B	CLEANING DITCH REQUIRED

PROJECT NO: 1204-08-65	HWY: USH 18/151	COUNTY: DANE	EROSION CONTROL	SHEET 144	E

FILE NAME : G:\WDOTSW\20007-000 USH 18\CIVIL 3D\SHEETSPLAN\022001-EC.DWG
LAYOUT NAME - 23

PLOT DATE : 7/29/2022 3:14 PM PLOT BY : ERIC ANDRITSCH PLOT NAME : PLOT SCALE : 1 IN:100 FT

2

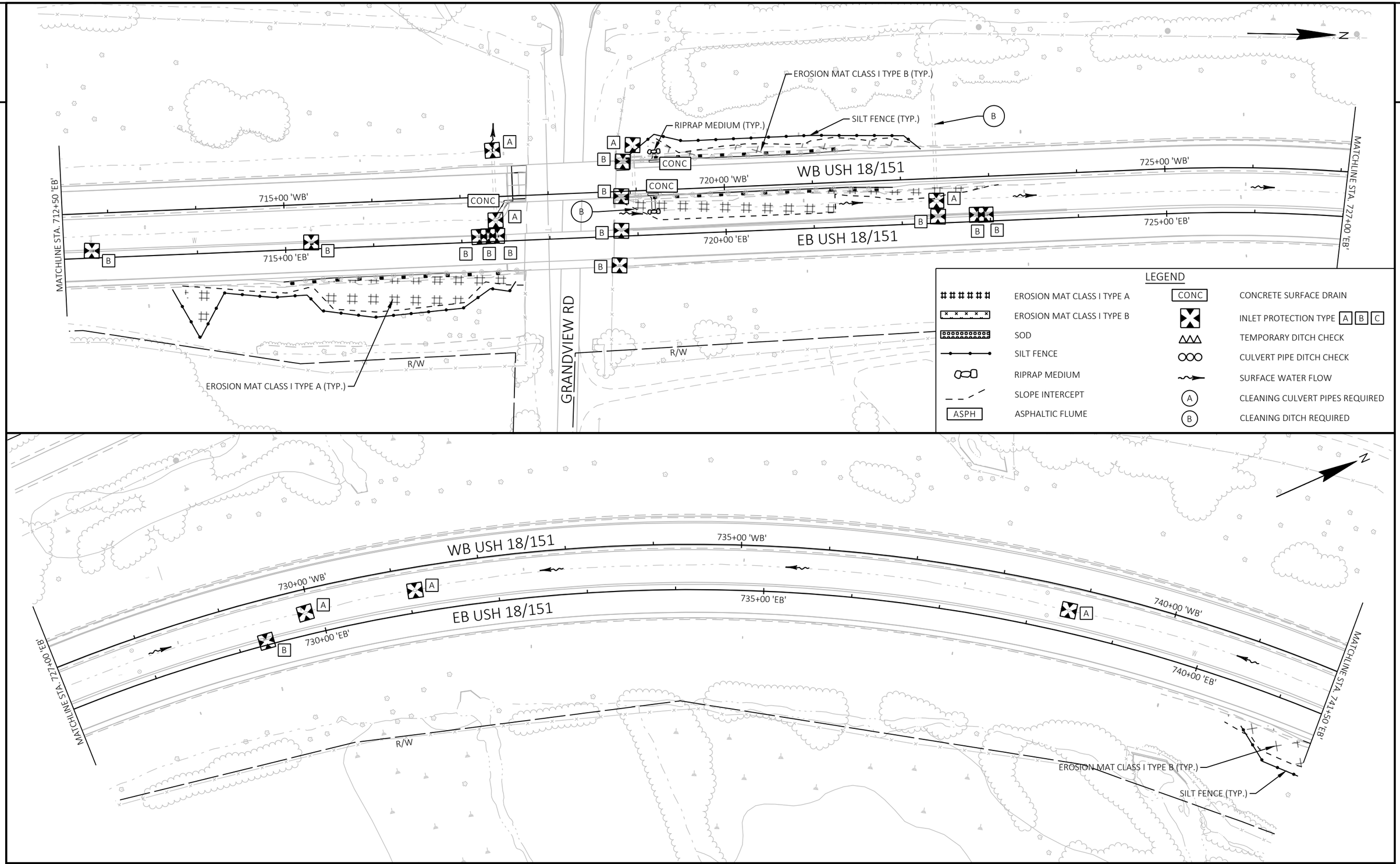

PROJECT NO: 1204-08-65	HWY: USH 18/151	COUNTY: DANE	EROSION CONTROL	SHEET 145	E

2

LEGEND

- EROSION MAT CLASS I TYPE A
- EROSION MAT CLASS I TYPE B
- SOD
- SILT FENCE
- RIPRAP MEDIUM
- SLOPE INTERCEPT
- ASPH — ASPHALTIC FLUME
- CONC — CONCRETE SURFACE DRAIN
- INLET PROTECTION TYPE A B C
- TEMPORARY DITCH CHECK
- CULVERT PIPE DITCH CHECK
- SURFACE WATER FLOW
- A — CLEANING CULVERT PIPES REQUIRED
- B — CLEANING DITCH REQUIRED

N

R/W

RAMP 'EW'

TEMPORARY DITCH CHECK (TYP.)

SILT FENCE (TYP.)

745+00 'WB'

750+00 'WB'

755+00 'WB'

WB USH 18/151

CONC

C

A

SOD (TYP.)

ASPH

745+00 'EB'

750+00 'EB'

755+00 'EB'

EB USH 18/151

MATCHLINE STA. 741+50 'EB'

MATCHLINE STA. 756+00 'EB'

EROSION MAT CLASS I TYPE A (TYP.)

B

RIPRAP MEDIUM (TYP.)

EROSION MAT CLASS I TYPE B (TYP.)

R/W

RAMP 'EE'

PROJECT NO: 1204-08-65	HWY: USH 18/151	COUNTY: DANE	EROSION CONTROL	SHEET 146	E

FILE NAME : G:\WDOTSW\20007-000 USH 18\CIVIL 3D\SHEETSPLAN\022001-EC.DWG
LAYOUT NAME - 25
PLOT DATE : 7/29/2022 3:15 PM
PLOT BY : ERIC ANDRITSCH
PLOT NAME :
PLOT SCALE : 1 IN:100 FT
WISDOT/CADDS SHEET 42

2

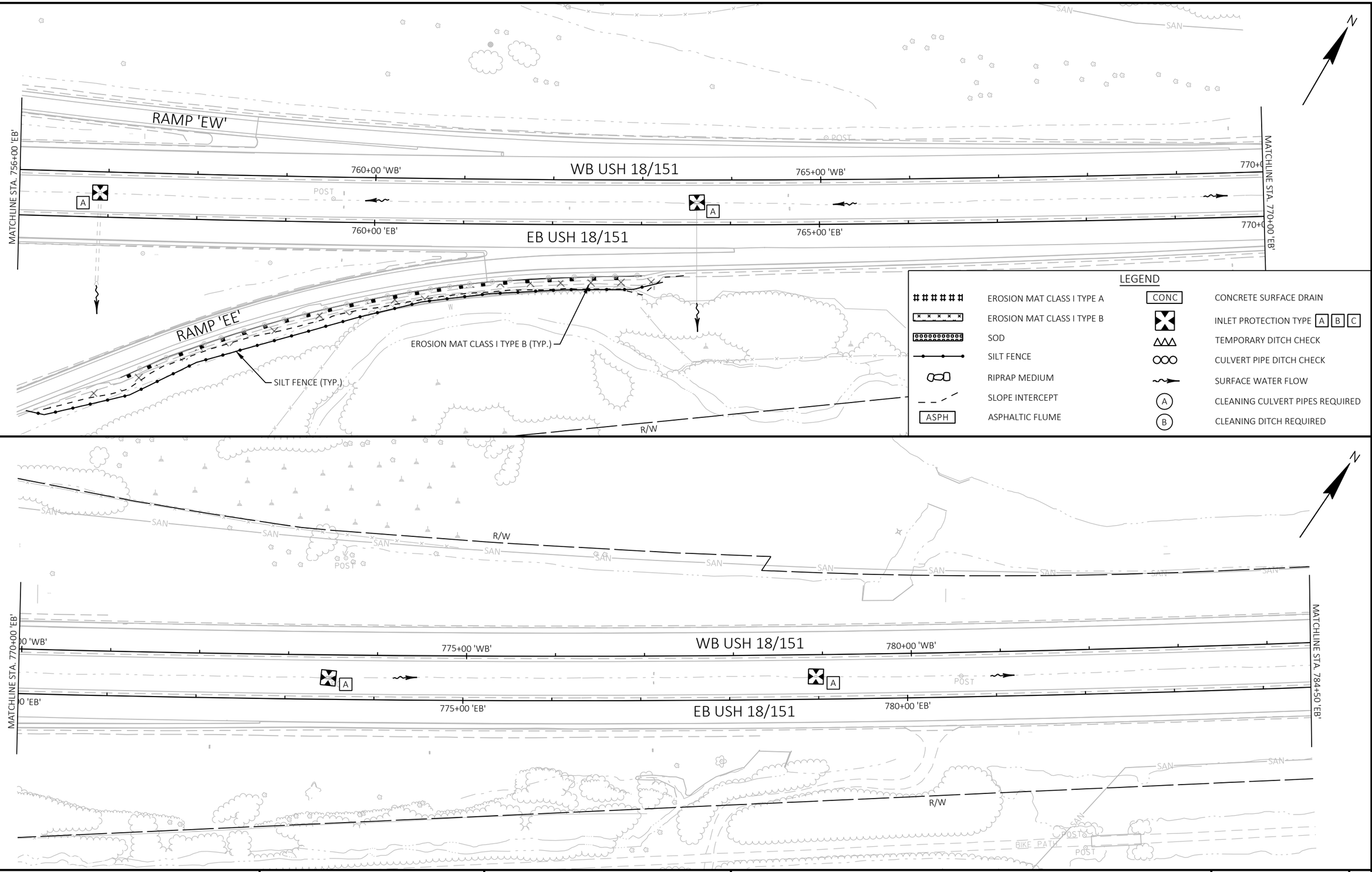

PROJECT NO: 1204-08-65	HWY: USH 18/151	COUNTY: DANE	EROSION CONTROL	SHEET 147	E

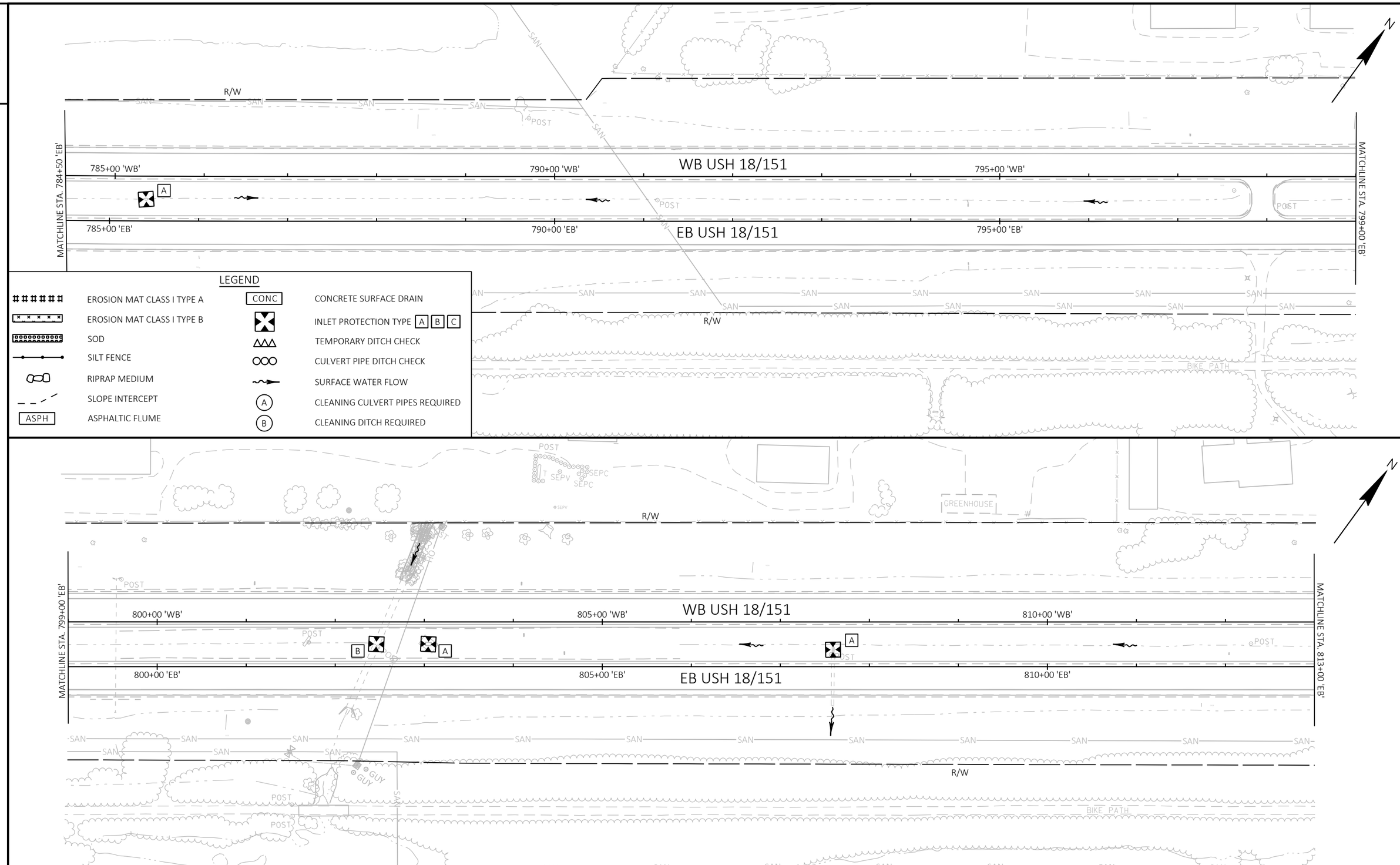

PROJECT NO: 1204-08-65	HWY: USH 18/151	COUNTY: DANE	EROSION CONTROL	SHEET 148	E

FILE NAME : G:\WDOTSW\20007-000 USH 18\CIVIL 3D\SHEETSPLAN\022001-EC.DWG
LAYOUT NAME - 27
PLOT DATE : 7/29/2022 3:16 PM
PLOT BY : ERIC ANDRITSCH
PLOT NAME :
PLOT SCALE : 1 IN:100 FT
WISDOT/CADDS SHEET 44

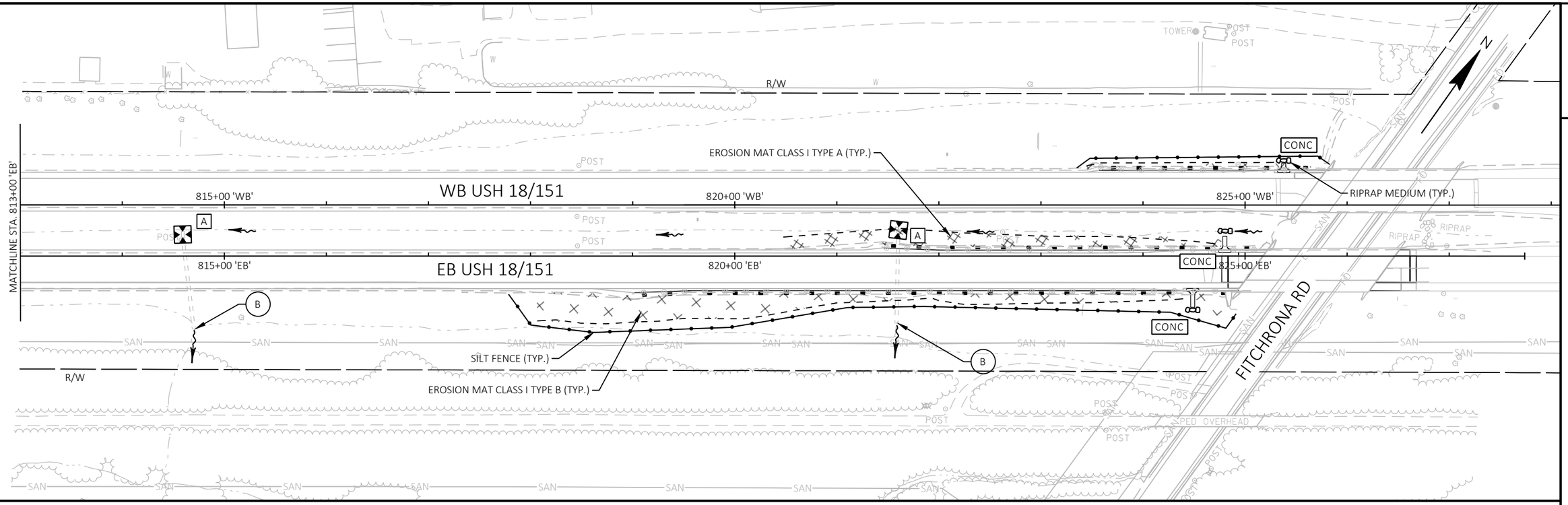

LEGEND

######	EROSION MAT CLASS I TYPE A	CONC	CONCRETE SURFACE DRAIN
	EROSION MAT CLASS I TYPE B		INLET PROTECTION TYPE A B C
	SOD		TEMPORARY DITCH CHECK
	SILT FENCE		CULVERT PIPE DITCH CHECK
	RIPRAP MEDIUM		SURFACE WATER FLOW
	SLOPE INTERCEPT	A	CLEANING CULVERT PIPES REQUIRED
ASPH	ASPHALTIC FLUME	B	CLEANING DITCH REQUIRED

PROJECT NO: 1204-08-65	HWY: USH 18/151	COUNTY: DANE	EROSION CONTROL	SHEET 149	E

FILE NAME : G:\WDOTSW\20007-000 USH 18\CIVIL 3D\SHEETSPLAN\022001-EC.DWG
LAYOUT NAME - 28

PLOT DATE : 7/29/2022 3:17 PM PLOT BY : ERIC ANDRITSCH PLOT NAME : PLOT SCALE : 1 IN:100 FT

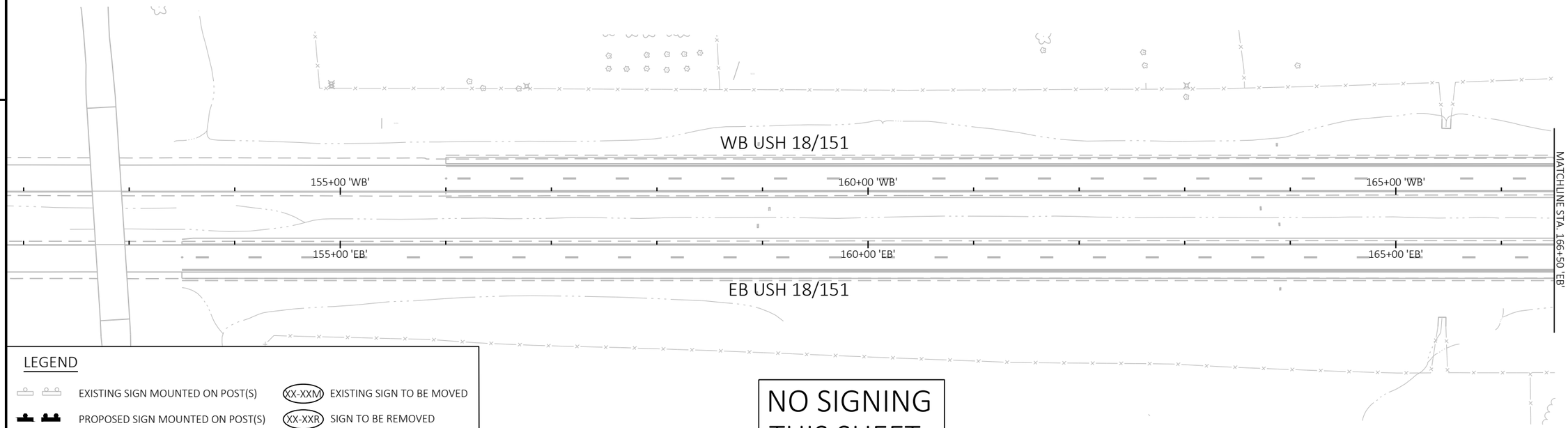

LEGEND

	EXISTING SIGN MOUNTED ON POST(S)	XX-XXM	EXISTING SIGN TO BE MOVED
	PROPOSED SIGN MOUNTED ON POST(S)	XX-XXR	SIGN TO BE REMOVED
	PROPOSED SIGN ON SIGNAL (NO POST)	XX-XX	PROPOSED SIGN

NOTE: SIGNS DENOTED AS MOVING SIGNS TYPE II SHALL BE MOVED FOR GRADING OPERATIONS AND REINSTALLED AT THEIR EXISTING LOCATION.

NO SIGNING THIS SHEET

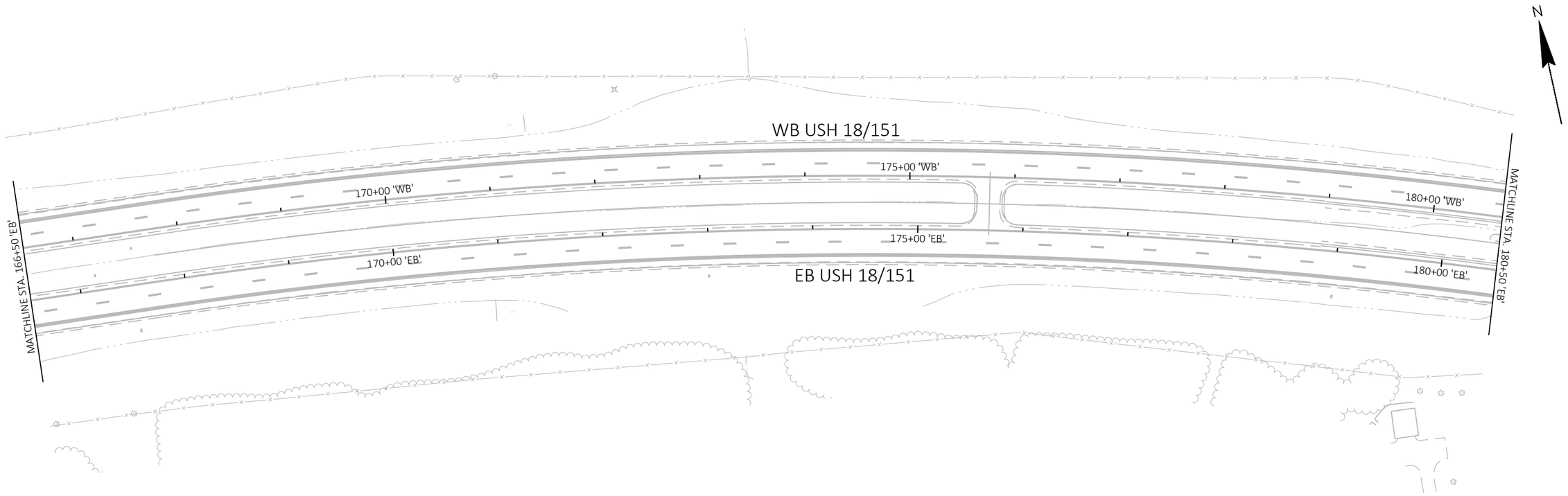

PROJECT NO: 1204-08-65	HWY: USH 18/151	COUNTY: DANE	PERMANENT SIGNING	SHEET 150	E

FILE NAME : G:\WDOTSW\20007-000 USH 18\CIVIL 3D\SHEETSPLAN\023201-PS.DWG
LAYOUT NAME - 01

PLOT DATE : 7/6/2022 12:47 PM PLOT BY : JENNIFER LAUER PLOT NAME : PLOT SCALE : 1 IN:100 FT

2

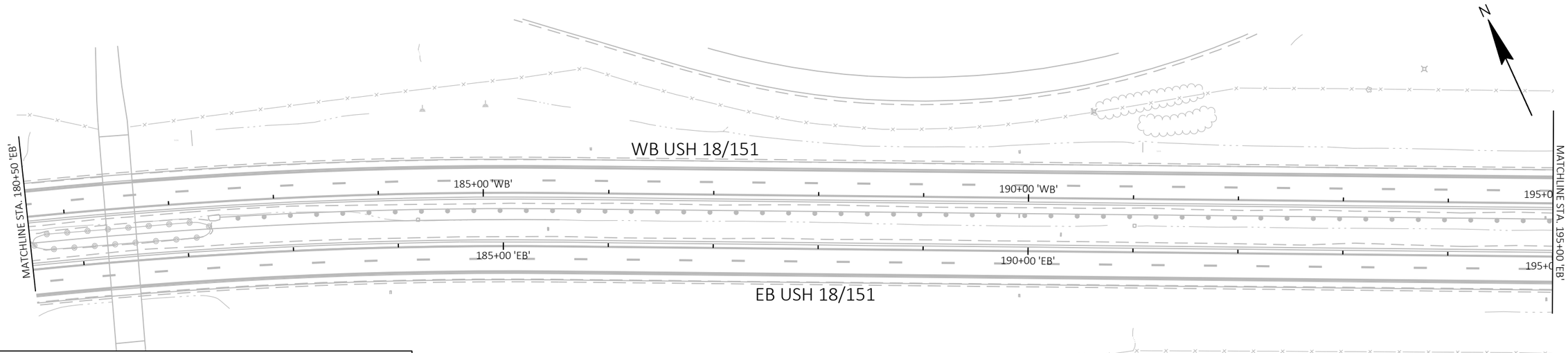

LEGEND

- EXISTING SIGN MOUNTED ON POST(S)
- PROPOSED SIGN MOUNTED ON POST(S)
- PROPOSED SIGN ON SIGNAL (NO POST)
- XX-XXM — EXISTING SIGN TO BE MOVED
- XX-XXR — SIGN TO BE REMOVED
- XX-XX — PROPOSED SIGN

NOTE: SIGNS DENOTED AS MOVING SIGNS TYPE II SHALL BE MOVED FOR GRADING OPERATIONS AND REINSTALLED AT THEIR EXISTING LOCATION.

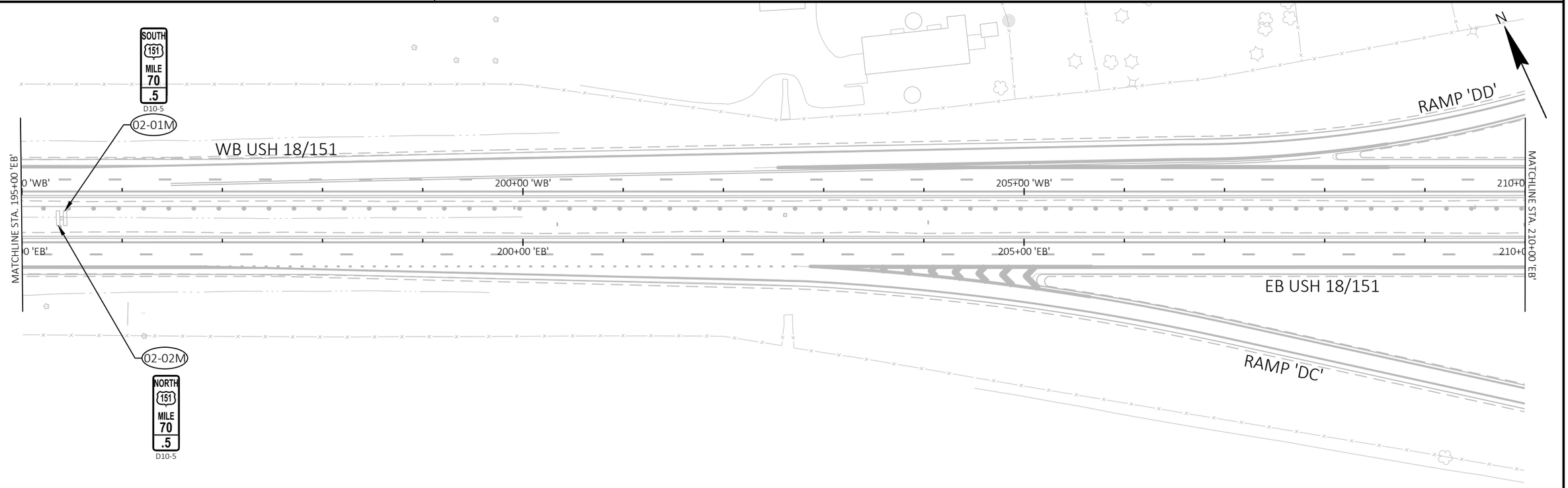

PROJECT NO: 1204-08-65	HWY: USH 18/151	COUNTY: DANE	PERMANENT SIGNING	SHEET 151	E

FILE NAME : G:\WDOTSW\20007-000 USH 18\CIVIL 3D\SHEETSPLAN\023201-PS.DWG
LAYOUT NAME - 02

PLOT DATE : 7/6/2022 12:48 PM PLOT BY : JENNIFER LAUER PLOT NAME : PLOT SCALE : 1 IN:100 FT

2

LEGEND

EXISTING SIGN MOUNTED ON POST(S)

PROPOSED SIGN MOUNTED ON POST(S)

PROPOSED SIGN ON SIGNAL (NO POST)

XX-XXM EXISTING SIGN TO BE MOVED

XX-XXR SIGN TO BE REMOVED

XX-XX PROPOSED SIGN

NOTE: SIGNS DENOTED AS MOVING SIGNS TYPE II SHALL BE MOVED FOR GRADING OPERATIONS AND REINSTALLED AT THEIR EXISTING LOCATION.

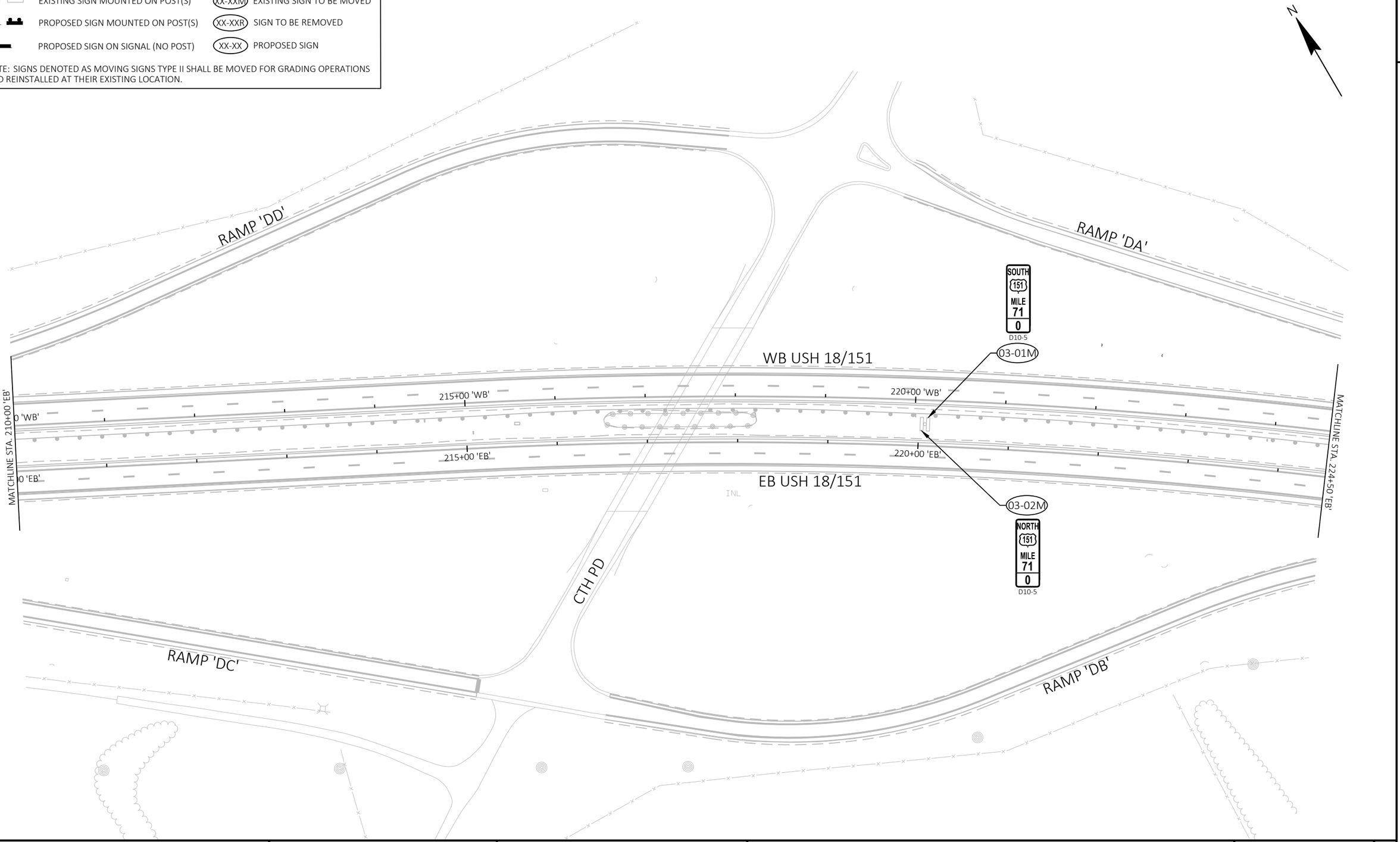

PROJECT NO: 1204-08-65	HWY: USH 18/151	COUNTY: DANE	PERMANENT SIGNING	SHEET 152	E

FILE NAME : G:\WDOTSW\20007-000 USH 18\CIVIL 3D\SHEETSPLAN\023201-PS.DWG
LAYOUT NAME - 03

PLOT DATE : 7/6/2022 12:48 PM PLOT BY : JENNIFER LAUER PLOT NAME : PLOT SCALE : 1 IN:100 FT

WISDOT/CADDS SHEET 42

2

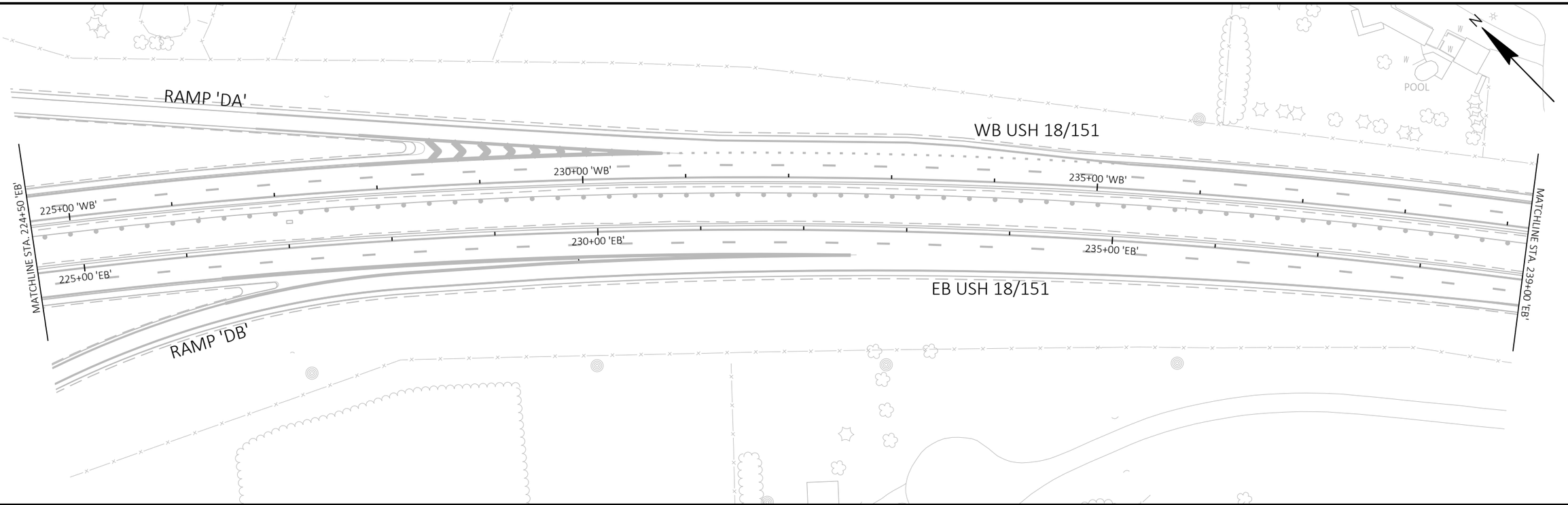

LEGEND

- EXISTING SIGN MOUNTED ON POST(S)
- PROPOSED SIGN MOUNTED ON POST(S)
- PROPOSED SIGN ON SIGNAL (NO POST)
- (XX-XXM) EXISTING SIGN TO BE MOVED
- (XX-XXR) SIGN TO BE REMOVED
- (XX-XX) PROPOSED SIGN

NOTE: SIGNS DENOTED AS MOVING SIGNS TYPE II SHALL BE MOVED FOR GRADING OPERATIONS AND REINSTALLED AT THEIR EXISTING LOCATION.

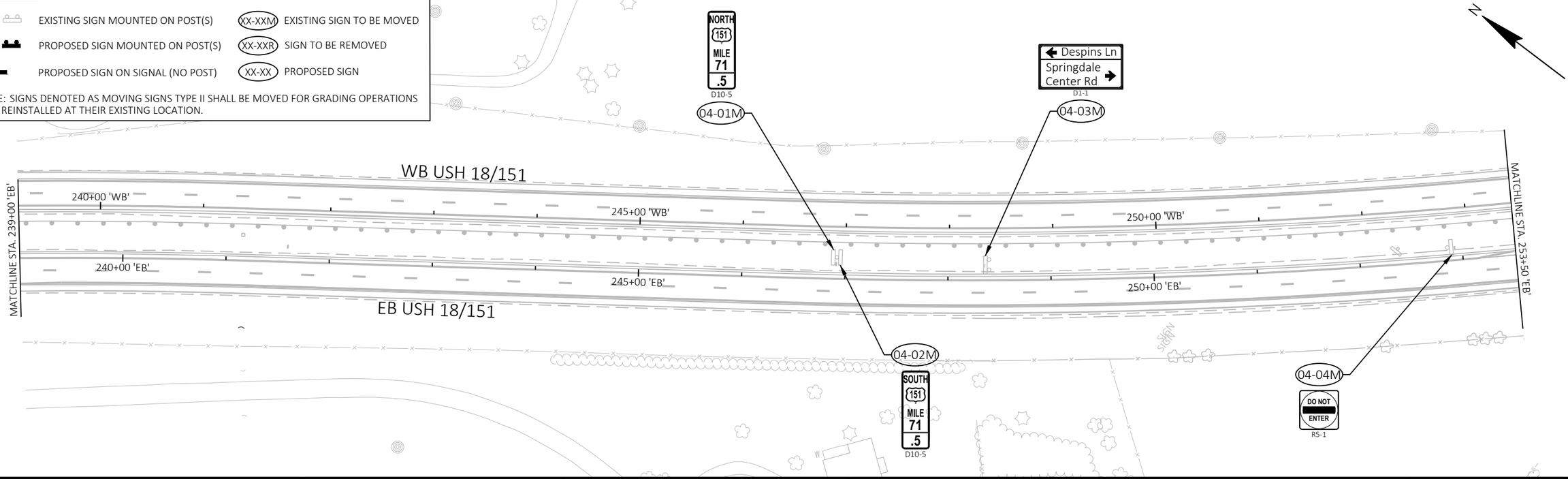

PROJECT NO: 1204-08-65	HWY: USH 18/151	COUNTY: DANE	PERMANENT SIGNING	SHEET 153	E

FILE NAME : G:\WDOTSW\20007-000 USH 18\CIVIL 3D\SHEETSPLAN\023201-PS.DWG
LAYOUT NAME - 04

PLOT DATE : 7/6/2022 12:49 PM PLOT BY : JENNIFER LAUER PLOT NAME : PLOT SCALE : 1 IN:100 FT

2

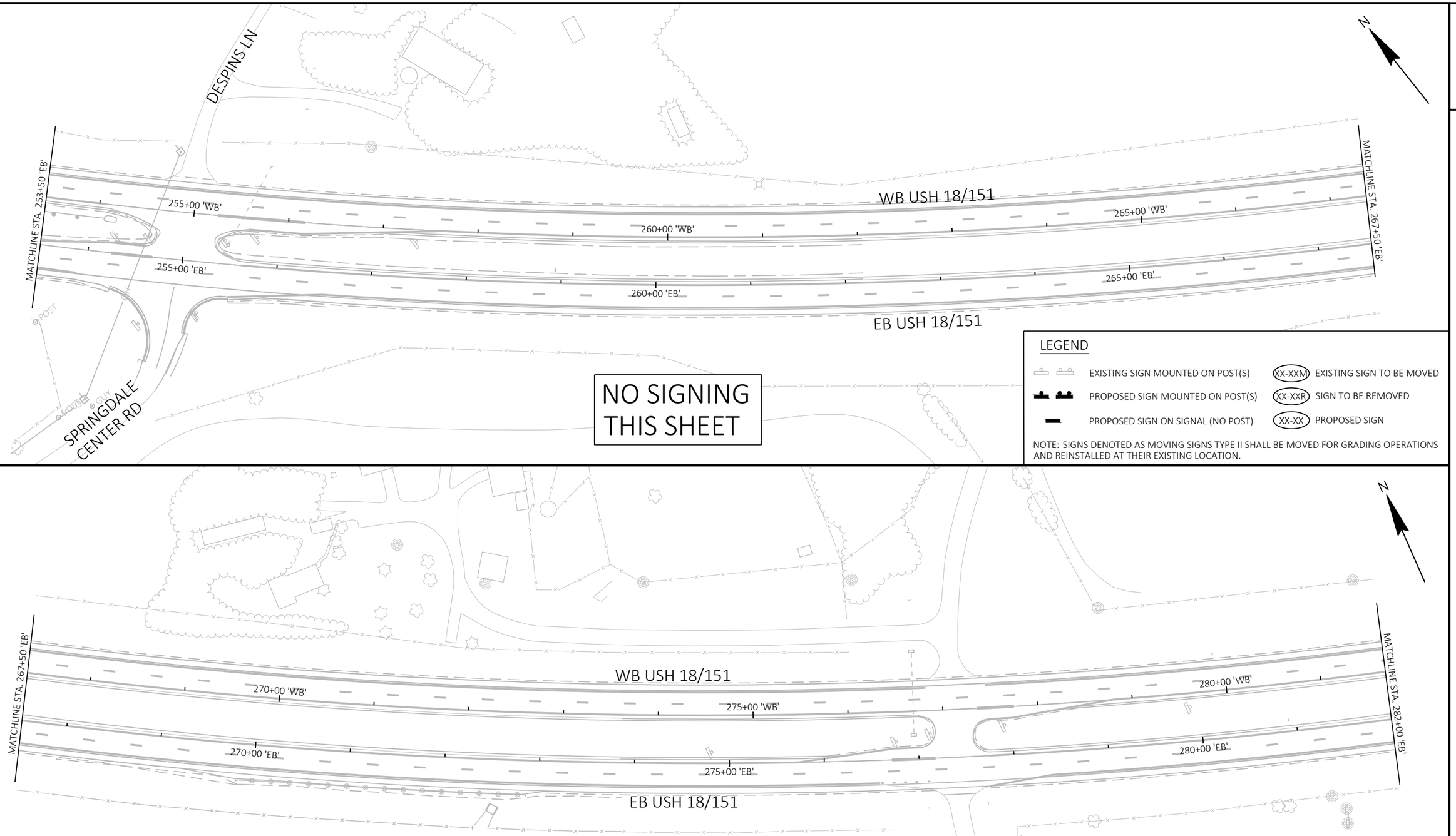

PROJECT NO: 1204-08-65	HWY: USH 18/151	COUNTY: DANE	PERMANENT SIGNING	SHEET 154	E

2

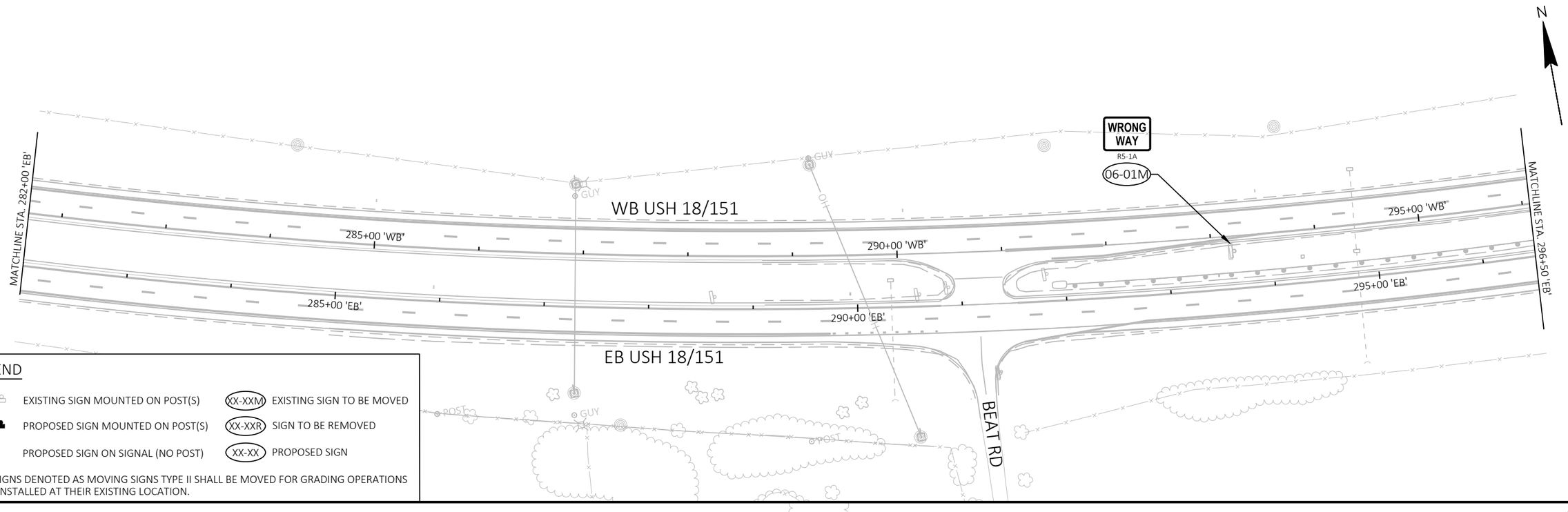

LEGEND

- EXISTING SIGN MOUNTED ON POST(S)
- PROPOSED SIGN MOUNTED ON POST(S)
- PROPOSED SIGN ON SIGNAL (NO POST)
- XX-XXM — EXISTING SIGN TO BE MOVED
- XX-XXR — SIGN TO BE REMOVED
- XX-XX — PROPOSED SIGN

NOTE: SIGNS DENOTED AS MOVING SIGNS TYPE II SHALL BE MOVED FOR GRADING OPERATIONS AND REINSTALLED AT THEIR EXISTING LOCATION.

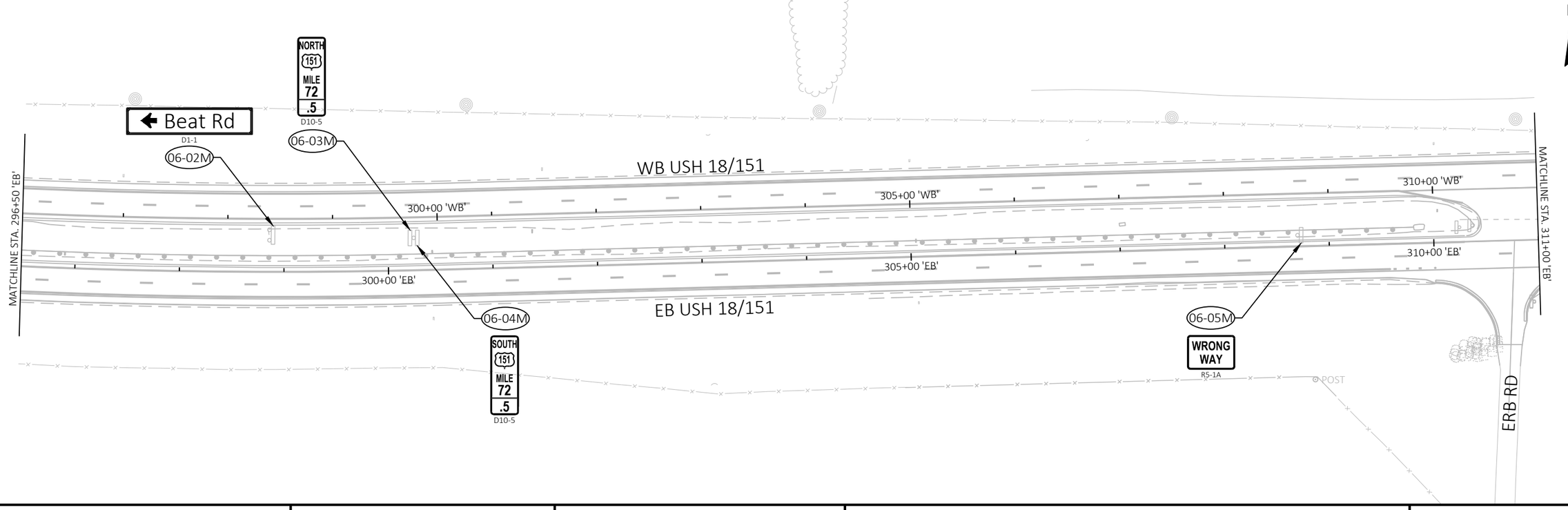

PROJECT NO: 1204-08-65	HWY: USH 18/151	COUNTY: DANE	PERMANENT SIGNING	SHEET 155	E

FILE NAME : G:\WDOTSW\20007-000 USH 18\CIVIL 3D\SHEETSPLAN\023201-PS.DWG
LAYOUT NAME - 06

PLOT DATE : 7/6/2022 12:52 PM PLOT BY : JENNIFER LAUER PLOT NAME : PLOT SCALE : 1 IN:100 FT

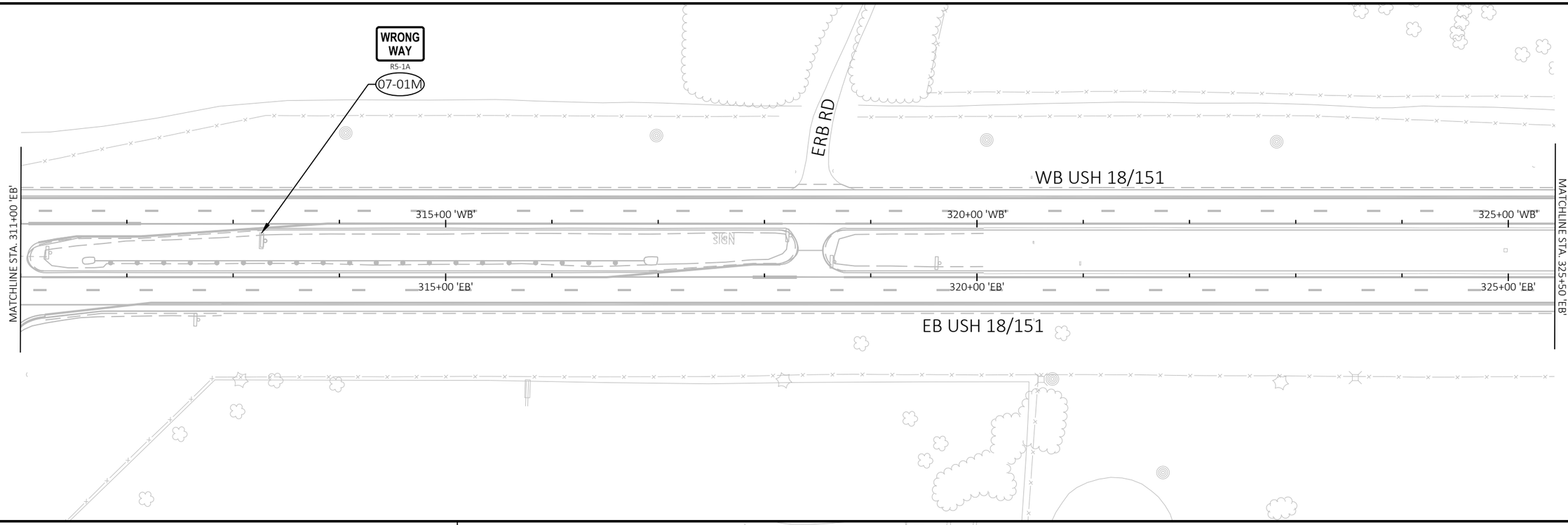

LEGEND

- EXISTING SIGN MOUNTED ON POST(S)
- PROPOSED SIGN MOUNTED ON POST(S)
- PROPOSED SIGN ON SIGNAL (NO POST)
- (XX-XXM) EXISTING SIGN TO BE MOVED
- (XX-XXR) SIGN TO BE REMOVED
- (XX-XX) PROPOSED SIGN

NOTE: SIGNS DENOTED AS MOVING SIGNS TYPE II SHALL BE MOVED FOR GRADING OPERATIONS AND REINSTALLED AT THEIR EXISTING LOCATION.

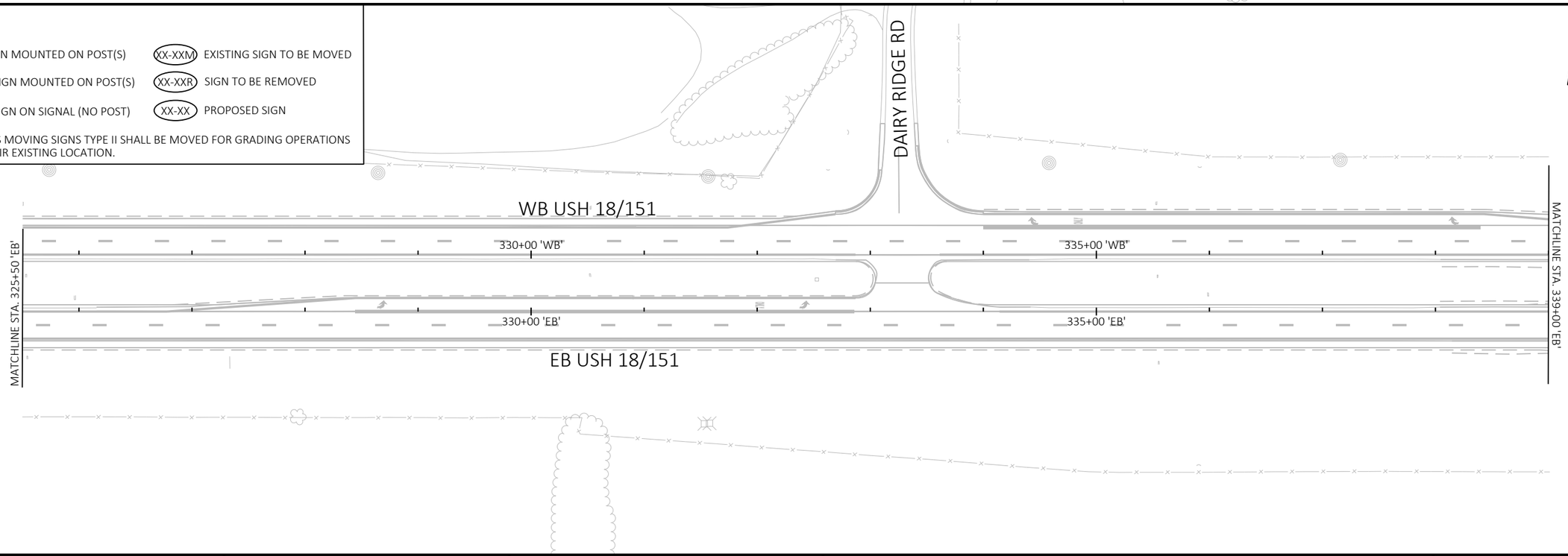

PROJECT NO: 1204-08-65	HWY: USH 18/151	COUNTY: DANE	PERMANENT SIGNING	SHEET 156	E

FILE NAME : G:\WDOTSW\20007-000 USH 18\CIVIL 3D\SHEETSPLAN\023201-PS.DWG
LAYOUT NAME - 07

PLOT DATE : 7/6/2022 12:53 PM PLOT BY : JENNIFER LAUER PLOT NAME : PLOT SCALE : 1 IN:100 FT

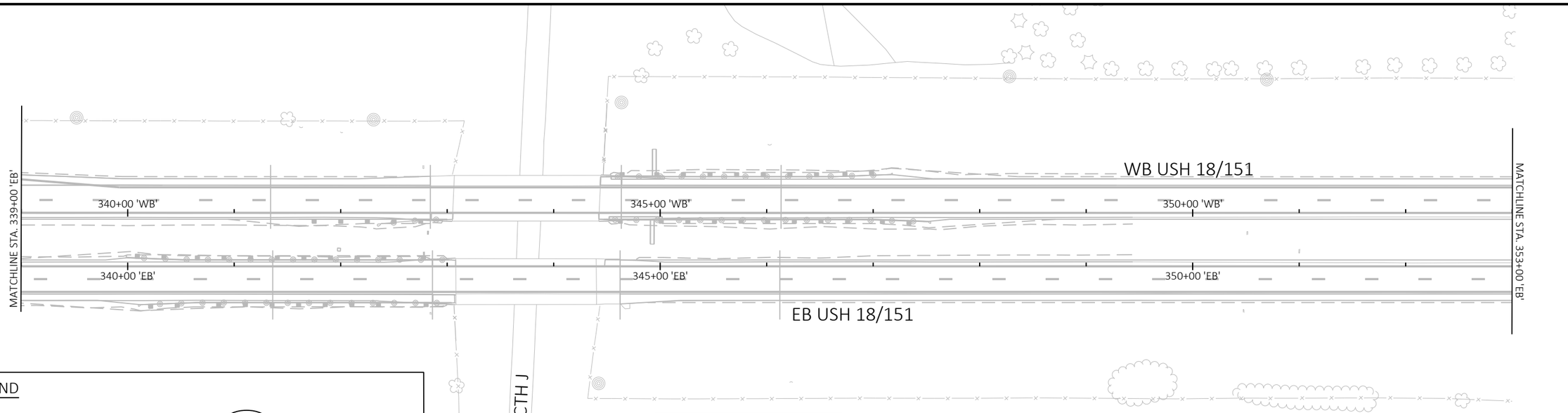

LEGEND

- EXISTING SIGN MOUNTED ON POST(S)
- PROPOSED SIGN MOUNTED ON POST(S)
- PROPOSED SIGN ON SIGNAL (NO POST)
- (XX-XXM) EXISTING SIGN TO BE MOVED
- (XX-XXR) SIGN TO BE REMOVED
- (XX-XX) PROPOSED SIGN

NOTE: SIGNS DENOTED AS MOVING SIGNS TYPE II SHALL BE MOVED FOR GRADING OPERATIONS AND REINSTALLED AT THEIR EXISTING LOCATION.

NO SIGNING THIS SHEET

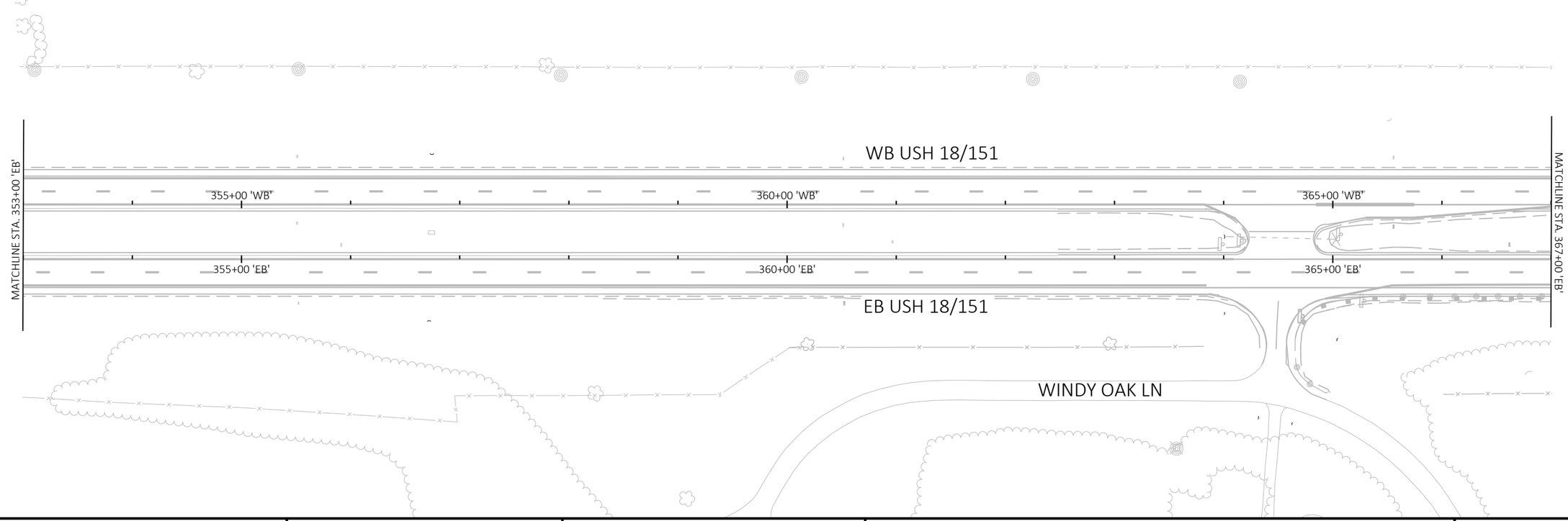

PROJECT NO: 1204-08-65	HWY: USH 18/151	COUNTY: DANE	PERMANENT SIGNING	SHEET 157	E

2

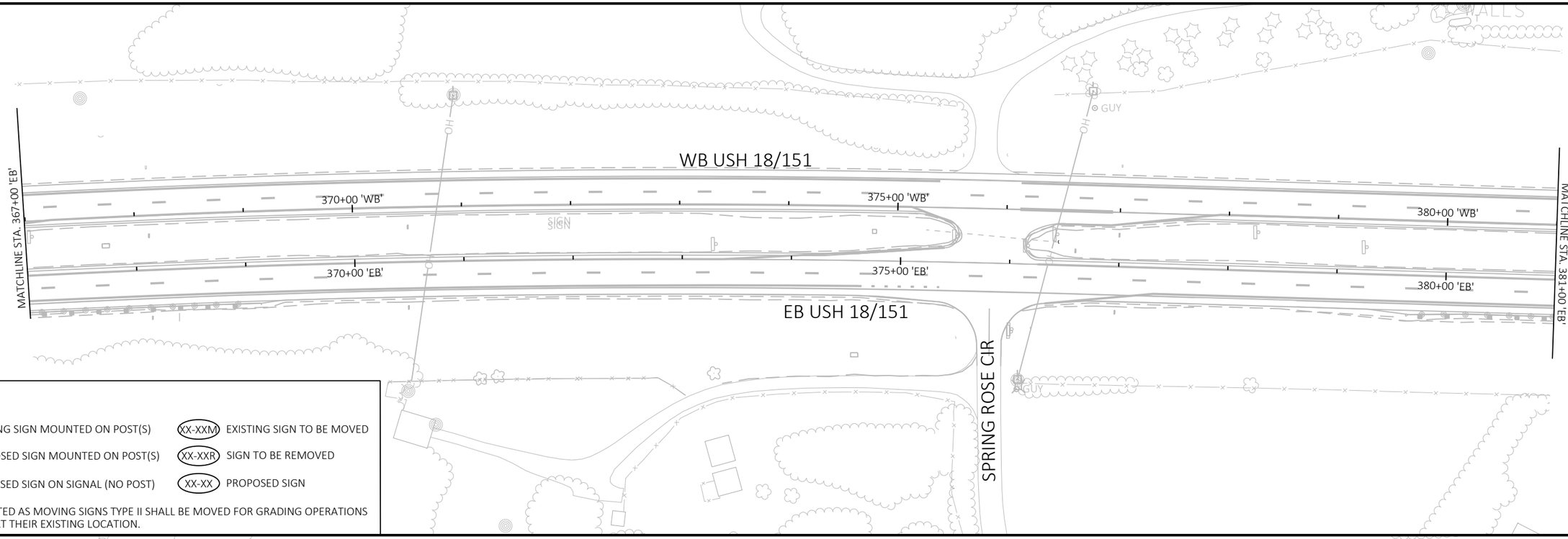

LEGEND

EXISTING SIGN MOUNTED ON POST(S)	XX-XXM EXISTING SIGN TO BE MOVED
PROPOSED SIGN MOUNTED ON POST(S)	XX-XXR SIGN TO BE REMOVED
PROPOSED SIGN ON SIGNAL (NO POST)	XX-XX PROPOSED SIGN

NOTE: SIGNS DENOTED AS MOVING SIGNS TYPE II SHALL BE MOVED FOR GRADING OPERATIONS AND REINSTALLED AT THEIR EXISTING LOCATION.

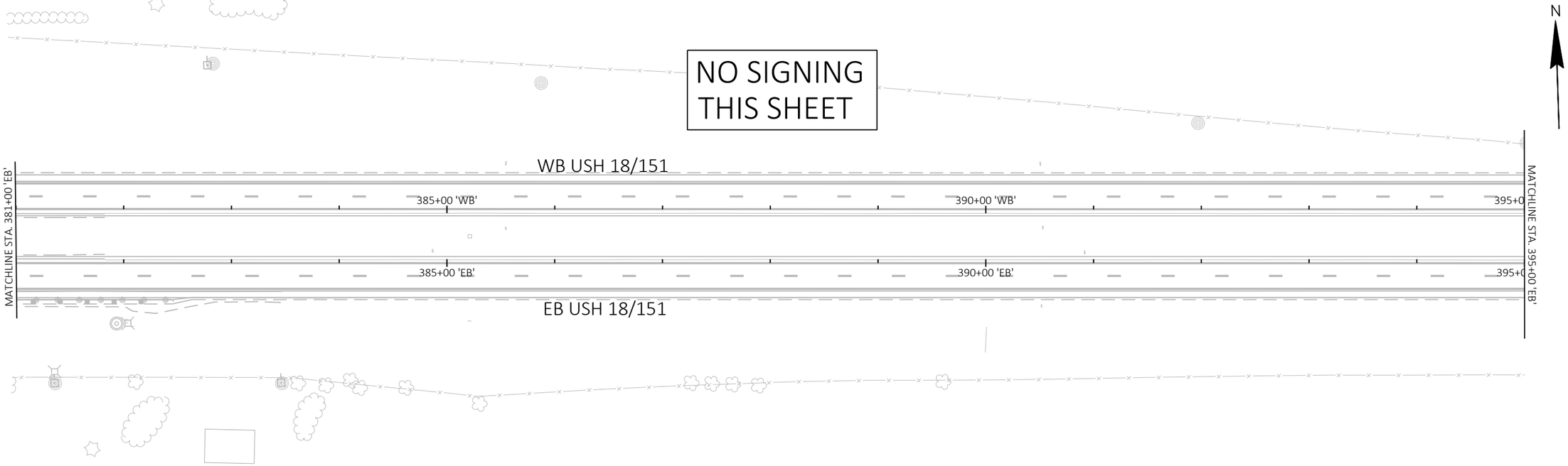

PROJECT NO: 1204-08-65	HWY: USH 18/151	COUNTY: DANE	PERMANENT SIGNING	SHEET 158	E

FILE NAME : G:\WDOTSW\20007-000 USH 18\CIVIL 3D\SHEETSPLAN\023201-PS.DWG
LAYOUT NAME - 09

PLOT DATE : 7/6/2022 12:55 PM PLOT BY : JENNIFER LAUER PLOT NAME : PLOT SCALE : 1 IN:100 FT

WISDOT/CADDS SHEET 44

2

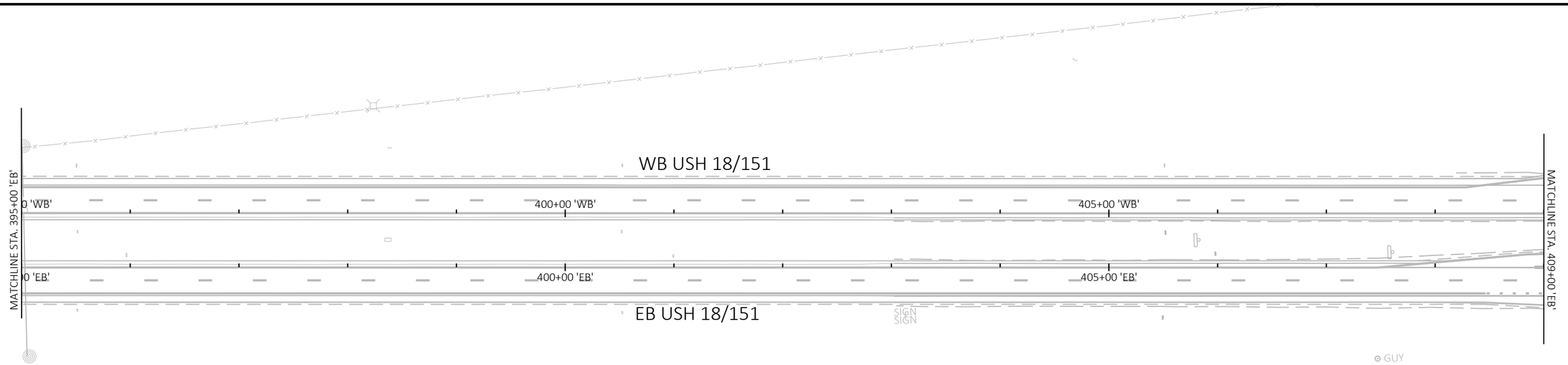

LEGEND

- EXISTING SIGN MOUNTED ON POST(S) — (XX-XXM) EXISTING SIGN TO BE MOVED
- PROPOSED SIGN MOUNTED ON POST(S) — (XX-XXR) SIGN TO BE REMOVED
- PROPOSED SIGN ON SIGNAL (NO POST) — (XX-XX) PROPOSED SIGN

NOTE: SIGNS DENOTED AS MOVING SIGNS TYPE II SHALL BE MOVED FOR GRADING OPERATIONS AND REINSTALLED AT THEIR EXISTING LOCATION.

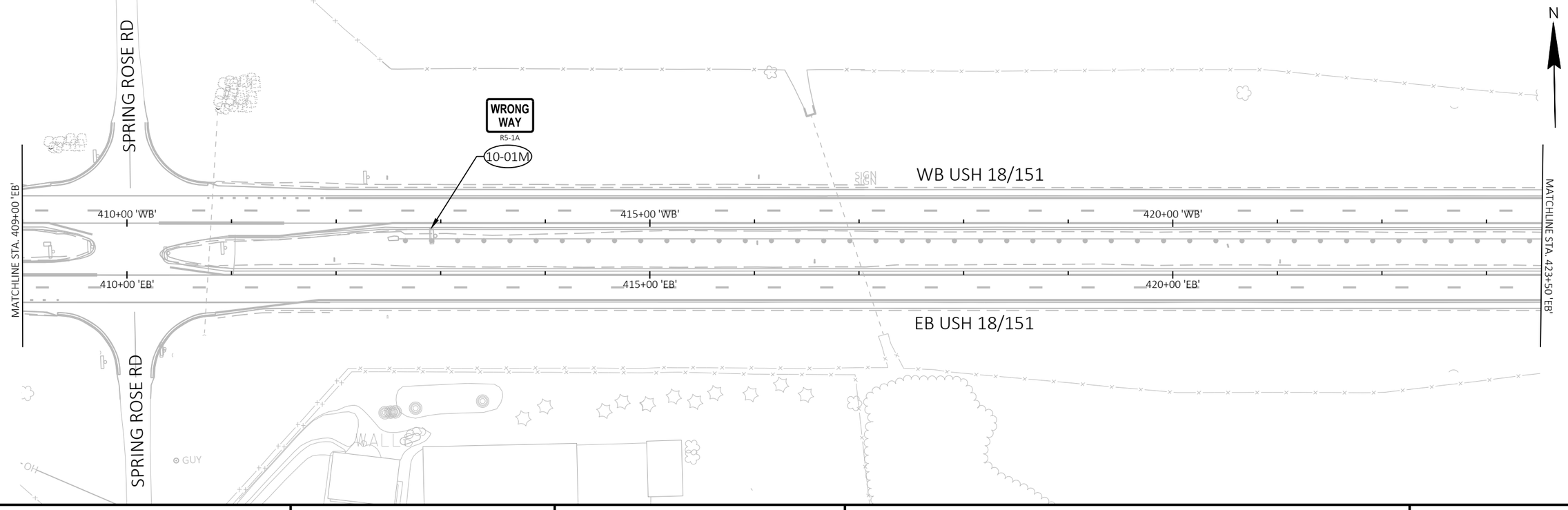

PROJECT NO: 1204-08-65	HWY: USH 18/151	COUNTY: DANE	PERMANENT SIGNING	SHEET 159	E

FILE NAME : G:\WDOTSW\20007-000 USH 18\CIVIL 3D\SHEETSPLAN\023201-PS.DWG
LAYOUT NAME - 10

PLOT DATE : 7/6/2022 12:56 PM PLOT BY : JENNIFER LAUER PLOT NAME : PLOT SCALE : 1 IN:100 FT

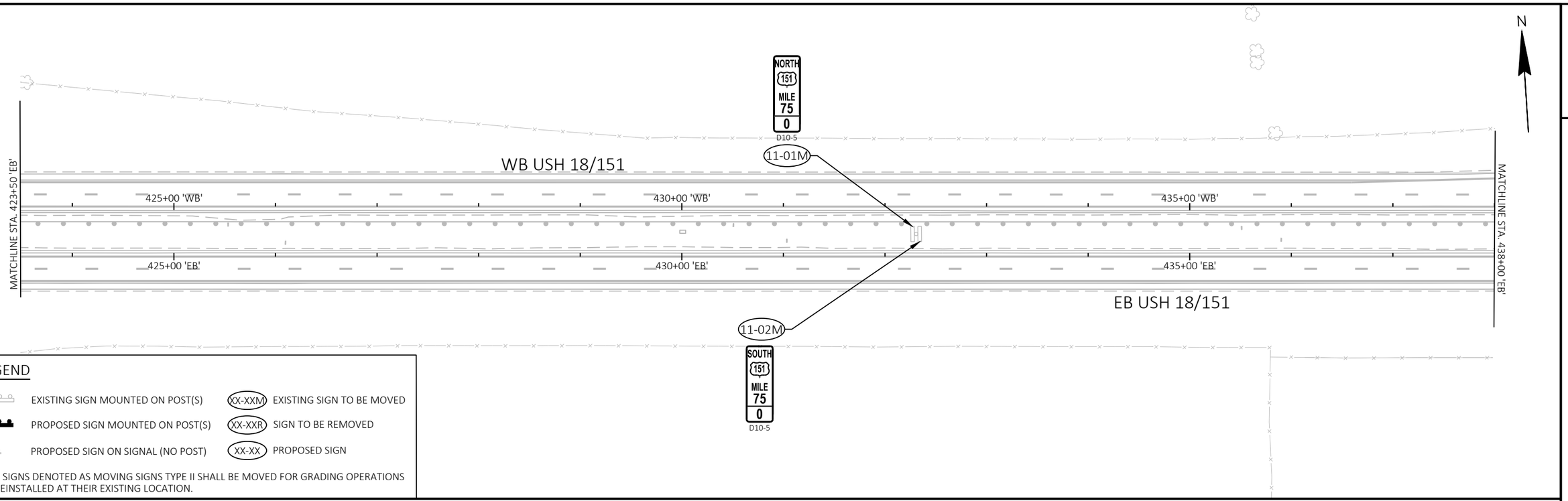

LEGEND

- EXISTING SIGN MOUNTED ON POST(S)
- PROPOSED SIGN MOUNTED ON POST(S)
- PROPOSED SIGN ON SIGNAL (NO POST)
- XX-XXM — EXISTING SIGN TO BE MOVED
- XX-XXR — SIGN TO BE REMOVED
- XX-XX — PROPOSED SIGN

NOTE: SIGNS DENOTED AS MOVING SIGNS TYPE II SHALL BE MOVED FOR GRADING OPERATIONS AND REINSTALLED AT THEIR EXISTING LOCATION.

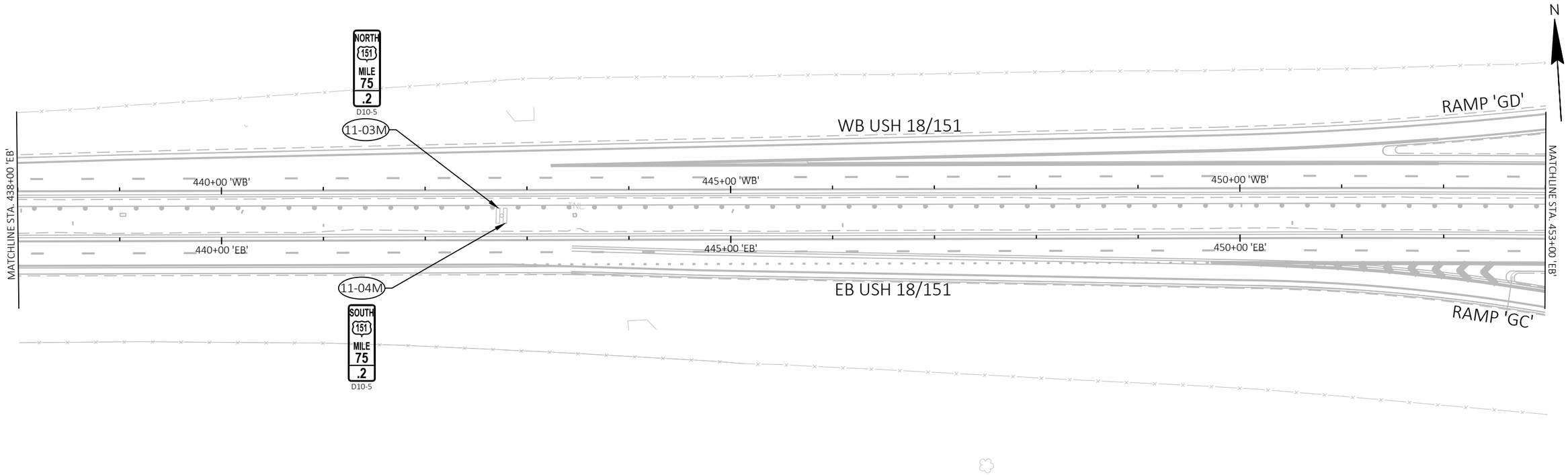

PROJECT NO: 1204-08-65	HWY: USH 18/151	COUNTY: DANE	PERMANENT SIGNING	SHEET 160	E

2

LEGEND

- EXISTING SIGN MOUNTED ON POST(S)
- PROPOSED SIGN MOUNTED ON POST(S)
- PROPOSED SIGN ON SIGNAL (NO POST)
- XX-XXM — EXISTING SIGN TO BE MOVED
- XX-XXR — SIGN TO BE REMOVED
- XX-XX — PROPOSED SIGN

NOTE: SIGNS DENOTED AS MOVING SIGNS TYPE II SHALL BE MOVED FOR GRADING OPERATIONS AND REINSTALLED AT THEIR EXISTING LOCATION.

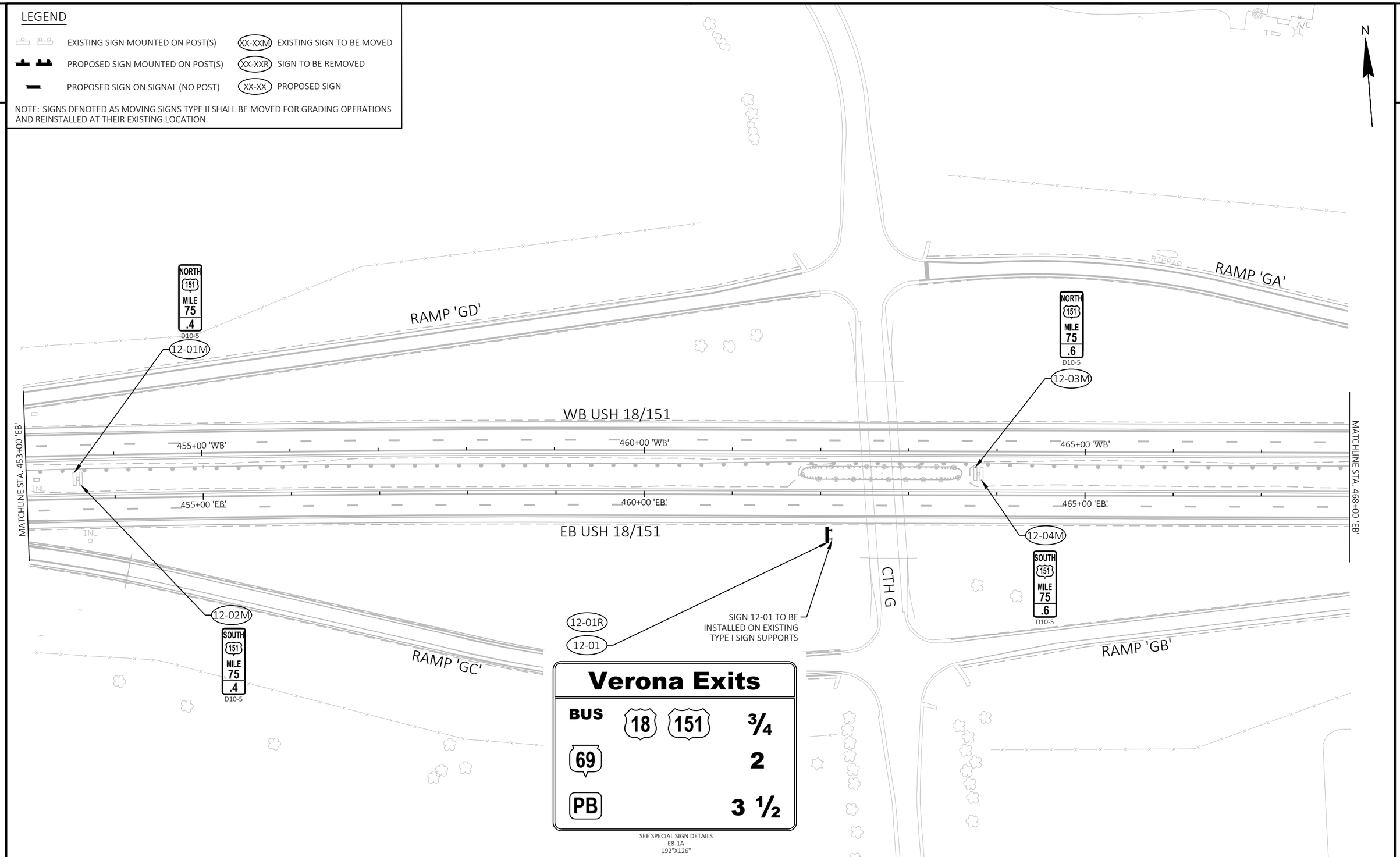

Verona Exits

BUS	18 151	¾
69		2
PB		3 ½

SEE SPECIAL SIGN DETAILS
E8-1A
192"X126"

PROJECT NO: 1204-08-65	HWY: USH 18/151	COUNTY: DANE	PERMANENT SIGNING	SHEET 161	E

FILE NAME : G:\WDOTSW\20007-000 USH 18\CIVIL 3D\SHEETSPLAN\023201-PS.DWG
LAYOUT NAME - 12
PLOT DATE : 7/6/2022 12:57 PM
PLOT BY : JENNIFER LAUER
PLOT NAME :
PLOT SCALE : 1 IN:100 FT

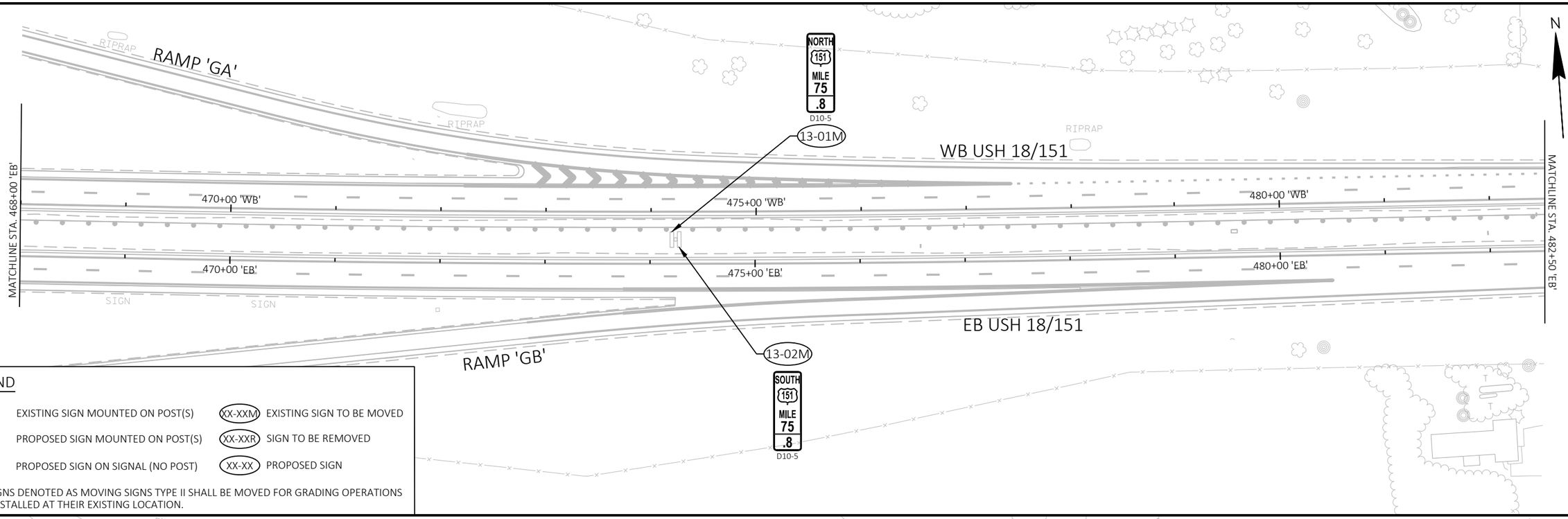

LEGEND

- EXISTING SIGN MOUNTED ON POST(S) — (XX-XXM) EXISTING SIGN TO BE MOVED
- PROPOSED SIGN MOUNTED ON POST(S) — (XX-XXR) SIGN TO BE REMOVED
- PROPOSED SIGN ON SIGNAL (NO POST) — (XX-XX) PROPOSED SIGN

NOTE: SIGNS DENOTED AS MOVING SIGNS TYPE II SHALL BE MOVED FOR GRADING OPERATIONS AND REINSTALLED AT THEIR EXISTING LOCATION.

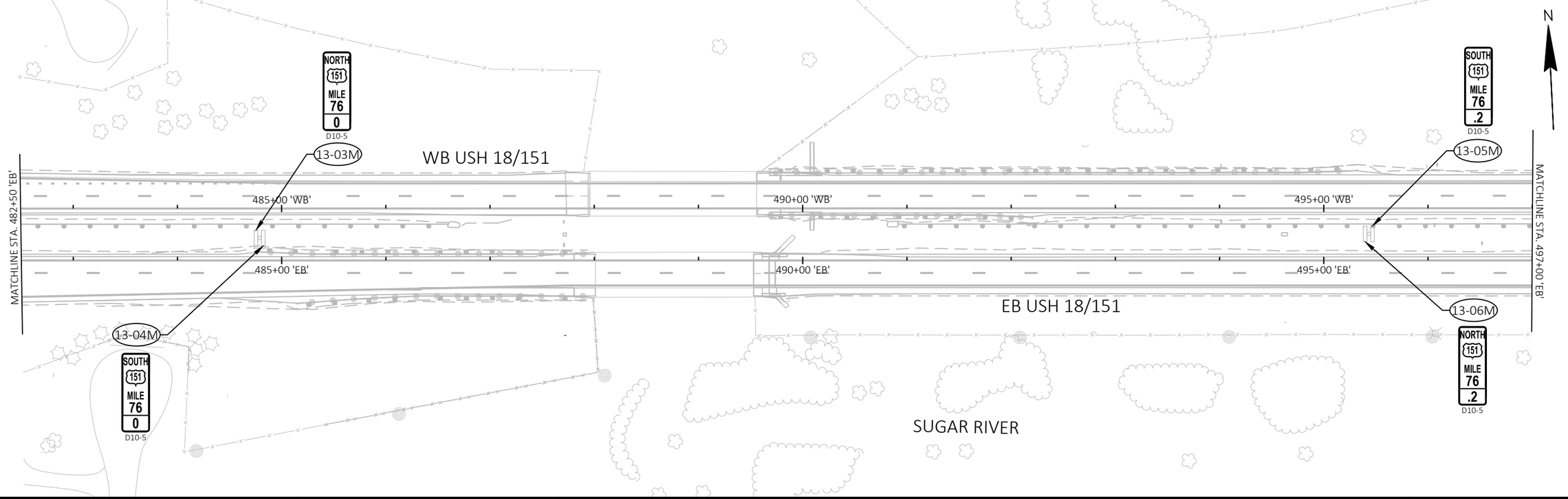

PROJECT NO: 1204-08-65	HWY: USH 18/151	COUNTY: DANE	PERMANENT SIGNING	SHEET 162	E

FILE NAME : G:\WDOTSW\20007-000 USH 18\CIVIL 3D\SHEETSPLAN\023201-PS.DWG
LAYOUT NAME - 13

PLOT DATE : 7/6/2022 12:58 PM PLOT BY : JENNIFER LAUER PLOT NAME : PLOT SCALE : 1 IN:100 FT

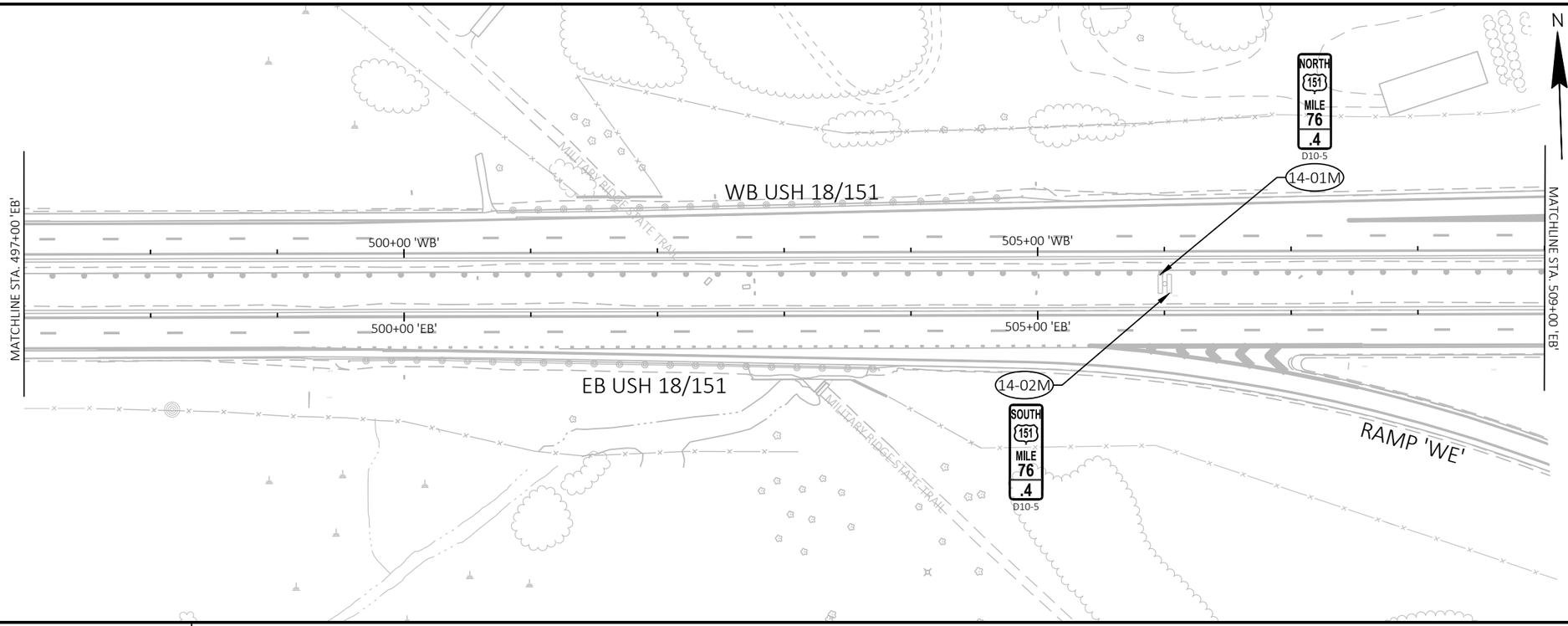

LEGEND

- EXISTING SIGN MOUNTED ON POST(S)
- PROPOSED SIGN MOUNTED ON POST(S)
- PROPOSED SIGN ON SIGNAL (NO POST)
- (XX-XXM) EXISTING SIGN TO BE MOVED
- (XX-XXR) SIGN TO BE REMOVED
- (XX-XX) PROPOSED SIGN

NOTE: SIGNS DENOTED AS MOVING SIGNS TYPE II SHALL BE MOVED FOR GRADING OPERATIONS AND REINSTALLED AT THEIR EXISTING LOCATION.

PROJECT NO: 1204-08-65	HWY: USH 18/151	COUNTY: DANE	PERMANENT SIGNING	SHEET 163	E

2

LEGEND

EXISTING SIGN MOUNTED ON POST(S)

PROPOSED SIGN MOUNTED ON POST(S)

PROPOSED SIGN ON SIGNAL (NO POST)

XX-XXM EXISTING SIGN TO BE MOVED

XX-XXR SIGN TO BE REMOVED

XX-XX PROPOSED SIGN

NOTE: SIGNS DENOTED AS MOVING SIGNS TYPE II SHALL BE MOVED FOR GRADING OPERATIONS AND REINSTALLED AT THEIR EXISTING LOCATION.

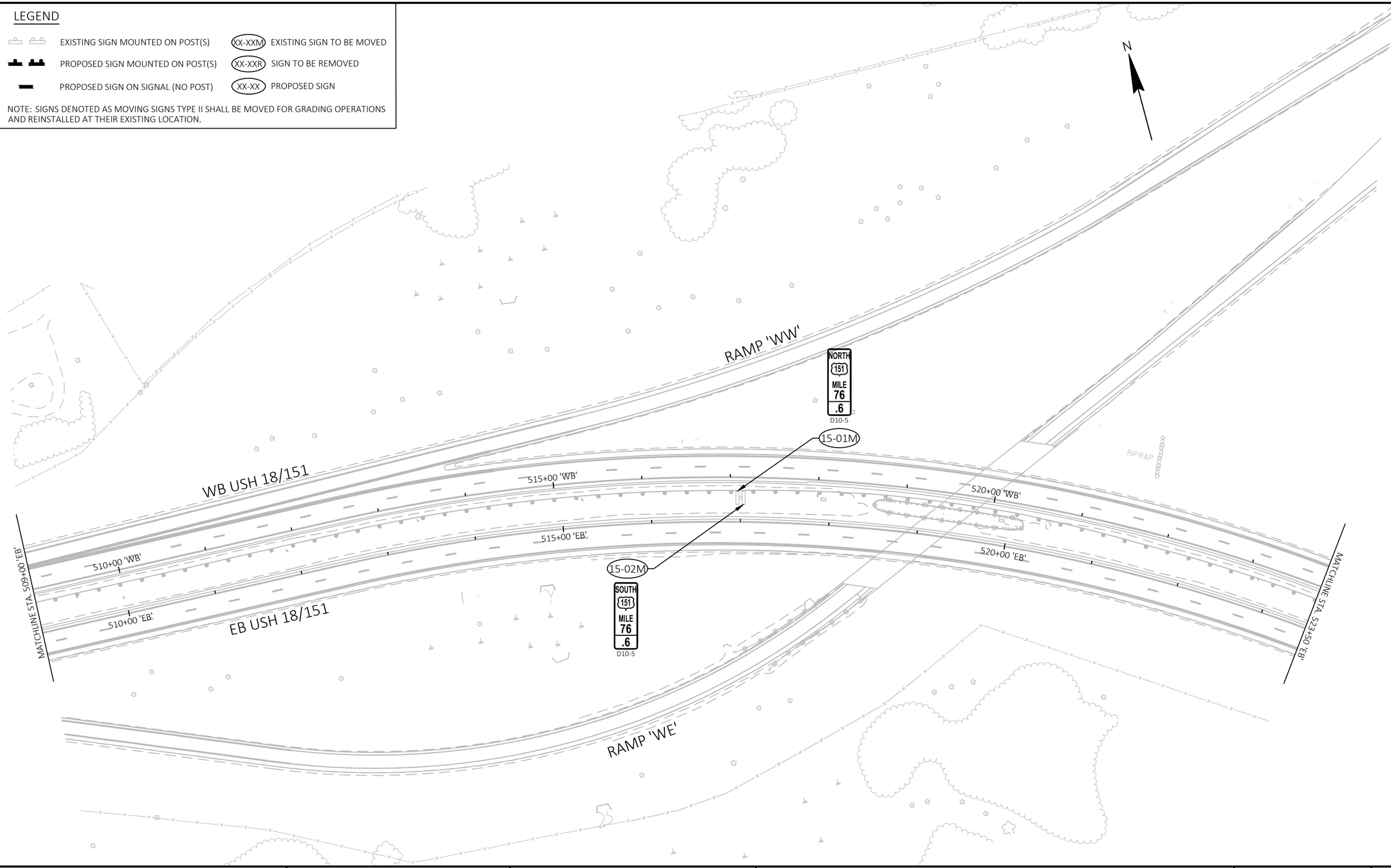

PROJECT NO: 1204-08-65	HWY: USH 18/151	COUNTY: DANE	PERMANENT SIGNING	SHEET 164	E

FILE NAME : G:\WDOTSW\20007-000 USH 18\CIVIL 3D\SHEETSPLAN\023201-PS.DWG
LAYOUT NAME - 15

PLOT DATE : 7/6/2022 1:00 PM PLOT BY : JENNIFER LAUER PLOT NAME : PLOT SCALE : 1 IN:100 FT

2

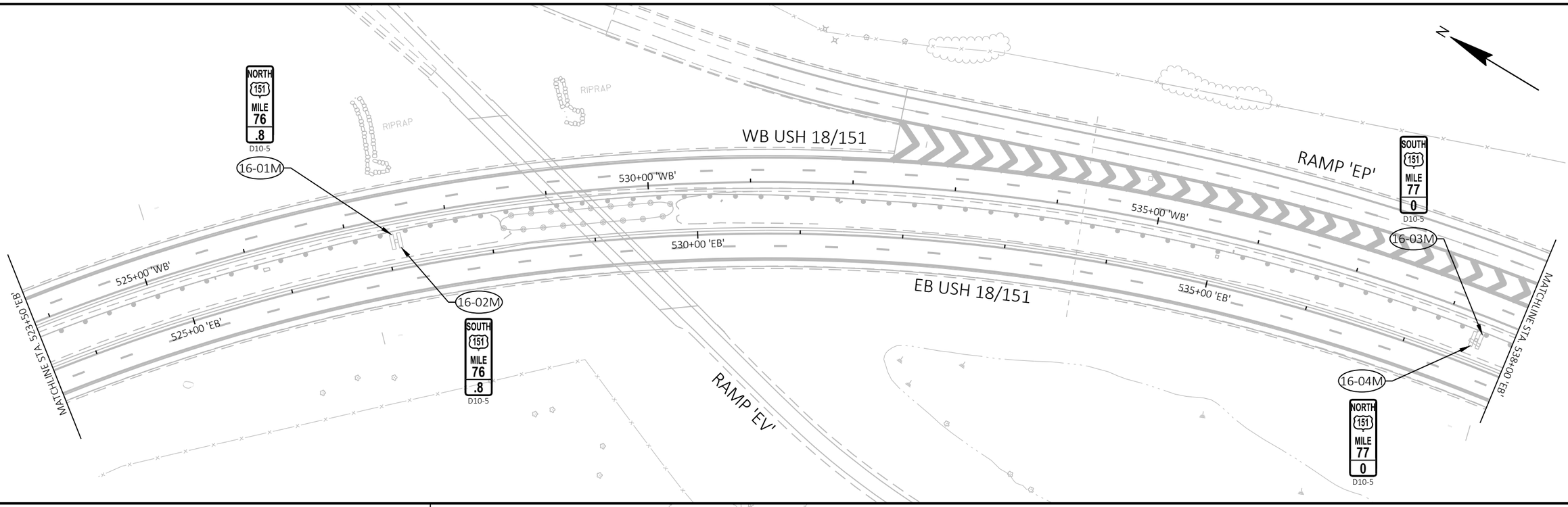

LEGEND

- EXISTING SIGN MOUNTED ON POST(S)
- PROPOSED SIGN MOUNTED ON POST(S)
- PROPOSED SIGN ON SIGNAL (NO POST)
- XX-XXM EXISTING SIGN TO BE MOVED
- XX-XXR SIGN TO BE REMOVED
- XX-XX PROPOSED SIGN

NOTE: SIGNS DENOTED AS MOVING SIGNS TYPE II SHALL BE MOVED FOR GRADING OPERATIONS AND REINSTALLED AT THEIR EXISTING LOCATION.

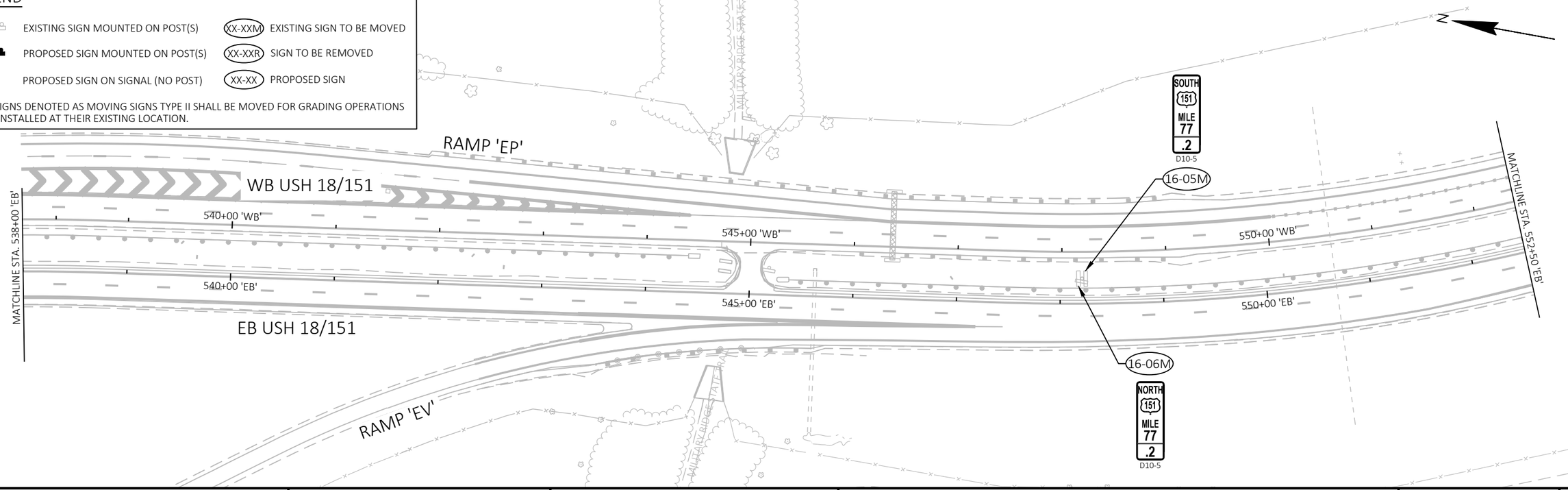

PROJECT NO: 1204-08-65	HWY: USH 18/151	COUNTY: DANE	PERMANENT SIGNING	SHEET 165	E

FILE NAME : G:\WDOTSW\20007-000 USH 18\CIVIL 3D\SHEETSPLAN\023201-PS.DWG
LAYOUT NAME - 16

PLOT DATE : 7/6/2022 1:01 PM PLOT BY : JENNIFER LAUER PLOT NAME : PLOT SCALE : 1 IN:100 FT

2

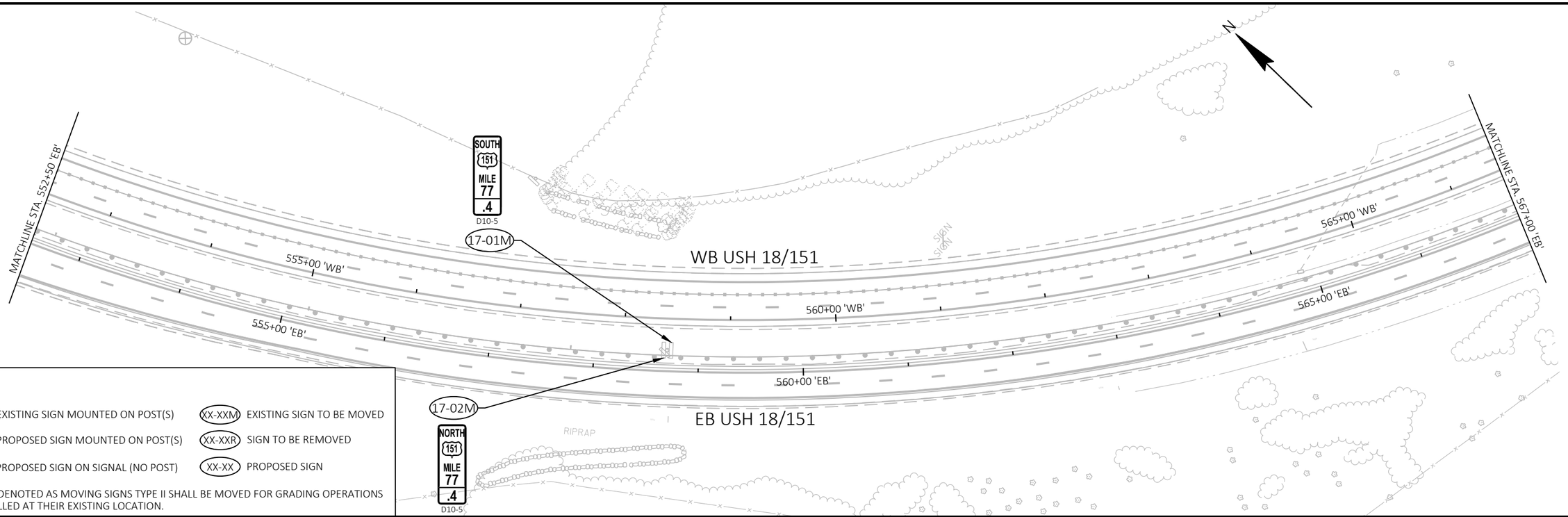

LEGEND

- EXISTING SIGN MOUNTED ON POST(S) — XX-XXM: EXISTING SIGN TO BE MOVED
- PROPOSED SIGN MOUNTED ON POST(S) — XX-XXR: SIGN TO BE REMOVED
- PROPOSED SIGN ON SIGNAL (NO POST) — XX-XX: PROPOSED SIGN

NOTE: SIGNS DENOTED AS MOVING SIGNS TYPE II SHALL BE MOVED FOR GRADING OPERATIONS AND REINSTALLED AT THEIR EXISTING LOCATION.

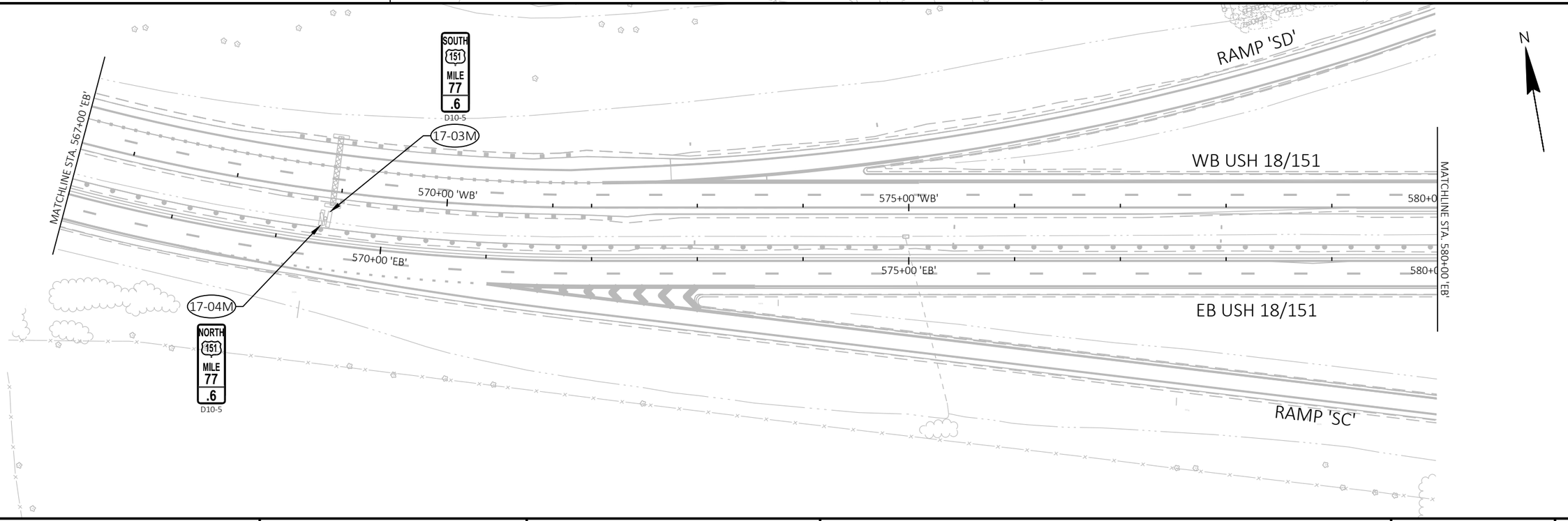

PROJECT NO: 1204-08-65	HWY: USH 18/151	COUNTY: DANE	PERMANENT SIGNING	SHEET 166	E

FILE NAME : G:\WDOTSW\20007-000 USH 18\CIVIL 3D\SHEETSPLAN\023201-PS.DWG
LAYOUT NAME - 17
PLOT DATE : 7/6/2022 1:02 PM
PLOT BY : JENNIFER LAUER
PLOT NAME :
PLOT SCALE : 1 IN:100 FT
WISDOT/CADDS SHEET 44

2

LEGEND

- EXISTING SIGN MOUNTED ON POST(S)
- PROPOSED SIGN MOUNTED ON POST(S)
- PROPOSED SIGN ON SIGNAL (NO POST)
- (XX-XXM) EXISTING SIGN TO BE MOVED
- (XX-XXR) SIGN TO BE REMOVED
- (XX-XX) PROPOSED SIGN

NOTE: SIGNS DENOTED AS MOVING SIGNS TYPE II SHALL BE MOVED FOR GRADING OPERATIONS AND REINSTALLED AT THEIR EXISTING LOCATION.

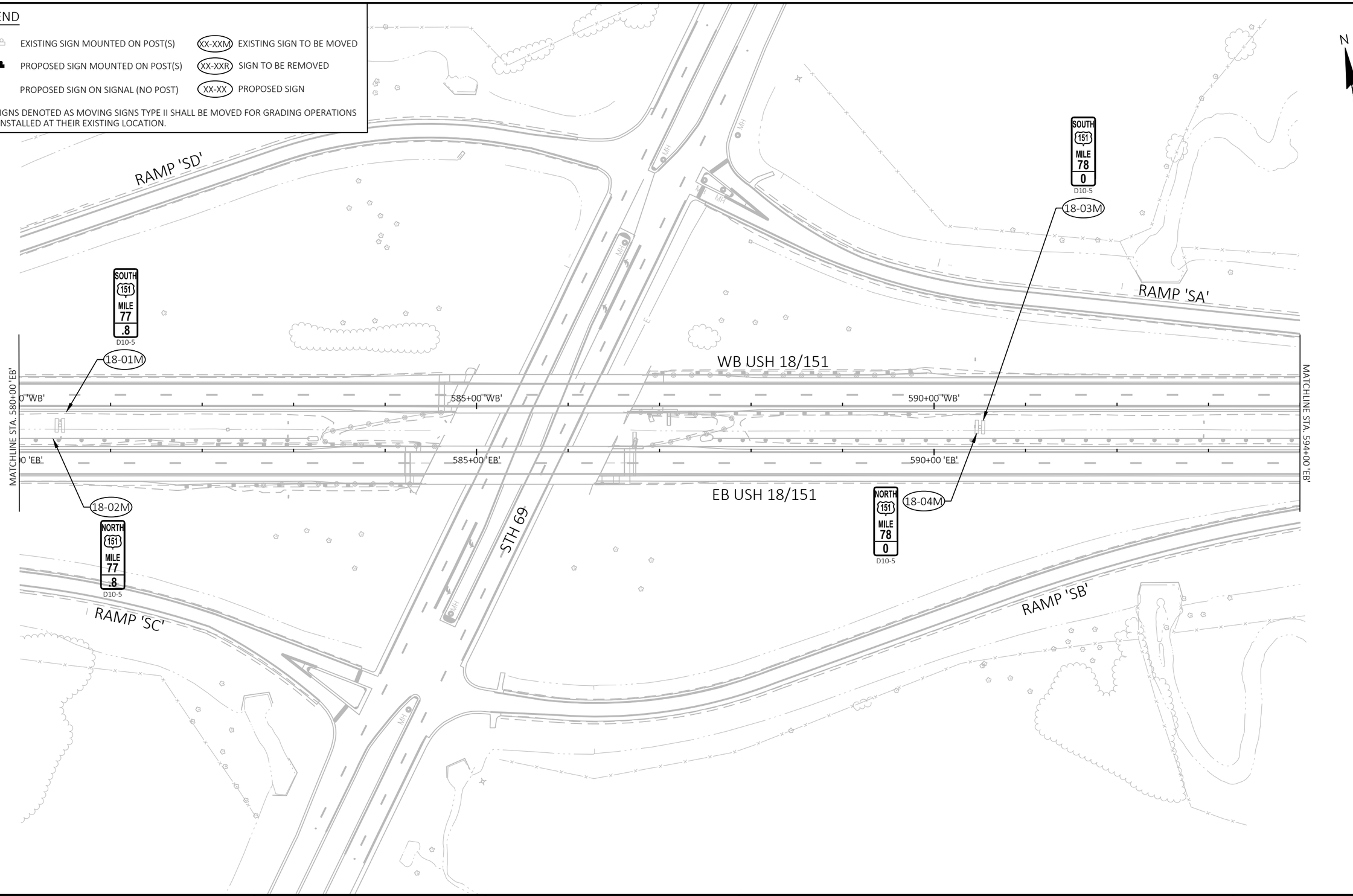

PROJECT NO: 1204-08-65	HWY: USH 18/151	COUNTY: DANE	PERMANENT SIGNING	SHEET 167	E

FILE NAME : G:\WDOTSW\20007-000 USH 18\CIVIL 3D\SHEETSPLAN\023201-PS.DWG
LAYOUT NAME - 18

PLOT DATE : 7/6/2022 1:02 PM PLOT BY : JENNIFER LAUER PLOT NAME : PLOT SCALE : 1 IN:100 FT

2

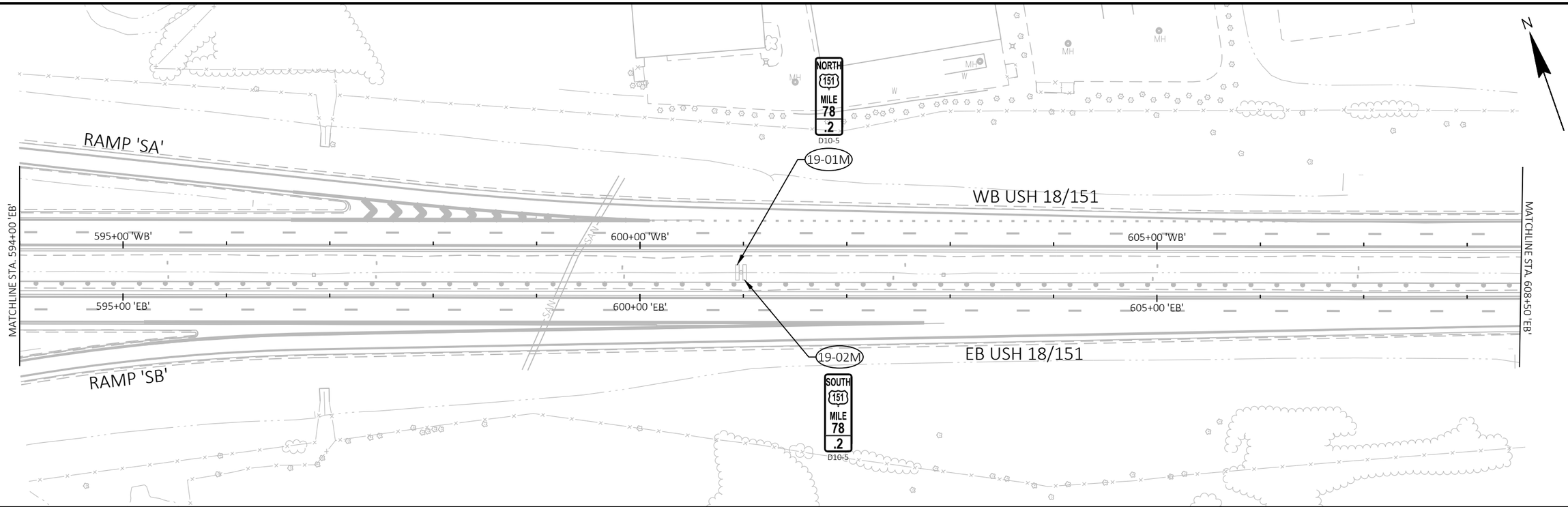

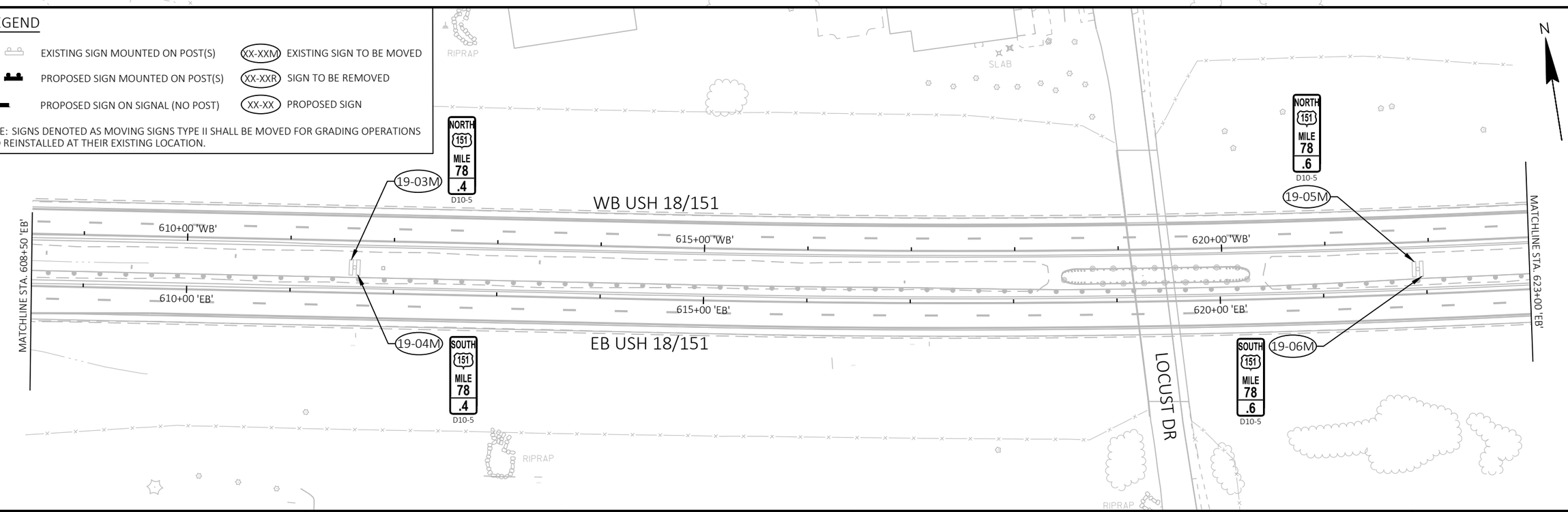

PROJECT NO: 1204-08-65	HWY: USH 18/151	COUNTY: DANE	PERMANENT SIGNING	SHEET 168	E

FILE NAME : G:\WDOTSW\20007-000 USH 18\CIVIL 3D\SHEETSPLAN\023201-PS.DWG
LAYOUT NAME - 19

PLOT DATE : 7/6/2022 1:03 PM PLOT BY : JENNIFER LAUER PLOT NAME : PLOT SCALE : 1 IN:100 FT

2

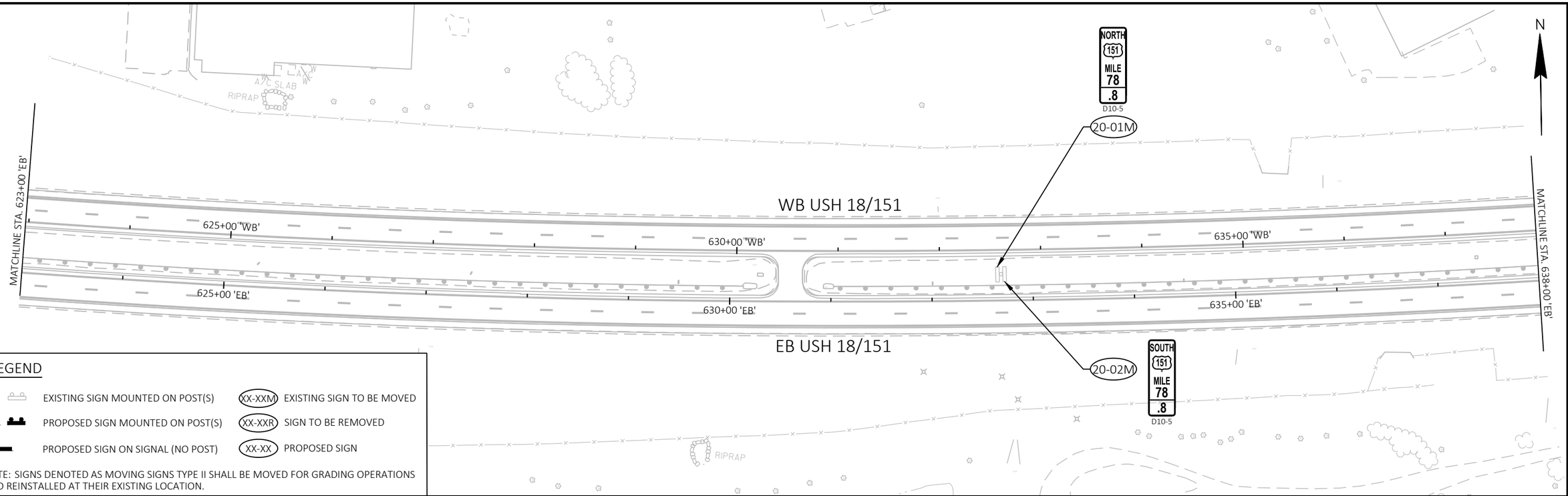

LEGEND

- EXISTING SIGN MOUNTED ON POST(S)
- PROPOSED SIGN MOUNTED ON POST(S)
- PROPOSED SIGN ON SIGNAL (NO POST)
- (XX-XXM) EXISTING SIGN TO BE MOVED
- (XX-XXR) SIGN TO BE REMOVED
- (XX-XX) PROPOSED SIGN

NOTE: SIGNS DENOTED AS MOVING SIGNS TYPE II SHALL BE MOVED FOR GRADING OPERATIONS AND REINSTALLED AT THEIR EXISTING LOCATION.

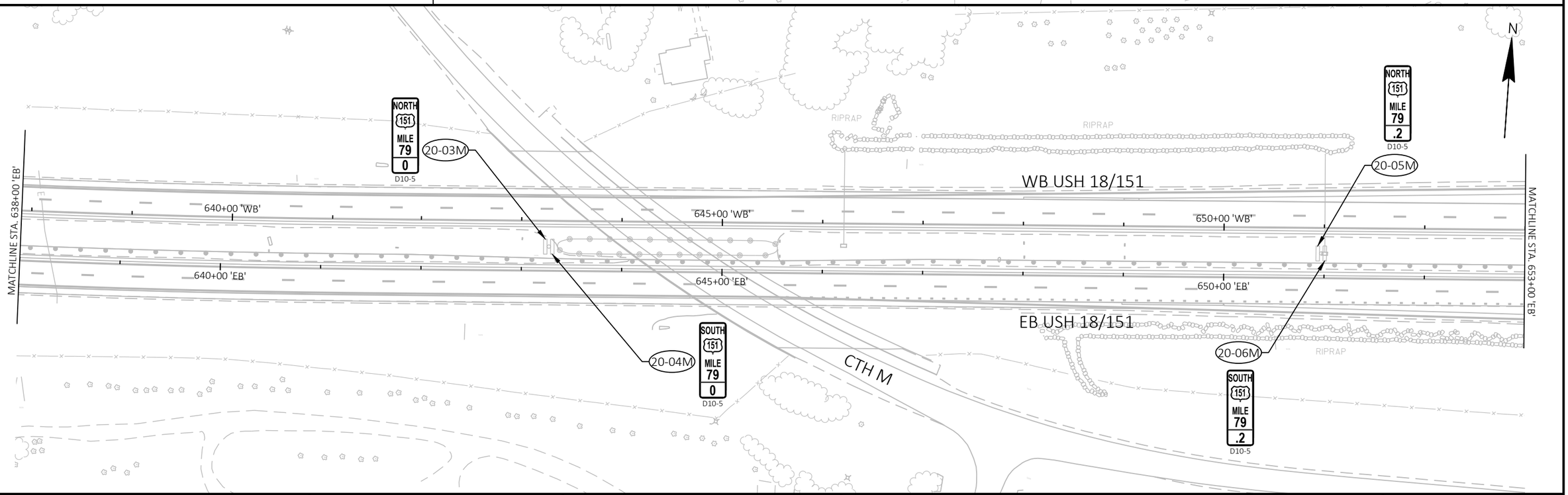

PROJECT NO: 1204-08-65	HWY: USH 18/151	COUNTY: DANE	PERMANENT SIGNING	SHEET 169	E

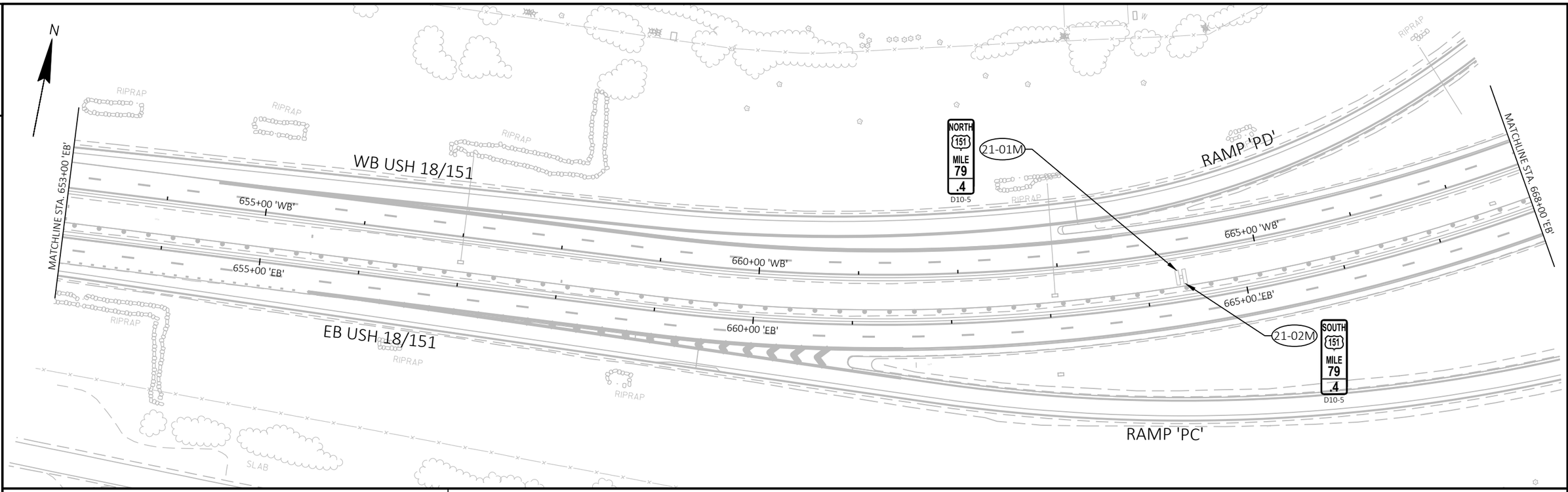

2

LEGEND

- EXISTING SIGN MOUNTED ON POST(S)
- PROPOSED SIGN MOUNTED ON POST(S)
- PROPOSED SIGN ON SIGNAL (NO POST)
- (XX-XXM) EXISTING SIGN TO BE MOVED
- (XX-XXR) SIGN TO BE REMOVED
- (XX-XX) PROPOSED SIGN

NOTE: SIGNS DENOTED AS MOVING SIGNS TYPE II SHALL BE MOVED FOR GRADING OPERATIONS AND REINSTALLED AT THEIR EXISTING LOCATION.

2

LEGEND

- EXISTING SIGN MOUNTED ON POST(S)
- PROPOSED SIGN MOUNTED ON POST(S)
- PROPOSED SIGN ON SIGNAL (NO POST)
- XX-XXM — EXISTING SIGN TO BE MOVED
- XX-XXR — SIGN TO BE REMOVED
- XX-XX — PROPOSED SIGN

NOTE: SIGNS DENOTED AS MOVING SIGNS TYPE II SHALL BE MOVED FOR GRADING OPERATIONS AND REINSTALLED AT THEIR EXISTING LOCATION.

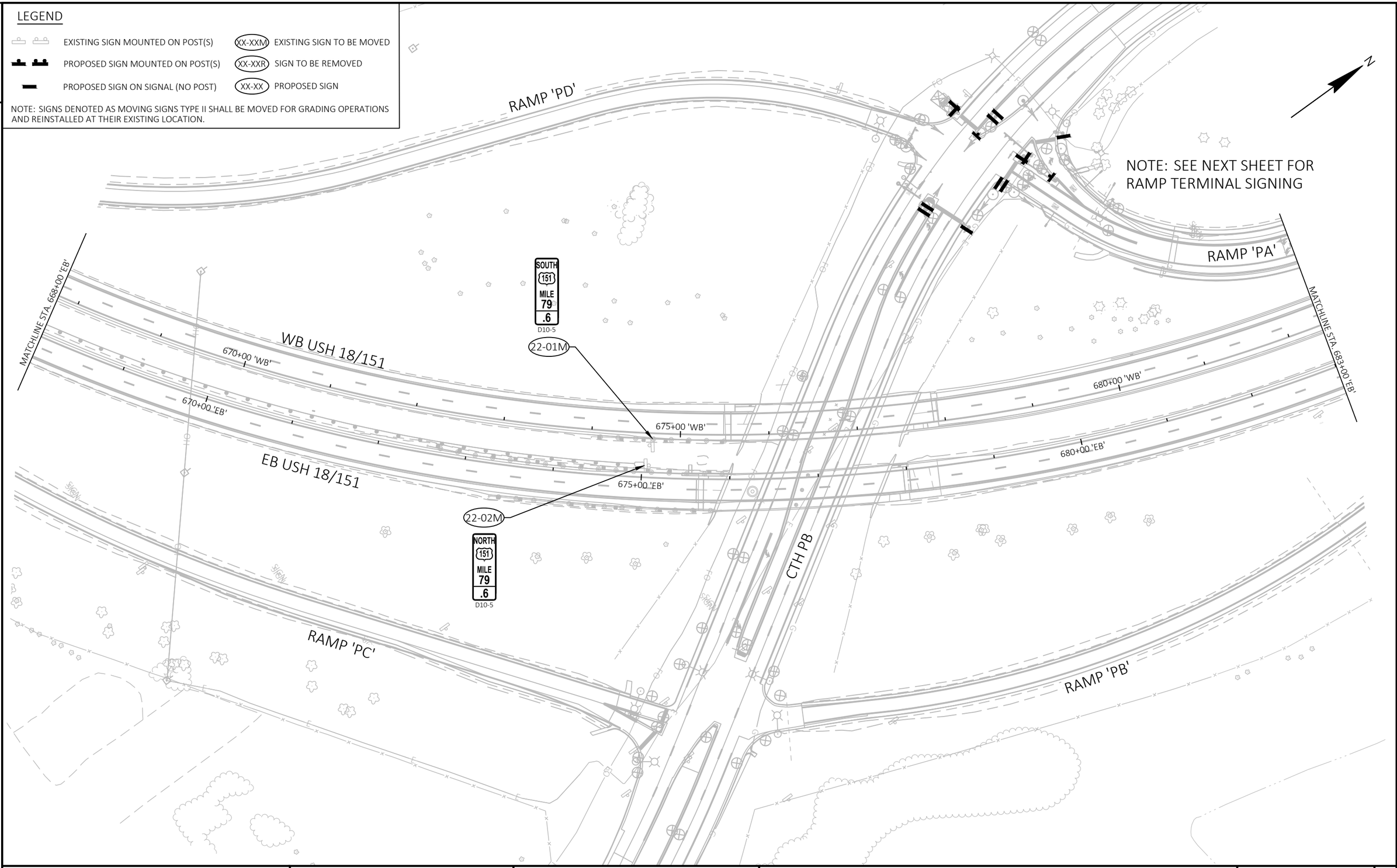

PROJECT NO: 1204-08-65	HWY: USH 18/151	COUNTY: DANE	PERMANENT SIGNING	SHEET 171	E

FILE NAME : G:\WDOTSW\20007-000 USH 18\CIVIL 3D\SHEETSPLAN\023201-PS.DWG
LAYOUT NAME - 22

PLOT DATE : 7/6/2022 1:05 PM PLOT BY : JENNIFER LAUER PLOT NAME : PLOT SCALE : 1 IN:100 FT

WISDOT/CADDS SHEET 42

2

LEGEND

- EXISTING SIGN MOUNTED ON POST(S)
- PROPOSED SIGN MOUNTED ON POST(S)
- PROPOSED SIGN ON SIGNAL (NO POST)
- (XX-XXM) EXISTING SIGN TO BE MOVED
- (XX-XXR) SIGN TO BE REMOVED
- (XX-XX) PROPOSED SIGN

NOTE: SIGNS DENOTED AS MOVING SIGNS TYPE II SHALL BE MOVED FOR GRADING OPERATIONS AND REINSTALLED AT THEIR EXISTING LOCATION.

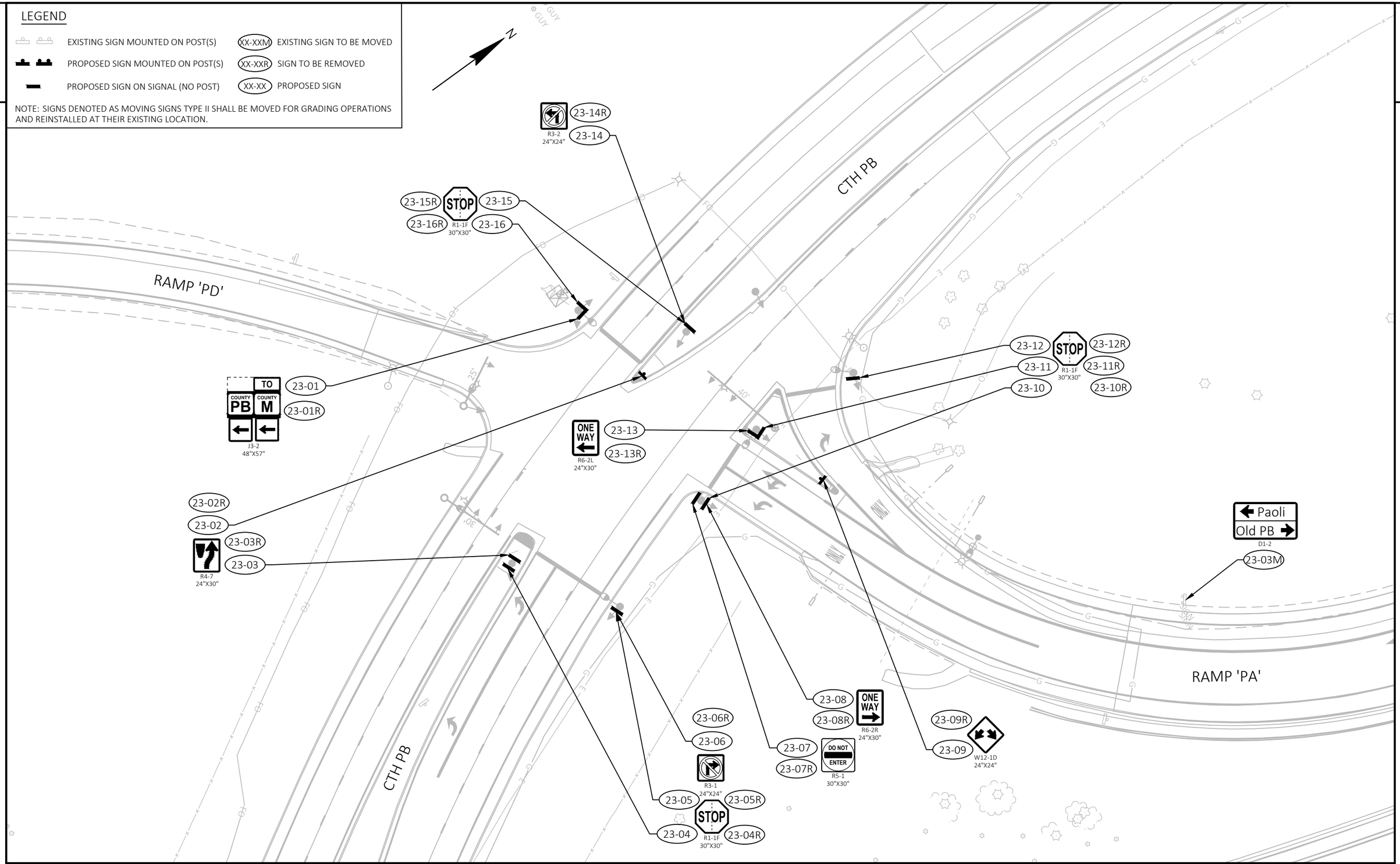

PROJECT NO: 1204-08-65	HWY: USH 18/151	COUNTY: DANE	PERMANENT SIGNING	SHEET 172	E

FILE NAME : G:\WDOTSW\20007-000 USH 18\CIVIL 3D\SHEETSPLAN\023201-PS.DWG
LAYOUT NAME - 23

PLOT DATE : 7/6/2022 2:09 PM PLOT BY : JENNIFER LAUER PLOT NAME : PLOT SCALE : 1 IN:100 FT

WISDOT/CADDS SHEET 42

2

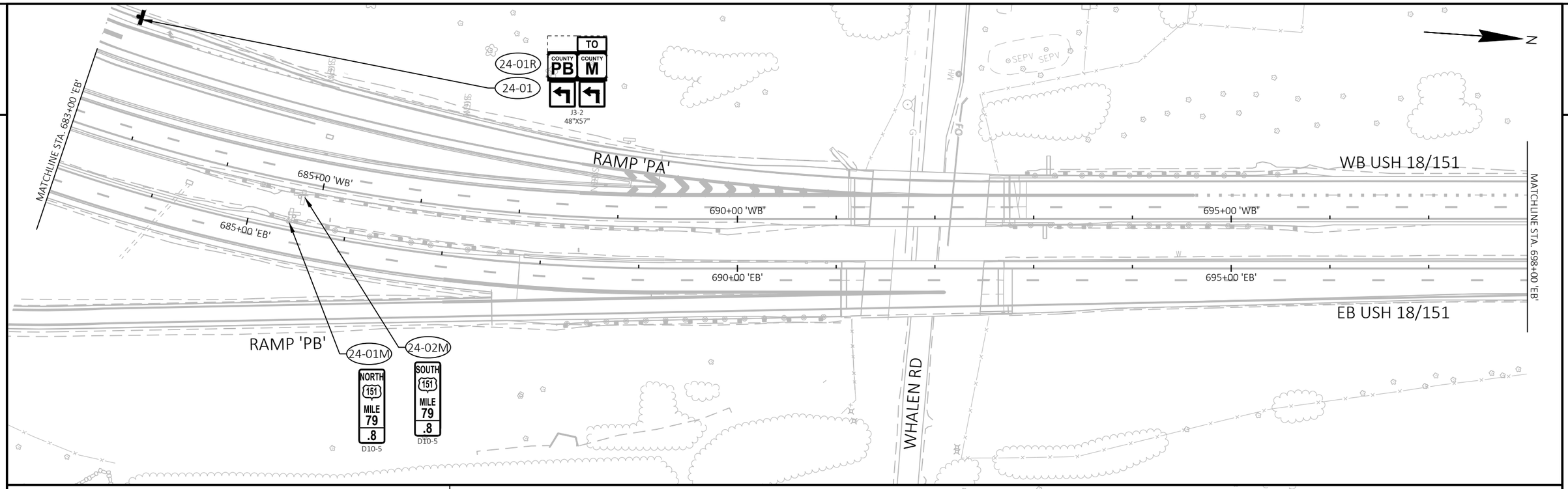

LEGEND

- EXISTING SIGN MOUNTED ON POST(S)
- PROPOSED SIGN MOUNTED ON POST(S)
- PROPOSED SIGN ON SIGNAL (NO POST)
- XX-XXM — EXISTING SIGN TO BE MOVED
- XX-XXR — SIGN TO BE REMOVED
- XX-XX — PROPOSED SIGN

NOTE: SIGNS DENOTED AS MOVING SIGNS TYPE II SHALL BE MOVED FOR GRADING OPERATIONS AND REINSTALLED AT THEIR EXISTING LOCATION.

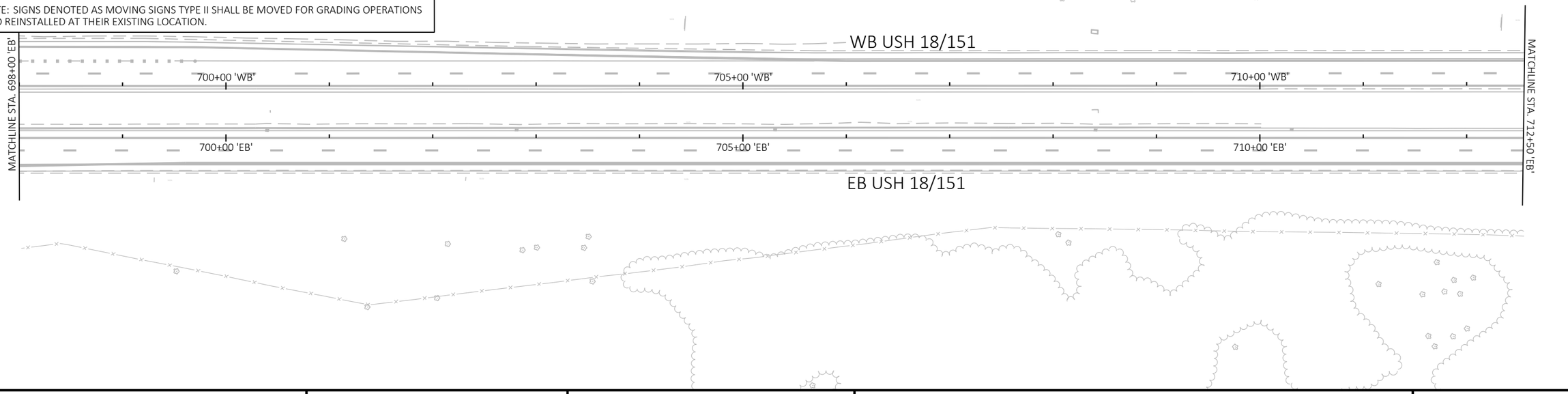

PROJECT NO: 1204-08-65	HWY: USH 18/151	COUNTY: DANE	PERMANENT SIGNING	SHEET 173	E

FILE NAME : G:\WDOTSW\20007-000 USH 18\CIVIL 3D\SHEETSPLAN\023201-PS.DWG
LAYOUT NAME - 24

PLOT DATE : 7/6/2022 1:07 PM PLOT BY : JENNIFER LAUER PLOT NAME : PLOT SCALE : 1 IN:100 FT

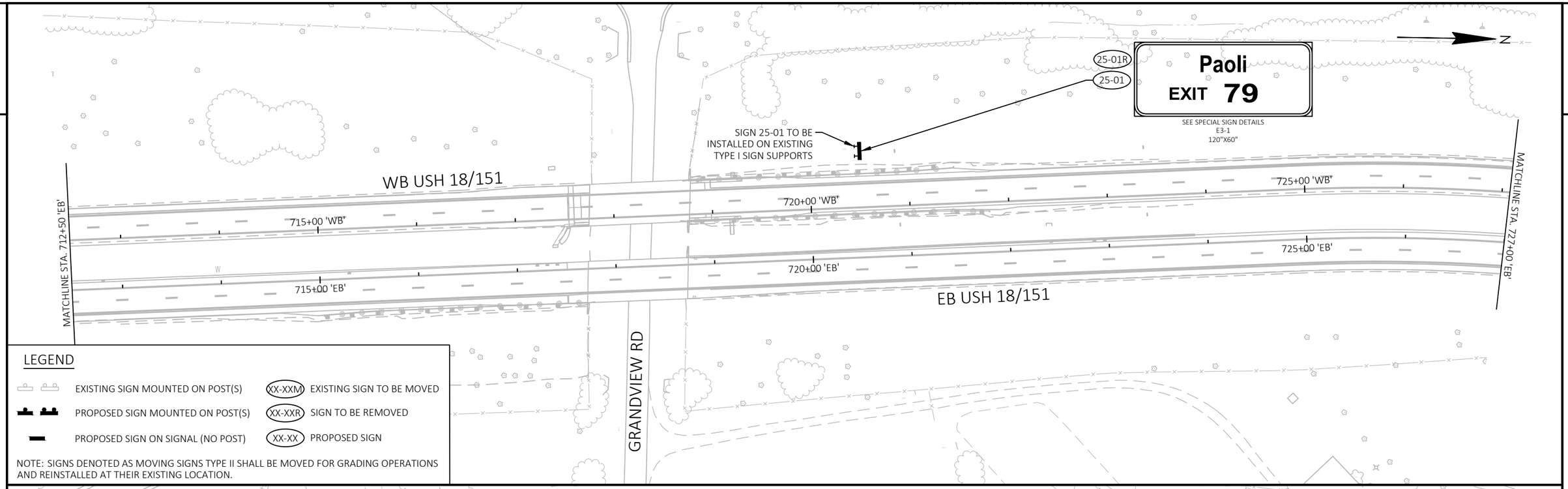

LEGEND

	EXISTING SIGN MOUNTED ON POST(S)	XX-XXM	EXISTING SIGN TO BE MOVED
	PROPOSED SIGN MOUNTED ON POST(S)	XX-XXR	SIGN TO BE REMOVED
	PROPOSED SIGN ON SIGNAL (NO POST)	XX-XX	PROPOSED SIGN

NOTE: SIGNS DENOTED AS MOVING SIGNS TYPE II SHALL BE MOVED FOR GRADING OPERATIONS AND REINSTALLED AT THEIR EXISTING LOCATION.

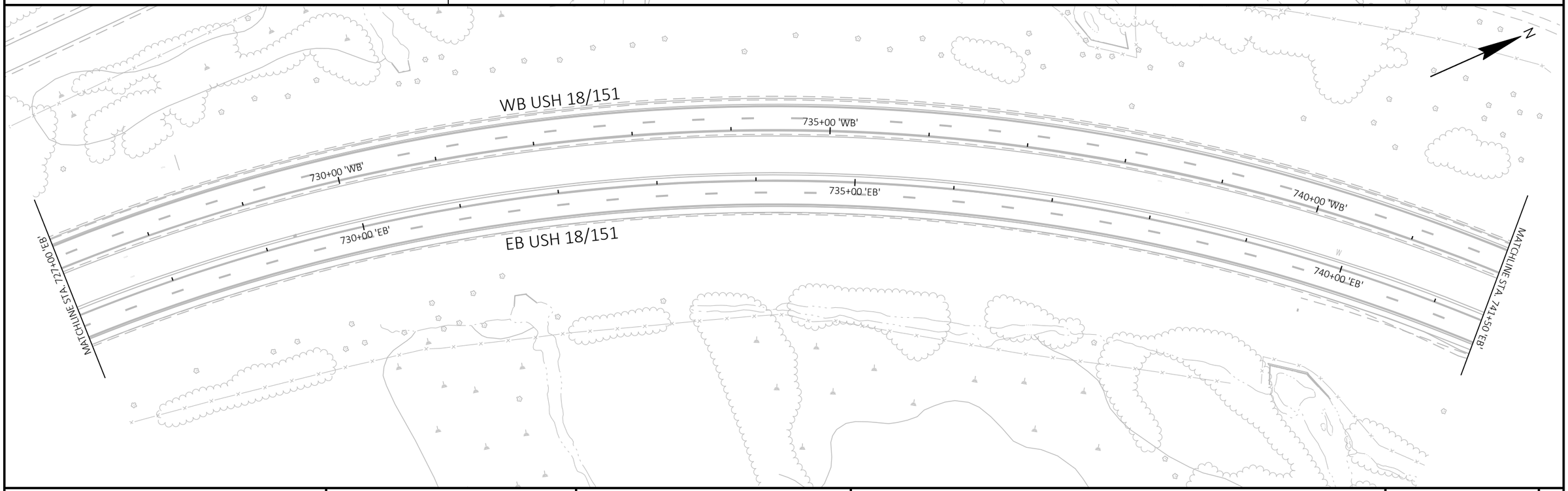

PROJECT NO: 1204-08-65	HWY: USH 18/151	COUNTY: DANE	PERMANENT SIGNING	SHEET 174	E

2

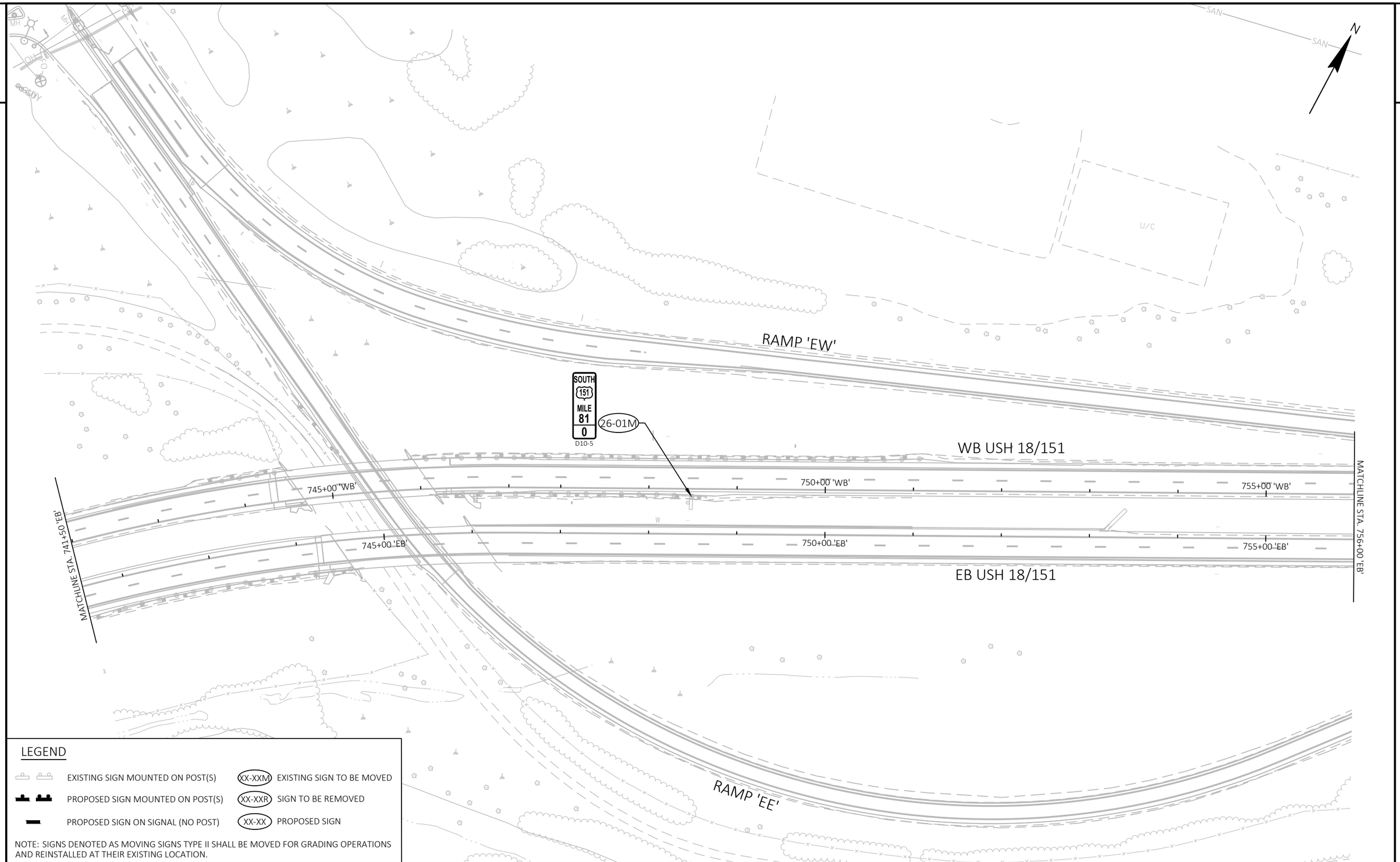

LEGEND

- EXISTING SIGN MOUNTED ON POST(S)
- PROPOSED SIGN MOUNTED ON POST(S)
- PROPOSED SIGN ON SIGNAL (NO POST)
- (XX-XXM) EXISTING SIGN TO BE MOVED
- (XX-XXR) SIGN TO BE REMOVED
- (XX-XX) PROPOSED SIGN

NOTE: SIGNS DENOTED AS MOVING SIGNS TYPE II SHALL BE MOVED FOR GRADING OPERATIONS AND REINSTALLED AT THEIR EXISTING LOCATION.

PROJECT NO: 1204-08-65	HWY: USH 18/151	COUNTY: DANE	PERMANENT SIGNING	SHEET 175	E

2

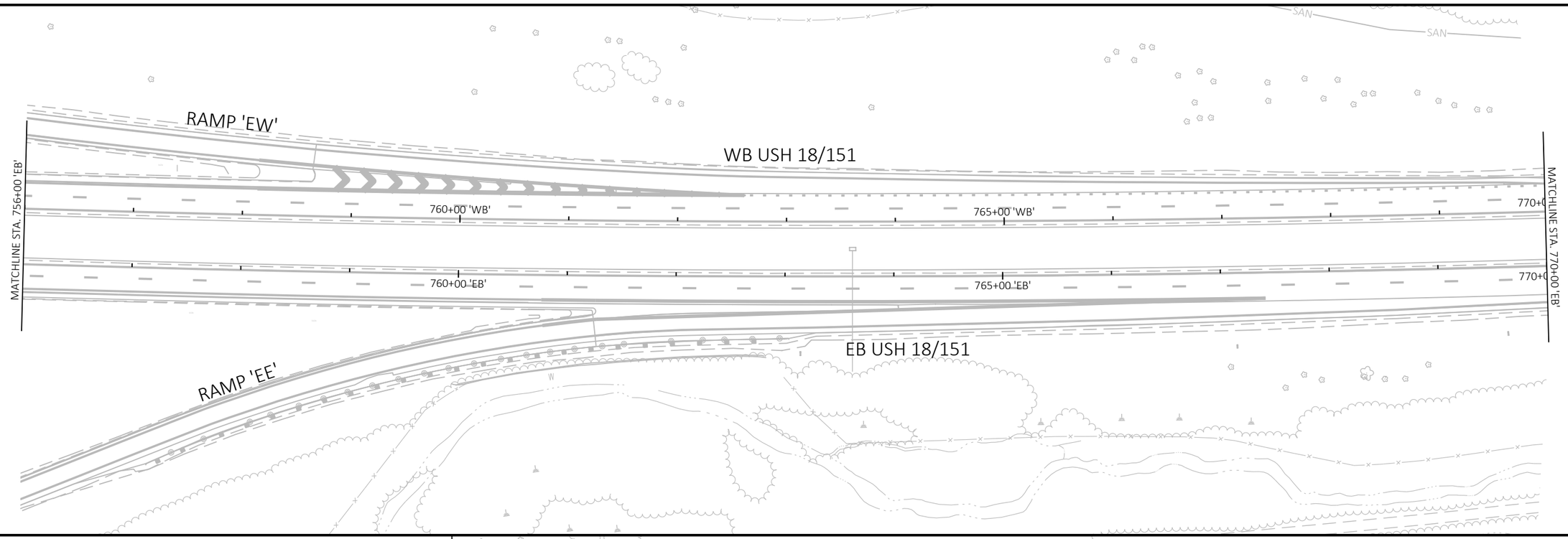

LEGEND

- EXISTING SIGN MOUNTED ON POST(S)
- PROPOSED SIGN MOUNTED ON POST(S)
- PROPOSED SIGN ON SIGNAL (NO POST)
- XX-XXM — EXISTING SIGN TO BE MOVED
- XX-XXR — SIGN TO BE REMOVED
- XX-XX — PROPOSED SIGN

NOTE: SIGNS DENOTED AS MOVING SIGNS TYPE II SHALL BE MOVED FOR GRADING OPERATIONS AND REINSTALLED AT THEIR EXISTING LOCATION.

NO SIGNING THIS SHEET

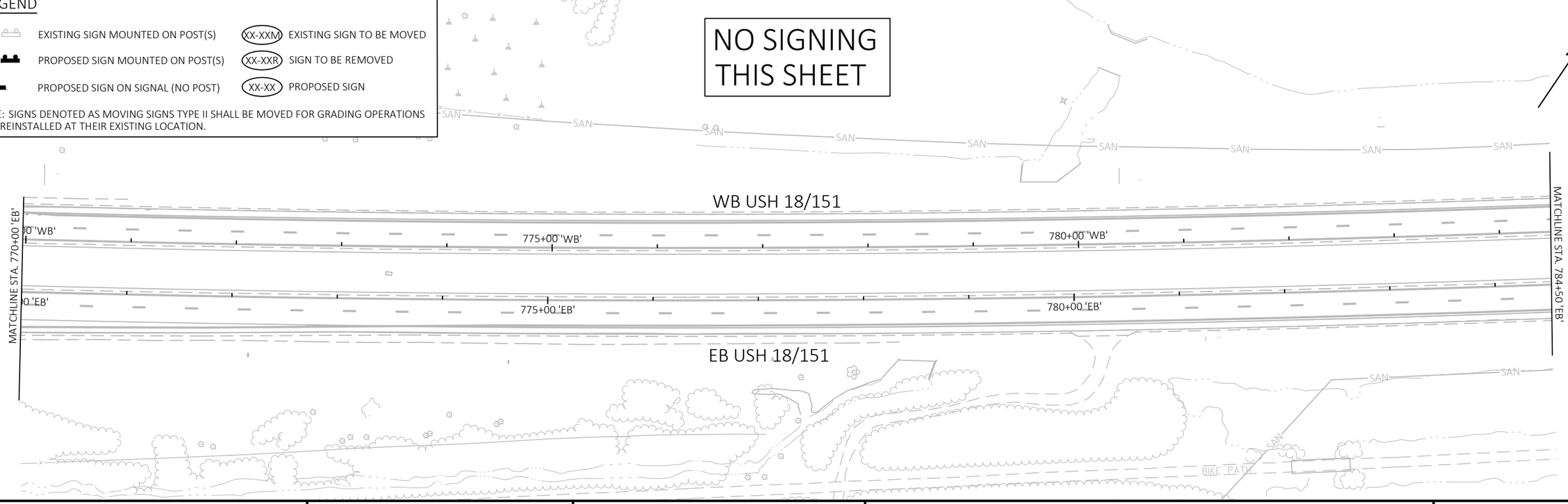

PROJECT NO: 1204-08-65	HWY: USH 18/151	COUNTY: DANE	PERMANENT SIGNING	SHEET 176	E

FILE NAME : G:\WDOTSW\20007-000 USH 18\CIVIL 3D\SHEETSPLAN\023201-PS.DWG
LAYOUT NAME - 27

PLOT DATE : 7/6/2022 1:10 PM PLOT BY : JENNIFER LAUER PLOT NAME : PLOT SCALE : 1 IN:100 FT

2

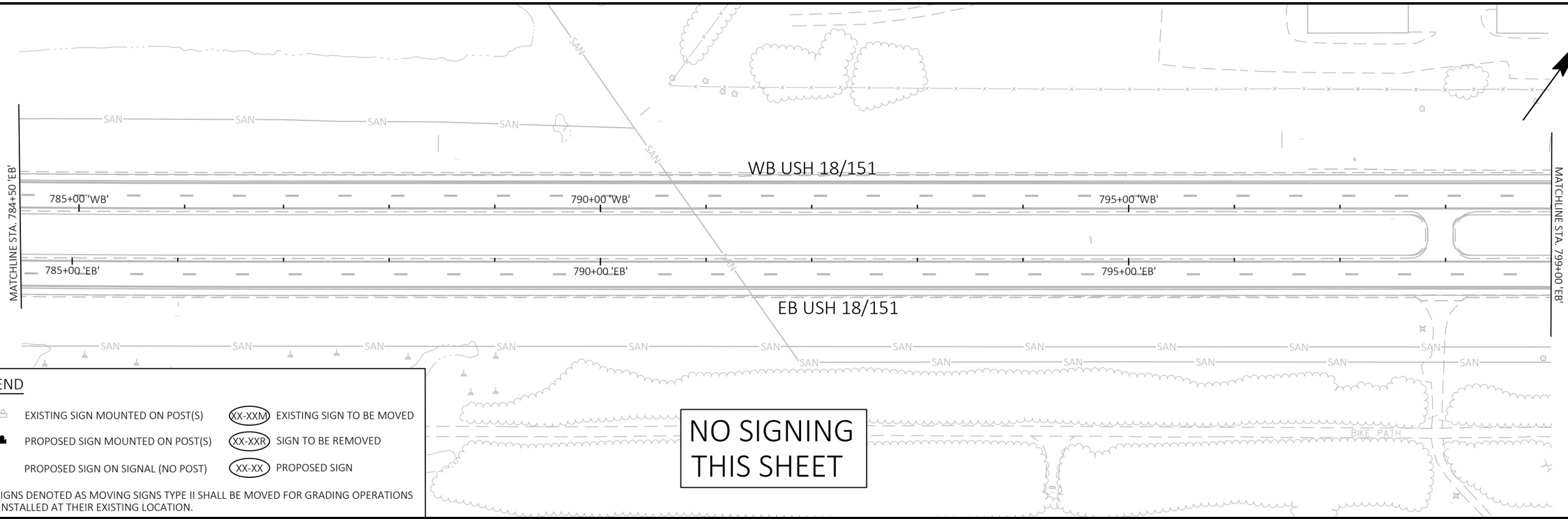

2

LEGEND

EXISTING SIGN MOUNTED ON POST(S)

PROPOSED SIGN MOUNTED ON POST(S)

PROPOSED SIGN ON SIGNAL (NO POST)

XX-XXM EXISTING SIGN TO BE MOVED

XX-XXR SIGN TO BE REMOVED

XX-XX PROPOSED SIGN

NOTE: SIGNS DENOTED AS MOVING SIGNS TYPE II SHALL BE MOVED FOR GRADING OPERATIONS AND REINSTALLED AT THEIR EXISTING LOCATION.

NO SIGNING THIS SHEET

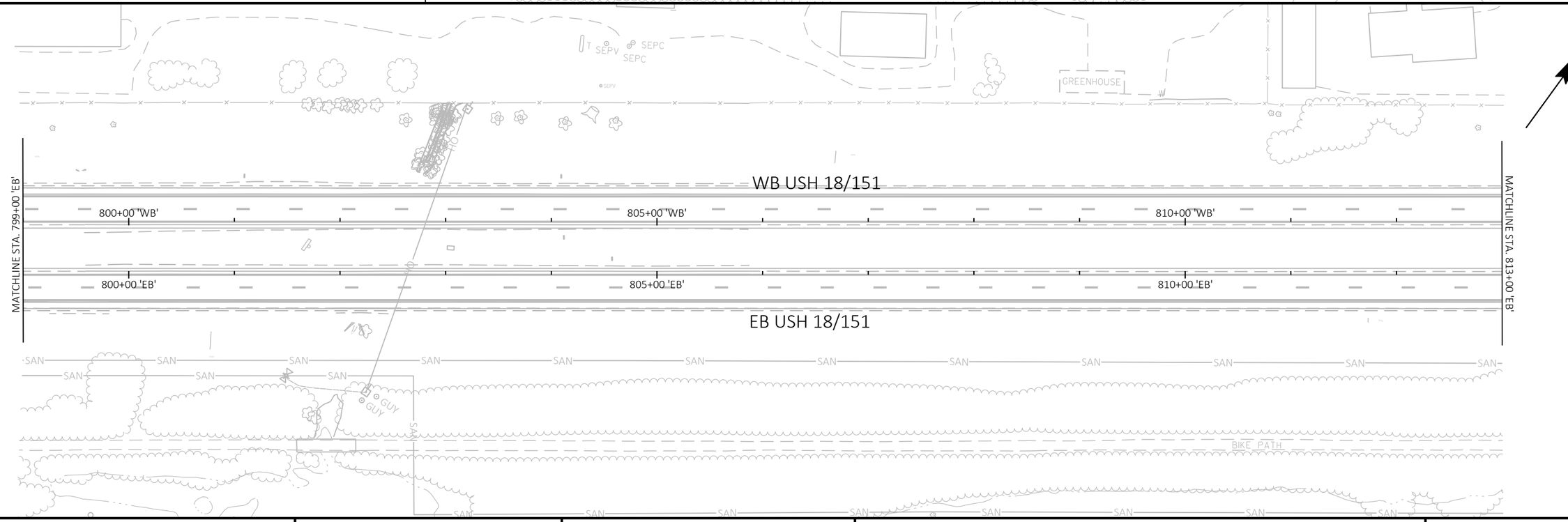

PROJECT NO: 1204-08-65	HWY: USH 18/151	COUNTY: DANE	PERMANENT SIGNING	SHEET 177	E

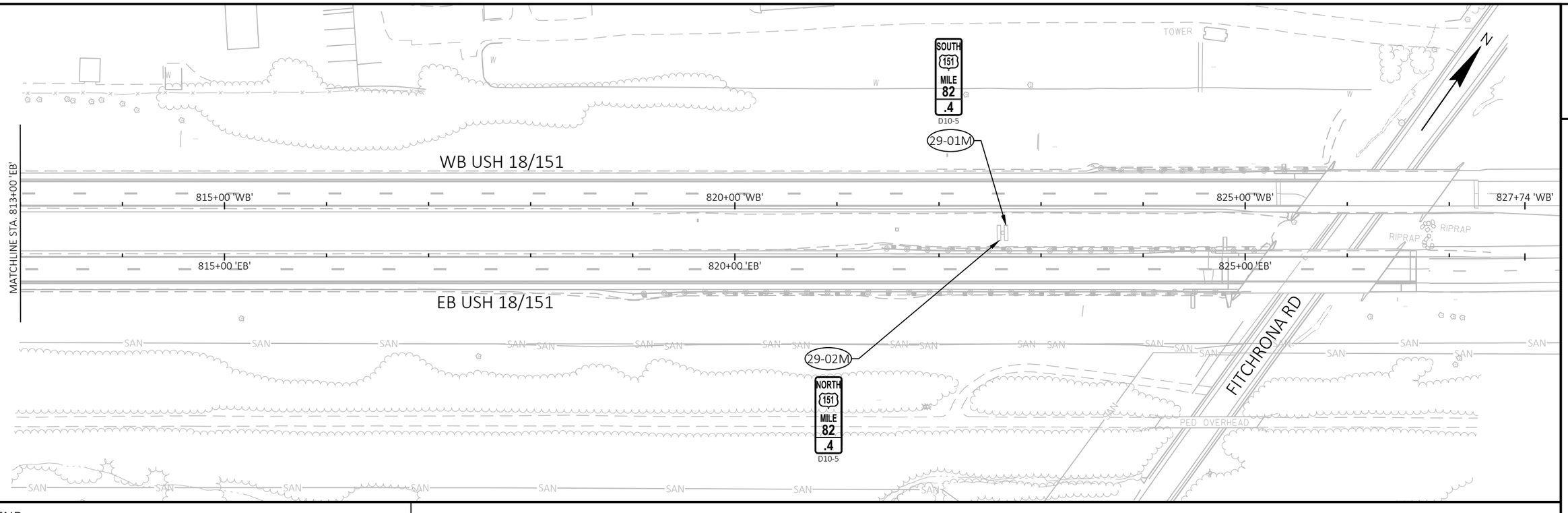

LEGEND

	EXISTING SIGN MOUNTED ON POST(S)	(XX-XXM)	EXISTING SIGN TO BE MOVED
	PROPOSED SIGN MOUNTED ON POST(S)	(XX-XXR)	SIGN TO BE REMOVED
	PROPOSED SIGN ON SIGNAL (NO POST)	(XX-XX)	PROPOSED SIGN

NOTE: SIGNS DENOTED AS MOVING SIGNS TYPE II SHALL BE MOVED FOR GRADING OPERATIONS AND REINSTALLED AT THEIR EXISTING LOCATION.

PROJECT NO: 1204-08-65	HWY: USH 18/151	COUNTY: DANE	PERMANENT SIGNING	SHEET 178	E

2

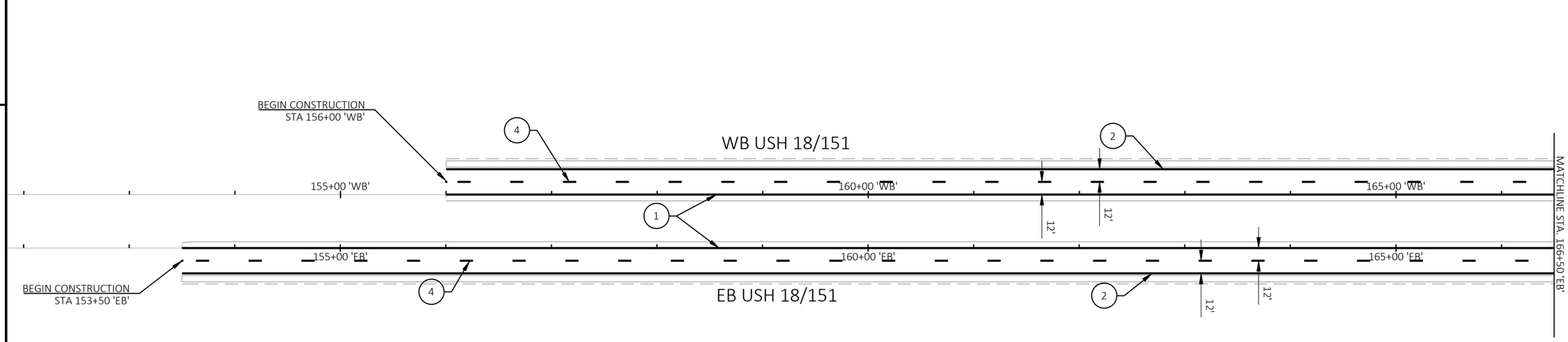

LEGEND

1. MARKING LINE GROOVED WET REFLECTIVE EPOXY 4-INCH (YELLOW)
2. MARKING LINE GROOVED WET REFLECTIVE EPOXY 4-INCH (WHITE)
3. MARKING LINE GROOVED CONTRAST PERMANENT TAPE 4-INCH (WHITE) (3 FT LINE, 9 FT SKIP)
4. MARKING LINE GROOVED CONTRAST PERMANENT TAPE 4-INCH (WHITE) (12.5 FT LINE, 37.5 FT SKIP)
5. MARKING LINE GROOVED CONTRAST PERMANENT TAPE 8-INCH (WHITE) (3 FT LINE, 9 FT SKIP)
6. MARKING LINE GROOVED CONTRAST PERMANENT TAPE 8-INCH (WHITE)
7. MARKING CHEVRON EPOXY 24-INCH (WHITE) 25' SPACING
8. MARKING STOP LINE EPOXY 18-INCH
9. MARKING LINE EPOXY 4-INCH (WHITE)
10. MARKING LINE EPOXY 4-INCH (YELLOW)
11. MARKING WORD EPOXY
12. MARKING ARROW EPOXY
13. MARKING ISLAND NOSE EPOXY
14. MARKING CURB EPOXY
15. MARKING LINE EPOXY 8-INCH (WHITE)

REFERENCE SDD:
- PAVEMENT MARKING WORDS, SYMBOLS AND ARROWS
- LONGITUDINAL MARKING (MAINLINE)
- PAVEMENT MARKING (TURN LANES)
- MEDIAN ISLAND MARKING, PAVEMENT MARKINGS AND MEDIAN ISLAND NOSE
- PAVEMENT MARKING (RAMPS AND GORES)
- STOP LINE AND CROSSWALK PAVEMENT MARKING
- PAVEMENT MARKING, INTERSECTIONS

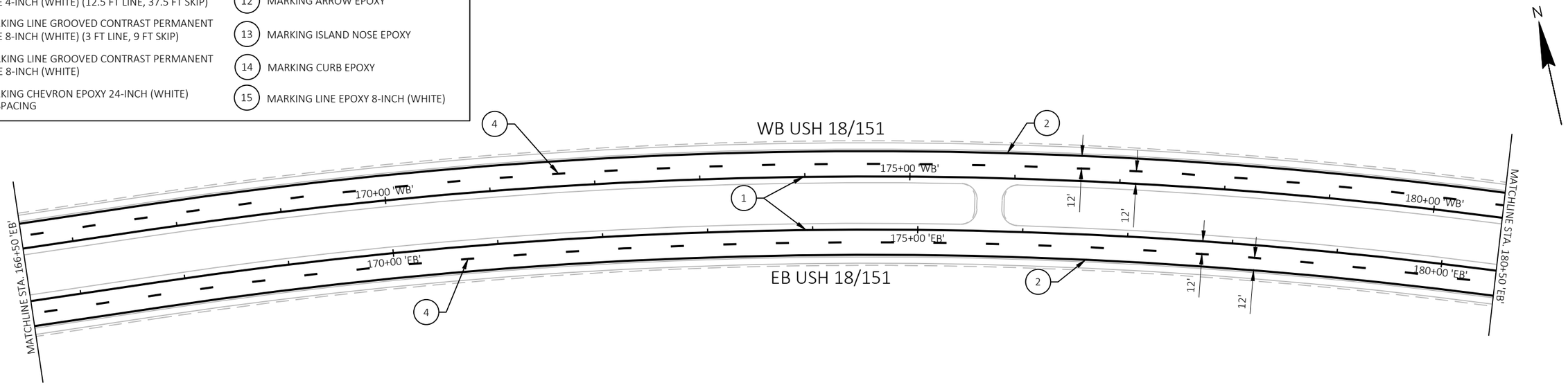

PROJECT NO: 1204-08-65	HWY: USH 18/151	COUNTY: DANE	PAVEMENT MARKING	SHEET 179	E

2

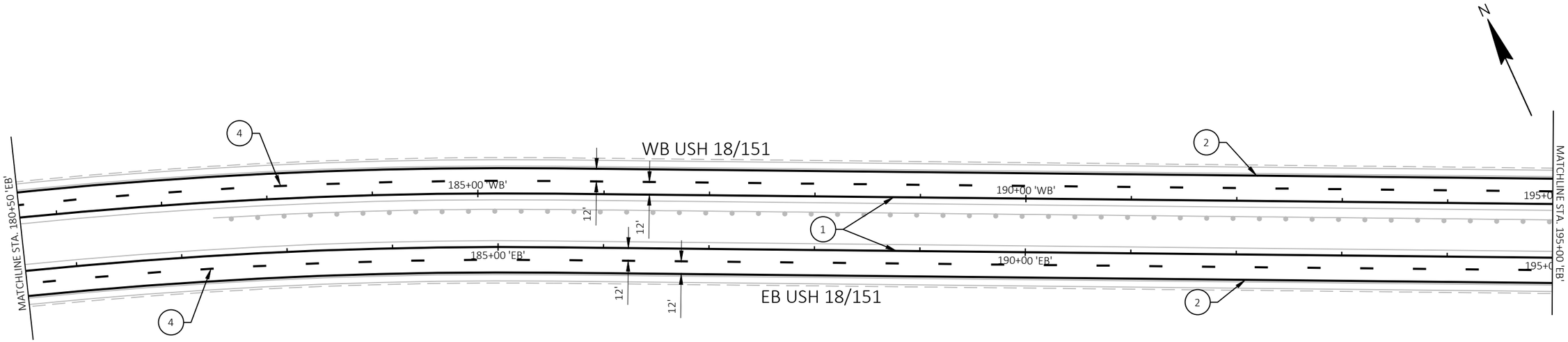

LEGEND

1. MARKING LINE GROOVED WET REFLECTIVE EPOXY 4-INCH (YELLOW)
2. MARKING LINE GROOVED WET REFLECTIVE EPOXY 4-INCH (WHITE)
3. MARKING LINE GROOVED CONTRAST PERMANENT TAPE 4-INCH (WHITE) (3 FT LINE, 9 FT SKIP)
4. MARKING LINE GROOVED CONTRAST PERMANENT TAPE 4-INCH (WHITE) (12.5 FT LINE, 37.5 FT SKIP)
5. MARKING LINE GROOVED CONTRAST PERMANENT TAPE 8-INCH (WHITE) (3 FT LINE, 9 FT SKIP)
6. MARKING LINE GROOVED CONTRAST PERMANENT TAPE 8-INCH (WHITE)
7. MARKING CHEVRON EPOXY 24-INCH (WHITE) 25' SPACING
8. MARKING STOP LINE EPOXY 18-INCH
9. MARKING LINE EPOXY 4-INCH (WHITE)
10. MARKING LINE EPOXY 4-INCH (YELLOW)
11. MARKING WORD EPOXY
12. MARKING ARROW EPOXY
13. MARKING ISLAND NOSE EPOXY
14. MARKING CURB EPOXY
15. MARKING LINE EPOXY 8-INCH (WHITE)

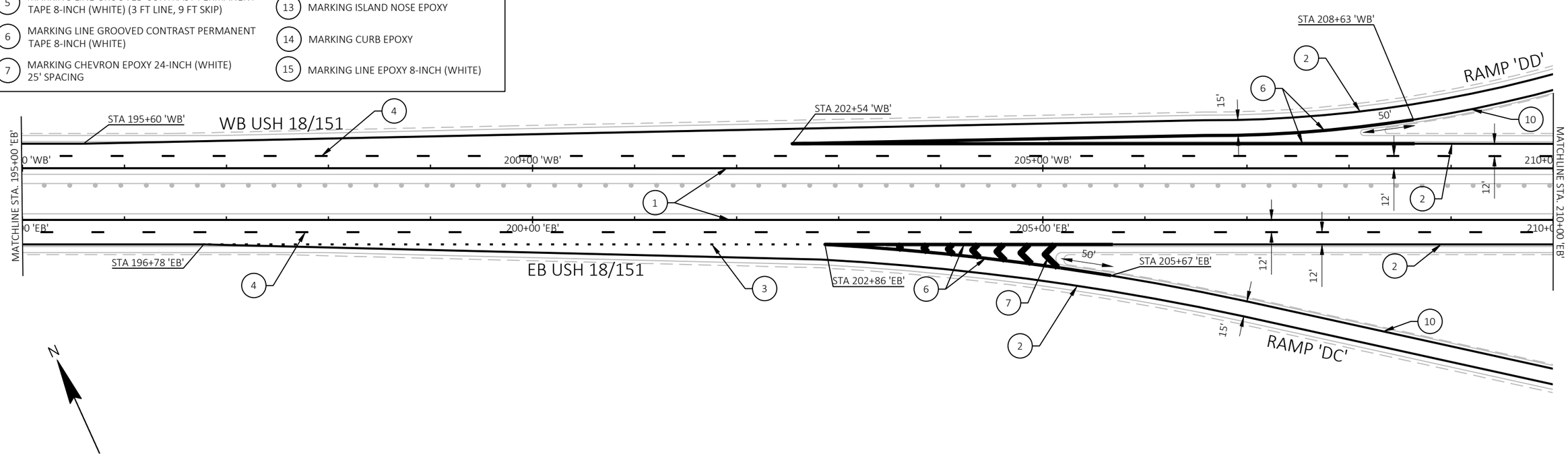

PROJECT NO: 1204-08-65	HWY: USH 18/151	COUNTY: DANE	PAVEMENT MARKING	SHEET 180	E

FILE NAME : G:\WDOTSW\20007-000 USH 18\CIVIL 3D\SHEETSPLAN\024501-PM.DWG
LAYOUT NAME - 02
PLOT DATE : 7/7/2022 3:37 PM
PLOT BY : NATHAN RULLMAN
PLOT NAME :
PLOT SCALE : 1 IN:100 FT
WISDOT/CADDS SHEET 44

LEGEND

1. MARKING LINE GROOVED WET REFLECTIVE EPOXY 4-INCH (YELLOW)
2. MARKING LINE GROOVED WET REFLECTIVE EPOXY 4-INCH (WHITE)
3. MARKING LINE GROOVED CONTRAST PERMANENT TAPE 4-INCH (WHITE) (3 FT LINE, 9 FT SKIP)
4. MARKING LINE GROOVED CONTRAST PERMANENT TAPE 4-INCH (WHITE) (12.5 FT LINE, 37.5 FT SKIP)
5. MARKING LINE GROOVED CONTRAST PERMANENT TAPE 8-INCH (WHITE) (3 FT LINE, 9 FT SKIP)
6. MARKING LINE GROOVED CONTRAST PERMANENT TAPE 8-INCH (WHITE)
7. MARKING CHEVRON EPOXY 24-INCH (WHITE) 25' SPACING
8. MARKING STOP LINE EPOXY 18-INCH
9. MARKING LINE EPOXY 4-INCH (WHITE)
10. MARKING LINE EPOXY 4-INCH (YELLOW)
11. MARKING WORD EPOXY
12. MARKING ARROW EPOXY
13. MARKING ISLAND NOSE EPOXY
14. MARKING CURB EPOXY
15. MARKING LINE EPOXY 8-INCH (WHITE)

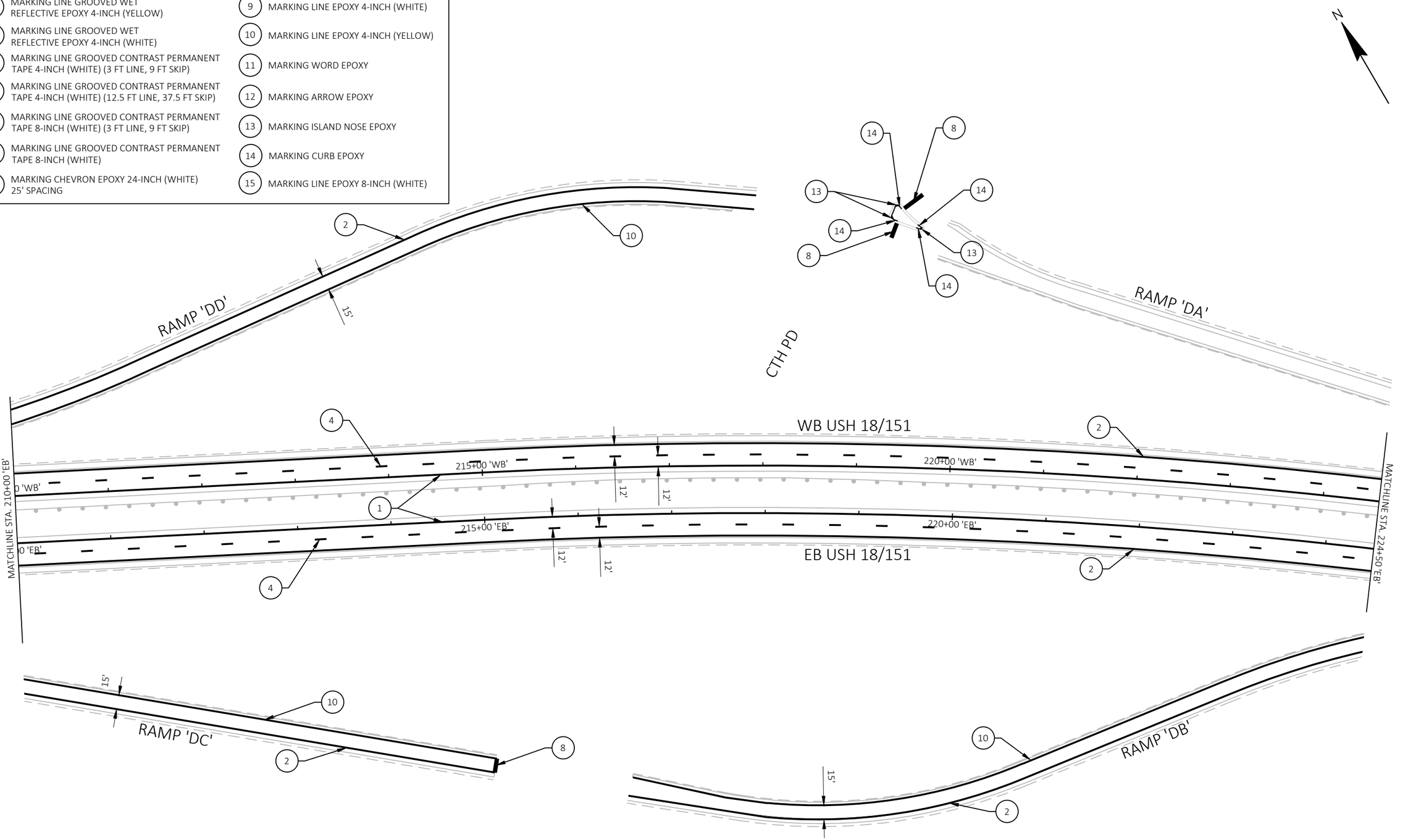

PROJECT NO: 1204-08-65	HWY: USH 18/151	COUNTY: DANE	PAVEMENT MARKING	SHEET 181	E

FILE NAME : G:\WDOTSW\20007-000 USH 18\CIVIL 3D\SHEETSPLAN\024501-PM.DWG
LAYOUT NAME - 03

PLOT DATE : 7/7/2022 3:37 PM PLOT BY : NATHAN RULLMAN PLOT NAME : PLOT SCALE : 1 IN:100 FT

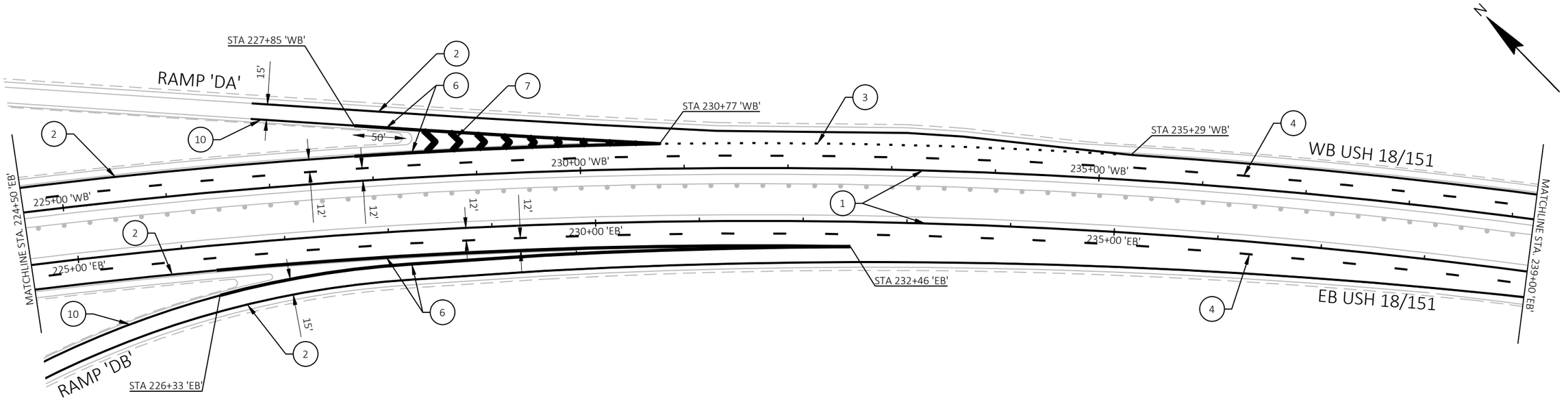

LEGEND

1. MARKING LINE GROOVED WET REFLECTIVE EPOXY 4-INCH (YELLOW)
2. MARKING LINE GROOVED WET REFLECTIVE EPOXY 4-INCH (WHITE)
3. MARKING LINE GROOVED CONTRAST PERMANENT TAPE 4-INCH (WHITE) (3 FT LINE, 9 FT SKIP)
4. MARKING LINE GROOVED CONTRAST PERMANENT TAPE 4-INCH (WHITE) (12.5 FT LINE, 37.5 FT SKIP)
5. MARKING LINE GROOVED CONTRAST PERMANENT TAPE 8-INCH (WHITE) (3 FT LINE, 9 FT SKIP)
6. MARKING LINE GROOVED CONTRAST PERMANENT TAPE 8-INCH (WHITE)
7. MARKING CHEVRON EPOXY 24-INCH (WHITE) 25' SPACING
8. MARKING STOP LINE EPOXY 18-INCH
9. MARKING LINE EPOXY 4-INCH (WHITE)
10. MARKING LINE EPOXY 4-INCH (YELLOW)
11. MARKING WORD EPOXY
12. MARKING ARROW EPOXY
13. MARKING ISLAND NOSE EPOXY
14. MARKING CURB EPOXY
15. MARKING LINE EPOXY 8-INCH (WHITE)

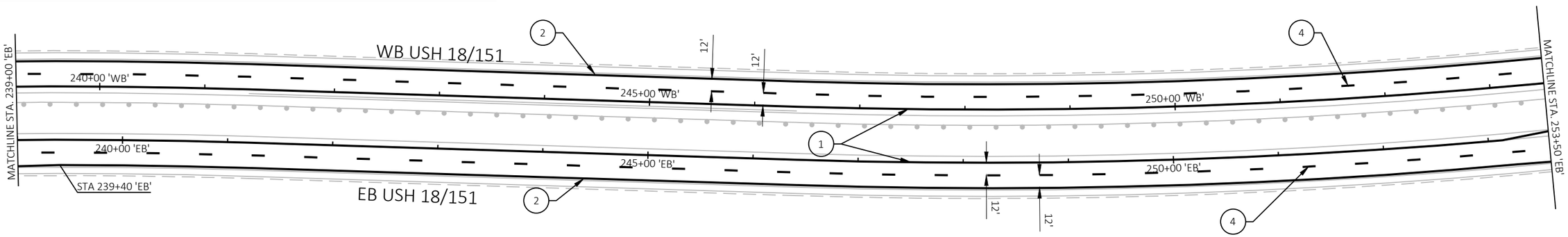

PROJECT NO: 1204-08-65	HWY: USH 18/151	COUNTY: DANE	PAVEMENT MARKING	SHEET 182	E

2

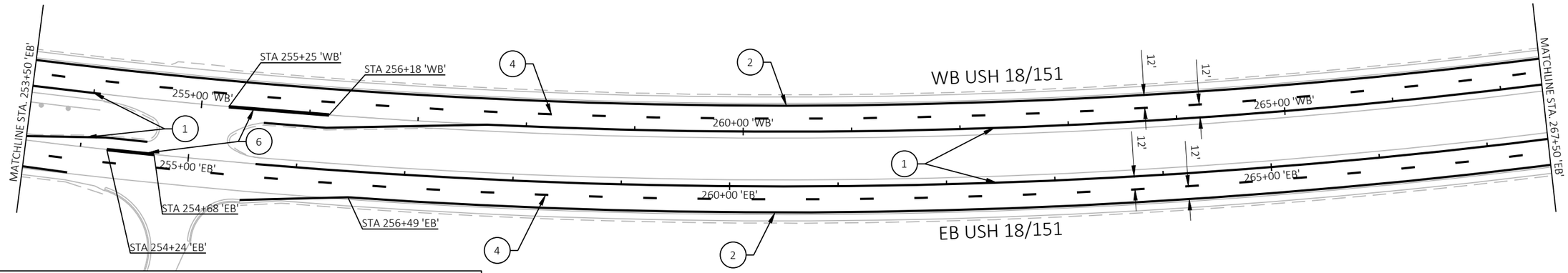

LEGEND

1. MARKING LINE GROOVED WET REFLECTIVE EPOXY 4-INCH (YELLOW)
2. MARKING LINE GROOVED WET REFLECTIVE EPOXY 4-INCH (WHITE)
3. MARKING LINE GROOVED CONTRAST PERMANENT TAPE 4-INCH (WHITE) (3 FT LINE, 9 FT SKIP)
4. MARKING LINE GROOVED CONTRAST PERMANENT TAPE 4-INCH (WHITE) (12.5 FT LINE, 37.5 FT SKIP)
5. MARKING LINE GROOVED CONTRAST PERMANENT TAPE 8-INCH (WHITE) (3 FT LINE, 9 FT SKIP)
6. MARKING LINE GROOVED CONTRAST PERMANENT TAPE 8-INCH (WHITE)
7. MARKING CHEVRON EPOXY 24-INCH (WHITE) 25' SPACING
8. MARKING STOP LINE EPOXY 18-INCH
9. MARKING LINE EPOXY 4-INCH (WHITE)
10. MARKING LINE EPOXY 4-INCH (YELLOW)
11. MARKING WORD EPOXY
12. MARKING ARROW EPOXY
13. MARKING ISLAND NOSE EPOXY
14. MARKING CURB EPOXY
15. MARKING LINE EPOXY 8-INCH (WHITE)

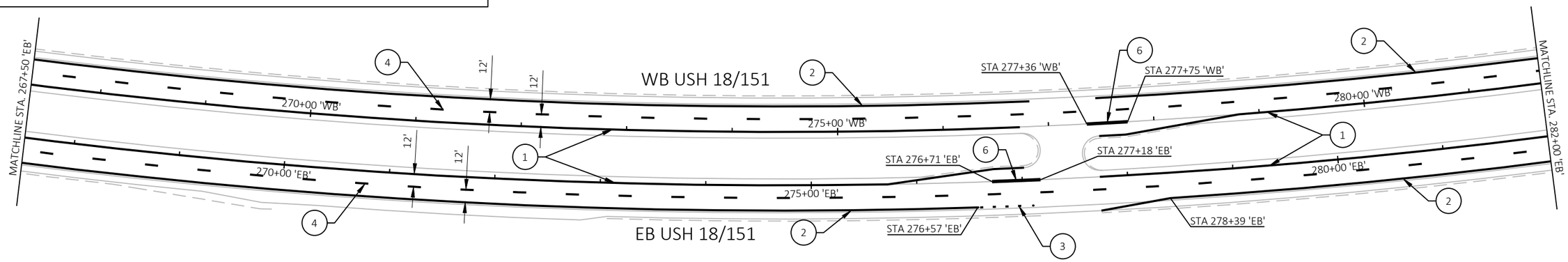

PROJECT NO: 1204-08-65	HWY: USH 18/151	COUNTY: DANE	PAVEMENT MARKING	SHEET 183	E

FILE NAME : G:\WDOTSW\20007-000 USH 18\CIVIL 3D\SHEETSPLAN\024501-PM.DWG
LAYOUT NAME - 05
PLOT DATE : 7/7/2022 3:37 PM
PLOT BY : NATHAN RULLMAN
PLOT NAME :
PLOT SCALE : 1 IN:100 FT
WISDOT/CADDS SHEET 44

2

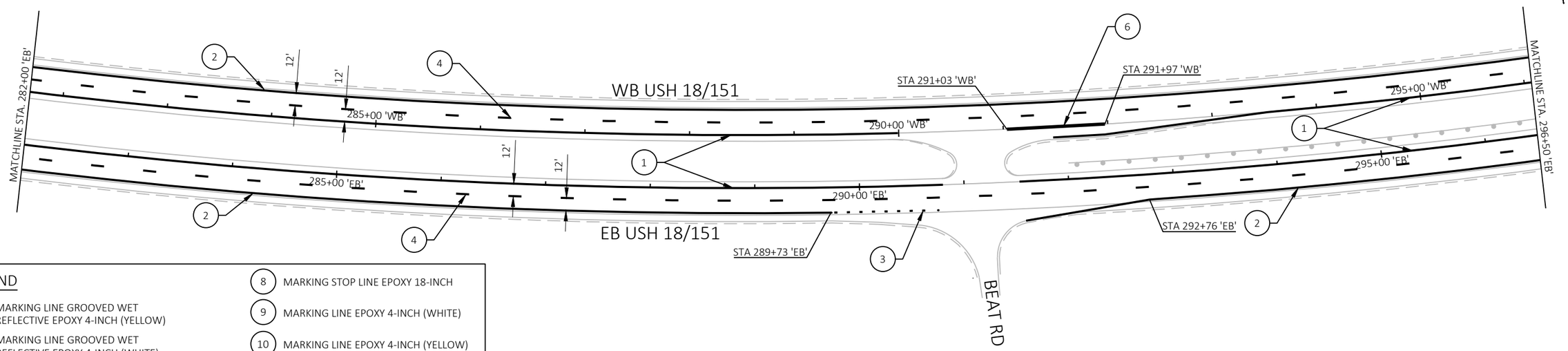

LEGEND

1. MARKING LINE GROOVED WET REFLECTIVE EPOXY 4-INCH (YELLOW)
2. MARKING LINE GROOVED WET REFLECTIVE EPOXY 4-INCH (WHITE)
3. MARKING LINE GROOVED CONTRAST PERMANENT TAPE 4-INCH (WHITE) (3 FT LINE, 9 FT SKIP)
4. MARKING LINE GROOVED CONTRAST PERMANENT TAPE 4-INCH (WHITE) (12.5 FT LINE, 37.5 FT SKIP)
5. MARKING LINE GROOVED CONTRAST PERMANENT TAPE 8-INCH (WHITE) (3 FT LINE, 9 FT SKIP)
6. MARKING LINE GROOVED CONTRAST PERMANENT TAPE 8-INCH (WHITE)
7. MARKING CHEVRON EPOXY 24-INCH (WHITE) 25' SPACING
8. MARKING STOP LINE EPOXY 18-INCH
9. MARKING LINE EPOXY 4-INCH (WHITE)
10. MARKING LINE EPOXY 4-INCH (YELLOW)
11. MARKING WORD EPOXY
12. MARKING ARROW EPOXY
13. MARKING ISLAND NOSE EPOXY
14. MARKING CURB EPOXY
15. MARKING LINE EPOXY 8-INCH (WHITE)

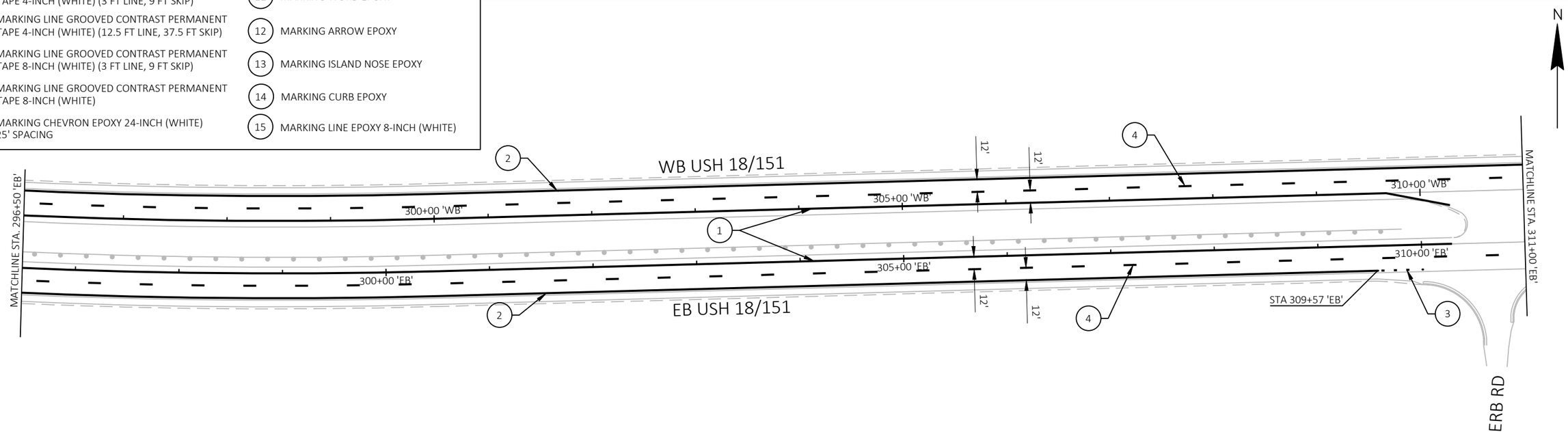

PROJECT NO: 1204-08-65	HWY: USH 18/151	COUNTY: DANE	PAVEMENT MARKING	SHEET 184	E

FILE NAME : G:\WDOTSW\20007-000 USH 18\CIVIL 3D\SHEETSPLAN\024501-PM.DWG
LAYOUT NAME - 06

PLOT DATE : 7/7/2022 3:37 PM PLOT BY : NATHAN RULLMAN PLOT NAME : PLOT SCALE : 1 IN:100 FT

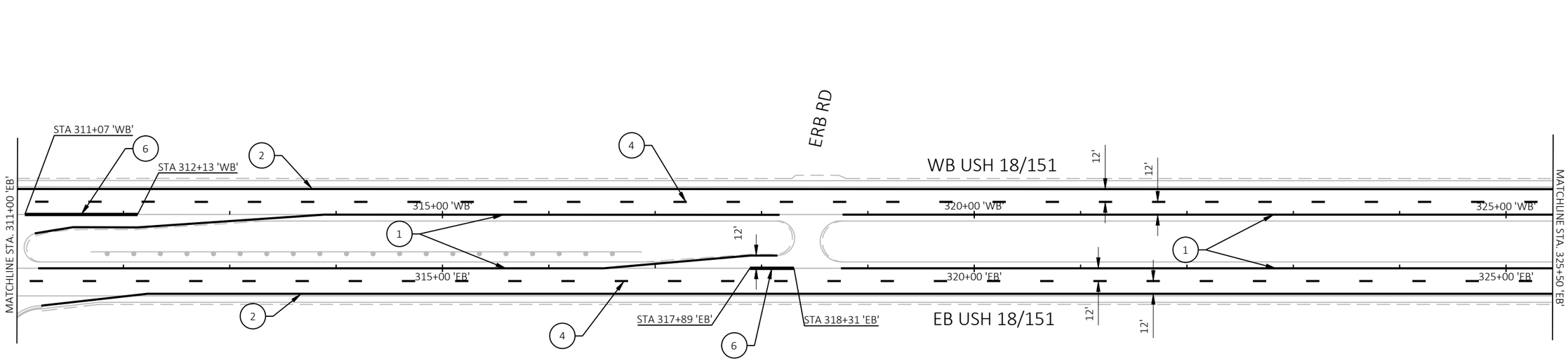

LEGEND

1. MARKING LINE GROOVED WET REFLECTIVE EPOXY 4-INCH (YELLOW)
2. MARKING LINE GROOVED WET REFLECTIVE EPOXY 4-INCH (WHITE)
3. MARKING LINE GROOVED CONTRAST PERMANENT TAPE 4-INCH (WHITE) (3 FT LINE, 9 FT SKIP)
4. MARKING LINE GROOVED CONTRAST PERMANENT TAPE 4-INCH (WHITE) (12.5 FT LINE, 37.5 FT SKIP)
5. MARKING LINE GROOVED CONTRAST PERMANENT TAPE 8-INCH (WHITE) (3 FT LINE, 9 FT SKIP)
6. MARKING LINE GROOVED CONTRAST PERMANENT TAPE 8-INCH (WHITE)
7. MARKING CHEVRON EPOXY 24-INCH (WHITE) 25' SPACING
8. MARKING STOP LINE EPOXY 18-INCH
9. MARKING LINE EPOXY 4-INCH (WHITE)
10. MARKING LINE EPOXY 4-INCH (YELLOW)
11. MARKING WORD EPOXY
12. MARKING ARROW EPOXY
13. MARKING ISLAND NOSE EPOXY
14. MARKING CURB EPOXY
15. MARKING LINE EPOXY 8-INCH (WHITE)

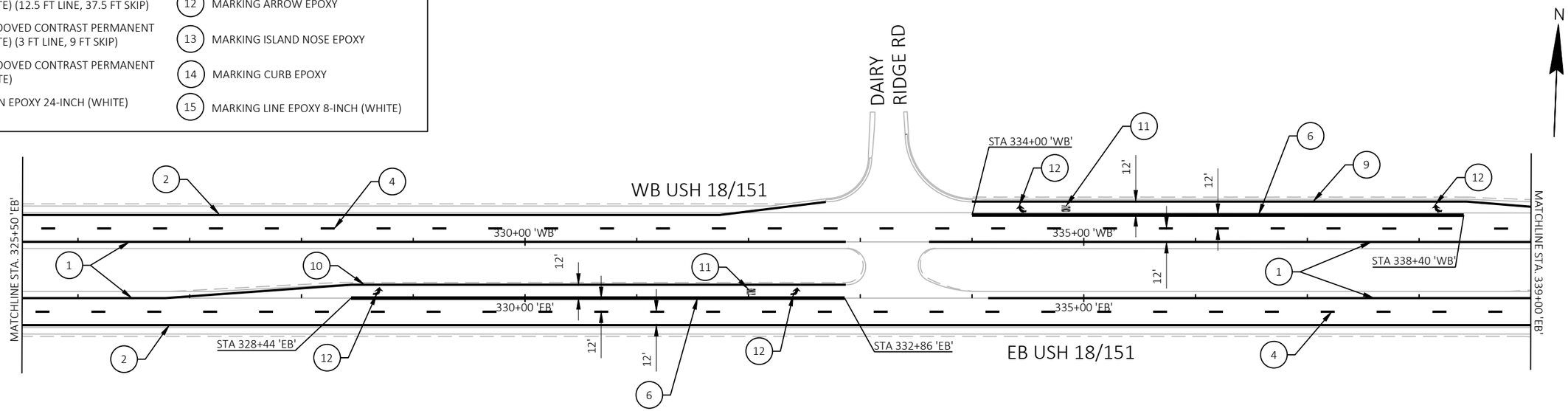

PROJECT NO: 1204-08-65	HWY: USH 18/151	COUNTY: DANE	PAVEMENT MARKING	SHEET 185	E

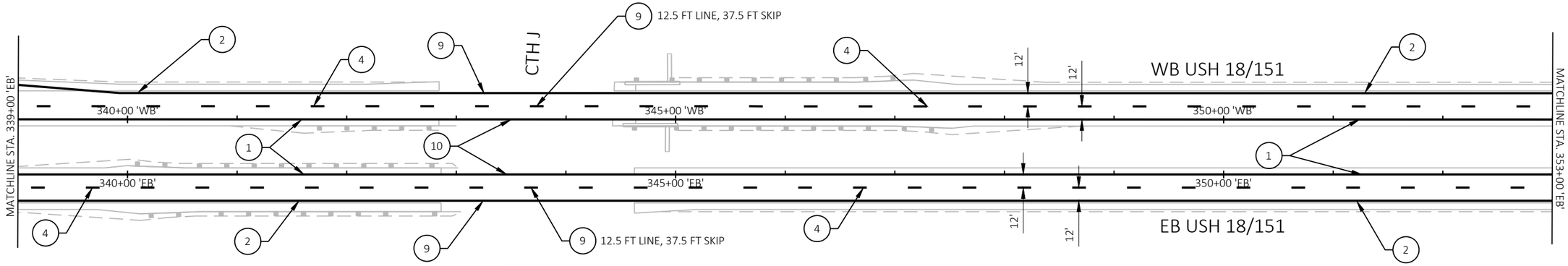

LEGEND

1. MARKING LINE GROOVED WET REFLECTIVE EPOXY 4-INCH (YELLOW)
2. MARKING LINE GROOVED WET REFLECTIVE EPOXY 4-INCH (WHITE)
3. MARKING LINE GROOVED CONTRAST PERMANENT TAPE 4-INCH (WHITE) (3 FT LINE, 9 FT SKIP)
4. MARKING LINE GROOVED CONTRAST PERMANENT TAPE 4-INCH (WHITE) (12.5 FT LINE, 37.5 FT SKIP)
5. MARKING LINE GROOVED CONTRAST PERMANENT TAPE 8-INCH (WHITE) (3 FT LINE, 9 FT SKIP)
6. MARKING LINE GROOVED CONTRAST PERMANENT TAPE 8-INCH (WHITE)
7. MARKING CHEVRON EPOXY 24-INCH (WHITE) 25' SPACING
8. MARKING STOP LINE EPOXY 18-INCH
9. MARKING LINE EPOXY 4-INCH (WHITE)
10. MARKING LINE EPOXY 4-INCH (YELLOW)
11. MARKING WORD EPOXY
12. MARKING ARROW EPOXY
13. MARKING ISLAND NOSE EPOXY
14. MARKING CURB EPOXY
15. MARKING LINE EPOXY 8-INCH (WHITE)

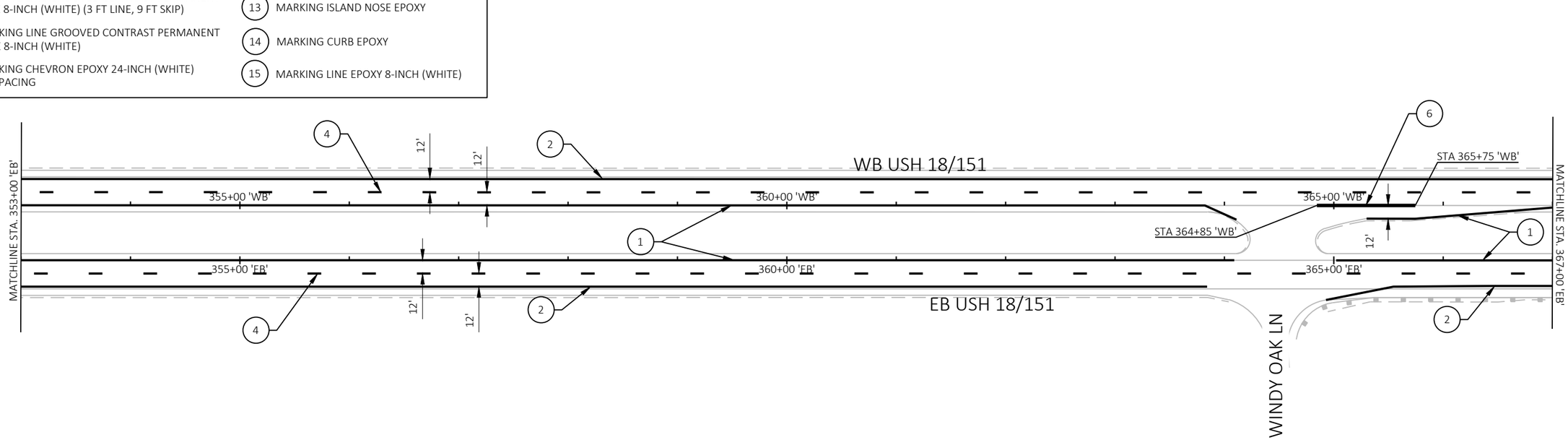

PROJECT NO: 1204-08-65	HWY: USH 18/151	COUNTY: DANE	PAVEMENT MARKING	SHEET 186	E

FILE NAME : G:\WDOTSW\20007-000 USH 18\CIVIL 3D\SHEETSPLAN\024501-PM.DWG
LAYOUT NAME - 08

PLOT DATE : 7/7/2022 3:37 PM PLOT BY : NATHAN RULLMAN PLOT NAME : PLOT SCALE : 1 IN:100 FT

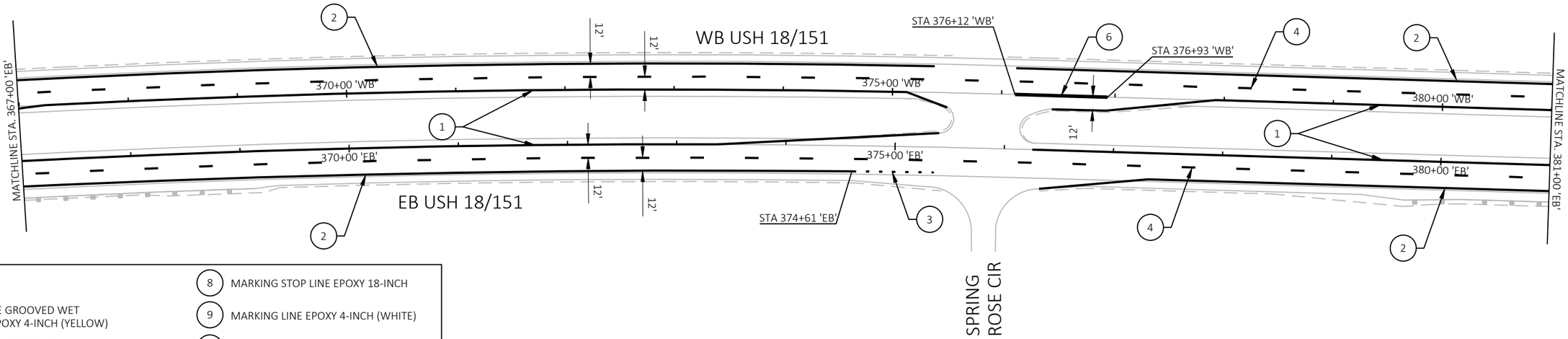

LEGEND

1. MARKING LINE GROOVED WET REFLECTIVE EPOXY 4-INCH (YELLOW)
2. MARKING LINE GROOVED WET REFLECTIVE EPOXY 4-INCH (WHITE)
3. MARKING LINE GROOVED CONTRAST PERMANENT TAPE 4-INCH (WHITE) (3 FT LINE, 9 FT SKIP)
4. MARKING LINE GROOVED CONTRAST PERMANENT TAPE 4-INCH (WHITE) (12.5 FT LINE, 37.5 FT SKIP)
5. MARKING LINE GROOVED CONTRAST PERMANENT TAPE 8-INCH (WHITE) (3 FT LINE, 9 FT SKIP)
6. MARKING LINE GROOVED CONTRAST PERMANENT TAPE 8-INCH (WHITE)
7. MARKING CHEVRON EPOXY 24-INCH (WHITE) 25' SPACING
8. MARKING STOP LINE EPOXY 18-INCH
9. MARKING LINE EPOXY 4-INCH (WHITE)
10. MARKING LINE EPOXY 4-INCH (YELLOW)
11. MARKING WORD EPOXY
12. MARKING ARROW EPOXY
13. MARKING ISLAND NOSE EPOXY
14. MARKING CURB EPOXY
15. MARKING LINE EPOXY 8-INCH (WHITE)

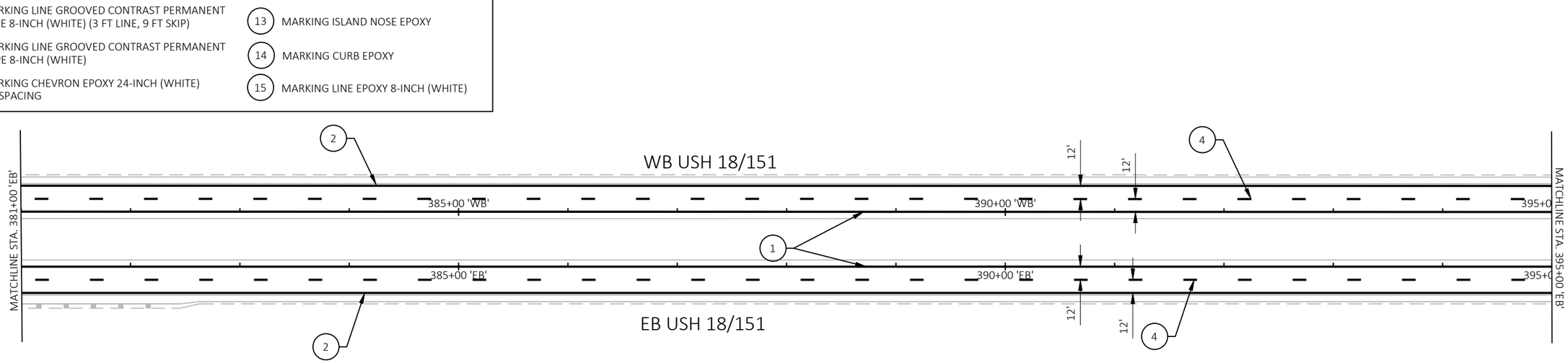

PROJECT NO: 1204-08-65	HWY: USH 18/151	COUNTY: DANE	PAVEMENT MARKING	SHEET 187	E

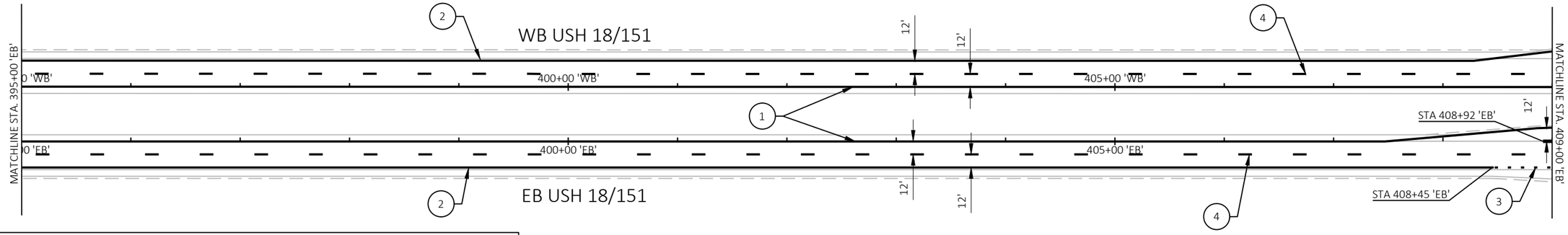

LEGEND

1. MARKING LINE GROOVED WET REFLECTIVE EPOXY 4-INCH (YELLOW)
2. MARKING LINE GROOVED WET REFLECTIVE EPOXY 4-INCH (WHITE)
3. MARKING LINE GROOVED CONTRAST PERMANENT TAPE 4-INCH (WHITE) (3 FT LINE, 9 FT SKIP)
4. MARKING LINE GROOVED CONTRAST PERMANENT TAPE 4-INCH (WHITE) (12.5 FT LINE, 37.5 FT SKIP)
5. MARKING LINE GROOVED CONTRAST PERMANENT TAPE 8-INCH (WHITE) (3 FT LINE, 9 FT SKIP)
6. MARKING LINE GROOVED CONTRAST PERMANENT TAPE 8-INCH (WHITE)
7. MARKING CHEVRON EPOXY 24-INCH (WHITE) 25' SPACING
8. MARKING STOP LINE EPOXY 18-INCH
9. MARKING LINE EPOXY 4-INCH (WHITE)
10. MARKING LINE EPOXY 4-INCH (YELLOW)
11. MARKING WORD EPOXY
12. MARKING ARROW EPOXY
13. MARKING ISLAND NOSE EPOXY
14. MARKING CURB EPOXY
15. MARKING LINE EPOXY 8-INCH (WHITE)

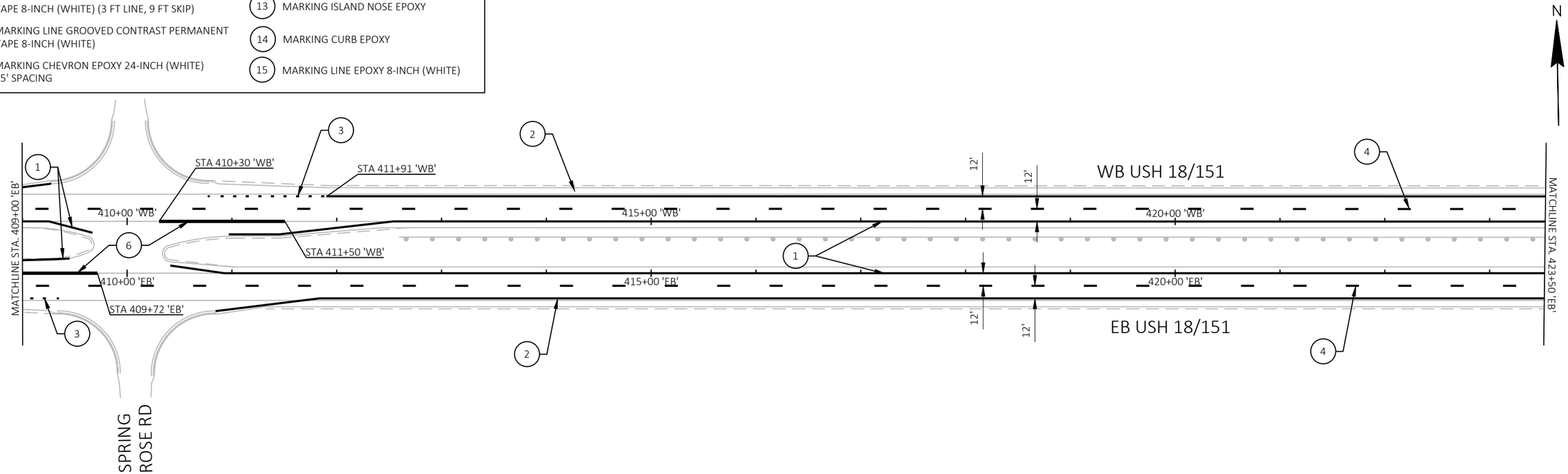

PROJECT NO: 1204-08-65	HWY: USH 18/151	COUNTY: DANE	PAVEMENT MARKING	SHEET 188	E

2

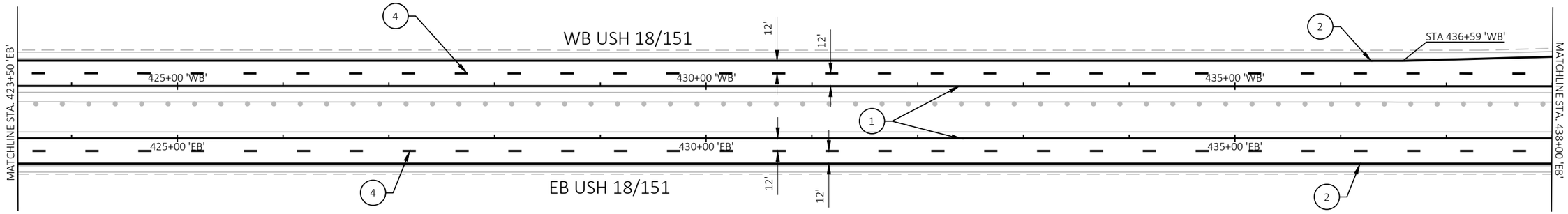

LEGEND

1. MARKING LINE GROOVED WET REFLECTIVE EPOXY 4-INCH (YELLOW)
2. MARKING LINE GROOVED WET REFLECTIVE EPOXY 4-INCH (WHITE)
3. MARKING LINE GROOVED CONTRAST PERMANENT TAPE 4-INCH (WHITE) (3 FT LINE, 9 FT SKIP)
4. MARKING LINE GROOVED CONTRAST PERMANENT TAPE 4-INCH (WHITE) (12.5 FT LINE, 37.5 FT SKIP)
5. MARKING LINE GROOVED CONTRAST PERMANENT TAPE 8-INCH (WHITE) (3 FT LINE, 9 FT SKIP)
6. MARKING LINE GROOVED CONTRAST PERMANENT TAPE 8-INCH (WHITE)
7. MARKING CHEVRON EPOXY 24-INCH (WHITE) 25' SPACING
8. MARKING STOP LINE EPOXY 18-INCH
9. MARKING LINE EPOXY 4-INCH (WHITE)
10. MARKING LINE EPOXY 4-INCH (YELLOW)
11. MARKING WORD EPOXY
12. MARKING ARROW EPOXY
13. MARKING ISLAND NOSE EPOXY
14. MARKING CURB EPOXY
15. MARKING LINE EPOXY 8-INCH (WHITE)

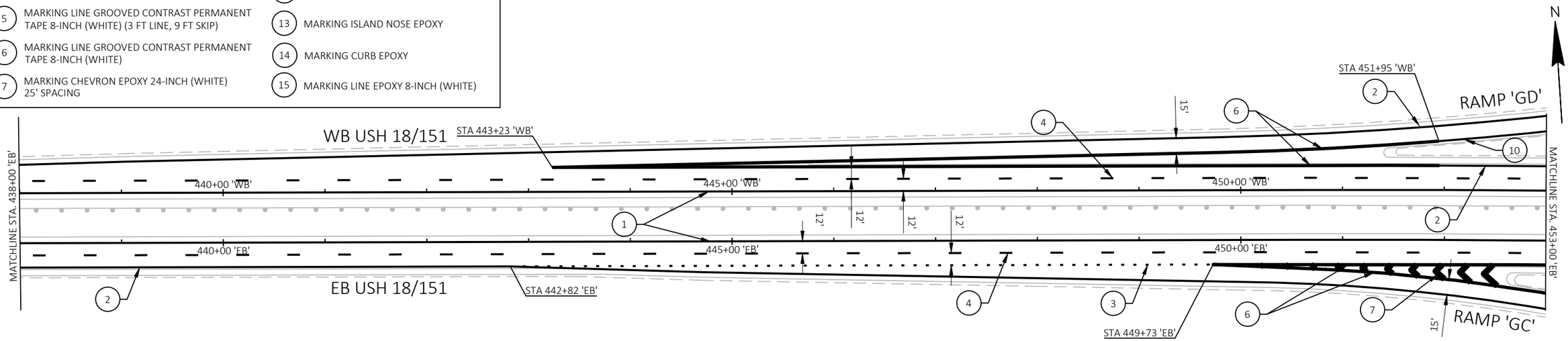

PROJECT NO: 1204-08-65	HWY: USH 18/151	COUNTY: DANE	PAVEMENT MARKING	SHEET 189	E

FILE NAME : G:\WDOTSW\20007-000 USH 18\CIVIL 3D\SHEETSPLAN\024501-PM.DWG
LAYOUT NAME - 11
PLOT DATE : 7/7/2022 3:37 PM
PLOT BY : NATHAN RULLMAN
PLOT NAME :
PLOT SCALE : 1 IN:100 FT
WISDOT/CADDS SHEET 44

2

LEGEND

1. MARKING LINE GROOVED WET REFLECTIVE EPOXY 4-INCH (YELLOW)
2. MARKING LINE GROOVED WET REFLECTIVE EPOXY 4-INCH (WHITE)
3. MARKING LINE GROOVED CONTRAST PERMANENT TAPE 4-INCH (WHITE) (3 FT LINE, 9 FT SKIP)
4. MARKING LINE GROOVED CONTRAST PERMANENT TAPE 4-INCH (WHITE) (12.5 FT LINE, 37.5 FT SKIP)
5. MARKING LINE GROOVED CONTRAST PERMANENT TAPE 8-INCH (WHITE) (3 FT LINE, 9 FT SKIP)
6. MARKING LINE GROOVED CONTRAST PERMANENT TAPE 8-INCH (WHITE)
7. MARKING CHEVRON EPOXY 24-INCH (WHITE) 25' SPACING
8. MARKING STOP LINE EPOXY 18-INCH
9. MARKING LINE EPOXY 4-INCH (WHITE)
10. MARKING LINE EPOXY 4-INCH (YELLOW)
11. MARKING WORD EPOXY
12. MARKING ARROW EPOXY
13. MARKING ISLAND NOSE EPOXY
14. MARKING CURB EPOXY
15. MARKING LINE EPOXY 8-INCH (WHITE)

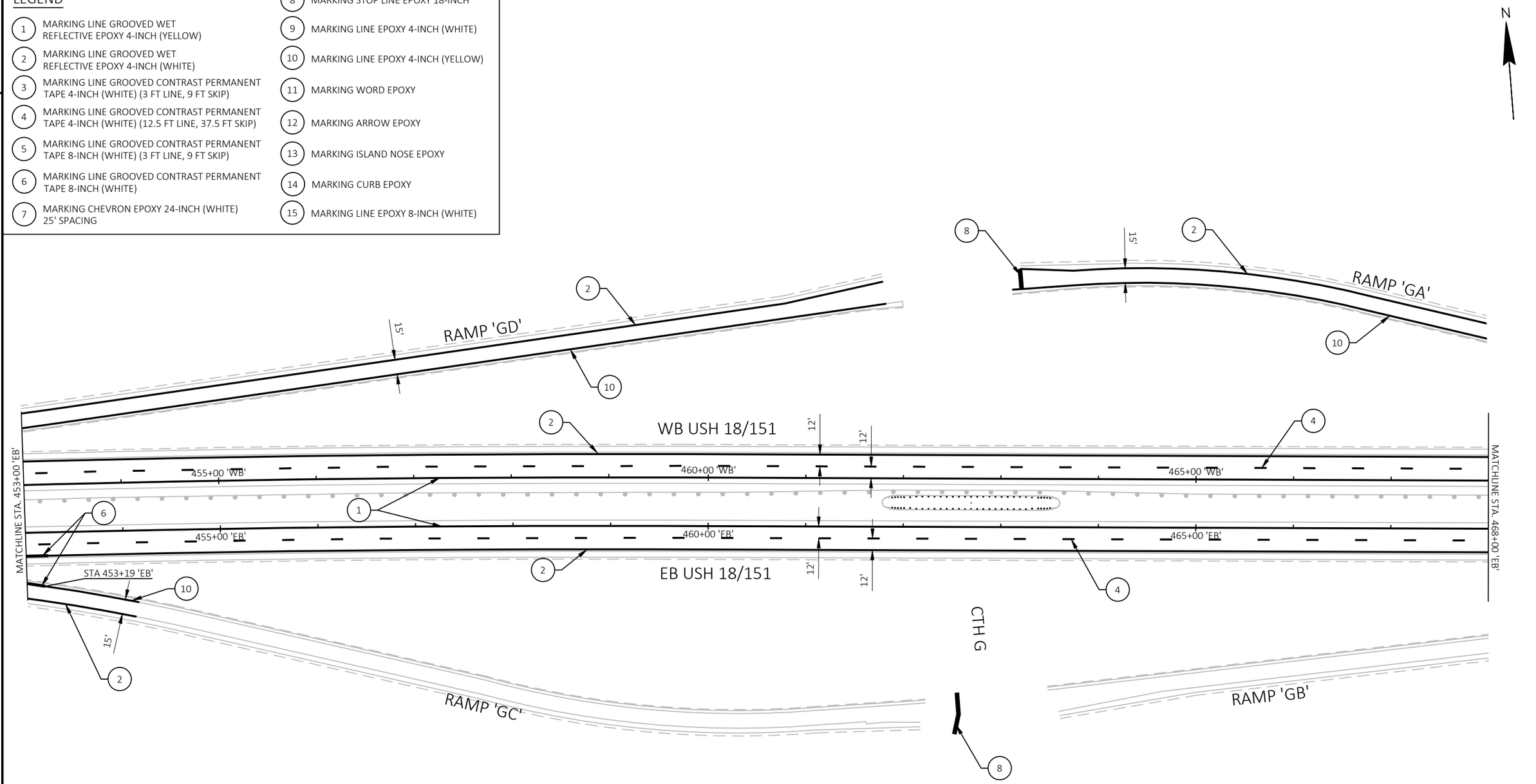

PROJECT NO: 1204-08-65	HWY: USH 18/151	COUNTY: DANE	PAVEMENT MARKING	SHEET 190	E

FILE NAME : G:\WDOTSW\20007-000 USH 18\CIVIL 3D\SHEETSPLAN\024501-PM.DWG
LAYOUT NAME - 12

PLOT DATE : 7/7/2022 3:37 PM PLOT BY : NATHAN RULLMAN PLOT NAME : PLOT SCALE : 1 IN:100 FT

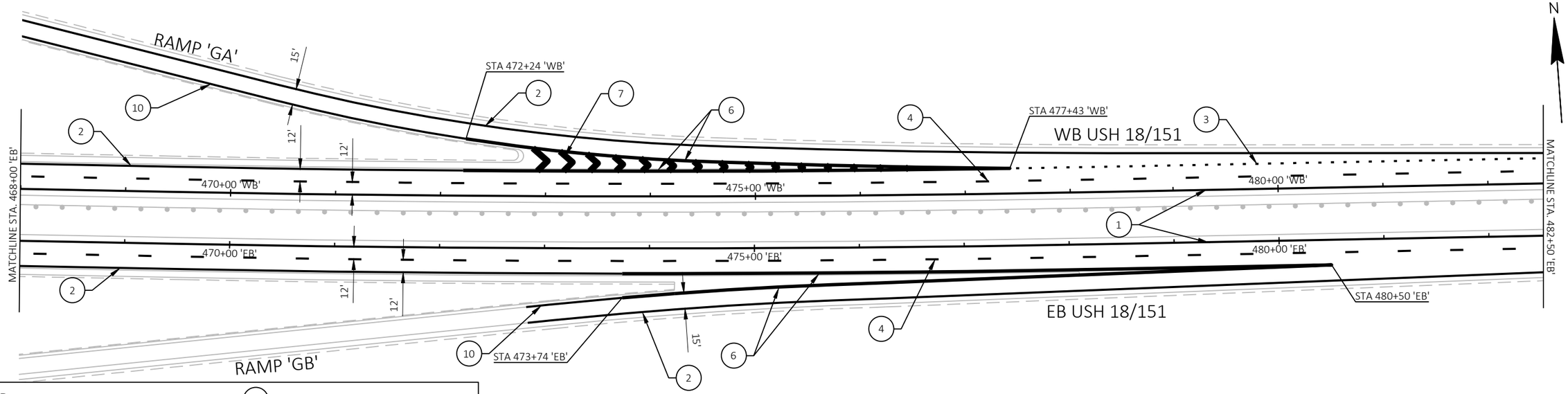

LEGEND

1. MARKING LINE GROOVED WET REFLECTIVE EPOXY 4-INCH (YELLOW)
2. MARKING LINE GROOVED WET REFLECTIVE EPOXY 4-INCH (WHITE)
3. MARKING LINE GROOVED CONTRAST PERMANENT TAPE 4-INCH (WHITE) (3 FT LINE, 9 FT SKIP)
4. MARKING LINE GROOVED CONTRAST PERMANENT TAPE 4-INCH (WHITE) (12.5 FT LINE, 37.5 FT SKIP)
5. MARKING LINE GROOVED CONTRAST PERMANENT TAPE 8-INCH (WHITE) (3 FT LINE, 9 FT SKIP)
6. MARKING LINE GROOVED CONTRAST PERMANENT TAPE 8-INCH (WHITE)
7. MARKING CHEVRON EPOXY 24-INCH (WHITE) 25' SPACING
8. MARKING STOP LINE EPOXY 18-INCH
9. MARKING LINE EPOXY 4-INCH (WHITE)
10. MARKING LINE EPOXY 4-INCH (YELLOW)
11. MARKING WORD EPOXY
12. MARKING ARROW EPOXY
13. MARKING ISLAND NOSE EPOXY
14. MARKING CURB EPOXY
15. MARKING LINE EPOXY 8-INCH (WHITE)

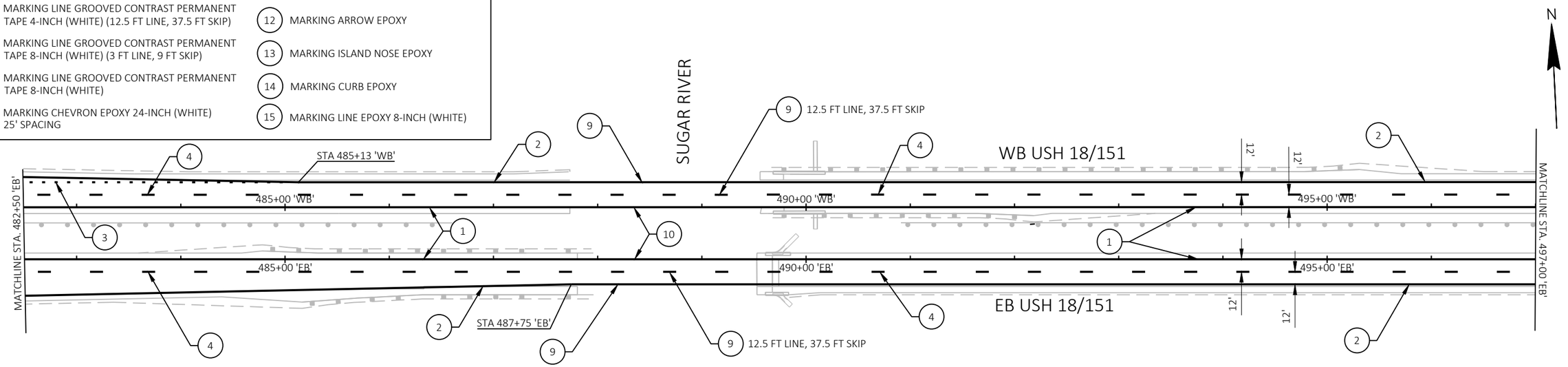

PROJECT NO: 1204-08-65	HWY: USH 18/151	COUNTY: DANE	PAVEMENT MARKING	SHEET 191	E

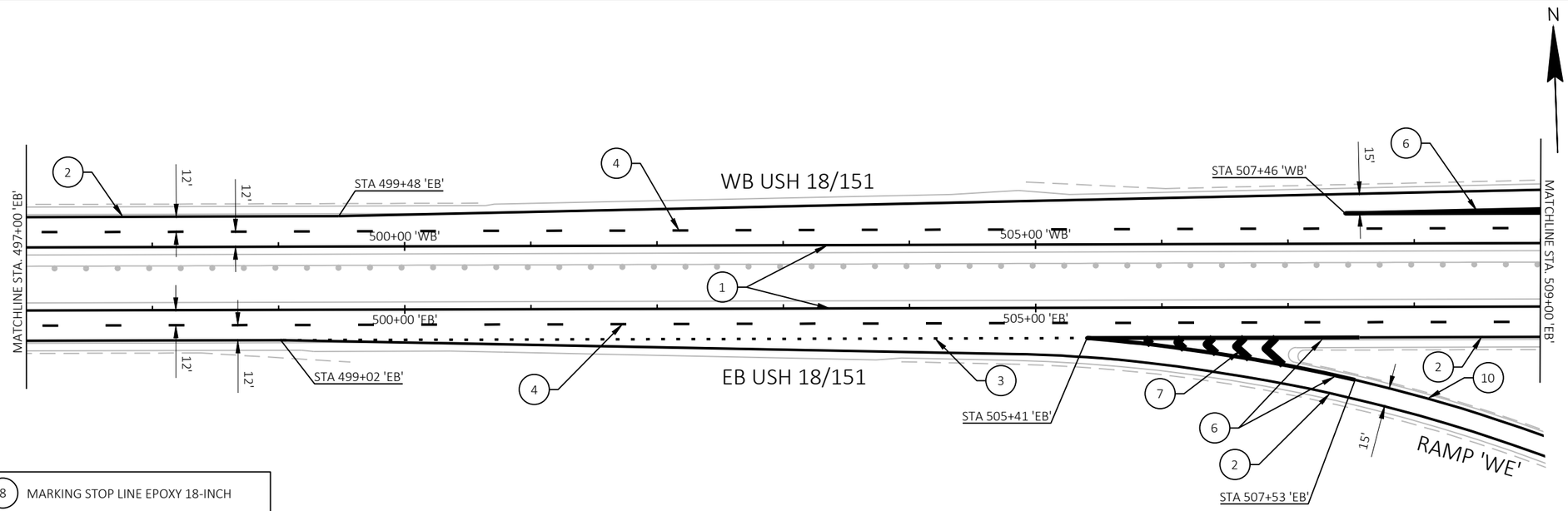

LEGEND

1. MARKING LINE GROOVED WET REFLECTIVE EPOXY 4-INCH (YELLOW)
2. MARKING LINE GROOVED WET REFLECTIVE EPOXY 4-INCH (WHITE)
3. MARKING LINE GROOVED CONTRAST PERMANENT TAPE 4-INCH (WHITE) (3 FT LINE, 9 FT SKIP)
4. MARKING LINE GROOVED CONTRAST PERMANENT TAPE 4-INCH (WHITE) (12.5 FT LINE, 37.5 FT SKIP)
5. MARKING LINE GROOVED CONTRAST PERMANENT TAPE 8-INCH (WHITE) (3 FT LINE, 9 FT SKIP)
6. MARKING LINE GROOVED CONTRAST PERMANENT TAPE 8-INCH (WHITE)
7. MARKING CHEVRON EPOXY 24-INCH (WHITE) 25' SPACING
8. MARKING STOP LINE EPOXY 18-INCH
9. MARKING LINE EPOXY 4-INCH (WHITE)
10. MARKING LINE EPOXY 4-INCH (YELLOW)
11. MARKING WORD EPOXY
12. MARKING ARROW EPOXY
13. MARKING ISLAND NOSE EPOXY
14. MARKING CURB EPOXY
15. MARKING LINE EPOXY 8-INCH (WHITE)

2

LEGEND

1. MARKING LINE GROOVED WET REFLECTIVE EPOXY 4-INCH (YELLOW)
2. MARKING LINE GROOVED WET REFLECTIVE EPOXY 4-INCH (WHITE)
3. MARKING LINE GROOVED CONTRAST PERMANENT TAPE 4-INCH (WHITE) (3 FT LINE, 9 FT SKIP)
4. MARKING LINE GROOVED CONTRAST PERMANENT TAPE 4-INCH (WHITE) (12.5 FT LINE, 37.5 FT SKIP)
5. MARKING LINE GROOVED CONTRAST PERMANENT TAPE 8-INCH (WHITE) (3 FT LINE, 9 FT SKIP)
6. MARKING LINE GROOVED CONTRAST PERMANENT TAPE 8-INCH (WHITE)
7. MARKING CHEVRON EPOXY 24-INCH (WHITE) 25' SPACING
8. MARKING STOP LINE EPOXY 18-INCH
9. MARKING LINE EPOXY 4-INCH (WHITE)
10. MARKING LINE EPOXY 4-INCH (YELLOW)
11. MARKING WORD EPOXY
12. MARKING ARROW EPOXY
13. MARKING ISLAND NOSE EPOXY
14. MARKING CURB EPOXY
15. MARKING LINE EPOXY 8-INCH (WHITE)

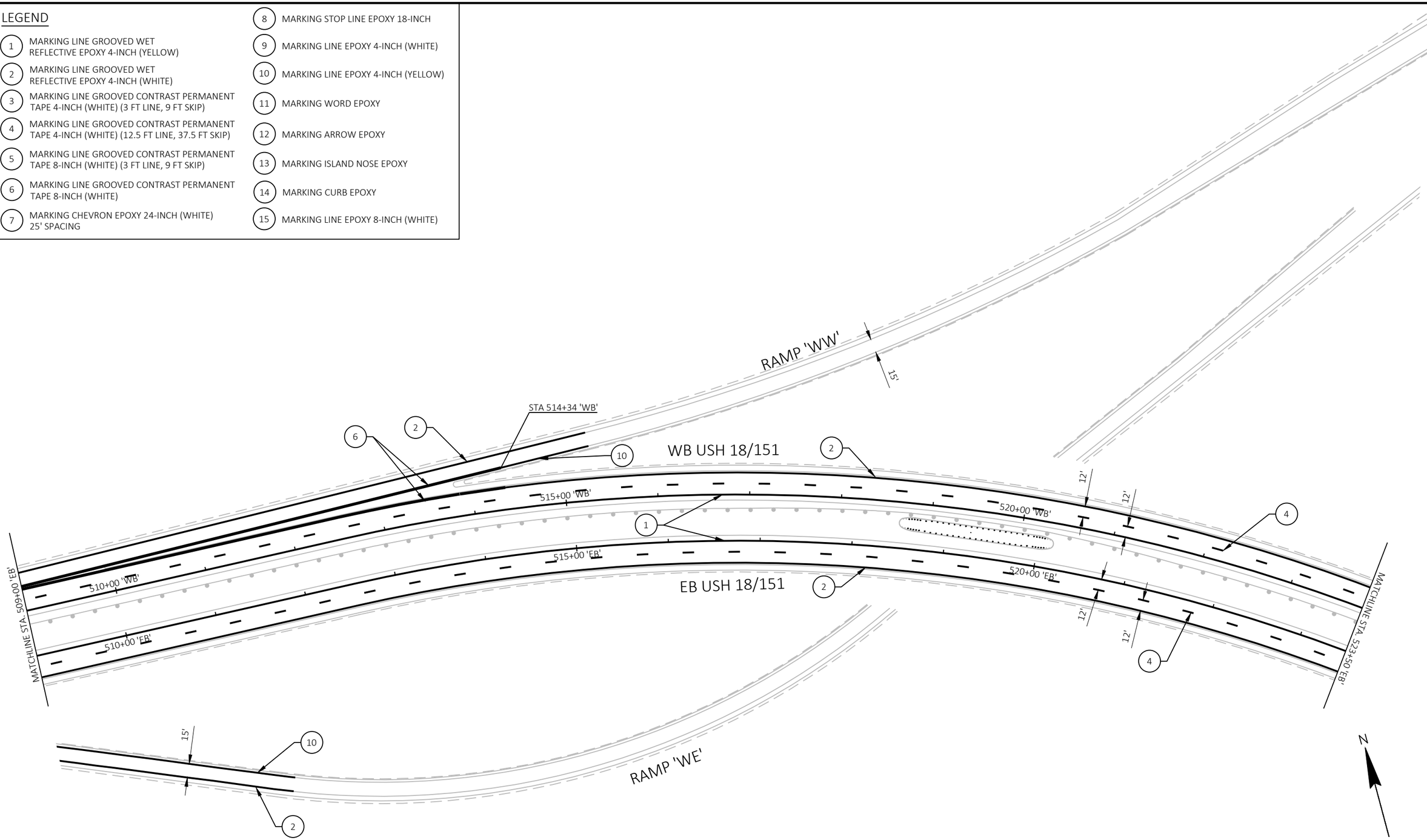

PROJECT NO: 1204-08-65	HWY: USH 18/151	COUNTY: DANE	PAVEMENT MARKING	SHEET 193	E

2

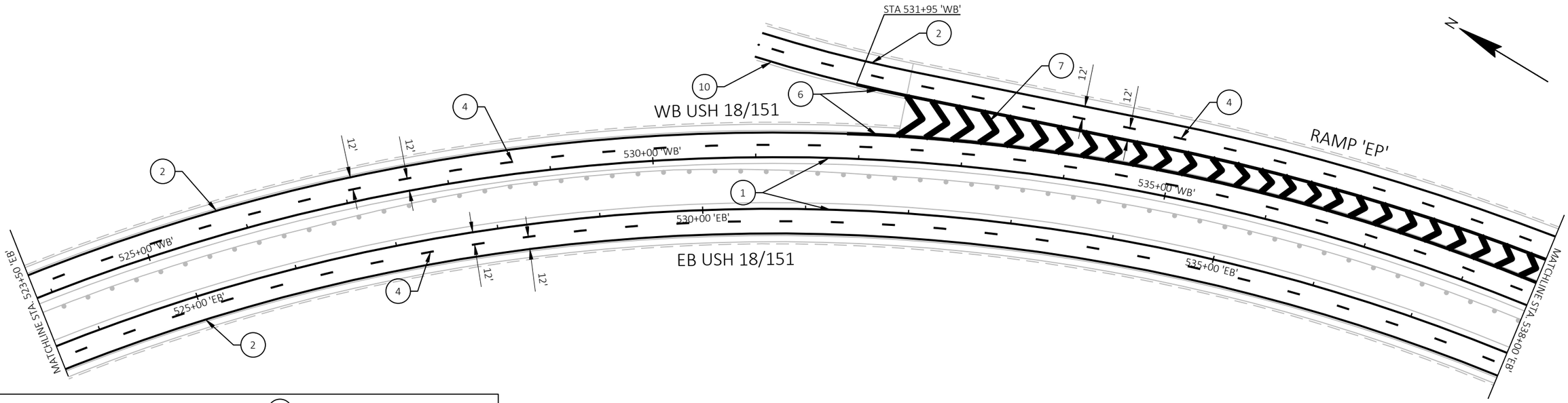

LEGEND

1. MARKING LINE GROOVED WET REFLECTIVE EPOXY 4-INCH (YELLOW)
2. MARKING LINE GROOVED WET REFLECTIVE EPOXY 4-INCH (WHITE)
3. MARKING LINE GROOVED CONTRAST PERMANENT TAPE 4-INCH (WHITE) (3 FT LINE, 9 FT SKIP)
4. MARKING LINE GROOVED CONTRAST PERMANENT TAPE 4-INCH (WHITE) (12.5 FT LINE, 37.5 FT SKIP)
5. MARKING LINE GROOVED CONTRAST PERMANENT TAPE 8-INCH (WHITE) (3 FT LINE, 9 FT SKIP)
6. MARKING LINE GROOVED CONTRAST PERMANENT TAPE 8-INCH (WHITE)
7. MARKING CHEVRON EPOXY 24-INCH (WHITE) 25' SPACING
8. MARKING STOP LINE EPOXY 18-INCH
9. MARKING LINE EPOXY 4-INCH (WHITE)
10. MARKING LINE EPOXY 4-INCH (YELLOW)
11. MARKING WORD EPOXY
12. MARKING ARROW EPOXY
13. MARKING ISLAND NOSE EPOXY
14. MARKING CURB EPOXY
15. MARKING LINE EPOXY 8-INCH (WHITE)

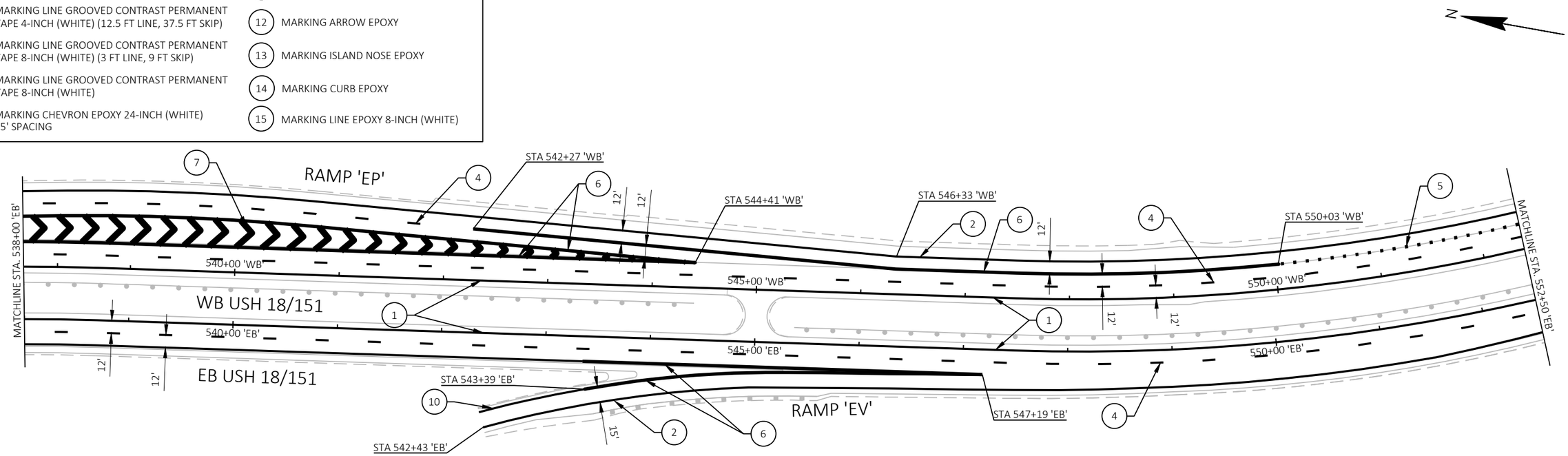

PROJECT NO: 1204-08-65	HWY: USH 18/151	COUNTY: DANE	PAVEMENT MARKING	SHEET 194	E

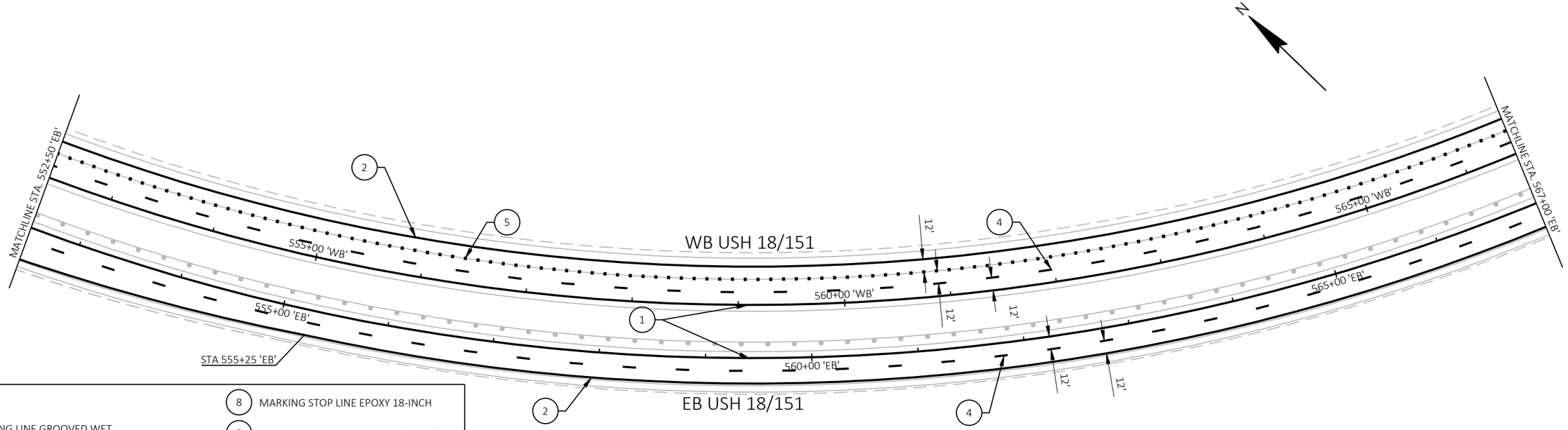

LEGEND

1. MARKING LINE GROOVED WET REFLECTIVE EPOXY 4-INCH (YELLOW)
2. MARKING LINE GROOVED WET REFLECTIVE EPOXY 4-INCH (WHITE)
3. MARKING LINE GROOVED CONTRAST PERMANENT TAPE 4-INCH (WHITE) (3 FT LINE, 9 FT SKIP)
4. MARKING LINE GROOVED CONTRAST PERMANENT TAPE 4-INCH (WHITE) (12.5 FT LINE, 37.5 FT SKIP)
5. MARKING LINE GROOVED CONTRAST PERMANENT TAPE 8-INCH (WHITE) (3 FT LINE, 9 FT SKIP)
6. MARKING LINE GROOVED CONTRAST PERMANENT TAPE 8-INCH (WHITE)
7. MARKING CHEVRON EPOXY 24-INCH (WHITE) 25' SPACING
8. MARKING STOP LINE EPOXY 18-INCH
9. MARKING LINE EPOXY 4-INCH (WHITE)
10. MARKING LINE EPOXY 4-INCH (YELLOW)
11. MARKING WORD EPOXY
12. MARKING ARROW EPOXY
13. MARKING ISLAND NOSE EPOXY
14. MARKING CURB EPOXY
15. MARKING LINE EPOXY 8-INCH (WHITE)

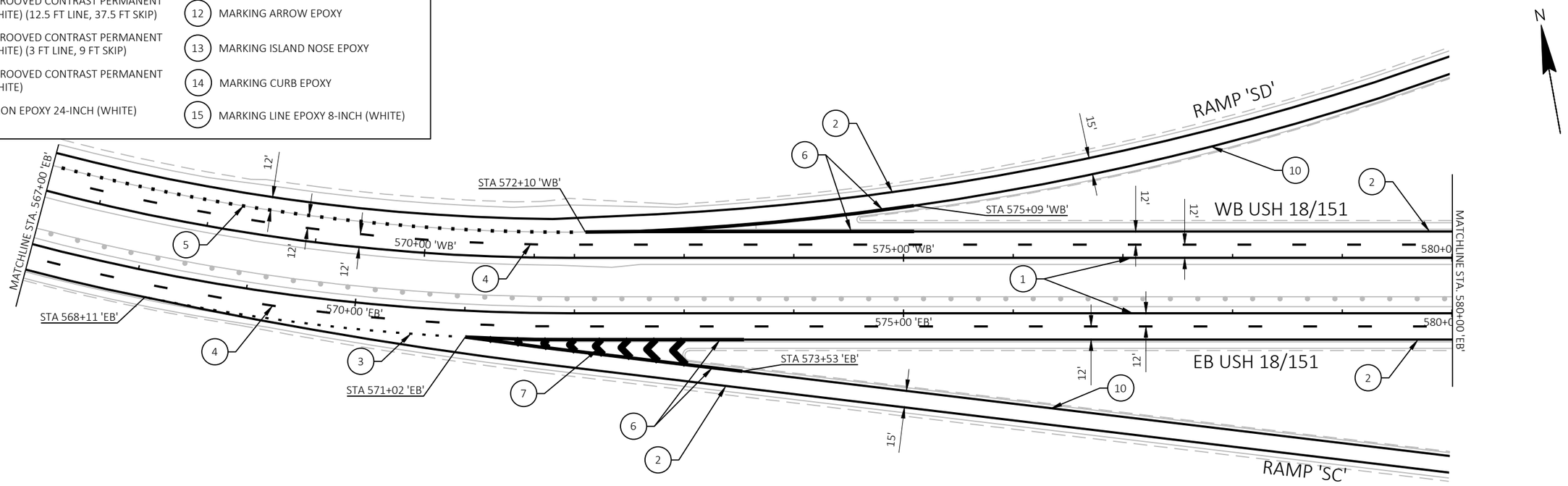

PROJECT NO: 1204-08-65	HWY: USH 18/151	COUNTY: DANE	PAVEMENT MARKING	SHEET 195	E

2

N

RAMP 'SD'

RAMP 'SA'

RAMP 'SC'

RAMP 'SB'

STH 69

WB USH 18/151

EB USH 18/151

MATCHLINE STA. 580+00 'EB'

MATCHLINE STA. 594+00 'EB'

585+00 'WB'

590+00 'WB'

585+00 'EB'

590+00 'EB'

12.5 FT LINE, 37.5 FT SKIP

SEE NEXT PAGE FOR PAVEMENT MARKING ON STH 69

LEGEND

1. MARKING LINE GROOVED WET REFLECTIVE EPOXY 4-INCH (YELLOW)
2. MARKING LINE GROOVED WET REFLECTIVE EPOXY 4-INCH (WHITE)
3. MARKING LINE GROOVED CONTRAST PERMANENT TAPE 4-INCH (WHITE) (3 FT LINE, 9 FT SKIP)
4. MARKING LINE GROOVED CONTRAST PERMANENT TAPE 4-INCH (WHITE) (12.5 FT LINE, 37.5 FT SKIP)
5. MARKING LINE GROOVED CONTRAST PERMANENT TAPE 8-INCH (WHITE) (3 FT LINE, 9 FT SKIP)
6. MARKING LINE GROOVED CONTRAST PERMANENT TAPE 8-INCH (WHITE)
7. MARKING CHEVRON EPOXY 24-INCH (WHITE) 25' SPACING
8. MARKING STOP LINE EPOXY 18-INCH
9. MARKING LINE EPOXY 4-INCH (WHITE)
10. MARKING LINE EPOXY 4-INCH (YELLOW)
11. MARKING WORD EPOXY
12. MARKING ARROW EPOXY
13. MARKING ISLAND NOSE EPOXY
14. MARKING CURB EPOXY
15. MARKING LINE EPOXY 8-INCH (WHITE)

PROJECT NO: 1204-08-65	HWY: USH 18/151	COUNTY: DANE	PAVEMENT MARKING	SHEET 196	E

FILE NAME : G:\WDOTSW\20007-000 USH 18\CIVIL 3D\SHEETSPLAN\024501-PM.DWG
LAYOUT NAME - 18
PLOT DATE : 7/7/2022 3:37 PM
PLOT BY : NATHAN RULLMAN
PLOT NAME :
PLOT SCALE : 1 IN:100 FT
WISDOT/CADDS SHEET 42

2

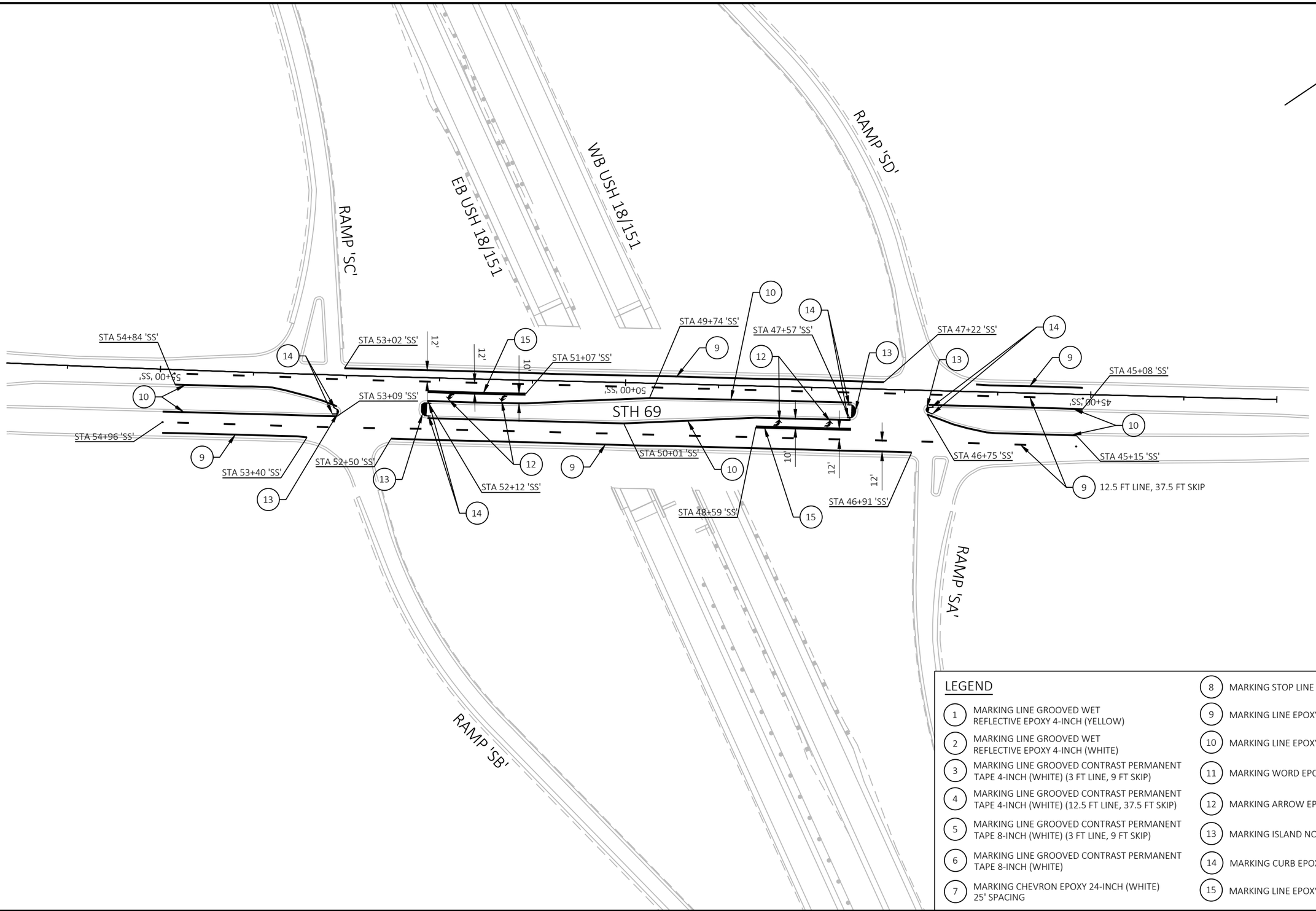

LEGEND

1. MARKING LINE GROOVED WET REFLECTIVE EPOXY 4-INCH (YELLOW)
2. MARKING LINE GROOVED WET REFLECTIVE EPOXY 4-INCH (WHITE)
3. MARKING LINE GROOVED CONTRAST PERMANENT TAPE 4-INCH (WHITE) (3 FT LINE, 9 FT SKIP)
4. MARKING LINE GROOVED CONTRAST PERMANENT TAPE 4-INCH (WHITE) (12.5 FT LINE, 37.5 FT SKIP)
5. MARKING LINE GROOVED CONTRAST PERMANENT TAPE 8-INCH (WHITE) (3 FT LINE, 9 FT SKIP)
6. MARKING LINE GROOVED CONTRAST PERMANENT TAPE 8-INCH (WHITE)
7. MARKING CHEVRON EPOXY 24-INCH (WHITE) 25' SPACING
8. MARKING STOP LINE EPOXY 18-INCH
9. MARKING LINE EPOXY 4-INCH (WHITE)
10. MARKING LINE EPOXY 4-INCH (YELLOW)
11. MARKING WORD EPOXY
12. MARKING ARROW EPOXY
13. MARKING ISLAND NOSE EPOXY
14. MARKING CURB EPOXY
15. MARKING LINE EPOXY 8-INCH (WHITE)

PROJECT NO: 1204-08-65	HWY: USH 18/151	COUNTY: DANE	PAVEMENT MARKING	SHEET 197	E

2

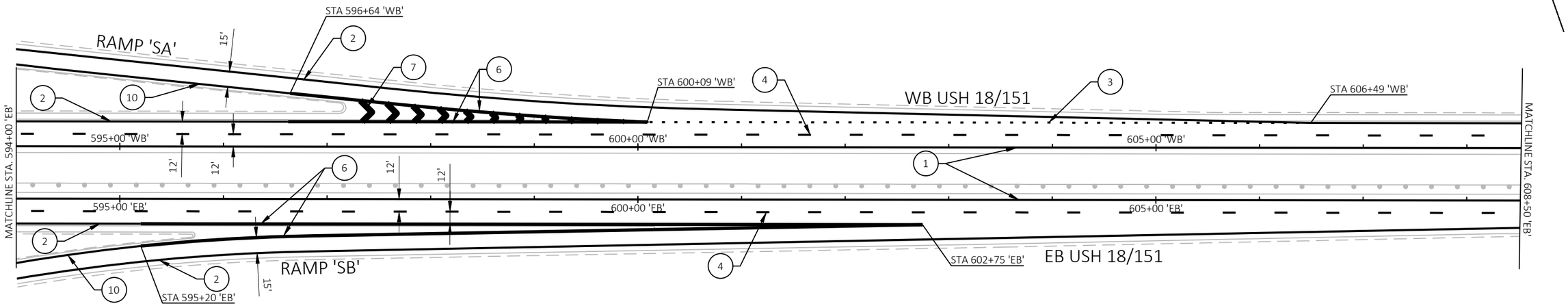

LEGEND

1. MARKING LINE GROOVED WET REFLECTIVE EPOXY 4-INCH (YELLOW)
2. MARKING LINE GROOVED WET REFLECTIVE EPOXY 4-INCH (WHITE)
3. MARKING LINE GROOVED CONTRAST PERMANENT TAPE 4-INCH (WHITE) (3 FT LINE, 9 FT SKIP)
4. MARKING LINE GROOVED CONTRAST PERMANENT TAPE 4-INCH (WHITE) (12.5 FT LINE, 37.5 FT SKIP)
5. MARKING LINE GROOVED CONTRAST PERMANENT TAPE 8-INCH (WHITE) (3 FT LINE, 9 FT SKIP)
6. MARKING LINE GROOVED CONTRAST PERMANENT TAPE 8-INCH (WHITE)
7. MARKING CHEVRON EPOXY 24-INCH (WHITE) 25' SPACING
8. MARKING STOP LINE EPOXY 18-INCH
9. MARKING LINE EPOXY 4-INCH (WHITE)
10. MARKING LINE EPOXY 4-INCH (YELLOW)
11. MARKING WORD EPOXY
12. MARKING ARROW EPOXY
13. MARKING ISLAND NOSE EPOXY
14. MARKING CURB EPOXY
15. MARKING LINE EPOXY 8-INCH (WHITE)

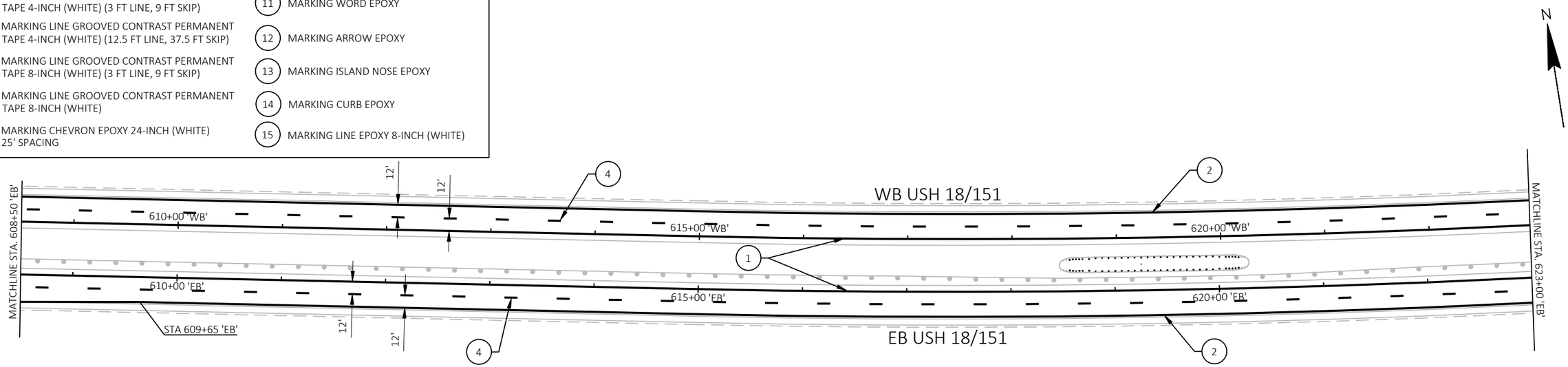

PROJECT NO: 1204-08-65	HWY: USH 18/151	COUNTY: DANE	PAVEMENT MARKING	SHEET 198	E

2

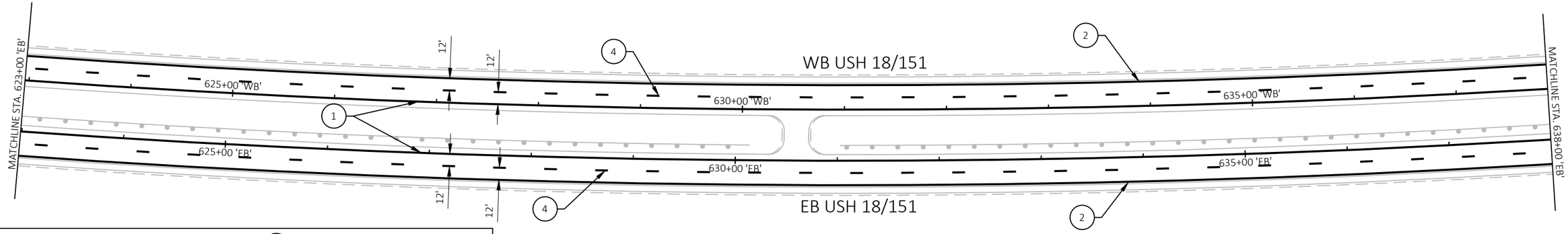

LEGEND

1. MARKING LINE GROOVED WET REFLECTIVE EPOXY 4-INCH (YELLOW)
2. MARKING LINE GROOVED WET REFLECTIVE EPOXY 4-INCH (WHITE)
3. MARKING LINE GROOVED CONTRAST PERMANENT TAPE 4-INCH (WHITE) (3 FT LINE, 9 FT SKIP)
4. MARKING LINE GROOVED CONTRAST PERMANENT TAPE 4-INCH (WHITE) (12.5 FT LINE, 37.5 FT SKIP)
5. MARKING LINE GROOVED CONTRAST PERMANENT TAPE 8-INCH (WHITE) (3 FT LINE, 9 FT SKIP)
6. MARKING LINE GROOVED CONTRAST PERMANENT TAPE 8-INCH (WHITE)
7. MARKING CHEVRON EPOXY 24-INCH (WHITE) 25' SPACING
8. MARKING STOP LINE EPOXY 18-INCH
9. MARKING LINE EPOXY 4-INCH (WHITE)
10. MARKING LINE EPOXY 4-INCH (YELLOW)
11. MARKING WORD EPOXY
12. MARKING ARROW EPOXY
13. MARKING ISLAND NOSE EPOXY
14. MARKING CURB EPOXY
15. MARKING LINE EPOXY 8-INCH (WHITE)

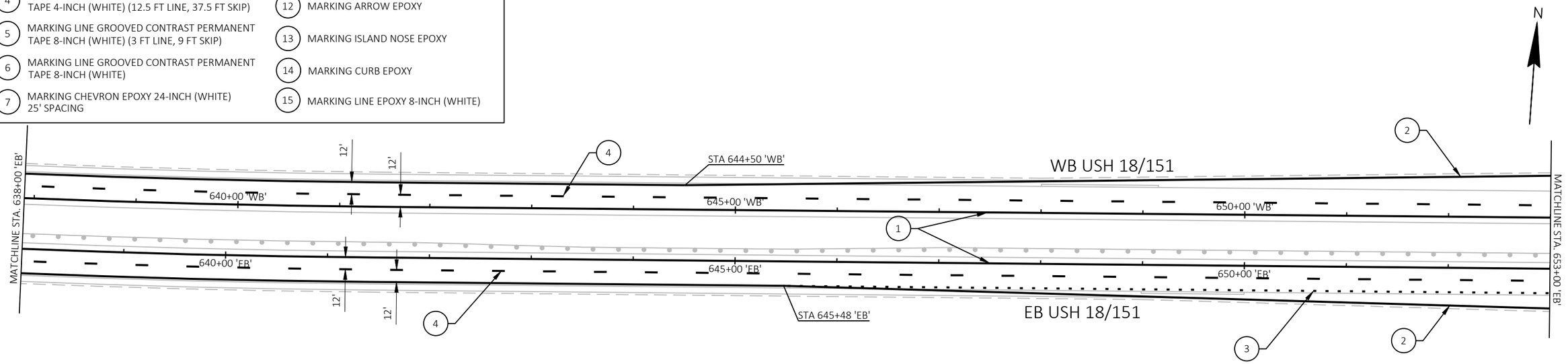

PROJECT NO: 1204-08-65	HWY: USH 18/151	COUNTY: DANE	PAVEMENT MARKING	SHEET 199	E

2

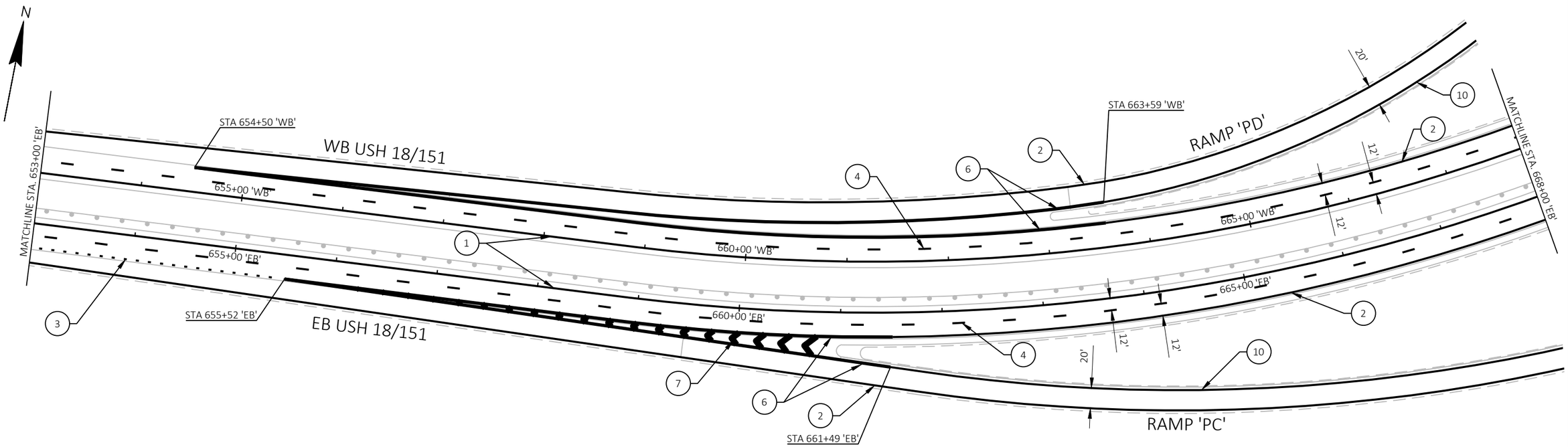

LEGEND

1. MARKING LINE GROOVED WET REFLECTIVE EPOXY 4-INCH (YELLOW)
2. MARKING LINE GROOVED WET REFLECTIVE EPOXY 4-INCH (WHITE)
3. MARKING LINE GROOVED CONTRAST PERMANENT TAPE 4-INCH (WHITE) (3 FT LINE, 9 FT SKIP)
4. MARKING LINE GROOVED CONTRAST PERMANENT TAPE 4-INCH (WHITE) (12.5 FT LINE, 37.5 FT SKIP)
5. MARKING LINE GROOVED CONTRAST PERMANENT TAPE 8-INCH (WHITE) (3 FT LINE, 9 FT SKIP)
6. MARKING LINE GROOVED CONTRAST PERMANENT TAPE 8-INCH (WHITE)
7. MARKING CHEVRON EPOXY 24-INCH (WHITE) 25' SPACING
8. MARKING STOP LINE EPOXY 18-INCH
9. MARKING LINE EPOXY 4-INCH (WHITE)
10. MARKING LINE EPOXY 4-INCH (YELLOW)
11. MARKING WORD EPOXY
12. MARKING ARROW EPOXY
13. MARKING ISLAND NOSE EPOXY
14. MARKING CURB EPOXY
15. MARKING LINE EPOXY 8-INCH (WHITE)

PROJECT NO: 1204-08-65	HWY: USH 18/151	COUNTY: DANE	PAVEMENT MARKING	SHEET 200	E

FILE NAME : G:\WDOTSW\20007-000 USH 18\CIVIL 3D\SHEETSPLAN\024501-PM.DWG
LAYOUT NAME - 21
PLOT DATE : 7/7/2022 3:37 PM
PLOT BY : NATHAN RULLMAN
PLOT NAME :
PLOT SCALE : 1 IN:100 FT
WISDOT/CADDS SHEET 44

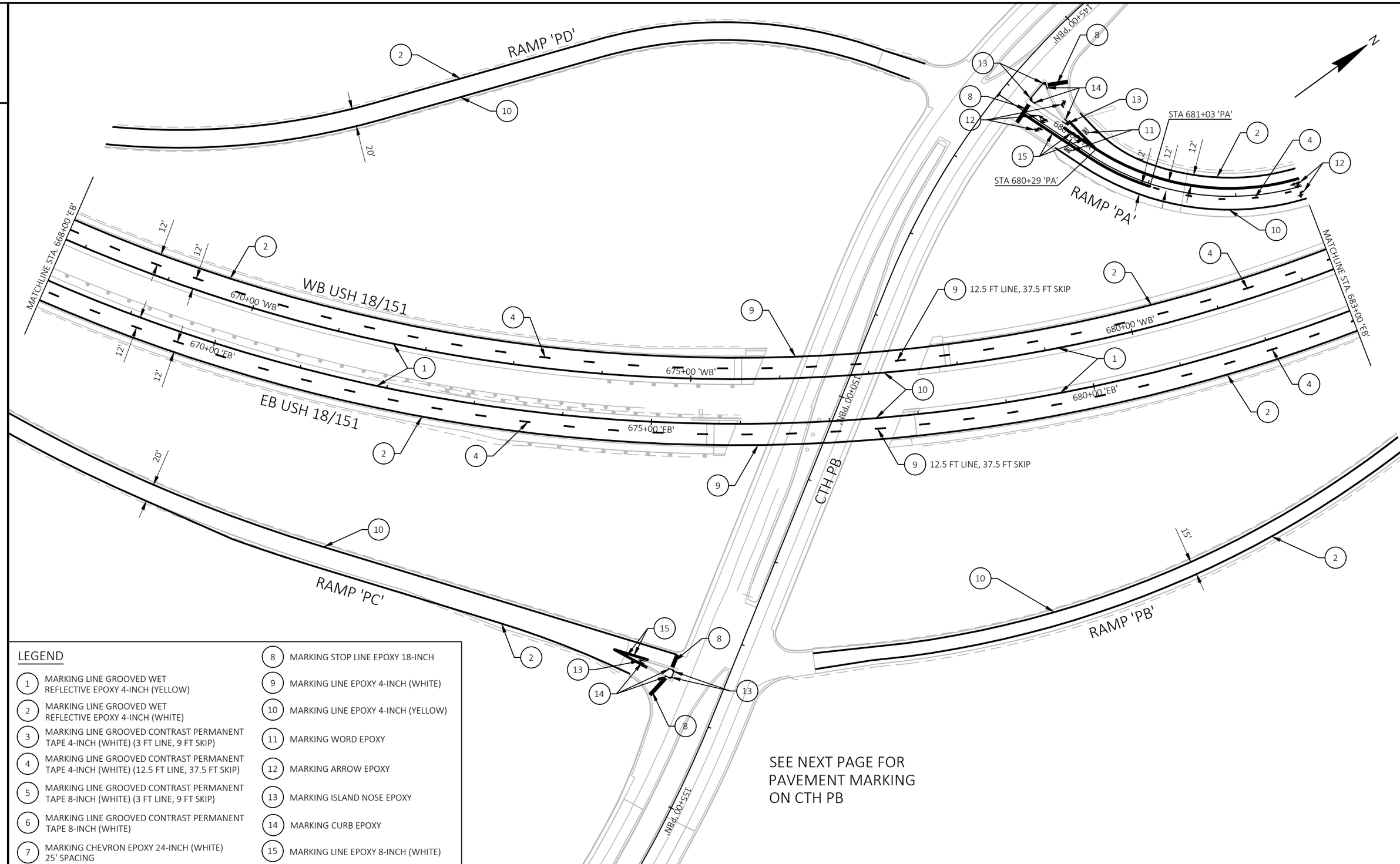

LEGEND

1. MARKING LINE GROOVED WET REFLECTIVE EPOXY 4-INCH (YELLOW)
2. MARKING LINE GROOVED WET REFLECTIVE EPOXY 4-INCH (WHITE)
3. MARKING LINE GROOVED CONTRAST PERMANENT TAPE 4-INCH (WHITE) (3 FT LINE, 9 FT SKIP)
4. MARKING LINE GROOVED CONTRAST PERMANENT TAPE 4-INCH (WHITE) (12.5 FT LINE, 37.5 FT SKIP)
5. MARKING LINE GROOVED CONTRAST PERMANENT TAPE 8-INCH (WHITE) (3 FT LINE, 9 FT SKIP)
6. MARKING LINE GROOVED CONTRAST PERMANENT TAPE 8-INCH (WHITE)
7. MARKING CHEVRON EPOXY 24-INCH (WHITE) 25' SPACING
8. MARKING STOP LINE EPOXY 18-INCH
9. MARKING LINE EPOXY 4-INCH (WHITE)
10. MARKING LINE EPOXY 4-INCH (YELLOW)
11. MARKING WORD EPOXY
12. MARKING ARROW EPOXY
13. MARKING ISLAND NOSE EPOXY
14. MARKING CURB EPOXY
15. MARKING LINE EPOXY 8-INCH (WHITE)

PROJECT NO: 1204-08-65	HWY: USH 18/151	COUNTY: DANE	PAVEMENT MARKING	SHEET 201	E

2

N

RAMP 'PC'

EB USH 18/151

WB USH 18/151

RAMP 'PD'

STA 154+88 'PBN'

STA 153+07 'PBN'

STA 151+09 'PBN'

STA 150+08 'PBN'

STA 148+08 'PBN'

STA 146+70 'PBN'

STA 146+03 'PBN'

STA 152+43 'PBN'

CTH PB

155+00 'PBN'

150+00 'PBN'

145+00 'PBN'

STA 155+11 'PBN'

STA 149+51 'PBN'

STA 152+72 'PBN'

STA 146+98 'PBN'

STA 146+41 'PBN'

STA 144+17 'PBN'

STA 144+17 'PBN'

12.5 FT LINE, 37.5 FT SKIP

12.5 FT LINE, 37.5 FT SKIP

10'

12'

12'

12'

12'

10'

RAMP 'PB'

RAMP 'PA'

LEGEND

1. MARKING LINE GROOVED WET REFLECTIVE EPOXY 4-INCH (YELLOW)
2. MARKING LINE GROOVED WET REFLECTIVE EPOXY 4-INCH (WHITE)
3. MARKING LINE GROOVED CONTRAST PERMANENT TAPE 4-INCH (WHITE) (3 FT LINE, 9 FT SKIP)
4. MARKING LINE GROOVED CONTRAST PERMANENT TAPE 4-INCH (WHITE) (12.5 FT LINE, 37.5 FT SKIP)
5. MARKING LINE GROOVED CONTRAST PERMANENT TAPE 8-INCH (WHITE) (3 FT LINE, 9 FT SKIP)
6. MARKING LINE GROOVED CONTRAST PERMANENT TAPE 8-INCH (WHITE)
7. MARKING CHEVRON EPOXY 24-INCH (WHITE) 25' SPACING
8. MARKING STOP LINE EPOXY 18-INCH
9. MARKING LINE EPOXY 4-INCH (WHITE)
10. MARKING LINE EPOXY 4-INCH (YELLOW)
11. MARKING WORD EPOXY
12. MARKING ARROW EPOXY
13. MARKING ISLAND NOSE EPOXY
14. MARKING CURB EPOXY
15. MARKING LINE EPOXY 8-INCH (WHITE)

PROJECT NO: 1204-08-65	HWY: USH 18/151	COUNTY: DANE	PAVEMENT MARKING	SHEET 202	E

FILE NAME : G:\WDOTSW\20007-000 USH 18\CIVIL 3D\SHEETSPLAN\024501-PM.DWG
LAYOUT NAME - CTH PB
PLOT DATE : 7/7/2022 3:37 PM
PLOT BY : NATHAN RULLMAN
PLOT NAME :
PLOT SCALE : 1 IN:100 FT
WISDOT/CADDS SHEET 42

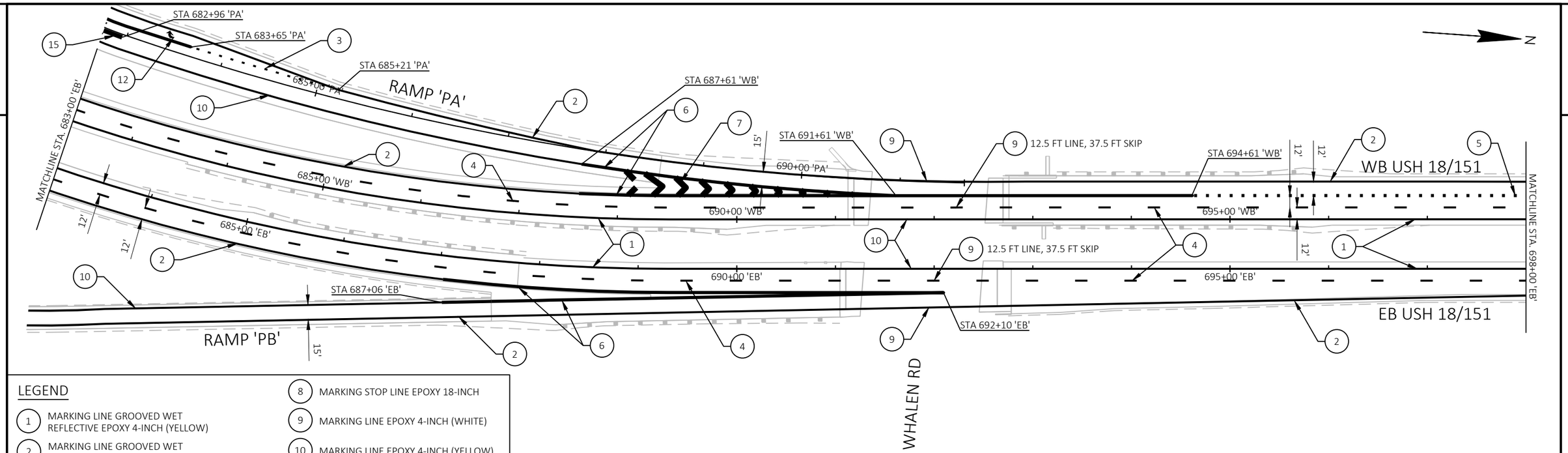

LEGEND

1. MARKING LINE GROOVED WET REFLECTIVE EPOXY 4-INCH (YELLOW)
2. MARKING LINE GROOVED WET REFLECTIVE EPOXY 4-INCH (WHITE)
3. MARKING LINE GROOVED CONTRAST PERMANENT TAPE 4-INCH (WHITE) (3 FT LINE, 9 FT SKIP)
4. MARKING LINE GROOVED CONTRAST PERMANENT TAPE 4-INCH (WHITE) (12.5 FT LINE, 37.5 FT SKIP)
5. MARKING LINE GROOVED CONTRAST PERMANENT TAPE 8-INCH (WHITE) (3 FT LINE, 9 FT SKIP)
6. MARKING LINE GROOVED CONTRAST PERMANENT TAPE 8-INCH (WHITE)
7. MARKING CHEVRON EPOXY 24-INCH (WHITE) 25' SPACING
8. MARKING STOP LINE EPOXY 18-INCH
9. MARKING LINE EPOXY 4-INCH (WHITE)
10. MARKING LINE EPOXY 4-INCH (YELLOW)
11. MARKING WORD EPOXY
12. MARKING ARROW EPOXY
13. MARKING ISLAND NOSE EPOXY
14. MARKING CURB EPOXY
15. MARKING LINE EPOXY 8-INCH (WHITE)

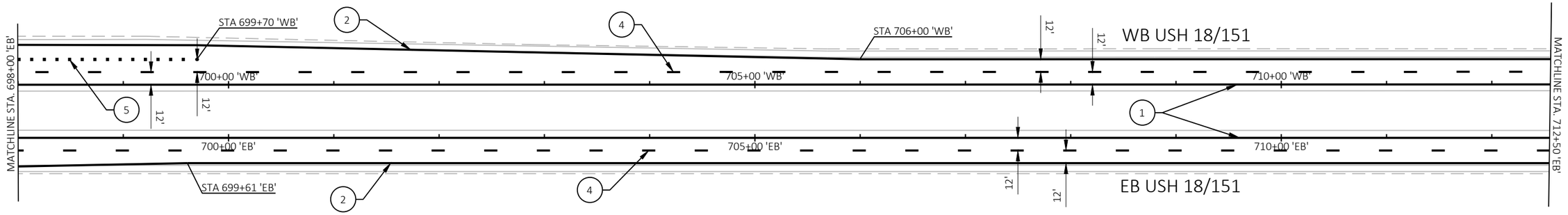

PROJECT NO: 1204-08-65	HWY: USH 18/151	COUNTY: DANE	PAVEMENT MARKING	SHEET 203	E

2

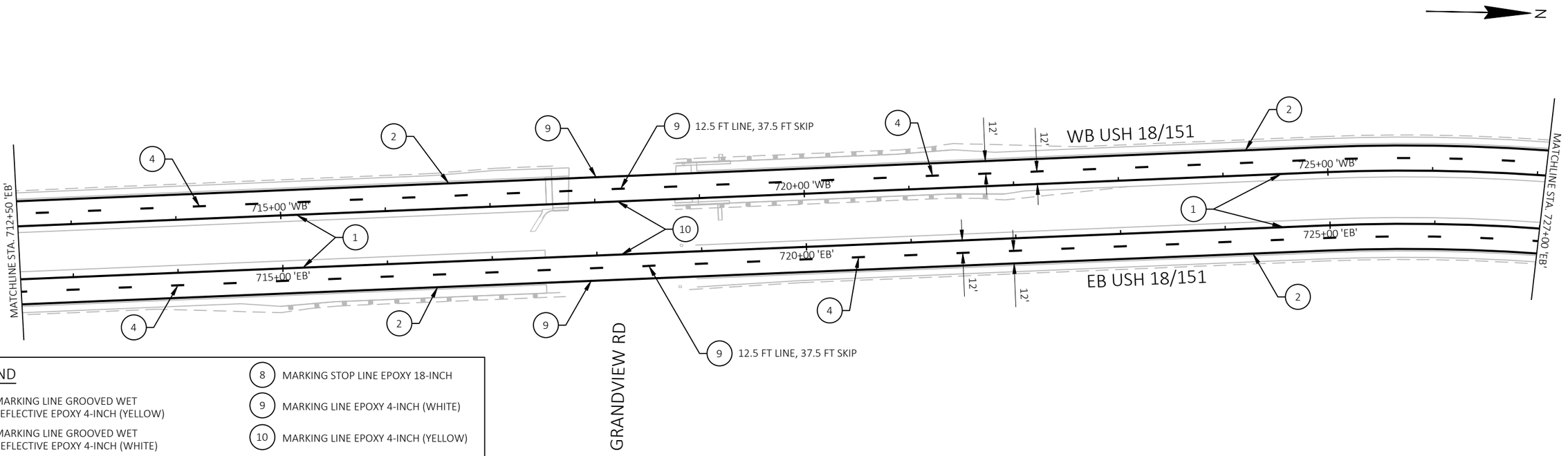

LEGEND

1. MARKING LINE GROOVED WET REFLECTIVE EPOXY 4-INCH (YELLOW)
2. MARKING LINE GROOVED WET REFLECTIVE EPOXY 4-INCH (WHITE)
3. MARKING LINE GROOVED CONTRAST PERMANENT TAPE 4-INCH (WHITE) (3 FT LINE, 9 FT SKIP)
4. MARKING LINE GROOVED CONTRAST PERMANENT TAPE 4-INCH (WHITE) (12.5 FT LINE, 37.5 FT SKIP)
5. MARKING LINE GROOVED CONTRAST PERMANENT TAPE 8-INCH (WHITE) (3 FT LINE, 9 FT SKIP)
6. MARKING LINE GROOVED CONTRAST PERMANENT TAPE 8-INCH (WHITE)
7. MARKING CHEVRON EPOXY 24-INCH (WHITE) 25' SPACING
8. MARKING STOP LINE EPOXY 18-INCH
9. MARKING LINE EPOXY 4-INCH (WHITE)
10. MARKING LINE EPOXY 4-INCH (YELLOW)
11. MARKING WORD EPOXY
12. MARKING ARROW EPOXY
13. MARKING ISLAND NOSE EPOXY
14. MARKING CURB EPOXY
15. MARKING LINE EPOXY 8-INCH (WHITE)

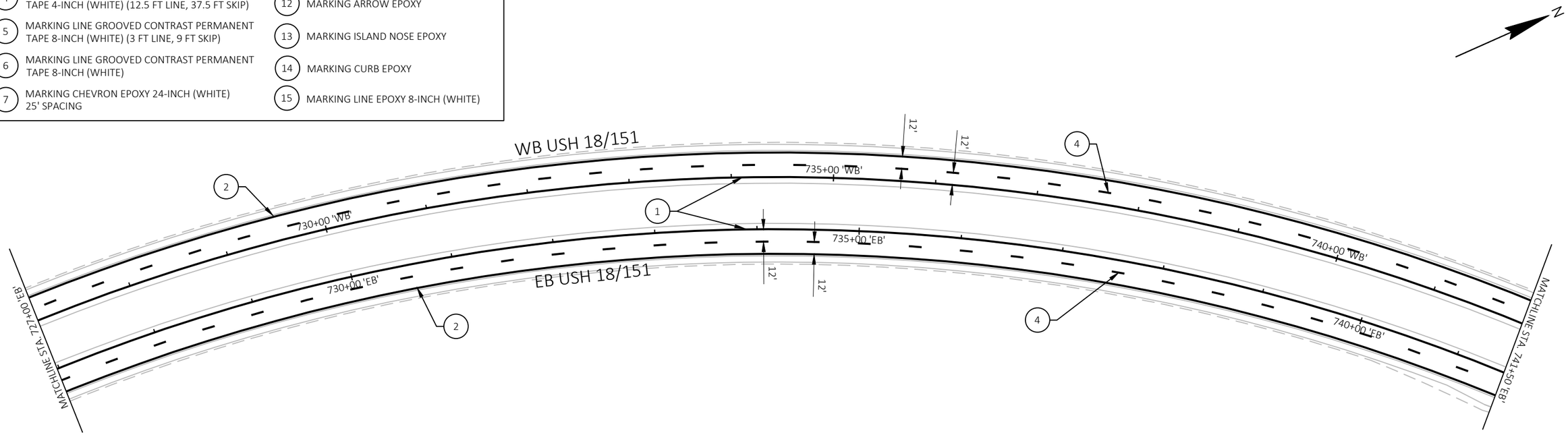

PROJECT NO: 1204-08-65	HWY: USH 18/151	COUNTY: DANE	PAVEMENT MARKING	SHEET 204	E

FILE NAME : G:\WDOTSW\20007-000 USH 18\CIVIL 3D\SHEETSPLAN\024501-PM.DWG
LAYOUT NAME - 24

PLOT DATE : 7/7/2022 3:37 PM PLOT BY : NATHAN RULLMAN PLOT NAME : PLOT SCALE : 1 IN:100 FT

2

LEGEND

1. MARKING LINE GROOVED WET REFLECTIVE EPOXY 4-INCH (YELLOW)
2. MARKING LINE GROOVED WET REFLECTIVE EPOXY 4-INCH (WHITE)
3. MARKING LINE GROOVED CONTRAST PERMANENT TAPE 4-INCH (WHITE) (3 FT LINE, 9 FT SKIP)
4. MARKING LINE GROOVED CONTRAST PERMANENT TAPE 4-INCH (WHITE) (12.5 FT LINE, 37.5 FT SKIP)
5. MARKING LINE GROOVED CONTRAST PERMANENT TAPE 8-INCH (WHITE) (3 FT LINE, 9 FT SKIP)
6. MARKING LINE GROOVED CONTRAST PERMANENT TAPE 8-INCH (WHITE)
7. MARKING CHEVRON EPOXY 24-INCH (WHITE) 25' SPACING
8. MARKING STOP LINE EPOXY 18-INCH
9. MARKING LINE EPOXY 4-INCH (WHITE)
10. MARKING LINE EPOXY 4-INCH (YELLOW)
11. MARKING WORD EPOXY
12. MARKING ARROW EPOXY
13. MARKING ISLAND NOSE EPOXY
14. MARKING CURB EPOXY
15. MARKING LINE EPOXY 8-INCH (WHITE)

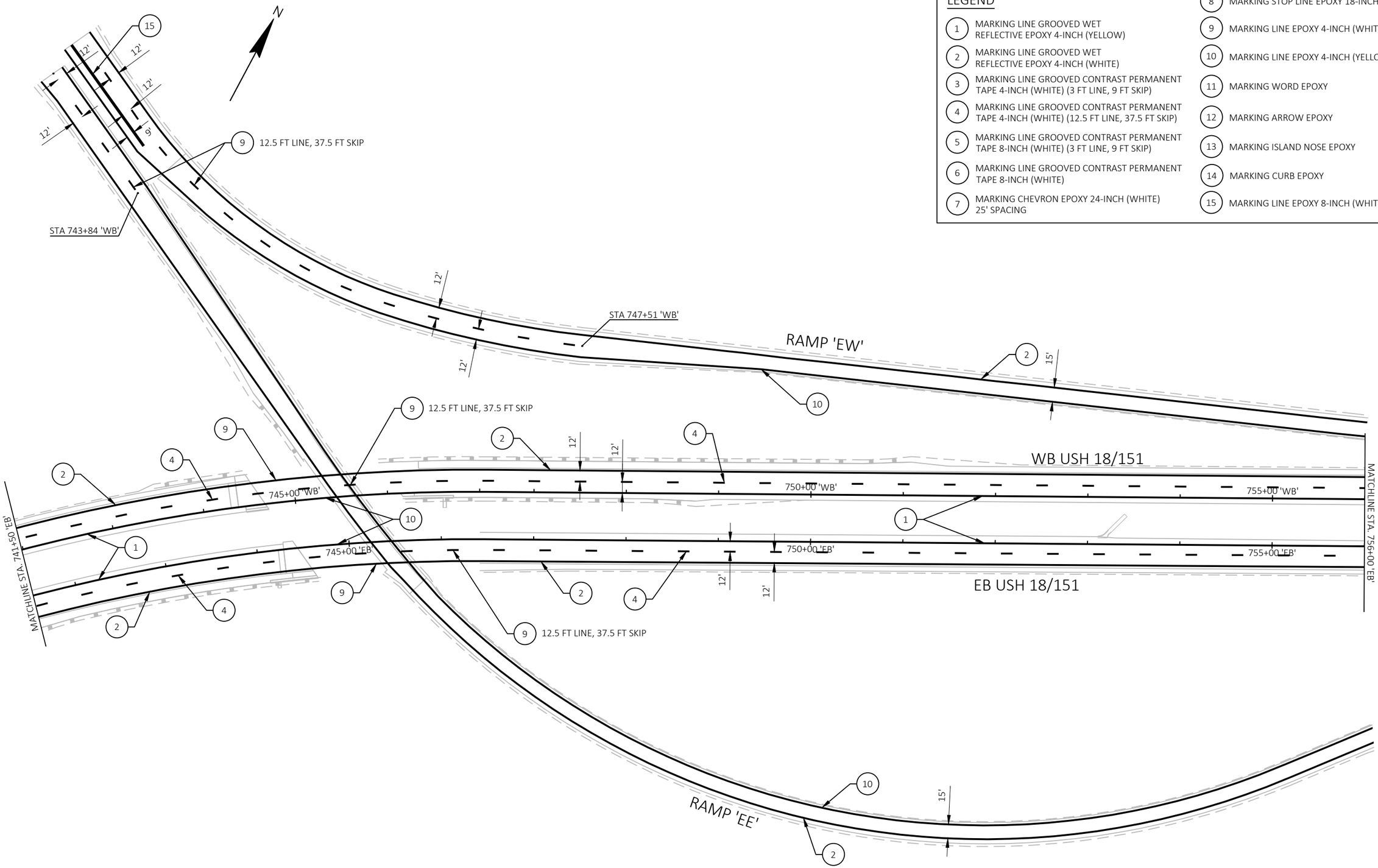

PROJECT NO: 1204-08-65	HWY: USH 18/151	COUNTY: DANE	PAVEMENT MARKING	SHEET 205	E

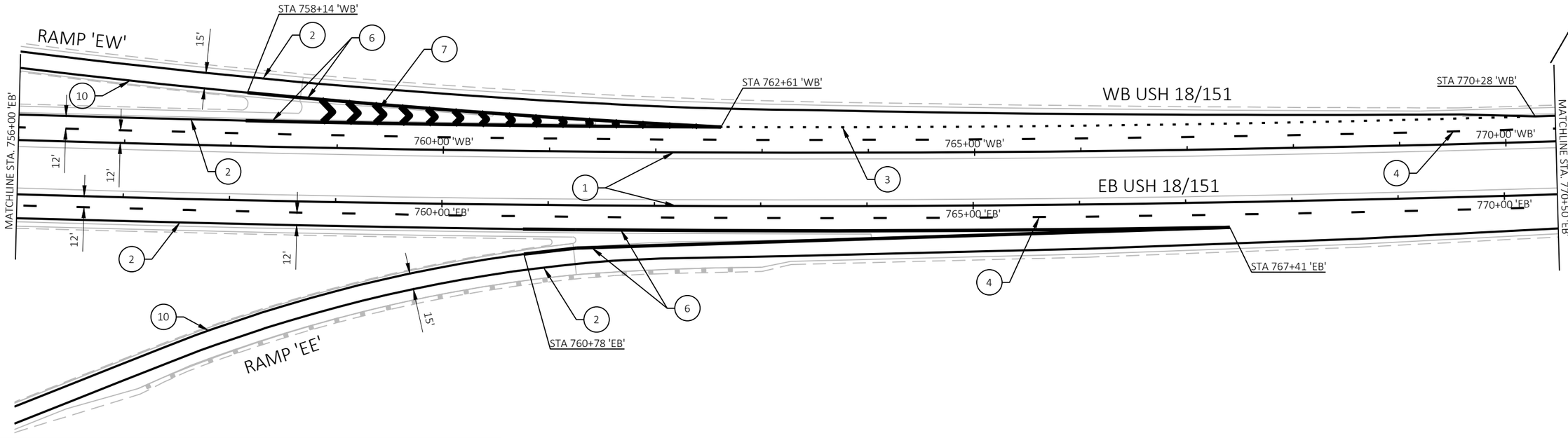

LEGEND

1. MARKING LINE GROOVED WET REFLECTIVE EPOXY 4-INCH (YELLOW)
2. MARKING LINE GROOVED WET REFLECTIVE EPOXY 4-INCH (WHITE)
3. MARKING LINE GROOVED CONTRAST PERMANENT TAPE 4-INCH (WHITE) (3 FT LINE, 9 FT SKIP)
4. MARKING LINE GROOVED CONTRAST PERMANENT TAPE 4-INCH (WHITE) (12.5 FT LINE, 37.5 FT SKIP)
5. MARKING LINE GROOVED CONTRAST PERMANENT TAPE 8-INCH (WHITE) (3 FT LINE, 9 FT SKIP)
6. MARKING LINE GROOVED CONTRAST PERMANENT TAPE 8-INCH (WHITE)
7. MARKING CHEVRON EPOXY 24-INCH (WHITE) 25' SPACING
8. MARKING STOP LINE EPOXY 18-INCH
9. MARKING LINE EPOXY 4-INCH (WHITE)
10. MARKING LINE EPOXY 4-INCH (YELLOW)
11. MARKING WORD EPOXY
12. MARKING ARROW EPOXY
13. MARKING ISLAND NOSE EPOXY
14. MARKING CURB EPOXY
15. MARKING LINE EPOXY 8-INCH (WHITE)

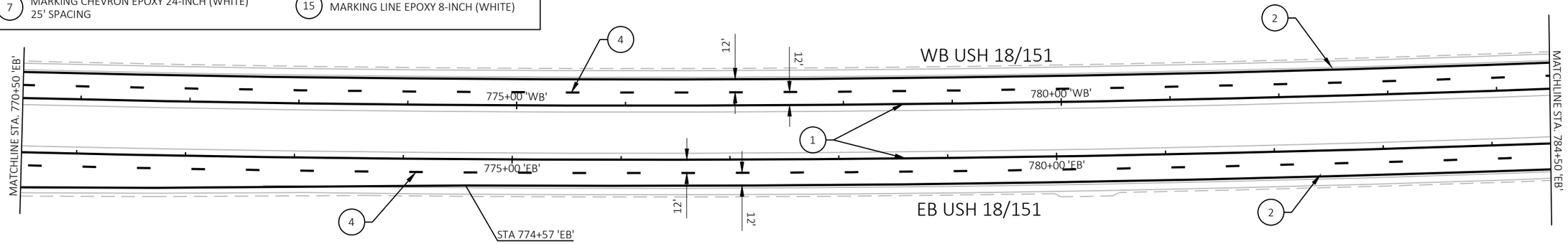

PROJECT NO: 1204-08-65	HWY: USH 18/151	COUNTY: DANE	PAVEMENT MARKING	SHEET 206	E

2

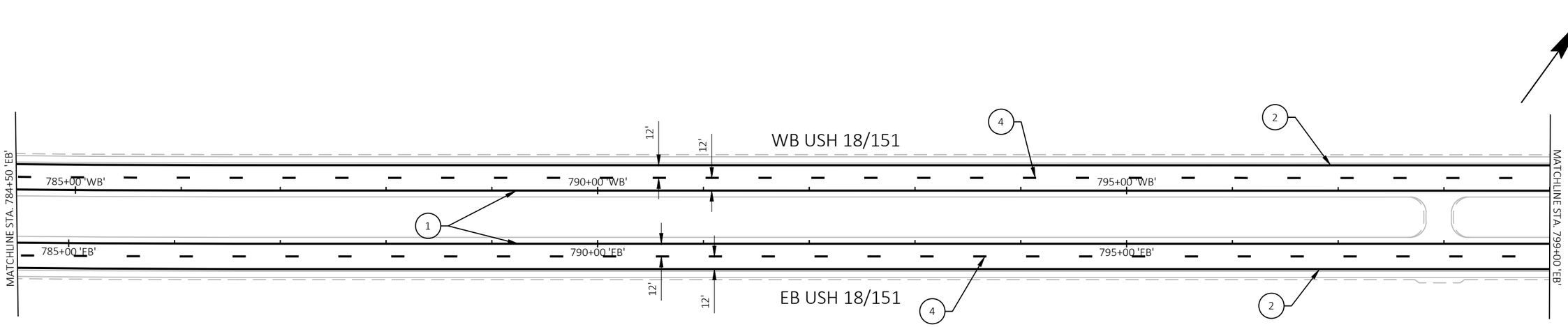

LEGEND

1. MARKING LINE GROOVED WET REFLECTIVE EPOXY 4-INCH (YELLOW)
2. MARKING LINE GROOVED WET REFLECTIVE EPOXY 4-INCH (WHITE)
3. MARKING LINE GROOVED CONTRAST PERMANENT TAPE 4-INCH (WHITE) (3 FT LINE, 9 FT SKIP)
4. MARKING LINE GROOVED CONTRAST PERMANENT TAPE 4-INCH (WHITE) (12.5 FT LINE, 37.5 FT SKIP)
5. MARKING LINE GROOVED CONTRAST PERMANENT TAPE 8-INCH (WHITE) (3 FT LINE, 9 FT SKIP)
6. MARKING LINE GROOVED CONTRAST PERMANENT TAPE 8-INCH (WHITE)
7. MARKING CHEVRON EPOXY 24-INCH (WHITE) 25' SPACING
8. MARKING STOP LINE EPOXY 18-INCH
9. MARKING LINE EPOXY 4-INCH (WHITE)
10. MARKING LINE EPOXY 4-INCH (YELLOW)
11. MARKING WORD EPOXY
12. MARKING ARROW EPOXY
13. MARKING ISLAND NOSE EPOXY
14. MARKING CURB EPOXY
15. MARKING LINE EPOXY 8-INCH (WHITE)

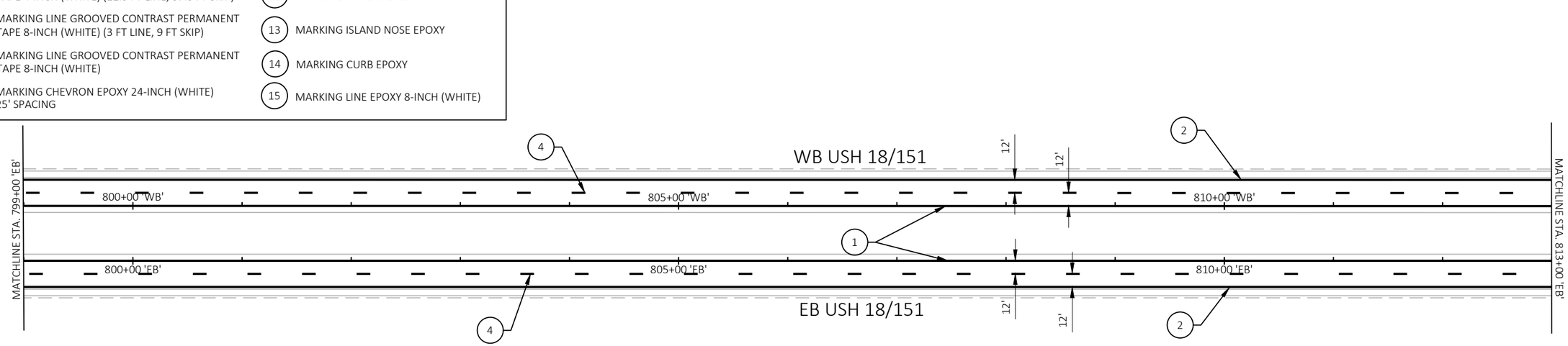

PROJECT NO: 1204-08-65	HWY: USH 18/151	COUNTY: DANE	PAVEMENT MARKING	SHEET 207	E

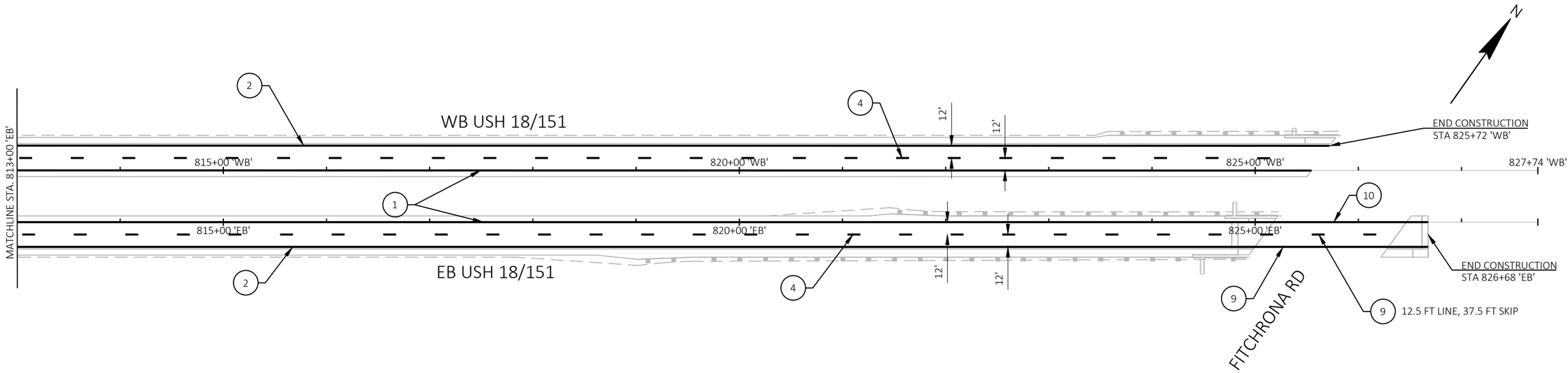

LEGEND

1. MARKING LINE GROOVED WET REFLECTIVE EPOXY 4-INCH (YELLOW)
2. MARKING LINE GROOVED WET REFLECTIVE EPOXY 4-INCH (WHITE)
3. MARKING LINE GROOVED CONTRAST PERMANENT TAPE 4-INCH (WHITE) (3 FT LINE, 9 FT SKIP)
4. MARKING LINE GROOVED CONTRAST PERMANENT TAPE 4-INCH (WHITE) (12.5 FT LINE, 37.5 FT SKIP)
5. MARKING LINE GROOVED CONTRAST PERMANENT TAPE 8-INCH (WHITE) (3 FT LINE, 9 FT SKIP)
6. MARKING LINE GROOVED CONTRAST PERMANENT TAPE 8-INCH (WHITE)
7. MARKING CHEVRON EPOXY 24-INCH (WHITE) 25' SPACING
8. MARKING STOP LINE EPOXY 18-INCH
9. MARKING LINE EPOXY 4-INCH (WHITE)
10. MARKING LINE EPOXY 4-INCH (YELLOW)
11. MARKING WORD EPOXY
12. MARKING ARROW EPOXY
13. MARKING ISLAND NOSE EPOXY
14. MARKING CURB EPOXY
15. MARKING LINE EPOXY 8-INCH (WHITE)

PROJECT NO: 1204-08-65	HWY: USH 18/151	COUNTY: DANE	PAVEMENT MARKING	SHEET 208	E

LEGEND

- CONTROL CABINET
- EXISTING CONDUIT AND WIRING
- SIGNAL HEAD, TRAFFIC SIGNAL STANDARD, PEDESTAL BASE
- (XX) SIGNAL HEAD, TRAFFIC SIGNAL POLE, TRANSFORMER BASE
- LUMINAIRE, TRAFFIC POLE, TRANSFORMER BASE
- LOOP DETECTOR TO BE ABANDONED
- PULL BOX, 12"X24"
- PULL BOX, 18"X24"
- PULL BOX, 24"X36"
- TRAFFIC SIGNAL HEAD

NOTE: BOLD REPRESENTS ITEMS TO BE REMOVED OR ABANDONED OR SALVAGED

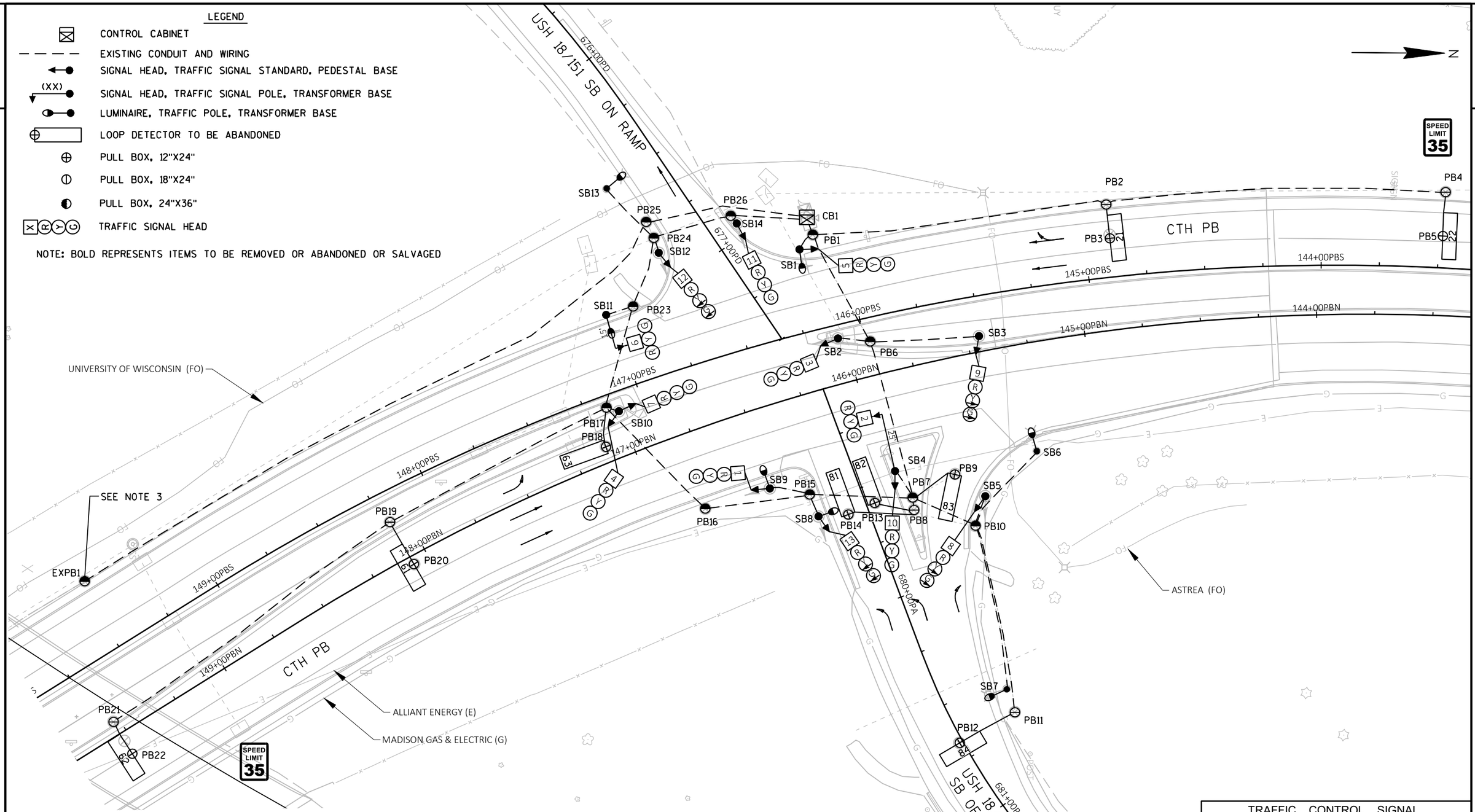

CONSTRUCTION NOTES:

1) THE LOCATION OF EXISTING AND PROPOSED UTILITY INSTALLATIONS ARE APPROXIMATE. THERE MAY BE OTHER UTILITY INSTALLATIONS WITHIN THE PROJECT AREA WHICH ARE NOT SHOWN.

2) THE LOCATION OF SIGNAL EQUIPMENT IS BASED ON COMBINATION OF FIELD SURVEY AND AS-BUILT DRAWINGS.

3) SALVAGE SPLICE CASE AT EXPB1 AND PRESERVE FOR REUSE PER SPV.0060.05. SEVER EXISTING SPLICES CONTAINED IN EXPB1. CAREFULLY PULL EXISTING 12-CT FIBER CABLE TOWARDS THE NB RAMP TERMINAL SIGNAL CABINET TO NEAREST PULL BOX TO REMAIN. CAREFULLY REMOVE EXISTING PRE TERMINATED FIBER OPTIC PIGTAIL RUNNING FROM EXPB1 TO CB1 AND SALVAGE TO THE DEPARTMENT.

TRAFFIC CONTROL SIGNAL
USH 18/151 SB RAMPS
CITY OF VERONA
DANE COUNTY

SIGNAL NO. S13-0571

REGION CONTACT: COLLIN WEBB
DESIGNED BY: KL ENGINEERING
REVISED BY:

PAGE 1 OF 1

PROJECT NO: 1204-08-65	HWY: USH 18/151	COUNTY: DANE	TRAFFIC SIGNAL REMOVAL PLAN	SHEET 209	E

LEGEND

- CONTROL CABINET
- OVERHEAD SIGNAL CABLE
- CLASS 4 WOOD POLE
- LUMINAIRE & ARM
- SIGNAL HEAD
- TEMPORARY SIGNAL BASE
- TRAFFIC SIGNAL HEAD
- BAGGED TRAFFIC SIGNAL HEAD
- EVP DESIGNATOR
- EVP DETECTOR HEAD
- NON-INTRUSIVE DETECTION ZONE
- LANE CLOSED TO TRAFFIC
- LANE DESIGNATION FOR INFO ONLY

NOTES:

- ALL LENSES ARE 12-INCH
- GRAYSHADE REPRESENTS EXISTING
- THIS CONFIGURATION SHALL OPERATE WHEN PERMANENT TRAFFIC SIGNALS ARE NOT OPERATING AND WHEN NO LANE CLOSURES ARE IMPLEMENTED. SEE CONSTRUCTION NOTES FOR OPERATIONS DURING RAMP CLOSURES.

ITEM	STATION	OFFSET
WP1	146+00.8 'PBS'	40.0' RT
WP2	145+91.8 'PBN'	51.4' LT
WP3	145+45.2 'PBN'	56.3' LT
WP4	146+86.2 'PBN'	33.7' LT
WP5	146+97.0 'PBS'	35.5' RT

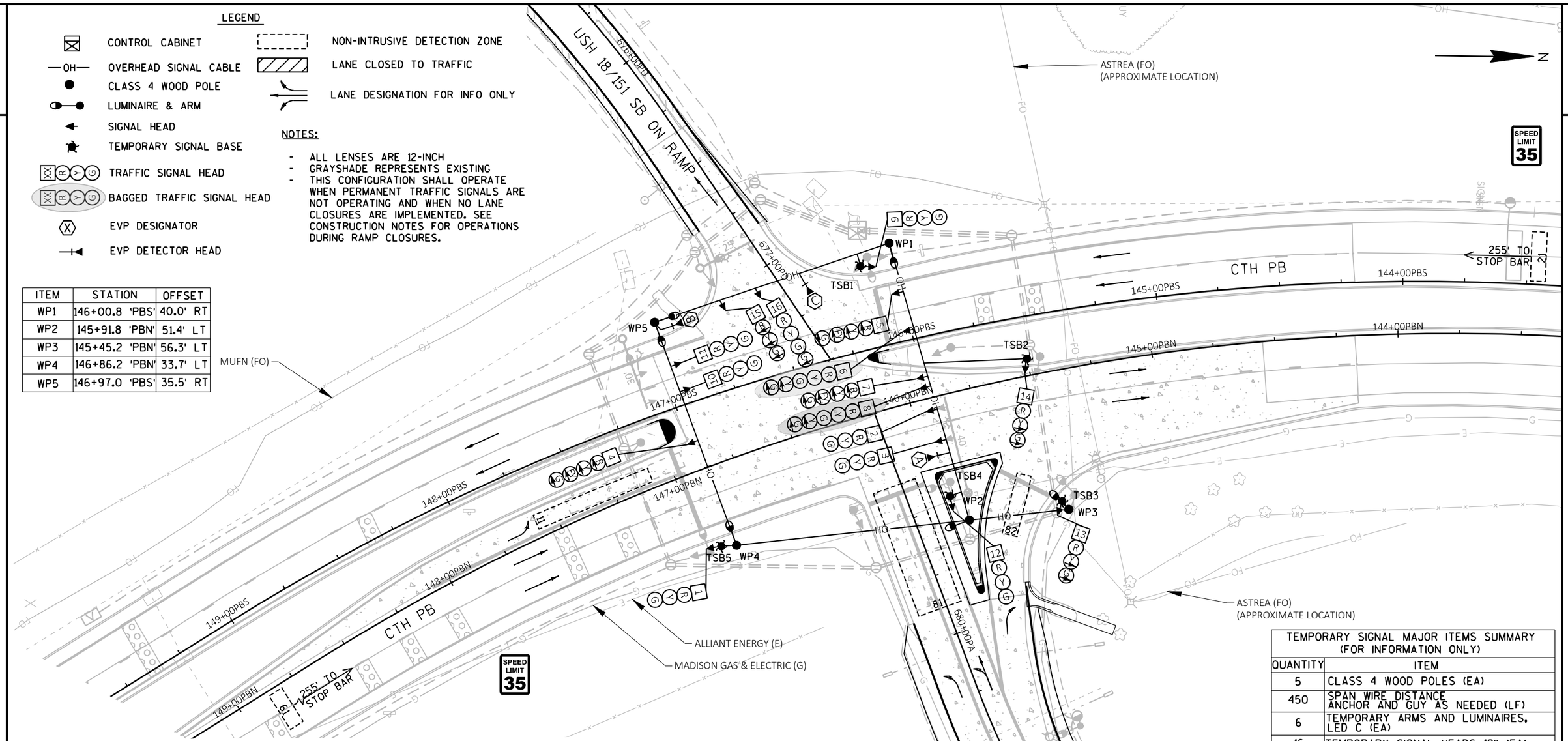

CONSTRUCTION NOTES:

1) THE LOCATION OF EXISTING AND PROPOSED UTILITY INSTALLATIONS ARE APPROXIMATE. THERE MAY BE OTHER UTILITY INSTALLATIONS WITHIN THE PROJECT AREA WHICH ARE NOT SHOWN.

2) THE FINAL LOCATIONS OF WOOD POLES, SIGNAL HEADS, AND TEMPORARY CABINET SHALL BE AS DIRECTED BY THE ENGINEER. USE CAUTION WHEN LOCATING WOOD POLES WITH THE STAKING INFORMATION SHOWN.

3) GUYING OF WOOD POLES IS REQUIRED AS SHOWN IN THE STANDARD DETAIL DRAWINGS AND LOCATIONS SHALL BE APPROVED BY THE ENGINEER. MULTIPLE ADJUSTMENTS MAY BE REQUIRED AND ARE CONSIDERED INCIDENTAL TO THE TEMPORARY TRAFFIC SIGNAL BID ITEM.

4) NEAR RIGHT SIGNAL HEADS SHALL BE MOUNTED BETWEEN THE SPAN AND THE TETHER WIRES UNLESS SHOWN ON TEMPORARY SIGNAL BASES.

5) USE CAUTION IN ALL STAGES TO ENSURE THAT NO SIGNAL EQUIPMENT IS OBSCURED FROM VIEW BY OTHER TEMPORARY SIGNAL EQUIPMENT AS WELL AS ANY OTHER OBSTRUCTION.

6) ENSURE OVERHEAD SPANS HAVE SUFFICIENT VERTICAL CLEARANCE OVER THE ROADWAY. ADDITIONAL TRAFFIC CONTROL DEVICES MAY BE USED TO PROTECT WOOD POLE LOCATIONS.

7) WHEN BOTH RAMPS ARE CLOSED, HEADS 4-6 AND 10-14 SHALL BE BAGGED AND SIGNAL SHALL OPERATE UNDER YELLOW FLASH FOR THROUGH MOVEMENTS ON CTH PB AND RED FLASH FOR ALL OTHER MOVEMENTS. AT ALL OTHER TIMES THE SIGNAL SHALL OPERATE UNDER STOP AND GO OPERATIONS AND BE CONFIGURED WITH RED-RED CABINET AND CONTROLLER FLASH.

8) THE CONTRACTOR SHALL MOVE SIGNAL HEADS WITH EACH STAGING CHANGE TO MAINTAIN MUTCD COMPLIANCE AND SIGNAL HEAD PLACEMENT.

TEMPORARY SIGNAL MAJOR ITEMS SUMMARY (FOR INFORMATION ONLY)	
QUANTITY	ITEM
5	CLASS 4 WOOD POLES (EA)
450	SPAN WIRE DISTANCE ANCHOR AND GUY AS NEEDED (LF)
6	TEMPORARY ARMS AND LUMINAIRES, LED C (EA)
16	TEMPORARY SIGNAL HEADS 12" (EA)
5	TEMPORARY SIGNAL BASES (EA)
1	NON-INTRUSIVE DETECTION SYSTEM (EA)
1	EMERGENCY VEHICLE PREEMPTION SYSTEM (EA)
1	TEMPORARY CONTROL CABINET AND BASE (EA)

TRAFFIC CONTROL SIGNAL
USH 18/151 & CTH PB
CITY OF VERONA
DANE COUNTY

SIGNAL NO. TEMP

REGION CONTACT: COLLIN WEBB
DESIGNED BY: KL ENGINEERING
REVISED BY:

PROJECT NO: 1204-08-65	HWY: USH 18/151	COUNTY: DANE	TEMPORARY TRAFFIC SIGNAL PLAN - NO TRAFFIC CONTROL AND RAMP CLOSURES	SHEET 210	E

FILE NAME : G:\WDOTSW\20007-000 USH 18\CIVIL 3D\SHEETSPLAN\024101-ST.DWG PLOT DATE : 7/21/2022 11:01 AM PLOT BY : KL ENGINEERING PLOT NAME : PLOT SCALE : 1 IN:40 FT
WISDOT/CADDS SHEET 42

LEGEND

- CONTROL CABINET
- OVERHEAD SIGNAL CABLE
- CLASS 4 WOOD POLE
- LUMINAIRE & ARM
- SIGNAL HEAD
- TEMPORARY SIGNAL BASE
- TRAFFIC SIGNAL HEAD
- BAGGED TRAFFIC SIGNAL HEAD
- EVP DESIGNATOR
- EVP DETECTOR HEAD
- NON-INTRUSIVE DETECTION ZONE
- LANE CLOSED TO TRAFFIC
- LANE DESIGNATION FOR INFO ONLY

NOTES:

- ALL LENSES ARE 12-INCH
- GRAYSHADE REPRESENTS EXISTING

USH 18/151 SB ON RAMP
676+00PD
677+00PBOH
WP1
TSB1
WP5
CTH PB
255' TO STOP BAR
144+00PBS
145+00PBS
144+00PBN
145+00PBN
146+00PBS
146+00PBN
147+00PBS
147+00PBN
148+00PBS
148+00PBN
149+00PBS
149+00PBN
MUFN (FO)
TSB2
TSB4
WP2
TSB3
WP3
TSB5
WP4
ASTREA (FO)
(APPROXIMATE LOCATION)
SPEED LIMIT 35
ALLIANT ENERGY (E)
MADISON GAS & ELECTRIC (G)
ASTREA (FO)
(APPROXIMATE LOCATION)
680+00PA
681+00PA
USH 18/151 SB OFF RAMP
N

TRAFFIC CONTROL SIGNAL
USH 18/151 & CTH PB
CITY OF VERONA
DANE COUNTY

SIGNAL NO. TEMP

REGION CONTACT: COLLIN WEBB
DESIGNED BY: KL ENGINEERING
REVISED BY:

PAGE 2 OF 4

PROJECT NO: 1204-08-65	HWY: USH 18/151	COUNTY: DANE	TEMPORARY TRAFFIC SIGNAL PLAN - STAGE 2 PHASE 1	SHEET 211	E

FILE NAME : G:\WDOTSW\20007-000 USH 18\CIVIL 3D\SHEETSPLAN\024101-ST.DWG PLOT DATE : 7/21/2022 11:03 AM PLOT BY : KL ENGINEERING PLOT NAME : PLOT SCALE : 1 IN:40 FT

WISDOT/CADDS SHEET 42

LEGEND

- CONTROL CABINET
- OVERHEAD SIGNAL CABLE (—OH—)
- CLASS 4 WOOD POLE
- LUMINAIRE & ARM
- SIGNAL HEAD
- TEMPORARY SIGNAL BASE
- TRAFFIC SIGNAL HEAD
- BAGGED TRAFFIC SIGNAL HEAD
- EVP DESIGNATOR
- EVP DETECTOR HEAD
- NON-INTRUSIVE DETECTION ZONE
- LANE CLOSED TO TRAFFIC
- LANE DESIGNATION FOR INFO ONLY

NOTES:

- ALL LENSES ARE 12-INCH
- GRAYSHADE REPRESENTS EXISTING

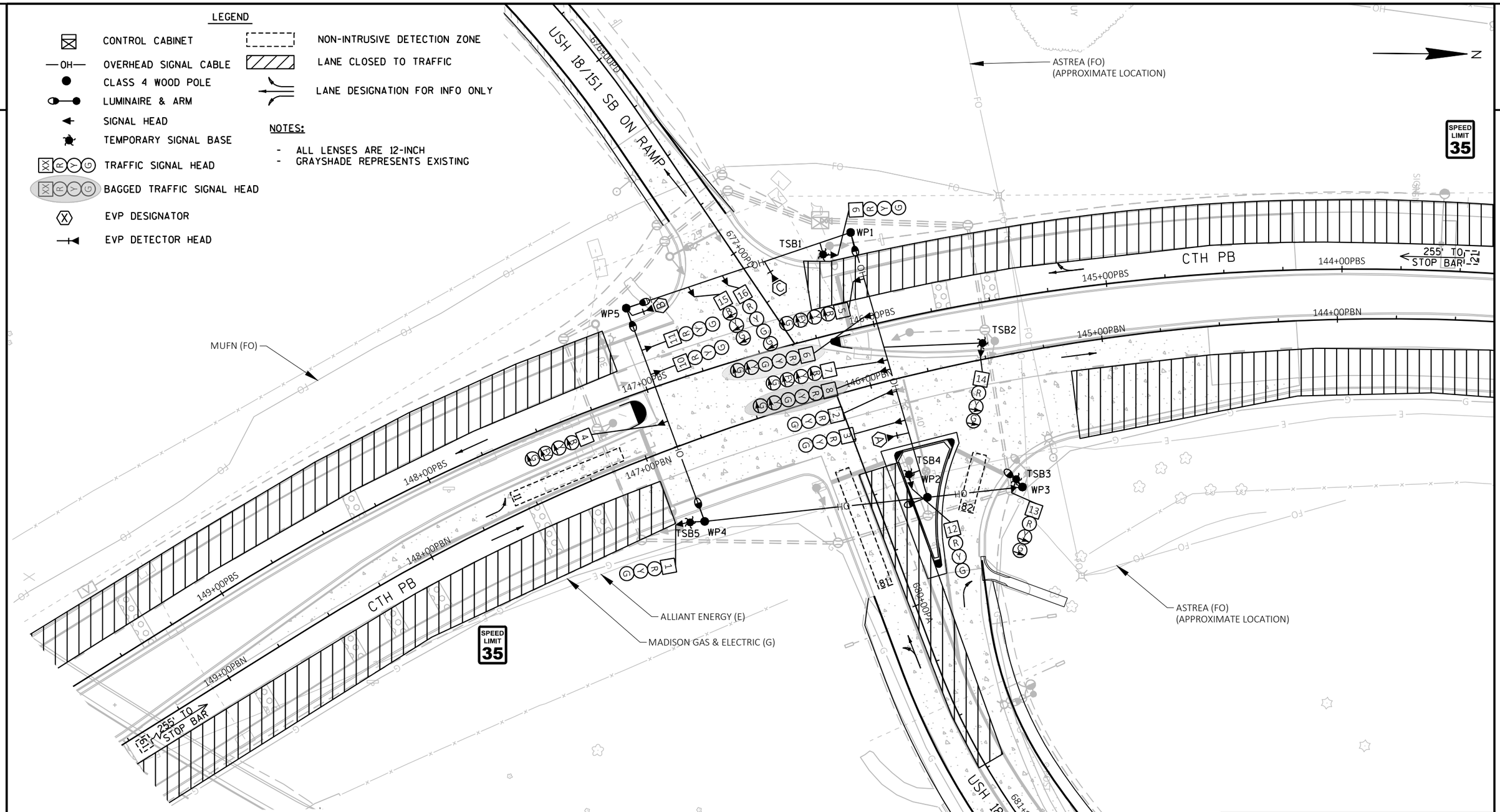

TRAFFIC CONTROL SIGNAL
USH 18/151 & CTH PB
CITY OF VERONA
DANE COUNTY

SIGNAL NO. TEMP

REGION CONTACT: COLLIN WEBB
DESIGNED BY: KL ENGINEERING
REVISED BY:

PAGE 3 OF 4

PROJECT NO: 1204-08-65	HWY: USH 18/151	COUNTY: DANE	TEMPORARY TRAFFIC SIGNAL PLAN - STAGE 2 PHASE 2	SHEET 212	E

FILE NAME : G:\WDOTSW\20007-000 USH 18\CIVIL 3D\SHEETSPLAN\024101-ST.DWG PLOT DATE : 7/21/2022 11:05 AM PLOT BY : KL ENGINEERING PLOT NAME : PLOT SCALE : 1 IN:40 FT

WISDOT/CADDS SHEET 42

	HEAD NUMBERS	FLASH
φ1	4-8	R
φ2	9-11	R*
φ3		
φ4		
φ5		
φ6	1-3,6,8	R*
φ7		
φ8	13-16	R
φ2 PED		
φ4 PED		
φ6 PED		
φ8 PED		

O.L. ASSIGNMENTS			
O.L.A			
O.L.B			
O.L.C			
O.L.D			
O.L.E	4,5,7	-	02
O.L.F			
O.L.G			
O.L.H			

NOTES:
* YELLOW FLASH WHEN BOTH RAMPS ARE CLOSED TO TRAFFIC.

GENERAL NOTES
1. O.L.E SHALL BE OMITTED WHEN LEFT TURN LANE CLOSED AND LEFT TURN TRAFFIC UTILIZES A SHARED LEFT-THROUGH LANE.
2. MAINLINE THROUGH HEADS SHALL FLASH YELLOW WHEN BOTH RAMPS ARE CLOSED AND ONLY THOSE MOVEMENTS REMAIN. SIGNAL SHALL OPERATE WITH STOP AND GO OPERATION AT ALL OTHER TIMES WITH RED-RED CONTROLLER AND CABINET FLASH.

N

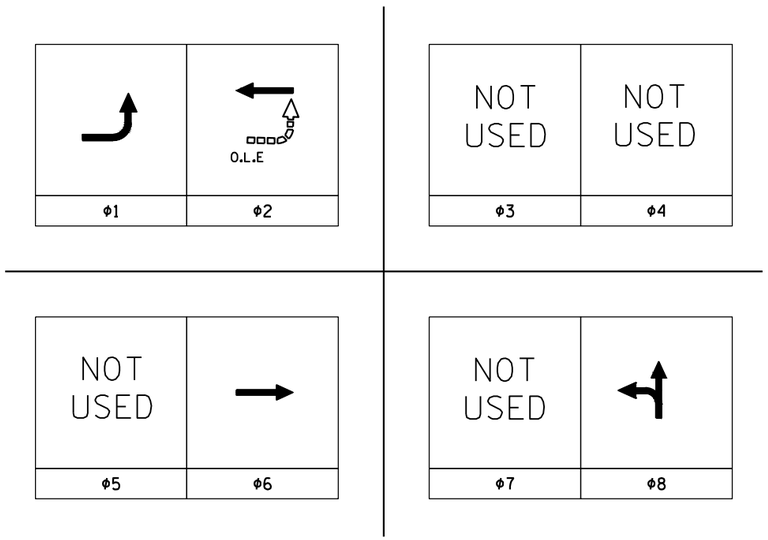

LEGEND

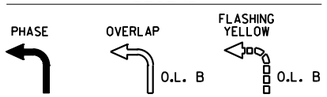

PREEMPTION ASSIGNMENTS				
PREEMPTION DESIGNATION	PREEMPTION TYPE	EVP CHANNEL	DIRECTION OF TRAVEL	PHASE(S) CALLED
1	RESERVED	-	-	-
2	RESERVED	-	-	-
3	EVP	A	NB	1+6
4	EVP	B	SB	2
5	EVP	C	WB	8
6	NOT USED	-	-	-
7	NOT USED	-	-	-
8	NOT USED	-	-	-
9	NOT USED	-	-	-
10	NOT USED	-	-	-

1. AFTER PREEMPTION SEQUENCE A OR B, CONTROLLER SHALL RETURN TO PHASE 2+6.
2. AFTER PREEMPTION SEQUENCE C, CONTROLLER SHALL RETURN TO PHASE 8.
3. FLASHING LEFT ARROW OVERLAPS SHALL BE OMITTED DURING ALL PREEMPTION SEQUENCES.

CONTROLLER LOGIC

PHASE NUMBER	PHASE LOCKING	DUAL ENTRY W/φ	PHASE RECALL	PHASE ACTIVE
1				X
2	X	6	MIN	X
3				
4				
5				
6	X	2	MIN	X
7				
8			NONE	X

TYPE OF PRE-EMPT	
NONE	
RAILROAD	
EMERGENCY VEHICLE	X
GTT	
TOMAR	
HARDWIRE	
OTHER	
LIFT BRIDGE	
QUEUE DETECTOR	

CENTRAL SYSTEM
LOCATION OF MASTER
CONTROLLER NO.: N/A
SIGNAL SYSTEM #:

TYPE OF LIGHTING	
BY OTHER AGENCY	
IN TRAFFIC SIGNAL CABINET	X
IN SEPARATE LIGHTING CABINET	

TYPE OF INTERCONNECT	
NONE	X
TBC	
CLOSED LOOP TWISTED PAIR	
CLOSED LOOP FIBER OPTIC	
RADIO	

TYPE OF REMOTE COMMUNICATION	
NONE	X
FIBER	
CELL MODEM	
PHONE	

DETECTOR LOGIC

DETECTOR INPUT	3	1	7	5	11	9	15	13	DETECTOR INPUT
DETECTOR #(S)	11			81	82				DETECTOR #(S)
PHASE CALLED	2			8	8				PHASE CALLED
PHASE EXTENDED	2			8	8				PHASE EXTENDED
DISCONNECT TIME									DISCONNECT TIME
CALLING DELAY					15				CALLING DELAY
EXTENSION STRETCH									EXTENSION STRETCH
LOOP FUNCTION									LOOP FUNCTION

DETECTOR INPUT	19	17	23	21	27	25	31	29	DETECTOR INPUT
DETECTOR #(S)									DETECTOR #(S)
PHASE CALLED									PHASE CALLED
PHASE EXTENDED									PHASE EXTENDED
DISCONNECT TIME									DISCONNECT TIME
CALLING DELAY									CALLING DELAY
EXTENSION STRETCH									EXTENSION STRETCH
LOOP FUNCTION									LOOP FUNCTION

DETECTOR INPUT	4	2	8	6	12	10	16	14	DETECTOR INPUT
DETECTOR #(S)		21	61						DETECTOR #(S)
PHASE CALLED		2	6						PHASE CALLED
PHASE EXTENDED		2	6						PHASE EXTENDED
DISCONNECT TIME									DISCONNECT TIME
CALLING DELAY									CALLING DELAY
EXTENSION STRETCH									EXTENSION STRETCH
LOOP FUNCTION									LOOP FUNCTION

DETECTOR INPUT	20	18	24	22	28	26	32	30	DETECTOR INPUT
DETECTOR #(S)									DETECTOR #(S)
PHASE CALLED									PHASE CALLED
PHASE EXTENDED									PHASE EXTENDED
DISCONNECT TIME									DISCONNECT TIME
CALLING DELAY									CALLING DELAY
EXTENSION STRETCH									EXTENSION STRETCH
LOOP FUNCTION									LOOP FUNCTION

TRAFFIC CONTROL SIGNAL
USH 18/151 & CTH PB
CITY OF VERONA
DANE COUNTY

SIGNAL NO. TEMP

REGION CONTACT: COLLIN WEBB
DESIGNED BY: KL ENGINEERING
REVISED BY:

PROJECT NO: 1204-08-65 | HWY: USH 18/151 | COUNTY: DANE | TEMPORARY TRAFFIC SIGNAL PLAN - SEQUENCE OF OPERATIONS | SHEET 213 | E

FILE NAME : G:\WDOTSW\20007-000 USH 18\CIVIL 3D\SHEETSPLAN\024101-ST.DWG
LAYOUT NAME - SOO STG 1
PLOT DATE : 7/21/2022 11:06 AM
PLOT BY : KL ENGINEERING
PLOT NAME :
PLOT SCALE : ##########
WISDOT/CADDS SHEET 42

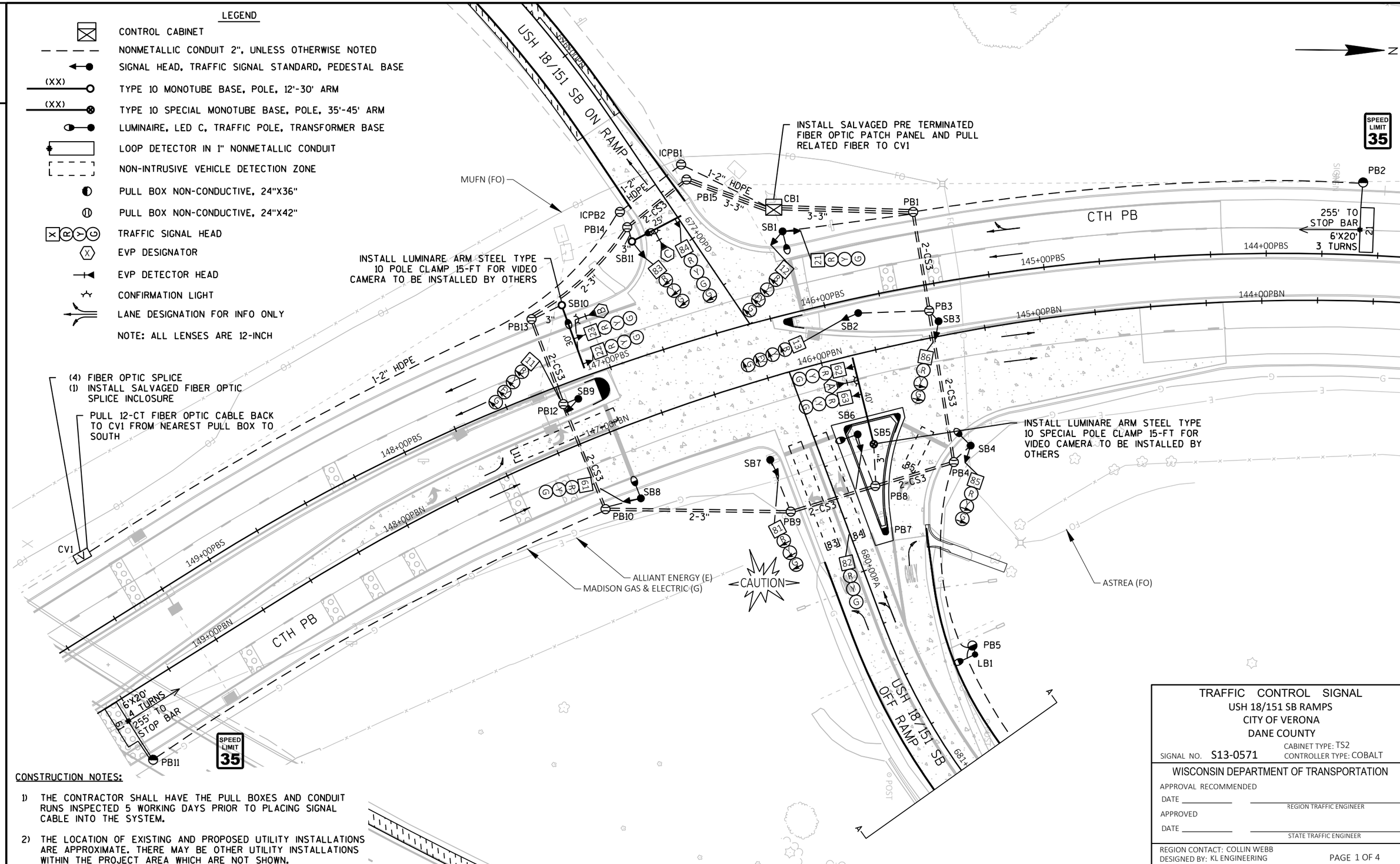

CONSTRUCTION NOTES:

1) THE CONTRACTOR SHALL HAVE THE PULL BOXES AND CONDUIT RUNS INSPECTED 5 WORKING DAYS PRIOR TO PLACING SIGNAL CABLE INTO THE SYSTEM.

2) THE LOCATION OF EXISTING AND PROPOSED UTILITY INSTALLATIONS ARE APPROXIMATE. THERE MAY BE OTHER UTILITY INSTALLATIONS WITHIN THE PROJECT AREA WHICH ARE NOT SHOWN.

TRAFFIC CONTROL SIGNAL
USH 18/151 SB RAMPS
CITY OF VERONA
DANE COUNTY

SIGNAL NO. S13-0571 CABINET TYPE: TS2 CONTROLLER TYPE: COBALT

WISCONSIN DEPARTMENT OF TRANSPORTATION

APPROVAL RECOMMENDED
DATE _____ REGION TRAFFIC ENGINEER
APPROVED
DATE _____ STATE TRAFFIC ENGINEER

REGION CONTACT: COLLIN WEBB
DESIGNED BY: KL ENGINEERING
REVISED BY:

PAGE 1 OF 4

PROJECT NO: 1204-08-65	HWY: USH 18/151	COUNTY: DANE	TRAFFIC SIGNAL PLAN	SHEET 214	E

FILE NAME : G:\WDOTSW\20007-000 USH 18\CIVIL 3D\SHEETSPLAN\024201-SP.DWG PLOT DATE : 11/30/2022 6:00 PM PLOT BY : KL ENGINEERING PLOT NAME : PLOT SCALE : 1 IN:40 FT

WISDOT/CADDS SHEET 42

LEGEND

NONMETALLIC CONDUIT 2", UNLESS OTHERWISE NOTED

LOOP DETECTOR IN 1" NONMETALLIC CONDUIT

PULL BOX NON-CONDUCTIVE, 24"X36"

LANE DESIGNATION FOR INFO ONLY

N

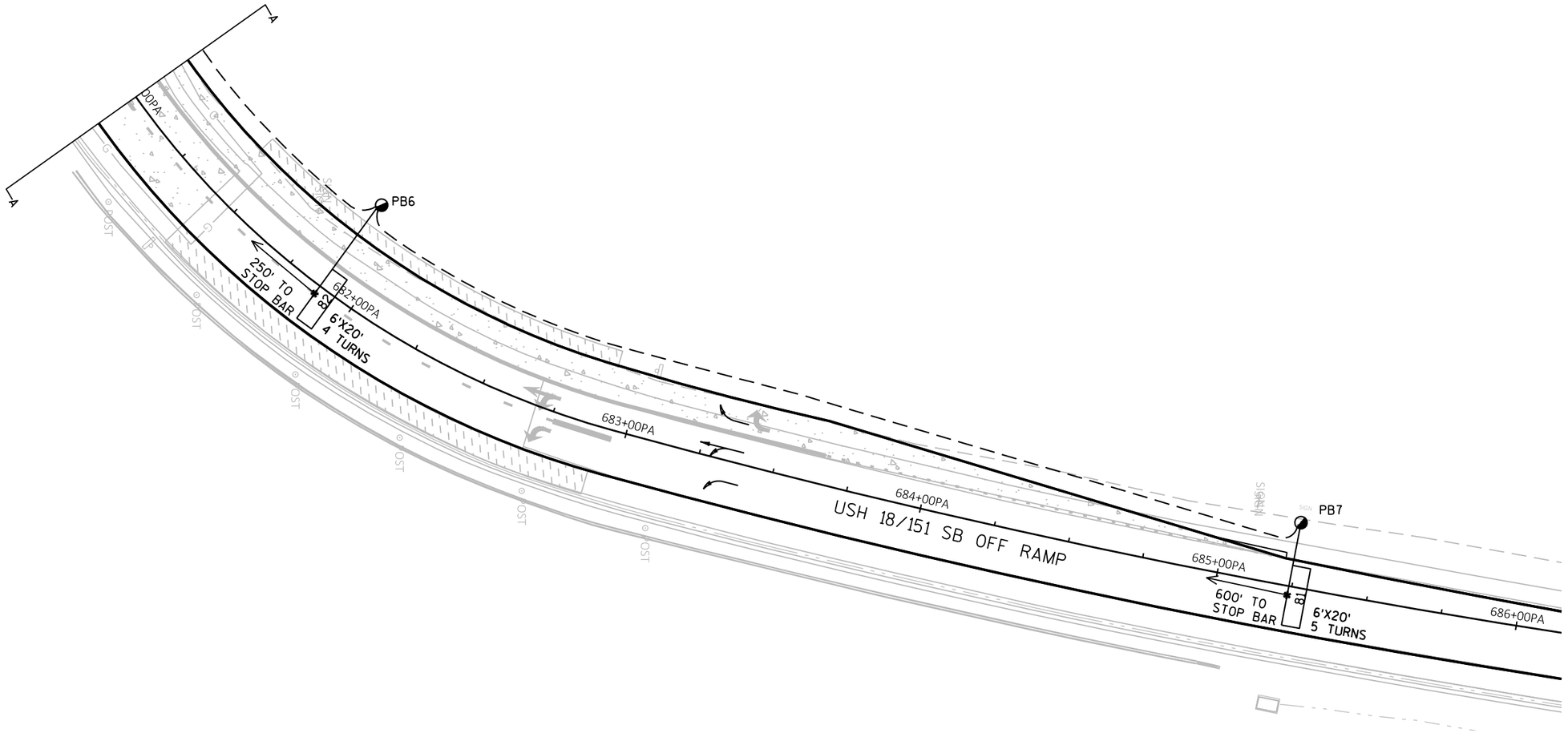

TRAFFIC CONTROL SIGNAL
USH 18/151 & OLD CTH PB
CITY OF VERONA
DANE COUNTY

SIGNAL NO. S13-0571

REGION CONTACT: COLLIN WEBB
DESIGNED BY: KL ENGINEERING
REVISED BY:

PAGE 2 OF 4

PROJECT NO: 1204-08-65	HWY: USH 18/151	COUNTY: DANE	TRAFFIC SIGNAL PLAN	SHEET 215	E

FILE NAME : G:\WDOTSW\20007-000 USH 18\CIVIL 3D\SHEETSPLAN\024201-SP.DWG PLOT DATE : 7/21/2022 11:23 AM PLOT BY : KL ENGINEERING PLOT NAME : PLOT SCALE : 1 IN:40 FT

WISDOT/CADDS SHEET 42

	HEAD NUMBERS	FLASH
φ1	11-13	R
φ2	21-23	R
φ3		
φ4		
φ5		
φ6	61-63	R
φ7		
φ8	81-86	R/R
φ2 PED		
φ4 PED		
φ6 PED		
φ8 PED		

O.L. ASSIGNMENTS			
O.L.A			
O.L.B			
O.L.C			
O.L.D			
O.L.E	11-13	-	φ2
O.L.F			
O.L.G			
O.L.H			

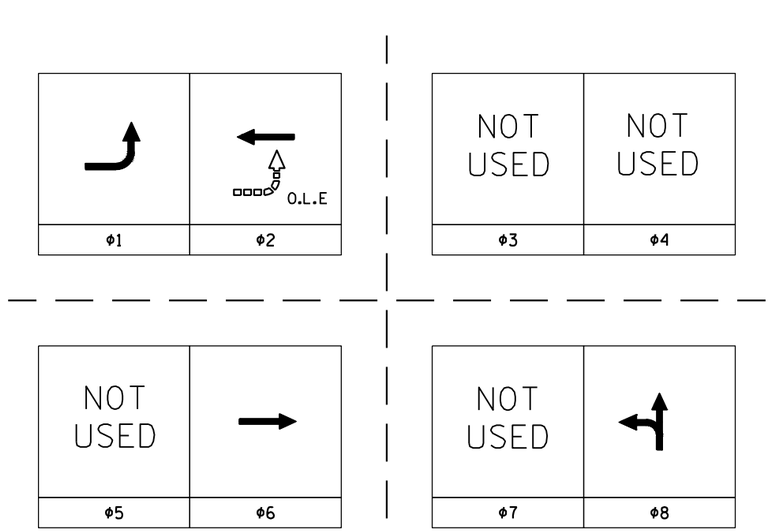

LEGEND

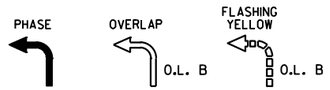

PREEMPTION ASSIGNMENTS				
PREEMPTION DESIGNATION	PREEMPTION TYPE	EVP CHANNEL	DIRECTION OF TRAVEL	PHASE(S) CALLED
1	RESERVED	-	-	-
2	RESERVED	-	-	-
3	EVP	A	NB	1+6
4	EVP	B	SB	2+6
5	EVP	C	WB	8
6	NOT USED	-	-	-
7	NOT USED	-	-	-
8	NOT USED	-	-	-
9	NOT USED	-	-	-
10	NOT USED	-	-	-

1. AFTER PREEMPTION SEQUENCE A OR B, CONTROLLER SHALL RETURN TO PHASE 2+6.
2. AFTER PREEMPTION SEQUENCE C, CONTROLLER SHALL RETURN TO PHASE 8.
3. FLASHING LEFT ARROW OVERLAPS SHALL BE OMITTED DURING ALL PREEMPTION SEQUENCES.

CONTROLLER LOGIC

PHASE NUMBER	PHASE LOCKING	DUAL ENTRY W/φ	PHASE RECALL	PHASE ACTIVE
1				X
2	X	6	MIN	X
3				
4				
5				
6	X	2	MIN	X
7				
8				X

TYPE OF PRE-EMPT	
NONE	
RAILROAD	
EMERGENCY VEHICLE	X
GTT	X
TOMAR	
HARDWIRE	
OTHER	
LIFT BRIDGE	
QUEUE DETECTOR	

CENTRAL SYSTEM
LOCATION OF MASTER CONTROLLER NO.: N/A
SIGNAL SYSTEM *:

TYPE OF LIGHTING	
BY OTHER AGENCY	
IN TRAFFIC SIGNAL CABINET	X
IN SEPARATE LIGHTING CABINET	

DETECTOR LOGIC

DETECTOR INPUT	3	1	7	5	11	9	15	13
DETECTOR *(S)	11			83	84	85		
PHASE CALLED	2			8	8	8		
PHASE EXTENDED	2			8	8	8		
DISCONNECT TIME								
CALLING DELAY						10		
EXTENSION STRETCH								
LOOP FUNCTION								

19	17	23	21	27	25	31	29	DETECTOR INPUT
								DETECTOR *(S)
								PHASE CALLED
								PHASE EXTENDED
								DISCONNECT TIME
								CALLING DELAY
								EXTENSION STRETCH
								LOOP FUNCTION

DETECTOR INPUT	4	2	8	6	12	10	16	14
DETECTOR *(S)		21	61	81	82			
PHASE CALLED		2	6	8	8			
PHASE EXTENDED		2	6	8	8			
DISCONNECT TIME								
CALLING DELAY								
EXTENSION STRETCH								
LOOP FUNCTION								

20	18	24	22	28	26	32	30	DETECTOR INPUT
								DETECTOR *(S)
								PHASE CALLED
								PHASE EXTENDED
								DISCONNECT TIME
								CALLING DELAY
								EXTENSION STRETCH
								LOOP FUNCTION

TYPE OF INTERCONNECT	
NONE	
TBC	
CLOSED LOOP TWISTED PAIR	
CLOSED LOOP FIBER OPTIC	X
RADIO	

TYPE OF REMOTE COMMUNICATION	
NONE	
FIBER	
CELL MODEM	X
PHONE	

TRAFFIC CONTROL SIGNAL
USH 18/151 & OLD CTH PB
CITY OF VERONA
DANE COUNTY

SIGNAL NO. S13-0571

REGION CONTACT: COLLIN WEBB
DESIGNED BY: KL ENGINEERING
REVISED BY:

PROJECT NO: 1204-08-65	HWY: USH 18/151	COUNTY: DANE	TRAFFIC SIGNAL PLAN	SHEET 216	E

FILE NAME : G:\WDOTSW\20007-000 USH 18\CIVIL 3D\SHEETSPLAN\024201-SP.DWG PLOT DATE : 7/21/2022 11:24 AM PLOT BY : KL ENGINEERING PLOT NAME : PLOT SCALE : ##########

PROJECT NO:	1204-08-6S
INTERSECTION:	USH 18/151

SIGNAL WIRE	BLK-BLACK	RED-RED	GRN-GREEN
COLOR CODING	WHT-WHITE	BLU-BLUE	ORG-ORANGE

CB1 TO	NO. OF CONDUCTORS	HEAD NO.	PHASE	SIGNAL INDICATION WIRE COLOR									PED BUTTON	OTHER
				RED	YELLOW	GREEN	<RED>	<YELLOW>	<FLASH YEL>	<GREEN>	DWALK	WALK		
SB1	12	12	1/O.L.E				RED/BLK	ORG/BLK	BLK/WHT	GRN/BLK				
		21	2	RED	ORG	GRN								
SB2	12	13	1/O.L.E				RED/BLK	ORG/BLK	BLK/WHT	GRN/BLK				
SB3	12	86	8	RED				ORG		GRN				
SB4	12	8S	8	RED				ORG		GRN				
SBS	12	62	6	RED	ORG	GRN								
		63	6	RED	ORG	GRN								
SB6	12	82	8	RED	ORG	GRN								
SB7	12	81	8				RED	ORG		GRN				
SB8	12	61	6	RED	ORG	GRN								
SB9	12	11	1/O.L.E				RED/BLK	ORG/BLK	BLK/WHT	GRN/BLK				
SB10	12	22	2	RED	ORG	GRN								
		23	2	RED	ORG	GRN								
SB11	12	83	8				RED	ORG		GRN				
		84	8	RED	ORG	GRN				GRN				

EQUIPMENT GROUNDING CONDUCTORS 10 AWG GRN XLP	
FROM	TO
CB1	SB1
SB1	SB2
SB2	SB3
SB3	SB4
SB4	SB5
SB5	SB6
SB6	SB7
SB7	SB8
SB8	SB9
SB9	SB10
SB10	SB11
SB11	CB1

DEPARTMENT FURNISHED CAT-5E CABLE	
FROM	TO
CB1	SB5
CB1	SB10

EVP CONFIRMATION LIGHT LOOP DETECTOR LEAD IN CABLE	
FROM	TO
CB1	SB5
CB1	SB10
CB1	SB11

TRAFFIC SIGNAL EVP DETECTOR CABLE		
HEAD	FROM	TO
A	CB1	SB5
B	CB1	SB10
C	CB1	SB11

LIGHTING UF 12 AWG W/ GROUND	
FROM	TO
CB1	SB1
SB1	SB4
SB4	LB1
SB4	SB6
CB1	SB11
SB11	SB10
SB10	SB8

TRAFFIC CONTROL SIGNAL
USH 18/151 & OLD CTH PB
CITY OF VERONA
DANE COUNTY

SIGNAL NO. S13-0571

REGION CONTACT: COLLIN WEBB
DESIGNED BY: KL ENGINEERING
REVISED BY:

PAGE 4 OF 4

STAGE 1 SUMMARY

MAINTENANCE OF TRAFFIC (MOT)

USH 18/151 WEST OF STA. 489+00 'EB'

- USH 18/151 WILL REMAIN OPEN TO ONE LANE OF TRAFFIC AT ALL TIMES IN THE WB AND EB DIRECTION UTILIZING A LONG TERM LANE AND SHOULDER CLOSURE.

USH 18/151 EAST OF STA. 489+00 'EB'

- USH 18/151 WILL REMAIN OPEN TO ALL LANES AT ALL TIMES EXCEPT NIGHTTIME SINGLE LANE CLOSURES AS SPECIFIED IN THE CONTRACT SPECIAL PROVISIONS.

All RAMPS

- ALL RAMPS WILL REMAIN OPEN AT ALL TIMES EXCEPT CLOSURE TIMES AS SPECIFIED IN THE CONTRACT SPECIAL PROVISIONS.

STH 69 & CTH PB

- STH 69 & CTH PB WILL REMAIN OPEN TO ALL LANES AT ALL TIMES EXCEPT NIGHTTIME SINGLE LANE CLOSURES AS SPECIFIED IN THE CONTRACT SPECIAL PROVISIONS.

PHASING DETAILS ALONG USH 18/151 WEST OF STA. 489+00 'EB'

PHASE 1 MOT
- TRAFFIC WILL BE REDUCED TO ONE LANE IN EACH DIRECTION UTILIZING THE EXISTING MEDIAN LANE

PHASE 1 CONSTRUCTION
- THE EXISTING OUTSIDE SHOULDER WILL BE RECONSTRUCTED

PHASE 2 MOT
- TRAFFIC WILL BE REDUCED TO ONE LANE IN EACH DIRECTION UTILIZING THE EXISTING OUTSIDE LANE AND RECONSTRUCTED OUTSIDE SHOULDER.

PHASE 2 CONSTRUCTION
- BASE PATCHING CONCRETE OF THE EXISTING MEDIAN LANE AND RECONSTRUCTING THE EXISTING MEDIAN SHOULDER FROM 3' PAVED TO 6' PAVED.
- CONCRETE PAVEMENT APPROACH SLABS

PHASE 3 MOT
- TRAFFIC WILL BE REDUCED TO ONE LANE IN EACH DIRECTION UTILIZING THE EXISTING MEDIAN LANE AND RECONSTRUCTED MEDIAN SHOULDER.

PHASE 3 CONSTRUCTION
- BASE PATCHING CONCRETE OF THE OUTSIDE LANE AND PAVING THE LOWER LAYER OF ASPHALT OVER THE OUTSIDE LANE AND SHOULDER.
- CONCRETE PAVEMENT APPROACH SLABS

PHASE 4 MOT
- TRAFFIC WILL BE REDUCED TO ONE LANE IN EACH DIRECTION UTILIZING THE LOWER LAYER OF ASPHALT OVER THE OUTSIDE LANE AND SHOULDER.

PHASE 4 CONSTRUCTION
- PAVING THE LOWER LAYER AND UPPER LAYER OF ASPHALT OVER THE MEDIAN LANE AND SHOULDER.
- MEDIAN MGS GUARDRAIL

PHASE 5 MOT
- TRAFFIC WILL BE REDUCED TO ONE LANE IN EACH DIRECTION UTILIZING THE UPPER LAYER OF ASPHALT OVER THE MEDIAN LANE AND SHOULDER.

PHASE 5 CONSTRUCTION
- PAVING THE UPPER LAYER OF ASPHALT OVER THE OUTSIDE LANE AND SHOULDER.
- OUTSIDE MGS GUARDRAIL

PHASE 6 MOT
- TRAFFIC WILL BE REDUCED TO ONE LANE IN EACH DIRECTION UTILIZING THE UPPER LAYER OF ASPHALT OVER THE OUTSIDE LANE.

PHASE 6 CONSTRUCTION
- MEDIAN LANE RUMBLE STRIPS AND PAVEMENT MARKINGS.

CONSTRUCTION TO BE COMPLETED THIS STAGE

- FROM STA. 319+00 'EB' TO STA. 489+00 'EB' AND STA. 326+80 WB TO STA. 489+00 WB COMPLETE ALL WORK IN THE PROJECT PLANS EXCEPT FOR MEDIAN GRADING FOR CABLE GUARD INSTALLATION, MEDIAN INLET RECONSTRUCTION FOR CABLE GUARD INSTALLATION, CABLE GUARD REMOVAL AND CONSTRUCTION, AND BULLNOSE TERMINAL REMOVAL AND CONSTRUCTION.

GENERAL NOTES

- ANY SIGNS, TEMPORARY OR EXISTING, WHICH CONFLICT WITH TRAFFIC CONTROL "IN USE" SHALL BE REMOVED OR COVERED AS NEEDED AND AS APPROVED BY THE ENGINEER. REMOVING/REPLACING OR COVERING/UNCOVERING SIGNS WILL BE INCIDENTAL TO OTHER TRAFFIC CONTROL ITEMS.
- ALL TRAFFIC CONTROL SIGNS SHALL BE 48" X 48" UNLESS OTHERWISE NOTED.
- "WO" SIGNS ARE THE SAME AS "W" SIGNS EXCEPT THE BACKGROUND IS REFLECTIVE ORANGE.
- CONSIDER GEOMETRICS WHEN LOCATING SIGNS, ARROW BOARDS AND SIGN MESSAGE BOARDS SO THE DRIVER HAS A CLEAR VIEW OF THE ARROW BOARDS, SIGN MESSAGE BOARDS AND LANE CLOSURE DRUMS FOR A MINIMUM OF 1500 FEET IN FRONT OF THE DRUMS.
- IF SIGNS ARE IN PLACE LESS THAN 7 CONTINUOUS DAYS AND NIGHTS, THE ADVANCED WARNING SIGNS MAY BE MOUNTED ON PORTABLE SUPPORTS WITH A MINIMUM 5' MOUNTING HEIGHT.
- ALL TRAFFIC CONTROL SIGNING SHALL CONFORM TO: PART VI OF THE MANUAL ON UNIFORM TRAFFIC CONTROL DEVICES, WISCONSIN MANUAL OF UNIFORM TRAFFIC CONTROL DEVICES, TRAFFIC ENGINEERING, OPERATIONS AND SAFETY MANUAL, AND OTHER CONTRACT DOCUMENTS.
- THE TURNING OF TRAFFIC CONTROL DEVICES WHEN NOT IN USE TO OBSCURE THE MESSAGE WILL NOT BE ALLOWED.
- REMOVE PAVEMENT MARKINGS NOT APPROPRIATE FOR THE TRAVEL PATH IN USE.
- MOVE, REMOVE OR INSTALL ROUTE MARKER SIGNS AS REQUIRED TO MAINTAIN NECESSARY ROUTE GUIDANCE THROUGHOUT CONSTRUCTION. REFER TO EXISTING SIGN REMOVAL PLANS FOR EXISTING ROUTE GUIDANCE.
- THE LANE CLOSURE SERIES SHALL BE INSTALLED AS A COMPLETE UNIT WHICH INCLUDES ALL ADVANCE WARNING SIGNING, DRUMS, AND ARROW BOARDS.
- CONTRACTORS EQUIPMENT AND MATERIAL STOCKPILES MAY NOT BE STORED WITHIN THE CONSTRUCTION CLEAR ZONE OF USH 18 OR USH 18 RAMPS WHILE THE CONTRACTOR IS NOT WORKING, UNLESS THEY ARE PROTECTED BY CONCRETE BARRIER TEMPORARY PRECAST. CONSTRUCTION CLEAR ZONE = 20 FEET MEASURED FROM THE EDGE OF LANE LINE.
- CONCRETE BARRIER TEMPORARY PRECAST SHALL BE ANCHORED IF THE DISTANCE TO A 2 FOOT OR GREATER DROP-OFF THAT IS STEEPER THAN 3H:1V

REFERENCE THE FOLLOWING STANDARD DETAIL DRAWINGS

- BARRICADES AND SIGNS FOR MAINLINE CLOSURES
- CONCRETE BARRIER TEMPORARY PRECAST, 12'-6"
- CRASH CUSHION/SAND BARREL ARRAY AND OTHER TEMPORARY BARRIER LAYOUT DETAILS
- TRAFFIC CONTROL, LANE CLOSURE, SPEED REDUCTION
- TRAFFIC CONTROL, PARALLEL ENTRANCE RAMP WITHIN LANE CLOSURE
- TRAFFIC CONTROL, ENTRANCE RAMP WITHIN LANE CLOSURE
- TRAFFIC CONTROL, TAPERED ENTRANCE RAMP WITHIN LANE CLOSURE
- TRAFFIC CONTROL, TAPERED ENTRANCE RAMP WITHIN LANE CLOSURE
- TRAFFIC CONTROL, PARALLEL EXIT RAMP WITHIN LANE CLOSURE
- TRAFFIC CONTROL, EXIT RAMP CLOSURE
- TRAFFIC CONTROL, SINGLE LANE CLOSURE, NON-FREEWAY/EXPRESSWAY
- TRAFFIC CONTROL, INTERSECTION WITHIN SINGLE LANE CLOSURE
- TRAFFIC CONTROL, INTERSECTION WITHIN SINGLE LANE CLOSURE
- TRAFFIC CONTROL, SHOULDER CLOSURE ON DIVIDED ROADWAY, SPEEDS GREATER THAN 40 MPH
- TRAFFIC CONTROL, DROP-OFF SIGNING
- TRAFFIC CONTROL, INGRESS/EGRESS WITH BARRIER
- TRAFFIC CONTROL, INGRESS/EGRESS WITHOUT BARRIER

2

2

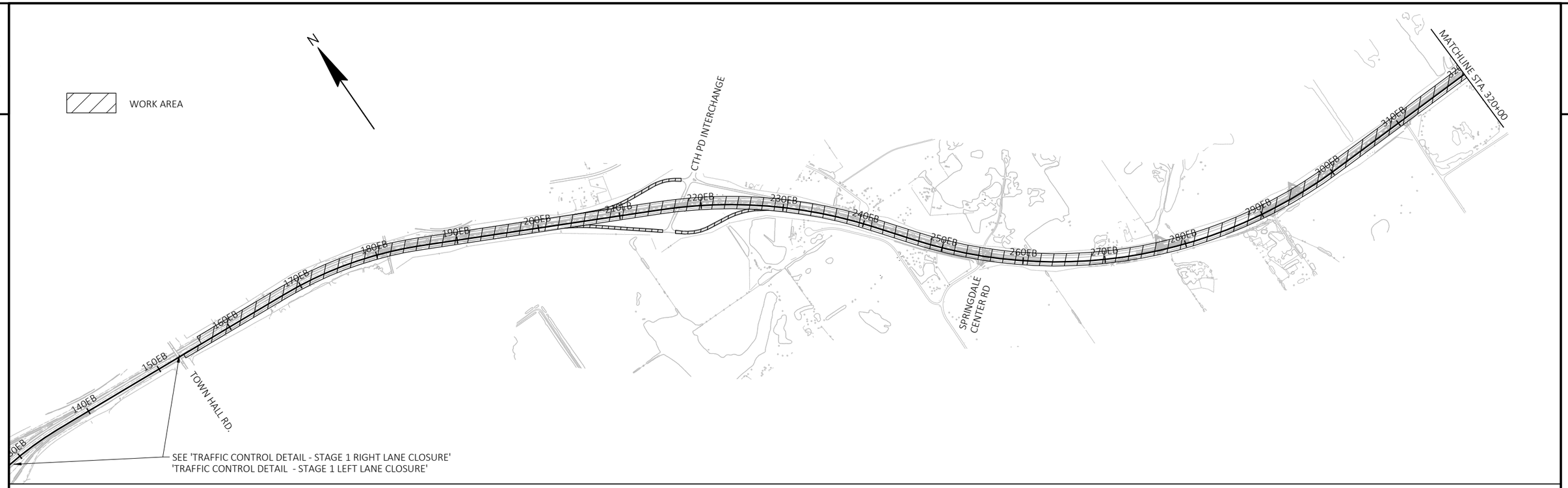



PROJECT NO: 1204-08-65	HWY: USH 18/151	COUNTY: DANE	TRAFFIC CONTROL OVERVIEW - STAGE 1	SHEET 219	E

FILE NAME : G:\WDOTSW\20007-000 USH 18\CIVIL 3D\SHEETSPLAN\TRAFFIC CONTROL\RE-LET\020301-TC__0VERVIEW_S1.DWG
LAYOUT NAME - 1

PLOT DATE : 11/17/2022 2:27 PM PLOT BY : JOSH MERCIER PLOT NAME : PLOT SCALE : 1 IN:2500 FT

2

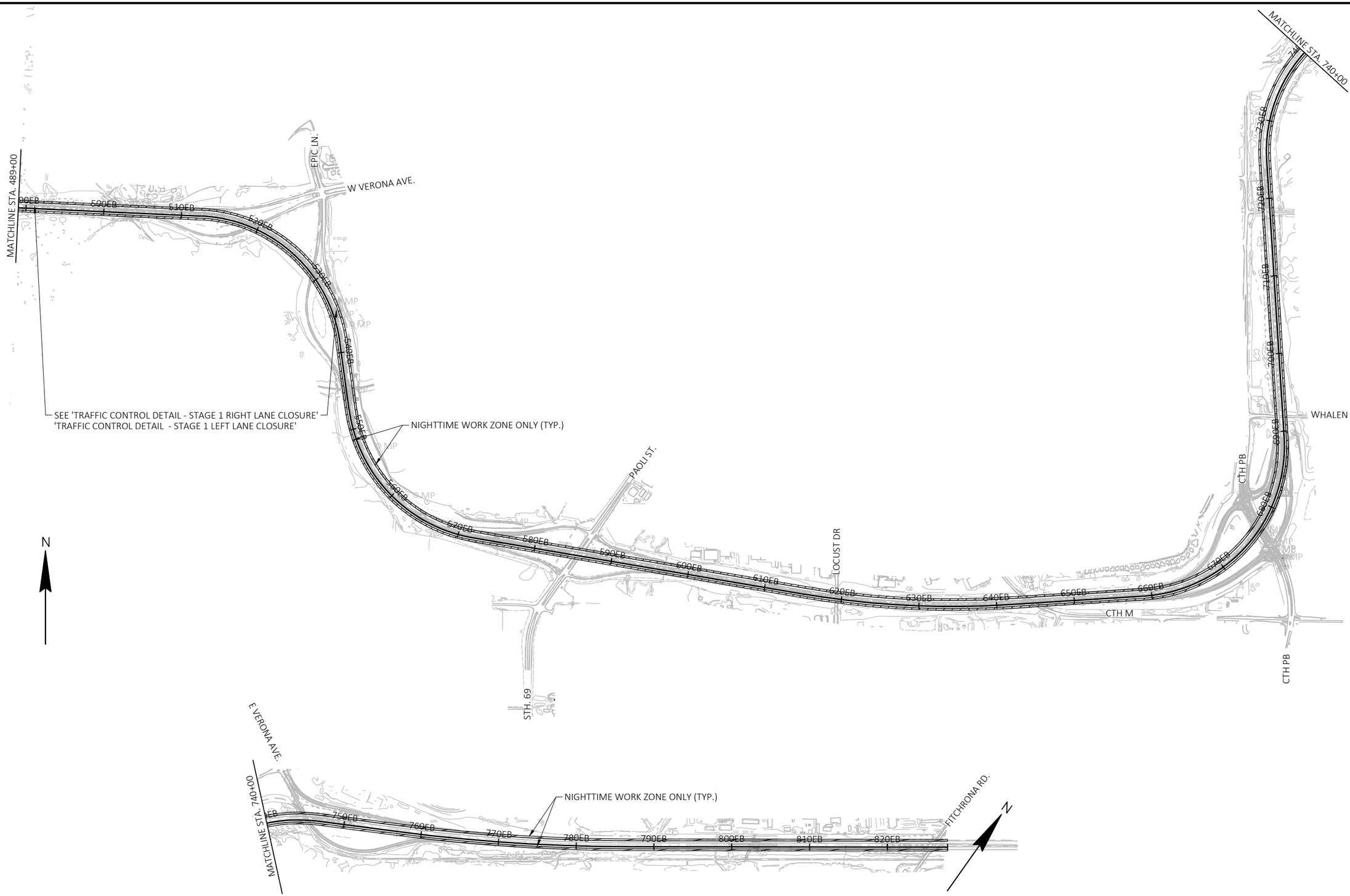

PROJECT NO: 1204-08-65	HWY: USH 18/151	COUNTY: DANE	TRAFFIC CONTROL OVERVIEW - STAGE 1	SHEET 220	E

FILE NAME : G:\WDOTSW\20007-000 USH 18\CIVIL 3D\SHEETSPLAN\TRAFFIC CONTROL\RE-LET\020301-TC__0VERVIEW_S1.DWG
LAYOUT NAME - 2
PLOT DATE : 11/17/2022 2:28 PM
PLOT BY : JOSH MERCIER
PLOT NAME :
PLOT SCALE : 1 IN:2500 FT
WISDOT/CADDS SHEET 44

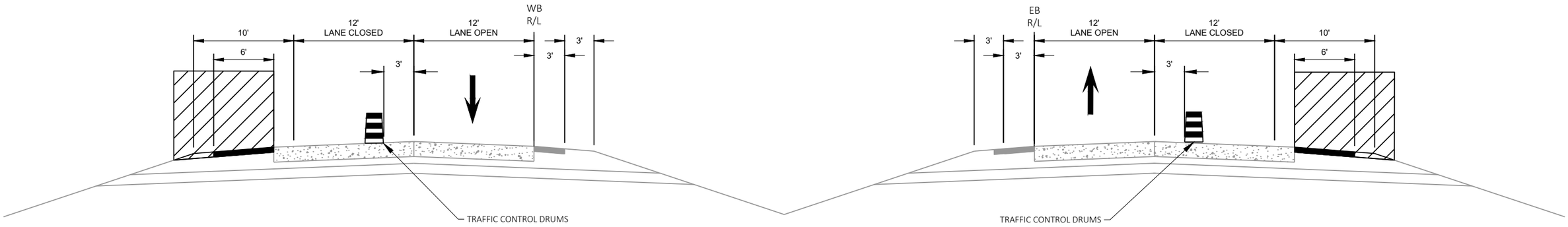

PHASE 1 TYPICAL SECTION

STA. 153+50'EB' - STA. 489+00'EB'
STA. 156+00'WB' - STA. 489+00'WB'

WORK AREA

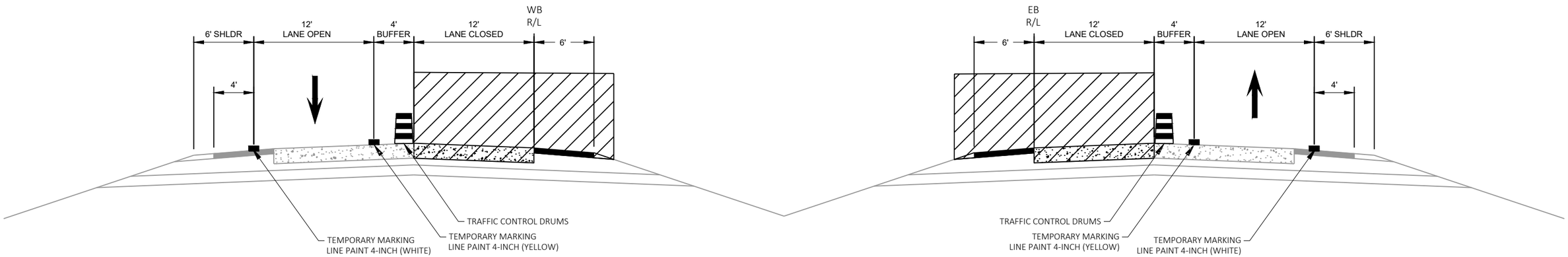

PHASE 2 TYPICAL SECTION

STA. 153+50'EB' - STA. 489+00'EB'
STA. 156+00'WB' - STA. 489+00'WB'

PROJECT NO: 1204-08-65	HWY: USH 18/151	COUNTY: DANE	TRAFFIC CONTROL - STAGE 1 TYPICAL SECTIONS	SHEET 221	E

FILE NAME : G:\WDOTSW\20007-000 USH 18\CIVIL 3D\SHEETSPLAN\TRAFFIC CONTROL\RE-LET\020301-TC__TYP_SEC_S1.DWG
LAYOUT NAME - 02
PLOT DATE : 11/17/2022 2:01 PM PLOT BY : KL ENGINEERING PLOT NAME : PLOT SCALE : 1 IN:10 FT

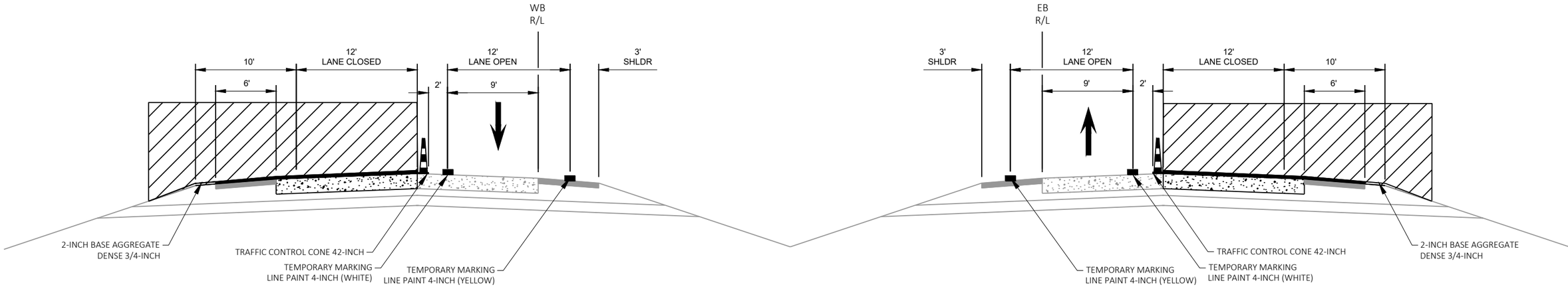

PHASE 3 TYPICAL SECTION

STA. 153+50'EB' - STA. 489+00'EB'
STA. 156+00'WB' - STA. 489+00'WB'

WORK AREA

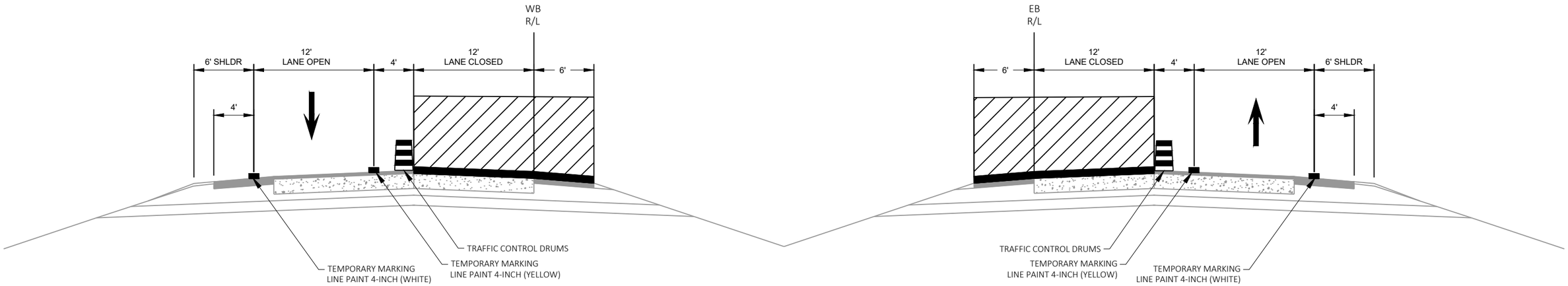

PHASE 4 TYPICAL SECTION

STA. 153+50'EB' - STA. 489+00'EB'
STA. 156+00'WB' - STA. 489+00'WB'

PROJECT NO: 1204-08-65	HWY: USH 18/151	COUNTY: DANE	TRAFFIC CONTROL - STAGE 1 TYPICAL SECTIONS	SHEET 222	E

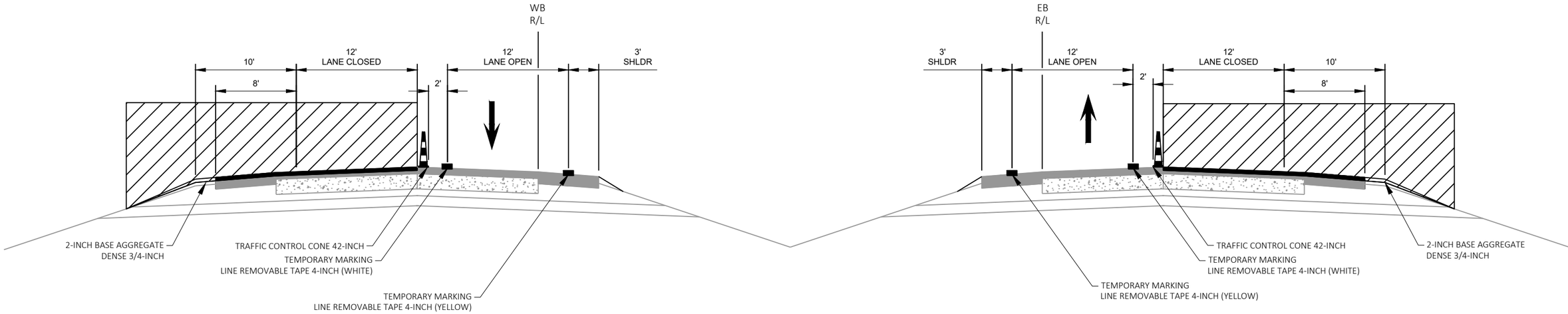

PHASE 5 TYPICAL SECTION

STA. 153+50'EB' - STA. 489+00'EB'
STA. 156+00'WB' - STA. 489+00'WB'

WORK AREA

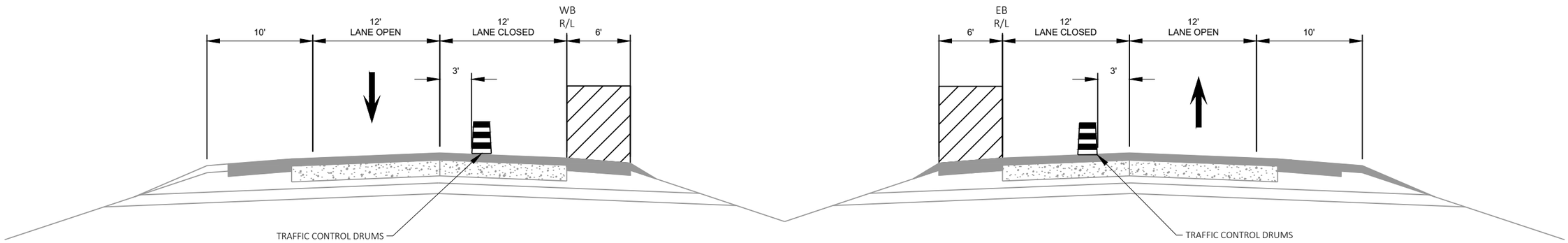

PHASE 6 TYPICAL SECTION

STA. 153+50'EB' - STA. 489+00'EB'
STA. 156+00'WB' - STA. 489+00'WB'

PROJECT NO: 1204-08-65	HWY: USH 18/151	COUNTY: DANE	TRAFFIC CONTROL - STAGE 1 TYPICAL SECTIONS	SHEET 223	E

FILE NAME : G:\WDOTSW\20007-000 USH 18\CIVIL 3D\SHEETSPLAN\TRAFFIC CONTROL\RE-LET\020301-TC__TYP_SEC_S1.DWG
LAYOUT NAME - 04
PLOT DATE : 11/17/2022 2:01 PM PLOT BY : KL ENGINEERING PLOT NAME : PLOT SCALE : 1 IN:10 FT
WISDOT/CADDS SHEET 42

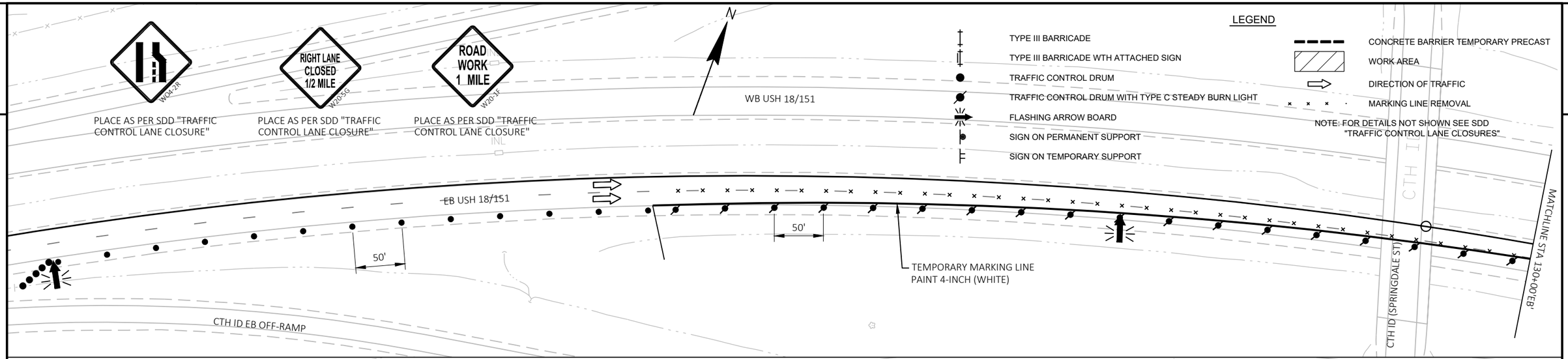

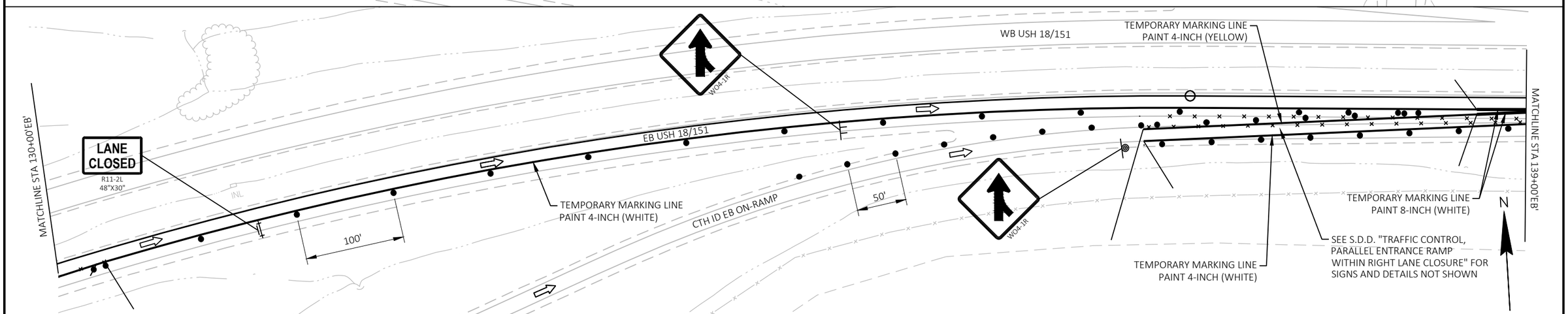

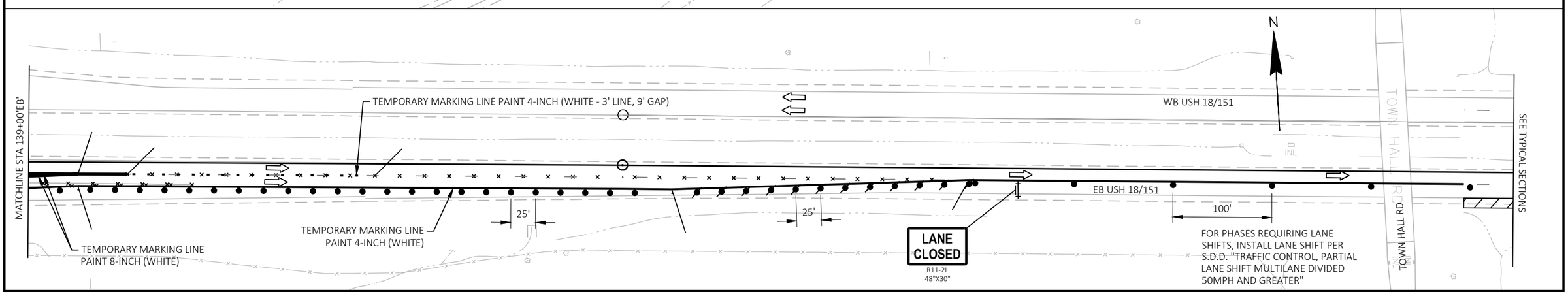

PROJECT NO: 1204-08-65	HWY: USH 18/151	COUNTY: DANE	TRAFFIC CONTROL DETAIL - STAGE 1 RIGHT LANE CLOSURE	SHEET 224	E

FILE NAME : G:\WDOTSW\20007-000 USH 18\CIVIL 3D\SHEETSPLAN\TRAFFIC CONTROL\RE-LET\020301-TC_STG1-PH1.DWG
LAYOUT NAME - RT LN
PLOT DATE : 12/7/2022 12:38 PM
PLOT BY : JOSH MERCIER
PLOT NAME :
PLOT SCALE : Custom
WISDOT/CADDS SHEET 42

2

LEGEND

TYPE III BARRICADE

TYPE III BARRICADE WTH ATTACHED SIGN

TRAFFIC CONTROL DRUM

TRAFFIC CONTROL DRUM WITH TYPE C STEADY BURN LIGHT

FLASHING ARROW BOARD

SIGN ON PERMANENT SUPPORT

SIGN ON TEMPORARY SUPPORT

CONCRETE BARRIER TEMPORARY PRECAST

WORK AREA

DIRECTION OF TRAFFIC

MARKING LINE REMOVAL

NOTE: FOR DETAILS NOT SHOWN SEE SDD "TRAFFIC CONTROL LANE CLOSURES"

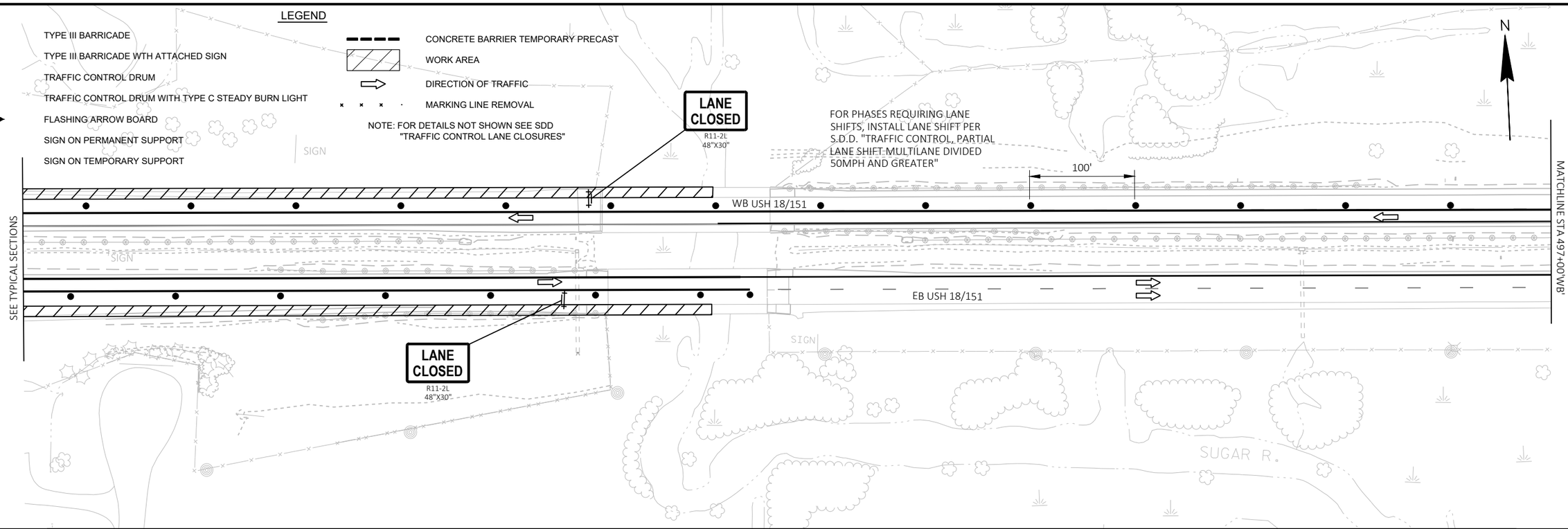

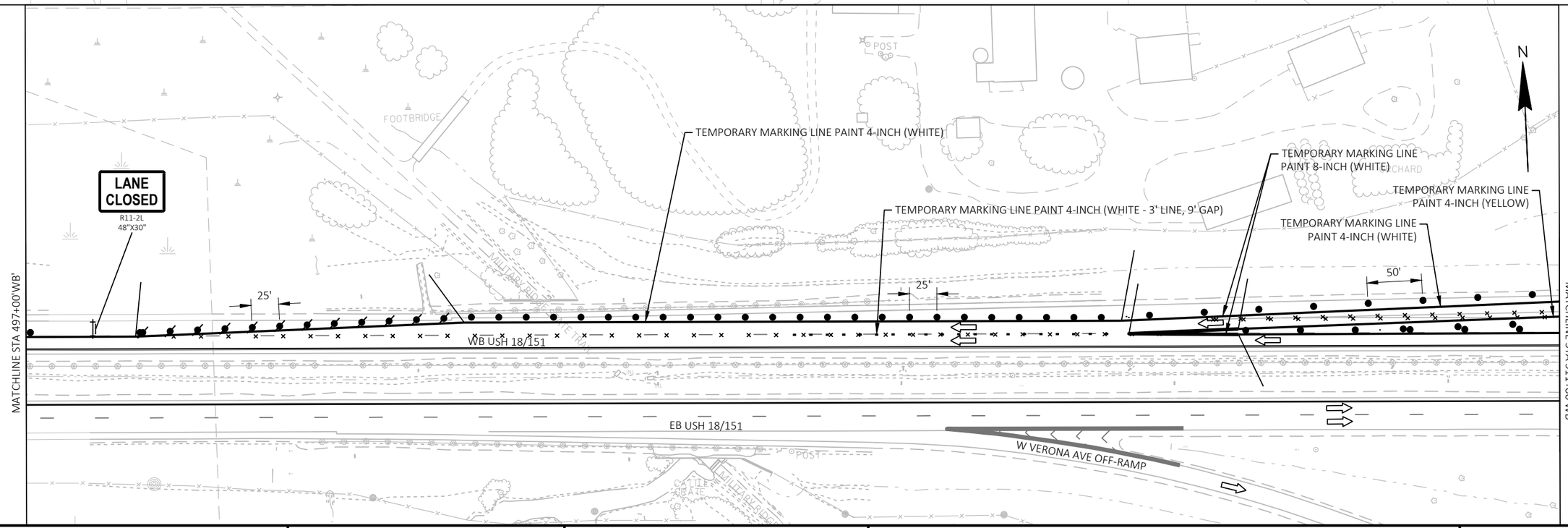

PROJECT NO: 1204-08-65	HWY: USH 18/151	COUNTY: DANE	TRAFFIC CONTROL DETAIL - STAGE 1 RIGHT LANE CLOSURE	SHEET 225	E

FILE NAME : G:\WDOTSW\20007-000 USH 18\CIVIL 3D\SHEETSPLAN\TRAFFIC CONTROL\RE-LET\020301-TC_STG1-PH1.DWG
LAYOUT NAME - RT LN (2)

PLOT DATE : 12/7/2022 12:39 PM PLOT BY : JOSH MERCIER PLOT NAME : PLOT SCALE : 1 IN:100 FT

WISDOT/CADDS SHEET 42

2

TEMPORARY MARKING LINE PAINT 4-INCH (WHITE)

TEMPORARY MARKING LINE PAINT 4-INCH (YELLOW)

W04-1R

SEE S.D.D. "TRAFFIC CONTROL, PARALLEL ENTRANCE RAMP WITHIN RIGHT LANE CLOSURE" FOR SIGNS AND DETAILS NOT SHOWN

W04-1R

W VERONA AVE ON-RAMP

TEMPORARY MARKING LINE PAINT 4-INCH (WHITE)

POST

RIPRAP

INE

LANE CLOSED
R11-2L
48"X30"

50'

WB USH 18/151

INE

INE

EB USH 18/151

MATCHLINE STA 511+00 WB

W VERONA AVE OFF-RAMP

MATCHLINE STA 526+00 WB

N

2

EPIC LANE OFF-RAMP

TEMPORARY MARKING LINE PAINT 4-INCH (WHITE)

RIPRAP

50'

WB USH 18/151

U/C

d MP

ANGLE ARROW BOARD TO FACE AWAY FROM EXIT LANE

50'

EB USH 18/151

MATCHLINE STA 526+00 WB

INE

EPIC LANE ON-RAMP

N

W04-2R

PLACE AS PER SDD "TRAFFIC CONTROL LANE CLOSURE"

RIGHT LANE CLOSED 1/2 MILE
W20-5G

PLACE AS PER SDD "TRAFFIC CONTROL LANE CLOSURE"

ROAD WORK 1 MILE
W20-1F

PLACE AS PER SDD "TRAFFIC CONTROL LANE CLOSURE"

PROJECT NO: 1204-08-65	HWY: USH 18/151	COUNTY: DANE	TRAFFIC CONTROL DETAIL - STAGE 1 RIGHT LANE CLOSURE	SHEET 226	E

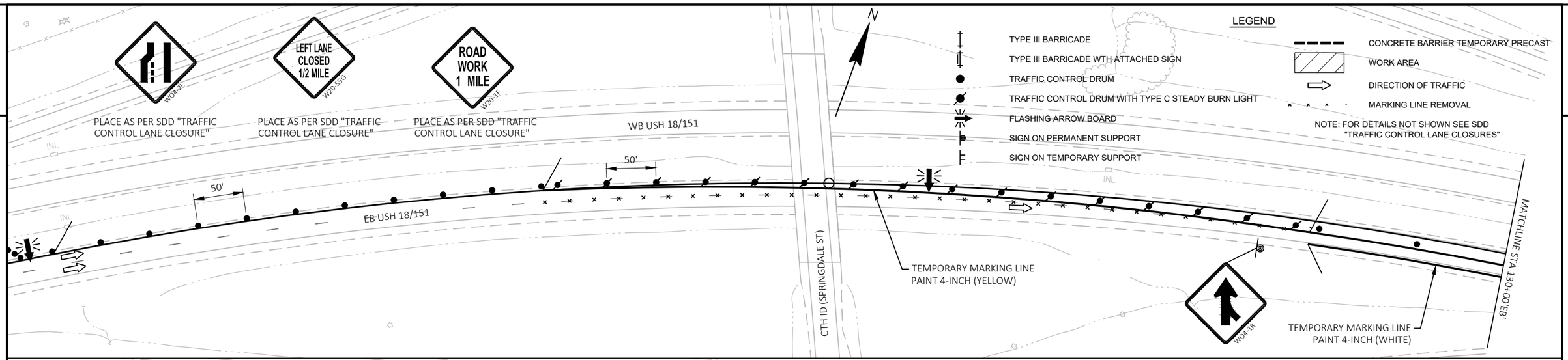

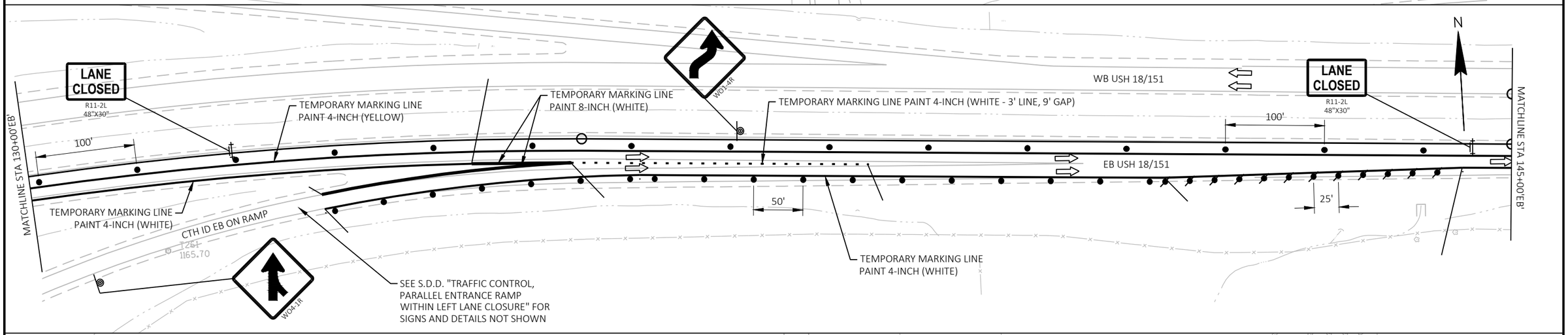

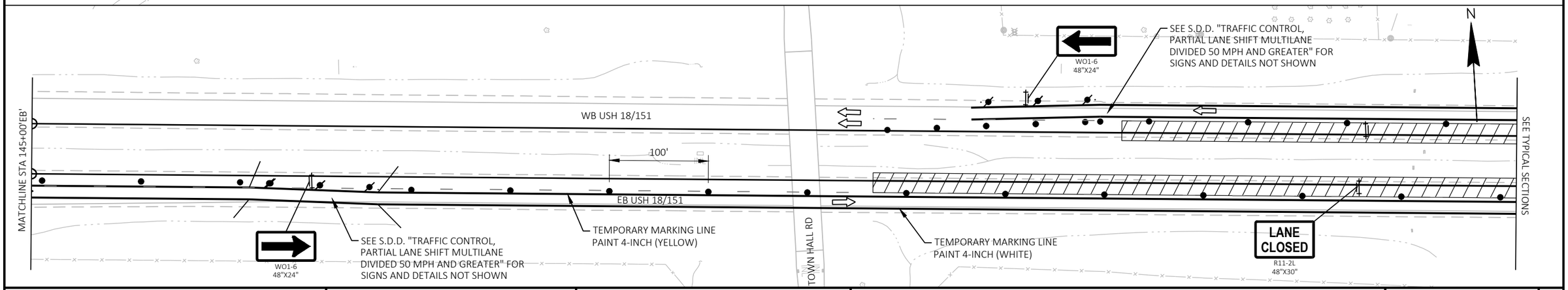

PROJECT NO: 1204-08-65	HWY: USH 18/151	COUNTY: DANE	TRAFFIC CONTROL DETAIL - STAGE 1 & 2 LEFT LANE CLOSURE	SHEET 227	E

LEGEND

- TYPE III BARRICADE
- TYPE III BARRICADE WTH ATTACHED SIGN
- TRAFFIC CONTROL DRUM
- TRAFFIC CONTROL DRUM WITH TYPE C STEADY BURN LIGHT
- FLASHING ARROW BOARD
- SIGN ON PERMANENT SUPPORT
- SIGN ON TEMPORARY SUPPORT
- CONCRETE BARRIER TEMPORARY PRECAST
- WORK AREA
- DIRECTION OF TRAFFIC
- MARKING LINE REMOVAL

NOTE: FOR DETAILS NOT SHOWN SEE SDD "TRAFFIC CONTROL LANE CLOSURES"

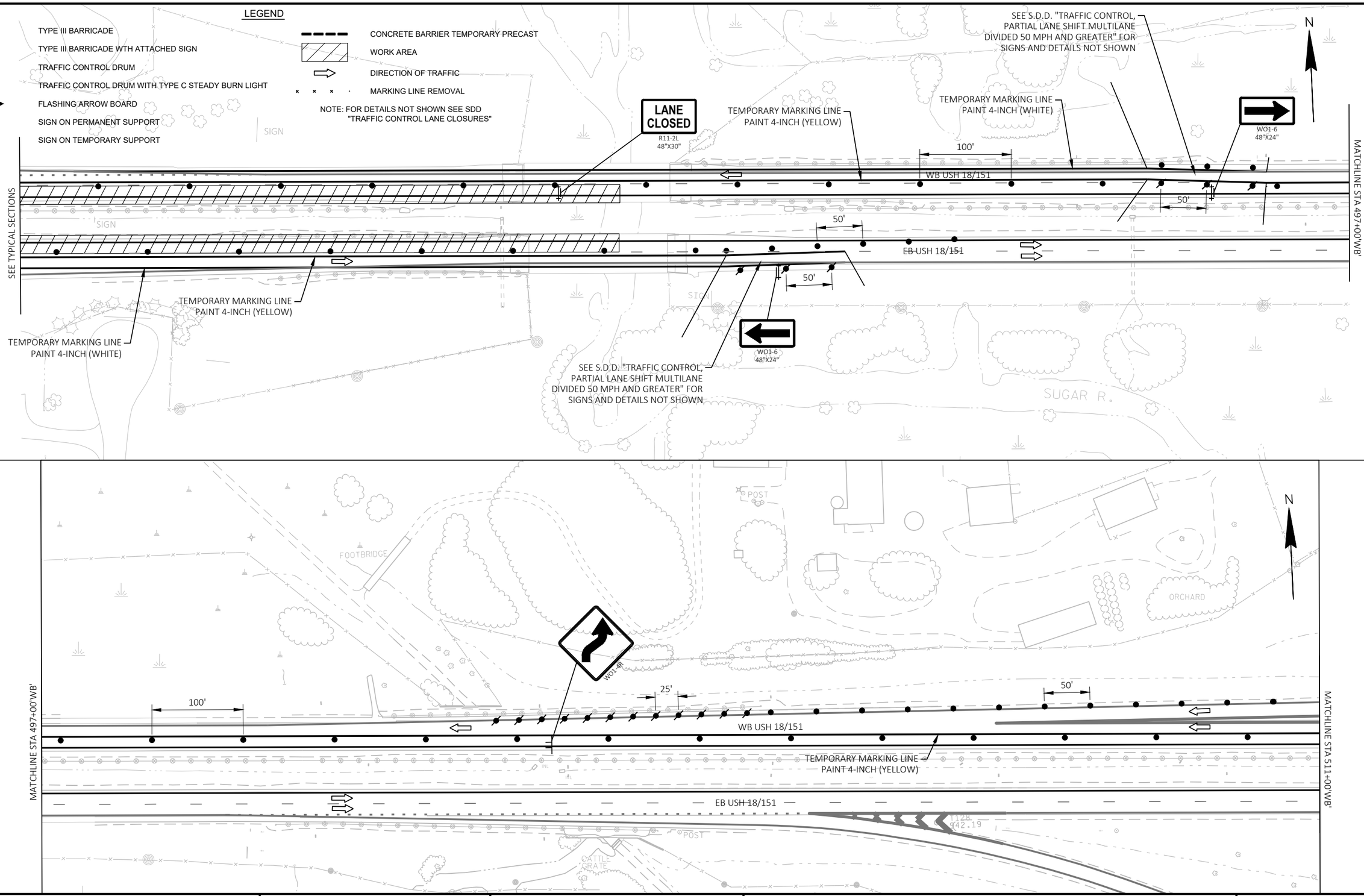

PROJECT NO: 1204-08-65	HWY: USH 18/151	COUNTY: DANE	TRAFFIC CONTROL DETAIL - STAGE 1 LEFT LANE CLOSURE	SHEET 228	E

FILE NAME : G:\WDOTSW\20007-000 USH 18\CIVIL 3D\SHEETSPLAN\TRAFFIC CONTROL\RE-LET\020301-TC_STG1-PH2.DWG
LAYOUT NAME - LT LN (2)
PLOT DATE : 12/7/2022 12:49 PM
PLOT BY : JOSH MERCIER
PLOT NAME :
PLOT SCALE : 1 IN:100 FT
WISDOT/CADDS SHEET 42

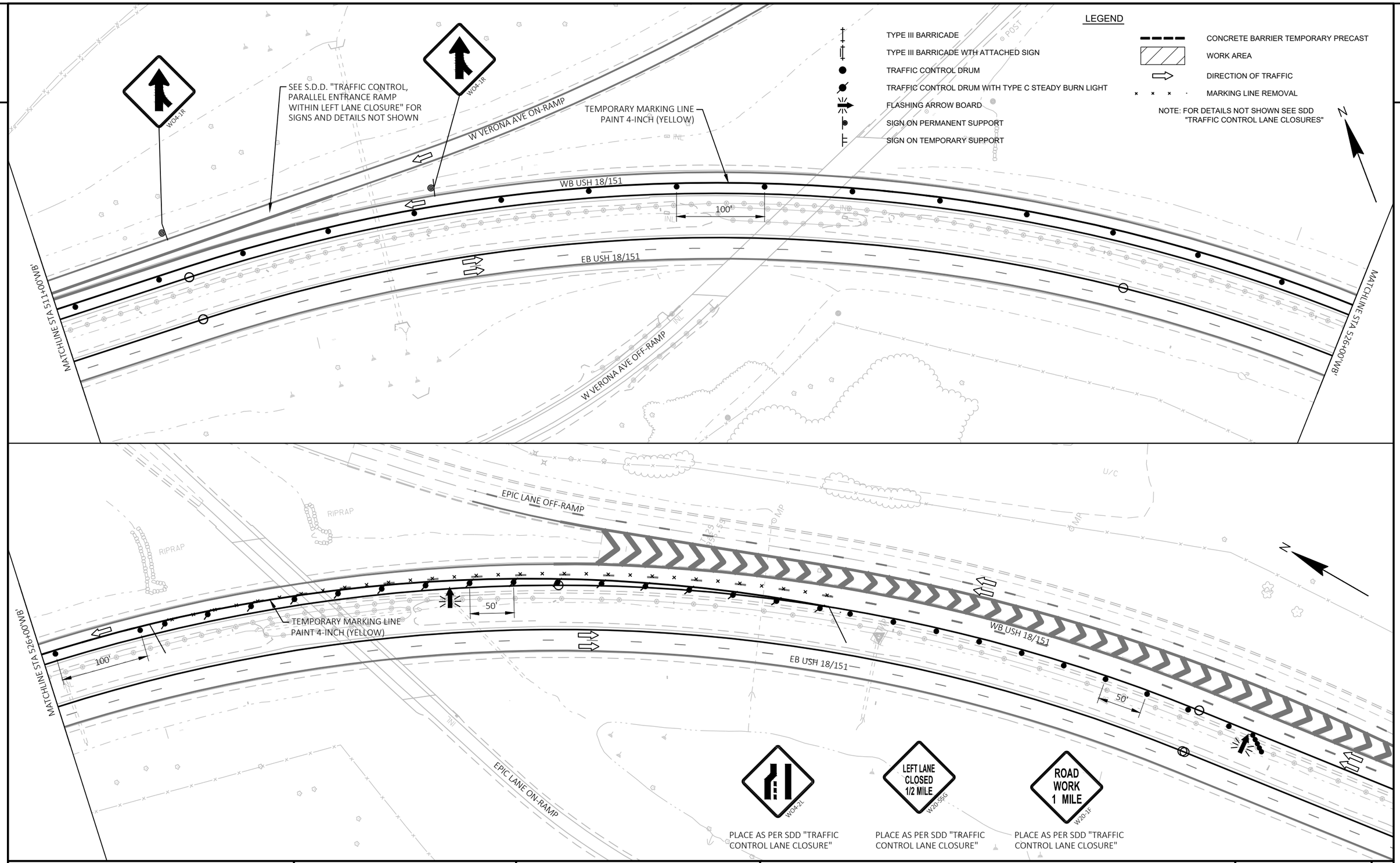

PROJECT NO: 1204-08-65	HWY: USH 18/151	COUNTY: DANE	TRAFFIC CONTROL DETAIL - STAGE 1 LEFT LANE CLOSURE	SHEET 229	E

2

LEGEND

PCMS — PORTABLE CHANGEABLE MESSAGE SIGN

(S) — PORTABLE TRAFFIC SENSOR

N

NOTE: SEE THE FOLLOWING STANDARD DETAIL DRAWING FOR ADDITIONAL DETAILS INCLUDING PCMS MESSAGING.

- S.D.D. TRAFFIC CONTROL, LANE CLOSURE, TRAFFIC QUEUE WARNING SYSTEM

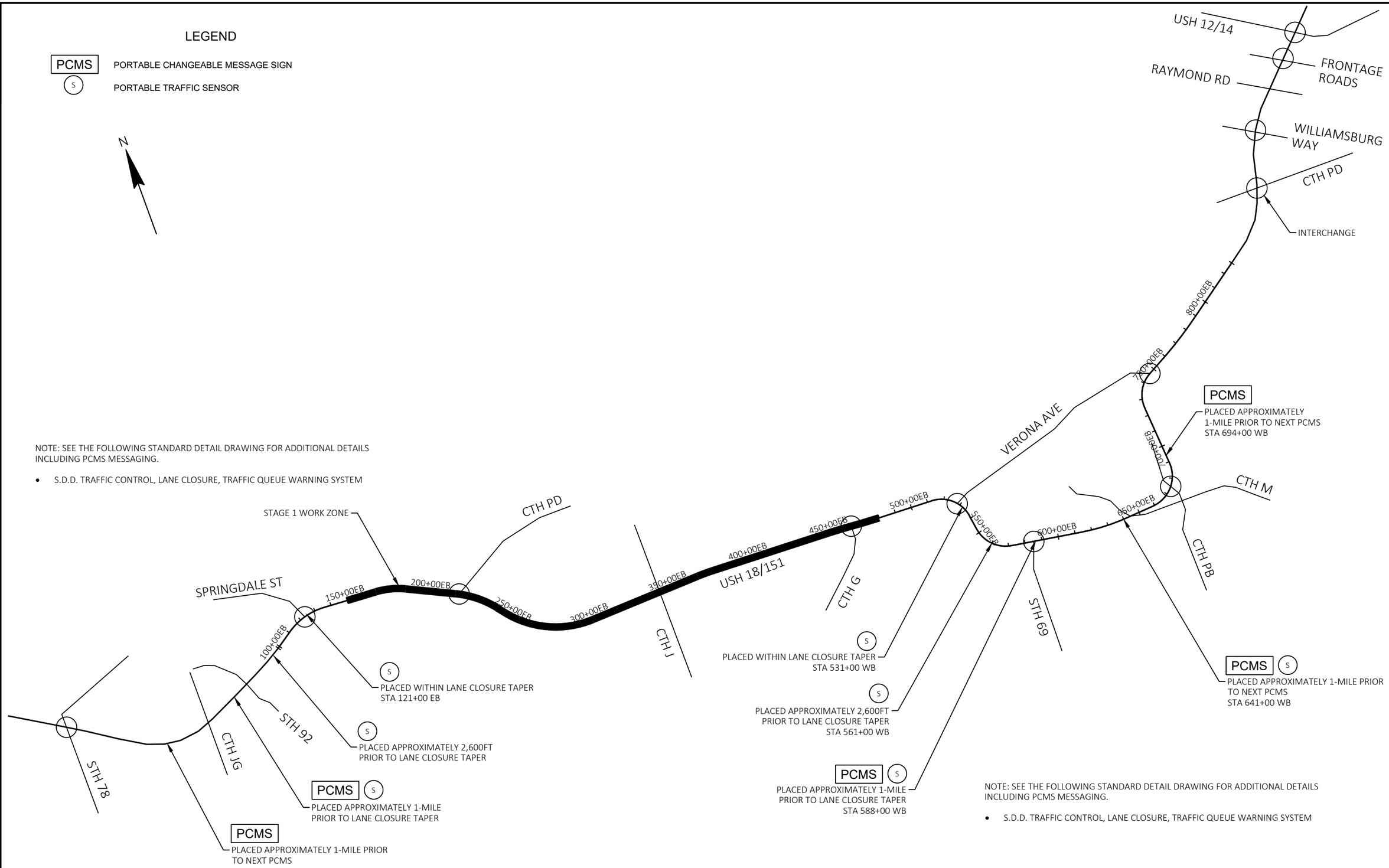

NOTE: SEE THE FOLLOWING STANDARD DETAIL DRAWING FOR ADDITIONAL DETAILS INCLUDING PCMS MESSAGING.

- S.D.D. TRAFFIC CONTROL, LANE CLOSURE, TRAFFIC QUEUE WARNING SYSTEM

PROJECT NO: 1204-08-65	HWY: USH 18/151	COUNTY: DANE	TRAFFIC CONTROL DETAILS - QWS LOCATIONS - STAGE 1	SHEET 230	E

FILE NAME : G:\WDOTSW\20007-000 USH 18\CIVIL 3D\SHEETSPLAN\TRAFFIC CONTROL\RE-LET\020300-TC_DETAILS.DWG
LAYOUT NAME - QWS

PLOT DATE : 11/18/2022 12:40 PM PLOT BY : BRIAN ST. VINCENT PLOT NAME : PLOT SCALE : 1 IN:2500 FT

WISDOT/CADDS SHEET 44

2

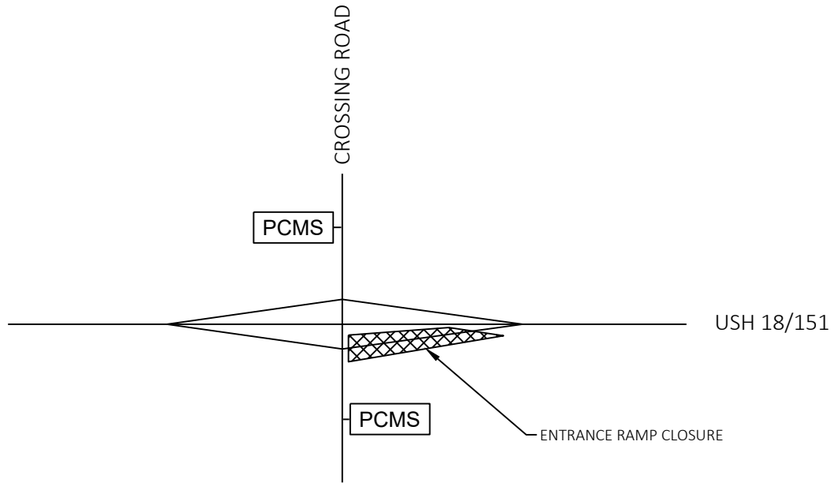

ENTRANCE RAMP CLOSURE

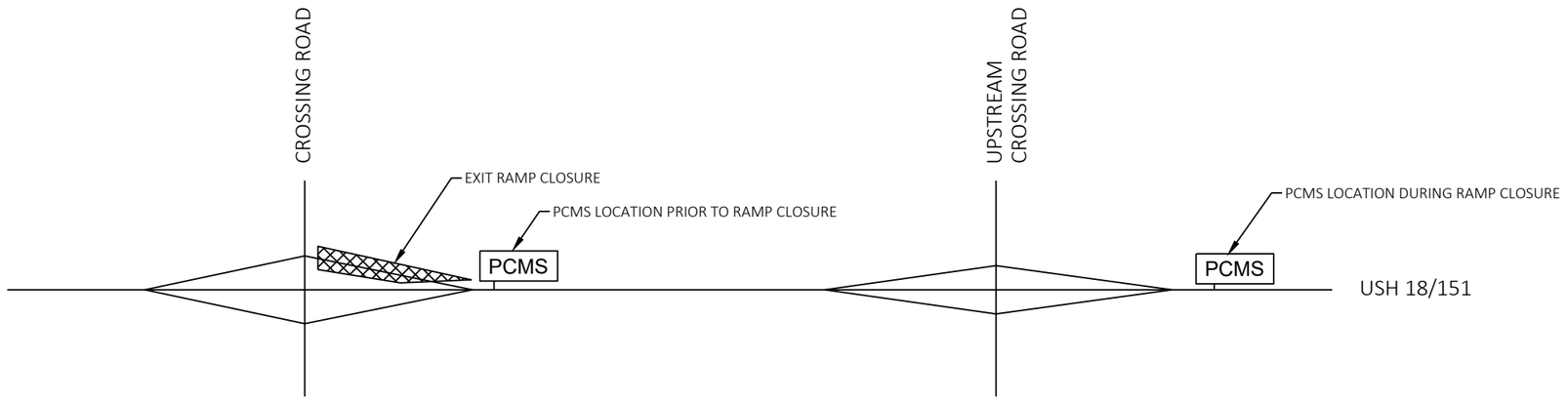

EXIT RAMP CLOSURE

LEGEND

PCMS PORTABLE CHANGEABLE MESSAGE SIGN

PROJECT NO: 1204-08-65	HWY: USH 18/151	COUNTY: DANE	TRAFFIC CONTROL DETAILS - PCMS LOCATIONS FOR RAMP CLOSURES	SHEET 231	E

NOTE: SEE STANDARD DETAIL DRAWINGS FOR ADDITIONAL PCMS MESSAGING DETAILS NOT SHOWN.

PCMS MESSAGE PLAN

EVENT/LOCATION	PANEL 1	PANEL 2
PRIOR TO START OF CONSTRUCTION	ROAD WORK BEGINS	STARTING (DATE)

PCMS MESSAGE PLAN

EVENT/LOCATION	PANEL 1	PANEL 2
PRIOR TO CTH PD WB ON-RAMP CLOSURE	RAMP TO CLOSE	XX DAYS STARTING (DATE)
PRIOR TO CTH PD WB OFF-RAMP CLOSURE	RAMP TO CLOSE	XX DAYS STARTING (DATE)
PRIOR TO CTH PD EB ON-RAMP CLOSURE	RAMP TO CLOSE	XX DAYS STARTING (DATE)
PRIOR TO CTH PD EB OFF-RAMP CLOSURE	RAMP TO CLOSE	XX DAYS STARTING (DATE)
PRIOR TO CTH G WB ON-RAMP CLOSURE	RAMP TO CLOSE	XX DAYS STARTING (DATE)
PRIOR TO CTH G WB OFF-RAMP CLOSURE	RAMP TO CLOSE	XX DAYS STARTING (DATE)
PRIOR TO CTH G EB ON-RAMP CLOSURE	RAMP TO CLOSE	XX DAYS STARTING (DATE)
PRIOR TO CTH G EB OFF-RAMP CLOSURE	RAMP TO CLOSE	XX DAYS STARTING (DATE)
PRIOR TO W VERONA AVE EB OFF-RAMP CLOSURE	RAMP TO CLOSE	XX DAYS STARTING (DATE)
PRIOR TO STH 69 WB ON-RAMP CLOSURE	RAMP TO CLOSE	XX DAYS STARTING (DATE)
PRIOR TO STH 69 WB OFF-RAMP CLOSURE	RAMP TO CLOSE	XX DAYS STARTING (DATE)
PRIOR TO STH 69 EB ON-RAMP CLOSURE	RAMP TO CLOSE	XX DAYS STARTING (DATE)
PRIOR TO STH 69 EB OFF-RAMP CLOSURE	RAMP TO CLOSE	XX DAYS STARTING (DATE)
PRIOR TO CTH PB WB ON-RAMP CLOSURE	RAMP TO CLOSE	XX DAYS STARTING (DATE)
PRIOR TO CTH PB WB OFF-RAMP CLOSURE	RAMP TO CLOSE	XX DAYS STARTING (DATE)
PRIOR TO CTH PB EB ON-RAMP CLOSURE	RAMP TO CLOSE	XX DAYS STARTING (DATE)
PRIOR TO CTH PB OFF-RAMP CLOSURE	RAMP TO CLOSE	XX DAYS STARTING (DATE)
PRIOR TO E VERONA AVE EB ON-RAMP CLOSURE	RAMP TO CLOSE	XX DAYS STARTING (DATE)
PRIOR TO E VERONA AVE WB OFF-RAMP CLOSURE	RAMP TO CLOSE	XX DAYS STARTING (DATE)
PRIOR TO WILLIAMSBURG WAY SLIP RAMP CLOSURE	RAMP TO CLOSE	XX DAYS STARTING (DATE)

PCMS MESSAGE PLAN

EVENT/LOCATION	PANEL 1	PANEL 2
DURING CTH PD WB ON-RAMP CLOSURE	RAMP CLOSED	USE ALT ROUTE
DURING CTH PD WB OFF-RAMP CLOSURE	EXIT XX CLOSED	USE EXIT XX
DURING CTH PD EB ON-RAMP CLOSURE	RAMP CLOSED	USE ALT ROUTE
DURING CTH PD EB OFF-RAMP CLOSURE	EXIT XX CLOSED	USE EXIT XX
DURING CTH G WB ON-RAMP CLOSURE	RAMP CLOSED	USE ALT ROUTE
DURING CTH G WB OFF-RAMP CLOSURE	EXIT XX CLOSED	USE EXIT XX
DURING CTH G EB ON-RAMP CLOSURE	RAMP CLOSED	USE ALT ROUTE
DURING CTH G EB OFF-RAMP CLOSURE	EXIT XX CLOSED	USE EXIT XX
DURING W VERONA AVE EB OFF-RAMP CLOSURE	EXIT XX CLOSED	USE EXIT XX
DURING STH 69 WB ON-RAMP CLOSURE	RAMP CLOSED	USE ALT ROUTE
DURING STH 69 WB OFF-RAMP CLOSURE	EXIT XX CLOSED	USE EXIT XX
DURING STH 69 EB ON-RAMP CLOSURE	RAMP CLOSED	USE ALT ROUTE
DURING STH 69 EB OFF-RAMP CLOSURE	EXIT XX CLOSED	USE EXIT XX
DURING CTH PB WB ON-RAMP CLOSURE	RAMP CLOSED	USE ALT ROUTE
DURING CTH PB WB OFF-RAMP CLOSURE	EXIT XX CLOSED	USE EXIT XX
DURING CTH PB EB ON-RAMP CLOSURE	RAMP CLOSED	USE ALT ROUTE
DURING CTH PB OFF-RAMP CLOSURE	EXIT XX CLOSED	USE EXIT XX
DURING E VERONA AVE EB ON-RAMP CLOSURE	RAMP CLOSED	USE ALT ROUTE
DURING E VERONA AVE WB OFF-RAMP CLOSURE	EXIT XX CLOSED	USE EXIT XX
DURING WILLIAMSBURG WAY SLIP RAMP CLOSURE	RAMP CLOSED	USE ALT ROUTE

2

STAGE 2 SUMMARY

MAINTENANCE OF TRAFFIC (MOT)

USH 18/151 WEST OF STA. 320+00 'EB'

- USH 18/151 WILL REMAIN OPEN TO ONE LANE OF TRAFFIC AT ALL TIMES IN THE WB AND EB DIRECTION UTILIZING A LONG TERM LANE AND SHOULDER CLOSURE.

USH 18/151 STA. 320+00 'EB' TO STA. 489+00 'EB'

- USH 18/151 WILL REMAIN OPEN TO ALL LANES AT ALL TIMES EXCEPT NIGHTTIME SINGLE LANE CLOSURES AS SPECIFIED IN THE CONTRACT SPECIAL PROVISIONS.

USH 18/151 STA. 489+00 'EB' TO THE EAST END OF PROJECT.

- USH 18/151 WILL REMAIN OPEN TO ONE LANE OF TRAFFIC AT ALL TIMES IN THE WB AND EB DIRECTION UTILIZING A LONG TERM LANE AND SHOULDER CLOSURE.
- USH 18/151 WILL BE OPEN TO ONE THRU LANE AND AUXILIARY LANE OF TRAFFIC AT ALL TIMES IN THE WB LANE FROM STATION 543+75'WB' TO 574+00'WB' EXCEPT NIGHTTIME LANE CLOSURES AS SPECIFIED IN THE CONTRACT SPECIAL PROVISIONS.

All RAMPS

- ALL RAMPS WILL REMAIN OPEN AT ALL TIMES EXCEPT CLOSURE TIMES AS SPECIFIED IN THE CONTRACT SPECIAL PROVISIONS.

STH 69 & CTH PB

- STH 69 & CTH PB WILL REMAIN OPEN TO ONE LANE OF TRAFFIC AT ALL TIMES UTILIZING A LONG TERM LANE CLOSURE.

PHASING DETAILS ALONG USH 18/151 EAST OF STA. 489+00 'EB'

PHASE 1 MOT
- TRAFFIC WILL BE REDUCED TO ONE LANE IN EACH DIRECTION UTILIZING THE EXISTING MEDIAN LANE

PHASE 1 CONSTRUCTION
- THE EXISTING OUTSIDE SHOULDER WILL BE RECONSTRUCTED

PHASE 2 MOT
- TRAFFIC WILL BE REDUCED TO ONE LANE IN EACH DIRECTION UTILIZING THE EXISTING OUTSIDE LANE AND RECONSTRUCTED OUTSIDE SHOULDER.

PHASE 2 CONSTRUCTION
- BASE PATCHING CONCRETE OF THE EXISTING MEDIAN LANE AND RECONSTRUCTING THE EXISTING MEDIAN SHOULDER FROM 3' PAVED TO 6' PAVED.
- CONCRETE PAVEMENT APPROACH SLABS.
- CONCRETE PAVEMENT RECONSTRUCTION AREA AND TEMPORARY WIDENING, EB MEDIAN LANE.

PHASE 3 MOT
- TRAFFIC WILL BE REDUCED TO ONE LANE IN EACH DIRECTION UTILIZING THE EXISTING MEDIAN LANE AND RECONSTRUCTED MEDIAN SHOULDER.

PHASE 3 CONSTRUCTION
- BASE PATCHING CONCRETE OF THE OUTSIDE LANE AND PAVING THE LOWER LAYER OF ASPHALT OVER THE OUTSIDE LANE AND SHOULDER.
- CONCRETE PAVEMENT APPROACH SLABS
- CONCRETE PAVEMENT RECONSTRUCTION AREA, EB OUTSIDE LANE.

PHASE 4 MOT
- TRAFFIC WILL BE REDUCED TO ONE LANE IN EACH DIRECTION UTILIZING THE LOWER LAYER OF ASPHALT OVER THE OUTSIDE LANE AND SHOULDER.

PHASE 4 CONSTRUCTION
- PAVING THE LOWER LAYER AND UPPER LAYER OF ASPHALT OVER THE MEDIAN LANE AND SHOULDER.
- MEDIAN MGS GUARDRAIL.
- REMOVING ADDITIONAL MEDIAN SHOULDER TO RESTORE TO FINAL SECTION IN THE PAVEMENT RECONSTRUCTION AREA.

PHASE 5 MOT
- TRAFFIC WILL BE REDUCED TO ONE LANE IN EACH DIRECTION UTILIZING THE UPPER LAYER OF ASPHALT OVER THE MEDIAN LANE AND SHOULDER.

PHASE 5 CONSTRUCTION
- PAVING THE UPPER LAYER OF ASPHALT OVER THE OUTSIDE LANE AND SHOULDER.
- OUTSIDE MGS GUARDRAIL

PHASE 6 MOT
- TRAFFIC WILL BE REDUCED TO ONE LANE IN EACH DIRECTION UTILIZING THE UPPER LAYER OF ASPHALT OVER THE OUTSIDE LANE.

PHASE 6 CONSTRUCTION
- MEDIAN LANE RUMBLE STRIPS AND PAVEMENT MARKINGS.

PHASING DETAILS ALONG STH 69 & CTH PB

PHASE 1 MOT
- TRAFFIC WILL BE REDUCED TO ONE LANE IN EACH DIRECTION UTILIZING THE EXISTING OUTSIDE LANE.

PHASE 1 CONSTRUCTION
- THE EXISTING MEDIAN LANE AND LEFT TURN LANES WILL BE RECONSTRUCTED.

PHASE 2 MOT
- TRAFFIC WILL BE REDUCED TO ONE LANE IN EACH DIRECTION UTILIZING THE RECONSTRUCTED MEDIAN LANE AND LEFT TURN LANES.

PHASE 2 CONSTRUCTION.
- THE EXISTING OUTSIDE LANE WILL BE RECONSTRUCTED.

CONSTRUCTION TO BE COMPLETED THIS STAGE

- ALL WORK IN THE PROJECT PLANS EXCEPT FOR MEDIAN GRADING FOR CABLE GUARD INSTALLATION, MEDIAN INLET RECONSTRUCTION FOR CABLE GUARD INSTALLATION, CABLE GUARD REMOVAL AND CONSTRUCTION, AND BULLNOSE TERMINAL REMOVAL AND CONSTRUCTION.

GENERAL NOTES

- ANY SIGNS, TEMPORARY OR EXISTING, WHICH CONFLICT WITH TRAFFIC CONTROL "IN USE" SHALL BE REMOVED OR COVERED AS NEEDED AND AS APPROVED BY THE ENGINEER. REMOVING/REPLACING OR COVERING/UNCOVERING SIGNS WILL BE INCIDENTAL TO OTHER TRAFFIC CONTROL ITEMS.
- ALL TRAFFIC CONTROL SIGNS SHALL BE 48" X 48" UNLESS OTHERWISE NOTED.
- "WO" SIGNS ARE THE SAME AS "W" SIGNS EXCEPT THE BACKGROUND IS REFLECTIVE ORANGE.
- CONSIDER GEOMETRICS WHEN LOCATING SIGNS, ARROW BOARDS AND SIGN MESSAGE BOARDS SO THE DRIVER HAS A CLEAR VIEW OF THE ARROW BOARDS, SIGN MESSAGE BOARDS AND LANE CLOSURE DRUMS FOR A MINIMUM OF 1500 FEET IN FRONT OF THE DRUMS.
- IF SIGNS ARE IN PLACE LESS THAN 7 CONTINUOUS DAYS AND NIGHTS, THE ADVANCED WARNING SIGNS MAY BE MOUNTED ON PORTABLE SUPPORTS WITH A MINIMUM 5' MOUNTING HEIGHT.
- ALL TRAFFIC CONTROL SIGNING SHALL CONFORM TO: PART VI OF THE MANUAL ON UNIFORM TRAFFIC CONTROL DEVICES, WISCONSIN MANUAL OF UNIFORM TRAFFIC CONTROL DEVICES, TRAFFIC ENGINEERING, OPERATIONS AND SAFETY MANUAL, AND OTHER CONTRACT DOCUMENTS.
- THE TURNING OF TRAFFIC CONTROL DEVICES WHEN NOT IN USE TO OBSCURE THE MESSAGE WILL NOT BE ALLOWED.
- REMOVE PAVEMENT MARKINGS NOT APPROPRIATE FOR THE TRAVEL PATH IN USE.
- MOVE, REMOVE OR INSTALL ROUTE MARKER SIGNS AS REQUIRED TO MAINTAIN NECESSARY ROUTE GUIDANCE THROUGHOUT CONSTRUCTION. REFER TO EXISTING SIGN REMOVAL PLANS FOR EXISTING ROUTE GUIDANCE.
- THE LANE CLOSURE SERIES SHALL BE INSTALLED AS A COMPLETE UNIT WHICH INCLUDES ALL ADVANCE WARNING SIGNING, DRUMS, AND ARROW BOARDS.
- CONTRACTORS EQUIPMENT AND MATERIAL STOCKPILES MAY NOT BE STORED WITHIN THE CONSTRUCTION CLEAR ZONE OF USH 18 OR USH 18 RAMPS WHILE THE CONTRACTOR IS NOT WORKING, UNLESS THEY ARE PROTECTED BY CONCRETE BARRIER TEMPORARY PRECAST. CONSTRUCTION CLEAR ZONE = 20 FEET MEASURED FROM THE EDGE OF LANE LINE.
- CONCRETE BARRIER TEMPORARY PRECAST SHALL BE ANCHORED IF THE DISTANCE TO A 2 FOOT OR GREATER DROP-OFF THAT IS STEEPER THAN 3H:1V

REFERENCE THE FOLLOWING STANDARD DETAIL DRAWINGS
- BARRICADES AND SIGNS FOR MAINLINE CLOSURES
- CONCRETE BARRIER TEMPORARY PRECAST, 12'-6"
- CRASH CUSHION/SAND BARREL ARRAY AND OTHER TEMPORARY BARRIER LAYOUT DETAILS
- TRAFFIC CONTROL, LANE CLOSURE, SPEED REDUCTION
- TRAFFIC CONTROL, PARALLEL ENTRANCE RAMP WITHIN LANE CLOSURE
- TRAFFIC CONTROL, ENTRANCE RAMP WITHIN LANE CLOSURE
- TRAFFIC CONTROL, TAPERED ENTRANCE RAMP WITHIN LANE CLOSURE
- TRAFFIC CONTROL, TAPERED ENTRANCE RAMP WITHIN LANE CLOSURE
- TRAFFIC CONTROL, PARALLEL EXIT RAMP WITHIN LANE CLOSURE
- TRAFFIC CONTROL, EXIT RAMP CLOSURE
- TRAFFIC CONTROL, SINGLE LANE CLOSURE, NON-FREEWAY/EXPRESSWAY
- TRAFFIC CONTROL, INTERSECTION WITHIN SINGLE LANE CLOSURE
- TRAFFIC CONTROL, INTERSECTION WITHIN SINGLE LANE CLOSURE
- TRAFFIC CONTROL, SHOULDER CLOSURE ON DIVIDED ROADWAY, SPEEDS GREATER THAN 40 MPH
- TRAFFIC CONTROL, DROP-OFF SIGNING
- TRAFFIC CONTROL, INGRESS/EGRESS WITH BARRIER
- TRAFFIC CONTROL, INGRESS/EGRESS WITHOUT BARRIER

2

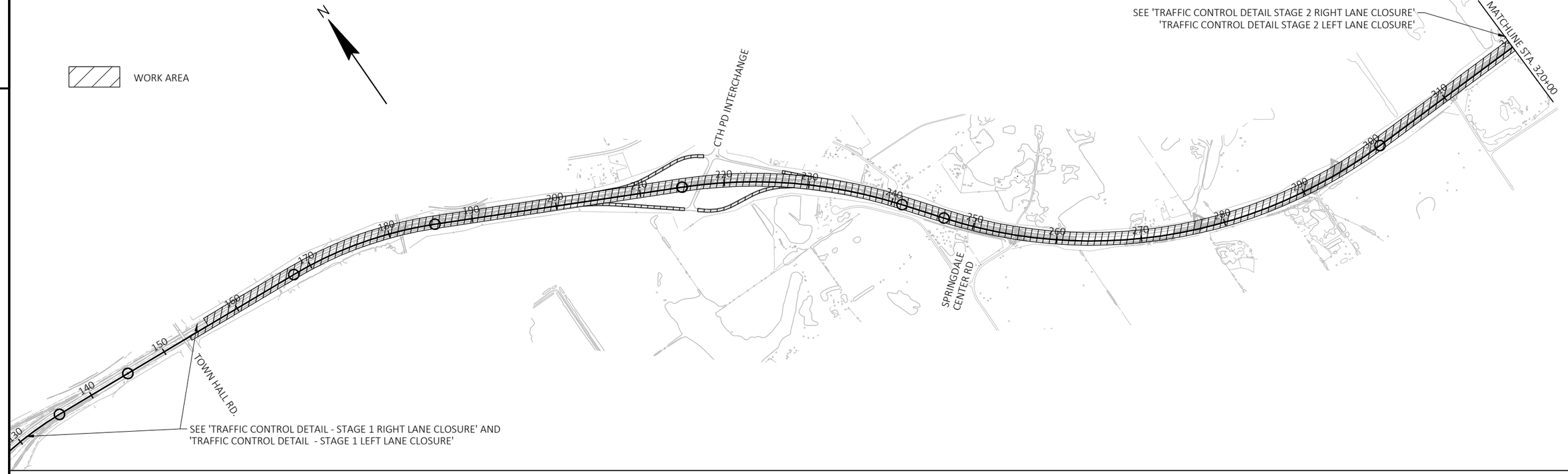

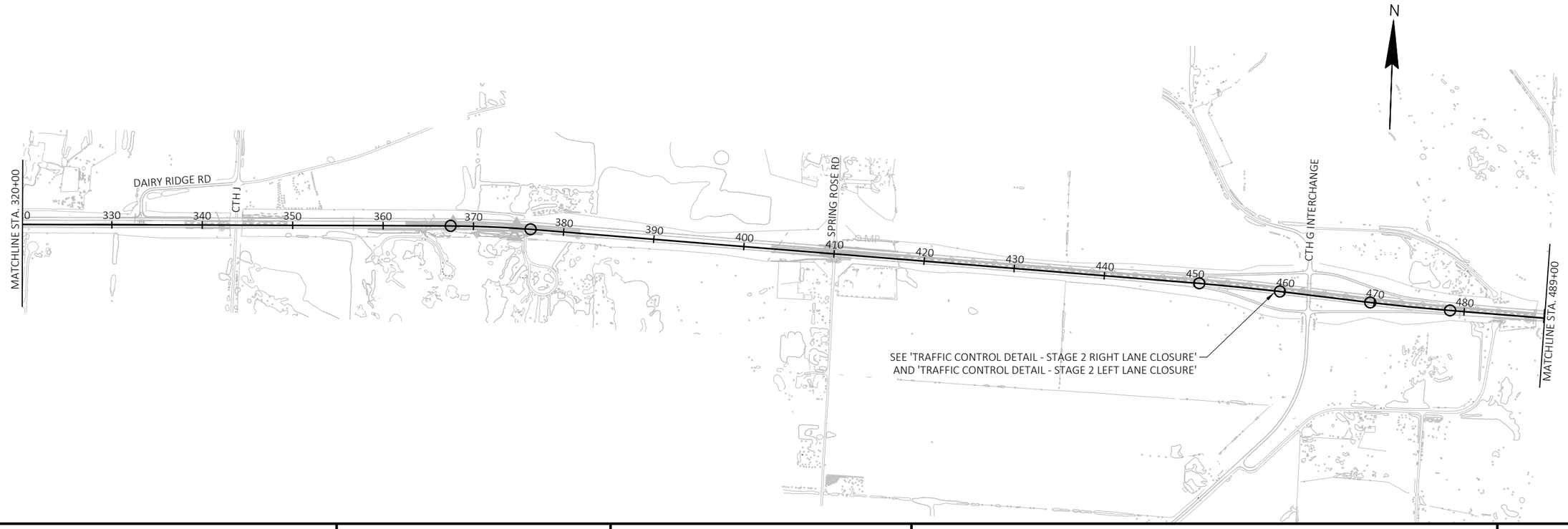

PROJECT NO: 1204-08-65	HWY: USH 18/151	COUNTY: DANE	TRAFFIC CONTROL OVERVIEW - STAGE 2	SHEET 234	E

FILE NAME : G:\WDOTSW\20007-000 USH 18\CIVIL 3D\SHEETSPLAN\TRAFFIC CONTROL\RE-LET\020303-TC__0VERVIEW_S2.DWG
LAYOUT NAME - 1

PLOT DATE : 12/1/2022 4:31 PM PLOT BY : JOSH MERCIER PLOT NAME : PLOT SCALE : 1 IN:2500 FT

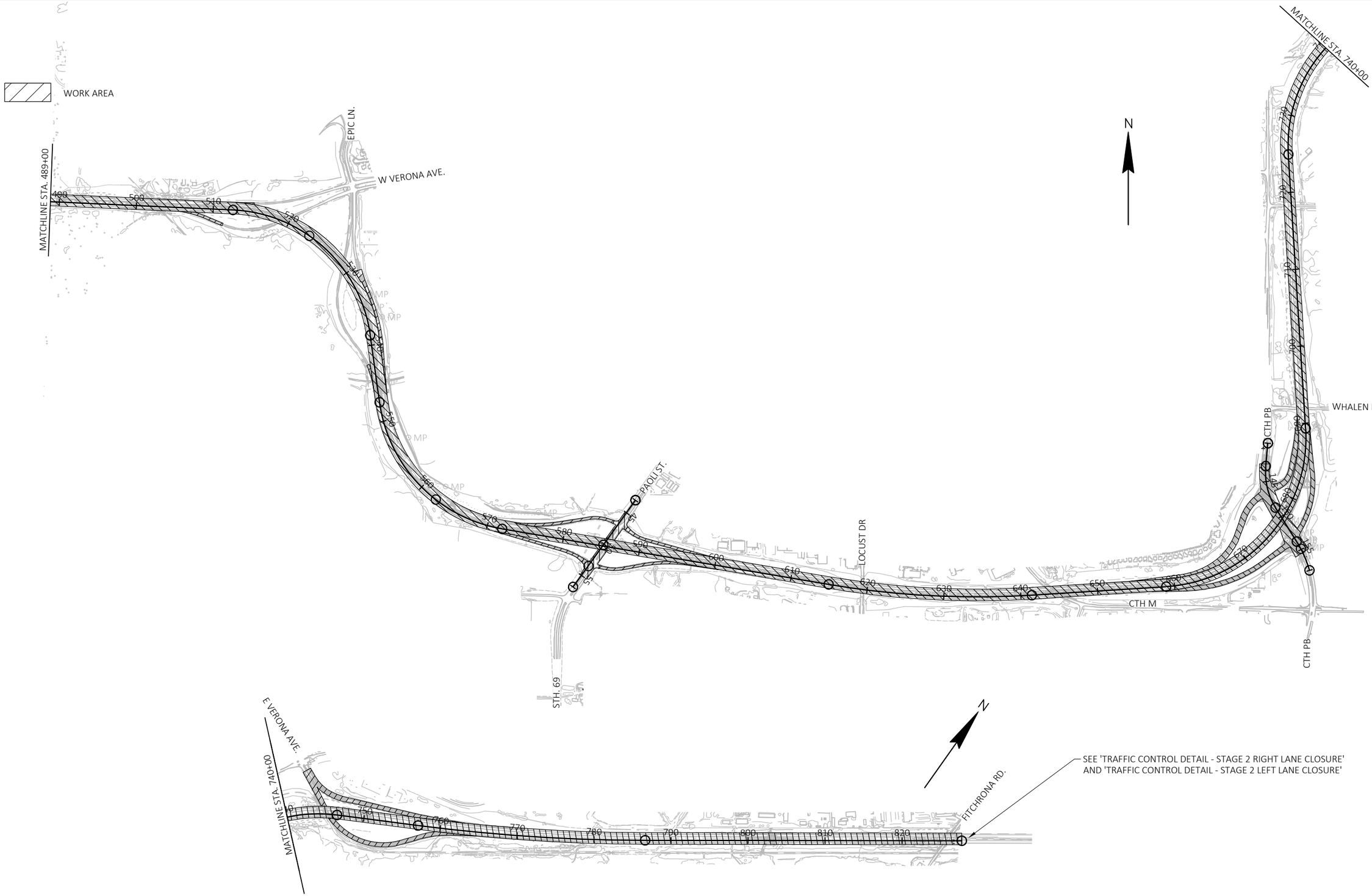

PROJECT NO: 1204-08-65	HWY: USH 18/151	COUNTY: DANE	TRAFFIC CONTROL OVERVIEW - STAGE 2	SHEET 235	E

FILE NAME : G:\WDOTSW\20007-000 USH 18\CIVIL 3D\SHEETSPLAN\TRAFFIC CONTROL\RE-LET\020303-TC__0VERVIEW_S2.DWG
LAYOUT NAME - 2

PLOT DATE : 12/1/2022 4:32 PM PLOT BY : JOSH MERCIER PLOT NAME : PLOT SCALE : 1 IN:2500 FT

WISDOT/CADDS SHEET 44

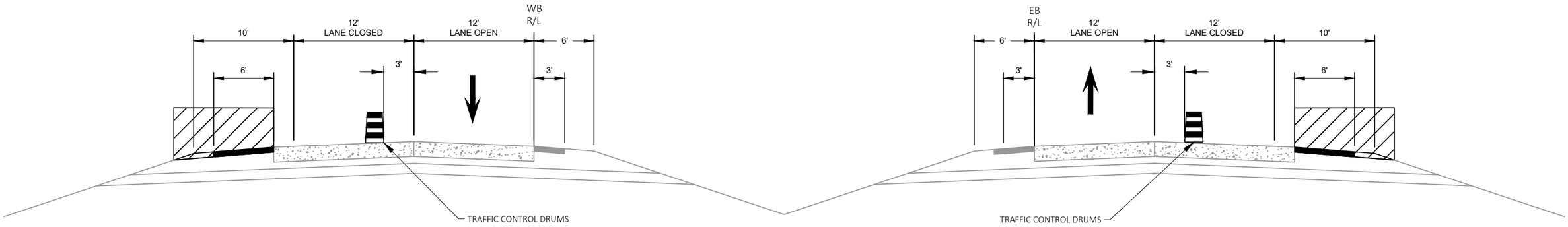

PHASE 1 TYPICAL SECTION

STA. 428+00'EB' - STA. 543+75'EB'
STA. 489+00'WB' - STA. 543+75'WB'
STA. 574+00'EB' - STA. 674+00'EB'
STA. 574+00'WB' - STA. 674+00'WB'
STA. 753+11'EB' - STA. 824+83'EB'
STA. 753+11'WB' - STA. 825+35'WB'

WORK AREA

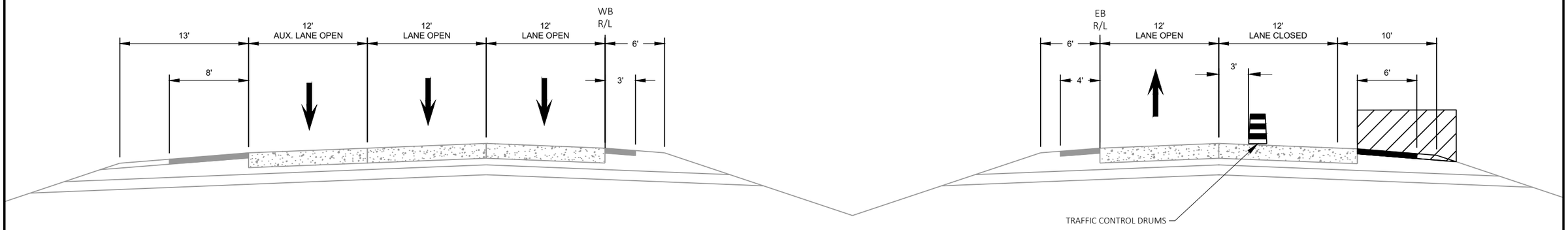

PHASE 1 TYPICAL SECTION

STA. 543+75'EB' - STA. 574+00'EB'
STA. 543+75'WB - STA. 574+00'WB'

PROJECT NO: 1204-08-65	HWY: USH 18/151	COUNTY: DANE	TRAFFIC CONTROL - STAGE 2 TYPICAL SECTIONS	SHEET 236	E

2

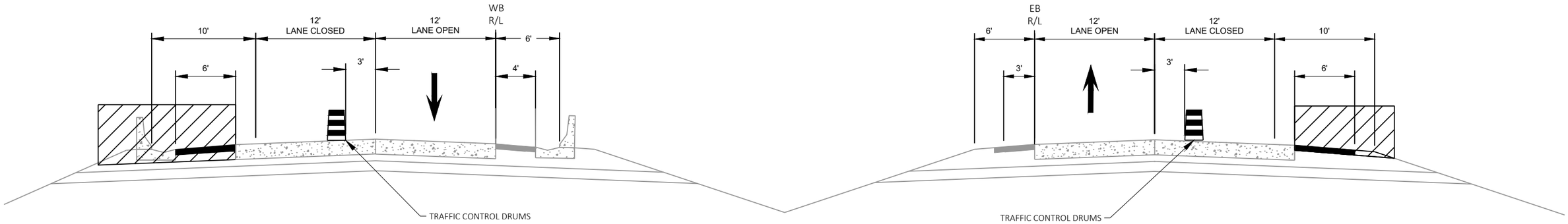

PHASE 1 TYPICAL SECTION

STA. 674+00'EB' - STA. 684+28'EB'
STA. 674+00'WB' - STA.683+61'WB'

WORK AREA

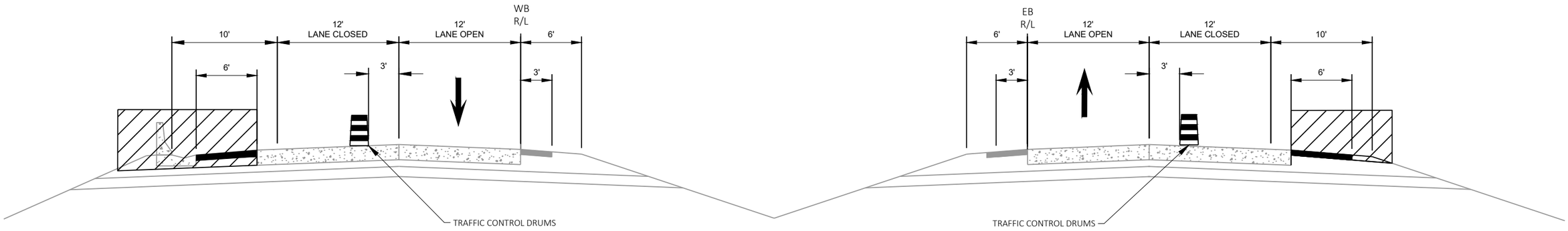

PHASE 1 TYPICAL SECTION

STA. 684+28'EB' - STA. 688+90'EB'
STA. 683+61'WB' - STA. 690+00'WB'

PROJECT NO: 1204-08-65	HWY: USH 18/151	COUNTY: DANE	TRAFFIC CONTROL - STAGE 2 TYPICAL SECTIONS	SHEET 237	E

FILE NAME : G:\WDOTSW\20007-000 USH 18\CIVIL 3D\SHEETSPLAN\TRAFFIC CONTROL\RE-LET\020304-TC__TYP_SEC_S2.DWG
LAYOUT NAME - 03
PLOT DATE : 11/30/2022 10:37 AM PLOT BY : KL ENGINEERING PLOT NAME : PLOT SCALE : 1 IN:10 FT
WISDOT/CADDS SHEET 42

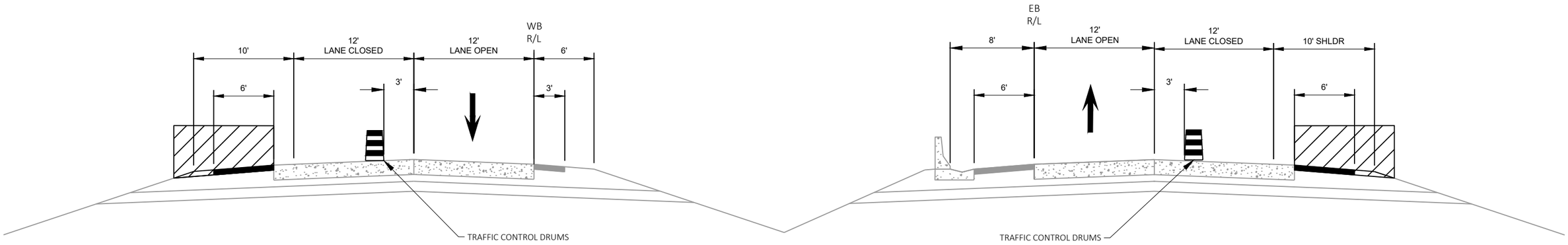

PHASE 1 TYPICAL SECTION

STA. 688+90'EB' - STA. 753+11'EB'
STA. 690+00'WB' - STA.753+11'WB'

WORK AREA

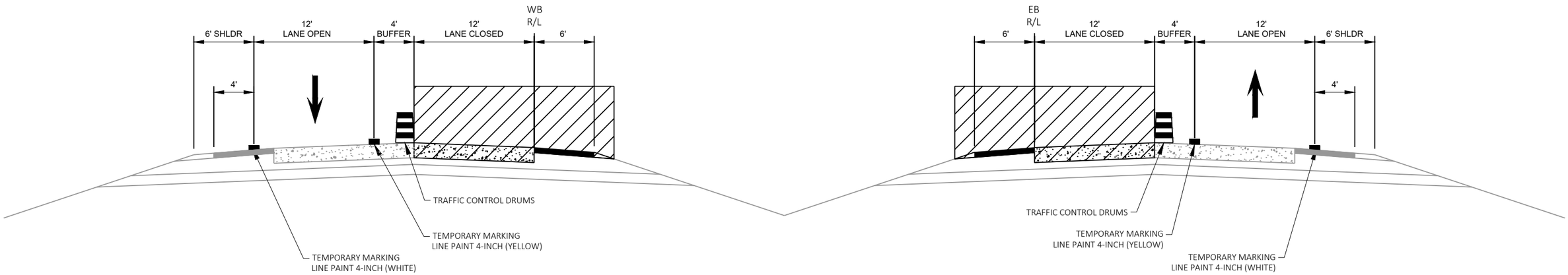

PHASE 2 TYPICAL SECTION

STA. 466+00'EB' - STA. 531+86'EB'
STA. 489+00'WB' - STA. 532+38'WB'
STA. 573+66'EB' - STA. 669+00'EB'
STA. 573+66'WB' - STA. 674+00'WB'
STA. 753+11'WB - STA. 825+30'WB'
STA. 753+11'EB' - STA. 824+78'EB'

PROJECT NO: 1204-08-65	HWY: USH 18/151	COUNTY: DANE	TRAFFIC CONTROL - STAGE 2 TYPICAL SECTIONS	SHEET 238	E

FILE NAME : G:\WDOTSW\20007-000 USH 18\CIVIL 3D\SHEETSPLAN\TRAFFIC CONTROL\RE-LET\020304-TC__TYP_SEC_S2.DWG
LAYOUT NAME - 04
PLOT DATE : 11/30/2022 10:37 AM PLOT BY : KL ENGINEERING PLOT NAME : PLOT SCALE : 1 IN:10 FT
WISDOT/CADDS SHEET 42

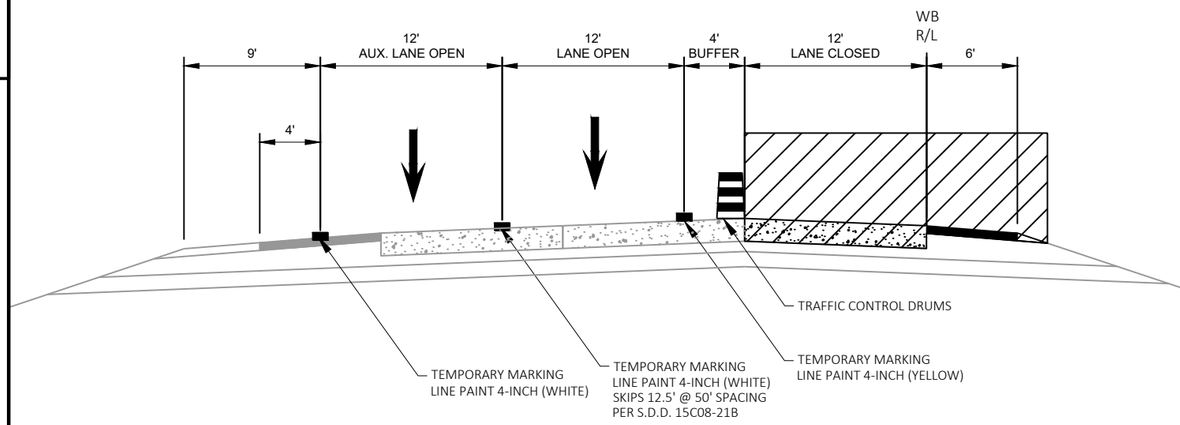

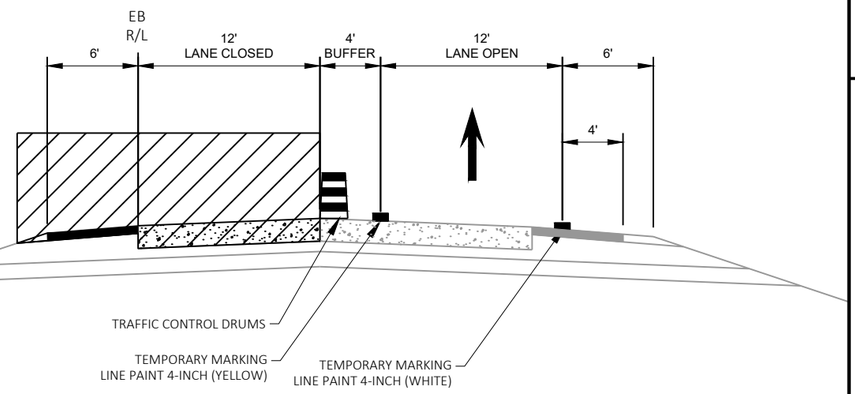

PHASE 2 TYPICAL SECTION

STA. 531+86'EB' - STA. 573+66'EB'
STA. 532+38'WB' - STA. 573+66'WB'

WORK AREA

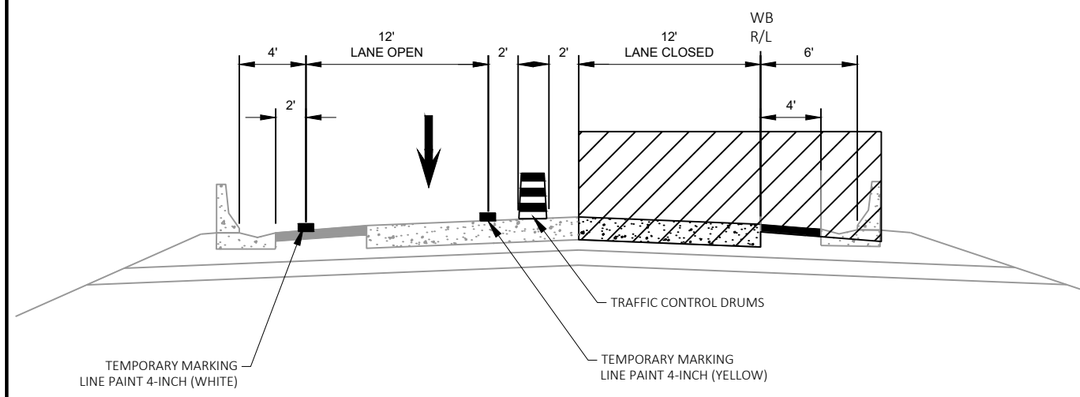

PHASE 2 TYPICAL SECTION

STA. 674+00'WB'- STA. 680+00'WB'

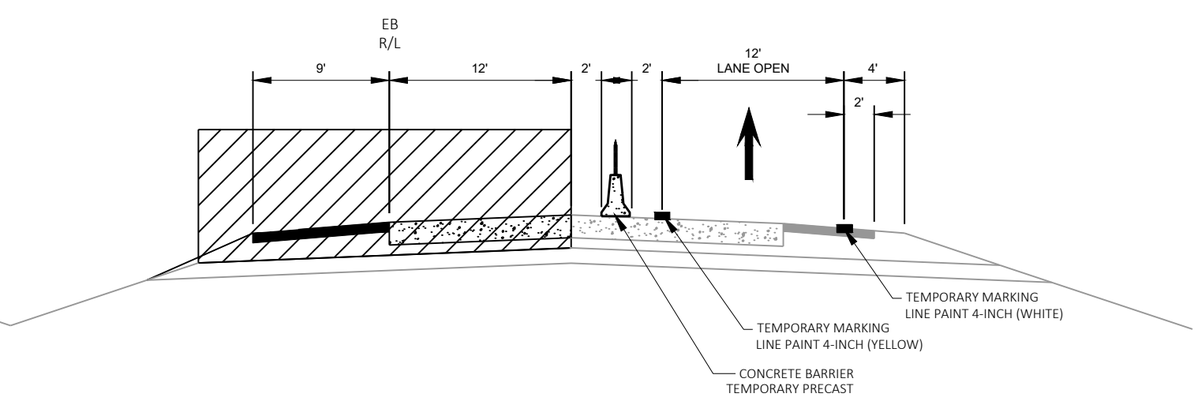

RECONSTRUCTION AREA PHASE 2

STA. 669+00'EB' - STA. 678+00'EB'

PROJECT NO: 1204-08-65	HWY: USH 18/151	COUNTY: DANE	TRAFFIC CONTROL - STAGE 2 TYPICAL SECTIONS	SHEET 239	E

FILE NAME : G:\WDOTSW\20007-000 USH 18\CIVIL 3D\SHEETSPLAN\TRAFFIC CONTROL\RE-LET\020304-TC__TYP_SEC_S2.DWG
LAYOUT NAME - 05
PLOT DATE : 11/30/2022 10:37 AM PLOT BY : KL ENGINEERING PLOT NAME : PLOT SCALE : 1 IN:10 FT

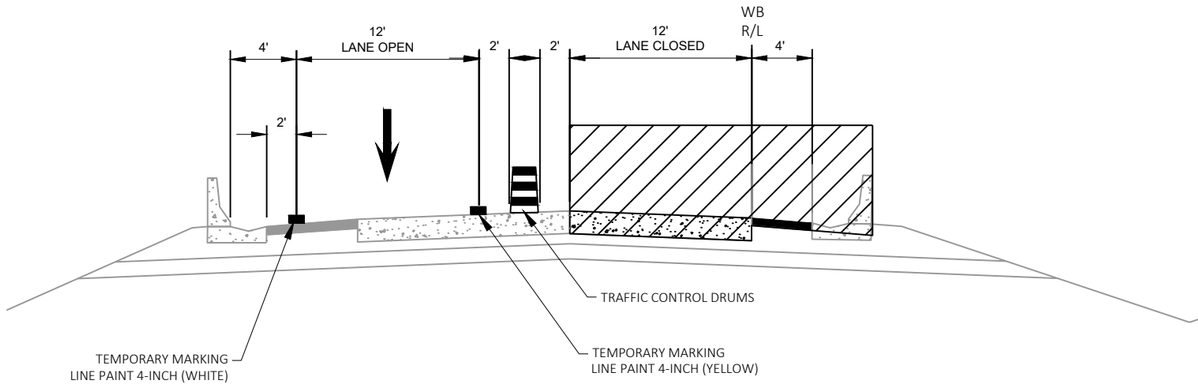

PHASE 2 TYPICAL SECTION

STA. 680+00'WB'- STA. 683+61'WB'

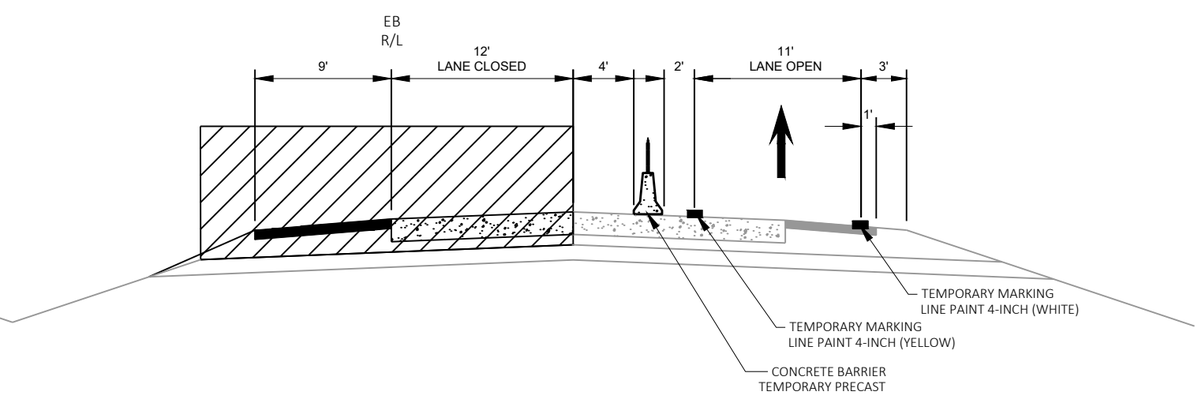

RECONSTRUCTION AREA PHASE 2

STA. 678+00'EB' - STA. 685+00'EB'

WORK AREA

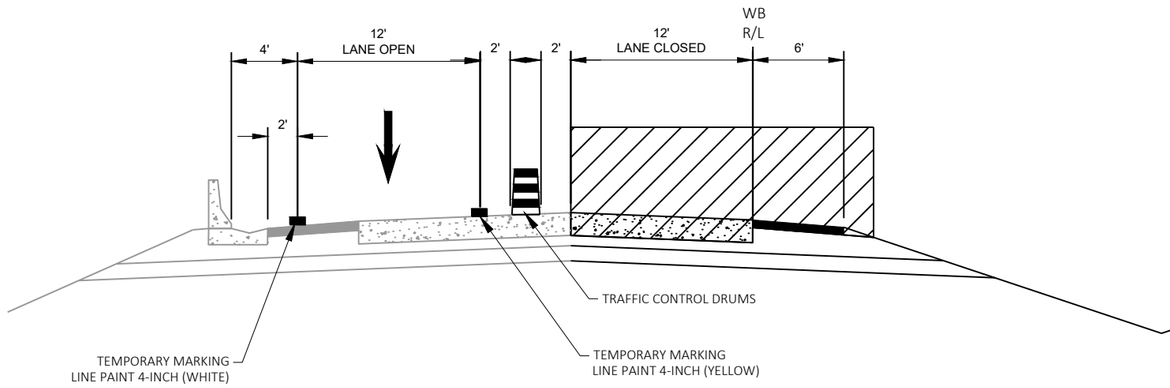

PHASE 2 TYPICAL SECTION

STA. 683+61WB'- STA. 688+00'WB'

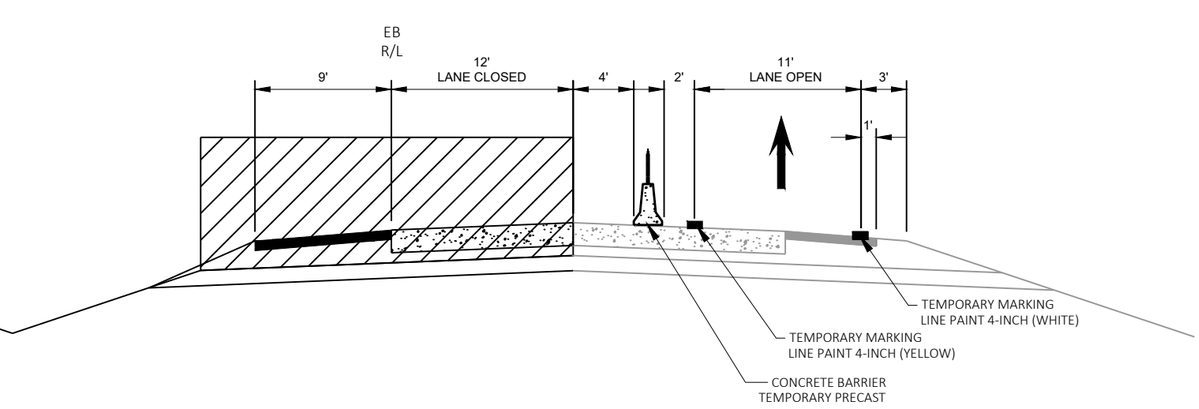

RECONSTRUCTION AREA PHASE 2

STA. 685+00'EB' - STA. 729+40'EB'

PROJECT NO: 1204-08-65	HWY: USH 18/151	COUNTY: DANE	TRAFFIC CONTROL - STAGE 2 TYPICAL SECTIONS	SHEET 240	E

FILE NAME : G:\WDOTSW\20007-000 USH 18\CIVIL 3D\SHEETSPLAN\TRAFFIC CONTROL\RE-LET\020304-TC__TYP_SEC_S2.DWG
LAYOUT NAME - 06

PLOT DATE : 11/30/2022 10:37 AM PLOT BY : KL ENGINEERING PLOT NAME : PLOT SCALE : 1 IN:10 FT

WISDOT/CADDS SHEET 42

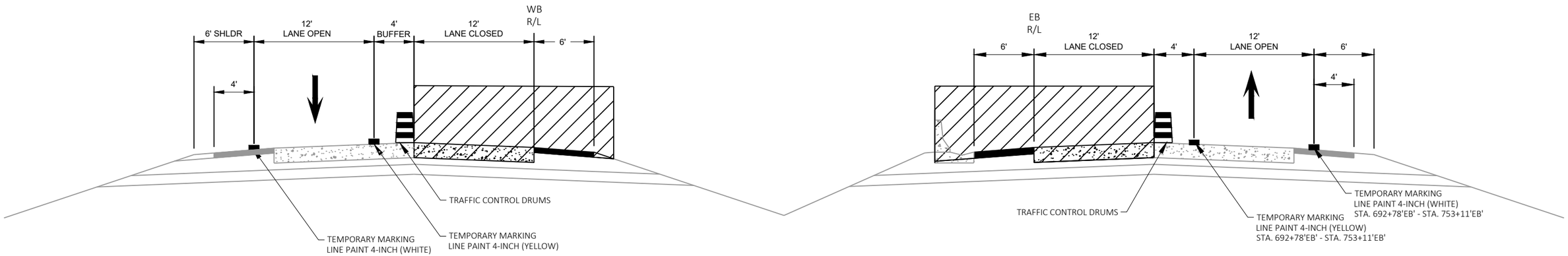

PHASE 2 TYPICAL SECTION

STA. 729+40'EB' - STA. 753+11'EB'
STA. 688+00'WB' - STA. 753+11'WB'

WORK AREA

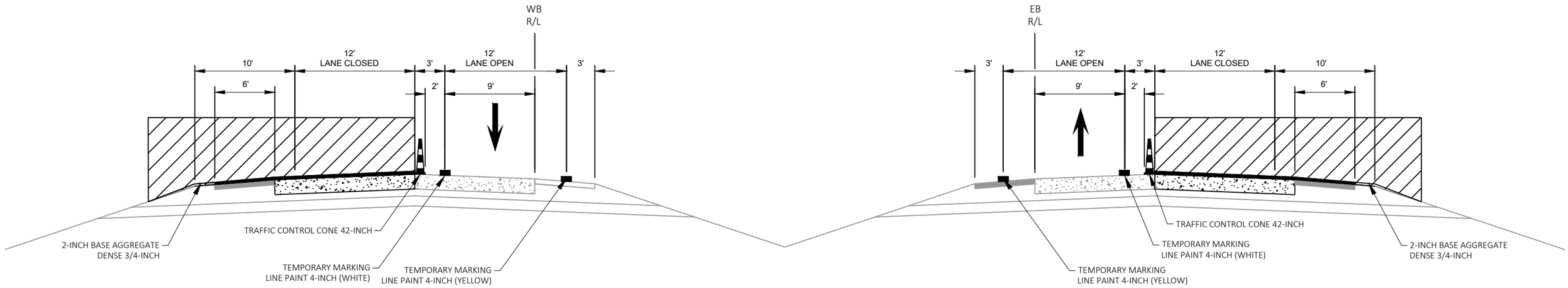

PHASE 3 TYPICAL SECTION

STA. 489+00'EB' - STA. 531+86'EB'
STA. 489+00'WB' - STA. 532+38'WB'
STA. 573+66'EB' - STA. 669+00'EB'
STA.573+66'WB' - STA. 674+00'WB'
STA. 751+00'WB - STA. 825+30'WB'
STA. 751+00'EB' - STA. 824+78'EB'

PROJECT NO: 1204-08-65	HWY: USH 18/151	COUNTY: DANE	TRAFFIC CONTROL - STAGE 2 TYPICAL SECTIONS	SHEET 241	E

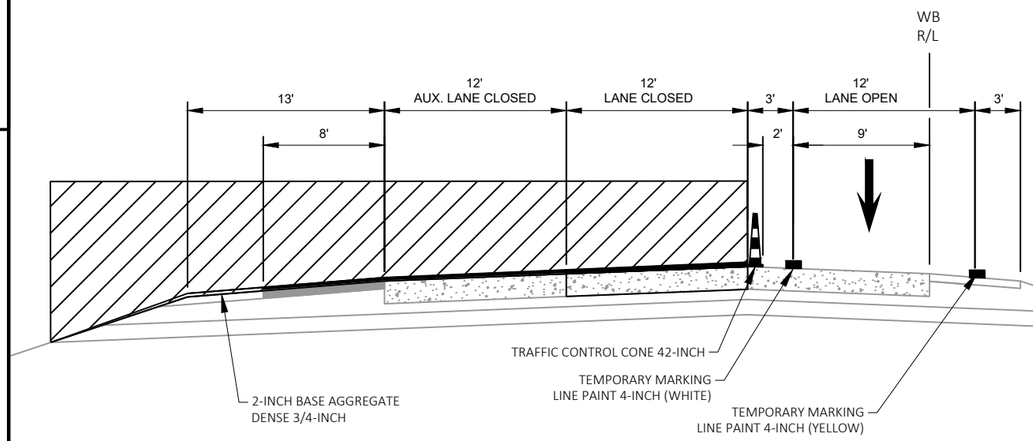

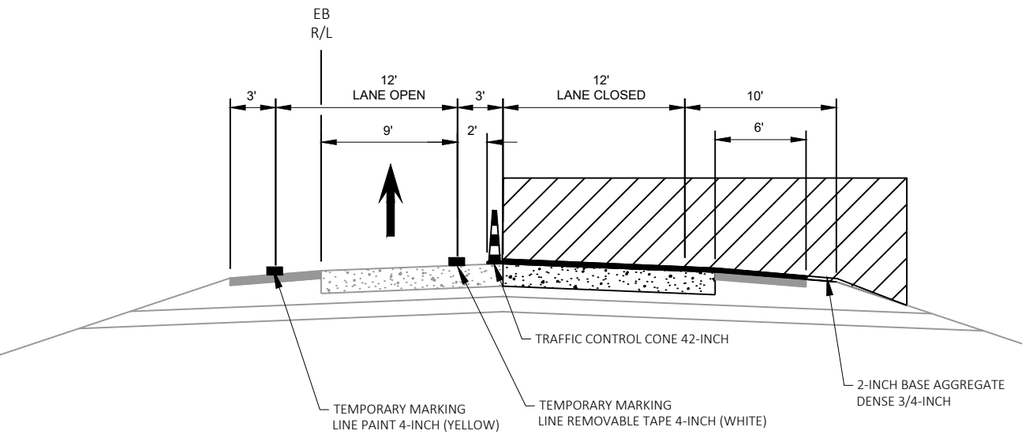

PHASE 3 TYPICAL SECTION

STA. 531+86'EB' - STA. 573+66'EB'
STA. 532+38'WB - STA.573+66'WB'

WORK AREA

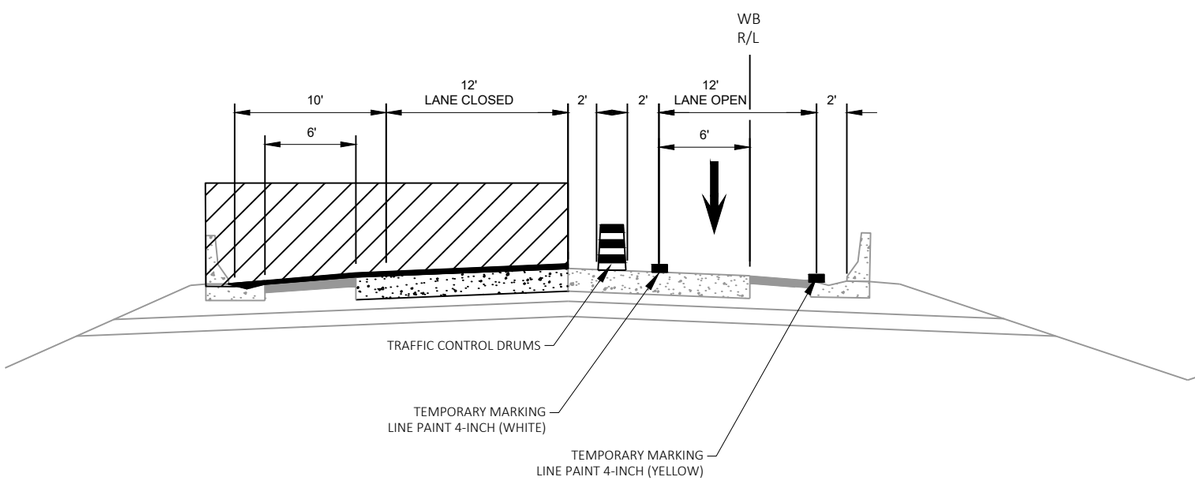

PHASE 3 TYPICAL SECTION

STA. 674+00'WB'- STA. 680+00'WB'

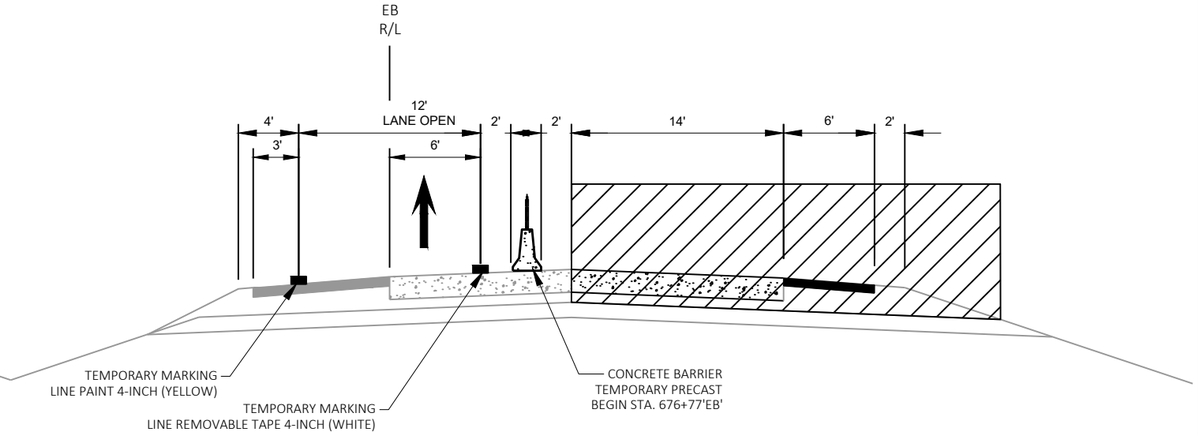

RECONSTRUCTION AREA PHASE 3

STA. 669+00'EB' - STA. 678+00'EB'

PROJECT NO: 1204-08-65	HWY: USH 18/151	COUNTY: DANE	TRAFFIC CONTROL - STAGE 2 TYPICAL SECTIONS	SHEET 242	E

FILE NAME : G:\WDOTSW\20007-000 USH 18\CIVIL 3D\SHEETSPLAN\TRAFFIC CONTROL\RE-LET\020304-TC__TYP_SEC_S2.DWG
LAYOUT NAME - 08
PLOT DATE : 11/30/2022 10:37 AM PLOT BY : KL ENGINEERING PLOT NAME : PLOT SCALE : 1 IN:10 FT
WISDOT/CADDS SHEET 42

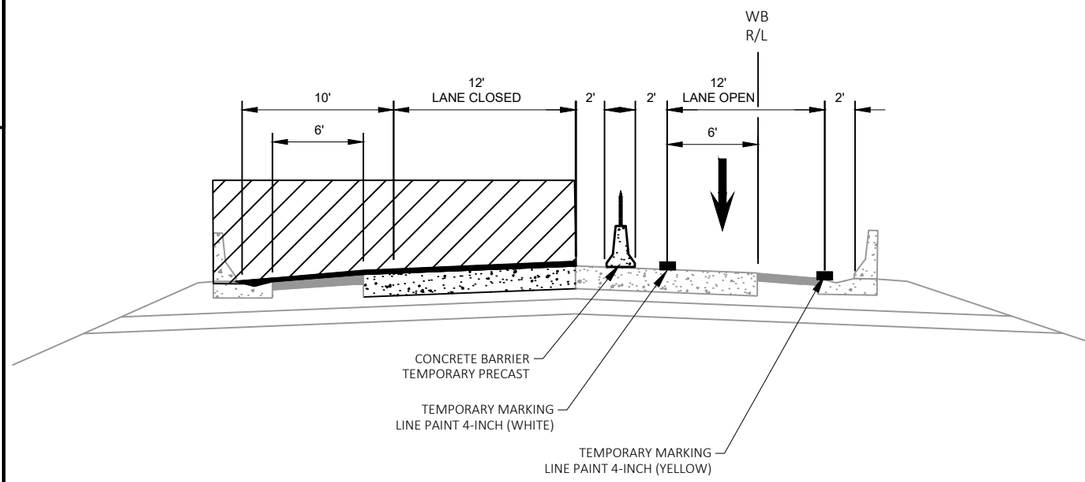

PHASE 3 TYPICAL SECTION

STA. 680+00'WB'- STA. 683+61'WB'

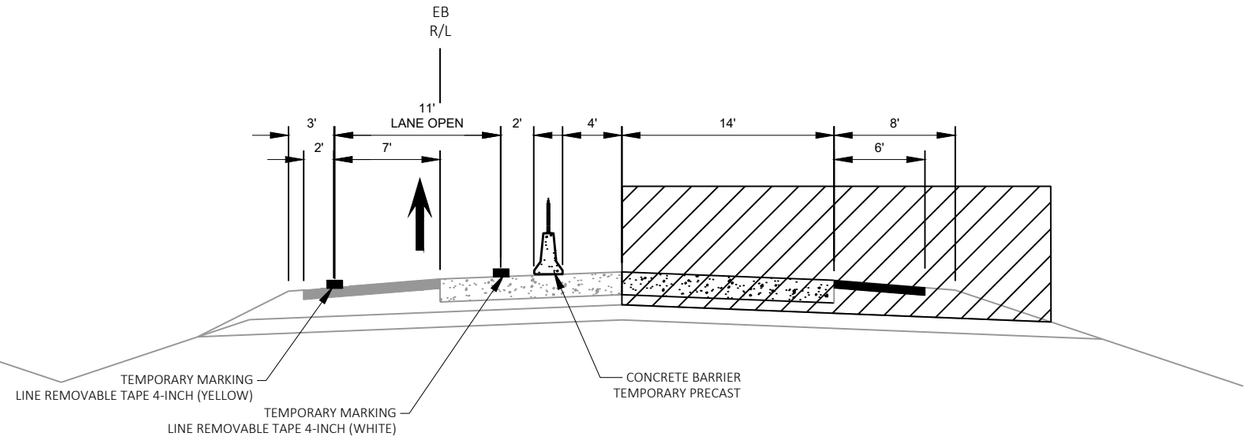

RECONSTRUCTION AREA PHASE 3

STA. 678+00'EB - STA. 684+27'EB'

WORK AREA

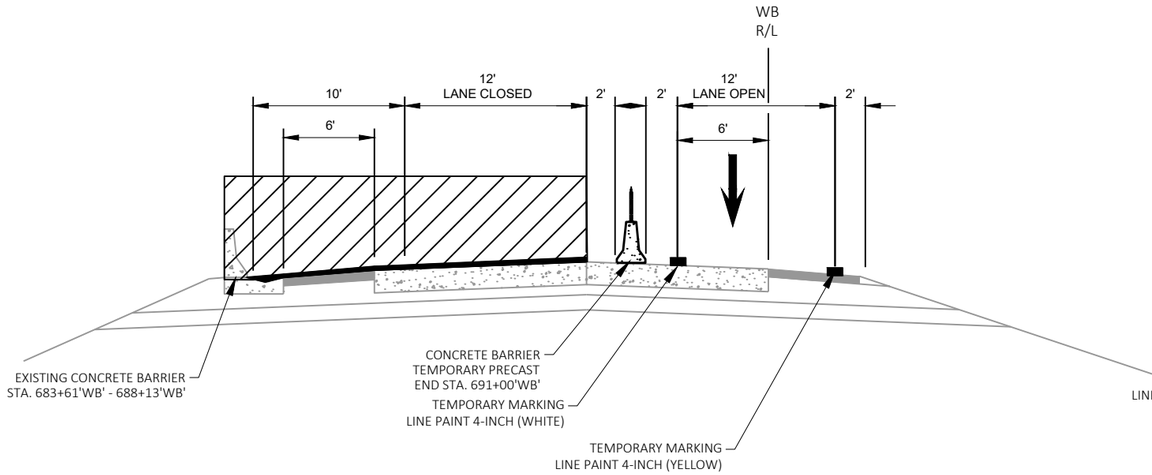

PHASE 3 TYPICAL SECTION

STA. 683+61WB'- STA. 695+00'WB'

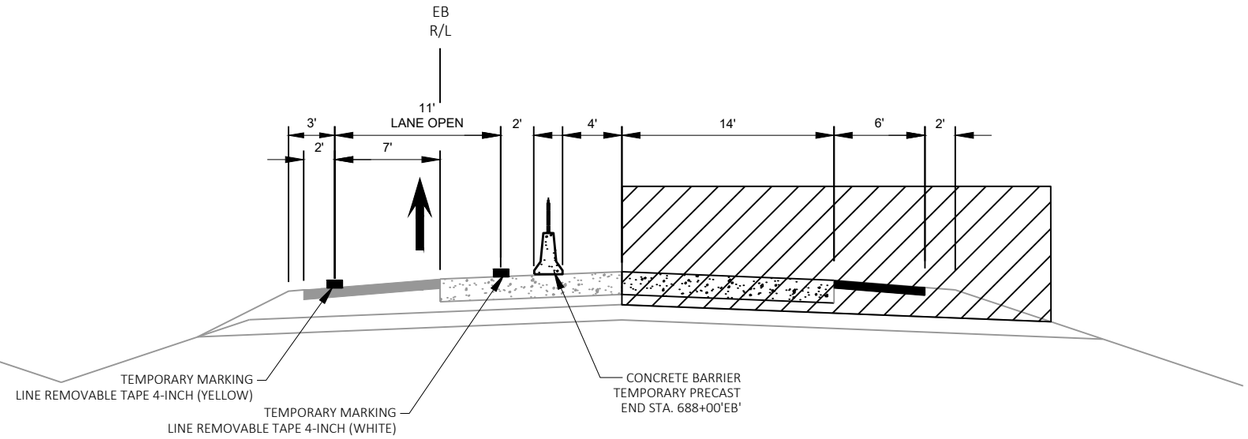

RECONSTRUCTION AREA PHASE 3

STA. 684+27'EB' - STA. 691+00'EB'

PROJECT NO: 1204-08-65	HWY: USH 18/151	COUNTY: DANE	TRAFFIC CONTROL - STAGE 2 TYPICAL SECTIONS	SHEET 243	E

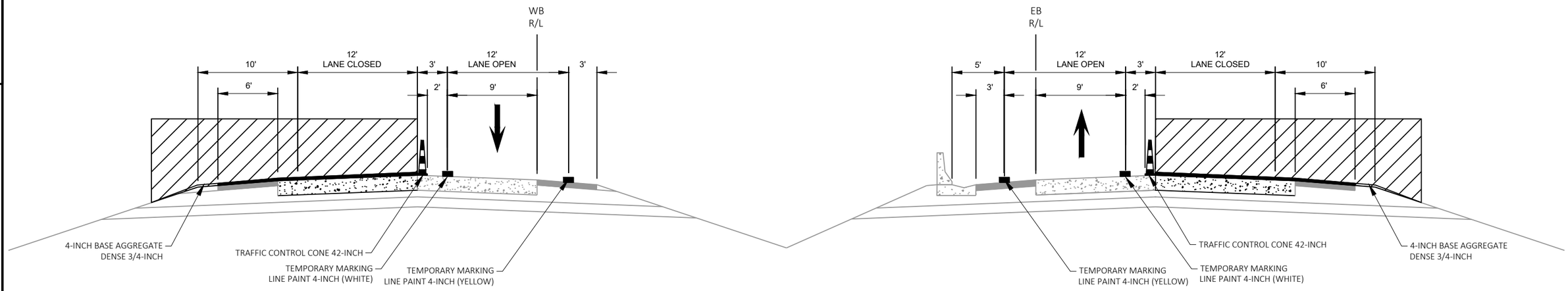

PHASE 3 TYPICAL SECTION

STA. 691+00'EB' - STA. 751+00'EB'
STA.695+00'WB' - STA. 751+00'WB'

WORK AREA

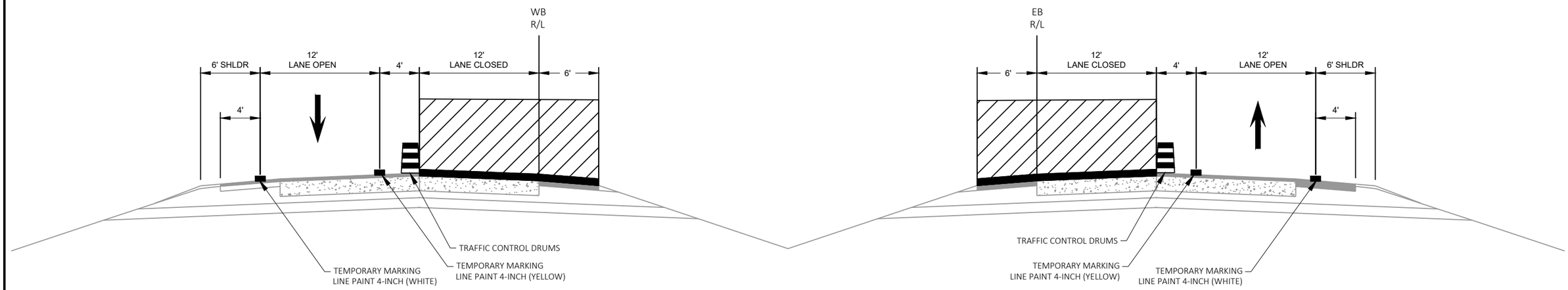

PHASE 4 TYPICAL SECTION

STA. 489+00'EB' - STA. 531+86'EB'
STA. 489+00'WB' - STA. 532+38'WB'
STA. 573+66'EB' - STA. 669+00'EB'
STA. 573+66'WB' - STA. 675+57'WB'
STA. 751+50'WB - STA. 825+30'WB'
STA. 751+50'EB' - STA. 824+78'EB'

PROJECT NO: 1204-08-65	HWY: USH 18/151	COUNTY: DANE	TRAFFIC CONTROL - STAGE 2 TYPICAL SECTIONS	SHEET 244	E

FILE NAME : G:\WDOTSW\20007-000 USH 18\CIVIL 3D\SHEETSPLAN\TRAFFIC CONTROL\RE-LET\020304-TC__TYP_SEC_S2.DWG
LAYOUT NAME - 10
PLOT DATE : 11/30/2022 10:37 AM PLOT BY : KL ENGINEERING PLOT NAME : PLOT SCALE : 1 IN:10 FT
WISDOT/CADDS SHEET 42

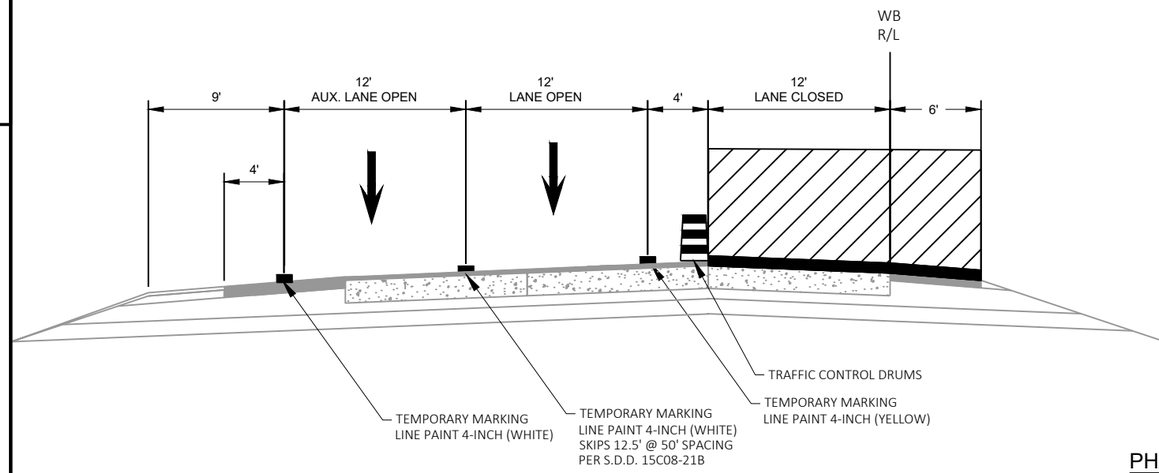

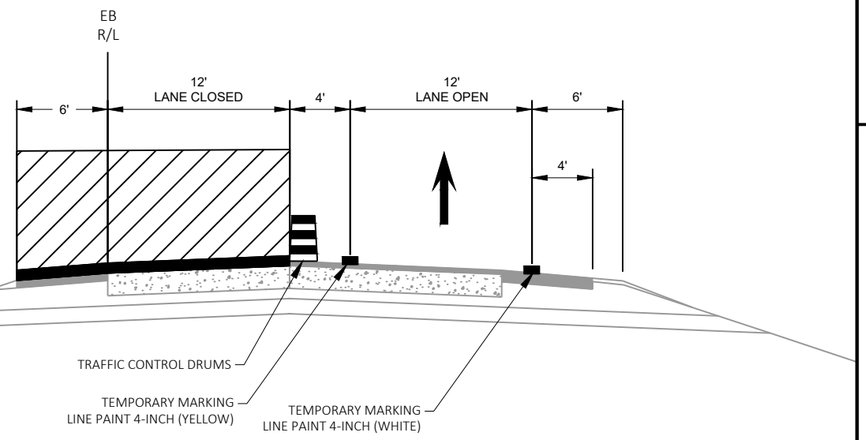

PHASE 4 TYPICAL SECTION

STA. 531+86'EB' - STA. 573+66'EB'
STA. 532+38'WB' - STA. 573+66'WB'

WORK AREA

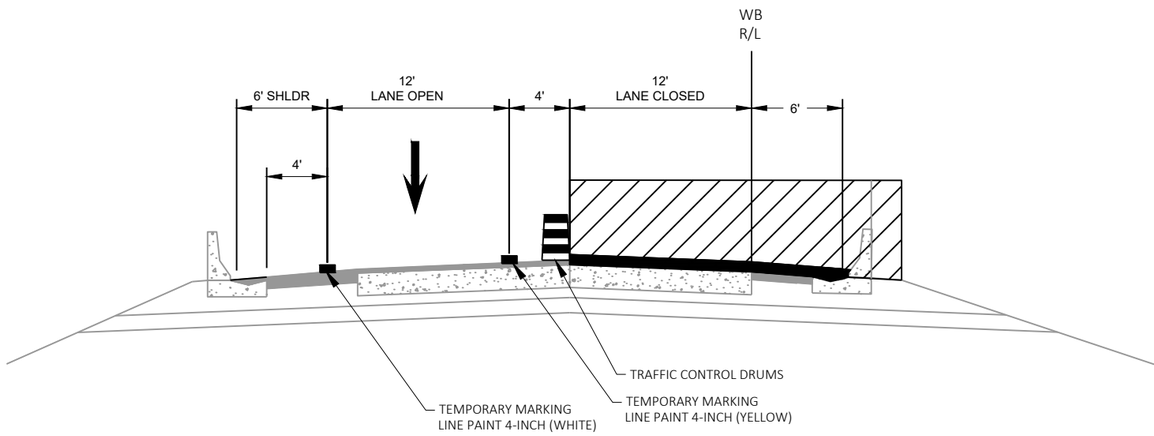

PHASE 4 TYPICAL SECTION

STA. 675+57'WB' - STA. 683+61'WB'

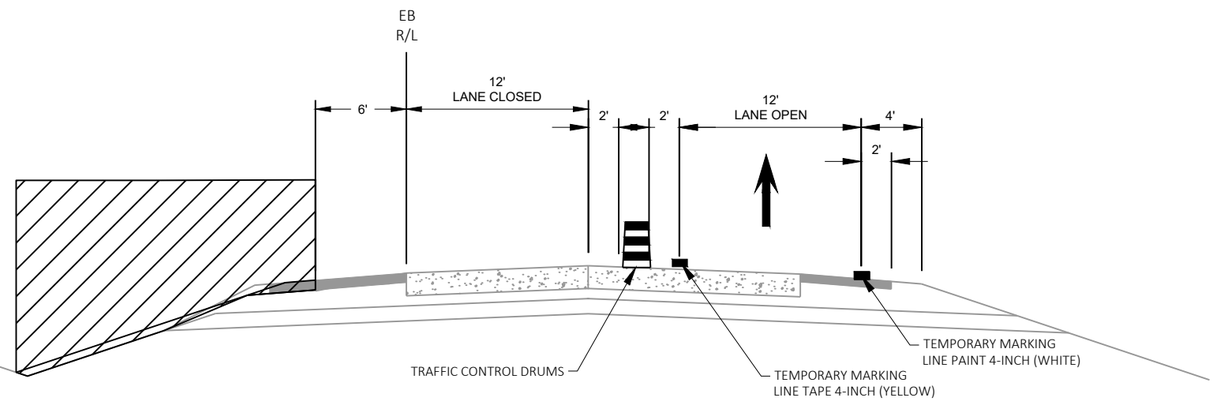

PHASE 4 TYPICAL SECTION

STA. 669+00'EB'- STA. 684+27'EB'

PROJECT NO: 1204-08-65	HWY: USH 18/151	COUNTY: DANE	TRAFFIC CONTROL - STAGE 2 TYPICAL SECTIONS	SHEET 245	E

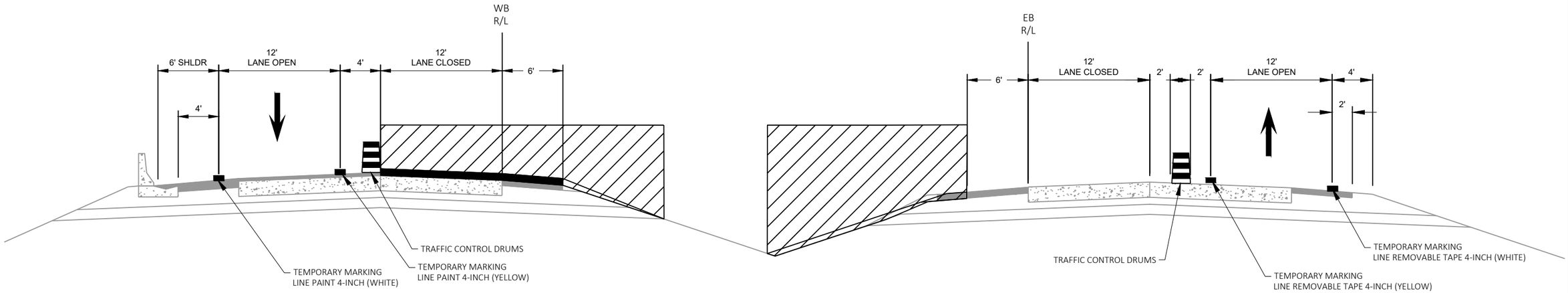

PHASE 4 TYPICAL SECTION

STA. 684+27'EB' - STA. 691+00'EB'
STA. 683+61WB'- STA. 687+04'WB'

WORK AREA

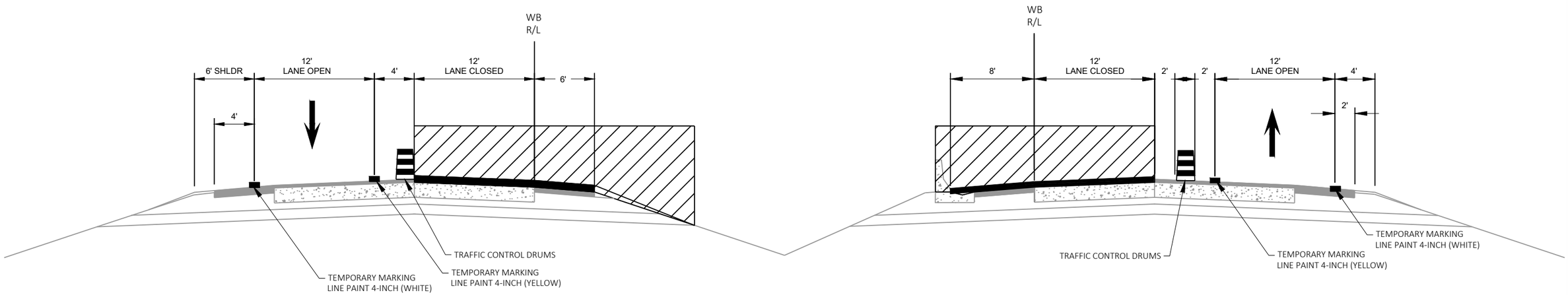

PHASE 4 TYPICAL SECTION

STA. 691+00'EB' - STA. 751+50'EB'
STA. 687+04'WB' - STA. 751+50'WB'

PROJECT NO: 1204-08-65	HWY: USH 18/151	COUNTY: DANE	TRAFFIC CONTROL - STAGE 2 TYPICAL SECTIONS	SHEET 246	E

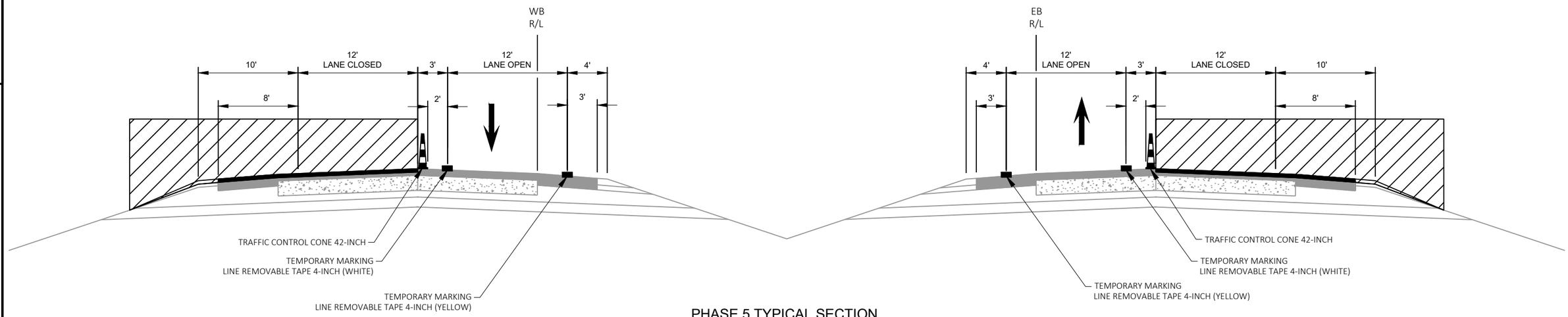

PHASE 5 TYPICAL SECTION

STA. 489+00'EB' - STA. 531+86'EB'
STA. 489+00'WB' - STA. 532+38'WB'
STA. 573+66'EB' - STA. 675+70'EB'
STA. 573+66'WB' - STA. 675+57'WB'
STA. 751+50'WB - STA. 825+30'WB'
STA. 751+50'EB' - STA. 824+78'EB'

WORK AREA

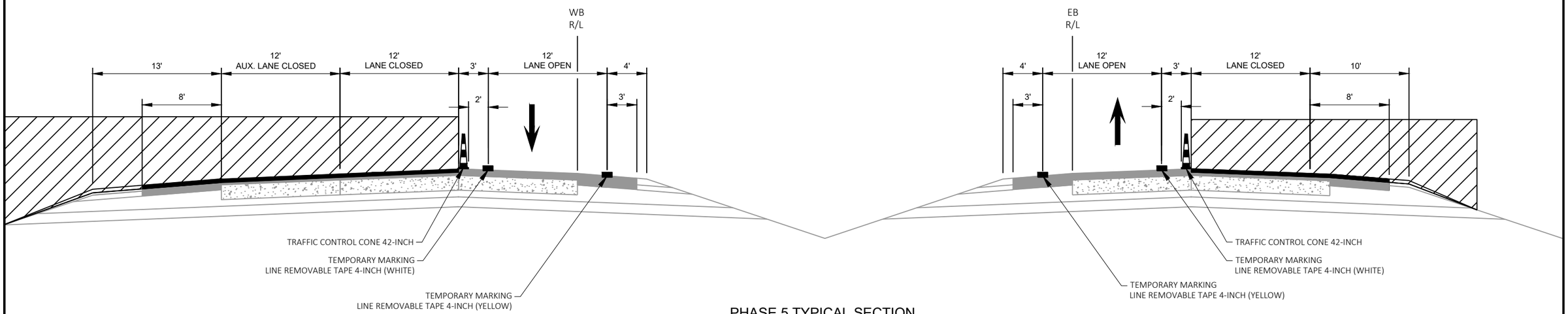

PHASE 5 TYPICAL SECTION

STA. 531+86'EB' - STA. 573+66'EB'
STA. 532+38'WB' - STA. 573+66'WB'

PROJECT NO: 1204-08-65	HWY: USH 18/151	COUNTY: DANE	TRAFFIC CONTROL - STAGE 2 TYPICAL SECTIONS	SHEET 247	E

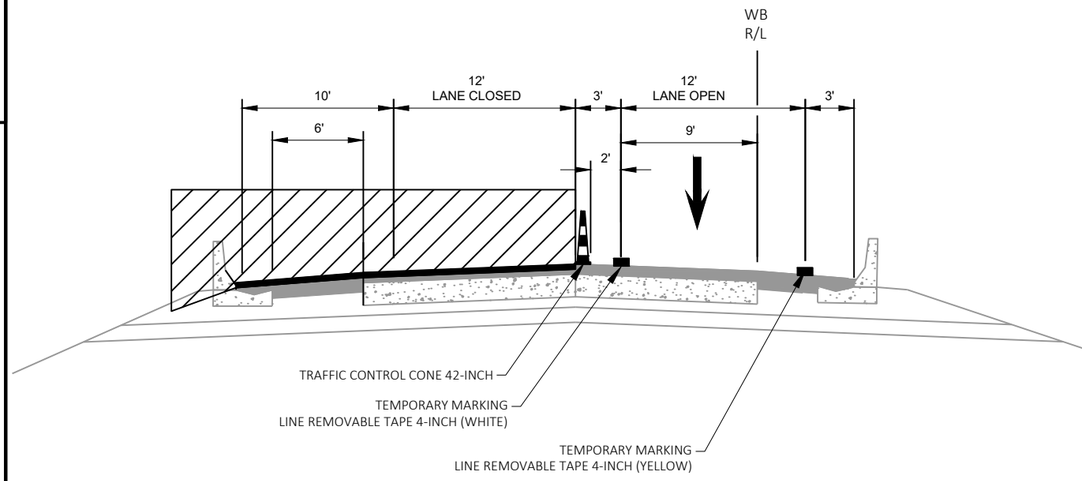

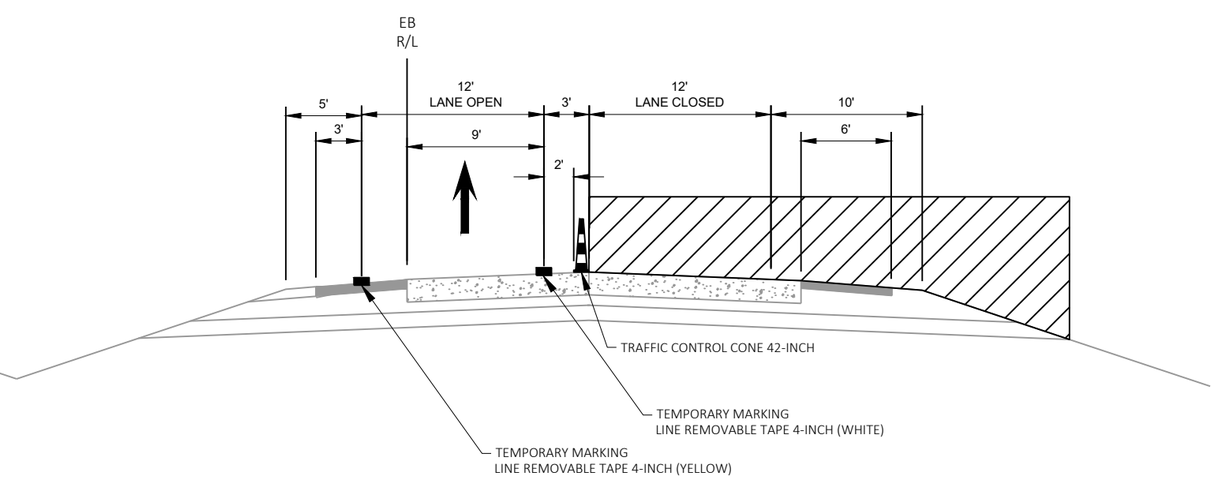

PHASE 5 TYPICAL SECTION

STA. 675+70'EB' - STA. 684+27'EB'
STA. 675+57'WB'- STA. 683+61'WB'

WORK AREA

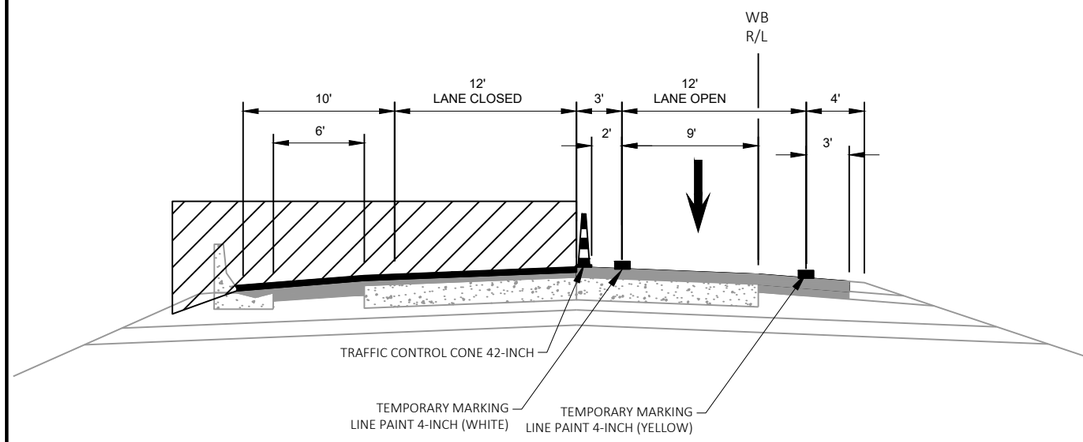

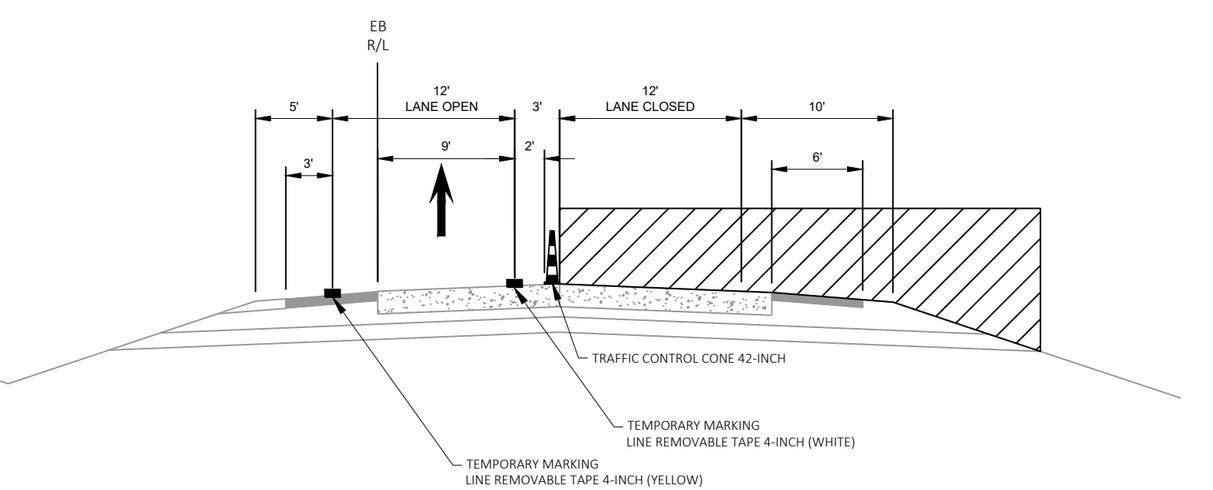

PHASE 5 TYPICAL SECTION

STA. 684+27EB' - STA. 691+29'EB'
STA. 683+61WB'- STA. 687+04'WB'

PROJECT NO: 1204-08-65	HWY: USH 18/151	COUNTY: DANE	TRAFFIC CONTROL - STAGE 2 TYPICAL SECTIONS	SHEET 248	E

2

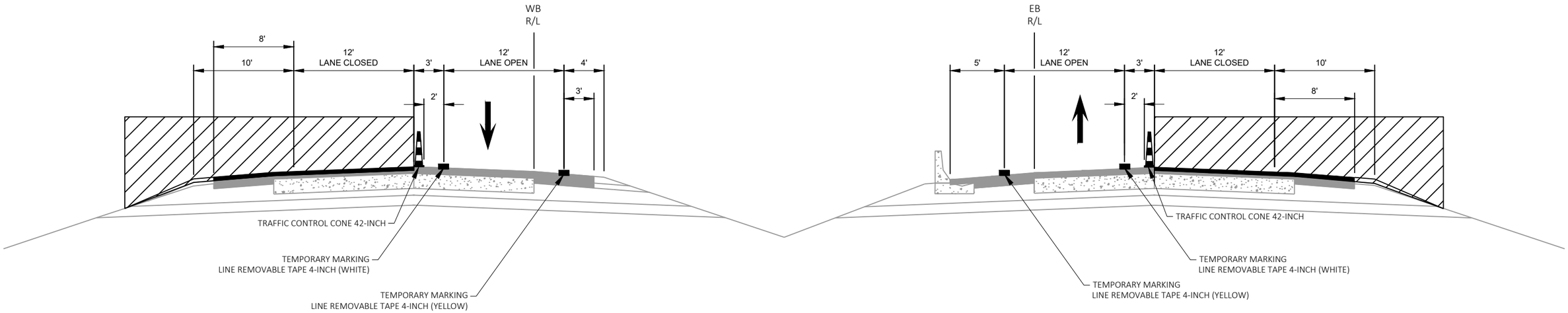

PHASE 5 TYPICAL SECTION

STA. 691+29'EB' - STA. 751+50'EB'
STA. 687+04'WB' - STA. 751+50'WB'

WORK AREA

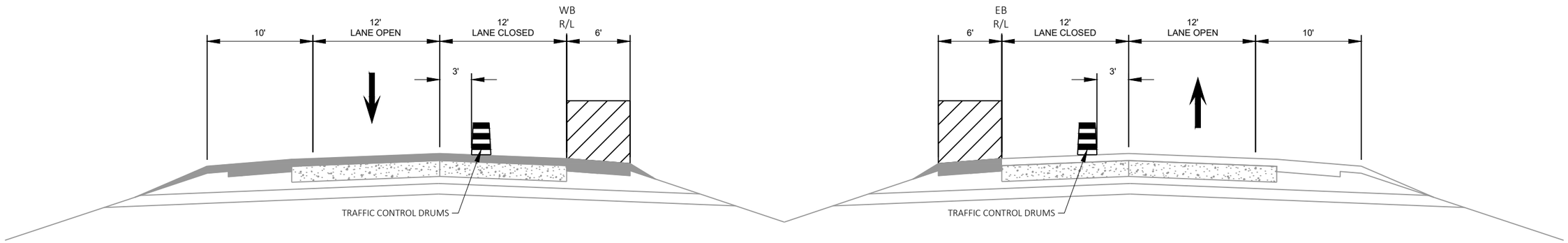

PHASE 6 TYPICAL SECTION

STA. 489+00'EB' - STA. 824+78'EB'
STA. 489+00'WB' - STA. 825+30'WB'

PROJECT NO: 1204-08-65	HWY: USH 18/151	COUNTY: DANE	TRAFFIC CONTROL - STAGE 2 TYPICAL SECTIONS	SHEET 249	E

FILE NAME : G:\WDOTSW\20007-000 USH 18\CIVIL 3D\SHEETSPLAN\TRAFFIC CONTROL\RE-LET\020304-TC__TYP_SEC_S2.DWG
LAYOUT NAME - 15
PLOT DATE : 11/30/2022 10:38 AM PLOT BY : KL ENGINEERING PLOT NAME : PLOT SCALE : 1 IN:10 FT
WISDOT/CADDS SHEET 42

2

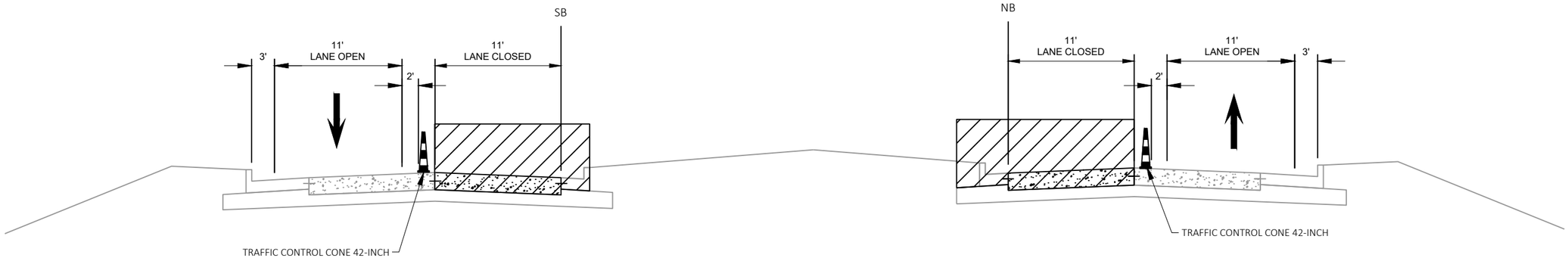

PHASE 1 TYPICAL SECTION

CTH PB
STA 144+19'SB' - 155+26'SB'
STH 69
STH 69 - STA. 45+00 'NB' - STA. 55+00'NB'

WORK AREA

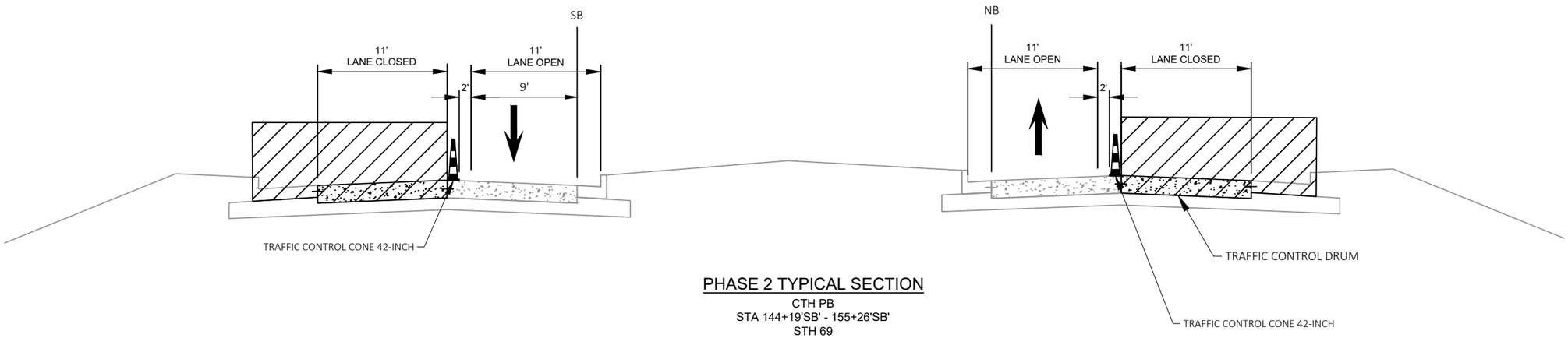

PHASE 2 TYPICAL SECTION

CTH PB
STA 144+19'SB' - 155+26'SB'
STH 69
STH 69 - STA. 45+00'NB' - STA. 55+00'NB'

PROJECT NO: 1204-08-65	HWY: USH 18/151	COUNTY: DANE	TRAFFIC CONTROL - STAGE 2 TYPICAL SECTIONS	SHEET 250	E

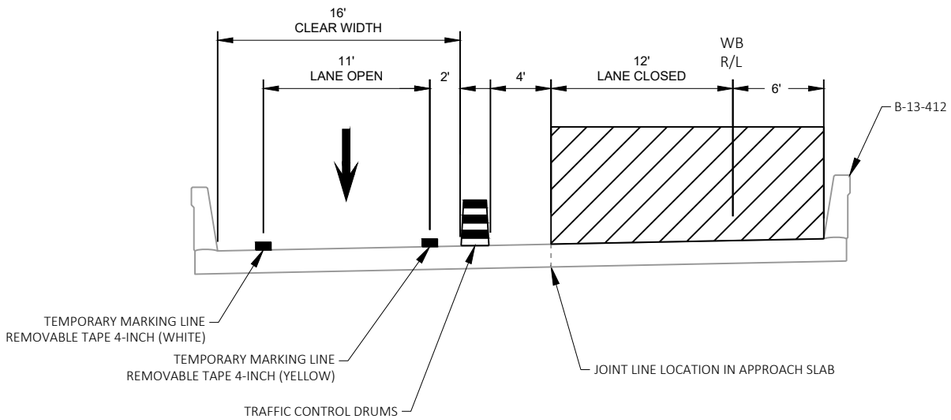

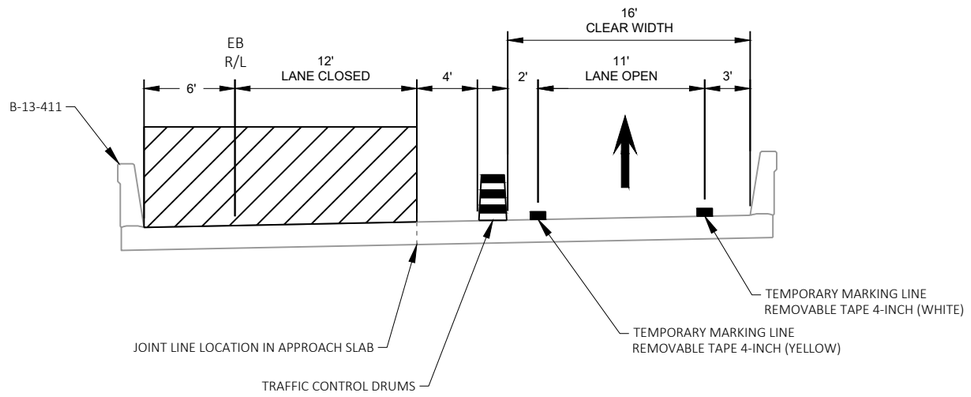

STRUCTURES - PHASE 2 OR 4

STRUCTURES B-13-411 & B-13-4112

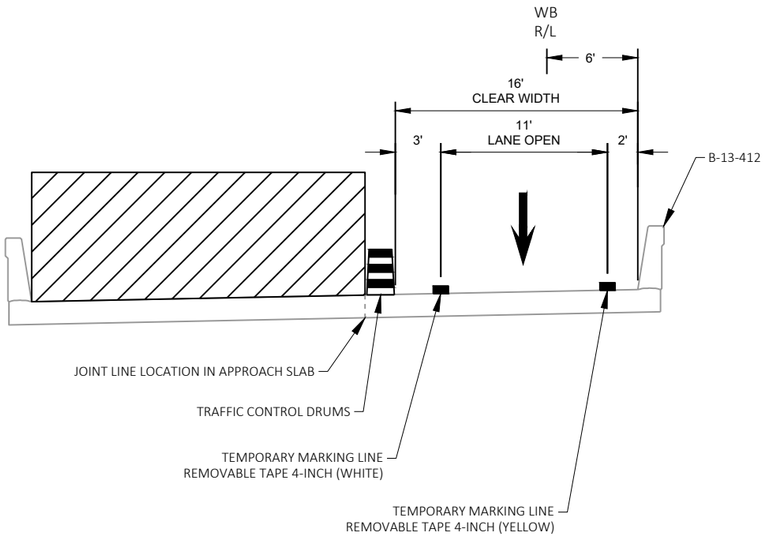

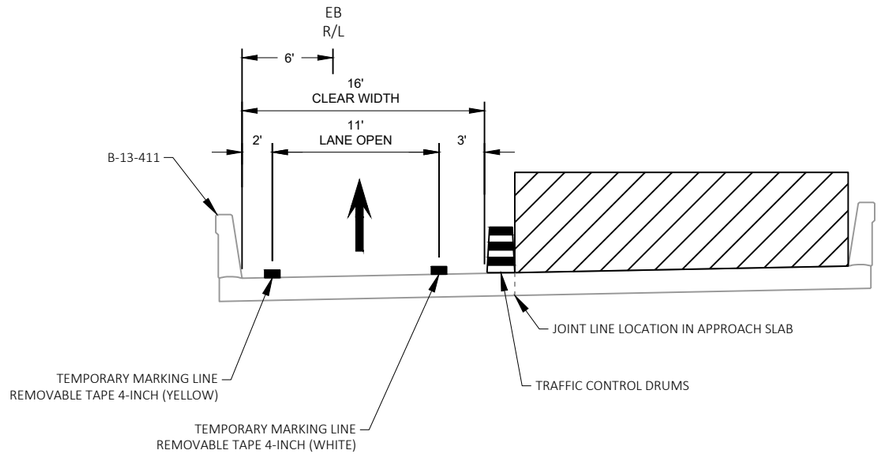

STRUCTURES - PHASE 3 OR 5

STRUCTURES B-13-411 & B-13-4112

PROJECT NO: 1204-08-65	HWY: USH 18/151	COUNTY: DANE	TRAFFIC CONTROL - STAGE 2 TYPICAL SECTIONS	SHEET 251	E

2

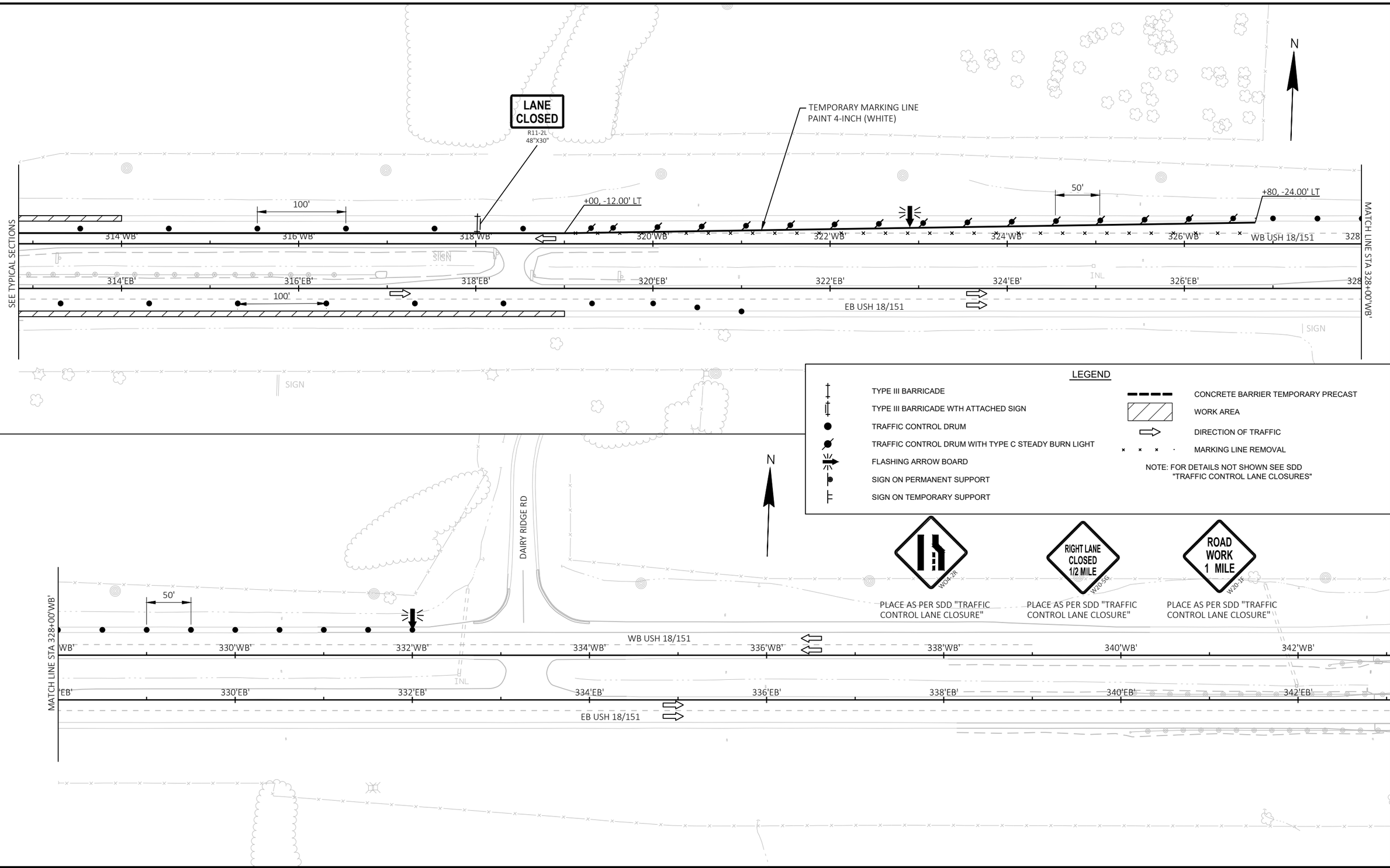

LEGEND

- TYPE III BARRICADE
- TYPE III BARRICADE WTH ATTACHED SIGN
- TRAFFIC CONTROL DRUM
- TRAFFIC CONTROL DRUM WITH TYPE C STEADY BURN LIGHT
- FLASHING ARROW BOARD
- SIGN ON PERMANENT SUPPORT
- SIGN ON TEMPORARY SUPPORT
- CONCRETE BARRIER TEMPORARY PRECAST
- WORK AREA
- DIRECTION OF TRAFFIC
- MARKING LINE REMOVAL

NOTE: FOR DETAILS NOT SHOWN SEE SDD "TRAFFIC CONTROL LANE CLOSURES"

PROJECT NO: 1204-08-65	HWY: USH 18/151	COUNTY: DANE	TRAFFIC CONTROL DETAIL - STAGE 2 RIGHT LANE CLOSURE	SHEET 252	E

FILE NAME : G:\WDOTSW\20007-000 USH 18\CIVIL 3D\SHEETSPLAN\TRAFFIC CONTROL\020305-TC_STG2-PH1.DWG
LAYOUT NAME - 00 (3)
PLOT DATE : 12/7/2022 1:00 PM
PLOT BY : JOSH MERCIER
PLOT NAME :
PLOT SCALE : 1 IN:100 FT
WISDOT/CADDS SHEET 42

2

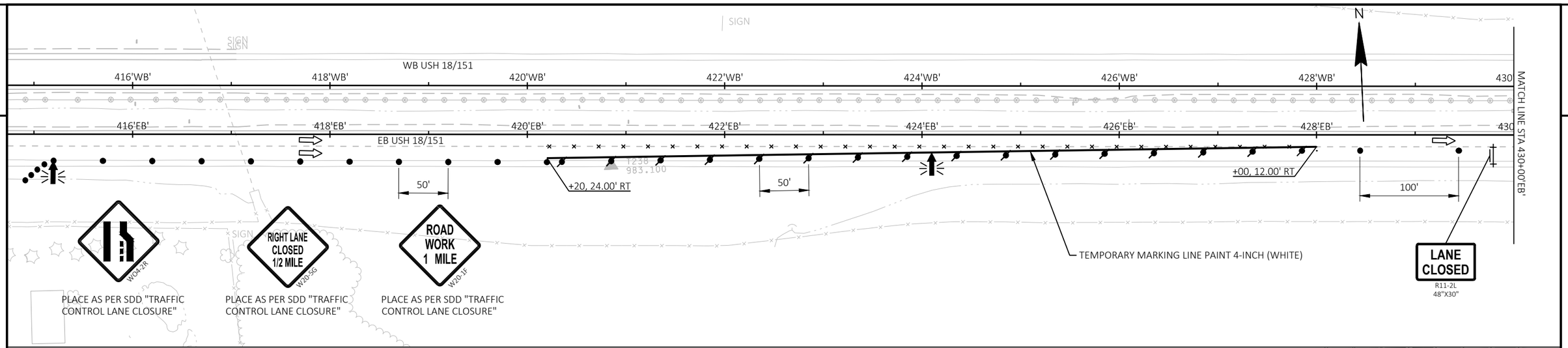

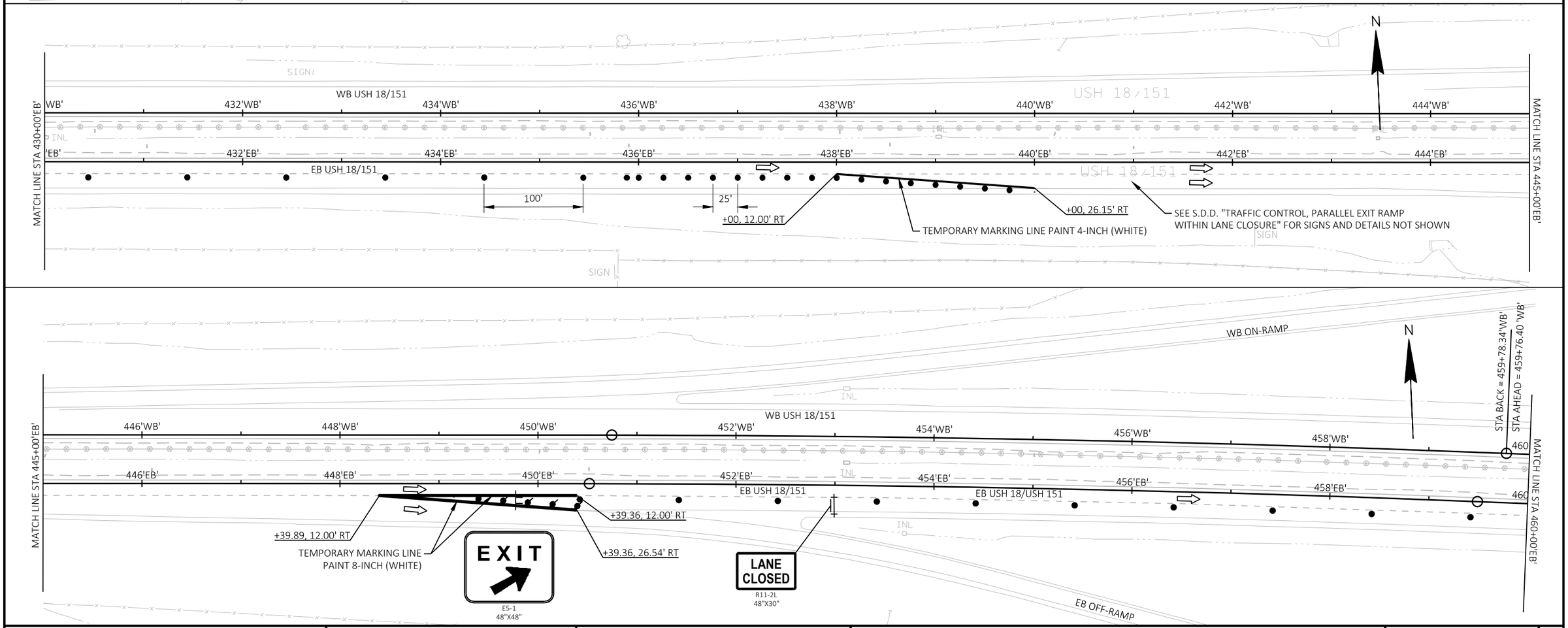

PROJECT NO: 1204-08-65	HWY: USH 18/151	COUNTY: DANE	TRAFFIC CONTROL DETAIL - STAGE 2 RIGHT LANE CLOSURE	SHEET 253	E

FILE NAME : G:\WDOTSW\20007-000 USH 18\CIVIL 3D\SHEETSPLAN\TRAFFIC CONTROL\RE-LET\020305-TC_STG2-PH1.DWG
LAYOUT NAME - 00

PLOT DATE : 11/30/2022 10:18 AM PLOT BY : JOSH MERCIER PLOT NAME : PLOT SCALE : 1 IN:100 FT

WISDOT/CADDS SHEET 42

2

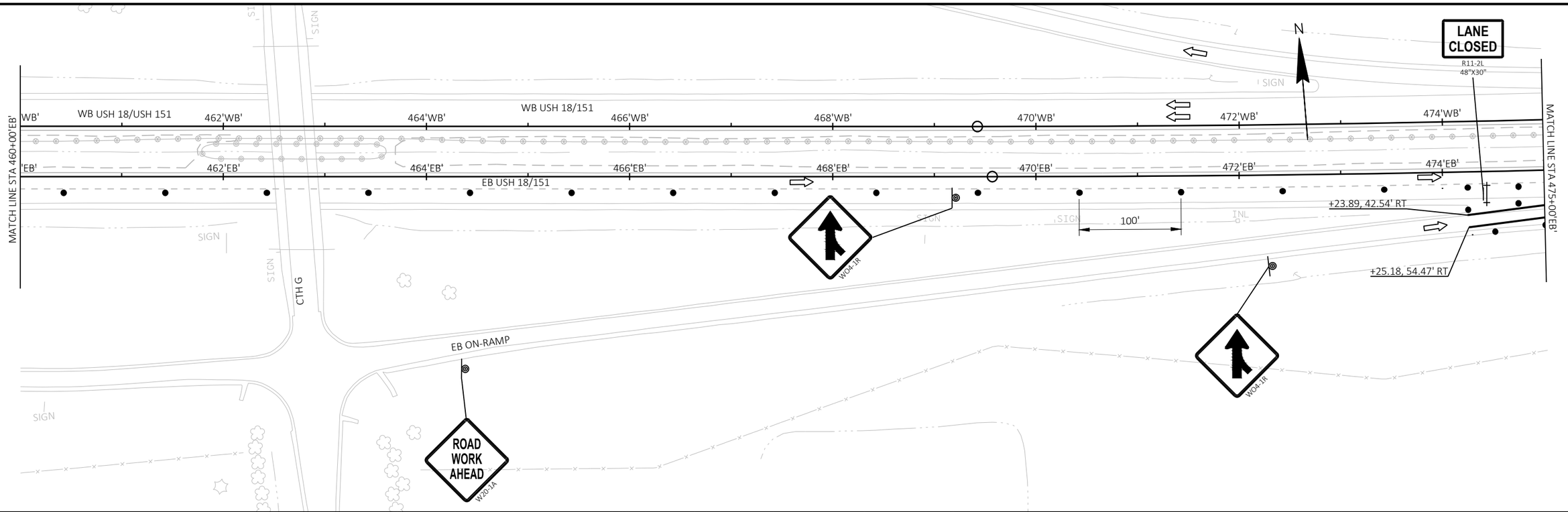

PROJECT NO: 1204-08-65	HWY: USH 18/151	COUNTY: DANE	TRAFFIC CONTROL DETAIL - STAGE 2 RIGHT LANE CLOSURE	SHEET 254	E

FILE NAME : G:\WDOTSW\20007-000 USH 18\CIVIL 3D\SHEETSPLAN\TRAFFIC CONTROL\020305-TC_STG2-PH1.DWG
LAYOUT NAME - 00 (2)
PLOT DATE : 7/21/2022 1:39 PM
PLOT BY : JOSH MERCIER
PLOT NAME :
PLOT SCALE : 1 IN:100 FT
WISDOT/CADDS SHEET 42

2

SEE SDD "TRAFFIC CONTROL, FULL LANE SHIFT, MULTILANE DIVIDED
50 MPH AND GREATER" FOR DETAILS NOT SHOWN

TEMPORARY MARKING LINE PAINT 4-INCH (WHITE)

LANE CLOSED
R11-2L
48"X30"

WO1-6
48"X24"

50'

SEE TYPICAL SECTIONS

824'WB' WB USH 18/USH 151 826'WB' 828'WB' 830'WB' 832'WB' 834'WB' 836'WB' 838

STA 827+35

STA 830+65

100'

824'EB' 826'EB'

EB USH 18/USH 151

TEMPORARY MARKING LINE PAINT 4-INCH (YELLOW)

MATCH LINE STA 838+00'WB'

TOWER POST POST W POST FITCHRONA RD RIPRAP RIPRAP FITCHRONA RD SAN SAN

2

WO1-4L

MATCH LINE STA 838+00'WB'

WB' 840'WB' WB USH 18/USH 151 842'WB' 844'WB' 846'WB' 848'WB' 850

100'

EB USH 18/USH 151

TEMPORARY MARKING LINE PAINT 4-INCH (YELLOW)

MATCH LINE STA 850+00'WB'

LEGEND

- TYPE III BARRICADE
- TYPE III BARRICADE WTH ATTACHED SIGN
- TRAFFIC CONTROL DRUM
- TRAFFIC CONTROL DRUM WITH TYPE C STEADY BURN LIGHT
- FLASHING ARROW BOARD
- SIGN ON PERMANENT SUPPORT
- SIGN ON TEMPORARY SUPPORT
- CONCRETE BARRIER TEMPORARY PRECAST
- WORK AREA
- DIRECTION OF TRAFFIC
- MARKING LINE REMOVAL

NOTE: FOR DETAILS NOT SHOWN SEE SDD
"TRAFFIC CONTROL LANE CLOSURES"

WO4-1R

MATCH LINE STA 850+00'WB'

WB' 852'WB' WB USH 18/USH 151 854'WB' 856'WB' 858'WB' 860'WB' 862'WB' 864'WB'

WB CTH PD ON-RAMP

50'

100'

EB USH 18/USH 151

TEMPORARY MARKING LINE PAINT 4-INCH (YELLOW)

LANE CLOSED
R11-2L
48"X30"

MATCH LINE STA 865+00'WB'

PROJECT NO: 1204-08-65	HWY: USH 18/151	COUNTY: DANE	TRAFFIC CONTROL DETAIL - STAGE 2 RIGHT LANE CLOSURE	SHEET 255	E

FILE NAME : G:\WDOTSW\20007-000 USH 18\CIVIL 3D\SHEETSPLAN\TRAFFIC CONTROL\020305-TC_STG2-PH1.DWG
LAYOUT NAME - 01

PLOT DATE : 12/7/2022 1:01 PM PLOT BY : JOSH MERCIER PLOT NAME : PLOT SCALE : 1 IN:100 FT

2

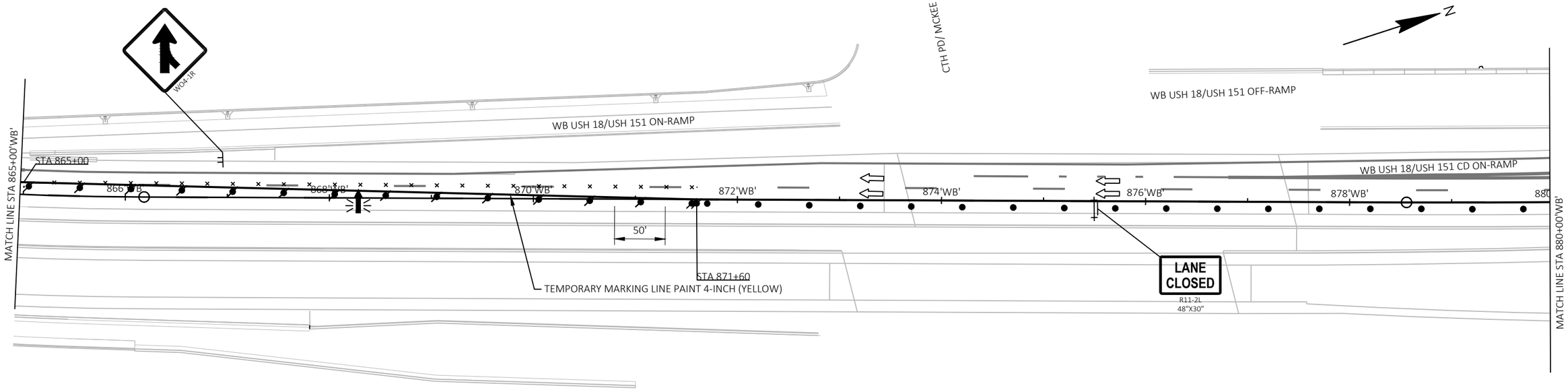

LEGEND

- TYPE III BARRICADE
- TYPE III BARRICADE WTH ATTACHED SIGN
- TRAFFIC CONTROL DRUM
- TRAFFIC CONTROL DRUM WITH TYPE C STEADY BURN LIGHT
- FLASHING ARROW BOARD
- SIGN ON PERMANENT SUPPORT
- SIGN ON TEMPORARY SUPPORT
- CONCRETE BARRIER TEMPORARY PRECAST
- WORK AREA
- DIRECTION OF TRAFFIC
- MARKING LINE REMOVAL

NOTE: FOR DETAILS NOT SHOWN SEE SDD "TRAFFIC CONTROL LANE CLOSURES"

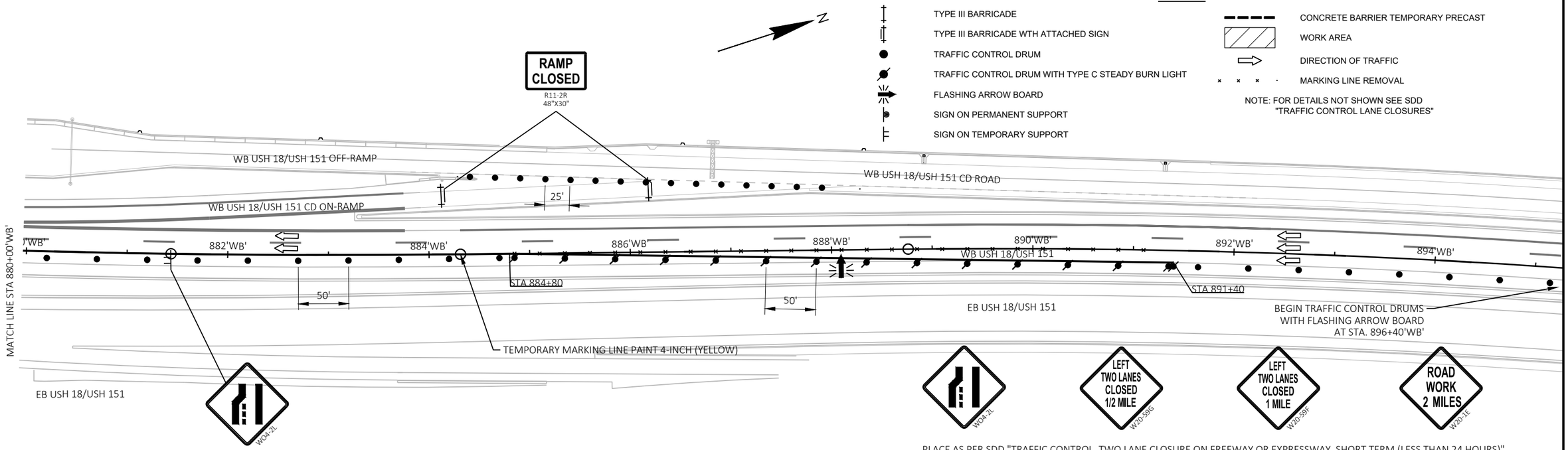

PLACE AS PER SDD "TRAFFIC CONTROL, TWO LANE CLOSURE ON FREEWAY OR EXPRESSWAY, SHORT TERM (LESS THAN 24 HOURS)"
NOTE THAT THESE SIGNS WILL BE IN PLACE LONGER THAN 24 HOURS.

PROJECT NO: 1204-08-65	HWY: USH 18/151	COUNTY: DANE	TRAFFIC CONTROL DETAIL - STAGE 2 RIGHT LANE CLOSURE	SHEET 256	E

FILE NAME : G:\WDOTSW\20007-000 USH 18\CIVIL 3D\SHEETSPLAN\TRAFFIC CONTROL\020305-TC_STG2-PH1.DWG
LAYOUT NAME - 02
PLOT DATE : 12/7/2022 1:02 PM
PLOT BY : JOSH MERCIER
PLOT NAME :
PLOT SCALE : 1 IN:100 FT
WISDOT/CADDS SHEET 44

2

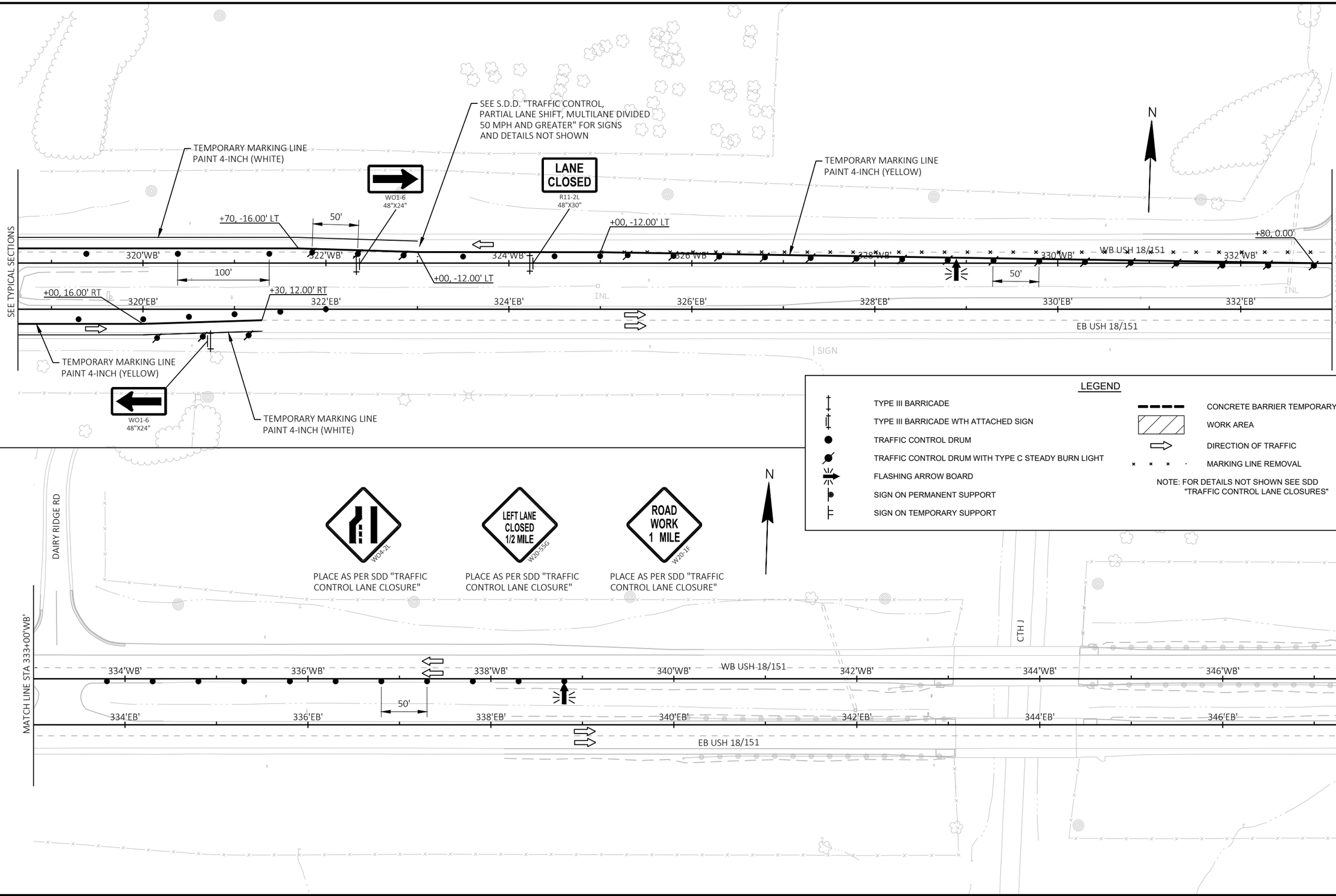

PROJECT NO: 1204-08-65	HWY: USH 18/151	COUNTY: DANE	TRAFFIC CONTROL DETAIL - STAGE 2 LEFT LANE CLOSURE	SHEET 257	E

FILE NAME : G:\WDOTSW\20007-000 USH 18\CIVIL 3D\SHEETSPLAN\TRAFFIC CONTROL\020306-TC_STG2-PH2.DWG
LAYOUT NAME - 00 (3)
PLOT DATE : 12/7/2022 1:09 PM
PLOT BY : JOSH MERCIER
PLOT NAME :
PLOT SCALE : 1 IN:100 FT
WISDOT/CADDS SHEET 42

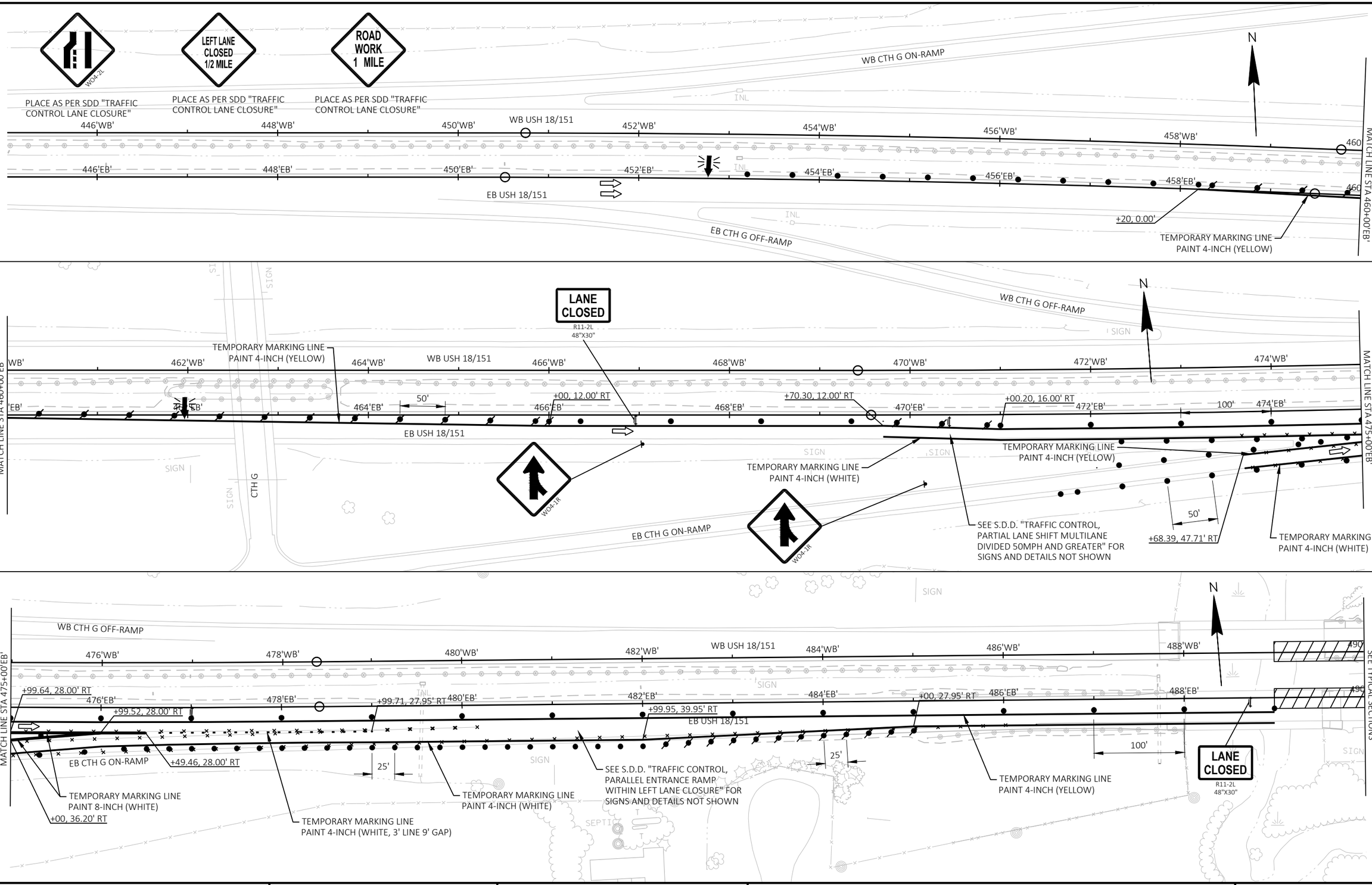

PROJECT NO: 1204-08-65	HWY: USH 18/151	COUNTY: DANE	TRAFFIC CONTROL DETAIL - STAGE 2 LEFT LANE CLOSURE	SHEET 258	E

FILE NAME : G:\WDOTSW\20007-000 USH 18\CIVIL 3D\SHEETSPLAN\TRAFFIC CONTROL\020306-TC_STG2-PH2.DWG
LAYOUT NAME - 00 (2)

PLOT DATE : 7/21/2022 2:51 PM PLOT BY : JOSH MERCIER PLOT NAME : PLOT SCALE : 1 IN:100 FT

WISDOT/CADDS SHEET 42

2

SEE SDD "TRAFFIC CONTROL, PARTIAL LANE SHIFT MULTILANE DIVIDED 50MPH AND GREATER" FOR DETAILS NOT SHOWN

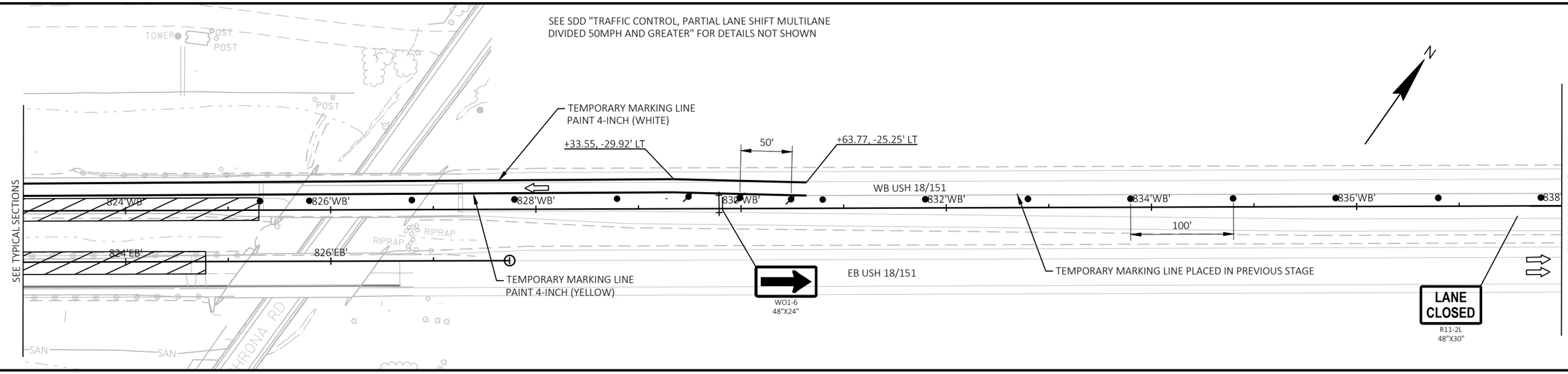

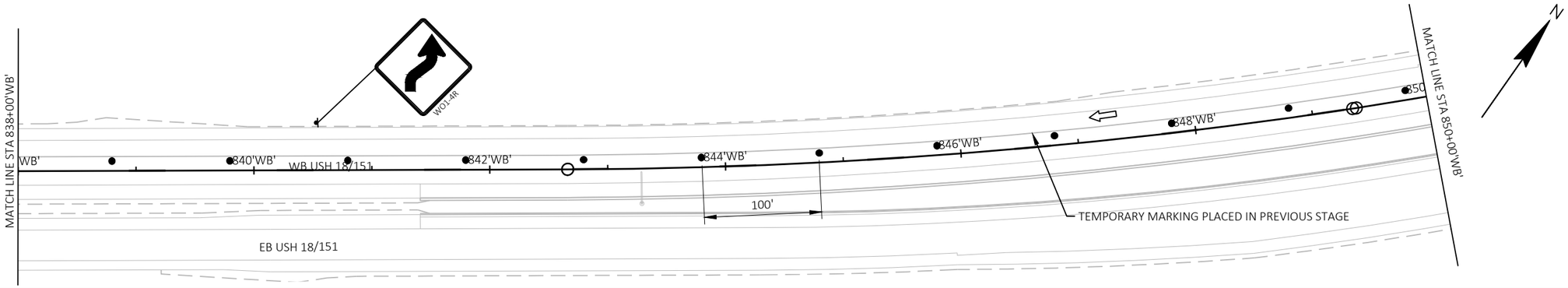

LEGEND

- TYPE III BARRICADE
- TYPE III BARRICADE WTH ATTACHED SIGN
- TRAFFIC CONTROL DRUM
- TRAFFIC CONTROL DRUM WITH TYPE C STEADY BURN LIGHT
- FLASHING ARROW BOARD
- SIGN ON PERMANENT SUPPORT
- SIGN ON TEMPORARY SUPPORT
- CONCRETE BARRIER TEMPORARY PRECAST
- WORK AREA
- DIRECTION OF TRAFFIC
- MARKING LINE REMOVAL

NOTE: FOR DETAILS NOT SHOWN SEE SDD "TRAFFIC CONTROL LANE CLOSURES"

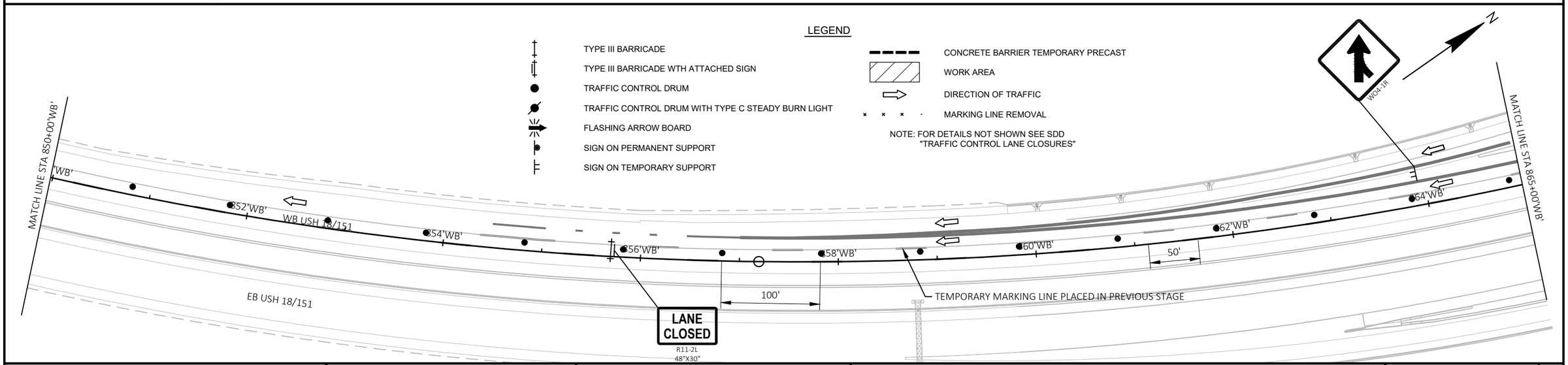

PROJECT NO: 1204-08-65	HWY: USH 18/151	COUNTY: DANE	TRAFFIC CONTROL DETAIL - STAGE 2 LEFT LANE CLOSURE	SHEET 259	E

FILE NAME : G:\WDOTSW\20007-000 USH 18\CIVIL 3D\SHEETSPLAN\TRAFFIC CONTROL\020306-TC_STG2-PH2.DWG
LAYOUT NAME - Layout1-01
PLOT DATE : 12/7/2022 1:11 PM PLOT BY : JOSH MERCIER PLOT NAME : PLOT SCALE : 1 IN:100 FT
WISDOT/CADDS SHEET 44

2

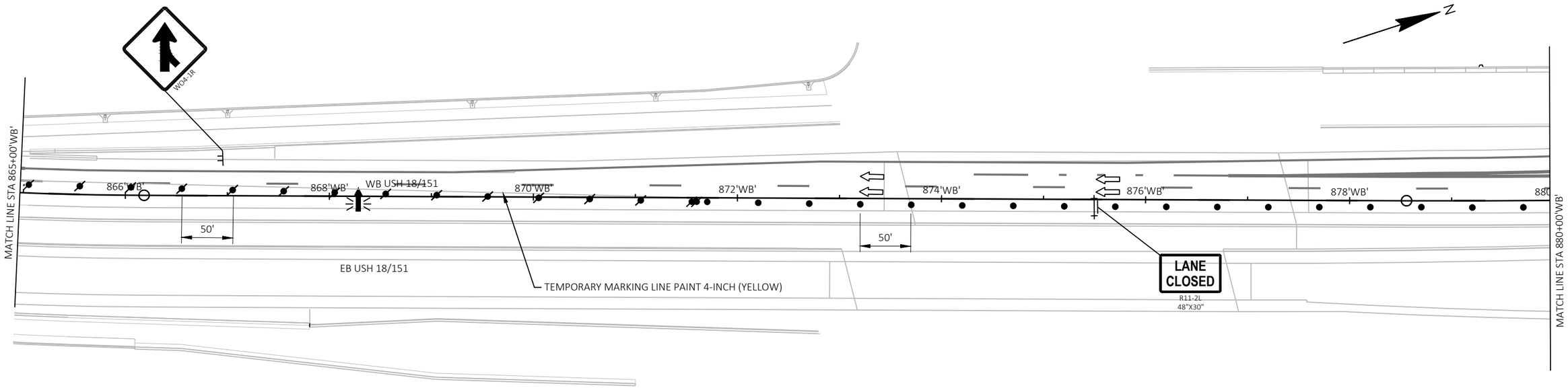

LEGEND

- TYPE III BARRICADE
- TYPE III BARRICADE WTH ATTACHED SIGN
- TRAFFIC CONTROL DRUM
- TRAFFIC CONTROL DRUM WITH TYPE C STEADY BURN LIGHT
- FLASHING ARROW BOARD
- SIGN ON PERMANENT SUPPORT
- SIGN ON TEMPORARY SUPPORT
- CONCRETE BARRIER TEMPORARY PRECAST
- WORK AREA
- DIRECTION OF TRAFFIC
- MARKING LINE REMOVAL

NOTE: FOR DETAILS NOT SHOWN SEE SDD "TRAFFIC CONTROL LANE CLOSURES"

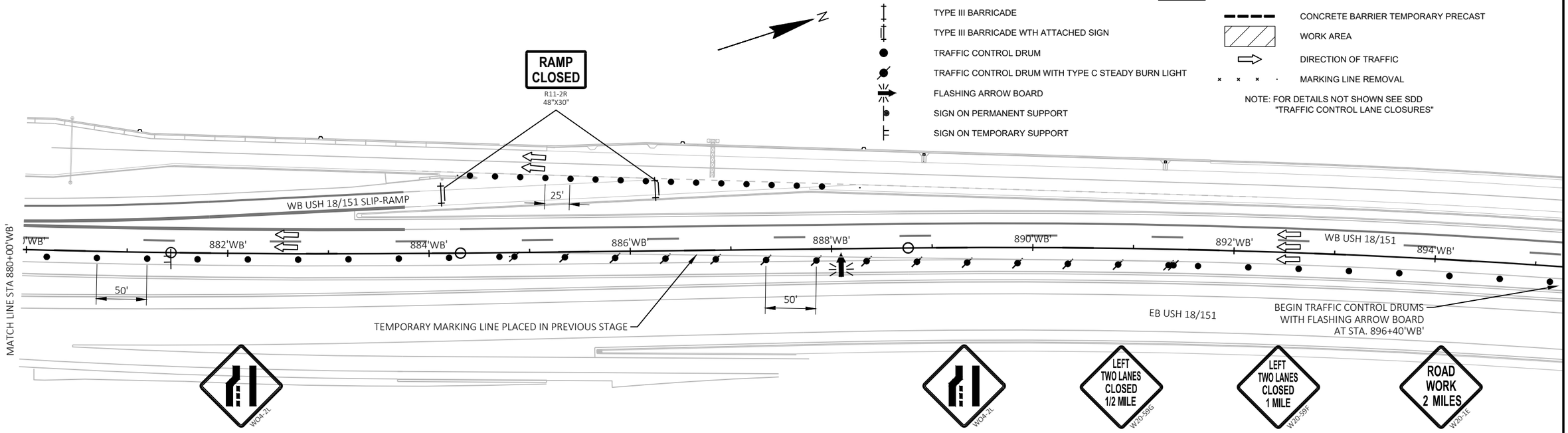

PLACE AS PER SDD "TRAFFIC CONTROL, TWO LANE CLOSURE ON FREEWAY OR EXPRESSWAY, SHORT TERM (LESS THAN 24 HOURS)" NOTE THAT THESE SIGNS WILL BE IN PLACE LONGER THAN 24 HOURS.

PROJECT NO: 1204-08-65	HWY: USH 18/151	COUNTY: DANE	TRAFFIC CONTROL DETAIL - STAGE 2 LEFT LANE CLOSURE	SHEET 260	E

FILE NAME : G:\WDOTSW\20007-000 USH 18\CIVIL 3D\SHEETSPLAN\TRAFFIC CONTROL\020306-TC_STG2-PH2.DWG
LAYOUT NAME - Layout2-02
PLOT DATE : 12/7/2022 1:12 PM PLOT BY : JOSH MERCIER PLOT NAME : PLOT SCALE : 1 IN:100 FT
WISDOT/CADDS SHEET 44

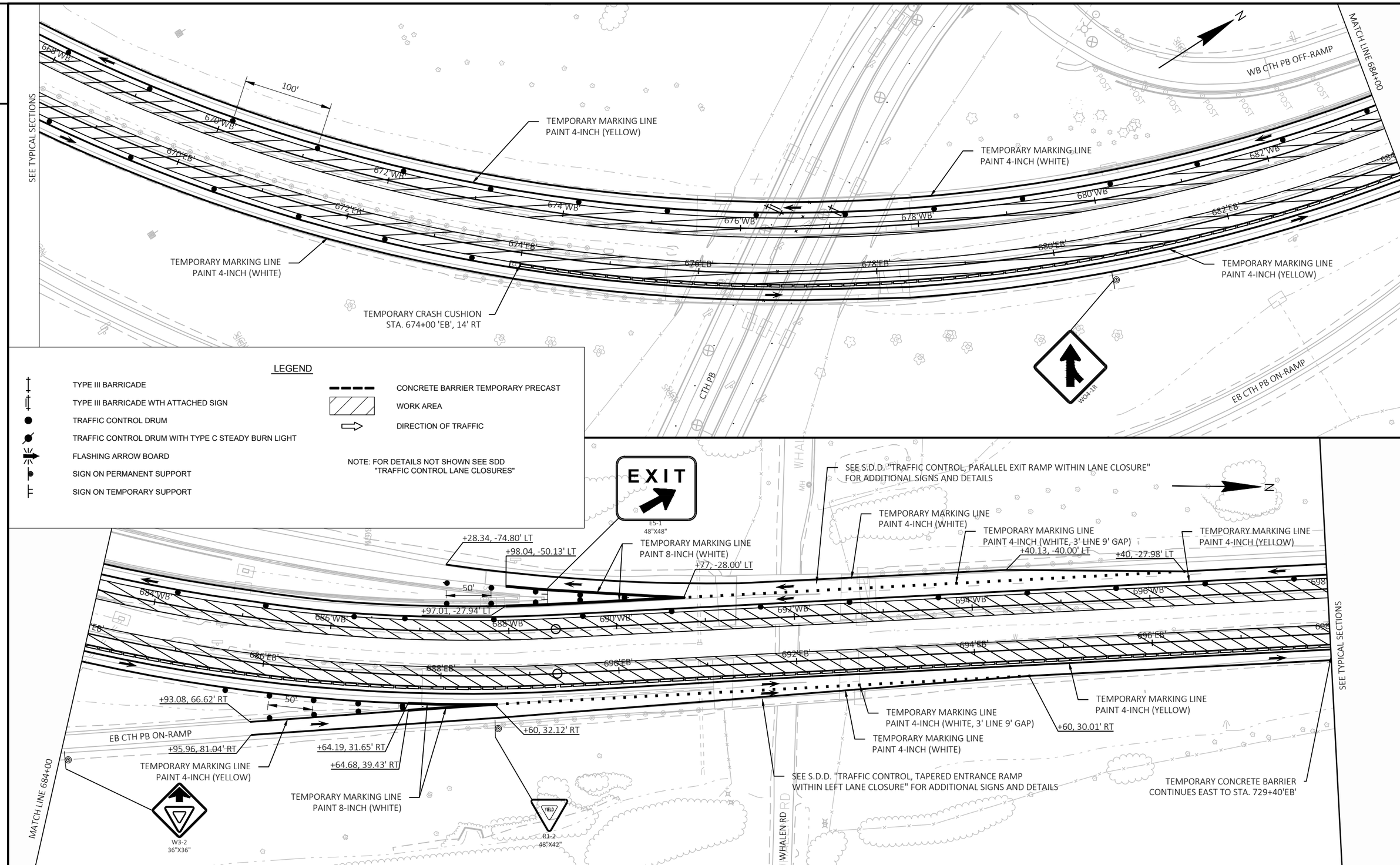

PROJECT NO: 1204-08-65	HWY: USH 18/151	COUNTY: DANE	TRAFFIC CONTROL DETAIL - STAGE 2, PHASE 2 BARRIER AREA	SHEET 261	E

FILE NAME : G:\WDOTSW\20007-000 USH 18\CIVIL 3D\SHEETSPLAN\TRAFFIC CONTROL\RE-LET\020307-TC_BARRIER2-2.DWG
LAYOUT NAME - 01
PLOT DATE : 12/7/2022 1:15 PM PLOT BY : JOSH MERCIER PLOT NAME : PLOT SCALE : 1 IN:100 FT
WISDOT/CADDS SHEET 44

2

2

CTH PB

WB CTH PB OFF-RAMP

EB CTH PB ON-RAMP

N

SEE TYPICAL SECTIONS

BEGIN TEMPORARY CONCRETE BARRIER
STA. 680+00'WB'

678'WB'

680'WB'

682'WB'

678'EB'

680'EB'

682'EB'

684'EB'

WO5-52R
18"X54"

+87.59, 9.00' RT

BEGIN TEMPORARY CONCRETE BARRIER
STA. 676+76.80'EB'

WO4-1R

TEMPORARY CRASH CUSHION
STA. 691+00'WB'
+77, -28.00' LT

WO1-6
48"X24"

TEMPORARY MARKING LINE
PAINT 4-INCH (YELLOW)
+27.29, -57.91' LT

MATCHLINE 692+00'EB'

690'WB'

692'WB'

50'

+99.89, 6.00' RT

690'EB'

+99.89, 16.86' RT

688'EB'

50'

TEMPORARY MARKING LINE
PAINT 4-INCH (YELLOW)

TEMPORARY MARKING LINE
PAINT 4-INCH (WHITE)

TEMPORARY MARKING LINE
PAINT 8-INCH (WHITE)

+54.80, 41.21' RT

END TEMPORARY CONCRETE BARRIER
STA. 688+00'EB'

+55, 53.14' RT

WO4-1R

SEE S.D.D. "TRAFFIC CONTROL, PARALLEL ENTRANCE RAMP WITHIN RIGHT LANE CLOSURE"
FOR ADDITIONAL SIGNS AND DETAILS

LEGEND

- TYPE III BARRICADE
- TYPE III BARRICADE WTH ATTACHED SIGN
- TRAFFIC CONTROL DRUM
- TRAFFIC CONTROL DRUM WITH TYPE C STEADY BURN LIGHT
- FLASHING ARROW BOARD
- SIGN ON PERMANENT SUPPORT
- SIGN ON TEMPORARY SUPPORT
- CONCRETE BARRIER TEMPORARY PRECAST
- WORK AREA
- DIRECTION OF TRAFFIC
- ASPHALTIC SURFACE TEMPORARY

NOTE: FOR DETAILS NOT SHOWN SEE SDD
"TRAFFIC CONTROL LANE CLOSURES"

EXIT

E5-1
48"X48"

N

LANE
CLOSED

R11-2L
48"X30"

TEMPORARY MARKING LINE
PAINT 4-INCH (YELLOW)

+40, -40.00' LT

+00, -40.00' LT

+99.59, -28.00' LT

25'

50'

694'WB'

696'WB'

TEMPORARY MARKING LINE
PAINT 8-INCH (WHITE)

+00, -6.00' LT

+23, -6.00' LT

700'WB'

702'WB'

TEMPORARY MARKING LINE
PAINT 4-INCH (WHITE)

+23.74, -19.67' LT

+23.13, -6.00' LT

TEMPORARY MARKING LINE
PAINT 4-INCH (YELLOW)

698'EB'

700'EB'

702'EB'

SEE TYPICAL SECTIONS

MATCHLINE 692+00'EB'

694'EB'

696'EB'

+48.68, 6.00' RT

+98.68, 6.00' RT

25'

+50, 18.00' RT

TEMPORARY MARKING LINE
PAINT 8-INCH (WHITE)

TEMPORARY MARKING LINE
PAINT 4-INCH (WHITE, 3' LINE 9' GAP)

TEMPORARY MARKING LINE
PAINT 4-INCH (WHITE)

+50, 18.00' RT

+47.49, 6.00' RT

25'

TEMPORARY MARKING LINE
PAINT 4-INCH (YELLOW)

+50, 6.00' RT

LANE
CLOSED

R11-2L
48"X30"

PROJECT NO: 1204-08-65	HWY: USH 18/151	COUNTY: DANE	TRAFFIC CONTROL DETAIL - STAGE 2, PHASE 3 BARRIER AREA	SHEET 262	E

FILE NAME : G:\WDOTSW\20007-000 USH 18\CIVIL 3D\SHEETSPLAN\TRAFFIC CONTROL\RE-LET\020307-TC_BARRIER2-3.DWG
LAYOUT NAME - 01

PLOT DATE : 12/7/2022 1:19 PM PLOT BY : JOSH MERCIER PLOT NAME : PLOT SCALE : 1 IN:100 FT

WISDOT/CADDS SHEET 44



SEE S.D.D. TRAFFIC CONTROL, SINGLE LANE CLOSURE, DIVIDED NON-FREEWAY/EXPRESSWAY FOR SIGN LOCATIONS

LEGEND

- TYPE III BARRICADE
- TYPE III BARRICADE WTH ATTACHED SIGN
- TRAFFIC CONTROL DRUM WITH TYPE C STEADY BURN LIGHT
- FLASHING ARROW BOARD
- SIGN ON PERMANENT SUPPORT
- SIGN ON TEMPORARY SUPPORT
- TRAFFIC CONTROL 42-INCH CONE
- WORK AREA
- DIRECTION OF TRAFFIC

NOTE: CONCRETE WORK AT THE EB AND WB RAMP TERMINAL INTERSECTIONS SHALL OCCUR DURING RAMP CLOSURES

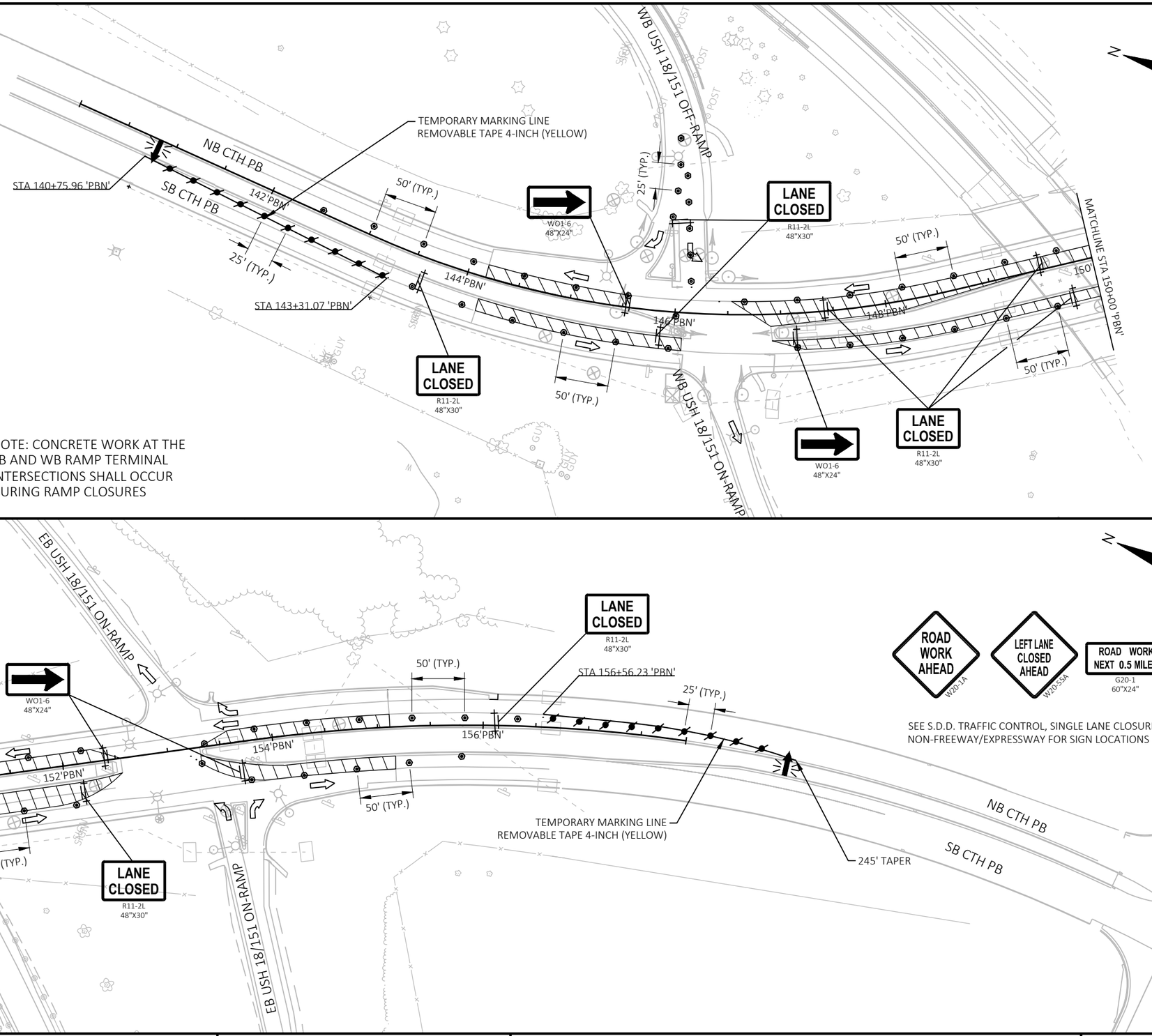

PROJECT NO: 1204-08-65	HWY: USH 18/151	COUNTY: DANE	TRAFFIC CONTROL - CTH PB STAGE 2, PHASE 1	SHEET 263	E



G20-1
60"X24"

SEE S.D.D. TRAFFIC CONTROL, SINGLE LANE CLOSURE, DIVIDED NON-FREEWAY/EXPRESSWAY FOR SIGN LOCATIONS

LEGEND

- TYPE III BARRICADE
- TYPE III BARRICADE WTH ATTACHED SIGN
- TRAFFIC CONTROL DRUM WITH TYPE C STEADY BURN LIGHT
- FLASHING ARROW BOARD
- SIGN ON PERMANENT SUPPORT
- SIGN ON TEMPORARY SUPPORT
- TRAFFIC CONTROL 42-INCH CONE
- WORK AREA
- DIRECTION OF TRAFFIC

NOTE: CONCRETE WORK AT THE EB AND WB RAMP TERMINAL INTERSECTIONS SHALL OCCUR DURING RAMP CLOSURES

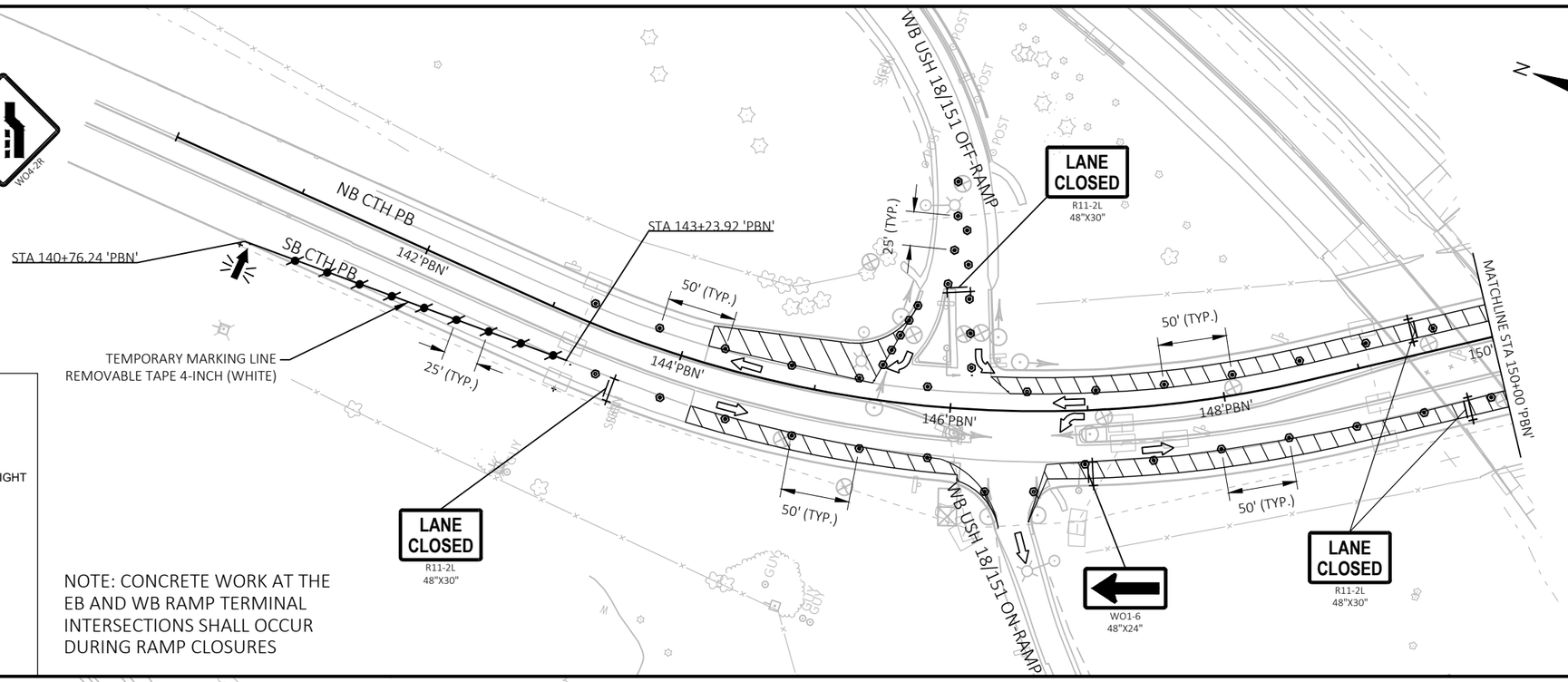

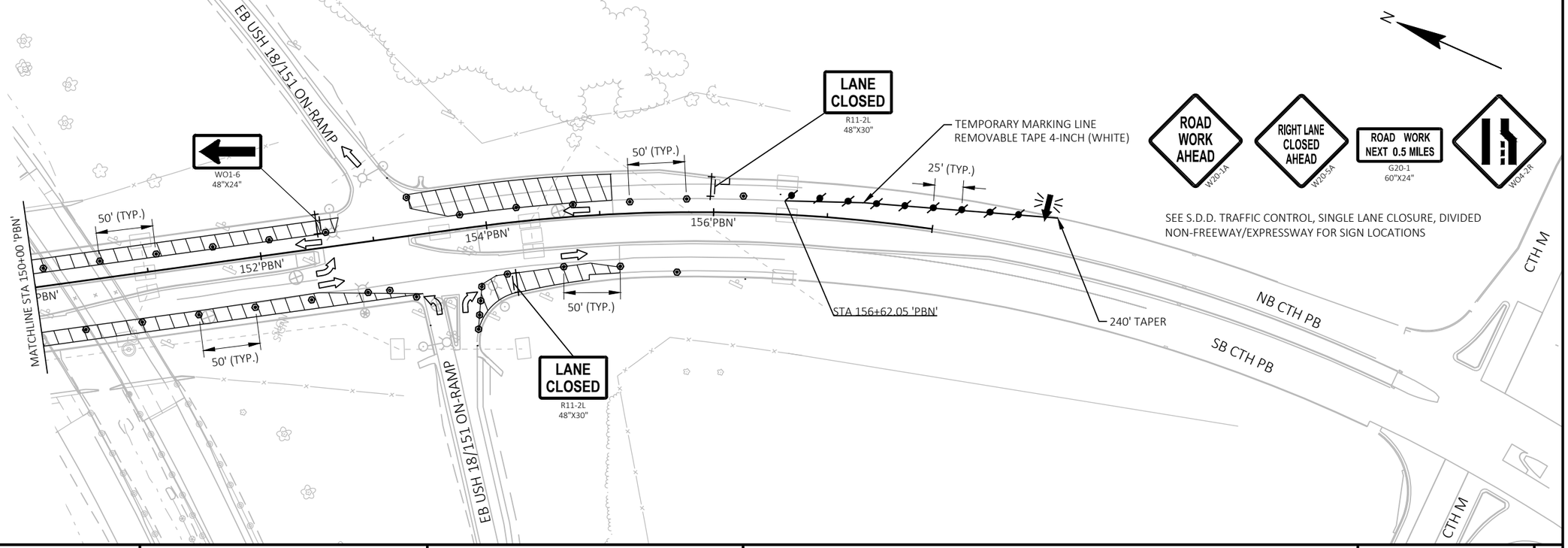

PROJECT NO: 1204-08-65	HWY: USH 18/151	COUNTY: DANE	TRAFFIC CONTROL - CTH PB STAGE 2, PHASE 2	SHEET 264	E

FILE NAME : G:\WDOTSW\20007-000 USH 18\CIVIL 3D\SHEETSPLAN\TRAFFIC CONTROL\025100_TC-CTH PB-S2-P2.DWG
LAYOUT NAME - 01

PLOT DATE : 7/21/2022 3:49 PM PLOT BY : JOSH MERCIER PLOT NAME : PLOT SCALE : 1 IN:100 FT

2

N

ROAD CLOSED 1000 FT
W20-3C

ROAD CLOSED 500 FT
W20-3D

ONLY ONLY
R3-8xx
36"X30"

E VERONA AVE

500'

WO12-1D
48"X48"

RAMP CLOSED
R11-2R
48"X30"

ONLY ONLY
R3-8xx
36"X30"

MAPLE GROVE DR

GUY

R3-2
24"X24"

RAMP CLOSED
R11-2R
48"X30"

25' TYP.

RAMP 'EW'

RAMP 'EE'

R3-1
24"X24"

CTH PB

25' TYP.

RAMP CLOSED
R11-2R
48"X30"

R3-6L
42"X48"

LEGEND

- TYPE III BARRICADE
- TYPE III BARRICADE WTH ATTACHED SIGN
- TRAFFIC CONTROL DRUMS
- SIGN ON PERMANENT SUPPORT
- SIGN ON TEMPORARY SUPPORT
- WORK AREA
- DIRECTION OF TRAFFIC
- BAG LIGHTS

NOTE: FOR DETAILS NOT SHOWN SEE SDD "TRAFFIC CONTROL LANE CLOSURES"

PROJECT NO: 1204-08-65	HWY: USH 18/151	COUNTY: DANE	TRAFFIC CONTROL - E VERONA AVE RAMPS	SHEET 265	E

FILE NAME : G:\WDOTSW\20007-000 USH 18\CIVIL 3D\SHEETSPLAN\TRAFFIC CONTROL\025100_TC-E VERONA AVE.DWG
LAYOUT NAME - 01

PLOT DATE : 7/14/2022 11:08 AM PLOT BY : NATHAN RULLMAN PLOT NAME : PLOT SCALE : 1 IN:100 FT

2

LEGEND

PCMS	PORTABLE CHANGEABLE MESSAGE SIGN
S	PORTABLE TRAFFIC SENSOR
FBS	FLASHING BEACON SIGNS

N

NOTE: SEE THE FOLLOWING STANDARD DETAIL DRAWING FOR ADDITIONAL DETAILS INCLUDING PCMS MESSAGING.

- S.D.D. TRAFFIC CONTROL, DYNAMIC LATE MERGE SYSTEM

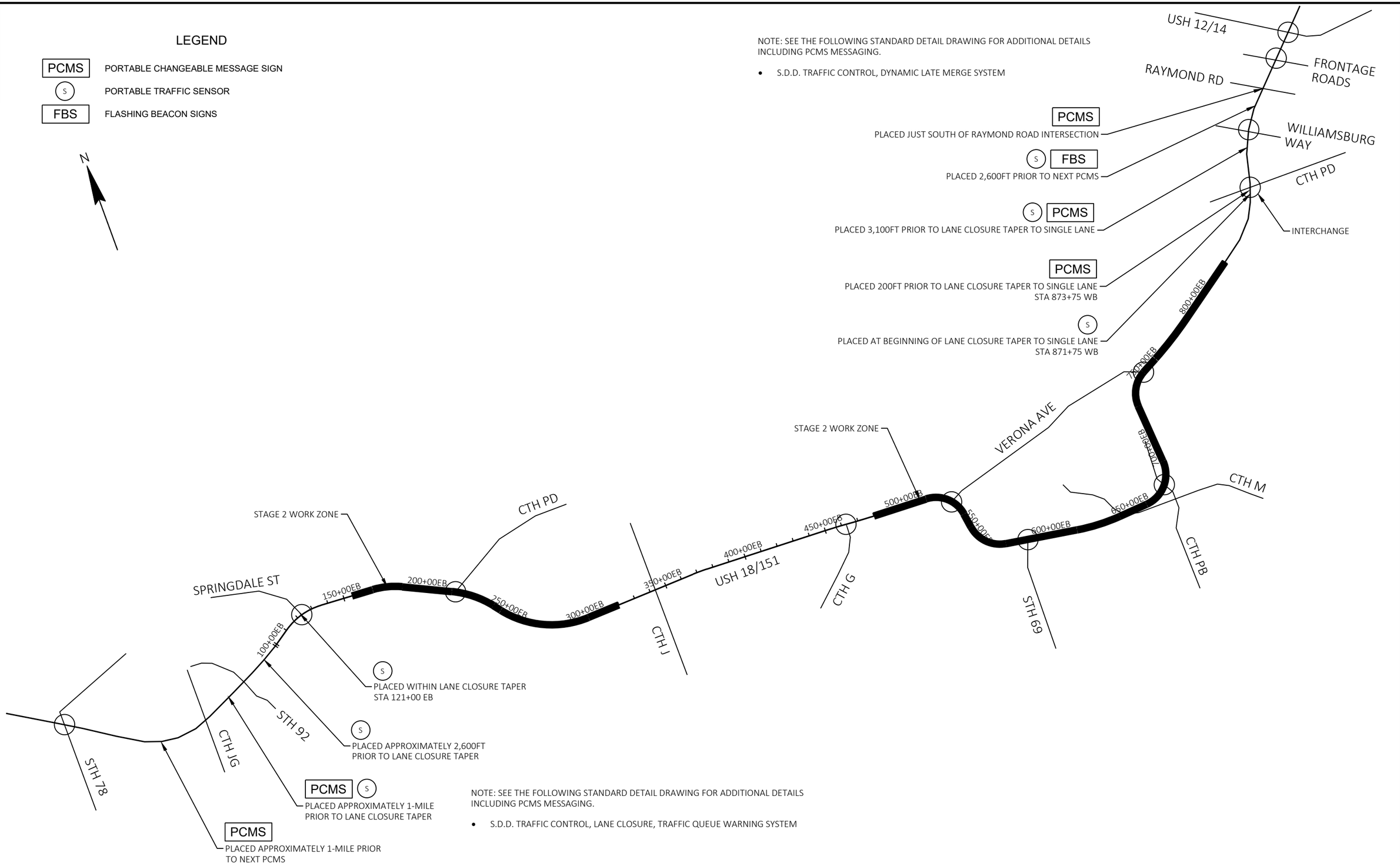

NOTE: SEE THE FOLLOWING STANDARD DETAIL DRAWING FOR ADDITIONAL DETAILS INCLUDING PCMS MESSAGING.

- S.D.D. TRAFFIC CONTROL, LANE CLOSURE, TRAFFIC QUEUE WARNING SYSTEM

PROJECT NO: 1204-08-65	HWY: USH 18/151	COUNTY: DANE	TRAFFIC CONTROL DETAILS - QWS LOCATIONS - STAGE 2	SHEET 266	E

FILE NAME : G:\WDOTSW\20007-000 USH 18\CIVIL 3D\SHEETSPLAN\TRAFFIC CONTROL\RE-LET\020300-TC_DETAILS.DWG
LAYOUT NAME - QWS (2)

PLOT DATE : 11/17/2022 9:33 PM PLOT BY : JOSH MERCIER PLOT NAME : PLOT SCALE : 1 IN:2500 FT

WISDOT/CADDS SHEET 44

2

STAGE 3 SUMMARY

MAINTENANCE OF TRAFFIC (MOT)

USH 18/151

- USH 18/151 WILL REMAIN OPEN TO ALL LANES OF TRAFFIC AT ALL TIMES IN THE WB AND EB DIRECTION.

All RAMPS

- ALL RAMPS WILL REMAIN OPEN AT ALL TIMES.

STH 69 & CTH PB

- STH 69 & CTH PB WILL REMAIN OPEN TO ALL LANES OF TRAFFIC AT ALL TIMES.

CONSTRUCTION TO BE COMPLETED THIS STAGE

- NONE

GENERAL NOTES

- ANY SIGNS, TEMPORARY OR EXISTING, WHICH CONFLICT WITH TRAFFIC CONTROL "IN USE" SHALL BE REMOVED OR COVERED AS NEEDED AND AS APPROVED BY THE ENGINEER. REMOVING/REPLACING OR COVERING/UNCOVERING SIGNS WILL BE INCIDENTAL TO OTHER TRAFFIC CONTROL ITEMS.
- ALL TRAFFIC CONTROL SIGNS SHALL BE 48" X 48" UNLESS OTHERWISE NOTED.
- "WO" SIGNS ARE THE SAME AS "W" SIGNS EXCEPT THE BACKGROUND IS REFLECTIVE ORANGE.
- CONSIDER GEOMETRICS WHEN LOCATING SIGNS, ARROW BOARDS AND SIGN MESSAGE BOARDS SO THE DRIVER HAS A CLEAR VIEW OF THE ARROW BOARDS, SIGN MESSAGE BOARDS AND LANE CLOSURE DRUMS FOR A MINIMUM OF 1500 FEET IN FRONT OF THE DRUMS.
- IF SIGNS ARE IN PLACE LESS THAN 7 CONTINUOUS DAYS AND NIGHTS, THE ADVANCED WARNING SIGNS MAY BE MOUNTED ON PORTABLE SUPPORTS WITH A MINIMUM 5' MOUNTING HEIGHT.
- ALL TRAFFIC CONTROL SIGNING SHALL CONFORM TO: PART VI OF THE MANUAL ON UNIFORM TRAFFIC CONTROL DEVICES, WISCONSIN MANUAL OF UNIFORM TRAFFIC CONTROL DEVICES, TRAFFIC ENGINEERING, OPERATIONS AND SAFETY MANUAL, AND OTHER CONTRACT DOCUMENTS.
- THE TURNING OF TRAFFIC CONTROL DEVICES WHEN NOT IN USE TO OBSCURE THE MESSAGE WILL NOT BE ALLOWED.
- REMOVE PAVEMENT MARKINGS NOT APPROPRIATE FOR THE TRAVEL PATH IN USE.
- MOVE, REMOVE OR INSTALL ROUTE MARKER SIGNS AS REQUIRED TO MAINTAIN NECESSARY ROUTE GUIDANCE THROUGHOUT CONSTRUCTION. REFER TO EXISTING SIGN REMOVAL PLANS FOR EXISTING ROUTE GUIDANCE.
- THE LANE CLOSURE SERIES SHALL BE INSTALLED AS A COMPLETE UNIT WHICH INCLUDES ALL ADVANCE WARNING SIGNING, DRUMS, AND ARROW BOARDS.
- CONTRACTORS EQUIPMENT AND MATERIAL STOCKPILES MAY NOT BE STORED WITHIN THE CONSTRUCTION CLEAR ZONE OF USH 18 OR USH 18 RAMPS WHILE THE CONTRACTOR IS NOT WORKING, UNLESS THEY ARE PROTECTED BY CONCRETE BARRIER TEMPORARY PRECAST. CONSTRUCTION CLEAR ZONE = 20 FEET MEASURED FROM THE EDGE OF LANE LINE.
- CONCRETE BARRIER TEMPORARY PRECAST SHALL BE ANCHORED IF THE DISTANCE TO A 2 FOOT OR GREATER DROP-OFF THAT IS STEEPER THAN 3H:1V

REFERENCE THE FOLLOWING STANDARD DETAIL DRAWINGS

- NONE

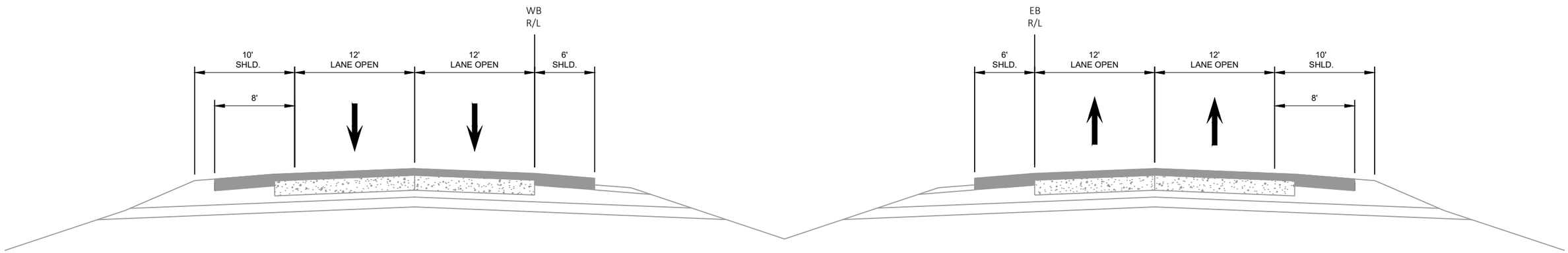

STAGE 3 - WINTER SHUTDOWN

ALL LANES OPEN THROUGH PROJECT

PROJECT NO: 1204-08-65	HWY: USH 18/151	COUNTY: DANE	TRAFFIC CONTROL - STAGE 3	SHEET 267	E

FILE NAME : G:\WDOTSW\20007-000 USH 18\CIVIL 3D\SHEETSPLAN\TRAFFIC CONTROL\RE-LET\020305-TC__TYP_SEC_S3.DWG
LAYOUT NAME - 01notes
PLOT DATE : 11/30/2022 12:09 PM PLOT BY : KL ENGINEERING PLOT NAME : PLOT SCALE : 1 IN:10 FT
WISDOT/CADDS SHEET 42

STAGE 4 SUMMARY

MAINTENANCE OF TRAFFIC (MOT)

USH 18/151

- USH 18/151 WILL REMAIN OPEN TO ONE LANE OF TRAFFIC AT ALL TIMES IN THE WB AND EB DIRECTION UTILIZING LONG TERM MEDIAN LANE CLOSURES. WORK ZONES WILL BE RESTRICTED TO THREE MILES IN LENGTH AS SPECIFIED IN THE CONTRACT SPECIAL PROVISIONS.

All RAMPS

- ALL RAMPS WILL REMAIN OPEN AT ALL TIMES.

STH 69 & CTH PB

- STH 69 & CTH PB WILL REMAIN OPEN TO ALL LANES AT ALL TIMES.

CONSTRUCTION TO BE COMPLETED THIS STAGE

- MEDIAN GRADING, MEDIAN INLETS, AND MEDIAN CABLE GUARD.

REFERENCE THE FOLLOWING STANDARD DETAIL DRAWINGS

- TRAFFIC CONTROL, LANE CLOSURE
- TRAFFIC CONTROL, RAMP WITHIN LANE CLOSURE
- TRAFFIC CONTROL, ENTRANCE RAMP WITHIN LEFT LANE CLOSURE
- TRAFFIC CONTROL, ENTRANCE RAMP WITHIN LANE CLOSURE
- TRAFFIC CONTROL, TAPERED ENTRANCE RAMP WITHIN LEFT LANE CLOSURE
- TRAFFIC CONTROL, PARALLEL EXIT RAMP WITHIN LANE CLOSURE
- TRAFFIC CONTROL, INGRESS/EGRESS

GENERAL NOTES

- ANY SIGNS, TEMPORARY OR EXISTING, WHICH CONFLICT WITH TRAFFIC CONTROL "IN USE" SHALL BE REMOVED OR COVERED AS NEEDED AND AS APPROVED BY THE ENGINEER. REMOVING/REPLACING OR COVERING/UNCOVERING SIGNS WILL BE INCIDENTAL TO OTHER TRAFFIC CONTROL ITEMS.
- ALL TRAFFIC CONTROL SIGNS SHALL BE 48" X 48" UNLESS OTHERWISE NOTED.
- "WO" SIGNS ARE THE SAME AS "W" SIGNS EXCEPT THE BACKGROUND IS REFLECTIVE ORANGE.
- CONSIDER GEOMETRICS WHEN LOCATING SIGNS, ARROW BOARDS AND SIGN MESSAGE BOARDS SO THE DRIVER HAS A CLEAR VIEW OF THE ARROW BOARDS, SIGN MESSAGE BOARDS AND LANE CLOSURE DRUMS FOR A MINIMUM OF 1500 FEET IN FRONT OF THE DRUMS.
- IF SIGNS ARE IN PLACE LESS THAN 7 CONTINUOUS DAYS AND NIGHTS, THE ADVANCED WARNING SIGNS MAY BE MOUNTED ON PORTABLE SUPPORTS WITH A MINIMUM 5' MOUNTING HEIGHT.
- ALL TRAFFIC CONTROL SIGNING SHALL CONFORM TO: PART VI OF THE MANUAL ON UNIFORM TRAFFIC CONTROL DEVICES, WISCONSIN MANUAL OF UNIFORM TRAFFIC CONTROL DEVICES, TRAFFIC ENGINEERING, OPERATIONS AND SAFETY MANUAL, AND OTHER CONTRACT DOCUMENTS.
- THE TURNING OF TRAFFIC CONTROL DEVICES WHEN NOT IN USE TO OBSCURE THE MESSAGE WILL NOT BE ALLOWED.
- REMOVE PAVEMENT MARKINGS NOT APPROPRIATE FOR THE TRAVEL PATH IN USE.
- MOVE, REMOVE OR INSTALL ROUTE MARKER SIGNS AS REQUIRED TO MAINTAIN NECESSARY ROUTE GUIDANCE THROUGHOUT CONSTRUCTION. REFER TO EXISTING SIGN REMOVAL PLANS FOR EXISTING ROUTE GUIDANCE.
- THE LANE CLOSURE SERIES SHALL BE INSTALLED AS A COMPLETE UNIT WHICH INCLUDES ALL ADVANCE WARNING SIGNING, DRUMS, AND ARROW BOARDS.
- CONTRACTORS EQUIPMENT AND MATERIAL STOCKPILES MAY NOT BE STORED WITHIN THE CONSTRUCTION CLEAR ZONE OF USH 18 OR USH 18 RAMPS WHILE THE CONTRACTOR IS NOT WORKING, UNLESS THEY ARE PROTECTED BY CONCRETE BARRIER TEMPORARY PRECAST. CONSTRUCTION CLEAR ZONE = 20 FEET MEASURED FROM THE EDGE OF LANE LINE.
- CONCRETE BARRIER TEMPORARY PRECAST SHALL BE ANCHORED IF THE DISTANCE TO A 2 FOOT OR GREATER DROP-OFF THAT IS STEEPER THAN 3H:1V

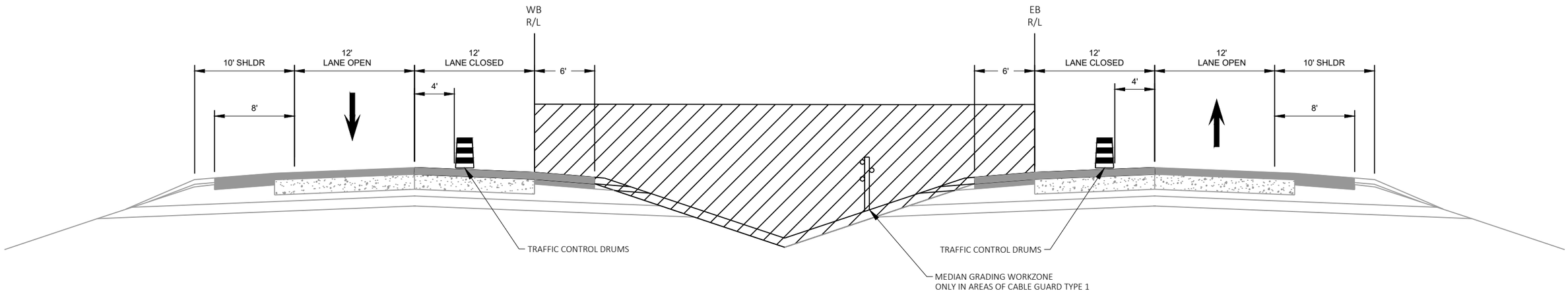

STAGE 4 TYPICAL SECTION

STA. 180+00'EB' - STA. 254+50'EB'
STA. 180+00'WB' - STA. 254+40'WB'
STA. 291+70'EB' - STA. 317+30'EB'
STA. 291+30'WB' - STA. 317+30'WB'
STA. 411+50'EB' - STA. 675+75'EB'
STA. 411+50'WB' - STA. 675+35'WB'

PROJECT NO: 1204-08-65	HWY: USH 18/151	COUNTY: DANE	TRAFFIC CONTROL - STAGE 4	SHEET 268	E

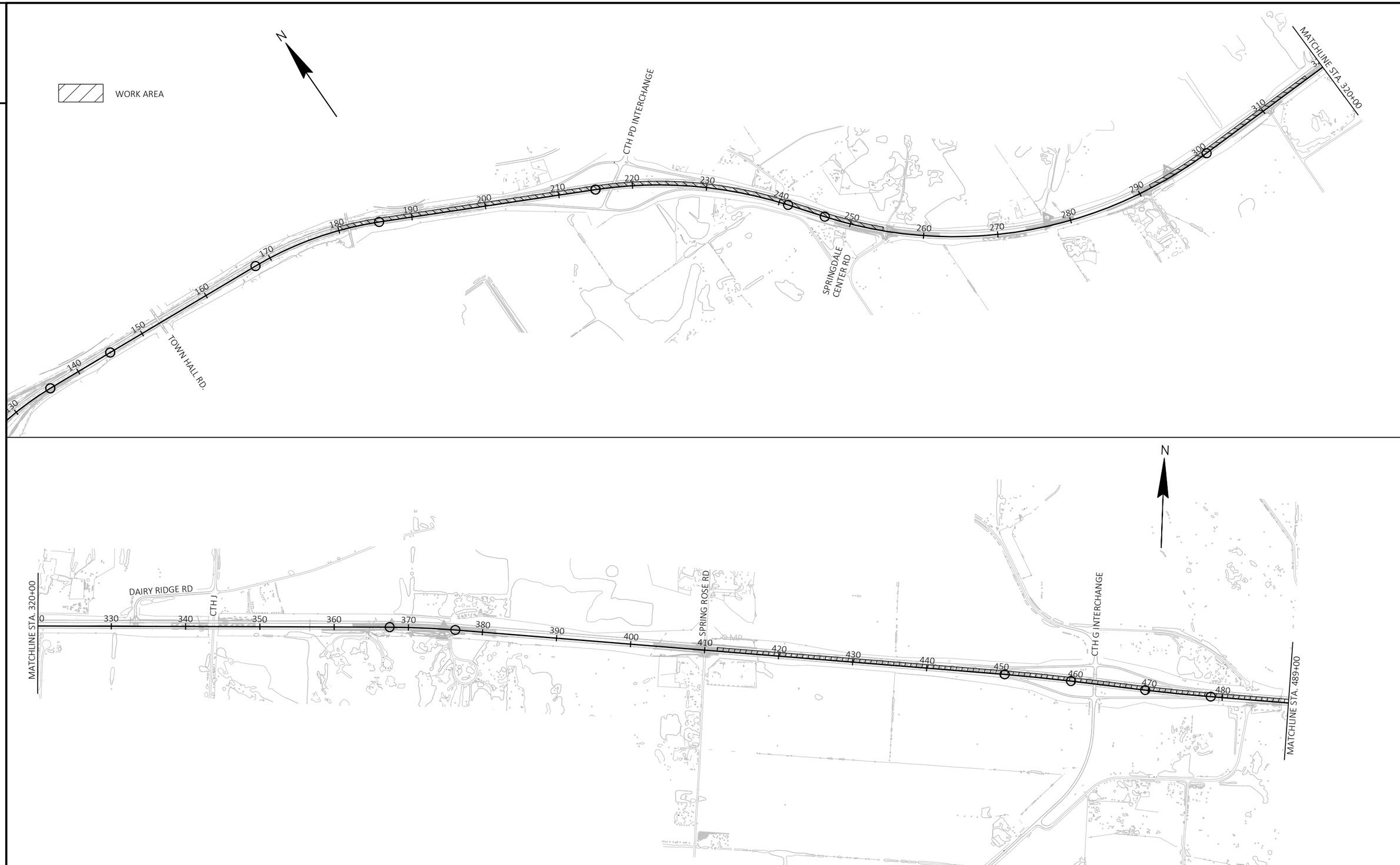

PROJECT NO: 1204-08-65	HWY: USH 18/151	COUNTY: DANE	TRAFFIC CONTROL OVERVIEW - STAGE 4	SHEET 269	E

FILE NAME : G:\WDOTSW\20007-000 USH 18\CIVIL 3D\SHEETSPLAN\TRAFFIC CONTROL\RE-LET\020311-TC__OVERVIEW_S4.DWG
LAYOUT NAME - 1
PLOT DATE : 11/17/2022 4:34 PM
PLOT BY : JOSH MERCIER
PLOT NAME :
PLOT SCALE : 1 IN:2500 FT
WISDOT/CADDS SHEET 44

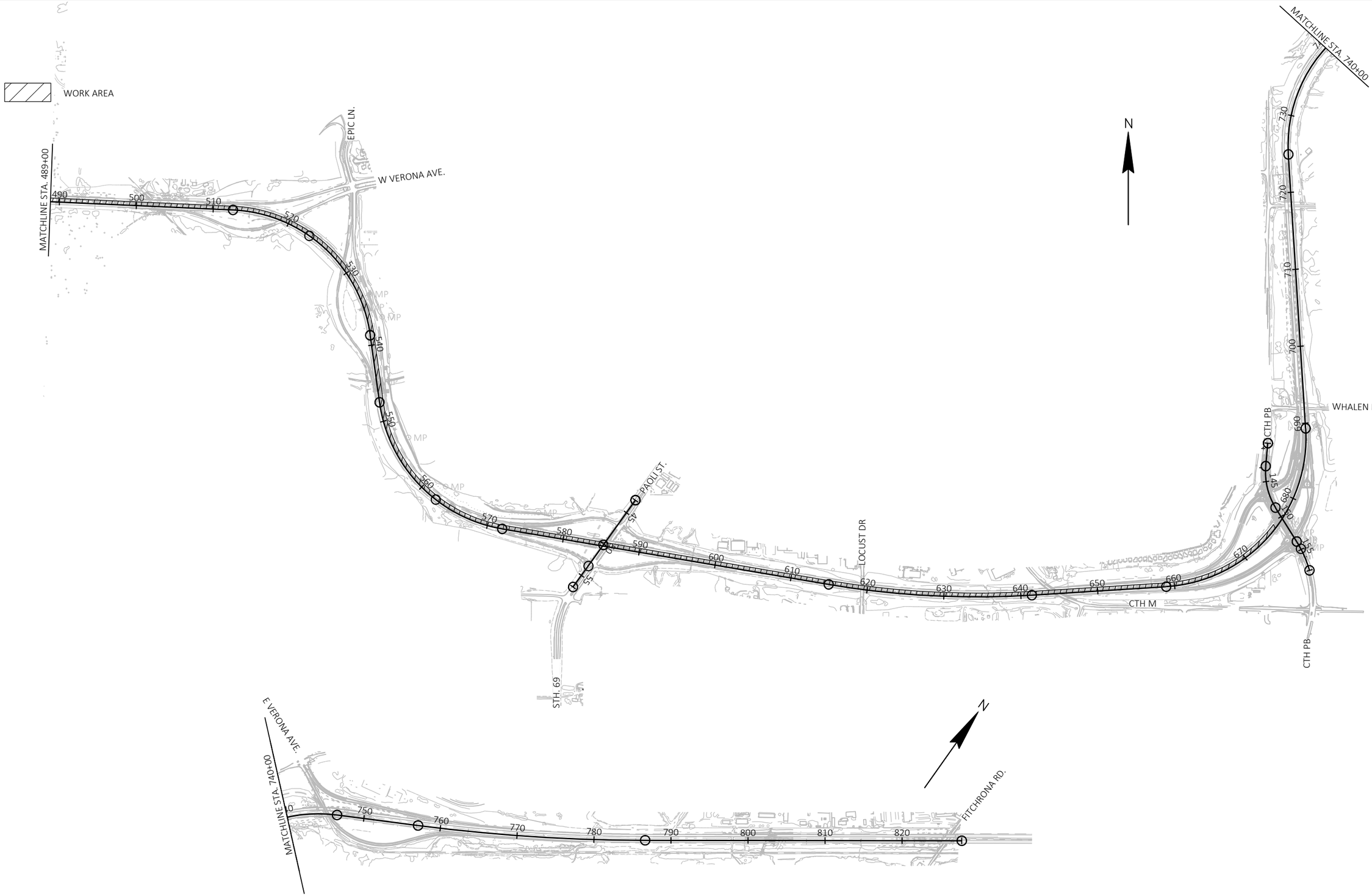

PROJECT NO: 1204-08-65	HWY: USH 18/151	COUNTY: DANE	TRAFFIC CONTROL OVERVIEW - STAGE 4	SHEET 270	E

FILE NAME : G:\WDOTSW\20007-000 USH 18\CIVIL 3D\SHEETSPLAN\TRAFFIC CONTROL\RE-LET\020311-TC__0VERVIEW_S4.DWG
LAYOUT NAME - 2

PLOT DATE : 11/17/2022 4:34 PM PLOT BY : JOSH MERCIER PLOT NAME : PLOT SCALE : 1 IN:2500 FT

WISDOT/CADDS SHEET 44

2

LEGEND

PCMS	PORTABLE CHANGEABLE MESSAGE SIGN
(S)	PORTABLE TRAFFIC SENSOR
FBS	FLASHING BEACON SIGNS

N

NOTE: SEE THE FOLLOWING STANDARD DETAIL DRAWING FOR ADDITIONAL DETAILS INCLUDING PCMS MESSAGING.

- S.D.D. TRAFFIC CONTROL, LANE CLOSURE, TRAFFIC QUEUE WARNING SYSTEM

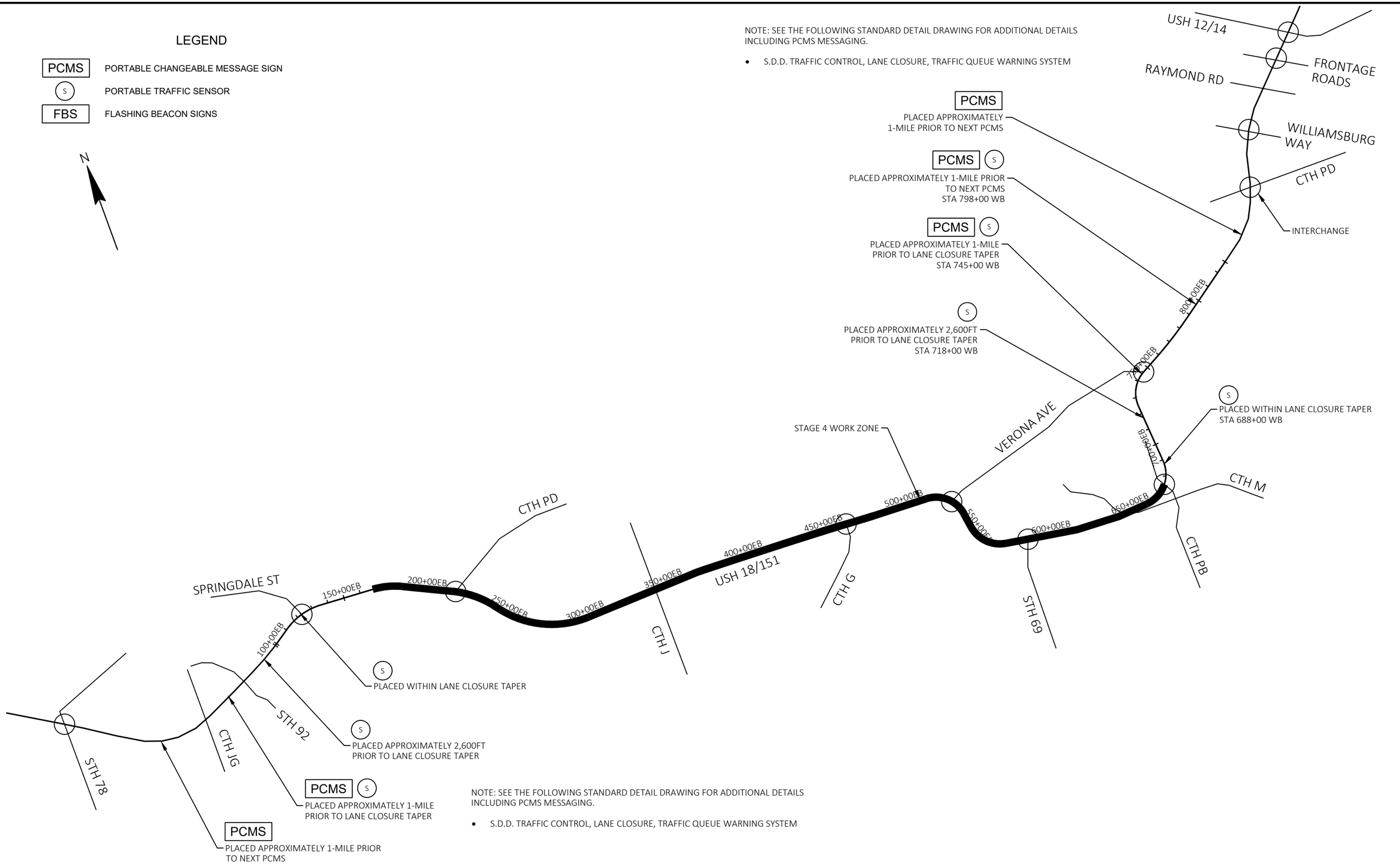

NOTE: SEE THE FOLLOWING STANDARD DETAIL DRAWING FOR ADDITIONAL DETAILS INCLUDING PCMS MESSAGING.

- S.D.D. TRAFFIC CONTROL, LANE CLOSURE, TRAFFIC QUEUE WARNING SYSTEM

PROJECT NO: 1204-08-65	HWY: USH 18/151	COUNTY: DANE	TRAFFIC CONTROL DETAILS - QWS LOCATIONS - STAGE 4	SHEET 271	E

FILE NAME : G:\WDOTSW\20007-000 USH 18\CIVIL 3D\SHEETSPLAN\TRAFFIC CONTROL\RE-LET\020300-TC_DETAILS.DWG
LAYOUT NAME - QWS (3)
PLOT DATE : 11/18/2022 12:40 PM PLOT BY : BRIAN ST. VINCENT PLOT NAME : PLOT SCALE : 1 IN:2500 FT

2

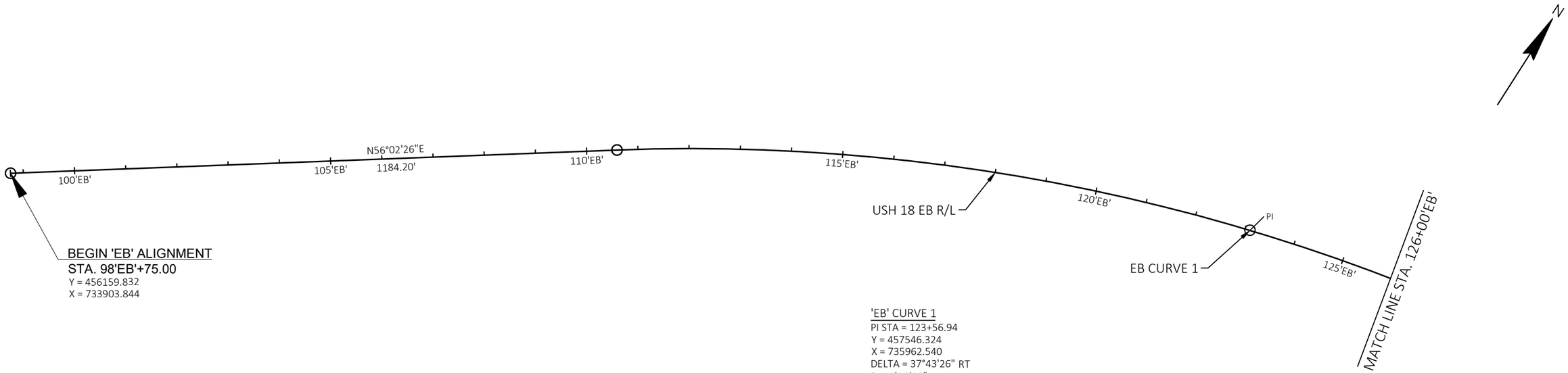

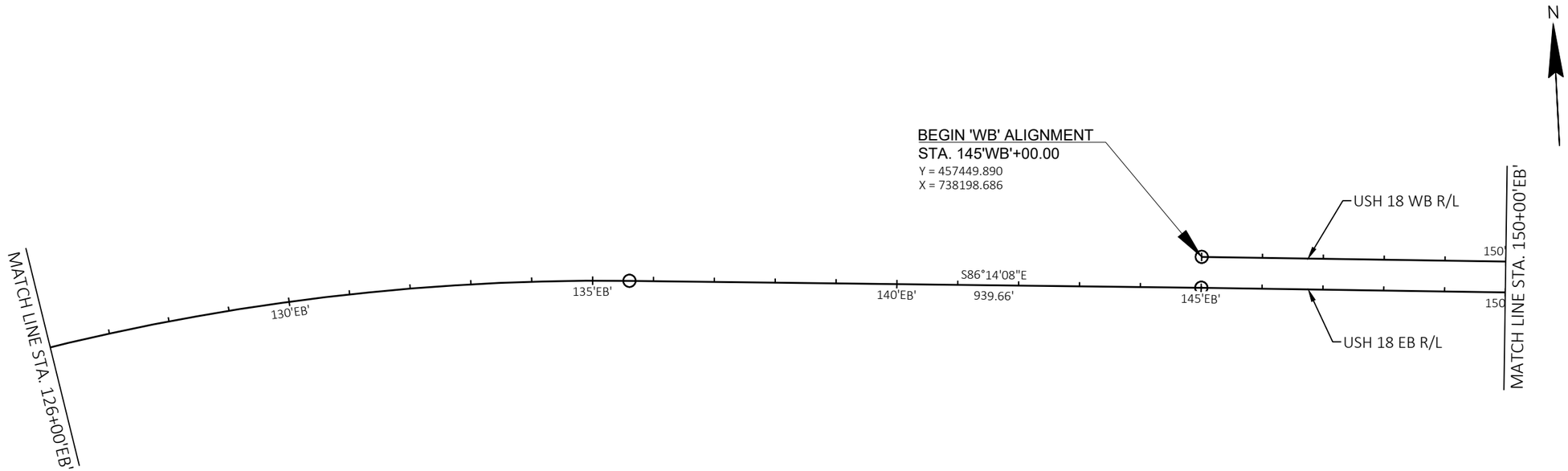

PROJECT NO: 1204-08-65	HWY: USH 18/151	COUNTY: DANE	ALIGNMENT DIAGRAM	SHEET 272	E

2

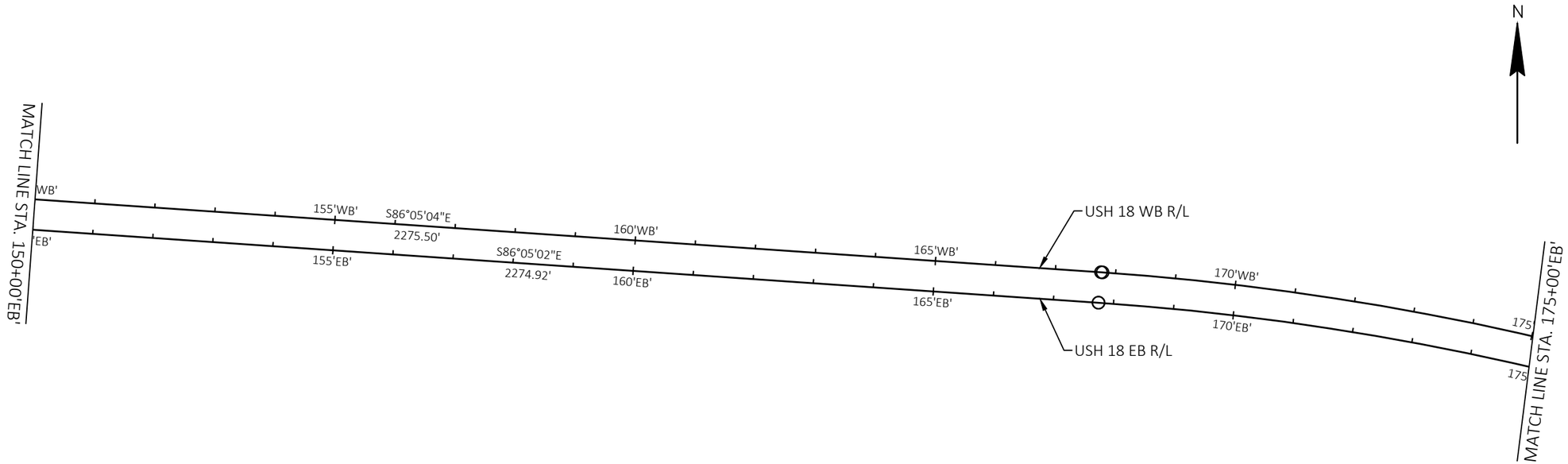

'WB' CURVE 1
PI STA = 176+86.03
Y = 457232.328
X = 741377.282
DELTA = 22°13'41" RT
D = 1°14'10"
T = 910.53'
L = 1798.17'
R = 4635.00'
PC STA = 167+75.50
PT STA = 185+54.00
MAX SE = 4%

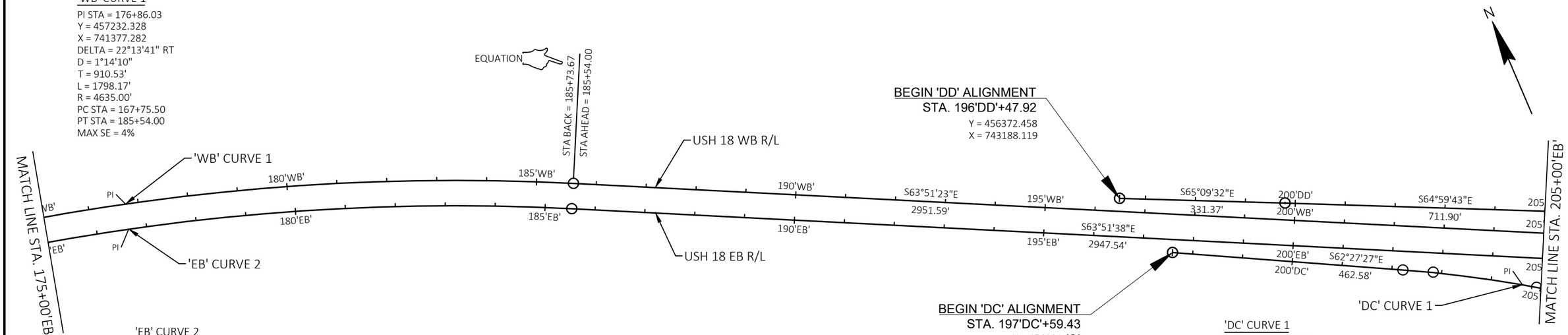

'EB' CURVE 2
PI STA = 176+75.43
Y = 457182.557
X = 741363.244
DELTA = 22°13'24" RT
D = 1°14'59"
T = 900.52'
L = 1778.40'
R = 4585.00'
PC STA = 167+74.92
PT STA = 185+53.31
MAX SE = 4%

'DC' CURVE 1
PI STA = 204+64.27
Y = 455905.197
X = 743867.923
DELTA = 10°59'12" RT
D = 2°16'28"
T = 242.26'
L = 483.03'
R = 2519.02'
PC STA = 202+22.01
PT STA = 207+05.05

PROJECT NO: 1204-08-65	HWY: USH 18/151	COUNTY: DANE	ALIGNMENT DIAGRAM	SHEET 273	E

FILE NAME : G:\WDOTSW\20007-000 USH 18\CIVIL 3D\SHEETSPLAN\027201-AD.DWG PLOT DATE : 7/20/2022 6:15 PM PLOT BY : NATHAN RULLMAN PLOT NAME : PLOT SCALE : 1 IN:200 FT
WISDOT/CADDS SHEET 42

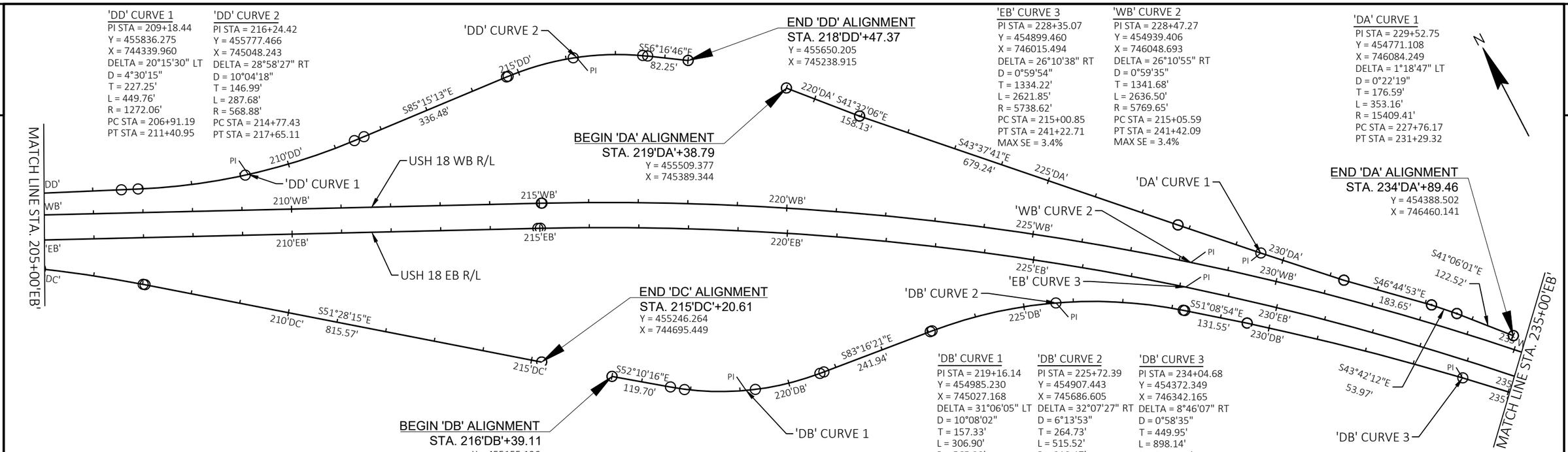

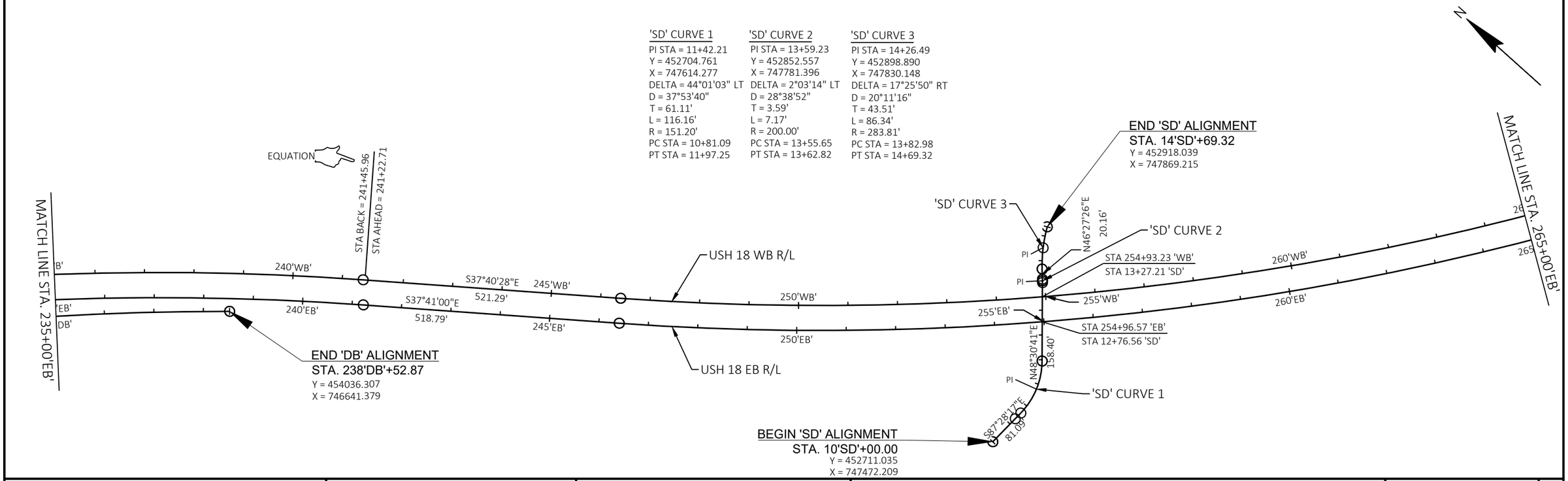

PROJECT NO: 1204-08-65	HWY: USH 18/151	COUNTY: DANE	ALIGNMENT DIAGRAM	SHEET 274	E

2

'EB' CURVE 4
PI STA = 275+67.33
Y = 451117.474
X = 748936.774
DELTA = 54°10'49" LT
D = 1°00'06"
T = 2925.83'
L = 5408.98'
R = 5720.00'
PC STA = 246+41.50
PT STA = 300+50.47
MAX SE = 3.4%

'WB' CURVE 3
PI STA = 275+40.64
Y = 451169.130
X = 748959.999
DELTA = 54°11'03" LT
D = 1°00'38"
T = 2900.50'
L = 5362.09'
R = 5670.00'
PC STA = 246+40.13
PT STA = 300+02.22
MAX SE = 3.4%

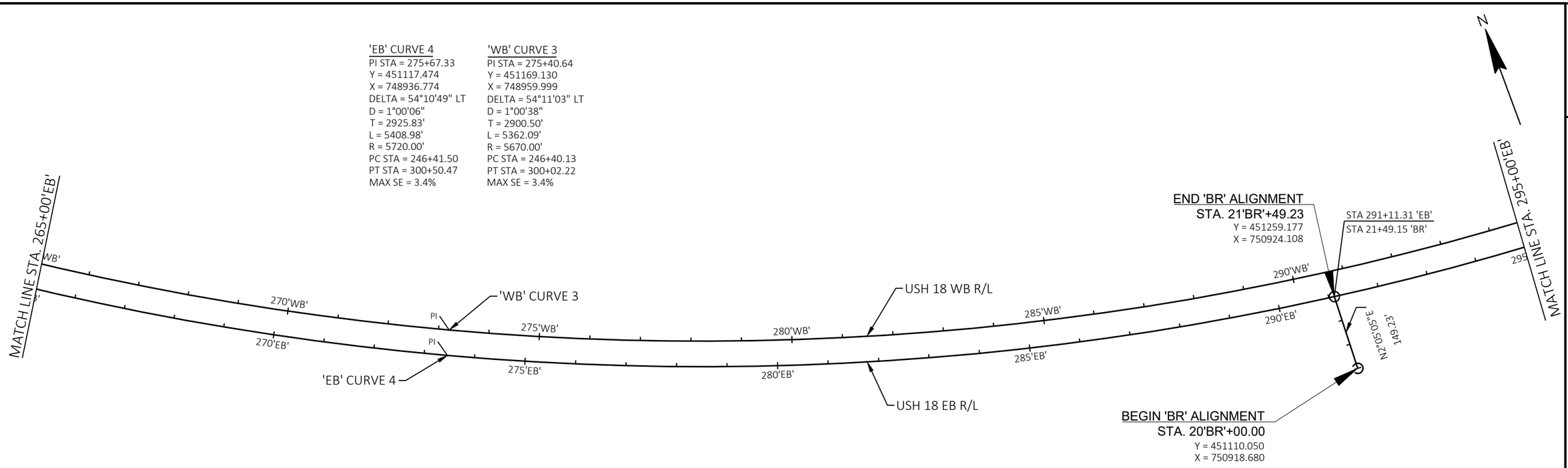

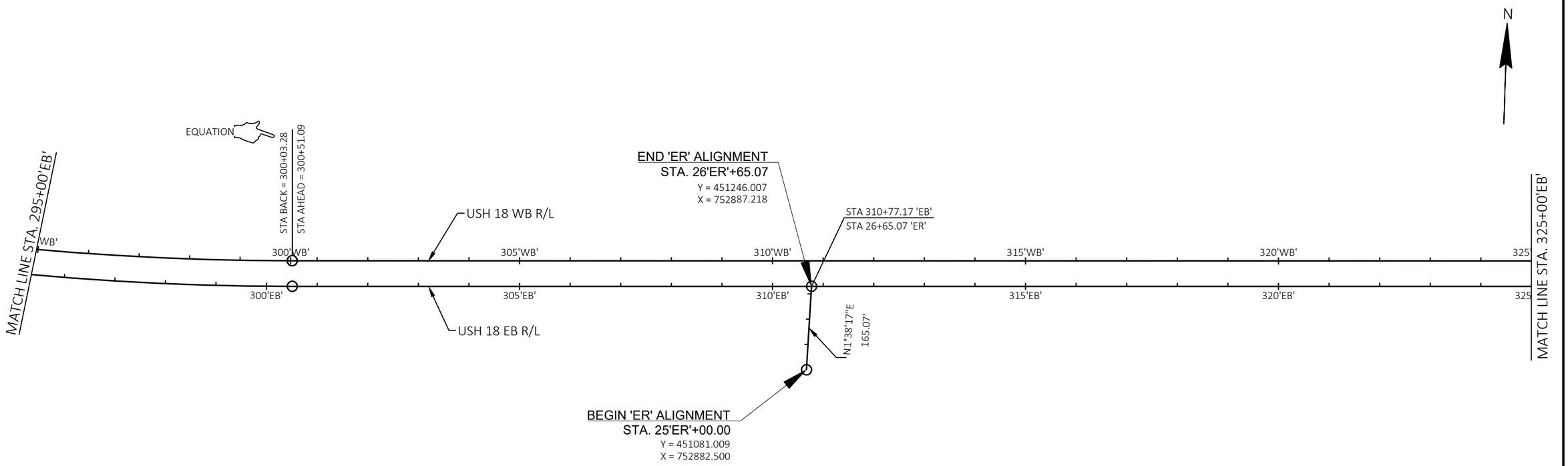

PROJECT NO: 1204-08-65	HWY: USH 18/151	COUNTY: DANE	ALIGNMENT DIAGRAM	SHEET 275	E

2

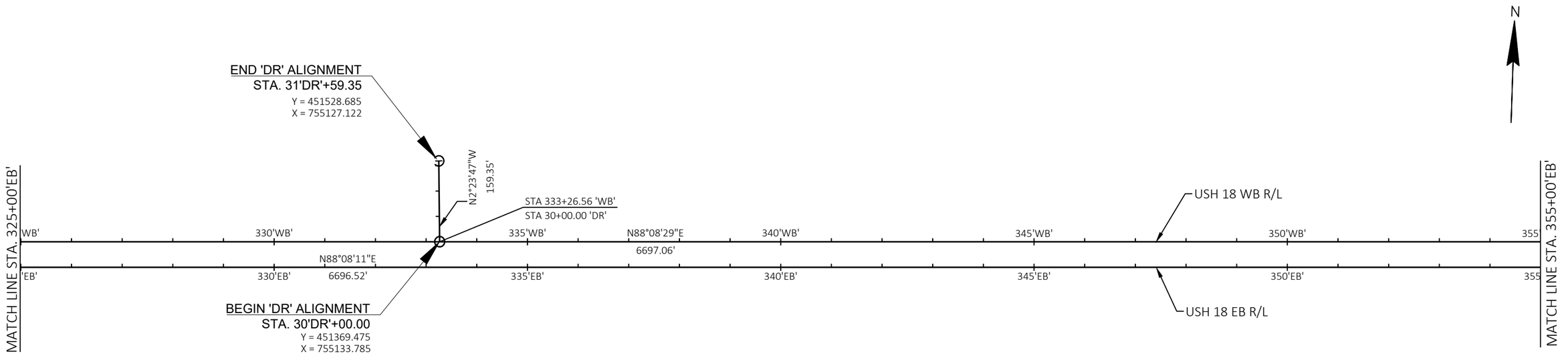

'EB' CURVE 5
PI STA = 371+89.87
Y = 451444.787
X = 758996.679
DELTA = 4°25'24" RT
D = 0°29'59"
T = 442.87'
L = 885.31'
R = 11467.19'
PC STA = 367+46.99
PT STA = 376+32.30
MAX SE = 2%

'WB' CURVE 4
PI STA = 371+92.28
Y = 451494.855
X = 758997.471
DELTA = 4°25'34" RT
D = 0°29'50"
T = 445.19'
L = 889.94'
R = 11520.00'
PC STA = 367+47.09
PT STA = 376+33.17
MAX SE = 2%

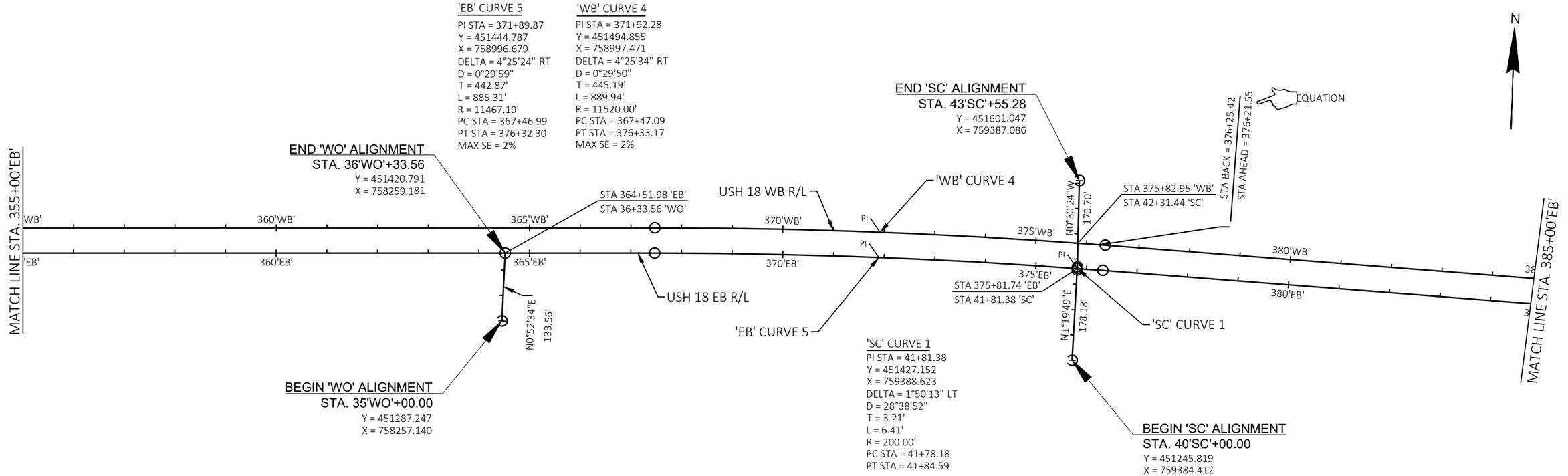

'SC' CURVE 1
PI STA = 41+81.38
Y = 451427.152
X = 759388.623
DELTA = 1°50'13" LT
D = 28°38'52"
T = 3.21'
L = 6.41'
R = 200.00'
PC STA = 41+78.18
PT STA = 41+84.59

BEGIN 'SC' ALIGNMENT
STA. 40'SC'+00.00
Y = 451245.819
X = 759384.412

PROJECT NO: 1204-08-65	HWY: USH 18/151	COUNTY: DANE	ALIGNMENT DIAGRAM	SHEET 276	E

FILE NAME : G:\WDOTSW\20007-000 USH 18\CIVIL 3D\SHEETSPLAN\027201-AD.DWG PLOT DATE : 7/20/2022 6:15 PM PLOT BY : NATHAN RULLMAN PLOT NAME : PLOT SCALE : 1 IN:200 FT
WISDOT/CADDS SHEET 42

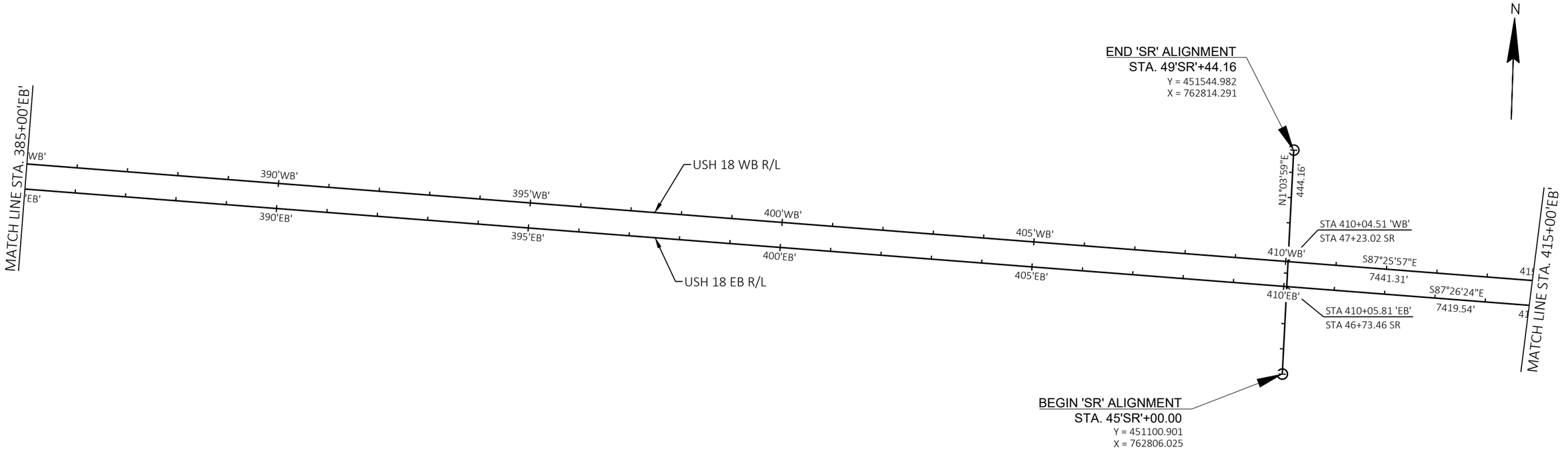

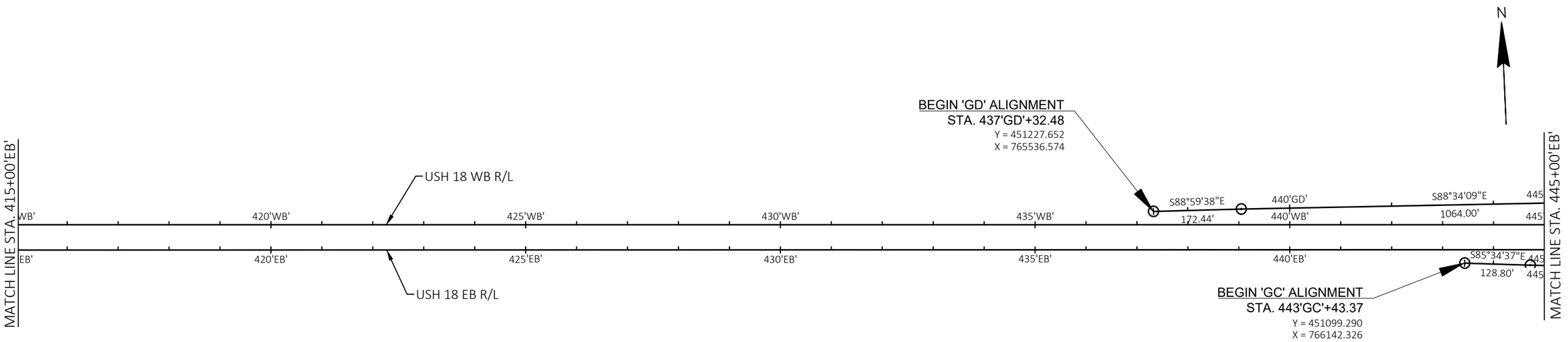

PROJECT NO: 1204-08-65	HWY: USH 18/151	COUNTY: DANE	ALIGNMENT DIAGRAM	SHEET 277	E

FILE NAME : G:\WDOTSW\20007-000 USH 18\CIVIL 3D\SHEETSPLAN\027201-AD.DWG
PLOT DATE : 7/20/2022 6:15 PM
PLOT BY : NATHAN RULLMAN
PLOT NAME :
PLOT SCALE : 1 IN:200 FT
WISDOT/CADDS SHEET 42

2

'GD' CURVE 1
PI STA = 451+45.88
Y = 451193.638
X = 766949.563
DELTA = 5°01'15" LT
D = 1°25'10"
T = 176.96'
L = 353.69'
R = 4036.17'
PC STA = 449+68.93
PT STA = 453+22.61

'EB' CURVE 6
PI STA = 455+00.52
Y = 451073.581
X = 767299.477
DELTA = 2°14'35" RT
D = 0°15'00"
T = 448.68'
L = 897.24'
R = 22918.00'
PC STA = 450+51.84
PT STA = 459+49.08

'WB' CURVE 5
PI STA = 455+26.47
Y = 451121.312
X = 767327.593
DELTA = 2°15'17" RT
D = 0°14'58"
T = 451.99'
L = 903.86'
R = 22968.00'
PC STA = 450+74.48
PT STA = 459+76.40

END 'GD' ALIGNMENT
STA. 462'GD'+11.92
Y = 451260.404
X = 768013.736

STA BACK = 459+78.34
STA AHEAD = 459+76.40

BEGIN 'GA' ALIGNMENT
STA. 462'GA'+97.27
Y = 451263.235
X = 768127.732

'GA' CURVE 1
PI STA = 465+10.36
Y = 451261.293
X = 768340.813
DELTA = 17°20'57" RT
D = 5°58'20"
T = 146.37'
L = 290.50'
R = 959.38'
PC STA = 463+63.99
PT STA = 466+54.49

'GA' CURVE 2
PI STA = 472+59.71
Y = 451030.649
X = 769056.137
DELTA = 12°39'56" LT
D = 2°56'01"
T = 216.75'
L = 431.74'
R = 1953.08'
PC STA = 470+42.96
PT STA = 474+74.70

N

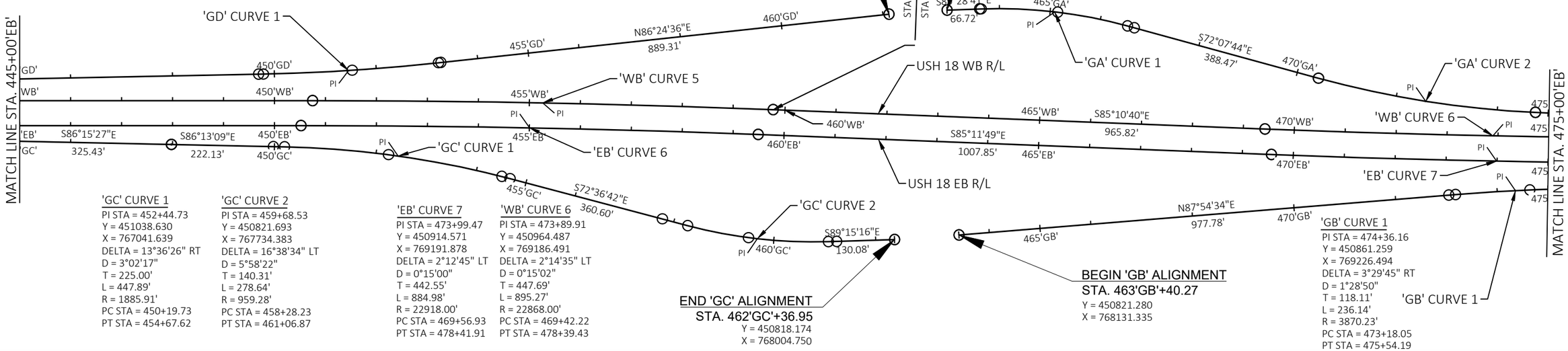

'GC' CURVE 1
PI STA = 452+44.73
Y = 451038.630
X = 767041.639
DELTA = 13°36'26" RT
D = 3°02'17"
T = 225.00'
L = 447.89'
R = 1885.91'
PC STA = 450+19.73
PT STA = 454+67.62

'GC' CURVE 2
PI STA = 459+68.53
Y = 450821.693
X = 767734.383
DELTA = 16°38'34" LT
D = 5°58'22"
T = 140.31'
L = 278.64'
R = 959.28'
PC STA = 458+28.23
PT STA = 461+06.87

'EB' CURVE 7
PI STA = 473+99.47
Y = 450914.571
X = 769191.878
DELTA = 2°12'45" LT
D = 0°15'00"
T = 442.55'
L = 884.98'
R = 22918.00'
PC STA = 469+56.93
PT STA = 478+41.91

'WB' CURVE 6
PI STA = 473+89.91
Y = 450964.487
X = 769186.491
DELTA = 2°14'35" LT
D = 0°15'02"
T = 447.69'
L = 895.27'
R = 22868.00'
PC STA = 469+42.22
PT STA = 478+39.43

END 'GC' ALIGNMENT
STA. 462'GC'+36.95
Y = 450818.174
X = 768004.750

BEGIN 'GB' ALIGNMENT
STA. 463'GB'+40.27
Y = 450821.280
X = 768131.335

'GB' CURVE 1
PI STA = 474+36.16
Y = 450861.259
X = 769226.494
DELTA = 3°29'45" RT
D = 1°28'50"
T = 118.11'
L = 236.14'
R = 3870.23'
PC STA = 473+18.05
PT STA = 475+54.19

'GB' CURVE 1

'GA' CURVE 3
PI STA = 476+57.03
Y = 450993.174
X = 769453.454
DELTA = 1°48'48" LT
D = 0°29'50"
T = 182.33'
L = 364.63'
R = 11521.97'
PC STA = 474+74.70
PT STA = 478+39.33

N

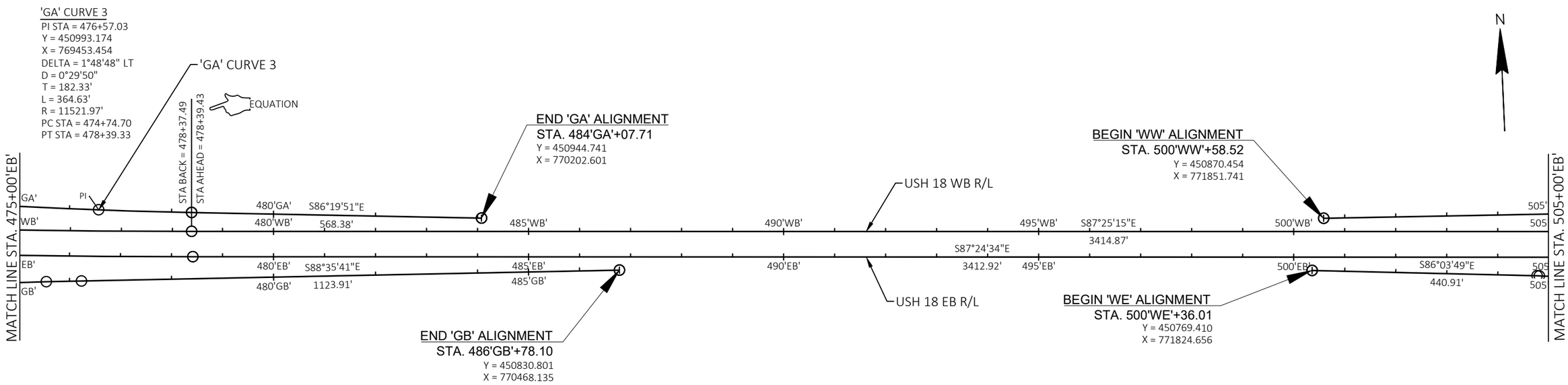

END 'GA' ALIGNMENT
STA. 484'GA'+07.71
Y = 450944.741
X = 770202.601

BEGIN 'WW' ALIGNMENT
STA. 500'WW'+58.52
Y = 450870.454
X = 771851.741

END 'GB' ALIGNMENT
STA. 486'GB'+78.10
Y = 450830.801
X = 770468.135

BEGIN 'WE' ALIGNMENT
STA. 500'WE'+36.01
Y = 450769.410
X = 771824.656

PROJECT NO: 1204-08-65	HWY: USH 18/151	COUNTY: DANE	ALIGNMENT DIAGRAM	SHEET 278	E

2

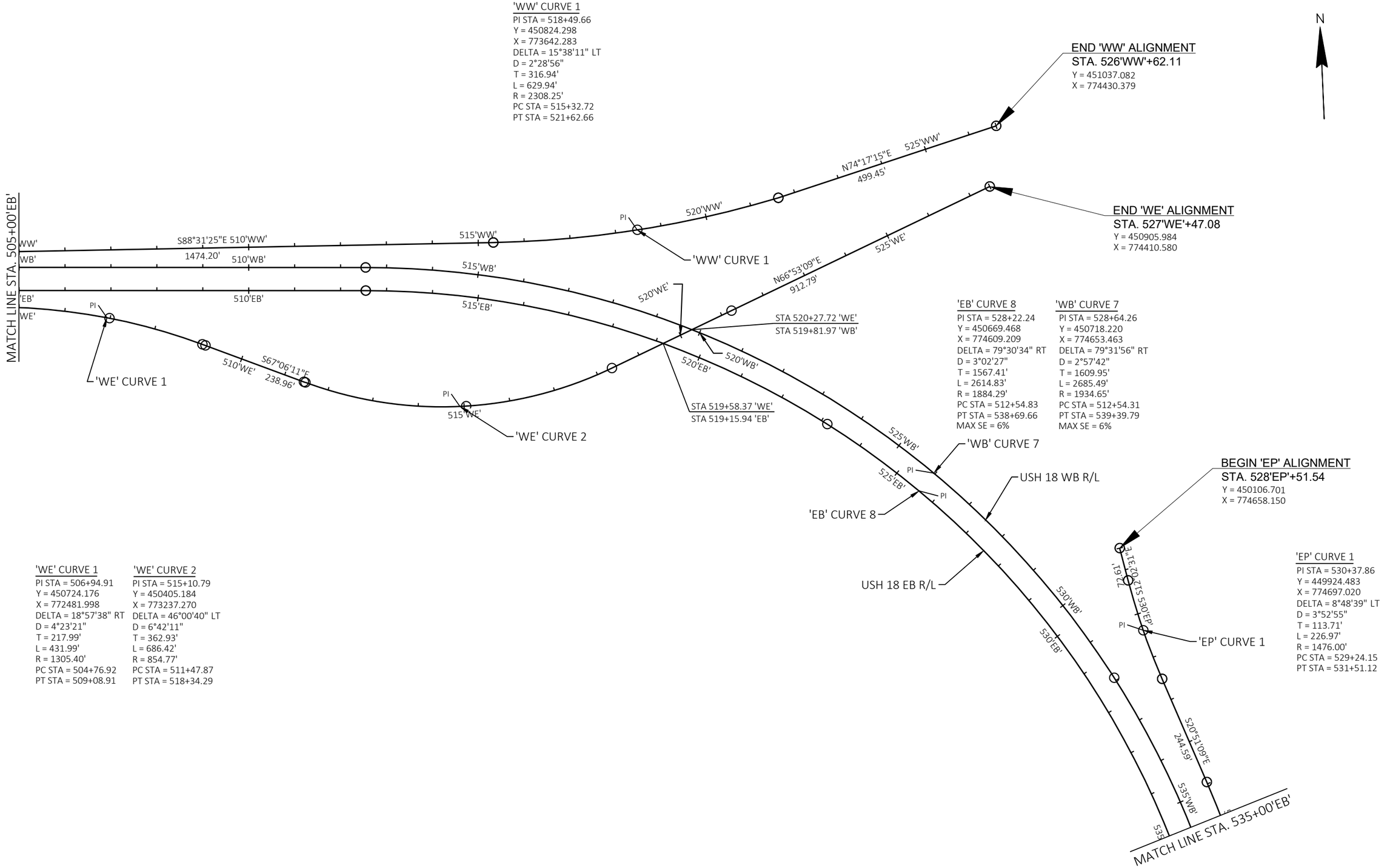

PROJECT NO: 1204-08-65	HWY: USH 18/151	COUNTY: DANE	ALIGNMENT DIAGRAM	SHEET 279	E

2

'EP' CURVE 2
PI STA = 537+38.12
Y = 449269.672
X = 774946.448
DELTA = 16°28'59" RT
D = 2°25'25"
T = 342.41'
L = 680.09'
R = 2364.00'
PC STA = 533+95.71
PT STA = 540+75.80

'EP' CURVE 3
PI STA = 560+91.55
Y = 446927.889
X = 775214.880
DELTA = 71°59'19" LT
D = 3°05'56"
T = 1342.99'
L = 2322.97'
R = 1848.86'
PC STA = 547+48.56
PT STA = 570+71.53

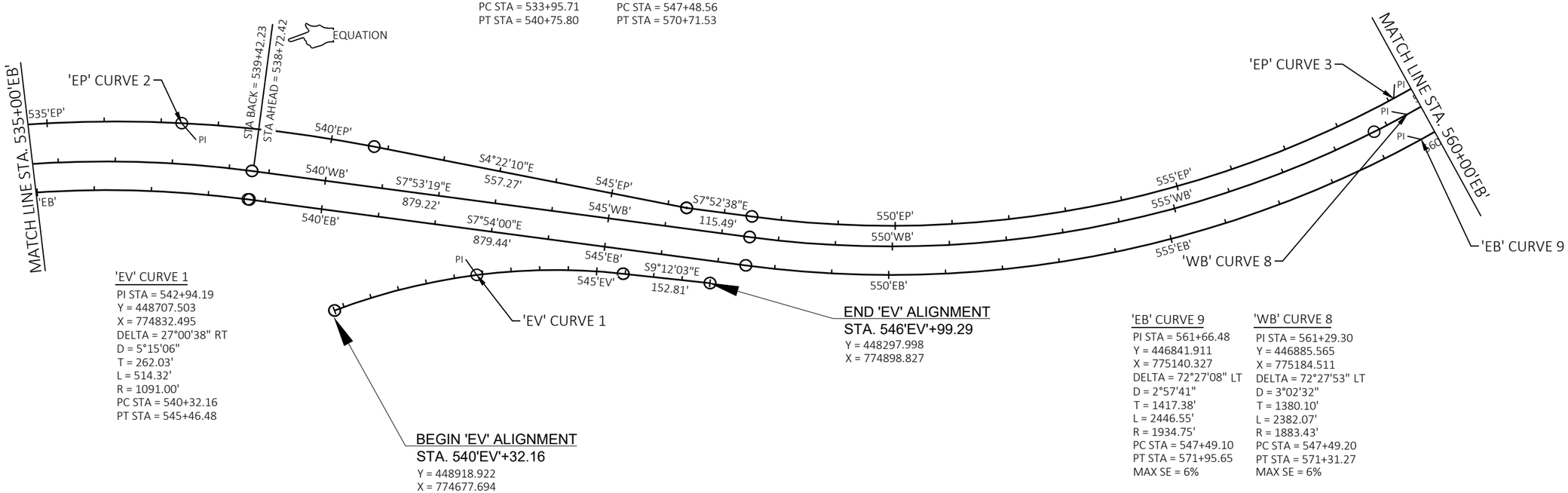

'EV' CURVE 1
PI STA = 542+94.19
Y = 448707.503
X = 774832.495
DELTA = 27°00'38" RT
D = 5°15'06"
T = 262.03'
L = 514.32'
R = 1091.00'
PC STA = 540+32.16
PT STA = 545+46.48

BEGIN 'EV' ALIGNMENT
STA. 540'EV'+32.16
Y = 448918.922
X = 774677.694

END 'EV' ALIGNMENT
STA. 546'EV'+99.29
Y = 448297.998
X = 774898.827

'EB' CURVE 9
PI STA = 561+66.48
Y = 446841.911
X = 775140.327
DELTA = 72°27'08" LT
D = 2°57'41"
T = 1417.38'
L = 2446.55'
R = 1934.75'
PC STA = 547+49.10
PT STA = 571+95.65
MAX SE = 6%

'WB' CURVE 8
PI STA = 561+29.30
Y = 446885.565
X = 775184.511
DELTA = 72°27'53" LT
D = 3°02'32"
T = 1380.10'
L = 2382.07'
R = 1883.43'
PC STA = 547+49.20
PT STA = 571+31.27
MAX SE = 6%

PROJECT NO: 1204-08-65	HWY: USH 18/151	COUNTY: DANE	ALIGNMENT DIAGRAM	SHEET 280	E

2

'SD' CURVE 1
PI STA = 576+27.34
Y = 446636.977
X = 776980.621
DELTA = 16°19'45" LT
D = 2°15'27"
T = 364.15'
L = 723.35'
R = 2538.13'
PC STA = 572+63.19
PT STA = 579+86.55

'SD' CURVE 2
PI STA = 584+36.26
Y = 446768.681
X = 777783.754
DELTA = 26°50'45" RT
D = 11°05'20"
T = 123.31'
L = 242.10'
R = 516.70'
PC STA = 583+12.95
PT STA = 585+55.05

'SA' CURVE 1
PI STA = 589+57.08
Y = 446495.695
X = 778308.753
DELTA = 19°37'56" LT
D = 8°28'48"
T = 116.90'
L = 231.51'
R = 675.65'
PC STA = 588+40.18
PT STA = 590+71.69

BEGIN 'SS' ALIGNMENT
STA. 43'SS'+00.00
Y = 446975.725
X = 778267.740

N

BEGIN 'SA' ALIGNMENT
STA. 587'SA'+32.22
Y = 446625.327
X = 778125.018

END 'SD' ALIGNMENT
STA. 586'SD'+76.79
Y = 446684.582
X = 778013.489

MATCH LINE STA. 560+00'EB'

560'EP'
560'WB'
'EB'
565'EP'
565'WB'
565'EB'

END 'EP' ALIGNMENT
STA. 570'EP'+71.53
Y = 446691.584
X = 776536.919

BEGIN 'SD' ALIGNMENT
STA. 571'SD'+80.29
Y = 446691.584
X = 776536.919

STA BACK = 571+36.10
STA AHEAD = 571+99.45
EQUATION

S82°59'02"E
82.90'

570'EP'
570'WB'
570'EB'
570'SC'
575'SD'
575'WB'
575'EB'
575'SC'
580'SD'
580'WB'
580'EB'
580'SC'
585'SD'
585'WB'
585'EB'
585'SB'

PI
'SD' CURVE 1

'SD' CURVE 2
N80°41'14"E
326.40'
PI
S71°05'43"E
45.47'
S65°00'46"E
76.27'

45.55'
S54°47'44"E
107.96'
PI
'SA' CURVE 1

USH 18 WB R/L
USH 18 EB R/L

STA 585+45.02 'WB'
STA 49+73.15 'SS'
STA 585+20.59 'EB'
STA 50+29.24 'SS'
50.55'

MATCH LINE STA. 590+00'EB'

BEGIN 'SC' ALIGNMENT
STA. 568'SC'+98.06
Y = 446651.906
X = 776241.028

'SC' CURVE 1
'SC' CURVE 2
S73°31'59"E
829.65'
S59°24'43"E
134.97'

'SB' CURVE 1
S71°25'40"E
34.14'
N79°49'15"E
279.26'

55.55'

END 'SC' ALIGNMENT
STA. 583'SC'+96.92
Y = 446159.395
X = 777651.393

END 'SS' ALIGNMENT
STA. 56'SS'+86.15
Y = 445850.171
X = 777458.727

BEGIN 'SB' ALIGNMENT
STA. 584'SB'+82.69
Y = 446109.660
X = 777793.784

'SC' CURVE 1
PI STA = 570+45.59
Y = 446600.355
X = 776379.256
DELTA = 3°59'07" LT
D = 1°21'04"
T = 147.53'
L = 294.94'
R = 4240.29'
PC STA = 568+98.06
PT STA = 571+93.00

'SC' CURVE 2
PI STA = 581+42.90
Y = 446289.272
X = 777431.678
DELTA = 14°07'15" RT
D = 5°54'04"
T = 120.26'
L = 239.29'
R = 970.94'
PC STA = 580+22.65
PT STA = 582+61.94

'SB' CURVE 1
PI STA = 586+52.20
Y = 446055.669
X = 777954.473
DELTA = 28°45'06" LT
D = 10°50'52"
T = 135.38'
L = 265.05'
R = 528.18'
PC STA = 585+16.83
PT STA = 587+81.87

PROJECT NO: 1204-08-65	HWY: USH 18/151	COUNTY: DANE	ALIGNMENT DIAGRAM	SHEET 281	E

'SA' CURVE 2
PI STA = 599+18.56
Y = 446236.966
X = 779237.152
DELTA = 4°41'50" LT
D = 1°32'44"
T = 152.04'
L = 303.90'
R = 3707.00'
PC STA = 597+66.53
PT STA = 600+70.43

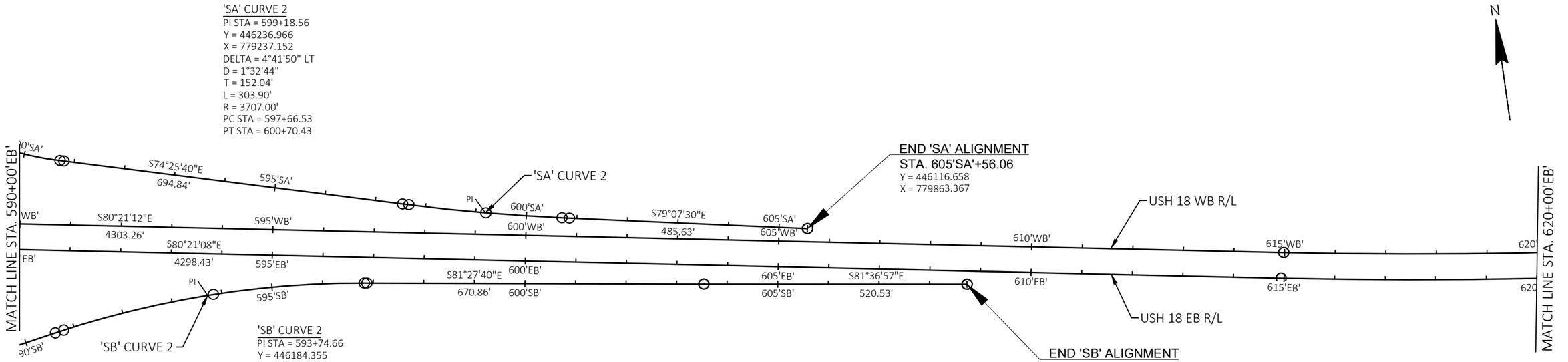

'SB' CURVE 2
PI STA = 593+74.66
Y = 446184.355
X = 778671.171
DELTA = 18°43'05" RT
D = 3°00'43"
T = 313.52'
L = 621.46'
R = 1902.27'
PC STA = 590+61.13
PT STA = 596+82.59

'WB' CURVE 9
PI STA = 628+24.22
Y = 445710.950
X = 782095.098
DELTA = 13°15'40" LT
D = 0°30'08"
T = 1326.35'
L = 2640.84'
R = 11410.00'
PC STA = 614+97.87
PT STA = 641+50.32
MAX SE = 2%

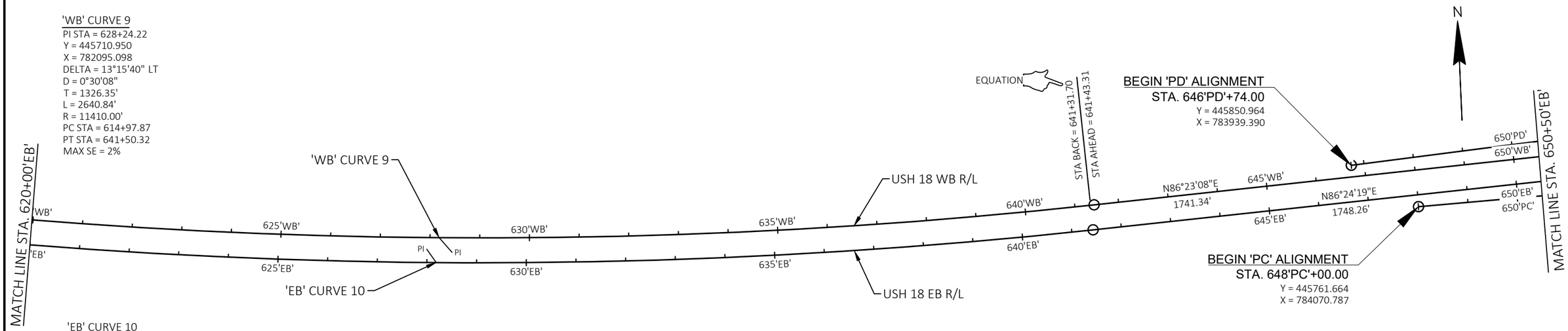

'EB' CURVE 10
PI STA = 628+24.33
Y = 445661.072
X = 782086.736
DELTA = 13°14'32" LT
D = 0°30'00"
T = 1330.25'
L = 2648.65'
R = 11460.00'
PC STA = 614+94.08
PT STA = 641+42.73
MAX SE = 2%

PROJECT NO: 1204-08-65	HWY: USH 18/151	COUNTY: DANE	ALIGNMENT DIAGRAM	SHEET 282	E

2



'PD' CURVE 1
PI STA = 660+94.60
Y = 445968.874
X = 785355.086
DELTA = 13°09'53" LT
D = 2°59'36"
T = 220.86'
L = 439.78'
R = 1914.04'
PC STA = 658+73.73
PT STA = 663+13.52
MAX SE = 6%

'PD' CURVE 2
PI STA = 667+10.75
Y = 446159.113
X = 785943.175
DELTA = 51°59'45" LT
D = 7°02'03"
T = 397.23'
L = 739.17'
R = 814.52'
PC STA = 663+13.52
PT STA = 670+52.69
MAX SE = 6%

'PD' CURVE 3
PI STA = 674+77.61
Y = 446931.298
X = 786225.427
DELTA = 35°49'35" RT
D = 11°01'06"
T = 168.09'
L = 325.15'
R = 520.00'
PC STA = 673+09.53
PT STA = 676+34.68
MAX SE = 5.5%

'EB' CURVE 11
PI STA = 678+26.22
Y = 445975.420
X = 787090.611
DELTA = 90°00'24" LT
D = 2°57'40"
T = 1935.23'
L = 3039.72'
R = 1935.00'
PC STA = 658+90.99
PT STA = 689+30.71
MAX SE = 6%

'WB' CURVE 10
PI STA = 677+76.67
Y = 446023.188
X = 787037.950
DELTA = 90°00'01" LT
D = 3°02'22"
T = 1885.01'
L = 2960.96'
R = 1885.00'
PC STA = 658+91.66
PT STA = 689+31.49
MAX SE = 6%

'PBS' CURVE 1
PI STA = 146+12.20
Y = 447108.747
X = 786400.288
DELTA = 37°32'08" LT
D = 6°23'53"
T = 304.30'
L = 586.68'
R = 895.53'
PC STA = 143+07.90
PT STA = 148+94.58

'PBS' CURVE 2
PI STA = 156+00.70
Y = 446252.550
X = 786936.844
DELTA = 16°10'53" RT
D = 4°01'38"
T = 202.25'
L = 401.81'
R = 1422.75'
PC STA = 153+98.45
PT STA = 158+00.26

'PA' CURVE 1
PI STA = 681+71.59
Y = 447199.282
X = 786728.515
DELTA = 54°07'51" LT
D = 20°01'33"
T = 146.19'
L = 270.30'
R = 286.11'
PC STA = 680+25.40
PT STA = 682+95.71
MAX SE = 4%

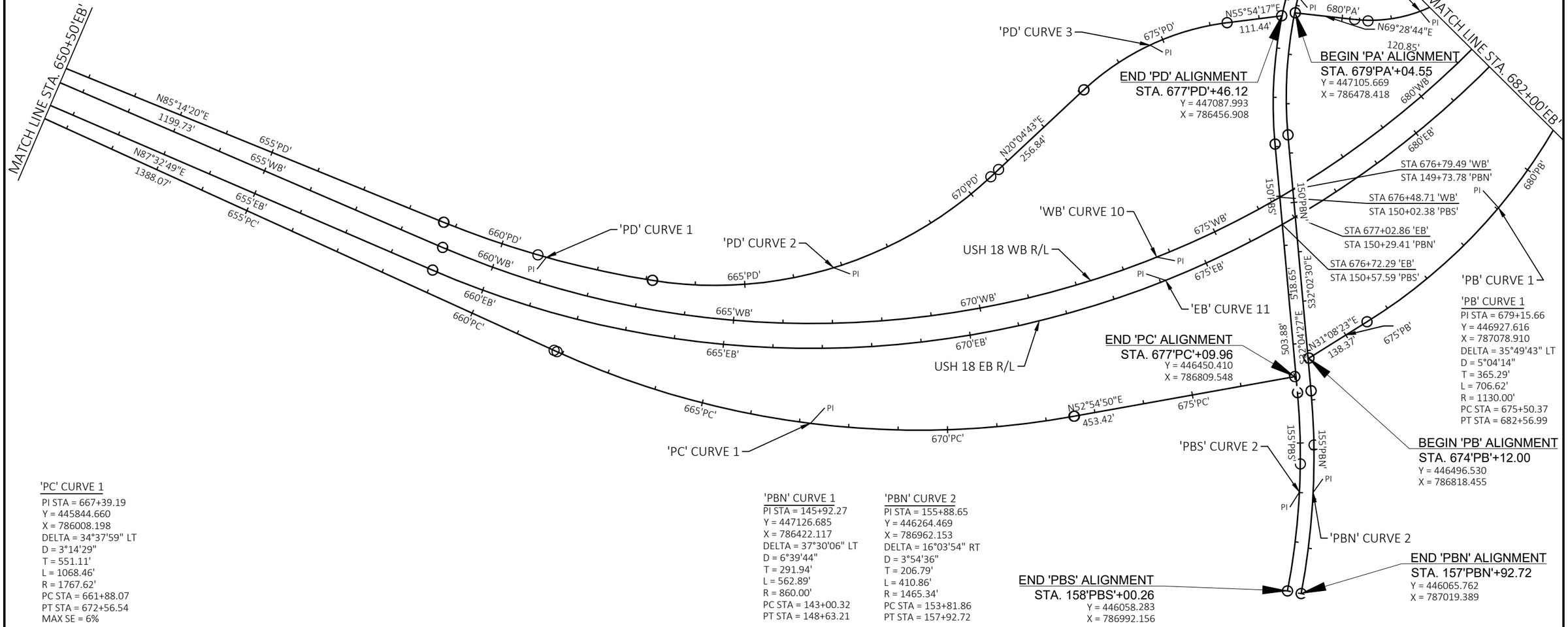

'PC' CURVE 1
PI STA = 667+39.19
Y = 445844.660
X = 786008.198
DELTA = 34°37'59" LT
D = 3°14'29"
T = 551.11'
L = 1068.46'
R = 1767.62'
PC STA = 661+88.07
PT STA = 672+56.54
MAX SE = 6%

'PBN' CURVE 1
PI STA = 145+92.27
Y = 447126.685
X = 786422.117
DELTA = 37°30'06" LT
D = 6°39'44"
T = 291.94'
L = 562.89'
R = 860.00'
PC STA = 143+00.32
PT STA = 148+63.21

'PBN' CURVE 2
PI STA = 155+88.65
Y = 446264.469
X = 786962.153
DELTA = 16°03'54" RT
D = 3°54'36"
T = 206.79'
L = 410.86'
R = 1465.34'
PC STA = 153+81.86
PT STA = 157+92.72

PROJECT NO: 1204-08-65	HWY: USH 18/151	COUNTY: DANE	ALIGNMENT DIAGRAM	SHEET 283	E

2

'PA' CURVE 2
PI STA = 687+33.99
Y = 447762.909
X = 786883.215
DELTA = 17°56'22" LT
D = 2°03'48"
T = 438.28'
L = 869.39'
R = 2776.70'
PC STA = 682+95.71
PT STA = 691+65.10
MAX SE = 4.6%

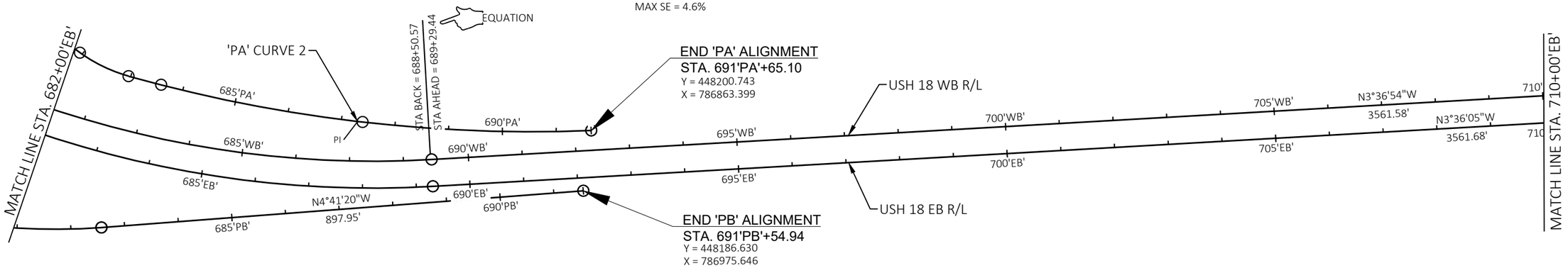

'WB' CURVE 11
PI STA = 737+40.41
Y = 452703.802
X = 786615.892
DELTA = 65°44'55" RT
D = 2°58'07"
T = 1247.34'
L = 2214.73'
R = 1930.00'
PC STA = 724+93.06
PT STA = 746+49.00
MAX SE = 6%

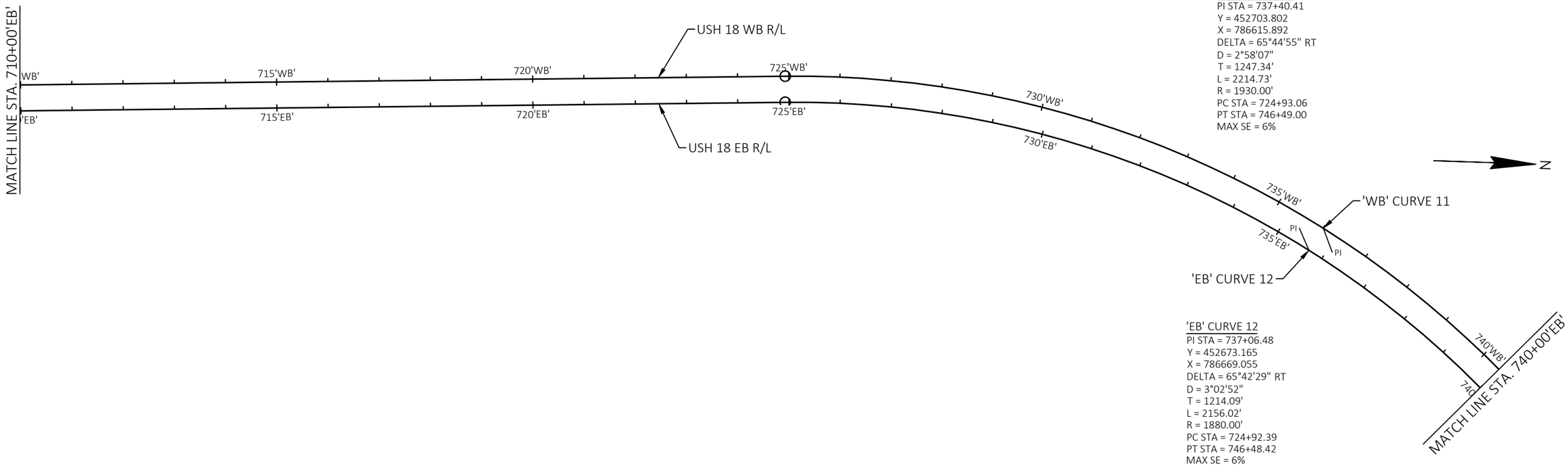

'EB' CURVE 12
PI STA = 737+06.48
Y = 452673.165
X = 786669.055
DELTA = 65°42'29" RT
D = 3°02'52"
T = 1214.09'
L = 2156.02'
R = 1880.00'
PC STA = 724+92.39
PT STA = 746+48.42
MAX SE = 6%

PROJECT NO: 1204-08-65	HWY: USH 18/151	COUNTY: DANE	ALIGNMENT DIAGRAM	SHEET 284	E

FILE NAME : G:\WDOTSW\20007-000 USH 18\CIVIL 3D\SHEETSPLAN\027201-AD.DWG PLOT DATE : 7/20/2022 6:16 PM PLOT BY : NATHAN RULLMAN PLOT NAME : PLOT SCALE : 1 IN:200 FT

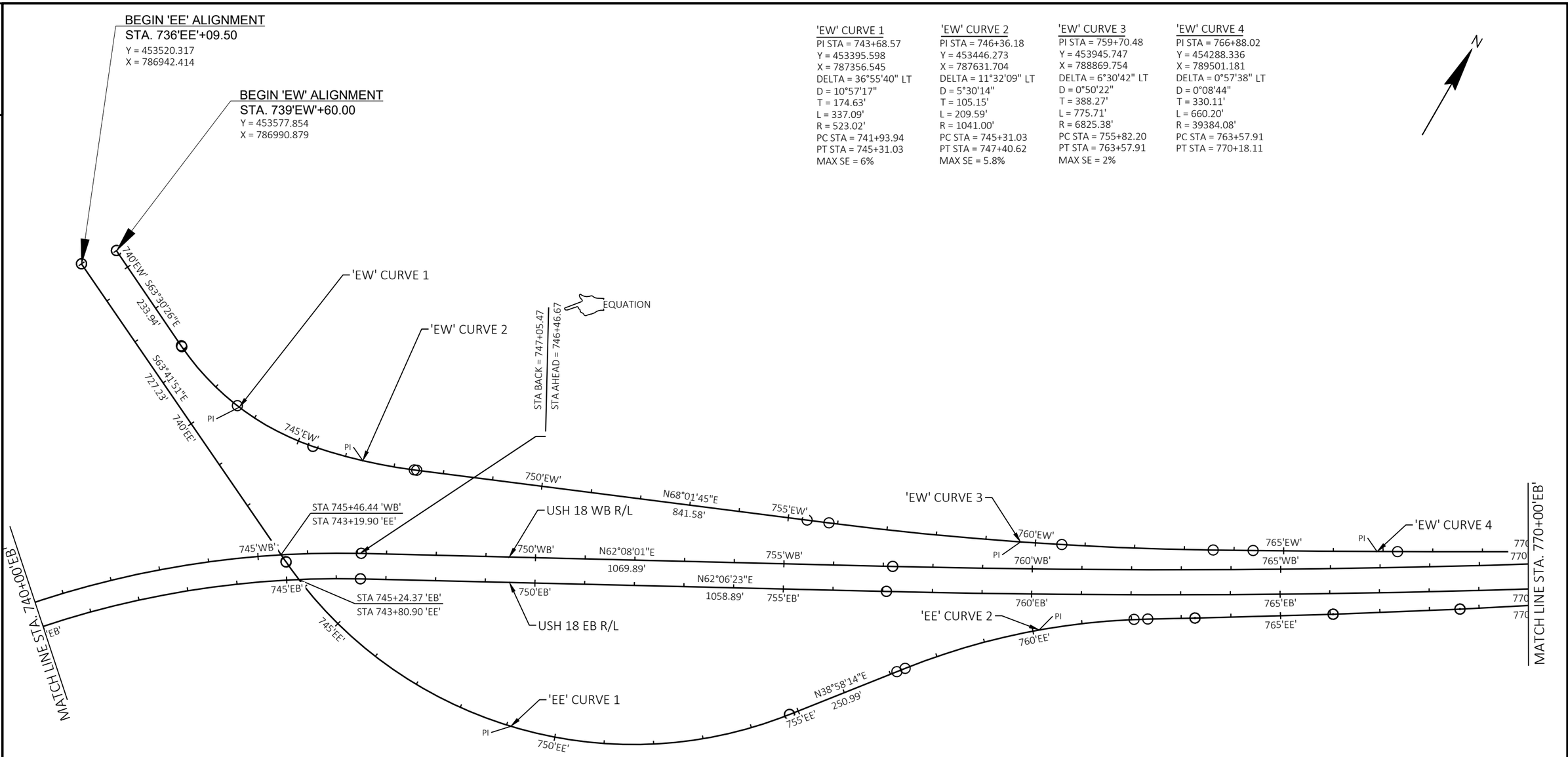

'EW' CURVE 1
PI STA = 743+68.57
Y = 453395.598
X = 787356.545
DELTA = 36°55'40" LT
D = 10°57'17"
T = 174.63'
L = 337.09'
R = 523.02'
PC STA = 741+93.94
PT STA = 745+31.03
MAX SE = 6%

'EW' CURVE 2
PI STA = 746+36.18
Y = 453446.273
X = 787631.704
DELTA = 11°32'09" LT
D = 5°30'14"
T = 105.15'
L = 209.59'
R = 1041.00'
PC STA = 745+31.03
PT STA = 747+40.62
MAX SE = 5.8%

'EW' CURVE 3
PI STA = 759+70.48
Y = 453945.747
X = 788869.754
DELTA = 6°30'42" LT
D = 0°50'22"
T = 388.27'
L = 775.71'
R = 6825.38'
PC STA = 755+82.20
PT STA = 763+57.91
MAX SE = 2%

'EW' CURVE 4
PI STA = 766+88.02
Y = 454288.336
X = 789501.181
DELTA = 0°57'38" LT
D = 0°08'44"
T = 330.11'
L = 660.20'
R = 39384.08'
PC STA = 763+57.91
PT STA = 770+18.11

'EE' CURVE 1
PI STA = 750+14.93
Y = 452897.560
X = 788202.336
DELTA = 77°19'55" LT
D = 6°45'36"
T = 678.19'
L = 1143.94'
R = 847.56'
PC STA = 743+36.73
PT STA = 754+80.68
MAX SE = 6%

'EE' CURVE 2
PI STA = 759+84.87
Y = 453816.831
X = 788945.963
DELTA = 20°32'14" RT
D = 4°05'58"
T = 253.20'
L = 500.97'
R = 1397.64'
PC STA = 757+31.67
PT STA = 762+32.64
MAX SE = 6%

PROJECT NO: 1204-08-65	HWY: USH 18/151	COUNTY: DANE	ALIGNMENT DIAGRAM	SHEET 285	E

FILE NAME : G:\WDOTSW\20007-000 USH 18\CIVIL 3D\SHEETSPLAN\027201-AD.DWG PLOT DATE : 7/20/2022 6:16 PM PLOT BY : NATHAN RULLMAN PLOT NAME : PLOT SCALE : 1 IN:200 FT

2

'WB' CURVE 12
PI STA = 771+81.61
Y = 454470.600
X = 789957.521
DELTA = 7°19'11" LT
D = 0°15'02"
T = 1462.72'
L = 2921.46'
R = 22868.00'
PC STA = 757+18.89
PT STA = 786+40.35

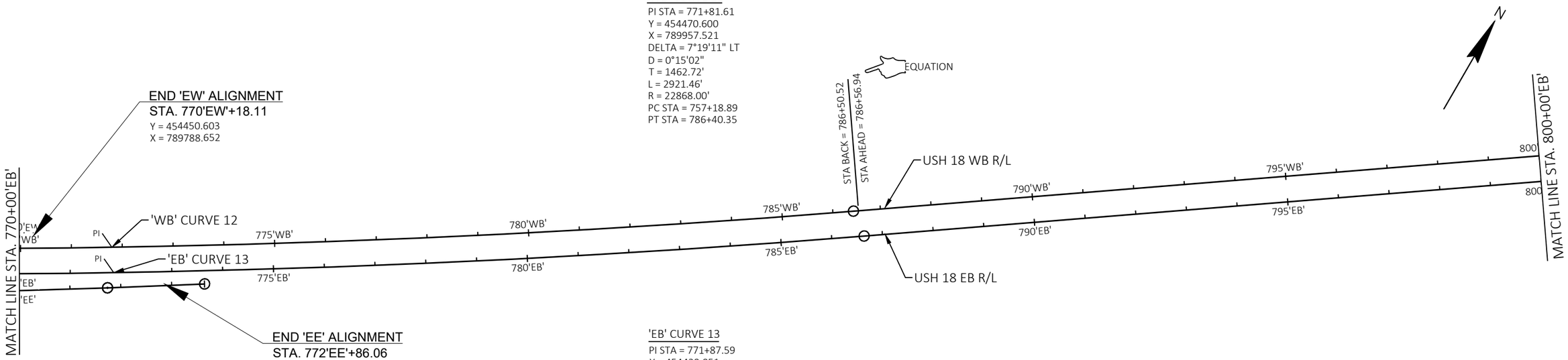

'EB' CURVE 13
PI STA = 771+87.59
Y = 454429.051
X = 789986.254
DELTA = 7°17'53" LT
D = 0°14'49"
T = 1480.29'
L = 2956.57'
R = 23211.90'
PC STA = 757+07.30
PT STA = 786+63.87

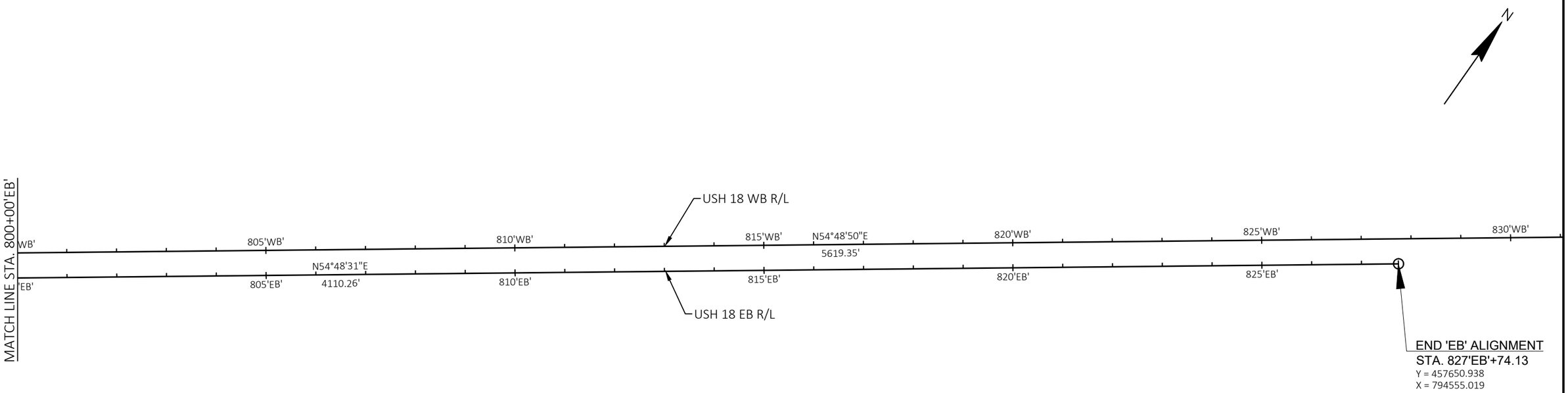

PROJECT NO: 1204-08-65	HWY: USH 18/151	COUNTY: DANE	ALIGNMENT DIAGRAM	SHEET 286	E

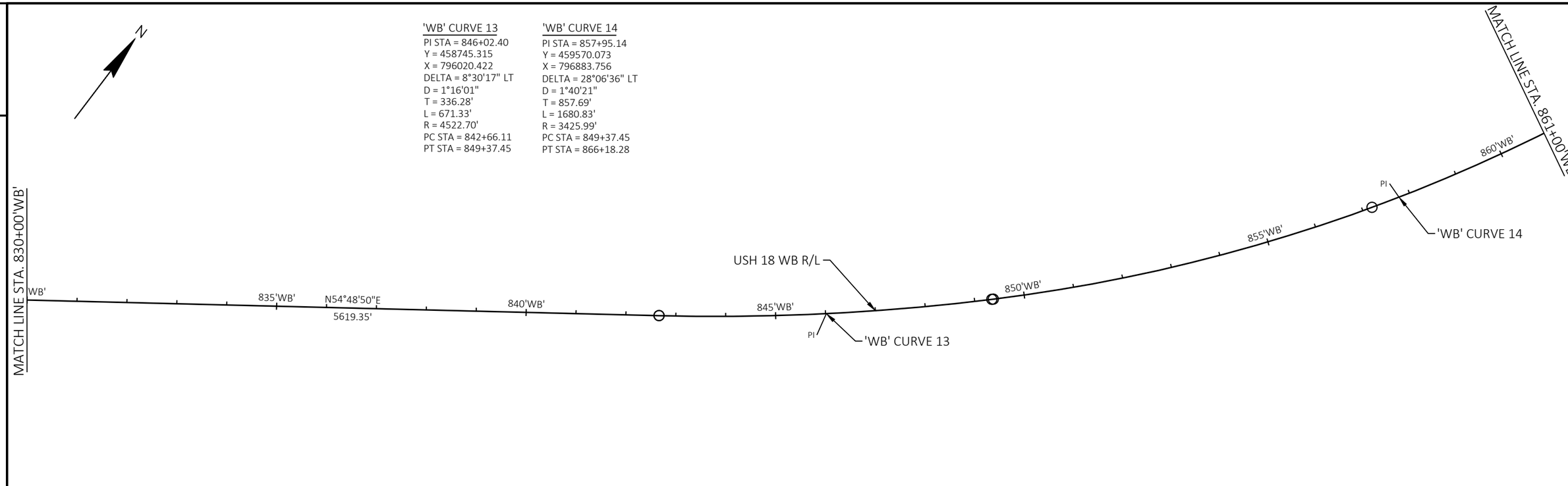

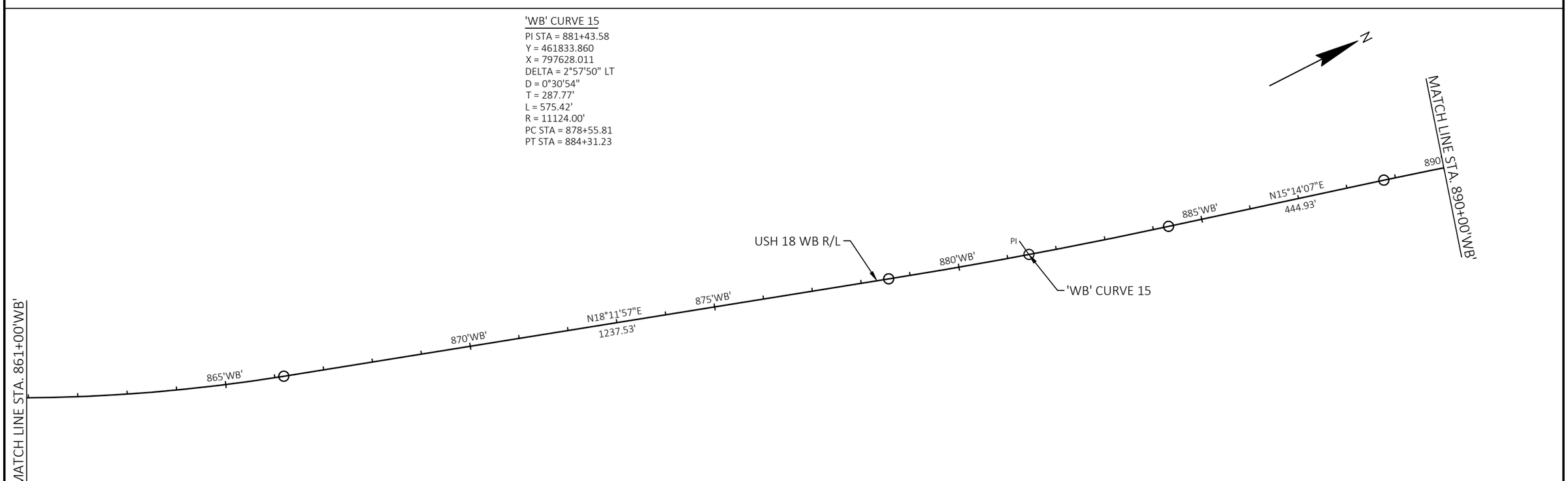

PROJECT NO: 1204-08-65	HWY: USH 18/151	COUNTY: DANE	ALIGNMENT DIAGRAM	SHEET 287	E

FILE NAME : G:\WDOTSW\20007-000 USH 18\CIVIL 3D\SHEETSPLAN\027201-AD.DWG PLOT DATE : 7/20/2022 6:16 PM PLOT BY : NATHAN RULLMAN PLOT NAME : PLOT SCALE : 1 IN:200 FT

WISDOT/CADDS SHEET 42

2

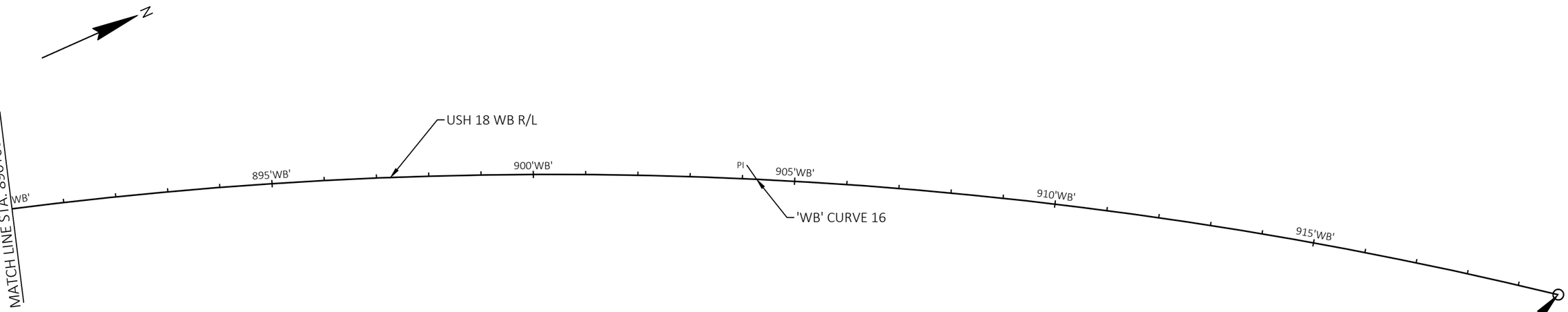

'WB' CURVE 16
PI STA = 904+46.21
Y = 464055.688
X = 798233.140
DELTA = 21°47'53" RT
D = 0°42'10"
T = 1570.06'
L = 3102.16'
R = 8154.00'
PC STA = 888+76.15
PT STA = 919+78.31

PROJECT NO: 1204-08-65	HWY: USH 18/151	COUNTY: DANE	ALIGNMENT DIAGRAM	SHEET 288	E

2

2

N

9710
HMOD

9711
HMOD

4966
HMOD

9712

9713

9714
HMOD

HMOD

HMOD

HMOD

CTH P

TOWN HALL RD

RIDGEVIEW RD

160

200

240

280

320

360

400

440

CTH PD

CTH PD

LUNDE LN

DESPIN LN

SPRINGDALE CENTER RD

BEAT RD

ERB RD

CTH J

CTH J

WHITE CROSSING RD

DAIRY RIDGE RD

SPRING ROSE RD

CTH G

MATCH LINE STA 475

PROJECT NO: 1204-08-65	HWY: USH 18/151	COUNTY: DANE	BENCHMARKS AND CONTROL POINTS	SHEET 289	E

FILE NAME : G:\WDOTSW\20007-000 USH 18\CIVIL 3D\SHEETSPLAN\027202-CT_PRIMARY.DWG
LAYOUT NAME - Plan (1)

PLOT DATE : 7/13/2022 10:23 AM PLOT BY : KL ENGINEERING PLOT NAME : PLOT SCALE : 1 IN:2000 FT

WISDOT/CADDS SHEET 42

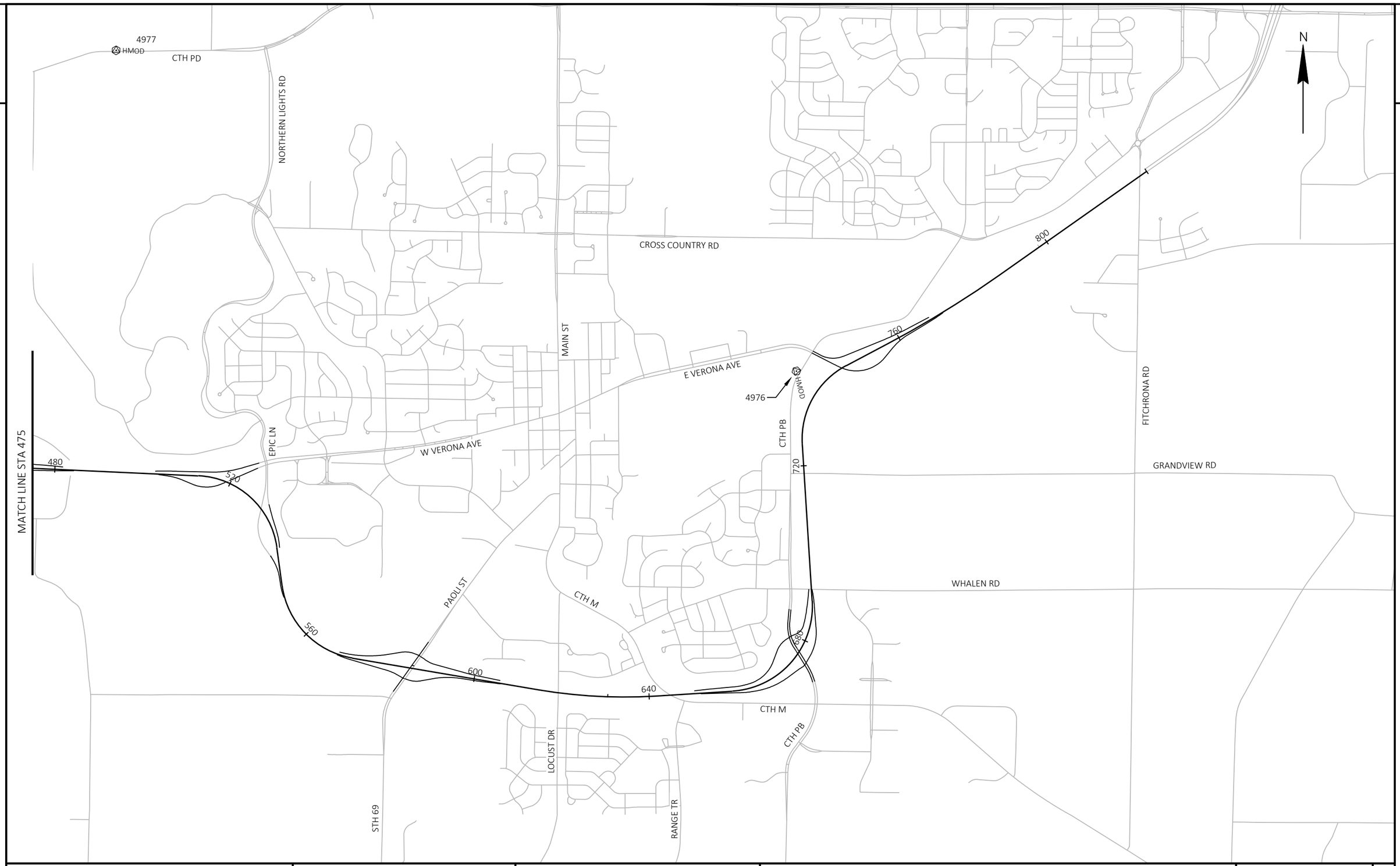

PROJECT NO: 1204-08-65	HWY: USH 18/151	COUNTY: DANE	BENCHMARKS AND CONTROL POINTS	SHEET 290	E

FILE NAME : G:\WDOTSW\20007-000 USH 18\CIVIL 3D\SHEETSPLAN\027202-CT_PRIMARY.DWG
LAYOUT NAME - Plan (2)

PLOT DATE : 7/13/2022 10:23 AM PLOT BY : KL ENGINEERING PLOT NAME : PLOT SCALE : 1 IN:2000 FT

WISDOT/CADDS SHEET 42

2

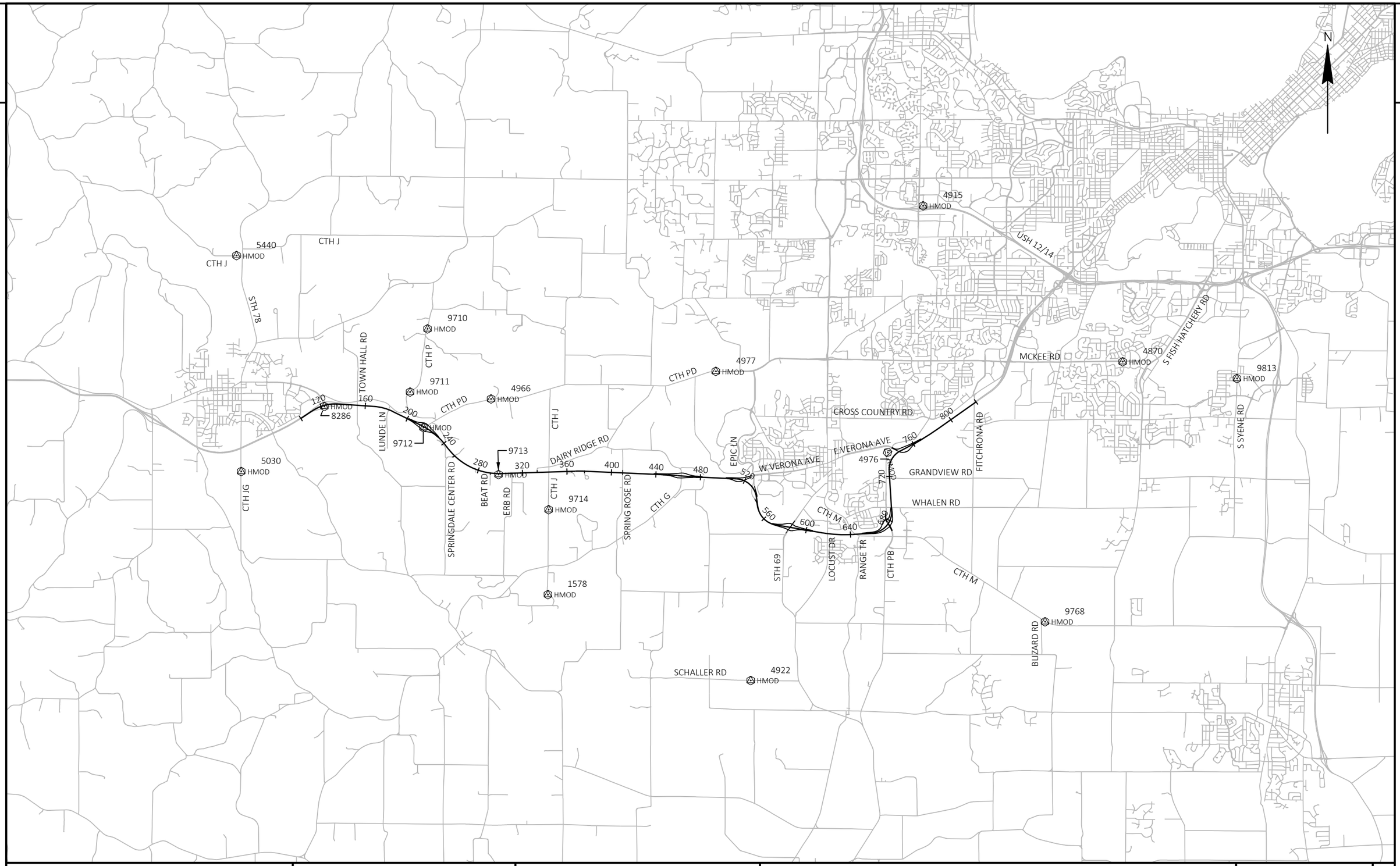

PROJECT NO: 1204-08-65	HWY: USH 18/151	COUNTY: DANE	PRIMARY CONTROL	SHEET 291	E

FILE NAME : G:\WDOTSW\20007-000 USH 18\CIVIL 3D\SHEETSPLAN\027202-CT_PRIMARY.DWG
LAYOUT NAME - PRIMARY

PLOT DATE : 7/13/2022 10:23 AM PLOT BY : KL ENGINEERING PLOT NAME : PLOT SCALE : 1 IN:1.5 MI

WISDOT/CADDS SHEET 42

PRIMARY CONTROL

TYPE	NUMBER	NORTHING	EASTING	ELEVATION	DESCRIPTION	STA	OFFSET	VC
HMOD	5440	470799.882'	728125.788'	1158.89'	DH5440 (VERMONT S GPS)			
HMOD	5030	451401.115'	728553.698'	1211.44'	DH5030 (BLUE MOUNDS E GPS)			X
HMOD	8286	457243.525'	736015.178'	1181.71'	DH8286 (1F56)			X
HMOD	9711	458541.914'	743710.650'	1106.91'	DF9711 (2U01)			X
HMOD	9712	455347.284'	744911.477'	1180.03'	DF9712 (1U28)	216+48.82	82.482'	
HMOD	9710	464218.158'	745287.509'	974.07'	DF9710 (2U02)			
HMOD	4966	457917.778'	750986.421'	1118.04'	DG4966 (SPRINGDALE N GPS)			X
HMOD	9713	451120.851'	751662.289'	1149.61'	DF9713 (1U27)	298+51.86	88.757'	
HMOD	1578	440341.343'	756095.434'	1139.62'	DH1578 (KOLLATH)			
HMOD	9714	447969.155'	756164.564'	1107.77'	DF9714 (1U26)			X
HMOD	4977	460396.290'	771180.815'	1007.25'	DG4977 (VERONA N GPS)			X
HMOD	4922	432616.080'	774307.274'	927.29'	DG4922 (MONTROSE N GPS)			X
HMOD	4976	453117.752'	786609.672'	953.51'	DG4976 (VERONA E GPS)	738+37.71	-652.564'	
HMOD	4915	475269.539'	789792.131'	1080.02'	DG4915 (MIDDLETON GPS)			X
HMOD	9768	437895.629'	800751.368'	1059.80'	DF9768 (FITCHBURG S GPS)			X
HMOD	4870	461259.359'	807725.666'	936.45'	DG4870 (FITCHBURG N GPS)			
HMOD	9813	459749.875'	817988.936'	903.47'	DF9813 (2V01)			X
VC = VERTICAL CALIBRATION								

NOTE: ALL STATION AND OFFSET DATA IS REFERENCED TO THE USH 18 'EB' ALIGNMENT.



PROJECT NO: 1204-08-65	HWY: USH 18/151	COUNTY: DANE	SECONDARY CONTROL	SHEET 293	E

FILE NAME : G:\WDOTSW\20007-000 USH 18\CIVIL 3D\SHEETSPLAN\027202-CT_SECONDARY.DWG
LAYOUT NAME - Plan (1)
PLOT DATE : 7/13/2022 10:21 AM
PLOT BY : KL ENGINEERING
PLOT NAME :
PLOT SCALE : 1 IN:2000 FT
WISDOT/CADDS SHEET 42

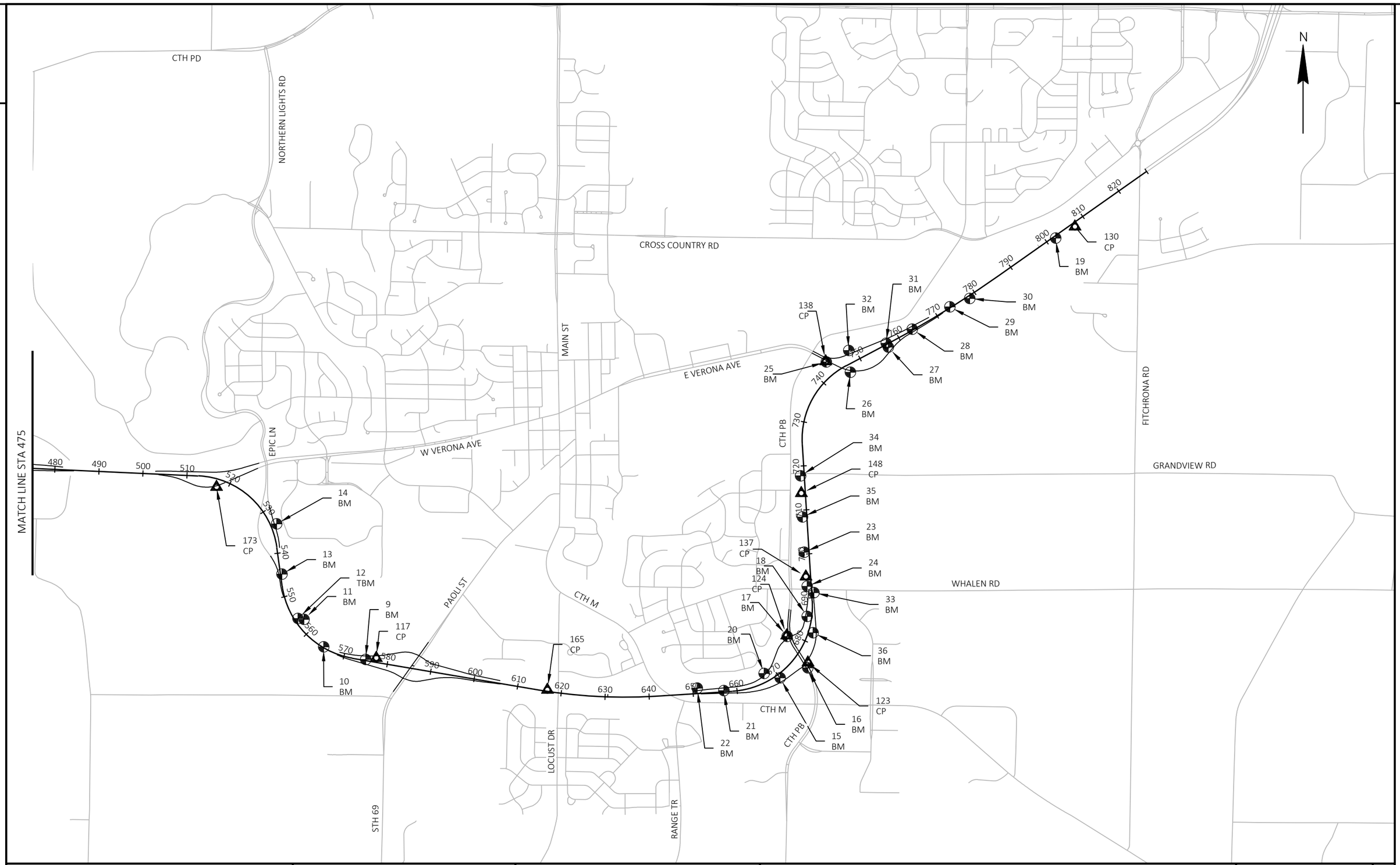

PROJECT NO: 1204-08-65	HWY: USH 18/151	COUNTY: DANE	SECONDARY CONTROL	SHEET 294	E

FILE NAME : G:\WDOTSW\20007-000 USH 18\CIVIL 3D\SHEETSPLAN\027202-CT_SECONDARY.DWG
LAYOUT NAME - Plan (2)

PLOT DATE : 7/13/2022 10:21 AM PLOT BY : KL ENGINEERING PLOT NAME : PLOT SCALE : 1 IN:2000 FT

WISDOT/CADDS SHEET 42

2

SECONDARY CONTROL

TYPE	NUMBER	NORTHING	EASTING	ELEVATION	DESCRIPTION	STA	OFFSET
CP	150	457024.012	741635.434	1165.62	5/8IN RB KL CAP	179+67.33	-15.104'
CP	152	455469.900	744903.207	1156.96	5/8IN RB KL CAP	215+84.90	-22.687'
CP	102	453272.714	747318.803	1166.30	5/8IN RB KL CAP	248+73.99	-32.323'
BM	1	452743.497	747550.319	1175.27	RR SPIKE PPOL	254+14.19	156.804'
CP	100	452687.110	747714.187	1178.21	5/8IN RB KL CAP	255+68.24	84.060'
CP	101	452356.661	748292.819	1178.70	5/8IN RB KL CAP	262+21.79	-32.188'
BM	2	451680.490	749796.494	1156.28	RR SPIKE R/W FENCE POST	278+98.59	-144.870'
CP	104	451196.533	750952.328	1132.76	5/8IN RB KL CAP	291+47.14	58.436'
BM	3	451131.148	750948.944	1123.11	RR SPIKE R/W FENCE POST	291+51.86	123.732'
BM	4	451155.208	752917.237	1152.36	CUT X TOP E END 24IN CMCP	311+04.22	91.727'
CP	106	451173.849	753065.474	1161.08	5/8IN RB KL CAP	312+52.99	77.917'
BM	5	451441.184	755067.002	1133.96	CUT SQ TOP N END 18IN RCCP	332+62.15	-124.189'
CP	109	451370.925	755815.485	1124.05	5/8IN RB KL CAP	340+07.95	-29.627'
BM	6	451581.327	758217.122	1075.58	RR SPIKE PPOL	364+15.16	-161.818'
BM	7	451346.523	759263.272	1063.97	CUT SQ N SIDE CONC INL BOX	374+58.85	84.957'
CP	112	451375.142	759361.221	1076.92	5/8IN RB KL CAP	375+56.36	53.043'
BM	8	451395.871	762736.082	1011.00	CUT SQ TOP N END 24IN RCCP	409+27.28	-118.149'
CP	115	451393.534	762845.587	1013.65	5/8IN RB KL CAP	410+36.78	-120.705'
CP	157	451055.472	767699.264	982.57	5/8IN RB KL CAP	459+00.34	-15.480'
CP	173	450490.796	773457.715	959.64	5/8IN RB KL CAP	517+28.99	176.755'
BM	14	449652.494	774820.127	950.92	CUT SQ TOP E END 48IN RCCP	533+69.45	-140.049'
BM	13	448513.792	774940.196	964.00	CUT SQ SE COR CONC INL BOX	544+82.96	-31.560'
TBM	12	447506.396'	775303.535'	971.64'	MAG NAIL ASPH SHLD	555+90.85	-80.223'
BM	11	447485.919	775441.127	949.69	RR SPIKE R/W FENCE POST	556+92.25	-182.336'
BM	10	446863.450	775887.000	969.46	CUT SQ SE COR CONC INL BOX	564+88.06	-19.714'
BM	9	446577.852	776842.278	964.57	CUT SQ NE COR CONC INL BOX	575+00.41	-24.903'
CP	117	446611.787	777081.266	963.87	5/8IN RB KL CAP	577+30.33	-98.410'
CP	165	445886.832	780962.806	989.79	5/8IN RB KL CAP	616+79.00	-32.722'

TYPE	NUMBER	NORTHING	EASTING	ELEVATION	DESCRIPTION	STA	OFFSET
BM	22	445927.429	784362.360	995.42	CUT SQ TOP N END 24IN RCCP	651+00.33	-123.158'
BM	21	445868.214	784964.154	1011.49	CUT SQ NW COR INL	656+97.22	-26.328'
BM	20	446258.082	785876.225	1029.78	CUT SQ TOP NW END 24IN RCCP	667+41.03	-192.826'
BM	15	446158.276	786239.853	1039.06	RR SPIKE PPOL	670+00.78	87.845'
BM	16	446385.915	786866.687	1031.33	CUT SQ NW COR CONC INL BOX	675+45.25	367.779'
CP	123	446506.590	786872.554	1031.35	5/8IN RB KL CAP	676+31.29	301.317'
BM	17	447100.289	786402.610	1021.64	CUT SQ NW COR CONC BASE TFSB	679+08.95	-408.000'
CP	124	447118.924	786390.327	1022.68	5/8IN RB KL CAP	679+23.26	-427.296'
BM	36	447182.274	786988.492	1031.23	CUT SQ E SIDE TOP CONC INL	682+28.94	106.701'
BM	18	447552.945	786855.007	1032.67	CUT SQ SW COR CONC INL BOX	685+63.01	-103.070'
BM	33	448092.030	787006.856	1039.11	WISDOT VT CTL DISK	691+13.17	49.367'
BM	24	448237.379	786853.242	1032.85	WISDOT VT CTL DISK NW COR B-13-414-95	692+67.88	-94.814'
CP	137	448456.609	786825.621	1024.51	5/8IN RB KL CAP	694+88.42	-108.609'
BM	23	449009.572	786787.426	1012.62	CUT SQ NE COR INL	700+42.69	-111.994'
BM	35	449809.354	786748.651	999.61	CUT SQ NE COR TOP CONC INL	708+43.32	-100.453'
CP	148	450349.271	786721.649	991.13	5/8IN RB KL CAP	713+83.87	-93.487'
BM	34	450742.492	786704.421	988.30	CUT SQ SW COR TOP CONC PARAPET	717+77.40	-85.980'
CP	138	453341.155	787275.123	952.77	5/8IN RB KL CAP	743+36.72	-337.249'
BM	25	453325.385	787287.796	950.97	CUT SQ TOP W END 24IN RCCP	743+37.14	-317.024'
BM	26	453092.761	787834.887	951.93	CUT SQ TOP SW END 30IN RCCP	746+61.01	174.564'
BM	32	453586.088	787797.841	956.48	RR SPIKE 19IN DIA DTRE	748+59.06	-278.779'
BM	31	453750.633	788648.140	963.74	CUT SQ SW COR INL	756+87.55	-26.411'
BM	27	453664.405	788695.553	960.55	CUT SQ TOP SSE END 24IN RCCP	756+89.12	71.980'
BM	28	454069.960	789238.067	967.57	CUT SQ SW COR INL	763+59.08	-23.512'
BM	29	454575.522	790090.958	967.50	CUT SQ SE COR INL	773+51.60	-22.311'
BM	30	454766.570'	790539.835'	963.79'	WISDOT VT CTL DISK SW COR B-13-426-95	778+32.41	58.130'
BM	19	456137.145'	792491.199'	966.86'	MAG NAIL S END 65IN H X 47IN W CMCE	802+15.10	47.718'
CP	130	456396.358	792928.482	974.55	5/8IN RB KL CAP	807+21.84	87.892'

2

NOTE: ALL STATION AND OFFSET DATA IS REFERENCED TO THE USH 18 'EB' ALIGNMENT.

1204-08-65

Line	Item	Item Description	Unit	Total	Qty
0002	203.0100	Removing Small Pipe Culverts	EACH	1.000	1.000
0004	204.0100	Removing Concrete Pavement	SY	8,970.000	8,970.000
0006	204.0105	Removing Concrete Pavement Butt Joints	SY	25,247.000	25,247.000
0008	204.0109.S	Removing Concrete Surface Partial Depth	SF	6,072.000	6,072.000
0010	204.0110	Removing Asphaltic Surface	SY	143,988.000	143,988.000
0012	204.0115	Removing Asphaltic Surface Butt Joints	SY	8,075.000	8,075.000
0014	204.0140	Removing Gutter	LF	190.000	190.000
0016	204.0150	Removing Curb & Gutter	LF	961.000	961.000
0018	204.0155	Removing Concrete Sidewalk	SY	60.000	60.000
0020	204.0157	Removing Concrete Barrier	LF	190.000	190.000
0022	204.0165	Removing Guardrail	LF	12,513.000	12,513.000
0024	204.0170	Removing Fence	LF	81.000	81.000
0026	204.0180	Removing Delineators and Markers	EACH	48.000	48.000
0028	204.0190	Removing Surface Drains	EACH	8.000	8.000
0030	204.0195	Removing Concrete Bases	EACH	14.000	14.000
0032	204.9060.S	Removing (item description) 01. Geodetic Survey Control Station	EACH	3.000	3.000
0034	205.0100	Excavation Common	CY	17,614.000	17,614.000
0036	208.0100	Borrow	CY	6,616.000	6,616.000
0038	211.0101	Prepare Foundation for Asphaltic Paving (project) 01. 1204-08-65	EACH	1.000	1.000
0040	211.0201	Prepare Foundation for Concrete Pavement (project) 01. 1204-08-65	EACH	1.000	1.000
0042	211.0400	Prepare Foundation for Asphaltic Shoulders	STA	2,693.000	2,693.000
0044	213.0100	Finishing Roadway (project) 01. 1204-08-65	EACH	1.000	1.000
0046	305.0110	Base Aggregate Dense 3/4-Inch	TON	50,119.000	50,119.000
0048	305.0120	Base Aggregate Dense 1 1/4-Inch	TON	3,903.000	3,903.000
0050	310.0110	Base Aggregate Open-Graded	TON	47.000	47.000
0052	330.0100	Mill and Relay	SY	24,106.000	24,106.000
0054	390.0303	Base Patching Concrete	SY	16,920.000	16,920.000
0056	415.0090	Concrete Pavement 9-Inch	SY	5,350.000	5,350.000
0058	415.0105	Concrete Pavement 10 1/2-Inch	SY	2,860.000	2,860.000
0060	415.0410	Concrete Pavement Approach Slab	SY	1,090.000	1,090.000
0062	415.6000.S	Rout and Seal	LF	15,084.000	15,084.000
0064	416.0610	Drilled Tie Bars	EACH	6,825.000	6,825.000
0066	416.0620	Drilled Dowel Bars	EACH	21,616.000	21,616.000
0068	416.1010	Concrete Surface Drains	CY	168.000	168.000
0070	416.1710	Concrete Pavement Repair	SY	1,290.000	1,290.000
0072	416.1720	Concrete Pavement Replacement	SY	403.000	403.000
0074	450.4000	HMA Cold Weather Paving	TON	7,000.000	7,000.000
0076	455.0605	Tack Coat	GAL	181,224.000	181,224.000
0078	460.0105.S	HMA Percent Within Limits (PWL) Test Strip Volumetrics	EACH	3.000	3.000
0080	460.0110.S	HMA Percent Within Limits (PWL) Test Strip Density	EACH	4.000	4.000
0082	460.0115.S	HMA Pavement Test Strips Volumetrics	EACH	1.000	1.000
0084	460.0120.S	HMA Pavement Test Strips Density	EACH	1.000	1.000
0086	460.2000	Incentive Density HMA Pavement	DOL	46,440.000	46,440.000
0088	460.2005	Incentive Density PWL HMA Pavement	DOL	86,440.000	86,440.000
0090	460.2007	Incentive Density HMA Pavement Longitudinal Joints	DOL	67,320.000	67,320.000
0092	460.2010	Incentive Air Voids HMA Pavement	DOL	150,223.000	150,223.000
0094	460.4210.S	HMA Pavement Interlayer	TON	1,223.000	1,223.000
0096	460.7423	HMA Pavement 3 HT 58-28 H	TON	118,210.000	118,210.000
0098	460.7424	HMA Pavement 4 HT 58-28 H	TON	23,950.000	23,950.000

1204-08-65

Line	Item	Item Description	Unit	Total	Qty
0100	460.8624	HMA Pavement 4 SMA 58-28 V	TON	46,013.000	46,013.000
0102	460.9000.S	Material Transfer Vehicle 01. 1204-08-65	EACH	1.000	1.000
0104	465.0315	Asphaltic Flumes	SY	50.000	50.000
0106	465.0400	Asphaltic Shoulder Rumble Strips	LF	235,200.000	235,200.000
0108	502.3205	Pigmented Surface Sealer Reseal	SY	296.000	296.000
0110	509.0301	Preparation Decks Type 1	SY	25.000	25.000
0112	509.0310.S	Sawing Pavement Deck Preparation Areas	LF	130.000	130.000
0114	520.8700	Cleaning Culvert Pipes	EACH	6.000	6.000
0116	601.0413	Concrete Curb & Gutter 6-Inch Sloped 30-Inch Type G	LF	94.000	94.000
0118	601.0452	Concrete Curb & Gutter Integral 30-Inch Type D	LF	86.000	86.000
0120	601.0454	Concrete Curb & Gutter Integral 30-Inch Type J	LF	66.000	66.000
0122	601.0553	Concrete Curb & Gutter 4-Inch Sloped 36-Inch Type D	LF	839.000	839.000
0124	601.0588	Concrete Curb & Gutter 4-Inch Sloped 36-Inch Type TBT	LF	597.000	597.000
0126	601.0590	Concrete Curb & Gutter 4-Inch Sloped 36-Inch Type TBTT	LF	385.000	385.000
0128	602.0410	Concrete Sidewalk 5-Inch	SF	536.000	536.000
0130	603.0105	Concrete Barrier Single-Faced 32-Inch	LF	190.000	190.000
0132	603.8000	Concrete Barrier Temporary Precast Delivered	LF	6,650.000	6,650.000
0134	603.8125	Concrete Barrier Temporary Precast Installed	LF	7,775.000	7,775.000
0136	606.0200	Riprap Medium	CY	30.000	30.000
0138	611.0430	Reconstructing Inlets	EACH	29.000	29.000
0140	611.0642	Inlet Covers Type MS	EACH	2.000	2.000
0142	611.3902	Inlets Median 2 Grate	EACH	1.000	1.000
0144	611.8115	Adjusting Inlet Covers	EACH	21.000	21.000
0146	612.0206	Pipe Underdrain Unperforated 6-Inch	LF	72.000	72.000
0148	612.0806	Apron Endwalls for Underdrain Reinforced Concrete 6-Inch	EACH	10.000	10.000
0150	614.0010	Barrier System Grading Shaping Finishing	EACH	3.000	3.000
0152	614.0220	Steel Thrie Beam Bullnose Terminal	EACH	14.000	14.000
0154	614.0230	Steel Thrie Beam	LF	1,025.000	1,025.000
0156	614.0400	Adjusting Steel Plate Beam Guard	LF	1,460.000	1,460.000
0158	614.0905	Crash Cushions Temporary	EACH	5.000	5.000
0160	614.2300	MGS Guardrail 3	LF	8,564.900	8,564.900
0162	614.2500	MGS Thrie Beam Transition	LF	1,221.400	1,221.400
0164	614.2610	MGS Guardrail Terminal EAT	EACH	31.000	31.000
0166	614.2620	MGS Guardrail Terminal Type 2	EACH	8.000	8.000
0168	614.2630	MGS Guardrail Short Radius Terminal	EACH	1.000	1.000
0170	616.0100	Fence Woven Wire (height) 01. 4 FT	LF	81.000	81.000
0172	618.0100	Maintenance And Repair of Haul Roads (project) 01. 1204-08-65	EACH	1.000	1.000
0174	619.1000	Mobilization	EACH	1.000	1.000
0176	620.0300	Concrete Median Sloped Nose	SF	39.000	39.000
0178	624.0100	Water	MGAL	1,174.000	1,174.000
0180	625.0105	Topsoil	CY	170.000	170.000
0182	625.0500	Salvaged Topsoil	SY	182,000.000	182,000.000
0184	627.0200	Mulching	SY	186,000.000	186,000.000
0186	628.1504	Silt Fence	LF	12,200.000	12,200.000
0188	628.1520	Silt Fence Maintenance	LF	36,600.000	36,600.000
0190	628.1905	Mobilizations Erosion Control	EACH	50.000	50.000
0192	628.1910	Mobilizations Emergency Erosion Control	EACH	12.000	12.000
0194	628.2002	Erosion Mat Class I Type A	SY	171,100.000	171,100.000
0196	628.2004	Erosion Mat Class I Type B	SY	14,700.000	14,700.000

1204-08-65

Line	Item	Item Description	Unit	Total	Qty
0198	628.7005	Inlet Protection Type A	EACH	115.000	115.000
0200	628.7010	Inlet Protection Type B	EACH	40.000	40.000
0202	628.7015	Inlet Protection Type C	EACH	55.000	55.000
0204	628.7504	Temporary Ditch Checks	LF	1,600.000	1,600.000
0206	628.7555	Culvert Pipe Checks	EACH	4.000	4.000
0208	629.0205	Fertilizer Type A	CWT	230.000	230.000
0210	630.0130	Seeding Mixture No. 30	LB	6,400.000	6,400.000
0212	630.0200	Seeding Temporary	LB	9,600.000	9,600.000
0214	630.0500	Seed Water	MGAL	4,100.000	4,100.000
0216	631.1100	Sod Erosion Control	SY	20.000	20.000
0218	633.5200	Markers Culvert End	EACH	10.000	10.000
0220	634.0612	Posts Wood 4x6-Inch X 12-FT	EACH	3.000	3.000
0222	634.0614	Posts Wood 4x6-Inch X 14-FT	EACH	39.000	39.000
0224	634.0616	Posts Wood 4x6-Inch X 16-FT	EACH	4.000	4.000
0226	637.1220	Signs Type I Reflective SH	SF	218.000	218.000
0228	637.2210	Signs Type II Reflective H	SF	72.250	72.250
0230	637.2215	Signs Type II Reflective H Folding	SF	36.260	36.260
0232	637.2230	Signs Type II Reflective F	SF	4.000	4.000
0234	638.2102	Moving Signs Type II	EACH	41.000	41.000
0236	638.2601	Removing Signs Type I	EACH	2.000	2.000
0238	638.2602	Removing Signs Type II	EACH	17.000	17.000
0240	638.3000	Removing Small Sign Supports	EACH	49.000	49.000
0242	642.5201	Field Office Type C	EACH	1.000	1.000
0244	643.0300	Traffic Control Drums	DAY	611,500.000	611,500.000
0246	643.0420	Traffic Control Barricades Type III	DAY	41,100.000	41,100.000
0248	643.0500	Traffic Control Flexible Tubular Marker Posts	EACH	50.000	50.000
0250	643.0600	Traffic Control Flexible Tubular Marker Bases	EACH	50.000	50.000
0252	643.0705	Traffic Control Warning Lights Type A	DAY	62,200.000	62,200.000
0254	643.0715	Traffic Control Warning Lights Type C	DAY	71,500.000	71,500.000
0256	643.0800	Traffic Control Arrow Boards	DAY	2,870.000	2,870.000
0258	643.0900	Traffic Control Signs	DAY	100,500.000	100,500.000
0260	643.0910	Traffic Control Covering Signs Type I	EACH	30.000	30.000
0262	643.0920	Traffic Control Covering Signs Type II	EACH	100.000	100.000
0264	643.1050	Traffic Control Signs PCMS	DAY	785.000	785.000
0266	643.1070	Traffic Control Cones 42-Inch	DAY	119,000.000	119,000.000
0268	643.1100.S	Dynamic Late Merge System	DAY	185.000	185.000
0270	643.1200.S	Portable Automated Real-Time Traffic Queue Warning System	DAY	500.000	500.000
0272	643.3105	Temporary Marking Line Paint 4-Inch	LF	1,283,000.000	1,283,000.000
0274	643.3150	Temporary Marking Line Removable Tape 4-Inch	LF	415,000.000	415,000.000
0276	643.3205	Temporary Marking Line Paint 8-Inch	LF	41,000.000	41,000.000
0278	643.3250	Temporary Marking Line Removable Tape 8-Inch	LF	11,300.000	11,300.000
0280	643.3960	Temporary Marking Removable Mask Out Tape 6-Inch	LF	3,000.000	3,000.000
0282	643.4100	Traffic Control Interim Lane Closure	EACH	40.000	40.000
0284	643.5000	Traffic Control	EACH	1.000	1.000
0286	645.0120	Geotextile Type HR	SY	30.000	30.000
0288	645.0130	Geotextile Type R	SY	770.000	770.000
0290	646.1020	Marking Line Epoxy 4-Inch	LF	25,744.000	25,744.000
0292	646.1040	Marking Line Grooved Wet Ref Epoxy 4-Inch	LF	284,593.000	284,593.000
0294	646.1545	Marking Line Grooved Wet Ref Contrast Epoxy 4-Inch	LF	953.000	953.000

1204-08-65

Line	Item	Item Description	Unit	Total	Qty
0296	646.1555	Marking Line Grooved Contrast Permanent Tape 4-Inch	LF	35,680.000	35,680.000
0298	646.3020	Marking Line Epoxy 8-Inch	LF	1,357.000	1,357.000
0300	646.3555	Marking Line Grooved Contrast Permanent Tape 8-Inch	LF	28,251.000	28,251.000
0302	646.5020	Marking Arrow Epoxy	EACH	18.000	18.000
0304	646.5120	Marking Word Epoxy	EACH	4.000	4.000
0306	646.5520	Marking Outfall Epoxy	EACH	10.000	10.000
0308	646.6120	Marking Stop Line Epoxy 18-Inch	LF	316.000	316.000
0310	646.6464	Cold Weather Marking Epoxy 4-Inch	LF	17,000.000	17,000.000
0312	646.7220	Marking Chevron Epoxy 24-Inch	LF	3,253.000	3,253.000
0314	646.8120	Marking Curb Epoxy	LF	314.000	314.000
0316	646.8220	Marking Island Nose Epoxy	EACH	23.000	23.000
0318	646.9000	Marking Removal Line 4-Inch	LF	302,916.000	302,916.000
0320	646.9100	Marking Removal Line 8-Inch	LF	14,236.000	14,236.000
0322	646.9400	Marking Removal Plowable Raised Pavement Markers	EACH	1,674.000	1,674.000
0324	650.5000	Construction Staking Base	LF	982.000	982.000
0326	650.5500	Construction Staking Curb Gutter and Curb & Gutter	LF	840.000	840.000
0328	650.7000	Construction Staking Concrete Pavement	LF	1,530.000	1,530.000
0330	650.8501	Construction Staking Electrical Installations (project) 01. 1204-08-65	EACH	1.000	1.000
0332	650.9500	Construction Staking Sidewalk (project) 01. 1204-08-65	EACH	1.000	1.000
0334	650.9911	Construction Staking Supplemental Control (project) 01. 1204-08-65	EACH	1.000	1.000
0336	650.9920	Construction Staking Slope Stakes	LF	9,740.000	9,740.000
0338	652.0225	Conduit Rigid Nonmetallic Schedule 40 2-Inch	LF	1,580.000	1,580.000
0340	652.0235	Conduit Rigid Nonmetallic Schedule 40 3-Inch	LF	620.000	620.000
0342	652.0615	Conduit Special 3-Inch	LF	640.000	640.000
0344	652.0800	Conduit Loop Detector	LF	412.000	412.000
0346	652.0900	Loop Detector Slots	LF	245.000	245.000
0348	653.0154	Pull Boxes Non-Conductive 24x36-Inch	EACH	7.000	7.000
0350	653.0164	Pull Boxes Non-Conductive 24x42-Inch	EACH	12.000	12.000
0352	653.0905	Removing Pull Boxes	EACH	27.000	27.000
0354	654.0101	Concrete Bases Type 1	EACH	4.000	4.000
0356	654.0102	Concrete Bases Type 2	EACH	4.000	4.000
0358	654.0105	Concrete Bases Type 5	EACH	1.000	1.000
0360	654.0110	Concrete Bases Type 10	EACH	2.000	2.000
0362	654.0120	Concrete Bases Type 10-Special	EACH	1.000	1.000
0364	654.0217	Concrete Control Cabinet Bases Type 9 Special	EACH	1.000	1.000
0366	655.0230	Cable Traffic Signal 5-14 AWG	LF	382.000	382.000
0368	655.0260	Cable Traffic Signal 12-14 AWG	LF	2,633.000	2,633.000
0370	655.0305	Cable Type UF 2-12 AWG Grounded	LF	1,711.000	1,711.000
0372	655.0515	Electrical Wire Traffic Signals 10 AWG	LF	1,486.000	1,486.000
0374	655.0610	Electrical Wire Lighting 12 AWG	LF	819.000	819.000
0376	655.0700	Loop Detector Lead In Cable	LF	3,259.000	3,259.000
0378	655.0800	Loop Detector Wire	LF	1,653.000	1,653.000
0380	655.0900	Traffic Signal EVP Detector Cable	LF	769.000	769.000
0382	656.0201	Electrical Service Meter Breaker Pedestal (location) 01. USH 18/151 & CTH PB WB Ramp	EACH	1.000	1.000
0384	657.0100	Pedestal Bases	EACH	4.000	4.000
0386	657.0255	Transformer Bases Breakaway 11 1/2-Inch Bolt Circle	EACH	5.000	5.000
0388	657.0315	Poles Type 4	EACH	4.000	4.000
0390	657.0322	Poles Type 5-Aluminum	EACH	1.000	1.000

1204-08-65

Line	Item	Item Description	Unit	Total	Qty
0392	657.0350	Poles Type 10	EACH	2.000	2.000
0394	657.0352	Poles Type 10-Special	EACH	1.000	1.000
0396	657.0420	Traffic Signal Standards Aluminum 13-FT	EACH	2.000	2.000
0398	657.0425	Traffic Signal Standards Aluminum 15-FT	EACH	2.000	2.000
0400	657.0525	Monotube Arms 25-FT	EACH	1.000	1.000
0402	657.0530	Monotube Arms 30-FT	EACH	1.000	1.000
0404	657.0541	Monotube Arms 40-FT-Special	EACH	1.000	1.000
0406	657.0609	Luminaire Arms Single Member 4-Inch Clamp 6-FT	EACH	4.000	4.000
0408	657.0610	Luminaire Arms Single Member 4 1/2-Inch Clamp 6-FT	EACH	1.000	1.000
0410	657.0815	Luminaire Arms Steel 15-FT	EACH	2.000	2.000
0412	657.0820	Luminaire Arms Steel Type 10 Pole Clamp 15-FT	EACH	1.000	1.000
0414	657.0830	Luminaire Arms Steel Type 10 Special Pole Clamp 15-FT	EACH	1.000	1.000
0416	658.0173	Traffic Signal Face 3S 12-Inch	EACH	11.000	11.000
0418	658.0174	Traffic Signal Face 4S 12-Inch	EACH	4.000	4.000
0420	658.5070	Signal Mounting Hardware (location) 01. USH 18/151 & CTH PB WB Ramp	EACH	1.000	1.000
0422	659.1125	Luminaires Utility LED C	EACH	7.000	7.000
0424	659.5000.S	Lamp, Ballast, LED, Switch Disposal by Contractor	EACH	20.000	20.000
0426	661.0201	Temporary Traffic Signals for Intersections (location) 01. USH 18/151 & CTH PB WB Ramp	EACH	1.000	1.000
0428	671.0112	Conduit HDPE 1-Duct 2-Inch	LF	425.000	425.000
0430	673.0105	Communication Vault Type 1	EACH	1.000	1.000
0432	673.0200	Tracer Wire Marker Posts	EACH	1.000	1.000
0434	678.0012	Install Fiber Optic Cable Outdoor Plant 12-CT	LF	825.000	825.000
0436	678.0200	Fiber Optic Splice Enclosure	EACH	1.000	1.000
0438	678.0300	Fiber Optic Splice	EACH	4.000	4.000
0440	690.0150	Sawing Asphalt	LF	2,938.000	2,938.000
0442	690.0250	Sawing Concrete	LF	47,972.000	47,972.000
0444	715.0720	Incentive Compressive Strength Concrete Pavement	DOL	2,463.000	2,463.000
0446	740.0440	Incentive IRI Ride	DOL	51,000.000	51,000.000
0448	ASP.1T0A	On-the-Job Training Apprentice at $5.00/HR	HRS	2,250.000	2,250.000
0450	ASP.1T0G	On-the-Job Training Graduate at $5.00/HR	HRS	1,250.000	1,250.000
0452	SPV.0035	Special 01. Rapid Set Deck Repair	CY	2.100	2.100
0454	SPV.0060	Special 01. Cable Guard End Terminal Safence TL-3, 4 Cable	EACH	16.000	16.000
0456	SPV.0060	Special 02. Salvage Terminal High-Tension Cable Safence TL-3, 4 Cable	EACH	16.000	16.000
0458	SPV.0060	Special 03. Salvage Traffic Signals (USH 18/151 & CTH PB WB Ramp)	EACH	1.000	1.000
0460	SPV.0060	Special 04. Trnspt & Inst S-F EVP Heads W/ Conf Lights (USH 18/151 & CTH PB WB Ramp)	EACH	1.000	1.000
0462	SPV.0060	Special 05. Salvage & Reinst Preterminated FO Patch Panel (USH 18/151 & CTH PB WB Ramp)	EACH	1.000	1.000
0464	SPV.0060	Special 06. Update Traffic Signal Timing Parameters (E Verona Ave & USH 18/151 Ramps)	EACH	1.000	1.000
0466	SPV.0060	Special 07. Landmark Reference Monuments	EACH	4.000	4.000
0468	SPV.0090	Special 01. Cable Guard Safence TL-3, 4 Cable	LF	34,062.000	34,062.000
0470	SPV.0090	Special 02. Cleaning Ditch	LF	260.000	260.000
0472	SPV.0090	Special 03. Concrete Joint and Crack Cleaning	LF	50,000.000	50,000.000
0474	SPV.0090	Special 04. Traffic Control Gawk Screen Furnished	LF	8,300.000	8,300.000
0476	SPV.0090	Special 05. Traffic Control Gawk Screen Installed	LF	13,950.000	13,950.000
0478	SPV.0090	Special 06. Removing HMA Pavement Notched Wedge Longitudinal Joint Milling	LF	269,300.000	269,300.000
0480	SPV.0090	Special 07. Concrete Pavement Repair Longitudinal Joint	LF	1,800.000	1,800.000
0482	SPV.0090	Special 08. Salvage High-Tension Cable Guard Safence TL-3, 4 Cable	LF	34,062.000	34,062.000

1204-08-65

Line	Item	Item Description	Unit	Total	Qty
0484	SPV.0090	Special 09. Pipe Underdrain (6-Inch) With Geotextile Fabric and Aggregate	LF	129.000	129.000
0486	SPV.0090	Special 10. Install State Furnished CAT-5E Cable	LF	646.000	646.000
0488	SPV.0090	Special 11. Transverse Joint and Crack Plunge Milling and Patching	LF	2,875.000	2,875.000
0490	SPV.0180	Special 01. High Friction Surface Treatment Polymer Overlay	SY	1,640.000	1,640.000

3

REMOVING CONCRETE PAVEMENT

CATEGORY	STATION	TO	STATION	LOCATION	204.0100 REMOVING CONCRETE PAVEMENT SY	REMARKS
0010	344+42'WB'	-	344+63'WB'	MEDIAN	15	USH 18/151
0010	344+43'WB'	-	344+63'WB'	OUTSIDE SHOULDER	18	USH 18/151
0010	489+53'EB'	-	489+74'EB'	BRIDGE APPROACH	73	USH 18/151
0010	489+56'WB'	-	489+79'WB'	MEDIAN	12	USH 18/151
0010	489+56'WB'	-	489+78'WB'	OUTSIDE SHOULDER	17	USH 18/151
0010	584+21'EB'	-	584+59'EB'	BRIDGE APPROACH	106	USH 18/151
0010	584+59'WB'	-	584+96'WB'	BRIDGE APPROACH	110	USH 18/151
0010	586+31'EB'	-	586+71'EB'	BRIDGE APPROACH	111	USH 18/151
0010	586+69'WB'	-	586+91'WB'	MEDIAN	9	USH 18/151
0010	675+62'EB'	-	675+97'EB'	BRIDGE APPROACH	104	USH 18/151
0010	675+51'WB'	-	675+85'WB'	BRIDGE APPROACH	100	USH 18/151
0010	677+64'EB'	-	678+02'EB'	BRIDGE APPROACH	110	USH 18/151
0010	677+54'WB'	-	677+91'WB'	BRIDGE APPROACH	105	USH 18/151
0010	678+02'EB'	-	687+79'EB'	MAINLINE	2,781	USH 18/151
0010	691+05'EB'	-	691+29'EB'	BRIDGE APPROACH	138	USH 18/151
0010	691+12'WB'	-	691+33'WB'	BRIDGE APPROACH	138	USH 18/151
0010	692+48'EB'	-	692+78'EB'	BRIDGE APPROACH	164	USH 18/151
0010	692+51'WB'	-	692+76'WB'	BRIDGE APPROACH	109	USH 18/151
0010	717+53'WB'	-	717+77'WB'	BRIDGE APPROACH	84	USH 18/151
0010	718+76'WB'	-	718+93'WB'	MEDIAN	7	USH 18/151
0010	718+76'WB'	-	718+93'WB'	OUTSIDE SHOULDER	12	USH 18/151
0010	744+30'WB'	-	744+70'WB'	BRIDGE APPROACH	116	USH 18/151
0010	744+23'EB'	-	744+63'EB'	BRIDGE APPROACH	109	USH 18/151
0010	740+86'EW'	-	741+95'EW'	MAINLINE	420	EW' RAMP
0010	--	-	--	CTH PB	2,577	BETWEEN NORTH RAMPS
0010	--	-	--	CTH PB	1,425	BETWEEN SOUTH RAMPS
				TOTAL 0010	8,970	

REMOVING CURB & GUTTER

CATEGORY	STATION	TO	STATION	LOCATION	204.0150 REMOVING CURB & GUTTER LF
0010	254+27'EB'	-	254+72'EB'	USH 18/151	102
0010	255+05'EB'	-	255+50'EB'	USH 18/151	70
0010	310+00'EB'	-	310+60'EB'	USH 18/151	97
0010	310+84'EB'	-	311+23'EB'	USH 18/151	64
0010	332+69'WB'	-	333+10'WB'	USH 18/151	64
0010	333+40'WB'	-	334+00'WB'	USH 18/151	95
0010	409+27'WB	-	409+88'WB'	USH 18/151	96
0010	410+17'WB'	-	417+77'WB'	USH 18/151	95
0010	409+33'EB'	-	409+93'EB'	USH 18/151	94
0010	410+23'EB'	-	410+84'EB'	USH 18/151	98
0010		-		STH 69	41
0010		-		STH 69	21
0010		-		STH 69	24
				TOTAL 0010	961

REMOVING CONCRETE SURFACE PARTIAL DEPTH

CATEGORY	STATION	TO	STATION	LOCATION	204.0109.S REMOVING CONCRETE SURFACE PARTIAL DEPTH (SF)
0010	677+92 'WB'	-	683+61 'WB'	MEDIAN, WB	1,142
0010	722+97 'EB'	-	744+22 'EB'	MEDIAN, EB	4,266
0010	745+99 'EB'	-	749+31 'EB'	MEDIAN, EB	664
				TOTAL 0010	6,072

REMOVING CONCRETE SIDEWALK

CATEGORY	STATION	TO	STATION	LOCATION	204.0155 REMOVING CONCRETE SIDEWALK SY	REMARKS
0010	679+36'PA'	-	679+89'PA'	'PA' RAMP	60	EB OFF RAMP FOR CTH PB, PORKCHOP AT BOTTOM OF RAMP
				TOTAL 0010	60	

BUTT JOINTS

CATEGORY	STATION	TO	STATION	LOCATION		204.0105 REMOVING CONCRETE PAVEMENT BUTT JOINTS SY	204.0115 REMOVING ASPHALTIC SURFACE BUTT JOINTS SY	REMARKS
0010	153+50	-	155+00	USH 18	EB	434	201	
0010	156+00	-	157+50	USH 18	WB	435	199	
0010	213+70	-	215+20	CTH PD RAMP		251	134	EB OFF
0010	216+95	-	217+94	CTH PD RAMP		260	127	WB ON
0010	216+40	-	217+90	CTH PD RAMP		279	133	EB ON
0010	226+80	-	228+30	CTH PD RAMP		251	134	WB OFF
0010	267+75	-	269+25	USH 18	EB	435	198	
0010	273+07	-	274+57	USH 18	EB	435	199	
0010	341+34	-	342+84	USH 18	WB	434	209	
0010	341+35	-	342+86	USH 18	EB	434	234	
0010	344+62	-	346+12	USH 18	EB	434	211	
0010	344+63	-	346+13	USH 18	WB	434	213	
0010	452+64	-	454+15	CTH G RAMP	GC	251	134	EB OFF
0010	460+45	-	461+95	CTH G RAMP	GD	296	135	WB ON
0010	463+07	-	464+57	CTH G RAMP	GA	266	136	WB OFF
0010	472+72	-	474+22	CTH G RAMP	GB	233	125	EB ON
0010	486+22	-	487+73	USH 18	WB	434	206	
0010	486+30	-	487+81	USH 18	EB	434	233	
0010	489+68	-	491+18	USH 18	EB	434	199	
0010	489+79	-	491+28	USH 18	WB	434	213	
0010	497+68	-	499+18	USH 18	EB	434	201	
0010	499+09	-	500+59	USH 18	WB	434	200	
0010	503+93	-	505+43	USH 18	EB	608	184	
0010	505+37	-	506+87	USH 18	WB	607	181	
0010	510+16	-	511+65	W VERONA AVE RAMP	WE	250	134	EB OFF
0010	513+85	-	515+36	W VERONA AVE RAMP	WW	250	134	WB ON
0010	526+49	-	528+00	USH 18	EB	431	199	
0010	530+00	-	531+50	USH 18	EB	431	199	
0010	529+98	-	531+49	EPIC LANE RAMP	EL	404	184	WB OFF
0010	542+46	-	543+97	EPIC LANE RAMP	EV	252	178	EB ON
0010	581+67	-	583+16	STH 69 RAMP	SC	326	135	EB OFF
0010	582+78	-	584+27	USH 18	EB	434	234	
0010	583+15	-	584+65	USH 18	WB	434	210	
0010	584+95	-	586+46	STH 69 RAMP	SD	266	127	WB ON
0010	584+82	-	586+32	STH 69 RAMP	SB	280	125	EB ON
0010	587+61	-	589+11	STH 69 RAMP	SA	407	122	WB OFF
0010	587+99	-	589+50	USH 18	EB	434	200	
0010	588+04	-	589+55	USH 18	WB	434	234	
0010	641+99	-	643+50	USH 18	EB	434	200	
0010	646+25	-	647+75	USH 18	EB	434	200	
0010	674+73	-	676+24	CTH PB RAMP	PC	399	153	EB OFF
0010	674+19	-	675+71	USH 18	EB	437	220	

CONTINUED 2 OF 2:

CATEGORY	STATION	TO	STATION	LOCATION		204.0105 REMOVING CONCRETE PAVEMENT BUTT JOINTS SY	204.0115 REMOVING ASPHALTIC SURFACE BUTT JOINTS SY	REMARKS
0010	674+07	-	675+57	USH 18	WB	431	-	
0010	674+83	-	676+35	CTH PB RAMP	PD	250	-	WB ON
0010	674+96	-	676+46	CTH PB RAMP	PB	270	-	EB ON
0010	677+87	-	679+37	USH 18	WB	431	-	
0010	681+41	-	682+91	CTH PB RAMP	PA	813	-	WB OFF
0010	685+46	-	686+97	CTH PB RAMP	PB	250	-	EB ON
0010	689+02	-	690+53	CTH PB RAMP	PA	782	-	WB OFF
0010	692+75	-	694+26	USH 18	WB	434	-	
0010	692+78	-	694+28	USH 18	EB	434	-	
0010	716+00	-	717+50	USH 18	EB	434	-	
0010	716+09	-	717+59	USH 18	WB	434	-	
0010	718+98	-	720+49	USH 18	WB	434	-	
0010	718+95	-	720+44	USH 18	EB	434	-	
0010	742+88	-	744+30	USH 18	WB	452	-	
0010	742+79	-	744+29	USH 18	EB	430	-	
0010	744+49	-	745+99	E VERONA AVE RAMP	EE	248	-	
0010	741+95	-	743+45	E VERONA AVE RAMP	EW	431	-	
0010	746+34	-	747+25	USH 18	WB	435	-	
0010	746+41	-	747+91	USH 18	EB	434	-	
0010	823+85	-	825+35	USH 18	WB	434	-	
0010	823+33	-	824+83	USH 18	EB	434	-	
0010	11+40	-	11+60	SPRINGDALE CENTER RD		-	57	
0010	276+89	-	277+34	USH 18	WB	-	16	
0010	277+19	-	277+64	USH 18	EB	-	16	
0010	20+40	-	20+60	BEAT RD	BR	-	40	
0010	25+45	-	25+66	ERB RD	ER	-	50	
0010	30+96	-	31+17	DAIRY RIDGE DR	DR	-	60	
0010	35+36	-	35+56	WINDY OAK LANE	WO	-	46	
0010	40+87	-	41+07	SPRINGROSE CIRCLE	SC	-	50	
0010	42+63	-	42+83	SPRINGROSE CIRCLE	SC	-	74	
0010	45+56	-	45+76	SPRINGROSE ROAD	SR	-	70	
0010	48+19	-	48+39	SPRINGROSE ROAD	SR	-	69	
				TOTAL 0010		25,247	8,075	

REMOVING ASPHALTIC SURFACE

CATEGORY	STATION	TO	STATION	LOCATION	204.0110 REMOVING ASPHALTIC SURFACE SY	REMARKS
0010	156+00'WB'	-	206+00'WB'	OUTSIDE SHOULDER (ML)	3,375	MAINLINE UP TO RAMP
0010	206+00'DD'	-	218+47'DD'	OUTSIDE SHOULDER (RAMP)	692	RAMP 'DD'
0010	208+11'DD'	-	218+23'DD'	INSIDE SHOULDER (RAMP)	336	RAMP 'DD'
0010	205+05 'WB'	-	217+68'WB'	GORE/OUTSIDE SHOULDER (ML)	871	MAINLINE
0010	156+00'WB'	-	217+53'WB'	MEDIAN SHOULDER (ML)	2,076	MAINLINE
0010	153+50'EB'	-	217+19'EB'	MEDIAN SHOULDER (ML)	2,123	MAINLINE
0010	153+50'EB'	-	202+00'EB'	OUTSIDE SHOULDER (ML)	3,283	MAINLINE UP TO RAMP
0010	202+00'DC'	-	215+20'DC'	OUTSIDE SHOULDER (RAMP)	722	RAMP 'DC'
0010	205+17'DC'	-	215+20'DC'	INSIDE SHOULDER (RAMP)	335	RAMP 'DC'
0010	203+47'EB'	-	216+97'EB'	GORE/OUTSIDE SHOULDER (ML)	983	MAINLINE
0010	175+32'EB	-	176+00'EB'	MEDIAN CROSSOVER	137	MAINLINE MEDIAN CROSSOVER
0010	219+39'DA'	-	230+00'DA'	OUTSIDE SHOULDER (RAMP)	580	RAMP 'DA'
0010	219+39'DA'	-	228+31'DA'	INSIDE SHOULDER (RAMP)	299	RAMP 'DA'
0010	217+68'WB'	-	230+09'WB'	OUTSIDE SHOULDER/GORE (ML)	941	MAINLINE
0010	217+53'WB'	-	342+84'WB'	MEDIAN SHOULDER (ML)	4,151	MAINLINE
0010	217+19'EB'	-	342+86'EB'	MEDIAN SHOULDER (ML)	4,189	MAINLINE
0010	217+04'EB'	-	229+80'EB'	OUTSIDE SHOULDER/GORE (ML)	869	MAINLINE
0010	216+40'DB'	-	226+92'DB'	INSIDE SHOULDER (RAMP)	349	RAMP 'DB'
0010	216+40'DB'	-	230+00'DB'	OUTSIDE SHOULDER (RAMP)	756	RAMP 'DB'
0010	230+00'EB'	-	342+86'EB'	OUTSIDE SHOULDER (ML)	7,449	MAINLINE
0010	253+50'EB'	-	257+38'EB'	MEDIAN CROSSOVER	619	MAINLINE MEDIAN CROSSOVER
0010	275+84'EB'	-	279+03'EB'	MEDIAN CROSSOVER	410	MAINLINE MEDIAN CROSSOVER
0010	289+72'WB'	-	293+33'WB'	MEDIAN CROSSOVER	508	MAINLINE MEDIAN CROSSOVER
0010	309+59'WB'	-	313+56'WB	MEDIAN CROSSOVER	607	MAINLINE MEDIAN CROSSOVER
0010	316+76'EB'	-	319+09'EB'	MEDIAN CROSSOVER	279	MAINLINE MEDIAN CROSSOVER
0010	326+83'EB'	-	334+32'EB'	MEDIAN CROSSOVER	885	MAINLINE MEDIAN CROSSOVER
0010	344+64'WB'	-	450+00'WB'	OUTSIDE SHOULDER (ML)	6,921	MAINLINE UP TO RAMP
0010	344+64'WB'	-	487+74'WB	INSIDE SHOULDER (ML)	4,768	MAINLINE
0010	344+63'EB'	-	487+80'EB'	INSIDE SHOULDER (ML)	4,773	MAINLINE
0010	344+62'EB'	-	450+00'EB	OUTSIDE SHOULDER (ML)	6,964	MAINLINE UP TO RAMP
0010	450+00'GD'	-	461+95'GD'	OUTSIDE SHOULDER (RAMP)	661	RAMP 'GD'
0010	445+75'GD	-	462+11'GD'	GORE/INSIDE SHOULDER (RAMP)	924	GORE AND RAMP 'GD"
0010	451+45'WB'	-	475+70'WB'	OUTSIDE SHOULDER/GORE (ML)	1,751	MAINLINE AND GORE
0010	450+83'EB'	-	478+09'EB'	OUTSIDE SHOULDER/GORE (ML)	2,004	MAINLINE AND GORE
0010	452+65'GC'	-	462+36'GC'	INSIDE SHOULDER (RAMP)	333	RAMP 'GC'
0010	450+00'GC'	-	462+30'GC'	OUTSIDE SHOULDER (RAMP)	689	RAMP 'GC'
0010	463+07'GA'	-	476+00'GA'	OUTSIDE SHOULDER (RAMP)	722	RAMP 'GA'
0010	462+97'GA'	-	472+78'GA'	INSIDE SHOULDER (RAMP)	330	RAMP 'GA'
0010	463+40'GB'	-	474+23'GB'	INSIDE SHOULDER (RAMP)	365	RAMP 'GB'
0010	463+49'GB'	-	476+00'GB'	OUTSIDE SHOULDER (RAMP)	715	RAMP 'GB'
0010	476+00'WB	-	487+72'WB	OUTSIDE SHOULDER (ML)	703	MAINLINE
0010	476+00'EB'	-	487+80'EB'	OUTSIDE SHOULDER (ML)	687	MAINLINE
0010	363+63'WB'	-	366+84'WB'	MEDIAN CROSSOVER	521	MAINLINE MEDIAN CROSSOVER
0010	374+23'EB'	-	377+90'EB'	MEDIAN CROSSOVER	563	MAINLINE MEDIAN CROSSOVER
0010	407+73'EB'	-	412+57'EB'	MEDIAN CROSSOVER	750	MAINLINE MEDIAN CROSSOVER
0010	489+80'WB	-	512+00'WB'	OUTSIDE SHOULDER (ML)	1,320	MAINLINE UP TO RAMP
0010	489+79'WB'	-	530+91'WB'	INSIDE SHOULDER (ML)	1,370	MAINLINE UP TO PREV. CONSTRUCTION
0010	489+75'EB'	-	584+22'EB'	INSIDE SHOULDER (ML)	3,149	MAINLINE
0010	489+74'EB'	-	504+00'EB'	OUTSIDE SHOULDER (ML)	994	MAINLINE UP TO RAMP
0010	512+00'WW'	-	526+61'WW'	OUTSIDE SHOULDER (RAMP)	834	RAMP 'WW'
0010	513+88'WW'	-	526+62'WW'	INSIDE SHOULDER (RAMP)	445	RAMP 'WW'
0010	509+93'WB'	-	532+38'WB	GORE/OUTSIDE SHOULDER (ML)	1,591	GORE/MAINLINE TO PREV. CONSTRUCTION
0010	505+90'EB'	-	545+28'EB'	GORE/OUTSIDE SHOULDER (ML)	2,687	MAINLINE
0010	507+04'WE'	-	518+06'WE'	INSIDE SHOULDER (RAMP)	369	RAMP 'WE'
0010	504+00'WE'	-	518+52'WE'	OUTSIDE SHOULDER (RAMP)	784	RAMP 'WE'

CONTINUED 2 OF 2:

CATEGORY	STATION	TO	STATION	LOCATION	204.0110 REMOVING ASPHALTIC SURFACE SY	REMARKS
0010	521+08'WE'	-	525+31'WE'	INSIDE SHOULDER (RAMP)	142	RAMP 'WE'
0010	521+24'WE'	-	527+46'WE'	OUTSIDE SHOULDER (RAMP)	344	RAMP 'WE'
0010	542+45'EV'	-	543+97'EV'	INSIDE SHOULDER (RAMP)	60	RAMP 'EV'
0010	542+58'EV'	-	546+08'EV'	OUTSIDE SHOULDER (RAMP)	291	RAMP 'EV'
0010	545+99'EB'	-	570+00'EB'	OUTSIDE SHOULDER (ML)	1,669	MAINLINE UP TO RAMP
0010	572+73'SD'	-	586+46'SD'	OURSIDE SHOULDER (RAMP)	758	RAMP 'SD'
0010	574+58'SD'	-	586+76'SD'	INSIDE SHOULDER (RAMP)	447	RAMP 'SD'
0010	573+65'WB'	-	584+59'WB'	GORE/OUTSIDE SHOULDER (ML)	814	GORE/MAINLINE
0010	577+21'WB'	-	584+58'WB'	INSIDE SHOULDER (ML)	246	MAINLINE
0010	571+51'EB'	-	584+21'EB'	GORE/OUTSIDE SHOULDER(ML)	963	GORE/MAINLINE
0010	573+03'SC'	-	583+96'SC'	INSIDE SHOULDER (RAMP)	391	RAMP 'SC'
0010	570+00'SC'	-	583+66'SC'	OUTSIDE SHOULDER (RAMP)	797	RAMP 'SC'
0010	544+68'EB'	-	545+34'EB'	MEDIAN CROSSOVER	130	MAINLINE MEDIAN CROSSOVER
0010	587+73'SA'	-	600+00'SA'	OUTSIDE SHOULDER (RAMP)	707	RAMP 'SA'
0010	587+32'SA'	-	597+16'SA'	INSIDE SHOULDER (RAMP)	374	RAMP 'SA'
0010	587+04'WB'	-	599+02'WB	OUTSIDE SHOULDER/GORE (ML)	962	MAINLINE/GORE
0010	586+92'WB'	-	675+49'WB'	INSIDE SHOULDER (ML)	2,949	MAINLINE
0010	586+74'EB'	-	675+63'EB'	INSIDE SHOULDER (ML)	2,962	MAINLINE
0010	586+67'EB'	-	600+16'EB'	OUTSIDE SHOULDER/GORE (ML)	984	MAINLINE/GORE
0010	584+92'SB'	-	595+71'SB'	INSIDE SHOULDER (RAMP)	417	RAMP 'SB'
0010	584+95'SB'	-	601+00'SB'	OUTSIDE SHOULDER (RAMP)	995	RAMP 'SB'
0010	600+00'WB'	-	657+00'WB'	OUTSIDE SHOULDER (ML)	3,670	MAINLINE UP TO RAMP
0010	601+00'EB'	-	657+00'EB'	OUTSIDE SHOULDER (ML)	3,649	MAINLINE UP TO RAMP
0010	657+36'WB'	-	675+51'WB'	OUTSIDE SHOULDER/GORE (ML)	1,525	MAINLINE/GORE
0010	658+83'EB'	-	675+63'EB'	GORE/OUTSIDE SHOULDER (ML)	1,250	GORE/MAINLINE
0010	630+22'EB'	-	630+96'EB'	MEDIAN CROSSOVER	145	MAINLINE MEDIAN CROSSOVER
0010	677+94'WB'	-	690+38'WB'	OUTSIDE SHOULDER/GORE (ML)	911	MAINLINE
0010	677+92'WB'	-	691+12'WB'	INSIDE SHOULDER (ML)	414	MAINLINE
0010	678+00'EB'	-	691+05'EB'	INSIDE SHOULDER (ML)	542	MAINLINE
0010	678+01'EB'	-	689+14'EB'	OUTSIDE SHOULDER/GORE (ML)	845	MAINLINE/GORE
0010	692+76'WB'	-	717+55'WB'	OUTSIDE SHOULDER (ML)	1,521	MAINLINE
0010	692+76'WB'	-	717+54'WB'	INSIDE SHOULDER (ML)	826	MAINLINE
0010	692+78'EB'	-	717+50'EB'	INSIDE SHOULDER (ML)	1,648	MAINLINE
0010	692+78'EB'	-	717+51'EB'	OUTSIDE SHOULDER (ML)	1,753	MAINLINE
0010	718+99'WB'	-	744+32'WB'	OUTSIDE SHOULDER (ML)	1,708	MAINLINE
0010	718+99'WB'	-	744+30'WB'	INSIDE SHOULDER (ML)	563	MAINLINE
0010	719+00'EB'	-	744+22'EB'	INSIDE SHOULDER (ML)	1,684	MAINLINE
0010	719+00'EB'	-	744+22'EB'	OUTSIDE SHOULDER (ML)	1,705	MAINLINE
0010	746+34'WB'	-	758+64'WB'	OUTSIDE SHOULDER (ML)	870	MAINLINE
0010	746+29'WB'	-	825+31'WB'	INSIDE SHOULDER (ML)	2,652	MAINLINE
0010	746+05'EB'	-	824+77'EB'	INSIDE SHOULDER (ML)	2,861	MAINLINE
0010	746+21'EB'	-	764+04'EB'	OUTSIDE SHOULDER/GORE (ML)	1,230	MAINLINE/GORE
0010	762+00'WB	-	825+49'WB'	OUTSIDE SHOULDER (ML)	4,103	MAINLINE
0010	765+00'EB'	-	824+78'EB'	OUTSIDE SHOULDER (ML)	3,851	MAINLINE
0010	797+62'EB'	-	798+32'EB'	MEDIAN CROSSOVER	149	MAINLINE MEDIAN CROSSOVER
				TOTAL 0010	143,988	

3

REMOVING GUARDRAIL

CATEGORY	STATION	TO	STATION	LOCATION	204.0165 REMOVING GUARDRAIL LF
0010	180+54'EB'	-	182+22'EB'	MEDIAN	351
0010	216+52'EB'	-	218+21'EB'	MEDIAN	351
0010	340+00'EB'	-	343+04'EB'	MEDIAN	304
0010	340+12'EB'	-	343+04'EB'	OUTSIDE EB TRAFFIC	292
0010	342+35'WB'	-	343+00'WB'	MEDIAN	65
0010	344+49'WB'	-	347+17'WB'	OUTSIDE WB TRAFFIC	268
0010	344+47'WB'	-	347+52'WB'	MEDIAN	305
0010	364+65'EB'	-	369+13'EB'	OUTSIDE EB TRAFFIC	465
0010	379+66'EB'	-	382+45'EB'	OUTSIDE EB TRAFFIC	279
0010	461+75'WB'	-	463+61'WB'	MEDIAN	376
0010	484+79'EB'	-	487+96'EB'	MEDIAN	318
0010	485+16'EB'	-	487+96'EB'	OUTSIDE EB TRAFFIC	280
0010	489+63'WB	-	495+31'WB'	OUTSIDE WB TRAFFIC	567
0010	489+64'WB'	-	492+19'WB'	MEDIAN	256
0010	518+66'WB'	-	520+37'WB'	MEDIAN	351
0010	528+11'EB'	-	529+77'EB'	MEDIAN	351
0010	543+61'EV'	-	545+12'EV	OUTSIDE 'EV' RAMP	150
0010	582+48'EB'	-	584+41'EB'	OUTSIDE EB TRAFFIC	193
0010	583+33'WB'	-	584+79'WB'	MEDIAN	285
0010	586+85'WB'	-	589+90'WB'	OUTSIDE WB TRAFFIC	305
0010	586+65'WB'	-	587+81'WB'	MEDIAN	259
0010	618+45'WB'	-	620+26'WB'	MEDIAN	376
0010	643+36'EB'	-	645+55'EB'	MEDIAN	452
0010	672+57'EB'	-	675+98'EB'	MEDIAN	340
0010	673+33'EB'	-	675+84'EB'	OUTSIDE EB TRAFFIC	255
0010	674+00'WB'	-	675+71'WB'	MEDIAN	171
0010	683+58'WB'	-	684+51'WB'	MEDIAN	93
0010	685+04'EB'	-	687+85'EB'	MEDIAN	280
0010	687+62'PB'	-	690+56'PB	OUTSIDE 'PB' RAMP	293
0010	692+65'WB'	-	695+34'WB'	MEDIAN	268
0010	692+70'WB'	-	695+76'WB'	OUTSIDE WB TRAFFIC	306
0010	715+03'EB'	-	717+72'EB'	OUTSIDE EB TRAFFIC	269
0010	718+74'WB'	-	721+81'WB'	MEDIAN	307
0010	718+77'WB'	-	721+46'WB'	OUTSIDE WB TRAFFIC	269
0010	741+79'EB'	-	744+66'EB'	OUTSIDE EB TRAFFIC	282
0010	743+56'WB'	-	744+51'WB'	OUTSIDE WB TRAFFIC	97
0010	741+95'EE'	-	742+67'EE'	OUTSIDE 'EE' RAMP	73
0010	756+92'EE'	-	763+02'EE'	OUTSIDE 'EE' RAMP	607
0010	746+17'WB'	-	748+65'WB'	MEDIAN	307
0010	745+89'WB'	-	751+11'WB'	OUTSIDE WB TRAFFIC	582
0010	819+00'EB'	-	824+96'EB'	OUTSIDE EB TRAFFIC	597
0010	821+44'EB'	-	825+26'EB'	MEDIAN	384
0010	823+49'WB'	-	825+84'WB	OUTSIDE WB TRAFFIC	236
				TOTAL 0010	12,513

REMOVING FENCE

CATEGORY	STATION	TO	STATION	LOCATION	204.0170 REMOVING FENCE LF	REMARKS
0010	489+59'WB'	-	490+22'WB'	OUTSIDE WB SHOULDER	81	FENCE OFF THE NE CORNER OF BRIDGE OVER SUGAR RIVER
				TOTAL 0010	81	

REMOVING SURFACE DRAINS

CATEGORY	STATION	TO	STATION	LOCATION	204.0190 REMOVING SURFACE DRAINS EACH	REMARKS
0010	586+71'EB'	-	586+75'EB'	MEDIAN	1	-
0010	586+85'WB'	-	586+95'WB'	MEDIAN	1	-
0010	690+97'WB'	-	691+21'WB'	OUTSIDE SHOULDER	1	AT THE SPLIT FOR THE 'PA' RAMP
0010	717+44'WB'	-	717+55'WB'	MEDIAN	1	-
0010	744+25'EB'	-	744+39'EB'	OUTSIDE SHOULDER	1	-
0010	746+51'WB'	-	746+67'WB'	MEDIAN	1	-
0010	824+79'EB'	-	824+87'EB'	OUTSIDE SHOULDER	1	-
0010	825+22'EB'	-	825+30'EB'	MEDIAN	1	-
				TOTAL 0010	8	

3

CULVERT MARKERS

CATEGORY	STATION	TO	STATION	LOCATION	204.0180 REMOVING DELINEATORS AND MARKERS EACH	633.5200 MARKERS CULVERT END EACH	REMARKS
0010	680+01	-	681+41	RAMP PA	-	2	OUTSIDE SHOULDER
0010	184+19			USH 18/151 EB	1	-	
0010	185+43			USH 18/151 EB	-	1	
0010	190+31			USH 18/151 EB	-	1	
0010	195+39			USH 18/151 EB	-	1	
0010	200+34			USH 18/151 EB	-	1	
0010	202+62			USH 18/151 EB	1	-	
0010	204+04			USH 18/151 EB	-	1	
0010	209+99			USH 18/151 EB	-	1	
0010	215+08			USH 18/151 EB	-	1	
0010	215+57			USH 18/151 EB	1	-	
0010	219+96			USH 18/151 EB	-	1	
0010	227+02			USH 18/151 EB	1	-	
0010	241+16			USH 18/151 EB	1	-	
0010	294+30			USH 18/151 EB	1	-	
0010	294+82			USH 18/151 EB	1	-	
0010	307+04			USH 18/151 EB	1	-	
0010	439+05			USH 18/151 EB	1	-	
0010	494+62			USH 18/151 EB	1	-	
0010	517+91			USH 18/151 EB	1	-	
0010	519+90			USH 18/151 EB	1	-	
0010	535+04			USH 18/151 EB	1	-	
0010	545+63			USH 18/151 EB	1	-	
0010	555+81			USH 18/151 EB	1	-	
0010	575+00			USH 18/151 EB	1	-	
0010	582+33			USH 18/151 EB	1	-	
0010	586+37			USH 18/151 EB	1	-	
0010	596+90			USH 18/151 EB	1	-	
0010	602+99			USH 18/151 EB	1	-	
0010	637+45			USH 18/151 EB	1	-	

CONTINUED 2 OF 2:

CATEGORY	STATION	TO	STATION	LOCATION	204.0180 REMOVING DELINEATORS AND MARKERS EACH	633.5200 MARKERS CULVERT END EACH	REMARKS
0010	646+26			USH 18/151 EB	1	-	
0010	651+06			USH 18/151 EB	1	-	
0010	657+06			USH 18/151 EB	1	-	
0010	663+12			USH 18/151 EB	1	-	
0010	667+68			USH 18/151 EB	1	-	
0010	676+25			USH 18/151 EB	1	-	
0010	677+93			USH 18/151 WB	1	-	
0010	680+80			USH 18/151 WB	1	-	
0010	683+32			USH 18/151 WB	1	-	
0010	685+66			USH 18/151 WB	1	-	
0010	688+64			USH 18/151 EB	1	-	
0010	692+69			USH 18/151 EB	1	-	
0010	700+40			USH 18/151 EB	1	-	
0010	702+81			USH 18/151 EB	1	-	
0010	705+31			USH 18/151 EB	1	-	
0010	708+41			USH 18/151 EB	1	-	
0010	710+31			USH 18/151 EB	1	-	
0010	712+80			USH 18/151 EB	1	-	
0010	715+30			USH 18/151 EB	1	-	
0010	717+21			USH 18/151 EB	1	-	
0010	717+31			USH 18/151 EB	1	-	
0010	717+41			USH 18/151 EB	1	-	
0010	722+41			USH 18/151 EB	1	-	
0010	722+85			USH 18/151 EB	1	-	
0010	722+96			USH 18/151 EB	1	-	
0010	729+31			USH 18/151 EB	1	-	
0010	744+12			USH 18/151 WB	1	-	
				TOTAL 0010	48	10	

204.9060.S.01

CATEGORY	STATION	OFFSET	LOCATION	204.9060.S.01 REMOVING (ITEM DESCRIPTION) (01. GEODETIC SURVEY CONTROL STATION) EACH	REMARKS
0010	201+26	10' LT	USH 18/151 'WB'	1	USGS, PAVEMENT
0010	25+91	10' RT	ERB RD 'ER'	1	USGS, PAVEMENT
0010	482+77	28' LT	USH 18/151 'WB'	1	USGS, PAVEMENT
			TOTAL 0010	3	

646.9400

CATEGORY	STATION	TO	STATION	LOCATION	MARKING REMOVAL PLOWABLE RAISED PAVEMENT MARKERS EACH	REMARKS
0010	153+50 'EB'	-	217+25 'EB'	USH 18/151 EB & WB	154	INCLUDES CTH PD OFF-RAMP GORE
0010	217+25 'EB'	-	344+00 'EB'	USH 18/151 EB & WB	280	INCLUDES CTH PD OFF-RAMP GORE
0010	344+00 'EB'	-	489+00 'EB'	USH 18/151 EB & WB	356	INCLUDES CTH G OFF-RAMP GORES
0010	489+00 'EB'	-	585+00 'EB'	USH 18/151 EB & WB	254	INCLUDES W VERONA AVE & STH 69 OFF RAMP GORES
0010	585+00 'EB'	-	677+00 'EB'	USH 18/151 EB & WB	261	INCLUDES STH 69 & CTH PB OFF RAMP GORES
0010	677+00 'EB'	-	745+00 'EB'	USH 18/151 EB & WB	166	INCLUDES CTH PB OFF RAMP GORE
0010	745+00 'EB'	-	827+00 'EB'	USH 18/151 EB & WB	203	INCLUDES E VERONA AVE OFF RAMP GORE
				TOTAL 0010	1,674	

INLETS

CATEGORY	STATION	LOCATION	SIDE	204.0140 REMOVING GUTTER LF	204.0157 REMOVING CONCRETE BARRIER LF	* 416.0610 DRILLED TIE BARS EACH	* 416.1010 CONCRETE SURFACE DRAINS CY	603.0105 CONCRETE BARRIER SINGLE-FACED 32-INCH LF	611.0430 RECONSTRUCTING INLETS EACH	611.8115 ADJUSTING INLET COVERS EACH	* 690.0250 SAWING CONCRETE LF	REMARKS
0010	184+19	USH 18/151 EB	LT	-	-	-	-	-	1	-	-	TYPE 1G-MS, 11.8-INCHES
0010	202+62	USH 18/151 EB	LT	-	-	-	-	-	1	-	-	TYPE 1G-MS, 9.6-INCHES
0010	215+57	USH 18/151 EB	LT	-	-	-	-	-	1	-	-	TYPE 2G-MS, 21.1-INCHES
0010	227+02	USH 18/151 EB	LT	-	-	-	-	-	1	-	-	TYPE 2G-MS, 19.38-INCHES
0010	241+16	USH 18/151 EB	LT	-	-	-	-	-	1	-	-	TYPE 1G-MS, 16.2-INCHES
0010	294+30	USH 18/151 EB	LT	-	-	-	-	-	1	-	-	TYPE 1G-MS, 16.6-INCHES
0010	294+82	USH 18/151 EB	LT	-	-	-	-	-	1	-	-	TYPE 2G-MS, 8.3-INCHES
0010	307+04	USH 18/151 EB	LT	-	-	-	-	-	1	-	-	TYPE 2G-MS, 19.1-INCHES
0010	341+98	USH 18/151 EB	LT	-	-	-	-	-	1	-	-	TYPE 1G-MS, 19.1-INCHES
0010	430+00	USH 18/151 EB	LT	-	-	-	-	-	1	-	-	TYPE 2G-MS, 5.8-INCHES
0010	443+47	USH 18/151 EB	LT	-	-	-	-	-	1	-	-	TYPE 1G-MS, 12.4-INCHES
0010	494+62	USH 18/151 EB	LT	-	-	-	-	-	1	-	-	TYPE 2G-MS, 10.8-INCHES
0010	517+91	USH 18/151 EB	LT	-	-	-	-	-	1	-	-	TYPE 2G-MS, 25.1-INCHES
0010	519+90	USH 18/151 EB	LT	-	-	-	-	-	1	-	-	TYPE 2G-MS, 10.9-INCHES
0010	525+81	USH 18/151 EB	LT	-	-	-	-	-	1	-	-	TYPE 2G-MS, 14.6-INCHES
0010	534+85	USH 18/151 WB	LT	-	-	-	-	-	-	1	-	TYPE 1G-MS, 4-INCHES
0010	535+04	USH 18/151 EB	LT	-	-	-	-	-	1	-	-	TYPE 1G-MS, 10.3-INCHES
0010	541+49	USH 18/151 WB	LT	-	-	-	-	-	-	1	-	TYPE 1G-MS, 4-INCHES
0010	545+63	USH 18/151 EB	LT	-	-	-	-	-	1	-	-	TYPE 1G-MS, 26.8-INCHES
0010	555+81	USH 18/151 EB	LT	-	-	-	-	-	1	-	-	TYPE 2G-MS, 10.1-INCHES
0010	575+00	USH 18/151 EB	LT	-	-	-	-	-	1	-	-	TYPE 2G-MS, 4.8-INCHES
0010	582+33	USH 18/151 EB	LT	-	-	-	-	-	1	-	-	TYPE 1G-MS, 18.6-INCHES
0010	596+90	USH 18/151 EB	LT	-	-	-	-	-	1	-	-	TYPE 1G-MS, 13.4-INCHES
0010	602+99	USH 18/151 EB	LT	-	-	-	-	-	1	-	-	TYPE 1G-MS, 14.1-INCHES
0010	637+45	USH 18/151 EB	LT	-	-	-	-	-	1	-	-	TYPE 1G-MS, 10.8-INCHES
0010	646+26	USH 18/151 EB	LT	-	-	-	-	-	1	-	-	TYPE 2G-MS, 15.9-INCHES
0010	651+06	USH 18/151 EB	LT	-	-	-	-	-	1	-	-	TYPE 2G-MS, 19.3-INCHES
0010	657+06	USH 18/151 EB	LT	-	-	-	-	-	1	-	-	TYPE 2G-MS, 14.7-INCHES
0010	663+12	USH 18/151 EB	LT	-	-	-	-	-	1	-	-	TYPE 2G-MS, 7.9-INCHES
0010	667+68	USH 18/151 EB	LT	-	-	-	-	-	1	-	-	TYPE 2G-MS, 11.5-INCHES
0010	680+23	USH 18/151 WB	LT	10	10	10	2	10	-	1	14	
0010	682+70	USH 18/151 WB	LT	10	10	10	2	10	-	1	14	
0010	684+33	USH 18/151 WB	LT	-	-	-	-	-	1	-	-	TYPE 2G-MS, 21.0-INCHES
0010	684+96	USH 18/151 WB	LT	10	10	10	2	10	-	1	14	
0010	687+87	USH 18/151 WB	LT	20	20	10	4	20	-	2	14	
0010	700+40	USH 18/151 EB	LT	10	10	10	2	10	-	1	14	
0010	702+85	USH 18/151 EB	LT	10	10	10	2	10	-	1	14	
0010	705+31	USH 18/151 EB	LT	10	10	10	2	10	-	1	14	
0010	708+42	USH 18/151 EB	LT	10	10	10	2	10	-	1	14	
0010	710+32	USH 18/151 EB	LT	10	10	10	2	10	-	1	14	
0010	712+80	USH 18/151 EB	LT	10	10	10	2	10	-	1	14	
0010	715+29	USH 18/151 EB	LT	10	10	10	2	10	-	1	14	
0010	717+21	USH 18/151 EB	LT	10	10	10	2	10	-	1	14	
0010	717+30	USH 18/151 EB	LT	10	10	10	2	10	-	1	14	
0010	717+40	USH 18/151 EB	LT	10	10	10	2	10	-	1	14	
0010	722+41	USH 18/151 EB	LT	10	10	10	2	10	-	1	14	
0010	722+85	USH 18/151 EB	LT	10	10	10	2	10	-	1	14	
0010	722+96	USH 18/151 EB	LT	10	10	10	2	10	-	1	14	
0010	729+30	USH 18/151 EB	LT	10	10	10	2	10	-	1	14	
		TOTAL 0010		190	190	180	38	190	29	21	252	

* ADDITIONAL QUANTITIES FOUND ELSEWHERE

EARTWOR

DIVISION	FROM/TO STATION	LOCATION	205.0100 COMMON EXCAVATION (1) CUT	(2)	UNEXPANDED FILL	EXPANDED FILL (13) FACTOR 1.25	MASS ORDINATE +/- (14)	WASTE	208.0100 BORROW
DIVISION 1									
TEMPORARY WIDENING	678+02 - 687+82		331		59	74	257	257	0
DIVISION 1 SUBTOTAL			331		59	74	257	257	0
DIVISION 2 (STAGE 1 & 2, PHASE 4)									
338+84 - 342+75		USH 18/151 EB AND WB MEDIAN	60		15	19	41	41	0
345+04 - 348+72			72		134	168	-96	0	..
483+5 - 48+1			2		2	3	-1	0	1
40+18 - 43+00			20		31	3	10	10	0
581+00 - 584+21			250		13	14	76	76	0
58+1 - 50+0			69		58	3	-4	0	4
58+5 - 50+00			148		2	3	112	112	0
1+45 - 5+0			82		1	1	81	81	0
1+45 - 5+0			52		4	80	-28	0	28
4+00 - 5+50			104		45	5	48	48	0
80+00 - 8+			142		0	0	142	142	0
83+0 - 0+			25		505	31	-35	0	35
3+24 - +4			4		3	4	0	0	0
1+31 - 23+11			83		18	23	1	1	0
4+34 - 52+31			5		2	34	23	23	0
818+0 - 824+50			66		69	8	-20	0	20
DIVISION 2 SUBTOTAL			301		1140	1425	154	208	504
DIVISION 3 (STAE 1 2 PASE 5)									
338+84 - 342+5		US 18/151 EB OUTSIDE	69		52	03	-34	0	34
35+08 - 3+35			42		99	124	-82	0	82
38+48 - 382+3			3		66	83	-10	0	10
483+5 - 48+1			15		113	141	1	1	0
545+3 - 584+21			11		21	2	3	3	0
1+45 - 5+0			121		4	5	11	11	0
13+81 - 1+51			145		9	11	134	134	0
40+50 - 44+1			8		5	1	1	1	0
818+0 - 824+50			12		14	218	-2	0	2
DIVISION 3 SUBTOTAL			3		1105	1381	-442	34	81

NOTES

(1) COMMON EXCAVATION IS TE SUM OF TE CUT COLUMN. ITEM NUMBER 205.0100
(2) SALVAED/UNSUABLE PAVEMENT MATERIAL IS INCLUDED IN CUT.
(13) EXPANDED FILL FACTOR = 1.25
EXPANDED FILL = (UNEXPANDED FILL) * FILL FACTOR
(14) TE MASS ORDINATE + OR - T CALCULATED FOR TE DIVISION. PLUS UANTIT INDICATES AN EXCESS OF MATERIAL WITIN TE DIVISION. MINUS INDICATES A SORTAE OF MATERIAL WITIN TE DIVISION.
(15) FACTORS USED TO COMPUTE ANTICIPATED WASTE AND TE COMPUTED WASTE VOLUME IDENTIFIED ARE FOR *GENERAL INFORMATION ONLY.*

3

EARTWOR

DIVISION	FROM/TO STATION	LOCATION	205.0100 COMMON EXCAVATION (1) CUT (2)	UNEXPANDED FILL	EXPANDED FILL (13) FACTOR 1.25	MASS ORDINATE +/- (14)	WASTE	208.0100 BORROW
DIVISION 4 (STAE 1 2 PASE 5)								
	345+04 - 348+2	US 18/151 WB OUTSIDE	4	82	103	-	0	9
	40+18 - 505+80		154	11	23	-85	0	85
	58+1 - 50+0		85	25	31	54	54	0
	3+24 - +4		128	1	24	104	104	0
	1+31 - 23+11		80	18	23	58	58	0
	43+41 - 44+25		53	0	0	53	53	0
	4+34 - 52+31		288	67	84	204	204	0
	823+44 - 825+3		2	4	5	5	5	0
DIVISION 4 SUBTOTAL			44	40	508	43	530	3
DIVISION 5								
	542+5 - 545+83	RAMP EV	51	35	44	7	7	0
DIVISION 5 SUBTOTAL			51	35	44	7	7	0
DIVISION								
	+2 - 0+25	RAMP PA	1	4	80	11	11	0
DIVISION SUBTOTAL			1	4	80	11	11	0
DIVISION								
	8+0 - 0+50	RAMP PB	11	5	81	-0	0	0
DIVISION SUBTOTAL			11	5	81	-0	0	0
DIVISION 8								
	40+55 - 42+50	RAMP EE	1	12	15	1	1	0
	5+00 - 3+25		1	223	2	-28	0	28
DIVISION 8 SUBTOTAL			1	235	24	-2	1	28
DIVISION (STAE 4)								
	182+41 - 220+40	US 18/151 EB AND WB MEDIAN	1	1454	1818	-151	0	151
	223+00 - 254+13		1	1848	2310	-230	0	230
	22+03 - 30+81		32	2	1203	-8	0	8
	311+5 - 31+8		158	141	1	-18	0	18
	412+50 - 48+5		218	1321	151	10	10	0
	43+00 - 505+80		482	8	123	30	30	0
	43+00 - 505+80		202	52	5	13	13	0
	50+00 - 544+40		2223	3	841	1382	1382	0
	545+3 - 581+00		158	84	855	23	23	0
	50+00 - 1+00		251	204	218	34	34	0
DIVISION SUBTOTAL			1050	32	115	-1153	302	4854
RAND TOTAL			114	1243	15545	20	885	1
TOTAL COMMON EXC			114					

NOTES

(1) COMMON EXCAVATION IS TE SUM OF TE CUT COLUMN. ITEM NUMBER 205.0100

(2) SALVAED/UNSUABLE PAVEMENT MATERIAL IS INCLUDED IN CUT.

(13) EXPANDED FILL FACTOR = 1.25

$$\text{EXPANDED FILL} = \frac{\text{(UNEXPANDED FILL)}}{\text{FILL FACTOR}}$$

(14) TE MASS ORDINATE + OR - T CALCULATED FOR TE DIVISION. PLUS UANTIT INDICATES AN EXCESS OF MATERIAL WITIN TE DIVISION. MINUS INDICATES A SORTAE OF MATERIAL WITIN TE DIVISION.

(15) FACTORS USED TO COMPUTE ANTICIPATED WASTE AND TE COMPUTED WASTE VOLUME IDENTIFIED ARE FOR *GENERAL INFORMATION ONLY.*

3

SHOULDER PREPARATION

CATEGORY	STATION	TO	STATION	LOCATION	211.0400 PREPARE FOUNDATION FOR ASPHALTIC SHOULDERS STA	REMARKS
0010	153+50	-	826+64	USH 18/151 EB	673	OUTSIDE SHOULDER
0010	153+50	-	826+64	USH 18/151 EB	673	MEDIAN SHOULDER
0010	153+50	-	826+64	USH 18/151 WB	673	OUTSIDE SHOULDER
0010	153+50	-	826+64	USH 18/151 WB	673	MEDIAN SHOULDER
				TOTAL 0010	2,693	

BASE AGGREGATE OPEN-GRADED

CATEGORY	STATION	TO	STATION	LOCATION	310.0110 BASE AGGREGATE OPEN-GRADED TON	REMARKS
0010	679+30	-	691+25	RAMP PA	47	RAMP PA UNDERDRAIN
				TOTAL 0010	47	

MILL AND RELAY

CATEGORY	STATION	TO	STATION	LOCATION	330.0100 MILL AND RELAY SY	REMARKS
0010	205+17	-	215+20	RAMP 'DC'	334	LEFT SIDE OF RAMP
0010	200+04	-	215+20	RAMP 'DC'	842	RIGHT SIDE OF RAMP
0010	196+48	-	218+48	RAMP 'DD'	733	LEFT SIDE OF RAMP
0010	208+12	-	218+24	RAMP 'DD'	337	RIGHT SIDE OF RAMP
0010	216+41	-	226+92	RAMP 'DB'	350	LEFT SIDE OF RAMP
0010	216+40	-	235+68	RAMP 'DB'	1,071	RIGHT SIDE OF RAMP
0010	437+32	-	461+95	RAMP 'GD'	1,368	LEFT SIDE OF RAMP
0010	451+44	-	462+12	RAMP 'GD'	475	RIGHT SIDE OF RAMP
0010	463+07	-	480+92	RAMP 'GA'	793	LEFT SIDE OF RAMP
0010	462+97	-	472+78	RAMP 'GA'	382	RIGHT SIDE OF RAMP
0010	507+03	-	511+66	RAMP 'WE'	154	LEFT SIDE OF RAMP
0010	502+91	-	511+66	RAMP 'WE'	486	RIGHT SIDE OF RAMP
0010	503+71	-	515+37	RAMP 'WW'	648	LEFT SIDE OF RAMP
0010	513+86	-	515+37	RAMP 'WW'	50	RIGHT SIDE OF RAMP
0010	542+46	-	543+96	RAMP 'EV'	58	LEFT SIDE OF RAMP
0010	542+46	-	552+98	RAMP 'EV'	555	RIGHT SIDE OF RAMP
0010	572+73	-	586+46	RAMP 'SD'	763	LEFT SIDE OF RAMP
0010	574+59	-	586+77	RAMP 'SD'	406	RIGHT SIDE OF RAMP
0010	573+09	-	583+97	RAMP 'SC'	363	LEFT SIDE OF RAMP
0010	568+98	-	583+68	RAMP 'SC'	817	RIGHT SIDE OF RAMP
0010	584+92	-	595+71	RAMP 'SB'	420	LEFT SIDE OF RAMP
0010	584+93	-	606+00	RAMP 'SB'	1,054	RIGHT SIDE OF RAMP
0010	587+73	-	602+76	RAMP 'SA'	752	LEFT SIDE OF RAMP
0010	587+32	-	597+14	RAMP 'SA'	355	RIGHT SIDE OF RAMP
0010	651+00	-	676+86	RAMP 'PD'	1,437	LEFT SIDE OF RAMP
0010	663+00	-	676+74	RAMP 'PD'	458	RIGHT SIDE OF RAMP
0010	661+06	-	676+35	RAMP 'PC'	510	LEFT SIDE OF RAMP
0010	652+00	-	676+19	RAMP 'PC'	1,344	RIGHT SIDE OF RAMP
0010	674+96	-	686+97	RAMP 'PB'	534	LEFT SIDE OF RAMP
0010	675+61	-	690+50	RAMP 'PB'	827	RIGHT SIDE OF RAMP
0010	680+03	-	690+38	RAMP 'PA'	575	LEFT SIDE OF RAMP
0010	679+89	-	687+90	RAMP 'PA'	445	RIGHT SIDE OF RAMP
0010	742+54	-	767+20	RAMP 'EW'	1,370	LEFT SIDE OF RAMP
0010	742+54	-	758+59	RAMP 'EW'	758	RIGHT SIDE OF RAMP
0010	744+50	-	761+23	RAMP 'EE'	837	LEFT SIDE OF RAMP
0010	744+50	-	770+53	RAMP 'EE'	1,446	RIGHT SIDE OF RAMP
				TOTAL 0010	24,106	

BASE AGGREGATE DENSE

CATEGORY	STATION	TO	STATION	LOCATION	305.0110 BASE AGGREGATE DENSE 3/4-INCH TON PHASE 1	PHASE 2	PHASE 3	PHASE 4	PHASE 5	RAMPS	305.0120 BASE AGGREGATE DENSE 1 1/4-INCH TON	* 624.0100 WATER MGAL
0010	153+50 'EB'	-	217+00 'EB'	TOWN HALL RD TO CTH PD	693	881	237	-	137	-	44	58
0010	156+00 'WB'		217+00 'WB'	TOWN HALL RD TO CTH PD	614	864	211	-	121	-		
0010				RAMP DA	-	-	-	-	-	199	-	3
0010				RAMP DB	-	-	-	-	-	287	13	5
0010				RAMP DC	-	-	-	-	-	238	2	4
0010				RAMP DD	-	-	-	-	-	283	5	5
0010	217+00 'EB'	-	342+86 'EB'	CTH PD TO CTH J	1440	1,734	508	-	297	-	67	61
0010	217+00 'WB'	-	342+84 'WB'	CTH PD TO CTH J	1,465	1,694	501	-	289	-	-	60
0010	344+62 'EB'	-	487+81 'EB'	CTH J TO SUGAR RIVER	1,536	1,990	536	-	312	-	83	67
0010	344+64 'WB'	-	487+65 'WB'	CTH J TO SUGAR RIVER	1,476	2,000	510	-	295	-	-	65
0010				RAMP GA	-	-	-	-	-	272	4	5
0010				RAMP GB	-	-	-	-	-	369	2	6
0010				RAMP GC	-	-	-	-	-	243	6	4
0010				RAMP GD	-	-	-	-	-	315	2	5
0010	489+68 'EB'	-	584+27 'EB'	SUGAR RIVER TO STH 69	914	1,835	321	-	150	-	54	50
0010	489+79 'WB'	-	584+71 'WB'	SUGAR RIVER TO STH 69	595	1,834	226	-	137	-		42
0010				RAMP WW	-	-	-	-	-	305	10	5
0010				RAMP WE	-	-	-	-	-	392	6	6
0010				RAMP EP	-	-	-	-	-	544	-	9
0010				RAMP EV	-	-	-	-	-	157	-	3
0010				RAMP SA	-	-	-	-	-	239	7	4
0010				RAMP SB	-	-	-	-	-	307	5	5
0010				RAMP SC	-	-	-	-	-	213	6	4
0010				RAMP SD	-	-	-	-	-	210	2	4
0010	586+56 'EB'	-	677+00 'EB'	STH 69 TO CTH PB	828	1,745	289	-	169	-	181	49
0010	587+04 'WB'	-	677+00 'WB'	STH 69 TO CTH PB	824	1,732	285	-	165	-	-	46
0010				RAMP PA	-	-	-	-	-	269	857	17
0010				RAMP PB	-	-	-	-	-	273	16	5
0010				RAMP PC	-	-	-	-	-	394	19	7
0010				RAMP PD	-	-	-	-	-	404	16	7
0010	677+00 'EB'	-	745+00 'EB'	CTH PB TO E VERONA RD	726	364	230	-	135	-	2,165	55
0010	677+00 'WB'	-	745+00 'WB'	CTH PB TO E VERONA RD	655	617	206	-	113	-	-	24
0010				RAMP EW	-	-	-	-	-	445	53	8
0010				RAMP EE	-	-	-	-	-	562	25	9
0010	745+00 'EB'	-	827+00 'EB'	E VERONA RD TO FITCHRONA RD	886	625	311	-	182	-	161	33
0010	745+00 'WB'	-	827+00 'WB'	E VERONA RD TO FITCHRONA RD	906	626	324	-	191	-	-	31
0010				STH 69	-	-	-	-	-	-	76	2
0010				CTH PB	-	-	-	-	-	-	16	1
				PHASE TOTAL	13,558	18,541	4,695	-	2,693	6,920		
				TOTAL 0010			46,407				3,903	774

* QUANTITY SHOWN ELESWHERE IN PLAN

3

CONTINUED 2 OF 2:

CATEGORY	STATION	TO	STATION	LOCATION	305.0110 BASE AGGREGATE DENSE 3/4-INCH TON PHASE 1	PHASE 2	PHASE 3	PHASE 4	PHASE 5	RAMPS	305.0120 BASE AGGREGATE DENSE 1 1/4-INCH TON	* 624.0100 WATER MGAL
0020	153+50 'EB'	-	217+00 'EB'	TOWN HALL RD TO CTH PD	-	-	-	154	-	-	-	-
0020	156+00 'WB'		217+00 'WB'	TOWN HALL RD TO CTH PD	-	-	-	150	-	-		
0020	217+00 'EB'	-	342+86 'EB'	CTH PD TO CTH J	-	-	-	386	-	-	-	-
0020	217+00 'WB'	-	342+84 'WB'	CTH PD TO CTH J	-	-	-	238	-	-		
0020	344+62 'EB'	-	487+81 'EB'	CTH J TO SUGAR RIVER	-	-	-	397	-	-	-	-
0020	344+64 'WB'	-	487+65 'WB'	CTH J TO SUGAR RIVER	-	-	-	410	-	-		
0020	489+68 'EB'	-	584+27 'EB'	SUGAR RIVER TO STH 69	-	-	-	344	-	-	-	-
0020	489+79 'WB'	-	584+71 'WB'	SUGAR RIVER TO STH 69	-	-	-	341	-	-		
0020	586+56 'EB'	-	677+00 'EB'	STH 69 TO CTH PB	-	-	-	333	-	-	-	-
0020	587+04 'WB'	-	677+00 'WB'	STH 69 TO CTH PB	-	-	-	324	-	-		
0020	677+00 'EB'	-	745+00 'EB'	CTH PB TO E VERONA RD	-	-	-	71	-	-	-	-
0020	677+00 'WB'	-	745+00 'WB'	CTH PB TO E VERONA RD	-	-	-	242	-	-		
0020	745+00 'EB'	-	827+00 'EB'	E VERONA RD TO FITCHRONA RD	-	-	-	164	-	-	-	-
0020	745+00 'WB'	-	827+00 'WB'	E VERONA RD TO FITCHRONA RD	-	-	-	158	-	-		
				TOTAL 0020	-	-	-	-	- 3,712	-	-	-
				PROJECT TOTAL				50,119			3,903	774

* QUANTITY SHOWN ELESWHERE IN PLAN

3

						BASE PATCHING							
								*	*	*			
						390.0303		416.0610	416.0620	690.0250	SPV.0090.03	SPV.0090.11	
CATEGORY	STATION	TO	STATION	LOCATION	DESCRIPTION	BASE PATCHING CONCRETE (PHASE 2) SY	BASE PATCHING CONCRETE (PHASE 3) SY	DRILLED TIE BARS EACH	DRILLED DOWEL BARS EACH	SAWING CONCRETE LF	SPECIAL (03. CONCRETE JOINT AND CRACK CLEANING) LF	SPECIAL (11. TRANSVERSE JOINT AND CRACK PLUNGE MILLING AND PATCHING) LF	
0010	153+50	-	217+37	BOP - CTH PD	EB	36	539	200	720	1,410	-	-	
0010	153+50	-	217+37	BOP - CTH PD	WB	15	140	54	196	378	-	-	
0010	217+37	-	254+94	CTH PD - SPRINGDALE CENTER RD	EB	39	268	210	528	1,179	-	-	
0010	217+37	-	254+94	CTH PD - SPRINGDALE CENTER RD	WB	-	152	51	180	350	-	-	
0010	254+94	-	343+74	SPRINGDALE CENTER RD - CTH J	EB	56	431	187	800	1,444	-	-	
0010	254+94	-	343+74	SPRINGDALE CENTER RD - CTH J	WB	-	284	102	420	765	-	-	
0010	343+74	-	488+77	CTH J - SUGAR RIVER	EB	98	696	301	1,280	2,343	-	-	
0010	343+74	-	488+77	CTH J - SUGAR RIVER	WB	116	756	317	1,200	2,295	-	-	
0010	488+77	-	585+54	SUGAR RIVER - STH 69	EB	142	523	236	704	1,476	-	-	
0010	488+77	-	585+54	SUGAR RIVER - STH 69	WB	115	295	142	428	892	-	-	
0010	585+54	-	676+89	STH 69 - CTH PB	EB	332	1,353	522	948	2,497	-	-	
0010	585+54	-	676+89	STH 69 - CTH PB	WB	126	2,004	661	1,500	3,502	-	-	
0010	676+89	-	745+20	CTH PB - E VERONA AVE	EB	155	413	198	596	1,244	-	-	
0010	676+89	-	745+20	CTH PB - E VERONA AVE	WB	376	1,336	616	2,256	4,405	-	-	
0010	745+20	-	826+64	E VERONA AVE - EOP	EB	123	849	303	676	1,610	-	-	
0010	745+20	-	826+64	E VERONA AVE - EOP	WB	245	934	417	1,404	2,814	-	-	
0010				RAMP DB		-	120	-	220	330	-	-	
0010				RAMP DC		-	59	-	100	150	-	-	
0010				RAMP DD		-	103	-	100	150	-	-	
0010				RAMP GA		-	15	-	20	30	-	-	
0010				RAMP GB		-	27	-	40	60	-	-	
0010				RAMP GC		-	32	-	40	60	-	-	
0010				RAMP GD		-	24	-	40	60	-	-	
0010				RAMP WE		-	37	-	60	90	-	-	
0010				RAMP WW		-	13	-	20	30	-	-	
0010				RAMP SA		-	68	-	80	120	-	-	
0010				RAMP SB		-	103	-	160	240	-	-	
0010				RAMP SC		-	12	-	20	30	-	-	
0010				RAMP SD		-	28	-	40	60	-	-	
0010				RAMP PA		-	170	17	188	282	-	228	
0010				RAMP PB		-	89	-	80	120	-	270	
0010				RAMP PC		-	246	-	300	450	-	390	
0010				RAMP PD		-	233	-	100	150	-	345	
0010				RAMP EE		-	196	-	140	210	-	480	
0010				RAMP EW		-	177	50	144	346	-	772	
0010				UNDISTRIBUTED		300	1,921	691	2,362	4,738	50,000	390	
					PHASE TOTAL	2,274	14,646	5,275	18,090	36,310	50,000	2,875	
					TOTAL 0010	16,920		5,275	18,090	36,310	50,000	2,875	

* ADDITIONAL QUANTITES FOUND ELSEWHERE

STRUCTURE APPROACH ITEMS

CATEGORY	STATION	TO	STATION	LOCATION	415.0410 CONCRETE PAVEMENT APPROACH SLAB SY	* 416.0610 DRILLED TIE BARS EACH	* 416.0620 DRILLED DOWEL BARS EACH	* 416.1010 CONCRETE SURFACE DRAINS CY	645.0130 GEOTEXTILE TYPE R SY	* 690.0250 SAWING CONCRETE LF	REMARKS
0010	341+34	-	346+14	USH 18 WB	-	-	-	9	60	100	B-13-380
0010	341+36	-	346+12	USH 18 EB	-	-	-	-	-	-	B-13-051
0010	486+23	-	491+29	USH 18 WB	-	-	-	9	50	110	B-13-052
0010	486+31	-	491+18	USH 18 EB	44	13	26	8	50	98	B-13-383
0010	583+15	-	588+06	USH 18 WB	62	13	40	8	50	171	B-13-408
0010	582+77	-	588+00	USH 18 EB	124	26	78	9	60	287	B-13-407
0010	674+48	-	679+92	USH 18 WB	123	26	78	9	50	267	B-13-412
0010	674+20	-	677+96	USH 18 EB	121	26	78	9	60	178	B-13-411
0010	689+69	-	694+26	USH 18 WB	145	40	79	12	80	212	B-13-414
0010	691+05	-	694+28	USH 18 EB	145	40	79	13	80	165	B-13-413
0010	716+10	-	720+49	USH 18 WB	46	13	26	11	70	-	B-13-416
0010	716+01	-	720+44	USH 18 EB	-	-	-	-	-	-	B-13-415
0010	742+40	-	747+26	USH 18 WB	67	14	39	5	30	154	B-13-418
0010	742+79	-	747+92	USH 18 EB	65	13	40	5	30	147	B-13-417
0010	823+85	-	825+83	USH 18 WB	-	-	-	4	30	104	B-13-397
0010	823+33	-	826+68	USH 18 EB	148	26	87	19	70	228	B-13-398
				TOTAL 0010	1,090	250	650	130	770	2,221	

* ADDITIONAL QUANTITIES FOUND ELSEWHERE

CONCRETE PAVEMENT

CATEGORY	STATION	TO	STATION	LOCATION	415.0090 CONCRETE PAVEMENT 9-INCH SY	415.0105 CONCRETE PAVEMENT 10 1/2-INCH SY	REMARKS
0010	489+68	-	489+74	USH 18/151 EB	18	-	B-13-383
0010	584+21	-	586+74	USH 18/151 EB	54	-	B-13-407
0010	584+59	-	584+65	USH 18/151 WB	18	-	B-13-408
0010	675+62	-	675+70	USH 18/151 EB	24	-	B-13-411
0010	675+49	-	677+93	USH 18/151 WB	41	-	B-13-412
0010	677+96		687+79	USH 18/151 EB	-	2,860	-
0010	691+05	-	692+78	USH 18/151 EB	39	-	B-13-413
0010	691+13	-	692+76	USH 18/151 WB	59	-	B-13-414
0010	717+54	-	717+60	USH 18/151 WB	18	-	B-13-416
0010	744+30	-	744+38	USH 18/151 WB	24	-	B-13-418
0010	744+23	-	744+29	USH 18/151 EB	18	-	B-13-417
0010	824+77		826+68	USH 18/151 EB	39	-	B-13-398
0010	676+35	-	677+22	RAMP PD	269	-	-
0010	679+28	-	685+21	RAMP PA	1,457	-	-
0010	144+55	-	149+25	CTH PB NB	1,434	-	-
0010	150+39	-	155+01	CTH PB SB	1,061	-	-
0010	676+24	-	676+88	RAMP PC	360	-	-
0010	740+86	-	741+96	RAMP EW	417	-	-
				TOTAL 0010	5,350	2,860	

3

416 CONCRETE REPAIR REPLACE

CATEGORY	STATION	TO	STATION	LOCATION	* 416.0610 DRILLED TIE BARS EACH	* 416.0620 DRILLED DOWEL BARS EACH	416.1710 CONCRETE PAVEMENT REPAIR SY	416.1720 CONCRETE PAVEMENT REPLACEMENT SY	* 690.0250 SAWING CONCRETE LF	REMARKS
0010	254+94	-	343+74	SRINGDALE CENTER RD - CTH J	21	112	63	-	277	EB
0010	488+77	-	585+54	SUGAR RIVER - STH 69	6	16	22	-	56	EB
0010	488+77	-	585+54	SUGAR RIVER - STH 69	9	32	29	-	93	WB
0010	676+89	-	745+20	CTH PB - E VERONA RD	32	16	-	63	106	EB
0010				RAMP GC	30	44	75	-	278	-
0010				RAMP WW	6	80	173	-	363	-
0010				RAMP WE	-	32	63	-	135	-
0010				RAMP PB	6	48	33	-	132	-
0010				STH 69 NB	446	1,256	430	158	1,918	-
0010				STH 69 SB	354	713	168	182	1,146	
0010				CTH PB NB	170	427	192	-	775	-
0010				CTH PB SB	40	100	41	-	183	-
				TOTAL 0010	1,120	2,876	1,290	403	5,462	

COLD WEATHER PAVING

CATEGORY	STATION	TO	STATION	LOCATION	450.4000 HMA COLD WEATHER PAVING TON	REMARKS
0010	153+50	-	489+00	N/A	7,000	STAGE 1, PHASE 1
				TOTAL 0010	7,000	

ROUT AND SEAL

CATEGORY	STATION	TO	STATION	LOCATION	415.6000.S ROUT AND SEAL LF	REMARKS
0010	677+96	-	687+83	USH 18/151	1974	
0010	219+39	-	226+80	RAMP DA	1482	
0010	463+40	-	472+72	RAMP GB	1864	
0010	454+42	-	462+37	RAMP GC	1590	
0010	511+65	-	527+47	RAMP WE	3164	
0010	515+37	-	526+62	RAMP WW	2250	
0010	737+67	-	763+00	RAMP EE	2000	
0010	740+86	-	742+55	RAMP EW	338	
0010	679+30	-	681+41	RAMP PA	422	
				TOTAL 0010	15,084	

HMA PAVEMENT

CATEGORY	PHASE	STATION	TO	STATION	LOCATION	REFERENCE LINE	455.0605 TACK COAT GAL	460.7423 HMA PAVEMENT 3 HT 58-28 H TON	460.7424 HMA PAVEMENT 4 HT 58-28 H TON	460.8624 HMA PAVEMENT 4 SMA 58-28 V TON	460.4210.S HMA PAVEMENT INTERLAYER TON	REMARKS
0010	1	153+50	-	217+00	TOWN HALL RD - CTH PD	EB	-	1,020	-	-	-	
0010	1					WB	-	932	-	-	-	
0010	1	217+00	-	344+00	CTH PD - CTH J	EB	-	2,183	-	-	-	
0010	1					WB	-	2,177	-	-	-	
0010	1	343+00	-	489+00	CTH J - SUGAR RIVER	EB	-	2,417	-	-	-	
0010	1					WB	-	2,329	-	-	-	
0010	1	489+00	-	586+00	SUGAR RIVER - STH 69	EB	-	1,452	-	-	-	OUTSIDE SHOULDER
0010	1					WB	-	867	-	-	-	
0010	1	586+00	-	677+00	STH 69 - CTH PB	EB	-	1,344	-	-	-	
0010	1					WB	-	1,419	-	-	-	
0010	1	677+00	-	745+00	CTH PB - E VERONA RD	EB	-	1,084	-	-	-	
0010	1					WB	-	1,073	-	-	-	
0010	1	745+00	-	826+64	E VERONA RD - FITCHRONA RD	EB	-	1,210	-	-	-	
0010	1					WB	-	1,313	-	-	-	
					SUBTOTAL - PHASE 1		-	20,820	-	-	-	
0010	2	153+50	-	217+00	TOWN HALL RD - CTH PD	EB	-	1,068	-	-	-	
0010	2					WB	-	1,028	-	-	-	
0010	2	217+00	-	344+00	CTH PD - CTH J	EB	-	2,396	-	-	-	
0010	2					WB	-	2,418	-	-	-	
0010	2	343+00	-	489+00	CTH J - SUGAR RIVER	EB	-	2,532	-	-	-	
0010	2					WB	-	2,633	-	-	-	
0010	2	489+00	-	586+00	SUGAR RIVER - STH 69	EB	-	1,589	-	-	-	INSIDE SHOULDER
0010	2					WB	-	813	-	-	-	
0010	2	586+00	-	677+00	STH 69 - CTH PB	EB	-	1,494	-	-	-	
0010	2					WB	-	1,487	-	-	-	
0010	2	677+00	-	745+00	CTH PB - E VERONA RD	EB	-	1,220	-	-	-	
0010	2					WB	-	1,093	-	-	-	
0010	2	745+00	-	826+64	E VERONA RD - FITCHRONA RD	EB	-	1,354	-	-	-	
0010	2					WB	-	1,341	-	-	-	
					SUBTOTAL - PHASE 2		-	22,466	-	-	-	
0010	3	153+50	-	217+00	TOWN HALL RD - CTH PD	EB	928	1,670	-	-	-	
0010	3					WB	876	1,577	-	-	-	
0010	3	217+00	-	344+00	CTH PD - CTH J	EB	1,788	3,217	-	-	-	
0010	3					WB	1,929	3,472	-	-	-	
0010	3	343+00	-	489+00	CTH J - SUGAR RIVER	EB	2,110	3,797	-	-	-	
0010	3					WB	2,074	3,732	-	-	-	
0010	3	489+00	-	586+00	SUGAR RIVER - STH 69	EB	1,152	2,072	-	-	-	OUTSIDE LANE & SHOULDER LOWER LAYER
0010	3					WB	1,089	1,959	-	-	-	
0010	3	586+00	-	677+00	STH 69 - CTH PB	EB	1,118	2,011	-	-	-	
0010	3					WB	1,202	2,163	-	-	-	
0010	3	677+00	-	745+00	CTH PB - E VERONA RD	EB	697	1,253	-	-	-	
0010	3					WB	911	1,638	-	-	-	
0010	3	745+00	-	826+64	E VERONA RD - FITCHRONA RD	EB	1,111	1,999	-	-	-	
0010	3					WB	1,147	2,064	-	-	-	
					SUBTOTAL - PHASE 3		18,132	32,624	-	-	-	

3

HMA PAVEMENT

CONTINUED 2 OF 3:

CATEGORY	PHASE	STATION	TO	STATION	LOCATION	REFERENCE LINE	455.0605 TACK COAT GAL	460.7423 HMA PAVEMENT 3 HT 58-28 H TON	460.7424 HMA PAVEMENT 4 HT 58-28 H TON	460.8624 HMA PAVEMENT 4 SMA 58-28 V TON	460.4210.S HMA PAVEMENT INTERLAYER TON	REMARKS
0010	4	153+50	-	217+00	TOWN HALL RD - CTH PD	EB	1,300	1,312	-	1,050	-	
0010	4					WB	1,245	1,248	-	1,000	-	
0010	4	217+00	-	344+00	CTH PD - CTH J	EB	2,581	2,575	-	2,090	-	
0010	4					WB	2,720	2,752	-	2,169	-	
0010	4	343+00	-	489+00	CTH J - SUGAR RIVER	EB	2,977	2,994	-	2,388	-	
0010	4					WB	3,026	3,045	-	2,427	-	
0010	4	489+00	-	586+00	SUGAR RIVER - STH 69	EB	1,677	1,606	-	1,426	-	INSIDE LANE & SHOULDER
0010	4					WB	1,924	1,925	-	1,614	-	UPPER & LOWER LAYERS
0010	4	586+00	-	677+00	STH 69 - CTH PB	EB	1,891	1,633	-	1,388	-	
0010	4					WB	1,759	1,754	-	1,423	-	
0010	4	677+00	-	745+00	CTH PB - E VERONA RD	EB	937	875	-	802	-	
0010	4					WB	1,184	1,104	-	1,035	-	
0010	4	745+00	-	826+64	E VERONA RD - FITCHRONA RD	EB	1,603	1,603	-	1,308	-	
0010	4					WB	1,603	1,598	-	1,301	-	
					SUBTOTAL - PHASE 4		26,427	26,024	-	21,421	-	
0010	5	153+50	-	217+00	TOWN HALL RD - CTH PD	EB	680	469	-	967	-	
0010	5					WB	643	418	-	935	-	
0010	5	217+00	-	344+00	CTH PD - CTH J	EB	1,324	943	-	1,862	-	
0010	5					WB	1,395	1,055	-	1,914	-	
0010	5	343+00	-	489+00	CTH J - SUGAR RIVER	EB	1,536	1,064	-	2,183	-	
0010	5					WB	1,516	1,014	-	2,183	-	
0010	5	489+00	-	586+00	SUGAR RIVER - STH 69	EB	900	575	-	1,317	-	OUTSIDE LANE & SHOULDER
0010	5					WB	841	351	-	1,375	-	UPPER LAYER
0010	5	586+00	-	677+00	STH 69 - CTH PB	EB	867	514	-	1,299	-	
0010	5					WB	895	545	-	1,330	-	
0010	5	677+00	-	745+00	CTH PB - E VERONA RD	EB	576	473	-	761	-	
0010	5					WB	757	675	-	959	-	
0010	5	745+00	-	826+64	E VERONA RD - FITCHRONA RD	EB	825	542	-	1,196	-	
0010	5					WB	856	599	-	1,213	-	
					SUBTOTAL - PHASE 5		13,611	9,237	-	19,494	-	

HMA PAVEMENT

CONTINUED 3 OF 3:

CATEGORY	PHASE	STATION	TO	STATION	LOCATION	REFERENCE LINE	455.0605 TACK COAT GAL	460.7423 HMA PAVEMENT 3 HT 58-28 H TON	460.7424 HMA PAVEMENT 4 HT 58-28 H TON	460.8624 HMA PAVEMENT 4 SMA 58-28 V TON	460.4210.S HMA PAVEMENT INTERLAYER TON	REMARKS
0010		197+59	-	215+21	RAMP DD		5,071	-	1,054	-	-	
0010		196+48	-	218+47	RAMP DC		4,032	-	839	-	-	
0010		216+39	-	238+53	RAMP DB		5,109	-	1,062	-	-	
0010		219+39	-	234+89	RAMP DA		2,052	-	471	-	-	
0010		11+40	-	12+43	SPRINGDALE CENTER RD		457	-	78	-	-	
0010		20+40	-	21+17	BEAT RD		360	-	61	-	-	
0010		25+46	-	26+30	ERB RD		423	-	72	-	-	
0010		30+36	-	31+16	DAIRY RIDGE RD		377	-	65	-	-	
0010		35+36	-	35+97	WINDY OAK LN		205	-	36	-	-	
0010		40+87	-	41+45	SPRINGROSE CIR		206	-	36	-	-	
0010		42+63	-	42+84	SPRINGROSE CIR PE		80	-	13	-	-	
0010		45+55	-	46+37	SPRINGROSE RD SOUTH		430	-	74	-	-	
0010		47+59	-	48+39	SPRINGROSE RD NORTH		430	-	74	-	-	
0010		437+32	-	462+12	RAMP GD		5,908	-	1,228	-	-	
0010		443+43	-	462+37	RAMP GC		2,555	-	144	-	-	
0010		463+40	-	487+81	RAMP GB		3,683	-	822	-	-	
0010		462+97	-	484+08	RAMP GA		4,828	-	1,004	-	-	
0010		503+94	-	527+47	RAMP WE		2,528	-	615	-	-	
0010		505+37	-	526+62	RAMP WW		2,952	-	682	-	-	
0010		529+98	-	570+72	RAMP EP		12,852	1,703	378	946	-	
0010		571+80	-	586+77	RAMP SD		3,957	-	823	-	-	
0010		568+98	-	583+97	RAMP SC		3,606	-	750	-	-	
0010		584+83	-	608+74	RAMP SB		5,907	-	1,226	-	-	
0010		587+32	-	605+56	RAMP SA		4,127	-	859	-	-	
0010		648+01	-	676+35	RAMP PD		8,510	-	1,400	-	170	
0010		649+00	-	676+24	RAMP PC		8,383	-	1,271	-	218	
0010		674+98	-	686+96	RAMP PB		3,891	-	531	-	130	
0010		679+90	-	690+47	RAMP PA		5,409	-	753	-	179	
0010		737+67	-	773+65	RAMP EE		10,814	-	1,663	-	273	
0010		741+95	-	769+49	RAMP EW		9,676	-	1,465	-	253	
					SUBTOTAL		118,818	- 1,703	- 19,549	- 946	1,223	
					TOTAL 0010		176,988	112,874	19,549	41,861	1,223	
0020	4	153+50	-	217+00	TOWN HALL RD - CTH PD	EB	212	267	946	208	-	
0020	4					WB	204	257	853	200	-	
0020	4	217+00	-	344+00	CTH PD - CTH J	EB	420	529	630	412	-	
0020	4					WB	420	529	817	412	-	
0020	4	343+00	-	489+00	CTH J - SUGAR RIVER	EB	478	602	531	468	-	
0020	4					WB	477	602	624	468	-	
0020	4	489+00	-	586+00	SUGAR RIVER - STH 69	EB	316	398	-	310	-	INSIDE 3' SHOULDER
0020	4					WB	163	204	-	159	-	
0020	4	586+00	-	677+00	STH 69 - CTH PB	EB	297	375	-	291	-	
0020	4					WB	296	373	-	290	-	
0020	4	677+00	-	745+00	CTH PB - E VERONA RD	EB	212	267	-	208	-	
0020	4					WB	214	270	-	210	-	
0020	4	745+00	-	826+64	E VERONA RD - FITCHRONA RD	EB	262	330	-	257	-	
0020	4					WB	265	333	-	259	-	
					TOTAL 0020		4,236	5,336	4,401	4,152	-	

3

PWL MIXTURE USE TABLE

LOCATION	MIXTURE USE	STATION	TO	STATION	UNDERLYING SURFACE	BID ITEM	TONS	THICKNESS	MIXTURE ACCEPTANCE	DENSITY ACCEPTANCE
6' MEDIAN SHOULDER	(SINGLE REPLACE EXISTING)	153+50 EB	-	826+67.75 EB	EXISTING BASE COURSE	4HT 58-28 H	11,610	4.5"	QMP AS PER SS 460.	INCENTIVE DENSITY HMA PAVEMENT 460.2000
6' OUTSIDE SHOULDER	(SINGLE REPLACE EXISTING)	153+50 EB	-	826+67.75 EB	EXISTING BASE COURSE	4HT 58-28 H	11,610	4.5"	QMP AS PER SS 460.	INCENTIVE DENSITY HMA PAVEMENT 460.2000
26' TRAVEL LANES	(LOWER)	153+50 EB	-	826+67.75 EB	EXISTING CONCRETE PAVEMENT	3HT 58-28 H	25,158	2.25"	PWL INCENTIVE AIR VOIDS HMA PAVEMENT 460.2010	INCENTIVE DENSITY PWL HMA PAVEMENT 460.2005
6' OUTSIDE SHOULDERS	(LOWER)	153+50 EB	-	826+67.75 EB	2.0" 4HT 58-28 H	3HT 58-28 H	5,805	2.25"	PWL INCENTIVE AIR VOIDS HMA PAVEMENT 460.2010	DEPARTMENT TESTED, NOT ELEGIBLE FOR INCENTIVE
6' MEDIAN SHOULDER	(LOWER)	153+50 EB	-	826+67.75 EB	2.0" 3 HT 58-28 H	3HT 58-28 H	5,805	2.25"	PWL INCENTIVE AIR VOIDS HMA PAVEMENT 460.2010	DEPARTMENT TESTED, NOT ELEGIBLE FOR INCENTIVE
MISCELLANEOUS/SIDE ROADS	(LOWER)	153+50 EB	-	826+67.75 EB	EXISTING BITUMINOUS PAVEMENT	4HT 58-28 H	434	2.25"	PWL INCENTIVE AIR VOIDS HMA PAVEMENT 460.2010	DEPARTMENT TESTED, NOT ELEGIBLE FOR INCENTIVE
RAMPS/SHOULDERS	(LOWER)	153+50 EB	-	826+67.75 EB	EXISTING CONCRETE PAVEMENT	4HT 58-28 H	4,064	1.75"	PWL INCENTIVE AIR VOIDS HMA PAVEMENT 460.2010	DEPARTMENT TESTED, NOT ELEGIBLE FOR INCENTIVE
RAMPS/SHOULDERS	(LOWER)	153+50 EB	-	826+67.75 EB	1" PAVEMENT INTERLAYER	4HT 58-28 H	1,220	1.75"	PWL INCENTIVE AIR VOIDS HMA PAVEMENT 460.2010	DEPARTMENT TESTED, NOT ELEGIBLE FOR INCENTIVE
24' TRAVEL LANES	(UPPER)	153+50 EB	-	826+67.75 EB	2.25" 3HT 58-28 H	4 SMA 58-28 V	18,062	1.75"	PWL INCENTIVE AIR VOIDS HMA PAVEMENT 460.2010	INCENTIVE DENSITY PWL HMA PAVEMENT 460.2005
8' SHOULDERS	(UPPER)	153+50 EB	-	826+67.75 EB	2.25" 3HT 58-28 H	4HT 58-28 H	6,020	1.75"	PWL INCENTIVE AIR VOIDS HMA PAVEMENT 460.2010	DEPARTMENT TESTED, NOT ELEGIBLE FOR INCENTIVE
6' MEDIAN SHOULDER	(UPPER)	153+50 EB	-	826+67.75 EB	2.25" 3HT 58-28 H	4 SMA 58-28 V	4,515	1.75"	PWL INCENTIVE AIR VOIDS HMA PAVEMENT 460.2010	DEPARTMENT TESTED, NOT ELEGIBLE FOR INCENTIVE
MISCELLANEOUS/SIDE ROADS	(UPPER)	153+50 EB	-	826+67.75 EB	2.25" 3HT 58-28 H	4HT 58-28 H	434	1.75"	PWL INCENTIVE AIR VOIDS HMA PAVEMENT 460.2010	DEPARTMENT TESTED, NOT ELEGIBLE FOR INCENTIVE
RAMPS/SHOULDERS	(UPPER)	153+50 EB	-	826+67.75 EB	1.75" 4HT 58-28 H	4HT 58-28 H	4,064	1.75"	PWL INCENTIVE AIR VOIDS HMA PAVEMENT 460.2010	DEPARTMENT TESTED, NOT ELEGIBLE FOR INCENTIVE
6' MEDIAN SHOULDER	(SINGLE REPLACE EXISTING)	156+00 WB	-	826+00 WB	EXISTING BASE COURSE	4HT 58-28 H	11,610	4.5"	QMP AS PER SS 460.	INCENTIVE DENSITY HMA PAVEMENT 460.2000
6' OUTSIDE SHOULDER	(SINGLE REPLACE EXISTING)	156+00 WB	-	826+00 WB	EXISTING BASE COURSE	4HT 58-28 H	11,610	4.5	QMP AS PER SS 460.	INCENTIVE DENSITY HMA PAVEMENT 460.2000
26' TRAVEL LANES	(LOWER)	156+00 WB	-	826+00 WB	EXISTING CONCRETE PAVEMENT	3HT 58-28 H	25,158	2.25"	PWL INCENTIVE AIR VOIDS HMA PAVEMENT 460.2010	INCENTIVE DENSITY PWL HMA PAVEMENT 460.2005
8' OUTSIDE SHOULDERS	(LOWER)	156+00 WB	-	826+00 WB	2.0" 3HT 58-28 H	3HT 58-28 H	5,805	2.25"	PWL INCENTIVE AIR VOIDS HMA PAVEMENT 460.2010	DEPARTMENT TESTED, NOT ELEGIBLE FOR INCENTIVE

CONTINUED ON NEXT PAGE

CONTINUED 2 OF 2:

LOCATION	MIXTURE USE	STATION	TO	STATION	UNDERLYING SURFACE	BID ITEM	TONS	THICKNESS	MIXTURE ACCEPTANCE	DENSITY ACCEPTANCE
6' MEDIAN SHOULDER	(LOWER)	156+00 WB	-	826+00 WB	2" 4 HT 58-28 H	3HT 58-28 H	5,805	2.25"	PWL INCENTIVE AIR VOIDS HMA PAVEMENT 460.2010	DEPARTMENT TESTED, NOT ELEGIBLE FOR INCENTIVE
MISCELLANEOUS/SIDE ROADS	(LOWER)	156+00 WB	-	826+00 WB	EXISTING BITUMINOUS PAVEMENT	4HT 58-28 H	434	2.25"	PWL INCENTIVE AIR VOIDS HMA PAVEMENT 460.2010	DEPARTMENT TESTED, NOT ELEGIBLE FOR INCENTIVE
RAMPS/SHOULDERS	(LOWER)	156+00 WB	-	826+00 WB	EXISTING CONCRETE PAVEMENT	4HT 58-28 H	3,493	1.75"	PWL INCENTIVE AIR VOIDS HMA PAVEMENT 460.2010	DEPARTMENT TESTED, NOT ELEGIBLE FOR INCENTIVE
RAMPS/SHOULDERS	(LOWER)	156+00 WB	-	826+00 WB	1" PAVEMENT INTERLAYER	4HT 58-28 H	1,424	1.75"	PWL INCENTIVE AIR VOIDS HMA PAVEMENT 460.2010	DEPARTMENT TESTED, NOT ELEGIBLE FOR INCENTIVE
12' TRAVEL LANES	(UPPER)	156+00 WB	-	826+00 WB	2.25" 3HT 58-28 H	4 SMA 58-28 V	18,062	1.75"	PWL INCENTIVE AIR VOIDS HMA PAVEMENT 460.2010	INCENTIVE DENSITY PWL HMA PAVEMENT 460.2005
8' SHOULDERS	(UPPER)	156+00 WB	-	826+00 WB	2.25" 3HT 58-28 H	4HT 58-28 H	6,020	1.75"	PWL INCENTIVE AIR VOIDS HMA PAVEMENT 460.2010	DEPARTMENT TESTED, NOT ELEGIBLE FOR INCENTIVE
6' MEDIAN SHOULDER	(UPPER)	156+00 WB	-	826+00 WB	2.25" 3HT 58-28 H	4 SMA 58-28 V	4,515	1.75"	PWL INCENTIVE AIR VOIDS HMA PAVEMENT 460.2010	DEPARTMENT TESTED, NOT ELEGIBLE FOR INCENTIVE
MISCELLANEOUS/SIDE ROADS	(UPPER)	156+00 WB	-	826+00 WB	2.25" 3HT 58-28 H	4HT 58-28 H	434	1.75"	PWL INCENTIVE AIR VOIDS HMA PAVEMENT 460.2010	DEPARTMENT TESTED, NOT ELEGIBLE FOR INCENTIVE
RAMPS/SHOULDERS	(UPPER)	156+00 WB	-	826+00 WB	1.75" 4HT 58-28 H	4HT 58-28 H	3,492	1.75"	PWL INCENTIVE AIR VOIDS HMA PAVEMENT 460.2010	DEPARTMENT TESTED, NOT ELEGIBLE FOR INCENTIVE

ASPHALTIC FLUMES

CATEGORY	STATION	TO	STATION	LOCATION	465.0315 ASPHALTIC FLUMES SY
0010	677+00 'EB'	-	745+00 'EB'	USH 18/151	33
0010	745+00 'EB'	-	827+00 'EB'	USH 18/151	17
				TOTAL 0010	50

CLEANING CULVERT PIPES

CATEGORY	STATION	TO	STATION	LOCATION	520.8700 CLEANING CULVERT PIPES EACH
0010	344+00 'EB'	-	489+00 'EB'	USH 18/151 EB	1
0010	489+00 'EB'	-	585+00 'EB'	USH 18/151 EB	3
0010	677+00 'EB'	-	745+00 'EB'	USH 18/151 EB	2
				TOTAL 0010	6

3

ASPHALTIC SHOULDER RUMBLE STRIPS

CATEGORY	STATION	TO	STATION	LOCATION	465.0400 ASPHALTIC SHOULDER RUMBLE STRIPS LF
0010	153+50	-	217+37	TOWN HALL RD - CTH PD	23,163
0010	217+37	-	254+94	CTH PD - SPRINGDALE CENTER RD	12,855
0010	254+94	-	343+74	SRINGDALE CENTER RD - CTH J	31,663
0010	343+74	-	488+77	CTH J - SUGAR RIVER	49,711
0010	488+77	-	585+54	SUGAR RIVER - STH 69	32,614
0010	585+54	-	676+89	STH 69 - CTH PB	30,790
0010	676+89	-	745+20	CTH PB - E VERONA RD	24,568
0010	745+20	-	826+64	E VERONA RD - FITCHRONA RD	29,836
				TOTAL 0010	235,200

3

CURB & GUTTER

CATEGORY	STATION	TO	STATION	LOCATION	601.0413 CONCRETE CURB & GUTTER 6-INCH SLOPED 30-INCH TYPE G LF	601.0452 CONCRETE CURB & GUTTER INTEGRAL 30-INCH TYPE D LF	601.0454 CONCRETE CURB & GUTTER INTEGRAL 30-INCH TYPE J LF	601.0553 CONCRETE CURB & GUTTER 4-INCH SLOPED 36-INCH TYPE D LF	601.0588 CONCRETE CURB & GUTTER 4-INCH SLOPED 36-INCH TYPE TBT LF	601.0590 CONCRETE CURB & GUTTER 4-INCH SLOPED 36-INCH TYPE TBTT LF	620.0300 CONCRETE MEDIAN SLOPED NOSE SF	REMARKS
0010	679+34	-	679+91	RAMP PA	94	-	66	-	-	-	39	-
0010	-	-	-	SPRINGDALE CENTER RD	-	-	-	163	-	-	-	-
0010	-	-	-	ERB RD	-	-	-	155	-	-	-	-
0010	-	-	-	DAIRY RIDGE RD	-	-	-	152	-	-	-	-
0010	-	-	-	SPRING ROSE RD	-	-	-	369	-	-	-	-
0010	344+42	-	345+04	USH 18/151 WB	-	-	-	-	78	21	-	B-13-380
0010	489+53	-	489+83	USH 18/151 EB	-	-	-	-	33	14	-	B-13-383
0010	489+56	-	490+18	USH 18/151 WB	-	-	-	-	80	22	-	B-13-052
0010	586+30	-	586+82	USH 18/151 EB	-	-	-	-	21	39	-	B-13-407
0010	586+68	-	587+20	USH 18/151 WB	-	-	-	-	27	23	-	B-13-408
0010	675+46	-	675+97	USH 18/151 EB	-	-	-	-	-	24	-	B-13-411
0010	675+62	-	675+87	USH 18/151 WB	-	-	-	-	25	28	-	B-13-412
0010	677+81	-	678+02	USH 18/151 EB	-	-	-	-	6	13	-	B-13-411
0010	692+46	-	692+78	USH 18/151 EB	-	-	-	-	16	-	-	B-13-413
0010	692+52	-	693+24	USH 18/151 WB	-	-	-	-	107	-	-	B-13-414
0010	717+60	-	717+77	USH 18/151 WB	-	-	-	-	-	15	-	B-13-416
0010	718+74	-	719+31	USH 18/151 WB	-	-	-	-	62	42	-	B-13-416
0010	744+46	-	744+71	USH 18/151 WB	-	-	-	-	-	25	-	B-13-418
0010	744+11	-	744+64	USH 18/151 EB	-	-	-	-	18	33	-	B-13-417
0010	746+17	-	746+72	USH 18/151 WB	-	-	-	-	37	18	-	B-13-418
0010	824+39	-	825+23	USH 18/151 EB	-	-	-	-	67	38	-	B-13-398
0010	825+29	-	825+80	USH 18/151 WB	-	-	-	-	20	30	-	B-13-397
0010	-	-	-	STH 69	-	86	-	-	-	-	-	Between Ramp 'SC' and Ramp 'SB'
		-										
				TOTAL 0010	94	86	66	839	597	385	39	

CONCRETE SIDEWALK

CATEGORY	STATION	TO	STATION	LOCATION	602.0410 CONCRETE SIDEWALK 5-INCH SF	REMARKS
0010	679+36'PA'	-	679+89'PA'	'PA' RAMP	536	EB OFF RAMP FOR CTH PB, PORKCHOP AT BOTTOM OF RAMP
				TOTAL 0010	536	

3

TEMPOARARY PRECAST BARRIER

CATEGORY	STATION	TO	STATION	LOCATION	603.8000 CONCRETE BARRIER TEMPORARY PRECAST DELIVERED LF	603.8125 CONCRETE BARRIER TEMPORARY PRECAST INSTALLED LF	REMARKS
0010	674+00	-	729+40	USH 18 EB	5,550	5,550	STAGE 2 PHASE 2
0010	676+77	-	688+00	USH 18 EB	-	1,125	STAGE 2 PHASE 3
0010	680+00	-	691+00	USH 18 WB	1,100	1,100	STAGE 2 PHASE 3
				TOTAL 0010	6,650	7,775	

EDGEDRAIN ITEMS

CATEGORY	STATION	TO	STATION	LOCATION	612.0206 PIPE UNDERDRAIN UNPERFORATED 6-INCH LF	612.0806 APRON ENDWALLS FOR UNDERDRAIN REINFORCED CONCRETE 6-INCH EACH	646.5520 MARKING OUTFALL EPOXY EACH	SPV.0090.09 SPECIAL (09. PIPE UNDERDRAIN (6-INCH) WITH GEOTEXTILE FABRIC AND AGGREGATE) LF	REMARKS
0010	680+01'PA'	-	681+41'PA'	OUTSIDE SHOULDER 'PA' RAMP	48	2	2	129	RAMP 'PA'
0010	185+43'EB'			MEDIAN	3	1	1	-	-
0010	190+31'EB'			MEDIAN	3	1	1	-	-
0010	195+39'EB'			MEDIAN	3	1	1	-	-
0010	200+34'EB'			MEDIAN	3	1	1	-	-
0010	204+04'EB'			MEDIAN	3	1	1	-	-
0010	209+99'EB'			MEDIAN	3	1	1	-	-
0010	215+08'EB'			MEDIAN	3	1	1	-	-
0010	219+96'EB'			MEDIAN	3	1	1	-	-
				TOTAL 0010	72	10	10	129	

RIPRAP

CATEGORY	STATION	TO	STATION	LOCATION	606.0200 RIPRAP MEDIUM CY	645.0120 GEOTEXTILE TYPE HR SY
0010	344+00 'EB'	-	489+00 'EB'	USH 18/151 EB	2	2
0010	489+00 'EB'	-	585+00 'EB'	USH 18/151 EB	6	6
0010	585+00 'EB'	-	677+00 'EB'	USH 18/151 EB	7	7
0010	677+00 'EB'	-	745+00 'EB'	USH 18/151 EB	8	8
0010	745+00 'EB'	-	827+00 'EB'	USH 18/151 EB	7	7
				TOTAL 0010	30	30

MEDIAN INLETS

CATEGORY	STATION	LOCATION	203.0100 REMOVING SMALL PIPE CULVERTS EACH	611.0642 INLET COVERS TYPE MS EACH	611.3902 INLETS MEDIAN 2 GRATE EACH	REMARKS
0010	802+50	'EB' MEDIAN	1	2	1	EXISTING CATTLE PASS MEDIAN INLET REMOVE 4' OF 66"X47" CMCP
		TOTAL 0010	1	2	1	

BARRIER SYSTEM GRADING SHAPING FINISHING

CATEGORY	STATION	TO	STATION	LOCATION	614.0010 BARRIER SYSTEM GRADING SHAPING FINISHING EACH
0010	461+80	-	463+60	CTH J - SUGAR RIVER	1
0010	518+60	-	520+40	SURGAR RIVER - STH 69	1
0010	618+45	-	620+25	STH 69 - CTH PB	1
				TOTAL 0010	3

GUARDRAIL

CATEGORY	STATION	TO	STATION	LOCATION	614.0220 STEEL THRIE BEAM BULLNOSE TERMINAL EACH	614.0230 STEEL THRIE BEAM LF	614.0400 ADJUSTING STEEL PLATE BEAM GUARD LF	614.2300 MGS GUARDRAIL 3 LF	614.2500 MGS THRIE BEAM TRANSITION LF	614.2610 MGS GUARDRAIL TERMINAL EAT EACH	614.2620 MGS GUARDRAIL TERMINAL TYPE 2 EACH	614.2630 MGS GUARDRAIL SHORT RADIUS TERMINAL EACH	REMARKS
0010	180+53	-	182+22	USH 18 EB	2	125	-	-	-	-	-	-	MEDIAN
0010	216+51	-	218+20	USH 18 EB	2	125	-	-	-	-	-	-	MEDIAN
0010	339+99	-	343+04	USH 18 EB	-	-	-	212.5	39.4	1	-	-	LT
0010	340+12	-	343+04	USH 18 EB	-	-	-	200.0	39.4	1	-	-	RT
0011	342+23	-	343+00	USH 18 WB	-	-	-	139.4	-	-	1	-	RT
0010	344+47	-	347+52	USH 18 WB	-	-	-	212.5	39.4	1	-	-	RT
0010	344+49	-	347+17	USH 18 WB	-	-	-	175.5	39.4	1	-	-	LT
0010	364+99	-	369+13	USH 18 EB	-	-	-	412.5	-	-	1	1	RT - CONNECTS TO SHORT RADIUS
0010	379+67	-	382+45	USH 18 EB	-	-	-	225.0	-	1	1	-	RT
0010	461+78	-	463+60	USH 18 EB	2	150	-	-	-	-	-	-	MEDIAN
0010	484+78	-	487+96	USH 18 EB	-	-	-	225.0	39.4	1	-	-	LT
0010	485+16	-	487+96	USH 18 EB	-	-	-	187.5	39.4	1	-	-	RT
0010	489+64	-	492+19	USH 18 WB	-	-	-	162.5	39.4	1	-	-	RT
0010	489+64	-	495+31	USH 18 WB	-	-	-	475.0	39.4	1	-	-	LT
0010	518+49	-	520+16	USH 18 EB	2	125	-	-	-	-	-	-	MEDIAN
0010	528+10	-	529+77	USH 18 EB	2	125	-	-	-	-	-	-	MEDIAN
0010	541+89	-	549+06	USH 18 WB	-	-	717	-	-	-	-	-	LT
0010	543+52	-	545+69	RAMP EV	-	-	-	162.5	-	1	1	-	RT
0010	568+48	-	572+39	USH 18 WB	-	-	391	-	-	-	-	-	RT
0010	568+51	-	572+00	USH 18 WB	-	-	352	-	-	-	-	-	LT
0010	581+44	-	584+61	USH 18 EB	-	-	-	225.0	39.4	1	-	-	LT
0010	581+73	-	584+41	USH 18 EB	-	-	-	175.0	39.4	1	-	-	RT
0010	586+65	-	589+82	USH 18 WB	-	-	-	225.0	39.4	1	-	-	RT
0010	586+88	-	589+93	USH 18 WB	-	-	-	212.5	39.4	1	-	-	LT
0010	618+46	-	620+29	USH 18 EB	2	150	-	-	-	-	-	-	MEDIAN
0010	643+35	-	645+55	USH 18 EB	2	225	-	-	-	-	-	-	MEDIAN
0010	672+57	-	676+01	USH 18 EB	-	-	-	250.0	39.4	1	-	-	LT
0010	673+33	-	675+84	USH 18 EB	-	-	-	162.5	39.4	1	-	-	RT
0010	673+94	-	675+71	USH 18 WB	-	-	-	137.5	39.4	-	1	-	RT
0010	683+58	-	689+90	USH 18 WB	-	-	-	462.5	39.4	1	-	-	RT
0010	685+05	-	687+86	USH 18 EB	-	-	-	187.5	39.4	1	-	-	LT
0010	687+61	-	690+53	RAMP PB	-	-	-	200.0	39.4	1	-	-	RT
0010	692+66	-	695+83	USH 18 WB	-	-	-	225.0	39.4	1	-	-	RT
0010	692+70	-	695+75	USH 18 WB	-	-	-	212.5	39.4	1	-	-	LT
0010	714+96	-	717+64	USH 18 EB	-	-	-	175.0	39.4	1	-	-	RT
0010	718+74	-	721+91	USH 18 WB	-	-	-	225.0	39.4	1	-	-	RT
0010	718+76	-	721+44	USH 18 WB	-	-	-	175.0	39.4	1	-	-	LT
0010	741+43	-	744+66	USH 18 EB	-	-	-	225.0	39.4	1	-	-	RT
0010	741+75	-	742+67	RAMP EE	-	-	-	-	39.4	1	-	-	RT
0010	743+51	-	744+52	USH 18 WB	-	-	-	62.5	39.4	-	1	-	LT
0010	745+92	-	751+09	USH 18 WB	-	-	-	487.5	39.4	1	-	-	LT
0010	746+16	-	748+75	USH 18 WB	-	-	-	225.0	39.4	1	-	-	RT
0010	756+94	-	762+99	RAMP EE	-	-	-	550.0	-	1	1	-	RT
0010	819+02	-	824+94	USH 18 EB	-	-	-	500.0	39.4	1	-	-	RT
0010	821+46	-	825+26	USH 18 EB	-	-	-	287.5	39.4	1	-	-	LT
0010	823+57	-	825+83	USH 18 WB	-	-	-	187.5	39.4	-	1	-	LT
				TOTAL 0010	14	1,025	1,460	8,564.9	1,221.4	31	8	1	

3

FENCE WOVEN WIRE

CATEGORY	STATION	TO	STATION	LOCATION	616.0100.01 FENCE WOVEN WIRE (HEIGHT) (01. 4 FT) LF	REMARKS
0010	489+59'WB'	-	490+22'WB'	OUTSIDE WB SHOULDER	81	FENCE OFF THE NE CORNER OF BRIDGE OVER SUGAR RIVER
				TOTAL 0010	81	

EC MOBILIZATION

CATEGORY	STATION	TO	STATION	LOCATION	628.1905 MOBILIZATIONS EROSION CONTROL EACH	628.1910 MOBILIZATIONS EMERGENCY EROSION CONTROL EACH	REMARKS
0010	153+50	-	826+67	USH 18/151	50	12	ENTIRE PROJECT
				TOTAL 0010	50	12	

3

FINISHING ITEMS

CATEGORY	STATION	TO	STATION	LOCATION	625.0105 TOPSOIL CY	625.0500 SALVAGED TOPSOIL SY	627.0200 MULCHING SY	629.0205 FERTILIZER TYPE A CWT	630.0130 SEEDING MIXTURE NO. 30 LB	630.0200 SEEDING TEMPORARY LB	630.0500 SEED WATER MGAL	631.1100 SOD EROSION CONTROL SY
0010	153+50 'EB'	-	217+25 'EB'	USH 18/151	-	12,797	12,797	16	460	690	287	-
0010	217+25 'EB'	-	344+00 'EB'	USH 18/151	-	25,017	25,017	32	907	1,360	562	-
0010	344+00 'EB'	-	489+00 'EB'	USH 18/151	-	29,138	29,138	37	1,046	1,570	654	-
0010	489+00 'EB'	-	585+00 'EB'	USH 18/151	-	35,711	35,711	35	988	1,483	802	-
0010	585+00 'EB'	-	677+00 'EB'	USH 18/151	-	32,676	32,676	32	919	1,379	734	-
0010	677+00 'EB'	-	745+00 'EB'	USH 18/151	-	5,847	8,914	14	405	608	131	11
0010	745+00 'EB'	-	827+00 'EB'	USH 18/151	-	4,384	4,534	15	375	570	98	5
0010	-	-	-	325+00 'EB'	45	-	-	-	-	-	-	-
0010	-	-	-	367+73 'EB'	45	-	-	-	-	-	-	-
0010	-	-	-	708+40 'WB'	45	-	-	-	-	-	-	-
0010				UNDISTRIBUTED	35	36,430	37,213	49	1,300	1,940	831	4
				TOTAL 0010	170	182,000	186,000	230	6,400	9,600	4,100	20

CRASH CUSHIONS TEMPORARY

CATEGORY	STATION	OFFSET	LOCATION	614.0905 CRASH CUSHIONS TEMPORARY EA	BACK WIDTH	OBJECT MARKING PATTERN	CRASH TEST LEVEL	TRAFFIC DIRECTION	TRAFFIC LOCATION	CRASH CUSHION SHIELDS
0010	674+00 EB	14.0' RT	USH 18 EB	1	2	OM-3L (WO5-58L)	TL-3	UNIDIRECTIONAL	RT	TEMPORARY CONCRETE BARRIER ON SHOULDER FOR WORK ZONE
0010	INGRESS POINT WHERE NEEDED	14.0' RT	USH 18 EB	1	2	OM-3L (WO5-58L)	TL-3	UNIDIRECTIONAL	RT	TEMPORARY CONCRETE BARRIER ON SHOULDER FOR WORK ZONE
0010	INGRESS POINT WHERE NEEDED	7.0' RT	USH 18 EB	1	2	OM-3R (WO5-58R)	TL-3	UNIDIRECTIONAL	LT	TEMPORARY CONCRETE BARRIER ON SHOULDER FOR WORK ZONE
0010	691+00 WB	9.0' LT	USH 18 WB	1	2	OM-3R (WO5-58R)	TL-3	UNIDIRECTIONAL	LT	TEMPORARY CONCRETE BARRIER ON SHOULDER FOR WORK ZONE
0010	INGRESS POINT WHERE NEEDED	9.0' LT	USH 18 WB	1	2	OM-3R (WO5-58R)	TL-3	UNIDIRECTIONAL	LT	TEMPORARY CONCRETE BARRIER ON SHOULDER FOR WORK ZONE
			TOTAL 0010	5						

EROSION CONTROL

CATEGORY	STATION	TO	STATION	LOCATION	628.1504 SILT FENCE LF	628.1520 SILT FENCE MAINTENANCE LF	628.2002 EROSION MAT CLASS I TYPE A SY	628.2004 EROSION MAT CLASS I TYPE B SY	628.7005 INLET PROTECTION TYPE A EACH	628.7010 INLET PROTECTION TYPE B EACH	628.7015 INLET PROTECTION TYPE C EACH	628.7504 TEMPORARY DITCH CHECKS LF
0010	153+50 'EB'	-	217+25 'EB'	USH 18/151 EB	-	-	12,800	-	7	-	-	80
0010	217+25 'EB'	-	344+00 'EB'	USH 18/151 EB	470	1,410	23,170	1,850	13	-	-	380
0010	344+00 'EB'	-	489+00 'EB'	USH 18/151 EB	1,660	4,980	27,420	1,720	15	-	-	680
0010	489+00 'EB'	-	585+00 'EB'	USH 18/151 EB	1,400	4,200	33,660	2,050	13	2	8	40
0010	585+00 'EB'	-	677+00 'EB'	USH 18/151 EB	760	2,280	31,410	1,260	18	-	21	20
0010	677+00 'EB'	-	745+00 'EB'	USH 18/151 EB	2,930	8,790	7,210	1,810	14	27	11	80
0010	745+00 'EB'	-	827+00 'EB'	USH 18/151 EB	2,520	7,560	1,180	3,070	10	1	4	-
0010				UNDISTRIBUTED	2,460	7,380	34,250	2,940	25	10	11	320
				TOTAL 0010	12,200	36,600	171,100	14,700	115	40	55	1,600

WATER

CATEGORY	LOCATION	* 624.0100 WATER MGAL	REMARKS
0010	UNDISTRIBUTED	400	DUST CONTROL
	TOTAL 0010	400	

* QUANTITY SHOWN ELESWHERE IN PLAN

CULVERT PIPE CHECKS

CATEGORY	STATION	TO	STATION	LOCATION	628.7555 CULVERT PIPE CHECKS EACH	REMARKS
0010	153+50 'EB'	-	217+25 'EB'	USH 18/151	0	
0010	217+25 'EB'	-	344+00 'EB'	USH 18/151	1	
0010	344+00 'EB'	-	489+00 'EB'	USH 18/151	0	
0010	489+00 'EB'	-	585+00 'EB'	USH 18/151	0	
0010	585+00 'EB'	-	677+00 'EB'	USH 18/151	0	
0010	677+00 'EB'	-	745+00 'EB'	USH 18/151	0	
0010				UNDISTRIBUTED	3	
				TOTAL 0010	4	

3

PERMANENT SIGNING

SIGN #	SIGN CODE	SIGN SIZE WxH (IN)	634.0612 POSTS WOOD 4X6-INCH X 12-FT EACH	634.0614 POSTS WOOD 4X6-INCH X 14-FT EACH	634.0616 POSTS WOOD 4X6-INCH X 16-FT EACH	637.1220 SIGNS TYPE I REFLECTIVE SH SF	637.2210 SIGNS TYPE II REFLECTIVE H SF	637.2215 SIGNS TYPE II REFLECTIVE H FOLDING SF	637.2230 SIGNS TYPE II REFLECTIVE F SF	638.2102 MOVING SIGNS TYPE II EACH	638.2601 REMOVING SIGNS TYPE I EACH	638.2602 REMOVING SIGNS TYPE II EACH	638.3000 REMOVING SMALL SIGN SUPPORTS EACH	SIGN MOUNTED ON SAME POST AS	REMARKS
ALL CAT. 0010															
02-01M	D10-5	21X60	-	1	-	-	-	-	-	1	-	-	1	02-02M	ENHANCED REFERENCE MARKER (1 SHEILD)
02-02M	D10-5	21X60	-	-	-	-	-	-	-	-	-	-	-	02-01M	ENHANCED REFERENCE MARKER (1 SHEILD)
03-01M	D10-5	21X60	-	1	-	-	-	-	-	1	-	-	1	03-02M	ENHANCED REFERENCE MARKER (1 SHEILD)
03-02M	D10-5	21X60	-	-	-	-	-	-	-	-	-	-	-	03-01M	ENHANCED REFERENCE MARKER (1 SHEILD)
04-01M	D10-5	21X60	-	1	-	-	-	-	-	1	-	-	1	04-02M	ENHANCED REFERENCE MARKER (1 SHEILD)
04-02M	D10-5	21X60	-	-	-	-	-	-	-	-	-	-	-	04-01M	ENHANCED REFERENCE MARKER (1 SHEILD)
04-03M	D1-2	60X45	-	-	2	-	-	-	-	1	-	-	2	-	TWO DESTINATION (ARROWS)
04-04M	R5-1	48X48	-	-	1	-	-	-	-	1	-	-	1	-	DO NOT ENTER
06-01M	R5-1A	42X30	-	1	-	-	-	-	-	1	-	-	1	-	WRONG WAY
06-02M	D1-1	60X15	2	-	-	-	-	-	-	1	-	-	2	-	ONE DESTINATION (ARROW)
06-03M	D10-5	21X60	-	1	-	-	-	-	-	1	-	-	1	06-04M	ENHANCED REFERENCE MARKER (1 SHEILD)
06-04M	D10-5	21X60	-	-	-	-	-	-	-	-	-	-	-	06-03M	ENHANCED REFERENCE MARKER (1 SHEILD)
06-05M	R5-1A	42X30	-	1	-	-	-	-	-	1	-	-	1	-	WRONG WAY
07-01M	R5-1A	42X30	-	1	-	-	-	-	-	1	-	-	1	-	WRONG WAY
10-01M	R5-1A	42X30	-	1	-	-	-	-	-	1	-	-	1	-	WRONG WAY
11-01M	D10-5	21X60	-	1	-	-	-	-	-	1	-	-	1	11-02M	ENHANCED REFERENCE MARKER (1 SHEILD)
11-02M	D10-5	21X60	-	-	-	-	-	-	-	-	-	-	-	11-01M	ENHANCED REFERENCE MARKER (1 SHEILD)
11-03M	D10-5	21X60	-	1	-	-	-	-	-	1	-	-	1	11-04M	ENHANCED REFERENCE MARKER (1 SHEILD)
11-04M	D10-5	21X60	-	-	-	-	-	-	-	-	-	-	-	11-03M	ENHANCED REFERENCE MARKER (1 SHEILD)
12-01/R	E8-1A	192X126	-	-	-	168	-	-	-	-	1	-	-	-	VERONA EXITS
12-01M	D10-5	21X60	-	1	-	-	-	-	-	1	-	-	1	12-02M	ENHANCED REFERENCE MARKER (1 SHEILD)
12-02M	D10-5	21X60	-	-	-	-	-	-	-	-	-	-	-	12-01M	ENHANCED REFERENCE MARKER (1 SHEILD)
12-03M	D10-5	21X60	-	1	-	-	-	-	-	1	-	-	1	12-04M	ENHANCED REFERENCE MARKER (1 SHEILD)
12-04M	D10-5	21X60	-	-	-	-	-	-	-	-	-	-	-	12-03M	ENHANCED REFERENCE MARKER (1 SHEILD)
13-01M	D10-5	21X60	-	1	-	-	-	-	-	1	-	-	1	13-02M	ENHANCED REFERENCE MARKER (1 SHEILD)
13-02M	D10-5	21X60	-	-	-	-	-	-	-	-	-	-	-	13-01M	ENHANCED REFERENCE MARKER (1 SHEILD)
13-03M	D10-5	21X60	-	1	-	-	-	-	-	1	-	-	1	13-04M	ENHANCED REFERENCE MARKER (1 SHEILD)
13-04M	D10-5	21X60	-	-	-	-	-	-	-	-	-	-	-	13-03M	ENHANCED REFERENCE MARKER (1 SHEILD)
13-05M	D10-5	21X60	-	1	-	-	-	-	-	1	-	-	1	13-06M	ENHANCED REFERENCE MARKER (1 SHEILD)
13-06M	D10-5	21X60	-	-	-	-	-	-	-	-	-	-	-	13-05M	ENHANCED REFERENCE MARKER (1 SHEILD)
14-01M	D10-5	21X60	-	1	-	-	-	-	-	1	-	-	1	14-02M	ENHANCED REFERENCE MARKER (1 SHEILD)
14-02M	D10-5	21X60	-	-	-	-	-	-	-	-	-	-	-	14-01M	ENHANCED REFERENCE MARKER (1 SHEILD)
15-01M	D10-5	21X60	-	1	-	-	-	-	-	1	-	-	1	15-02M	ENHANCED REFERENCE MARKER (1 SHEILD)
15-02M	D10-5	21X60	-	-	-	-	-	-	-	-	-	-	-	15-01M	ENHANCED REFERENCE MARKER (1 SHEILD)
16-01M	D10-5	21X60	-	1	-	-	-	-	-	1	-	-	1	16-02M	ENHANCED REFERENCE MARKER (1 SHEILD)
16-02M	D10-5	21X60	-	-	-	-	-	-	-	-	-	-	-	16-01M	ENHANCED REFERENCE MARKER (1 SHEILD)
16-03M	D10-5	21X60	-	1	-	-	-	-	-	1	-	-	1	16-04M	ENHANCED REFERENCE MARKER (1 SHEILD)
16-04M	D10-5	21X60	-	-	-	-	-	-	-	-	-	-	-	16-03M	ENHANCED REFERENCE MARKER (1 SHEILD)
16-05M	D10-5	21X60	-	1	-	-	-	-	-	1	-	-	1	16-06M	ENHANCED REFERENCE MARKER (1 SHEILD)
16-06M	D10-5	21X60	-	-	-	-	-	-	-	-	-	-	-	16-05M	ENHANCED REFERENCE MARKER (1 SHEILD)
17-01M	D10-5	21X60	-	1	-	-	-	-	-	1	-	-	1	17-02M	ENHANCED REFERENCE MARKER (1 SHEILD)
17-02M	D10-5	21X60	-	-	-	-	-	-	-	-	-	-	-	17-01M	ENHANCED REFERENCE MARKER (1 SHEILD)

3

PERMANENT SIGNING

BLANK(A6),"",$	SIGN CODE	SIGN SIZE WxH (IN)	634.0612 POSTS WOOD 4X6-INCH X 12-FT EACH	634.0614 POSTS WOOD 4X6-INCH X 14-FT EACH	634.0616 POSTS WOOD 4X6-INCH X 16-FT EACH	637.1220 SIGNS TYPE I REFLECTIVE SH SF	637.2210 SIGNS TYPE II REFLECTIVE H SF	637.2215 SIGNS TYPE II REFLECTIVE H FOLDING SF	637.2230 SIGNS TYPE II REFLECTIVE F SF	638.2102 MOVING SIGNS TYPE II EACH	638.2601 REMOVING SIGNS TYPE I EACH	638.2602 REMOVING SIGNS TYPE II EACH	638.3000 REMOVING SMALL SIGN SUPPORTS EACH	SIGN MOUNTED ON SAME POST AS	REMARKS
17-03M	D10-5	21X60	-	1	-	-	-	-	-	1	-	-	1	17-04M	ENHANCED REFERENCE MARKER (1 SHEILD)
17-04M	D10-5	21X60	-	-	-	-	-	-	-	-	-	-	-	17-03M	ENHANCED REFERENCE MARKER (1 SHEILD)
18-01M	D10-5	21X60	-	1	-	-	-	-	-	1	-	-	1	18-02M	ENHANCED REFERENCE MARKER (1 SHEILD)
18-02M	D10-5	21X60	-	-	-	-	-	-	-	-	-	-	-	18-01M	ENHANCED REFERENCE MARKER (1 SHEILD)
18-03M	D10-5	21X60	-	1	-	-	-	-	-	1	-	-	1	18-04M	ENHANCED REFERENCE MARKER (1 SHEILD)
18-04M	D10-5	21X60	-	-	-	-	-	-	-	-	-	-	-	18-03M	ENHANCED REFERENCE MARKER (1 SHEILD)
19-01M	D10-5	21X60	-	1	-	-	-	-	-	1	-	-	1	19-02M	ENHANCED REFERENCE MARKER (1 SHEILD)
19-02M	D10-5	21X60	-	-	-	-	-	-	-	-	-	-	-	19-01M	ENHANCED REFERENCE MARKER (1 SHEILD)
19-03M	D10-5	21X60	-	1	-	-	-	-	-	1	-	-	1	19-04M	ENHANCED REFERENCE MARKER (1 SHEILD)
19-04M	D10-5	21X60	-	-	-	-	-	-	-	-	-	-	-	19-03M	ENHANCED REFERENCE MARKER (1 SHEILD)
19-05M	D10-5	21X60	-	1	-	-	-	-	-	1	-	-	1	19-06M	ENHANCED REFERENCE MARKER (1 SHEILD)
19-06M	D10-5	21X60	-	-	-	-	-	-	-	-	-	-	-	19-05M	ENHANCED REFERENCE MARKER (1 SHEILD)
20-01M	D10-5	21X60	-	1	-	-	-	-	-	1	-	-	1	20-02M	ENHANCED REFERENCE MARKER (1 SHEILD)
20-02M	D10-5	21X60	-	-	-	-	-	-	-	-	-	-	-	20-01M	ENHANCED REFERENCE MARKER (1 SHEILD)
20-03M	D10-5	21X60	-	1	-	-	-	-	-	1	-	-	1	20-04M	ENHANCED REFERENCE MARKER (1 SHEILD)
20-04M	D10-5	21X60	-	-	-	-	-	-	-	-	-	-	-	20-03M	ENHANCED REFERENCE MARKER (1 SHEILD)
20-05M	D10-5	21X60	-	1	-	-	-	-	-	1	-	-	1	20-06M	ENHANCED REFERENCE MARKER (1 SHEILD)
20-06M	D10-5	21X60	-	-	-	-	-	-	-	-	-	-	-	20-05M	ENHANCED REFERENCE MARKER (1 SHEILD)
21-01M	D10-5	21X60	-	1	-	-	-	-	-	1	-	-	1	21-02M	ENHANCED REFERENCE MARKER (1 SHEILD)
21-02M	D10-5	21X60	-	-	-	-	-	-	-	-	-	-	-	21-01M	ENHANCED REFERENCE MARKER (1 SHEILD)
22-01M	D10-5	21X60	-	1	-	-	-	-	-	1	-	-	1	-	ENHANCED REFERENCE MARKER (1 SHEILD)
22-02M	D10-5	21X60	-	1	-	-	-	-	-	1	-	-	1	-	ENHANCED REFERENCE MARKER (1 SHEILD)
22-03M	D1-2	60X30	-	2	-	-	-	-	-	1	-	-	2	-	TWO DESTINATION (ARROWS)
23-01/R	J3-2	48X57	-	-	-	-	19.00	-	-	-	-	1	-	23-16(TS)	DIRECTIONAL ASSEMBLY (2 HEADED PANEL)
23-02/R	R4-7	24X30	-	-	-	-	5.00	-	-	-	-	1	1	23-14/15(TS)	KEEP RIGHT
23-03/R	R4-7	24X30	-	-	-	-	5.00	-	-	-	-	1	-	23-04(TS)	KEEP RIGHT
23-04/R	R1-1F	30X30	-	-	-	-	-	5.18	-	-	-	1	-	23-03(TS)	STOP SIGN (FOLDING)
23-05/R	R1-1F	30X30	-	-	-	-	-	5.18	-	-	-	1	-	23-06(TS)	STOP SIGN (FOLDING)
23-06/R	R3-2	24X24	-	-	-	-	4.00	-	-	-	-	1	-	23-05(TS)	NO LEFT TURN SYMBOL
23-07/R	R5-1	30X30	-	-	-	-	6.25	-	-	-	-	1	1	23-08/10(TS)	DO NOT ENTER
23-08/R	R6-2R	24X30	-	-	-	-	5.00	-	-	-	-	1	-	23-07/10(TS)	ONE WAY RIGHT ARROW
23-09/R	W12-1D	24X24	1	-	-	-	-	-	4	-	-	1	1	-	DOUBLE DOWN ARROW
23-10/R	R1-1F	30X30	-	-	-	-	-	5.18		-	-	1	-	23-07/08(TS)	STOP SIGN (FOLDING)
23-11/R	R1-1F	30X30	-	-	-	-	-	5.18	-	-	-	1	-	23-13(TS)	STOP SIGN (FOLDING)
23-12/R	R1-1F	30X30	-	-	-	-	-	5.18	-	-	-	1	-	-	STOP SIGN (FOLDING)
23-13/R	R6-2L	24X30	-	-	-	-	5.00	-	-	-	-	1	-	23-11(TS)	ONE WAY LEFT ARROW
23-14/R	R3-2	24X24	-	-	-	-	4.00	-	-	-	-	1	1	23-02/15(TS)	NO LEFT TURN SYMBOL
23-15/R	R1-1F	30X30	-	-	-	-	-	5.18	-	-	-	1	-	23-02/14(TS)	STOP SIGN (FOLDING)
23-16/R	R1-1F	30X30	-	-	-	-	-	5.18	-	-	-	1	-	23-01(TS)	STOP SIGN (FOLDING)
24-01/R	J3-2	48X57	-	-	1	-	19.00	-	-	-	-	1	1	-	DIRECTIONAL ASSEMBLY (2 HEADED PANEL)
24-01M	D10-5	21X60	-	1	-	-	-	-	-	1	-	-	1	-	ENHANCED REFERENCE MARKER (1 SHEILD)
24-02M	D10-5	21X60	-	1	-	-	-	-	-	1	-	-	1	-	ENHANCED REFERENCE MARKER (1 SHEILD)
25-01/R	E3-1	120X60	-	-	-	50	-	-	-	-	1	-	-	-	PAOLI EXIT 79
26-01M	D10-5	21X60	-	1	-	-	-	-	-	1	-	-	1	-	ENHANCED REFERENCE MARKER (1 SHEILD)
29-01M	D10-5	21X60	-	1	-	-	-	-	-	1	-	-	1	29-02M	ENHANCED REFERENCE MARKER (1 SHEILD)
29-02M	D10-5	21X60	-	-	-	-	-	-	-	-	-	-	-	29-01M	ENHANCED REFERENCE MARKER (1 SHEILD)
		TOTAL 0010	3	39	4	218	72.25	36.26	4	41	2	17	49		

3

PAVEMENT MARKING

CATEGORY	STATION	TO	STATION	LOCATION	646.1020 MARKING LINE EPOXY 4-INCH (YELLOW) LF	646.1020 MARKING LINE EPOXY 4-INCH (WHITE) LF	646.1040 MARKING LINE GROOVED WET REF EPOXY 4-INCH (YELLOW) LF	646.1040 MARKING LINE GROOVED WET REF EPOXY 4-INCH (WHITE) LF	646.1545 MARKING LINE GROOVED WET REF CONTRAST EPOXY 4-INCH LF	646.1555 MARKING LINE GROOVED CONTRAST PERMANENT TAPE 4-INCH (WHITE SKIPS) LF	646.1555 MARKING LINE GROOVED CONTRAST PERMANENT TAPE 4-INCH (WHITE DOTTED)	646.3020 MARKING LINE EPOXY 8-INCH (WHITE) LF	646.3555 MARKING LINE GROOVED CONTRAST PERMANENT TAPE 8-INCH (WHITE SOLID) LF	646.3555 MARKING LINE GROOVED CONTRAST PERMANENT TAPE 8-INCH (WHITE DOTTED) LF	646.5020 MARKING ARROW EPOXY EACH	646.5120 MARKING WORD EPOXY EACH	646.6120 MARKING STOP LINE EPOXY 18-INCH LF	646.6464 COLD WEATHER MARKING EPOXY 4-INCH LF	646.7220 MARKING CHEVRON EPOXY 24-INCH LF	646.8120 MARKING CURB EPOXY LF	646.8220 MARKING ISLAND NOSE EPOXY EACH
0010	153+50	-	217+00	MAINLINE EB	-	-	6,350	5,532	-	1,587	153	-	283	-	-	-	-	-	-	-	-
0010	156+00	-	217+00	MAINLINE WB	-	-	6,120	4,914	-	1,532	-	-	610	-	-	-	-	-	-	-	-
0010	217+00	-	344+00	MAINLINE EB	-	-	12,183	11,162	-	3,177	-	-	1,187	-	2	1	-	-	-	-	-
0010	217+00	-	344+00	MAINLINE WB	-	-	12,086	11,722	-	3,168	114	-	1,067	-	2	1	-	-	-	-	-
0010	344+00	-	489+00	MAINLINE EB	-	-	14,230	11,767	-	3,625	173	-	1,107	-	-	-	-	-	-	-	-
0010	344+00	-	489+00	MAINLINE WB	-	-	14,169	11,488	-	3,627	192	-	1,688	-	-	-	-	-	-	-	-
0010	489+00	-	585+38	MAINLINE EB	-	-	9,639	7,024	-	2,408	234	-	855	-	-	-	-	-	-	-	-
0010	489+00	-	585+62	MAINLINE WB	-	-	9,669	3,886	-	2,419	-	-	2,325	530	-	-	-	-	-	-	-
0010	585+38	-	676+91	MAINLINE EB	-	-	9,153	6,132	-	2,292	251	-	1,358	-	-	-	-	-	-	-	-
0010	585+62	-	676+68	MAINLINE WB	-	-	9,094	6,177	-	2,270	161	-	1,250	-	-	-	-	-	-	-	-
0010	676+91	-	744+58	MAINLINE EB	-	-	6,767	5,572	-	1,694	-	-	458	-	-	-	-	-	-	-	-
0010	676+68	-	744+85	MAINLINE WB	-	-	6,738	4,965	-	1,683	-	-	622	128	-	-	-	-	-	-	-
0010	744+58	-	826+68	MAINLINE EB	-	-	8,211	6,911	-	2,052	-	-	667	-	-	-	-	-	-	-	-
0010	744+85	-	825+80	MAINLINE WB	-	-	8,123	6,939	-	2,035	192	-	448	-	-	-	-	-	-	-	-
0010	196+48	-	218+48	RAMP DD	981	-	-	2,200	-	-	-	-	610	-	-	-	-	-	-	-	-
0010	197+59	-	215+21	RAMP DC	956	-	-	1,762	-	-	-	-	283	-	-	-	-	-	134	-	-
0010	216+39	-	238+53	RAMP DB	1,000	-	-	2,215	-	-	-	-	611	-	-	-	-	-	-	-	-
0010	226+80	-	234+89	RAMP DA	100	-	-	851	-	-	-	-	295	-	-	-	42	-	139	31	3
0010	437+32	-	462+12	RAMP GD	1,002	-	-	2,537	-	-	-	-	873	-	-	-	-	-	-	-	-
0010	443+43	-	454+15	RAMP GC	98	-	-	1,133	-	-	-	-	348	-	-	-	43	-	145	-	-
0010	462+97	-	484+08	RAMP GA	928	-	-	2,207	-	-	-	-	520	-	-	-	21	-	225	-	-
0010	472+82	-	486+78	RAMP GB	92	-	-	1,493	-	-	-	-	677	-	-	-	-	-	-	-	-
0010	500+36	-	511+66	RAMP WE	415	-	-	1,265	-	-	-	-	216	-	-	-	-	-	97	-	-
0010	500+59	-	515+36	RAMP WW	99	-	-	1,590	-	-	-	-	693	-	-	-	-	-	-	-	-
0010	529+98	-	570+72	RAMP EP	103	-	-	4,074	-	307	-	-	2,111	-	-	-	-	-	1,586	-	-
0010	542+45	-	546+99	RAMP EV	104	-	-	1,302	-	-	-	-	382	-	-	-	-	-	-	-	-
0010	568+98	-	583+97	RAMP SC	1,042	-	-	1,563	-	-	-	80	336	-	-	-	23	-	144	30	3
0010	571+80	-	586+77	RAMP SD	1,162	-	-	1,468	-	-	-	-	251	-	-	-	-	-	-	-	-
0010	584+83	-	608+74	RAMP SB	1,035	-	-	2,484	-	-	-	-	755	-	-	-	-	-	-	-	-
0010	587+32	-	605+56	RAMP SA	948	-	-	1,921	-	-	-	107	453	-	-	-	39	-	156	26	3
0010	646+74	-	676+85	RAMP PD	1,331	-	-	3,231	-	-	-	-	900	-	-	-	-	-	-	-	-
0010	648+00	-	676+78	RAMP PC	1,514	-	-	3,090	-	-	-	-	686	-	-	-	41	-	209	26	3
0010	674+96	-	691+55	RAMP PB	1,151	-	-	2,419	-	-	-	-	509	-	-	-	-	-	-	-	-
0010	679+38	-	691+65	RAMP PA	805	-	-	2,524	-	49	39	582	904	-	6	2	48	-	184	39	3
0010	740+85	-	770+18	RAMP EW	1,747	-	-	2,936	-	178	-	135	582	-	-	-	-	-	234	-	-
0010	737+65	-	773+65	RAMP EE	2,294	-	-	3,605	-	68	-	-	673	-	-	-	-	-	-	-	-
0010	43+00	-	55+00	STH 69	1,607	1,411	-	-	490	-	-	208	-	-	4	-	-	-	-	40	4
0010	144+55	-	155+12	CTH PB	1,684	2,135	-	-	463	-	-	245	-	-	4	-	59	-	-	122	4
0010	153+50	-	450+00	PROJECT	-	-	-	-	-	-	-	-	-	-	-	-	-	17,000	-	-	-
				SUBTOTAL	22,198	3,546	132,532	152,061	953	34,171	1,509	1,357	27,593	658	18	4	316	17,000	3,253	314	23
				TOTAL 0010	25,744		284,593		953	35,680		1,357	28,251		18	4	316	17,000	3,253	314	23

PAVEMENT MARKING REMOVALS

CATEGORY	STATION	TO	STATION	LOCATION	646.9000 MARKING REMOVAL LINE 4-INCH LF	646.9100 MARKING REMOVAL LINE 8-INCH LF
0010	153+50	-	217+37	TOWN HALL RD - CTH PD	28,742	2,152
0010	217+37	-	254+94	CTH PD - SPRINGDALE CENTER RD	16,907	943
0010	254+94	-	343+74	SRINGDALE CENTER RD - CTH J	39,960	1,231
0010	343+74	-	488+77	CTH J - SUGAR RIVER	65,264	2,693
0010	488+77	-	585+54	SUGAR RIVER - STH 69	43,547	2,196
0010	585+54	-	676+89	STH 69 - CTH PB	41,108	2,654
0010	676+89	-	745+20	CTH PB - E VERONA RD	30,740	1,224
0010	745+20	-	826+64	E VERONA RD - FITCHRONA RD	36,648	1,143
				TOTAL 0010	302,916	14,236

STAKING

CATEGORY	STATION	TO	STATION	LOCATION	650.5000 CONSTRUCTION STAKING BASE LF	650.5500 CONSTRUCTION STAKING CURB GUTTER AND CURB & GUTTER LF	650.7000 CONSTRUCTION STAKING CONCRETE PAVEMENT LF	650.9500.01 CONSTRUCTION STAKING SIDEWALK PROJECT (01. 1204-08-65) EACH	650.9920 CONSTRUCTION STAKING SLOPE STAKES LF
0010	153+50	-	217+37	TOWN HALL RD - CTH PD	-	-	-	-	-
0010	217+37	-	254+94	CTH PD - SPRINGDALE CENTER RD	-	-	-	-	-
0010	254+94	-	343+74	SRINGDALE CENTER RD - CTH J	-	470	-	-	420
0010	343+74	-	488+77	CTH J - SUGAR RIVER	-	370	-	-	1,787
0010	488+77	-	585+54	SUGAR RIVER - STH 69	-	-	-	-	1,078
0010	585+54	-	676+89	STH 69 - CTH PB	-	-	-	-	638
0010	676+89	-	745+20	CTH PB - E VERONA RD	982	-	998	-	1,723
0010	745+20	-	826+64	E VERONA RD - FITCHRONA RD	-	-	-	-	1,530
0010				RAMP EV	-	-	-	-	324
0010				RAMP PA	-	-	532	1	1,051
0010				RAMP PB	-	-	-	-	412
0010				RAMP EE	-	-	-	-	777
				TOTAL 0010	982	840	1,530	1	9,740

SAWING ASPHALT

CATEGORY	STATION	TO	STATION	LOCATION	690.0150 SAWING ASPHALT LF	REMARKS
0010	153+50'EB'	-		INSIDE SHOULDER	6	BOP MAINLINE
0010	153+50'EB'	-		OUTSIDE SHOULDER	6	BOP MAINLINE
0010	156+00'WB'	-		INSIDE SHOULDER	6	BOP MAINLINE
0010	156+00'WB'	-		OUTSIDE SHOULDER	6	BOP MAINLINE
0010	175+34'WB'	-	176+08'WB'	INSIDE SHOULDER	74	MEDIAN CROSSING
0010	175+26'EB'	-	176+00'EB'	INSIDE SHOULDER	73	MEDIAN CROSSING
0010	196+48'DD'	-		OUTSIDE SHOULDER	6	DD' RAMP
0010	208+12'DD'	-		INSIDE SHOULDER	3	DD' RAMP
0010	218+23'DD'	-		INSIDE SHOULDER	3	DD' RAMP
0010	218+47'DD'	-		OUTSIDE SHOULDER	5	DD' RAMP
0010	200+04'DC'	-		OUTSIDE SHOULDER	5	DC' RAMP
0010	205+16'DC'	-		INSIDE SHOULDER	3	DC' RAMP
0010	215+20'DC'	-		INSIDE SHOULDER	3	DC' RAMP
0010	215+20'DC'	-		OUTSIDE SHOULDER	5	DC' RAMP
0010	216+40'DB'	-		INSIDE SHOULDER	3	DB' RAMP
0010	216+39'DB'	-		OUTSIDE SHOULDER	5	DB' RAMP
0010	226+92'DB'	-		INSIDE SHOULDER	3	DB' RAMP
0010	235+68'DB'	-		OUTSIDE SHOULDER	5	DB' RAMP
0010	219+39'DA'	-		INSIDE SHOULDER	3	DA' RAMP
0010	219+39'DA'	-		OUTSIDE SHOULDER	3	DA' RAMP
0010	229+86'DB'	-		END OF RAMP GORE	3	DB' RAMP
0010	253+89'EB'	-	255+88'EB'	OUTSIDE SHOULDER	148	SPRINGDALE CENTER RD
0010	269+25'EB'	-		OUTSIDE SHOULDER	6	MAINLINE
0010	269+25'EB'	-		INSIDE SHOULDER	6	MAINLINE
0010	273+07'EB'	-		OUTSIDE SHOULDER	6	MAINLINE
0010	273+07'EB'	-		INSIDE SHOULDER	6	MAINLINE
0010	276+87'WB'	-	277+37'WB'	OUTSIDE SHOULDER	86	PRIVATE ENTRANCE
0010	277+10'EB'	-	277+73'EB'	OUTSIDE SHOULDER	98	PRIVATE ENTRANCE
0010	289+80'EB'	-	292+00'EB'	OUTSIDE SHOULDER	251	BEAT RD
0010	309+57'EB'	-	311+77'EB'	OUTSIDE SHOULDER	239	ERB RD
0010	332+74'WB'	-	334+00'WB'	OUTSIDE SHOULDER	164	DAIRY RIDGE RD
0010	363+60'EB'	-	365+36'EB'	OUTSIDE SHOULDER	202	WINDY OAK LN
0010	374+60'EB'	-	377+00'EB'	OUTSIDE SHOULDER	235	SPRING ROSE CIR
0010	375+54'WB'	-	376+05'WB'	OUTSIDE SHOULDER	86	PRIVATE ENTRANCE
0010	408+48'EB'	-	411+29'EB'	OUTSIDE SHOULDER	316	SPRING ROSE RD
0010	408+85'WB'	-	411+92'WB'	OUTSIDE SHOULDER	339	SPRING ROSE RD
0010	462+29'GC'	-		OUTSIDE SHOULDER	5	GC' RAMP
0010	462+36'GC'	-		INSIDE SHOULDER	3	GC' RAMP
0010	461+95'GD'	-		OUTSIDE SHOULDER	5	GD' RAMP
0010	461+95'GD'	-		INSIDE SHOULDER	5	GD' RAMP
0010	463+40'GB'	-		INSIDE SHOULDER	3	GB' RAMP
0010	463+49'GB'	-		OUTSIDE SHOULDER	5	GB' RAMP
0010	472+82'GB'	-		INSIDE SHOULDER	3	GB' RAMP
0010	472+82'GB'	-		OUTSIDE SHOULDER	5	GB' RAMP
0010	463+07'GA'	-		OUTSIDE SHOULDER	3	GA' RAMP
0010	462+97'GA'	-		INSIDE SHOULDER	4	GA' RAMP
0010	480+92'GA'	-		OUTSIDE SHOULDER	5	GA' RAMP
0010	472+77'GA'	-		INSIDE SHOULDER	3	GA' RAMP
0010	499+18'EB'	-		OUTSIDE SHOULDER	6	MAINLINE

CONTINUED 2 OF 2:

CATEGORY	STATION	TO	STATION	LOCATION	690.0150 SAWING ASPHALT LF	REMARKS
0010	499+18'EB'	-		INSIDE SHOULDER	6	MAINLINE
0010	500+59'WB'	-		OUTSIDE SHOULDER	6	MAINLINE
0010	500+59'WB'	-		INSIDE SHOULDER	6	MAINLINE
0010	503+94'WE'	-		INSIDE SHOULDER	6	WE' RAMP
0010	503+94'WE'	-		OUTSIDE SHOULDER	5	WE' RAMP
0010	505+37'WW'	-		INSIDE SHOULDER	6	WW' RAMP
0010	505+37'WW'	-		OUTSIDE SHOULDER	5	WW' RAMP
0010	511+66'WE'	-		INSIDE SHOULDER	3	WE' RAMP
0010	511+66'WE'	-		OUTSIDE SHOULDER	5	WE' RAMP
0010	515+36'WW'	-		INSIDE SHOULDER	3	WW' RAMP
0010	515+36'WW'	-		OUTSIDE SHOULDER	5	WW' RAMP
0010	525+31'WE'	-		INSIDE SHOULDER	3	WE' RAMP
0010	527+47'WE'	-		OUTSIDE SHOULDER	5	WE' RAMP
0010	526+61'WW'	-		INSIDE SHOULDER	3	WW' RAMP
0010	526+61'WW'	-		OUTSIDE SHOULDER	8	WW' RAMP
0010	529+98'EP'	-		INSIDE SHOULDER	3	EP' RAMP
0010	529+98'EP'	-		OUTSIDE SHOULDER	8	EP' RAMP
0010	542+46'EV'	-		INSIDE SHOULDER	4	EV' RAMP
0010	542+46'EV'	-		OUTSIDE SHOULDER	6	EV' RAMP
0010	544+72'WB'	-	545+32'WB'	INSIDE SHOULDER	57	MEDIAN CROSSING
0010	544+71'EB'	-	545+32'EB'	INSIDE SHOULDER	59	MEDIAN CROSSING
0010	583+17'SC'	-		INSIDE SHOULDER	3	SC' RAMP
0010	583+17'SC'	-		OUTSIDE SHOULDER	5	SC' RAMP
0010	586+47'SD'	-		INSIDE SHOULDER	3	SD' RAMP
0010	586+47'SD'	-		OUTSIDE SHOULDER	3	SD' RAMP
0010	587+62'SA'	-		INSIDE SHOULDER	3	SA' RAMP
0010	630+26'WB'	-	630+82'WB'	INSIDE SHOULDER	54	MEDIAN CROSSING
0010	630+31'EB'	-	630+87'EB'	INSIDE SHOULDER	54	MEDIAN CROSSING
0010	643+50'EB'	-		INSIDE SHOULDER	6	MAINLINE
0010	643+50'EB'	-		OUTSIDE SHOULDER	6	MAINLINE
0010	646+25'EB'	-		INSIDE SHOULDER	6	MAINLINE
0010	646+25'EB'	-		OUTSIDE SHOULDER	6	MAINLINE
0010	797+65'WB'	-	798+31'WB'	INSIDE SHOULDER	54	MEDIAN CROSSING
0010	797+61'EB'	-	798+24'EB'	INSIDE SHOULDER	54	MEDIAN CROSSING
				TOTAL 0010	2,938	

SAWING CONCRETE

CATEGORY	STATION	LOCATION	* 690.0250 SAWING CONCRETE LF	REMARKS
0010	153+50'EB'	ACROSS MAINLINE	26	BOP EB
0010	156+00'WB'	ACROSS MAINLINE	26	BOP WB
0010	215+21'DC'	ACROSS RAMP	15	DC' RAMP
0010	218+47'DD'	ACROSS RAMP	18	DD' RAMP
0010	216+39'DB'	ACROSS RAMP	20	DB' RAMP
0010	226+80'DA'	ACROSS RAMP	15	DA' RAMP
0010	269+25'EB'	ACROSS MAINLINE	26	EB MAINLINE
0010	273+07'EB'	ACROSS MAINLINE	26	EB MAINLINE
0010	454+15'GC'	ACROSS RAMP	15	GC' RAMP
0010	461+95'GD'	ACROSS RAMP	23	GD' RAMP
0010	463+07'GA'	ACROSS RAMP	21	GA' RAMP
0010	472+82'GB'	ACROSS RAMP	15	GB' RAMP
0010	499+18'EB'	ACROSS MAINLINE	26	EB MAINLINE
0010	500+59'WB'	ACROSS MAINLINE	26	WB MAINLINE
0010	503+93'EB'	ACROSS MAINLINE	34	EB MAINLINE
0010	505+37'WB'	ACROSS MAINLINE	35	WB MAINLINE
0010	511+65'WE'	ACROSS RAMP	15	WE' RAMP
0010	515+36'WW'	ACROSS RAMP	15	WW' RAMP
0010	528+00'EB'	ACROSS MAINLINE	26	EB MAINLINE
0010	530+00'EB'	ACROSS MAINLINE	26	EB MAINLINE
0010	530+00'EP'	ACROSS RAMP	24	EP' RAMP
0010	542+46'EV'	ACROSS RAMP	15	EV' RAMP
0010	583+17'SC'	ACROSS RAMP	32	SC' RAMP
0010	586+46'SD'	ACROSS RAMP	22	SD' RAMP
0010	584+83'SB'	ACROSS RAMP	29	SB' RAMP
0010	587+62'SA'	ACROSS RAMP	41	SA' RAMP
0010	643+50'EB'	ACROSS MAINLINE	26	EB MAINLINE
0010	646+25'EB'	ACROSS MAINLINE	26	EB MAINLINE
0010	674+96'PB'	ACROSS RAMP	28	PB' RAMP
0010	681+41'PA'	ACROSS RAMP	29	PA' RAMP
0010	676+34'PD'	ACROSS RAMP	23	PD' RAMP
0010	686+96'PB'	ACROSS RAMP	15	PB' RAMP
0010	N/A	CTH PB	515	NORTH SECTION CTH PB
0010	N/A	CTH PB	729	MID-NORTH SECTION CTH PB
0010	N/A	CTH PB	1,232	SOUTH SECTION CTH PB
0010	737+68'EE'	ACROSS RAMP	222	EE' RAMP
0010	737+54'EW'	ACROSS RAMP	255	EW' RAMP
0010	744+50'EE'	ACROSS RAMP	15	EE' RAMP
		TOTAL 0010	3,727	

* ADDITIONAL QUANTITIES FOUND ELSEWHERE

SPV.0060.07

CATEGORY	STATION	SIDE	LOCATION	SPV.0060.07 SPECIAL (07. LANDMARK REFERENCE MONUMENTS) EACH	REMARKS
0010	332+36	RT	USH 18/151 'EB'	1	SECTION CORNER, PAVEMENT
0010	410+06	RT	USH 18/151 'EB'	1	SECTION CORNER, PAVEMENT
0010	435+78	LT	USH 18/151 'EB'	1	SECTION CORNER, MEDIAN
0010	462+60	LT	USH 18/151 'WB'	1	SECTION CORNER, GRAVEL
			TOTAL 0010	4	

SPV.0090.02

CATEGORY	STATION	LOCATION	SPV.0090.02 SPECIAL (02. CLEANING DITCH) LF	REMARKS
0010	332+63	USH 18 WB	10	LT
0010	341+63	USH 18 WB	10	LT
0010	356+72	USH 18 WB	10	LT
0010	356+75	USH 18 EB	10	RT
0010	374+76	USH 18 WB	10	LT
0010	404+69	USH 18 WB	10	LT
0010	479+53	USH 18 EB	10	RT
0010	487+72	USH 18 EB	10	RT
0010	494+63	USH 18 EB	10	RT
0010	525+84	USH 18 EB	10	RT
0010	528+04	USH 18 EB	10	MEDIAN
0010	531+02	USH 18 EB	10	RT
0010	535+03	USH 18 EB	10	RT
0010	545+62	USH 18 EB	10	RT
0010	637+39	USH 18 WB	10	LT
0010	657+01	USH 18 WB	10	LT
0010	663+09	USH 18 WB	10	LT
0010	690+95	RAMP PA	10	LT
0010	683+87	USH 18 EB	10	RT
0010	702+81	USH 18 EB	10	MEDIAN
0010	710+30	USH 18 EB	10	MEDIAN
0010	718+98	USH 18 EB	10	MEDIAN
0010	722+40	USH 18 WB	10	LT
0010	751+31	USH 18 EB	10	RT
0010	814+70	USH 18 EB	10	RT
0010	821+58	USH 18 EB	10	RT
		TOTAL 0010	260	

3

GAWK SCREEN

CATEGORY	STATION	TO	STATION	LOCATION	SPV.0090.04 SPECIAL (04. TRAFFIC CONTROL GAWK SCREEN FURNISHED) LF	SPV.0090.05 SPECIAL (05. TRAFFIC CONTROL GAWK SCREEN INSTALLED) LF	REMARKS
0010	669+00	-	691+00	USH 18 EB	2,200	2,200	STAGE 2 PHASE 2
0010	674+00	-	686+50	USH 18 WB	1,250	1,250	STAGE 2 PHASE 2
0010	669+00	-	691+00	USH 18 EB	-	2,200	STAGE 2 PHASE 3
0010	674+00	-	686+50	USH 18 WB	-	1,250	STAGE 2 PHASE 3
0010	686+50	-	695+00	USH 18 WB	850	850	STAGE 2 PHASE 3
0010	669+00	-	691+00	USH 18 EB	-	2,200	STAGE 2 PHASE 4
0010	691+00	-	731+00	USH 18 EB	4,000	4,000	STAGE 2 PHASE 4
				TOTAL 0010	8,300	13,950	

PAVEMENT NOTCHED WEDGE LONGITUDINAL JOINT MILLING

CATEGORY	STATION	TO	STATION	LOCATION	SPV.0090.06 SPECIAL (06. REMOVING HMA PAVEMENT NOTCHED WEDGE LONGITUDINAL JOINT MILLING) (Phase 4) LF	(Phase 5) LF
0010	153+50	-	217+37	TOWN HALL RD - CTH PD	12,774	12,774
0010	217+37	-	254+94	CTH PD - SPRINGDALE CENTER RD	7,514	7,514
0010	254+94	-	343+74	SRINGDALE CENTER RD - CTH J	17,760	17,760
0010	343+74	-	488+77	CTH J - SUGAR RIVER	29,006	29,006
0010	488+77	-	585+54	SUGAR RIVER - STH 68	19,354	19,354
0010	585+54	-	676+89	STH 69 - CTH PB	18,280	18,280
0010	676+89	-	745+20	CTH PB - E VERONA RD	13,667	13,667
0010	745+20	-	826+64	E VERONA RD - FITCHRONA RD	16,295	16,295
				SUBTOTAL	134,650	134,650
				TOTAL 0010	269,300	

3

CABLE GUARD

CATEGORY	STATION	TO	STATION	LOCATION	SPV.0060.01 SPECIAL (01. CABLE GUARD END TERMINAL SAFENCE TL-3, 4 CABLE) EACH	SPV.0060.02 SPECIAL (02. SALVAGE TERMINAL HIGH-TENSION CABLE SAFENCE TL-3, 4 CABLE) EACH	SPV.0090.01 SPECIAL (01. CABLE GUARD SAFENCE TL-3, 4 CABLE) LF	SPV.0090.08 SPECIAL (08. SALVAGE HIGH-TENSION CABLE GUARD SAFENCE TL-3, 4 CABLE) LF
0010	182+48'WB'	-	254+08'WB'	MEDIAN	2	2	7,120	7,120
0010	292+00'EB'	-	309+79'EB'	MEDIAN	2	2	1,700	1,700
0010	311+69'EB'	-	316+88'EB'	MEDIAN	2	2	440	440
0010	412+59'WB'	-	486+61'WB'	MEDIAN	2	2	7,323	7,323
0010	490+91'WB'	-	544+41'WB'	MEDIAN	2	2	5,322	5,322
0010	545+37'EB'	-	583+18'EB'	MEDIAN	2	2	3,683	3,683
0010	587+59'EB'	-	630+14'EB'	MEDIAN	2	2	4,177	4,177
0010	631+02'EB'	-	674+92'EB'	MEDIAN	2	2	4,297	4,297
				TOTAL 0010	16	16	34,062	34,062

CONCRETE PAVEMENT REPAIR LONGITUDINAL JOINT

CATEGORY	STATION	TO	STATION	LOCATION	SPV.0090.07 SPECIAL (07. CONCRETE PAVEMENT REPAIR LONGITUDINAL JOINT) LF
0010	676+89	-	745+20	CTH PB - E VERONA RD	82
0010				RAMP GB	53
0010				RAMP GC	120
0010				RAMP GD	210
0010				RAMP WE	248
0010				RAMP PA	343
0010				RAMP EW	243
0010				RAMP EE	501
				TOTAL 0010	1,800

TRAFFIC CONTROL DEVICES

LOCATION	CATEGORY	STAGE		# OF DAY	643.0300 TRAFFIC CONTROL DRUMS (DAY)	643.0420 TRAFFIC CONTROL BARRICADES TYPE III (DAY)	643.0500 TRAFFIC CONTROL FLEXIBLE TUBULAR MARKER POSTS (EACH)	643.0600 TRAFFIC CONTROL FLEXIBLE TUBULAR MARKER BASES (EACH)	643.0705 TRAFFIC CONTROL WARNING LIGHTS TYPE A (DAY)	643.0715 TRAFFIC CONTROL WARNING LIGHTS TYPE C (DAY)	643.0800 TRAFFIC CONTROL ARROW BOARDS (DAY)	643.0900 TRAFFIC CONTROL SIGNS (DAY)	643.0910 COVERING SIGNS TYPE I SIGNS	643.0910 COVERING SIGNS TYPE I CYCLES	643.0910 COVERING SIGNS TYPE I (EACH)	643.0920 COVERING SIGNS TYPE II SIGNS	643.0920 COVERING SIGNS TYPE II CYCLES	643.0920 COVERING SIGNS TYPE II (EACH)	643.1050 TRAFFIC CONTROL SIGNS PCMS (DAY)	643.1070 TRAFFIC CONTROL CONES 42-INCH (DAY)	643.1100.S DYNAMIC LATE MERGE SYSTEM (DAY)	643.1200.S PORTABLE AUTOMATED REAL-TIME TRAFFIC QUEUE WARNING SYSTEM (DAY)	643.4100 TRAFFIC CONTROL INTERIM LANE CLOSURE (EACH)
USH 18/151																							
	0010	STAGE 1	MAIN WORK ZONE WEST OF STA 489+00	77	8,624	4,158	-	-	6,314	462	-	6,622	-	-	-	-	-	-	14	-	-	154	-
	0010	STAGE 1	PHASE 1 LANE CLOSURES AND SHIFTS	13	19,669	520	-	-	793	1,768	52	1,716	-	-	-	-	-	-	-	-	-	-	-
	0010	STAGE 1	PHASE 2 LANE CLOSURES AND SHIFTS	18	21,384	540	-	-	864	2,088	72	1,872	-	-	-	-	-	-	-	-	-	-	-
	0010	STAGE 1	PHASE 3 LANE CLOSURES AND SHIFTS	16	13,456	640	-	-	976	2,176	64	2,112	-	-	-	-	-	-	-	10,752	-	-	-
	0010	STAGE 1	PHASE 4 LANE CLOSURES AND SHIFTS	13	15,444	390	-	-	624	1,508	52	1,352	-	-	-	-	-	-	-	-	-	-	-
	0010	STAGE 1	PHASE 5 LANE CLOSURES AND SHIFTS	10	8,410	400	-	-	610	1,360	40	1,320	-	-	-	-	-	-	-	6,720	-	-	-
	0010	STAGE 1	PHASE 6 LANE CLOSURES AND SHIFTS	7	8,316	210	-	-	336	812	28	728	-	-	-	-	-	-	-	-	-	-	-
	0010	STAGE 1	NIGHT LANE CLOSURES EAST OF STA 489+00	18	26,604	1,512	-	-	2,304	3,132	72	3,060	-	-	-	-	-	-	-	-	-	-	36
	0010	STAGE 1	SHOULDER CLOSURES	10	1,200	-	-	-	-	-	20	80	-	-	-	-	-	-	-	-	-	-	-
		STAGE 1 SUBTOTAL			123,107	8,370	0	0	12,821	13,306	400	18,862			0			0	14	17,472	0	154	36
	0010	STAGE 2	MAIN WORK ZONE WEST OF STA 320+00	160	24,320	4,480	-	-	6,880	960	-	8,320	-	-	-	-	-	-	-	-	-	160	-
	0010	STAGE 2	MAIN WORK ZONE EAST OF STA 489+00	160	22,720	10,560	42	42	15,840	960	-	16,000	-	-	-	-	-	-	-	-	160	-	-
	0010	STAGE 2	PHASE 1 LANE CLOSURES AND SHIFTS	26	63,778	754	-	-	1,170	5,538	260	4,030	-	-	-	-	-	-	-	-	-	-	-
	0010	STAGE 2	PHASE 2 LANE CLOSURES AND SHIFTS	32	54,144	928	-	-	1,440	6,816	320	4,960	-	-	-	-	-	-	-	-	-	-	-
	0010	STAGE 2	PHASE 3 LANE CLOSURES AND SHIFTS	32	46,144	1,984	-	-	3,008	9,664	320	6,752	-	-	-	-	-	-	-	32,352	-	-	-
	0010	STAGE 2	PHASE 4 LANE CLOSURES AND SHIFTS	35	59,220	1,015	-	-	1,575	7,455	350	5,425	-	-	-	-	-	-	-	-	-	-	-
	0010	STAGE 2	PHASE 5 LANE CLOSURES AND SHIFTS	29	41,470	1,798	-	-	2,726	8,758	290	6,003	-	-	-	-	-	-	-	29,319	-	-	-
	0010	STAGE 2	PHASE 6 LANE CLOSURES AND SHIFTS	6	10,152	372	-	-	564	1,812	60	1,242	-	-	-	-	-	-	-	-	-	-	-
	0010	STAGE 2	WILLIAMSBURG WAY WB ON-RAMP CLOSURE	160	2,400	320	-	-	640	-	-	320	2	1	2	-	-	-	167	-	-	-	-
	0010	STAGE 2	STH 69 WB ON-RAMP CLOSURE	7	490	35	-	-	42	-	-	315	-	-	-	8	1	8	21	-	-	-	-
	0010	STAGE 2	STH 69 WB OFF-RAMP CLOSURE	7	532	63	-	-	84	-	-	196	2	1	2	-	-	-	21	-	-	-	-
	0010	STAGE 2	STH 69 EB ON-RAMP CLOSURE	7	490	35	-	-	42	-	-	315	-	-	-	8	1	8	21	-	-	-	-
	0010	STAGE 2	STH 69 EB OFF-RAMP CLOSURE	7	532	63	-	-	84	-	-	196	2	1	2	-	-	-	21	-	-	-	-
	0010	STAGE 2	CTH PB WB ON-RAMP CLOSURE	14	980	70	-	-	84	-	-	630	-	-	-	8	1	8	35	-	-	-	-
	0010	STAGE 2	CTH PB WB OFF-RAMP CLOSURE	21	1,596	189	-	-	252	-	-	588	2	1	2	-	-	-	49	-	-	-	-
	0010	STAGE 2	CTH PB EB ON-RAMP CLOSURE	14	980	70	-	-	84	-	-	630	-	-	-	8	1	8	35	-	-	-	-
	0010	STAGE 2	CTH PB EB OFF-RAMP CLOSURE	14	1,064	126	-	-	168	-	-	392	2	1	2	-	-	-	35	-	-	-	-
	0010	STAGE 2	E VERONA AVE WB OFF-RAMP CLOSURE	14	1,064	126	-	-	168	-	-	84	2	1	2	-	-	-	35	-	-	-	-
	0010	STAGE 2	E VERONA AVE EB ON-RAMP CLOSURE	14	1,386	224	-	-	336	-	-	224	-	-	-	8	1	8	35	-	-	-	-
	0010	STAGE 2	CTH PB LANE CLOSURES	160	3,520	1,600	-	-	2,400	1,920	320	4,160	-	-	-	-	-	-	-	19,360	-	-	-
	0010	STAGE 2	SHOULDER CLOSURES	10	1,200	-	-	-	-	-	20	80	-	-	-	-	-	-	-	-	-	-	-
		STAGE 2 SUBTOTAL			338,182	24,812	42	42	37,587	43,883	1,940	60,862			12			40	475	81,031	160	160	0
	0010	STAGE 4	3 MILE LONG WORK ZONE	67	42,813	3,618	-	-	5,494	7,772	268	9,246	-	-	-	-	-	-	-	-	-	134	-
		STAGE 4 SUBTOTAL			42,813	3,618	0	0	5,494	7,772	268	9,246			0			0	0	0	0	134	0
ALLOWABLE RAMP CLOSURES IN STAGE 1 OR 2																							
	0010	VARIES	CTH PD WB ON-RAMP CLOSURE	8	560	40	-	-	48	-	-	360	-	-	-	8	1	8	23	-	-	-	-
	0010	VARIES	CTH PD WB OFF-RAMP CLOSURE	3	228	27	-	-	36	-	-	84	2	1	2	-	-	-	13	-	-	-	-
	0010	VARIES	CTH PD EB ON-RAMP CLOSURE	8	560	40	-	-	48	-	-	360	-	-	-	8	1	8	23	-	-	-	-
	0010	VARIES	CTH PD EB OFF-RAMP CLOSURE	8	608	72	-	-	96	-	-	224	2	1	2	-	-	-	23	-	-	-	-
	0010	VARIES	CTH G WB ON-RAMP CLOSURE	8	560	40	-	-	48	-	-	360	-	-	-	8	1	8	23	-	-	-	-
	0010	VARIES	CTH G WB OFF-RAMP CLOSURE	8	608	72	-	-	96	-	-	224	2	1	2	-	-	-	23	-	-	-	-
	0010	VARIES	CTH G EB ON-RAMP CLOSURE	8	560	40	-	-	48	-	-	360	-	-	-	8	1	8	23	-	-	-	-
	0010	VARIES	CTH G EB OFF-RAMP CLOSURE	8	608	72	-	-	96	-	-	224	2	1	2	-	-	-	23	-	-	-	-
	0010	VARIES	W VERONA AVE WB ON-RAMP CLOSURE	7	490	35	-	-	42	-	-	7	-	-	-	8	1	8	21	-	-	-	-
	0010	VARIES	W VERONA AVE EB OFF-RAMP CLOSURE	7	532	63	-	-	84	-	-	196	2	1	2	-	-	-	21	-	-	-	-
		RAMPS SUBTOTAL			5,314	501	0	0	642	0	0	2,399			10			40	216	0	0	0	0
			UNDISTRIBUTED		102,084	3,799	8	8	5,656	6,539	262	9,131			8			20	80	20,497	25	52	4
			TOTAL 0010		611,500	41,100	50	50	62,200	71,500	2,870	100,500			30			100	785	119,000	185	500	40

3

TEMPORARY PAVEMENT MARKING

				643.3150		643.3250	643.3105		643.3205	643.3960
				TEMPORARY MARKING						
				LINE REMOVABLE TAPE			LINE PAINT			REMOVABLE
				4-INCH		8-INCH	4-INCH		8-INCH	MASK OUT
				(YELLOW)	(WHITE)	(WHITE)	(YELLOW)	(WHITE)	(WHITE)	TAPE 6-INCH
LOCATION	CATEGORY	STAGE		(LF)	(LF)	(LF)	(LF)	(LF)	(LF)	(LF)
USH 18/151	CATEGORY									
	0010	STAGE 1	PHASE 1	-	-	-	1,200	10,070	3,100	-
	0010	STAGE 1	PHASE 2	-	-	-	75,080	78,350	3,000	-
	0010	STAGE 1	PHASE 3	-	-	-	68,300	77,170	3,100	-
	0010	STAGE 1	PHASE 4	-	-	-	75,080	78,350	3,000	-
	0010	STAGE 1	PHASE 5	68,300	77,170	3,100	-	-	-	-
		STAGE 1 SUBTOTAL		68,300	77,170	3,100	219,660	243,940	12,200	0
	0010	STAGE 2	PHASE 1	-	-	-	2,200	15,050	7,150	1,000
	0010	STAGE 2	PHASE 2	-	-	-	116,484	119,264	5,500	-
	0010	STAGE 2	PHASE 3	-	-	-	103,564	116,414	7,150	-
	0010	STAGE 2	PHASE 4	-	-	-	110,584	119,264	5,500	-
	0010	STAGE 2	PHASE 5	103,564	114,814	7,150	-	-	-	-
	0010	STAGE 2	STH 69 WB OFF-RAMP CLOSURE	-	950	-	-	-	-	-
	0010	STAGE 2	STH 69 WB OFF-RAMP CLOSURE	-	950	-	-	-	-	-
	0010	STAGE 2	STH 69 EB OFF-RAMP CLOSURE	-	500	-	-	-	-	-
	0010	STAGE 2	CTH PB WB OFF-RAMP CLOSURE	-	1,560	-	-	-	-	-
	0010	STAGE 2	CTH PB EB OFF-RAMP CLOSURE	-	1,160	-	-	-	-	-
	0010	STAGE 2	E VERONA AVE WB OFF-RAMP CLOSURE	-	1,150	-	-	-	-	-
		STAGE 2 SUBTOTAL		103,564	120,134	7,150	332,832	369,992	25,300	1,000
	0010	STAGE 4		-	3,200	-	-	-	-	1,000
		STAGE 4 SUBTOTAL		0	3,200	0	0	0	0	1,000
ALLOWABLE RAMP CLOSURES IN STAGE 1 OR 2										
	0010	VARIES	CTH PD WB OFF-RAMP CLOSURE	-	670	-	-	-	-	-
	0010	VARIES	CTH PD EB OFF-RAMP CLOSURE	-	820	-	-	-	-	-
	0010	VARIES	CTH G WB OFF-RAMP CLOSURE	-	1,240	-	-	-	-	-
	0010	VARIES	CTH G EB OFF-RAMP CLOSURE	-	960	-	-	-	-	-
	0010	VARIES	W VERONA AVE EB OFF-RAMP CLOSURE	-	770	-	-	-	-	-
		RAMPS SUBTOTAL		0	4,460	0	0	0	0	0
			UNDISTRIBUTED	17,636	20,536	1,050	55,183	61,393	3,500	1,000
			SUBTOTAL	189,500	225,500	11,300	607,675	675,325	41,000	3,000
			TOTAL 0010	415,000		11,300	1,283,000		41,000	3,000

3

TRAFFIC SIGNAL REMOVALS

LOCATION / ITEM NUMBER	204.0195 REMOVING CONCRETE BASES EACH	653.0905 REMOVING PULL BOXES EACH
CATEGORY 0010		
USH 18/151 & CTH PB WB RAMP		
SB1	1	--
SB2	1	--
SB3	1	--
SB4	1	--
SB5	1	--
SB6	1	--
SB7	1	--
SB8	1	--
SB9	1	--
SB10	1	--
SB11	1	--
SB12	1	--
SB13	1	--
SB14	1	--
PB1	--	1
PB2	--	1
PB3	--	1
PB4	--	1
PB5	--	1
PB6	--	1
PB7	--	1
PB8	--	1
PB9	--	1
PB10	--	1
PB11	--	1
PB12	--	1
PB13	--	1
PB14	--	1
PB15	--	1
PB16	--	1
PB17	--	1
PB18	--	1
PB19	--	1
PB20	--	1
PB21	--	1
PB22	--	1
PB23	--	1
PB24	--	1
PB25	--	1
PB26	--	1
EXPB1	--	1
CATEGORY 0010 TOTAL	**14**	**27**

TRAFFIC SIGNAL PULL BOXES

LOCATION / PULL BOX NUMBER	STATION	OFFSET	L/R	653.0154 PULL BOXES NON-CONDUCTIVE 24X36-INCH EACH	653.0164* PULL BOXES NON-CONDUCTIVE 24X42-INCH EACH
CATEGORY 0010					
USH 18/151 & CTH PB WB RAMP					
PB1	145+53.5 'PBS'	33.1'	RT	--	1
PB2	143+57.8 'PBS'	32.5'	RT	1	--
PB3	145+48.0 'PBN'	12.0'	RT	--	1
PB4	679+68.4 'PA'	54.9'	LT	--	1
PB5	680+51.4 'PA'	32.9'	LT	1	--
PB6	681+87.5 'PA'	33.5'	LT	1	--
PB7	685+24.1 'PA'	21.3'	LT	1	--
PB8	679+66.0 'PA'	18.2'	LT	--	1
PB9	679+63.6 'PA'	21.4'	RT	--	1
PB10	147+15.0 'PBN'	31.4'	LT	--	1
PB11	149+52.7 'PBN'	30.8'	LT	1	--
PB12	147+25.8 'PBS'	8.3'	LT	--	1
PB13	147+25.4 'PBS'	32.4'	RT	--	1
PB14	676+79.3 'PD'	21.3'	RT	--	1
PB15	676+76.5 'PD'	12.8'	LT	--	1
E VERONA AVE & USH 18/151 RAMPS					
PB1	741+86.2 'EW'	10.4'	LT	1	--
PB2	744+03.9 'EW'	10.5'	LT	1	--
CATEGORY 0010 TOTAL				**7**	**10**

*ADDITIONAL QUANTITIES SHOWN ELSEWHERE.

INTERCONNECT PULLBOXES AND VAULTS

ITEM NUMBER	STATION	OFFSET	L/R	653.0164* PULL BOXES NON-CONDUCTIVE 24X42-INCH EACH	673.0105 COMMUNICATION VAULT TYPE 1 EACH
CATEGORY 0010					
USH 18/151 & CTH PB WB RAMP					
CV1	149+47.6 'PBS'	31.6'	RT	--	1
ICPB1	676+69.6 'PD'	14.5'	LT	1	--
ICPB2	676+71.8 'PD'	20.2'	RT	1	--
CATEGORY 0010 TOTAL				**2**	**1**

*ADDITIONAL QUANTITIES SHOWN ELSEWHERE.

TRAFFIC SIGNAL CONDUIT

LOCATION	FROM	-	TO	652.0225 CONDUIT RIGID NONMETALLIC SCHEDULE 40 2-INCH LF	652.0235 CONDUIT RIGID NONMETALLIC SCHEDULE 40 3-INCH LF	652.0615 CONDUIT SPECIAL 3-INCH LF
CATEGORY 0010						
USH 18/151 & CTH PB WB RAMP						
	CB1	-	PB1	--	180	--
	PB1	-	SB1	60	--	--
	PB1	-	PB2	220	--	--
	PB1	-	PB3	--	--	90
	PB3	-	SB2	35	--	--
	PB3	-	SB3	5	--	--
	PB3	-	PB4	--	--	140
	PB4	-	SB4	10	--	--
	PB4	-	PB5	90	--	--
	PB4	-	PB8	--	--	80
	PB5	-	LB1	5	--	--
	PB5	-	PB6	125	--	--
	PB6	-	PB7	330	--	--
	PB8	-	PB9	--	--	80
	PB8	-	SB5	--	20	--
	PB8	-	SB6	25	--	--
	PB9	-	SB7	25	--	--
	PB9	-	PB10	--	170	--
	PB10	-	SB8	10	--	--
	PB10	-	PB11	255	--	--
	PB10	-	PB12	--	--	100
	PB12	-	SB9	10	--	--
	PB12	-	PB13	--	--	80
	PB13	-	SB10	--	10	--
	PB13	-	PB14	--	110	--
	PB14	-	SB11	--	10	--
	PB14	-	PB15	--	--	70
	PB15	-	CB1	--	120	--
E VERONA AVE & USH 18/151 RAMPS						
	EXPB1	-	PB1	165	--	--
	PB1	-	PB2	210	--	--
CATEGORY 0010 TOTAL				**1580**	**620**	**640**

INTERCONNECT FIBER OPTIC TERMINATION

LOCATION	678.0200 FIBER OPTIC SPLICE ENCLOSURE EACH	678.0300 FIBER OPTIC SPLICE EACH
CATEGORY 0010		
USH 18/151 & CTH PB WB RAMP		
CV1	1	4
CATEGORY 0010 TOTAL	**1**	**4**

3

TRAFFIC SIGNAL LOOP DETECTORS

LOCATION / LOOP NO.	STATION **	OFFSET	L/R	SIZE FT X FT	NO. OF TURNS	INSTALLATION METHOD	652.0900 LOOP DETECTOR SLOTS LF	652.0800 CONDUIT LOOP DETECTOR LF	655.0800 LOOP DETECTOR WIRE LF	655.0700* LOOP DETECTOR LEAD IN CABLE LF
CATEGORY 0010										
USH 18/151 & CTH PB WB RAMP										
21	143+58.3 'PBS'	11.3'	RT	6 X 20	3	LOOP DETECTOR INSTALLED IN EXISTING ASPHALT PAVEMENT	60	62	198	285
61	149+52.9 'PBN'	10.2'	LT	6 X 20	4	LOOP DETECTOR INSTALLED IN BASE COURSE WITH PULL (SPLICE) BOX OFF ROADWAY (OPTION 2)	--	72	300	465
81	685+24.0 'PA'	3.0'	RT	6 X 20	5	LOOP DETECTOR INSTALLED IN EXISTING CONCRETE PAVEMENT WITH NEW ASPHALTIC OVERLAY	65	67	347	735
82	681+87.4 'PA'	3.0'	RT	6 X 20	4	LOOP DETECTOR INSTALLED IN EXISTING CONCRETE PAVEMENT WITH NEW ASPHALTIC OVERLAY	60	77	320	405
E VERONA AVE & USH 18/151 RAMPS										
21	741+85.5 'EW'	12.4'	RT	6 X 20	3	LOOP DETECTOR INSTALLED IN BASE COURSE WITH PULL (SPLICE) BOX OFF ROADWAY (OPTION 2)	--	72	228	200
22	744+04.1 'EW'	12.4'	RT	6 X 20	4	LOOP DETECTOR INSTALLED IN EXISTING CONCRETE PAVEMENT WITH NEW ASPHALTIC OVERLAY	60	62	260	400
CATEGORY 0010 TOTAL							**245**	**412**	**1653**	**2490**

*ADDITIONAL QUANTITIES SHOWN ELSEWHERE.

TRAFFIC SIGNAL STRUCTURES

LOCATION / BASE NUMBER	STATION	OFFSET	L/R	654.0110 CONCRETE BASES TYPE 10 EACH	654.0120 CONCRETE BASES TYPE 10 SPECIAL EACH	657.0350 POLES TYPE 10 EACH	657.0352 POLES TYPE 10 - SPECIAL EACH	657.0525 MONOTUBE ARMS 25-FT EACH	657.0530 MONOTUBE ARMS 30-FT EACH	657.0541 MONOTUBE ARMS 40-FT SPECIAL EACH	657.0815 LUMINAIRE ARMS STEEL 15-FT EACH	657.0820 LUMINAIRE ARMS STEEL TYPE 10 POLE CLAMP 15-FT EACH	657.0830 LUMINARE ARMS STEEL TYPE 10 SPECIAL POLE CLAMP 15-FT EACH	659.1125* LUMINAIRES UTILITY LED C EACH
CATEGORY 0010														
USH 18/151 & CTH PB WB RAMP														
SB5	679+48.2 'PA'	24.1'	LT	--	1	--	1	--	--	1	--	--	1	--
SB10	147+11.1 'PBS'	33.5'	RT	1	--	1	--	--	1	--	1	1	--	1
SB11	676+85.8 'PD'	23.1'	RT	1	--	1	--	1	--	--	1	--	--	1
CATEGORY 0010 TOTAL				**2**	**1**	**2**	**1**	**1**	**1**	**1**	**2**	**1**	**1**	**2**

*ADDITIONAL QUANTITIES SHOWN ELSEWHERE.

TRAFFIC SIGNAL STRUCTURES

LOCATION / BASE NUMBER	STATION	OFFSET	L/R	654.0101 CONCRETE BASES TYPE 1 EACH	654.0102 CONCRETE BASES TYPE 2 EACH	654.0105 CONCRETE BASES TYPE 5 EACH	657.0100 PEDESTAL BASES EACH	657.0255 TRANSFORMER BASES BREAKAWAY 11 1/2-INCH BOLT CIRCLE EACH	657.0315 POLES TYPE 4 EACH	657.0322 POLES TYPE 5-ALUMINUM EACH	657.0420 TRAFFIC SIGNAL STANDARDS ALUMINUM 13-FT EACH	657.0425 TRAFFIC SIGNAL STANDARDS ALUMINUM 15-FT EACH	657.0609 LUMINAIRE ARMS SINGLE MEMBER 4-INCH CLAMP 6-FT EACH	657.0610 LUMINAIRE ARMS SINGLE MEMBER 4 1/2-INCH CLAMP 6-FT EACH	659.1125* LUMINAIRES UTILITY LED C EACH
CATEGORY 0010															
USH 18/151 & CTH PB WB RAMP															
SB1	146+10.4 'PBS'	36.6'	RT	--	1	--	--	1	1	--	--	--	1	--	1
SB2	145+86.0 'PBS'	6.7'	LT	1	--	--	1	--	--	--	--	1	--	--	--
SB3	145+44.8 'PBN'	6.6'	RT	1	--	--	1	--	--	--	1	--	--	--	--
SB4	145+41.2 'PBN'	50.9'	LT	--	1	--	--	1	1	--	--	--	1	--	1
SB6	679+41.6 'PA'	18.9'	LT	--	1	--	--	1	1	--	--	--	1	--	1
SB7	679+38.6 'PA'	21.9'	RT	1	--	--	1	--	--	--	1		--	--	--
SB8	146+97.8 'PBN'	32.8'	LT	--	1	--	--	1	1	--	--	--	1	--	1
SB9	147+18.5 'PBS'	8.4'	LT	1	--	--	1	--	--	--	--	1	--	--	--
LB1	680+56.1 'PA'	32.2'	LT	--	--	1	--	1	--	1	--	--	--	1	1
CATEGORY 0010 TOTAL				**4**	**4**	**1**	**4**	**5**	**4**	**1**	**2**	**2**	**4**	**1**	**5**

*ADDITIONAL QUANTITIES SHOWN ELSEWHERE.

TRAFFIC SIGNAL HEADS

LOCATION	SIGNAL BASE NO.	HEAD NO.	658.0173 TRAFFIC SIGNAL FACE 3S 12-INCH EACH	658.0174 TRAFFIC SIGNAL FACE 4S 12-INCH EACH
CATEGORY 0010				
USH 18/151 & CTH PB WB RAMP				
	SB1	12	--	1
		21	1	--
	SB2	13	--	1
	SB3	86	1	--
	SB4	85	1	--
	SB5	62	1	--
		63	1	--
	SB6	82	1	--
	SB7	81	1	--
	SB8	91	1	--
	SB9	11	--	1
	SB10	22	1	--
		23	1	--
	SB11	83	1	--
		84	--	1
CATEGORY 0010 TOTAL			**11**	**4**

TEMPORARY TRAFFIC SIGNALS

LOCATION	661.0201.01 TEMPORARY TRAFFIC SIGNALS FOR INTERSECTIONS (USH 18/151 & CTH PB WB RAMP) EACH
CATEGORY 0010	
USH 18/151 & CTH PB WB RAMP	1
CATEGORY 0010 TOTAL	**1**

TRAFFIC SIGNAL CABLE AND WIRE

LOCATION	FROM	-	TO	SPV.0090.10 INSTALL STATE FURNISHED CAT-5E CABLE LF
CATEGORY 0010				
USH 18/151 & CTH PB WB RAMP				
	CB1	-	SB5	368
	CB1	-	SB10	278
CATEGORY 0010 TOTAL				**646**

INTERCONNECT CONDUIT

FROM	-	TO	671.0112 CONDUIT HDPE 1-DUCT 2-INCH LF	678.0012 INSTALL FIBER OPTIC CABLE OUTDOOR PLANT 12-CT LF	673.0200 TRACER WIRE MARKER POSTS EACH
CATEGORY 0100					
USH 18/151 & CTH PB WB RAMP					
CB1	-	ICPB1	90	240	--
ICPB1	-	ICPB2	35	135	--
ICPB2	-	CV1	300	450	1
CATEGORY 0100 TOTAL			**425**	**825**	**1**

TRAFFIC SIGNAL CABLE AND WIRE - ABOVE GROUND

LOCATION	FROM SIGNAL BASE	-	TO SIGNAL HEAD	655.0230 CABLE TRAFFIC SIGNAL 5-14 AWG LF	655.0610 ELECTRICAL WIRE LIGHTING 12 AWG LF	655.0700* LOOP DETECTOR LEAD IN CABLE LF	655.0900* TRAFFIC SIGNAL EVP DETECTOR CABLE LF
CATEGORY 0010							
USH 18/151 & CTH PB WB RAMP							
	SB1	-	12	19	--	--	--
		-	21	15	--	--	--
		-	LUMINAIRE	--	117	--	--
	SB2	-	13	19	--	--	--
	SB3	-	86	15	--	--	--
	SB4	-	85	15	--	--	--
		-	LUMINAIRE	--	117	--	--
	LB1	-	LUMINAIRE	--	117	--	--
	SB5	-	62	55	--	--	--
		-	63	45	--	--	--
		-	EVP HEAD 'A'	--	--	50	50
	SB6	-	82	15	--	--	--
		-	LUMINAIRE	--	117	--	--
	SB7	-	81	15	--	--	--
	SB8	-	61	15	--	--	--
		-	LUMINAIRE	--	117	--	--
	SB9	-	11	19	--	--	--
	SB10	-	22	45	--	--	--
		-	23	35	--	--	--
		-	LUMINAIRE	--	117	--	--
		-	EVP HEAD 'B'	--	--	40	40
	SB11	-	83	15	--	--	--
		-	84	40	--	--	--
		-	EVP HEAD 'C'	--	--	35	35
		-	LUMINAIRE	--	117	--	--
CATEGORY 0010 TOTAL				**382**	**819**	**125**	**125**

*ADDITIONAL QUANTITIES SHOWN ELSEWHERE.

TRAFFIC SIGNAL CONTROL

LOCATION	654.0217 CONCRETE CONTROL CABINET BASES TYPE 9 SPECIAL EACH	656.0201.01 ELECTRICAL SERVICE METER BREAKER PEDESTAL (USH 18/151 & CTH PB WB RAMP) EACH
CATEGORY 0010		
USH 18/151 & CTH PB WB RAMP	1	1
CATEGORY 0010 TOTAL	**1**	**1**

MISCELLANEOUS TRAFFIC SIGNALS

LOCATION	SPV.0060.04 TRNSPT & INST S-F EVP HEADS W/ CONF LIGHTS (USH 18/151 & CTH PB WB RAMP) EACH	SPV.0060.05 SALVAGE AND REINST PRETERMINATED FO PATCH PANEL (USH 18/151 & CTH PB WB RAMP) EACH	SPV.0060.06 UPDATE TRAFFIC SIGNAL TIMING PARAMETERS (E VERONA AVE & USH 18/151 RAMPS) EACH
CATEGORY 0010			
USH 18/151 & CTH PB WB RAMP	1	1	--
E VERONA AVE & USH 18/151 RAMPS	--	--	1
CATEGORY 0010 TOTAL	**1**	**1**	**1**

TRAFFIC SIGNAL CABLE AND WIRE - BELOW GROUND

LOCATION	FROM	-	TO	655.0260 CABLE TRAFFIC SIGNAL 12-14 AWG LF	655.0305 CABLE TYPE UF 2-12 AWG GROUNDED LF	655.0515 ELECTRICAL WIRE TRAFFIC SIGNALS 10 AWG LF	655.0700* LOOP DETECTOR LEAD IN CABLE LF	655.0900* TRAFFIC SIGNAL EVP DETECTOR CABLE LF
CATEGORY 0010								
USH 18/151 & CTH PB WB RAMP								
	CB1	-	SB1	148	148	148	--	--
	CB1	-	SB2	178	--	--	--	--
	CB1	-	SB3	153	--	--	--	--
	CB1	-	SB4	243	243	--	--	--
	CB1	-	LB1	--	353	--	--	--
	CB1	-	SB5	318	--	--	318	318
	CB1	-	SB6	323	323	--	--	--
	CB1	-	SB7	378	--	--	--	--
	CB1	-	SB8	318	318	--	--	--
	CB1	-	SB9	248	--	--	--	--
	CB1	-	SB10	198	198	--	198	198
	CB1	-	SB11	128	128	128	128	128
	SB1	-	SB2	--	--	180	--	--
	SB2	-	SB3	--	--	65	--	--
	SB3	-	SB4	--	--	130	--	--
	SB4	-	SB5	--	--	115	--	--
	SB5	-	SB6	--	--	75	--	--
	SB6	-	SB7	--	--	115	--	--
	SB7	-	SB8	--	--	175	--	--
	SB8	-	SB9	--	--	115	--	--
	SB9	-	SB10	--	--	105	--	--
	SB10	-	SB11	--	--	135	--	--
CATEGORY 0010 TOTAL				**2633**	**1711**	**1486**	**644**	**644**

*ADDITIONAL QUANTITIES SHOWN ELSEWHERE.

CONSTRUCTION STAKING

LOCATION	650.8501.01 CONSTRUCTION STAKING ELECTRICAL INSTALLATIONS (1204-08-65) EACH
CATEGORY 0010	
USH 18/151 & CTH PB WB RAMP	1
CATEGORY 0010 TOTAL	**1**

TRAFFIC SIGNAL MOUNTING HARDWARE

LOCATION	658.5070.01 SIGNAL MOUNTING HARDWARE (USH 18/151 & CTH PB WB RAMP) EACH
CATEGORY 0010	
USH 18/151 & CTH PB WB RAMP	1
CATEGORY 0010 TOTAL	**1**

REMOVE TRAFFIC SIGNALS

LOCATION	SPV.0060.03 SALVAGE TRAFFIC SIGNALS (USH 18/151 & CTH PB WB RAMP) EACH	659.5000.S LAMP, BALLAST, LED SWITCH DISPOSAL BY CONTRACTOR EACH
CATEGORY 0010		
USH 18/151 & CTH PB WB RAMP	1	20
CATEGORY 0010 TOTAL	**1**	**20**

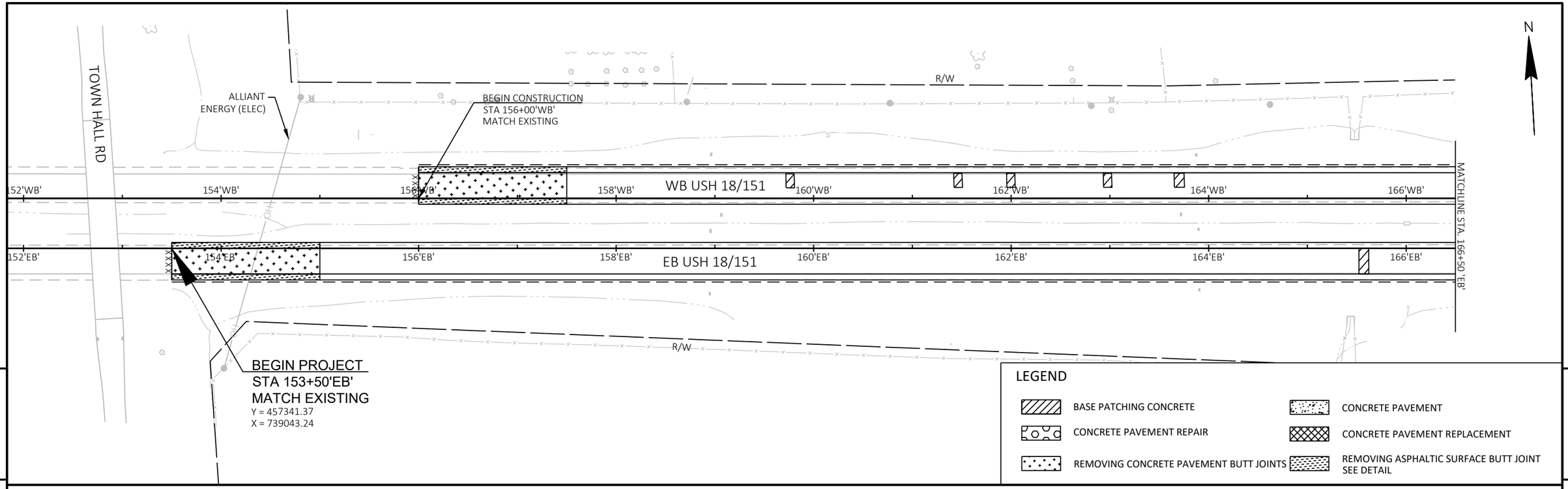

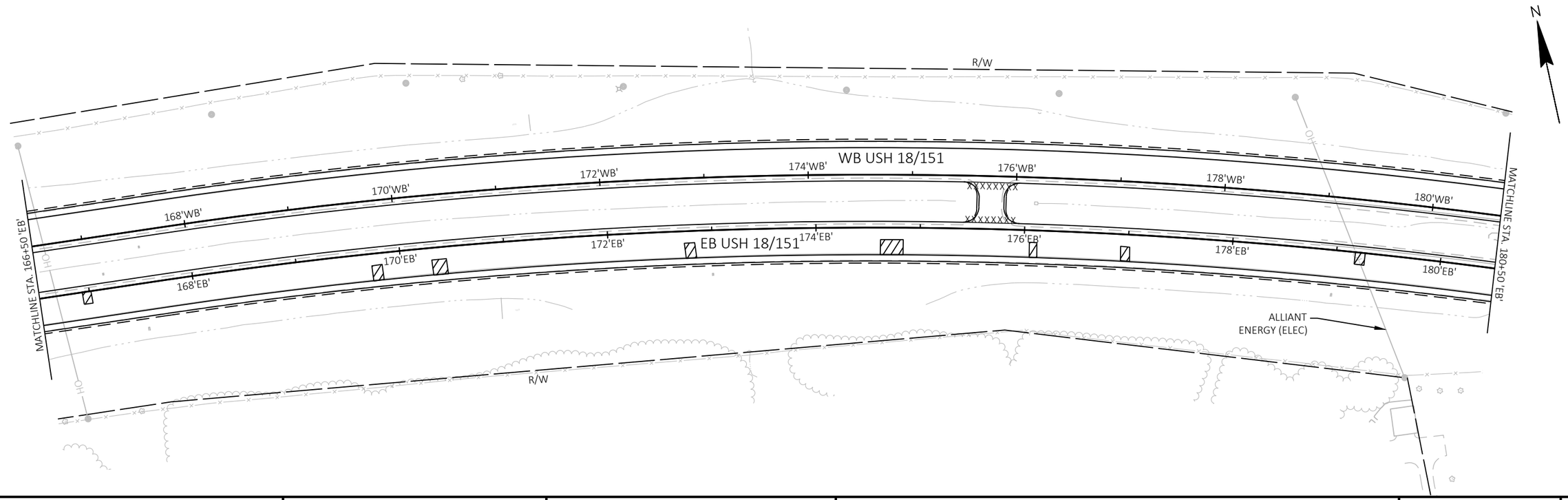

PROJECT NO: 1204-08-65	HWY: USH 18/151	COUNTY: DANE	PLAN SHEETS	SHEET 341	E

FILE NAME : G:\WDOTSW\20007-000 USH 18\CIVIL 3D\SHEETSPLAN\050201-PN.DWG
LAYOUT NAME - 01

PLOT DATE : 11/29/2022 1:46 PM PLOT BY : KL ENGINEERING PLOT NAME : PLOT SCALE : 1 IN:100 FT

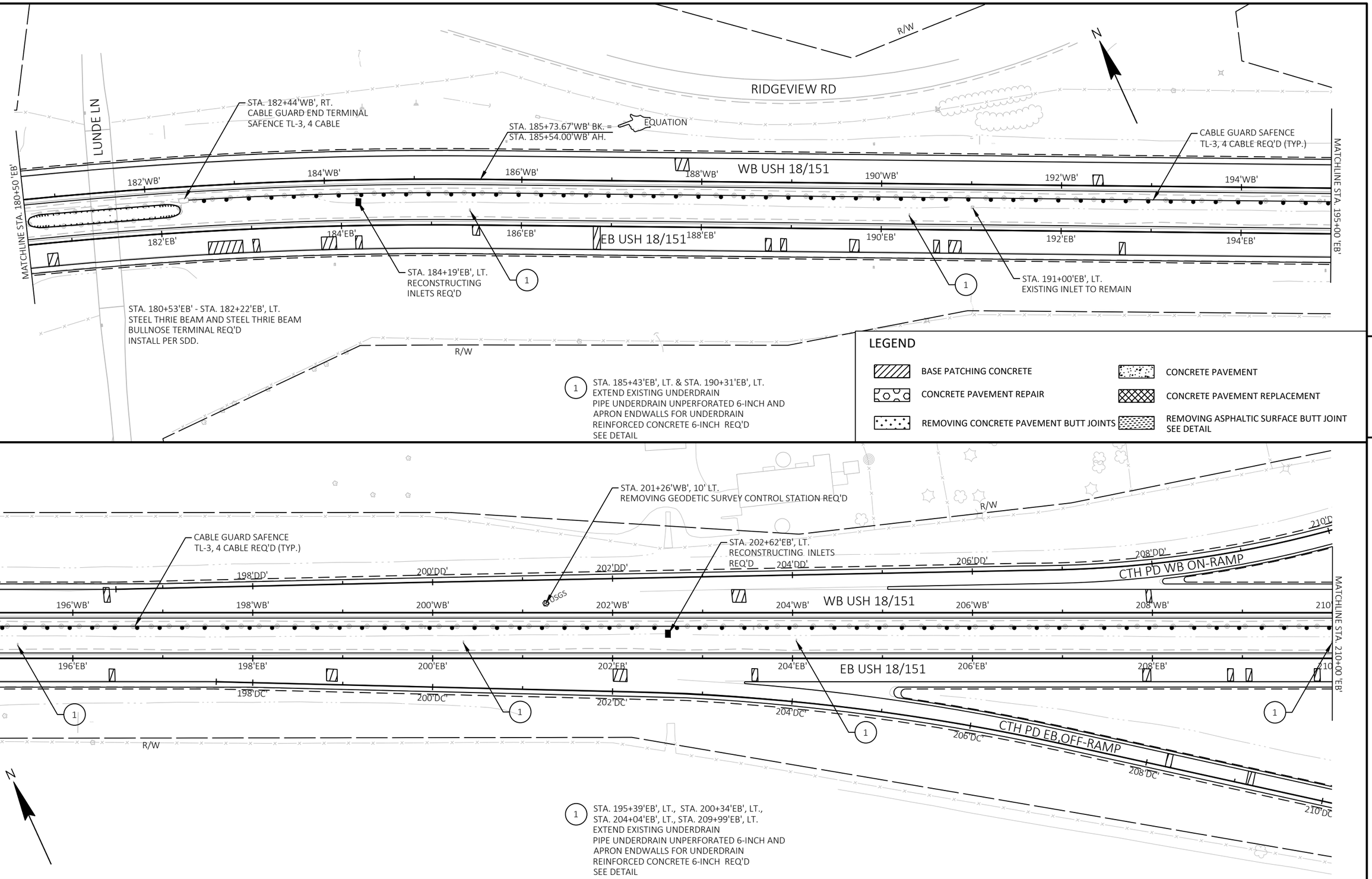

PROJECT NO: 1204-08-65	HWY: USH 18/151	COUNTY: DANE	PLAN SHEETS	SHEET 342	E

FILE NAME : G:\WDOTSW\20007-000 USH 18\CIVIL 3D\SHEETSPLAN\050201-PN.DWG
LAYOUT NAME - 02
PLOT DATE : 11/29/2022 1:47 PM
PLOT BY : KL ENGINEERING
PLOT NAME :
PLOT SCALE : 1 IN:100 FT
WISDOT/CADDS SHEET 44

5

LEGEND

- BASE PATCHING CONCRETE
- CONCRETE PAVEMENT
- CONCRETE PAVEMENT REPAIR
- CONCRETE PAVEMENT REPLACEMENT
- REMOVING CONCRETE PAVEMENT BUTT JOINTS
- REMOVING ASPHALTIC SURFACE BUTT JOINT SEE DETAIL

N

R/W

CTH PD WB ON-RAMP

212'DD' 214'DD' 216'DD' 218'DD'

CTH PD

CTH PD WB OFF-RAMP

220'DA' 222'DA' 224'DA'

REDUCE CABLE GUARD SAFENCE TL-3, 4 CABLE SPACING PER MANUFACTURERS SPECIFICATIONS FOR A 5-FEET MINIMUM WORKING WIDTH AT BULLNOSE TERMINAL

CABLE GUARD SAFENCE TL-3, 4 CABLE REQ'D (TYP.)

1 STA. 215+08'EB', LT. & STA. 219+96'EB', LT., EXTEND EXISTING UNDERDRAIN PIPE UNDERDRAIN UNPERFORATED 6-INCH AND APRON ENDWALLS FOR UNDERDRAIN REINFORCED CONCRETE 6-INCH REQ'D SEE DETAIL

MATCHLINE STA. 210+00'EB'

WB USH 18/151

212'WB' 214'WB' 216'WB' 218'WB' 220'WB' 222'WB' 224'WB'

212'EB' 214'EB' 216'EB' 218'EB' 220'EB' 222'EB' EB USH 18/151 224'EB'

MATCHLINE STA. 224+50'EB'

STA. 215+57'EB', LT. RECONSTRUCTING INLETS REQ'D

HMOD

INL

STA. 216+51'EB' - STA. 218+20'EB', LT. STEEL THRIE BEAM AND STEEL THRIE BEAM BULLNOSE TERMINAL REQ'D INSTALL PER SDD.

CTH PD EB OFF-RAMP

212'DC' 214'DC'

CTH PD EB ON-RAMP

218'DB' 220'DB' 222'DB' 224'DB'

R/W

PROJECT NO: 1204-08-65	HWY: USH 18/151	COUNTY: DANE	PLAN SHEETS	SHEET 343	E

FILE NAME : G:\WDOTSW\20007-000 USH 18\CIVIL 3D\SHEETSPLAN\050201-PN.DWG
LAYOUT NAME - 03
PLOT DATE : 11/29/2022 1:48 PM PLOT BY : KL ENGINEERING PLOT NAME : PLOT SCALE : 1 IN:100 FT
WISDOT/CADDS SHEET 44

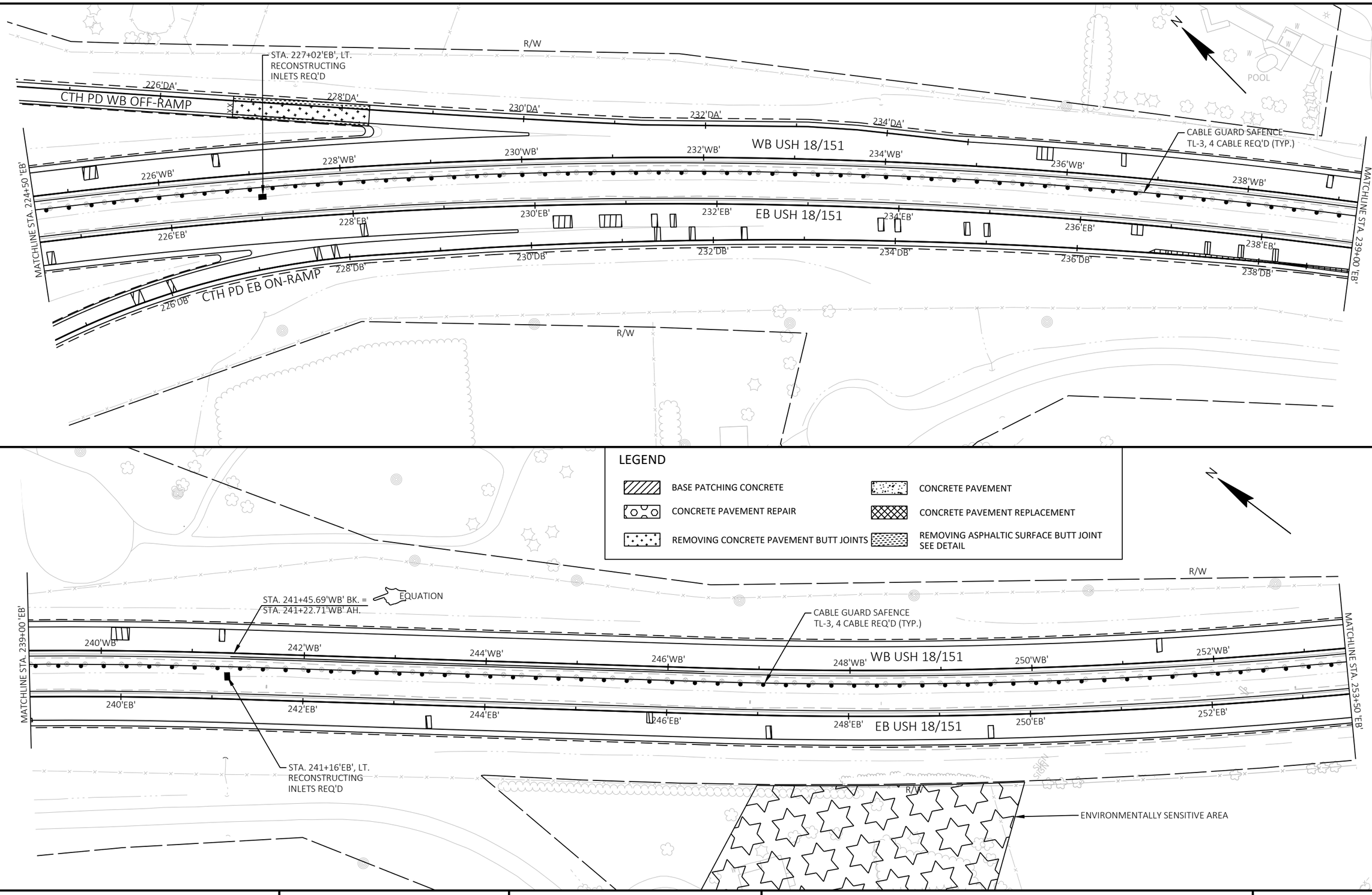

PROJECT NO: 1204-08-65	HWY: USH 18/151	COUNTY: DANE	PLAN SHEETS	SHEET 344	E

FILE NAME : G:\WDOTSW\20007-000 USH 18\CIVIL 3D\SHEETSPLAN\050201-PN.DWG
LAYOUT NAME - 04

PLOT DATE : 11/29/2022 1:49 PM PLOT BY : KL ENGINEERING PLOT NAME : PLOT SCALE : 1 IN:100 FT

WISDOT/CADDS SHEET 44

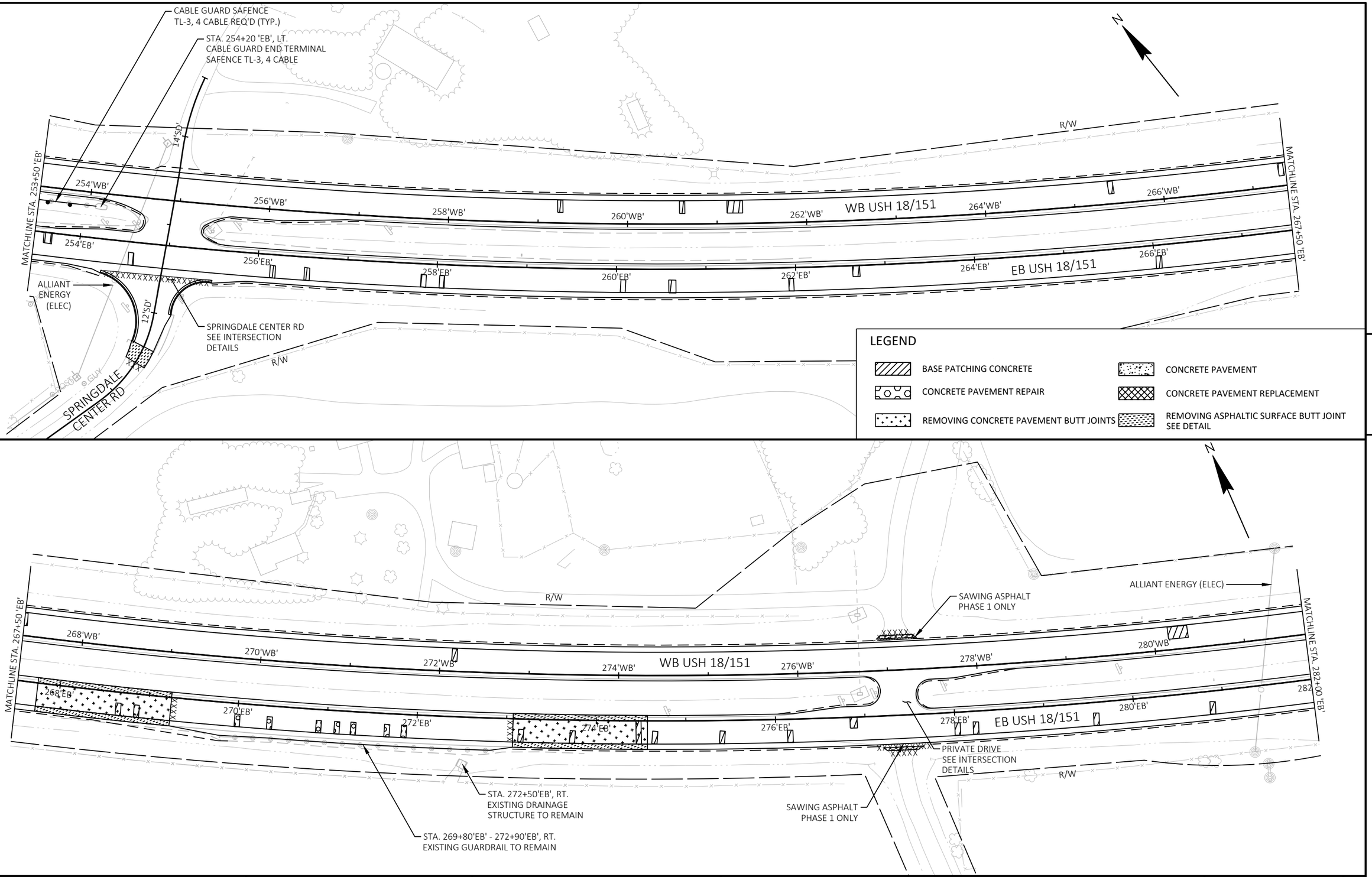

5

5

PROJECT NO: 1204-08-65	HWY: USH 18/151	COUNTY: DANE	PLAN SHEETS	SHEET 345	E

FILE NAME : G:\WDOTSW\20007-000 USH 18\CIVIL 3D\SHEETSPLAN\050201-PN.DWG
LAYOUT NAME - 05

PLOT DATE : 11/29/2022 1:50 PM PLOT BY : KL ENGINEERING PLOT NAME : PLOT SCALE : 1 IN:100 FT

WISDOT/CADDS SHEET 44

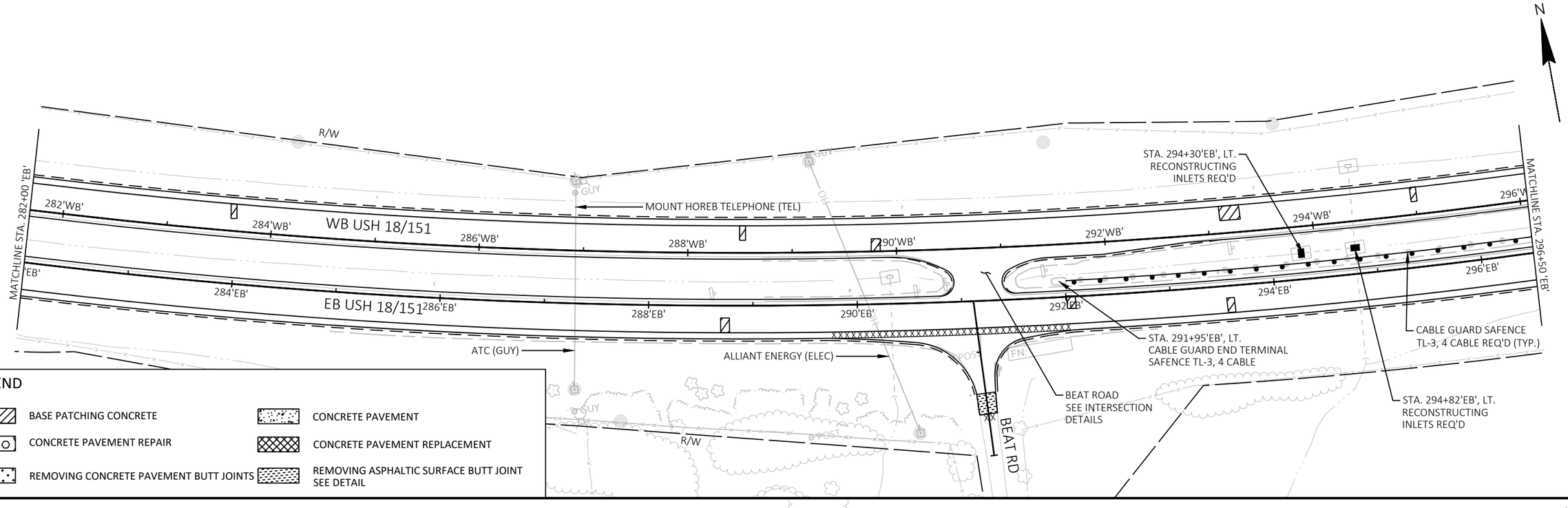

PROJECT NO: 1204-08-65	HWY: USH 18/151	COUNTY: DANE	PLAN SHEETS	SHEET 346	E

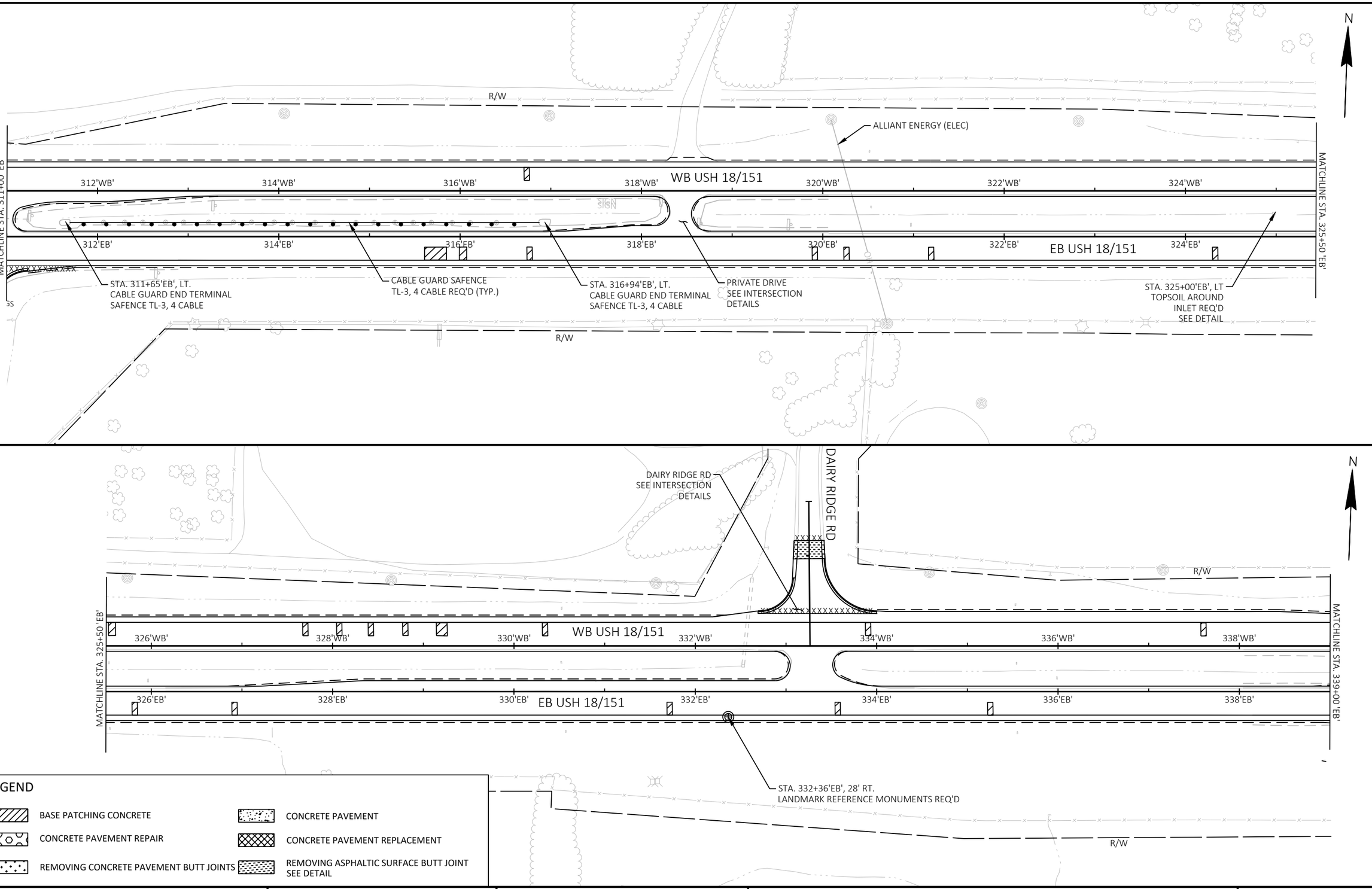

5

5

PROJECT NO: 1204-08-65	HWY: USH 18/151	COUNTY: DANE	PLAN SHEETS	SHEET 347	E

FILE NAME : G:\WDOTSW\20007-000 USH 18\CIVIL 3D\SHEETSPLAN\050201-PN.DWG
LAYOUT NAME - 07

PLOT DATE : 11/29/2022 1:52 PM PLOT BY : KL ENGINEERING PLOT NAME : PLOT SCALE : 1 IN:100 FT

STA. 342+23'WB' - STA. 343+00'WB', RT.
MGS GUARDRAIL 3, MGS GUARDRAIL THRIE BEAM TRANSITION & MGS GUARD RAIL TERMNINAL TYPE 2 REQUIRED. SEE CROSS SECTIONS FOR POST AND APPROACH TAPER LOCATIONS.

STA. 344+49'WB' - STA. 347+17'WB', LT.
STA. 344+47'WB' - STA. 347+52'WB', RT.
MGS GUARDRAIL 3, MGS GUARDRAIL THRIE BEAM TRANSITION, & MGS GUARDRAIL TERMINAL EAT REQUIRED. SEE CROSS SECTIONS FOR POST AND APPROACH TAPER LOCATIONS.

N

R/W

ALLIANT ENERGY (ELEC)

STA. 341+98'EB', LT.
RECONSTRUCT INLET

STRUCTURE B-13-380
TO REMAIN

MATCHLINE STA. 339+00 'EB'

340'WB' 342'WB' 344'WB' 346'WB' 348'WB' 350'WB' 352'WB'

WB USH 18/151

340'EB' 342'EB' 344'EB' 346'EB' 348'EB' 350'EB' 352'EB'

EB USH 18/151

MATCHLINE STA. 353+00 'EB'

STRUCTURE B-13-051
TO REMAIN

CTH J

SLOPE INTERCPT
(TYP.)

R/W

STA. 339+99'EB' - STA. 343+04'EB', LT.
STA. 340+12'EB' - STA. 343+04'EB', RT.
MGS GUARDRAIL 3, MGS GUARDRAIL THRIE BEAM TRANSITION, & MGS GUARDRAIL TERMINAL EAT REQUIRED. SEE CROSS SECTIONS FOR POST AND APPROACH TAPER LOCATIONS.

5

5

LEGEND

- BASE PATCHING CONCRETE
- CONCRETE PAVEMENT
- CONCRETE PAVEMENT REPAIR
- CONCRETE PAVEMENT REPLACEMENT
- REMOVING CONCRETE PAVEMENT BUTT JOINTS
- REMOVING ASPHALTIC SURFACE BUTT JOINT SEE DETAIL

N

R/W

ALLIANT ENERGY (ELEC)

MATCHLINE STA. 353+00 'EB'

354'WB' 356'WB' 358'WB' 360'WB' 362'WB' 364'WB' 366'WB'

WB USH 18/151

354'EB' 356'EB' 358'EB' 360'EB' 362'EB' 364'EB' 366'EB'

EB USH 18/151

MATCHLINE STA. 367+00 'EB'

8:1 BEAM GUARD TAPER

STA 36+03.63, 85.89' RT

STA 35+97.16, 48.66' RT

STA 35+61.99, 17.22' RT

SLOPE INTERCPT
(TYP.)

WINDY OAK LN
SEE INTERSECTION
DETAILS

WINDY OAK LN

CONNECT TO EXISTING
BEAM GUARD

R/W

STA. 364+65'EB' - STA. 369+13'EB', RT
MGS GUARDRAIL SHORT RADIUS TERMINAL, MGS GUARDRAIL 3, & MGS GUARDRAIL TERMINAL TYPE 2
SEE CROSS SECTION FOR POST AND APPROACH TAPER LOCATIONS. 40' RADIUS

PROJECT NO: 1204-08-65	HWY: USH 18/151	COUNTY: DANE	PLAN SHEETS	SHEET 348	E

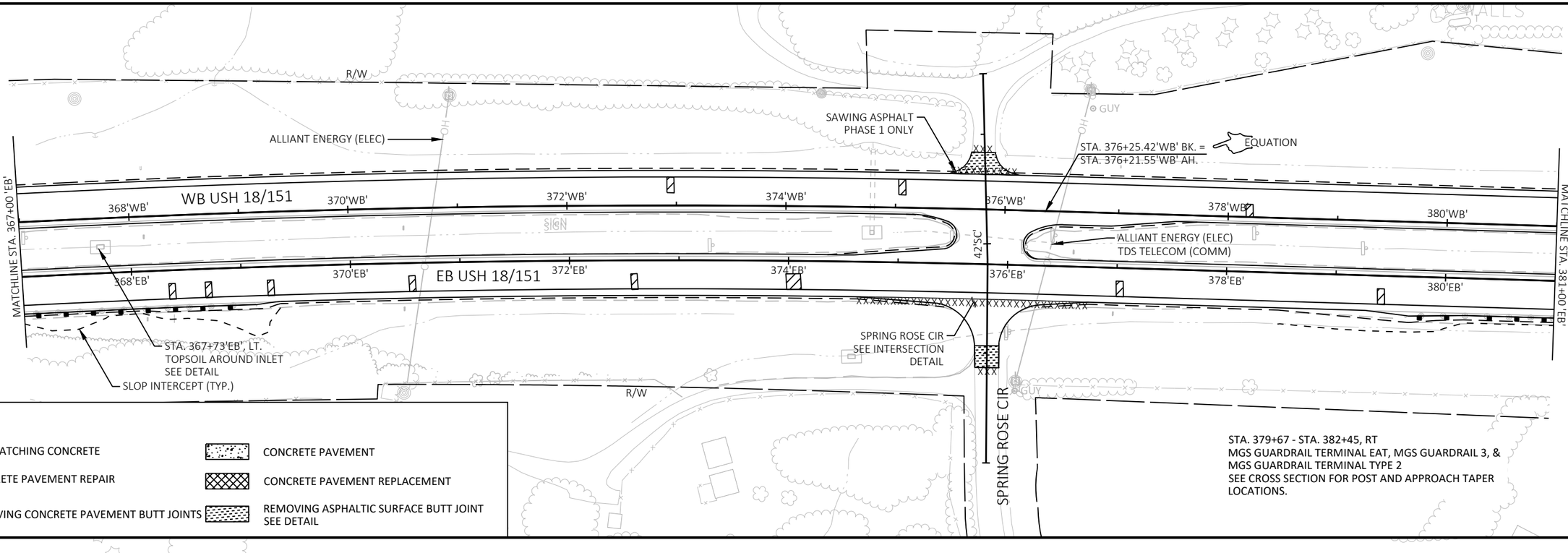

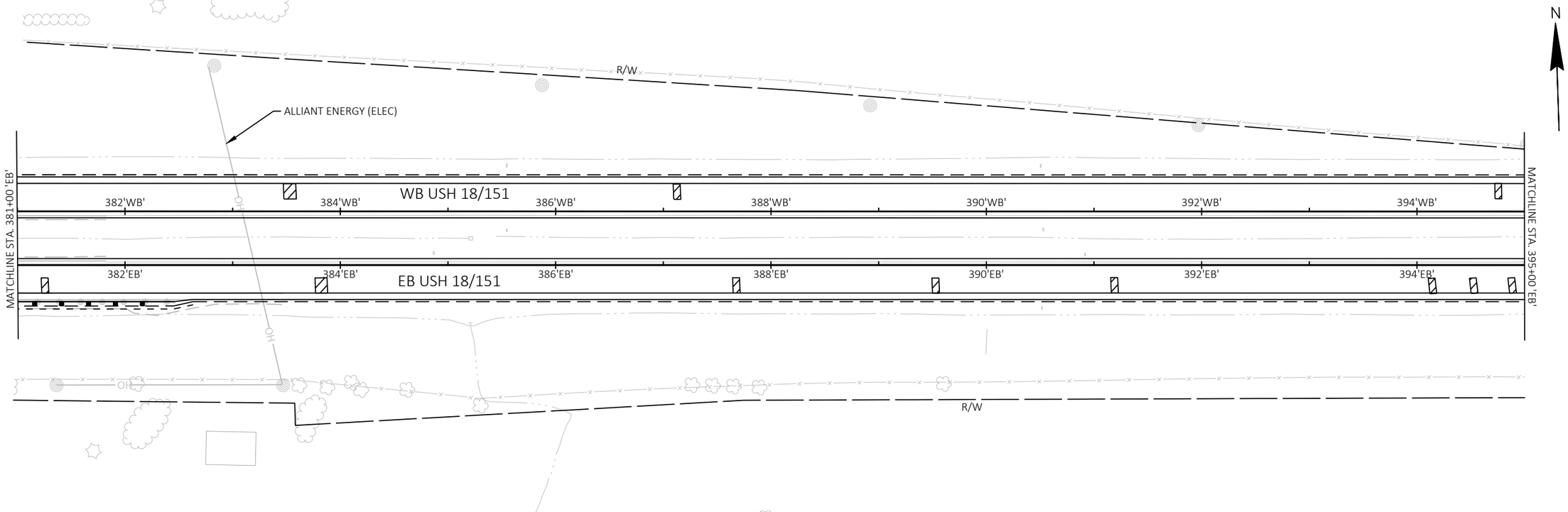

PROJECT NO: 1204-08-65	HWY: USH 18/151	COUNTY: DANE	PLAN SHEETS	SHEET 349	E

FILE NAME : G:\WDOTSW\20007-000 USH 18\CIVIL 3D\SHEETSPLAN\050201-PN.DWG
LAYOUT NAME - 09

PLOT DATE : 11/29/2022 1:54 PM PLOT BY : KL ENGINEERING PLOT NAME : PLOT SCALE : 1 IN:100 FT

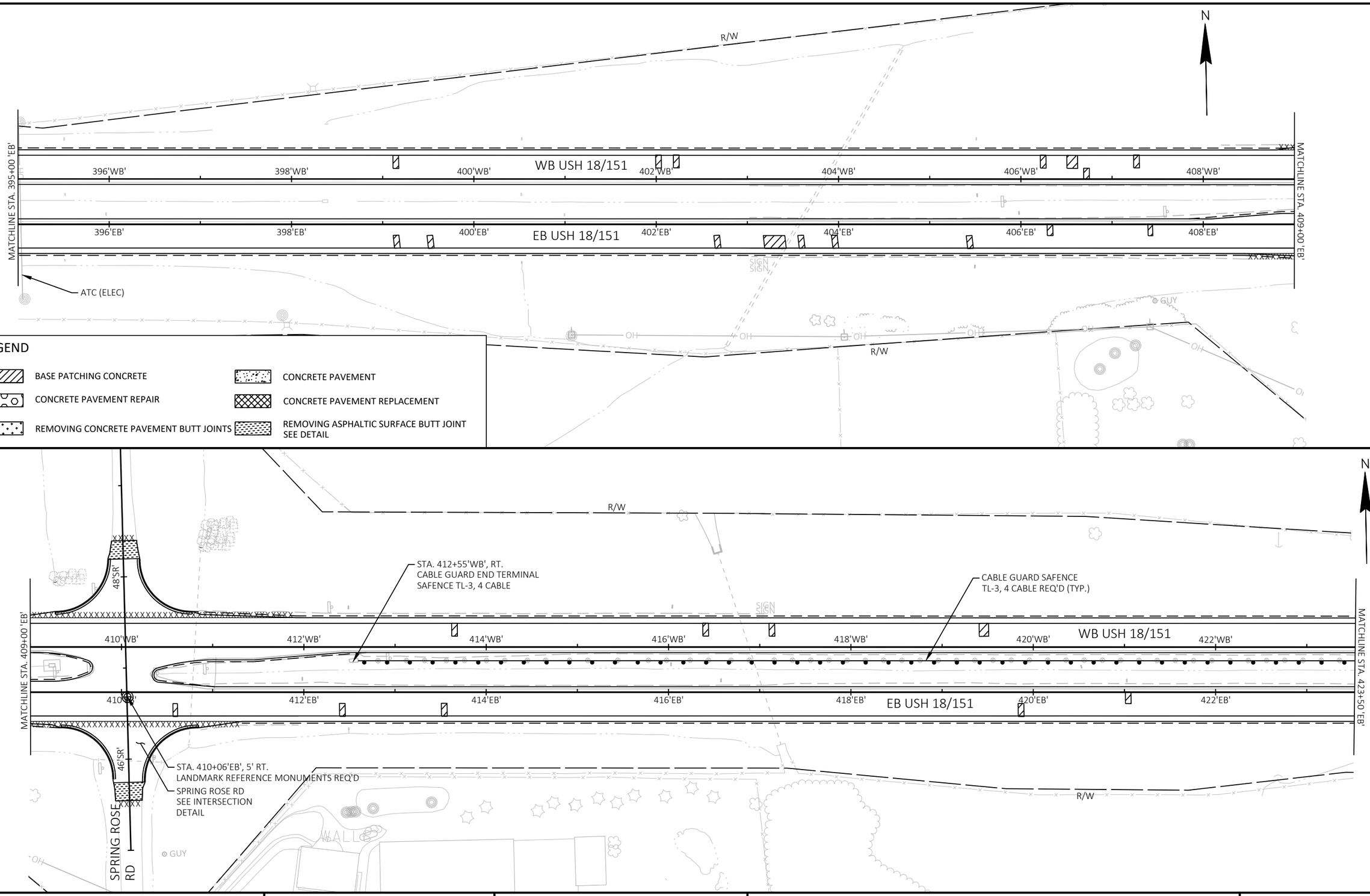

PROJECT NO: 1204-08-65	HWY: USH 18/151	COUNTY: DANE	PLAN SHEETS	SHEET 350	E

FILE NAME : G:\WDOTSW\20007-000 USH 18\CIVIL 3D\SHEETSPLAN\050201-PN.DWG
LAYOUT NAME - 10
PLOT DATE : 11/29/2022 1:55 PM
PLOT BY : KL ENGINEERING
PLOT NAME :
PLOT SCALE : 1 IN:100 FT
WISDOT/CADDS SHEET 44

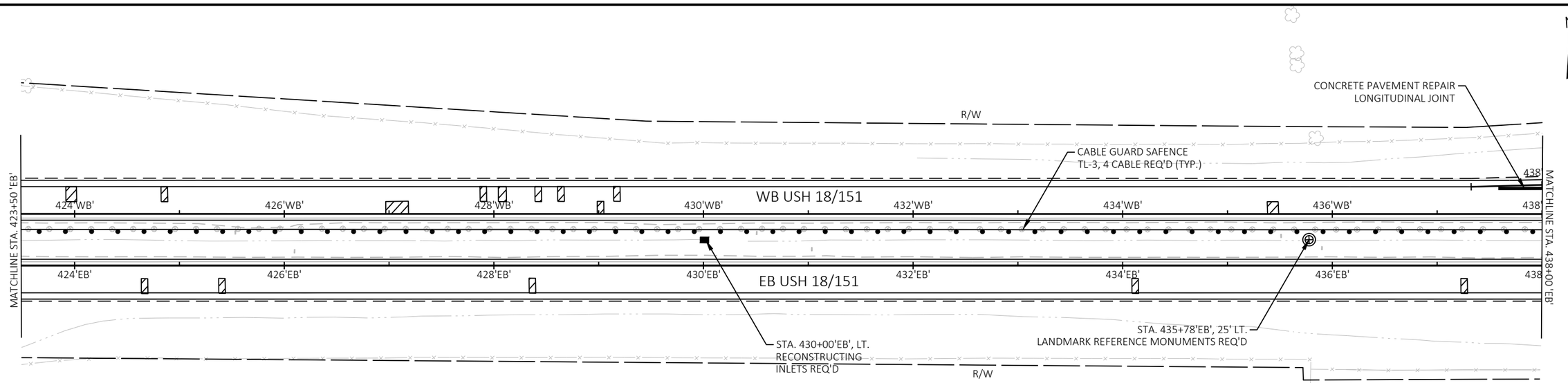

5

LEGEND

- BASE PATCHING CONCRETE
- CONCRETE PAVEMENT
- CONCRETE PAVEMENT REPAIR
- CONCRETE PAVEMENT REPLACEMENT
- REMOVING CONCRETE PAVEMENT BUTT JOINTS
- REMOVING ASPHALTIC SURFACE BUTT JOINT SEE DETAIL

5

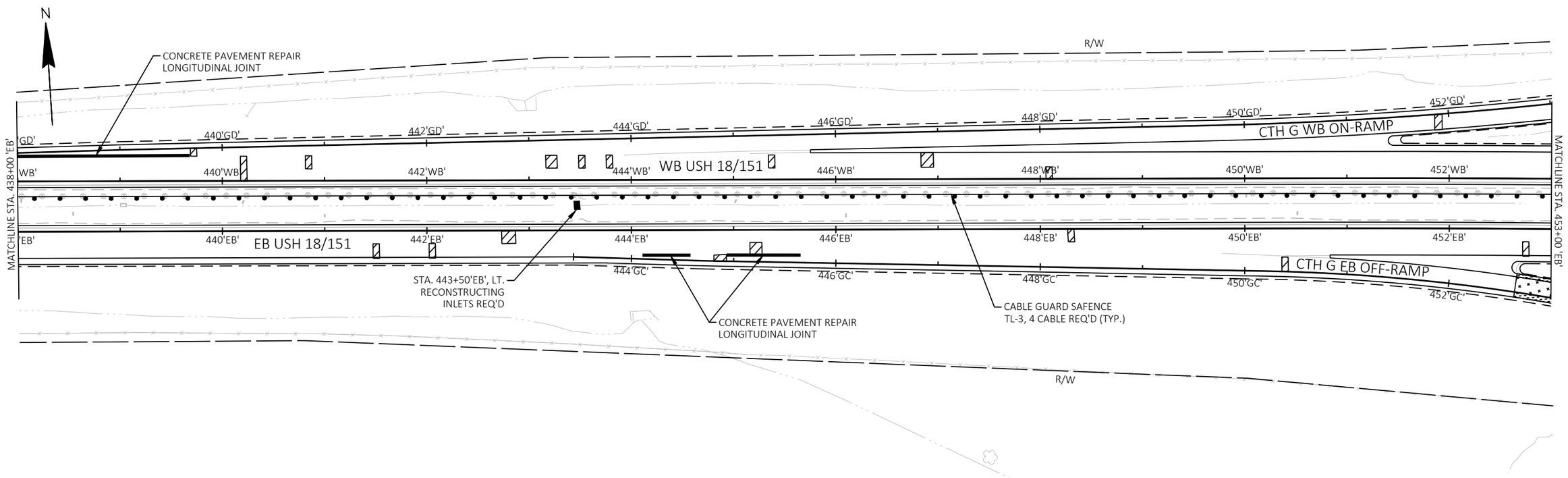

PROJECT NO: 1204-08-65	HWY: USH 18/151	COUNTY: DANE	PLAN SHEETS	SHEET 351	E

LEGEND

- BASE PATCHING CONCRETE
- CONCRETE PAVEMENT REPAIR
- REMOVING CONCRETE PAVEMENT BUTT JOINTS
- CONCRETE PAVEMENT
- CONCRETE PAVEMENT REPLACEMENT
- REMOVING ASPHALTIC SURFACE BUTT JOINT SEE DETAIL

N

R/W

454'GD' 456'GD' 458'GD' 460'GD' 462'GD'

CTH G WB ON-RAMP

464'GA' 466'GA'

CTH G WB OFF-RAMP

STA. 462+60'WB', 34' LT.
LANDMARK REFERENCE MONUMENTS REQ'D

REDUCE CABLE GUARD SAFENCE TL-3, 4 CABLE SPACING PER MANUFACTURERS SPECIFICATIONS FOR A 5-FEET MINIMUM WORKING WIDTH AT BULLNOSE TERMINAL

CABLE GUARD SAFENCE TL-3, 4 CABLE REQ'D (TYP.)

STA. 459+78.34'WB' BK. =
STA. 459+76.40'WB' AH.
EQUATION

MATCHLINE STA. 453+00 'EB'

454'WB' 456'WB' 458'WB' 460'WB' 462'WB' 464'WB' 466'WB' 468

WB USH 18/151

TNL

454'EB' 456'EB' 458'EB' 460'EB' 462'EB' 464'EB' 466'EB' 468

EB USH 18/151

MATCHLINE STA. 468+00 'EB'

INL

454'GC' 456'GC' 458'GC' 460'GC' 462'GC'

CTH G EB OFF-RAMP

STA. 461+79'EB' - STA. 463+60'EB', LT.
STEEL THRIE BEAM STRUCTURE APPROACH AND
STEEL THRIE BEAM BULLNOSE TERMINAL REQ'D
SEE DETAIL

CTH G

CTH G EB ON-RAMP

464'GB' 466'GB'

R/W

R/W

PROJECT NO: 1204-08-65	HWY: USH 18/151	COUNTY: DANE	PLAN SHEETS	SHEET 352	E

FILE NAME : G:\WDOTSW\20007-000 USH 18\CIVIL 3D\SHEETSPLAN\050201-PN.DWG
LAYOUT NAME - 12

PLOT DATE : 11/29/2022 1:57 PM PLOT BY : KL ENGINEERING PLOT NAME : PLOT SCALE : 1 IN:100 FT

WISDOT/CADDS SHEET 44

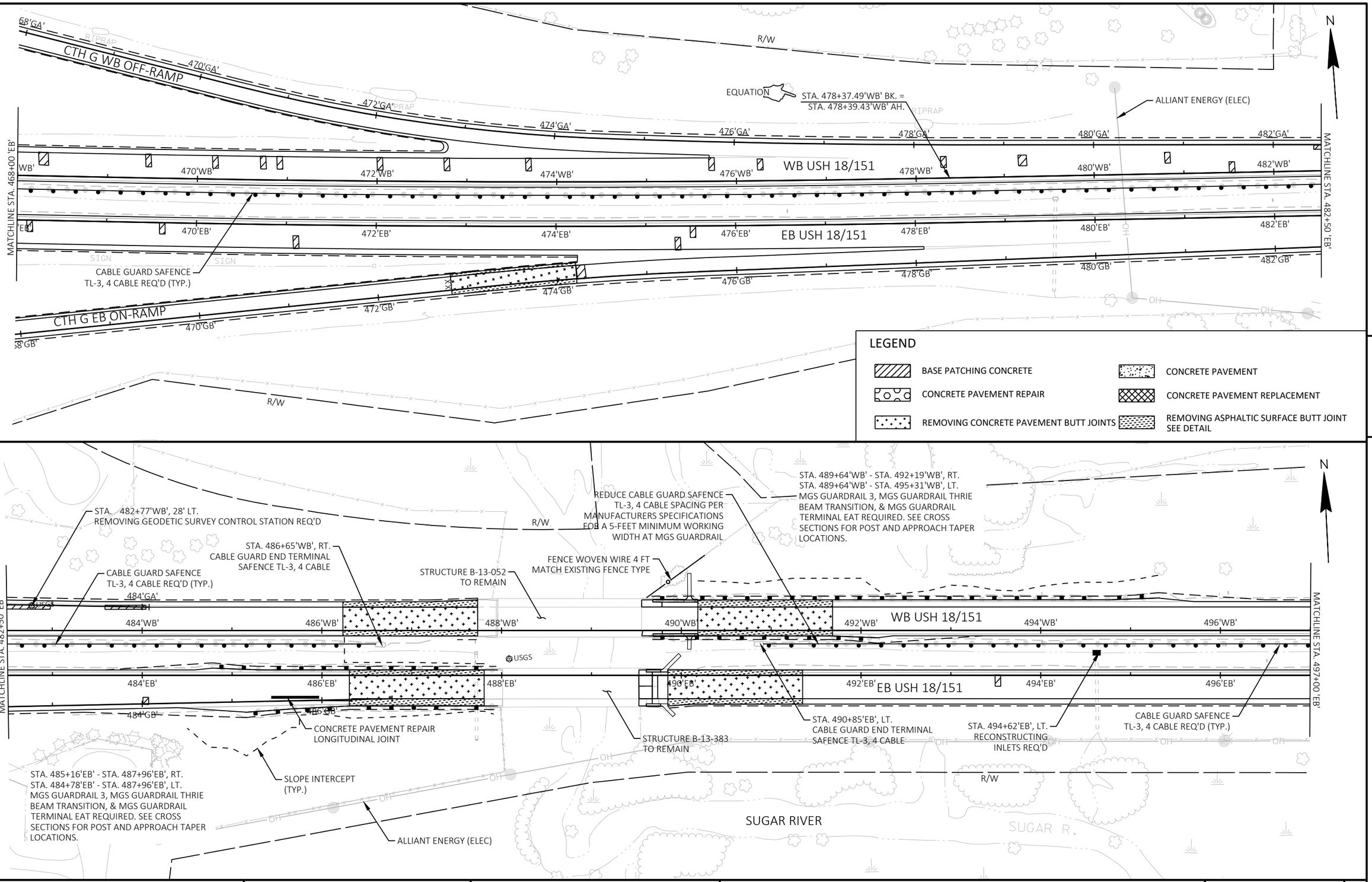

PROJECT NO: 1204-08-65	HWY: USH 18/151	COUNTY: DANE	PLAN SHEETS	SHEET 353	E

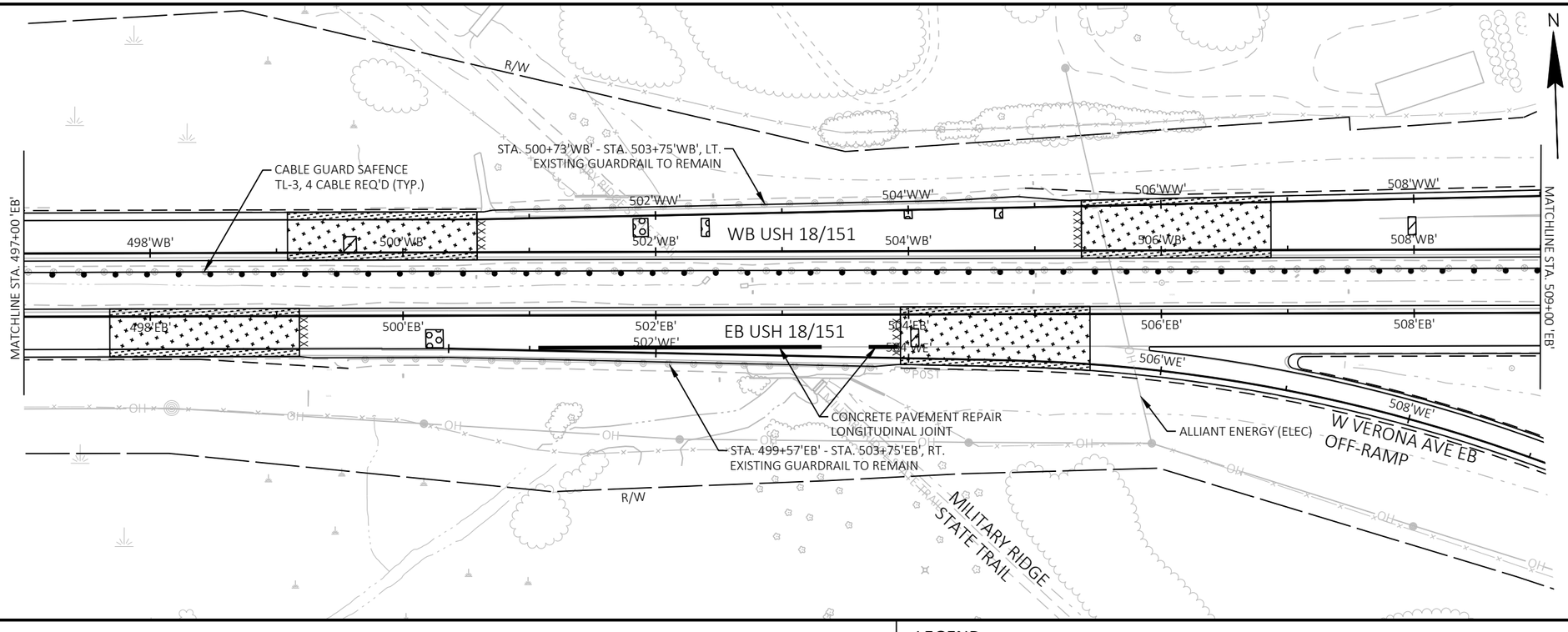

5

5

LEGEND

- BASE PATCHING CONCRETE
- CONCRETE PAVEMENT
- CONCRETE PAVEMENT REPAIR
- CONCRETE PAVEMENT REPLACEMENT
- REMOVING CONCRETE PAVEMENT BUTT JOINTS
- REMOVING ASPHALTIC SURFACE BUTT JOINT SEE DETAIL

PROJECT NO: 1204-08-65	HWY: USH 18/151	COUNTY: DANE	PLAN SHEETS	SHEET 354	E

FILE NAME : G:\WDOTSW\20007-000 USH 18\CIVIL 3D\SHEETSPLAN\050201-PN.DWG
LAYOUT NAME - 14

PLOT DATE : 11/29/2022 1:59 PM PLOT BY : KL ENGINEERING PLOT NAME : PLOT SCALE : 1 IN:100 FT

WISDOT/CADDS SHEET 44

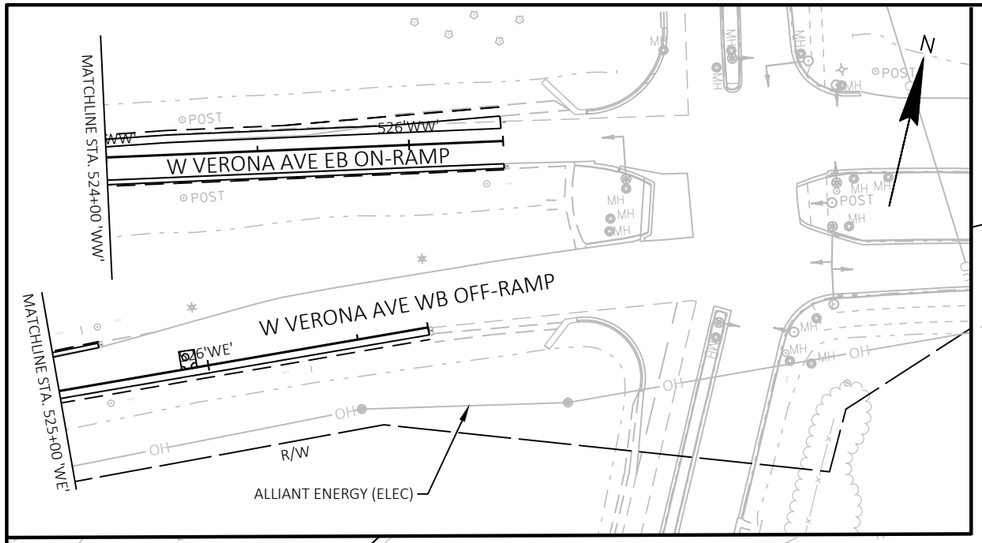

LEGEND

- BASE PATCHING CONCRETE
- CONCRETE PAVEMENT
- CONCRETE PAVEMENT REPAIR
- CONCRETE PAVEMENT REPLACEMENT
- REMOVING CONCRETE PAVEMENT BUTT JOINTS
- REMOVING ASPHALTIC SURFACE BUTT JOINT SEE DETAIL

PROJECT NO: 1204-08-65	HWY: USH 18/151	COUNTY: DANE	PLAN SHEETS	SHEET 355	E

FILE NAME : G:\WDOTSW\20007-000 USH 18\CIVIL 3D\SHEETSPLAN\050201-PN.DWG
LAYOUT NAME - 15

PLOT DATE : 11/29/2022 2:00 PM PLOT BY : KL ENGINEERING PLOT NAME : PLOT SCALE : 1 IN:100 FT

WISDOT/CADDS SHEET 44

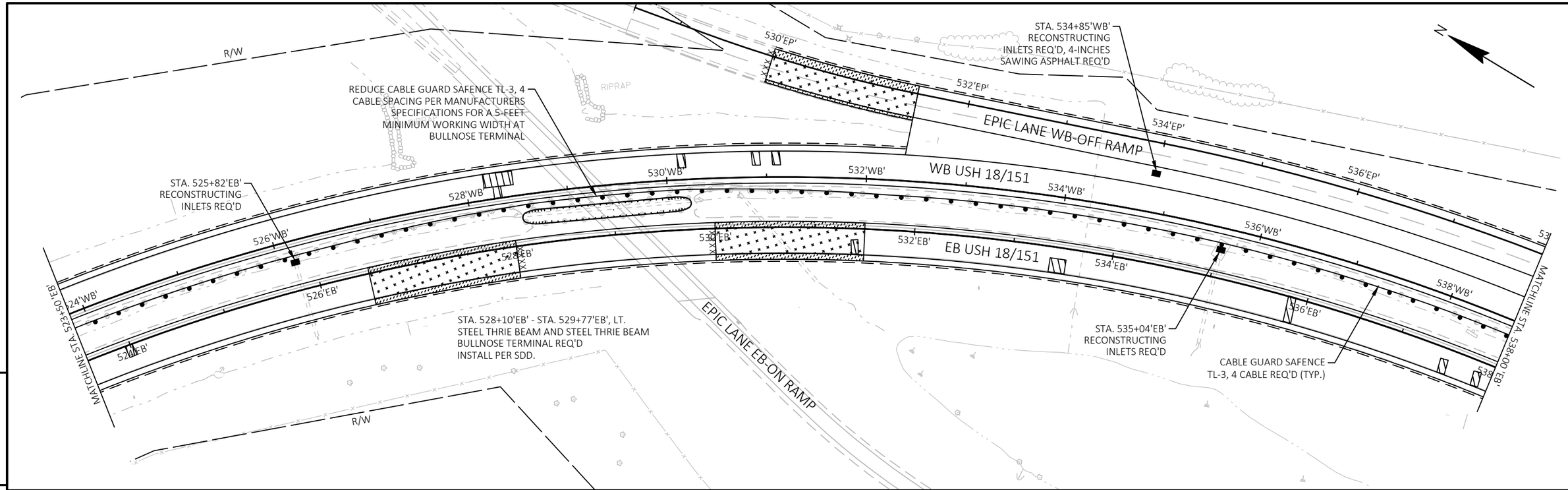

PROJECT NO: 1204-08-65	HWY: USH 18/151	COUNTY: DANE	PLAN SHEETS	SHEET 356	E

FILE NAME : G:\WDOTSW\20007-000 USH 18\CIVIL 3D\SHEETSPLAN\050201-PN.DWG
LAYOUT NAME - 16
PLOT DATE : 11/29/2022 2:01 PM
PLOT BY : KL ENGINEERING
PLOT NAME :
PLOT SCALE : 1 IN:100 FT
WISDOT/CADDS SHEET 44

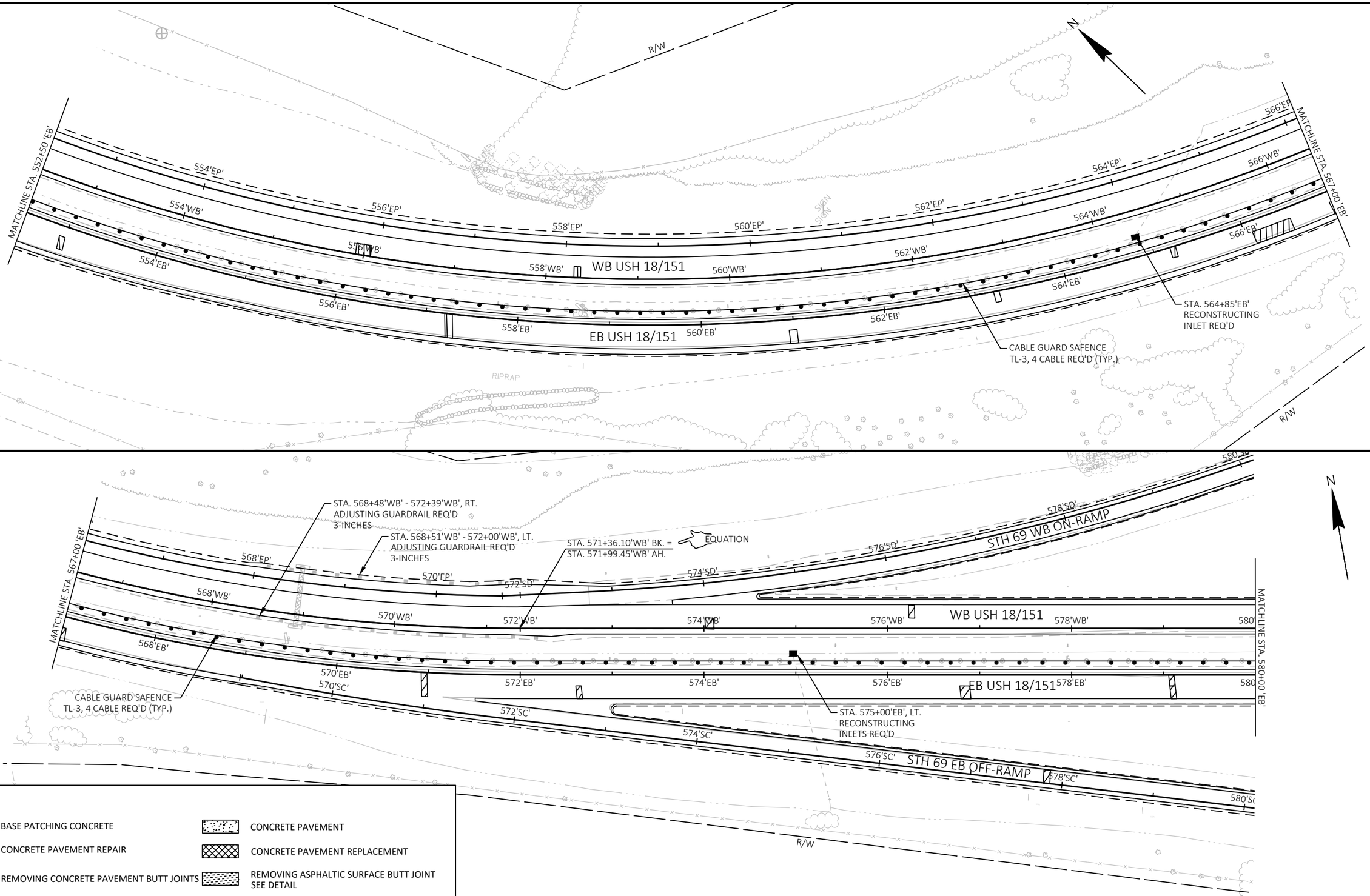

5

5

LEGEND

- BASE PATCHING CONCRETE
- CONCRETE PAVEMENT
- CONCRETE PAVEMENT REPAIR
- CONCRETE PAVEMENT REPLACEMENT
- REMOVING CONCRETE PAVEMENT BUTT JOINTS
- REMOVING ASPHALTIC SURFACE BUTT JOINT SEE DETAIL

PROJECT NO: 1204-08-65	HWY: USH 18/151	COUNTY: DANE	PLAN SHEETS	SHEET 357	E

2

5

ALLIANT ENERGY (ELEC)

STA. 586+88'WB' - STA. 589+91'WB', LT.
STA. 586+65'WB' - STA. 589+82'WB', RT.
MGS GUARDRAIL 3, MGS GUARDRAIL THRIE BEAM TRANSITION, & MGS GUARDRAIL TERMINAL EAT REQUIRED. SEE CROSS SECTIONS FOR POST AND APPROACH TAPER LOCATIONS.

N

R/W

584'SD'

586'SD'

582'SD'

STH 69 WB ON-RAMP

48'SS' SB STH 69

46'SS'

590'SA'

592'SA'

STH 69 WB OFF-RAMP

ALLIANT ENERGY (ELEC)

REDUCE CABLE GUARD SAFENCE TL-3, 4 CABLE SPACING PER MANUFACTURERS SPECIFICATIONS FOR A 5-FEET MINIMUM WORKING WIDTH AT MGS GUARDRAIL

STA. 583+25'EB',LT.
CABLE GUARD END TERMINAL
SAFENCE TL-3, 4 CABLE

STA. 582+33'EB', LT.
RECONSTRUCTING
INLETS REQ'D

STRUCTURE B-13-408
TO REMAIN
SEE BRIDGE
APPROACH DETAILS

MATCHLINE STA. 580+00 'EB'

WB'

582'WB'

584'WB'

586'WB'

588'WB'

590'WB'

WB USH 18/151

592'WB'

MATCHLINE STA. 594+00 'EB'

'EB'

582'EB'

584'EB'

586'EB'

588'EB'

590'EB'

EB USH 18/151

592'EB'

50'SS'

CABLE GUARD SAFENCE
TL-3, 4 CABLE REQ'D (TYP.)

SLOPE INTERCEPTS
(TYP.)

NB STH 69

STRUCTURE B-13-407
TO REMAIN
SEE BRIDGE
APPROACH DETAILS

STA. 587+53'EB', LT.
CABLE GUARD END TERMINAL
SAFENCE TL-3, 4 CABLE

CABLE GUARD SAFENCE
TL-3, 4 CABLE REQ'D (TYP.)

SEE PLAN DETAILS FOR STH 69

STH 69 EB OFF-RAMP

582'SC'

52'SS'

592'SB'

590'SB'

STH 69 EB ON-RAMP

588'SB'

R/W

586'SB'

STA. 581+44'EB' - STA. 584+61'EB', LT.
STA. 581+73'EB' - STA. 584+41'EB', RT.
MGS GUARDRAIL 3, MGS GUARDRAIL THRIE BEAM TRANSITION, & MGS GUARDRAIL TERMINAL EAT REQUIRED. SEE CROSS SECTIONS FOR POST AND APPROACH TAPER LOCATIONS.

54'SS'

LEGEND

- BASE PATCHING CONCRETE
- CONCRETE PAVEMENT
- CONCRETE PAVEMENT REPAIR
- CONCRETE PAVEMENT REPLACEMENT
- REMOVING CONCRETE PAVEMENT BUTT JOINTS
- REMOVING ASPHALTIC SURFACE BUTT JOINT SEE DETAIL

PROJECT NO: 1204-08-65	HWY: USH 18/151	COUNTY: DANE	PLAN SHEETS	SHEET 358	E

FILE NAME : G:\WDOTSW\20007-000 USH 18\CIVIL 3D\SHEETSPLAN\050201-PN.DWG
LAYOUT NAME - 18

PLOT DATE : 11/29/2022 2:02 PM PLOT BY : [illegible] PLOT NAME : PLOT SCALE : 1 IN:100 FT

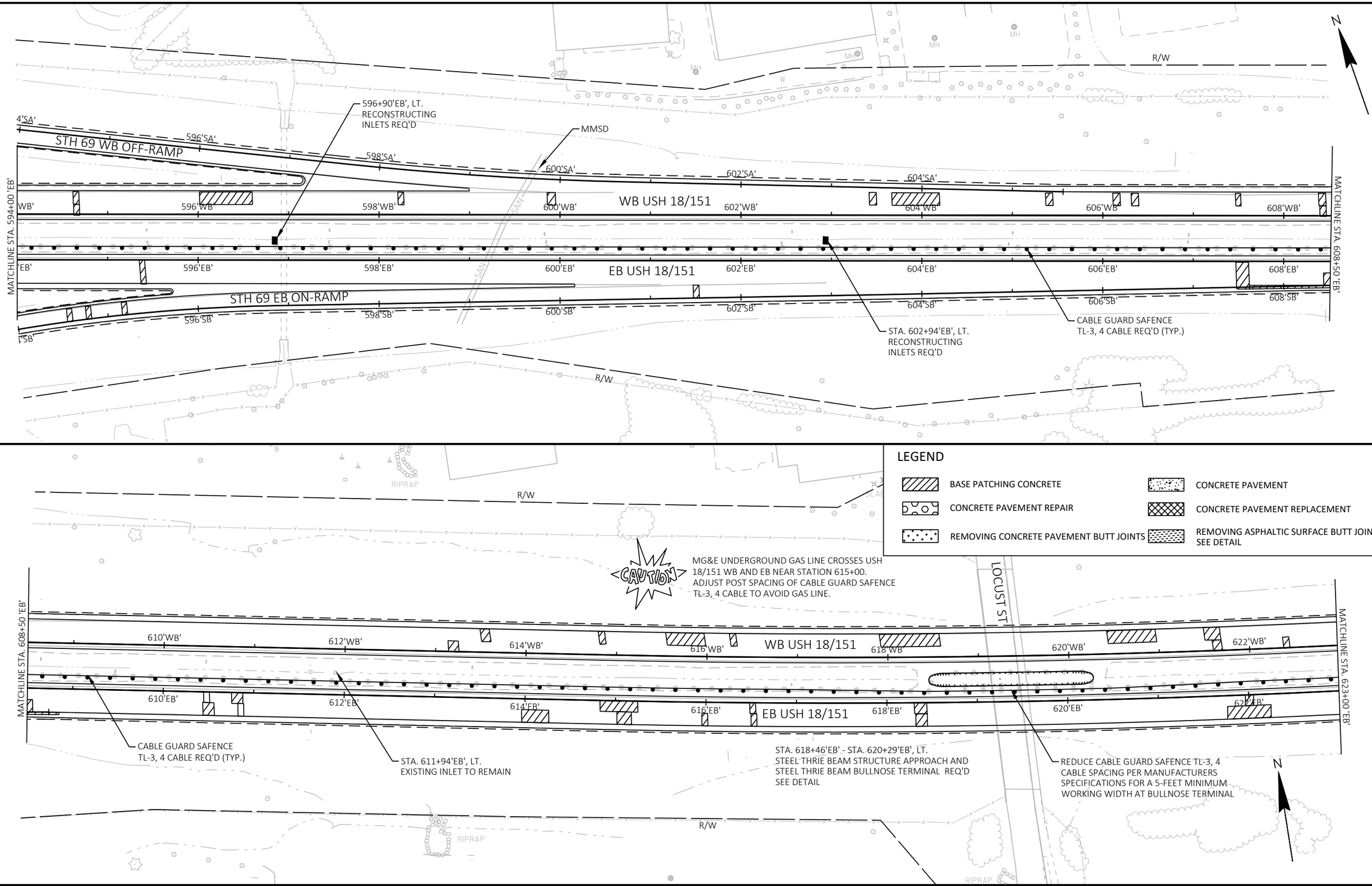

5

5

PROJECT NO: 1204-08-65	HWY: USH 18/151	COUNTY: DANE	PLAN SHEETS	SHEET 359	E

FILE NAME : G:\WDOTSW\20007-000 USH 18\CIVIL 3D\SHEETSPLAN\050201-PN.DWG
LAYOUT NAME - 19

PLOT DATE : 11/29/2022 2:04 PM PLOT BY : KL ENGINEERING PLOT NAME : PLOT SCALE : 1 IN:100 FT

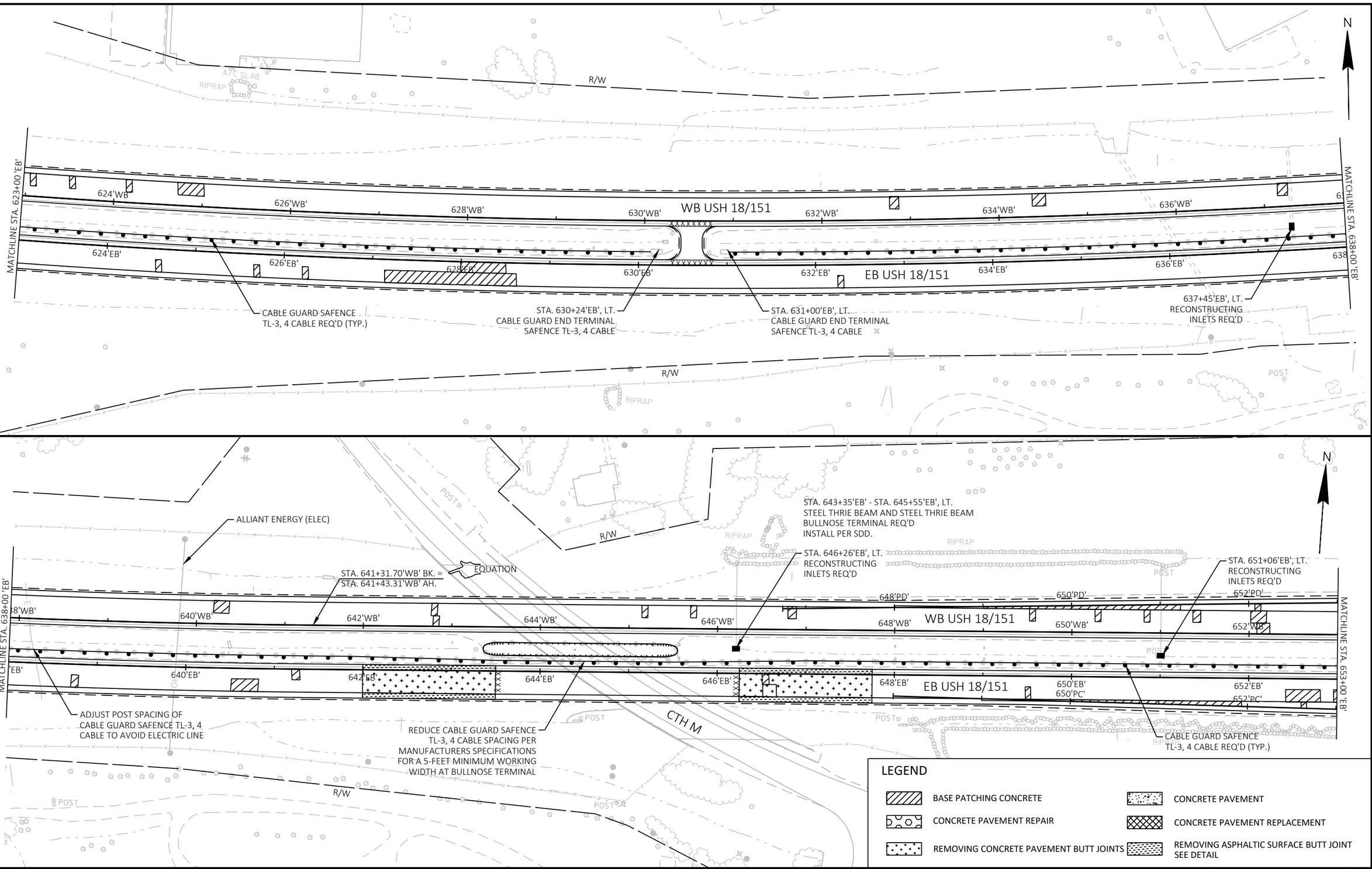

PROJECT NO: 1204-08-65	HWY: USH 18/151	COUNTY: DANE	PLAN SHEETS	SHEET 360	E

FILE NAME : G:\WDOTSW\20007-000 USH 18\CIVIL 3D\SHEETSPLAN\050201-PN.DWG
LAYOUT NAME - 20
PLOT DATE : 11/29/2022 2:05 PM
PLOT BY : KL ENGINEERING
PLOT NAME :
PLOT SCALE : 1 IN:100 FT
WISDOT/CADDS SHEET 44

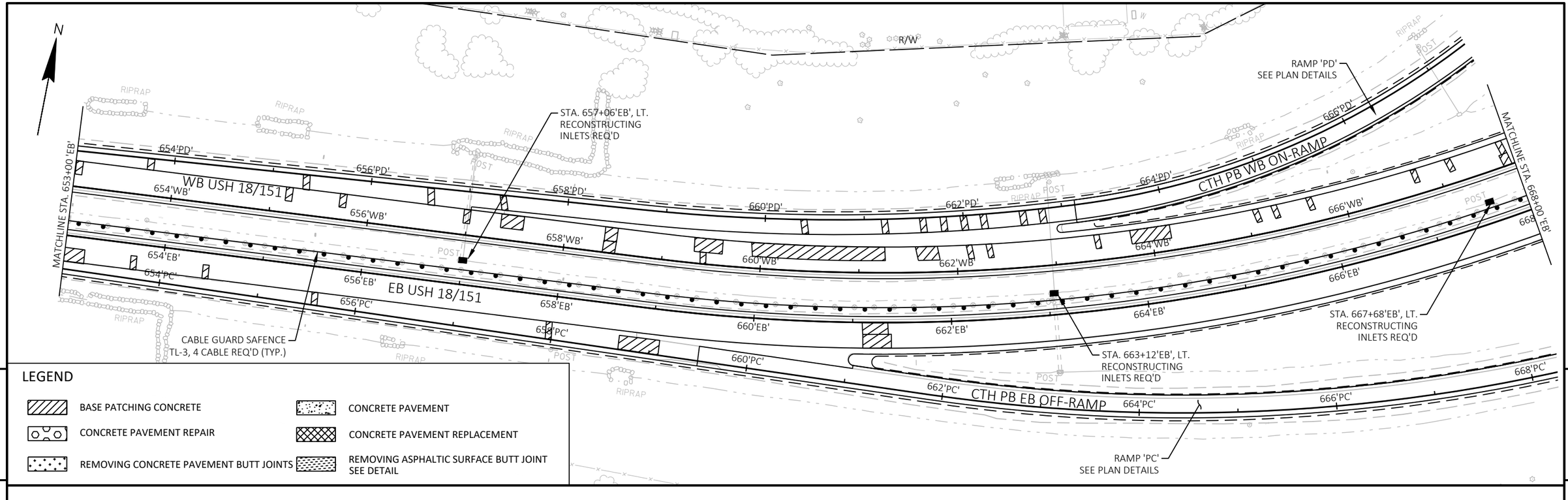

5

LEGEND

- BASE PATCHING CONCRETE
- CONCRETE PAVEMENT
- CONCRETE PAVEMENT REPAIR
- CONCRETE PAVEMENT REPLACEMENT
- REMOVING CONCRETE PAVEMENT BUTT JOINTS
- REMOVING ASPHALTIC SURFACE BUTT JOINT SEE DETAIL

5

PROJECT NO: 1204-08-65	HWY: USH 18/151	COUNTY: DANE	PLAN SHEETS	SHEET 361	E

FILE NAME : G:\WDOTSW\20007-000 USH 18\CIVIL 3D\SHEETSPLAN\050201-PN.DWG
LAYOUT NAME - 21

PLOT DATE : 11/29/2022 2:05 PM PLOT BY : KL ENGINEERING PLOT NAME : PLOT SCALE : 1 IN:100 FT

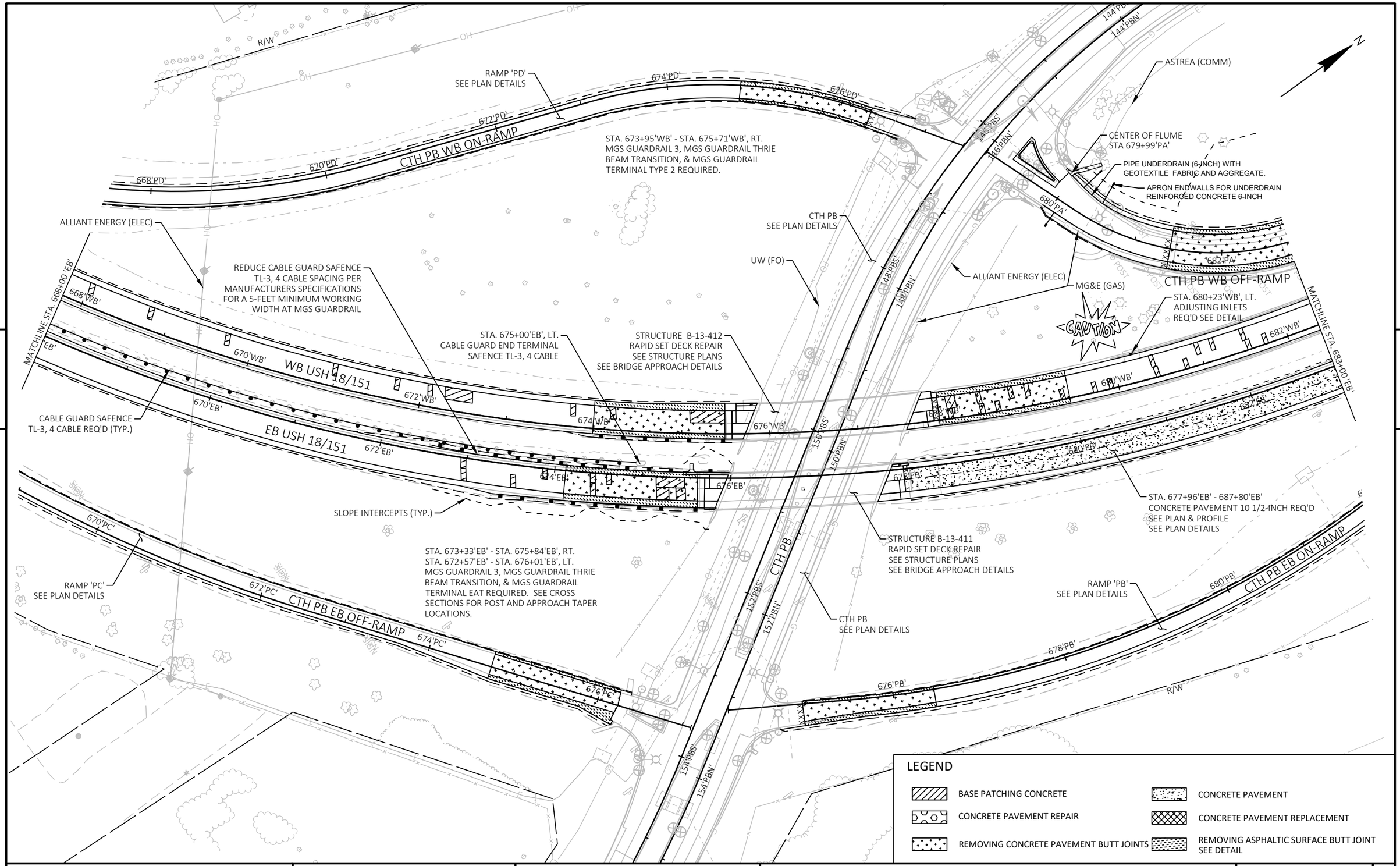

PROJECT NO: 1204-08-65	HWY: USH 18/151	COUNTY: DANE	PLAN SHEETS	SHEET 362	E

RAMP 'PA'
SEE PLAN DETAILS

STA. 684+25'EB', LT.
RECONSTRUCTING
INLETS REQ'D

EQUATION
STA. 688+50.57'WB' BK. =
STA. 689+29.44'WB' AH.

CAUTION
MG&E (GAS)

STRUCTURE B-13-414
TO REMAIN
SEE BRIDGE APPROACH DETAILS

TDS (FO)

STA. 683+58'WB' - STA. 689+90'WB', RT.
STA. 692+66'WB' - STA. 695+83'WB', RT.
STA. 692+70'WB' - STA. 695+75'WB', LT.
MGS GUARDRAIL 3, MGS GUARDRAIL THRIE
BEAM TRANSITION, & MGS GUARDRAIL
TERMINAL EAT REQUIRED. SEE CROSS
SECTIONS FOR POST AND APPROACH TAPER
LOCATIONS.

N

MATCHLINE STA. 683+00 'EB'

684'PA'
686'PA'
CTH PB WB OFF-RAMP
688'PA'
690'PA'
684'WB'
686'WB'
688'WB'
690'WB'
692'WB'
694'WB'
696'WB'
WB USH 18/151
698'WB'

MATCHLINE STA. 698+00 'EB'

ADJUSTING INLETS REQ'D
STA. 682+70'WB', LT.
STA. 684+96'WB', LT.
STA. 687+87'WB', LT. (x2)

684'EB'
686'EB'
688'EB'
690'EB'
692'EB'
694'EB'
696'EB'
EB USH 18/151
698'EB'

684'PB'
686'PB'
688'PB'
690'PB'
CTH PB EB ON-RAMP

RAMP 'PB'
SEE PLAN DETAILS

CONCRETE PAVEMENT REPAIR
LONGITUDINAL JOINT (TYP.)

STRUCTURE B-13-413
TO REMAIN
SEE BRIDGE APPROACH DETAILS

SLOPE INTERCEPTS
(TYP.)

STA. 687+61'PB' - STA. 690+53'PB'
STA. 685+05'EB' - STA. 687+86'EB', LT.
MGS GUARDRAIL 3, MGS GUARDRAIL THRIE
BEAM TRANSITION, & MGS GUARDRAIL
TERMINAL EAT REQUIRED. SEE CROSS
SECTIONS FOR POST AND APPROACH TAPER
LOCATIONS.

WHALEN RD

R/W

5

5

STA. 708+40'WB',LT
TOPSOIL AROUND INLET REQ'D
SEE DETAIL

CONCRETE PAVEMENT REPAIR
LONGITUDINAL JOINT (TYP.)

N

MATCHLINE STA. 698+00 'EB'

'WB'
700'WB'
702'WB'
704'WB'
706'WB'
WB USH 18/151
708'WB'
710'WB'
712'WB'

MATCHLINE STA. 712+50 'EB'

'EB'
700'EB'
702'EB'
704'EB'
706'EB'
EB USH 18/151
710'EB'
712'EB'

ADJUSTING INLETS REQ'D SEE DETAIL
STA. 700+40'EB', LT.
STA. 702+85'EB', LT.
STA. 705+31'EB', LT.
STA. 708+42'EB', LT.
STA. 710+32'EB', LT.

R/W

LEGEND

- BASE PATCHING CONCRETE
- CONCRETE PAVEMENT
- CONCRETE PAVEMENT REPAIR
- CONCRETE PAVEMENT REPLACEMENT
- REMOVING CONCRETE PAVEMENT BUTT JOINTS
- REMOVING ASPHALTIC SURFACE BUTT JOINT SEE DETAIL

PROJECT NO: 1204-08-65	HWY: USH 18/151	COUNTY: DANE	PLAN SHEETS	SHEET 363	E

FILE NAME : G:\WDOTSW\20007-000 USH 18\CIVIL 3D\SHEETSPLAN\050201-PN.DWG
LAYOUT NAME - 23

PLOT DATE : 11/29/2022 2:07 PM PLOT BY : KL ENGINEERING PLOT NAME : PLOT SCALE : 1 IN:100 FT

WISDOT/CADDS SHEET 44

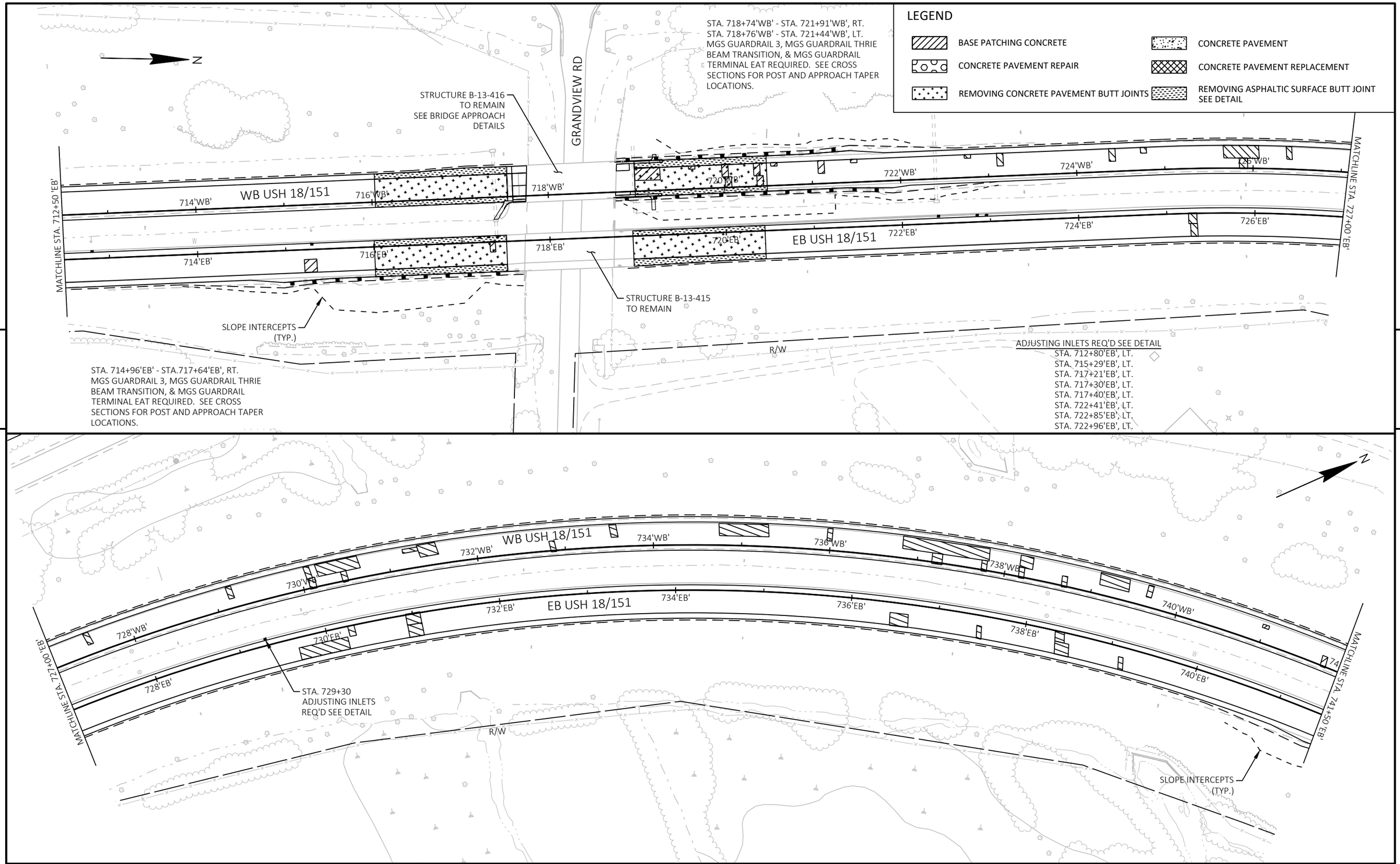

5

5

PROJECT NO: 1204-08-65	HWY: USH 18/151	COUNTY: DANE	PLAN SHEETS	SHEET 364	E

FILE NAME : G:\WDOTSW\20007-000 USH 18\CIVIL 3D\SHEETSPLAN\050201-PN.DWG
LAYOUT NAME - 24

PLOT DATE : 11/29/2022 2:08 PM PLOT BY : KL ENGINEERING PLOT NAME : PLOT SCALE : 1 IN:100 FT

LEGEND

- BASE PATCHING CONCRETE
- CONCRETE PAVEMENT
- CONCRETE PAVEMENT REPAIR
- CONCRETE PAVEMENT REPLACEMENT
- REMOVING CONCRETE PAVEMENT BUTT JOINTS
- REMOVING ASPHALTIC SURFACE BUTT JOINT SEE DETAIL

N

STA. 741+75'EE' - STA. 742+67'EE', LT.
MGS GUARDRAIL 3, MGS GUARDRAIL THRIE BEAM TRANSITION, & MGS GUARDRAIL TERMINAL EAT REQUIRED. SEE CROSS SECTIONS FOR POST AND APPROACH TAPER LOCATIONS.

STA. 743+51'WB' - STA. 744+52'WB', LT.
MGS GUARDRAIL 3, MGS GUARDRAIL THRIE BEAM TRANSITION, & MGS GUARDRAIL TERMINAL TYPE 2. SEE CROSS SECTIONS FOR POST AND APPROACH TAPER LOCATIONS.

STA. 746+16'WB' - STA. 748+75'WB', RT.
STA. 745+92'WB' - STA. 751+09'WB', LT.
MGS GUARDRAIL 3, MGS GUARDRAIL THRIE BEAM TRANSITION & MGS GUARDRAIL TERMINAL EAT REQUIRED. SEE CROSS SECTIONS FOR POST AND APPROACH TAPER LOCATIONS.

STA. 741+43'EB' - STA. 744+66'EB', RT.
MGS GUARDRAIL 3, MGS GUARDRAIL THRIE BEAM TRANSITION, & MGS GUARDRAIL TERMINAL EAT REQUIRED. SEE CROSS SECTIONS FOR POST AND APPROACH TAPER LOCATIONS.

STRUCTURE B-13-418
TO REMAIN
SEE BRIDGE APPROACH DETAILS

STRUCTURE B-13-417
TO REMAIN
SEE BRIDGE APPROACH DETAILS.

STA. 747+05.47'WB' BK. = STA. 746+46.67'WB' AH. EQUATION

RAMP 'EW'
SEE PLAN DETAILS

RAMP 'EE'
SEE PLAN DETAILS

753+20'EB'
ASPHALTIC FLUME REQ'D

SLOPE INTERCEPTS (TYP.)

MATCHLINE STA. 741+50 'EB'

MATCHLINE STA. 756+00 'EB'

E VERONA OFF-RAMP

E VERONA ON-RAMP

WB USH 18/151

EB USH 18/151

R/W

U/C

PROJECT NO: 1204-08-65	HWY: USH 18/151	COUNTY: DANE	PLAN SHEETS	SHEET 365	E

FILE NAME : G:\WDOTSW\20007-000 USH 18\CIVIL 3D\SHEETSPLAN\050201-PN.DWG
LAYOUT NAME - 25
PLOT DATE : 11/29/2022 2:08 PM PLOT BY : KL ENGINEERING PLOT NAME : PLOT SCALE : 1 IN:100 FT

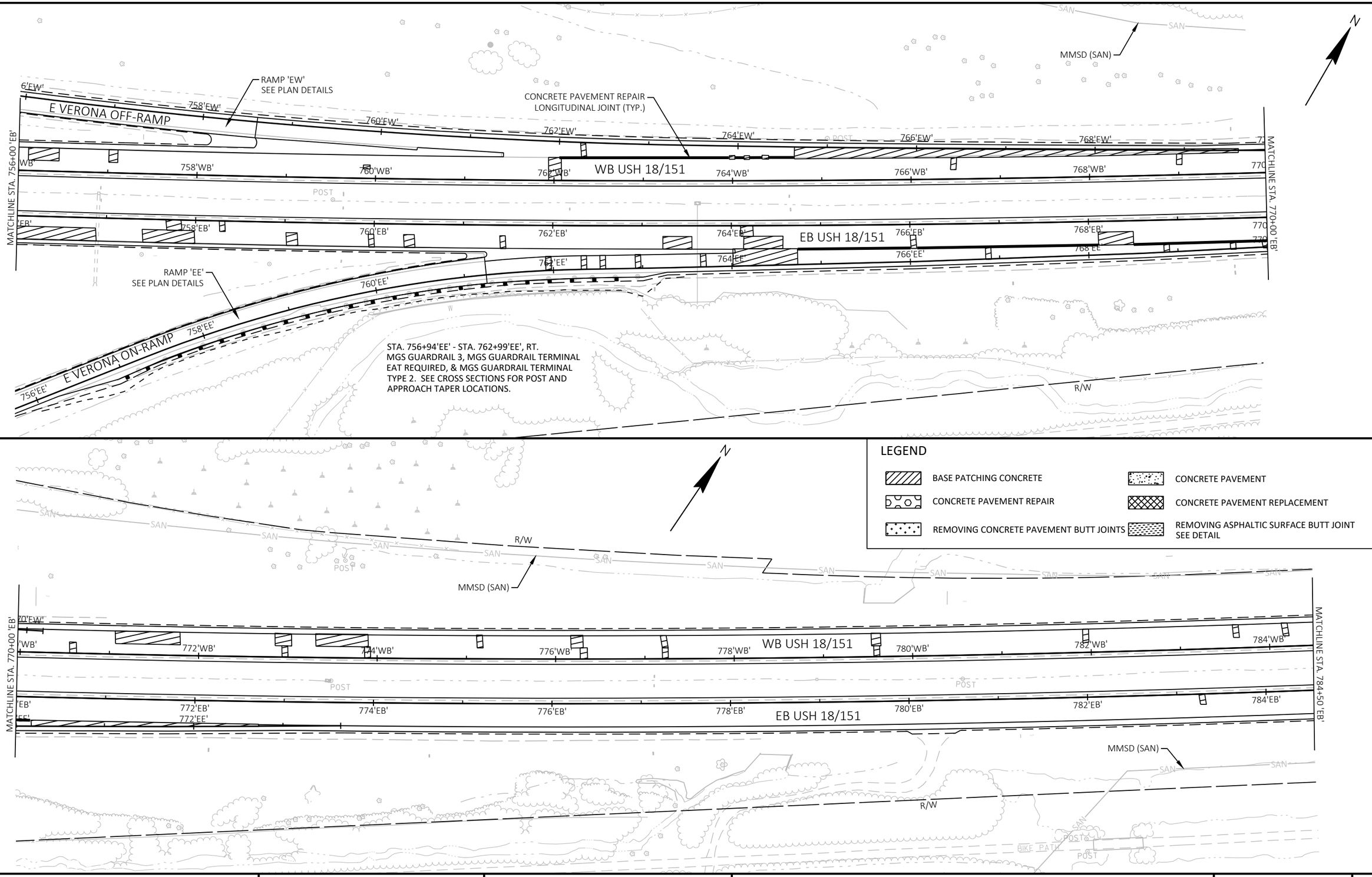

5

5

PROJECT NO: 1204-08-65	HWY: USH 18/151	COUNTY: DANE	PLAN SHEETS	SHEET 366	E

FILE NAME : G:\WDOTSW\20007-000 USH 18\CIVIL 3D\SHEETSPLAN\050201-PN.DWG
LAYOUT NAME - 26

PLOT DATE : 11/29/2022 2:09 PM PLOT BY : KL ENGINEERING PLOT NAME : PLOT SCALE : 1 IN:100 FT

WISDOT/CADDS SHEET 44

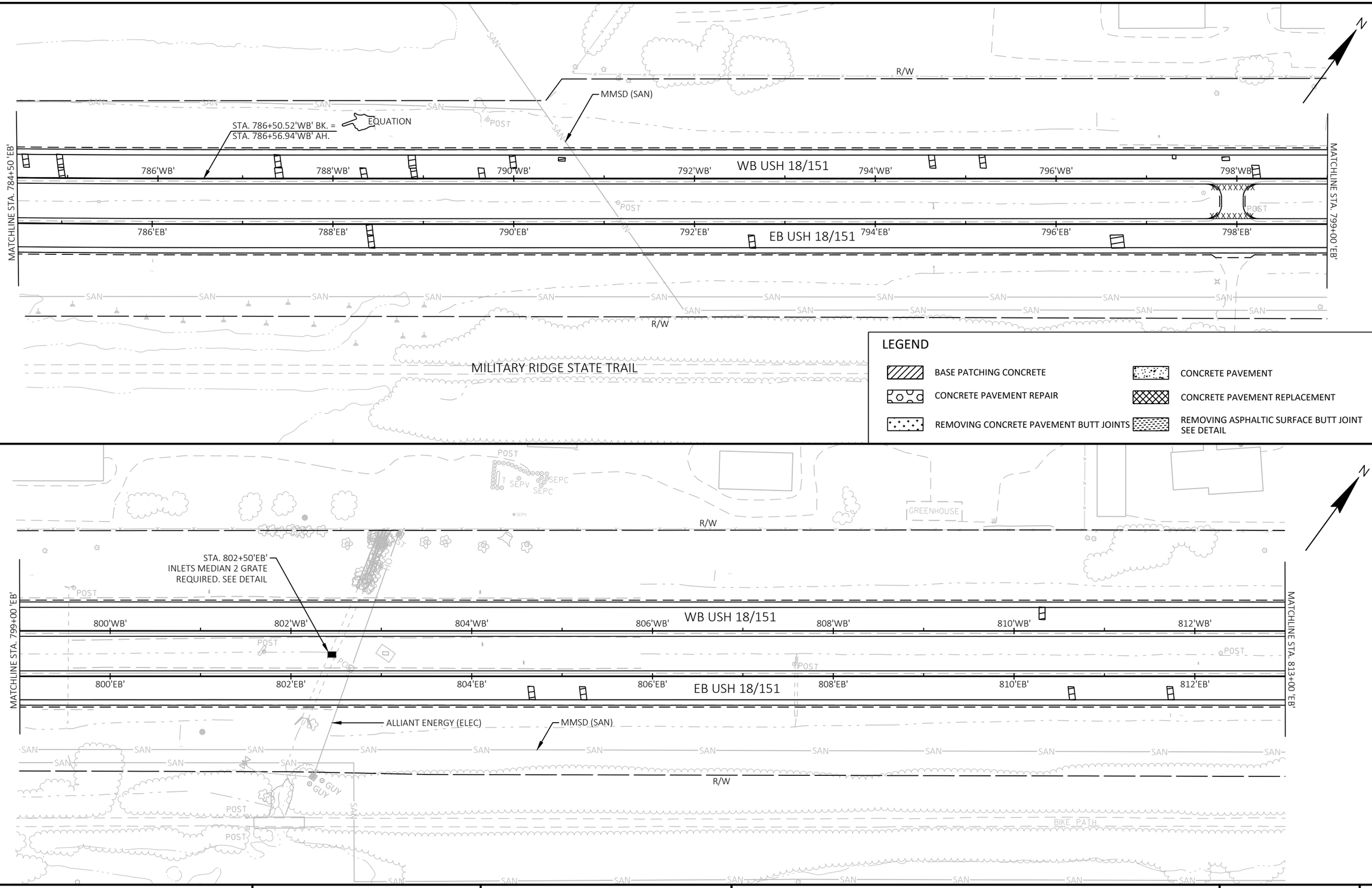

5

5

LEGEND

- BASE PATCHING CONCRETE
- CONCRETE PAVEMENT
- CONCRETE PAVEMENT REPAIR
- CONCRETE PAVEMENT REPLACEMENT
- REMOVING CONCRETE PAVEMENT BUTT JOINTS
- REMOVING ASPHALTIC SURFACE BUTT JOINT SEE DETAIL

PROJECT NO: 1204-08-65	HWY: USH 18/151	COUNTY: DANE	PLAN SHEETS	SHEET 367	E

FILE NAME : G:\WDOTSW\20007-000 USH 18\CIVIL 3D\SHEETSPLAN\050201-PN.DWG
LAYOUT NAME - 27

PLOT DATE : 11/29/2022 2:10 PM PLOT BY : KL ENGINEERING PLOT NAME : PLOT SCALE : 1 IN:100 FT

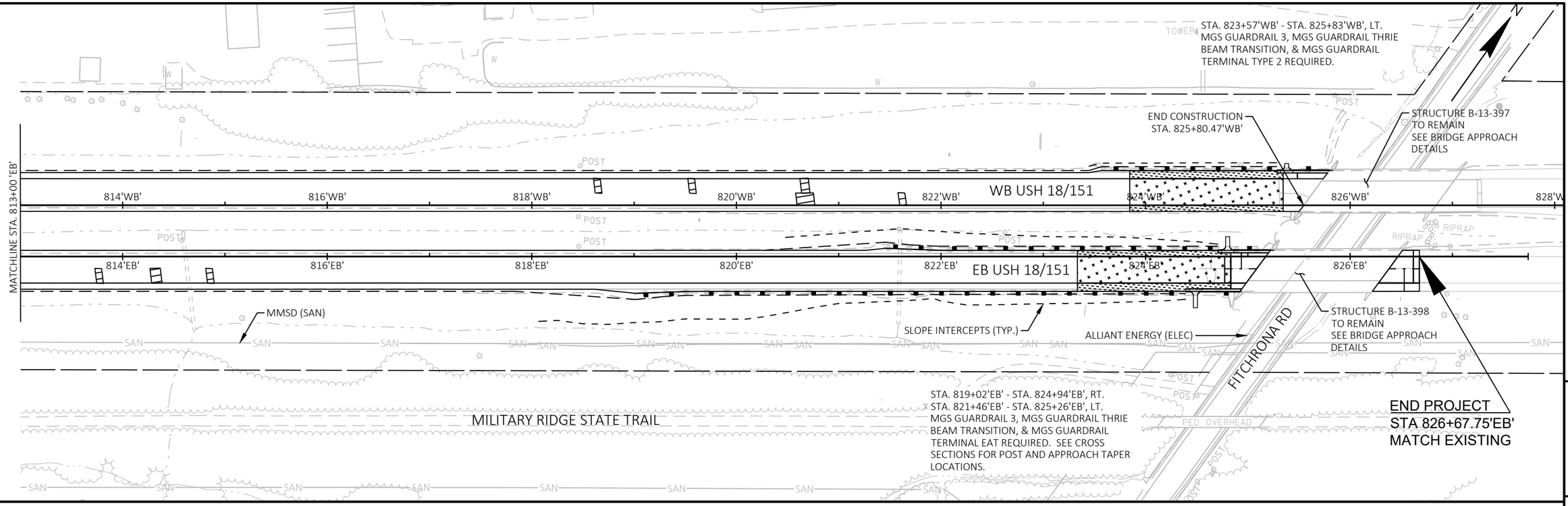

LEGEND

- BASE PATCHING CONCRETE
- CONCRETE PAVEMENT
- CONCRETE PAVEMENT REPAIR
- CONCRETE PAVEMENT REPLACEMENT
- REMOVING CONCRETE PAVEMENT BUTT JOINTS
- REMOVING ASPHALTIC SURFACE BUTT JOINT SEE DETAIL

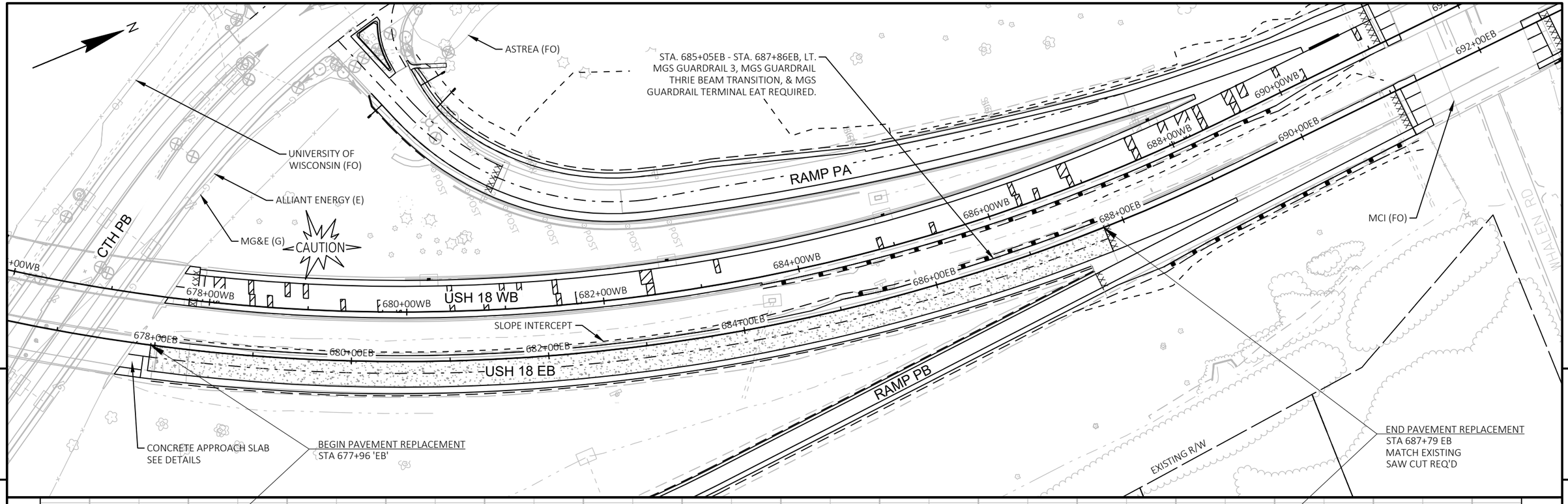

PROJECT NO: 1204-08-65	HWY: USH 18/151	COUNTY: DANE	PLAN AND PROFILE: USH 18 EB	SHEET 369	E

FILE NAME : G:\WDOTSW\20007-000 USH 18\CIVIL 3D\SHEETSPLAN\PLAN & PROFILE\050101-PP (USH 18 EB).DWG
LAYOUT NAME - EB01

PLOT DATE : 7/8/2022 1:01 PM PLOT BY : KL ENGINEERING PLOT NAME : PLOT SCALE : 1 IN:100 FT

WISDOT/CADDS SHEET 44

UNIVERSITY OF WISCONSIN (FO)

RAMP PD

CTH PB

ALLIANT ENERGY (E)

N

WHALEN ROAD

CAUTION

ASTREA (FO)

SLOPE INTERCEPT (TYP.)

MG&E (G)

TDS TELECOM (FO)

680+00PA

682+00PA

684+00PA

686+00PA

688+00PA

690+00PA

RAMP PA

USH 18 WB

USH 18 EB

MCI (FO)

5

5

BEGIN RAMP PA CONCRETE PAVEMENT 9-INCH
STA 679+90PA
MATCH EXISTING

END CONCRETE PAVEMENT 9-INCH
STA 681+41.28PA
MATCH EXISTING

STA 679+28.29
EL 1018.87

VCL = 199.68

K = 32.00

VPC STA 679+41.60
VPC EL 1018.45

VPI STA 680+41.44
VPI EL 1015.27

VPT STA 681+41.28
VPT EL 1018.33

EXISTING PROFILE
RAMP PA

3.18%

EXISTING PROFILE
ELEVATION

PROPOSED PROFILE ELEVATION

PROPOSED PROFILE
RAMP PA

1045
1040
1035
1030
1025
1020
1015
1010

1018.19	1018.19	1017.08	1017.12	1016.82	1016.84	1017.32	1017.33	1018.60	1020.39	1022.26	1024.11	1025.81	1027.36	1028.69	1029.88	1030.98	1031.96	1032.80	1033.33	1033.62	1033.84	1033.99	1033.89	1033.68	1033.32	1032.80	1011.25	1007.85

678+00PA 679+00PA 680+00PA 681+00PA 682+00PA 683+00PA 684+00PA 685+00PA 686+00PA 687+00PA 688+00PA 689+00PA 690+00PA 691+00PA 692+00PA 693+00PA

PROJECT NO: 1204-08-65	HWY: USH 18/151	COUNTY: DANE	PLAN AND PROFILE: RAMP PA	SHEET 370	E

Standard Detail Drawing List

08A05-19B	INLET COVERS TYPE B, B-A, C, MS, MS-A, & WM
08A05-19C	INLET COVERS TYPE F, HM, HM-S, S, T, V, HM-GJ, & HM-GJ-S
08C08-02	INLETS MEDIAN 1 AND 2 GRATE
08D01-22A	CONCRETE CURB & GUTTER
08D01-22B	CONCRETE CURB, TIES AND CURB AND GUTTER APPLICATIONS
08D02-07A	CONCRETE SURFACE DRAINS FLUME TYPE AT STRUCTURES
08D02-07B	CONCRETE SURFACE DRAINS FLUME TYPE AT STRUCTURES
08D02-07C	CONCRETE SURFACE DRAINS FLUME TYPE AT STRUCTURES
08D03-08A	CONCRETE SURFACE DRAINS DROP INLET TYPE AT STRUCTURES
08D03-08B	CONCRETE SURFACE DRAINS DROP INLET TYPE AT STRUCTURES
08D04-06	CONCRETE SURFACE DRAINS & ASPHALTIC FLUMES
08D15-05A	EDGEDRAIN OUTLET AND OUTFALL MARKERS
08D15-05B	EDGEDRAIN AND BASE AGGREGATE OPEN GRADED
08D15-05C	EDGEDRAIN AND BASE AGGREGATE OPEN GRADED
08D16-11	CONCRETE GUTTER, CURB AND GUTTER AND PAVEMENT TIES
08E08-03	TYPICAL INSTALLATIONS OF EROSION BALES / TEMPORARY DITCH CHECKS
08E09-06	SILT FENCE
08E10-02	INLET PROTECTION TYPE A, B, C AND D
08E14-01	TRACKING PAD
08E15-01	CULVERT PIPE CHECK
09B02-10	CONDUIT
09B16-02	PULL BOX NON-CONDUCTIVE
09C02-09	CONCRETE BASES, TYPES 1, 2, 5, & 6
09C03-04	TRANSFORMER/PEDESTAL BASES
09C06-07	CONCRETE CONTROL CABINET BASE, TYPE 9, SPECIAL
09C11-10	CONCRETE BASE TYPE 10
09C15-01	CONCRETE BASE TYPE 10 SPECIAL
09D01-05	CABINET SERVICE INSTALLATION (METER BREAKER PEDESTAL)
09E01-15C	POLE MOUNTINGS FOR TRAFFIC SIGNALS AND LIGHTING UNITS, TYPE 4
09E01-15D	POLE MOUNTINGS FOR LIGHTING UNITS, TYPE 5 (30 FEET)
09E01-15G	HARDWARE DETAILS FOR POLE MOUNTINGS
09E05-06	TRAFFIC SIGNAL STANDARD ORNAMENTAL BRACKET MOUNTINGS TYPICAL FOR 13 FT. OR 15 FT.
09E07-06	TRAFFIC SIGNAL STANDARD PEDESTRIAN AND FLASHER TYPICAL MOUNTING DETAILS
09E08-09A	TYPE 9 POLE 15'-30' MONOTUBE ARM
09E08-09C	TYPE 9 SPECIAL POLE 40' MONOTUBE ARM
09E08-09E	TYPE 10 POLE 15'-30' MONOTUBE ARM
09E08-09K	GENERAL NOTES,HARDWARE DETAILS FOR TYPE 9/10,9/10 SPECIAL,12 & 13 POLES W/MONOTUBE ARMS
09F11-04	LOOP DETECTOR INSTALLED IN EXISTING CONCRETE PAVEMENT WITH NEW ASPHALTIC OVERLAY
09F13-04	LOOP DETECTOR INSTALLED IN EXISTING ASPHALTIC PAVEMENT
09F15-04B	LOOP DETECTOR INSTALLED IN BASE COURSE WITH PULL (SPLICE) BOX OFF ROADWAY (OPTION 2)
09G01-04A	SPAN WIRE TEMPORARY TRAFFIC SIGNAL
09G01-04B	SPAN WIRE TEMPORARY TRAFFIC SIGNAL
09G01-04C	SPAN WIRE TEMPORARY TRAFFIC SIGNAL
09G01-04D	SPAN WIRE TEMPORARY TRAFFIC SIGNAL
09G01-04E	SPAN WIRE TEMPORARY TRAFFIC SIGNAL
09G01-04F	SPAN WIRE TEMPORARY TRAFFIC SIGNAL
09G01-04G	SPAN WIRE TEMPORARY TRAFFIC SIGNAL
09H09-02	COMMUNICATION VAULT TYPE 1
11B02-02	CONCRETE MEDIAN NOSE
13A05-05A	SHOULDER RUMBLE STRIP, MILLING
13A05-05B	SHOULDER RUMBLE STRIP, MILLING
13A08-01	ASPHALTIC RUMBLE STRIPS AT INTERSECTION
13B02-09A	CONCRETE PAVEMENT APPROACH SLAB
13B02-09B	STRUCTURAL APPROACH SLAB AND CONCRETE PAVEMENT APPROACH SLAB
13C01-19	CONCRETE PAVEMENT LONGITUDINAL JOINTS AND TIES
13C09-17A	CONCRETE PAVEMENT REPAIR AND REPLACEMENT
13C09-17B	CONCRETE PAVEMENT REPAIR AND REPLACEMENT
13C09-17C	CONCRETE PAVEMENT REPAIR AND REPLACEMENT
13C11-14A	RURAL DOWELED CONCRETE PAVEMENT
13C11-14B	RURAL DOWELED CONCRETE PAVEMENT
13C14-07A	BASE PATCHING CONCRETE
13C14-07B	BASE PATCHING CONCRETE
13C14-07C	BASE PATCHING CONCRETE
13C18-07A	CONCRETE PAVEMENT JOINTING
13C18-07B	CONCRETE PAVEMENT STEEL REINFORCEMENT
13C18-07C	CONCRETE PAVEMENT JOINT TYPES
13C19-03	HMA LONGITUDINAL JOINTS

6

Standard Detail Drawing List

14B07-16A	CONCRETE BARRIER TEMPORARY PRECAST, 12'-6"
14B07-16B	CONCRETE BARRIER TEMPORARY PRECAST, 12'-6"
14B07-16C	CONCRETE BARRIER TEMPORARY PRECAST, 12'-6"
14B07-16D	CONCRETE BARRIER TEMPORARY PRECAST, 12'-6"
14B07-16E	CONCRETE BARRIER TEMPORARY PRECAST, 12'-6"
14B07-16F	CONCRETE BARRIER TEMPORARY PRECAST, 12'-6"
14B07-16G	CONCRETE BARRIER TEMPORARY PRECAST, 12'-6"
14B07-16H	CONCRETE BARRIER TEMPORARY PRECAST, 12'-6"
14B07-16I	CONCRETE BARRIER TEMPORARY PRECAST, 12'-6"
14B07-16J	CONCRETE BARRIER TEMPORARY PRECAST, 12'-6"
14B07-16K	CONCRETE BARRIER TEMPORARY PRECAST, 12'-6"
14B07-16L	CONCRETE BARRIER TEMPORARY PRECAST, 12'-6"
14B07-16M	CONCRETE BARRIER TEMPORARY PRECAST, 12'-6"
14B07-16N	CONCRETE BARRIER TEMPORARY PRECAST, 12'-6"
14B08-02A	CRASH CUSHION/SAND BARREL ARRAY AND OTHER TEMPORARY BARRIER LAYOUT DETAILS
14B08-02B	CRASH CUSHION/SAND BARREL ARRAY AND OTHER TEMPORARY BARRIER LAYOUT DETAILS
14B08-02C	CRASH CUSHION/SAND BARREL ARRAY AND OTHER TEMPORARY BARRIER LAYOUT DETAILS
14B08-02D	CRASH CUSHION/SAND BARREL ARRAY AND OTHER TEMPORARY BARRIER LAYOUT DETAILS
14B08-02E	CRASH CUSHION/SAND BARREL ARRAY AND OTHER TEMPORARY BARRIER LAYOUT DETAILS
14B22-07A	CONCRETE BARRIER, SINGLE-FACED (WITH ANCHORAGE)
14B22-07B	CONCRETE BARRIER, SINGLE-FACED (WITH ANCHORAGE)
14B26-05A	STEEL THRIE BEAM BULLNOSE TERMINAL
14B26-05B	STEEL THRIE BEAM BULLNOSE TERMINAL
14B26-05C	STEEL THRIE BEAM BULLNOSE TERMINAL
14B26-05D	STEEL THRIE BEAM BULLNOSE TERMINAL
14B26-05E	STEEL THRIE BEAM BULLNOSE TERMINAL
14B26-05F	STEEL THRIE BEAM BULLNOSE TERMINAL
14B26-05G	STEEL THRIE BEAM BULLNOSE TERMINAL
14B26-05H	STEEL THRIE BEAM BULLNOSE TERMINAL
14B29-01	SAFETY EDGE
14B42-07A	MIDWEST GUARDRAIL SYSTEM (MGS) GUARDRAIL
14B42-07B	MIDWEST GUARDRAIL SYSTEM (MGS) GUARDRAIL
14B42-07C	MIDWEST GUARDRAIL SYSTEM (MGS) GUARDRAIL
14B42-07D	MIDWEST GUARDRAIL SYSTEM (MGS) GUARDRAIL
14B44-04A	MIDWEST GUARDRAIL SYSTEM ENERGY ABSORBING TERMINAL (MGS)
14B44-04B	MIDWEST GUARDRAIL SYSTEM ENERGY ABSORBING TERMINAL (MGS)
14B44-04C	MIDWEST GUARDRAIL SYSTEM ENERGY ABSORBING TERMINAL (MGS)
14B45-05A	MIDWEST GUARDRAIL SYSTEM THRIE BEAM TRANSITION (MGS)
14B45-05B	MIDWEST GUARDRAIL SYSTEM THRIE BEAM TRANSITION (MGS)
14B45-05C	MIDWEST GUARDRAIL SYSTEM THRIE BEAM TRANSITION (MGS)
14B45-05D	MIDWEST GUARDRAIL SYSTEM THRIE BEAM TRANSITION (MGS)
14B45-05E	MIDWEST GUARDRAIL SYSTEM THRIE BEAM TRANSITION (MGS)
14B45-05F	MIDWEST GUARDRAIL SYSTEM THRIE BEAM TRANSITION (MGS)
14B47-03A	MIDWEST GUARDRAIL SYSTEM (MGS) TYPE 2 TERMINAL
14B47-03B	MIDWEST GUARDRAIL SYSTEM (MGS) TYPE 2 TERMINAL
14B47-03C	MIDWEST GUARDRAIL SYSTEM (MGS) TYPE 2 TERMINAL
14B47-03D	MIDWEST GUARDRAIL SYSTEM (MGS) TYPE 2 TERMINAL
14B47-03E	MIDWEST GUARDRAIL SYSTEM (MGS) TYPE 2 TERMINAL
14B47-03F	MIDWEST GUARDRAIL SYSTEM (MGS) TYPE 2 TERMINAL
14B47-03G	MIDWEST GUARDRAIL SYSTEM (MGS) TYPE 2 TERMINAL
14B52-03A	CABLE BARRIER TYPE 1 LAYOUT
14B52-03B	CABLE BARRIER TYPE 1 LAYOUT
14B52-03C	CABLE BARRIER TYPE 1 LAYOUT
14B53-02A	SHORT RADIUS BEAM GUARD (MGS) SHORT RADIUS TERMINAL (MGS)
14B53-02B	SHORT RADIUS BEAM GUARD (MGS) SHORT RADIUS TERMINAL (MGS)
14B53-02C	SHORT RADIUS BEAM GUARD (MGS) SHORT RADIUS TERMINAL (MGS)
14B53-02D	SHORT RADIUS BEAM GUARD (MGS) SHORT RADIUS TERMINAL (MGS)
14B53-02E	SHORT RADIUS BEAM GUARD (MGS) SHORT RADIUS TERMINAL (MGS)
14B53-02F	SHORT RADIUS BEAM GUARD (MGS) SHORT RADIUS TERMINAL (MGS)
14B53-02G	SHORT RADIUS BEAM GUARD (MGS) SHORT RADIUS TERMINAL (MGS)
14B53-02H	SHORT RADIUS BEAM GUARD (MGS) SHORT RADIUS TERMINAL (MGS)
14B53-02I	SHORT RADIUS BEAM GUARD (MGS) SHORT RADIUS TERMINAL (MGS)
15A03-02A	FLEXIBLE MARKER POST FOR CULVERT END
15A03-02B	FLEXIBLE MARKER POST FOR CULVERT END
15A04-07A	FLEXIBLE DELINEATOR POST
15B01-08A	FENCE WOVEN WIRE
15B01-08B	FENCE WOVEN WIRE

6

Standard Detail Drawing List

15C02-08A	BARRICADES AND SIGNS FOR MAINLINE CLOSURES
15C02-08B	BARRICADES AND SIGNS FOR VARIOUS CLOSURES
15C02-08D	ON RAMP LANE CLOSURE
15C02-08E	OFF RAMP LANE CLOSURE
15C04-05	TRAFFIC CONTROL, ADVANCE WARNING SIGNS 45 M.P.H. OR GREATER TWO-WAY UNDIVIDED ROAD OPEN TO TRAFFIC
15C05-05	TRAFFIC CONTROL, ADVANCE WARNING SIGNS 40 M.P.H. OR LESS
15C07-15A	PAVEMENT MARKING SYMBOLS
15C07-15B	PAVEMENT MARKING WORDS
15C07-15C	PAVEMENT MARKING ARROWS
15C08-22A	LONGITUDINAL MARKING (MAINLINE)
15C08-22C	PAVEMENT MARKING (TURN LANES)
15C08-22D	PAVEMENT MARKING (TURN LANES)
15C11-10B	CHANNELIZING DEVICES DRUMS, CONES, BARRICADES AND VERTICAL PANELS
15C18-07A	MEDIAN ISLAND MARKING PAVEMENT MARKINGS
15C18-07B	MEDIAN ISLAND MARKING MEDIAN ISLAND NOSE
15C31-04A	PAVEMENT MARKING EXIT RAMP AND PARALLEL EXIT RAMP
15C31-04B	PAVEMENT MARKING MAJOR SPLIT FREEWAY TO FREEWAY
15C31-04C	PAVEMENT MARKING ENTRANCE RAMP AND PARALLEL ENTRANCE RAMP
15C31-04D	PAVEMENT MARKING SERVICE INTERCHANGE LANE DROP AND LANE REDUCTION MARKING
15C33-04	STOP LINE AND CROSSWALK PAVEMENT MARKING
15C35-05A	PAVEMENT MARKING (INTERSECTIONS)
15D12-10B	TRAFFIC CONTROL, LANE CLOSURE, SPEED REDUCTION
15D12-10C	DYNAMIC LATE MERGE SYSTEM
15D12-10E	TRAFFIC CONTROL, LANE CLOSURE, TRAFFIC QUEUE WARNING SYSTEM
15D15-06A	TRAFFIC CONTROL, PARALLEL ENTRANCE RAMP WITHIN LANE CLOSURE
15D15-06B	TRAFFIC CONTROL, ENTRANCE RAMP WITHIN LANE CLOSURE
15D15-06C	TRAFFIC CONTROL, TAPERED ENTRANCE RAMP WITHIN LANE CLOSURE
15D15-06D	TRAFFIC CONTROL, TAPERED ENTRANCE RAMP WITHIN LANE CLOSURE
15D15-06E	TRAFFIC CONTROL, PARALLEL EXIT RAMP WITHIN LANE CLOSURE
15D16-05	TRAFFIC CONTROL, EXIT RAMP CLOSURE
15D20-06A	TRAFFIC CONTROL, SINGLE LANE CLOSURE, NON-FREEWAY/EXPRESSWAY
15D21-07A	TRAFFIC CONTROL, INTERSECTION WITHIN SINGLE LANE CLOSURE
15D21-07B	TRAFFIC CONTROL, INTERSECTION WITHIN SINGLE LANE CLOSURE
15D27-03	TRAFFIC CONTROL, SHOULDER CLOSURE ON DIVIDED ROADWAY, SPEEDS GREATER THAN 40 MPH
15D39-02	TRAFFIC CONTROL, DROP-OFF SIGNING
15D40-04A	TRAFFIC CONTROL, FULL LANE SHIFT NON-FREEWAY OR MULTILANE DIVIDED 45 MPH AND UNDER
15D40-04B	TRAFFIC CONTROL, FULL LANE SHIFT MULTILANE DIVIDED 50 MPH AND GREATER
15D40-04C	TRAFFIC CONTROL, PARTIAL LANE SHIFT NON-FREEWAY OR MULTILANE DIVIDED 45 MPH AND UNDER
15D40-04D	TRAFFIC CONTROL, PARTIAL LANE SHIFT MULTILANE DIVIDED 50 MPH AND GREATER
15D47-02A	TRAFFIC CONTROL, INGRESS/EGRESS WITH BARRIER
15D47-02B	TRAFFIC CONTROL, INGRESS/EGRESS WITHOUT BARRIER

6

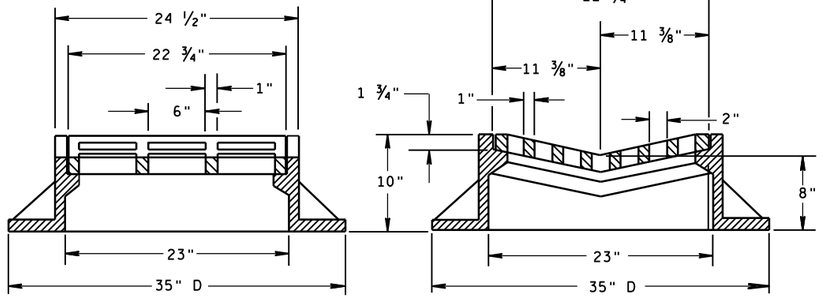

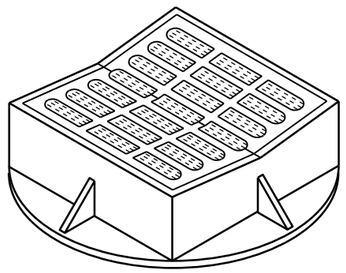

TYPE "B"

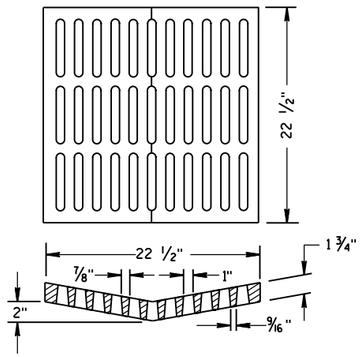

ALTERNATIVE GRATE FOR TYPE "B" COVER

USE WHERE PEDESTRIAN OR BICYCLE TRAFFIC IS POSSIBLE.
NOTED AS TYPE B-A ON THE DRAINAGE TABLE

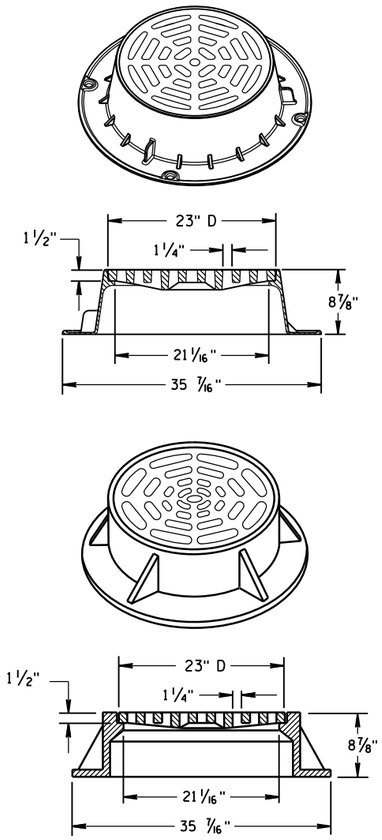

TYPE "C"

NOTE: EITHER CASTING IS ACCEPTABLE

GENERAL NOTES

DETAILS OF CONSTRUCTION, MATERIALS AND WORKMANSHIP NOT SHOWN ON THIS DRAWING SHALL CONFORM TO THE PERTINENT REQUIREMENTS OF THE STANDARD SPECIFICATIONS AND THE APPLICABLE SPECIAL PROVISIONS.

DETAIL DRAWINGS FOR PROPOSED ALTERNATE DESIGNS FOR CATCH BASIN, MANHOLE AND INLET COVERS SHALL BE SUBMITTED TO THE ENGINEER FOR APPROVAL PROVIDING THAT SUCH ALTERNATE DESIGNS MAKE PROVISION FOR EQUIVALENT CAPACITY AND STRENGTH.

ROUND FRAMES AND COVERS SHALL HAVE CONTINUOUSLY MACHINED BEARING SURFACES TO PREVENT ROCKING AND RATTLING.

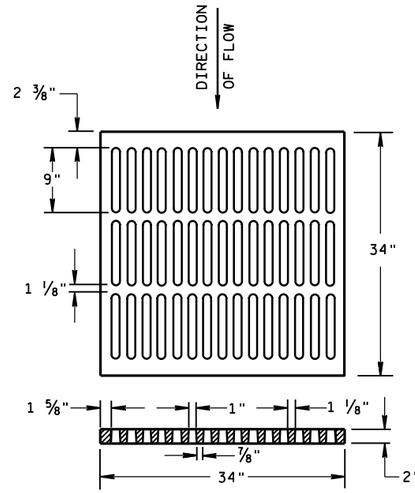

ALTERNATIVE TYPE "MS"

USE WHERE PEDESTRIAN OR BICYCLE TRAFFIC IS PERMITTED
NOTED AS TYPE MS-A ON THE DRAINAGE TABLE

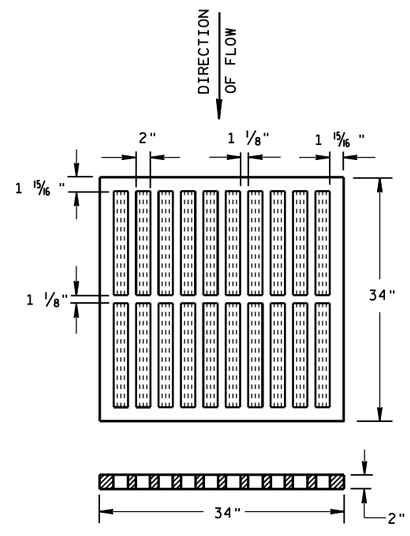

TYPE "MS"

USE ON FREEWAYS AND EXPRESSWAYS
NOTED AS TYPE MS ON DRAINAGE TABLE

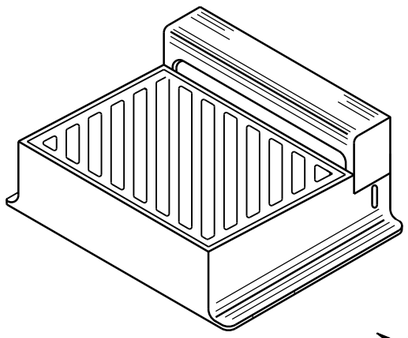

DIAGONAL SLOTS, SHALL BE ORIENTED TO THE DIRECTION OF FLOW AS ILLUSTRATED. GRATES ARE MANUFACTURED TO BE REVERSIBLE.

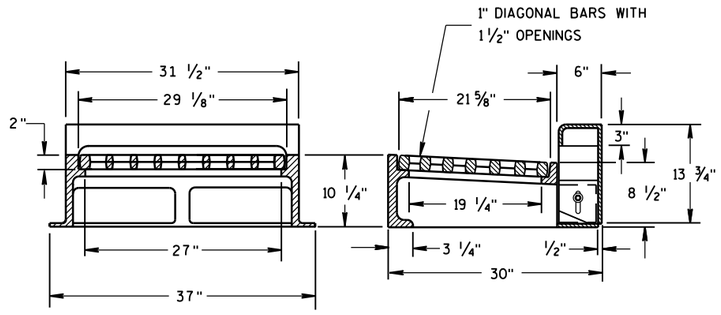

NOTE: CURB BOX HEIGHT ADJUSTABLE 6" TO 9"

TYPE "WM"

INLET COVERS
TYPE B, B-A, C,
MS, MS-A, & WM

STATE OF WISCONSIN
DEPARTMENT OF TRANSPORTATION

APPROVED
11/27/2013
DATE
/S/ Jerry H. Zogg
ROADWAY STANDARDS DEVELOPMENT ENGINEER
FHWA

6

S.D.D. 8 A 5-19b

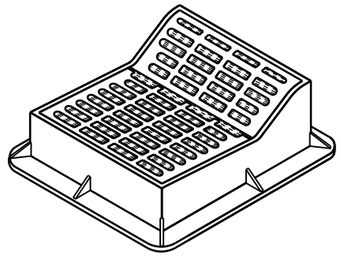

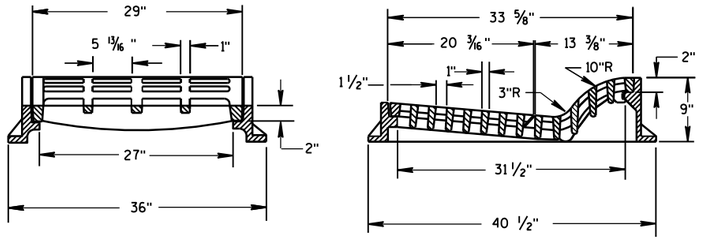

TYPE "F"

USE WITH TYPES A & D CONCRETE CURB & GUTTER, 36 INCH.

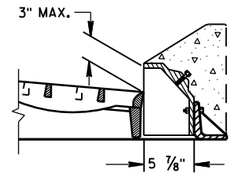

ALTERNATIVE CURB BOX FOR TYPE "HM" COVER

USE WITH TYPES G & J CONCRETE CURB & GUTTER, 30 INCH
NOTED AS TYPE HM-GJ ON DRAINAGE TABLE

NOTE:
SPECIAL GRATE FOR THE
TYPE "H" COVER MAY ALSO BE
USED FOR THE TYPE "HM-GJ" COVER
NOTED AS TYPE HM-GJ-S ON DRAINAGE TABLE

GENERAL NOTES

DETAILS OF CONSTRUCTION, MATERIALS AND WORKMANSHIP NOT SHOWN ON THIS DRAWING SHALL CONFORM TO THE PERTINENT REQUIREMENTS OF THE STANDARD SPECIFICATIONS AND THE APPLICABLE SPECIAL PROVISIONS.

DETAIL DRAWINGS FOR PROPOSED ALTERNATE DESIGNS FOR INLET COVERS SHALL BE SUBMITTED TO THE ENGINEER FOR APPROVAL PROVIDING THAT SUCH ALTERNATE DESIGNS MAKE PROVISION FOR EQUIVALENT CAPACITY AND STRENGTH.

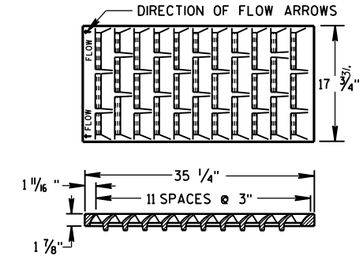

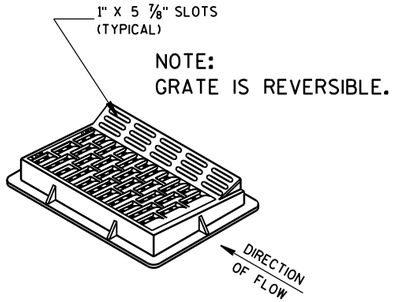

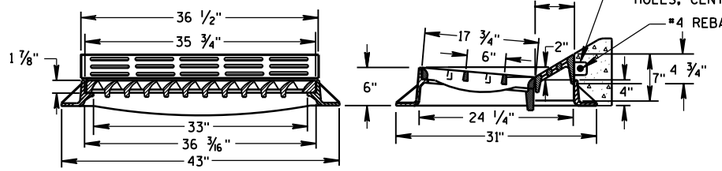

TYPE "HM"

USE WITH TYPES A & D CONCRETE CURB & GUTTER, 36 INCH.

NOTE:
SPECIAL GRATE FOR THE
TYPE "H" COVER MAY ALSO BE
USED FOR THE TYPE "HM" COVER
NOTED AS TYPE HM-S ON DRAINAGE TABLE

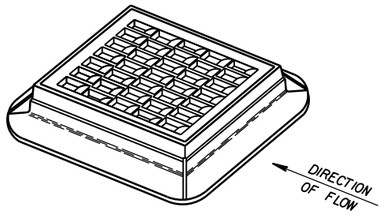

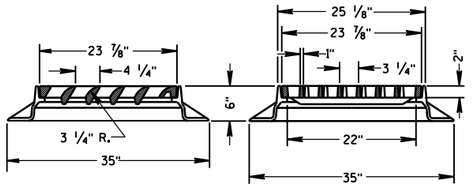

TYPE "S"

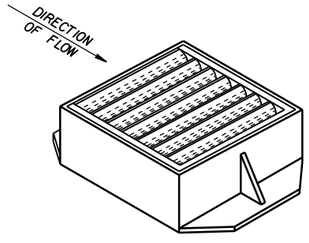

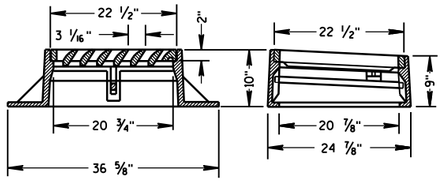

TYPE "V"

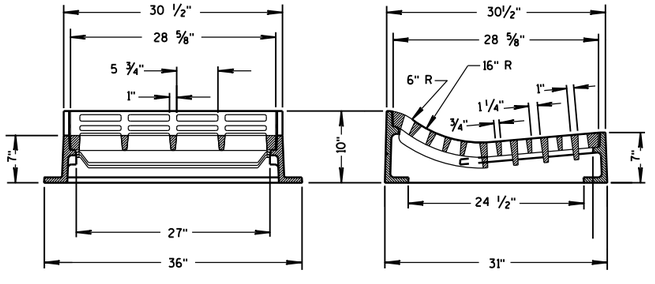

TYPE "T"

USE WITH TYPES R & T CONCRETE CURB & GUTTER, 36 INCH.

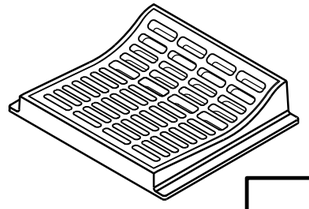

INLET COVERS
TYPE F, HM, HM-S, S, T, V, HM-GJ, & HM-GJ-S

STATE OF WISCONSIN
DEPARTMENT OF TRANSPORTATION

APPROVED
11/27/2013
DATE

/S/ Jerry H. Zogg
ROADWAY STANDARDS ENGINEER

FHWA

6
S.D.D. 8 A 5-19c

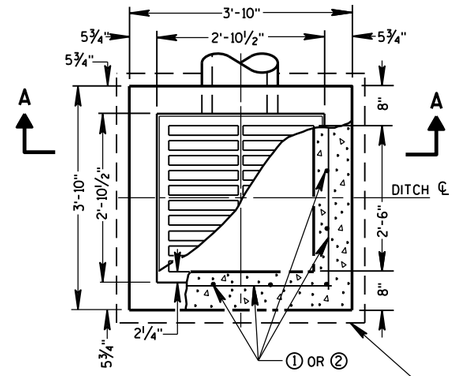

PLAN VIEW

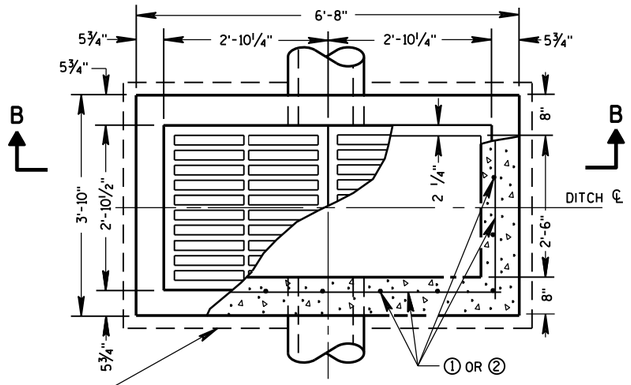

PLAN VIEW

4" OVERHANGING BASE ON REINFORCED CAST-IN-PLACE CONCRETE INLETS

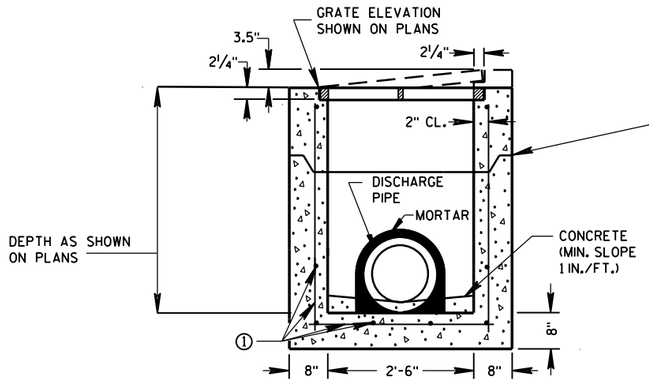

PRECAST REINFORCED CONCRETE SECTION A-A

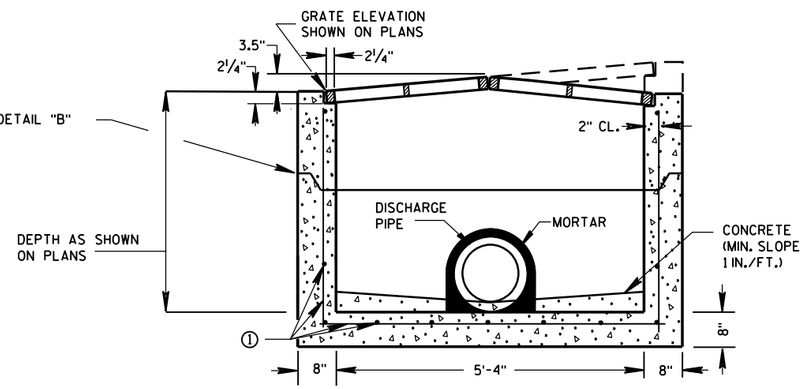

PRECAST REINFORCED CONCRETE SECTION B-B

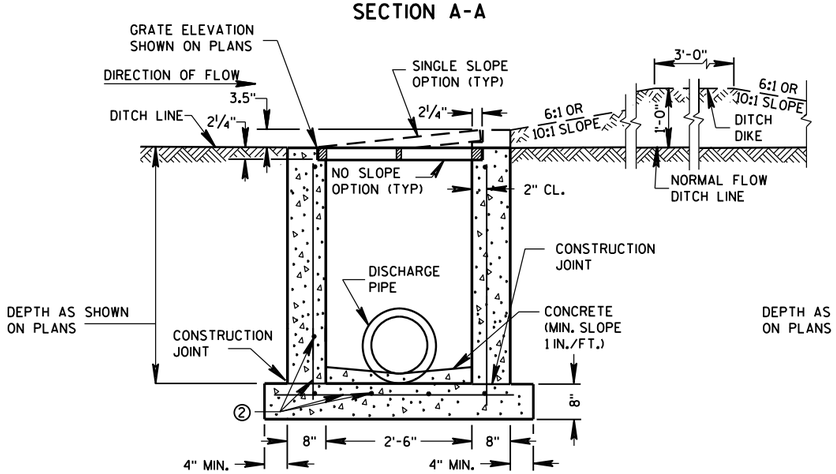

REINFORCED CAST-IN-PLACE CONCRETE SECTION A-A

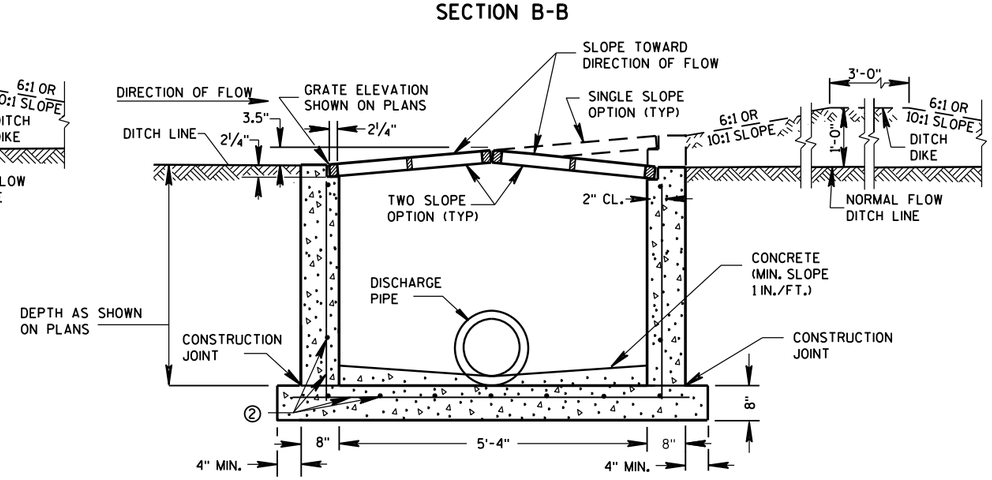

REINFORCED CAST-IN-PLACE CONCRETE SECTION B-B

INLETS MEDIAN 1 GRATE

INLETS MEDIAN 2 GRATE

GENERAL NOTES

DETAILS OF CONSTRUCTION, MATERIALS AND WORKMANSHIP NOT SHOWN ON THIS DRAWING SHALL CONFORM TO THE PERTINENT REQUIREMENTS OF THE STANDARD SPECIFICATIONS AND THE APPLICABLE SPECIAL PROVISIONS.

UNLESS OTHERWISE AUTHORIZED IN WRITING BY THE ENGINEER, THE CONTRACTOR SHALL NOT ORDER AND DELIVER PRECAST INLET UNITS REQUIRED FOR THE PROJECT UNTIL A LIST OF SIZES IS FURNISHED BY THE ENGINEER.

DETAILED DRAWINGS FOR PROPOSED ALTERNATE DESIGNS FOR INLETS WHICH MAY INCLUDE PRECAST REINFORCED CONCRETE INLETS, SHALL BE SUBMITTED TO THE ENGINEER FOR APPROVAL PROVIDING THAT SUCH ALTERNATE DESIGNS MAKE PROVISION FOR EQUIVALENT CAPACITY AND STRENGTH.

ALL MEDIAN INLETS ARE DESIGNATED ON THE PLANS AS "INLETS, 1G-MS", ETC. THE FIRST NUMBER AND LETTER DESIGNATE THE TYPE OF STRUCTURE, AND THE FOLLOWING LETTERS DESIGNATE THE TYPE OF COVER TO BE USED TO COMPRISE THE COMPLETE UNIT.

BASES SHALL BE PLACED ON A BED OF MATERIAL AT LEAST 6 INCHES IN DEPTH, WHICH MEETS THE REQUIREMENTS OF FOUNDATION BACKFILL. THIS BEDDING SHALL BE COMPACTED AND PROVIDE UNIFORM SUPPORT FOR THE ENTIRE AREA OF THE BASE.

ALL BAR STEEL REINFORCEMENT SHALL BE EMBEDDED 2 INCHES CLEAR UNLESS OTHERWISE SHOWN OR NOTED.

PRECAST REINFORCED RISERS SHALL HAVE A TONGUE AND GROOVE JOINT WITH TONGUE UP OR DOWN.

ALL PRECAST INLET UNITS SHALL CONFORM TO THE PERTINENT REQUIREMENTS OF ASTM C 913.

MAXIMUM INSIDE PIPE DIAMETER DETERMINED BY 3" CLEARANCE ON EACH SIDE OF THE OUTSIDE WALL OF THE PIPE. SEE DETAIL "A". ASSUMES PIPE ENTERS PERPENDICULAR TO THE STRUCTURE.

① FOR PRECAST INLETS PROVIDE REINFORCING STEEL IN ACCORDANCE TO ASTM C 913.

② CONTRACTOR TO PROVIDE DRAWING(S) STAMPED BY A PROFESSIONAL ENGINEER FOR STEEL REINFORCING DESIGN FOR CAST-IN-PLACE STRUCTURES.

PIPE MATRIX

	MAXIMUM INSIDE PIPE DIAMETER	
INLET SIZE	WIDTH (IN)	LENGTH (IN)
1 GRATE	18	18
2 GRATE	18	42

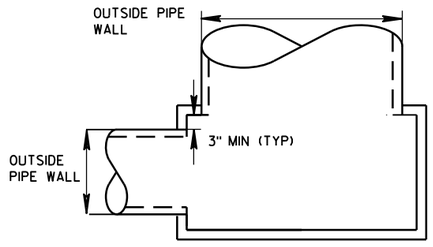

DETAIL "A"

JOINTS TO BE SEALED WITH A BUTYL RUBBER SEAL PER SEALANT MANUFACTURERS RECOMMENDATIONS CONFORMING TO ASTM C 990 (TYP)

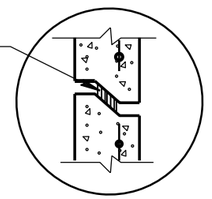

DETAIL "B"

INLETS MEDIAN 1 AND 2 GRATE

STATE OF WISCONSIN
DEPARTMENT OF TRANSPORTATION

APPROVED
Sept., 2016 — DATE
/S/ Rodney Taylor — ROADWAY STANDARDS UNIT SUPERVI ENT
FHWA

6
S.D.D. 8 C 8-2

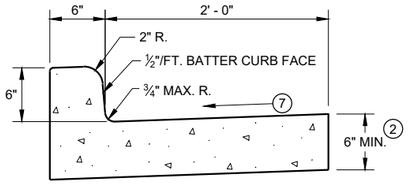

TYPES A (1) & D

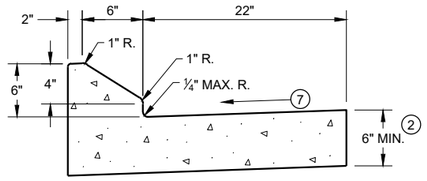

6" SLOPED CURB TYPES G (1) & J

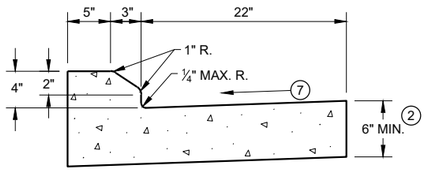

4" SLOPED CURB TYPES G (1) & J

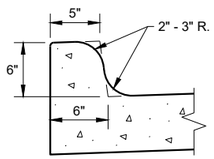

TYPES K (1) & L
(OPTIONAL CURB SHAPE)

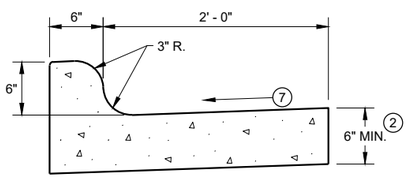

TYPES K (1) & L

CONCRETE CURB AND GUTTER 30"

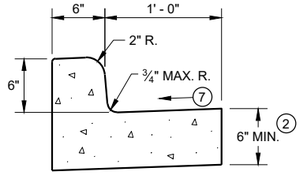

TYPES A (1) & D

CONCRETE CURB AND GUTTER 18"

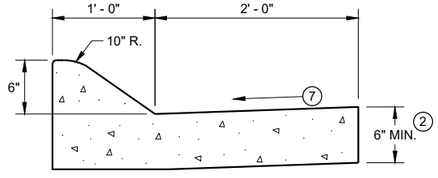

6" SLOPED CURB TYPES A (1) & D

4" SLOPED CURB TYPES A (1) & D

CONCRETE CURB AND GUTTER 36"

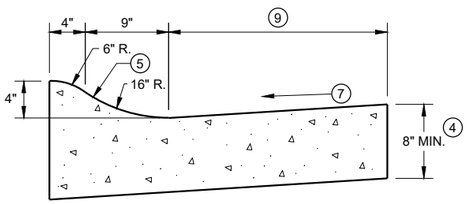

4" SLOPED CURB TYPES R (1) & T

TBT & TBTT	X
30"	22"
36"	28"

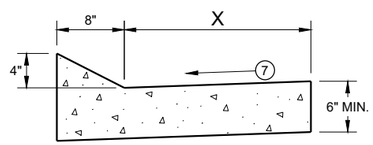

TYPES TBT & TBTT (1)

CONCRETE CURB AND GUTTER

PAVEMENT THICKNESS AND MAXIMUM CONCRETE PANEL WIDTH TABLE

PAVEMENT THICKNESS	MAXIMUM PANEL WIDTH
LESS THAN 10"	12'
10" & ABOVE	15'

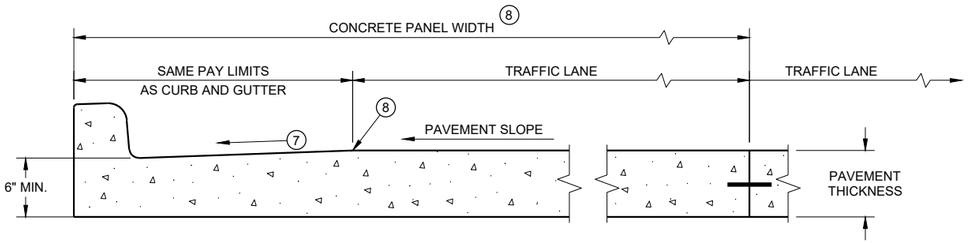

PARTIAL SECTION OF PAVEMENT *
WITH INTEGRAL CURB AND GUTTER

* BIKE LANE IS NOT SHOWN

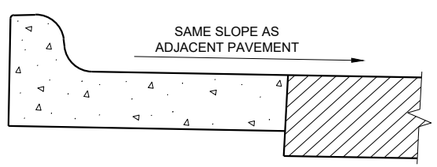

REVERSE SLOPE GUTTER (6)
(TYPICAL FOR ALL CURB & GUTTER TYPES)

GENERAL NOTES

DETAILS OF CONSTRUCTION AND WORKMANSHIP NOT SHOWN ON THIS DRAWING SHALL CONFORM TO THE PERTINENT REQUIREMENTS OF THE CONTRACT.

PAVEMENT TIES AND TIE BARS SHALL BE EPOXY COATED IN CONFORMANCE WITH SUBSECTION 505.2.6.2 OF THE STANDARD SPECIFICATIONS.

INTEGRAL CURB AND GUTTER SHALL CONFORM TO THE DETAILS SHOWN FOR CONCRETE CURB AND GUTTER INCLUDING THE TRANSVERSE GUTTER SLOPE.

UNLESS OTHERWISE SHOWN ON THE TYPICAL CROSS SECTIONS, THE BASE AGGREGATE AND COMMON EXCAVATION LIMITS ARE 2' - 0" BEHIND THE BACK OF CURBS.

(1) TIE BARS ARE REQUIRED FOR CURB AND GUTTERS TYPES A, G, K, R, AND TBTT.

(2) THE BOTTOM OF CURB AND GUTTER MAY BE CONSTRUCTED EITHER LEVEL OR PARALLEL TO THE SLOPE OF THE SUBGRADE OR BASE AGGREGATE PROVIDED A 6" MINIMUM GUTTER THICKNESS IS MAINTAINED.

(3) USE 8" MINIMUM GUTTER THICKNESS WHEN USED WITH AN ADJACENT CONCRETE TRUCK APRON PLACED BEHIND BACK OF CURB.

(4) THE BOTTOM OF CURB AND GUTTER MAY BE CONSTRUCTED EITHER LEVEL OR PARALLEL TO THE SLOPE OF THE SUBGRADE OR BASE AGGREGATE PROVIDED A 8" MINIMUM GUTTER THICKNESS IS MAINTAINED.

(5) UNLESS OTHERWISE NOTED, FOR STAKING PURPOSES THE FACE OF CURB IS 6" FROM THE BACK OF CURB.

(6) WHEN REVERSE SLOPE GUTTER IS REQUIRED, THE LOCATION(S) WILL BE SHOWN ELSEWHERE IN THE PLAN.

(7) USE 4% GUTTER CROSS SLOPE UNLESS OTHERWISE NOTED IN THE PLANS.

(8) INCLUDE LONGITUDINAL JOINT AND TIE BARS ALONG LANE EDGE WHEN CONCRETE PANEL WIDTH EXCEEDS THE MAXIMUM WIDTH PER TABLE BELOW. LONGITUDINAL JOINT(S) ARE NOT ALLOWED WITHIN TRAFFIC LANES AND BIKE LANES. LONGITUDINAL JOINT MAY BE SAWED.

(9) CONCRETE CURB AND GUTTER 4-INCH SLOPED 30-INCH TYPE "R" AND "T" = 17 INCHES
CONCRETE CURB AND GUTTER 4-INCH SLOPED 36-INCH TYPE "R" AND "T" = 23 INCHES

CONCRETE CURB AND GUTTER

STATE OF WISCONSIN
DEPARTMENT OF TRANSPORTATION

6

SDD 08D01 - 22a
SDD 08D01 - 22a

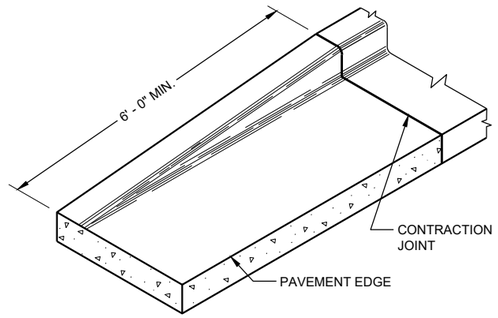

END SECTIONCURB AND GUTTER

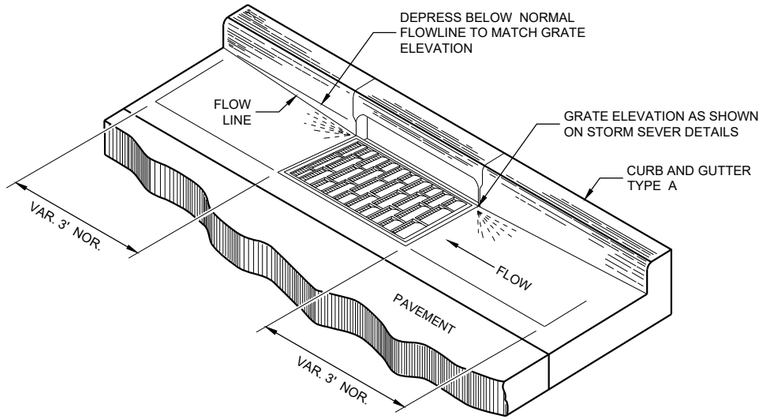

DETAIL OF CURB AND GUTTER AT INLETS

(TYPICAL H INLET COVER SHOWN)

GENERAL NOTES

DETAILS OF CONSTRUCTION AND WORKMANSHIP NOT SHOWN ON THIS DRAWING SHALL CONFORM TO THE PERTINENT REQUIREMENTS OF THE CONTRACT.

PAVEMENT TIES AND TIE BARS SHALL BE EPOXY COATED IN CONFORMANCE WITH SUBSECTION 505.2.6.2 OF THE STANDARD SPECIFICATIONS.

UNLESS OTHERWISE SHOWN ON THE TYPICAL CROSS SECTIONS, THE BASE AGGREGATE AND COMMON EXCAVATION LIMITS ARE 2' - 0" BEHIND THE BACK OF CURBS.

(1) TIE BARS ARE REQUIRED FOR CURB AND GUTTERS TYPES A, G, K, R, AND TBTT.

(2) THE BOTTOM OF CURB AND GUTTER MAY BE CONSTRUCTED EITHER LEVEL OR PARALLEL TO THE SLOPE OF THE SUBGRADE OR BASE AGGREGATE PROVIDED A 6" MINIMUM GUTTER THICKNESS IS MAINTAINED.

(9) REFER TO SDD 08D18 AND 08D19 FOR ADDITIONAL DRIVEWAY ENTRANCE CURB DETAILS.

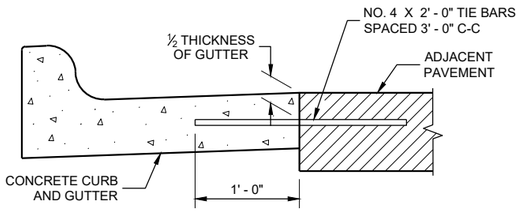

TYPICAL TIE BAR LOCATION (1)

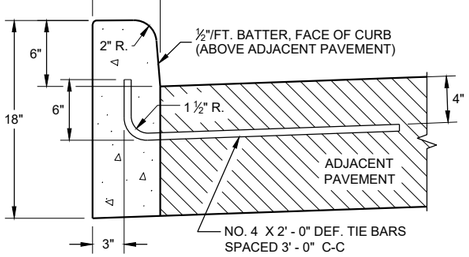

TYPES A (1) & D

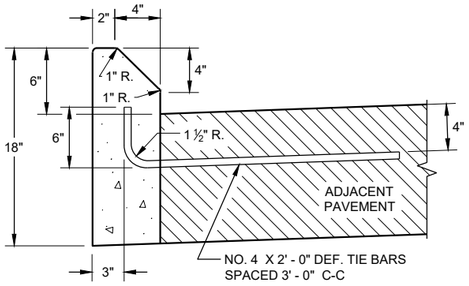

TYPES G (1) & J

CONCRETE CURB

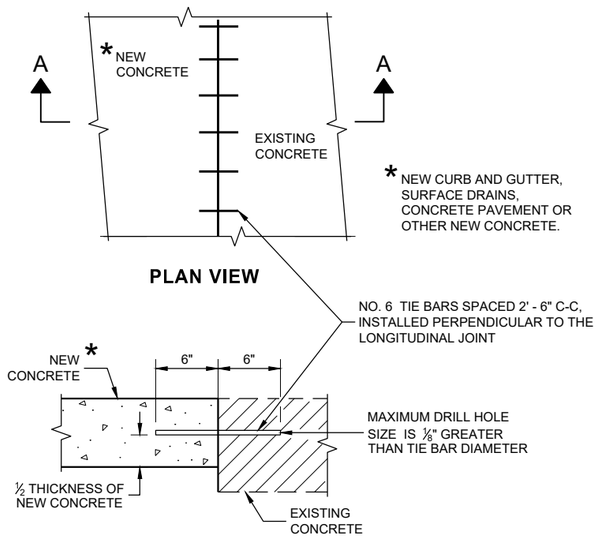

PLAN VIEW

SECTION A - A

TIE BARS DRILLED INTO EXISTING PAVEMENT

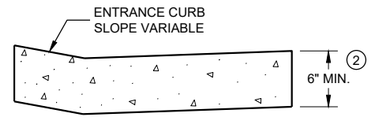

DRIVEWAY ENTRANCE CURB (9)

(WHEN DIRECTED BY THE ENGINEER)

CONCRETE CURB, TIES AND CURB AND GUTTER APPLICATIONS

STATE OF WISCONSIN
DEPARTMENT OF TRANSPORTATION

APPROVED
February 2021 — DATE
/S/ Rodnery Taylor — ROADWAY STANDARDS DEVE ENGINEER

FHWA

6

SDD08D01 - 22b

GENERAL NOTES

DETAILS OF CONSTRUCTION, MATERIALS AND WORKMANSHIP NOT SHOWN ON THIS DRAWING SHALL CONFORM TO THE PERTINENT REQUIREMENTS OF THE STANDARD SPECIFICATIONS AND THE APPLICABLE SPECIAL PROVISIONS.

ALL STEEL REINFORCEMENT SHALL BE EMBEDDED 2 INCHES CLEAR UNLESS OTHERWISE SHOWN OR NOTED.

(1) USE A JOINT SEALANT CONFORMING TO STANDARD SPECIFICATION 415.2.6.

(2) NO. 4 X 2' - 0" TIE BARS SPACED AT 12" C-C TO BE PLACED BY BRIDGE CONTRACTOR OR DRILLED TIE BARS PLACED AS DIRECTED BY THE ENGINEER.

(3) PAVED CONCRETE SHOULDER (SDD 13A03) OR CONCRETE DRAINAGE SLAB.

(4) CONCRETE PAVEMENT APPROACH SLAB (SHOWN) OR STRUCTURE APPROACH SLAB AND CONCRETE PAVEMENT APPROACH SLAB. SEE SDD 13B02.

(5) PAVED CONCRETE SHOULDER (SDD 13A03) OR ASPHALT SHOULDER.

(6) CONCRETE CURB AND GUTTER 4-INCH SLOPED 36-INCH TYPE TBT OR TBTT. USE TYPE TBTT CURB WITH NO. 4 X 2' -0" TIE BARS SPACED AT 3' - 0" C-C ONLY WHEN ADJACENT TO CONCRETE PAVEMENTS.

(7) PLACE FLUME BEFORE MSG THRIE BEAM TRANSITION POST 1 (SEE SDD 14B45)

(8) CENTER FLUME BETWEEN POSTS. 6-INCH MINIMUM SEPARATION FROM OUTSIDE EDGE OF FLUME TO POSTS.

(9) MINIMUM REINFORCEMENT SHALL BE 4" X 4" - W3.0 X W3.0 OR NO. 3 BARS LONGITUDINAL AND TRANSVERSE SPACING 12" C -C.

(10) SEE ROADWAY PLANS FOR FLUME LOCATION.

(11) START CURB AND GUTTER TRANSITION OR END SECTION.

(12) DEPRESS FLOW LINE (SEE DETAIL)

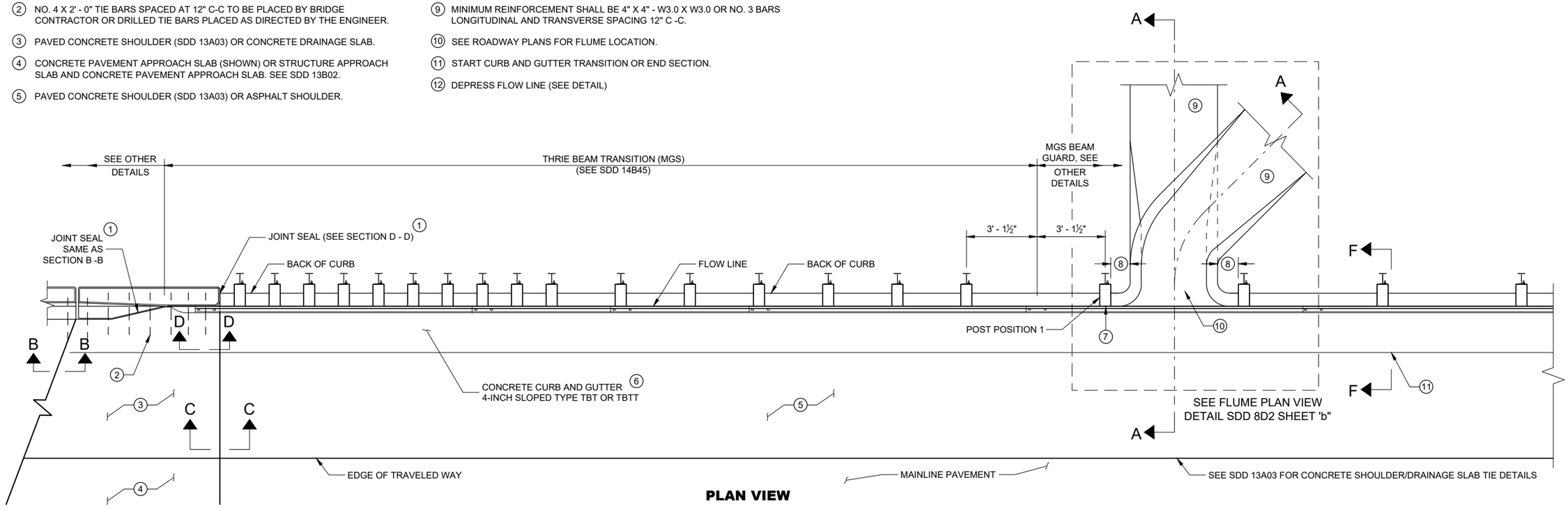

PLAN VIEW

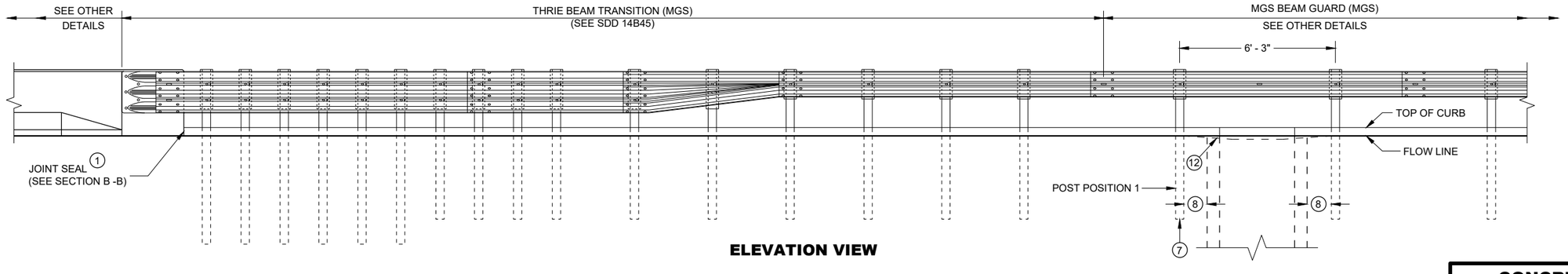

ELEVATION VIEW

CONCRETE SURFACE DRAINS FLUME TYPE AT STRUCTURES

STATE OF WISCONSIN
DEPARTMENT OF TRANSPORTATION

SDD 08D02 - 07a

SDD 08D02 - 07a

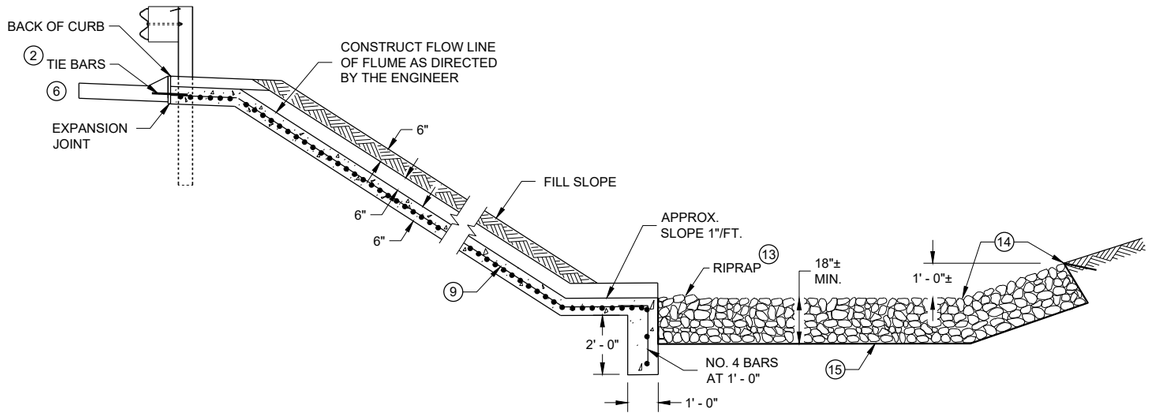

SECTION A - A

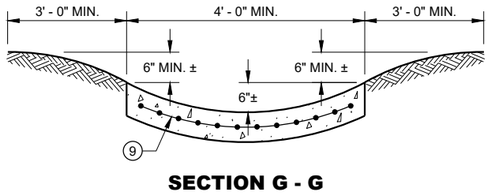

SECTION G - G

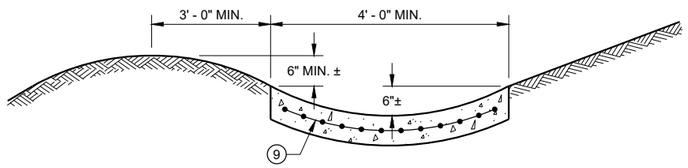

SECTION H - H

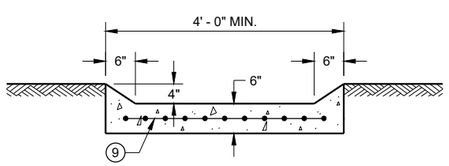

SECTION I - I

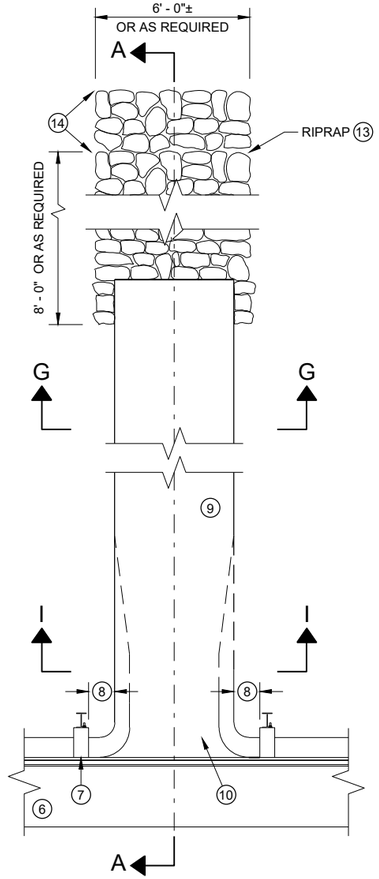

PLAN VIEW PERPENDICULAR FLUME

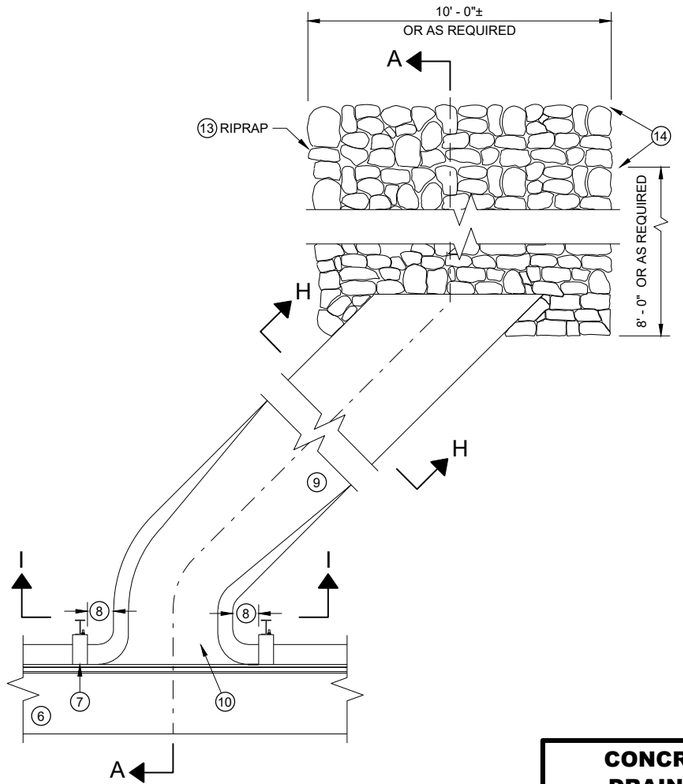

PLAN VIEW SKEWED FLUME

GENERAL NOTES

DETAILS OF CONSTRUCTION, MATERIALS AND WORKMANSHIP NOT SHOWN ON THIS DRAWING SHALL CONFORM TO THE PERTINENT REQUIREMENTS OF THE STANDARD SPECIFICATIONS AND THE APPLICABLE SPECIAL PROVISIONS.

ALL STEEL REINFORCEMENT SHALL BE EMBEDDED 2 INCHES CLEAR UNLESS OTHERWISE SHOWN OR NOTED.

1. USE A JOINT SEALANT CONFORMING TO STANDARD SPECIFICATION 415.2.6.
2. NO. 4 X 2' - 0" TIE BARS SPACED AT 12" C-C TO BE PLACED BY BRIDGE CONTRACTOR OR DRILLED TIE BARS PLACED AS DIRECTED BY THE ENGINEER.
3. PAVED CONCRETE SHOULDER (SDD 13A03) OR CONCRETE DRAINAGE SLAB.
4. CONCRETE PAVEMENT APPROACH SLAB (SHOWN) OR STRUCTURE APPROACH SLAB AND CONCRETE PAVEMENT APPROACH SLAB. SEE SDD 13B02 AND STRUCTURE PLANS.
5. PAVED CONCRETE SHOULDER (SDD 13A03) OR ASPHALT SHOULDER.
6. CONCRETE CURB AND GUTTER 4-INCH SLOPED 36-INCH TYPE TBT OR TBTT. USE TYPE TBTT CURB WITH NO. 4 X 2' -0" TIE BARS SPACED AT 3' - 0" C-C ONLY WHEN ADJACENT TO CONCRETE PAVEMENTS.
7. PLACE FLUME BEFORE MSG THRIE BEAM TRANSITION POST 1 (SEE SDD 14B45)
8. CENTER FLUME BETWEEN POSTS. 6-INCH MINIMUM SEPARATION FROM OUTSIDE EDGE OF FLUME TO POSTS.
9. MINIMUM REINFORCEMENT SHALL BE 4" X 4" - W3.0 X W3.0 OR NO. 3 BARS LONGITUDINAL AND TRANSVERSE SPACING 12" C -C.
10. SEE ROADWAY PLANS FOR FLUME LOCATION.
11. START CURB AND GUTTER TRANSITION OR END SECTION.
12. DEPRESS FLOW LINE (SEE DETAIL)
13. MEDIUM RIPRAP UNLESS OTHERWISE SPECIFIED.
14. LIMITS OF ADDITIONAL RIPRAP WHEN SPECIAL DITCH AS REQUIRED.
15. GEOTEXTILE FABRIC TYPE HR.

CONCRETE SURFACE DRAINS FLUME TYPE AT STRUCTURES

STATE OF WISCONSIN
DEPARTMENT OF TRANSPORTATION

6

SDD 08D02 - 07b
SDD 08D02 - 07b

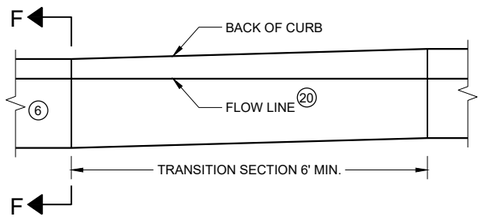

CURB AND GUTTER TRANSITION SECTION
CONCRETE CURB AND GUTTER 4-INCH SLOPED 36 INCH TYPE TBT OR TBTT

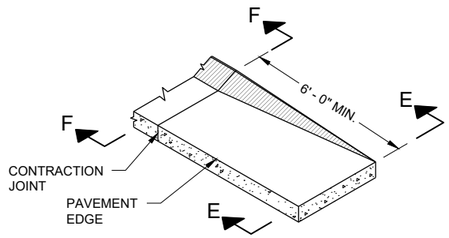

CURB AND GUTTER END SECTION
CONCRETE CURB AND GUTTER 4-INCH SLOPED 36 INCH TYPE TBT OR TBTT

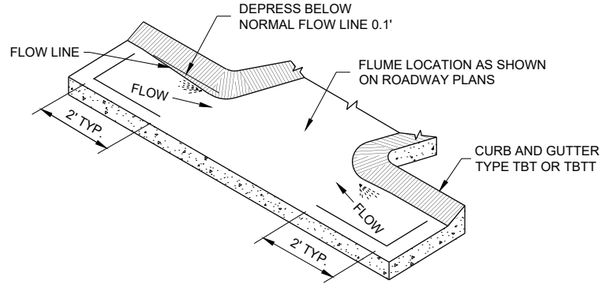

CURB AND GUTTER FLOW LINE DEPRESSION AT FLUMES CONCRETE CURB AND GUTTER 4-INCH SLOPED 36 INCH TYPE TBT OR TBTT

GENERAL NOTES

DETAILS OF CONSTRUCTION, MATERIALS AND WORKMANSHIP NOT SHOWN ON THIS DRAWING SHALL CONFORM TO THE PERTINENT REQUIREMENTS OF THE STANDARD SPECIFICATIONS AND THE APPLICABLE SPECIAL PROVISIONS.

ALL STEEL REINFORCEMENT SHALL BE EMBEDDED 2 INCHES CLEAR UNLESS OTHERWISE SHOWN OR NOTED.

(1) USE A JOINT SEALANT CONFORMING TO STANDARD SPECIFICATION 415.2.6.

(2) NO. 4 X 2' - 0" TIE BARS SPACED AT 12" C-C TO BE PLACED BY BRIDGE CONTRACTOR OR DRILLED TIE BARS PLACED AS DIRECTED BY THE ENGINEER.

(3) PAVED CONCRETE SHOULDER (SDD 13A03) OR CONCRETE DRAINAGE SLAB.

(4) CONCRETE PAVEMENT APPROACH SLAB (SHOWN) OR STRUCTURE APPROACH SLAB AND CONCRETE PAVEMENT APPROACH SLAB. SEE SDD 13B02 AND STRUCTURE PLANS.

(5) PAVED CONCRETE SHOULDER (SDD 13A03) OR ASPHALT SHOULDER.

(6) CONCRETE CURB AND GUTTER 4-INCH SLOPED 36-INCH TYPE TBT OR TBTT. USE TYPE TBTT CURB WITH NO. 4 X 2' -0" TIE BARS SPACED AT 3' - 0" C-C ONLY WHEN ADJACENT TO CONCRETE PAVEMENTS.

(7) PLACE FLUME BEFORE MSG THRIE BEAM TRANSITION POST 1 (SEE SDD 14B45)

(8) CENTER FLUME BETWEEN POSTS. 6-INCH MINIMUM SEPARATION FROM OUTSIDE EDGE OF FLUME TO POSTS.

(9) MINIMUM REINFORCEMENT SHALL BE 4" X 4" - W3.0 X W3.0 OR NO. 3 BARS LONGITUDINAL AND TRANSVERSE SPACING 12" C -C.

(10) SEE ROADWAY PLANS FOR FLUME LOCATION.

(11) START CURB AND GUTTER TRANSITION OR END SECTION.

(12) DEPRESS FLOW LINE (SEE DETAIL)

(13) MEDIUM RIPRAP UNLESS OTHERWISE SPECIFIED.

(14) LIMITS OF ADDITIONAL RIPRAP WHEN SPECIAL DITCH IS REQUIRED.

(15) GEOTEXTILE FABRIC TYPE HR.

(16) MINIMUM REINFORCEMENT SHALL BE 6" X 6" - W4.0 X W4.0 OR NO. 3 BARS LONGITUDINAL AND TRANSVERSE SPACING 12" C - C.

(17) MSG THRIE BEAM TRANSITION POST 1. SEE SDD 14B45 FOR ADDITIONAL CONSTRUCTION DETAILS AND ACCEPTABLE MATERIALS.

(18) MAINTAIN WIDTH, THICKNESS AND CROSS SLOPE OF ADJACENT TYPE TBT OR TBTT CURB. SEE NOTE 6 FOR TIE BAR SPACING.

(19) ALIGN FACE OF POST BLOCK WITH FLOW LINE.

(20) MAINTAIN FLOW LINE AT EDGE OF PAVEMENT/FACE OF BEAM GUARD AS APPLICABLE.

(21) DO NOT CONSTRUCT AN EXPANSION JOINT OR INSTALL DOWEL BARS WHEN ABUTTING HMA PAVEMENTS.

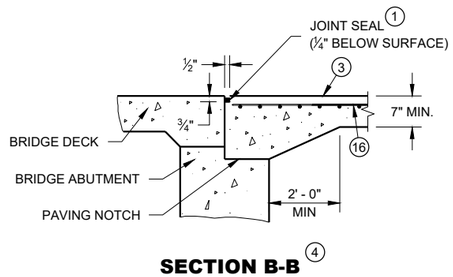

SECTION B-B (4)

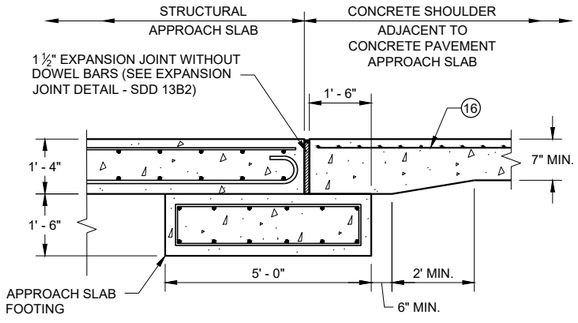

SECTION C - C
JOINT DETAIL FOR BRIDGE WITH STRUCTURAL APPROACH SLAB AND CONCRETE APPROACH SLAB

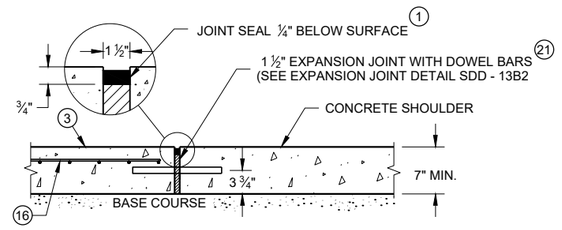

SECTION C - C
JOINT DETAIL FOR BRIDGE APPROACH WITH CONCRETE SHOULDERS

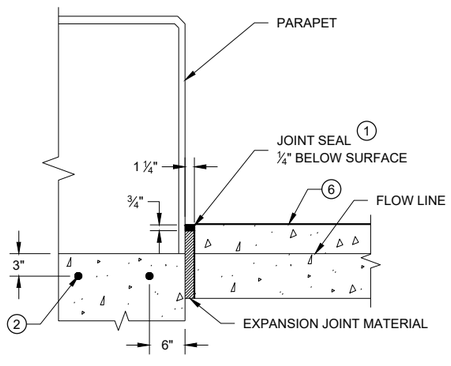

SECTION D - D

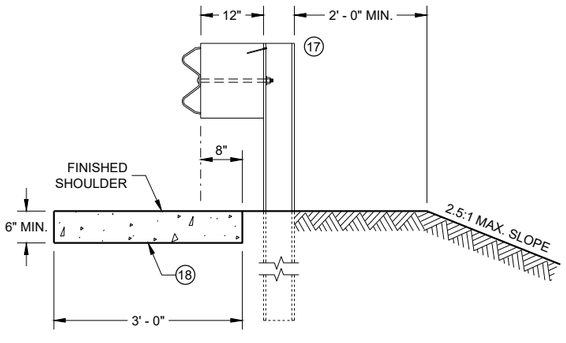

SECTION E - E

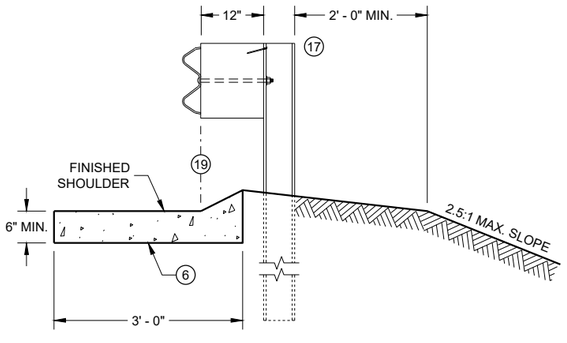

SECTION F - F

CONCRETE SURFACE DRAINS FLUME TYPE AT STRUCTURES

STATE OF WISCONSIN
DEPARTMENT OF TRANSPORTATION

APPROVED
February 2020 — DATE
/S/ Rodney Taylor — ROADWAY STANDARDS DEVE ENGINEER

FHWA

6

SDD 08D02 - 07c

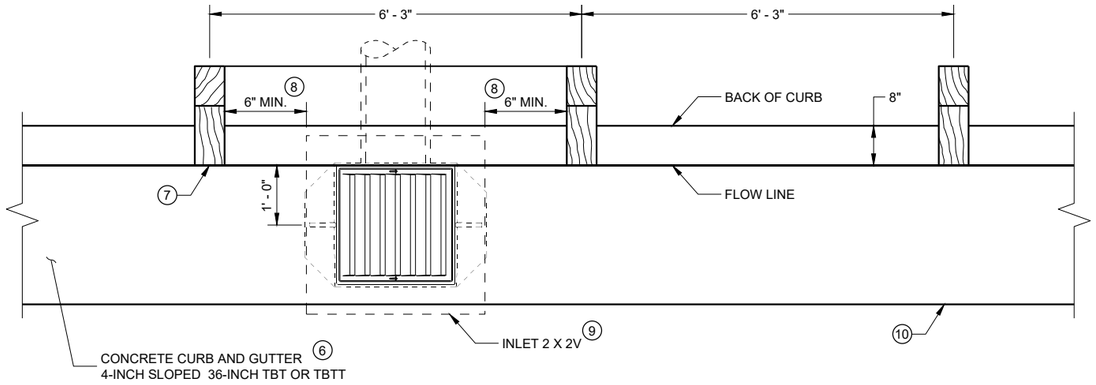

INLET PLAN VIEW

(NOTE: RAIL NOT SHOWN FOR CLARITY)

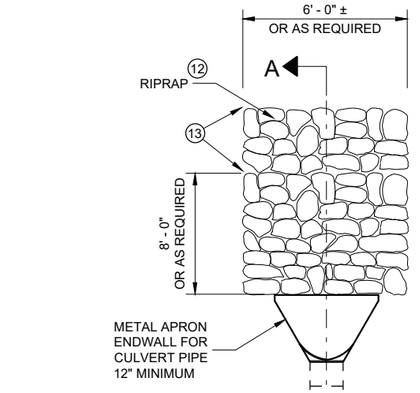

GENERAL NOTES

DETAILS OF CONSTRUCTION, MATERIALS AND WORKMANSHIP NOT SHOWN ON THIS DRAWING SHALL CONFORM TO THE PERTINENT REQUIREMENTS OF THE STANDARD SPECIFICATIONS AND THE APPLICABLE SPECIAL PROVISIONS.

ALL STEEL REINFORCEMENT SHALL BE EMBEDDED 2 INCHES CLEAR UNLESS OTHERWISE SHOWN OR NOTED.

(1) USE A JOINT SEALANT CONFORMING TO STANDARD SPECIFICATION 415.2.6.

(2) NO. 4 X 2' - 0" TIE BARS SPACED AT 12" C-C TO BE PLACED BY BRIDGE CONTRACTOR OR DRILLED TIE BARS PLACED AS DIRECTED BY THE ENGINEER.

(3) PAVED CONCRETE SHOULDER (SDD 13A03) OR CONCRETE DRAINAGE SLAB.

(4) CONCRETE PAVEMENT APPROACH SLAB (SHOWN) OR STRUCTURE APPROACH SLAB AND CONCRETE PAVEMENT APPROACH SLAB. SEE SDD 13B02.

(5) PAVED CONCRETE SHOULDER (SDD 13A03) OR ASPHALT SHOULDER.

(6) CONCRETE CURB AND GUTTER 4-INCH SLOPED 36-INCH TYPE TBT OR TBTT. USE TYPE TBTT CURB WITH NO. 4 X 2' -0" TIE BARS SPACED AT 3' - 0" C-C ONLY WHEN ADJACENT TO CONCRETE PAVEMENTS.

(7) PLACE DRAINAGE STRUCTURE BEFORE MSG THRIE BEAM TRANSITION POST 1 (SEE SDD 14B45)

(8) CENTER DRAINAGE STRUCTURE BETWEEN POSTS. 6-INCH MINIMUM SEPARATION FROM OUTSIDE WALL OF DRAINAGE STRUCTURE TO POSTS.

(9) SEE SDD 08A05 AND 08C07 FOR DETAILS. SEE ROADWAY PLANS FOR LOCATION.

(10) START CURB AND GUTTER TRANSITION OR END SECTION.

(11) DEPRESS FLOW LINE (SEE DETAIL)

(12) MEDIUM RIPRAP UNLESS OTHERWISE SPECIFIED.

(13) LIMITS OF ADDITIONAL RIPRAP WHEN SPECIAL DITCH IS REQUIRED.

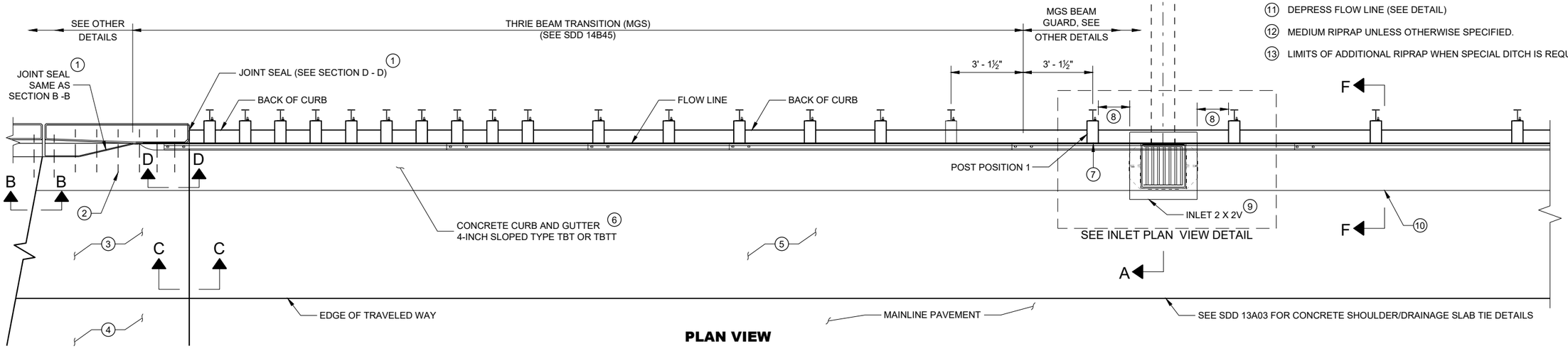

PLAN VIEW

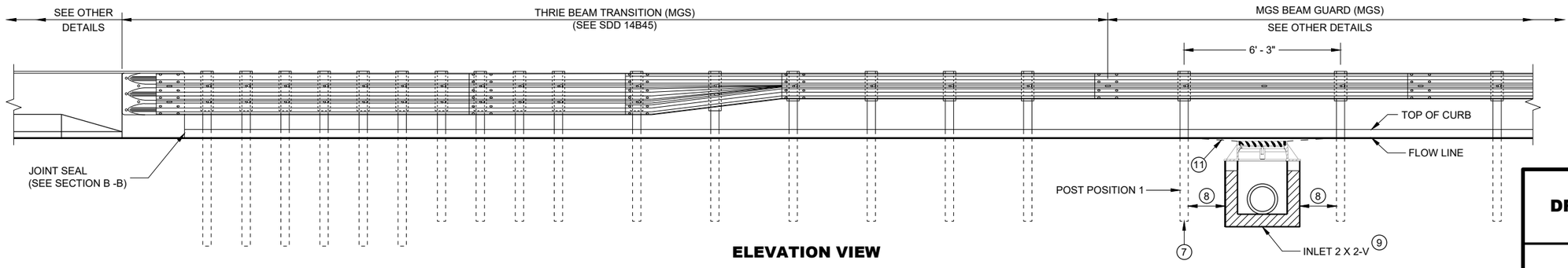

ELEVATION VIEW

CONCRETE SURFACE DRAINS DROP INLET TYPE AT STRUCTURES

STATE OF WISCONSIN
DEPARTMENT OF TRANSPORTATION

6

SDD 08D03 - 08a

6

SDD 08D03 - 08a

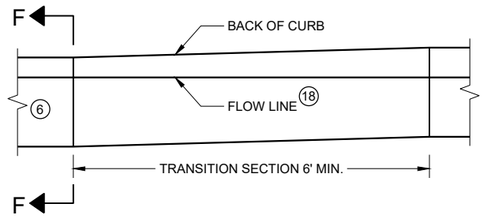

CURB AND GUTTER TRANSITION SECTION CONCRETE CURB AND GUTTER 4-INCH SLOPED 36 INCH TYPE TBT OR TBTT

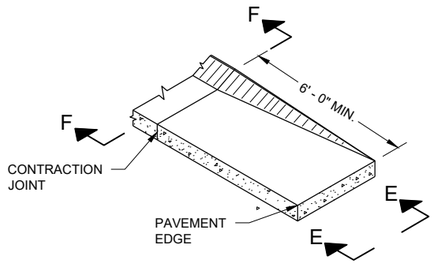

CURB AND GUTTER END SECTION CONCRETE CURB AND GUTTER 4-INCH SLOPED 36 INCH TYPE TBT OR TBTT

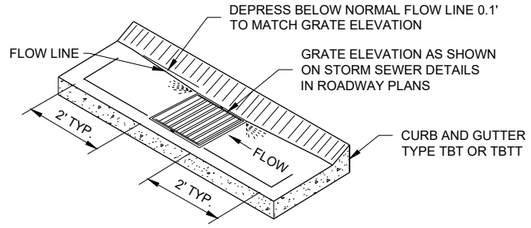

CURB AND GUTTER FLOW LINE DEPRESSION AT INLETS CONCRETE CURB AND GUTTER 4-INCH SLOPED 36 INCH TYPE TBT OR TBTT

GENERAL NOTES

DETAILS OF CONSTRUCTION, MATERIALS AND WORKMANSHIP NOT SHOWN ON THIS DRAWING SHALL CONFORM TO THE PERTINENT REQUIREMENTS OF THE STANDARD SPECIFICATIONS AND THE APPLICABLE SPECIAL PROVISIONS.

ALL STEEL REINFORCEMENT SHALL BE EMBEDDED 2 INCHES CLEAR UNLESS OTHERWISE SHOWN OR NOTED.

(1) USE A JOINT SEALANT CONFORMING TO STANDARD SPECIFICATION 415.2.6.

(2) NO. 4 X 2' - 0" TIE BARS SPACED AT 12" C-C TO BE PLACED BY BRIDGE CONTRACTOR OR DRILLED TIE BARS PLACED AS DIRECTED BY THE ENGINEER.

(3) PAVED CONCRETE SHOULDER (SDD 13A03) OR CONCRETE DRAINAGE SLAB.

(4) CONCRETE PAVEMENT APPROACH SLAB (SHOWN) OR STRUCTURE APPROACH SLAB AND CONCRETE PAVEMENT APPROACH SLAB. SEE SDD 13B02 AND STRUCTURE PLANS.

(5) PAVED CONCRETE SHOULDER (SDD 13A03) OR ASPHALT SHOULDER.

(6) CONCRETE CURB AND GUTTER 4-INCH SLOPED 36-INCH TYPE TBT OR TBTT. USE TYPE TBTT CURB WITH NO. 4 X 2' -0" TIE BARS SPACED AT 3' - 0" C-C ONLY WHEN ADJACENT TO CONCRETE PAVEMENTS.

(7) PLACE DRAINAGE STRUCTURE BEFORE MSG THRIE BEAM TRANSITION POST 1 (SEE SDD 14B45)

(8) CENTER DRAINAGE STRUCTURE BETWEEN POSTS. 6-INCH MINIMUM SEPARATION FROM OUTSIDE WALL OF DRAINAGE STRUCTURE TO POSTS.

(9) SEE SDD 08A05 AND 08C07 FOR DETAILS. SEE ROADWAY PLANS FOR LOCATION.

(10) START CURB AND GUTTER TRANSITION OR END SECTION.

(11) DEPRESS FLOW LINE (SEE DETAIL)

(12) MEDIUM RIPRAP UNLESS OTHERWISE SPECIFIED.

(13) LIMITS OF ADDITIONAL RIPRAP WHEN SPECIAL DITCH IS REQUIRED.

(14) GEOTEXTILE FABRIC TYPE HR.

(15) MSG THRIE BEAM TRANSITION POST 1. SEE SDD 14B45 FOR ADDITIONAL CONSTRUCTION DETAILS AND ACCEPTABLE MATERIALS.

(16) MAINTAIN WIDTH, THICKNESS AND CROSS SLOPE OF ADJACENT TYPE TBT OR TBTT CURB. SEE NOTE 6 FOR TIE BAR SPACING.

(17) ALIGN FACE OF POST BLOCK WITH FLOW LINE.

(18) MAINTAIN FLOW LINE AT EDGE OF PAVEMENT/FACE OF BEAM GUARD AS APPLICABLE.

(19) MANUFACTURER SUPPLIED BEND.

(20) MANUFACTURER SUPPLIED EXTERNAL MECHANICAL COUPLING OR A MANUFACTURER RECOMMENDED COUPLING WITH A MASTIC IMPREGNATED GEOTEXTILE WRAP AND MECHANICAL FASTENING BANDS.

(21) MINIMUM REINFORCEMENT SHALL BE 6" X 6" - W4.0 X W4.0 OR NO. 3 BARS LONGITUDINAL AND TRANSVERSE SPACING 12" C - C.

(22) DO NOT CONSTRUCT AN EXPANSION JOINT OR INSTALL DOWEL BARS WHEN ABUTTING HMA PAVEMENTS.

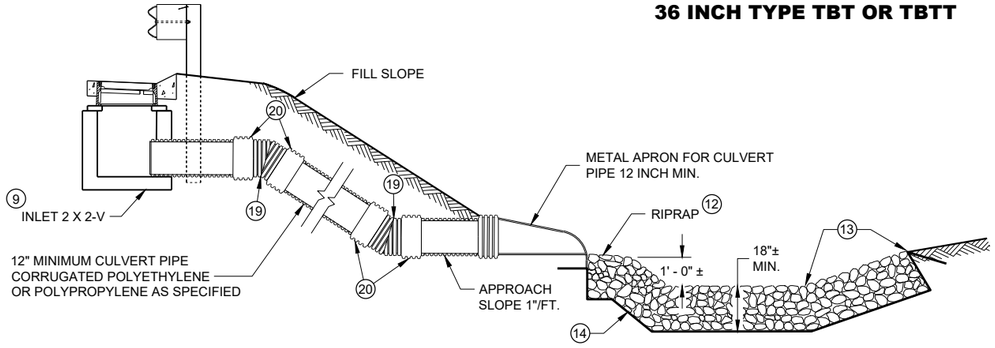

SECTION A - A

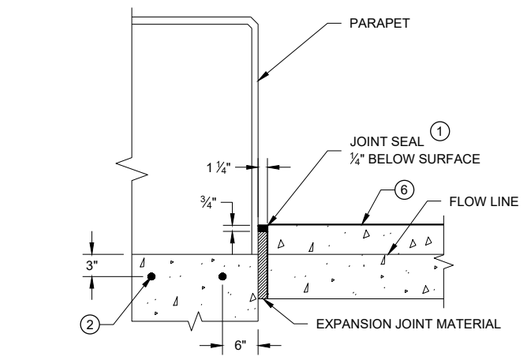

SECTION D - D

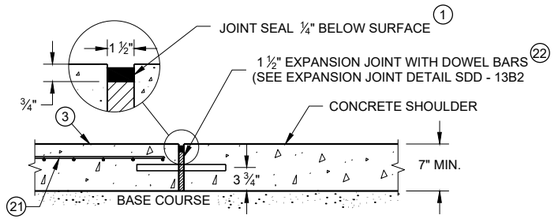

SECTION C - C

JOINT DETAIL FOR BRIDGE APPROACH WITH CONCRETE SHOULDERS

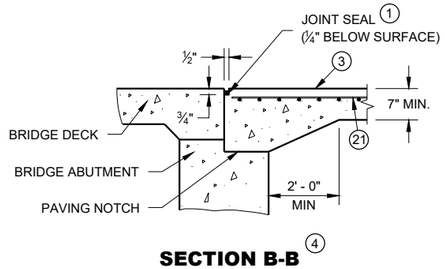

SECTION B-B 4

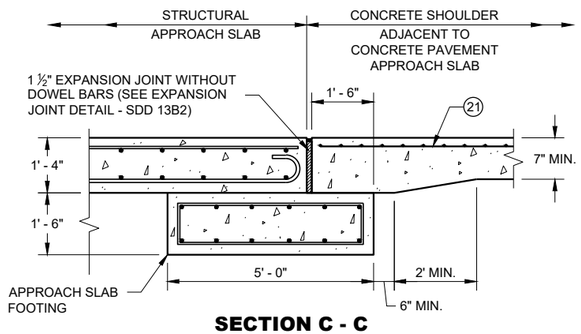

SECTION C - C

JOINT DETAIL FOR BRIDGE WITH STRUCTURAL APPROACH SLAB AND CONCRETE APPROACH SLAB

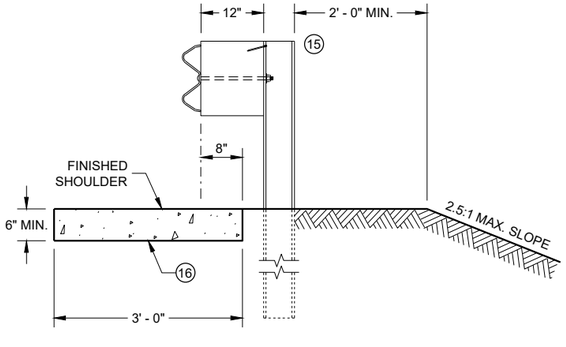

SECTION E - E

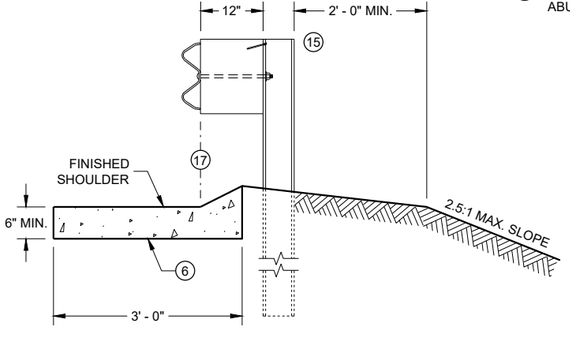

SECTION F - F

CONCRETE SURFACE DRAINS DROP INLET TYPE AT STRUCTURES

STATE OF WISCONSIN
DEPARTMENT OF TRANSPORTATION

APPROVED
February 2020 — DATE
/S/ Rodney Taylor — ROADWAY STANDARDS DEVE ENGINEER

FHWA

6

SDD 08D03 - 08b

NOTE: TAPER CURB ENDS TO GUTTER IN 1' - 0"

ASPHALTIC FLUME

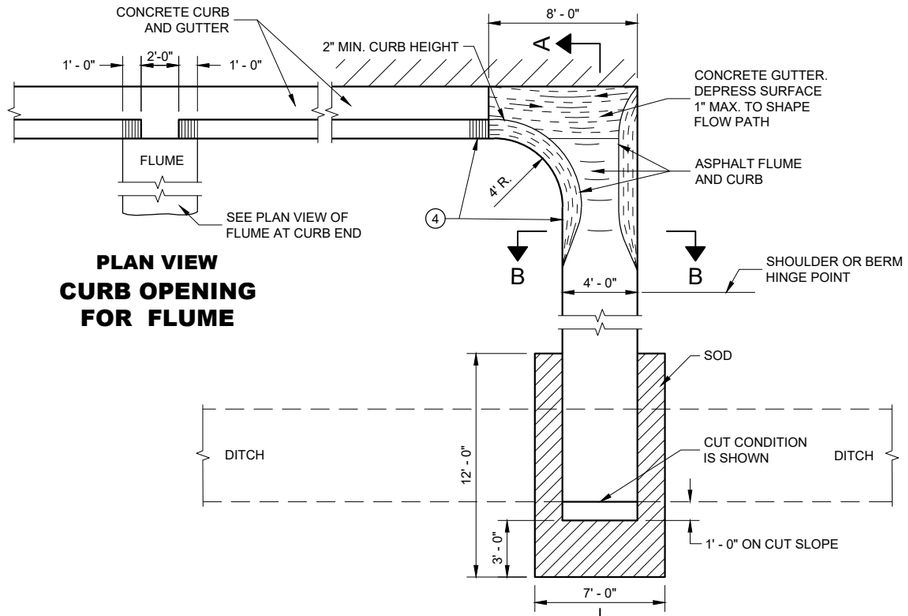

PLAN VIEW
CURB OPENING FOR FLUME

PLAN VIEW
FLUME AT CURB END

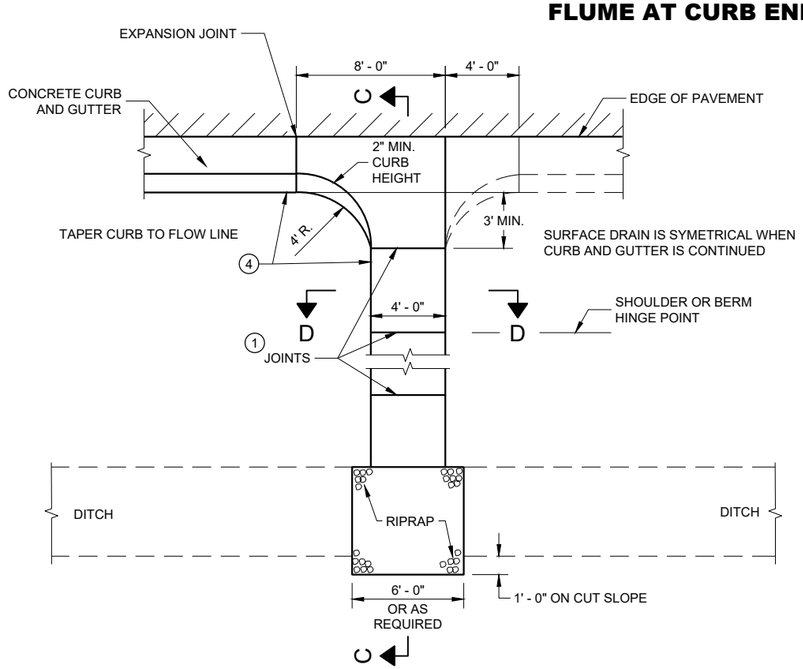

PLAN VIEW
CONCRETE SURFACE DRAIN

GENERAL NOTES

DETAILS OF CONSTRUCTION, MATERIALS AND WORKMANSHIP NOT SHOWN ON THIS DRAWING SHALL CONFORM TO PERTINENT REQUIREMENTS OF THE STANDARD SPECIFICATIONS AND APPLICABLE SPECIAL PROVISIONS.

4" X 4" - W3.0 X W3.0 CONCRETE REINFORCEMENT SHALL BE IN ACCORDANCE WITH AASHTO SPECIFICATION M55.

1. JOINTS SHALL BE ⅛" TO ¼" WIDE BY 1½" DEEP AND SPACED AT UNIFORM INTERVALS OF APPROXIMATELY 4 FEET.
2. GEOTEXTILE TYPE "R" SHALL UNDERLAY THE FULL LENGTH AND WIDTH OF THE CONCRETE SURFACE DRAIN AND RIPRAP.
3. CONCRETE SURFACE DRAIN WITHOUT CURB AND GUTTER MAY BE USED ON BACKSLOPES WHEN SPECIFIED.
4. ANGLE OF FLUME IN RELATION TO BACK OF CURB TO BE CONSTRUCTED PER THE PLAN DETAILS OR AS DIRECTED BY THE ENGINEER. ANGLE OF FLUME MAY BE OTHER THAN 90 DEGREES AS SHOWN.

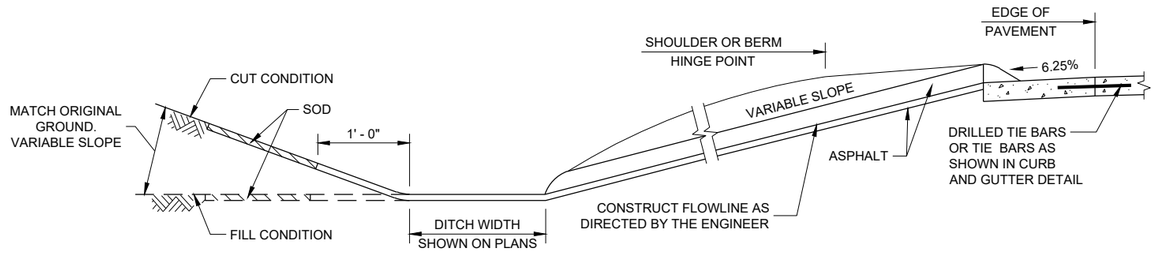

SECTION A - A

SECTION B - B

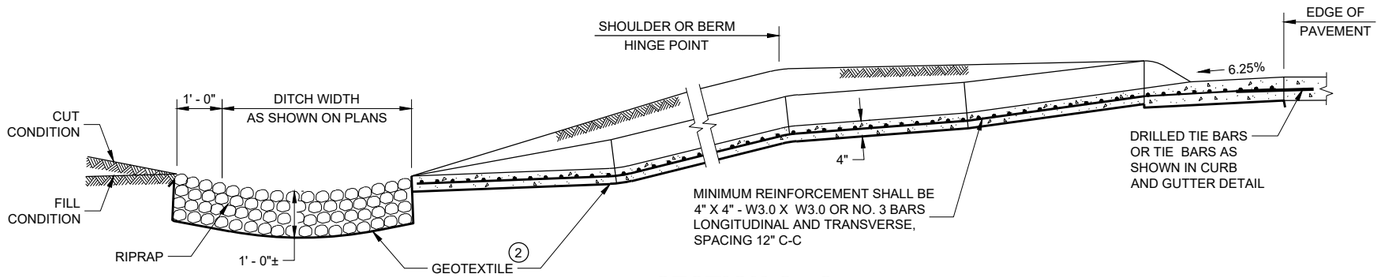

SECTION C - C

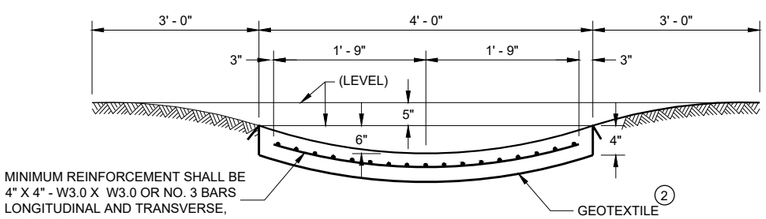

SECTION D - D

CONCRETE SURFACE DRAINS AND ASPHALTIC FLUMES

STATE OF WISCONSIN
DEPARTMENT OF TRANSPORTATION

APPROVED
November 2021
DATE

/S/ Rodney Taylor
ROADWAY STANDARDS DEVE ENGINEER

FHWA

6

SDD 08D04 - 06

6

SDD 08D04 - 06

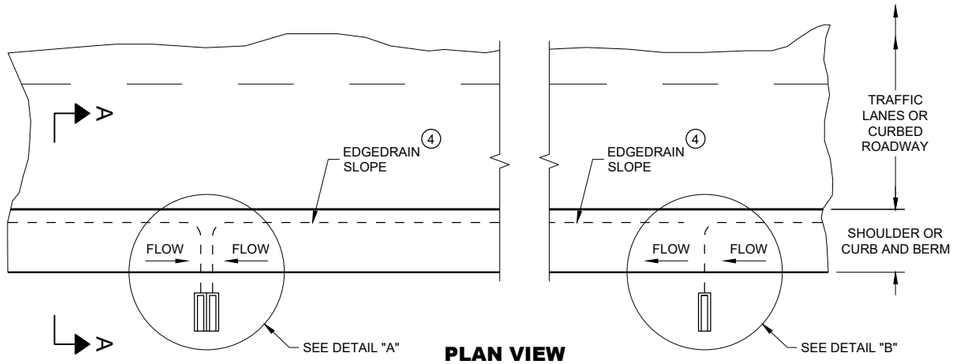

PLAN VIEW

ROADWAY WITH SHOULDERS OR CURBS
(EDGEDRAIN CONNECTS TO ROADSIDE) (2)

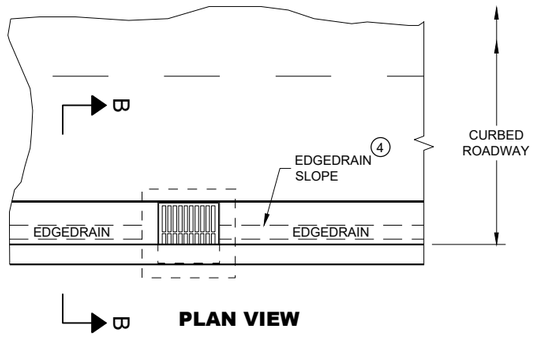

PLAN VIEW

ROADWAY WITH CURBS
(EDGEDRAIN CONNECTS INTO INLET STRUCTURE)

GENERAL NOTES

DETAILS OF CONSTRUCTION, MATERIALS AND WORKMANSHIP NOT SHOWN ON THIS DRAWING SHALL CONFORM TO THE PERTINENT REQUIREMENTS OF THE STANDARD SPECIFICATIONS AND THE APPLICABLE SPECIAL PROVISIONS.

(1) UNPERFORATED PIPE UNDERDRAIN AND FITTINGS FURNISHED FOR OUTFALL PIPE SHALL MEET THE REQUIREMENTS OF ONE OF THE FOLLOWING SPECIFICATIONS:

POLYVINYL CHLORIDE (PVC) PLASTIC DRAIN, WASTE, AND VENT PIPE AND FITTINGS, ASTM D 2665, SCHEDULE 40 PVC.

TYPE PSM POLYVINYL CHLORIDE (PVC) SEWER PIPE AND FITTINGS, ASTM D 3034, SDR 23.5 PVC SEWER PIPE.

(2) MAXIMUM SPACING OF EDGEDRAIN OUTLETS SHALL BE 250 FEET UNLESS OTHERWISE SPECIFIED IN THE CONTRACT OR DIRECTED BY THE ENGINEER.

(3) EDGEDRAIN SHALL BE CONNECTED TO INLETS REGARDLESS OF FLOW DIRECTION FOR DRAINAGE AND MAINTENANCE ACCESS.

(4) EDGEDRAIN SHALL BE LAID PARALLEL TO THE GRADE OF ROADWAY.

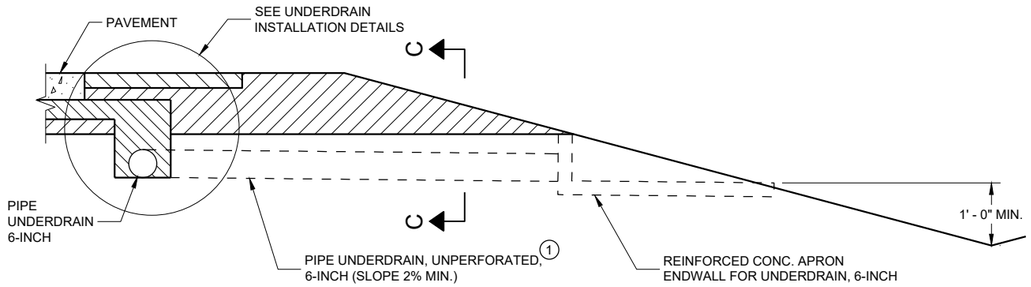

SECTION A - A

RURAL CROSS SECTION

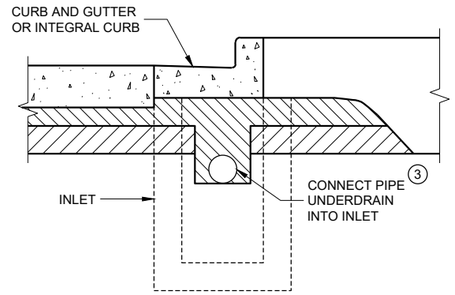

SECTION B - B

URBAN CROSS SECTION

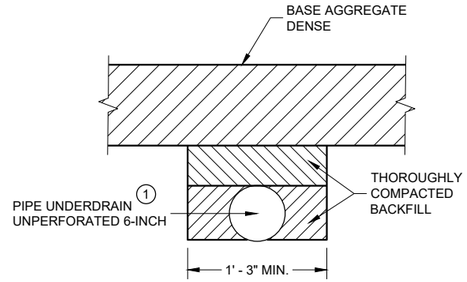

SECTION C - C

TRENCH FOR OUTFALL PIPE

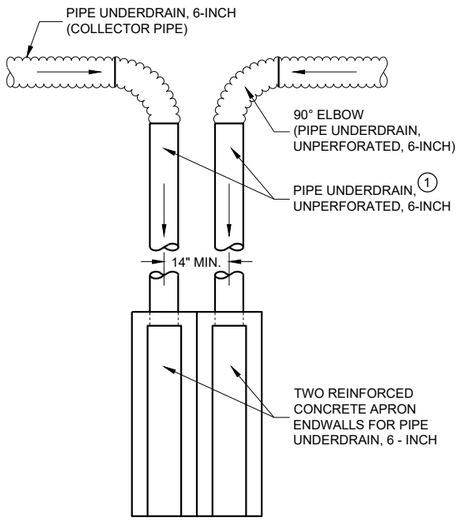

DETAIL "A"
TO BE USED AT LOW POINT LOCATIONS

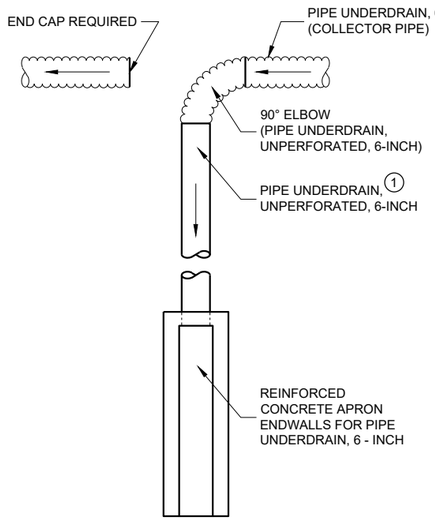

DETAIL "B"
TO BE USED AT INTERMEDIATE LOCATIONS

TYPICAL DRAIN OUT DETAILS

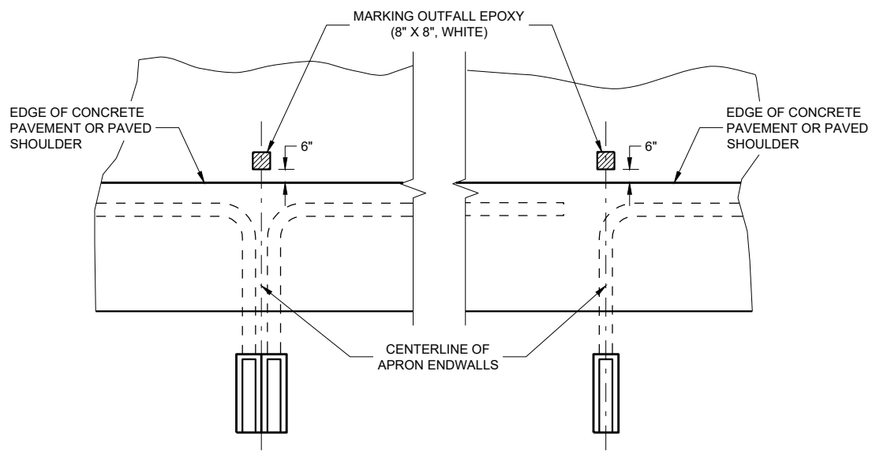

LOW POINT LOCATIONS — INTERMEDIATE LOCATIONS

PAVEMENT MARKINGS FOR OUTFALL MARKERS

EDGEDRAIN OUTLET AND OUTFALL MARKERS

STATE OF WISCONSIN
DEPARTMENT OF TRANSPORTATION

6
SDD08D15 - 05a

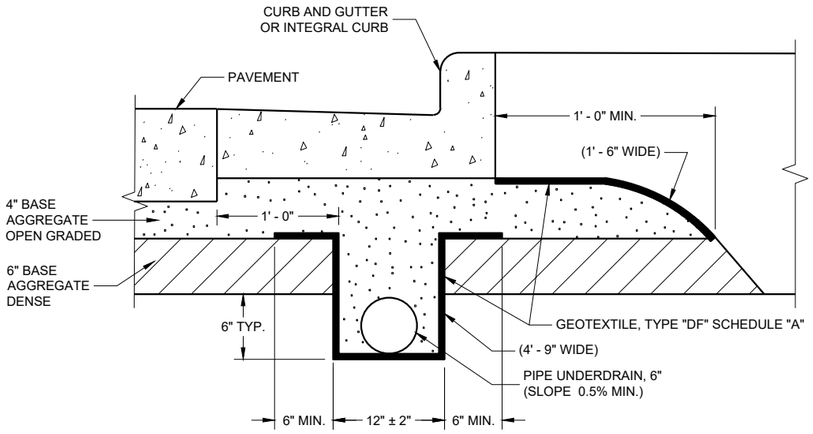

EDGEDRAIN IN URBAN ROADWAY

GENERAL NOTES

THE DIMENSIONS SHOWN ON THE TYPICAL CROSS SECTIONS WILL GOVERN IN THE EVENT THERE IS A CONFLICT WITH THE DETAILS SHOWN ON THIS DRAWING.

PIPE UNDERDRAIN SHALL BE LAID PARALLEL TO THE GRADE OF THE ROADWAY.

(1) FOLD OVER EXCESS GEOTEXTILE AT THIS LOCATION.

(2) TOTAL GEOTEXTILE WIDTH IS 6'-3" FOR PAYMENT.

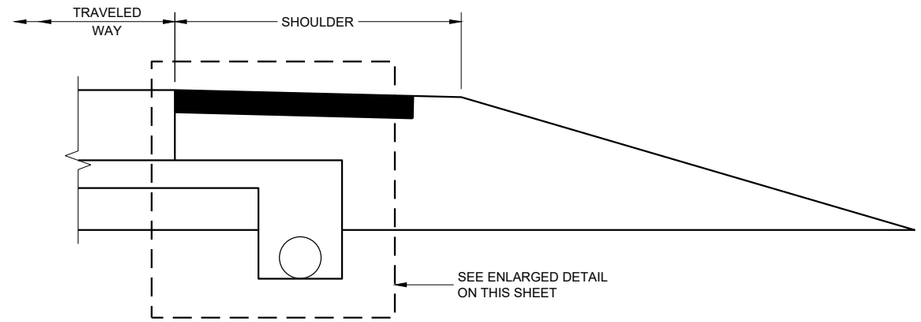

RURAL CROSS SECTION

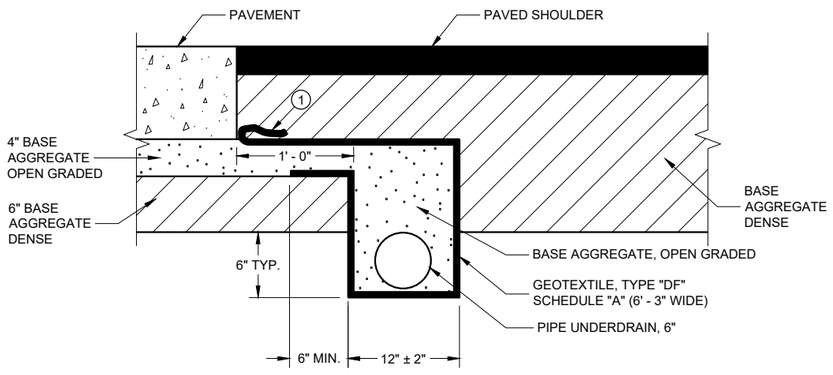

POST PAVING INSTALLATION

(QUANTITIES ARE BASED ON THIS DETAIL)

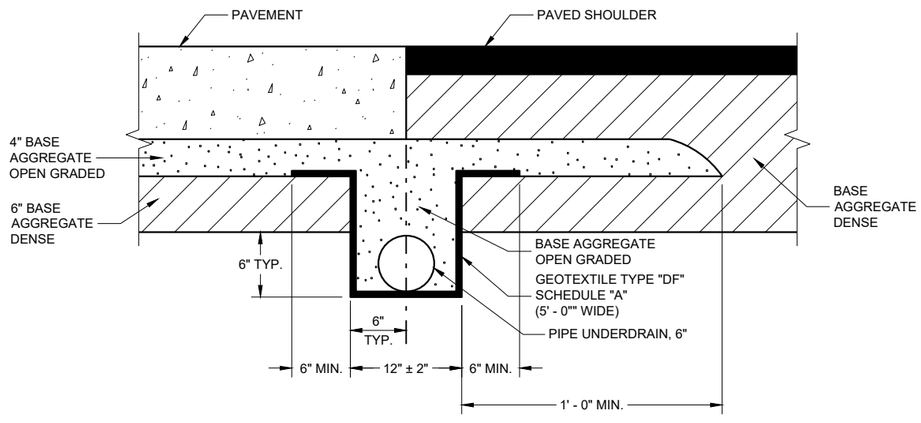

PRE-PAVING INSTALLATION ALTERNATIVE

EDGEDRAIN IN RURAL ROADWAY

EGEDRAIN AND BASE AGGREGATE OPEN GRADED

STATE OF WISCONSIN
DEPARTMENT OF TRANSPORTA

6

SDD 08D15 - 05b

GENERAL NOTES

THE DIMENSIONS SHOWN ON THE TYPICAL CROSS SECTIONS WILL GOVERN IN THE EVENT THERE IS A CONFLICT WITH THE DETAILS SHOWN ON THIS DRAWING.

PIPE UNDERDRAIN SHALL BE LAID PARALLEL TO THE GRADE OF THE ROADWAY.

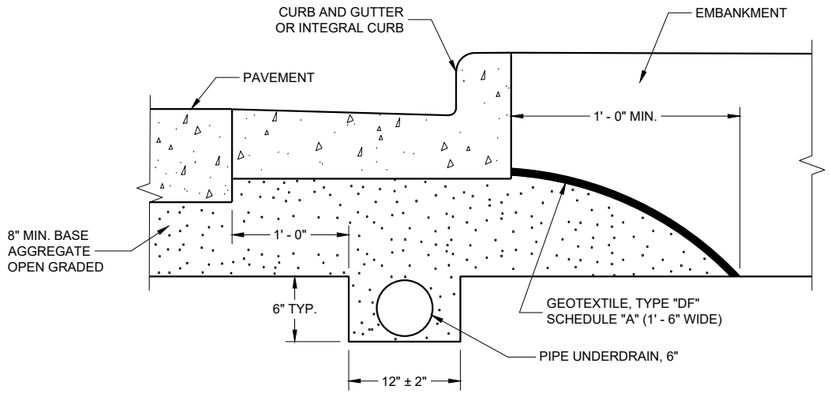

EDGEDRAIN IN URBAN ROADWAY

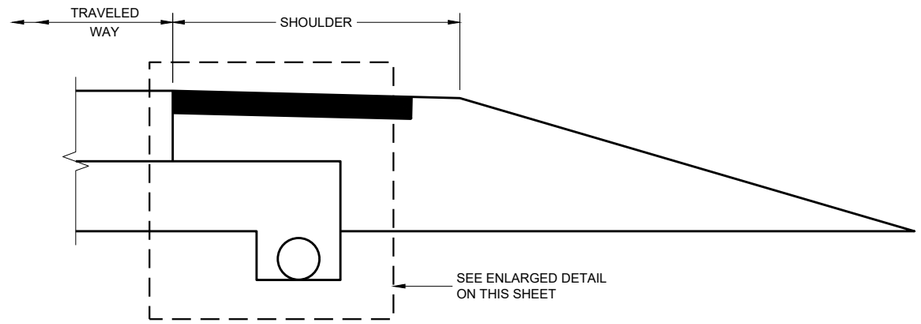

RURAL CROSS SECTION

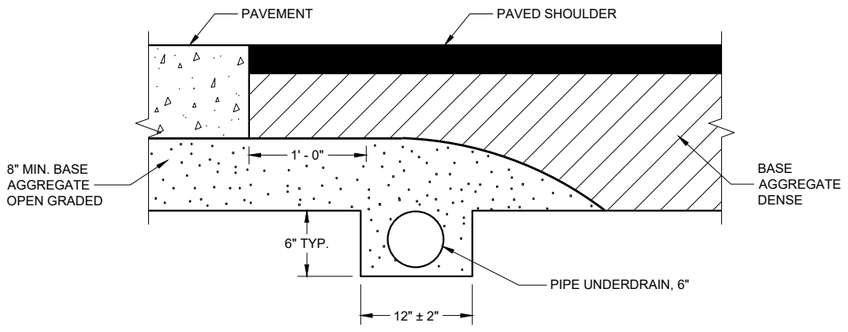

POST PAVING INSTALLATION

(QUANTITIES ARE BASED ON THIS DETAIL)

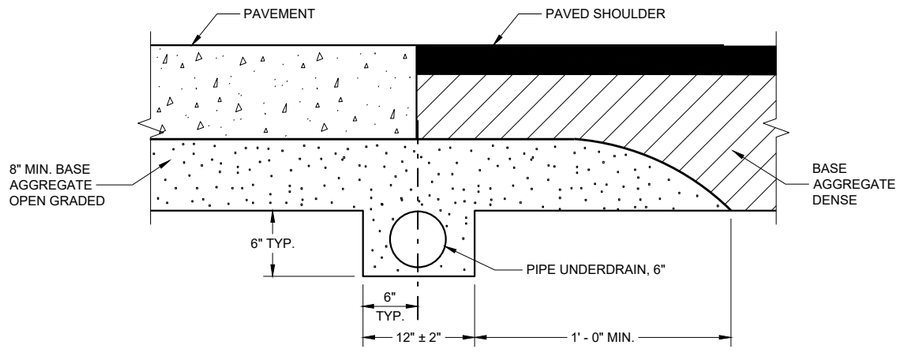

PRE-PAVING INSTALLATION ALTERNATIVE

EDGEDRAIN IN RURAL ROADWAY

EDGEDRAIN AND BASE AGGREGATE OPEN GRADED

STATE OF WISCONSIN
DEPARTMENT OF TRANSPORTATION

APPROVED
September 2015
DATE

/S/ Peter Kemp, P.E.
PAVEMENT SUPERVISOR

FHWA

6

SDD 08D15 - 05c

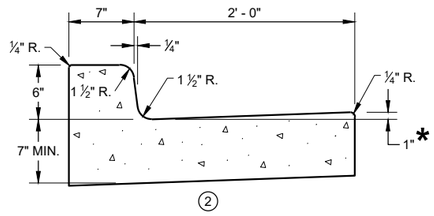

CONCRETE CURB AND GUTTER 31" ①

*TO BE MEASURED TO A MAXIMUM OF 3" WHERE DRAINAGE PROBLEMS EXIST.

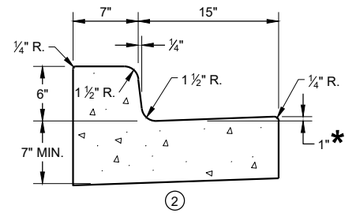

CONCRETE CURB AND GUTTER 22" ①

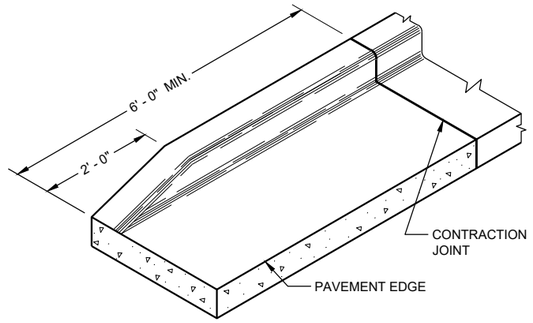

END SECTIONCURB AND GUTTER

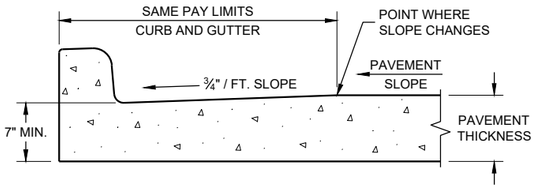

PARTIAL SECTION OF PAVEMENT WITH INTEGRAL CURB AND GUTTER

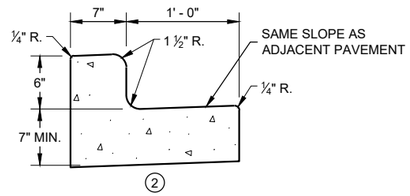

CONCRETE CURB AND GUTTER 19" ①

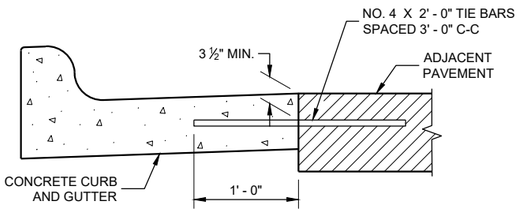

TYPICAL TIE BAR LOCATION ①

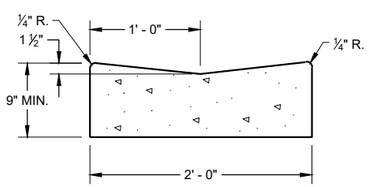

CONCRETE GUTTER 24" ①

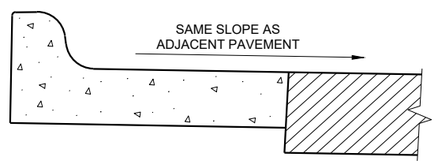

HIGH SIDE SECTION ③

(TYPICAL FOR ALL CURB & GUTTER TYPES)

GENERAL NOTES

DETAILS OF CONSTRUCTION AND WORKMANSHIP NOT SHOWN ON THIS DRAWING SHALL CONFORM TO THE PERTINENT REQUIREMENTS OF THE CONTRACT.

PAVEMENT TIES AND TIE BARS SHALL BE EPOXY COATED IN CONFORMANCE WITH SUBSECTION 505.2.6.2 OF THE STANDARD SPECIFICATIONS.

INTEGRAL CURB AND GUTTER SHALL CONFORM TO THE DETAILS SHOWN FOR CONCRETE CURB AND GUTTER INCLUDING THE TRANSVERSE GUTTER SLOPE. A LONGITUDINAL CONSTRUCTION JOINT IS NOT REQUIRED WITH INTEGRAL CURB AND GUTTER.

UNLESS OTHERWISE SHOWN ON THE TYPICAL CROSS SECTIONS, THE BASE COURSE AND UNCLASSIFIED EXCAVATION LIMITS ARE 2' - 0" BEHIND THE BACK OF CURBS.

① WHEN PLACED ADJACENT TO NEW CONCRETE, TIE BARS ARE REQUITED FOR CURB AND GUTTER 31", 22", 19" AND CONCRETE GUTTER 24".

② THE BOTTOM OF CURB AND GUTTER MAY BE CONSTRUCTED EITHER LEVEL OR PARALLEL TO THE SLOPE OF THE SUBGRADE OR BASE COURSE PROVIDED A 7" MINIMUM GUTTER THICKNESS IS MAINTAINED.

③ WHEN HIGH SIDE CURB SECTION IS REQUIRED, THE LOCATION(S) WILL BE NOTED ON THE PLANS

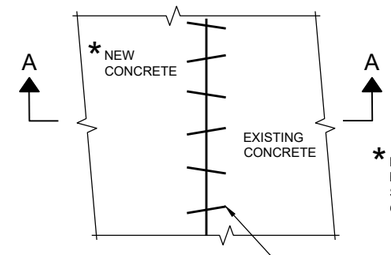

PLAN VIEW

*EXISTING AND NEW CONCRETE MAY BE CURB AND GUTTER, SURFACE DRAINS, PAVEMENT OR OTHER CONCRETE STRUCTURE.

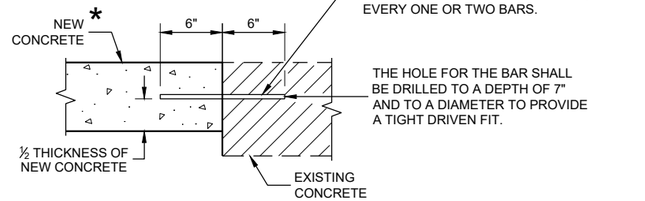

SECTION A - A

PAVEMENT TIES

CONCRETE GUTTER, CURB AND GUTTER AND PAVEMENT TIES

(For Optional use in Milwaukee Co. Only)

STATE OF WISCONSIN
DEPARTMENT OF TRANSPORTATION

APPROVED
February 2020
DATE

/S/ Rodney Taylor
ROADWAY STANDARDS DEVE ENGINEER

FHWA

388

6

SDD 08D16 - 11

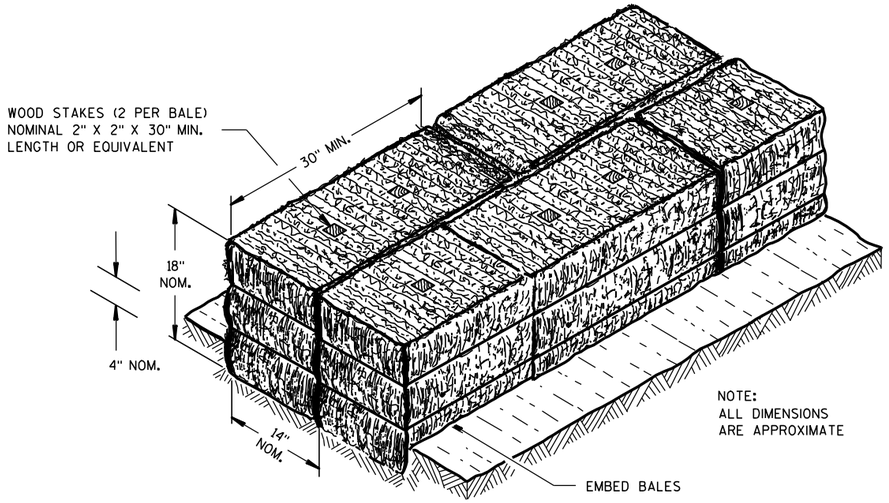

SECTION A-A

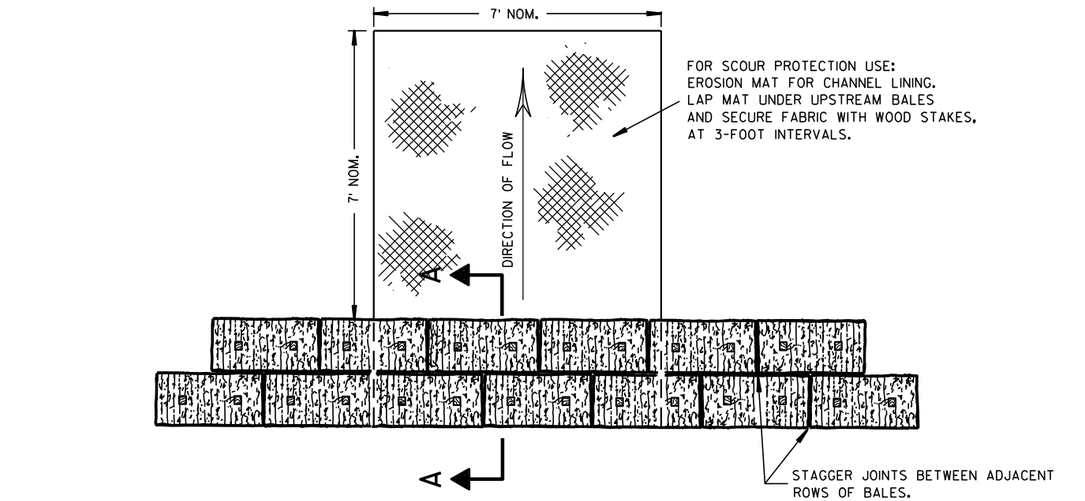

PLAN VIEW

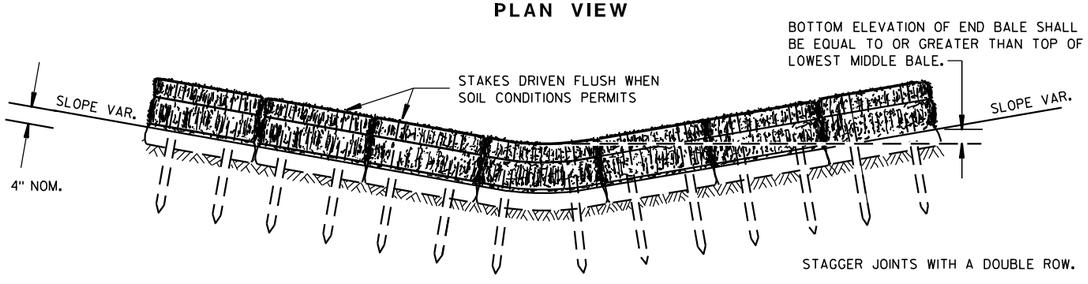

FRONT ELEVATION

TEMPORARY DITCH CHECK USING EROSION BALES ①

GENERAL NOTES

DETAILS OF CONSTRUCTION, MATERIALS AND WORKMANSHIP NOT SHOWN ON THIS DRAWING SHALL CONFORM TO THE PERTINENT REQUIREMENTS OF THE STANDARD SPECIFICATIONS AND THE APPLICABLE SPECIAL PROVISIONS.

① TEMPORARY DITCH CHECKS EITHER EROSION BALES OR MANUFACTURED SHALL BE PAID FOR UNDER THE BID ITEM OF TEMPORARY DITCH CHECK. THE DEPARTMENT WILL NOT PAY FOR TEMPORARY DITCH CHECKS CONSTRUCTED OF A SINGLE ROW OF EROSION BALES.

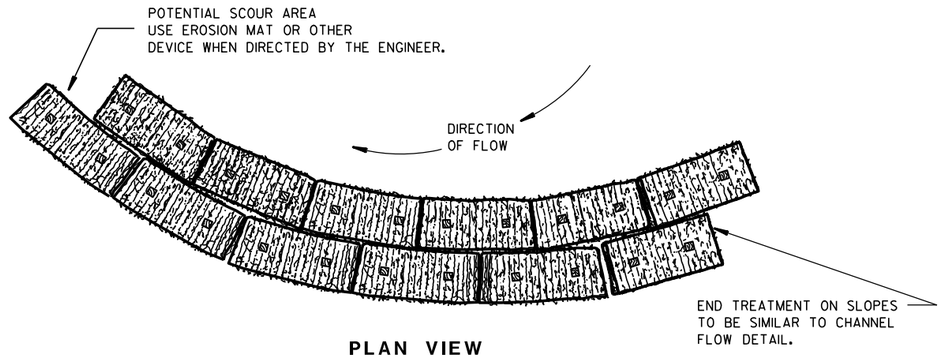

PLAN VIEW

WHEN ALTERING THE DIRECTION OF FLOW

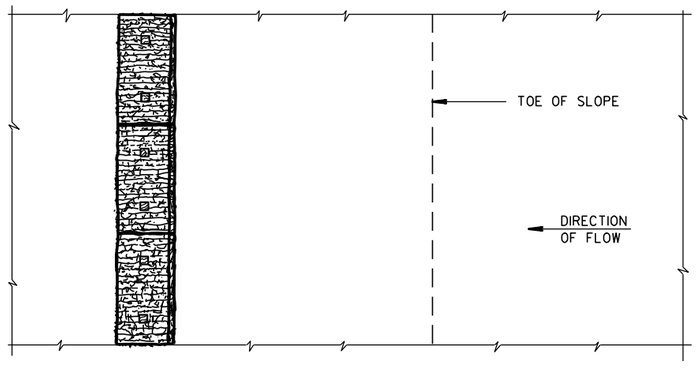

PLAN VIEW

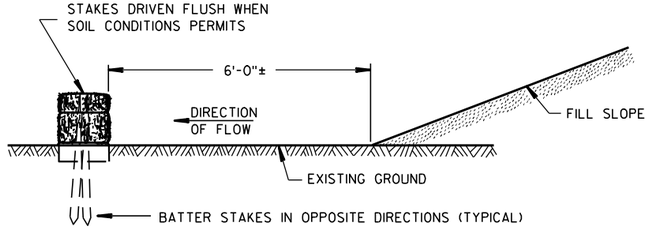

FRONT ELEVATION

WHEN EXISTING GROUND SLOPES AWAY FROM FILL SLOPE

EROSION BALES FOR SHEET FLOW

TYPICAL INSTALLATIONS OF EROSION BALES / TEMPORARY DITCH CHECKS

STATE OF WISCONSIN
DEPARTMENT OF TRANSPORTATION

APPROVED

6/04/02 DATE

/S/ Beth Cannestra
CHIEF ROADWAY DEVELOPMENT ENGINEER

FHWA

6
S.D.D. 8 E 8-3

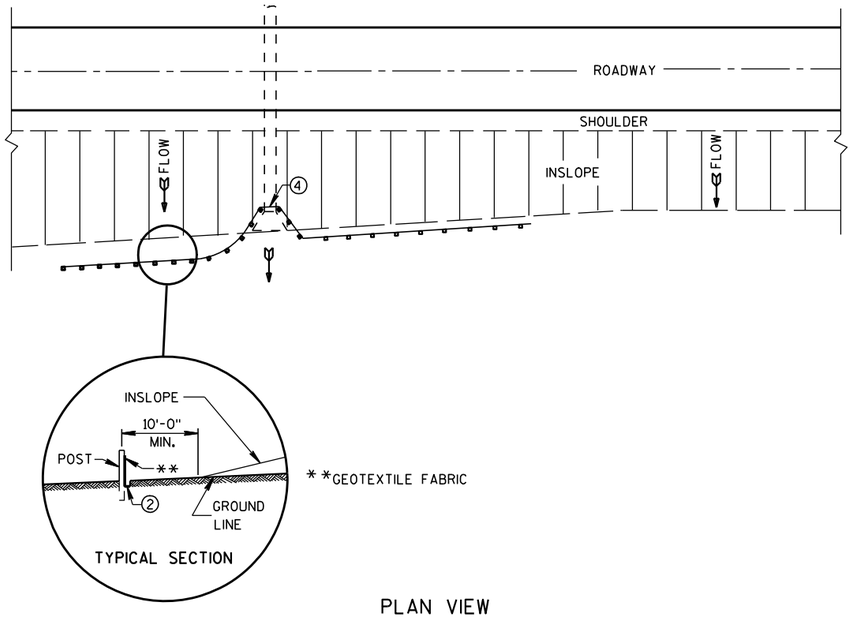

PLAN VIEW

TYPICAL APPLICATION OF SILT FENCE

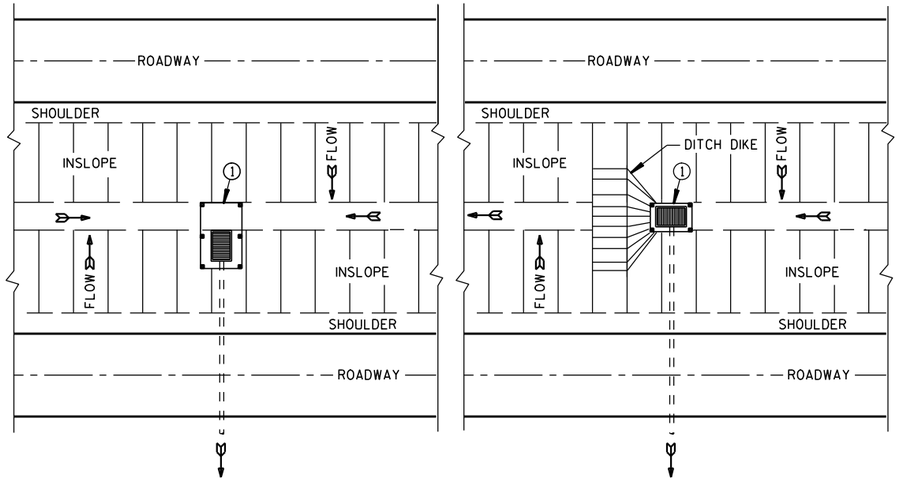

PLAN VIEW

SILT FENCE AT MEDIAN SURFACE DRAINS

GENERAL NOTES

DETAILS OF CONSTRUCTION NOT SHOWN ON THIS DRAWING SHALL CONFORM TO THE PERTINENT REQUIREMENTS OF THE STANDARD SPECIFICATIONS AND APPLICABLE SPECIAL PROVISIONS.

1. HORIZONTAL BRACE REQUIRED WITH 2" X 4" WOODEN FRAME OR EQUIVALENT AT TOP OF POSTS.
2. FOR MANUAL INSTALLATIONS THE TRENCH SHALL BE A MINIMUM OF 4" WIDE & 6" DEEP TO BURY AND ANCHOR THE GEOTEXTILE FABRIC. FOLD MATERIAL TO FIT TRENCH AND BACKFILL & COMPACT TRENCH WITH EXCAVATED SOIL.
3. WOOD POSTS SHALL BE A MINIMUM SIZE OF 1⅛" X 1⅛" OF OAK OR HICKORY.
4. SILT FENCE TO EXTEND ACROSS THE TOP OF THE PIPE.
5. CONSTRUCT SILT FENCE FROM A CONTINUOUS ROLL IF POSSIBLE BY CUTTING LENGTHS TO AVOID JOINTS. IF A JOINT IS NECESSARY USE ONE OF THE FOLLOWING TWO METHODS; A) OVERLAP THE END POSTS AND TWIST, OR ROTATE, AT LEAST 180 DEGREES, B) HOOK THE END OF EACH SILT FENCE LENGTH.

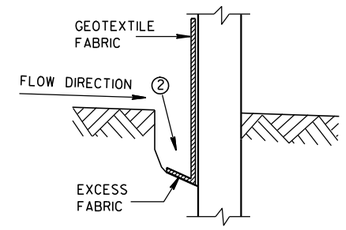

TRENCH DETAIL

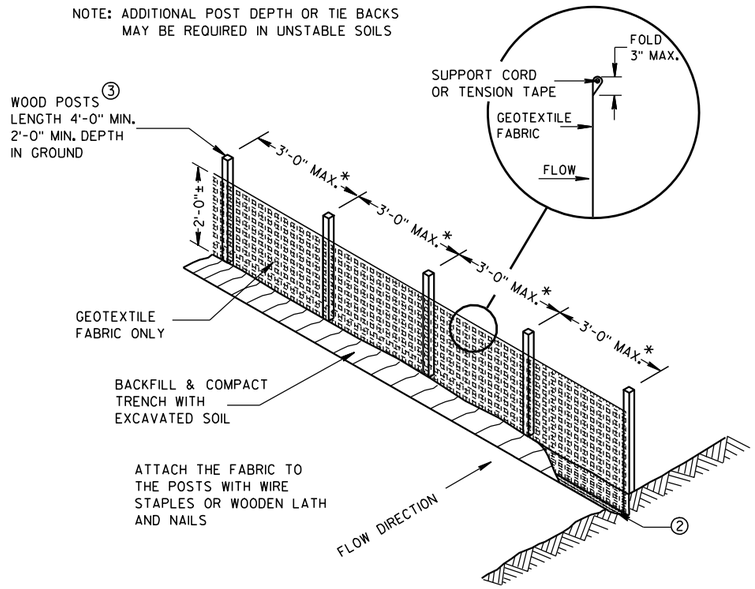

SILT FENCE

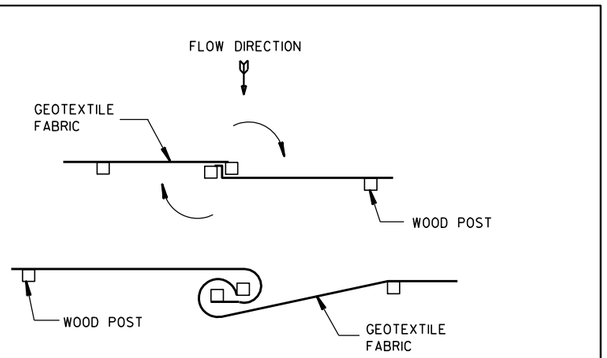

TWIST METHOD

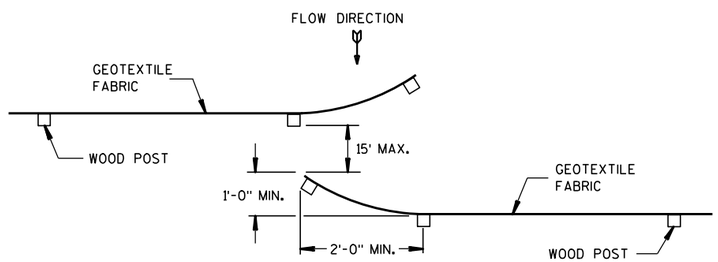

HOOK METHOD

JOINING TWO LENGTHS OF SILT FENCE 5

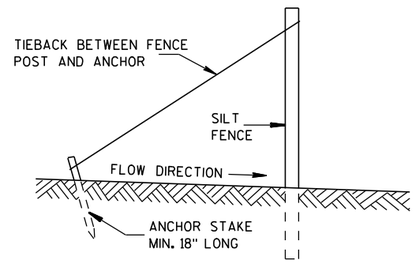

SILT FENCE TIE BACK

(WHEN REQUIRED BY THE ENGINEER)

SILT FENCE

STATE OF WISCONSIN
DEPARTMENT OF TRANSPORTATION

APPROVED
4-29-05 DATE
/S/ Beth Cannestra
CHIEF ROADWAY DEVELOPMENT ENGINEER
FHWA

6

S.D.D. 8 E 9-6

6

S.D.D. 8 E 9-6

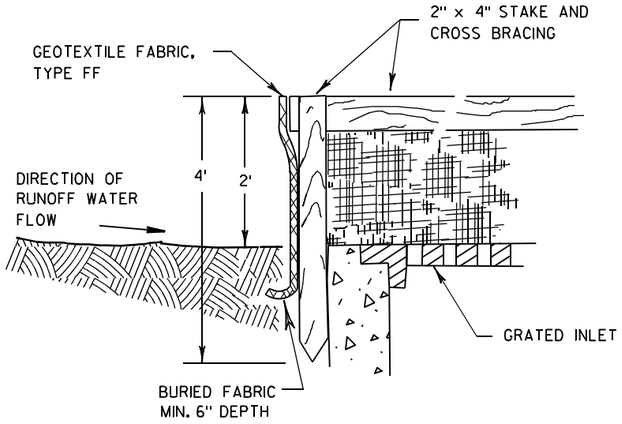

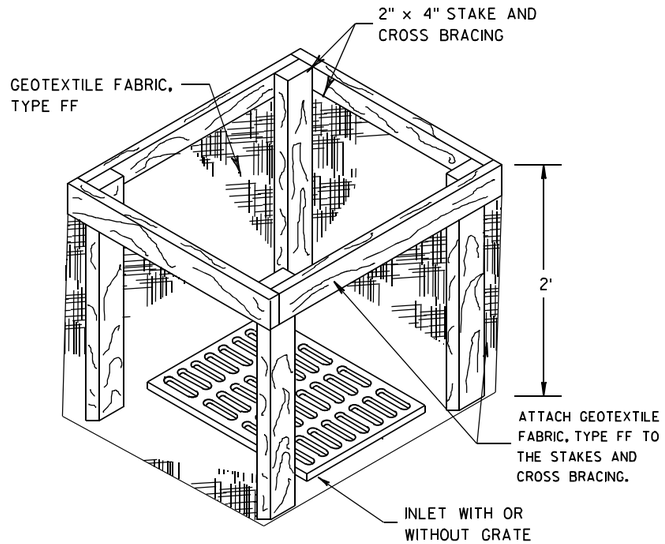

INLET PROTECTION, TYPE A

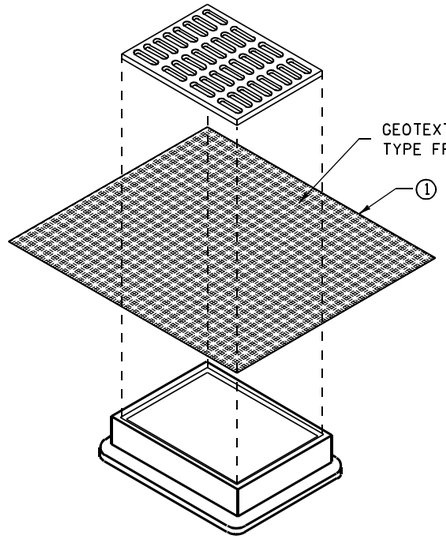

INLET PROTECTION, TYPE B
(WITHOUT CURB BOX)

(CAN BE INSTALLED IN ANY INLET WITHOUT A CURB BOX)

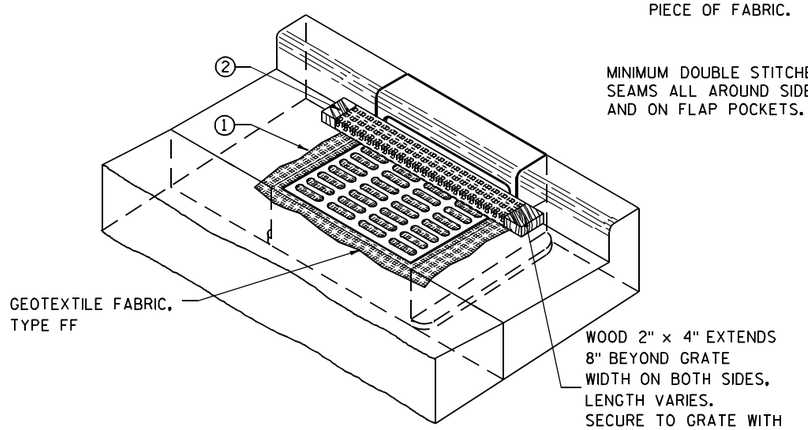

INLET PROTECTION, TYPE C (WITH CURB BOX)

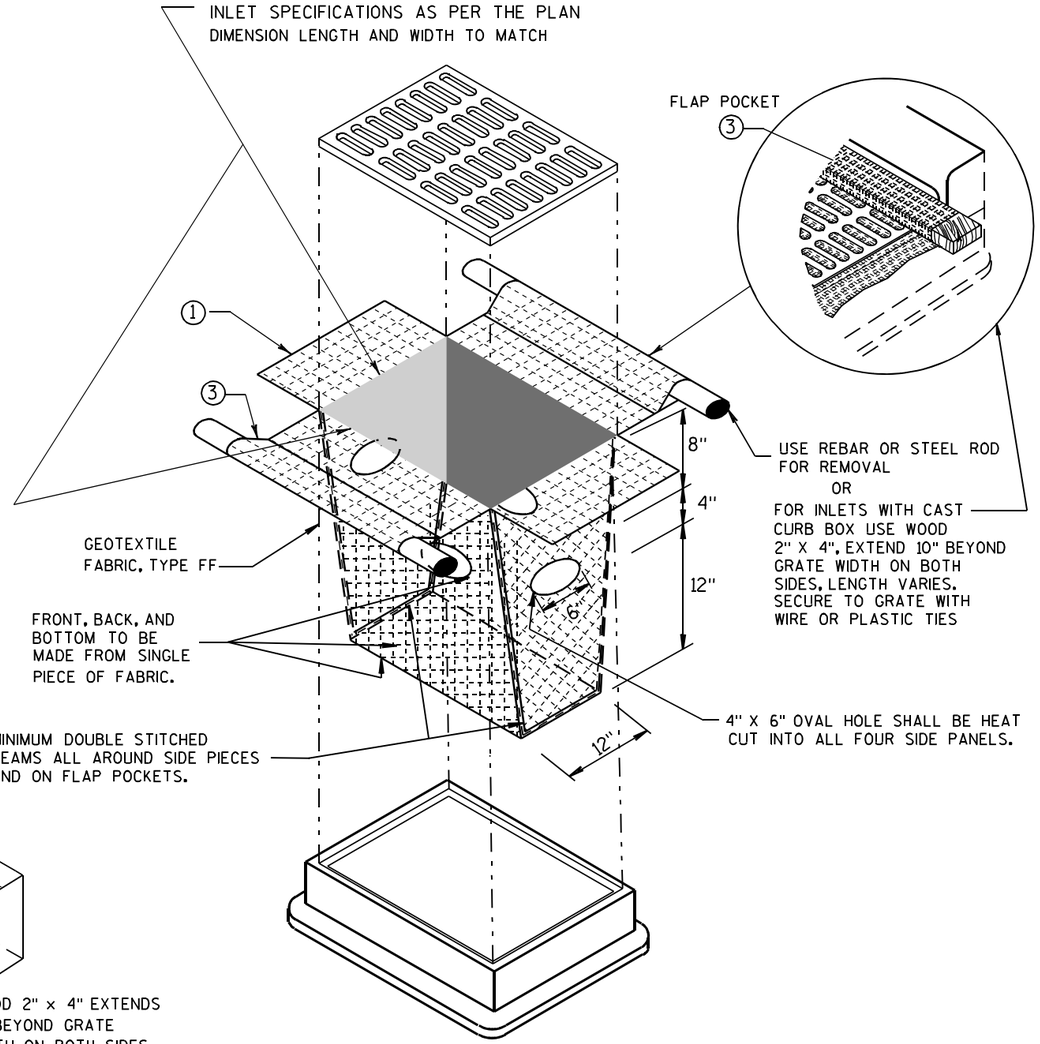

INLET PROTECTION, TYPE D

(CAN BE INSTALLED IN ANY INLET TYPE WITH
OR WITHOUT A CURB BOX AS PER NOTE ②)

GENERAL NOTES

INLET PROTECTION DEVICES SHALL BE MAINTAINED OR REPLACED AT THE DIRECTION OF THE ENGINEER.

MANUFACTURED ALTERNATIVES APPROVED AND LISTED ON THE DEPARTMENT'S EROSION CONTROL PRODUCT ACCEPTABILITY LIST MAY BE SUBSTITUTED.

WHEN REMOVING OR MAINTAINING INLET PROTECTION, CARE SHALL BE TAKEN SO THAT THE SEDIMENT TRAPPED ON THE GEOTEXTILE FABRIC DOES NOT FALL INTO THE INLET. ANY MATERIAL FALLING INTO THE INLET SHALL BE REMOVED IMMEDIATELY.

① FINISHED SIZE, INCLUDING FLAP POCKETS WHERE REQUIRED, SHALL EXTEND A MINIMUM OF 10" AROUND THE PERIMETER TO FACILITATE MAINTENANCE OR REMOVAL.

② FOR INLET PROTECTION, TYPE C (WITH CURB BOX), AN ADDITIONAL 18" OF FABRIC IS WRAPPED AROUND THE WOOD AND SECURED WITH STAPLES. THE WOOD SHALL NOT BLOCK THE ENTIRE HEIGHT OF THE CURB BOX OPENING.

③ FLAP POCKETS SHALL BE LARGE ENOUGH TO ACCEPT WOOD 2X4.

INSTALLATION NOTES

TYPE B & C

TRIM EXCESS FABRIC IN THE FLOW LINE TO WITHIN 3" OF THE GRATE.

THE CONTRACTOR SHALL DEMONSTRATE A METHOD OF MAINTENANCE, USING A SEWN FLAP, HAND HOLDS OR OTHER METHOD TO PREVENT ACCUMULATED SEDIMENT FROM ENTERING THE INLET.

TYPE D

DO NOT INSTALL INLET PROTECTION TYPE D IN INLETS SHALLOWER THAN 30", MEASURED FROM THE BOTTOM OF THE INLET TO THE TOP OF THE GRATE.

TRIM EXCESS FABRIC IN THE FLOW LINE TO WITHIN 3" OF THE GRATE.

THE INSTALLED BAG SHALL HAVE A MINIMUM SIDE CLEARANCE, BETWEEN THE INLET WALLS AND THE BAG, MEASURED AT THE BOTTOM OF THE OVERFLOW HOLES, OF 3". WHERE NECESSARY THE CONTRACTOR SHALL CINCH THE BAG, USING PLASTIC ZIP TIES, TO ACHIEVE THE 3" CLEARANCE. THE TIES SHALL BE PLACED AT A MAXIMUM OF 4" FROM THE BOTTOM OF THE BAG.

INLET PROTECTION
TYPE A, B, C, AND D

STATE OF WISCONSIN
DEPARTMENT OF TRANSPORTATION

APPROVED
10/16/02
DATE
/S/ Beth Cannestra
CHIEF ROADWAY DEVELOPMENT ENGINEER
FHWA

6
S.D.D. 8 E 10-2

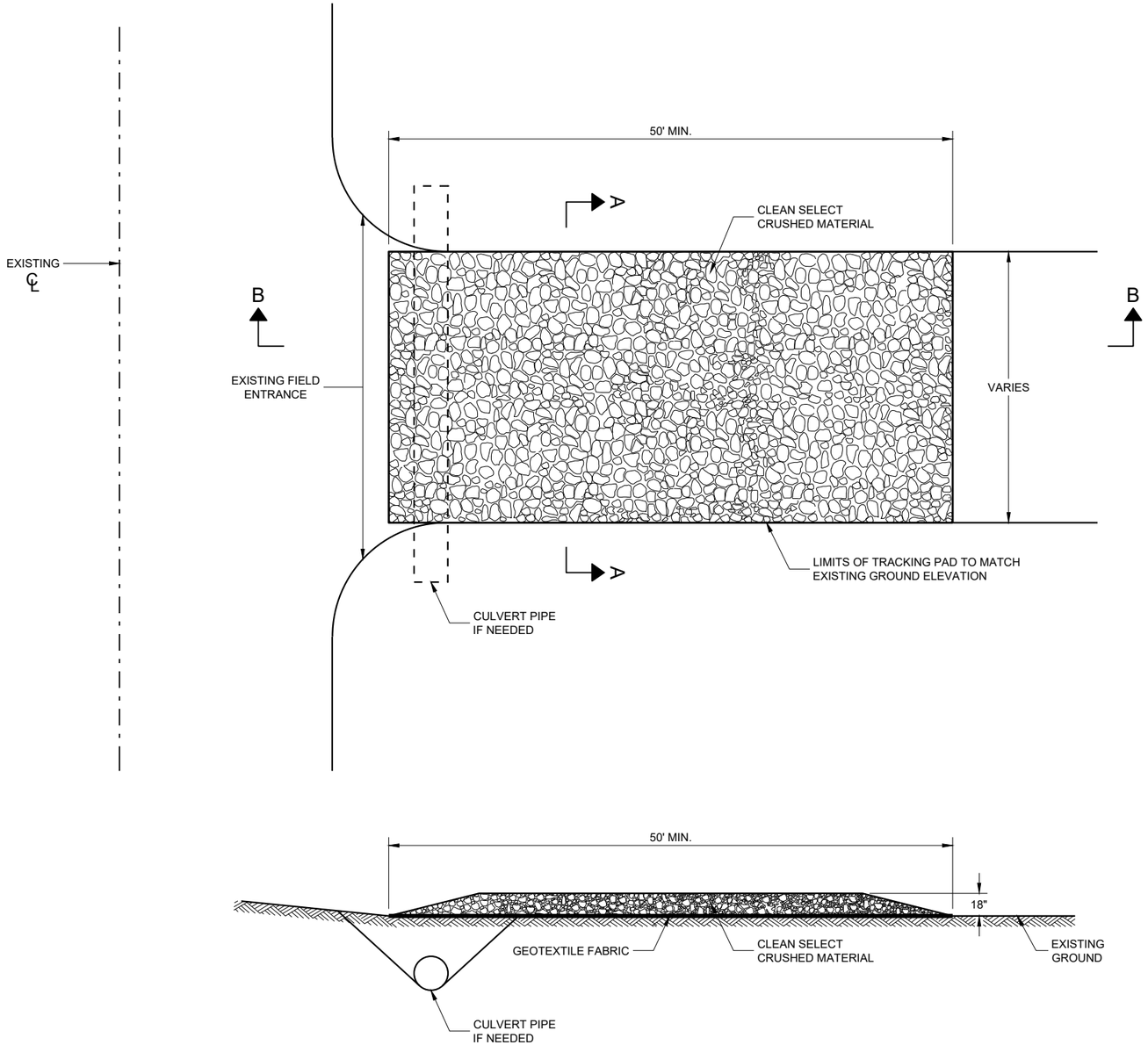

SECTION B - B

GENERAL NOTES

DETAILS OF CONSTRUCTION, MATERIALS AND WORKMANSHIP NOT SHOWN ON THIS DRAWING SHALL CONFORM TO THE PERTINENT REQUIREMENTS OF THE STANDARD SPECIFICATIONS AND THE APPLICABLE SPECIAL PROVISIONS.

TRACKING PAD SHALL BE INSPECTED DAILY. DEFICIENT AREAS SHALL BE REPAIRED OR REPLACED IMMEDIATELY.

TRACKING PAD TO BE REMOVED AFTER CONSTRUCTION IS COMPLETED.

TRACKING PAD SHALL BE THE FULL WIDTH OF THE EGRESS POINT.

SURFACE WATER MUST BE PREVENTED FROM PASSING THROUGH THE TRACKING PAD. FLOWS SHALL BE DIVERTED AWAY, AROUND OR CONVEYED UNDER THE TRACKING PAD.

CULVERT PIPE OR OTHER BMP USED TO DIVERT WATER AWAY, AROUND OR UNDER THE TRACKING PAD SHALL BE DESIGNED TO CONVEY THE 2 YEAR - 24 HOUR EVENT.

THE COST OF ADDITIONAL BMP TO DIVERT WATER ARE INCIDENTAL TO THE TRACKING PAD BID ITEM.

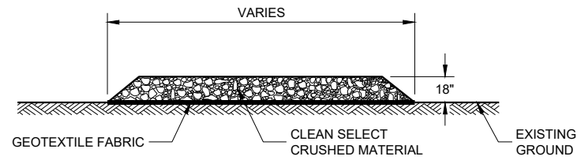

SECTION A - A

6

SDD 08E14 - 01

TRACKING PAD

STATE OF WISCONSIN
DEPARTMENT OF TRANSPORTATION

APPROVED
3/24/2011
DATE
/S/ Jerry H. Zogg
ROADWAY STANDARDS DEVE ENGINEER

FHWA

6

SDD 08E14 - 01

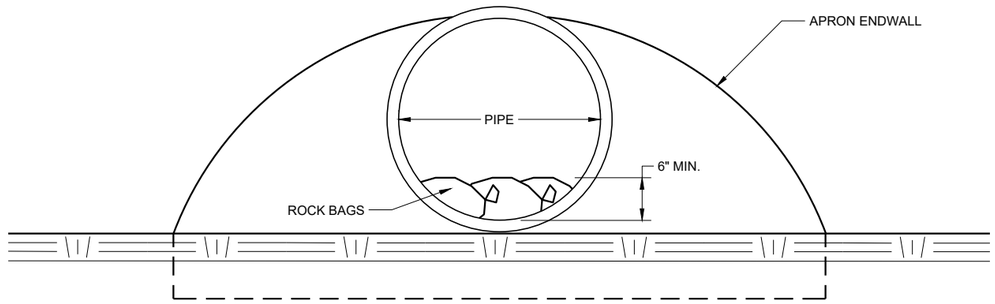

END VIEW

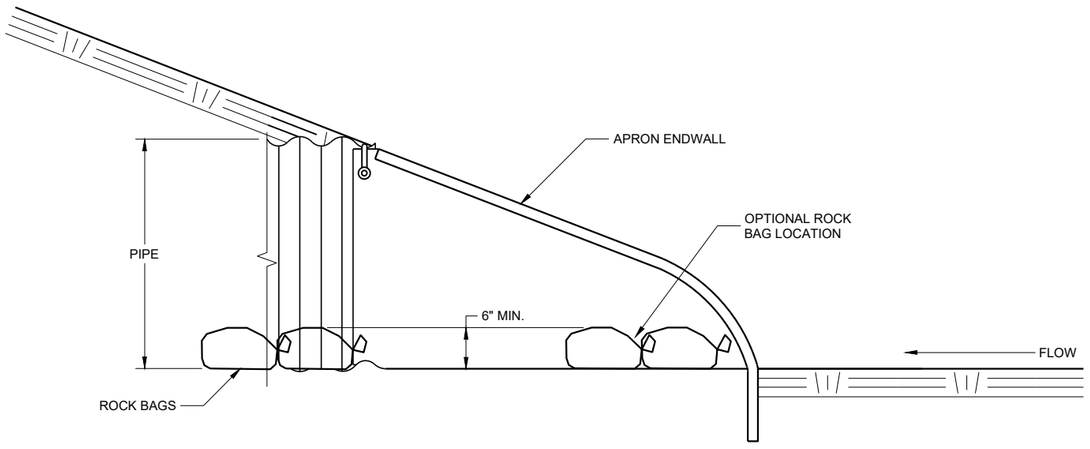

SIDE VIEW

CULVERT PIPE CHECK

(INSTALL ON INLET END ONLY)

CULVERT PIPE CHECK

STATE OF WISCONSIN
DEPARTMENT OF TRANSPORTATION

APPROVED
May 2019
DATE

/S/ Daniel Schave
EROSION CONTROL ENGI

FHWA

6

SDD 08E15 - 01

6

SDD 08E15 - 01

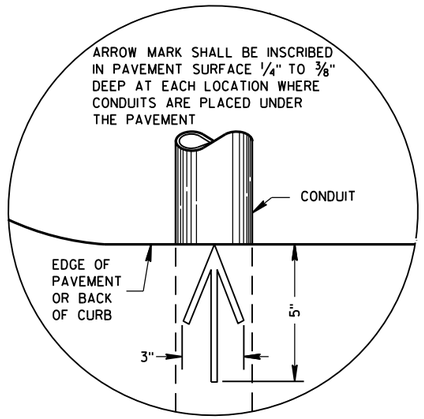

PLAN VIEW

ARROW MARK

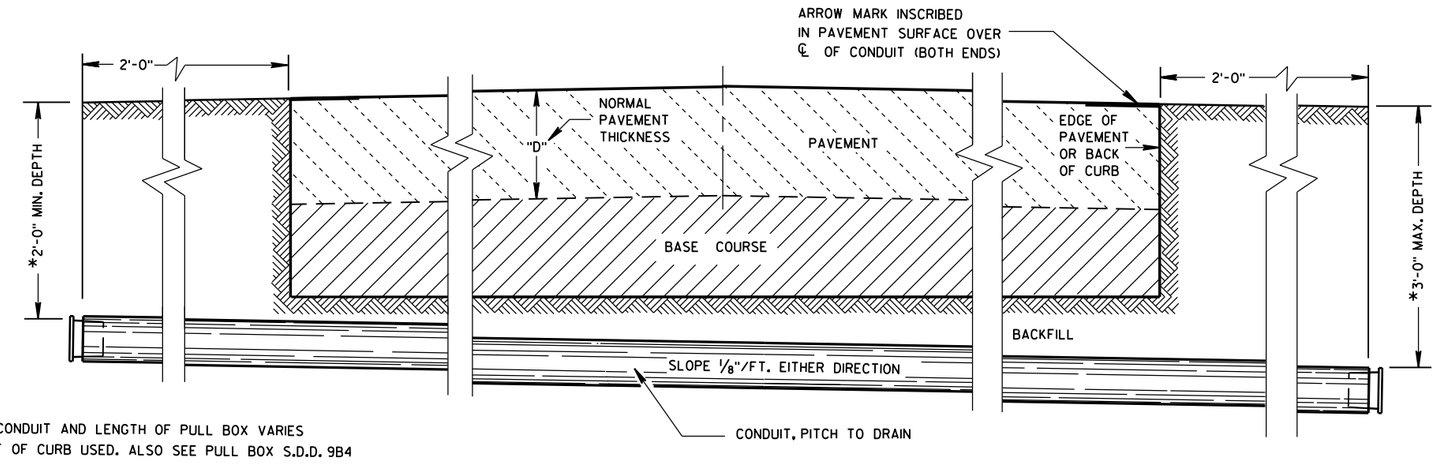

*DEPTH OF CONDUIT AND LENGTH OF PULL BOX VARIES WITH HEIGHT OF CURB USED. ALSO SEE PULL BOX S.D.D. 9B4

SIDE ELEVATION

DETAIL FOR CONDUIT UNDER PAVED HIGHWAYS

GENERAL NOTES

DETAILS OF CONSTRUCTION, MATERIALS AND WORKMANSHIP NOT SHOWN ON THIS DRAWING SHALL CONFORM TO THE PERTINENT REQUIREMENTS OF THE CONTRACT.

METALLIC (STANDARD SPECIFICATION 652.2.2) OR NONMETALLIC (STANDARD SPECIFICATION 652.2.3) CONDUIT SHALL BE FURNISHED AND PLACED AS SHOWN.

DEPTH OF CONDUIT INSTALLED BELOW THE TRAVELED WAY SHALL BE 24 INCHES MINIMUM AND 36 INCHES MAXIMUM.

DEPTH OF CONDUIT INSTALLED THAT IS NOT BELOW THE TRAVELED WAY SHALL BE 18 INCHES MINIMUM AND 36 INCHES MAXIMUM.

ANY EXCEPTION TO THE MAXIMUM DEPTH SHALL BE ONLY WITH THE WRITTEN APPROVAL OF THE ENGINEER.

THE TRENCH SHALL NOT BE BACKFILLED PRIOR TO INSPECTION OF THE CONDUIT.

ALL METALLIC CONDUIT RACEWAY ENDS SHALL BE REAMED AND THREADED.

ALL METALLIC CONDUIT IN WHICH WIRE OR CABLE IS TO BE INSTALLED SHALL BE BUSHED WITH APPROVED THREADED BUSHINGS BEFORE INSTALLATION OF THE WIRE OR CABLE.

ALL METALLIC CONDUITS IN WHICH WIRE OR CABLE IS NOT TO BE INSTALLED SHALL BE CAPPED WITH THREADED PROTECTIVE CAPS, AS APPROVED BY THE ENGINEER.

ALL NONMETALLIC CONDUIT SHALL BE CAPPED OR PLUGGED IMMEDIATELY AFTER INSTALLATION AND SHALL REMAIN CAPPED OR PLUGGED UNTIL WIRE/CABLES ARE INSTALLED.

NONMETALLIC CONDUITS IN WHICH WIRE OR CABLE IS NOT BEING INSTALLED SHALL REMAIN CAPPED OR PLUGGED.

BENDING OF PVC ELECTRICAL CONDUIT SHALL BE ACCOMPLISHED BY USING A BLANKET OR EMERSION TYPE TANK DESIGNED FOR THE PURPOSE OF BENDING PVC ELECTRICAL CONDUIT.

ALL CUT ENDS SHALL BE TRIMMED INSIDE AND OUTSIDE TO REMOVE ALL ROUGH EDGES ON NONMETALLIC CONDUIT. (SEE NEC 347.5)

WHEN REQUIRED TO CONNECT NONMETALLIC CONDUIT TO METALLIC CONDUIT, ONLY U.L. LISTED ADAPTER FITTINGS SHALL BE USED.

PRIOR TO CONDUIT ACCEPTANCE, CONDUIT CAPS OR PLUGS SHALL BE REMOVED, AND THE CAPS, PLUGS AND CONDUIT ENDS SHALL BE THOROUGHLY CLEANED AND THEN THE CAPS OR PLUGS REINSTALLED TO ENSURE THAT THE CAPS OR PLUGS CAN BE EASILY REMOVED IN THE FUTURE.

ALL CONDUIT BEING FURNISHED AND INSTALLED SHALL HAVE THE U.L. LABEL FIRMLY ATTACHED.

CONDUIT RUNS SHALL BE THE SAME SIZE OF CONDUIT FROM ONE END TO THE OTHER (FROM PULL BOX TO PULL BOX-OR-JUNCTION BOX TO JUNCTION BOX-OR-BASE TO BASE, ETC.).

TRACER WIRE SHALL BE INSTALLED AS STATED IN THE STANDARD SPECIFICATION, ITEM 652.3.1.1.

ALL CONDUIT RUNS SHALL BE STRAIGHT (WITHOUT BENDS) FROM PULL BOX TO PULL BOX, PULL BOX TO BASE AND BASE TO BASE AS SHOWN ON THE PLANS.

CONDUIT

STATE OF WISCONSIN
DEPARTMENT OF TRANSPORTATION

APPROVED
March, 2017 — DATE
/S/ Ahmet Demirbilek — STATE ELECTRICAL 394
FHWA

6

S.D.D. 9 B 2-10

TABLE OF NOMINAL DIMENSIONS AND WEIGHTS

DIMENSION IN INCHES		NON- CONDUCTIVE PULL BOX	
BOX DIAMETER ** (INSIDE)	A	24	24
BOX OVERALL OUTSIDE DIAMETER	B	27	27
BOX LENGTH	C	36	42
FRAME OPENING	D	22 ½	22 ½
WEIGHT IN POUNDS *			
COVER		50	50
BOX ONLY		75	85

* THE ACTUAL WEIGHT OF THE COVER OR BOX ONLY MAY VARY NOT TO EXCEED 100 LBS INDIVIDUALLY.

** DIAMETER VARIES FROM TOP TO BOTTOM WITH THE DIAMETER LARGER AT THE BOTTOM TO PREVENT FROST HEAVE.

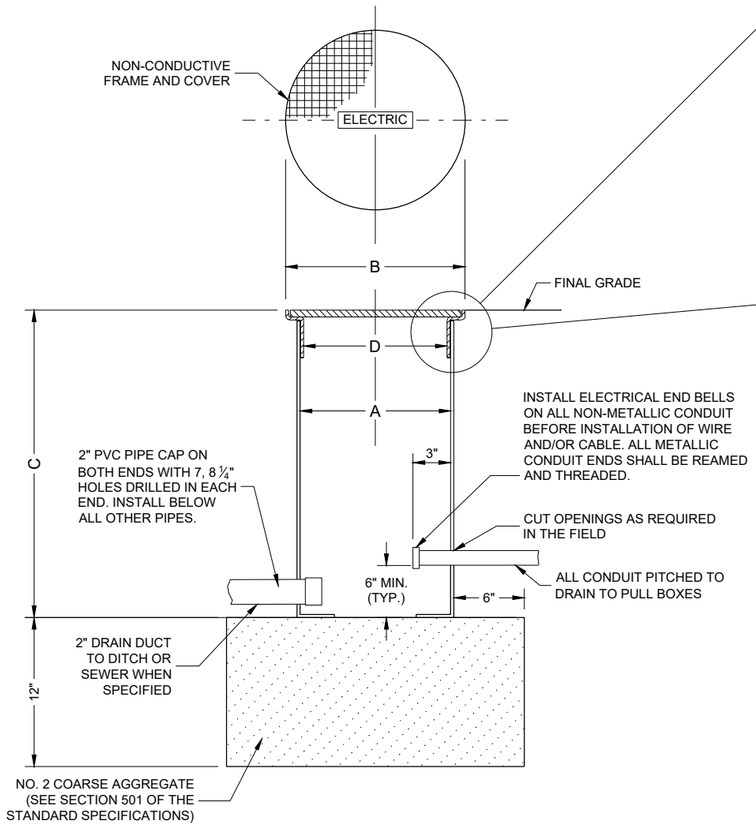

NON-CONDUCTIVE PULL BOX

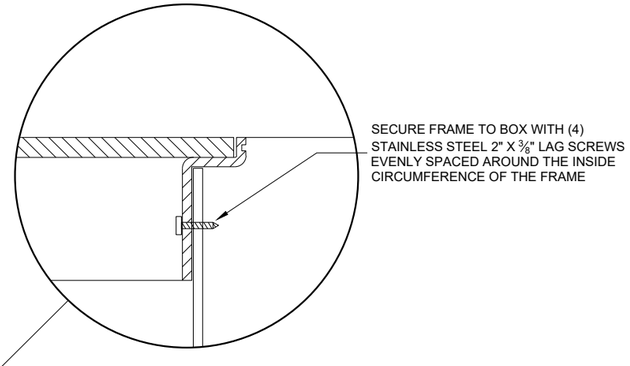

INSTALLED IN SOD OR CRUSHED AGGREGATE

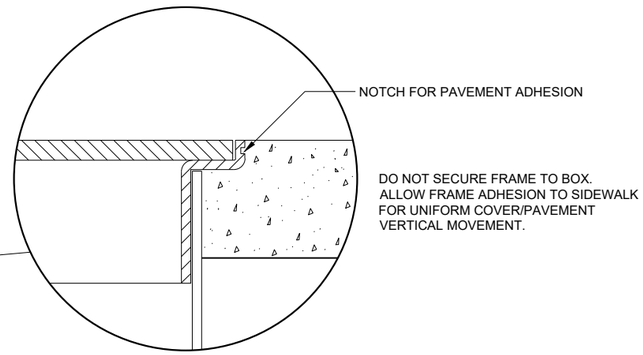

INSTALLED IN SIDEWALK

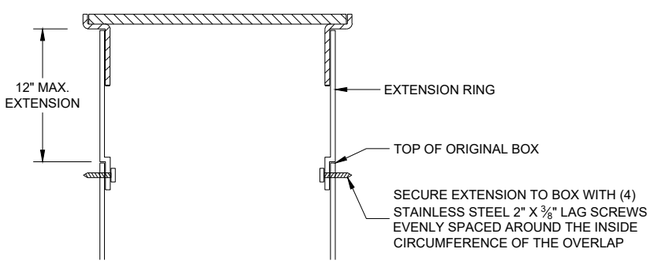

BOX EXTENSION

GENERAL NOTES

DETAILS OF CONSTRUCTION, MATERIALS AND WORKMANSHIP NOT SHOWN ON THIS DRAWING SHALL CONFORM TO THE PERTINENT REQUIREMENTS OF THE CONTRACT.

ALL BOXES, FRAMES AND COVERS SHALL BE SUITABLE FOR TIER 15 LOADING AS SPECIFIED IN ANSI/SCTE 77.

PROVIDE AN OPENING FOR TOOL ASSISTED COVER REMOVAL NOT LARGE ENOUGH TO PERMIT PASSAGE OF A SPHERE MORE THAN ½" DIAMETER

ENSURE COVER SURFACE IS SKID RESISTANT WITH A COEFFICIENT OF FRICTION OF AT LEAST 0.5 AND VERTICAL SURFACE DICONTINUITIES LESS THAN ¼".

COVER SHALL BE MAGNETICALLY LOCATABLE.

BOXES AND EXTENSIONS ARE TRIMMABLE FOR CUSTOM LENGTHS. TRIMMED PIECES SHALL MAINTAIN A UNIFORM LENGTH.

ENTRANCE HOLES INTO PULL BOXES SHALL BE CUT WITH A CIRCULAR HOLE SAW OR HYDRAULIC CONDUIT PUNCH. HOLE SIZE SHALL BE THE OUTSIDE DIAMETER OF THE CONDUIT THAT IS TO FIT IN THE OPENING PLUS NO MORE THAN ¼".

THE CONTRACTOR SHALL NOT INSTALL WIRE IN ANY PULL BOX UNTIL ITS INSTALLATION HAS BEEN INSPECTED AND ACCEPTED BY THE ENGINEER.

ALL METALLIC CONDUIT IN WHICH WIRE AND/OR CABLE IS TO BE INSTALLED, SHALL BE BUSHED BEFORE INSTALLATION OF THE WIRE AND/OR CABLE.

ENTIRE BOX MUST BE CONSTRUCTED OF NON-CONDUCTIVE MATERIALS WITH THE EXCEPTION OF STAINLESS STEEL FASTENERS AND MAGNETIC LOCATABLE DEVICE.

WHEN A PULL BOX IS INSTALLED IN CRUSHED AGGREGATE SHOULDERS, PLACE IT 2-3 INCHES BELOW GRADE AND COVER IT WITH 2-3 INCHES OF CRUSHED AGGREGATE.

LABEL ON COVER SHALL READ "ELECTRIC" FOR SIGNAL AND LIGHTING SYSTEMS, "WISDOT ITS" FOR COMMUNICATIONS AND ITS EQUIPMENT SYSTEMS.

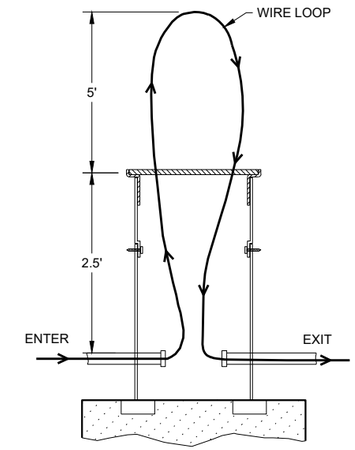

MEASUREMENT DETAIL FOR WIRE/CABLE IN THE PULL BOX

PULL BOXES NON-CONDUCTIVE

STATE OF WISCONSIN
DEPARTMENT OF TRANSPORTATION

APPROVED
May 2022
DATE

/S/ Ahmet Demirbilek
STATE ELECTRICAL ENGI 395

FHWA

6
SDD 09B16 - 02

FORM DEPTH SHALL BE NO MORE THAN 6" BELOW GRADE ON THE LOWER SIDE OF BASE

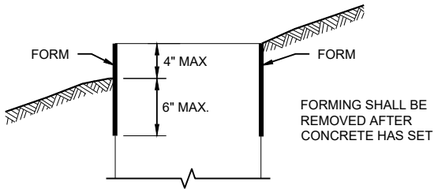

FORMING DETAIL

QUANTITY REQUIREMENTS	CONCRETE BASE TYPE		
	1	2	5 & 6
APPROX. CUBIC YARDS OF CONCRETE	0.40	0.57	0.40
LBS. OF HOOP BAR STEEL	NONE	23	16
LBS. OF VERTICAL BAR STEEL	NONE	60	18

GENERAL NOTES

DETAILS OF CONSTRUCTION, MATERIALS AND WORKMANSHIP NOT SHOWN ON THIS DRAWINGSHALL CONFORM TO THE PERTINENT REQUIREMENTS OF THE CONTRACT.

BASES SHALL BE EXCAVATED BY USE OF A CIRCULAR AUGER.

TOP SURFACES OF CONCRETE BASES SHALL BE TROWEL FINISHED SMOOTH AND LEVEL.

CONDUIT SIZES AND LOCATIONS SHALL BE SHOWN ON THE PLANS

THE FINAL OR TERMINATING CONCRETE BASE IN A CONDUIT RUN SHALL HAVE A 6" EXIT STUB INSTALLED FOR FUTURE CABLING USE. THE EXIT STUB SHALL BE SIZED AS USED THROUGHOUT THE CONDUIT RUN AS SHOWN A THE ENTRANCE OF THE BASE.

ENDS OF CONDUIT INSTALLED BELOW GRADE FRO FUTURE USE SHALL BE CAPPED IF METALLIC OR PLUGGED IF NON-METALLIC.

MINIMUM BENDING RADIUS OF CONDUIT IS EQUAL TO 6X THE DIAMETER.

CONDUIT HEIGHT ABOVE CONCRETE BASES SHALL BE 1 INCH. ALL METALLIC CONDUIT ENDS SHALL BE REAMED AND THREADED.

ALL CONDUIT ENDS AT THE TOP OF CONCRETE BASES SHALL BE CAPPED IF METALLIC OR PLUGGED IF NON-METALLIC IMMEDIATELY AFTER PLACEMENT AND BEFORE CONCRETE IS POURED. CONDUITS IN WHICH WIRE OR CABLE IS NOT INSTALLED SHALL REMAIN CAPPED OR PLUGGED.

BELL ENDS SHALL BE INSTALLED ON ALL PVC CONDUIT EXPOSED AT THE TOP OF CONCRETE BASES BEFORE INSTALLATION.

WHEN REQUIRED TO CONNECT NON-METALLIC CONDUIT TO METALLIC CONDUIT, ONLY ADAPTER FITTINGS, U.L. LISTED FOR ELECTRICAL USE, SHALL BE USED.

IF A BASE REQUIRES A DEEP FORM BECAUSE OF LOOSE DIRT OR FILL, THE FORM SHALL BE REMOVED BEFORE BACKFILLING AROUND THE BASE. BACKFILL SHALL BE TAMPED TIGHT AGAINST THE BARE CONCRETE BASE IN LAYERS OF 1 FOOT OR LESS.

A NO. 4 AWG STRANDED COPPER EQUIPMENT GROUNDING CONDUCTOR SHALL BE EXOTHERMICALLY WELDED TO THE EQUIPMENT GROUNDING ELECTRODE (GROUND ROD) FOR TYPE 2, TYPE 5 AND TYPE 6 BASES.

THE EQUIPMENT GROUNDING CONDUCTOR SHALL BE FURNISHED AND INSTALLED TO ENTER ALL BASE TYPES THROUGH A 1 INCH CONDUIT INSTALLED FOR GROUNDING PURPOSES, LEAVING A 4 FOOT COIL OF WIRE ABOVE THE CONCRETE BASE. THE EQUIPMENT GROUNDING CONDUCTOR SHALL BE NEATLY COILED AND THE COILS TIED TOGETHER.

ANCHOR RODS SHALL BE THREADED 12" IN LENGTH ON EACH END OF THE ROD. ANCHOR RODS SHALL BE MANUFACTURED IN ACCORDANCE WITH SECTION 654.2.1 OF THE STANDARD SPECIFICATIONS.

WASHERS AND LOCK WASHERS ARE REQUIRED ON ALL ANCHOR RODS.

WHEN ANCHOR RODS USING THE ALTERNATE "L" BEND ARE FURNISHED, THE 4 INCH"L" BEND SHALL BE IN ADDITION TO THE SPECIFIED ANCHOR ROD BAR LENGTH. THE "L" BEND SHALL NOT BE THREADED.

ANCHOR RODS SHALL BE INSTALLED WITH MISALIGNMENTS OF LESS THAN 1:40 FROM VERTICAL.

WELDING OF THE ANCHOR RODS TO THE CAGE IS UNACCEPTABLE. TIE WIRES SHALL BE USED.

BAR STEEL REINFORCEMENT SHALL BE COATED WITH POWDERED EPOXY RESIN IN ACCORDANCE WITH SECTION 505 OF THE STANDARD SPECIFICATIONS (LATEST EDITION).

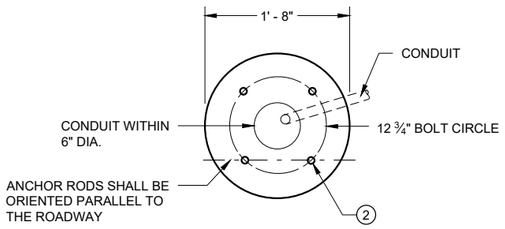

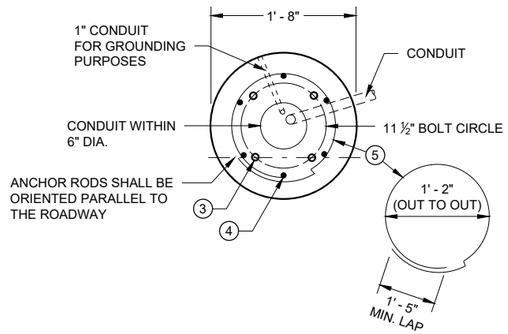

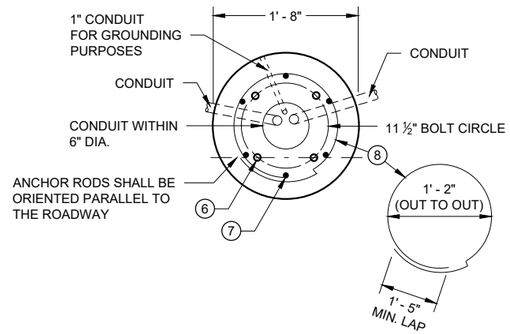

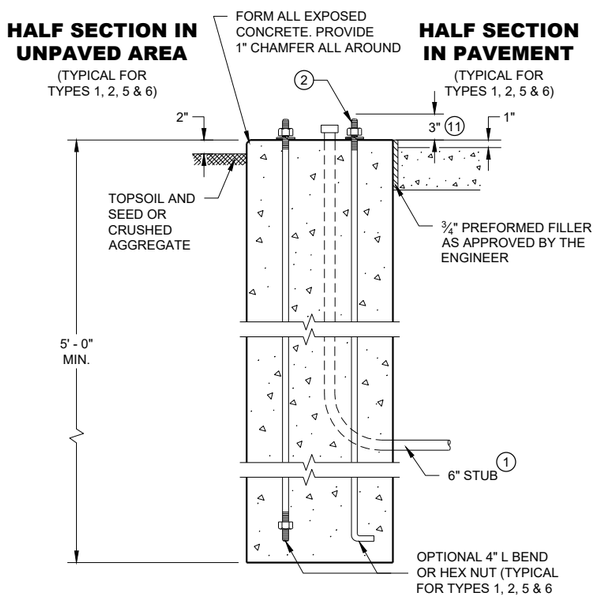

TYPE 1

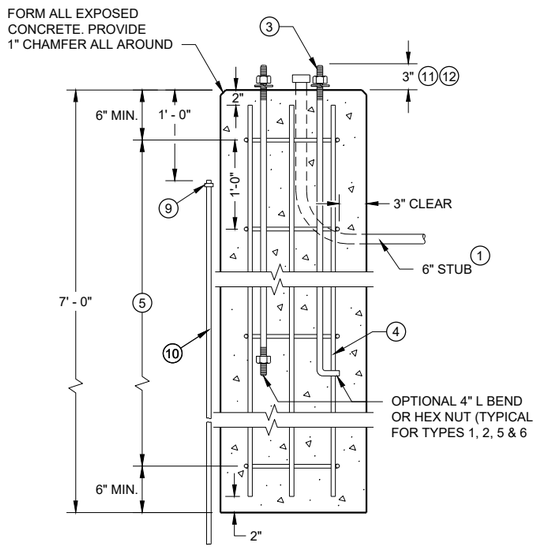

TYPE 2

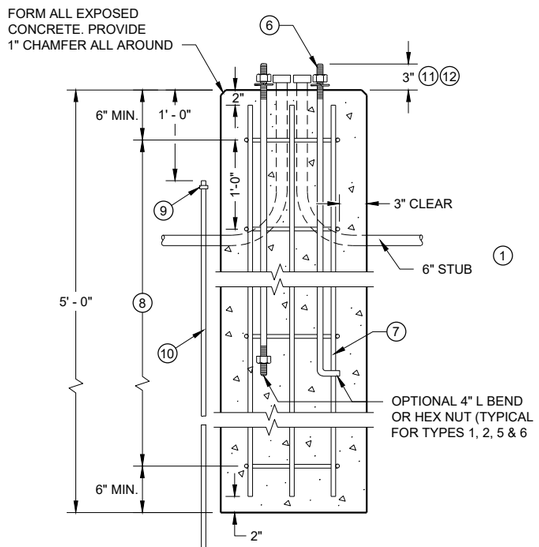

TYPE 5 & 6

1 THE MINIMUM DEPTH OF CONDUIT EXITING THE CONCRETE BASE AND INSTALLED BELOW THE TRAVELED WAY SHALL BE 24 INCHES. THE MINIMUM DEPTH OF CONDUIT EXITING THE CONCRETE BASE THAT IS NOT INSTALLED BELOW THE TRAVELED WAY SHALL BE 18 INCHES. THE MAXIMUM DEPTH OF ALL CONDUIT SHALL BE 36 INCHES EXCEPT WITH WRITTEN APPROVAL OF THE ENGINEER.

2 (4) 1" DIA. X 3' - 6" ANCHOR RODS.

3 (4) 1" DIA. X 5' - 0" ANCHOR RODS.

4 (6) NO. 6 X 6' - 8" BAR STEEL REINFORCEMENT.

5 (7) NO. 4 X 5' - 1" BAR STEEL REINFORCEMENT @ 1' - 0" C - C.

6 (4) 1" DIA. X 3' - 6" ANCHOR RODS.

7 (6) NO. 4 X 4' - 8" BAR STEEL REINFORCEMENT.

8 (5) NO. 4 X 5' - 1" BAR STELL REINFORCEMENT @ 1' - 0" C -C.

9 EXOTHERMIC CONNECTION TO EUIPMENT GROUNDING CONDUCTOR

10 ⅝" DIA. X 8' -0" COPPERCLAD EQUIPMENT GROUNDING ELECTRODE REQUIRED

11 ANY ANCHOR ROD PROJECTION SHORTER THAN 2 ¾" OR LONGER THAN 3 ¼" SHALL REQUIRE THE BASE TO BE REMOVED AND REPLACED AT THE CONTRACTORS EXPENSE.

12 FOR NON - BREAKAWAY INSTALLATIONS, 4 ½" ± ANCHOR ROD PROJECTION WITH THE USE OF LEVELING NUTS. RODENT SCREEN REQUIRED.

CONCRETE BASES

CONCRETE BASES
TYPES 1, 2, 5, & 6

STATE OF WISCONSIN
DEPARTMENT OF TRANSPORTATION

APPROVED
May 2019
DATE
/S/ Ahmet Demirbilek
STATE ELECTRICAL ENGI 396

FHWA

GENERAL NOTES

DETAILS OF CONSTRUCTION, MATERIALS AND WORKMANSHIP NOT SHOWN ON THIS DRAWING SHALL CONFORM TO THE PERTINENT REQUIREMENTS OF THE CONTRACT.

FOUR (4) BOLTS SHALL BE FURNISHED WITH EACH TRANSFORMER BASE. BOLTS SHALL BE 1" DIAMETER, 4" IN LENGTH, WITH WASHERS, LOCK WASHERS AND NUTS. BOLTS, NUTS AND WASHERS SHALL BE MANUFACTURED IN ACCORDANCE WITH SECTION 531.2.2 OF THE STANDARD SPECIFICATIONS.

LEVELING SHIMS, IF NEEDED, SHALL BE DESIGNED FOR THE PURPOSE AND USED UNDER CAST BASES WHEN PLUMBING POLES OR STANDARDS DURING INSTALLATION. THE USE OF WASHERS IN LIEU OF PROPER LEVELING SHIMS IS NOT ACCEPTABLE.

SHIM LENGTH SHALL BE LONG ENOUGH TO COMPLETELY COVER THE AREA UNDER THE LENGTH AND WIDTH OF THE BASE MOUNTING FLANGE.

DOUBLE NUTTING IS NOT ACCEPTABLE FOR LEVELING OR MOUNTING PURPOSES.

A NEMA APPROVED, U.L. LISTED, COPPER WITH BRASS OR STAINLESS STEEL SET SCREW, DIRECT BURY RATED, MECHANICAL CONNECTOR (LUG), SIZED TO ACCEPT AWG. #10 TO #4 COPPER STRANDED WIRE SHALL BE FURNISHED AND INSTALLED IN THE PEDESTAL AND TRANSFORMER BASES.

THE MECHANICAL CONNECTOR SHALL BE INSTALLED USING A 1/4" - 20 (TPI) STAINLESS STEEL HEX HEAD BOLT OF SUFFICIENT LENGTH TO FIRMLY ATTACH THE LUG TO THE BASE.

SHOULD THE MANNER OF ATTACHMENT OF THE LUG REQUIRE WASHERS, HEX NUTS, LOCK WASHER - THEY SHALL BE STAINLESS STEEL AS IS THE BOLT. THE MANNER OF ATTACHMENT SHALL NOT BLOCK ACCESSIBILITY TO WIRE PLACEMENT IN THE CONNECTOR.

PEDESTAL BASE COLLAR THREADING SHALL BE TAPERED AND IN ACCORDANCE WITH NATIONAL PIPE THREADING DIMENSIONS.

BASE COLLAR THREADING SHALL EXTEND INTO THE BASE COLLAR WITH SUFFICIENT DEPTH TO ACCEPT THE INSTALLATION OF TRAFFIC SIGNAL STANDARDS TO A DEPTH OF 1 1/2", THEN TIGHTENING TO A POINT OF BEING IMMOVABLE.

THE ACCESS DOOR SHALL BE OF THE SAME MATERIAL AS THE BASE.

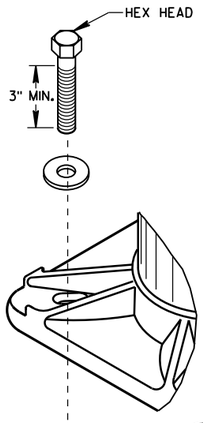

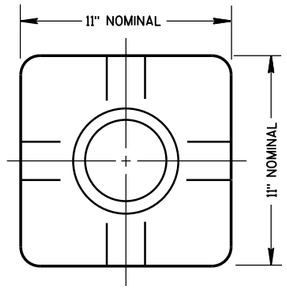

TOP VIEW
(PEDESTAL BASE)

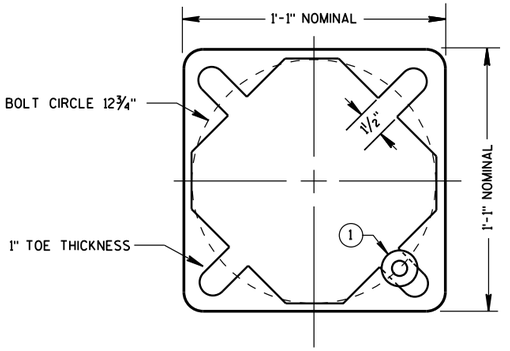

BOTTOM VIEW
(PEDESTAL BASE)

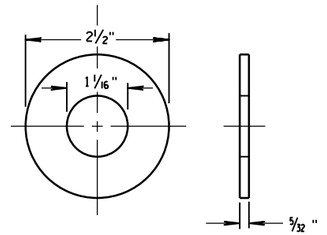

ZINC COATED STEEL WASHER
TO BE PROVIDED BY THE CONTRACTOR

PEDESTAL BASE WASHER (1)

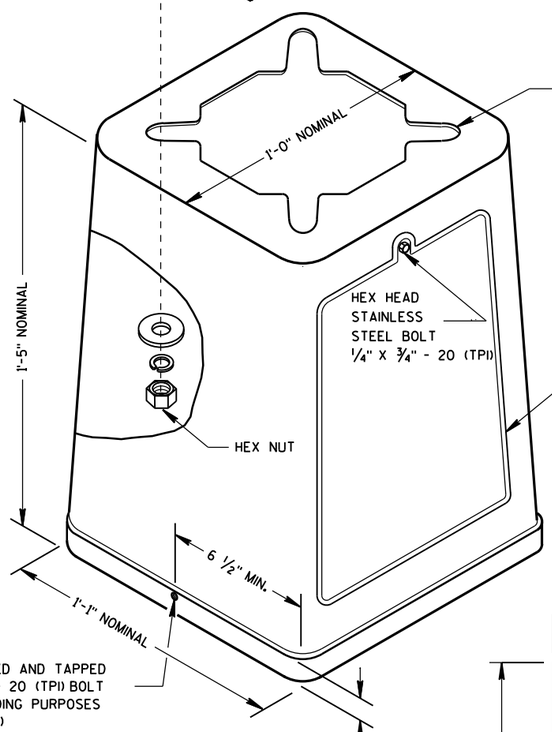

ISOMETRIC VIEW

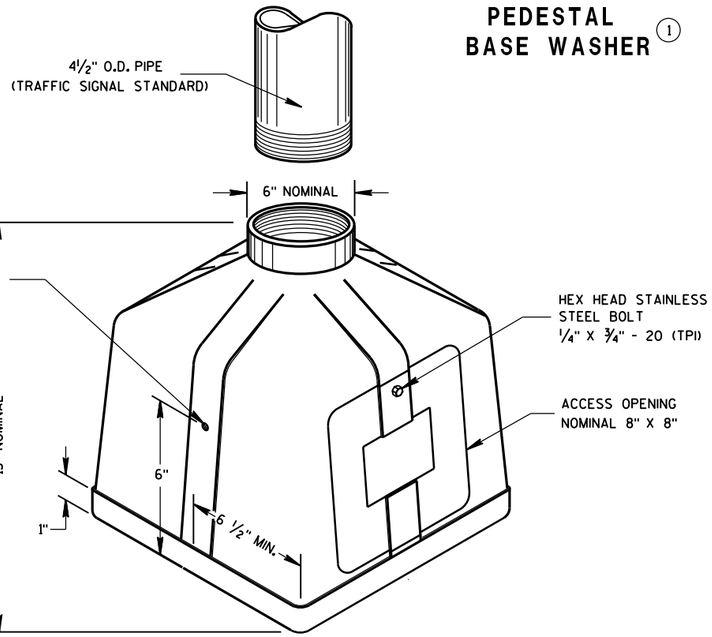

ISOMETRIC VIEW

PEDESTAL BASE

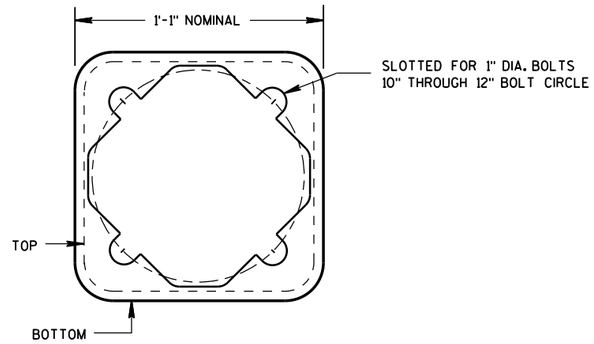

BOTTOM VIEW
(TRANSFORMER BASE)

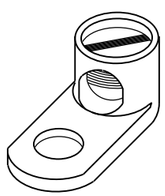

TYPICAL MECHANICAL CONNECTOR LUG

TO BE FURNISHED WITH EACH BASE

TRANSFORMER BASE

INTENDED FOR USE WITH TYPE 2, 3, 4, 5 & 6 POLES

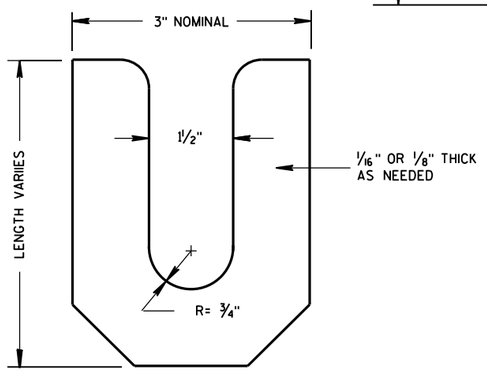

LEVELING SHIM

TRANSFORMER/PEDESTAL BASES

STATE OF WISCONSIN
DEPARTMENT OF TRANSPORTATION

APPROVED
Sept. 2014 — DATE
/S/ Ahmet Demirbilek — STATE ELECTRICAL
FHWA

6

S.D.D. 9 C 3-4

SDD 09C06 Concrete Control Cabinet Base, Type 9, Special

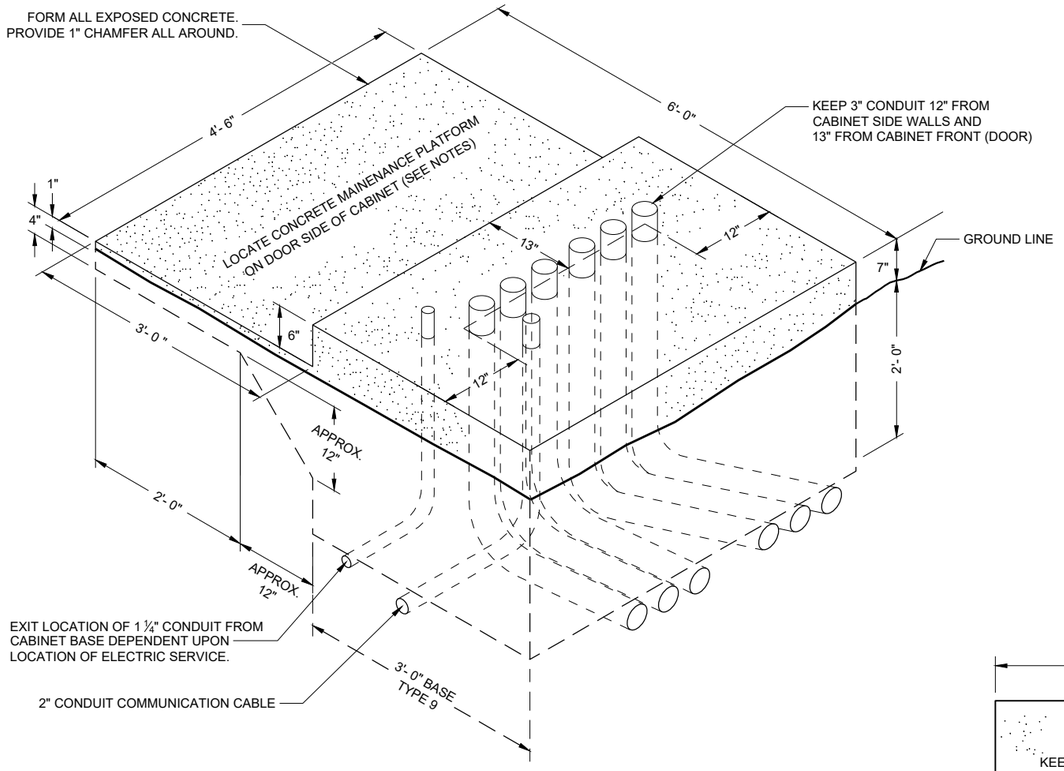

ISOMETRIC VIEW

TYPE 9 SPECIAL

(C.Y. CONCRETE = APPROX. 1.56)

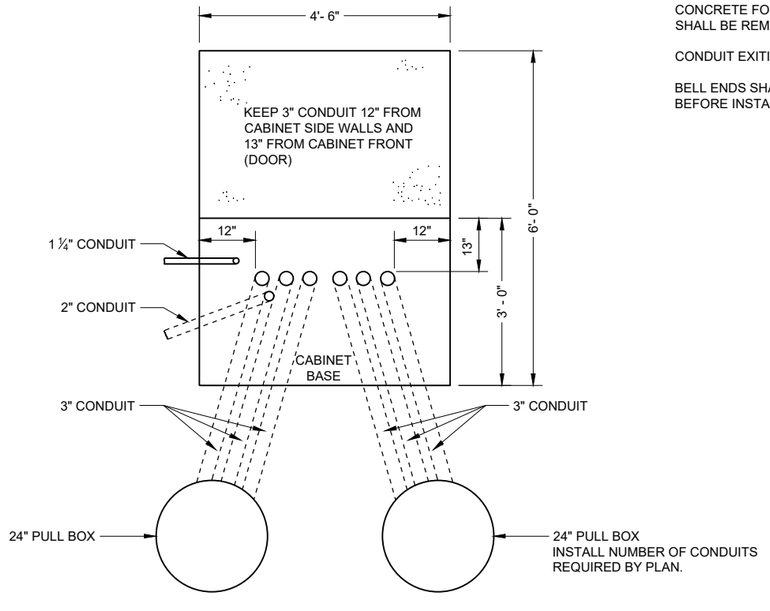

PLAN VIEW

CONCRETE CONTROL CABINET BASE, TYPE 9 SPECIAL

GENERAL NOTES

DETAILS OF CONSTRUCTION, MATERIALS AND WORKMANSHIP NOT SHOWN ON THIS DRAWING SHALL CONFORM TO THE PERTINENT REQUIREMENTS OF THE CONTRACT.

INSTALL FOUR INCH MINIMUM DIAMETER X 4 INCH MINIMUM LENGTH STAINLESS STEEL APPROVED CONCRETE MASONRY ANCHORS WITH A PULLOUT STRENGTH OF 9,000 LBS. TO ANCHOR THE CABINET TO TYPE 6, 7, 8, AND 9 BASES. THE ANCHOR STUDS SHALL BE LOCATED AS DIRECTED BY THE ENGINEER TO PROPERLY ANCHOR THE CONTROL CABINET TO THE BASE.

WHEN REQUIRED TO CONNECT NON - METALLIC CONDUIT TO METALLIC CONDUIT, ONLY ADAPTER FITTINGS, U. L. LISTED FOR ELECTRICAL USE, SHALL BE USED.

CONDUIT HEIGHT ABOVE THE CONCRETE BASE SHALL BE 1 INCH.

DEPTH OF CONDUIT INSTALLED BELOW THE TRAVELED WAY SHALL BE 24 INCHES MINIMUM AND 36 INCHES MAXIMUM.

DEPTH OF CONDUIT INSTALLED THAT IS NOT BELOW THE TRAVELED WAY SHALL BE 18 INCHES MINIMUM AND 36 INCHES MAXIMUM.

ANY EXCEPTION TO THE MAXIMUM DEPTH SHALL BE ONLY WITH THE WRITTEN APPROVAL OF THE ENGINEER.

CONTROL CABINET BASE TOP SURFACE SHALL BE TROWEL FINISHED SMOOTH AND LEVEL.

MAINTENANCE PLATFORM SHALL BE FLOAT OR BROOM FINISHED AND LEVEL.

MAINTENANCE PLATFORMS ARE NOT REQUIRED WHEN THE SURROUNDING AREA IS PAVED.

MINIMUM BENDING RADIUS OF CONDUIT EQUALS 6 TIMES THE DIAMETER.

ALL METALLIC CONDUIT ENDS SHALL BE REAMED AND THREADED.

CAP ALL BELOW GRADE METALLIC CONDUIT ENDS IN WHICH WIRE OR CABLE IS NOT BEING INSTALLED.

PLUG ALL BELOW GRADE NON - METALLIC CONDUIT ENDS IN WHICH WIRE OR CABLE IS NOT BEING INSTALLED.

ALL CONDUIT ENDS AT THE TOP OF CONCRETE BASES SHALL BE CAPPED IF METALLIC OR PLUGGED IF NON - METALLIC IMMEDIATELY AFTER PLACEMENT AND BEFORE CONCRETE IS POURED. CONDUITS IN WHICH WIRE OR CABLE IS NOT BEING INSTALLED SHALL REMAIN CAPPED OR PLUGGED.

CONCRETE FORM DEPTH BELOW FINISHED GRADE SHALL BE 6 INCHES MAXIMUM. CONCRETE FORMS SHALL BE REMOVED AFTER CONCRETE HAS SET.

CONDUIT EXITING THE CONCRETE BASE (SIX 3") SHALL TERMINATE IN PULL BOXES AS SHOWN ON THE PLANS.

BELL ENDS SHALL BE INSTALLED ON ALL PVC CONDUIT EXPOSED AT THE TOP OF THE CONCRETE BASE BEFORE INSTALLATION OF CABLE OR WIRE.

CONCRETE CONTROL CABINET BASE TYPE 9, SPECIAL

STATE OF WISCONSIN
DEPARTMENT OF TRANSPORTATION

APPROVED
September 2014
DATE

/S/ Ahmet Demerbilek
STATE ELECTRICAL ENGI 398

FHWA

GENERAL NOTES

DETAILS OF CONSTRUCTION, MATERIALS AND WORKMANSHIP NOT SHOWN ON THIS DRAWING SHALL CONFORM TO THE PERTINENT REQUIREMENTS OF THE CONTRACT.

BASES (SHAFT) SHALL BE EXCAVATED BY THE USE OF A CIRCULAR AUGER. IF BASE REQUIRES A DEEP FORM BECAUSE OF LOOSE SOIL, THE FORM SHALL BE REMOVED BEFORE BACKFILLING. A STEEL CASING OR CORRUGATED METAL PIPE IS ALLOWED TO REMAIN. BACKFILL SHALL BE TAMPED TIGHT AGAINST THE BASE IN LAYERS OF ONE FOOT OR LESS.

TOP SURFACE OF THE CONCRETE BASE SHALL BE TROWEL FINISHED AND LEVEL.

ANCHOR RODS SHALL BE INSTALLED WITH MISALIGNMENTS OF LESS THAN 1:40 FROM VERTICAL.

BAR STEEL REINFORCEMENT SHALL BE COATED WITH POWDERED EPOXY RESIN IN ACCORDANCE WITH SECTION 505 OF THE STANDARD SPECIFICATIONS (LATEST EDITION).

WELDING OF ANCHOR RODS TO THE CAGE IS UNACCEPTABLE. TEMPLATES SHALL BE USED.

CONDUIT SIZES AND LOCATIONS SHALL BE SHOWN ON THE PLANS.

MINIMUM BENDING RADIUS OF CONDUIT IS EQUAL TO 6 TIMES THE DIAMETER.

CONDUIT HEIGHT ABOVE CONCRETE BASES SHALL BE 4" INCHES. ALL METALLIC CONDUIT ENDS SHALL BE REAMED AND THREADED. NON-METALLIC CONDUIT SHALL HAVE BELL ENDS INSTALLED. ALL CONDUIT SHALL SLOPE TO PULL BOX.

ALL CONDUIT ENDS AT THE TOP OF CONCRETE BASES SHALL BE CAPPED IF METALLIC OR PLUGGED IF NON-METALLIC IMMEDIATELY AFTER PLACEMENT AND BEFORE CONCRETE IS POURED. CONDUITS IN WHICH WIRE OR CABLE IS NOT INSTALLED SHALL REMAIN CAPPED OR PLUGGED.

BELL ENDS SHALL BE INSTALLED ON ALL PVC CONDUIT EXPOSED AT THE TOP OF CONCRETE BASES BEFORE INSTALLATION OF CABLE OR WIRE.

WHEN REQUIRED TO CONNECT NON-METALLIC CONDUIT TO METALLIC CONDUIT, ONLY ADAPTER FITTINGS, U.L. LISTED FOR ELECTRICAL USE, SHALL BE USED.

ENDS OF CONDUIT INSTALLED BELOW GRADE FOR FUTURE USE SHALL BE CAPPED IF METALLIC OR PLUGGED IF NONMETALLIC.

A NO. 4 AWG STRANDED COPPER EQUIPMENT GROUNDING CONDUCTOR SHALL BE EXOTHERMICALLY WELDED TO THE EQUIPMENT GROUNDING ELECTRODE (GROUND ROD).

THE EQUIPMENT GROUNDING CONDUCTOR SHALL BE FURNISHED AND INSTALLED TO ENTER THE BASE THROUGH A 1 INCH CONDUIT INSTALLED FOR GROUNDING PURPOSES, LEAVING A 4 FOOT COIL OF WIRE ABOVE THE CONCRETE BASE. THE EQUIPMENT GROUNDING CONDUCTOR SHALL BE NEATLY COILED AND THE COILS TIED TOGETHER.

THE FINAL OR TERMINATING CONCRETE BASE IN A CONDUIT RUN SHALL HAVE A 6" EXIT STUB INSTALLED FOR FUTURE CABLING USE. THE EXIT STUB SHALL BE SIZED AS USED THROUGHOUT THE CONDUIT RUN AS SHOWN A THE ENTRANCE OF THE BASE.

(1) THE MINIMUM DEPTH OF CONDUIT EXITING THE CONCRETE BASE AND INSTALLED BELOW THE TRAVELED WAY SHALL BE 24 INCHES. THE MINIMUM DEPTH OF CONDUIT EXITING THE CONCRETE BASE THAT IS NOT INSTALLED BELOW THE TRAVELED WAY SHALL BE 18 INCHES. THE MAXIMUM DEPTH OF ALL CONDUIT SHALL BE 36 INCHES (GREATER THAN 36 INCHES IF INSTALLED IN BREAKER RUN) EXCEPT WITH WRITTEN APPROVAL OF THE ENGINEER.

(2) (6) 1 ½ DIA. X 4' - 4" ANCHOR RODS

(3) (6) NO. 6 X 13' - 7" BAR STEEL REINFORCEMENT.

(4) (21) NO. 5 X 7'-10" BAR STEEL REINFORCEMENT @ 8" MAX. C-C.

CONCRETE MASONRY.....fc = 3,500 p.s.i
HIGH STRENGTH BAR STEEL REINFORCEMENT, GRADE 60.....fy = 60,000 p.s.i.
ANCHOR RODS, ASTM F1554 GRADE 55 (IN ACCORDANCE .....fy = 55,000 p.s.i.
WITH SECTION 531.2.2 OF THE STANDARD SPECIFICATION)
TEMPLATES, ASTM A709, GRADE 36.....fy = 36,000 p.s.i.

QUANTITY REQUIREMENTS	
APPROX. CUBIC YARDS OF CONCRETE	2.5
LBS. OF HOOP BAR STEEL	172
LBS. OF VERTICAL BAR STEEL	122

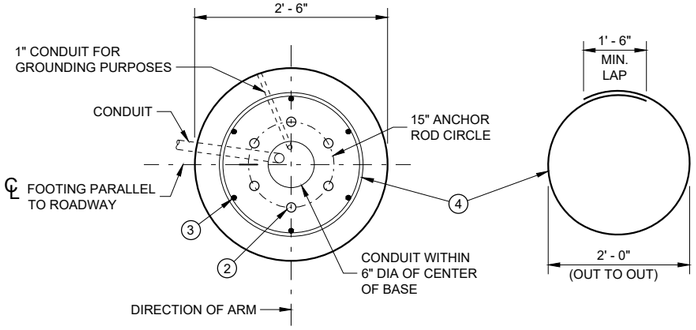

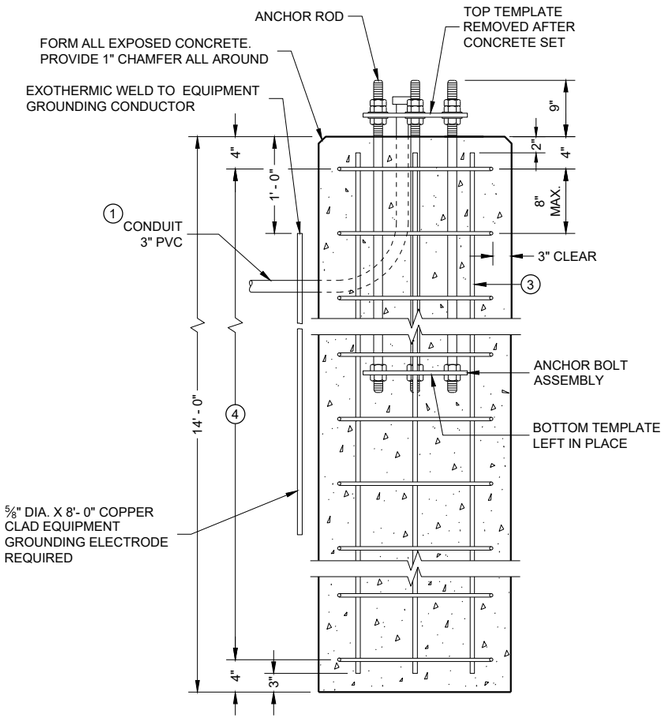

CONCRETE BASE, TYPE 10
(FOR TYPE 9, TYPE 10 AND OVER HEIGHT (OH) POLES)

TO BE USED WHEN GROUND ELEVATION AT BASE EQUALS OR IS GREATER THAN HIGH POINT OF ROADWAY ELEVATION. SEE SDD 9C13 WHEN GROUND ELEVATION AT BASE IS LOWER THAN HIGH POINT OF ROADWAY ELEVATION.

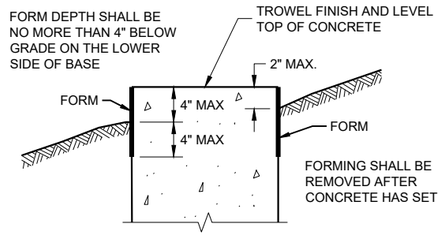

FORMING DETAIL

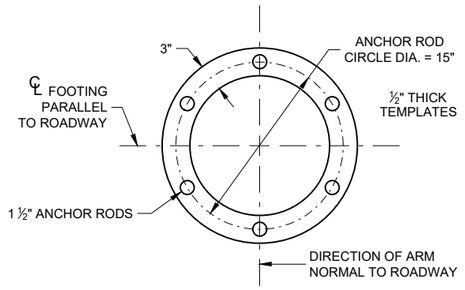

TOP AND BOTTOM TEMPLATE

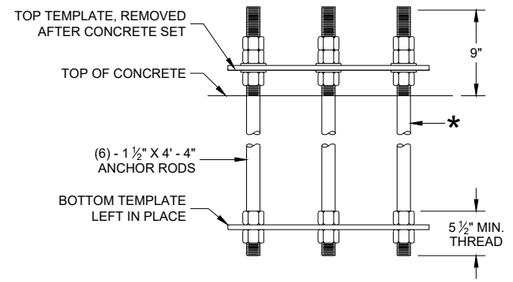

ANCHOR ROD ASSEMBLY DETAILS

* THREAD TOP 10" OF ANCHOR ROD FOR 3 NUTS AND 2 WASHERS AND BOTTOM 5 ½" FOR 2 NUTS PER ANCHOR ROD. HOT DIP GALVANIZE THE ENTIRE LENGTH OF THE ANCHOR ROD (ASTM A123) AND HOT DIP NUTS AND WASHERS (ASTM A153. USE ZINC COATED NUTS MANUFACTURED WITH SUFFICIENT ALLOWANCE TO ALLOW NUTS TO RUN FREELY ON THE THREADS.

CONCRETE BASE TYPE 10

STATE OF WISCONSIN
DEPARTMENT OF TRANSPORTATION

APPROVED
May 2017 — DATE
/S/ Ahmet Demerbilek — WIND LOADED STRUCTU PROGRAM LEADER
FHWA

6

SDD 09C11 - 10

GENERAL NOTES

DETAILS OF CONSTRUCTION, MATERIALS AND WORKMANSHIP NOT SHOWN ON THIS DRAWING SHALL CONFORM TO THE PERTINENT REQUIREMENTS OF THE CONTRACT.

THE CONTRACTOR IS RESPONSIBLE FOR MAKING THEIR OWN DETERMINATION AS TO THE TYPE AND LOCATION OF UNDERGROUND UTILITIES AS MAY BE NECESSARY TO AVOID DAMAGE THERETO.

BASES (SHAFT) SHALL BE EXCAVATED BY THE USE OF A CIRCULAR AUGER. IF BASE REQUIRES A DEEP FORM BECAUSE OF LOOSE SOIL, THE FORM SHALL BE REMOVED BEFORE BACKFILLING. A STEEL CASING OR CORRUGATED METAL PIPE IS ALLOWED TO REMAIN. BACKFILL SHALL BE TAMPED TIGHT AGAINST THE BASE IN LAYERS OF ONE FOOT OR LESS.

TOP SURFACE OF THE CONCRETE BASE SHALL BE TROWEL FINISHED AND LEVEL.

ANY DAMAGE TO THE CONCRETE BASE AND ANCHOR RODS DURING CONSTRUCTION OPERATIONS SHALL BE REPAIRED AT THE ENGINEER'S DIRECTION, AT THE EXPENSE OF THE CONTRACTOR.

THE REINFORCEMENT AND ANCHOR RODS SHALL BE ADEQUATELY SUPPORTED IN THE PROPER POSITIONS SO NO MOVEMENT OCCURS DURING CONCRETE PLACEMENT.

ORIENT ANCHOR RODS IN FOOTING AND PROVIDE ANCHOR RODS STICK OUT ABOVE TOP OF CONCRETE FOOTING BASE PER THIS SHEET.

ANCHOR RODS SHALL BE INSTALLED WITH MISALIGNMENTS OF LESS THAN 1:40 FROM VERTICAL.

BAR STEEL REINFORCEMENT SHALL BE COATED WITH POWDERED EPOXY RESIN IN ACCORDANCE WITH SECTION 505 OF THE STANDARD SPECIFICATIONS (LATEST EDITION).

BENDING DIMENSIONS FOR REINFORCING BARS ARE OUT TO OUT.

WELDING OF ANCHOR RODS TO THE CAGE IS UNACCEPTABLE. TEMPLATES SHALL BE USED.

USE 3" CLEAR FOR ALL REINFORCEMENT UNLESS NOTED OTHERWISE.

FORM ALL EXPOSED CONCRETE CORNERS WITH 1" CHAMFER ALL AROUND. TOP OF THE CONCRETE BASE SHALL BE TROWEL FINISHED AND LEVEL.

CONDUIT SIZES AND LOCATIONS SHALL BE SHOWN ON THE PLANS.

MINIMUM BENDING RADIUS OF CONDUIT IS EQUAL TO 6 TIMES THE DIAMETER.

CONDUIT HEIGHT ABOVE CONCRETE BASES SHALL BE 4 ½" INCHES. ALL METALLIC CONDUIT ENDS SHALL BE REAMED AND THREADED. NON-METALLIC CONDUIT SHALL HAVE BELL ENDS INSTALLED. ALL CONDUIT SHALL SLOPE TO PULL BOX.

ALL CONDUIT ENDS AT THE TOP OF CONCRETE BASES SHALL BE CAPPED IF METALLIC OR PLUGGED IF NON-METALLIC IMMEDIATELY AFTER PLACEMENT AND BEFORE CONCRETE IS POURED. CONDUITS IN WHICH WIRE OR CABLE IS NOT INSTALLED SHALL REMAIN CAPPED OR PLUGGED.

BELL ENDS SHALL BE INSTALLED ON ALL PVC CONDUIT EXPOSED AT THE TOP OF CONCRETE BASES BEFORE INSTALLATION OF CABLE OR WIRE.

WHEN REQUIRED TO CONNECT NON-METALLIC CONDUIT TO METALLIC CONDUIT, ONLY ADAPTER FITTINGS, U.L. LISTED FOR ELECTRICAL USE, SHALL BE USED.

A NO. 4 AWG STRANDED COPPER EQUIPMENT GROUNDING CONDUCTOR SHALL BE EXOTHERMICALLY WELDED TO THE EQUIPMENT GROUNDING ELECTRODE (GROUND ROD).

THE EQUIPMENT GROUNDING CONDUCTOR SHALL BE FURNISHED AND INSTALLED TO ENTER THE BASE THROUGH A 1 INCH CONDUIT INSTALLED FOR GROUNDING PURPOSES, LEAVING A 4 FOOT COIL OF WIRE ABOVE THE CONCRETE BASE. THE EQUIPMENT GROUNDING CONDUCTOR SHALL BE NEATLY COILED AND THE COILS TIED TOGETHER.

THE FINAL OR TERMINATING CONCRETE BASE IN A CONDUIT RUN SHALL HAVE A 6" EXIT STUB INSTALLED FOR FUTURE CABLING USE. THE EXIT STUB SHALL BE SIZED AS USED THROUGHOUT THE CONDUIT RUN AS SHOWN A THE ENTRANCE OF THE BASE.

(1) THE MINIMUM DEPTH OF CONDUIT EXITING THE CONCRETE BASE AND INSTALLED BELOW THE TRAVELED WAY SHALL BE 24 INCHES. THE MINIMUM DEPTH OF CONDUIT EXITING THE CONCRETE BASE THAT IS NOT INSTALLED BELOW THE TRAVELED WAY SHALL BE 18 INCHES. THE MAXIMUM DEPTH OF ALL CONDUIT SHALL BE 36 INCHES (GREATER THAN 36 INCHES IF INSTALLED IN BREAKER RUN) EXCEPT WITH WRITTEN APPROVAL OF THE ENGINEER.

CONCRETE MASONRY.....fc = 3,500 p.s.i
HIGH STRENGTH BAR STEEL REINFORCEMENT, GRADE 60.....fy = 60,000 p.s.i.
ANCHOR RODS, ASTM F1554 GRADE 55 (IN ACCORDANCE WITH SECTION 531.2.2 OF THE STANDARD SPECIFICATION).....fy = 55,000 p.s.i.
TEMPLATES, ASTM A709, GRADE 36.....fy = 36,000 p.s.i.

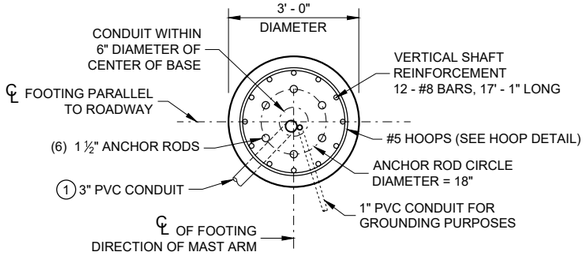

PLAN VIEW

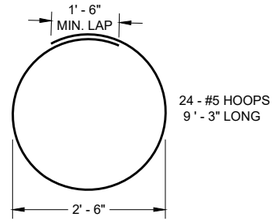

HOOP DETAIL

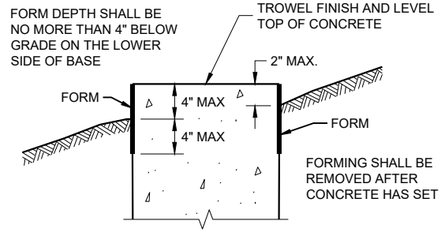

FORMING DETAIL

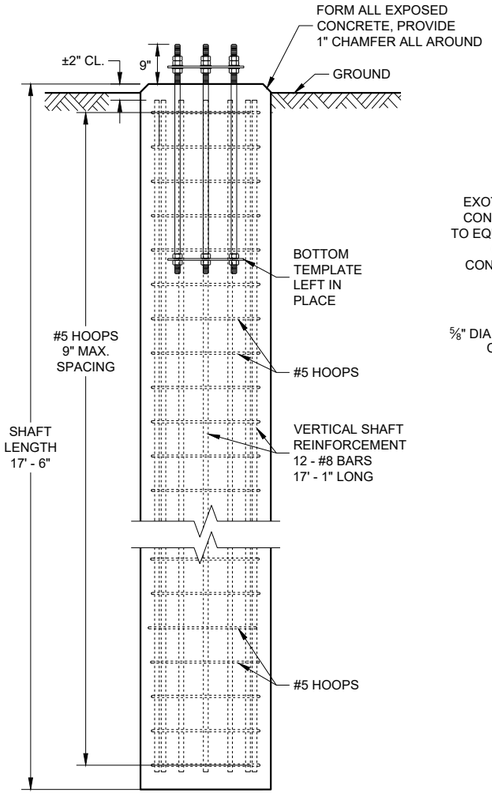

ELEVATION VIEW

(CONDUITS NOT SHOWN ON THIS VIEW FOR CLARITY)

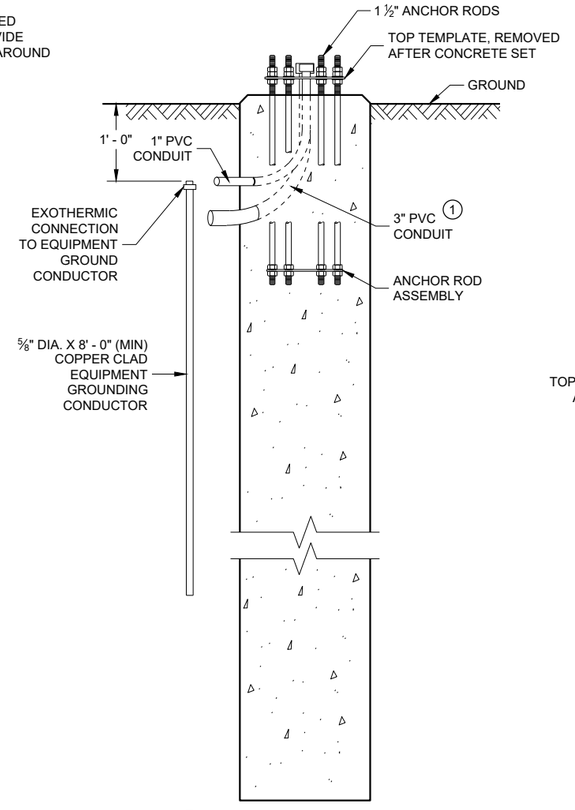

SIDE VIEW

(HOOPS AND VERTICAL SHAFT REINFORCEMENT NOT SHOWN ON THIS VIEW FOR CLARITY)

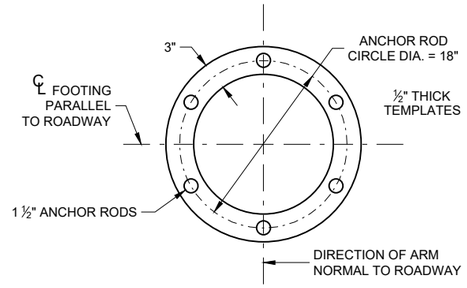

TOP AND BOTTOM TEMPLATE

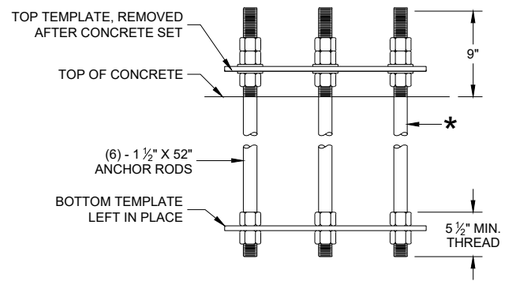

ANCHOR ROD ASSEMBLY DETAILS

* THREAD TOP 10" OF ANCHOR ROD FOR 3 NUTS AND 2 WASHERS AND BOTTOM 5 ½" FOR 2 NUTS PER ANCHOR ROD. HOT DIP GALVANIZE THE ENTIRE LENGTH OF THE ANCHOR ROD (ASTM A123) AND HOT DIP NUTS AND WASHERS (ASTM A153. USE ZINC COATED NUTS MANUFACTURED WITH SUFFICIENT ALLOWANCE TO ALLOW NUTS TO RUN FREELY ON THE THREADS.

CONCRETE BASE, TYPE 10 SPECIAL
(FOR TYPE 9 SPECIAL AND TYPE 10 SPECIAL POLES)

CONCRETE = 4.6 CUBIC YARD
H.S. REINFORCEMENT = 779 LBS.

FOR USE WHEN GROUND ELEVATION AT BASE EQUALS OR IS GREATER THAN HIGH POINT OF ROADWAY ELEVATION.

CONCRETE BASE TYPE 10 SPECIAL

STATE OF WISCONSIN
DEPARTMENT OF TRANSPORTATION

APPROVED
August 2020 — DATE
/S/ Alex Crabtree — WIND LOADED STRUCTU PROGRAM LEADER
FHWA

6
SDD 09C15 - 01

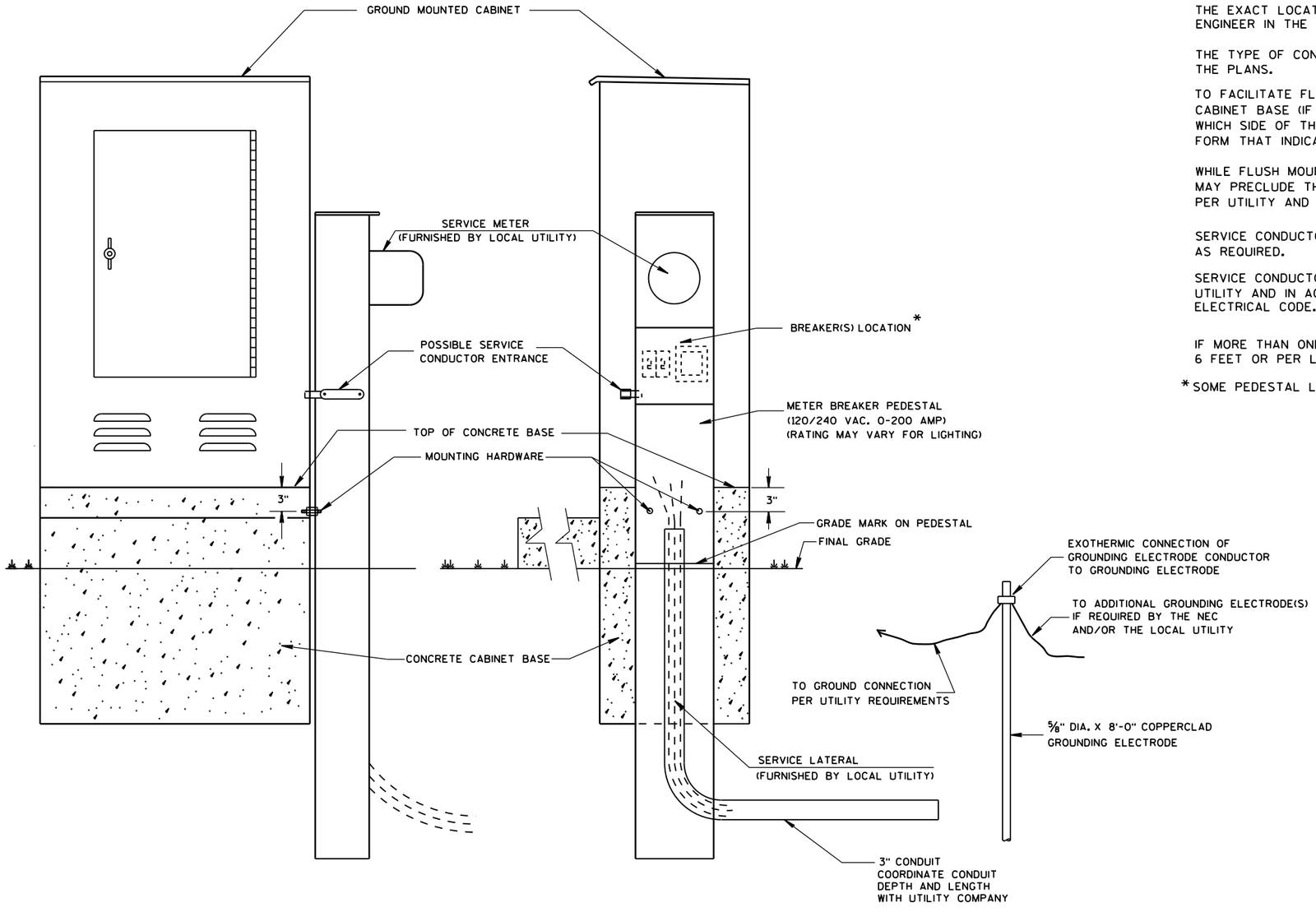

TYPICAL CABINET SERVICE INSTALLATION

GENERAL NOTES

DETAILS OF CONSTRUCTION, MATERIALS AND WORKMANSHIP NOT SHOWN ON THIS DRAWING SHALL CONFORM TO THE PERTINENT REQUIREMENTS OF THE CONTRACT.

THE EXACT LOCATION OF THE METER BREAKER PEDESTAL SHALL BE DETERMINED BY THE ENGINEER IN THE FIELD.

THE TYPE OF CONCRETE CABINET BASE TO BE INSTALLED SHALL BE AS CALLED FOR IN THE PLANS.

TO FACILITATE FLUSH MOUNTING OF THE METER BREAKER PEDESTAL AGAINST THE SIDE OF THE CABINET BASE (IF FLUSH MOUNTING POSSIBLE. CONFER WITH THE LOCAL UTILITY TO DETERMINE WHICH SIDE OF THE CONCRETE BASE THE ELECTRICAL SERVICE LATERAL WILL APPROACH. THEN FORM THAT INDICATED SIDE FOR FULL SIDE DEPTH.

WHILE FLUSH MOUNTING IS THE MOST DESIRABLE MOUNTING CONFIGURATION UTILITY REQUIREMENTS MAY PRECLUDE THIS OPTION. CONTRACTOR MUST PROVIDE UTILITY APPROVED PEDESTAL AND INSTALL PER UTILITY AND MANUFACTURERS REQUIREMENTS.

SERVICE CONDUCTOR ENTRANCES SHALL BE RIGID METALLIC CONDUIT, NIPPLES AND/OR CONDULETS AS REQUIRED.

SERVICE CONDUCTOR ENTRANCES SHALL BE SIZED AND LOCATED AS REQUIRED BY THE LOCAL UTILITY AND IN ACCORDANCE WITH APPROPRIATE ARTICLES OF THE LATEST ACCEPTED NATIONAL ELECTRICAL CODE.

IF MORE THAN ONE GROUNDING ELECTRODE IS REQUIRED, THE DISTANCE APART SHALL BE 6 FEET OR PER LOCAL UTILITY REGULATIONS.

* SOME PEDESTAL LIGHTING PLANS SHOW MAIN LUGS ONLY.

6

S.D.D. 9 D 1-5

6

S.D.D. 9 D 1-5

CABINET SERVICE INSTALLATION (METER BREAKER PEDESTAL)

STATE OF WISCONSIN
DEPARTMENT OF TRANSPORTATION

APPROVED
Sept. 2014
DATE

/S/ Ahmet Demirbilek
STATE ELECTRICAL

FHWA

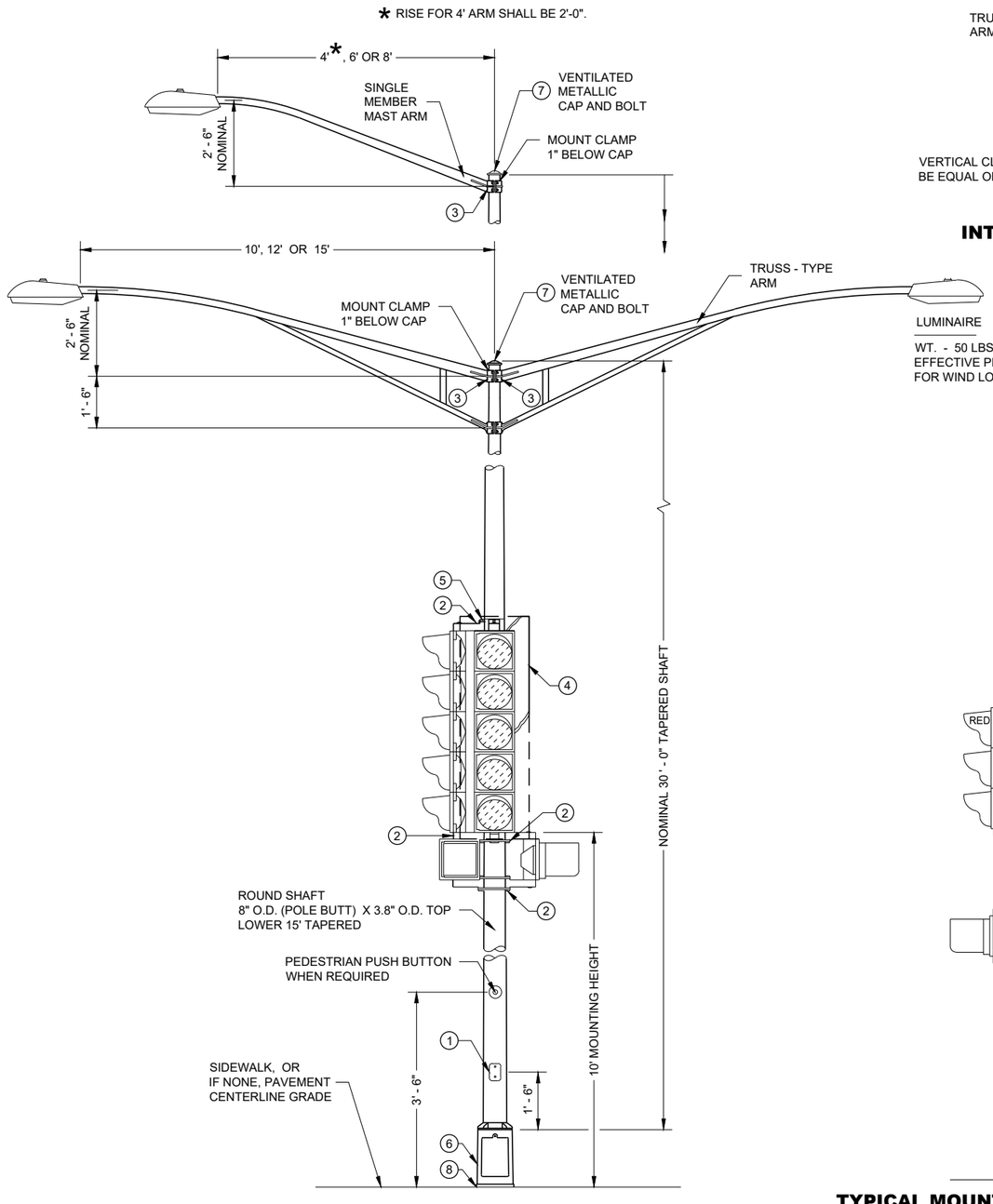

(MAXIMUM LOAD)

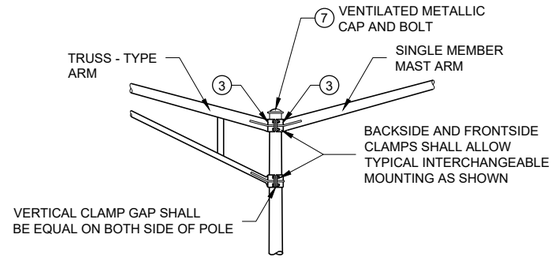

INTERCHANGEABLE MOUNTING DETAIL

GENERAL NOTES

DETAILS OF CONSTRUCTION, MATERIALS AND WORKMANSHIP NOT SHOWN ON THIS DRAWING SHALL CONFORM TO THE PERTINENT REQUIREMENTS OF THE CONTRACT.

ALL TYPE 4 POLE MOUNTINGS SHALL BE DESIGNED TO INCLUDE TWIN 15' ARMS WITH LUMINAIRES.

POLES SHALL BE GALVANIZED STEEL WITH A MINIMUM WALL THICKNESS OF U.S. STANDARD 11 GAGE (.1196").

SECTION 657, POLES, OF THE STANDARD SPECIFICATIONS SHALL APPLY TO THIS DRAWING.

A PULL WIRE / ROPE SHALL BE INSTALLED IN EACH TROMBONE ARM RACEWAY DURING THE MANUFACTURING PROCESS.

THE SLIPFITTER END OF THE LUMINAIRE MAST ARM SHALL BE A NOMINAL 2 ⅜ INCHES IN OUTSIDE DIAMETER. THE STRAIGHT PORTION OF THE SLIPFITTER END OF THE LUMINAIRE MAST ARM SHALL BE A NOMINAL 12 INCHES IN LENGTH.

WHEN TRANSFORMER BASES ARE USED, WIRE CONNECTIONS SHALL BE MADE IN THE TRANSFORMER BASE.

(1) 4" X 6" REINFORCED HANDHOLE AND COVER ASSEMBLY WITH TWO (2) ¼" X ¾" - 20 TPI , STAINLESS STEEL, HEX HEAD BOLTS.

(2) SIGNAL FACE MOUNTING BRACKETS. MOUNT WITH CAP SCREWS AND BANDING.

(3) GROMMETS. 1" CHASE NIPPLES OR 1" CLOSE CONDUIT NIPPLES WITH BUSHINGS SHALL BE PROVIDED FOR 1 ⅜" HOLE IN POLE SHAFT FOR WIRING.

(4) SECURELY MOUNT DULL BLACK POLYCARBONATE BACKPLATES, PROJECTING 5" BEYOND ALL SIDES OF THE SIGNAL FACE HOUSING, PER MANUFACTURER'S RECOMMENDATIONS.

(5) POLE MOUNTED SIGNAL FACES SHALL REQUIRE ONE OR MORE MOUNTING SPACERS UNDER THE TOP MOUNTING BRACKET(S) AS REQUIRED, TO PLUMB THE SIGNAL FACE.

(6) CAST ALUMINUM TRANSFORMER BASE, WHEN REQUIRED.

(7) FURNISH AND INSTALL VENTILATED, CAST METALLIC (ALUMINUM ALLOY) CAPS. FASTEN CAPS WITH ONE (1) ¼" X ¾" - 20 TPI STAINLESS STEEL, HEX HEAD BOLT.

(8) SHIMMING, IF NEEDED, SHALL BE LOCATED BETWEEN THE CONCRETE FOUNDATION AND POLE.

(9) USE 1 ½" ID NIPPLES ZINC-COATED RIGID METAL CONDUIT, LONG ENOUGH TO ACCOMMODATE FULL DEPTH THREADING INTO THE HEAD MOUNTING LOCK NUT IN ORDER TO TIGHTEN THE FACE, BUT THAT DO NOT INTERFERE WITH REFLECTOR CLOSURE. THREAD THE NIPPLE INTO THE MOUNTING BRACKET/ELBOW UNTIL TIGHT. USE APPROVED PINNACLE TYPE HARDWARE FROM A DEPARTMENT APPROVED MANUFACTURER TO CLOSE THE UNUSED 1 ½" OPENING IN SIGNAL FACES AND BRACKET ENDS.

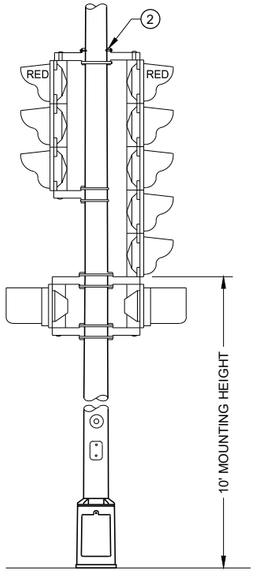

TYPICAL MOUNTING OF BACK TO BACK 3 AND 5 SECTION SIGNAL FACES

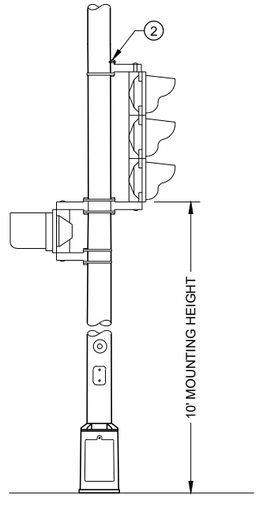

TYPICAL MOUNTING OF 3 SECTION SIGNAL FACE

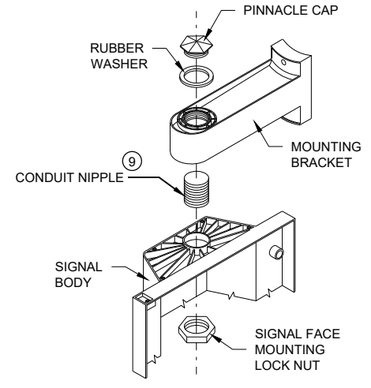

SIGNAL FACE MOUNTING DETAIL
(BANDED)

TYPE 4 POLE MOUNTING CONFIGURATION

POLE MOUNTINGS FOR TRAFFIC SIGNALS AND LIGHTING UNITS, TYPE 4

STATE OF WISCONSIN
DEPARTMENT OF TRANSPORTATION

6

SDD 09E01 - 15c

SDD 09E01 - 15c

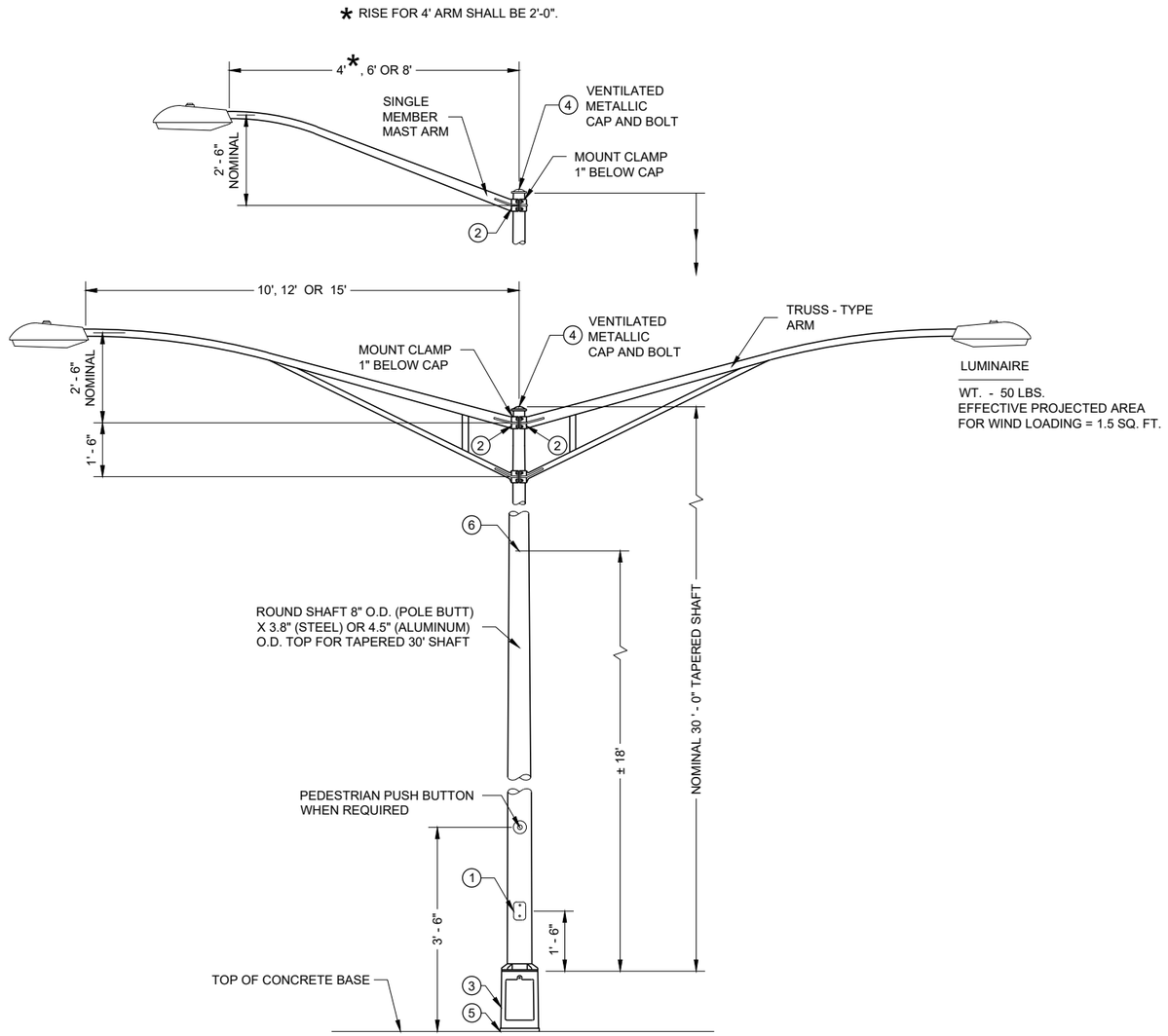

TYPE 5 POLE MOUNTING CONFIGURATION
(MAXIMUM LOAD)
LIGHTING ONLY

GENERAL NOTES

DETAILS OF CONSTRUCTION, MATERIALS AND WORKMANSHIP NOT SHOWN ON THIS DRAWING SHALL CONFORM TO THE PERTINENT REQUIREMENTS OF THE CONTRACT.

SECTION 657, POLES, OF THE STANDARD SPECIFICATIONS SHALL APPLY TO THIS DRAWING.

ALL TYPE 5 POLE MOUNTINGS SHALL BE DESIGNED TO INCLUDE TWIN 15' ARMS WITH LUMINAIRES.

POLES SHALL BE GALVANIZED STEEL OR ALUMINUM, AS CALLED FOR IN THE CONTRACT.

TYPE 5 ALUMINUM POLES SHALL BE CONSTRUCTED OF 6063 - T6 ALUMINUM ALLOY. SLEEVING INSIDE THE POLE IS NOT ACCEPTABLE.

TYPE 5 ALUMINUM POLES SHALL HAVE A MINIMUM WALL THICKNESS OF 0.1888".

TYPE 5 STEEL POLES SHALL HAVE A MINIMUM WALL THICKNESS OF U.S. STANDARD 11 GAGE (0.1196").

THE SLIPFITTER END OF THE LUMINAIRE MAST ARM SHALL BE A NOMINAL 2 ⅜ INCHES IN OUTSIDE DIAMETER. THE STRAIGHT PORTION OF THE SLIPFITTER END OF THE LUMINAIRE MAST ARM SHALL BE A NOMINAL 12 INCHES IN LENGTH.

WHEN TRANSFORMER BASES ARE USED, WIRE CONNECTIONS SHALL BE MADE IN THE TRANSFORMER BASE.

(1) 4" X 6" REINFORCED HANDHOLE AND COVER ASSEMBLY WITH TWO (2) ¼" X ¾" - 20 TPI , STAINLESS STEEL, HEX HEAD BOLTS.

(2) GROMMETS. 1" CHASE NIPPLES OR 1" CLOSE CONDUIT NIPPLES WITH BUSHINGS SHALL BE PROVIDED FOR 1 ⅜" HOLE IN POLE SHAFT FOR WIRING.

(3) CAST ALUMINUM TRANSFORMER BASE, WHEN REQUIRED.

(4) FURNISH AND INSTALL VENTILATED, CAST METALLIC (ALUMINUM ALLOY) CAPS. FASTEN CAPS WITH ONE (1) ¼" X ¾" - 20 TPI STAINLESS STEEL, HEX HEAD BOLT.

(5) SHIMMING, IF NEEDED, SHALL BE LOCATED BETWEEN THE CONCRETE FOUNDATION AND POLE.

(6) INTERNAL DUMBBELL - TYPE VIBRATION DAMPER.

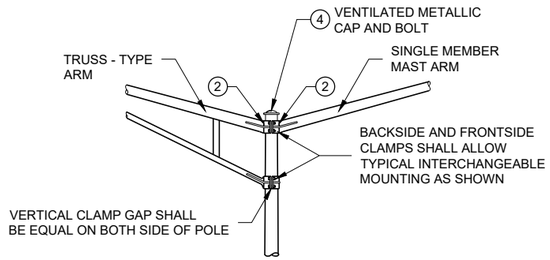

INTERCHANGEABLE MOUNTING DETAIL

POLE MOUNTINGS FOR LIGHTING UNITS, TYPE 5 (30 FEET)

STATE OF WISCONSIN
DEPARTMENT OF TRANSPORTATION

6
SDD 09E01 - 15d

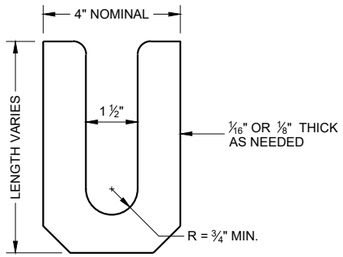

LEVELING SHIM (1)
SHALL BE ALUMINUM

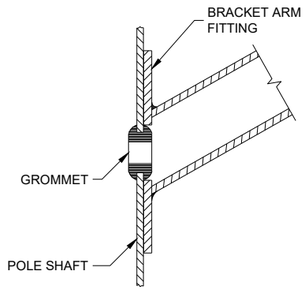

TYPICAL APPLICATION OF GROMMET IN POLE SHAFT

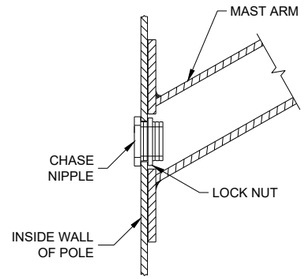

TYPICAL APPLICATION OF CHASE NIPPLE IN POLE SHAFT

GENERAL NOTES

CLAMP BOLT-NUT TIGHTENING TORQUE SHALL BE INDICATED BY INDENT STAMPING (1/2 INCH NUMERALS AND LETTERS) OR WEATHERPROOF PRINTING ON THE INSIDE OF THE CLAMP THAT IS WELDED TO THE ARM MEMBER.

(1) 4.5" I.D. FOR LUMINAIRE MAST ARM CLAMP. 6.625" I.D. FOR TROMBONE MAST ARM CLAMP.

(2) INDIVIDUAL BASE PLATE ANCHOR ROD COVERS. (4 REQUIRED)

(3) BASE PLATE SLOTTED TO ACCEPT 11" THROUGH 12" BOLT CIRCLE USING 1" DIAMETER ANCHOR RODS.

(4) LEVELING SHIMS, DESIGNED FOR THE PURPOSE, SHALL BE USED WHEN PLUMBING POLES. THE USE OF WASHERS IN LIEU OF PROPER LEVELING SHIMS IS NOT ACCEPTABLE. LEVELING SHIMS SHALL BE USED ONLY BETWEEN THE TOP OF THE CONCRETE BASE AND A METALLIC BASE PLATE.

SHIMS SHALL BE LONG ENOUGH AND WIDE ENOUGH TO COMPLETELY COVER THE AREA UNDER THE LENGTH AND WIDTH OF THE BASE MOUNTING FLANGE.

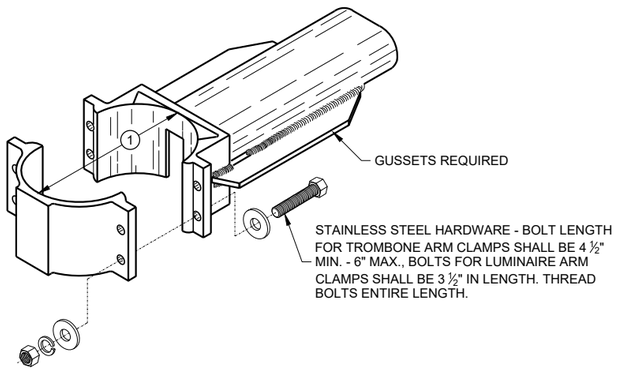

TYPICAL TROMBONE MAST ARM AND SINGLE LUMINAIRE MAST ARM MOUNTING CLAMP

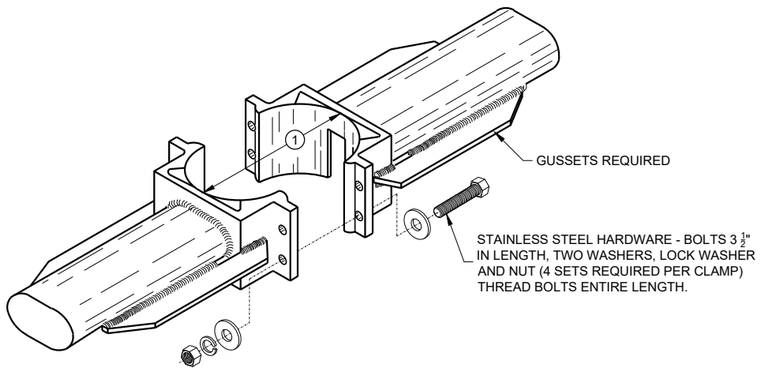

TYPICAL LUMINAIRE MAST ARM (DOUBLE) MOUNTING BRACKETS

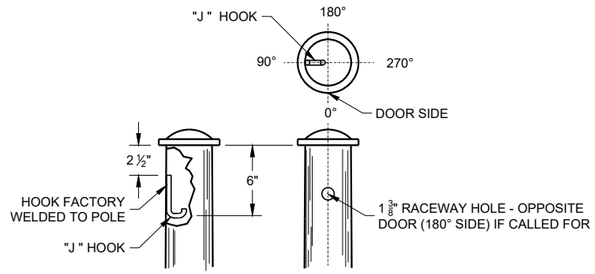

TYPICAL "J" HOOK LOCATION

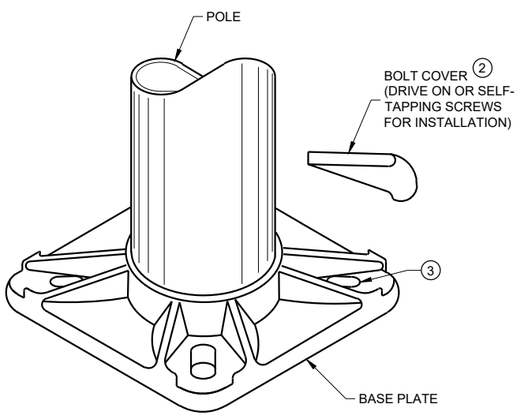

BASE PLATE

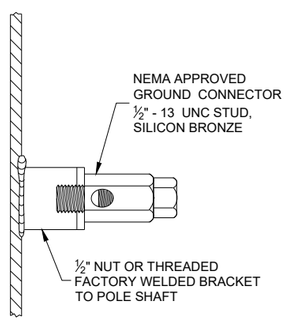

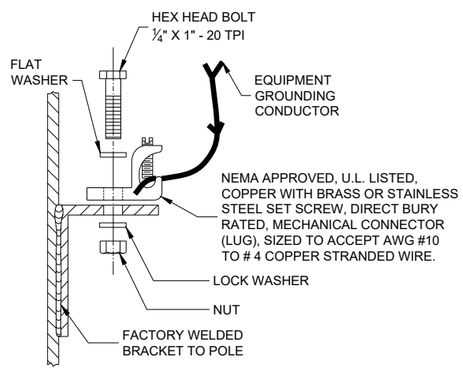

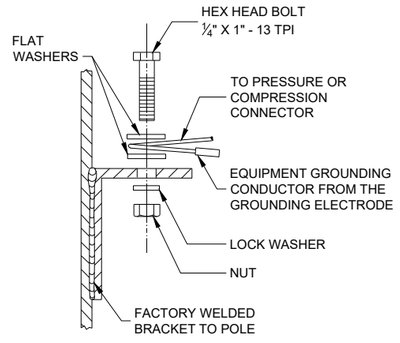

TYPICAL GROUNDING CONNECTIONS

NUT, BOLT AND WASHERS SHALL BE STAINLESS STEEL

HARDWARE DETAILS FOR POLE MOUNTING

STATE OF WISCONSIN
DEPARTMENT OF TRANSPORTATION

APPROVED
November 2018
DATE

/S/ Ahmet Demirbilek
STATE ELECTRICAL ENGI 404

FHWA

6

SDD 09E01 - 15g

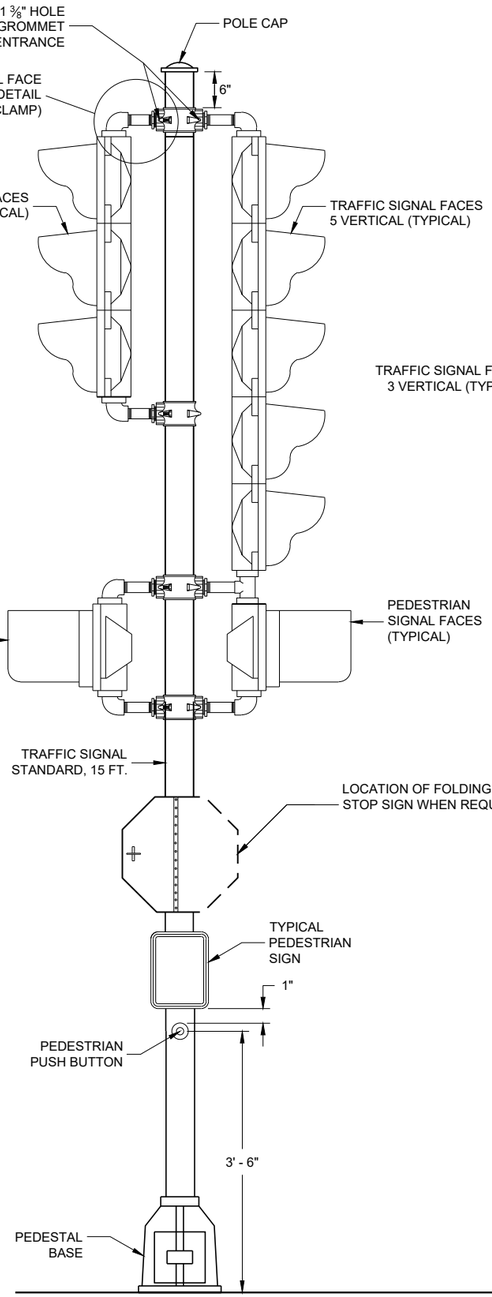

TRAFFIC SIGNAL STANDARD - 15 FT.

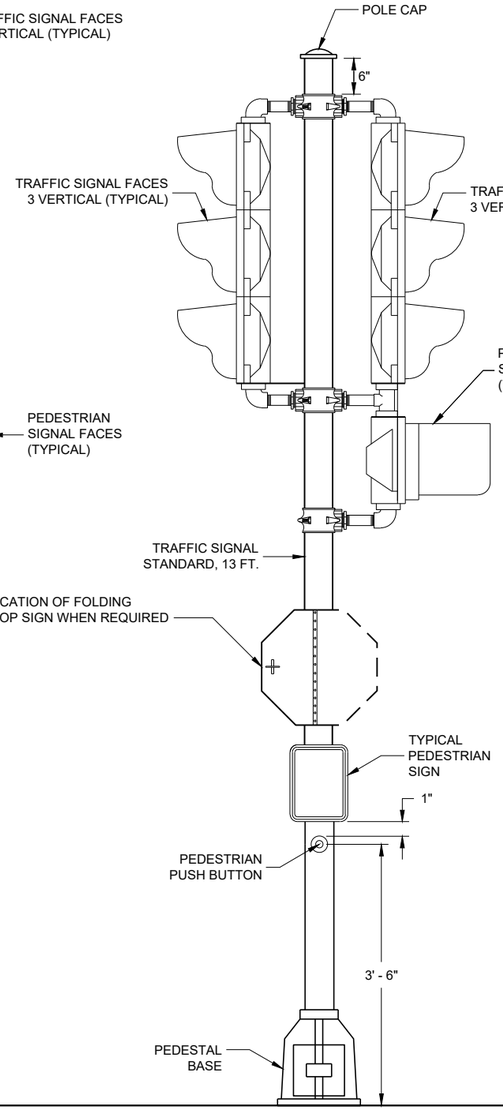

TRAFFIC SIGNAL STANDARD - 13 FT.

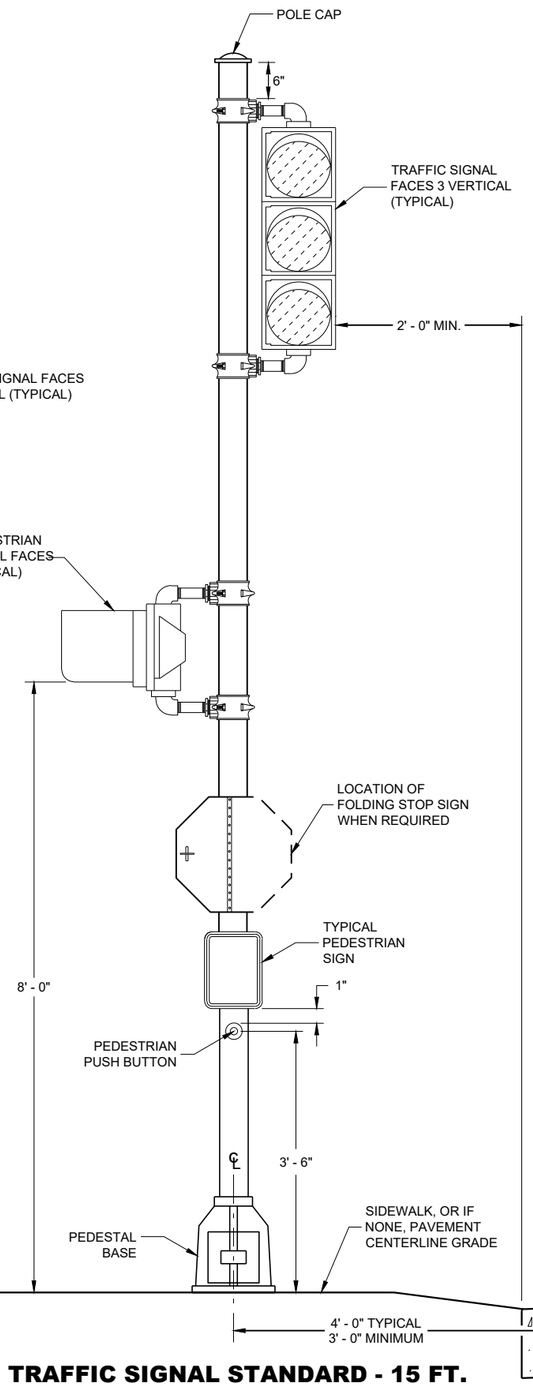

TRAFFIC SIGNAL STANDARD - 15 FT.
3M MOUNTING (TYPICAL)

GENERAL NOTES

DETAILS OF CONSTRUCTION, MATERIALS AND WORKMANSHIP NOT SHOWN ON THIS DRAWING SHALL CONFORM TO THE PERTINENT REQUIREMENTS OF THE CONTRACT.

SEE THE SIGNAL PLAN FOR REQUIRED SIGNAL FACE SIZES.

ALL PEDESTAL BASES SHALL BE MOUNTED ON CONCRETE BASE - TYPE 1.

FOR APPROVED MOUNTING HARDWARE, SEE THE CONTRACT SPECIAL PROVISIONS.

POLE CLAMP (AS SHOWN) MOUNTING BRACKETS SHALL BE USED.

LENGTH AND LOCATION OF TRAFFIC SIGNAL STANDARDS SHALL BE AS SHOWN ON THE PLANS.

OPTICALLY PROGRAMMED SIGNAL FACES SHALL BE MASKED IN ACCORDANCE WITH MANUFACTURERS INSTRUCTIONS, AND UNDER THE DIRECTIONS OF THE REGION TRAFFIC ENGINEER.

FOLDING STOP SIGNS SHALL BE IN ACCORDANCE WITH THE MUTCD AND/OR THE LATEST WISCONSIN SUPPLEMENT. THE SIGNS SHALL BE SIZED AND LOCATED AS CALLED FOR IN IN THE PLANS.

PEDESTRIAN SIGNS SHALL BE AS DESIGNATED IN THE PLANS.

FURNISH AND INSTALL VENTILATED, CAST, METALLIC (ALUMINUM ALLOY) CAPS. FASTEN CAPS WITH ONE (1) ¼" X ¾" - 20 TPI STAINLESS STEEL, HEX HEAD BOLT.

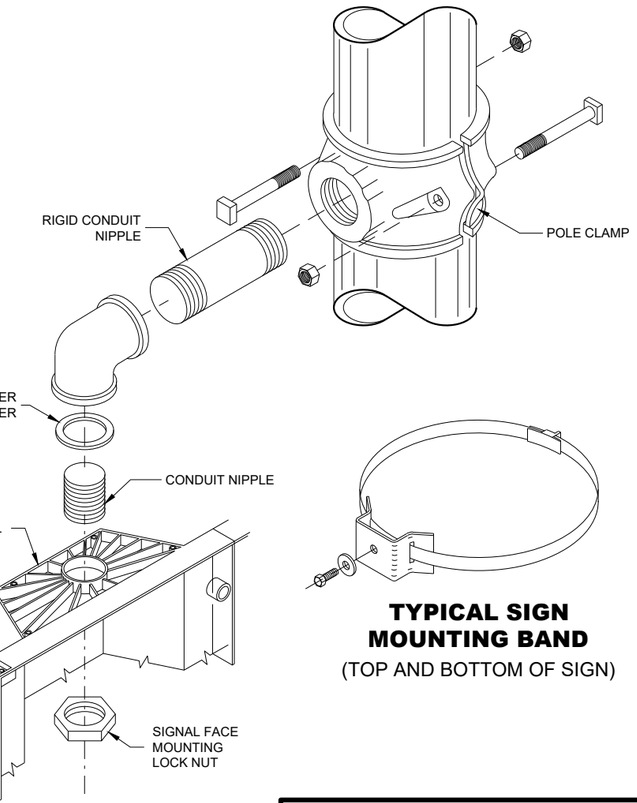

SIGNAL FACE MOUNTING DETAIL (ORNAMENTAL)

TYPICAL SIGN MOUNTING BAND
(TOP AND BOTTOM OF SIGN)

TRAFFIC SIGNAL STANDARD ORNAMENTAL BRACKET MOUNTINGS TYPICAL FOR 13 FT. OR 15 FT.

STATE OF WISCONSIN
DEPARTMENT OF TRANSPORTATION

APPROVED
2/28/2013
DATE

/S/ Ahmet Demirbilek
STATE ELECTRICAL ENGI

FHWA

6

SDD 09E05 - 06

SDD 09E05 - 06

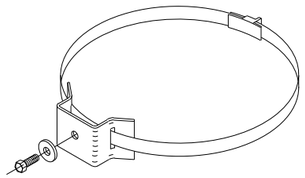

TYPICAL SIGN MOUNTING BAND
(TOP AND BOTTOM OF SIGN)

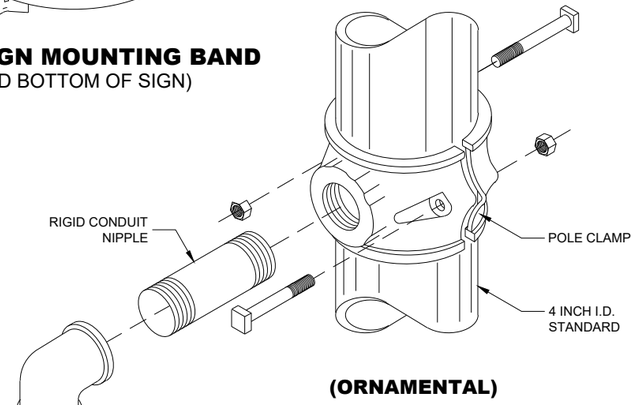

(ORNAMENTAL)

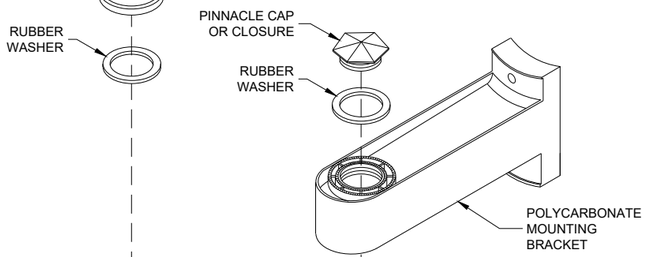

(BANDED)

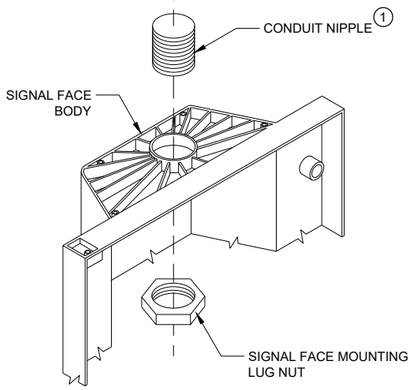

SIGNAL FACE MOUNTING DETAILS

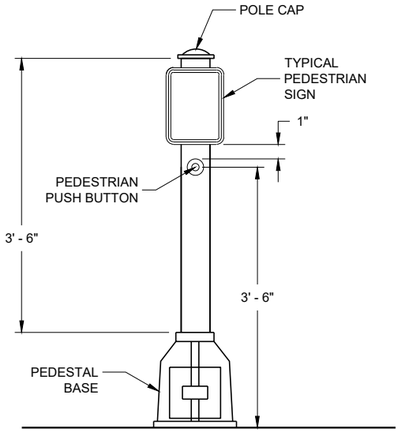

PEDESTRIAN PUSH BUTTON TYPICAL MOUNTING

GENERAL NOTES

DETAILS OF CONSTRUCTION, MATERIALS AND WORKMANSHIP NOT SHOWN ON THIS DRAWING SHALL CONFORM TO THE PERTINENT REQUIREMENTS OF THE CONTRACT.

SEE THE SIGNAL PLAN FOR REQUIRED SIGNAL FACE SIZES.

LOCATIONS SHALL BE AS SHOWN ON THE PLANS, UNLESS APPROVED BY THE ENGINEER IN THE FIELD.

ALL PEDESTAL BASES SHALL BE MOUNTED ON CONCRETE BASE - TYPE 1.

FOR APPROVED MOUNTING HARDWARE, SEE THE CONTRACT SPECIFICATIONS.

POLYCARBONATE SIGNAL FACE MOUNTING BRACKETS SHALL BE USED UNLESS ORNAMENTAL POLE CLAMPS ARE SPECIFIED.

LENGTH OF TRAFFIC STANDARDS SHALL BE AS SHOWN ON THE PLANS.

MOUNTINGS AND BRACKETS SHALL BE AS SHOWN ON THE PLANS OR DESCRIBED IN THE SPECIAL PROVISIONS (BY THE REGION TRAFFIC ENGINEER).

PEDESTRIAN SIGNS SHALL BE AS DESIGNATED IN THE PLANS.

FURNISH AND INSTALL VENTILATED, CAST, METALLIC (ALUMINUM ALLOY) CAPS. FASTEN CAPS WITH ONE (1) ¼" X ¾" - 20 TPI STAINLESS STEEL, HEX HEAD BOLT.

(1) USE 1 ½" ID NIPPLES ZINC-COATED RIGID METAL CONDUIT, LONG ENOUGH TO ACCOMMODATE FULL DEPTH THREADING INTO THE HEAD MOUNTING LOCK NUT IN ORDER TO TIGHTEN THE FACE, BUT THAT DO NOT INTERFERE WITH REFLECTOR CLOSURE. THREAD THE NIPPLE INTO THE MOUNTING BRACKET/ELBOW UNTIL TIGHT. USE APPROVED PINNACLE TYPE HARDWARE FROM A DEPARTMENT APPROVED MANUFACTURER TO CLOSE THE UNUSED 1 ½" OPENING IN SIGNAL FACESAND BRACKET ENDS.

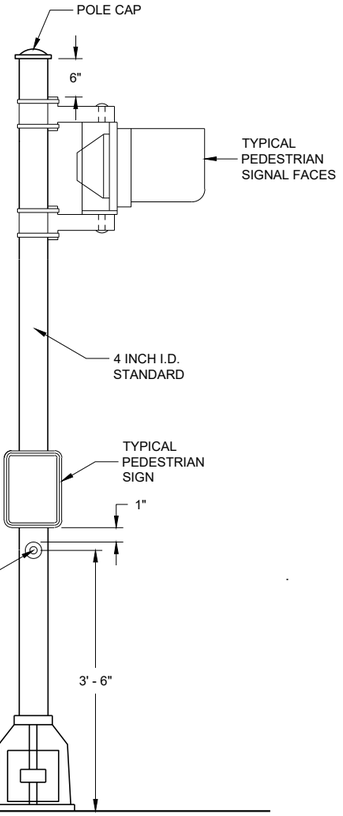

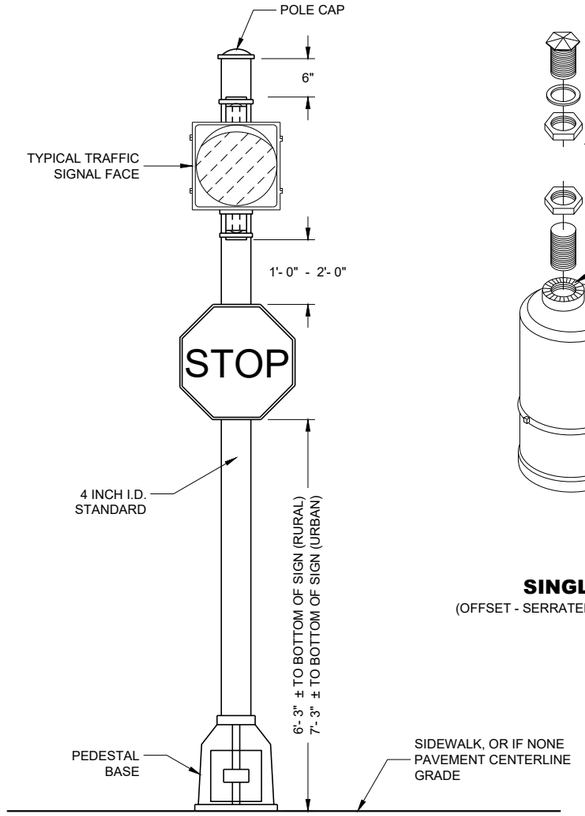

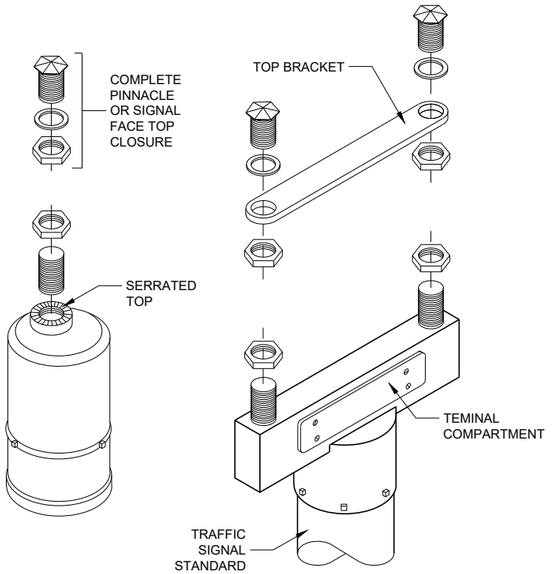

SINGLE
(OFFSET - SERRATED MOUNTING)

DOUBLE
(SERRATED MOUNTING)

SLIPFITTERS

PEDESTRIAN FACE STANDARD - 10 FT.
(WALK - DON'T WALK)

STANDARD FLASHER
10 FOOT, 13 FOOT OR 15 FOOT AS REQUIRED

TRAFFIC SIGNAL STANDARD
PEDESTRIAN AND FLASHER
TYPICAL MOUNTING DETAILS

STATE OF WISCONSIN
DEPARTMENT OF TRANSPORTATION

APPROVED
November 2018
DATE

/S/ Ahmet Demirbilek
STATE ELECTRICAL ENGI 406

FHWA

6

SDD 09E07 - 06

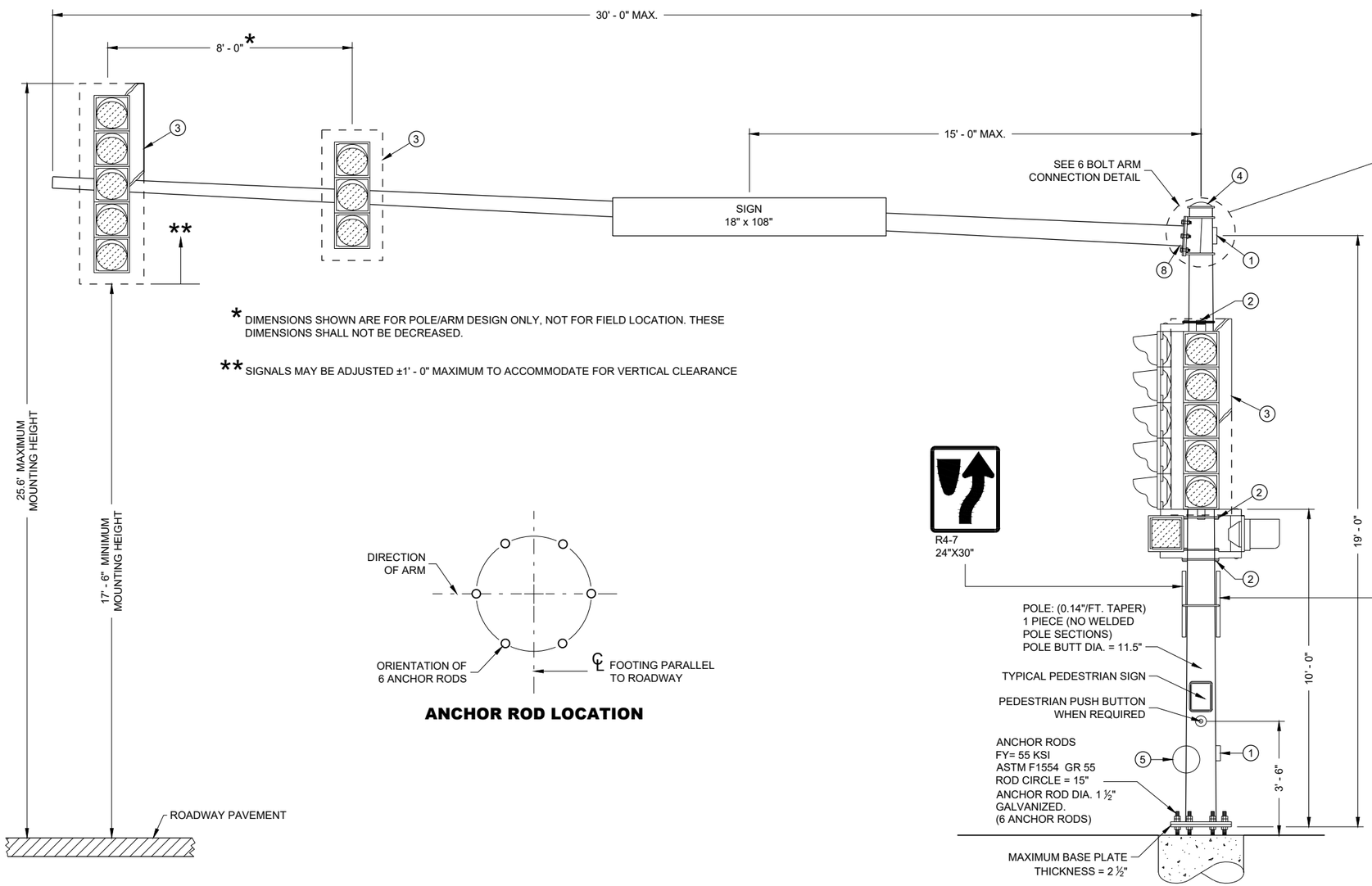

* DIMENSIONS SHOWN ARE FOR POLE/ARM DESIGN ONLY, NOT FOR FIELD LOCATION. THESE DIMENSIONS SHALL NOT BE DECREASED.

** SIGNALS MAY BE ADJUSTED ±1' - 0" MAXIMUM TO ACCOMMODATE FOR VERTICAL CLEARANCE

ANCHOR ROD LOCATION

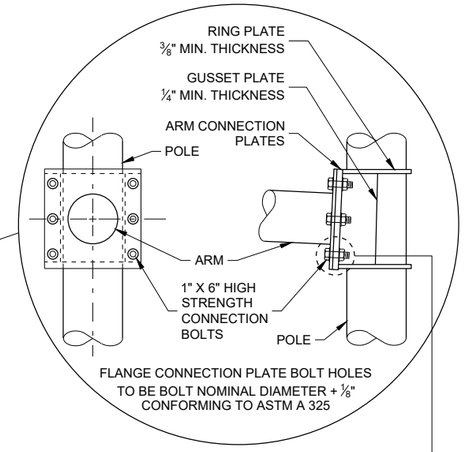

6 BOLT ARM CONNECTION DETAIL

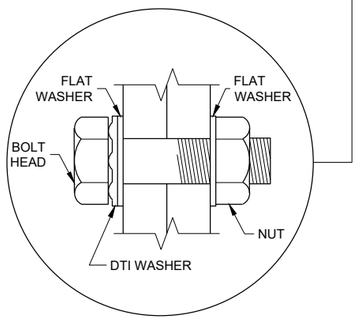

RECOMMENDED BOLT ASSEMBLY DETAIL

TYPE 9 POLE
15' - 30' MONOTUBE ARM
(MAXIMUM LOAD)

TYPE 9 POLE
15' - 30' MONOTUBE ARM

STATE OF WISCONSIN
DEPARTMENT OF TRANSPORTATION

APPROVED
August 2020
DATE

/S/ Ahmet Demirbilek
STATE ELECTRICAL ENGI 407

FHWA

6

SDD 09E08 - 09a

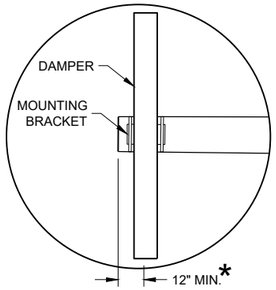

DUMBBELL VIBRATION DAMPER

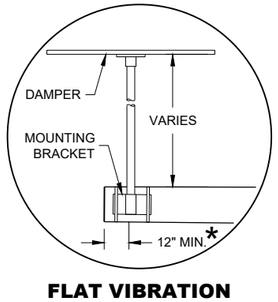

FLAT VIBRATION DAMPER

* MOUNT AS CLOSE TO END OF MAST ARM FOR MAXIMUM DAMPING PER MANUFACTURER'S RECOMMENDATIONS.

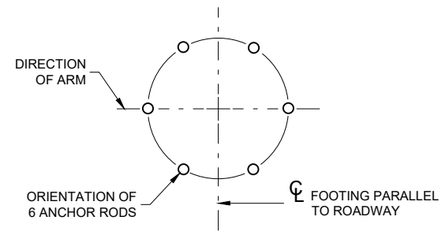

ANCHOR ROD LOCATION

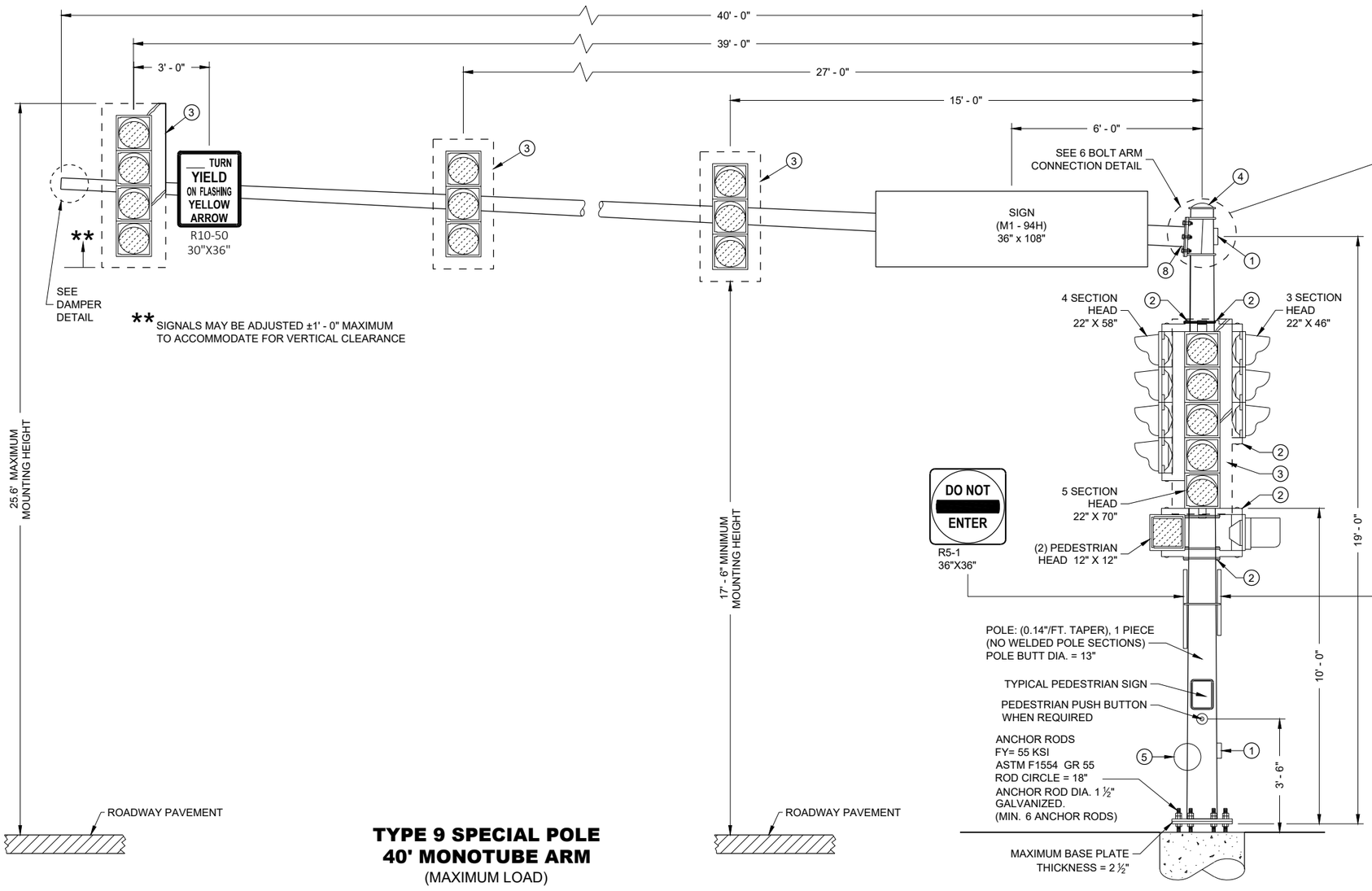

TYPE 9 SPECIAL POLE 40' MONOTUBE ARM
(MAXIMUM LOAD)

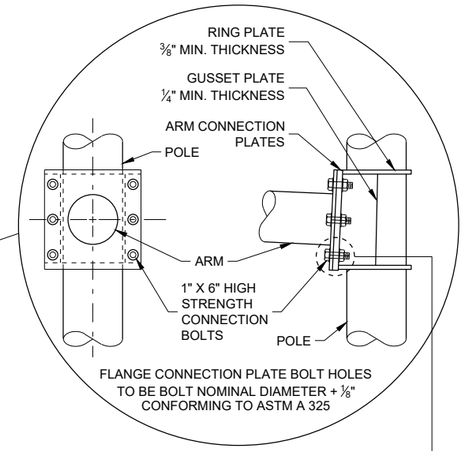

6 BOLT ARM CONNECTION DETAIL

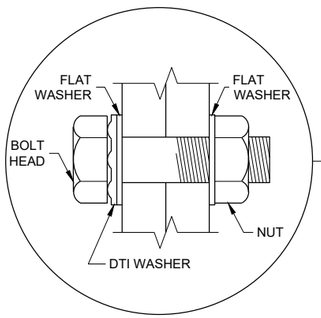

RECOMMENDED BOLT ASSEMBLY DETAIL

TYPE 9 SPECIAL POLE 40' MONOTUBE ARM

STATE OF WISCONSIN
DEPARTMENT OF TRANSPORTATION

APPROVED
August 2020
DATE

/S/ Ahmet Demirbilek
STATE ELECTRICAL ENGI

FHWA

6

SDD 09E08 - 09c

6

SDD 09E08 - 09c

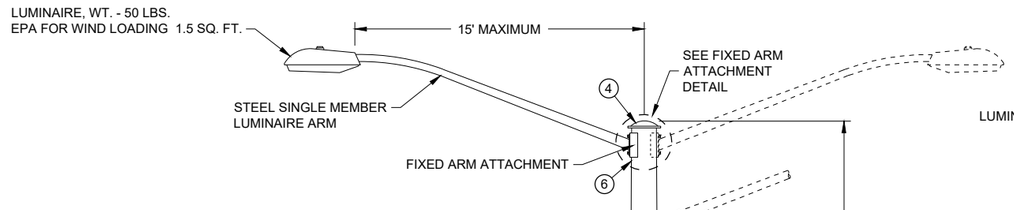

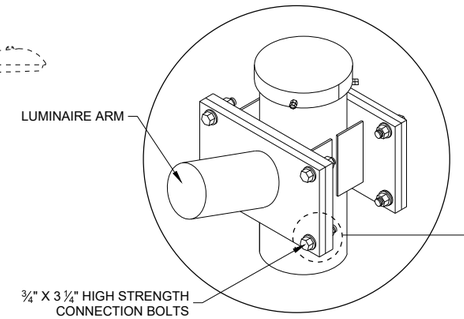

FIXED ARM ATTACHMENT DETAIL

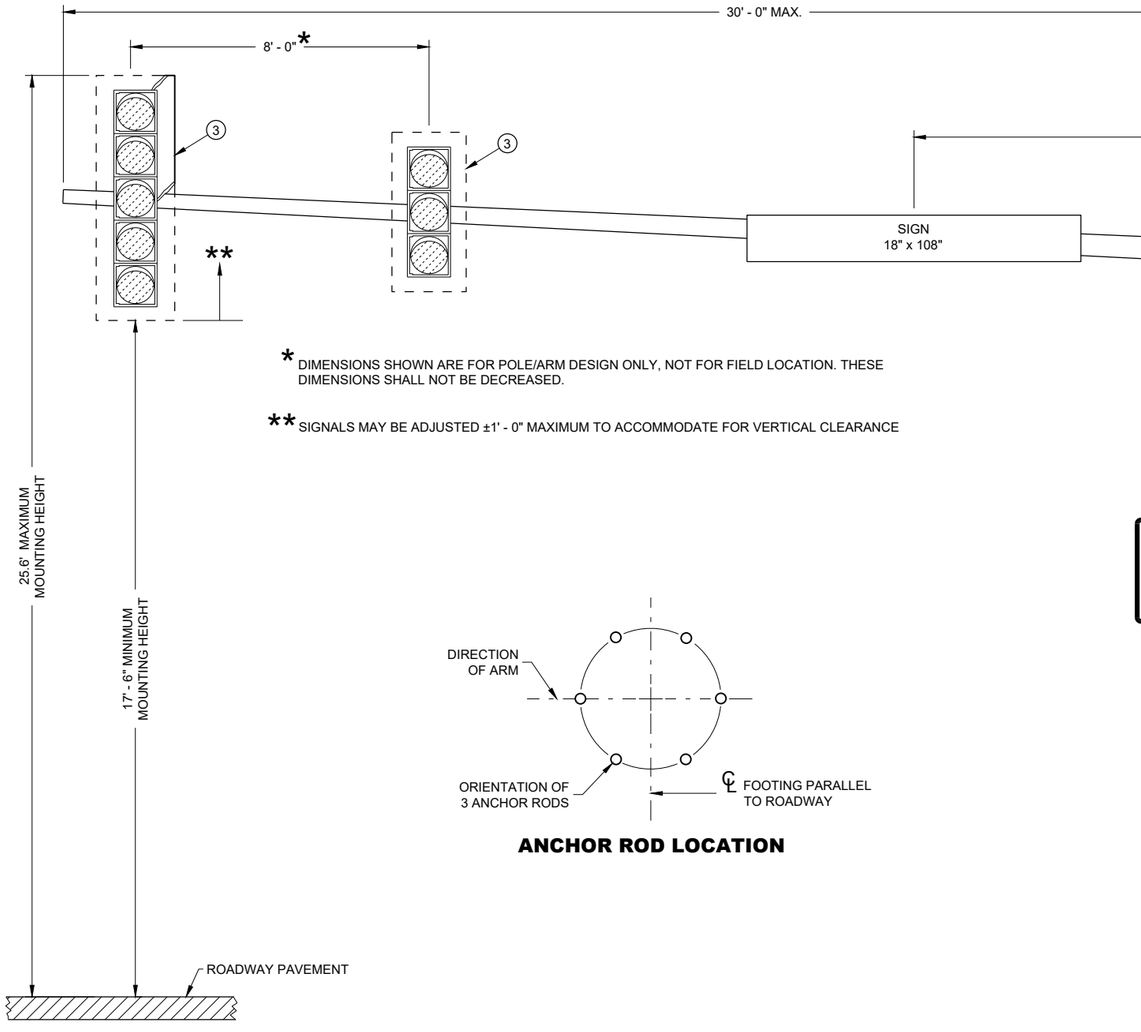

* DIMENSIONS SHOWN ARE FOR POLE/ARM DESIGN ONLY, NOT FOR FIELD LOCATION. THESE DIMENSIONS SHALL NOT BE DECREASED.

** SIGNALS MAY BE ADJUSTED ±1' - 0" MAXIMUM TO ACCOMMODATE FOR VERTICAL CLEARANCE

ANCHOR ROD LOCATION

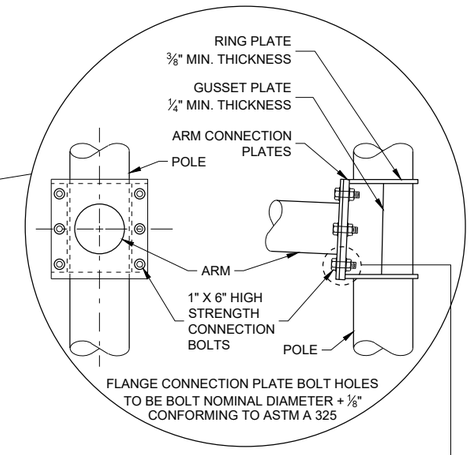

6 BOLT ARM CONNECTION DETAIL

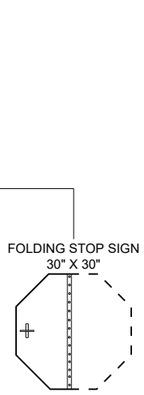

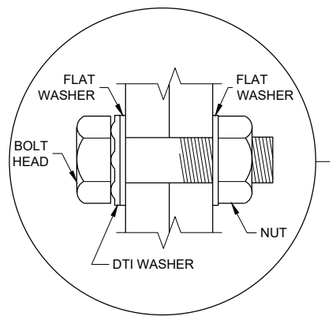

RECOMMENDED BOLT ASSEMBLY DETAIL

TYPE 10 POLE
15' - 30' MONOTUBE ARM
(MAXIMUM LOAD)

TYPE 10 POLE
15' - 30 MONOTUBE ARM

STATE OF WISCONSIN
DEPARTMENT OF TRANSPORTATION

APPROVED
August 2020
DATE

/S/ Ahmet Demirbilek
STATE ELECTRICAL ENGI 409

FHWA

6

SDD 09E08 - 09e

GENERAL NOTES

DETAILS OF CONSTRUCTION NOT SHOWN ON THIS DRAWING SHALL CONFORM TO THE PERTINENT REQUIREMENTS OF THE CONTRACT.

POLE TYPES 9 AND 10 ARE FOR ARM LENGTHS 15 FOOT TO 30 FOOT.

POLE TYPES 9 SPECIAL AND 10 SPECIAL ARE FOR ARM LENGTHS 35 FOOT, 40 FOOT, AND 45 FOOT.

POLE TYPES 12 AND 13 ARE FOR ARM LENGTHS 35 FOOT TO 55 FOOT.

MONOTUBE POLES AND ARMS SHALL BE GALVANIZED STEEL.

RING STIFFENED BUILT UP BOX TYPE OF ATTACHMENT FOR TRAFFIC SIGNAL ARM.

ONE PIECE POLE CONSTRUCTION (NO WELDED POLE SECTIONS).

STANDARD STRAIGHT ARM DESIGN (3% ± RISE).

SECTION 657, POLES OF THE STANDARD SPECIFICATION SHALL APPLY TO THIS DRAWING.

PROVIDE WIREWAY THRU POLE WALL AND ARM CONNECTION PLATES. PROVIDE ROUND, SMOOTH INSIDE SURFACE.

MANUFACTURER'S SUBMITTED POLE DESIGNS AND DRAWINGS SHALL BE SIGNED AND STAMPED BY A REGISTERED PROFESSIONAL ENGINEER AND CERTIFIED AS BEING IN COMPLIANCE WITH THE AASHTO "LRFD SPECIFICATIONS FOR STRUCTURAL SUPPORTS FOR HIGHWAY SIGNS, LUMINAIRES AND TRAFFIC SIGNAL 2015 1ST EDITION (INCLUDING INTERIM REVISIONS)" AND ALL PERTINENT WISDOT SPECIFICATIONS AND DRAWINGS FOR THE LIGHTING STRUCTURES AS FOLLOWS:

CATEGORY III FATIGUE LOADS OF GALLOPING, TRUCK GUSTS (AT 45 MPH VEHICLE VELOCITY) AND NATURAL WIND GUSTS FOR DESIGN OF TYPE 9 AND TYPE 10 STRUCTURES.

CATEGORY II FATIGUE LOADS OF TRUCK GUSTS (AT 45 MPH VEHICLE VELOCITY) AND NATURAL WIND GUSTS FOR DESIGN OF TYPE 9 SPECIAL AND TYPE 10 SPECIAL STRUCTURES. IN LIEU OF DESIGNING FOR GALLOPING, A VIBRATION DAMPER MITIGATION DEVICE IS REQUIRED TO BE SUPPLIED AND INSTALLED AT THE END OF THE MAST ARM.

CATEGORY II FATIGUE FATIGUE LOADS OF GALLOPING, TRUCK GUSTS (AT 45 MPH VEHICLE VELOCITY) AND NATURAL WIND GUSTS FOR DESIGN OF TYPE12 AND TYPE 13 STRUCTURES.

115 MPH (700 YEAR MRI BASIC WIND SPEED).

SECURE THE OPENING BELOW THE BASE PLATE WITH STAINLESS STEEL OR GALVANIZED STEEL MESH AND SECURE THE MESH WITH ¾" STAINLESS STEEL BANDING AROUND THE LEVELING NUTS.

INDENT PRINT (NOMINAL ½" HIGH) THE POLE LENGTH AND FIRST TWO LETTERS OF THE MANUFACTURERS NAME ON TWO SIDES OF THE BASE PLATE 180 DEGREES APART, BEFORE GALVANIZING. THE ARM SHALL BE IDENTIFIED WITH THE SAME INFORMATION BY INDENT PRINT.

SIGNAL FACE SHALL BE MOUNTED 6 INCHES (NOMINAL) FROM THE END OF THE MONOTUBE ARM OR AS SHOWN ON THE PLAN CONSTRUCTION DETAIL OR A S DIRECTED BY THE PROJECT ENGINEER/ELECTRICAL OPERATIONS PERSONNEL. MOUNT ALL LIKE HEAD AT SAME ELEVATION.

SIGN MOUNTING BRACKETS SHALL BE FURNISHED IN ACCORDANCE WITH SECTION 637 OF THE STANDARD SPECIFICATIONS FOR HIGHWAY AND STRUCTURE CONSTRUCTION.

(1) DESIGN FOR MAXIMUM ALLOWABLE HAND HOLE WITH COVER ASSEMBLY WITH TWO ¼" X ¾" - 20 TPI STAINLESS STEEL HEX HEAD BOLTS.

(2) SIGNAL MOUNTING BRACKETS FOR POLE MOUNTING, MOUNT WITH CAP SCREW AND BANDING (SEE SPECIFICATION SECTION 658).

(3) SECURELY MOUNT BACK PLATES, PROJECTING 5" BEYOND ALL SIDES OF THE SIGNAL FACE HOUSING, PER MANUFACTURERS RECOMMENDATIONS.

(4) THE TOP OF THE POLE SHAFT AND THE MONOTUBE ARM SHALL BE EQUIPPED WITH A REMOVABLE, VENTILATED CAP HELD SECURELY IN PLACE WITH SET SCREWS.

(5) FACTORY WELDED BRACKET FOR GROUNDING LUG, OPPOSITE HAND HOLD, (LUG AND HARDWARE PAID UNDER SEPARATE ITEM). PROVIDE HOLE IN BRACKET FOR ¼" X ¾" - 20 TPI STAINLESS STEEL HEX HEAD BOLT.

(6) FACTORY WELDED "J" HOOK FOR STRAIN RELIEF FOR POLE LUMINAIRE WIRE.

(7) INSTALL STRUCTURAL IDENTIFICATION PLAQUES.

STRUCTURAL IDENTIFICATION PLAQUES SHALL BE PLACED ON THE POLES IN THE SAME DIRECTION AS THE ARM.

MOUNTING HEIGHT SHALL BE 6' - 0" ABOVE THE CURB OR SHOULDER. ADJUST IF IT IS KNOWN THAT REQUIRED TRAFFIC SIGNS WILL BE OBSTRUCTED.

(8) FACTORY DRILLED ½" DRAIN HOLE 2" FROM FLANGE CONNECTION PLATE.

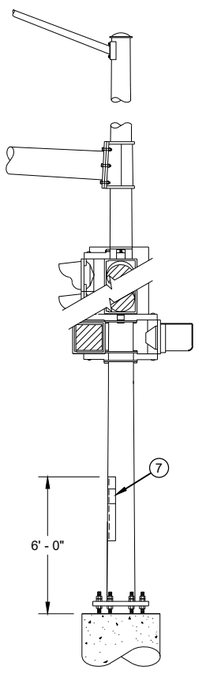

STRUCTURAL IDENTIFICATION PLAQUE PLACEMENT

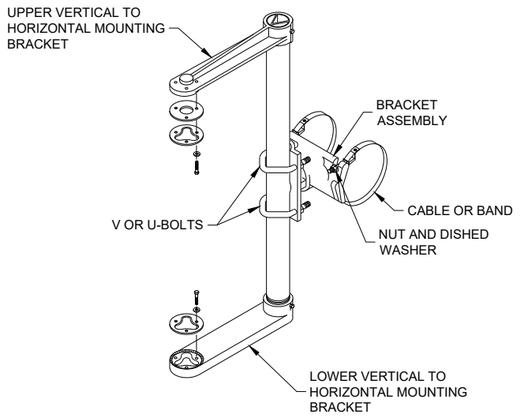

SIGNAL FACE MOUNTING BRACKET DETAIL FOR MONOTUBE ARM

(MOUNT PER MANFACTURER'S RECOMMENDATION)

TYPICAL GROUNDING (5) CONNECTIONS

NUT, BOLT AND WASHERS SHALL BE STAINLESS STEEL

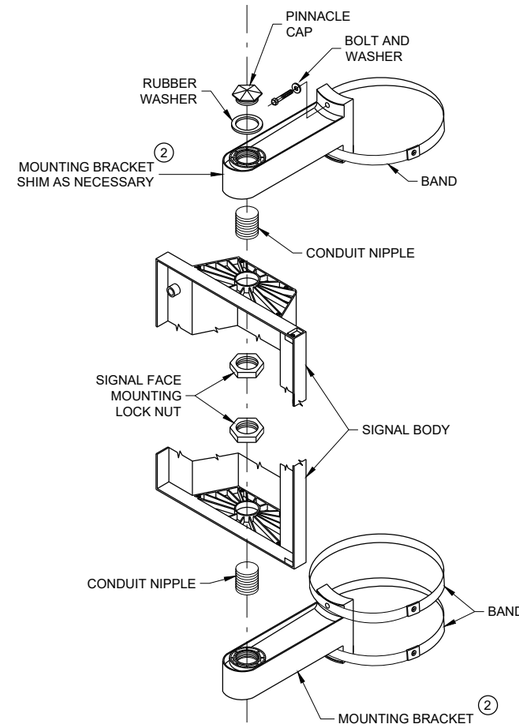

SIGNAL FACE VERTICAL MOUNTING DETAIL

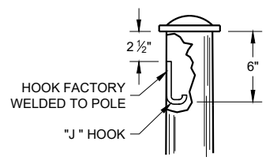

TYPICAL "J" HOOK (6) WIRE SUPPORT

GENERAL NOTES AND HARDWARE FOR TYPES 9,10, 9/10 SPECIAL, 12 AND 13 POLES WITH MONOTUBE ARMS

STATE OF WISCONSIN
DEPARTMENT OF TRANSPORTATION

APPROVED
August 2020
DATE

/S/ Ahmet Demirbilek
STATE ELECTRICAL ENGINEER

FHWA

SDD 09E08 - 09k

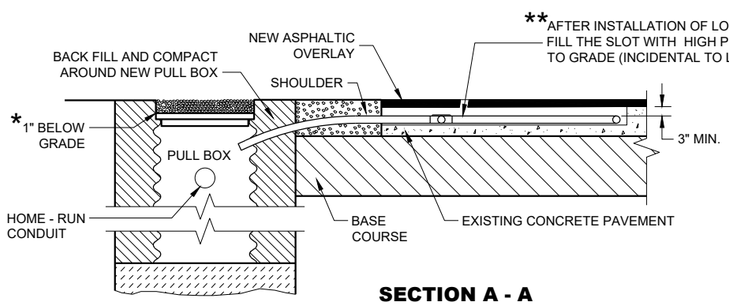

SECTION A - A
NO CURB AND GUTTER

LOOP DETECTOR INSTALLATION DETAIL

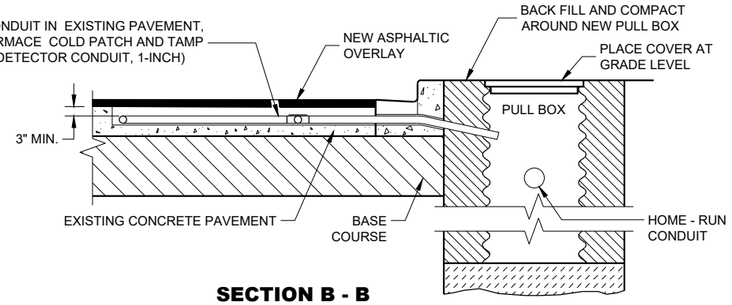

SECTION B - B
CURB AND GUTTER

LOOP DETECTOR INSTALLATION DETAIL

* RECESS PULL BOX SO THAT THE COVER IS 3" BELOW GRADE IN SHOULDER AREAS OF CRUSHED AGGREGATE. BACKFILL OVER COVER WITH THE CRUSHED AGGREGATE TO BRING THE AREA TO GRADE LEVEL.

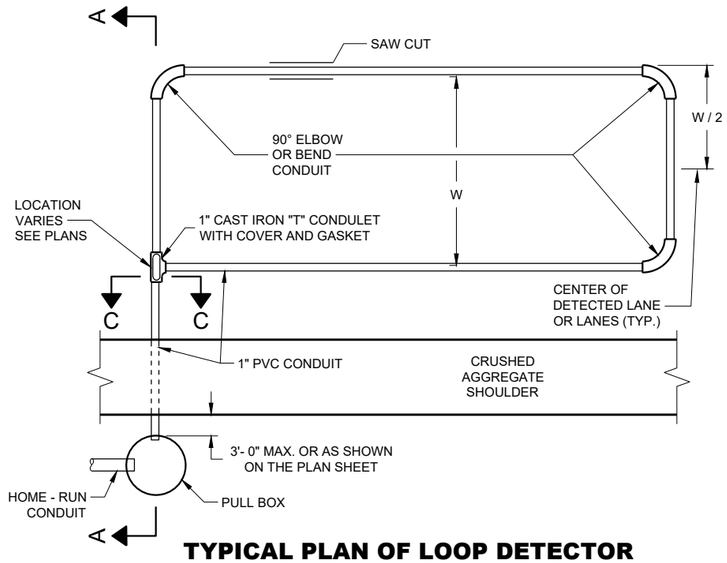

TYPICAL PLAN OF LOOP DETECTOR

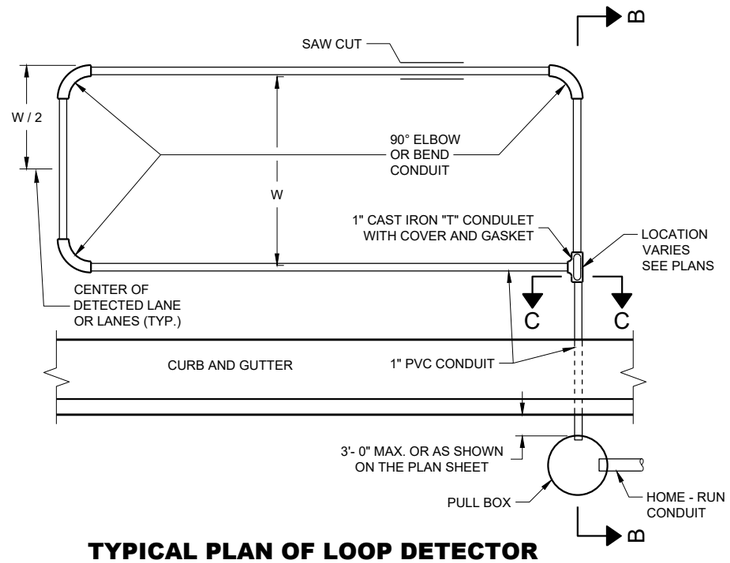

TYPICAL PLAN OF LOOP DETECTOR

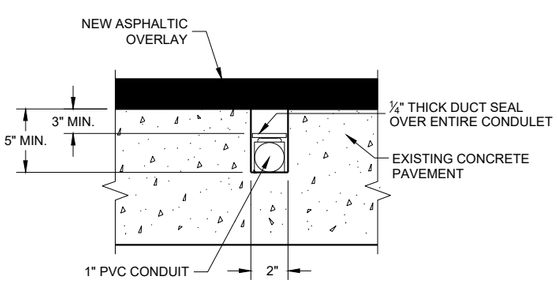

SIDE VIEW
SECTION C - C

LOOP DETECTOR SLOT DETAIL

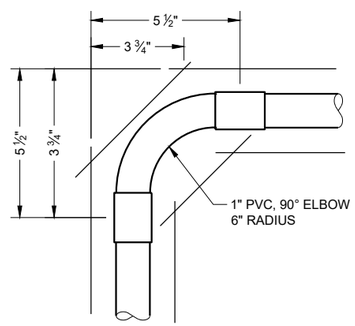

TOP VIEW

CORNER SAW SLOT DETAIL

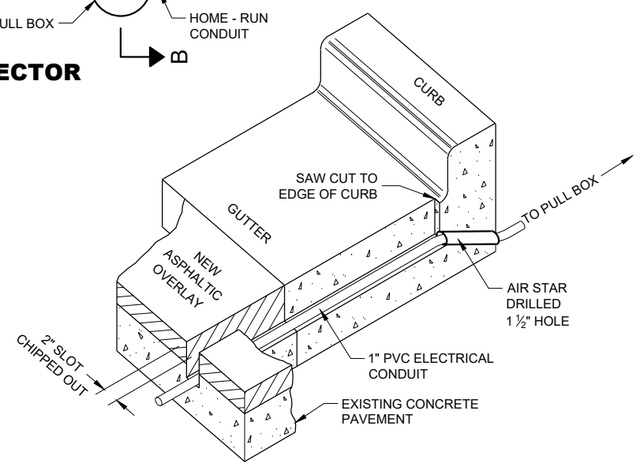

ISOMETRIC VIEW

TYPICAL SAW CUT DETAIL FOR LEAD-IN CONDUIT

GENERAL NOTES

DETAILS OF CONSTRUCTION, MATERIALS AND WORKMANSHIP NOT SHOWN ON THIS DRAWING SHALL CONFORM TO THE PERTINENT REQUIREMENTS OF THE CONTRACT.

PITCH LEAD OUT CONDUIT TO DRAIN TO ROADSIDE PULL BOX.

LOOP SIZE, LOCATION, NUMBER OF TURNS OF WIRE AND ASSOCIATED SIGNAL PHASE SHALL BE AS SHOWN ON THE PLANS.

SPLICES SHALL BE INSTALLED BY USING CAST IN PLACE SPLICE KITS LISTED ON THE DEPARTMENTS APPROVED PRODUCTS LIST OR AN ENGINEER APPROVED EQUAL. NON-INSULATED BUTT SPLICES TO FIT #12 AWG STRANDED WIRE SHALL BE USED. SPLICES SHALL BE SOLDERED AND INSULATED FROM EACH OTHER AS PER INSTRUCTIONS INCLUDED IN THE SPLICE KIT.

MEASURE GROUND RESISTANCE USING A MEGGER. REPLACE LOOP WIRE NOT ATTAINING A READING OF INFINITY TO GROUND.

AFTER SPLICING THE LOOP WIRE TO THE LOOP LEAD-IN CABLE, THE CONTRACTOR SHALL MEASURE INDUCTANCE, GROUND RESISTANCE AND WIRE RESISTANCE AT THE CABINET END OF THE LEAD-IN CABLE AND FURNISH A COPY OF THE READING TO THE PROJECT ENGINEER FOR EVALUATION.

LOOP DETECTOR LEADS SHALL BE IDENTIFIED WITH THEIR ASSOCIATED LOOP BY USE OF WATERPROOF TAGS AT BOTH ENDS OF THE CABLE. A LISTING OF THE CABLE IDENTIFICATION PER INDIVIDUAL LOOP LEAD-IN SHALL BE PLACED IN THE CABINET.

THE #12 AWG LOOP WIRE FROM THE LOOP TO THE ROADSIDE PULL BOX, SHALL BE HAND TWISTED AT LEAST 3 TWISTS PER FOOT BEFORE INSTALLATION.

SPLICES OF LOOP WIRE TO LEAD-IN CABLE SHALL BE MADE ONLY IN PULL BOXES AT THE SIDE OF THE ROAD.

THE #12 AWG LOOP WIRE SHALL BE INSTALLED FROM THE ROADSIDE PULL BOX, THROUGH THE LOOP CONDUIT, BACK TO THE ROADSIDE PULL BOX, AND BE INSTALLED IN ONE NON-SPLICED, CONTINUOUS LENGTH.

BEFORE PLACING THE 1 INCH CONDUIT IN THE CLEANED OUT SLOT, PLACE SOME OF THE TAR OR EPOXY SEALANT IN THE SLOT TO A DEPTH OF APPROXIMATELY ½ INCH.

ONCE THE 2" LOOP SLOT HAS BEEN CHIPPED OUT, THE LOOP INSTALLATION SHALL BE COMPLETED PRIOR TO OPENING THE LANE(S) TO TRAFFIC.

** AFTER THE HIGH PERFORMANCE COLD PATCH HAS BEEN TAMPED, SEAL THE SLOT/HIGH PERFORMANCE COLD PATCH/PAVEMENT OPENING WITH HOT POURED ELASTIC TYPE MATERIAL CONFORMING TO THE REQUIREMENTS OF THE "SPECIFICATION FOR JOINT SEALANTS, HOT POURED, FOR CONCRETE AND ASPHALT PAVEMENTS, ASTM DESIGNATION: D3405".

IN THE EVENT HIGH PERFORMANCE COLD PATCH IS NOT AVAILABLE, AND FLEXIBLE TYPE EPOXY IS USED AS A LOOP SLOT FILLER, THE 2 INCH SLOT SHALL BE TOTALLY CLEAN AND DRY BEFORE ITS INSTALLATION. EPOXY USE SHALL BE APPROVED BY THE DISTRICT ENGINEER AND THE FURNISHED EPOXY SHALL BE INSTALLED AFTER WRITTEN APPROVAL BY THE PROJECT ENGINEER.

LOOP DETECTOR INSTALLED IN EXISTING CONCRETE PAVEMENT WITH NEW ASPHALTIC OVERLAY

STATE OF WISCONSIN
DEPARTMENT OF TRANSPORTATION

APPROVED
September 2014
DATE
/S/ Ahmet Demirbilek
STATE ELECTRICAL ENGI 411
FHWA

6
SDD 09F11 - 04

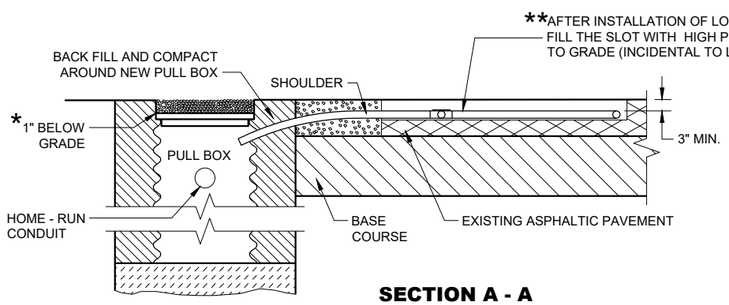

SECTION A - A
NO CURB AND GUTTER

LOOP DETECTOR INSTALLATION DETAIL

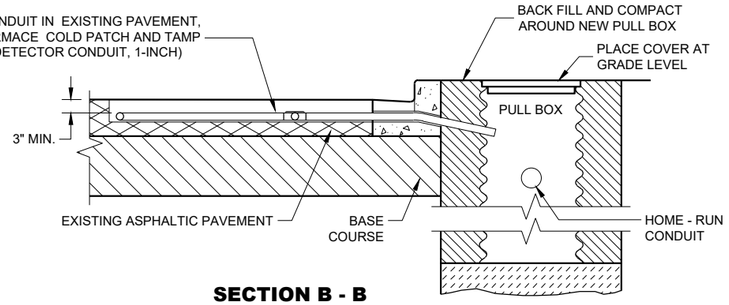

SECTION B - B
CURB AND GUTTER

LOOP DETECTOR INSTALLATION DETAIL

* RECESS PULL BOX SO THAT THE COVER IS 3" BELOW GRADE IN SHOULDER AREAS OF CRUSHED AGGREGATE. BACKFILL OVER COVER WITH THE CRUSHED AGGREGATE TO BRING THE AREA TO GRADE LEVEL.

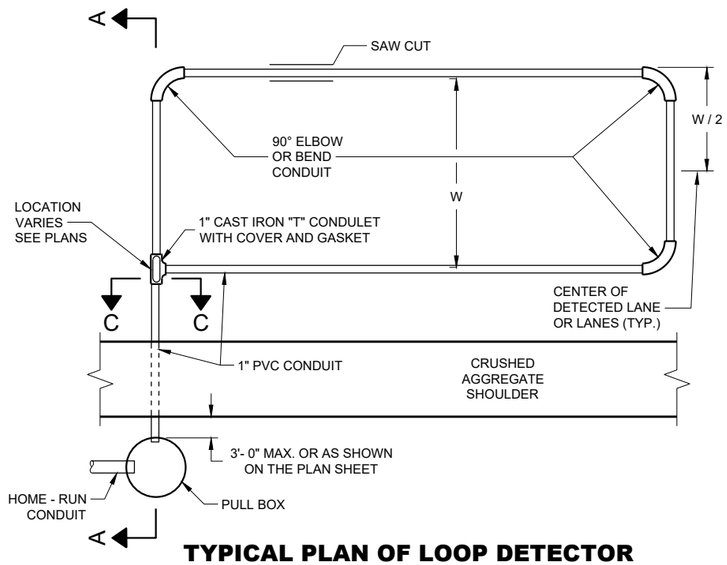

TYPICAL PLAN OF LOOP DETECTOR

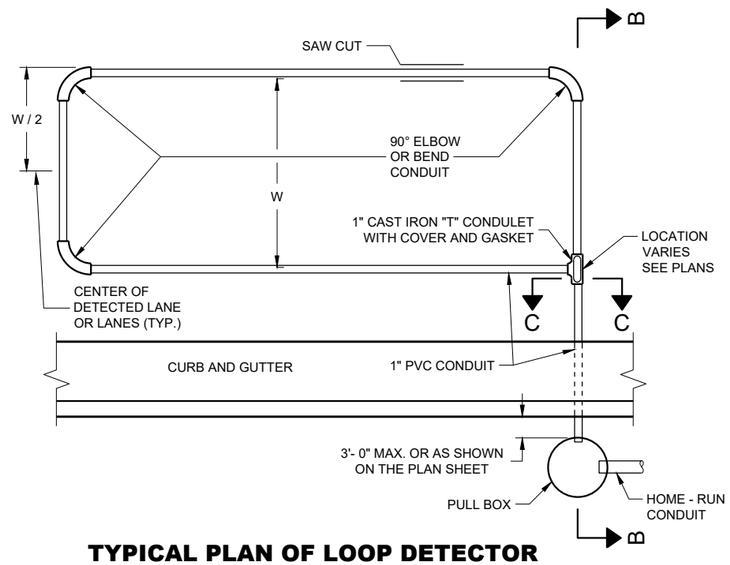

TYPICAL PLAN OF LOOP DETECTOR

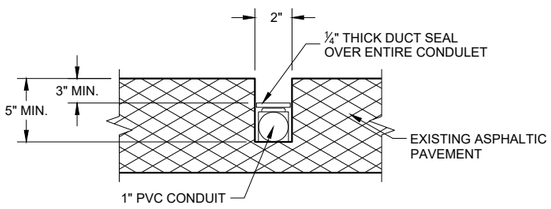

SIDE VIEW
SECTION C - C

LOOP DETECTOR SLOT DETAIL

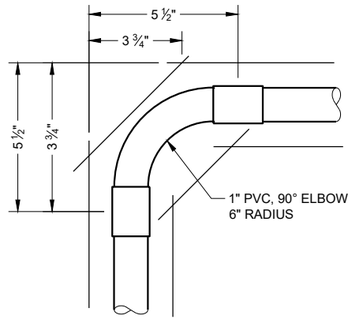

TOP VIEW

CORNER SAW SLOT DETAIL

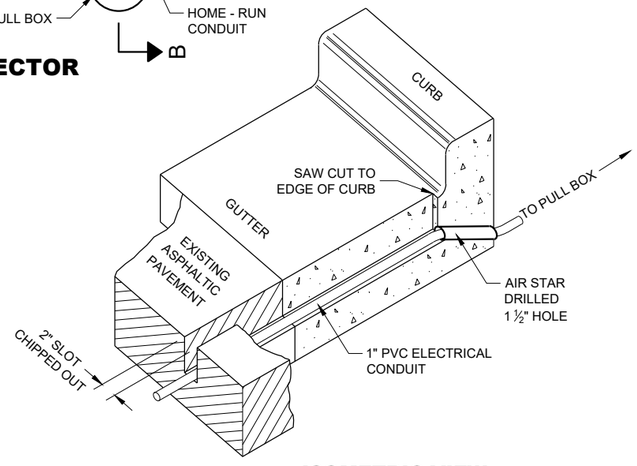

ISOMETRIC VIEW

TYPICAL SAW CUT DETAIL FOR LEAD-IN CONDUIT

GENERAL NOTES

DETAILS OF CONSTRUCTION, MATERIALS AND WORKMANSHIP NOT SHOWN ON THIS DRAWING SHALL CONFORM TO THE PERTINENT REQUIREMENTS OF THE CONTRACT.

PITCH LEAD OUT CONDUIT TO DRAIN TO ROADSIDE PULL BOX.

LOOP SIZE, LOCATION, NUMBER OF TURNS OF WIRE AND ASSOCIATED SIGNAL PHASE SHALL BE AS SHOWN ON THE PLANS.

SPLICES SHALL BE INSTALLED BY USING CAST IN PLACE SPLICE KITS LISTED ON THE DEPARTMENTS APPROVED PRODUCTS LIST OR AN ENGINEER APPROVED EQUAL. NON-INSULATED BUTT SPLICES TO FIT #12 AWG STRANDED WIRE SHALL BE USED. SPLICES SHALL BE SOLDERED AND INSULATED FROM EACH OTHER AS PER INSTRUCTIONS INCLUDED IN THE SPLICE KIT.

MEASURE GROUND RESISTANCE USING A MEGGER. REPLACE LOOP WIRE NOT ATTAINING A READING OF INFINITY TO GROUND.

AFTER SPLICING THE LOOP WIRE TO THE LOOP LEAD-IN CABLE, THE CONTRACTOR SHALL MEASURE INDUCTANCE, GROUND RESISTANCE AND WIRE RESISTANCE AT THE CABINET END OF THE LEAD-IN CABLE AND FURNISH A COPY OF THE READING TO THE PROJECT ENGINEER FOR EVALUATION.

LOOP DETECTOR LEADS SHALL BE IDENTIFIED WITH THEIR ASSOCIATED LOOP BY USE OF WATERPROOF TAGS AT BOTH ENDS OF THE CABLE. A LISTING OF THE CABLE IDENTIFICATION PER INDIVIDUAL LOOP LEAD-IN SHALL BE PLACED IN THE CABINET.

THE #12 AWG LOOP WIRE FROM THE LOOP TO THE ROADSIDE PULL BOX, SHALL BE HAND TWISTED AT LEAST 3 TWISTS PER FOOT BEFORE INSTALLATION.

SPLICES OF LOOP WIRE TO LEAD-IN CABLE SHALL BE MADE ONLY IN PULL BOXES AT THE SIDE OF THE ROAD.

THE #12 AWG LOOP WIRE SHALL BE INSTALLED FROM THE ROADSIDE PULL BOX, THROUGH THE LOOP CONDUIT, BACK TO THE ROADSIDE PULL BOX, AND BE INSTALLED IN ONE NON-SPLICED, CONTINUOUS LENGTH

IN THE EVENT THAT THE EXISTING PAVEMENT IS MORE THAT 5 INCHES THICK, THE 1 INCH CONDUIT DOES NOT REQUIRE INSTALLATION BELOW THE PAVEMENT INTO THE BASE COURSE. PLACE SOME OF THE TAR OR EPOXY SEALANT IN THE SLOT TO A DEPTH OF APPROXIMATELY ½ INCH BEFORE INSTALLATION OF THE CONDUIT. IF THE CONDUIT MUST BE PLACED IN THE BASE COURSE, DO NOT PLACE THE TAR OR EPOXY SEALANT IN THE SLOT.

ONCE THE 2" LOOP SLOT HAS BEEN CHIPPED OUT, THE LOOP INSTALLATION SHALL BE COMPLETED PRIOR TO OPENING THE LANE(S) TO TRAFFIC.

** AFTER THE HIGH PERFORMANCE COLD PATCH HAS BEEN TAMPED, SEAL THE SLOT/HIGH PERFORMANCE COLD PATCH/PAVEMENT OPENING WITH HOT POURED ELASTIC TYPE MATERIAL CONFORMING TO THE REQUIREMENTS OF THE "SPECIFICATION FOR JOINT SEALANTS, HOT POURED, FOR CONCRETE AND ASPHALT PAVEMENTS, ASTM DESIGNATION: D3405".

IN THE EVENT HIGH PERFORMANCE COLD PATCH IS NOT AVAILABLE , AND FLEXIBLE TYPE EPOXY IS USED AS A LOOP SLOT FILLER, THE 2 INCH SLOT SHALL BE TOTALLY CLEAN AND DRY BEFORE ITS INSTALLATION. EPOXY USE SHALL BE APPROVED BY THE DISTRICT ENGINEER AND THE FURNISHED EPOXY SHALL BE INSTALLED AFTER WRITTEN APPROVAL BY THE PROJECT ENGINEER.

LOOP DETECTOR INSTALLED IN EXISTING ASPHALTIC PAVEMENT

STATE OF WISCONSIN
DEPARTMENT OF TRANSPORTATION

APPROVED
September 2014
DATE
/S/ Ahmet Demirbilek
STATE ELECTRICAL ENGI 412
FHWA

6
SDD 09F13 - 04

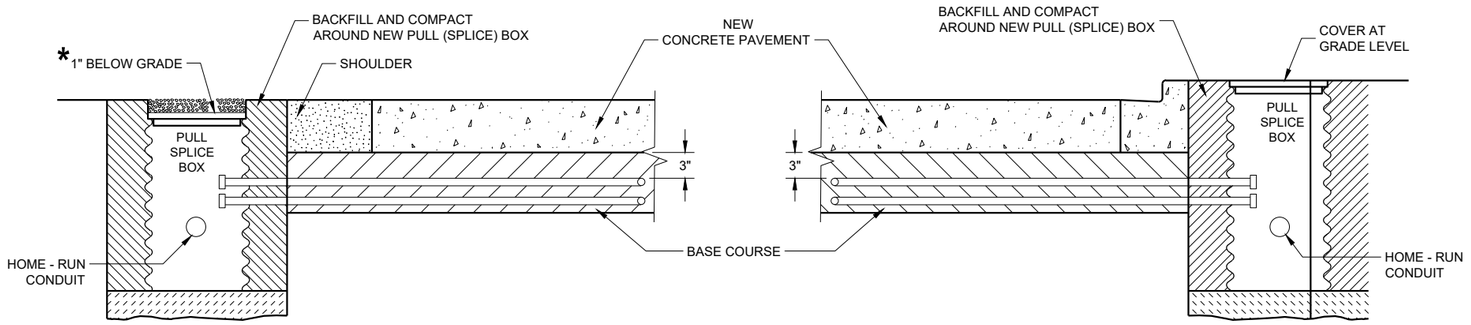

SECTION A - A
NO CURB AND GUTTER

SECTION B - B
CURB AND GUTTER

* RECESS PULL (SPLICE) BOX SO THAT THE COVER IS 3" BELOW GRADE IN SHOULDER AREAS OF CRUSHED AGGREGATE. BACKFILL OVER COVER WITH THE CRUSHED AGGREGATE TO BRING THE AREA TO GRADE LEVEL.

LOOP DETECTOR INSTALLATION DETAIL

GENERAL NOTES

DETAILS OF CONSTRUCTION, MATERIALS AND WORKMANSHIP NOT SHOWN ON THIS DRAWING SHALL CONFORM TO THE PERTINENT REQUIREMENTS OF THE CONTRACT.

PITCH LEAD OUT CONDUIT TO DRAIN TO ROADSIDE PULL (SPLICE) BOX.

LOOP SIZE, LOCATION, NUMBER OF TURNS OF WIRE AND ASSOCIATED SIGNAL PHASE SHALL BE AS SHOWN ON THE PLANS.

SPLICES SHALL BE INSTALLED BY USING CAST IN PLACE SPLICE KITS LISTED ON THE DEPARTMENTS APPROVED PRODUCTS LIST OR AN ENGINEER APPROVED EQUAL. NON-INSULATED BUTT SPLICES TO FIT #12 AWG STRANDED WIRE SHALL BE USED. SPLICES SHALL BE SOLDERED AND INSULATED FROM EACH OTHER AS PER INSTRUCTIONS INCLUDED IN THE SPLICE KIT.

MEASURE GROUND RESISTANCE USING A MEGGER. REPLACE LOOP WIRE NOT ATTAINING A READING OF INFINITY TO GROUND.

AFTER SPLICING THE LOOP WIRE TO THE LOOP LEAD-IN CABLE, THE CONTRACTOR SHALL MEASURE INDUCTANCE, GROUND RESISTANCE AND WIRE RESISTANCE AT THE CABINET END OF THE LEAD-IN CABLE AND FURNISH A COPY OF THE READING TO THE PROJECT ENGINEER FOR EVALUATION.

LOOP DETECTOR LEADS SHALL BE IDENTIFIED WITH THEIR ASSOCIATED LOOP BY USE OF WATERPROOF TAGS AT BOTH ENDS OF THE CABLE. A LISTING OF THE CABLE IDENTIFICATION PER INDIVIDUAL LOOP LEAD-IN SHALL BE PLACED IN THE CABINET.

THE #12 AWG LOOP WIRE IN THE PULL (SPLICE) BOX SHALL BE HAND TWISTED AT LEAST 3 TWISTS PER FOOT BEFORE BEING SPLICED TO THE LOOP LEAD-IN CABLE.

SPLICES OF LOOP WIRE TO LEAD-IN CABLE SHALL BE MADE ONLY IN PULL (SPLICE) BOXES AT THE SIDE OF THE ROAD.

THE #12 AWG LOOP WIRE SHALL BE INSTALLED FROM THE ROADSIDE PULL (SPLICE) BOX, THROUGH THE LOOP CONDUIT, BACK TO THE ROADSIDE PULL (SPLICE) BOX, AND BE INSTALLED IN ONE NON-SPLICED, CONTINUOUS LENGTH.

PROTECTION OF THE CONDUIT IN THE BASE COURSE SHALL BE REQUIRED AFTER INSTALLATION AND BEFORE NEW PAVEMENT IS INSTALLED.

SHOULD INSTALLATION REPAIR BE REQUIRED, IT SHALL BE DONE UNDER THE DIRECTION OF THE PROJECT ENGINEER.

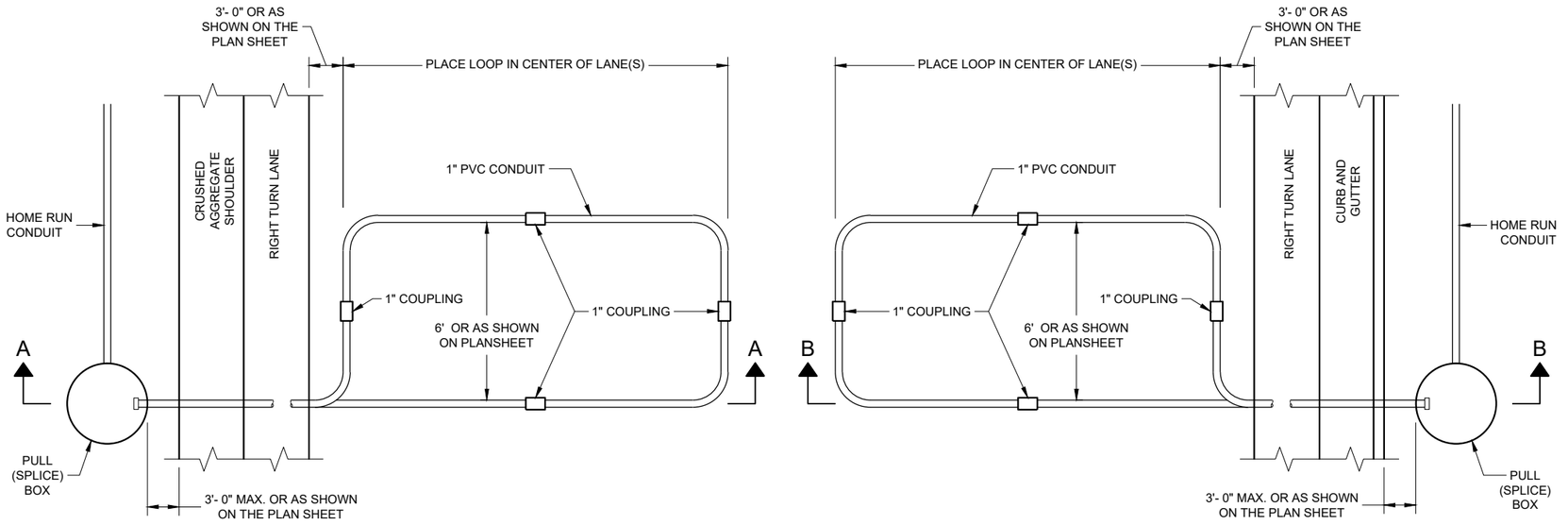

TYPICAL PLAN LOOP DETECTOR WITH 24" PULL (SPLICE) BOX

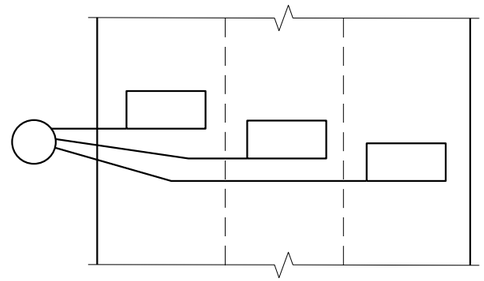

MULTI-LANE INSTALLATION

LOOP DETECTOR INSTALLED IN BASE COURSE WITH PULL (SPLICE) BOX OFF ROADWAY (OPTION 2)

STATE OF WISCONSIN
DEPARTMENT OF TRANSPORTATION

APPROVED
September 2014
DATE
/S/ Ahmet Demirbilek
STATE ELECTRICAL ENGI

FHWA

6

SDD 09F15 - 04b

6

SDD 09F15 - 04b

MINIMUM POLE LENGTHS	POLE BURIAL DEPTHS
25'	5'
30'	6'
35'	7'
40'	8'
45'	9'

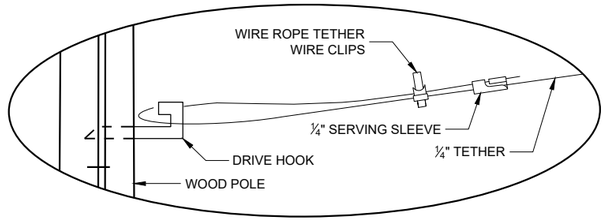

DETAIL "A"

GENERAL NOTES

DETAILS OF CONSTRUCTION, MATERIALS AND WORKMANSHIP NOT SHOWN ON THIS DRAWING SHALL CONFORM TO THE PERTINENT REQUIREMENTS OF THE CONTRACT.

1. WOOD POLES SHALL BE CLASS 4. LENGTH DETERMINED BY SIGNAL PLAN.
2. SIGNAL FACES:
   A. ALL SECTIONS SHALL BE 12" AND POLYCARBONATE.
   B. EACH SHALL CONTAIN A 5" WIDE DULL BLACK POLYCARBONATE BACKPLATE.
   C. EACH SHALL BE WIRED FROM THE TOP SIGNAL MOUNTING BRACKET.
   D. NEAR RIGHT SIGNAL FACE SUSPENDED ON THE TETHER (NO BACKPLATE) SHALL NOT BE OVER THE TRAVELED WAY. IF THE POLE IS WITHIN 5 FEET OF THE TRAVELED WAY MOUNT THE SIGNAL FACE ON THE WOOD POLE WITH BACKPLATE.
3. SPAN WIRE:
   A. EACH SPAN WIRE SHALL BE INDIVIDUALLY DOWN GUYED
   B. SIGNAL AND LIGHTING CABLES SHALL ONLY BE ATTACHED TO THE UPPER SPAN WIRE.
   C. THE SIGNAL ASSEMBLY SHALL HAVE A 17' MIN. HEIGHT ABOVE THE ROADWAY. THIS SHALL BE MEASURED AFTER THE SPAN WIRE INSTALLATION IS COMPLETED WITH ALL CABLES AND SIGNAL FACES IN PLACE. MAINTAIN MINIMUM AND MAXIMUM HEIGHTS AS ROADWAY WORK PROGRESSES.

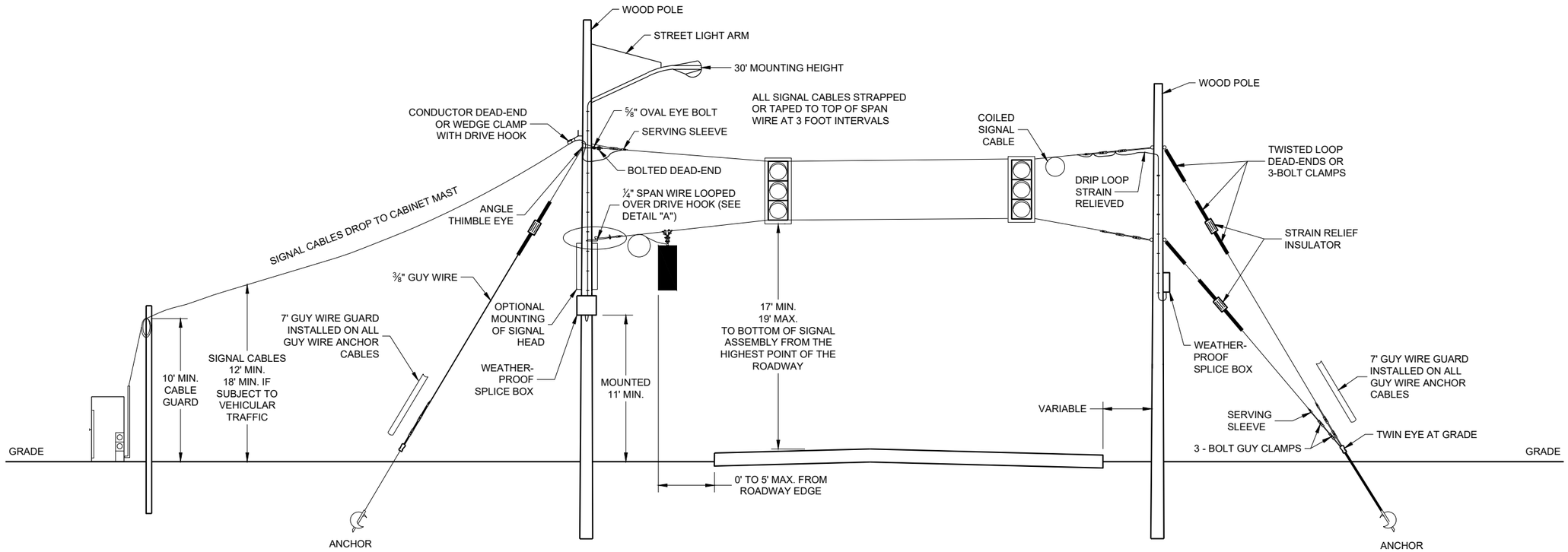

SPAN WIRE
TEMPORARY SIGNALS

SPAN WIRE TEMPORARY TRAFFIC SIGNAL

STATE OF WISCONSIN
DEPARTMENT OF TRANSPORTATION

APPROVED
June 2015
DATE

/S/ Ahmet Demerbilek
STATE ELECTRICAL ENGI 414

FHWA

6

6

SDD09G01 - 04a

SDD09G01 - 04a

MINIMUM POLE LENGTHS	CLASS	POLE BURIAL DEPTHS
25'	V	5'
30'	V	6'
35'	IV	7'
40'	IV	8'
45'	IV	9'

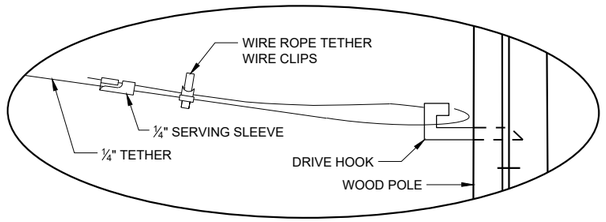

DETAIL "A"

GENERAL NOTES

DETAILS OF CONSTRUCTION, MATERIALS AND WORKMANSHIP NOT SHOWN ON THIS DRAWING SHALL CONFORM TO THE PERTINENT REQUIREMENTS OF THE CONTRACT.

1. WOOD POLES SHALL BE CLASS 4. LENGTH DETERMINED BY SIGNAL PLAN.
2. SIGNAL FACES:
   - A. ALL SECTIONS SHALL BE 12" AND POLYCARBONATE.
   - B. EACH SHALL CONTAIN A 5" WIDE DULL BLACK POLYCARBONATE BACKPLATE.
   - C. EACH SHALL BE WIRED FROM THE TOP SIGNAL MOUNTING BRACKET.
   - D. NEAR RIGHT SIGNAL FACE SUSPENDED ON THE TETHER (NO BACKPLATE) SHALL NOT BE OVER THE TRAVELED WAY. IF THE POLE IS WITHIN 5 FEET OF THE TRAVELED WAY MOUNT THE SIGNAL FACE ON THE WOOD POLE WITH BACKPLATE.
   - E. FAR INDICATION SHALL BE MAINTAINED OVER CENTER OF TRAFFIC LANE.
3. SPAN WIRE:
   - A. EACH SPAN WIRE SHALL BE INDIVIDUALLY DOWN GUYED
   - B. SIGNAL AND LIGHTING CABLES SHALL ONLY BE ATTACHED TO THE UPPER SPAN WIRE.
   - C. THE SIGNAL ASSEMBLY SHALL HAVE A 17' MIN. HEIGHT ABOVE THE ROADWAY. THIS SHALL BE MEASURED AFTER THE SPAN WIRE INSTALLATION IS COMPLETED WITH ALL CABLES AND SIGNAL FACES IN PLACE. MAINTAIN MINIMUM AND MAXIMUM HEIGHTS AS ROADWAY WORK PROGRESSES.

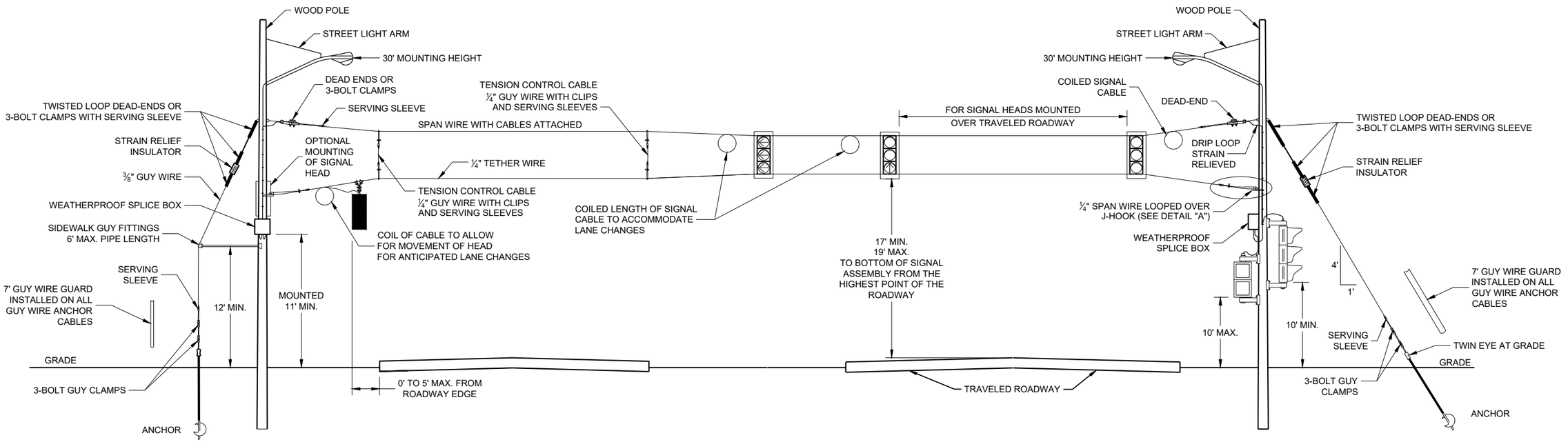

SPAN WIRE
TEMPORARY SIGNALS
4 LANE ROADWAYS

SPAN WIRE TEMPORARY TRAFFIC SIGNAL

STATE OF WISCONSIN
DEPARTMENT OF TRANSPORTATION

APPROVED
June 2015
DATE
/S/ Ahmet Demerbilek
STATE ELECTRICAL ENGI 415
FHWA

6

SDD09G01 - 04b

6

SDD09G01 - 04b

MINIMUM POLE LENGTHS	CLASS	POLE BURIAL DEPTHS
25'	V	5'
30'	V	6'
35'	IV	7'
40'	IV	8'
45'	IV	9'

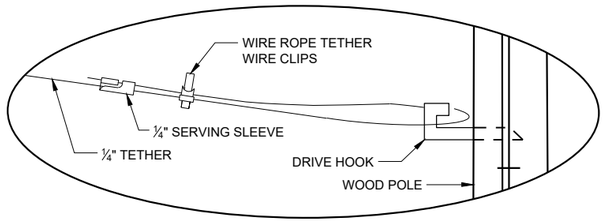

DETAIL "A"

GENERAL NOTES

DETAILS OF CONSTRUCTION, MATERIALS AND WORKMANSHIP NOT SHOWN ON THIS DRAWING SHALL CONFORM TO THE PERTINENT REQUIREMENTS OF THE CONTRACT.

1. WOOD POLES SHALL BE CLASS 4. LENGTH DETERMINED BY SIGNAL PLAN.
2. SIGNAL FACES:
   - A. ALL SECTIONS SHALL BE 12" AND POLYCARBONATE.
   - B. EACH SHALL CONTAIN A 5" WIDE DULL BLACK POLYCARBONATE BACKPLATE.
   - C. EACH SHALL BE WIRED FROM THE TOP SIGNAL MOUNTING BRACKET.
   - D. NEAR RIGHT SIGNAL FACE SUSPENDED ON THE TETHER (NO BACKPLATE) SHALL NOT BE OVER THE TRAVELED WAY. IF THE POLE IS WITHIN 5 FEET OF THE TRAVELED WAY MOUNT THE SIGNAL FACE ON THE WOOD POLE WITH BACKPLATE.
   - E. FAR INDICATION SHALL BE MAINTAINED OVER CENTER OF TRAFFIC LANE.
3. SPAN WIRE:
   - A. EACH SPAN WIRE SHALL BE INDIVIDUALLY DOWN GUYED
   - B. SIGNAL AND LIGHTING CABLES SHALL ONLY BE ATTACHED TO THE UPPER SPAN WIRE.
   - C. THE SIGNAL ASSEMBLY SHALL HAVE A 17' MIN. HEIGHT ABOVE THE ROADWAY. THIS SHALL BE MEASURED AFTER THE SPAN WIRE INSTALLATION IS COMPLETED WITH ALL CABLES AND SIGNAL FACES IN PLACE. MAINTAIN MINIMUM AND MAXIMUM HEIGHTS AS ROADWAY WORK PROGRESSES.

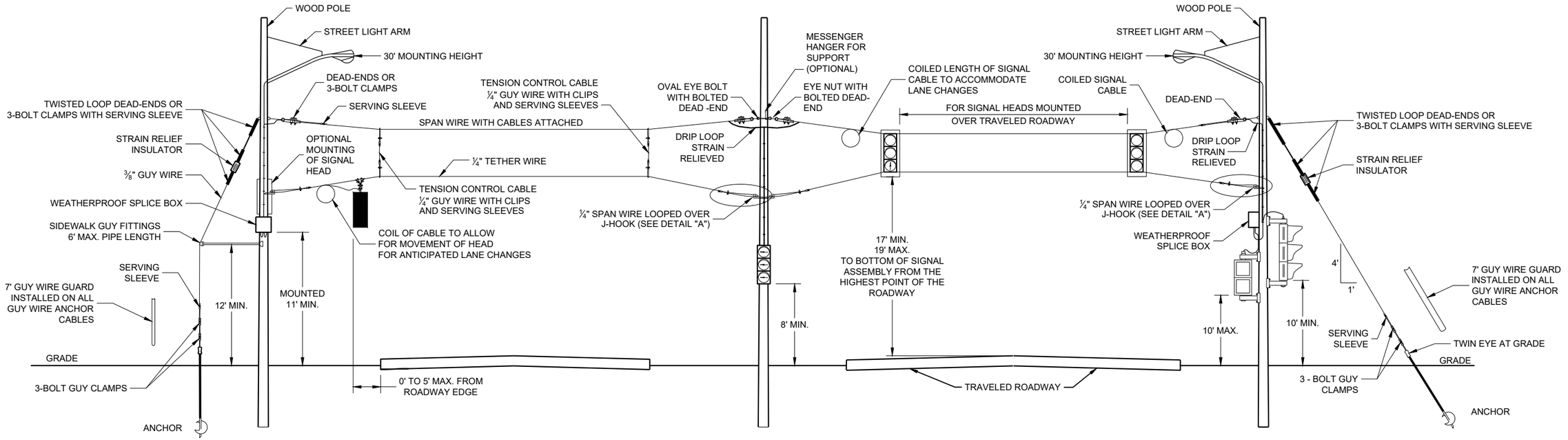

SPAN WIRE
TEMPORARY SIGNALS
4 LANE ROADWAYS

SPAN WIRE TEMPORARY TRAFFIC SIGNAL

STATE OF WISCONSIN
DEPARTMENT OF TRANSPORTATION

APPROVED
June 2015
DATE

/S/ Ahmet Demerbilek
STATE ELECTRICAL ENGI 416

FHWA

6

6

SDD09G01 - 04c

SDD09G01 - 04c

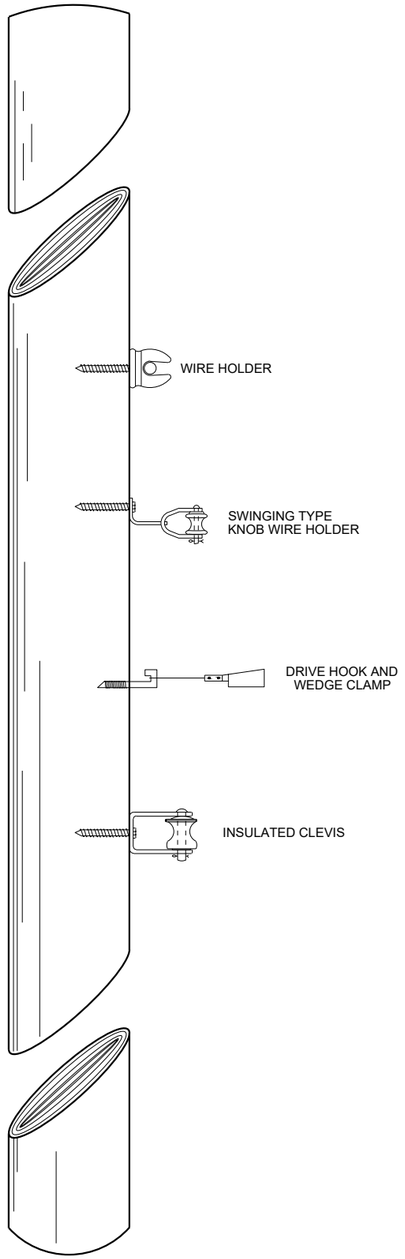

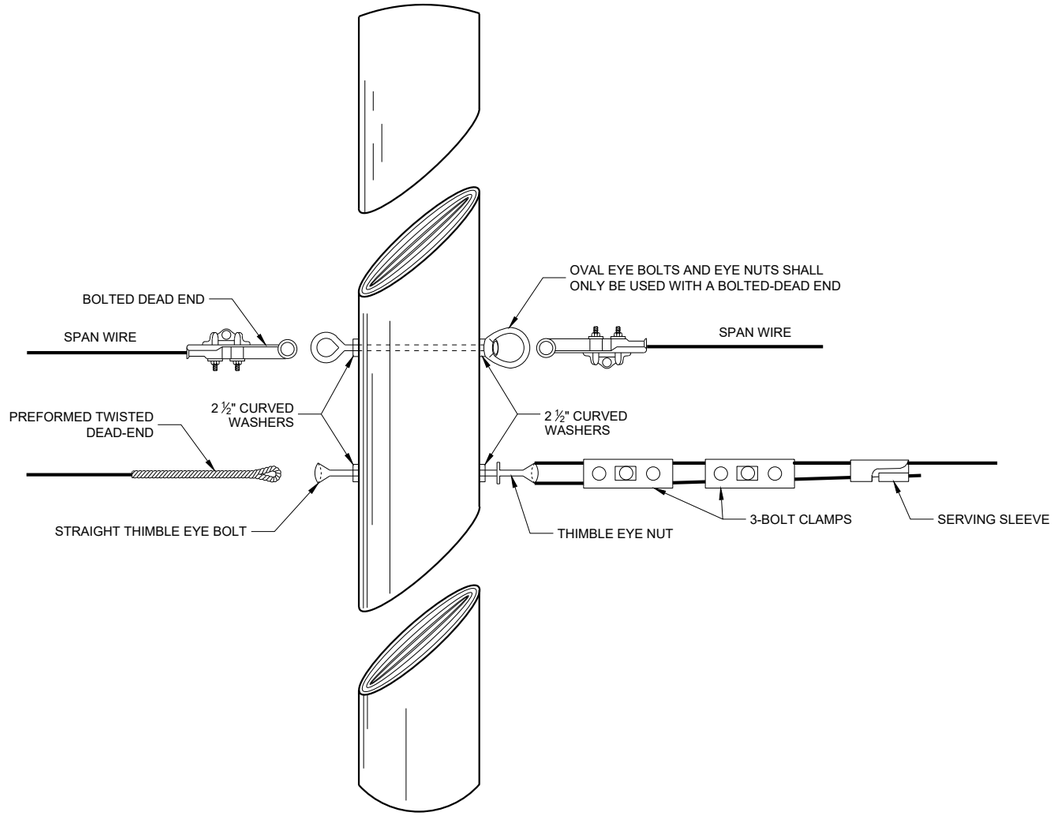

SPAN WIRE TEMPORARY TRAFFIC SIGNAL

STATE OF WISCONSIN
DEPARTMENT OF TRANSPORTATION

APPROVED

June 2015
DATE

/S/ Ahmet Demerbilek
ROADWAY STANDARDS DEVE ENGINEER

FHWA

6

SDD 09G01 - 4d

GENERAL NOTES

1. USE ¾" DRILL IN WOOD POLE TO PROVIDE FOR ⅝" BOLTS.
2. SAFETY LOOP REQUIRED ON EACH END OF ALL SPAN WIRES.

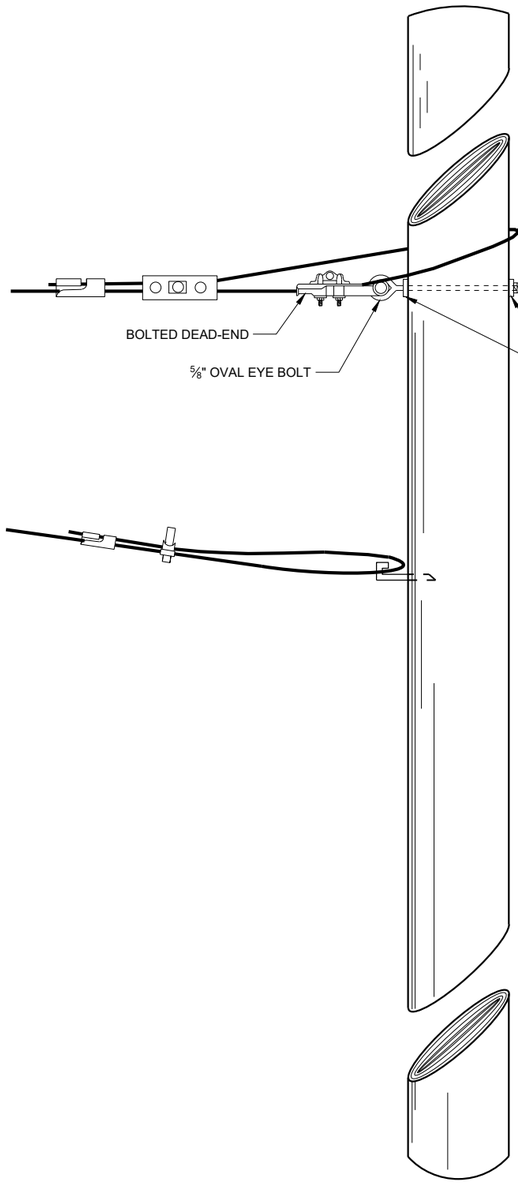

SPAN WIRE POLE

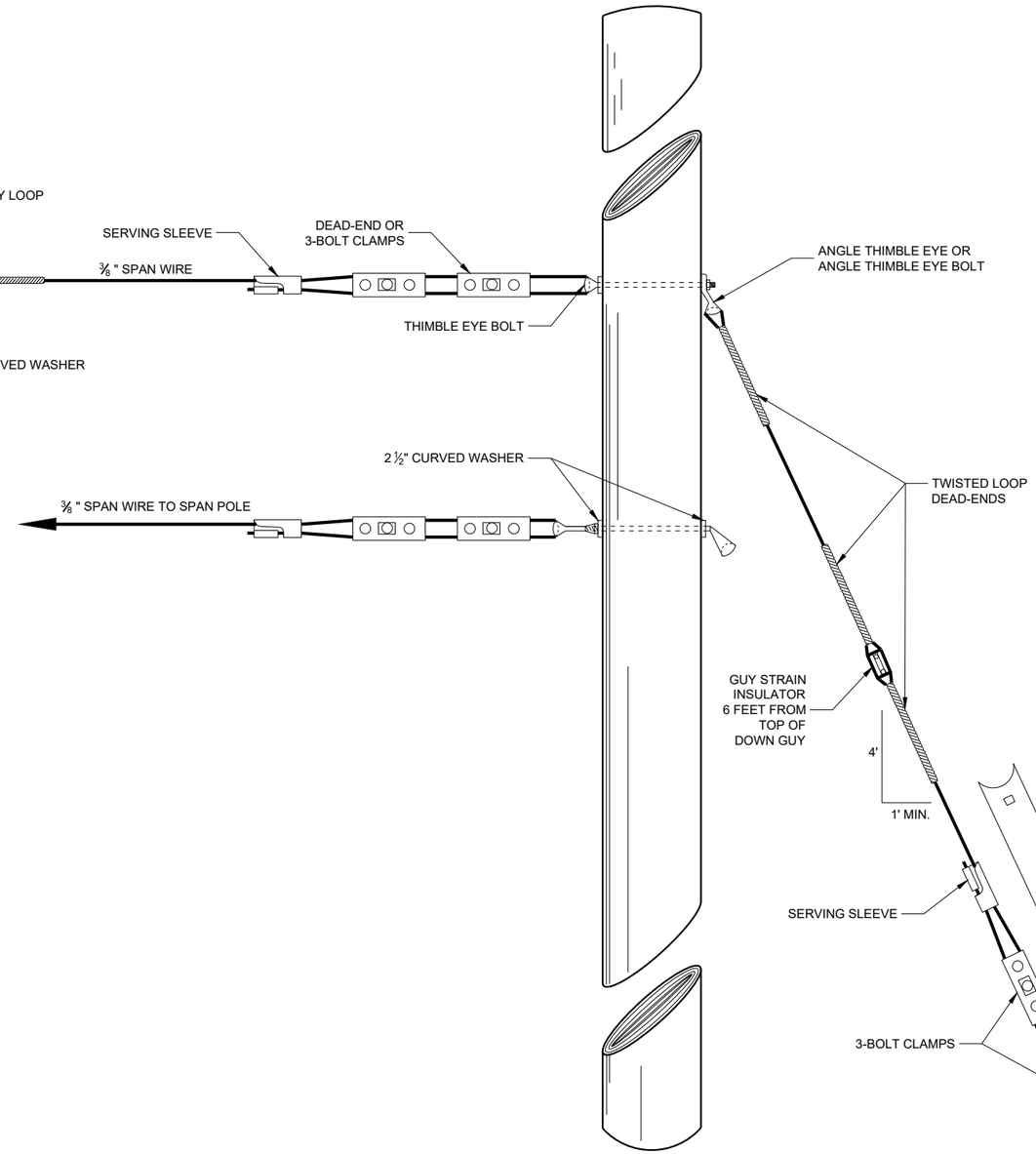

GUY POLE

TYPICAL DEAD-ENDINGS OR GUYING

SPAN WIRE TEMPORARY TRAFFIC SIGNAL

STATE OF WISCONSIN
DEPARTMENT OF TRANSPORTATION

APPROVED
June 2015 — DATE
/S/ Ahmet Demerbilek — ROADWAY STANDARDS DEVE ENGINEER
FHWA

6

SDD 09G01 - 4e

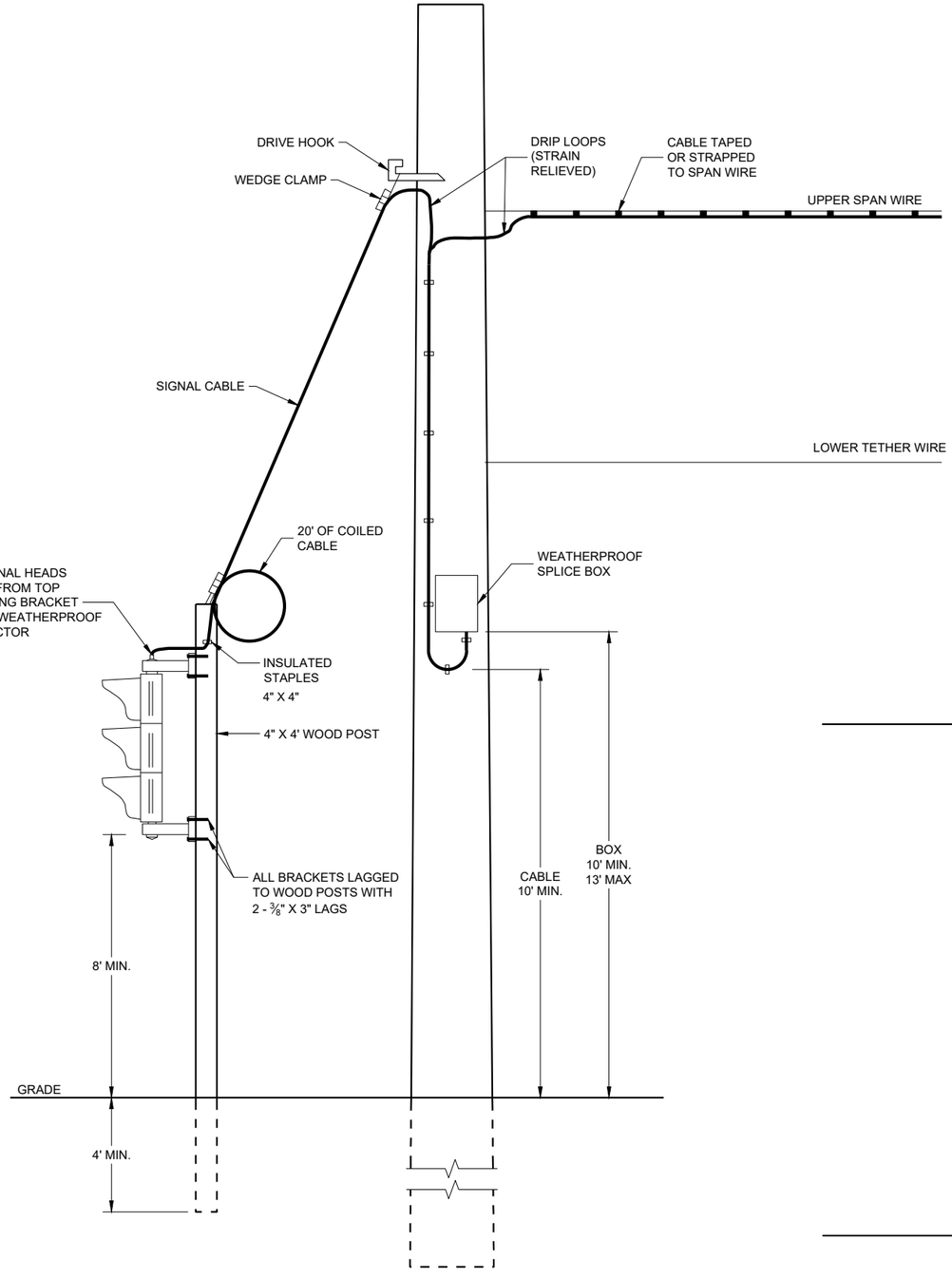

TYPICAL DROP TO TEMPORARY MOVEABLE SIGNAL

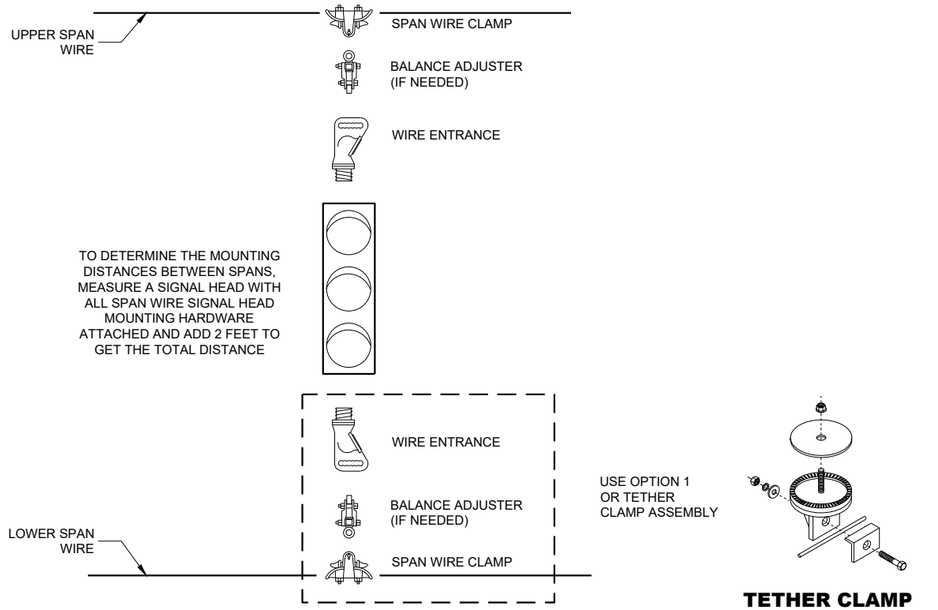

TYPICAL SPAN WIRE MOUNTING HARDWARE

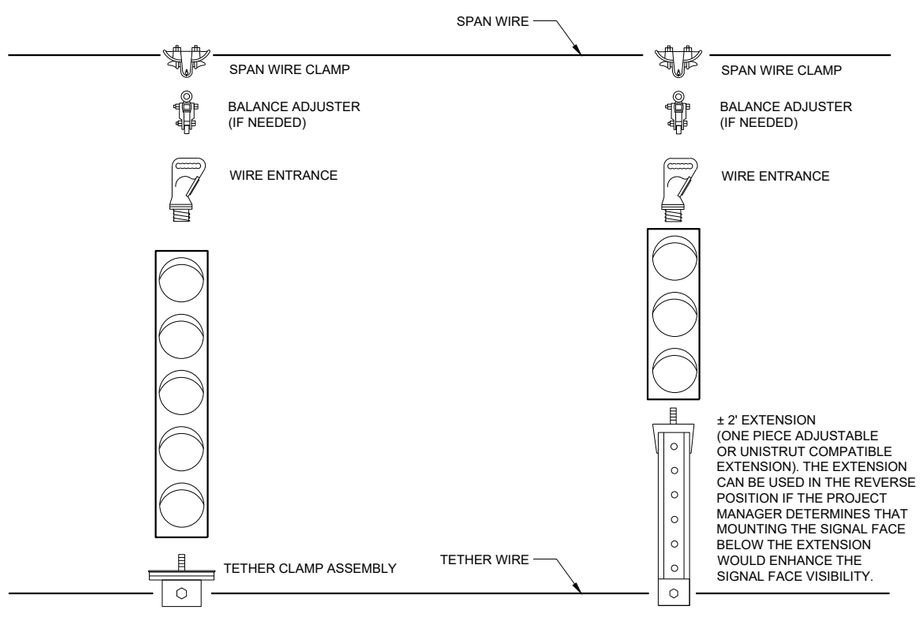

5 SECTION VERTICAL WITH 3 SECTION VERTICAL ON ONE SPAN WIRE

SPAN WIRE TEMPORARY TRAFFIC SIGNAL

STATE OF WISCONSIN
DEPARTMENT OF TRANSPORTATION

APPROVED
June 2015 — DATE
/S/ Ahmet Demerbilek — ROADWAY STANDARDS DEVE ENGINEER

FHWA

6

SDD 09G01 - 4f

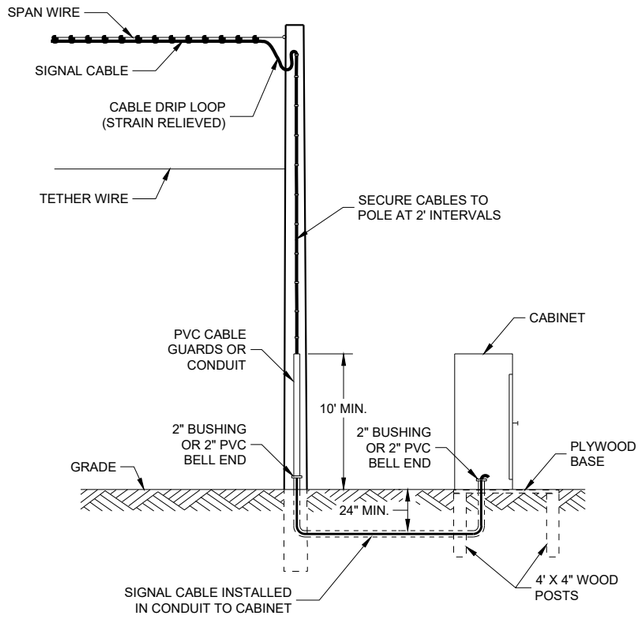

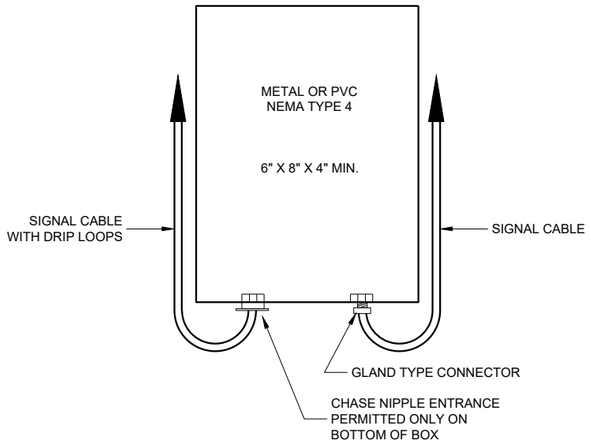

SPLICE BOX

TYPICAL SKID TYPE TEMPORARY

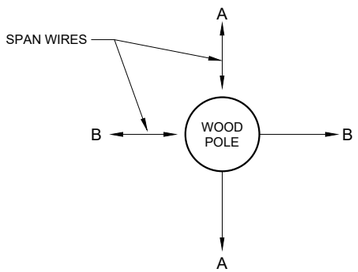

ALL DOWN OR SIDEWALK GUYS
SHALL BE INSTALLED IN THE
OPOSITE DIRECTION OF THE
STRAIN OF THE SPAN WIRE

CORNER POLES

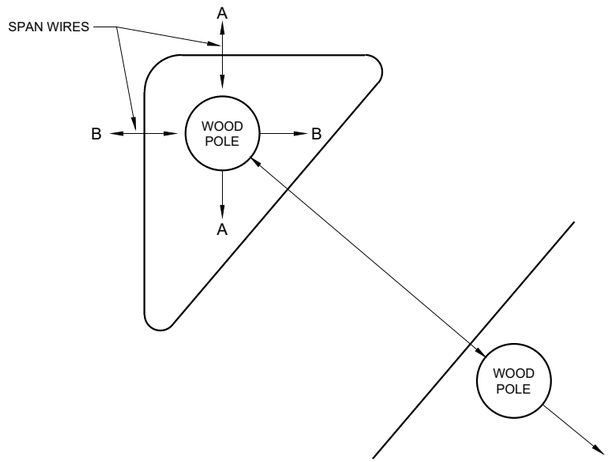

ISLAND POLES

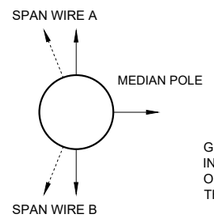

GUY AWAY FROM
INTERSECTION OR IN
OPPOSITE DIRECTION OF
THE SPAN LOADING

MEDIAN POLES

SPAN WIRE TEMPORARY TRAFFIC SIGNAL

STATE OF WISCONSIN
DEPARTMENT OF TRANSPORTATION

APPROVED

June 2015
DATE

/S/ Ahmet Demerbilek
ROADWAY STANDARDS DEVE ENGINEER

FHWA

SDD 09G01 - 4g

6

GENERAL NOTES

PROVIDE VAULT WITH OPEN BASE.

COVER SHALL HAVE A MINIMUM DESIGN LOAD OF 15,000 LBS AND SHALL LOCK.

ALL OPENINGS IN STRUCTURE MUST BE MACHINED AT TIME OF FABRICATION, OR PUNCH DRIVEN AT TIME OF PLACEMENT.

VAULTS SHALL BE OF ONE-PIECE CONSTRUCTION. TWO-PIECE/STACKABLE VAULTS WILL NOT BE PERMITTED.

FIELD PLACEMENT OF COMMUNICATIONS VAULTS SHALL BE AS DIRECTED BY THE ENGINEER.

FIBER TRACER MARKER POSTS SHALL BE CONSTRUCTED WITH HIGH-IMPACT PLASTIC MATERIAL WHICH IS FADE RESISTANT AND UV STABLE. ALL HARDWARE SHALL BE STAINLESS STEEL AND CONTAIN A MINIMUM OF FIVE STANDARD TERMINALS.

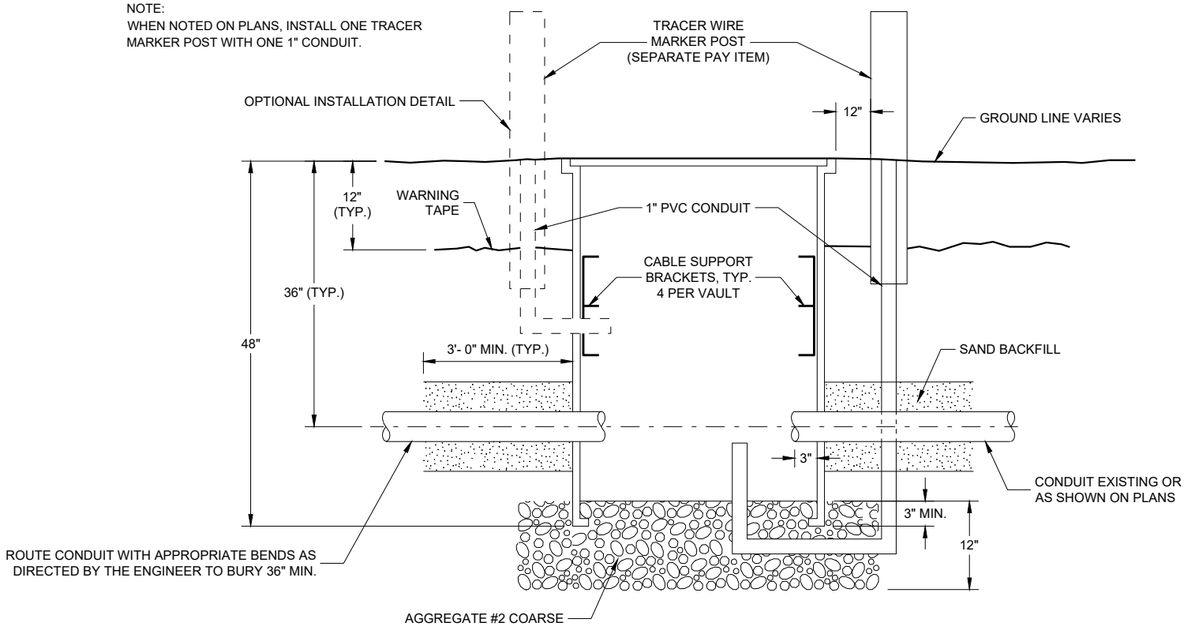

SECTION A - A

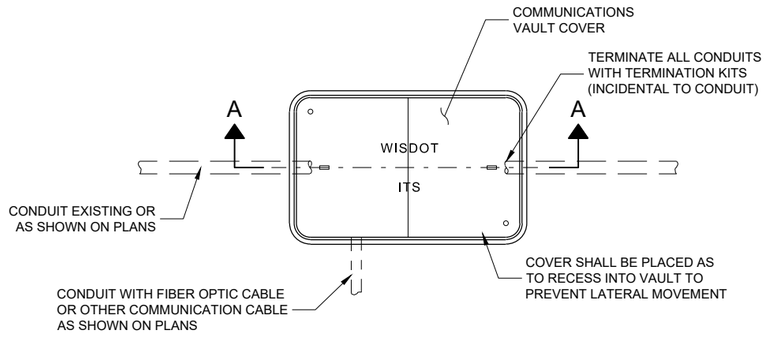

PLAN VIEW

COMMUNICATIONS VAULT TYPE 1

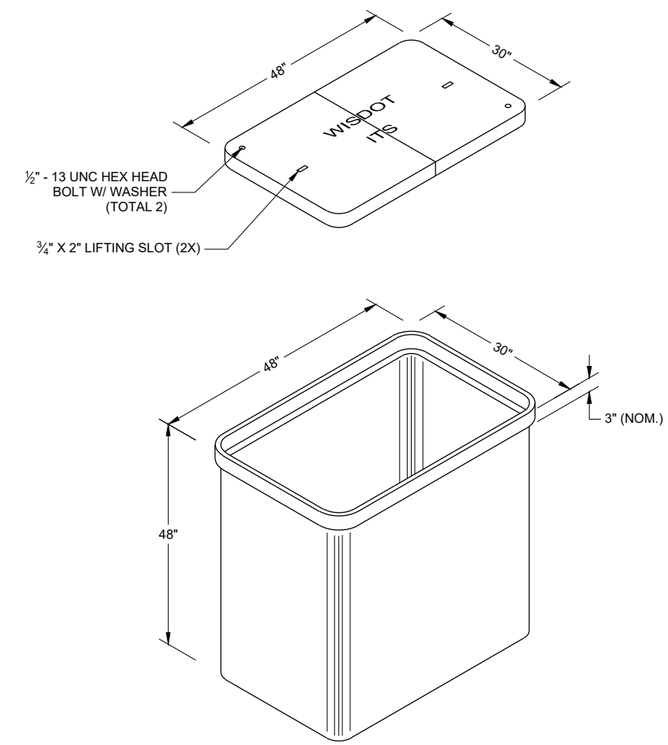

ISOMETRIC VIEW

COMMUNICATION VAULT TYPE 1

STATE OF WISCONSIN
DEPARTMENT OF TRANSPORTATION

APPROVED
May 2017 /S/ Ahmet Demirbilek
DATE STATE ELECTRICAL ENGI
FHWA

6

SDD 09H09 - 02

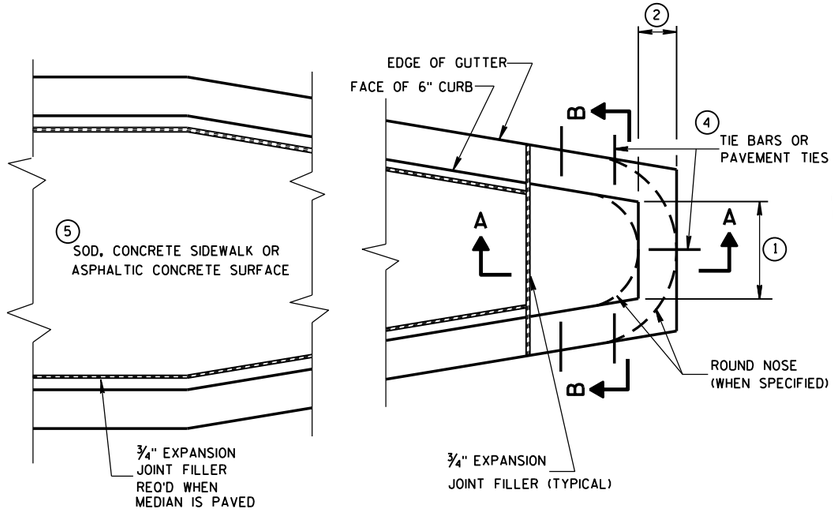

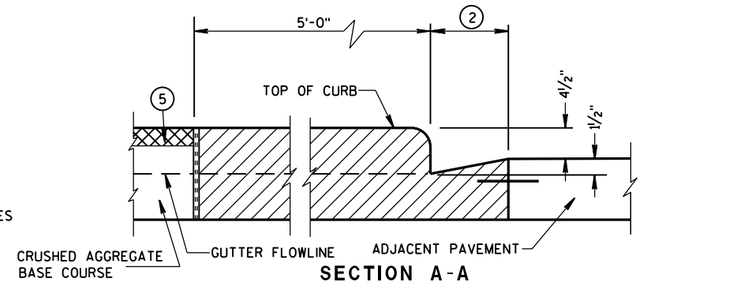

CONCRETE MEDIAN BLUNT NOSE DETAIL

GENERAL NOTES

DETAILS OF CONSTRUCTION, MATERIALS AND WORKMANSHIP NOT SHOWN ON THIS DRAWING SHALL CONFORM TO THE PERTINENT REQUIREMENTS OF THE STANDARD SPECIFICATIONS AND THE APPLICABLE SPECIAL PROVISIONS.

(1) SEE PLAN FOR MEDIAN NOSE WIDTH AND RADIUS (FOR ROUND NOSE ALTERNATE).

(2) WIDTH OF GUTTER TO MATCH EXISTING ADJACENT GUTTER OR AS SPECIFIED ELSEWHERE IN THE PLAN.

(3) DEPTH EQUAL TO ADJACENT PAVEMENT. ADJACENT PAVEMENT STRUCTURE DETAILS ARE SHOWN ON THE PLAN. TYPICAL OPTIONS ARE:

(1) NEW OR EXISTING CONCRETE PAVEMENT.

(2) ASPHALTIC CONCRETE PAVEMENT OVER NEW OR EXISTING CONCRETE BASE COURSE.

(3) ASPHALTIC CONCRETE PAVEMENT OVER CRUSHED AGGREGATE BASE COURSE.

(4) TIE BARS OR PAVEMENT TIES REQUIRED IN NEW CONCRETE PAVEMENT OR CONCRETE BASE COURSE. TIE BARS SHALL BE NO. 4 X 2'-0" SPACED AT 2'-0" C-C.

PAVEMENT TIES REQUIRED IN EXISTING CONCRETE BASE COURSE. PAVEMENT TIES SHALL BE NO. 6 X 1'-0" SPACED AT 3'-0" C-C INSTALLED ON A HORIZONTAL SKEW OF 6:1. THE DIRECTION OF SKEW SHALL ALTERNATE AFTER EVERY ONE OR TWO BARS.

(5) SURFACE TYPE AND DETAILS ARE SHOWN ELSEWHERE IN THE PLAN.

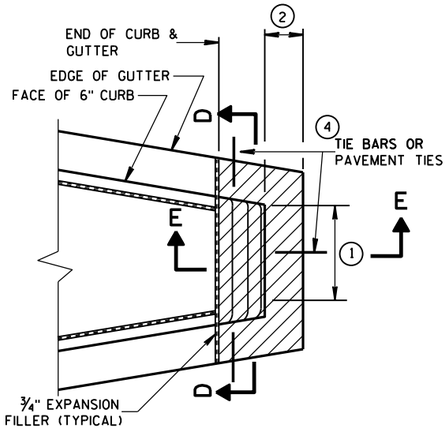

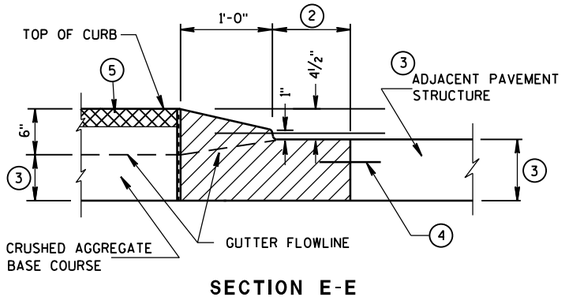

SECTION E-E

CONCRETE MEDIAN SLOPED NOSE TYPE 2

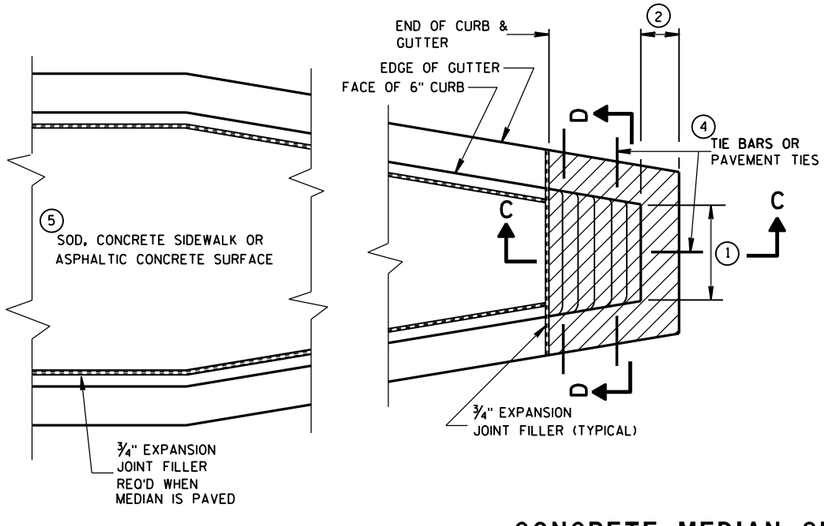

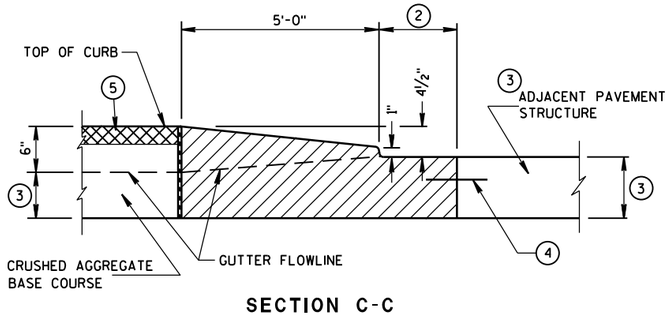

SECTION C-C

CONCRETE MEDIAN SLOPED NOSE TYPE 1

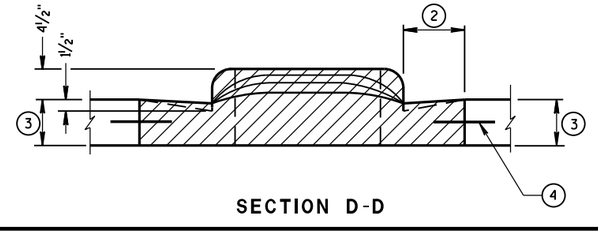

SECTION D-D

CONCRETE MEDIAN NOSE

STATE OF WISCONSIN
DEPARTMENT OF TRANSPORTATION

APPROVED
6/8/2006
DATE
/S/ Jerry H. Zogg
ROADWAY STANDARDS DEVELOPMENT ENGINEER
FHWA

6

S.D.D. 11 B 2-2

6

S.D.D. 11 B 2-2

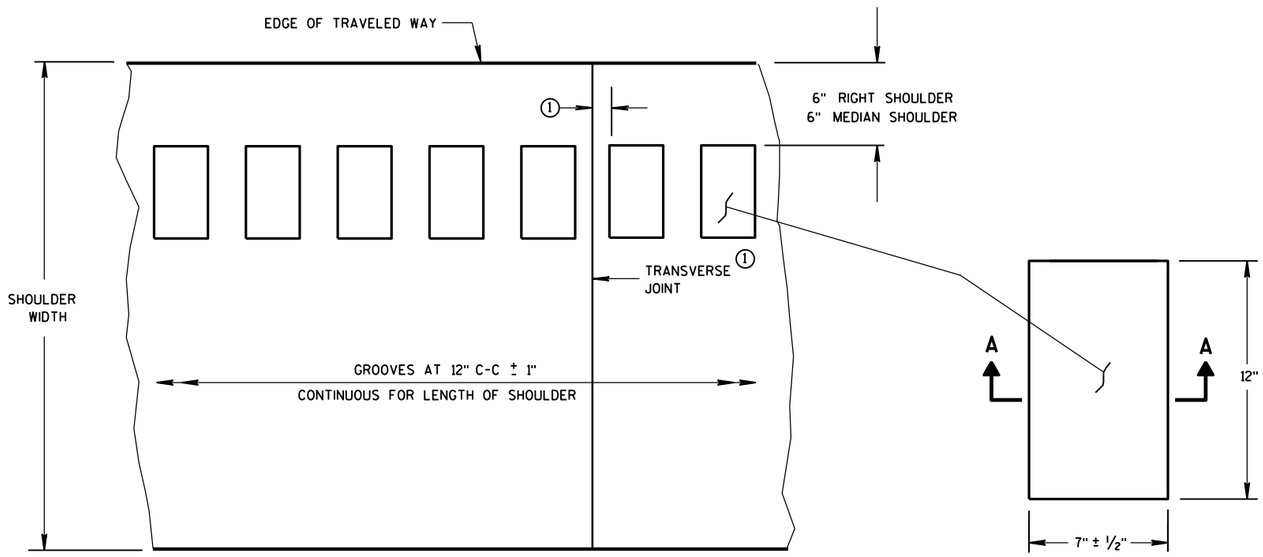

PLAN VIEW
SHOULDER WITH GROOVES

PLAN VIEW
(SINGLE GROOVE)

PLACEMENT DETAIL FOR MILLED RUMBLE STRIP

GENERAL NOTES

DETAILS OF CONSTRUCTION SHOWN ON THIS DRAWING SHALL CONFORM TO THE PERTINENT REQUIREMENTS OF THE STANDARD SPECIFICATIONS AND APPLICABLE SPECIAL PROVISIONS.

RUMBLE STRIPS ON EXPRESSWAYS

DO NOT INSTALL RUMBLE STRIPS ACROSS SIDE ROAD INTERSECTIONS, COMMERCIAL DRIVEWAYS, PRIVATE DRIVEWAYS OR ADJACENT TO RIGHT TURN LANES, LEFT TURN LANES, TURN LANE TAPERS, BRIDGE DECKS, BRIDGE APPROACHES, OR 100 FEET IN ADVANCE OF RAILROAD CROSSING. THE ATTACHED STANDARD DETAIL DRAWING SHOWS THE LOCATION OF THE RUMBLE STRIPS AT INTERCHANGE AREAS.

(1) CONCRETE PAVEMENT - RUMBLE STRIPS SHALL BE A MINIMUM OF 6" AWAY FROM TRANSVERSE JOINTS.

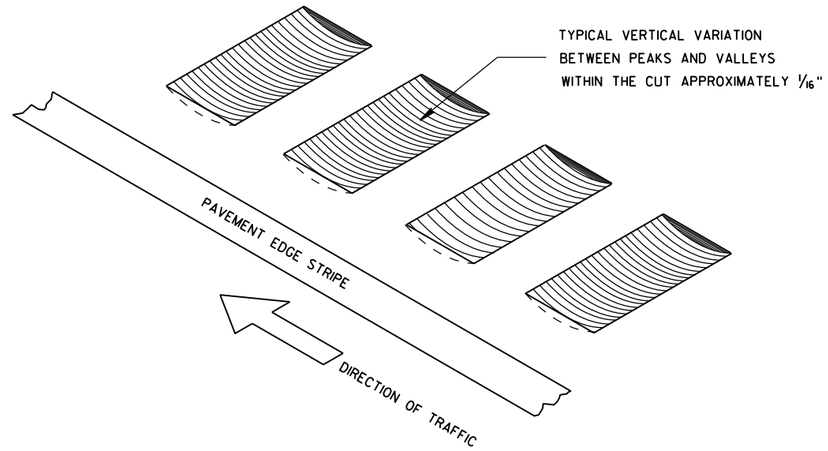

ISOMETRIC

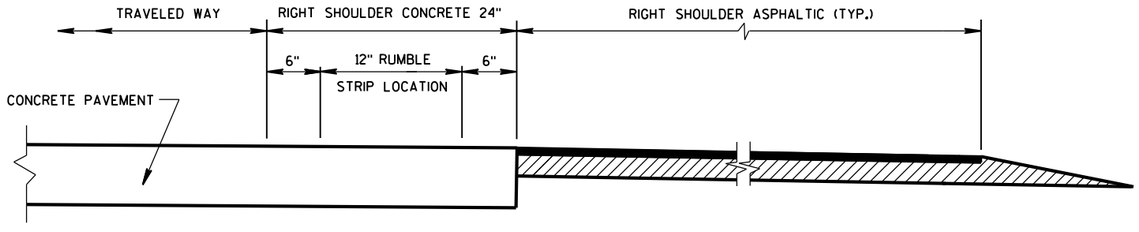

SECTION VIEW
CONCRETE PAVEMENT EXTENDS INTO RIGHT SHOULDER)

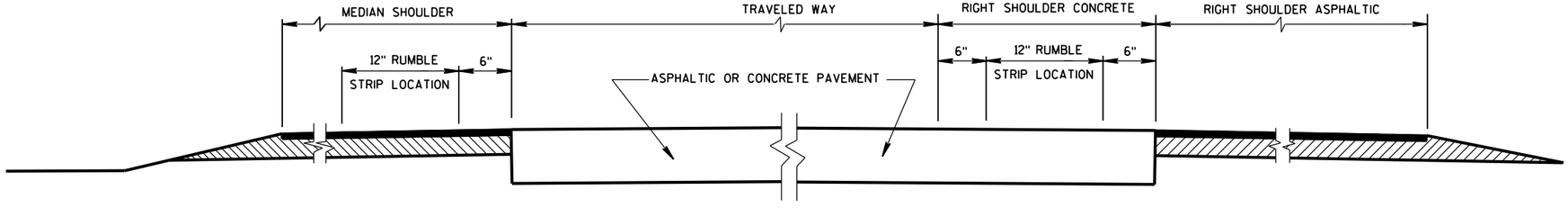

SECTION VIEW

TYPICAL LOCATIONS OF SHOULDER RUMBLE STRIPS IN RURAL DIVIDED HIGHWAYS

(ONE ROADWAY IS SHOWN)

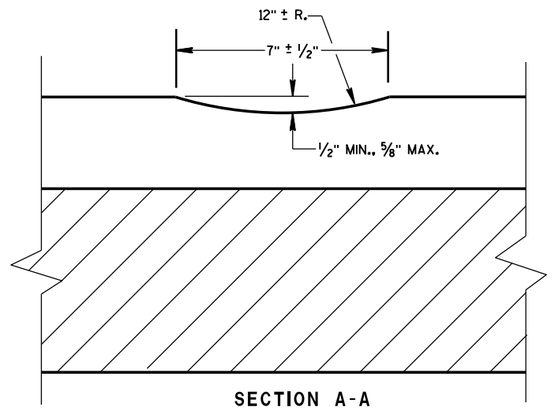

SECTION A-A

SHOULDER RUMBLE STRIP, MILLING

STATE OF WISCONSIN
DEPARTMENT OF TRANSPOI

6

S.D.D. 13 A 5-5a

6

S.D.D. 13 A 5-5a

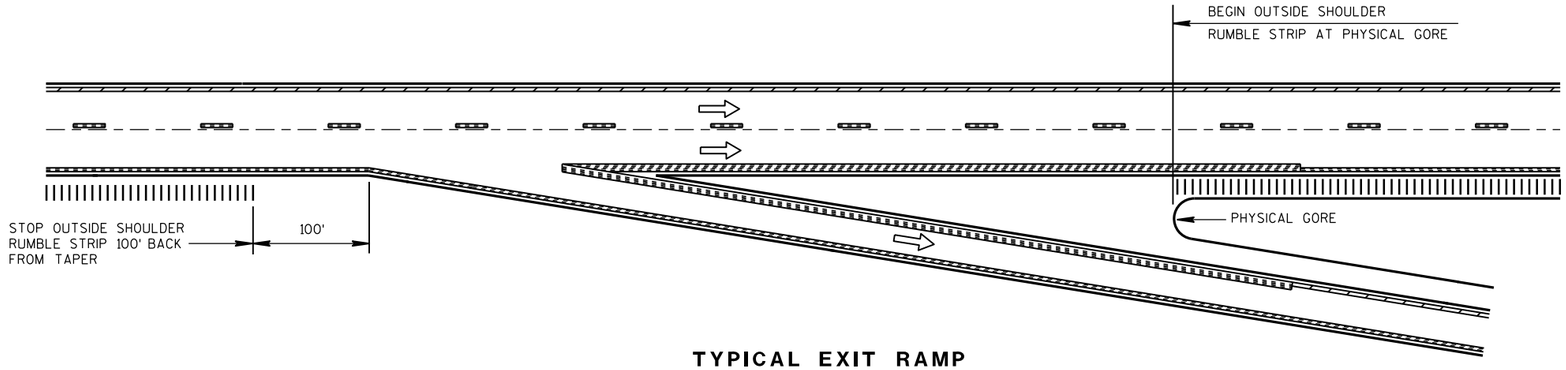

TYPICAL EXIT RAMP

NOTES:

NO RUMBLE STRIP ON EXIT, DIRECTIONAL, OR ENTRANCE RAMPS, EXCEPT NEAR THE ENTRANCE TAPER END AND ALONG THE PARALLEL RAMP AREA AS SHOWN.

PAVEMENT MARKING DETAILS AND SPECIFICATIONS ARE PROVIDED ELSEWHERE IN THE CONTRACT.

NOTE:
ARROW SYMBOL (⇨)
SHOWS DIRECTION OF TRAVEL

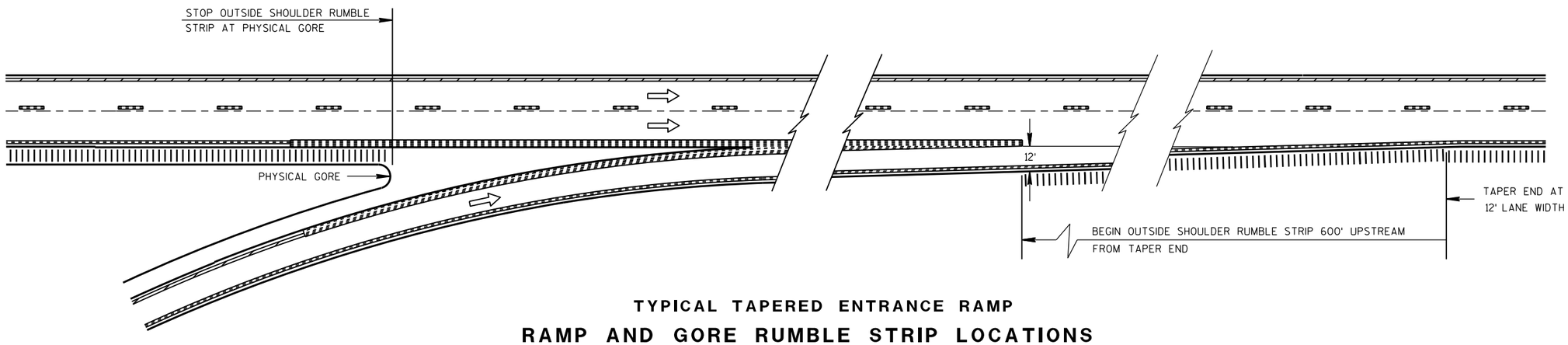

TYPICAL TAPERED ENTRANCE RAMP

RAMP AND GORE RUMBLE STRIP LOCATIONS

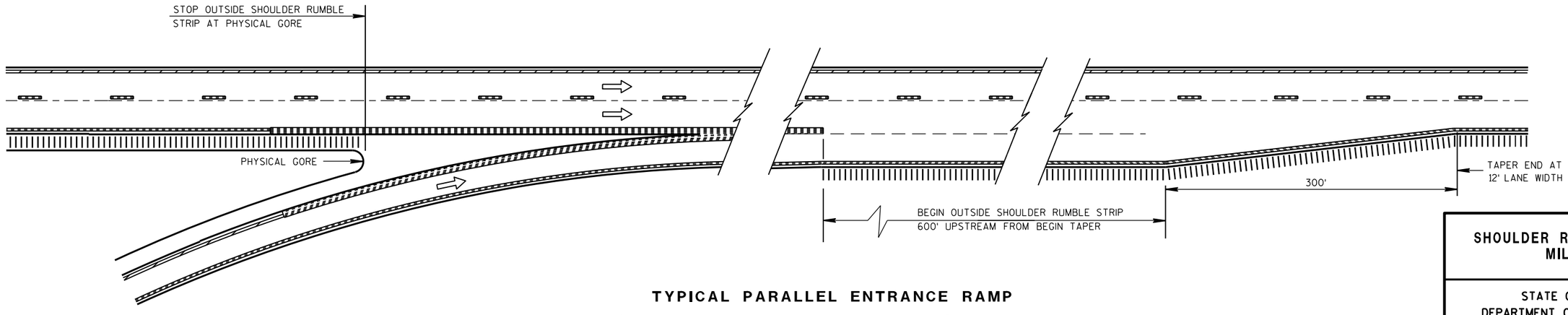

TYPICAL PARALLEL ENTRANCE RAMP

RAMP AND GORE RUMBLE STRIP LOCATIONS

SHOULDER RUMBLE STRIP, MILLING

STATE OF WISCONSIN
DEPARTMENT OF TRANSPORTATION

APPROVED

12/17/2012
DATE

/S/ Jerry H. Zoga
ROADWAY STANDARDS ENGINEER

FHWA

6

S.D.D. 13 A 5-5b

6

S.D.D. 13 A 5-5b

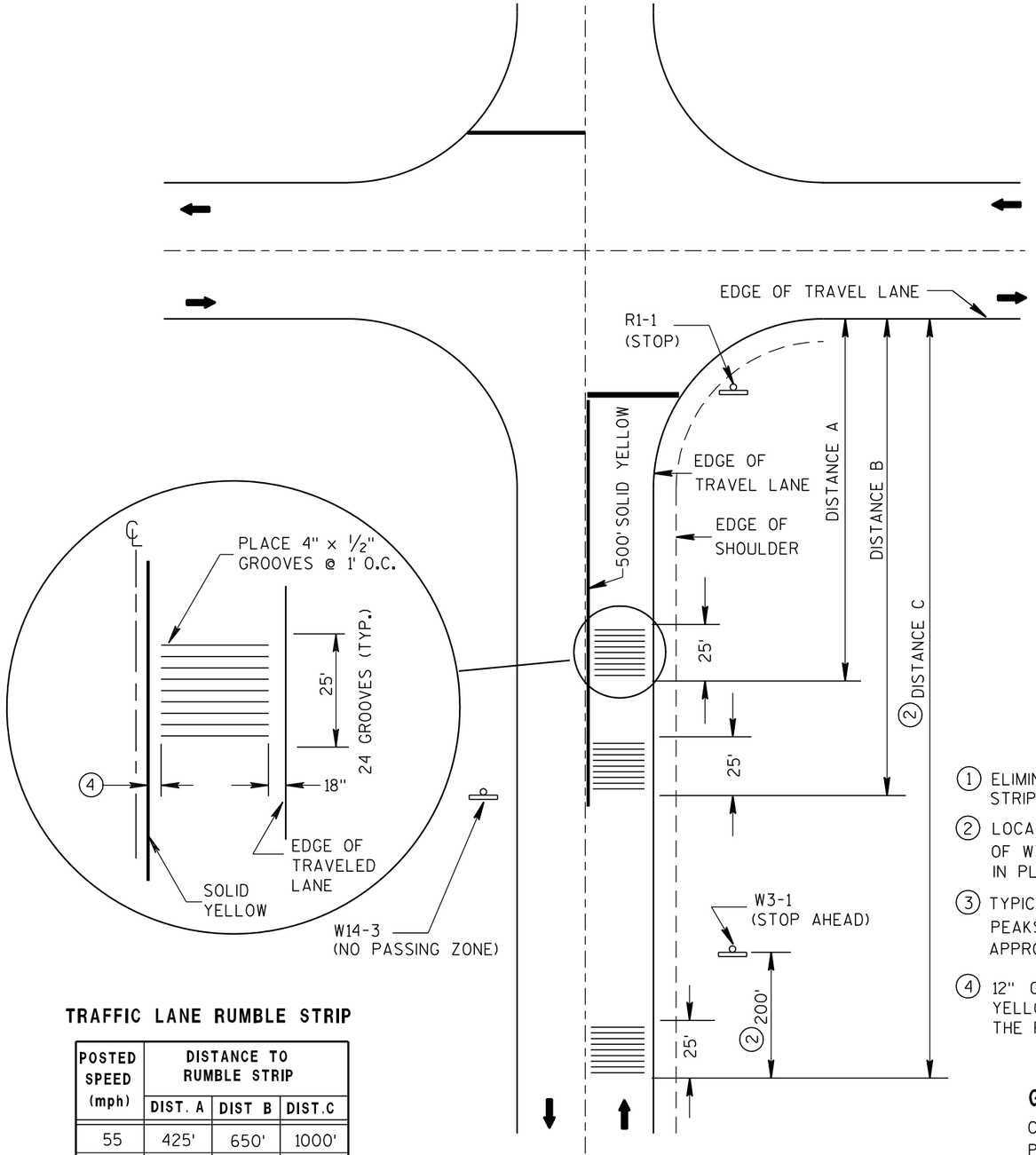

ARROW SYMBOL (➡) SHOWS DIRECTION OF TRAVEL

PLAN VIEW

RUMBLE STRIP LOCATION

TRAFFIC LANE RUMBLE STRIP

POSTED SPEED (mph)	DISTANCE TO RUMBLE STRIP		
	DIST. A	DIST B	DIST.C
55	425'	650'	1000'
50	325'	450'	800'
45	275'	400'	650'
40	225'	(1)	550'
35	175'	(1)	475'
≤ 30	125'	(1)	425'

(1) ELIMINATE THE MIDDLE SET OF RUMBLE STRIPS.

(2) LOCATE RUMBLE STRIP 200' IN ADVANCE OF W3-1 SIGN AS SHOWN. IF W3-1 IS NOT IN PLACE, USE DISTANCE C.

(3) TYPICAL VERTICAL VARIATION BETWEEN PEAKS AND VALLEYS WITHIN THE CUT APPROXIMATELY 1/16"

(4) 12" CLEAR BETWEEN THE SOLID YELLOW LINE AND THE EDGE OF THE RUMBLE.

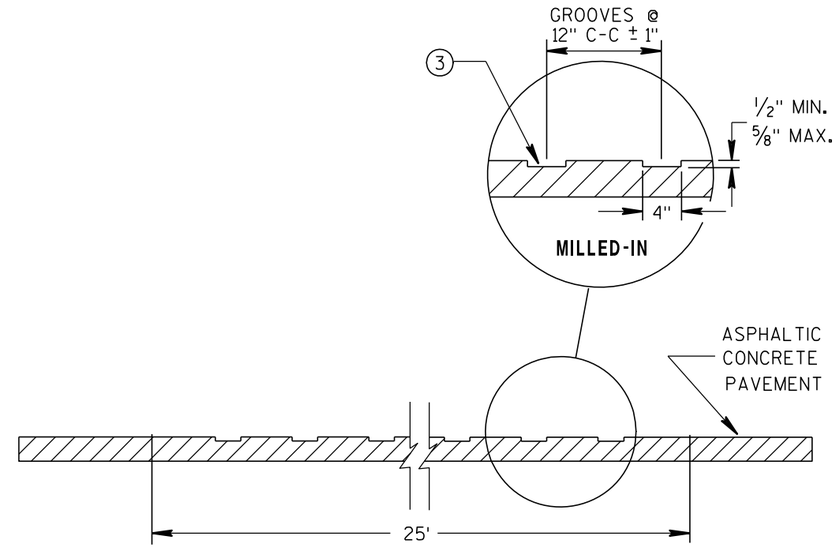

ELEVATION VIEW

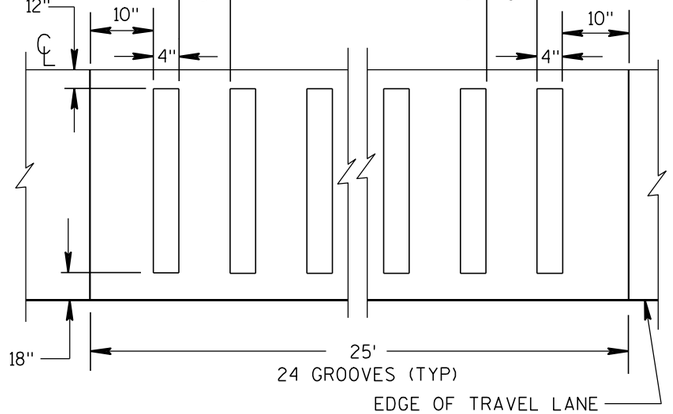

PLAN VIEW

ASPHALTIC PAVEMENT MILLED-IN

GENERAL NOTES

CONTRACTOR SHALL CONFIRM RUMBLE STRIP LOCATION WITH THE ENGINEER PRIOR TO INSTALLATION. THE ENGINEER MAY MODIFY THE RUMBLE STRIP LOCATION AS FIELD CONDITIONS DICTATE.

WHEN ASPHALTIC PAVEMENT IS NEW IN THE RUMBLE AREA THE CONTRACTOR SHALL ALLOW THE PAVEMENT TO CURE A MINIMUM OF 7 DAYS PRIOR TO RUMBLE INSTALLATION.

PAVEMENT MARKING AND SIGNING DETAILS AND SPECIFICATIONS ARE PROVIDED ELSEWHERE IN THE CONTRACT.

ASPHALTIC RUMBLE STRIPS AT INTERSECTION

STATE OF WISCONSIN
DEPARTMENT OF TRANSPORTATION

APPROVED

8/17/2011
DATE

/S/ Jerry H. Zogg
ROADWAY STANDARDS | 425
ENGINEER

FHWA

6

S.D.D. 13 A 8-1

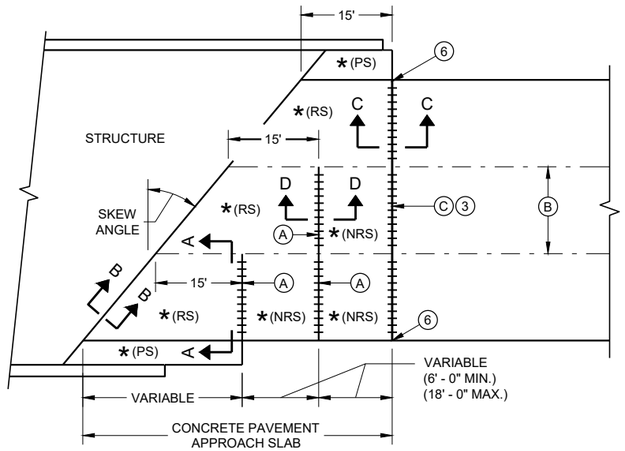

SKEWED APPROACH
(PAVEMENT MORE THAN TWO LANES)

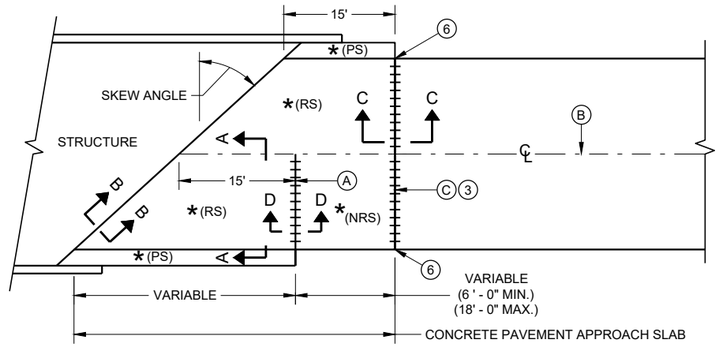

SKEWS > 20°
(PAVEMENT WIDTH ≤ 30')

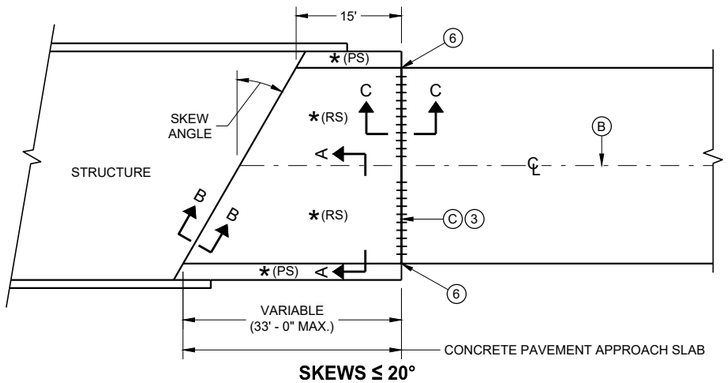

SKEWS ≤ 20°
(PAVEMENT WIDTH ≤ 30')

APPROACH SLAB AND ADJACENT PAVEMENT

* (RS) = REINFORCED CONCRETE SLAB

* (PS) = PAVED CONCRETE SHOULDER OR CONCRETE DRAINAGE SLAB

* (NRS) - NON - REINFORCED CONCRETE SLAB

*** STANDARD DOWEL BAR DIAMETER (SEE SDD 13C11 AND SDD 13C13)

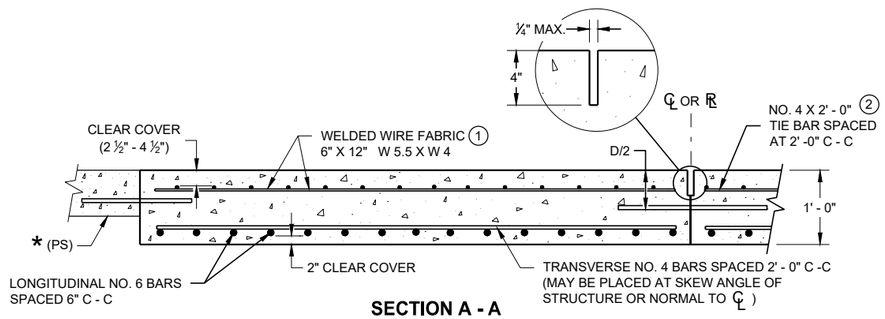

SECTION A - A
REINFORCEMENT POSITIONING DETAIL

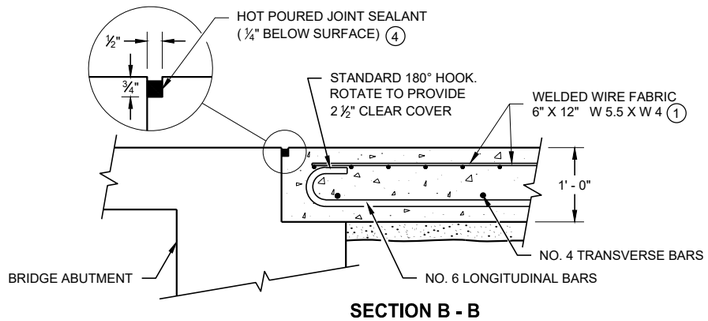

SECTION B - B
BEND DETAIL
BOTTOM REINFORCEMENT

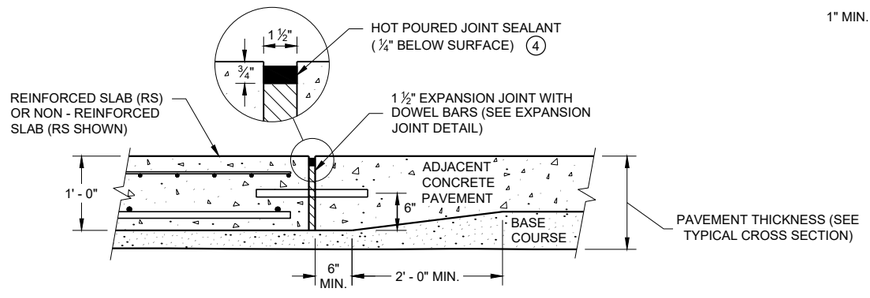

SECTION C - C
TRANSITION DETAIL
APPROACH SLAB TO ADJACENT PAVEMENT

GENERAL NOTES

THE CONTRACTOR MAY SPLICE NO. 6 BARS IN THE APPROACH SLAB FOR SKEWED STRUCTURES ONLY. STAGGER SPLICES WITH A MAXIMUM OF ONE SPLICE PER BAR. THE LENGTH OF LAP IS 20 INCHES.

TACK WELD DOWEL BARS TO THE BASKETS ON ALTERNATE ENDS.

(1) THE CONTRACTOR MAY USE NO. 4 BARS SPACED AT 2' - 0 " C - C IN BOTH THE LONGITUDINAL AND TRANSVERSE DIRECTIONS FOR TOP REINFORCEMENT AS AN ALTERNATIVE TO THE WELDED WIRE FABRIC.

(2) THE CONTRACTOR MAY OMIT THE BARS BETWEEN REINFORCED SLABS WHERE SLAB REINFORCEMENT BARS EXTEND ACROSS THE CENTERLINE OR REFERENCE LINE.

(3) DO NOT CONSTRUCT AN EXPANSION JOINT OR INSTALL DOWEL BARS WHEN ABUTTING AN HMA PAVEMENT.

(4) USE A JOINT SEALANT CONFORMING TO STANDARD SPECIFICATION 415.2.6.

(5) PLACE EXPANSION CAP ON THE END OF THE DOWEL THAT IS NOT TACK WELDED TO THE BASKET. DO NOT FORCE DOWEL BAR PAST THE DOWEL STOP.

(6) EXTEND EXPANSION JOINT THROUGH ANY ADJACENT TIED CONCRETE.

(A) STANDARD CONTRACTION JOINT NORMAL TO ℄ OR ℞.

(B) STANDARD LONGITUDINAL JOINT WITH TIE BARS.

(C) 1 ½" EXPANSION JOINT WITH DOWEL BARS NORMAL TO ℄ OR ℞ .

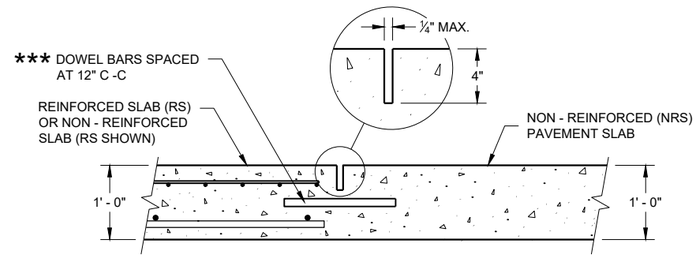

SECTION D - D
CONTRACTION JOINT

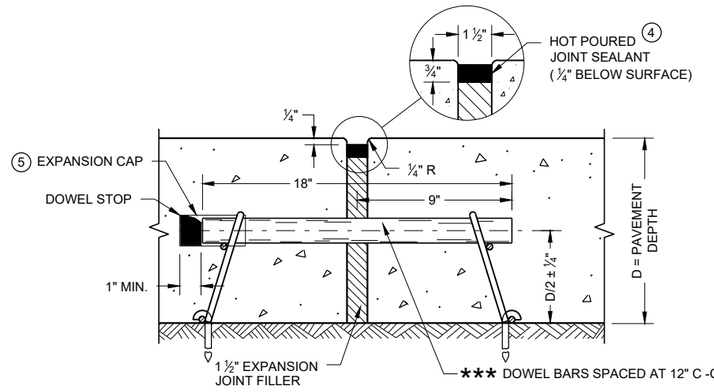

EXPANSION JOINT DETAIL

CONCRETE PAVEMENT APPROACH SLAB

STATE OF WISCONSIN
DEPARTMENT OF TRANSPORTATION

APPROVED
November 2018
DATE

/S/ Peter Kemp, P.E.
PAVEMENT SUPERVISOR

FHWA

6

SDD 13B02 - 09a

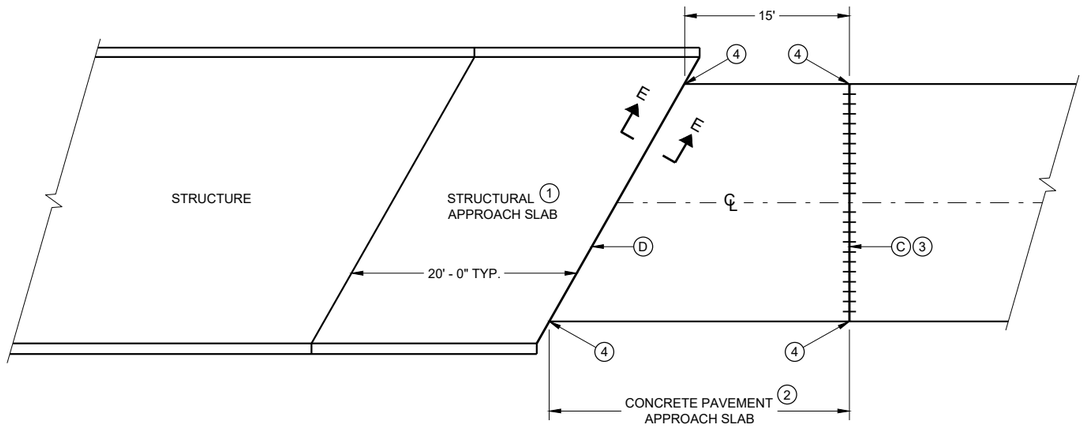

BRIDGE APPROACHES

GENERAL NOTES

ALL PROJECTS THAT INVOLVE A STRUCTURAL APPROACH SLAB WILL ALSO HAVE A CONCRETE PAVEMENT APPROACH SLAB.

(1) SEE BRIDGE PLAN.

(2) CONFORM TO SDD 13B02 SHEET A FOR CONCRETE PAVEMENT APPROACH SLAB DETAILS

(3) DO NOT CONSTRUCT AN EXPANSION JOINT OR INSTALL DOWEL BARS WHEN ABUTTING AN HMA PAVEMENT.

(4) EXTEND EXPANSION JOINT THROUGH ANY ADJACENT TIED CONCRETE.

(C) 1 ½" EXPANSION JOINT WITH DOWEL BARS NORMAL TO ℄ OR ℞.

(D) 1 ½" EXPANSION JOINT (NO DOWELS)

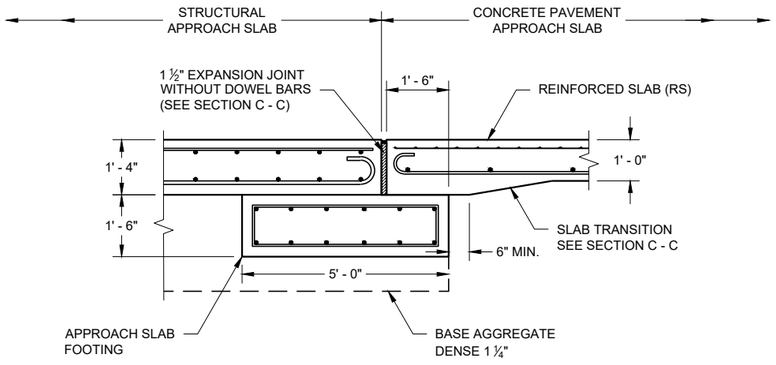

SECTION E - E
FOOTING DETAIL
STRUCTURAL APPROACH SLAB TO CONCRETE BRIDGE APPROACH

STRUCTURAL APPROACH SLAB AND CONCRETE PAVEMENT APPROACH SLAB

STATE OF WISCONSIN
DEPARTMENT OF TRANSPORTATION

APPROVED
November 2018
DATE
/S/ Peter Kemp P.E.
PAVEMENT SUPERVIS

FHWA

6

SDD 13B02 - 09b

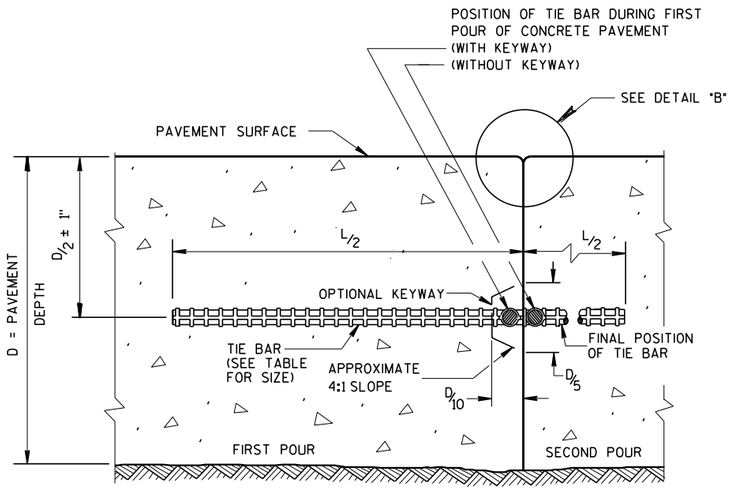

CONSTRUCTION JOINT

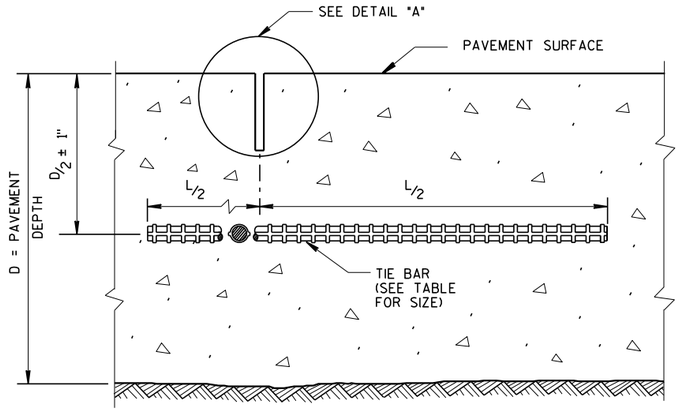

SAWED JOINT

GENERAL NOTES

CREATE A LONGITUDINAL JOINT FOR PAVEMENT WIDTHS GREATER THAN 15 FEET.

CORRELATE LONGITUDINAL JOINTS WITH LANE LINES WHEN POSSIBLE.

(1) ANCHOR TIE BARS INTO DRILLED HOLES WITH AN EPOXY.

(2) PAVEMENT THAT WAS IN PLACE PRIOR TO THE CONTRACT.

PLAN VIEW

SECTION A-A

LONGITUDINAL CONSTRUCTION JOINT TIE BARS ANCHORED INTO EXISTING PAVEMENT

DETAIL "A"

DETAIL "B"

DETAIL "C"

TIE BAR TABLE

PAVEMENT DEPTH (D)	TIE BAR SIZE	TIE BAR LENGTH (L)	MAX. TIE BAR SPACING
< 10 1/2"	NO. 4	30"	36"
≥ 10 1/2"	NO. 5	36"	36"
	NO. 4 *	30"	24" **

* SUBSTITUTE BENT BARS AT LONGITUDINAL JOINTS WHEN EQUIPMENT LIMITATIONS DURING CONSTRUCTION WARRANT (e.g. AUXILIARY LANES OR TURN LANES)

** CONFORM TO 15" MINUMUM SPACING FROM TRANSVERSE JOINTS; SPACING BETWEEN TIE BARS WILL BE 30" AT TRANSVERSE JOINTS.

PLAN VIEW
SHOWING LOCATION OF TIE BARS

CONCRETE PAVEMENT LONGITUDINAL JOINTS AND TIES

STATE OF WISCONSIN
DEPARTMENT OF TRANSPORTATION

APPROVED
March 2018
DATE
/S/ Peter Kemp PE
PAVEMENT SUPE
FHWA

6

S.D.D. 13 C 1-19

6

S.D.D. 13 C 1-19

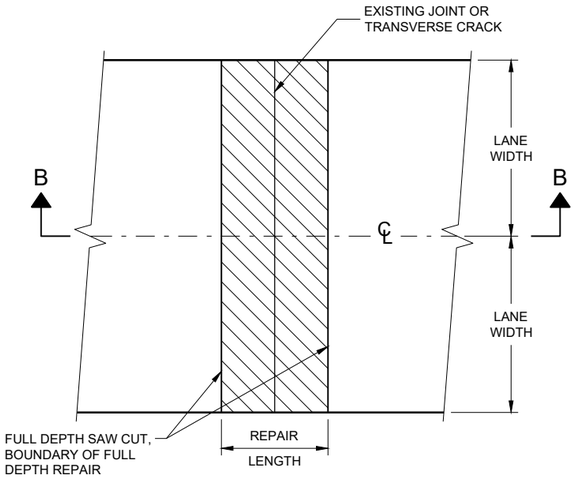

PLAN VIEW
(DOUBLE LANE REPAIR)

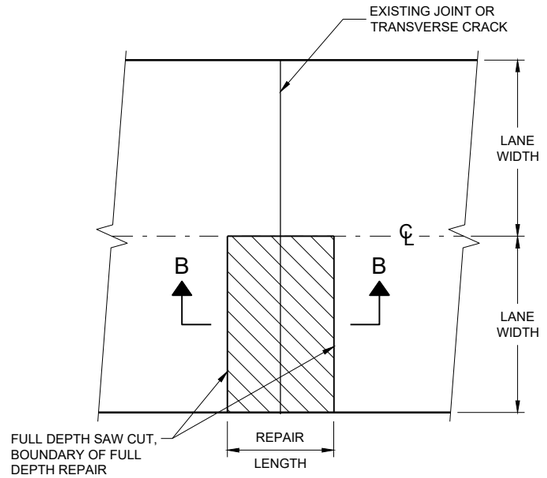

PLAN VIEW
(SINGLE LANE REPAIR)

GENERAL NOTES

SAW CUT, DRILL, AND LIFT OUT EXISTING CONCRETE PAVEMENT WITHIN THE BOUNDARIES OF CONCRETE REPAIR AREAS. THE CONTRACTOR MAY MAKE ADDITIONAL SAW CUTS INSIDE THE REPAIR LIMITS TO REDUCE WEIGHT AND SIZE OF CONCRETE PIECES.

PROVIDE A 6 FOOT MINIMUM DISTANCE FROM BOUNDARIES OF CONCRETE REPAIR AREA TO ADJACENT TRANSVERSE JOINT OR CRACK.

THE LENGTH OF THE REPAIRS MAY VARY FROM THE DIMENSIONS SHOWN IF THE EXISTING CONCRETE PAVEMENT IS NON-DOWELED AND THE PAVEMENT IS TO BE OVERLAID AFTER REPAIRING.

(1) DOWEL BARS MAY NOT BE PRESENT.

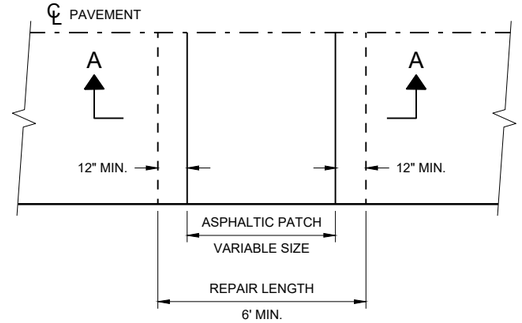

PLAN VIEW

FULL DEPTH CONCRETE PAVEMENT REMOVAL

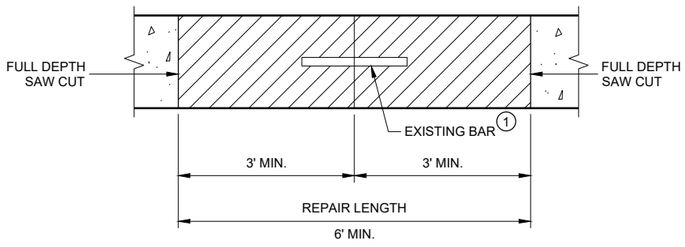

SECTION B - B
CONCRETE REMOVAL

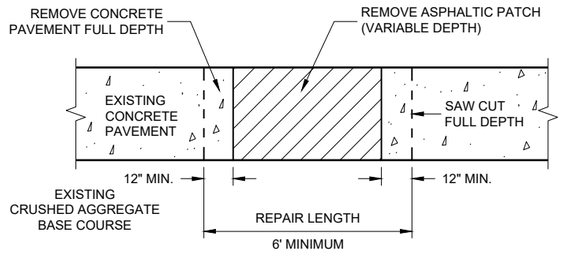

SECTION A - A

HMA PATCH REMOVAL

CONCRETE PAVEMENT
REPAIR AND REPLACEMENT

STATE OF WISCONSIN
DEPARTMENT OF TRANSPORTATION

6

SDD13C09 - 16a

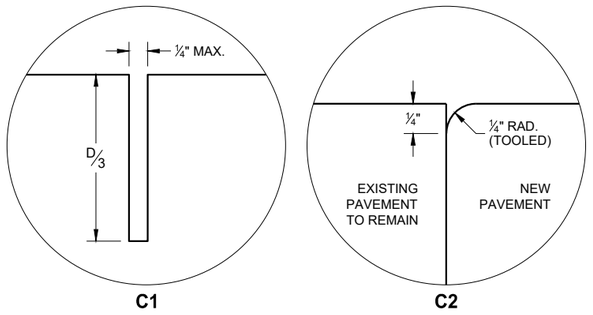

TRANSVERSE JOINTS

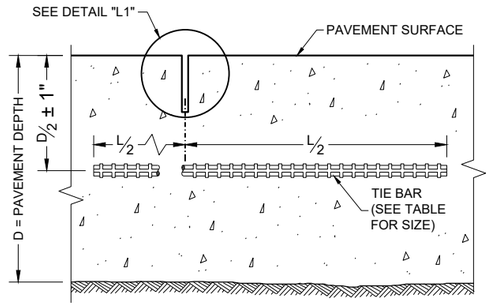

SECTION C - C

SAWED LONGITUDINAL JOINT

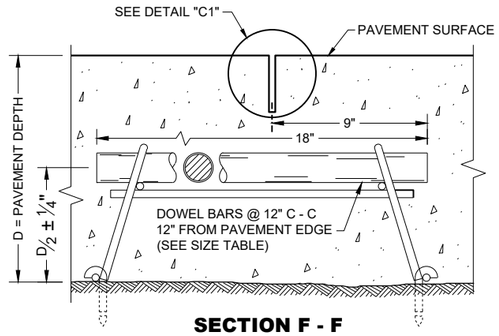

SECTION F - F

DOWELED CONTRACTION JOINT

GENERAL NOTES

INSTALL DOWEL BARS PARALLEL TO THE PAVEMENT CENTERLINE AND PAVEMENT SURFACE.

CONCRETE PAVEMENT REPAIRS OF EXISTING NON-DOWELED CONCRETE PAVEMENTS DO NOT NEED TO BE DOWELED.

ANCHOR DOWEL BARS AND TIE BARS INTO DRILLED HOLES WITH AN EPOXY.

FOR MULTI-LANE CONCRETE PAVEMENT REPLACEMENTS, PROVIDE A MINIMUM DISTANCE OF 15 INCHES FROM ALL TRANSVERSE JOINTS OR EDGES OF REPLACEMENT TO THE CENTER OF THE TIE BAR NEAREST THAT JOINT OR EDGE.

(1) APPLY A THIN UNIFORM COATING OF SURFACE TREATMENT TO THE FREE END OF DOWEL BARS TO PREVENT BONDING.

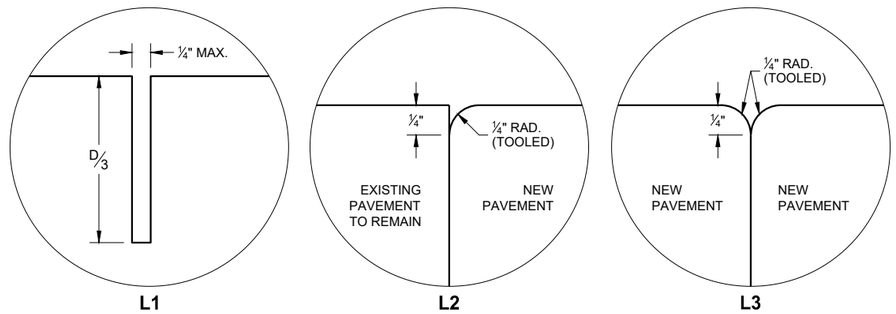

LONGITUDINAL JOINTS

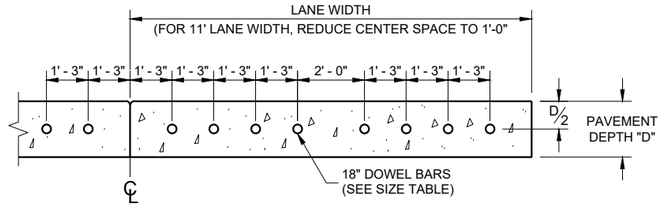

SECTION E - E

DRILLED DOWEL BAR CONSTRUCTION JOINT

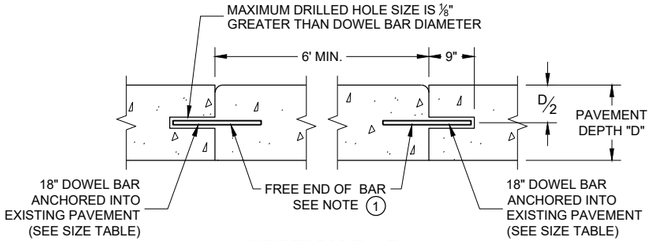

SECTION D - D

TIE BAR TABLE

PAVEMENT DEPTH (D)	TIE BAR SIZE	TIE BAR LENGTH (L)	MAX. TIE BAR SPACING
< 10 ½"	NO. 4	30"	36"
≥ 10 ½"	NO. 5	36"	36"
	NO. 4 *	30"	24" **

* SUBSTITUTE BENT BARS AT LONGITUDINAL JOINTS WHEN EQUIPMENT LIMITATIONS DURING CONSTRUCTION WARRANT (e.g. AUXILIARY LANES OR TURN LANES)

** CONFORM TO 15" MINIMUM SPACING FROM TRANSVERSE JOINTS; SPACING BETWEEN TIE BARS WILL BE 30" AT TRANSVERSE JOINTS.

PAVEMENT DEPTH, DOWEL BAR SIZE AND JOINT SPACING TABLE

PAVEMENT DEPTH (D)	DOWEL BAR DIAMETER	DRILLED DOWEL BAR DIAMETER	CONTRACTION JOINT SPACING
6", 6 ½"	NONE	NONE	12'
7", 7 ½"	1"	1"	14'
8" & ABOVE	1 ¼"	1 ¼"	15'

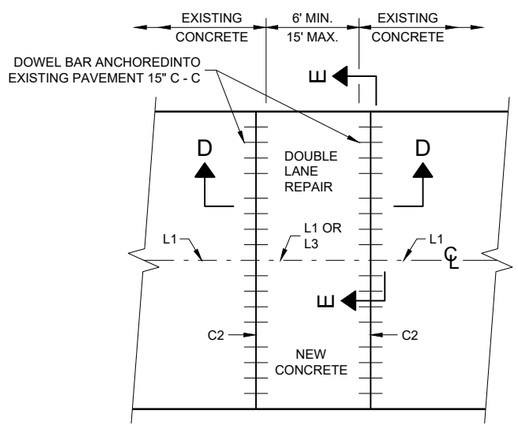

PLAN VIEW

MULTILANE CONCRETE PAVEMENT REPAIR

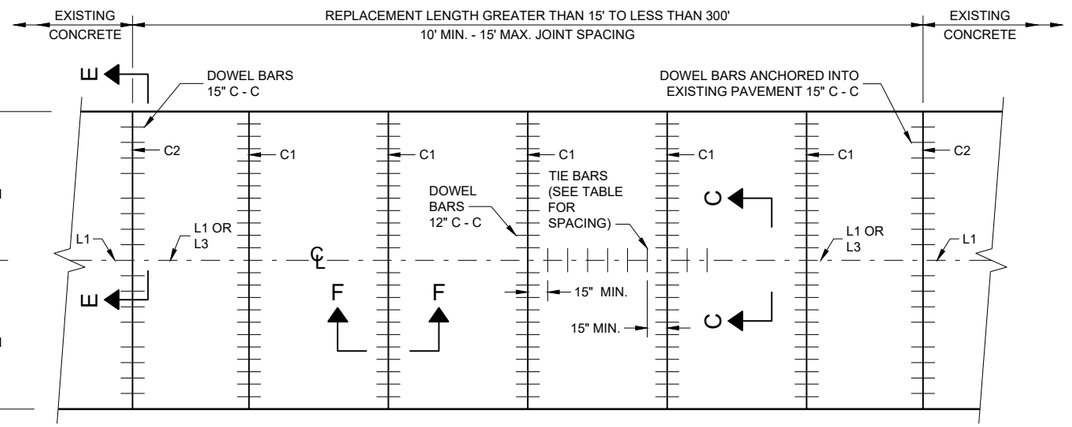

PLAN VIEW

MULTILANE CONCRETE PAVEMENT REPLACEMENT

CONCRETE PAVEMENT REPAIR AND REPLACEMENT

STATE OF WISCONSIN
DEPARTMENT OF TRANSPORTATION

6

SDD 13C09 - 17b

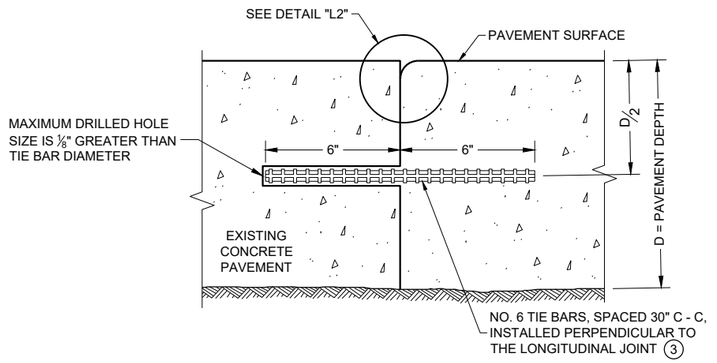

SECTION G - G

TIE BARS ANCHORED INTO EXISTING PAVEMENT

GENERAL NOTES

1. WITH THE APPROVAL OF THE ENGINEER, FOR SINGLE LANE PAVEMENT REPLACEMENTS LESS THAN 30 FEET IN LENGTH, THE CONTRACTOR MAY INSTALL DRILLED TIE BARS ON 6:1 SKEW HORIZONTALLY, DIRECTION OF SKEW ALTERNATING WITH EACH SUCCESSIVE BAR. DRIVE SKEWED TIE BARS TO A DEPTH OF 6 INCHES IN A HOLE OF SUCH A DIAMETER AS TO PROVIDE A TIGHT DRIVEN FIT.
2. USE AN ENGINEER APPROVED BOND BREAKER (E.G. RELEASE AGENT, CURING COMPOUND) FOR SINGLE LANE REPAIRS UP TO 15 FEET IN LENGTH.
3. ANCHOR TIE BARS INTO DRILLED HOLES WITH AN EPOXY.

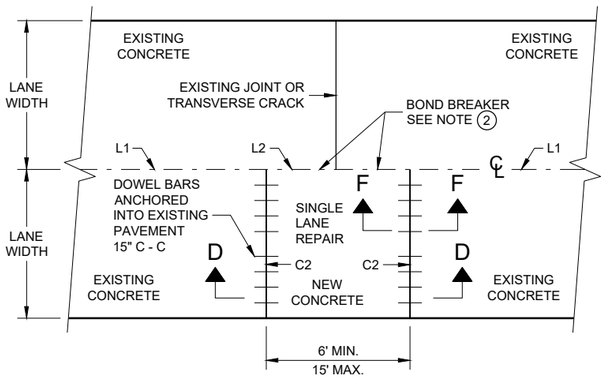

PLAN VIEW

SINGLE LANE CONCRETE PAVEMENT REPAIR

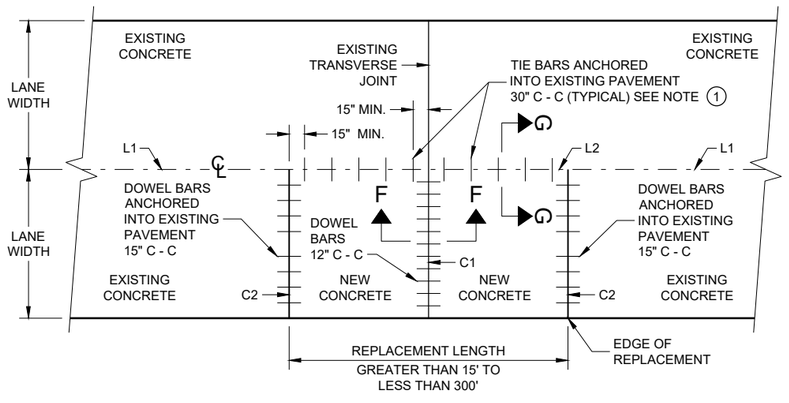

PLAN VIEW

SINGLE LANE CONCRETE PAVEMENT REPLACEMENT

CONCRETE REPAIR AND REPLACEMENT

STATE OF WISCONSIN
DEPARTMENT OF TRANSPORTATION

APPROVED
May 2022
DATE
/S/ Peter Kemp P.E.
PAVEMENT SUPERVISO

FHWA

6

SDD 13C09 - 16c

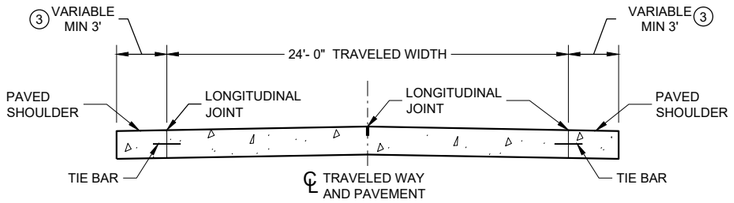

SECTION A - A

TWO-LANE TWO-WAY HIGHWAY (1)

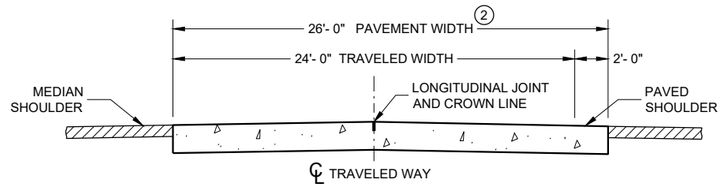

SECTION B - B

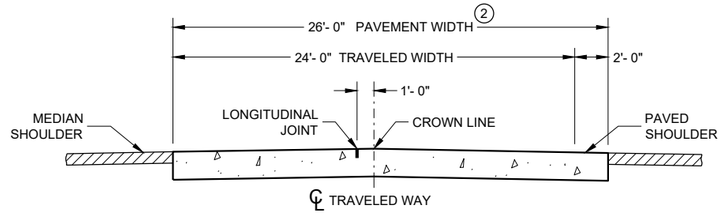

ALTERNATIVE SECTION B - B

DIVIDED HIGHWAY (1)

GENERAL NOTES

CONTRACTION JOINTS

CONSTRUCT TRANSVERSE CONTRACTION JOINTS NORMAL TO THE CENTERLINE. SHOW THE LOCATION OF CONTRACTION JOINTS THROUGH INTERSECTIONS ON THE PLANS OR AS DIRECTED BY THE ENGINEER.

INSTALL DOWEL BARS PARALLEL TO THE PAVEMENT CENTERLINE AND PAVEMENT SURFACE.

FOR PAVEMENT SLABS OF VARYING WIDTHS, LOCATE THE OUTER MOST DOWEL BAR SO THAT THE CENTER OF THE BAR IS A MINIMUM OF 6 INCHES FROM AND A MAXIMUM OF 18 INCHES FROM THE FREE EDGE OF PAVEMENT.

CONSTRUCTION JOINTS

LOCATE CONSTRUCTION JOINTS A MINIMUM OF 6 FEET FROM THE NEAREST CONTRACTION JOINT AND ALIGN PARALLEL TO THE CONTRACTION JOINTS.

(1) REFER TO TYPICAL CROSS SECTIONS FOR ADDITIONAL DETAILS.

(2) MEASURE THE ENTIRE PAVED WIDTH INCLUDING THE PORTION(S) LABELED "PAVED SHOULDER" AS CONCRETE PAVEMENT.

(3) SHOULDER WIDTHS LESS THAN 3 FEET SHALL BE PAVED INTEGRAL TO THE MAINLINE CONCRETE PAVEMENT, SEE SECTION B-B.

PAVEMENT DEPTH, DOWEL BAR SIZE AND JOINT SPACING TABLE

PAVEMENT DEPTH (D)	DOWEL BAR DIAMETER	CONTRACTION JOINT SPACING
6", 6 ½"	NONE	12'
7", 7 ½"	1"	14'
8" & ABOVE	1 ¼"	15'

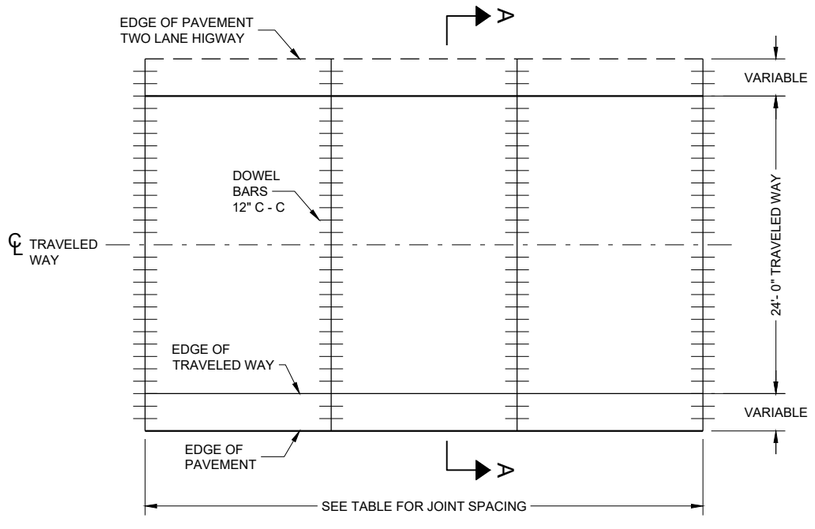

CONTRACTION JOINT LAYOUT FOR TWO-LANE TWO-WAY HIGHWAY

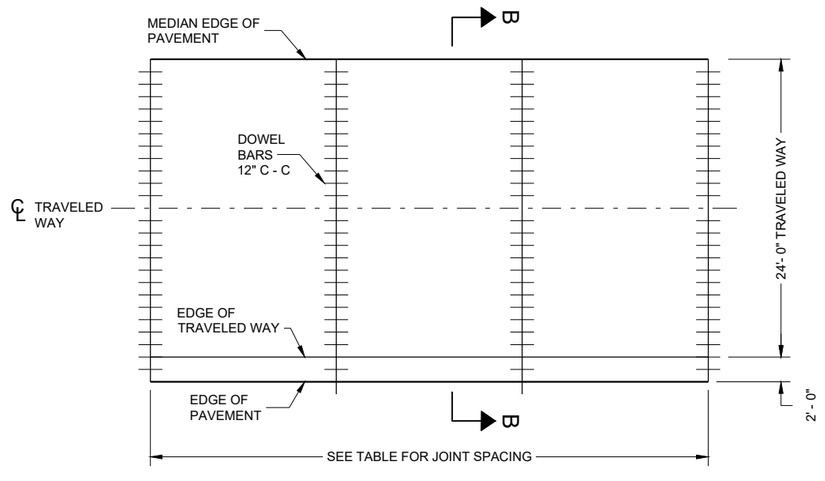

CONTRACTION JOINT LAYOUT FOR DIVIDED HIGHWAY

RURAL DOWELED CONCRETE PAVEMENT

STATE OF WISCONSIN
DEPARTMENT OF TRANSPORTATION

6

SDD13C11 - 14a

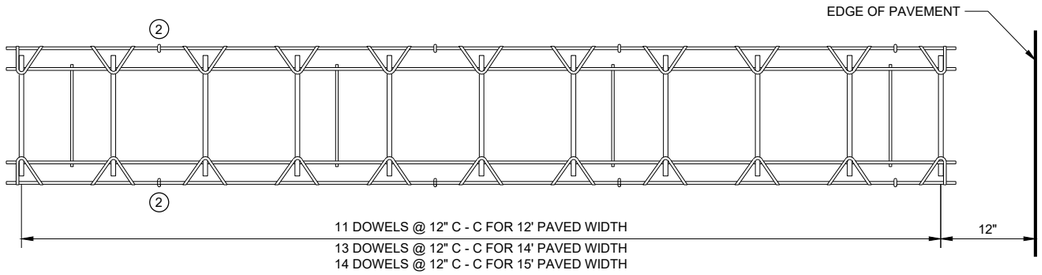

PLAN VIEW



SIDE VIEW

(NORMAL TO CENTERLINE)

CONTRACTION JOINT DOWEL ASSEMBLY (1)

GENERAL NOTES

1. OBTAIN THE ENGINEER'S APPROVAL FOR THE USE OF ALTERNATIVE DESIGNS OF THE DOWEL ASSEMBLY. USE MECHANICAL DOWEL BAR INSERTERS OR DOWEL ASSEMBLIES WHEN CONSTRUCTION CONTRACTION JOINTS.
2. SECURE BASKETS WITH ANCHORS TO HOLD DOWEL BARS IN THE CORRECT POSITION AND ALIGNMENT. TYPE, LOCATION, NUMBER AND LENGTH OF ANCHORS ARE DEPENDENT UPON FIELD CONDITIONS.
3. FORM OR SAW CONSTRUCTION JOINTS. PROVIDE A ¼" RADIUS AT FORMED JOINTS.
4. PROVIDE A SMOOTH VERTICAL FACE FOR THE ENTIRE DEPTH OF THE PAVEMENT WHEN FORMING CONSTRUCTION JOINTS.
5. INSTALL DOWEL BARS AT CONSTRUCTION JOINTS BY FORMING OR DRILLING. INSTALL FORMED DOWEL BARS 12 INCHES C - C AND 12 INCHES FROM PAVEMENT EDGE. REMOVE EXCESS CONCRETE FROM THE FREE END OF THE DOWEL BAR IF DOWEL BARS ARE FORMED THROUGH A HEADER BOARD. INSTALL DRILLED DOWEL BARS ACCORDING TO THE "DRILLED DOWEL BAR CONSTRUCTION JOINT" DETAIL.
6. APPLY A THIN UNIFORM COATING OF SURFACE TREATMENT TO THE FREE END OF DOWEL BARS TO PREVENT BONDING.
7. ANCHOR DOWEL BARS AND TIE BARS INTO DRILLED HOLES WITH AN EPOXY. MAXIMUM DRILLED HOLE SIZE IS ⅛" GREATER THAN DOWEL BAR DIAMETER, 9 INCHES IN LENGTH.

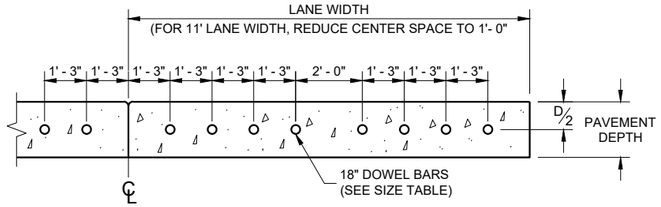

DRILLED DOWEL BAR CONSTRUCTION JOINT (7)

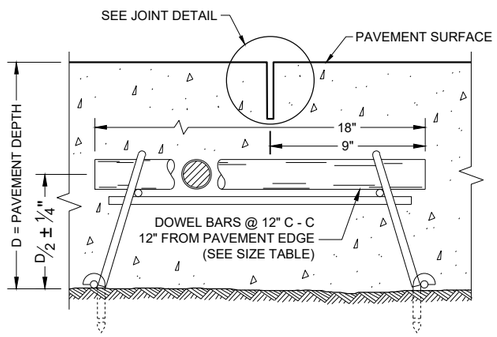

DOWELED CONTRACTION JOINT

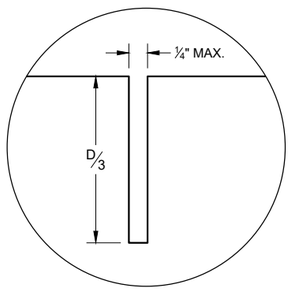

JOINT DETAIL

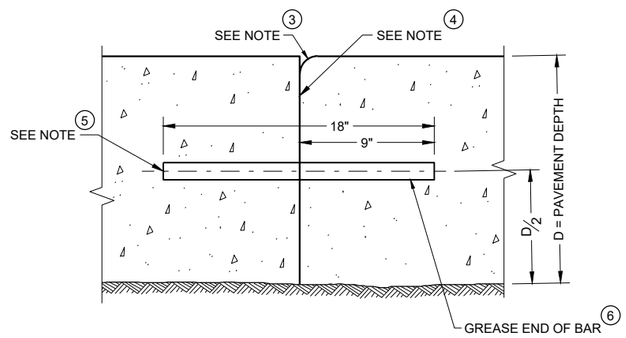

TRANSVERSE CONSTRUCTION JOINT

RURAL DOWELED CONCRETE PAVEMENT

STATE OF WISCONSIN
DEPARTMENT OF TRANSPORTATION

APPROVED
November 2022
DATE

/S/ Peter Kemp P.E.
PAVEMENT SUPERVISOR

FHWA

6

SDD 13C11 - 14b
SDD 13C11 - 14b

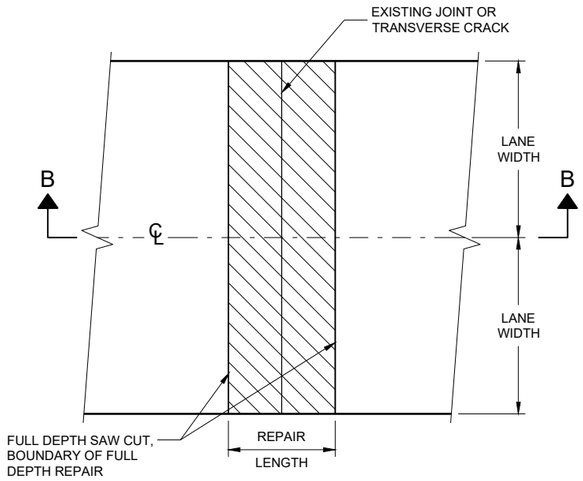

PLAN VIEW
DOUBLE LANE REPAIR

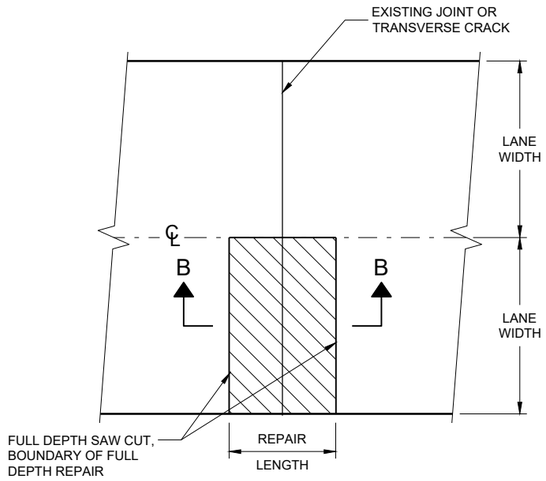

PLAN VIEW
SINGLE LANE REPAIR

GENERAL NOTES

SAW CUT, DRILL, AND LIFT OUT EXISTING CONCRETE PAVEMENT WITHIN THE BOUNDARIES OF CONCRETE REPAIR AREAS. THE CONTRACTOR MAY MAKE ADDITIONAL SAW CUTS INSIDE THE REPAIR LIMITS TO REDUCE WEIGHT AND SIZE OF CONCRETE PIECES.

PROVIDE A 6 FOOT MINIMUM DISTANCE FROM BOUNDARIES OF CONCRETE REPAIR AREA TO ADJACENT TRANSVERSE JOINT OR CRACK.

THE LENGTH OF THE REPAIRS MAY VARY FROM THE DIMENSIONS SHOWN IF THE EXISTING CONCRETE PAVEMENT IS NON-DOWELED AND THE PAVEMENT IS TO BE OVERLAID AFTER REPAIRING.

(1) DOWEL BARS MAY NOT BE PRESENT.

FULL DEPTH CONCRETE PAVEMENT REMOVAL

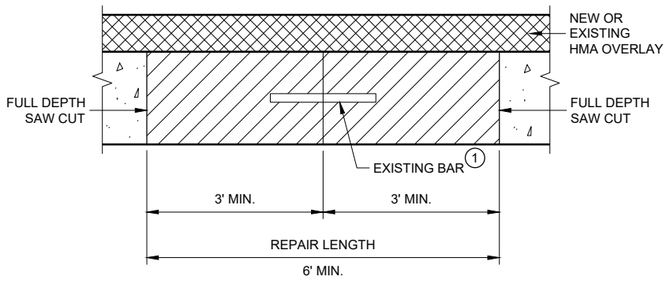

SECTION B - B
CONCRETE REMOVAL

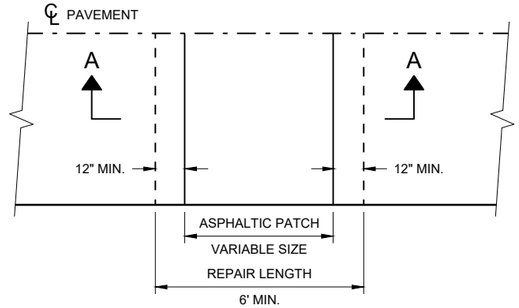

PLAN VIEW

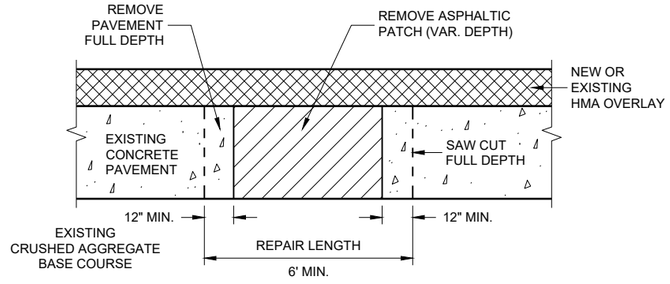

SECTION A - A

HMA PATCH REMOVAL

BASE PATCHING CONCRETE

STATE OF WISCONSIN
DEPARTMENT OF TRANSPORTA 434

SDD 13C14 - 07a

SDD 13C14 - 07a

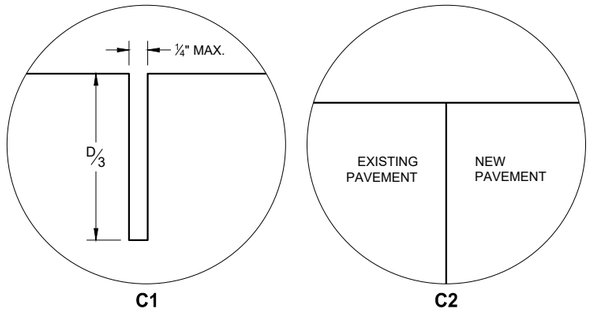

TRANSVERSE JOINTS

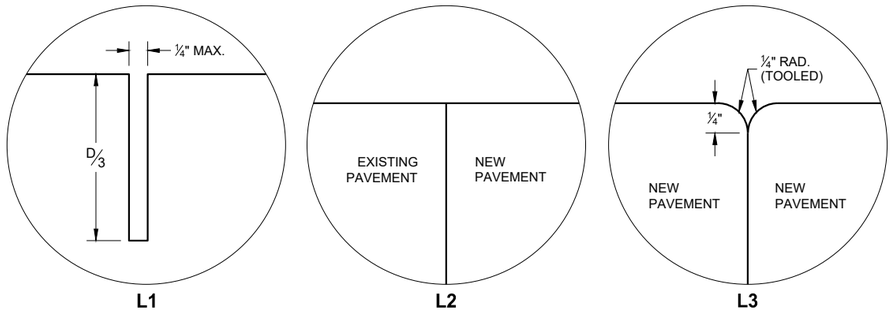

LONGITUDINAL JOINTS

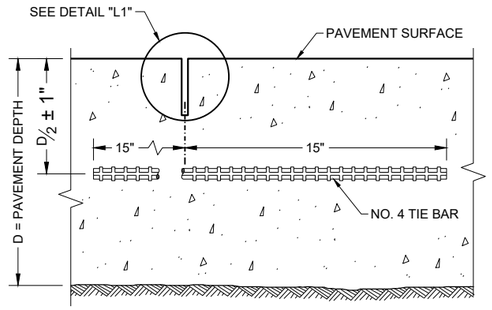

SECTION C - C

SAWED LONGITUDINAL JOINT

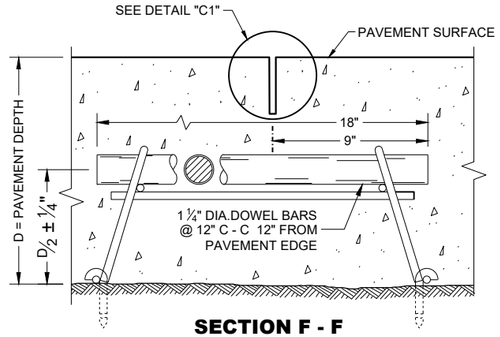

SECTION F - F

CONTRACTION JOINT

GENERAL NOTES

INSTALL DOWEL BARS PARALLEL TO THE PAVEMENT CENTERLINE AND PAVEMENT SURFACE.

CONCRETE BASE PATCHES OF EXISTING NON-DOWELED CONCRETE PAVEMENTS DO NOT NEED TO BE DOWELED.

ANCHOR DOWEL BARS AND TIE BARS INTO DRILLED HOLES WITH AN EPOXY.

PROVIDE A MINIMUM DISTANCE OF 15 INCHES FROM ALL TRANSVERSE JOINTS OR EDGES OF REPLACEMENT TO THE CENTER OF THE TIE BAR NEAREST THAT JOINT O EDGE.

(1) APPLY A THIN UNIFORM COATING OF SURFACE TREATMENT TO THE FREE END OF DOWEL BARS TO PREVENT BONDING.

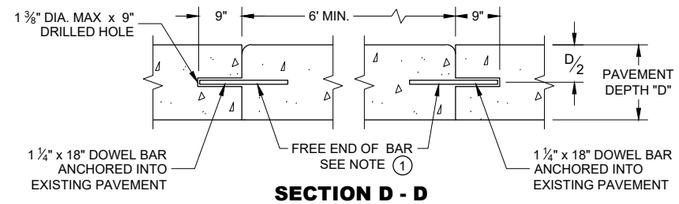

SECTION D - D

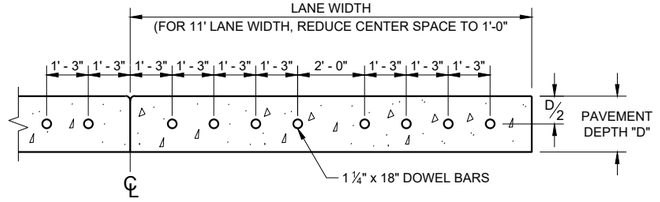

SECTION E - E

SPACING OF DOWEL BARS ANCHORED INTO EXISTING PAVEMENT

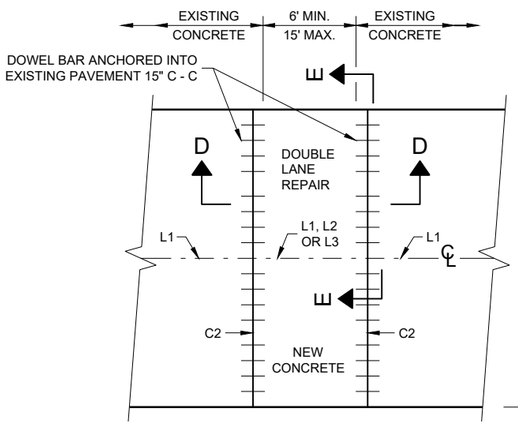

PLAN VIEW

MULTILANE CONCRETE BASE PATCH 15' MAXIMUM LENGTH

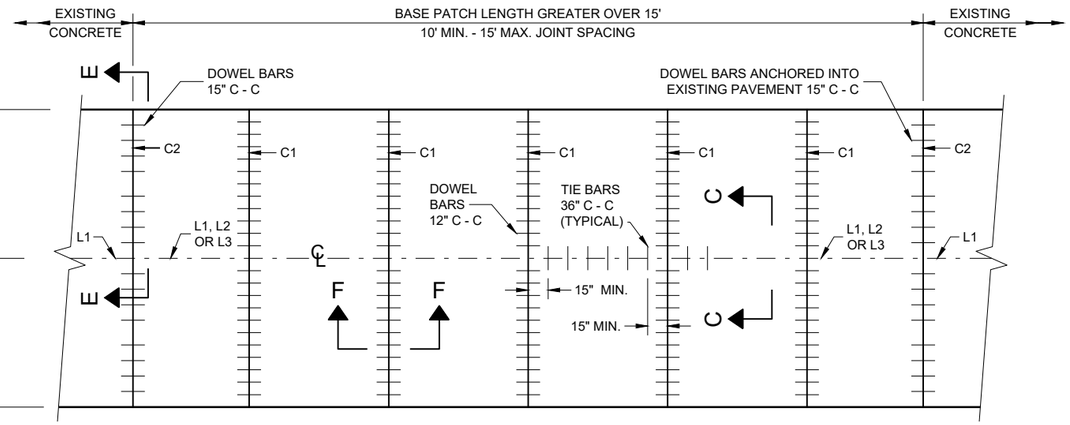

PLAN VIEW

MULTILANE CONCRETE BASE PATCH GREATER THAN 15' IN LENGTH

BASE PATCHING CONCRETE

STATE OF WISCONSIN
DEPARTMENT OF TRANSPORTA 435

SDD 13C14 - 07b

SDD 13C14 - 07b

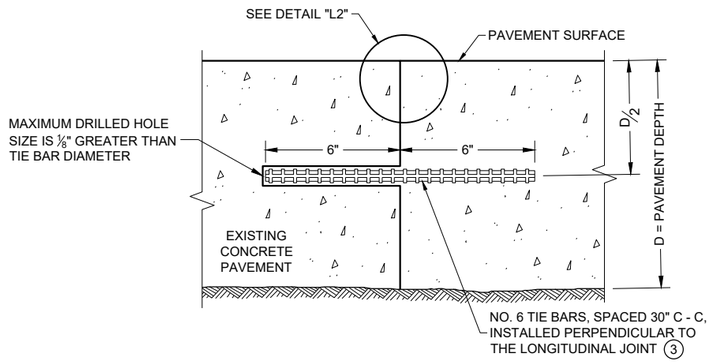

SECTION G - G

TIE BARS ANCHORED INTO EXISTING PAVEMENT

GENERAL NOTES

1. WITH THE APPROVAL OF THE ENGINEER, FOR SINGLE LANE PAVEMENT REPLACEMENTS LESS THAN 30 FEET IN LENGTH, THE CONTRACTOR MAY INSTALL DRILLED TIE BARS ON 6:1 SKEW HORIZONTALLY, DIRECTION OF SKEW ALTERNATING WITH EACH SUCCESSIVE BAR. DRIVE SKEWED TIE BARS TO A DEPTH OF 6 INCHES IN A HOLE OF SUCH A DIAMETER AS TO PROVIDE A TIGHT DRIVEN FIT.
2. USE AN ENGINEER APPROVED BOND BREAKER (E.G. RELEASE AGENT, CURING COMPOUND) FOR SINGLE LANE REPAIRS UP TO 15 FEET IN LENGTH.
3. ANCHOR TIE BARS INTO DRILLED HOES WITH AN EPOXY.

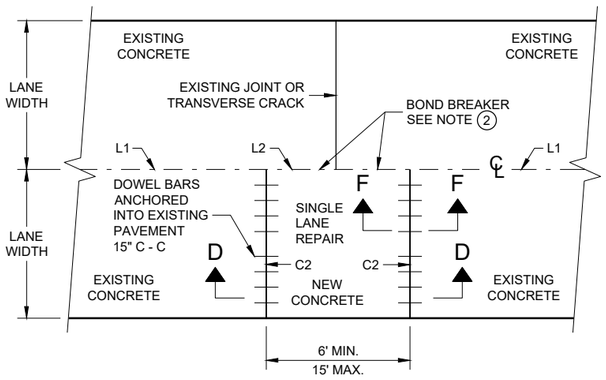

PLAN VIEW

SINGLE LANE CONCRETE BASE PATCH 15' MAXIMUM LENGTH

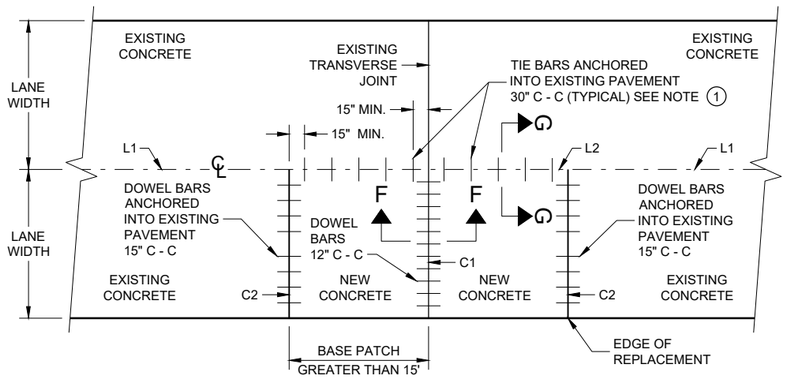

PLAN VIEW

SINGLE LANE CONCRETE BASE PATCH GREATER THAN 15' LENGTH

BASE PATCHING CONCRETE

STATE OF WISCONSIN
DEPARTMENT OF TRANSPORTATION

APPROVED
March 2018
DATE

/S/ Peter Kemp, P.E.
PAVEMENT SUPERVISO

FHWA

6

SDD 13C14 - 07c
SDD 13C14 - 07c

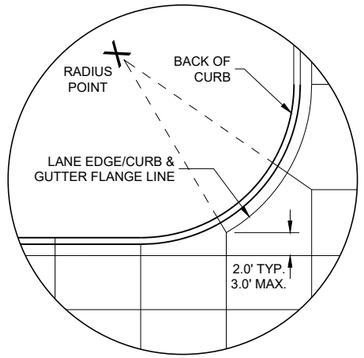

DETAIL "A"

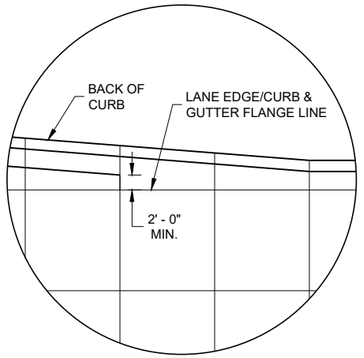

DETAIL "B"

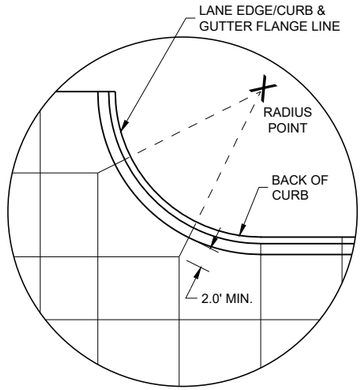

DETAIL "C"

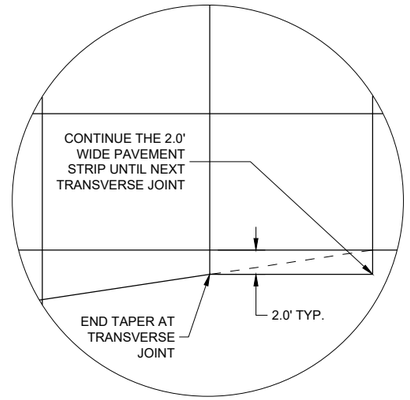

DETAIL "D"

GENERAL NOTES

THE PRIMARY ROADWAY CONTROLS THE TRANSVERSE JOINT PATTERN.

ALIGN NEW JOINTS WITH EXISTING JOINTS OR CRACKS.

CONSTRUCT TRANSVERSE JOINTS PERPENDICULAR TO THE ROADWAY.

ADJUST TRANSVERSE JOINTS TO ALIGN WITH UTILITY FIXTURES (E.G MANHOLES AND INLETS) IN THE PAVEMENT STRUCTURE WHEN POSSIBLE. WATER VALVES DO NOT REQUIRE JOINT ADJUSTMENT.

AVOID SLABS LESS THAN 2 FEET WIDE OR GREATER THAN 15 FEET WIDE.

SEE TABLE FOR TRANSVERSE JOINT SPACING. JOINT SPACING SPECIFIED IS MAXIMUM AND ACTUAL SPACING CAN BE ADJUSTED TO ACCOMMODATE INTERSECTIONS.

AVOID ANGLES LESS THAN 60° BY DOGLEGGING JOINTS THROUGH CURVE RADIUS POINTS. USE 90° ANGLES WHEN POSSIBLE.

CORRELATE LONGITUDINAL JOINTS WITH LANE LINES WHEN POSSIBLE.

(1) PROVIDE TRANSVERSE JOINTS AT ALL PAVEMENT WIDTH CHANGES.

(2) CONSTRUCT DOWELED EXPANSION JOINT ON THE SIDE ROAD OF AN INTERSECTION IF THE SIDE ROAD IS CONCRETE PAVEMENT AND GREATER THAN 300 FEET IN LENGTH. ALIGN EXPANSION JOINT WITHEDGE OF RADIUS.

(3) THE ENGINEER MAY APPROVE SLIGHT VARIATIONS FROM THESE JOINTING DETAILS.

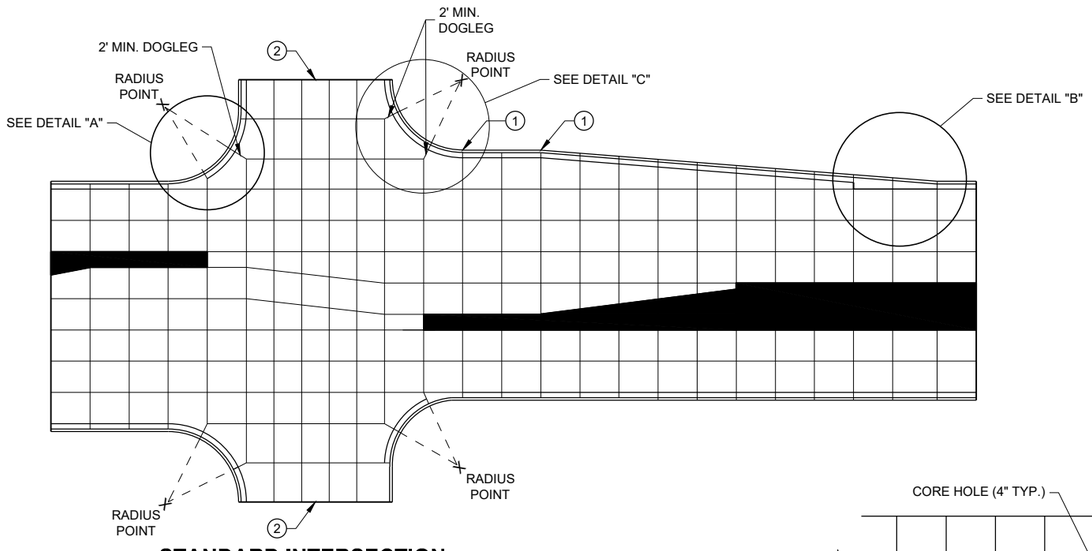

STANDARD INTERSECTION

PAVEMENT DEPTH AND JOINT SPACING TABLE

PAVEMENT DEPTH (D)	CONTRACTION JOINT SPACING
6", 6 ½"	12'
7", 7 ½"	14'
8" & ABOVE	15'

SKEWED INTERSECTION

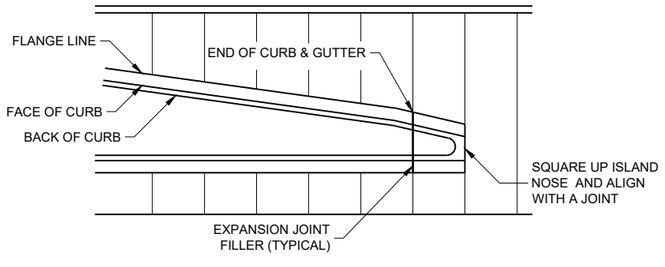

APPROACH TO MEDIAN

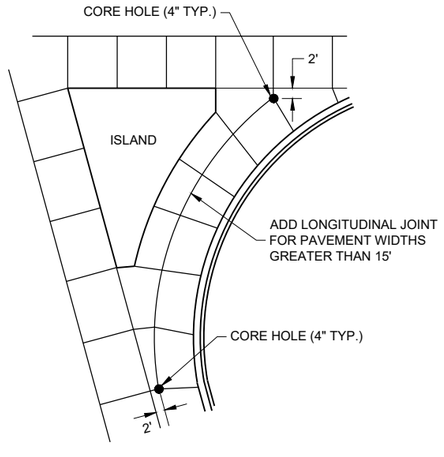

LARGE RIGHT TURN

CONCRETE PAVEMENT JOINTING

STATE OF WISCONSIN
DEPARTMENT OF TRANSPORTATION

6

SDD 13C18 - 07a

6

SDD 13C18 - 07a

LEGEND

POTENTIAL DOWELED EXPANSION JOINT

DOWELED JOINT

TIED JOINT

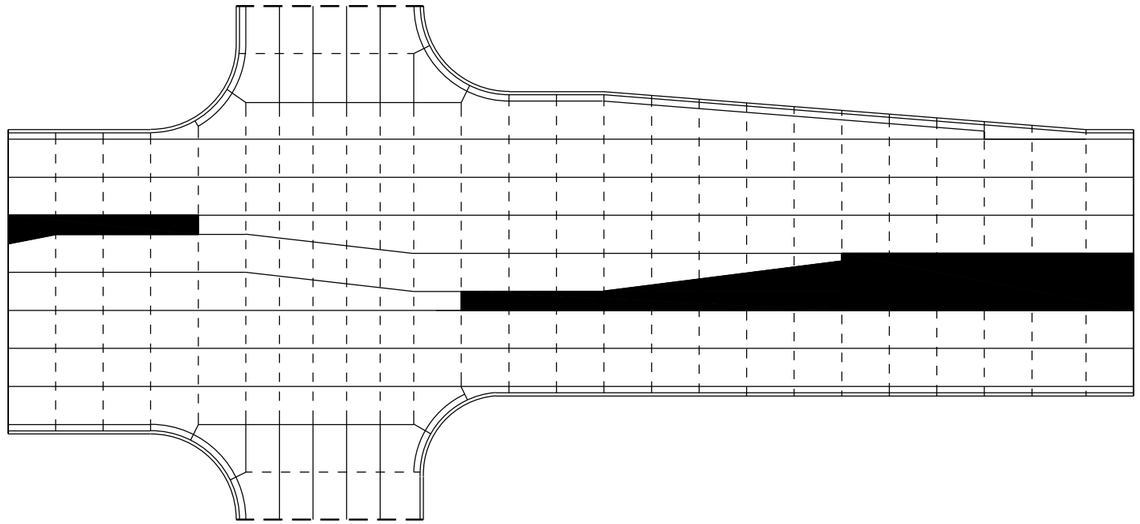

STANDARD INTERSECTION

GENERAL NOTES

USE AN EXPANSION JOINT FILLER MEETING THE REQUIREMENTS OF STANDARD SPECIFICATION 415.

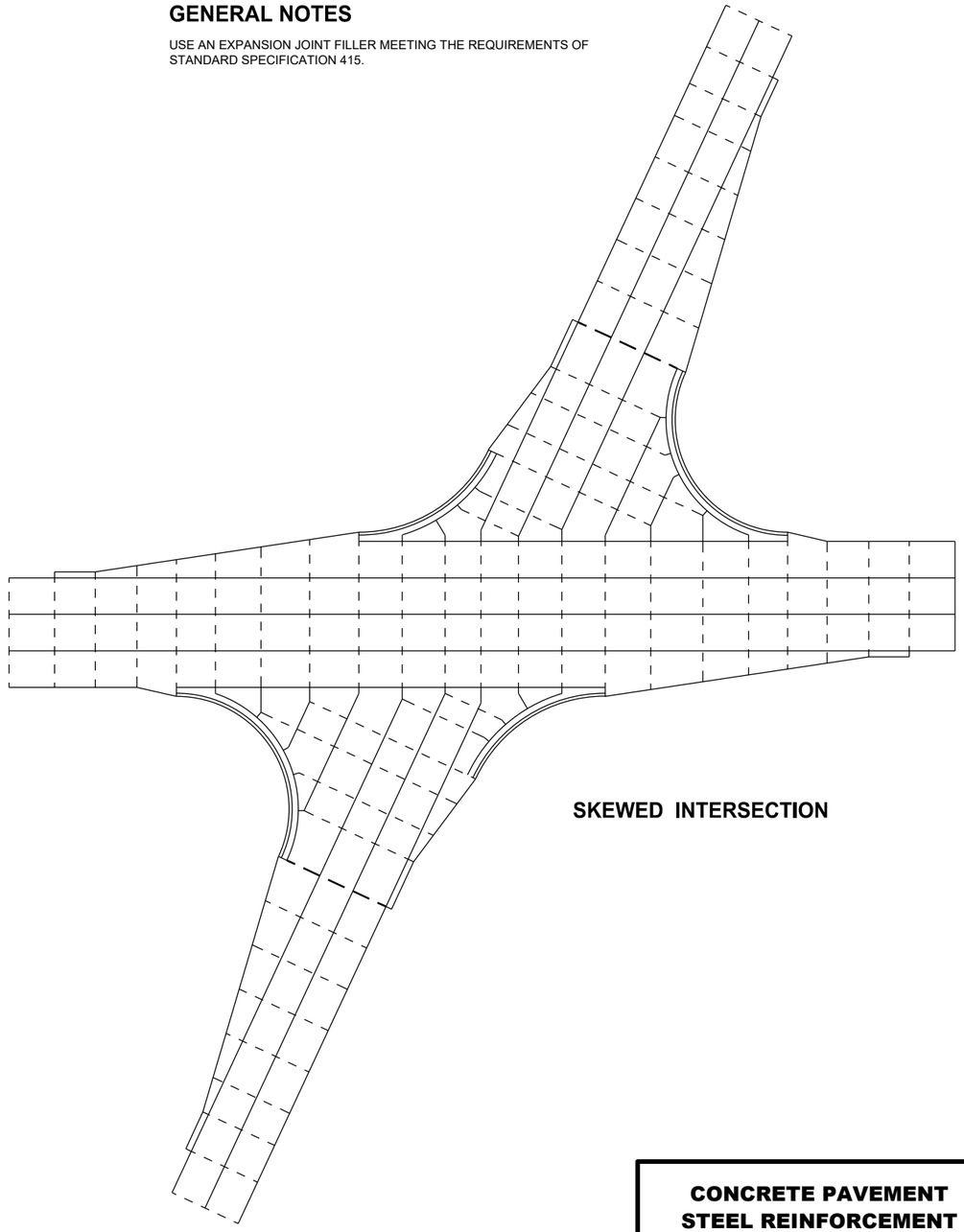

SKEWED INTERSECTION

6

SDD 13C18 - 07b

CONCRETE PAVEMENT STEEL REINFORCEMENT

STATE OF WISCONSIN
DEPARTMENT OF TRANSPORTATION

6

SDD 13C18 - 07b

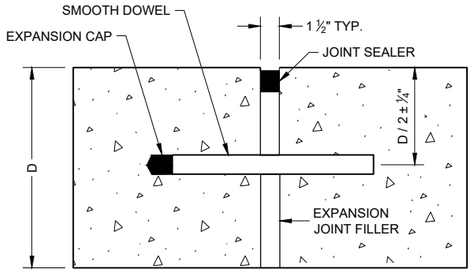

DOWELED TRANSVERSE (1)

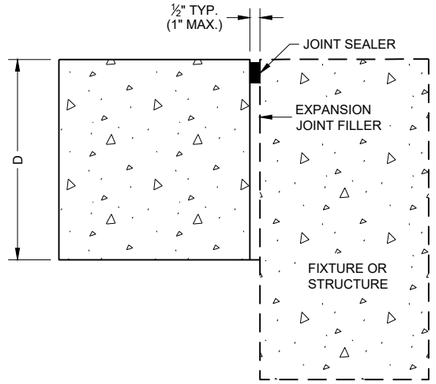

UNTIED - LONGITUDINAL

EXPANSION JOINTS

TIE BAR TABLE

PAVEMENT DEPTH (D)	TIE BAR SIZE	TIE BAR LENGTH (L)	MAX. TIE BAR SPACING
< 10 ½"	NO. 4	30"	36"
≥ 10 ½"	NO. 5	36"	36"
	NO. 4 *	30"	24" **

* SUBSTITUTE BENT BARS AT LONGITUDINAL JOINTS WHEN EQUIPMENT LIMITATIONS DURING CONSTRUCTION WARRANT (e.g. AUXILIARY LANES OR TURN LANES)

** CONFORM TO 15" MINIMUM SPACING FROM TRANSVERSE JOINTS; SPACING BETWEEN TIE BARS WILL BE 30" AT TRANSVERSE JOINTS.

GENERAL NOTES

1. USE DOWELED EXPANSION JOINTS ON SIDE ROADS AT INTERSECTIONS (TO ISOLATETHE SIDE ROAD FROM THE THROUGH STREET) IF THE SIDE ROAD IS CONCRETE PAVEMENT AND GREATER THAN 300 FEET IN LENGTH.
2. SPACE CONTRACTION JOINTS IN ACCORDANCE WITH SDD 13C4, 13C11 OR 13C13.
3. LOCATE CONSTRUCTION JOINTS A MINIMUM OF 6 FEET FROM THE NEAREST CONTRACTION JOINT AND ALIGN PARALLEL TO CONTRACTION JOINTS.
4. CONSTRUCTION JOINTS CAN BE FORMED OR SAWED.
5. IF JOINT IS FORMED, PROVIDE A ¼" RADIUS.
6. ANCHOR TIE BARS INTO DRILLED HOLES WITH AN EPOXY.

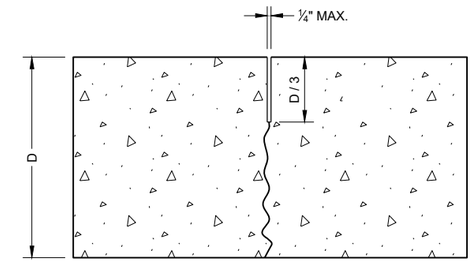

UNDOWELED TRANSVERSE

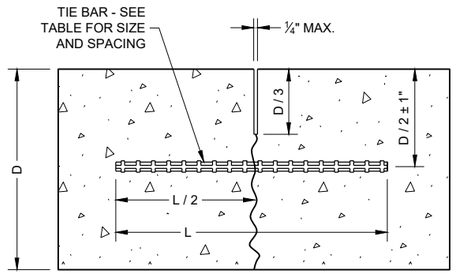

TIED LONGITUDINAL

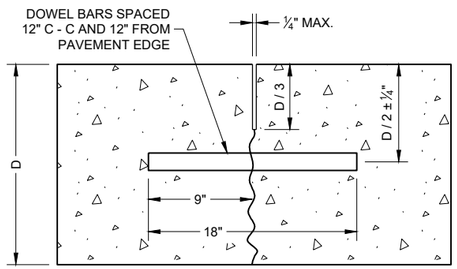

DOWELED TRANSVERSE

CONTRACTION JOINTS (2)

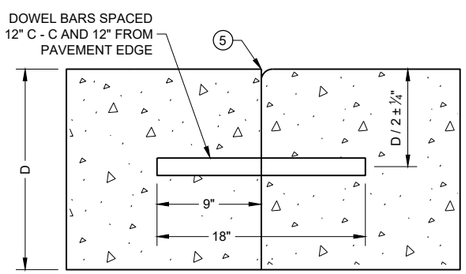

DOWELED TRANSVERSE (3)

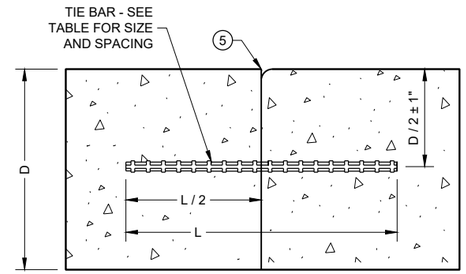

TIED LONGITUDINAL

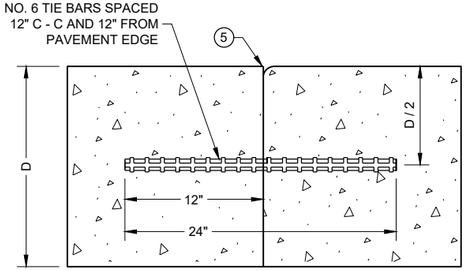

TIED TRANSVERSE (3)
(FOR USE ON NON-DOWELED PAVEMENTS ONLY)

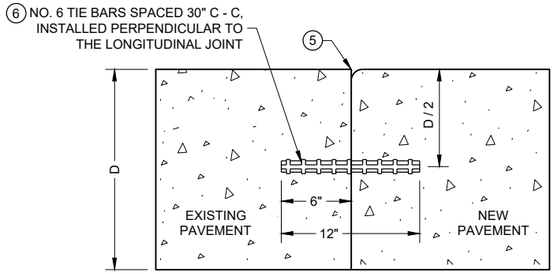

TIED LONGITUDINAL TO EXISTING

CONSTRUCTION JOINTS (4)

CONCRETE PAVEMENT JOINT TYPES

STATE OF WISCONSIN
DEPARTMENT OF TRANSPORTATION

6

SDD 13C18 - 07c

6

SDD 13C18 - 07c

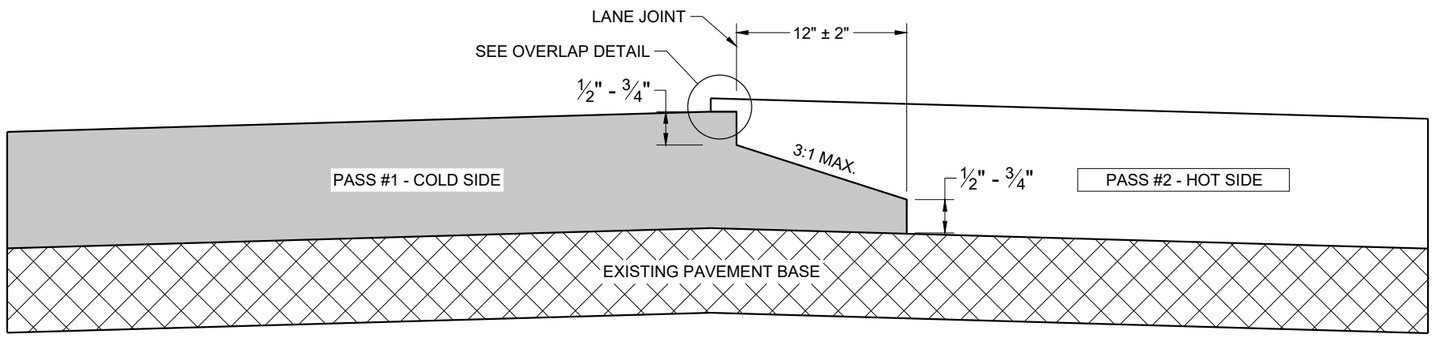

TYPICAL PAVEMENT CROSS SECTION
NOTCHED WEDGE JOINT

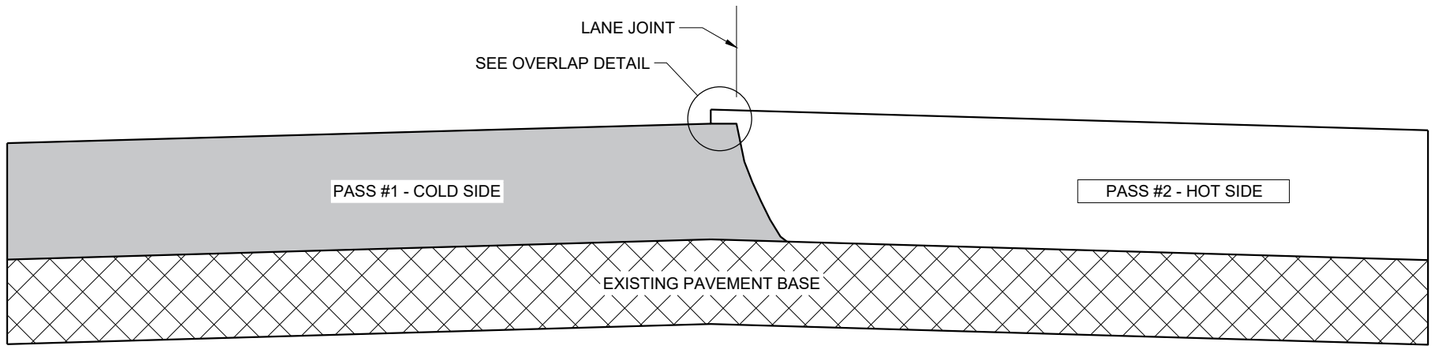

TYPICAL PAVEMENT CROSS SECTION
VERTICAL JOINT

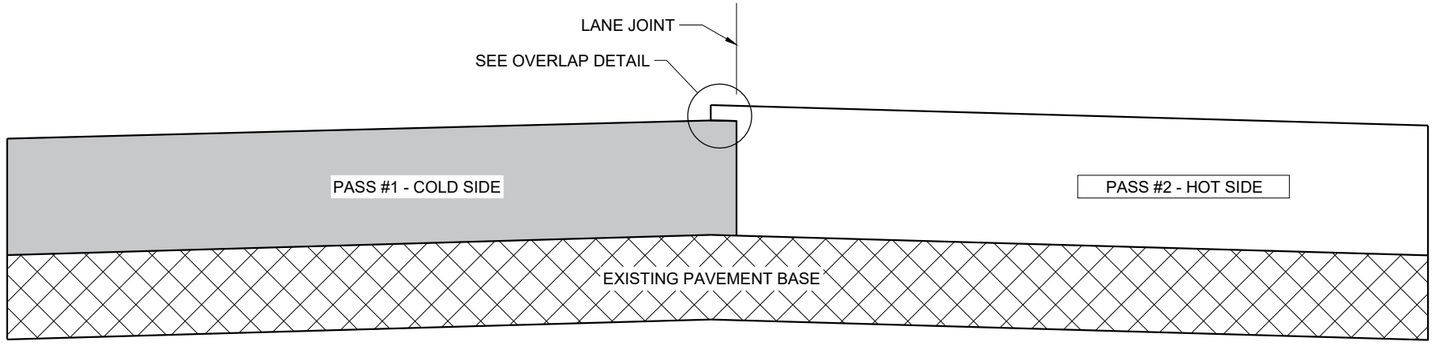

TYPICAL PAVEMENT CROSS SECTION
VERTICAL JOINT (MILLED)

GENERAL NOTES

IN ADDITION TO THE DETAILS PROVIDED IN THIS DRAWING, CONFORM TO STANDARD SPECIFICATION 450.3.2.8 FOR WHEN A NOTCHED WEDGE JOINT IS REQUIRED AND FOR GENERAL JOINT CONSTRUCTION REQUIREMENTS.

FOR ALL LONGITUDINAL JOINTS, ENSURE THE PAVER SCREED OVERLAPS THE PREVIOUSLY PLACED PAVEMENT BY 1" ± 0.5" AND THE HOT SIDE OF THE JOINT REMAINS HIGHER THAN THE COLD SIDE BY APPROXIMATELY 0.1" AFTER FINAL COMPACTION. (IT WILL BE FLUSH WHEN PAVING IN ECHELON.)

ONLY REMOVE THE LONGITUDINAL NOTCHED WEDGE JOINT FOR SMA PAVEMENT OR AS DIRECTED BY THE ENGINEER TO ADDRESS SPECIFIC LENGTHS OF JOINT DAMAGED BY TRAFFIC.

WHEN MILLING BACK OR REMOVING ANY LONGITUDINAL JOINT, LIMIT THE MATERIAL REMOVED TO 2" FROM THE TOP NOTCH OR FROM THE VERTICAL JOINT EDGE ON THE COLD SIDE OF THE JOINT.

USE LONGITUDINAL MILLED JOINT AS PLANS SHOW OR THE AS THE ENGINEER DIRECTS.

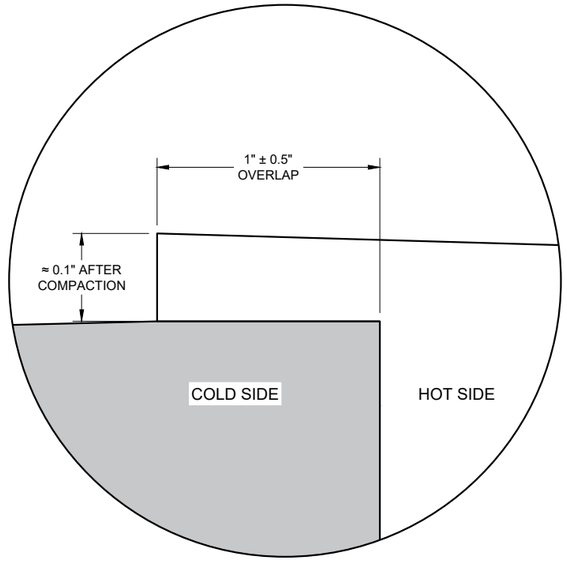

OVERLAP DETAIL (TYPICAL)

6

6

SDD 13C19 - 03

SDD 13C19 - 03

HMA LONGITUDINAL JOINTS

STATE OF WISCONSIN
DEPARTMENT OF TRANSPORTATION

APPROVED
November 2020
DATE

/S/ Steven Hefel
HMA PAVEMENT ENGIN 440

FHWA

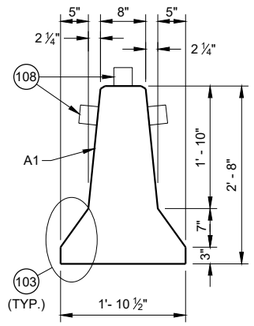

CROSS SECTION

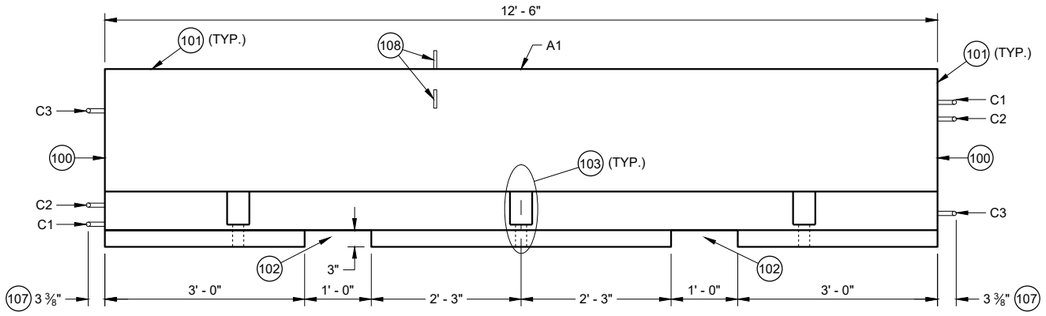

PROFILE VIEW

GENERAL NOTES

PLACE BARRIER ON PAVED SURFACE. BEFORE PLACEMENT OF TEMPORARY BARRIER, REMOVE ALL LOOSE MATERIAL FROM PAVED SURFACE.

LOOP BARS C1, C2 AND C3 ARE NOT FOR PLACEMENT OR MOVEMENT OF BARRIER.

(100) PERMANENTLY FORM INTO ONE END OF BARRIER THE FOLLOWING INFORMATION:
- A. TYPE OF BARRIER: WI-CBTP
- B. MANUFACTURER
- C. DATE OF MANUFACTURE (MONTH AND YEAR)

(101) 1" OPTIONAL CHAMFER

(102) SEE LIFTING SLOT DETAIL

(103) SEE ANCHOR BLOCK DETAIL

(104) 1 ¾" MIN. CLEAR COVER

(105) 2" MIN. CLEAR COVER

(106) 1" MIN. CLEAR COVER

(107) ± ⅛" MEASURED FROM FACE OF CONCRETE BARRIER TO OUTSIDE OF LOOP BAR (TYP.)

(108) USE DELINEATORS CONFORMING TO SECTION 633 OF THE STANDARD SPECIFICATIONS. CONTRACTOR MY USE ALTERNATE SHAPES AND HOUSING. INSTALL DELINEATORS ACCORDING TO MANUFACTURERS INSTRUCTION. INSTALL YELLOW REFLECTORS WHEN BARRIER IS LOCATED LEFT OF TRAFFIC AND WHITE WHEN BARRIER IS LOCATED RIGHT OF TRAFFIC. SPACE DELINEATORS A MAXIMUM OF 25 FEET APART, PROVIDE TO MOUNTED DELINEATORS IN ADDITION TO SIDE MOUNTED DELINEATORS ON BARRIER INSTALLATIONS LOCATED ON A CURVED ALIGNMENT LONGER THAT 200 FEET AND ON BARRIERS USED TO SEPARATE OPPOSING TRAFFIC.

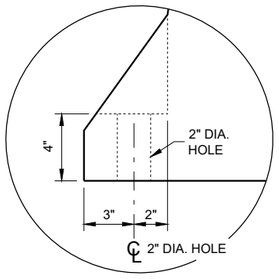

ANCHOR BLOCK DETAIL

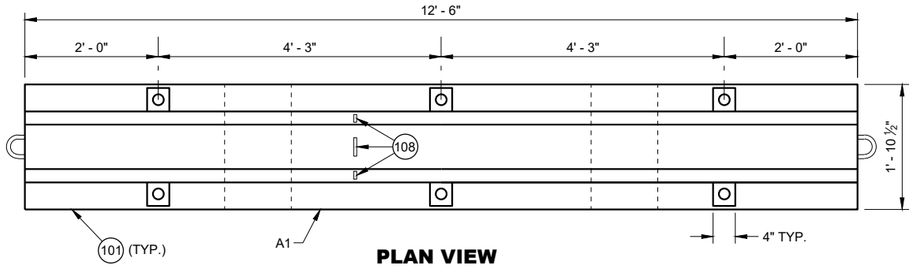

PLAN VIEW

TEMPORARY BARRIER

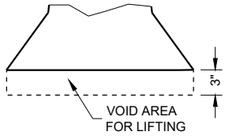

LIFTING SLOT DETAIL (TYP.)

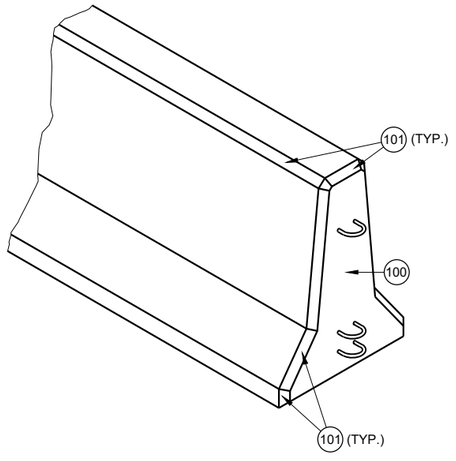

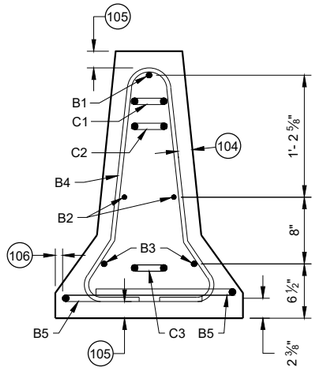

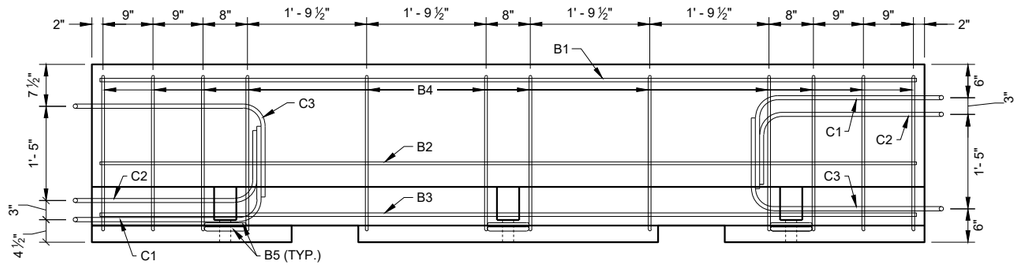

PROFILE VIEW

TEMPORARY BARRIER REINFORCEMENT

CONCRETE BARRIER TEMPORARY PRECAST, 12' - 6"

STATE OF WISCONSIN
DEPARTMENT OF TRANSPORTATION

6
SDD14B07 - 16a

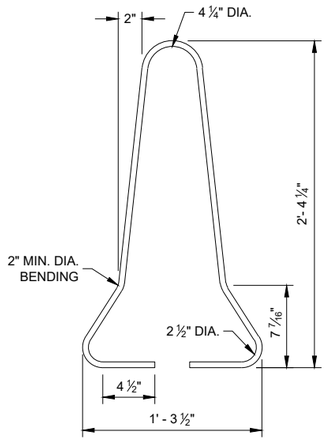

B4 BAR DETAIL

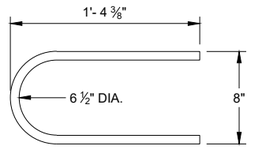

B5 BAR DETAIL

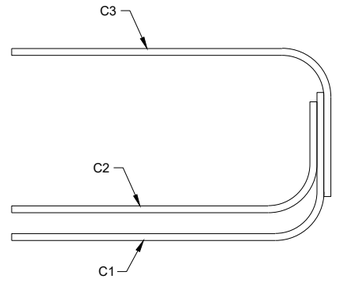

PROFILE VIEW

LOOP BAR ASSEMBLY

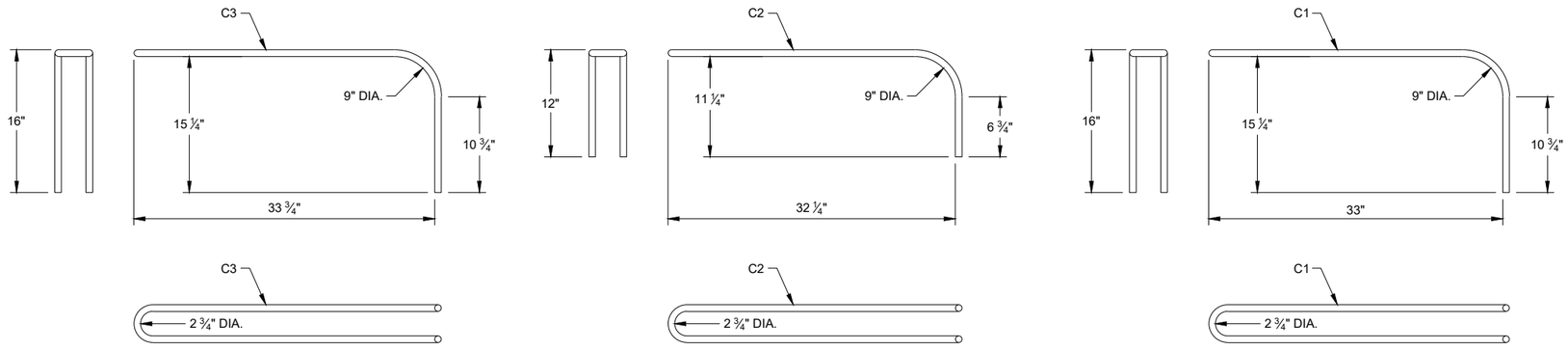

C BAR DETAILS

CONCRETE BARRIER TEMPORARY PRECAST, 12' - 6"

STATE OF WISCONSIN
DEPARTMENT OF TRANSPORTATION

6

SDD 14B07 - 16b

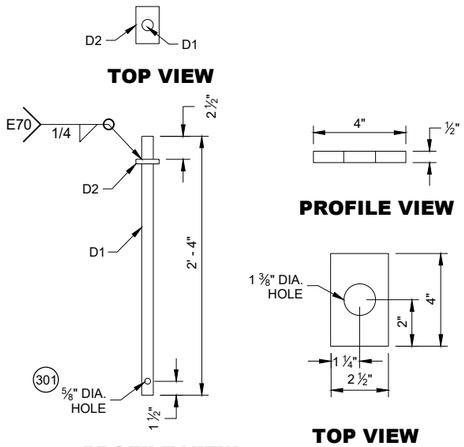

CONNECTOR PIN ASSEMBLY

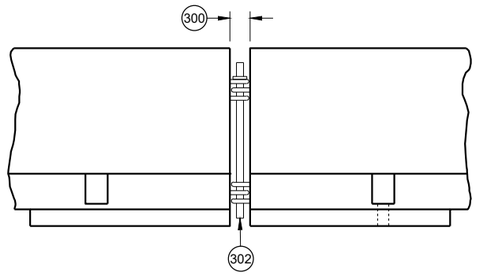

CONNECTING TEMPORARY BARRIER SECTIONS

GENERAL NOTES

300 SET WITH 3 ⅝" WOOD BLOCK.

301 HOLE IS OPTIONAL.

302 CONNECTOR PIN ASSEMBLY.

303 CONCRETE PAVEMENT, APPROACH SLAB, OR DECK.

304 CONCRETE DECK.

305 DO NOT USE ON CONCRETE BRIDGE DECK WITH ASPHALT OVERLAY OR CONCRETE PAVEMENT WITH ASPHALT OVERLAY.

306 MINIMUM OF 2" OF ASPHALT.

307 ASPHALT ANCHOR PIN ASSEMBLY

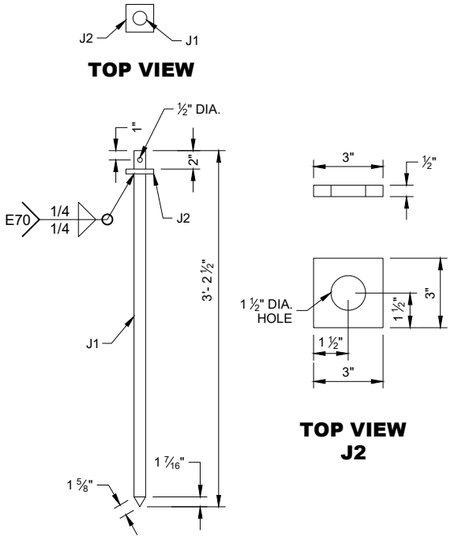

PROFILE VIEW

ASPHALT ANCHOR PIN ASSEMBLY

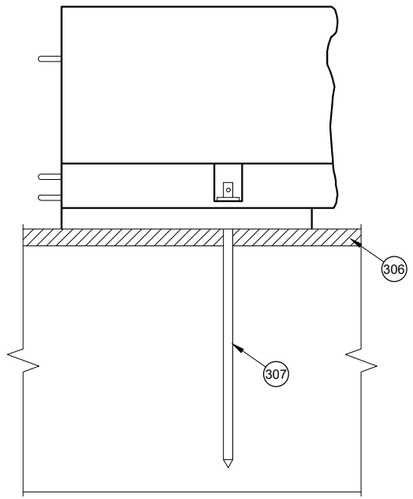

SIDE VIEW

ASPHALT ANCHOR INSTALLATION

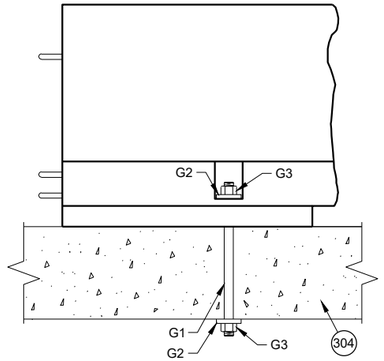

SIDE VIEW

THROUGH BOLT ANCHOR INSTALLATION 305

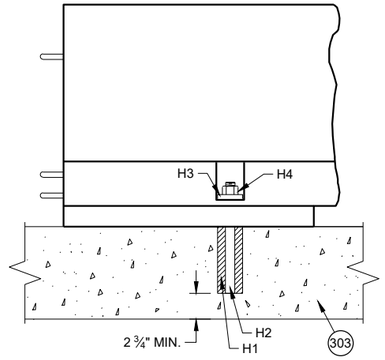

SIDE VIEW

ADHESIVE ANCHOR INSTALLATION 305

6

SDD 14B07 - 16c

CONCRETE BARRIER TEMPORARY PRECAST, 12' - 6"

6

SDD 14B07 - 16c

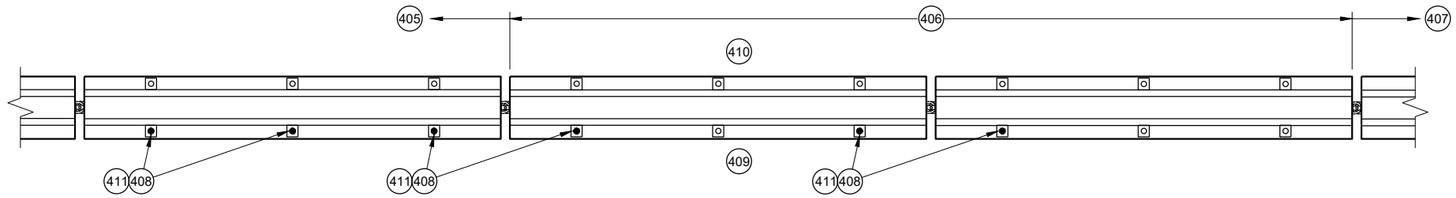

PLAN VIEW

TRANSITION FROM FREE STANDING TO ANCHORED BARRIER

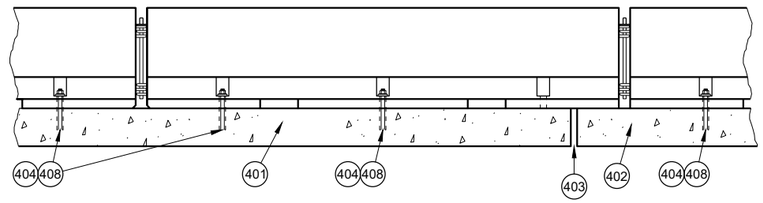

PROFILE VIEW

ANCHORED BARRIER NEAR EXPANSION JOINT (400)

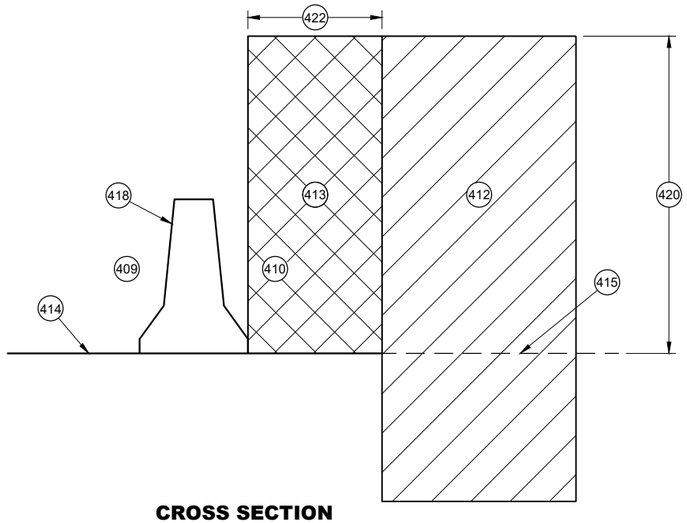

CROSS SECTION

FREE STANDING BARRIER

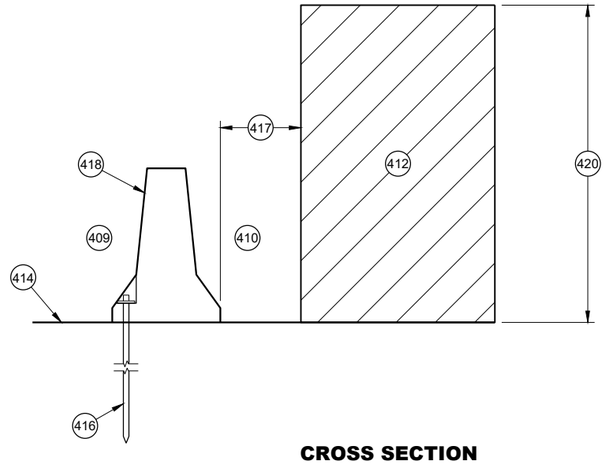

CROSS SECTION

ANCHORED BARRIER FOR OBJECTS ABOVE THE GRADE LINE AND NEAR THE BARRIER

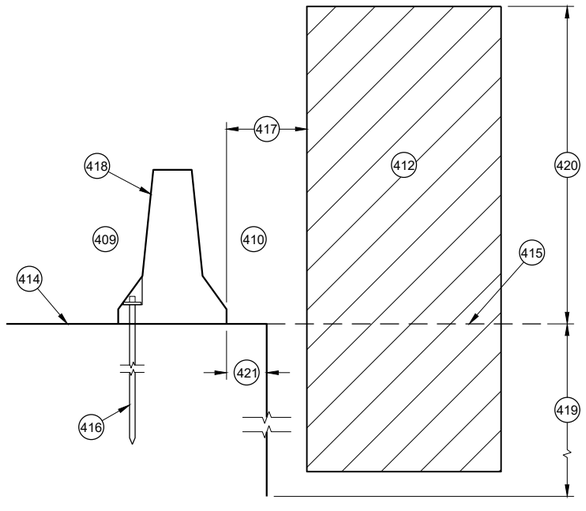

CROSS SECTION

ANCHORED BARRIER NEAR VERTICAL DROP OFF

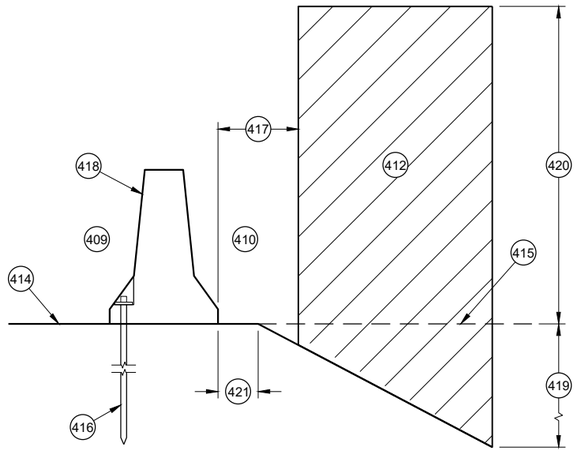

CROSS SECTION

ANCHORED BARRIER NEAR A SLOPE

GENERAL NOTES

(400) NO SINGLE CONCRETE BARRIER SECTION SHALL BE ANCHORED TO BOTH THE BRIDGE DECK AND THE APPROACH SLAB. ALL ANCHOR BOLT LOCATIONS SHALL BE ANCHORED TO THE DECK IN ACCORDANCE WITH THE DETAIL. NO MORE THAN ONE ANCHOR BOLT SHALL BE ELIMINATED FROM A BARRIER SECTION WHEN SPANNING AN EXPANSION JOINT.

(401) CONCRETE DECK

(402) CONCRETE DECK OR APPROACH SLAB.

(403) EXPANSION JOINT

(404) ADHESIVE ANCHOR SHOWN. SEE ANCHOR DETAILS.

(405) ANCHORED TEMPORARY BARRIER

(406) TRANSITION FROM ANCHORED TEMPORARY BARRIER TO FREE STANDING

(407) FREE STANDING BARRIER

(408) REMOVE ALL ANCHORS WHEN NO LONGER NEEDED. FILL CONCRETE PAVEMENTS, DECKS AND APPROACH SLABS WITH NON-SHRINK COMMERCIAL GROUT FROM THE APPROVED PRODUCT LIST. FILL ASPHALT PAVEMENTS WITH ASTM D6690 TYPE II RUBBERIZED CRACK FILLER.

(409) TRAFFIC SIDE

(410) NON-TRAFFIC SIDE

(411) ANCHOR LOCATION. SEE ANCHORING DETAILS.

(412) WORK AREA

(413) AREA FREE OF OBJECTS AND WORKERS

(414) GRADE LINE

(415) EXTENDED GRADE LINE

(416) ANCHORED TEMPORARY BARRIER. SEE BOLT THROUGH DECK, REMOVABLE ADHESIVE ANCHOR, OR AN ASPHALT ANCHOR ROD DETAILS FOR MORE INFORMATION. ASPHALT ANCHOR ROD SHOWN.

(417) WHEN OBJECTS EXTEND ABOVE THE GRADE. A MINIMUM OF 1 FOOT IS REQUIRED FROM BACK OF BARRIER TO OBJECT.

(418) OBJECTS ARE NOT TO BE PLACED ON, MOUNTED TO, OR ALLOWED TO LEAN AGAINST THE BARRIER WITHOUT WRITTEN PERMISSION OF THE PROJECT ENGINEER.

(419) DEPTHS OF 3 FEET OR MORE.

(420) Y = 6.5'

(421) OFFSET FROM BACK OF BARRIER EDGE:

CONCRETE PAVEMENT	0.5'
ASPHALT	0.5'

(422) POSTED SPEED (MPH):

45 OR GREATER	4.0'
40 OR LOWER	2.0'

CONCRETE BARRIER TEMPORARY PRECAST, 12' - 6"

6

SDD 14B07 - 16d

GENERAL NOTES

(500) EXISTING RIGID BARRIERS (VARIES)

(501) TEMPORARY BARRIER

(502) SEE OTHER DETAIL ON HOW TO ANCHOR TEMPORARY BARRIER (BARRIER ASPHALT ANCHOR SHOWN).

(503) ANCHORS ARE REQUIRED ON BOTH SIDE OF THE TEMPORARY BARRIER.

(504) NESTED RAILS ARE REQUIRED ON BOTH SIDES OF THE TEMPORARY BARRIER FOR ALL INSTALLATIONS.

(505) TRAFFIC TRAVELS FROM PERMANENT BARRIER TO TEMPORARY BARRIER.

(506) TRAFFIC TRAVELS FROM TEMPORARY BARRIER TO PERMANENT BARRIER.

(507) VERTICAL BARRIER

(508) SAFETY SHAPE BARRIER

(509) SINGLE SLOPE BARRIER

(510) CAP END PLATE PLACED FLUSH WITH UPSTREAM END OF RIGID BARRIER.

(511) BENT THRIE BEAM TO FIT.

(512) THRIE BEAM PIECES ARE OFFSET 15 ¼" TO PREVENT INTERFERENCE FROM THE ANCHORS ON OPPOSING SIDES.

(513) TWO (2) P1, P2 AND P3 ARE REQUIRED

(514) FIVE (5) N1, N2 AND N3 ARE REQUIRED

(515) TWO (2) R1, R2 AND R3 ARE REQUIRED

(516) CUT WOOD BLOCK TO FIT.

(517) SEE THRIE BEAM RAIL TERMINAL CONNECTOR DETAIL ASSEMBLY.

(518) CAP ASSEMBLY

(519) 4" MAX. GAP BETWEEN TEMPORARY BARRIER AND RIGID BARRIER.

(520) ALL TWELVE SPLICE HOLES REQUIRE M1 AND M2

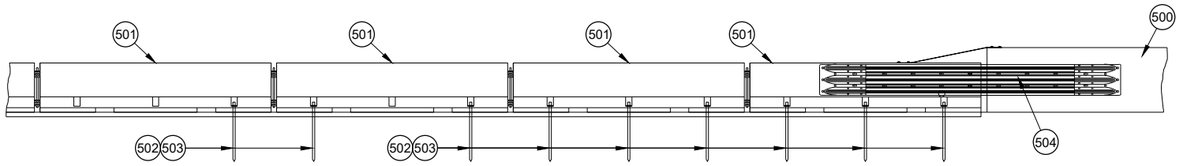

PROFILE VIEW

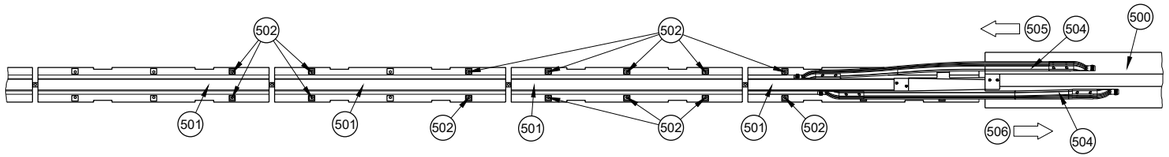

PLAN VIEW
TRANSITION TO RIGID BARRIER

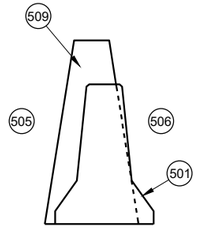

CROSS SECTION TEMPORARY BARRIER PLACEMENT SINGLE SLOPE

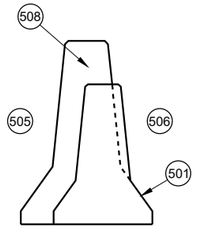

CROSS SECTION TEMPORARY BARRIER PLACEMENT SAFETY SHAPE

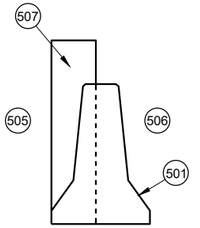

CROSS SECTION TEMPORARY BARRIER PLACEMENT VERTICAL

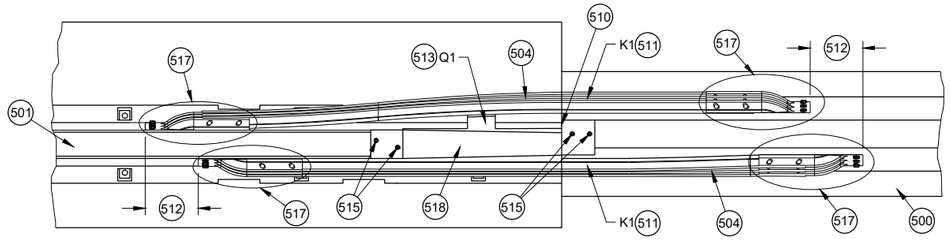

PLAN DETAIL VIEW
TRANSITION TO RIGID BARRIER

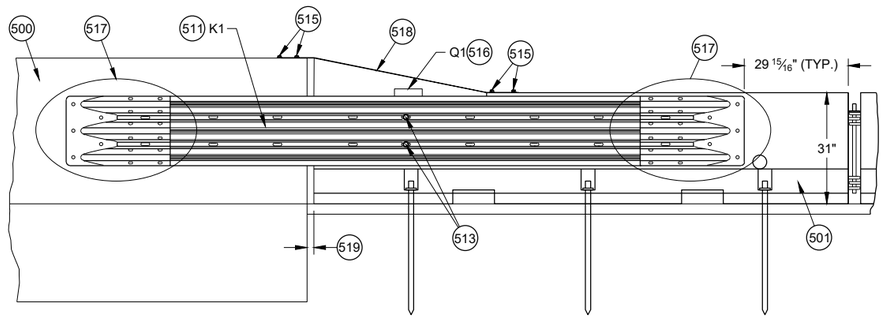

BACK DETAIL VIEW
TRANSITION TO RIGID BARRIER

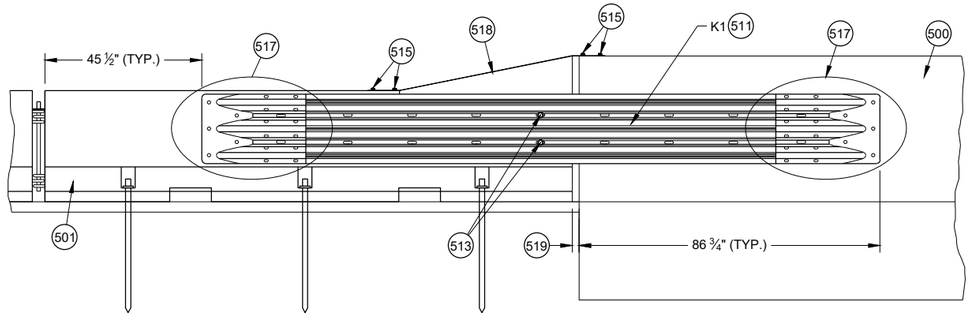

FRONT DETAIL VIEW
TRANSITION TO RIGID BARRIER

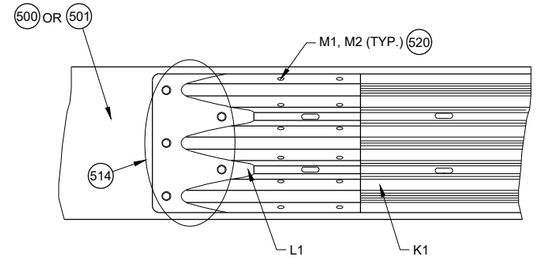

517 DETAIL PLAN VIEW
THRIE BEAM RAIL TERMINAL CONNECTOR ASSEMBLY

CONCRETE BARRIER TEMPORARY PRECAST, 12' - 6"

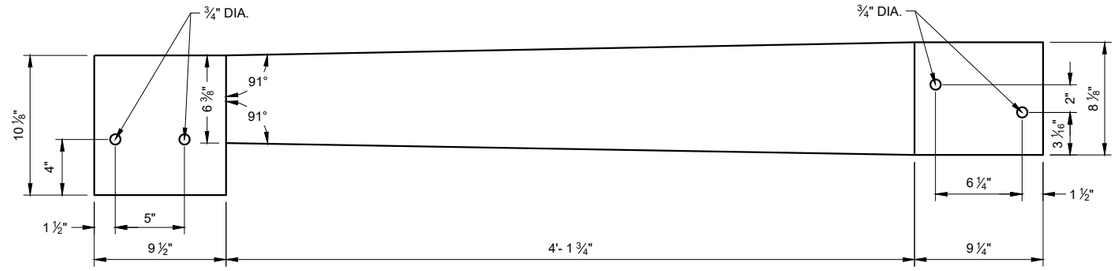

TOP VIEW

S1

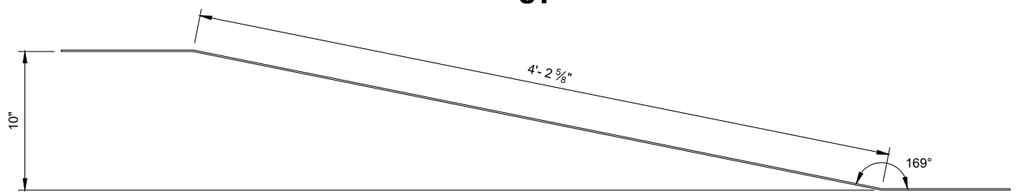

ELEVATION VIEW

S1

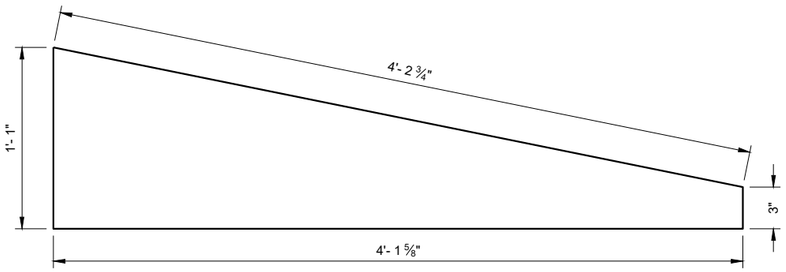

SIDE VIEW

S3

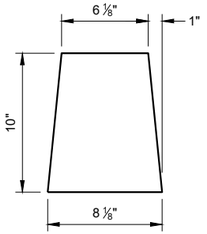

S2

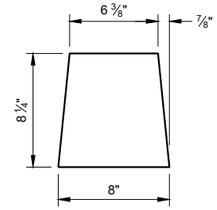

S4

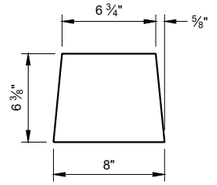

S5

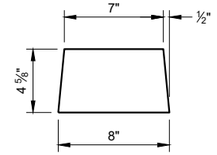

S6

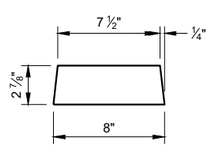

S7

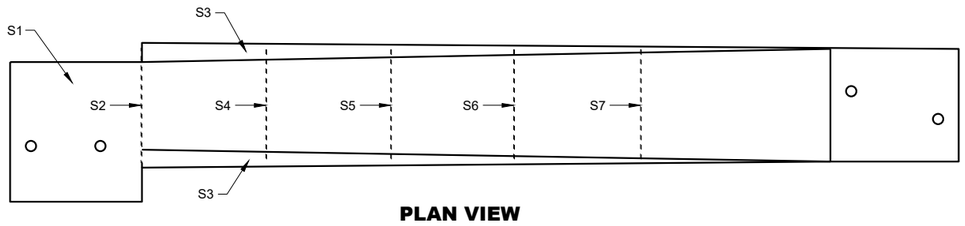

PLAN VIEW

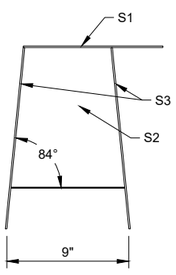

BACK VIEW

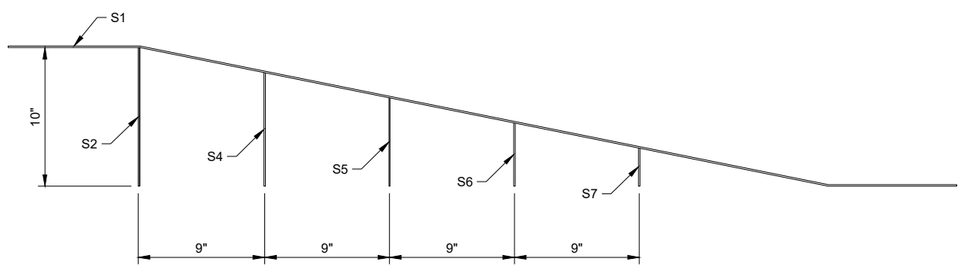

SIDE VIEW (600)

42" TOP CAP ASSEMBLY

GENERAL NOTES

STITCH WELD GUSSET PLATES AND END PLATES ON THREE SIDES

STITCH WELD TWO SIDE PLATES TO TOP PLATE, END PLATE AND GUSSETS.

(600) SIDE PLATES (S3) NOT SHOWN FOR CLARITY.

CONCRETE BARRIER TEMPORARY PRECAST, 12' - 6"

STATE OF WISCONSIN
DEPARTMENT OF TRANSPORTAT 446

6

SDD 14B07 - 16f

6

SDD 14B07 - 16f

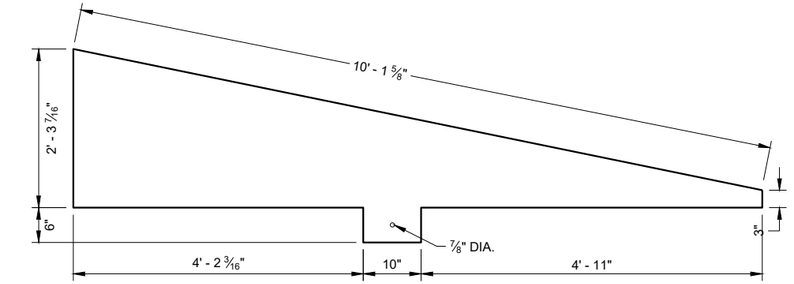

SIDE VIEW
T4



END VIEW

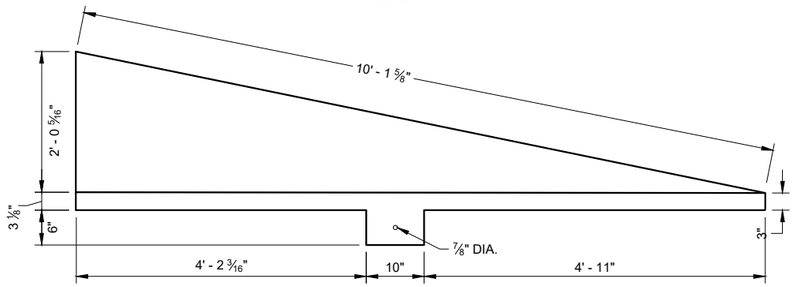

SIDE VIEW
T3

END VIEW

GENERAL NOTES

STITCH WELD GUSSET PLATES AND END PLATES ON THRIE SIDES

STITCH WELD TWO SIDE PLATES TO TOP PLATE, END PLATE AND GUSSETS.

SIDE PLATES, TOP PLATE, END PLATE AND GUSSETS ARE 12 GAUGE ASTM A36 GALVANIZED STEEL.

(700) SIDE PLATES (T3 AND T4) NOT SHOWN FOR CLARITY.

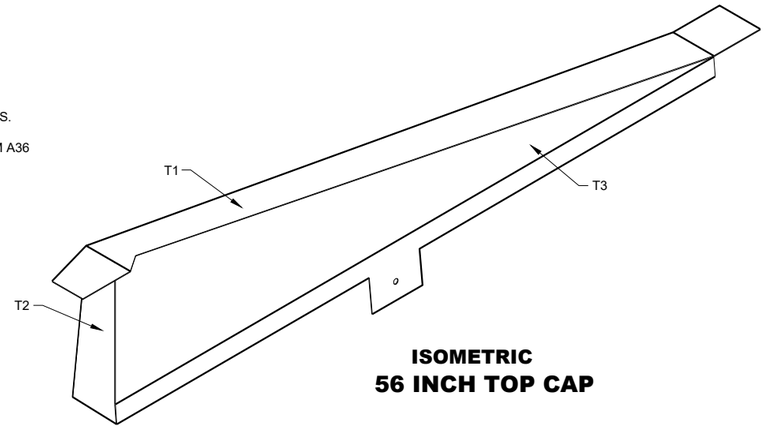

ISOMETRIC
56 INCH TOP CAP

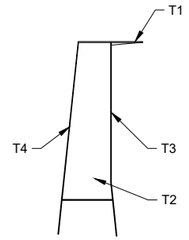

END VIEW
56 INCH TOP CAP

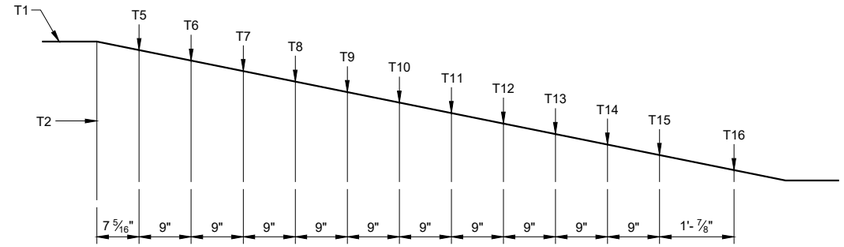

SIDE VIEW (700)
56 INCH TOP CAP

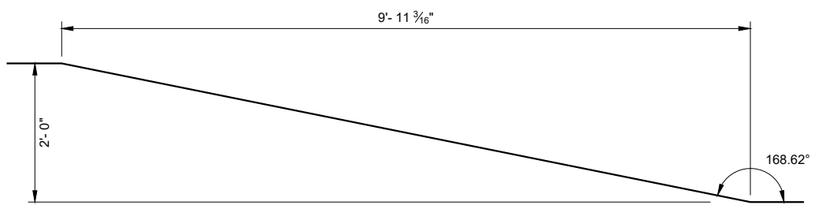

SIDE VIEW
TOP PLATE T1

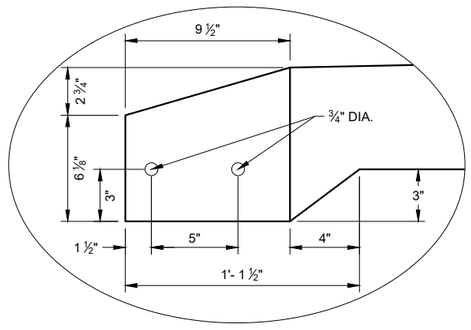

DETAIL "A"

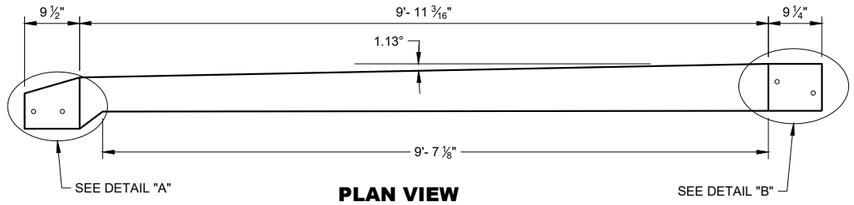

PLAN VIEW
TOP PLATE T1

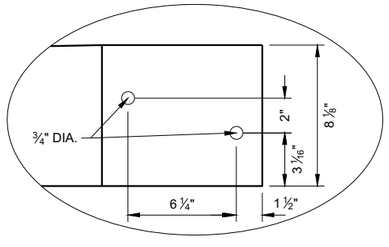

DETAIL "B"

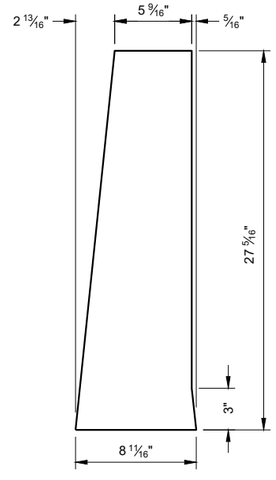

END PLATE T2

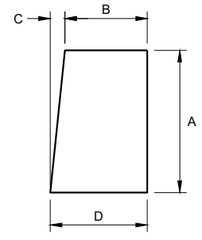

GUSSET PLATES
T5 - T16

GUSSET DIMENSIONS				
GUSSET NO.	A	B	C	D
T5	22 13/16"	5 1/16"	2 5/16"	8 1/16"
T6	21"	5 7/8"	2 3/16"	8 1/16"
T7	19 3/16"	6 1/16"	1 15/16"	8 1/16"
T8	17 3/8"	6 1/4"	1 13/16"	8 1/16"
T9	15 5/16"	6 7/16"	1 9/16"	8 1/16"
T10	13 3/4"	6 5/8"	1 7/16"	8 1/16"
T11	11 15/16"	6 13/16"	1 1/4"	8 1/16"
T12	10 1/8"	7"	1 1/16"	8 1/16"
T13	8 5/16"	7 3/16"	7/8"	8 1/16"
T14	6 1/2"	7 3/8"	1 1/16"	8 1/16"
T15	4 11/16"	7 9/16"	1/2"	8"
T16	2 7/8"	7 3/4"	1/4"	8"

CONCRETE BARRIER TEMPORARY PRECAST, 12' - 6"

STATE OF WISCONSIN
DEPARTMENT OF TRANSPORTATION

6

SDD 14B07 - 16g

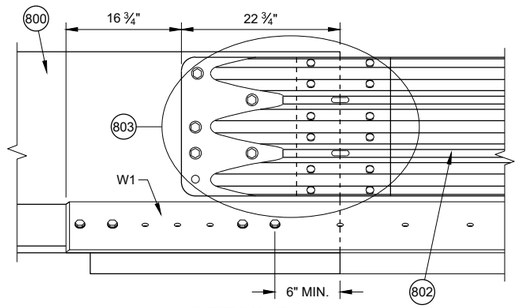

DETAIL D

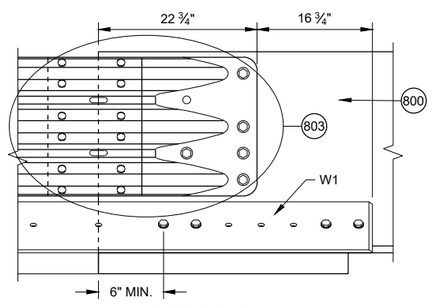

DETAIL E

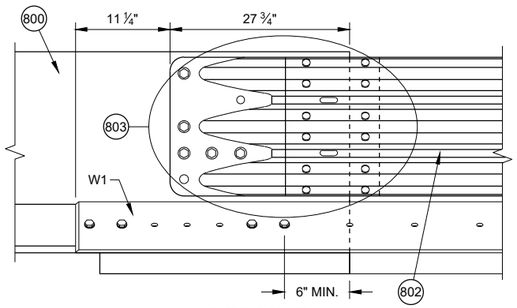

DETAIL F

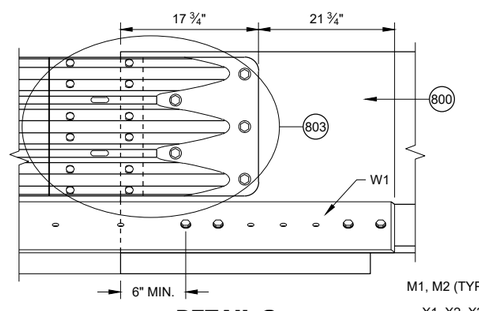

DETAIL G

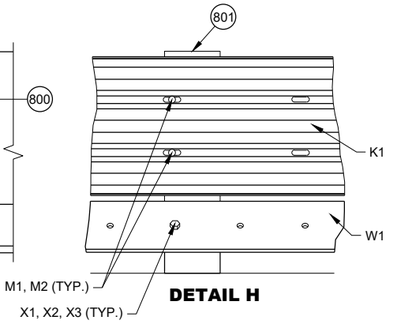

DETAIL H

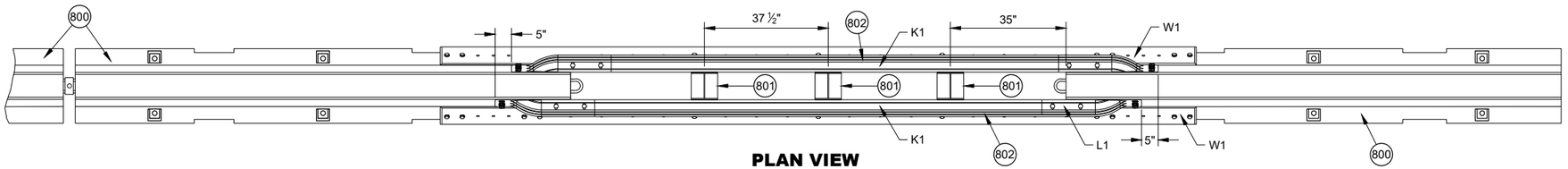

PLAN VIEW

GENERAL NOTES

(800) FREE STANDING TEMPORARY BARRIER

(801) GAP STIFFENER ASSEMBLY

(802) THRIE BEAMS ARE NESTED ON BOTH SIDES OF THE TEMPORARY BARRIER.

(803) SEE THRIE BEAM RAIL TERMINAL CONNECTOR DETAIL

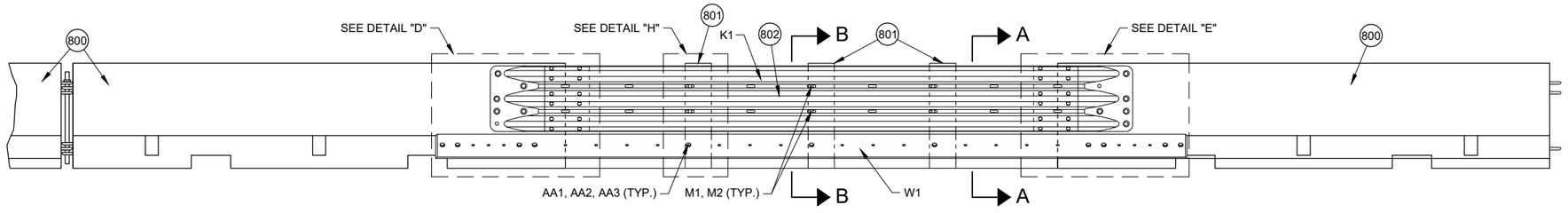

FRONT ELEVATION VIEW

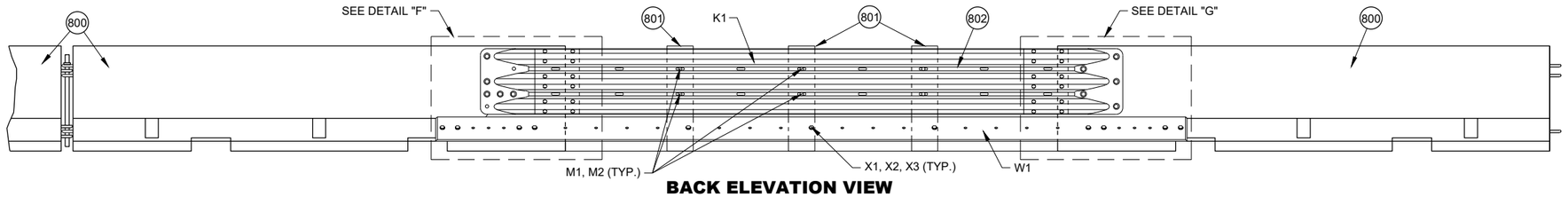

BACK ELEVATION VIEW

PORTABLE CONCRETE BARRIER GAP THRIE BEAM COVER

CONCRETE BARRIER TEMPORARY PRECAST, 12' - 6"

STATE OF WISCONSIN
DEPARTMENT OF TRANSPORTATION

6
SDD 14B07 - 16h

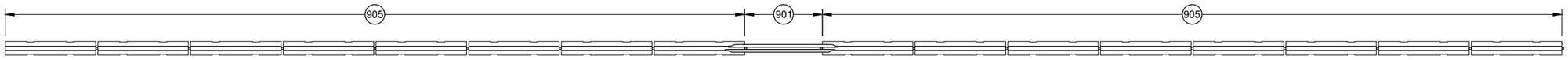

PLAN VIEW
GAP WITHIN SPACING

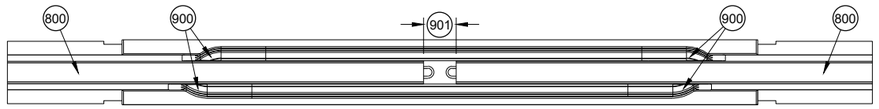

PLAN VIEW
TEMPORARY BARRIER GAP OVER 4" TO 1' MAX. (904)

GENERAL NOTES

(900) SEE OTHER DETAILS FOR TEMPORARY GAP HARDWARE (TYP.)
(901) TEMPORARY BARRIER GAP
(902) GAP STIFFENER ASSEMBLY CENTERED IN THE GAP.
(903) GAP STIFFENER ASSEMBLY IS OFFSET 18 ¾" FROM CENTER
(904) MINIMUM NUMBER OF GAP STIFFENERS SHOWN FOR THE GAP RANGE SHOWN.
(905) MINIMUM OF 8 CONTINUOUS FREE STANDING TEMPORARY BARRIERS

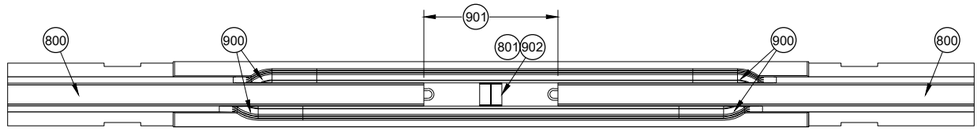

PLAN VIEW
TEMPORARY BARRIER GAP OVER 1' TO 4' MAX. (904)

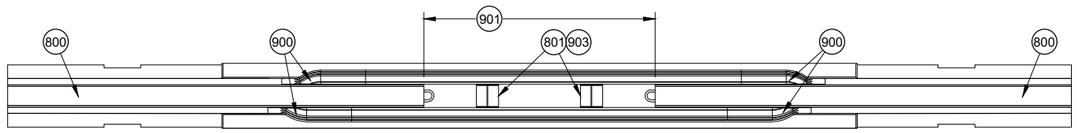

PLAN VIEW
TEMPORARY BARRIER GAP OVER 4' TO 7' MAX. (904)

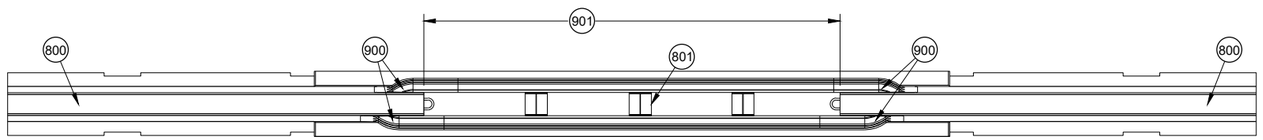

PLAN VIEW
TEMPORARY BARRIER GAP OVER 7' TO 12.5' MAX. (904)

CONCRETE BARRIER TEMPORARY PRECAST, 12' - 6"

6

SDD 14B07 - 16i

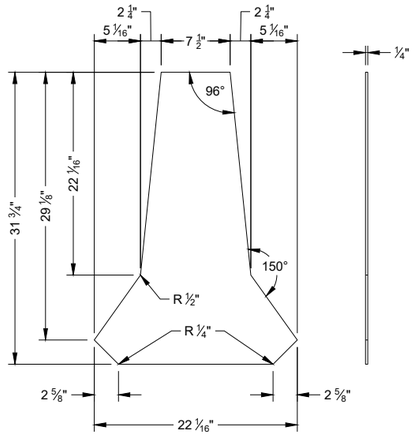

PROFILE VIEW SIDE VIEW

STIFFENER ASSEMBLY CENTER PANEL U1

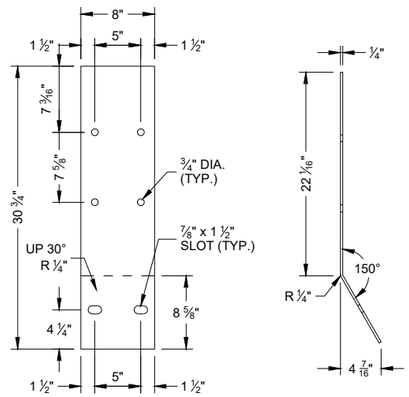

FLAT PATTERN SIDE VIEW

STIFFENER ASSEMBLY SIDE PANEL U2

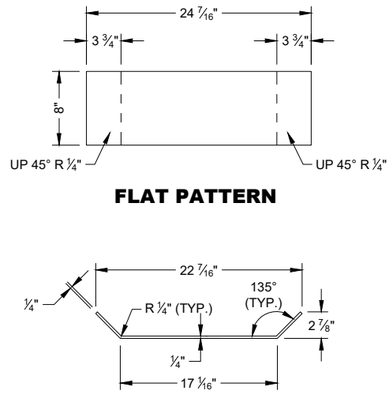

PROFILE VIEW

STIFFENER ASSEMBLY BOTTOM PANEL U3

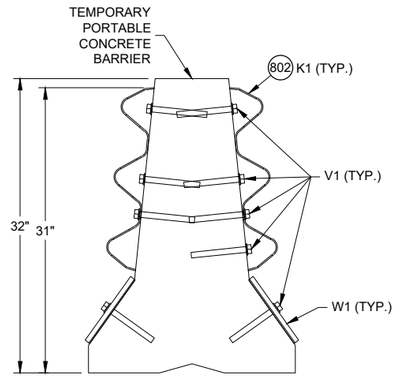

SECTION A - A

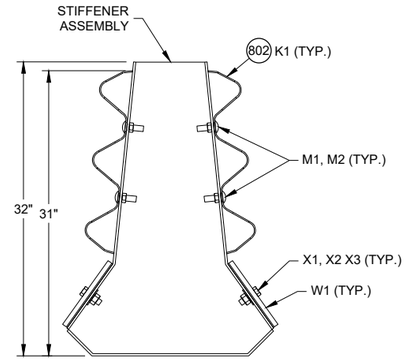

SECTION B - B

PLAN VIEW

PROFILE VIEW

SIDE VIEW

ISOMETRIC

GAP STIFFENER ASSEMBLY

PLAN VIEW

SIDE VIEW

ELEVATION VIEW

W1 TOE PLATE

CONCRETE BARRIER TEMPORARY PRECAST, 12' - 6"

6

SDD 14B07 - 16j

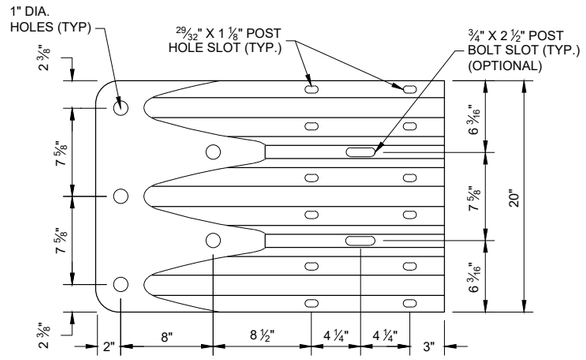

ELEVATION VIEW

THRIE BEAM TERMINAL CONNECTOR

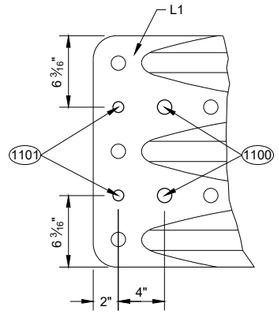

ELEVATION VIEW

ADDITIONAL THRIE BEAM (1102) TERMINAL CONNECTOR HOLE DETAIL

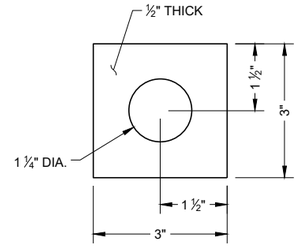

PLATE WASHER DETAIL G2, H3

GENERAL NOTES

(1100) 1" DIA. HOLE

(1101) 3/4" DIA. HOLE

(1102) PROVIDE HOLES IN THRIE BEAM TERMINAL CONNECTOR TO LIMIT STEEL REINFORCEMENT OR LOOP BAR CONFLICT. CONTRACTOR MAY FIELD DRILL ADDITIONAL HOLE OR PROVIDE THRIE BEAM TERMINAL CONNECTOR WITH ADDITIONAL HOLES FROM SUPPLIER.

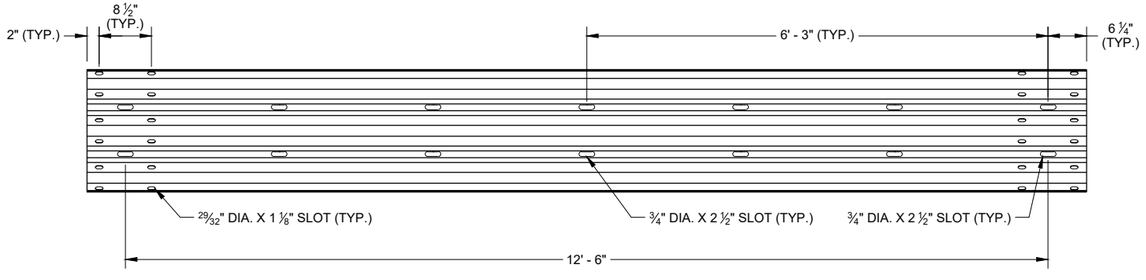

SLOTTED THRIE BEAM RAIL K1

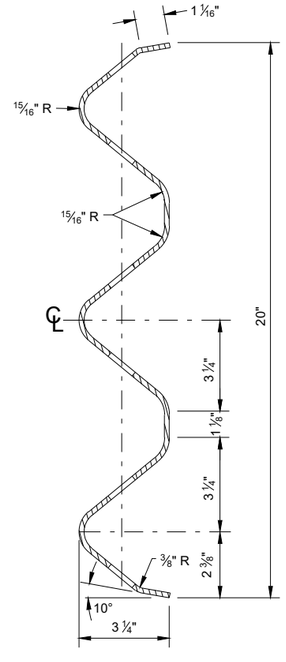

SECTION THROUGH BEAM K1

CONCRETE BARRIER TEMPORARY PRECAST, 12' - 6"

STATE OF WISCONSIN
DEPARTMENT OF TRANSPORTATION

6

SDD 14B07 - 16k

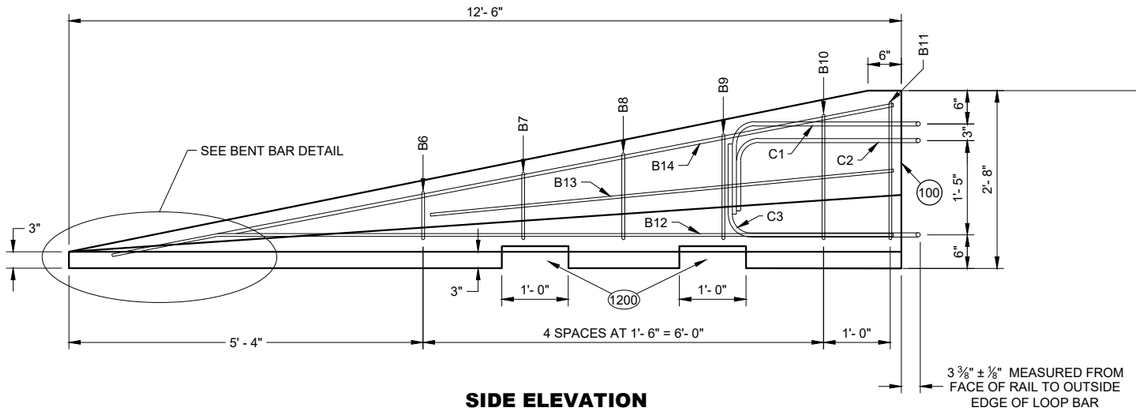

SIDE ELEVATION
(FOR CONNECTION TO LEFT END OF BARRIER)

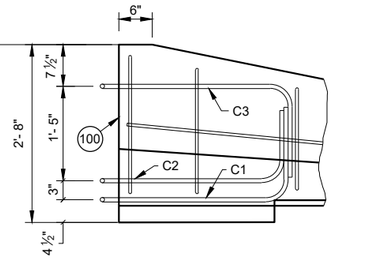

SIDE ELEVATION
LOOP BAR ASSEMBLY INVERTED FOR OPPOSITE END
(FOR CONNECTION TO RIGHT END OF BARRIER)

GENERAL NOTES

(1200) SEE LIFTING SLOT DETAIL. LOCATION OF LIFTING SLOTS DETERMINED BY CONTRACTOR.

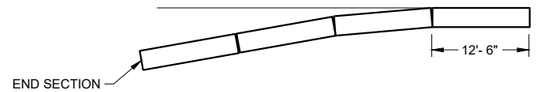

FLARE AT BARRIER END

POSTED SPEED, (MPH)	FLARE RATE
40 OR LESS	6:1
45 OR GREATER	8:1

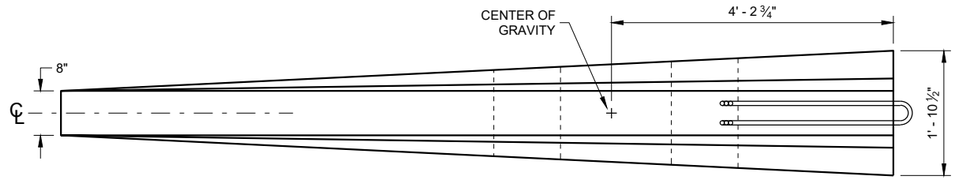

PLAN VIEW

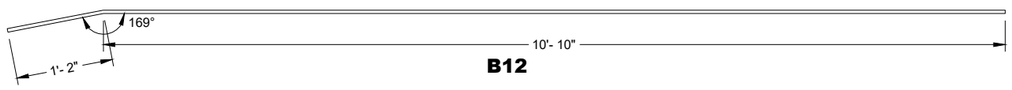

B12

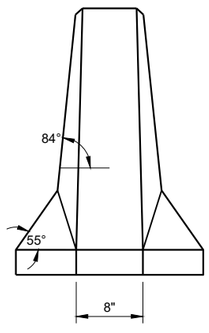

FRONT ELEVATION

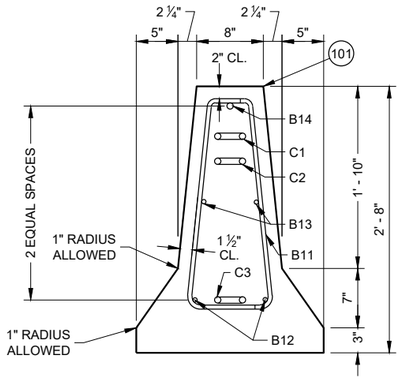

END SECTION

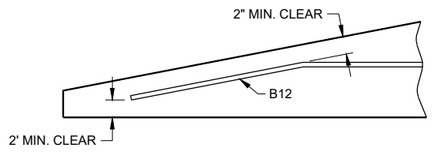

BENT BAR DETAIL

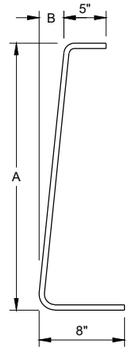

BAR	A	B
B6	10"	1"
B7	1'- 1"	1 ¼"
B8	1'- 5"	1 ⅝"
B9	1'- 8"	1 ⅞"
B10	2'- 0 ½"	2 ⅜"
B11	2'- 3"	2 ¾"

B BARS
2 OF EACH SIZE REQUIRED FOR STIRRUP ASSEMBLY

DETAILS OF BARRIER TAPER SECTION

CONCRETE BARRIER TEMPORARY PRECAST, 12' - 6"

STATE OF WISCONSIN
DEPARTMENT OF TRANSPORTATION

6

SDD 14B07 - 16I

BILL OF MATERIALS - CONCRETE BARRIER PRECAST

PART	DESCRIPTION	MATERIALS SPECIFICATIONS	NOTES
A1	PRECAST TEMPORARY BARRIER - CONCRETE	MIN. = f'c 5000 PSI	
B1	REBAR	STANDARD SPEC. 505.2 GRADE 60 UNCOATED REBAR	#5 REBAR, LENGTH 12'-2"
B2	REBAR	STANDARD SPEC. 505.2 GRADE 60 UNCOATED REBAR	#4 REBAR, LENGTH 12'-2"
B3	REBAR	STANDARD SPEC. 505.2 GRADE 60 UNCOATED REBAR	#5 REBAR, LENGTH 12'-2"
B4	REBAR	STANDARD SPEC. 505.2 GRADE 60 UNCOATED REBAR	#4 REBAR, LENGTH 6'-0"
B5	REBAR	STANDARD SPEC. 505.2 GRADE 60 UNCOATED REBAR	#6 REBAR, LENGTH 2'-11"
B6	REBAR	STANDARD SPEC. 505.2 GRADE 60 UNCOATED REBAR	#4 REBAR, LENGTH 1'-11"
B7	REBAR	STANDARD SPEC. 505.2 GRADE 60 UNCOATED REBAR	#4 REBAR, LENGTH 2'-2"
B8	REBAR	STANDARD SPEC. 505.2 GRADE 60 UNCOATED REBAR	#4 REBAR, LENGTH 2'-6"
B9	REBAR	STANDARD SPEC. 505.2 GRADE 60 UNCOATED REBAR	#4 REBAR, LENGTH 2'-9"
B10	REBAR	STANDARD SPEC. 505.2 GRADE 60 UNCOATED REBAR	#4 REBAR, LENGTH 3'-2"
B11	REBAR	STANDARD SPEC. 505.2 GRADE 60 UNCOATED REBAR	#4 REBAR, LENGTH 3'-4"
B12	REBAR	STANDARD SPEC. 505.2 GRADE 60 UNCOATED REBAR	#4 REBAR, LENGTH 12'-0"
B13	REBAR	STANDARD SPEC. 505.2 GRADE 60 UNCOATED REBAR	#4 REBAR, LENGTH 7'-9"
B14	REBAR	STANDARD SPEC. 505.2 GRADE 60 UNCOATED REBAR	#5 REBAR, LENGTH 11'-9"
C1	LOOP BAR	ASTM A709 GRADE 70 SMOOTH BAR OR ASTM A706 GRADE 60 REBAR UNCOATED	¾" DIA.
C2	LOOP BAR	ASTM A709 GRADE 70 SMOOTH BAR OR ASTM A706 GRADE 60 REBAR UNCOATED	¾" DIA.
C3	LOOP BAR	ASTM A709 GRADE 70 SMOOTH BAR OR ASTM A706 GRADE 60 REBAR UNCOATED	¾" DIA.
D1	CONNECTION PIN - ROD	ASTM A36 MIN. STRENGTH 36 KSI / ASTM A529 MAX. STRENGTH 50 KSI / ASTM A572 MAX STRENGTH 50 KSI / ASTM A709 MAX STRENGTH 50 KSI / ASTM A992 MAX STRENGTH 50 KSI	1 ¼" DIA.
D2	CONNECTION PIN - TOP PLATE	ASTM A36 MIN. STRENGTH 36 KSI / ASTM A529 MAX. STRENGTH 50 KSI / ASTM A572 MAX STRENGTH 50 KSI / ASTM A709 MAX STRENGTH 50 KSI / ASTM A992 MAX STRENGTH 50 KSI	
G1	BOLT THROUGH ANCHOR - THREADED ROD	HOT DIP AASHTO M232 CLASS / ASTM A153 CLASS C / ASTM F2329 C OR MECHANICAL GALVANIZE TO AASHTO M298 CLASS 55 TYPE 2 / ASTM B695 CLASS 55 TYPE 2 A307 GRADE A OR SAE J429 GRADE 2 UNC	1 ⅛" DIA.
G2	BOLT THROUGH ANCHOR - WASHER, SQUARE	ASTM A36 MIN. STRENGTH 36 KSI / ASTM A529 MAX. STRENGTH 50 KSI / ASTM A572 MAX STRENGTH 50 KSI / ASTM A709 MAX STRENGTH 50 KSI / ASTM A992 MAX STRENGTH 50 KSI	
G3	BOLT THROUGH ANCHOR - NUT	HOT DIP AASHTO M232 CLASS / ASTM A153 CLASS C / ASTM F2329 C OR MECHANICAL GALVANIZE TO AASHTO M298 CLASS 55 TYPE 2 / ASTM B695 CLASS 55 UNC OVER TAP NUTS AS SPECIFIED IN AASHTO 291 / ASTM A 563 HEAVY HEX HEAD ASTM A563DH OR SAE J995 GRADE 5	
H1	ADHESIVE ANCHOR - ADHESIVE	ICC-ES-AC308 5 ¼" EMBEDMENT WITH A MIN. STRENGTH OF 1,800 PSI. SEE 603.2 AND 603.3.1.2 OF THE WISCONSIN STANDARD SPECIFICATIONS FOR MORE INFORMATION ON ADHESIVE ANCHORS.	
H2	ADHESIVE ANCHOR - THREADED ROD	HOT DIP AASHTO M232 CLASS / ASTM A153 CLASS C / ASTM F2329 C OR MECHANICAL GALVANIZE TO AASHTO M298 CLASS 55 TYPE 2 / ASTM B695 CLASS 55 TYPE 2 A307 GRADE A / SAE J429 GRADE 2 UNC	1 ⅛" DIA.
H3	ADHESIVE ANCHOR - WASHER, SQUARE	ASTM A36 MIN. STRENGTH 36 KSI / ASTM A529 MAX. STRENGTH 50 KSI / ASTM A572 MAX STRENGTH 50 KSI / ASTM A709 MAX STRENGTH 50 KSI / ASTM A992 MAX STRENGTH 50 KSI	
H4	ADHESIVE ANCHOR - NUT	HOT DIP AASHTO M232 CLASS / ASTM A153 CLASS C / ASTM F2329 C OR MECHANICAL GALVANIZE TO AASHTO M298 CLASS 55 TYPE 2 / ASTM B695 CLASS 55 UNC OVER TAP NUTS AS SPECIFIED IN AASHTO 291 / ASTM A 563 HEAVY HEX HEAD ASTM A563DH OR SAE J995 GRADE 5	
J1	ASPHALT ANCHOR PIN - ROD	ASTM A36 MIN. STRENGTH 36 KSI / ASTM A529 MAX. STRENGTH 50 KSI / ASTM A572 MAX STRENGTH 50 KSI / ASTM A709 MAX STRENGTH 50 KSI / ASTM A992 MAX STRENGTH 50 KSI	1 ½" DIA.
J2	ASPHALT ANCHOR PIN - STOP PLATE	ASTM A36 MIN. STRENGTH 36 KSI / ASTM A529 MAX. STRENGTH 50 KSI / ASTM A572 MAX STRENGTH 50 KSI / ASTM A709 MAX STRENGTH 50 KSI / ASTM A992 MAX STRENGTH 50 KSI	
K1	THRIE BEAM RAIL	AASHTO M180 CLASS A TYPE 2 APPROVED PRODUCER	12 GAUGE
L1	THRIE BEAM RAIL - TERMINAL	AASHTO M180 CLASS A TYPE 2 APPROVED PRODUCER	12 GAUGE

PART	DESCRIPTION	MATERIALS SPECIFICATIONS	NOTES
M1	SPLICE BOLT	HOT DIP AASHTO M232 CLASS / ASTM A153 CLASS C / ASTM F2329 C OR MECHANICAL GAL. TO AASHTO M298 CLASS 55 TYPE 2 / ASTM B695 CLASS 55 TYPE 2 UNC AASHTO M180 HEAD ASTM A307 GRADE B OR SAE J429 GRADE 2 OR ASTM F1554 GRADE 36	⅝" DIA.
M2	SPLICE BOLT - NUT	HOT DIP AASHTO M232 CLASS / ASTM A153 CLASS C / ASTM F2329 C OR MECHANICAL GALVANIZE TO AASHTO M298 CLASS 55 TYPE 2 / ASTM B695 CLASS 55 UNC OVER TAP NUTS AS SPECIFIED IN AASHTO 291 / ASTM A 563 AASHTO M180 RECESSED HEAVY HEX HEAD ASTM A563DH OR SAE J995 GRADE 5	
N1	THRIE BEAM RAIL TERMINAL - MECHANICAL ANCHOR	HOT DIP AASHTO M232 CLASS / ASTM A153 CLASS C / ASTM F2329 C OR MECHANICAL GALVANIZE TO AASHTO M298 CLASS 55 TYPE 2 / ASTM B695 CLASS 55 UNC OVER TAP NUTS AS SPECIFIED IN AASHTO 291 / ASTM A 563 AASHTO M180 RECESSED HEAVY HEX HEAD ASTM A563DH OR SAE J995 GRADE 5	¾" DIA. LENGTH 6"
N2	THRIE BEAM RAIL TERMINAL - WASHER	HOT DIP AASHTO M232 CLASS / ASTM A153 CLASS C / ASTM F2329 C OR MECHANICAL GALVANIZE TO AASHTO M298 CLASS 55 TYPE 2 / ASTM B695 CLASS 55 TYPE 2 F436 TYPE 1	
N3	THRIE BEAM RAIL TERMINAL MECHANICAL OR ADHESIVE ANCHOR	MINIMUM MECHANICAL OR ADHESIVE ANCHOR STRENGTH REQUIREMENTS: ULTIMATE TENSILE LOAD 17.9 KIPS AND ULTIMATE SHEAR LOAD 21.96 KIPS. SEE 603.2 AND 603.3.1.2 OF THE WISCONSIN STANDARD SPECIFICATIONS FOR MORE INFORMATION ON ADHESIVE ANCHORS.	
P1	THRIE BEAM RAIL CONNECTION 1-BOLT	HOT DIP AASHTO M232 CLASS / ASTM A153 CLASS C / ASTM F2329 C OR MECHANICAL GALVANIZE TO AASHTO M298 CLASS 55 TYPE 2 / ASTM B695 CLASS 55 UNC OVER TAP NUTS AS SPECIFIED IN AASHTO 291 / ASTM A 563 AASHTO M180 RECESSED HEAVY HEX HEAD ASTM A563DH OR SAE J995 GRADE 5	¾" DIA.
P2	THRIE BEAM RAIL CONNECTION 1-WASHER	HOT DIP AASHTO M232 CLASS / ASTM A153 CLASS C / ASTM F2329 C OR MECHANICAL GAL. TO AASHTO M298 CLASS 55 TYPE 2 / ASTM B695 CLASS 55 TYPE 2 F436 TYPE 1	
P3	THRIE BEAM RAIL CONNETION 1- MECHANICAL OR ADHESIVE ANCHOR	MINIMUM MECHANICAL OR ADHESIVE ANCHOR STRENGTH REQUIREMENTS: ULTIMATE TENSILE LOAD 9.48 KIPS AND ULTIMATE SHEAR LOAD 10.48 KIPS. SEE 603.2 AND 603.3.1.2 OF THE WISCONSIN STANDARD SPECIFICATIONS FOR MORE INFORMATION ON ADHESIVE ANCHORS.	
Q1	BLOCK WOOD	SEE STANDARD SPEC. 614	
R1	CAP - BOLT	HOT DIP AASHTO M232 CLASS / ASTM A153 CLASS C / ASTM F2329 C OR MECHANICAL GALVANIZE TO AASHTO M298 CLASS 55 TYPE 2 / ASTM B695 CLASS 55 UNC OVER TAP NUTS AS SPECIFIED IN AASHTO 291 / ASTM A 563 AASHTO M180 RECESSED HEAVY HEX HEAD ASTM A563DH OR SAE J995 GRADE 5	⅝" DIA.
R2	CAP- BOLT - WASHER	HOT DIP AASHTO M232 CLASS / ASTM A153 CLASS C / ASTM F2329 C OR MECHANICAL GAL. TO AASHTO M298 CLASS 55 TYPE 2 / ASTM B695 CLASS 55 TYPE 2 F436 TYPE 1	
R3	CAP - BOLT - MECHANICAL ANCHOR	MINIMUM MECHANICAL OR ADHESIVE ANCHOR STRENGTH REQUIREMENTS ULTIMATE TENSILE LOAD 12.14 KIPS AND ULTIMATE SHEAR LOAD 17.5 KIPS.SEE 603.2 AND 603.3.1.2 OF THE WISCONSIN STANDARD SPECIFICATIONS FOR MORE INFORMATION ON ADHESIVE ANCHORS.	12 GAUGE
S1	CAP 42-INCH TOP PLATE	AASHTO M111 / ASTM A123 ASTM A36 MIN. STRENGTH 36 KSI, OR ASTM A529 MAX. STRENGTH 50 KSI, OR ASTM A572 MAX. STRENGTH 50 KSI, OR ASTM A709 MAX. STRENGTH 50 KSI, OR ASTM A992 MAX. STRENGTH 50 KSI	12 GAUGE
S2	CAP 42-INCH END PLATE	AASHTO M111 / ASTM A123 ASTM A36 MIN. STRENGTH 36 KSI, OR ASTM A529 MAX. STRENGTH 50 KSI, OR ASTM A572 MAX. STRENGTH 50 KSI, OR ASTM A709 MAX. STRENGTH 50 KSI, OR ASTM A992 MAX. STRENGTH 50 KSI	12 GAUGE
S3	CAP 42-INCH SIDE PLATE	AASHTO M111 / ASTM A123 ASTM A36 MIN. STRENGTH 36 KSI, OR ASTM A529 MAX. STRENGTH 50 KSI, OR ASTM A572 MAX. STRENGTH 50 KSI, OR ASTM A709 MAX. STRENGTH 50 KSI, OR ASTM A992 MAX. STRENGTH 50 KSI	12 GAUGE
S4	CAP 42-INCH GUSSET 1	AASHTO M111 / ASTM A123 ASTM A36 MIN. STRENGTH 36 KSI, OR ASTM A529 MAX. STRENGTH 50 KSI, OR ASTM A572 MAX. STRENGTH 50 KSI, OR ASTM A709 MAX. STRENGTH 50 KSI, OR ASTM A992 MAX. STRENGTH 50 KSI	12 GAUGE
S5	CAP 42-INCH GUSSET 2	AASHTO M111 / ASTM A123 ASTM A36 MIN. STRENGTH 36 KSI, OR ASTM A529 MAX. STRENGTH 50 KSI, OR ASTM A572 MAX. STRENGTH 50 KSI, OR ASTM A709 MAX. STRENGTH 50 KSI, OR ASTM A992 MAX. STRENGTH 50 KSI	12 GAUGE
S6	CAP 42-INCH GUSSET 3	AASHTO M111 / ASTM A123 ASTM A36 MIN. STRENGTH 36 KSI, OR ASTM A529 MAX. STRENGTH 50 KSI, OR ASTM A572 MAX. STRENGTH 50 KSI, OR ASTM A709 MAX. STRENGTH 50 KSI, OR ASTM A992 MAX. STRENGTH 50 KSI	12 GAUGE
S7	CAP 42-INCH GUSSET 4	AASHTO M111 / ASTM A123 ASTM A36 MIN. STRENGTH 36 KSI, OR ASTM A529 MAX. STRENGTH 50 KSI, OR ASTM A572 MAX. STRENGTH 50 KSI, OR ASTM A709 MAX. STRENGTH 50 KSI, OR ASTM A992 MAX. STRENGTH 50 KSI	12 GAUGE

6

SDD14B07 - 16m

MIDWEST GUARDRAIL SYSTEM (MGS) TYPE 2 TERMINAL

STATE OF WISCONSIN
DEPARTMENT OF TRANSPORTATION

6

SDD14B07 - 16m

BILL OF MATERIALS - CONCRETE BARRIER PRECAST

PART	DESCRIPTION	MATERIALS SPECIFICATIONS	NOTES
T1	CAP 56-INCH TOP PLATE	AASHTO M111 / ASTM A123 ASTM A36 MIN. STRENGTH 36 KSI, OR ASTM A529 MAX. STRENGTH 50 KSI, OR ASTM A572 MAX. STRENGTH 50 KSI, OR ASTM A709 MAX. STRENGTH 50 KSI, OR ASTM A992 MAX. STRENGTH 50 KSI	12 GAUGE
T2	CAP 56-INCH END PLATE	AASHTO M111 / ASTM A123 ASTM A36 MIN. STRENGTH 36 KSI, OR ASTM A529 MAX. STRENGTH 50 KSI, OR ASTM A572 MAX. STRENGTH 50 KSI, OR ASTM A709 MAX. STRENGTH 50 KSI, OR ASTM A992 MAX. STRENGTH 50 KSI	12 GAUGE
T3	CAP 56-INCH SIDE PLATE 1	AASHTO M111 / ASTM A123 ASTM A36 MIN. STRENGTH 36 KSI, OR ASTM A529 MAX. STRENGTH 50 KSI, OR ASTM A572 MAX. STRENGTH 50 KSI, OR ASTM A709 MAX. STRENGTH 50 KSI, OR ASTM A992 MAX. STRENGTH 50 KSI	12 GAUGE
T4	CAP 56-INCH SIDE PLATE 2	AASHTO M111 / ASTM A123 ASTM A36 MIN. STRENGTH 36 KSI, OR ASTM A529 MAX. STRENGTH 50 KSI, OR ASTM A572 MAX. STRENGTH 50 KSI, OR ASTM A709 MAX. STRENGTH 50 KSI, OR ASTM A992 MAX. STRENGTH 50 KSI	12 GAUGE
T5	CAP 56-INCH GUSSET 1	AASHTO M111 / ASTM A123 ASTM A36 MIN. STRENGTH 36 KSI, OR ASTM A529 MAX. STRENGTH 50 KSI, OR ASTM A572 MAX. STRENGTH 50 KSI, OR ASTM A709 MAX. STRENGTH 50 KSI, OR ASTM A992 MAX. STRENGTH 50 KSI	12 GAUGE
T6	CAP 56-INCH GUSSET 2	AASHTO M111 / ASTM A123 ASTM A36 MIN. STRENGTH 36 KSI, OR ASTM A529 MAX. STRENGTH 50 KSI, OR ASTM A572 MAX. STRENGTH 50 KSI, OR ASTM A709 MAX. STRENGTH 50 KSI, OR ASTM A992 MAX. STRENGTH 50 KSI	12 GAUGE
T7	CAP 56-INCH GUSSET 3	AASHTO M111 / ASTM A123 ASTM A36 MIN. STRENGTH 36 KSI, OR ASTM A529 MAX. STRENGTH 50 KSI, OR ASTM A572 MAX. STRENGTH 50 KSI, OR ASTM A709 MAX. STRENGTH 50 KSI, OR ASTM A992 MAX. STRENGTH 50 KSI	12 GAUGE
T8	CAP 42-INCH GUSSET 4	AASHTO M111 / ASTM A123 ASTM A36 MIN. STRENGTH 36 KSI, OR ASTM A529 MAX. STRENGTH 50 KSI, OR ASTM A572 MAX. STRENGTH 50 KSI, OR ASTM A709 MAX. STRENGTH 50 KSI, OR ASTM A992 MAX. STRENGTH 50 KSI	12 GAUGE
T9	CAP 42-INCH GUSSET 5	AASHTO M111 / ASTM A123 ASTM A36 MIN. STRENGTH 36 KSI, OR ASTM A529 MAX. STRENGTH 50 KSI, OR ASTM A572 MAX. STRENGTH 50 KSI, OR ASTM A709 MAX. STRENGTH 50 KSI, OR ASTM A992 MAX. STRENGTH 50 KSI	12 GAUGE
T10	CAP 42-INCH GUSSET 6	AASHTO M111 / ASTM A123 ASTM A36 MIN. STRENGTH 36 KSI, OR ASTM A529 MAX. STRENGTH 50 KSI, OR ASTM A572 MAX. STRENGTH 50 KSI, OR ASTM A709 MAX. STRENGTH 50 KSI, OR ASTM A992 MAX. STRENGTH 50 KSI	12 GAUGE
T11	CAP 42-INCH GUSSET 7	AASHTO M111 / ASTM A123 ASTM A36 MIN. STRENGTH 36 KSI, OR ASTM A529 MAX. STRENGTH 50 KSI, OR ASTM A572 MAX. STRENGTH 50 KSI, OR ASTM A709 MAX. STRENGTH 50 KSI, OR ASTM A992 MAX. STRENGTH 50 KSI	12 GAUGE
T12	CAP 42-INCH GUSSET 8	AASHTO M111 / ASTM A123 ASTM A36 MIN. STRENGTH 36 KSI, OR ASTM A529 MAX. STRENGTH 50 KSI, OR ASTM A572 MAX. STRENGTH 50 KSI, OR ASTM A709 MAX. STRENGTH 50 KSI, OR ASTM A992 MAX. STRENGTH 50 KSI	12 GAUGE
T13	CAP 42-INCH GUSSET 9	AASHTO M111 / ASTM A123 ASTM A36 MIN. STRENGTH 36 KSI, OR ASTM A529 MAX. STRENGTH 50 KSI, OR ASTM A572 MAX. STRENGTH 50 KSI, OR ASTM A709 MAX. STRENGTH 50 KSI, OR ASTM A992 MAX. STRENGTH 50 KSI	12 GAUGE
T14	CAP 42-INCH GUSSET 10	AASHTO M111 / ASTM A123 ASTM A36 MIN. STRENGTH 36 KSI, OR ASTM A529 MAX. STRENGTH 50 KSI, OR ASTM A572 MAX. STRENGTH 50 KSI, OR ASTM A709 MAX. STRENGTH 50 KSI, OR ASTM A992 MAX. STRENGTH 50 KSI	12 GAUGE
T15	CAP 42-INCH GUSSET 11	AASHTO M111 / ASTM A123 ASTM A36 MIN. STRENGTH 36 KSI, OR ASTM A529 MAX. STRENGTH 50 KSI, OR ASTM A572 MAX. STRENGTH 50 KSI, OR ASTM A709 MAX. STRENGTH 50 KSI, OR ASTM A992 MAX. STRENGTH 50 KSI	12 GAUGE
T16	CAP 42-INCH GUSSET 12	AASHTO M111 / ASTM A123 ASTM A36 MIN. STRENGTH 36 KSI, OR ASTM A529 MAX. STRENGTH 50 KSI, OR ASTM A572 MAX. STRENGTH 50 KSI, OR ASTM A709 MAX. STRENGTH 50 KSI, OR ASTM A992 MAX. STRENGTH 50 KSI	12 GAUGE
U1	GAP STIFFENER	AASHTO M111 / ASTM A123 ASTM A36 MIN. STRENGTH 36 KSI, OR ASTM A529 MAX. STRENGTH 50 KSI, OR ASTM A572 MAX. STRENGTH 50 KSI, OR ASTM A709 MAX. STRENGTH 50 KSI, OR ASTM A992 MAX. STRENGTH 50 KSI	
U2	GAP STIFFENER - CONNECTOR PLATE 1	AASHTO M111 / ASTM A123 ASTM A36 MIN. STRENGTH 36 KSI, OR ASTM A529 MAX. STRENGTH 50 KSI, OR ASTM A572 MAX. STRENGTH 50 KSI, OR ASTM A709 MAX. STRENGTH 50 KSI, OR ASTM A992 MAX. STRENGTH 50 KSI	
U3	GAP STIFFENER - CONNECTOR PLATE 2	AASHTO M111 / ASTM A123 ASTM A36 MIN. STRENGTH 36 KSI, OR ASTM A529 MAX. STRENGTH 50 KSI, OR ASTM A572 MAX. STRENGTH 50 KSI, OR ASTM A709 MAX. STRENGTH 50 KSI, OR ASTM A992 MAX. STRENGTH 50 KSI	

PART	DESCRIPTION	MATERIALS SPECIFICATIONS	NOTES
V1	THRIE BEAM RAIL TERMINAL MECHANICAL OR ADHESIVE ANCHOR	MINIMUM MECHANICAL OR ADHESIVE ANCHOR STRENGTH REQUIREMENTS ULTIMATE TENSILE LOAD 24.0 KIPS AND ULTIMATE SHEAR LOAD 21.5 KIPS. SEE 603.2 AND 603.3.1.2 OF THE WISCONSIN STANDARD SPECIFICATIONS FOR MORE INFORMATION ON ADHESIVE ANCHORS.	¾" DIA.
V2	GAP STIFFENER - BOLT - NUT	HOT DIP AASHTO M232 CLASS / ASTM A153 CLASS C / ASTM F2329 C O R MECHANICAL GALVANIZE TO AASHTO M298 CLASS 50 TYPE 1 / ASTM B695 CLASS 50 TYPE 1 UNC OVER TAP NUTS AS SPECIFIED IN AASHTO 291/ASTM A 563 HEAVY HEX HEAD ASTM A563DH OR SAE J995 GRADE 5	
W1	TOE PLATE	AASHTO M111/ASTM A123 ASTM A36 MIN STRENGTH 36 KSI, OR ASTM A529 MAX. STRENGTH 50 KSI, OR ASTM A572 MAX. STRENGTH 50 KSI, OR ASTM A709 MAX. STRENGTH 50 KSI, OR ASTM A992 MAX. STRENGTH 50 KSI	
X1	TOE PLATE - CONNECTION BOLT	HOT DIP AASHTO M232 CLASS / ASTM A153 CLASS C / ASTM F2329 C OR MECHANICAL GALVANIZE TO AASHTO M298 CLASS 55 TYPE 2 / ASTM B695 CLASS 55 TYPE 2 UNC HEAVY HEX HEAD OR AASTHO M180 HEAD, ASTM F3125 GRADE A325 TYPE 1 HEAVY HEX HEAD OR SAE J429 GRADE 5 HEAVY HEX HEAD / ASTM A449 TYPE 1 HEAVY HEX HEAD. BOLTS MAY BE FULLY THREADED. PROVIDE ENOUGH THREADING FOR PROPER TIGHTENING OF BOLT.	¾" DIA.
X2	TOE PLATE - CONNECTION BOLT - WASHER	HOT DIP AASHTO M232 CLASS / ASTM A153 CLASS C / ASTM F2329 C OR MECHANICAL GALVANIZE TO AASHTO M298 CLASS 55 TYPE 2 / ASTM B695 CLASS 55 TYPE 2 F436 TYPE 1 (HARDEN WASHER ONLY)	
X3	TOE PLATE - CONNECTION BOLT - NUT	HOT DIP AASHTO M232 CLASS / ASTM A153 CLASS C / ASTM F2329 C OR MECHANICAL GALVANIZE TO AASHTO M298 CLASS 55 TYPE 2 / ASTM B695 CLASS 55 UNC OVER TAP NUTS AS SPECIFIED IN AASHTO 291 / ASTM A 563 HEAVY HEX HEAD ASTM A563DH OR SAE J995 GRADE 5	

6

SDD 14B07 - 16n

CONCRETE BARRIER TEMPORARY PRECAST, 12' - 6"

STATE OF WISCONSIN
DEPARTMENT OF TRANSPORTATION

APPROVED
May 2022 — DATE
/S/ Rodney Taylor — ROADWAY STANDARDS DEVE ENGINEER
FHWA

6

SDD 14B07 - 16n

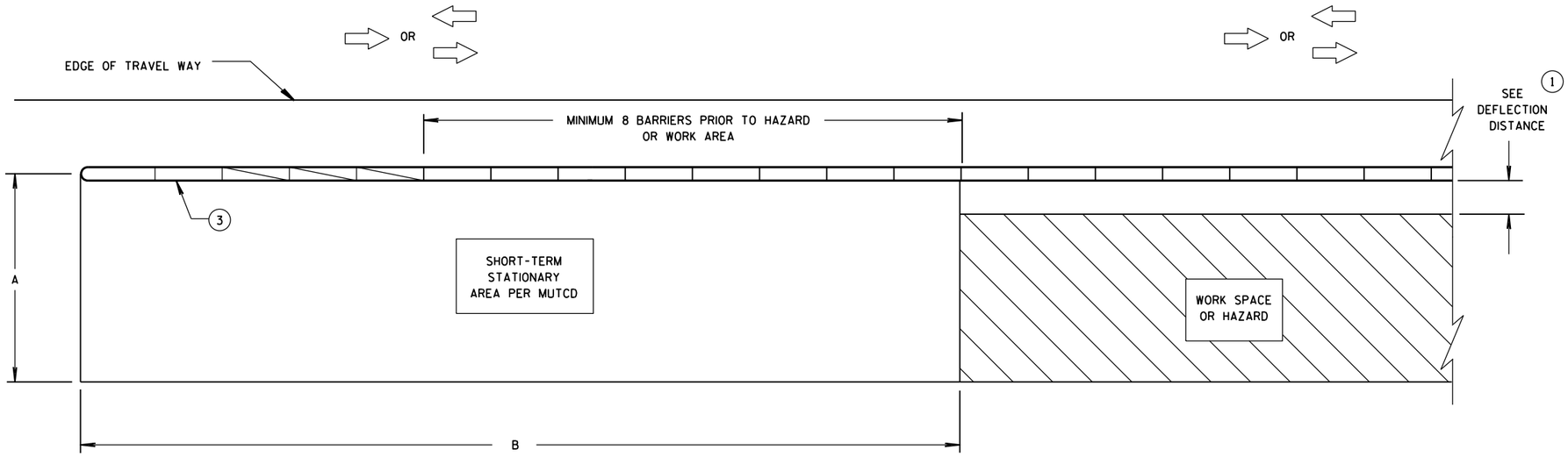

CRASH CUSHION/SAND BARREL ARRAY AND TEMPORARY BARRIER INSTALLATION FOR TRAFFIC ON ONE SIDE OF BARRIER

DIMENSION A TABLE (2)

FACILITY	POSTED SPEED MPH	DIMENSION A	
		MIN. FT	MAX. FT
FREEWAY/EXPRESSWAY	ALL	15	20
NON-FREEWAY/EXPRESSWAY	GREATER THAN OR EQUAL TO 45	10	15
NON-FREEWAY/EXPRESSWAY	LESS THAN 45	8	10
AADT LESS THAN 1,500	ALL	8	10

DIMENSION B TABLE (2)

POSTED SPEEDS MPH	DIMENSION B FT
20	115
25	155
30	200
35	250
40	305
45	360
50	425
55	495
60	570
65	645

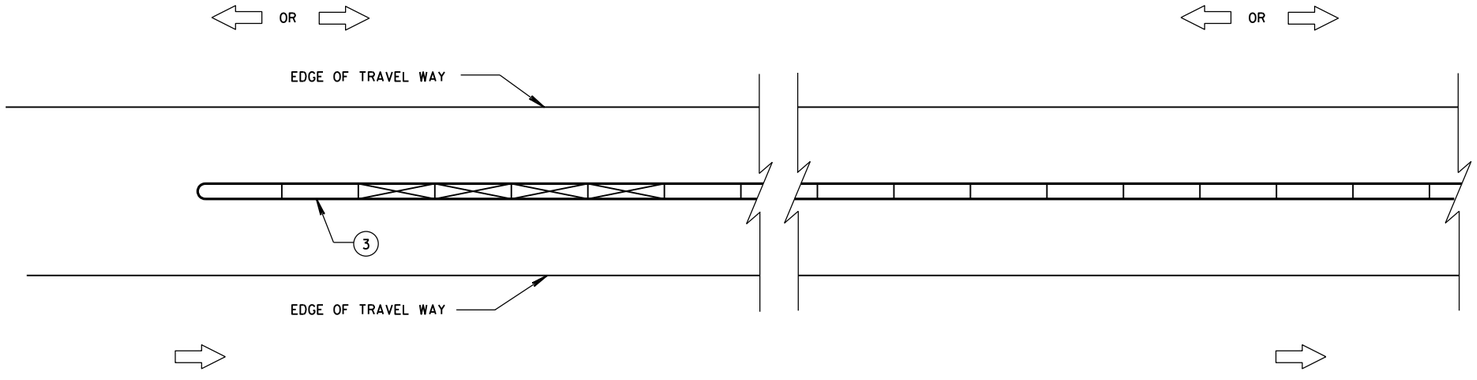

CRASH CUSHION/SAND BARREL ARRAY AND TEMPORARY BARRIER INSTALLATION FOR TRAFFIC ON BOTH SIDES OF BARRIER

LEGEND

- DIRECTION OF TRAVEL
- CRASH CUSHION OR SAND BARREL ARRAY
- SEE FREE STANDING TRANSITION TO TIED-DOWN SYSTEM DETAILS
- SEE BI-DIRECTIONAL TRANSITION TO TIED-DOWN SYSTEM DETAILS
- 3 PINS PLACED ON TRAFFIC SIDE OF BARRIER
- PERMANENT CONCRETE BARRIER OR CONCRETE PARAPET
- FREE STANDING TEMPORARY BARRIER

GENERAL NOTES

SEE STANDARD DETAIL DRAWING 14B7 FOR MORE INFORMATION.

DETAILS PROVIDE A GENERAL LAYOUT OF TEMPORARY CONCRETE BARRIER, CRASH CUSHIONS, SAND BARREL ARRAYS AND TIE DOWN TRANSITIONS. DETAILS PROVIDED MAY NOT FIT ALL POSSIBLE SITUATIONS OR SITE CONDITIONS. SEE OTHER SECTIONS OF THE CONTRACT OR PROJECT ENGINEER FOR MORE DETAILS.

ADDITIONAL TEMPORARY BARRIER MAY BE REQUIRED TO PROTECT TRAVELING PUBLIC FROM HAZARDS, CONTRACTOR'S OPERATIONS OR TO CONTROL TRAFFIC.

TEMPORARY BARRIER MAY BE REQUIRED TO BE ANCHORED TO PAVEMENT OR BRIDGE DECK.

FOR DETAILS ON CRASH CUSHION OR SAND BARREL ARRAYS SEE OTHER SECTIONS OF THE PLAN AND MANUFACTURE'S DETAILS.

SLOPES LEADING TO TEMPORARY BARRIER, CRASH CUSHION OR SAND BARREL ARRAY ARE 10:1 OR LESS.

(1) FOR DEFLECTION INFORMATION SEE STANDARD DETAIL DRAWING 14B7.

(2) VALUES PROVIDED MAY NOT FIT ALL POSSIBLE SITUATIONS OR SITE CONDITIONS. SEE OTHER SECTIONS OF THE CONTRACT OR PROJECT ENGINEER FOR MORE DETAILS.

(3) ANCHOR TEMPORARY BARRIER ACCORDING TO CRASH CUSHION OR SAND BARREL MANUFACTURER'S RECOMMENDATIONS. IF MANUFACTURER'S RECOMMENDATIONS ARE NOT PROVIDED, ANCHOR 3 PINS ON TRAFFIC SIDE.

CRASH CUSHION/SAND BARREL ARRAY AND OTHER TEMPORARY BARRIER LAYOUT DETAILS

STATE OF WISCONSIN
DEPARTMENT OF TRANSPOI

6

S.D.D. 14 B 8-2a

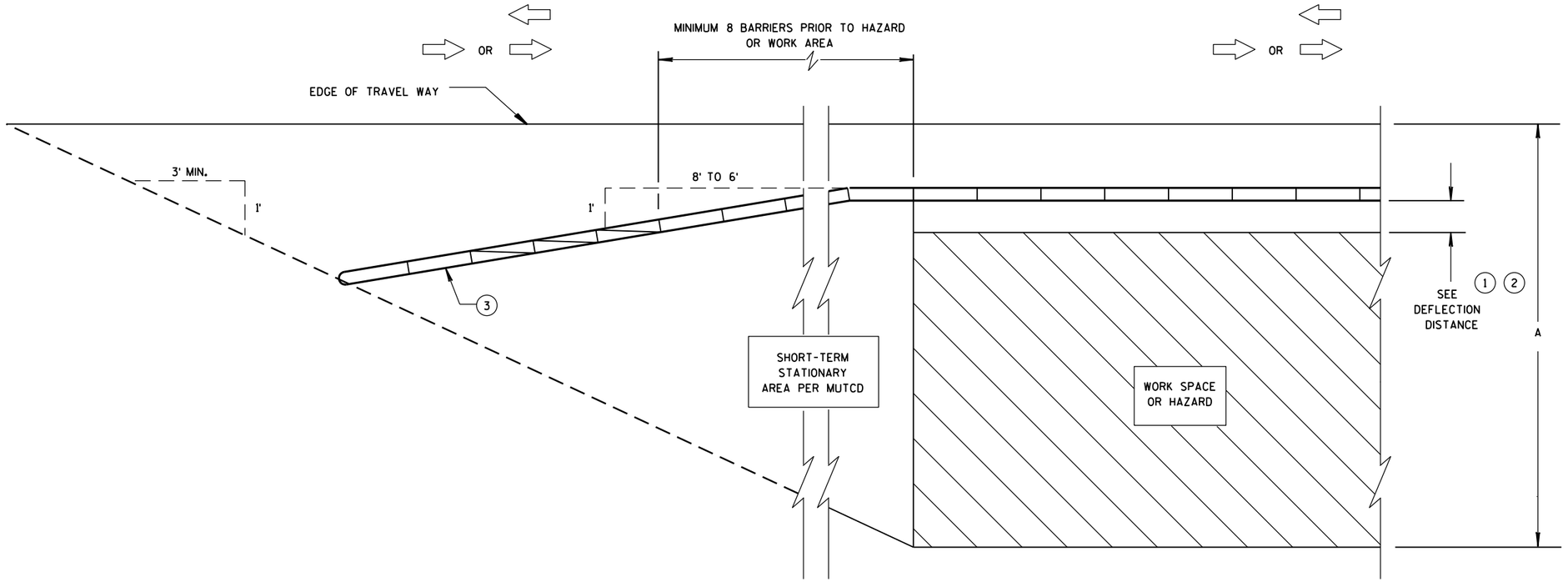

CRASH CUSHION/SAND BARREL ARRAY AND TEMPORARY BARRIER INSTALLATION FOR TRAFFIC ON ONE SIDE - FLARED INSTALLATION

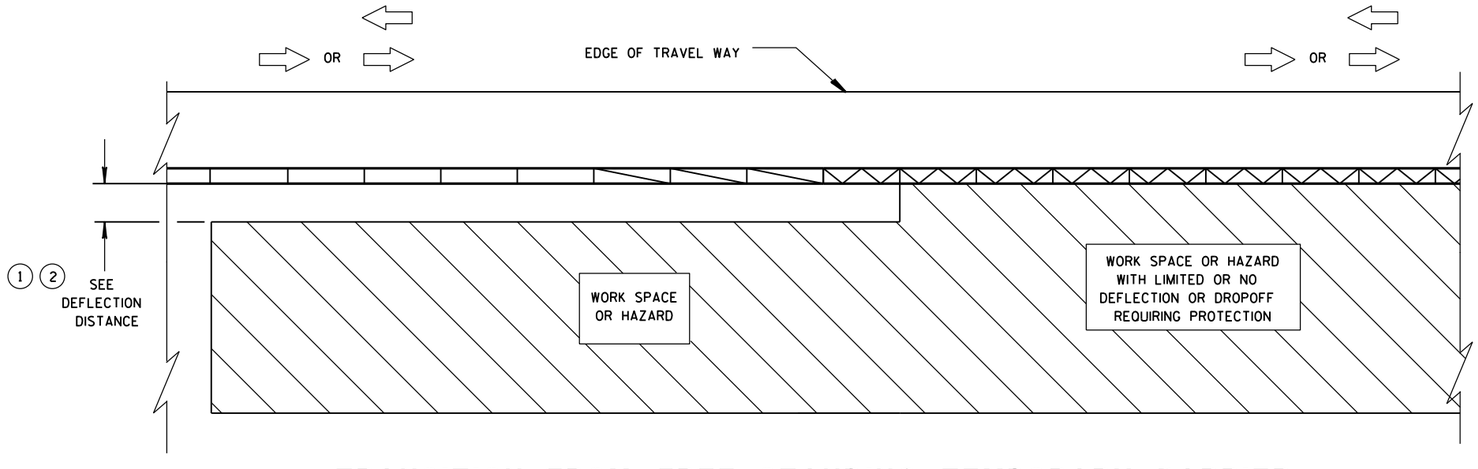

TRANSITION FROM FREE STANDING TEMPORARY BARRIER TO ANCHORED BARRIER

LEGEND

- DIRECTION OF TRAVEL
- CRASH CUSHION OR SAND BARREL ARRAY
- SEE FREE STANDING TRANSITION TO TIED-DOWN SYSTEM DETAILS
- SEE BI-DIRECTIONAL TRANSITION TO TIED-DOWN SYSTEM DETAILS
- 3 PINS PLACED ON TRAFFIC SIDE OF BARRIER
- PERMANENT CONCRETE BARRIER OR CONCRETE PARAPET
- FREE STANDING TEMPORARY BARRIER

CRASH CUSHION/SAND BARREL ARRAY AND OTHER TEMPORARY BARRIER LAYOUT DETAILS

STATE OF WISCONSIN
DEPARTMENT OF TRANSPOI

6

S.D.D. 14 B 8-2b

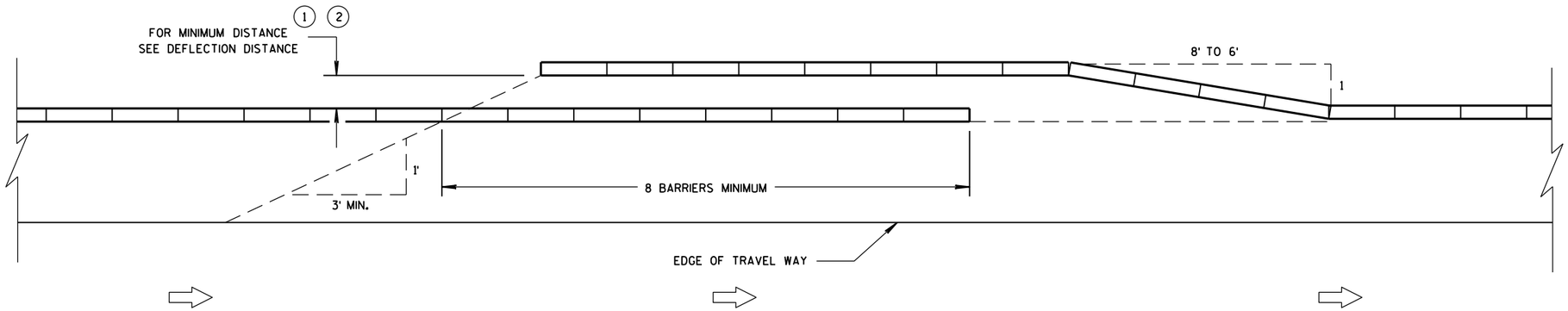

TEMPORARY BARRIER OVERLAP - ONE-WAY TRAFFIC

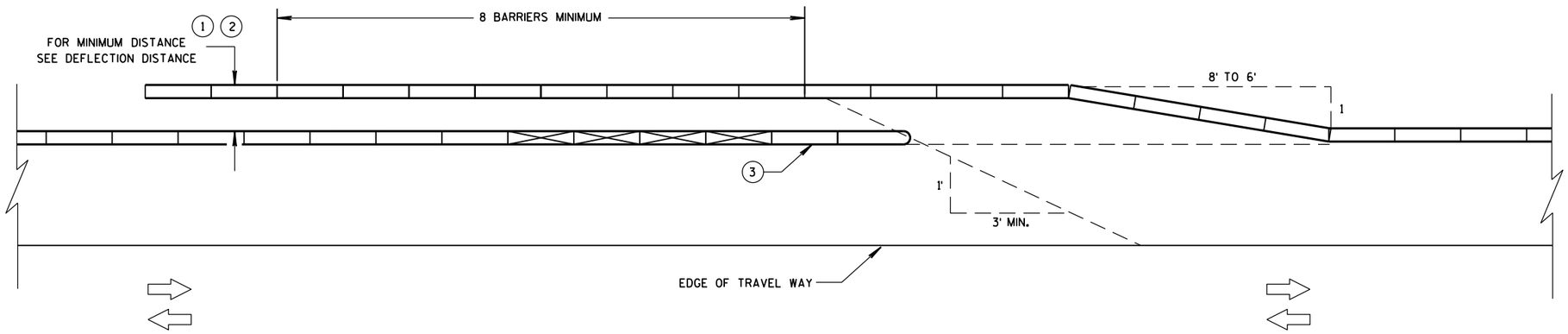

TEMPORARY BARRIER OVERLAP - TWO-WAY TRAFFIC

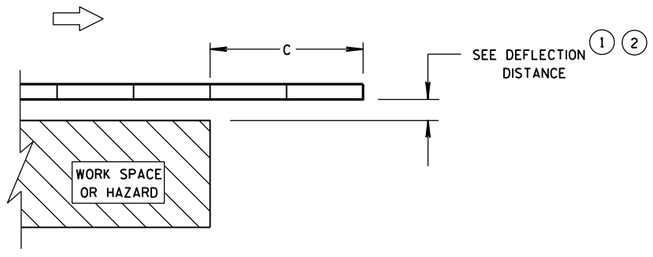

ENDING TEMPORARY BARRIER DOWNSTREAM - UNANCHORED

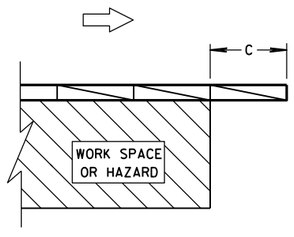

ENDING TEMPORARY BARRIER DOWNSTREAM - ANCHORED

LEGEND

- DIRECTION OF TRAVEL
- CRASH CUSHION OR SAND BARREL ARRAY
- SEE FREE STANDING TRANSITION TO TIED-DOWN SYSTEM DETAILS
- SEE BI-DIRECTIONAL TRANSITION TO TIED-DOWN SYSTEM DETAILS
- 3 PINS PLACED ON TRAFFIC SIDE OF BARRIER
- PERMANENT CONCRETE BARRIER OR CONCRETE PARAPET
- FREE STANDING TEMPORARY BARRIER

CRASH CUSHION/SAND BARREL ARRAY AND OTHER TEMPORARY BARRIER LAYOUT DETAILS

STATE OF WISCONSIN
DEPARTMENT OF TRANSPOR

6

S.D.D. 14 B 8-2c

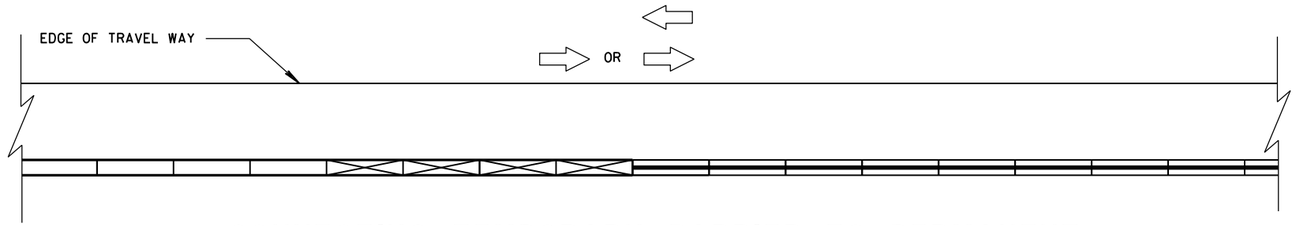

CONNECTING TEMPORARY BARRIER TO PERMANENT
CONCRETE BARRIER-TRAFFIC ON ONE SIDE

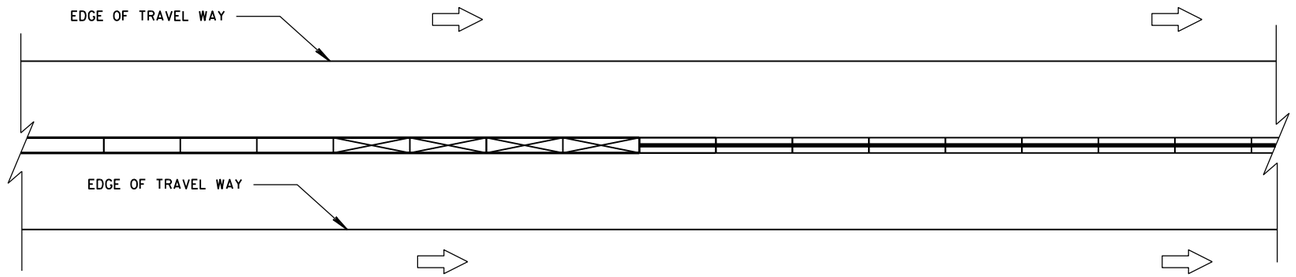

CONNECTING TEMPORARY BARRIER TO PERMANENT
CONCRETE BARRIER-TRAFFIC ON BOTH SIDES

LEGEND

- DIRECTION OF TRAVEL
- CRASH CUSHION OR SAND BARREL ARRAY
- SEE FREE STANDING TRANSITION TO TIED-DOWN SYSTEM DETAILS
- SEE BI-DIRECTIONAL TRANSITION TO TIED-DOWN SYSTEM DETAILS
- 3 PINS PLACED ON TRAFFIC SIDE OF BARRIER
- PERMANENT CONCRETE BARRIER OR CONCRETE PARAPET
- FREE STANDING TEMPORARY BARRIER

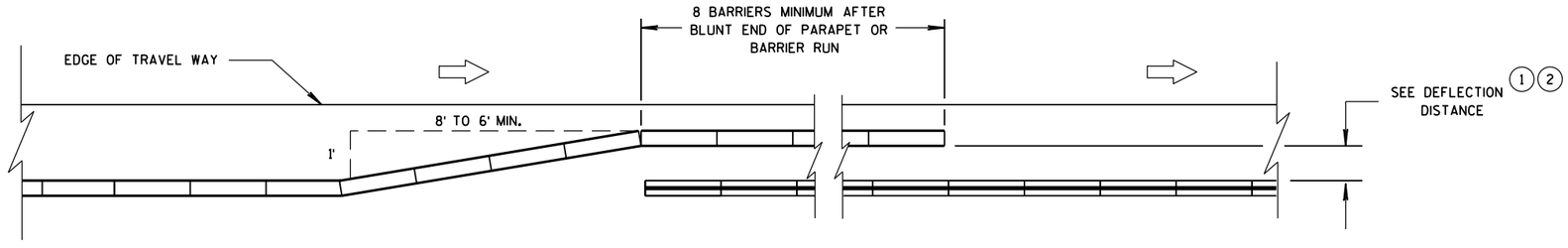

OVERLAPPING TEMPORARY BARRIER AND PERMANENT BARRIER -
ONE WAY TRAFFIC

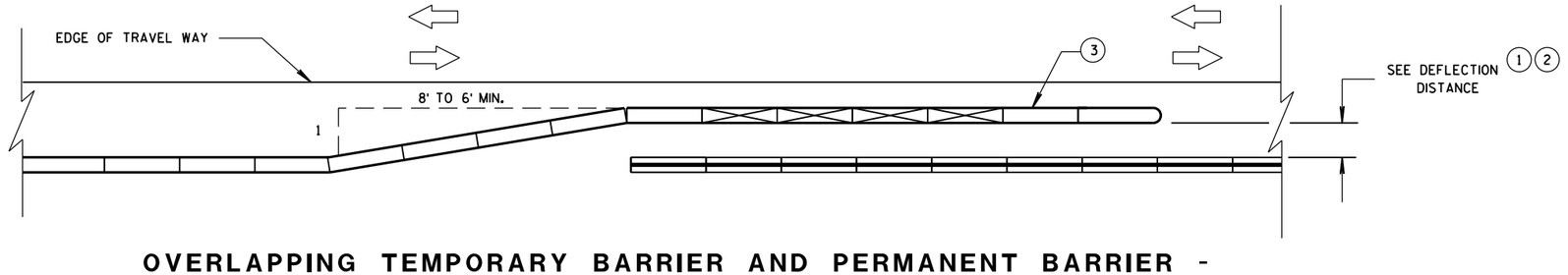

OVERLAPPING TEMPORARY BARRIER AND PERMANENT BARRIER -
TWO WAY TRAFFIC

CRASH CUSHION/SAND BARREL ARRAY AND OTHER TEMPORARY BARRIER LAYOUT DETAILS

STATE OF WISCONSIN
DEPARTMENT OF TRANSPOI

6

S.D.D. 14 B 8-2d

LEGEND

DIRECTION OF TRAVEL

CRASH CUSHION OR SAND BARREL ARRAY

SEE FREE STANDING TRANSITION TO TIED-DOWN SYSTEM DETAILS

SEE BI-DIRECTIONAL TRANSITION TO TIED-DOWN SYSTEM DETAILS

3 PINS PLACED ON TRAFFIC SIDE OF BARRIER

PERMANENT CONCRETE BARRIER OR CONCRETE PARAPET

FREE STANDING TEMPORARY BARRIER

DIMENSION C TABLE (2)

AVAILABLE DEFLECTION DISTANCE	MINIMUM LENGTH OF BARRIER BEYOND HAZARD FT
GREATER THAN 8'	12.5
LESS THAN OR EQUAL TO 8' BUT GREATER THAN 4'	50
LESS THAN OR EQUAL TO 4'	100

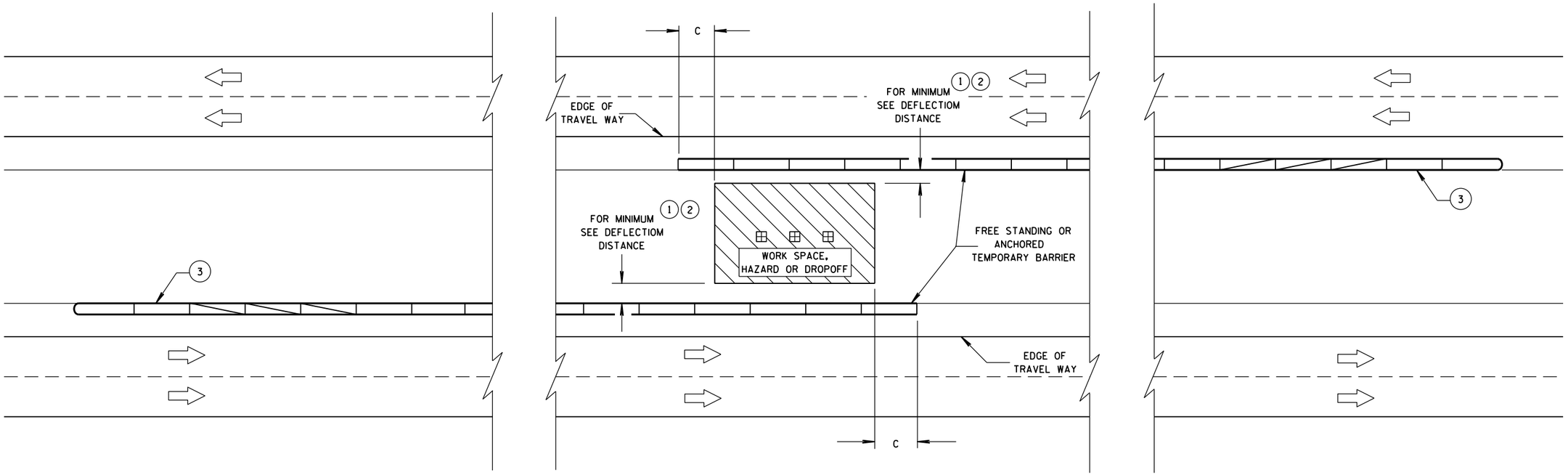

CRASH CUSHION/SAND BARREL ARRAY AND OTHER TEMPORARY BARRIER LAYOUT DETAILS

STATE OF WISCONSIN
DEPARTMENT OF TRANSPORTATION

APPROVED
June, 2015
DATE
/S/ Jerry H. Zogg
ROADWAY STANDARDS ENGINNER
FHWA

6

S.D.D. 14 B 8-2e

6

S.D.D. 14 B 8-2e

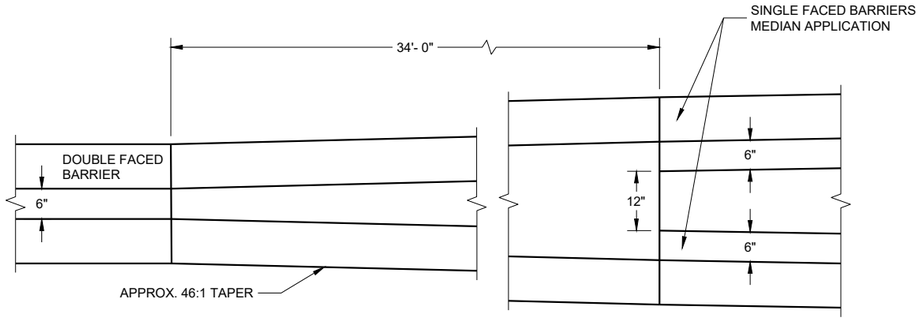

PLAN VIEW

TRANSITION DETAILS OF DOUBLE FACED TO SINGLE FACED CONCRETE MEDIAN BARRIER

(FOOTINGS ARE NOT SHOWN)

HIGH SIDE CONCRETE BARRIER DETAIL

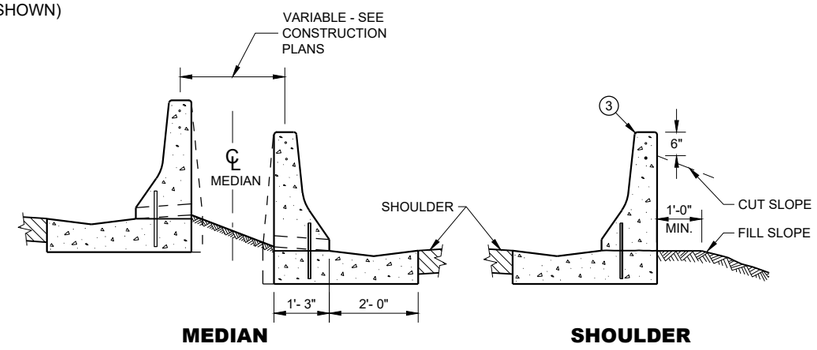

MEDIAN **SHOULDER**

TYPICAL APPLICATIONS

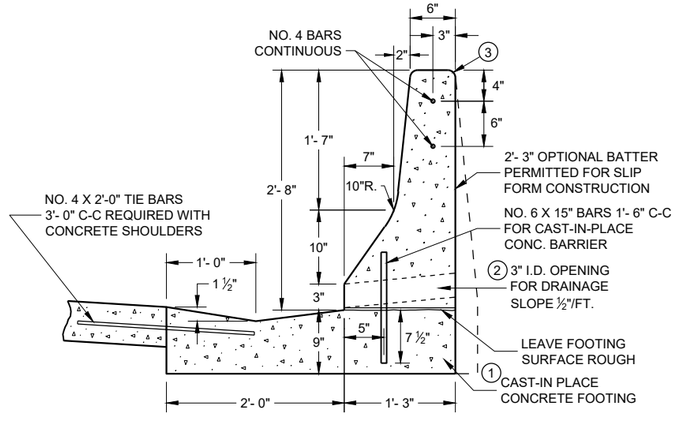

SECTION VIEW

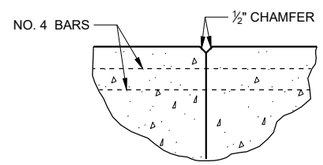

4 **CONSTRUCTION JOINT**

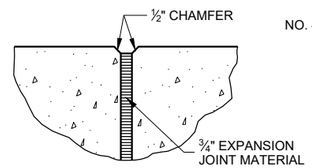

5 **EXPANSION JOINT**

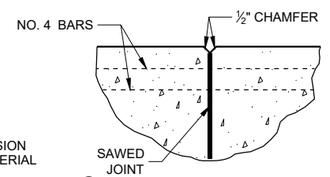

6 **CONTRACTION JOINT**

JOINT DETAILS

GENERAL NOTES

SPLICES OF LONGITUDINAL BARS SHALL BE MADE WITH BARS LAPPED AT LEAST 18-INCHES AND FIRMLY TIED OR FASTENED TOGETHER.

ALL BAR STEEL REINFORCEMENT SHALL CONFORM TO REQUIREMENTS OF AASHTO M31, GRADE 60.

4000 PSI AIR ENTRAINMENT PER STANDARD SPECIFICATION 501.

1. BARRIER SHALL BE INSTALLED ON A CONCRETE SHOULDER INSTEAD OF THE CONCRETE FOOTING WHEN SPECIFIED OR SHOWN ELSEWHERE IN THE CONTRACT.
2. OPENINGS FOR DRAINAGE SHALL BE PLACED AT LOW POINTS OF VERTICAL CURVES OR WHERE DIRECTED BY THE ENGINEER.
3. 3/4 -INCH BEVEL OR 1-INCH RADIUS (TYPICAL).
4. NO. 4 BARS SHALL BE CONTINUED THROUGH CONSTRUCTION JOINTS.
5. EXPANSION JOINTS SHALL BE PLACED AT EXISTING EXPANSION JOINTS IN THE PAVEMENT AND AT STRUCTURES. SEE REINFORCEMENT AT BARRIER END DETAIL.
6. SAWED CONTRACTION JOINTS SHALL BE PROVIDED ACROSS THE FULL WIDTH OF THE BARRIER FOOTING, AND IN FRONT, TOP AND BACK FACE OF THE BARRIER AT EXISTING PAVEMENT JOINTS AND AT UNIFORM INTERVALS BETWEEN WITH A MAXIMUM SPACING OF 25 FEET.

CONCRETE BARRIER (DOUBLE FACED)

STATE OF WISCONSIN
DEPARTMENT OF TRANSPORTATION

APPROVED
8/16/2022
DATE

/S/ Rodney Taylor
ROADWAY STANDARDS DEVE ENGINEER

FHWA

6

SDD 14B22 - 07a

6

SDD 14B22 - 07a

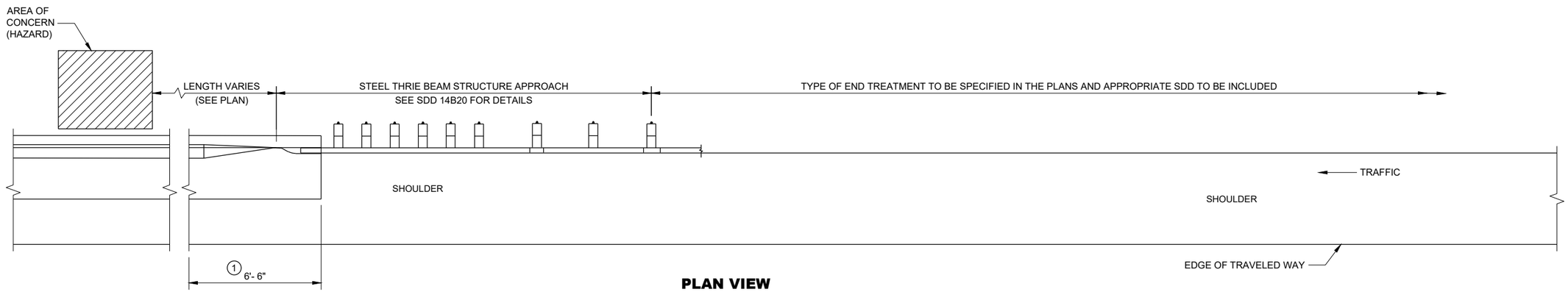

PLAN VIEW

TRANSITION TO STEEL PLATE BEAM GUARD AND END TERMINAL

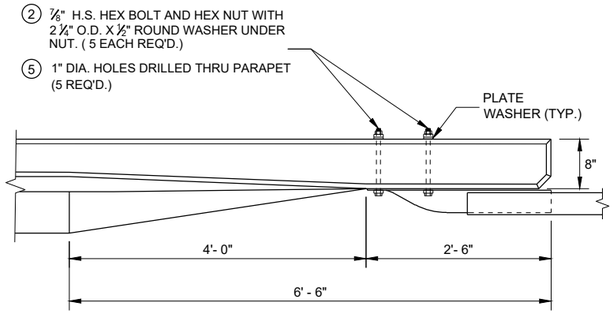

PLAN VIEW

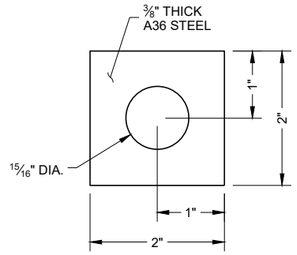

PLATE WASHER DETAIL

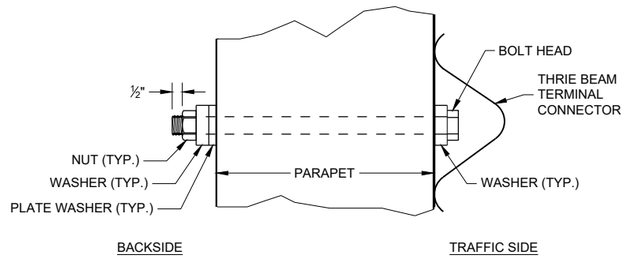

THRIE BEAM BOLT DETAIL

GENERAL NOTES

1. A SPECIAL END IS REQUIRED ON THE CONCRETE BARRIER TO TRANSITION TO A CONNECTION WITH THE STEEL THRIE BEAM STRUCTURE APPROACH. SEE THE DETAILS ON THIS SHEET.
2. BOLTS MAY BE A325 BOLTS OR A449 BOLTS. BOLT LENGTH AND THREADING LENGTH ARE TO ALLOW FOR A TIGHT CONNECTION BETWEEN RIGID BARRIER AND THRIE BEAM CONNECTION PLATE. CONTRACTOR IS TO FIELD VERIFY BOLT LENGTH AND THREAD LENGTH. ONE ROUND WASHER REQUIRED BETWEEN BOLT HEAD AND THRIE BEAM TERMINAL CONNECTOR. BOLTS THAT EXTEND THROUGH THE PARAPET AND OUT THE BACK FACE REQUIRE A HARDENED ROUND STEEL WASHER THAT IS 2" O.D. X 5/8" THICK AND ONE PLATE WASHER. REPAIR ANY DAMAGED CONCRETE FROM BOLT INSTALLATION.
3. REINFORCEMENT REQUIRED AT EXPANSION JOINTS AND WHERE CONCRETE BARRIER IS TERMINATED.
4. PLACE REINFORCEMENT SUCH THAT IT WILL NOT CONFLICT WITH THE BOLT HOLES IN THE THRIE BEAM TERMINAL CONNECTOR.
5. INCLUDE THE PAYMENT FOR DRILLING BOLT HOLES THROUGH THE PARAPET, AND ALL BOLTS, NUTS AND WASHERS IN THE ITEM "STEEL THRIE BEAM STRUCTURAL APPROACH".

   DO NOT USE STEEL POSTS AND NOTCHED PLASTIC BLOCKOUTS IN THE STEEL THRIE BEAM STRUCTURAL APPROACH AND THE TRANSITION SECTION OF STEEL PLATE BEAM GUARD, CLASS "A" INSTALLATIONS.

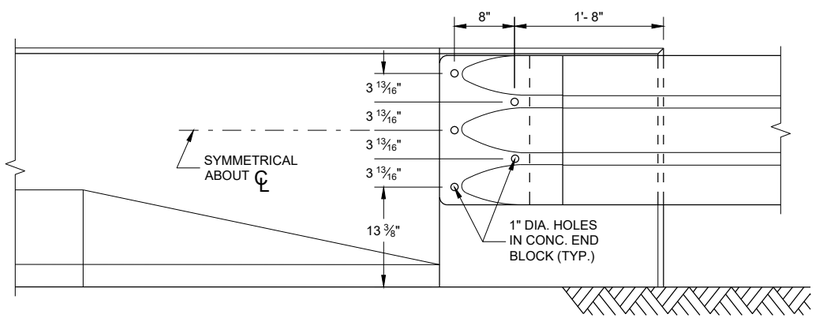

FRONT VIEW

CONCRETE BARRIER TRANSITION TO THRIE BEAM

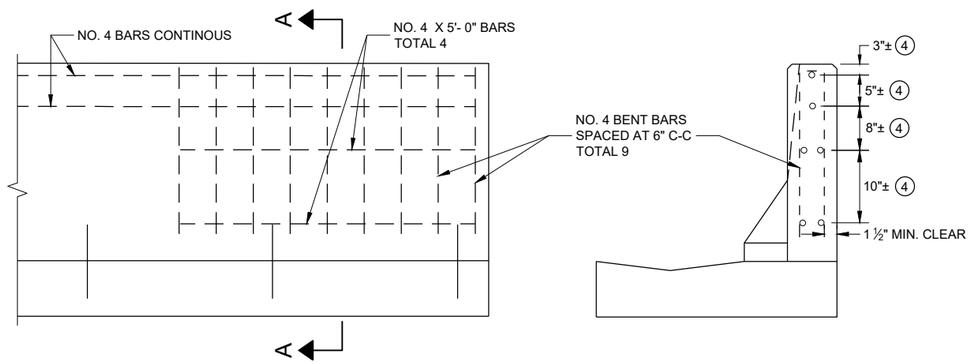

FRONT VIEW **SECTION A - A**

3 REINFORCEMENT AT BARRIER END

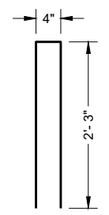

BENT BAR DETAIL

CONCRETE BARRIER, SINGLE FACED (WITH ANCHORAGE)

STATE OF WISCONSIN
DEPARTMENT OF TRANSPORTATION

APPROVED
8/16/2022 — DATE
/S/ Rodney Taylor — ROADWAY STANDARDS DEVE ENGINEER

FHWA

SDD 14B22 - 07b

SDD 14B22 - 07b

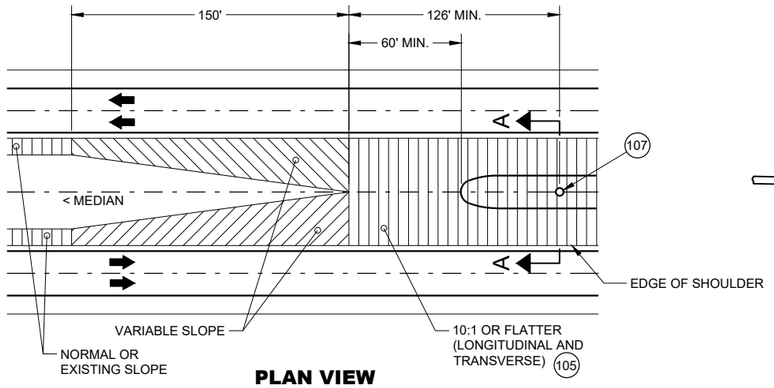

PLAN VIEW
GRADING AT BULLNOSE
(ALL INSTALLATIONS)

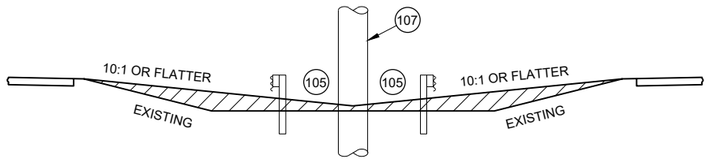

SECTION A -A
MEDIAN GRADING
(ALL INSTALLATIONS)

GENERAL NOTES

THRIE BEAM RAILS MAY NEED TO BE FIELD BENT TO FIT THE LOCATION.

SEE STANDARD DETAIL DRAWINGS 14B26 SHEETS a-h.

IF ROCK IS ENCOUNTERED, REMOVE ROCK TO FULL DEPTH OF POST PLUS 2 ½". MINIMUM DIAMETER OF THE ROCK REMOVAL IS 12" DIAMETER

- E1 UNBENT STANDARD THRIE BEAM RAIL B1 (POST 8 TO POST 10 AND POST 10 TO POST 12)
- E2 SLOTTED THRIE BEAM RAIL E1 (POST 1 TO POST 1)
- E3 SLOTTED THRIE BEAM RAIL B3 (POST 5 TO POST 8)
- E4 SLOTTED THRIE BEAM RAIL E4 (POST 1 TO POST 5)
- 5 BEYOND POST 12: CONSTRUCT STEEL THRIE BEAM - USE UNBENT STANDARD THRIE BEAM RAIL NO. 5.
- (100) DIMENSIONS ARE FROM BACK OF RAIL TO BACK OF RAIL WHERE RAIL IS BOLTED TO POST OR BLOCK.
- (101) U-BOLT CABLE CLIPS (3 PER CABLE) SPACED OUT ON NOSE, TO HOLD CABLE TO BACKSIDE OF THE RAIL.
- (102) NOSE CABLE WITH SWAGGED END BUTTONS.
- (103) NOSE CABLE ANCHOR PLATE (BACKSIDE OF SPLICE).
- (104) THE SLACK IN THE NOSE CABLES SHALL BE EVENLY DISTRIBUTED BETWEEN THE CABLE CLIP FASTENERS AND POST NO. 1 ON EITHER SIDE OF THE NOSE.
- (105) MINIMUM WORKING WIDTH 4' - 2".
- (106) MAX. WIDTH OF SYSTEM IS 14' - 2 ½" MEASURED FROM THE BACK OF RAIL TO BACK OF RAIL WHERE RAIL IS BOLTED TO A POST OR BLOCK.
- (107) FIXED OBJECT OR OTHER HAZARD.
- (108) PLAN IS TO PROVIDE STATION OFFSET TO CENTER OF POST 5 IN PLANS.

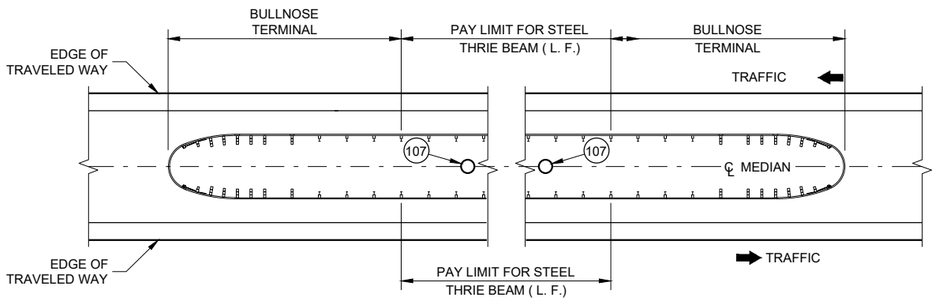

MEDIAN HAZARD PROTECTION PAY LIMITS

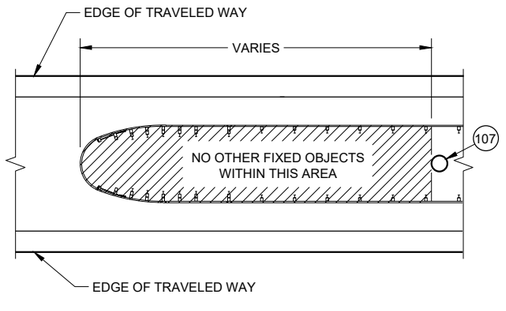

HAZARD FREE AREA
INSIDE BULLNOSE

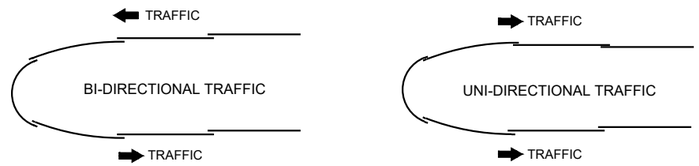

LAPPING DETAIL

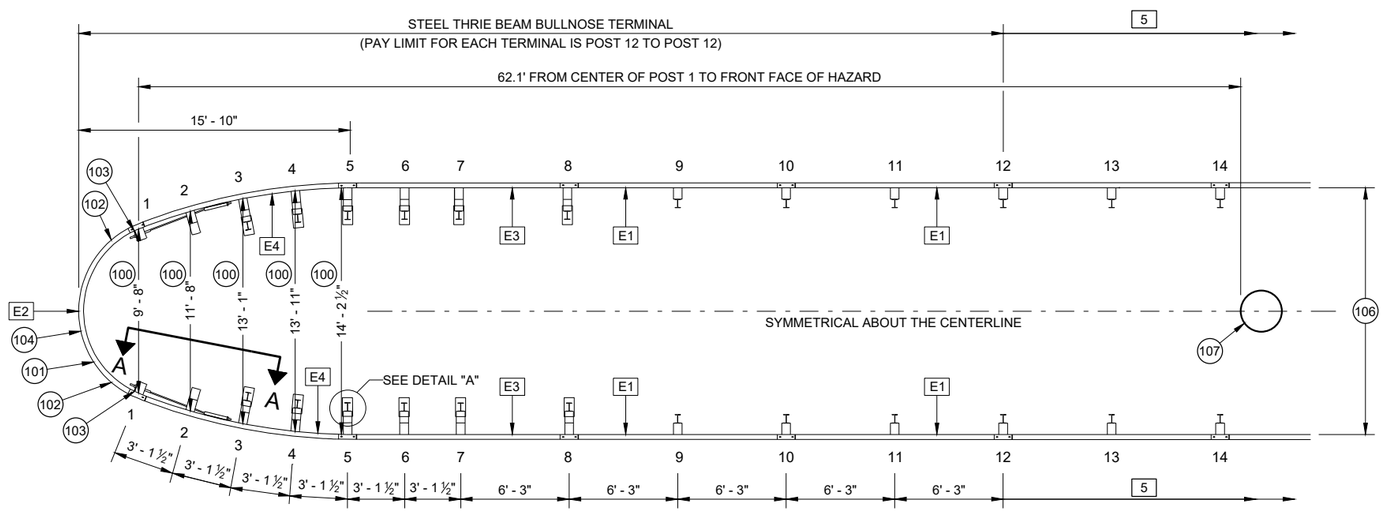

PLAN VIEW
TYPICAL BULLNOSE LAYOUT

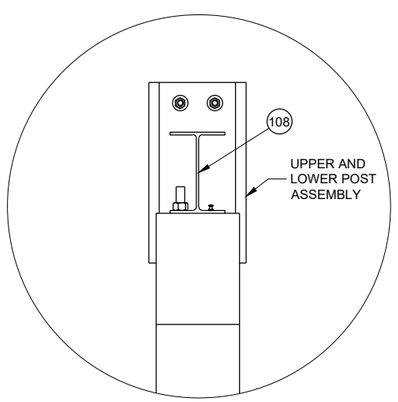

DETAIL "A"

STEEL THRIE BEAM
BULLNOSE TERMINAL

STATE OF WISCONSIN
DEPARTMENT OF TRANSPORTATION

SDD 14B26 - 05a

SDD 14B26 - 05a

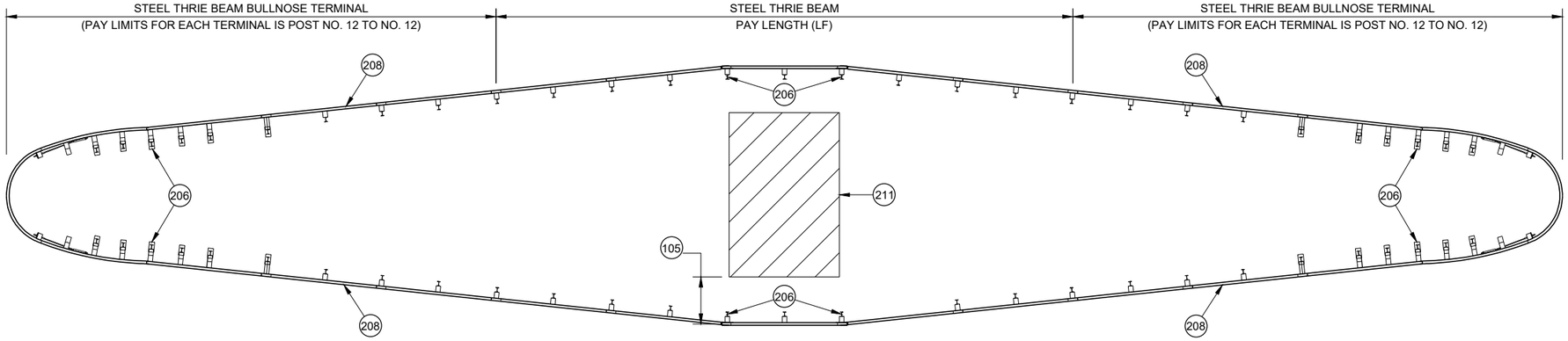

VARIABLE WIDTH BULLNOSE

GENERAL NOTES

200 6' - 3" ASYMMETRICAL 10-GAUGE W-BEAM TO THRIE BEAM GUARD TRANSITION. SEE SDD 14B45 FOR MORE INFORMATION.

201 W-BEAM RAIL. SEE SDD 14B42 FOR MORE INFORMATION.

202 SEE POST NO. 9 AND ALL STEEL THRIE BEAM POST BEYOND DETAIL.

203 SEE SDD 14B42 FOR INSTALLATION INFORMATION.

204 SEE SDD 14B45 FOR INSTALLATION DETAILS. REPLACE ASYMMETRICAL W-BEAM TO THRIE BEAM TRANSITION AND W-BEAM RAIL WITH E1. PAY FOR MODIFIED THRIE BEAM TRANSITION.

205 CONCRETE BARRIER OR BRIDGE RAIL.

206 SEE PLAN FOR STATION AND OFFSET TO CENTER OF POST.

207 SEE PLAN FOR STATION AND OFFSET TO CENTER OF SPLICE.

208 SEE PLAN FOR FLARE RATE.

209 A MINIMUM OF 25 FT OF THRIE BEAM TANGENT BEFORE TRANSITIONING TO BEAM GUARD OR THRIE BEAM TRANSITION.

210 NOT ALL BULLNOSE HARDWARE SHOWN. SEE OTHER SHEETS IN 14B26.

211 WIDER HAZARD TO BE SHIELDED.

212 TRANSITION RAIL HEIGHT TO 31" OVER THE LENGTH OF A 12' - 6" BEAM SECTION.

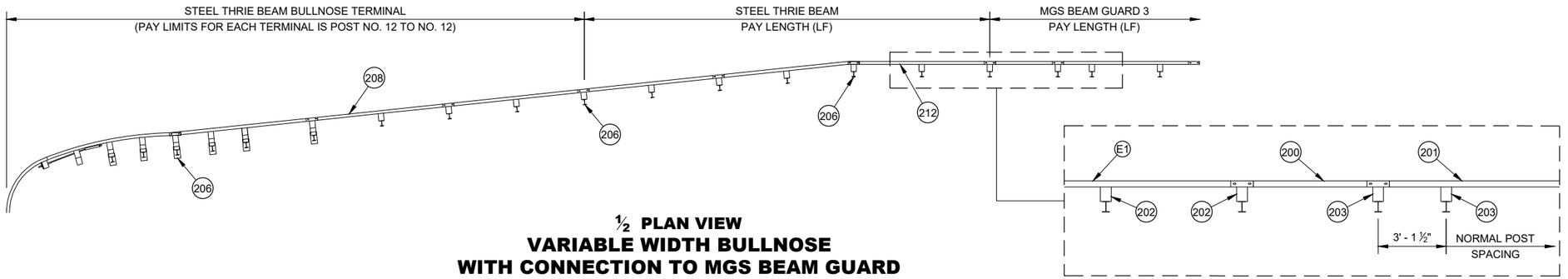

½ PLAN VIEW

VARIABLE WIDTH BULLNOSE WITH CONNECTION TO MGS BEAM GUARD

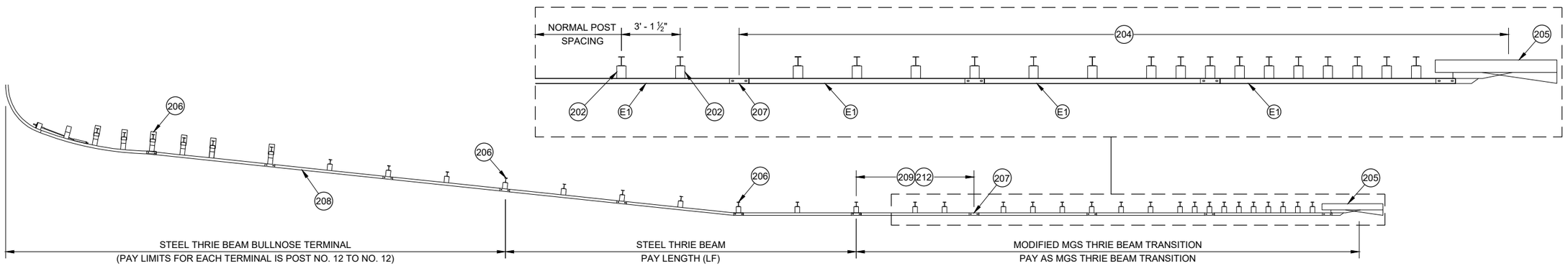

½ PLAN VIEW

VARIABLE WIDTH BULLNOSE WITH CONNECTION TO RIGID BARRIER

STEEL THRIE BEAM BULLNOSE TERMINAL

STATE OF WISCONSIN
DEPARTMENT OF TRANSPORTATION

6

SDD 14B26 - 05b

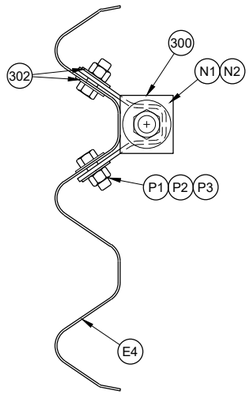

PROFILE VIEW

CABLE ANCHOR ASSEMBLY CONNECTION

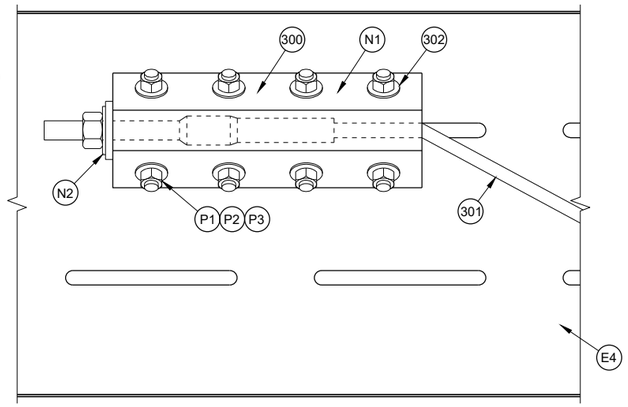

CABLE ANCHOR ASSEMBLY

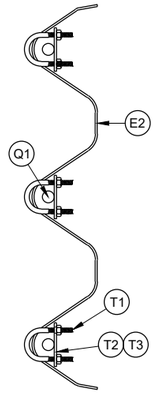

NOSE CABLE RETAINING CLIP

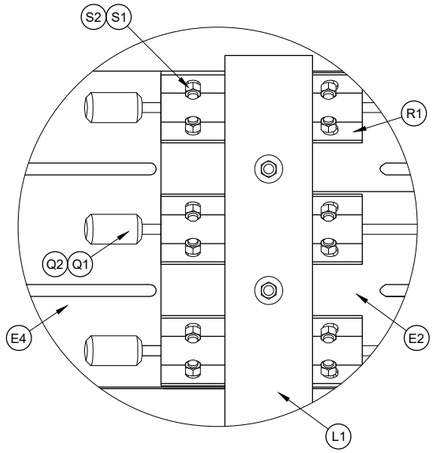

DETAIL "A"

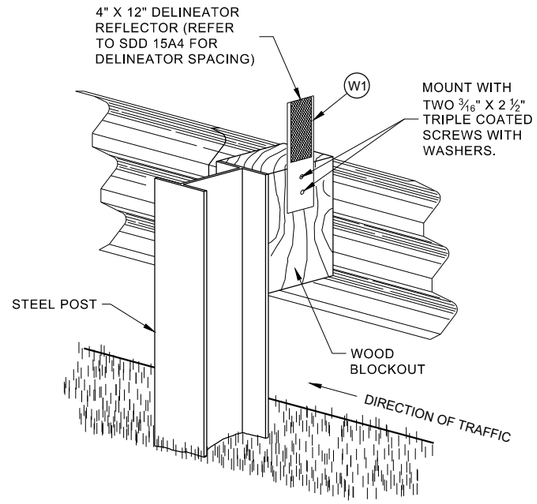

ONE SIDED REFLECTOR DETAIL AND TYPICAL INSTALLATION

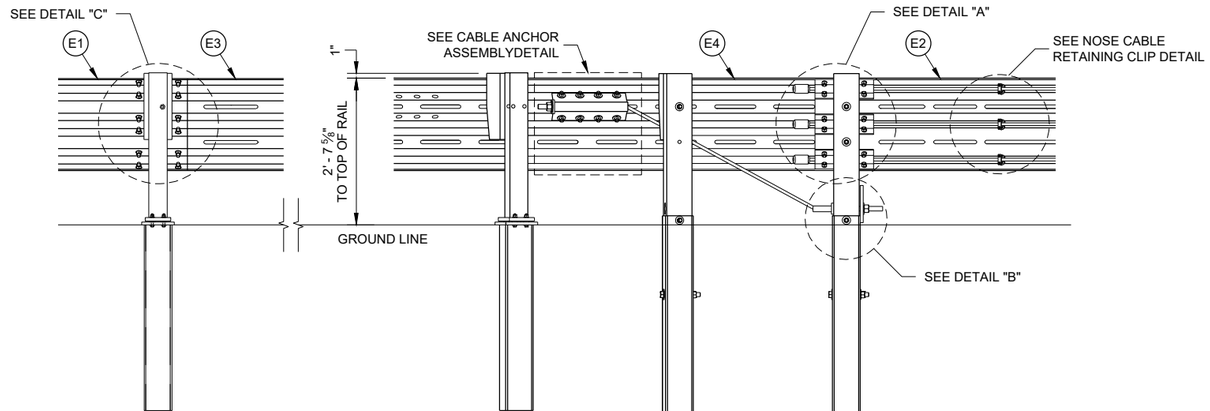

POST 8

POST 3

POST 2

POST 1

CROSS SECTION A - A

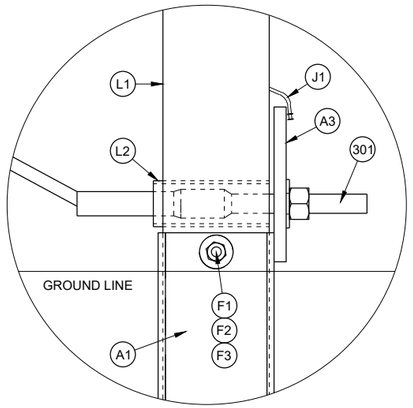

DETAIL "B"

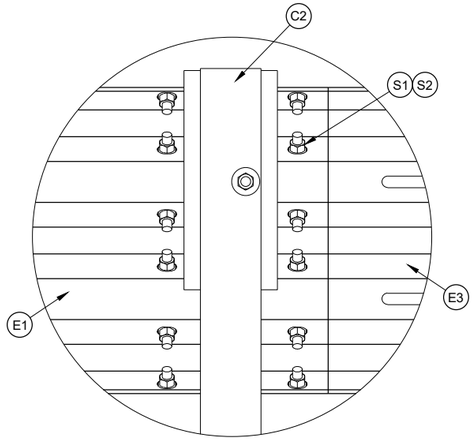

DETAIL "C" THRIE BEAM SPLICE

GENERAL NOTES

(300) SEE ANCHOR BRACKET ASSEMBLY DETAIL.

(301) SEE ANCHOR CABLE ASSEMBLY DETAIL

(302) ONE WASHER BETWEEN BOLT HEAD AND RAIL AND BETWEEN NUT AND ANCHOR BRACKET ASSEMBLY.

(303) ONE WASHER BETWEEN BOLD HEAD AND FOUNDATION TUBE AND BETWEEN NUT AND FOUNDATION TUBE.

STEEL THRIE BEAM BULLNOSE TERMINAL

STATE OF WISCONSIN
DEPARTMENT OF TRANSPORTATION

6

SDD 14B26 - 05c

SDD 14B26 - 05c

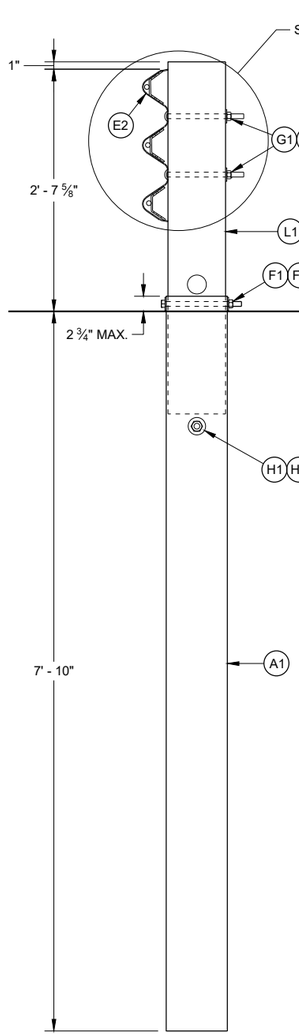

POST NO. 1

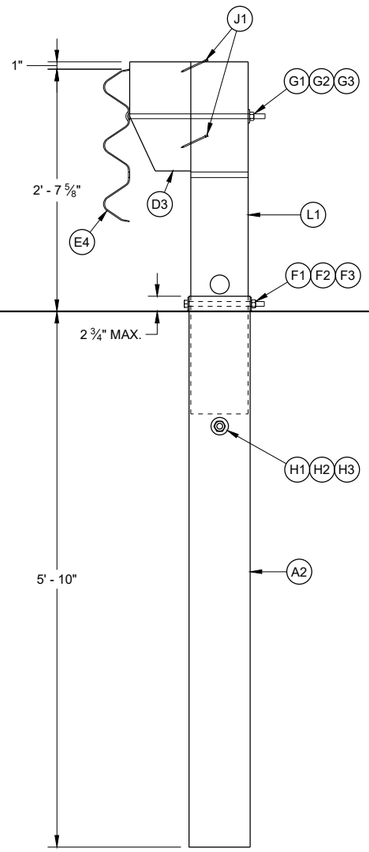

POST NO. 2

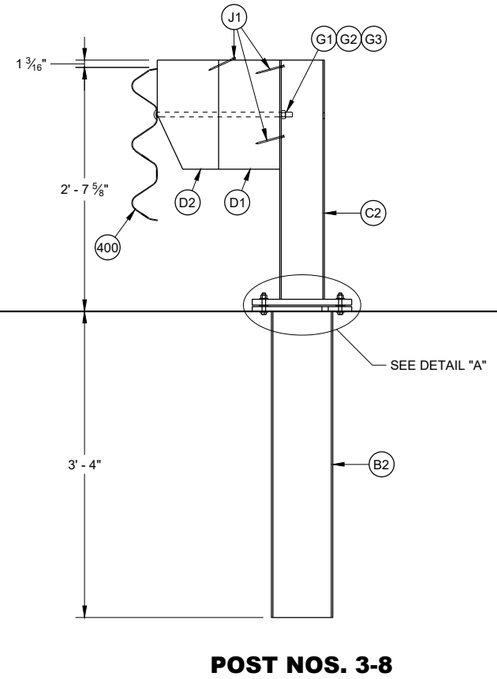

POST NOS. 3-8

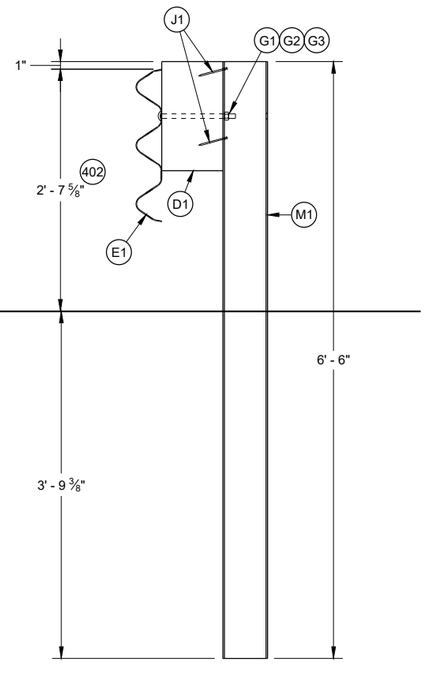

POST NOS. 9 AND ALL STEEL THRIE BEAM POSTS BEYOND

GENERAL NOTES

(400) RAIL CAN BE E3 OR E4 DEPENDING ON POST LOCATION.

(401) TORQUE BOLD BETWEEN 60-75 FT-LB

(402) HEIGHT WILL VARY WITHIN HEIGHT TRANSITION TO OTHER HARDWARE. SEE NOTE 213, SHEET "b".

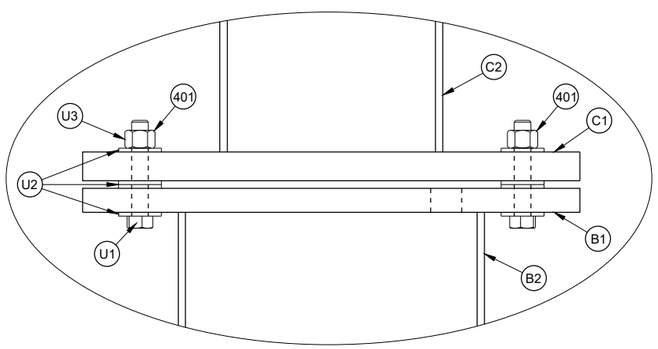

DETAIL "A"

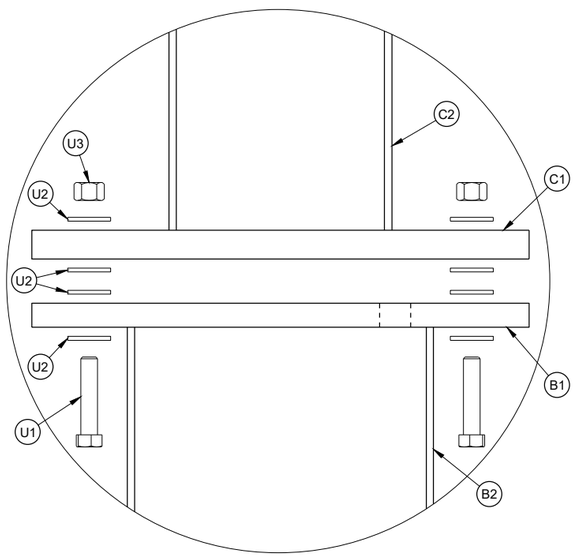

EXPLODED VIEW
DETAIL "A"

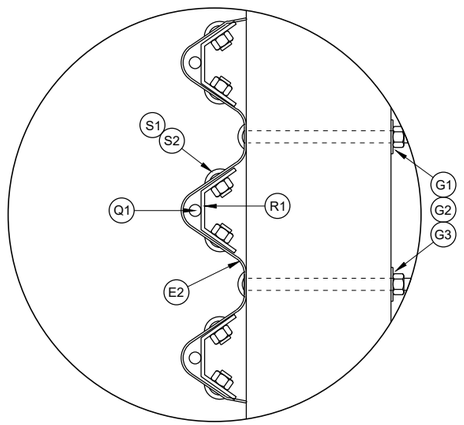

DETAIL "B"

STEEL THRIE BEAM BULLNOSE TERMINAL

STATE OF WISCONSIN
DEPARTMENT OF TRANSPORTATION

6

SDD 14B26 - 05d

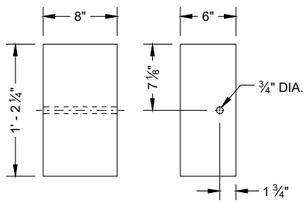

ELEVATION PROFILE

BLOCKOUT (D1)

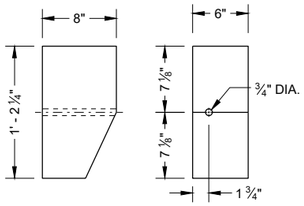

ELEVATION PROFILE

BLOCKOUT (D2)

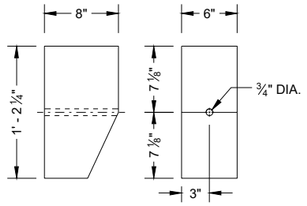

ELEVATION PROFILE

BLOCKOUT (D3)

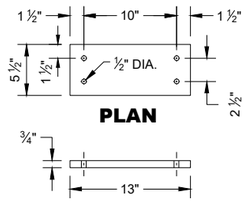

PLAN

PROFILE

UPPER SHEAR PLATE (C1)

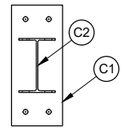

PLAN

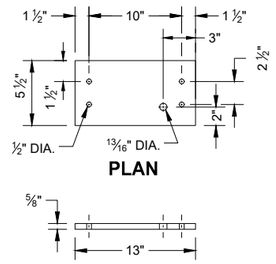

PLAN

PROFILE

LOWER SHEAR PLATE (B1)

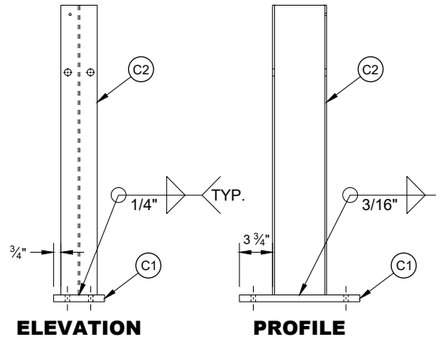

ELEVATION PROFILE

UPPER POST ASSEMBLY

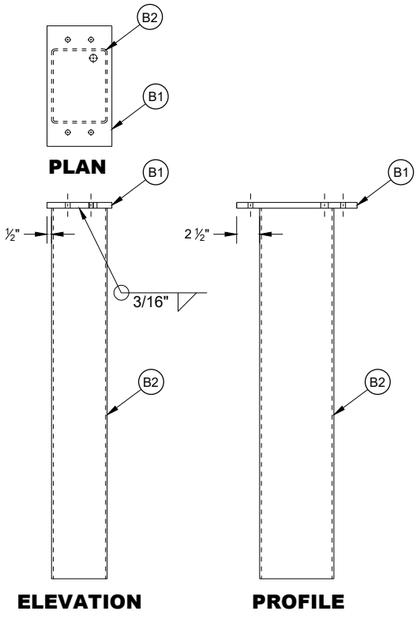

PLAN

ELEVATION PROFILE

LOWER POST ASSEMBLY

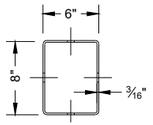

PLAN

PART	LENGTH "X"
A1	8' - 0"
A2	6' - 0"
B2	3' - 4"

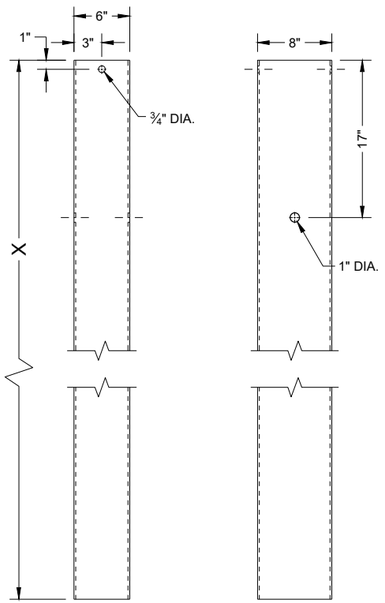

ELEVATION PROFILE

FOUNDATION TUBE

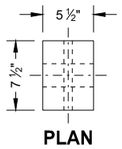

PLAN

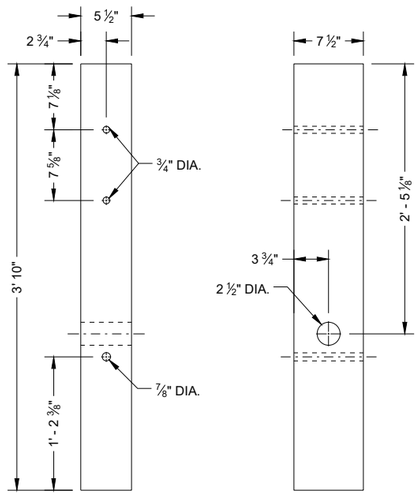

ELEVATION PROFILE

BCT POST (L1)

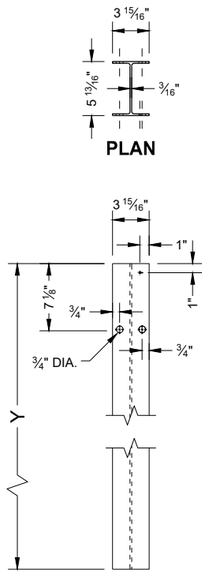

ELEVATION

POST

PART	LENGTH "Y"
M1	6' - 6"
M2	5' - 8 5/8"
C2	2' - 7 5/8"

STEEL THRIE BEAM BULLNOSE TERMINAL

STATE OF WISCONSIN
DEPARTMENT OF TRANSPORTATION

6

SDD 14B26 - 05e

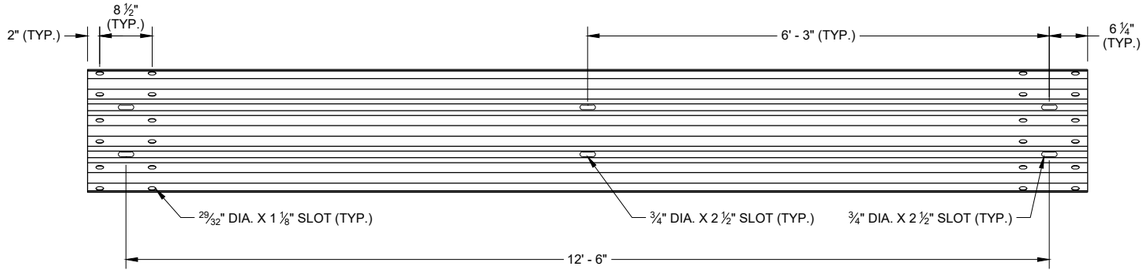

SLOTTED THRIE BEAM RAIL E1

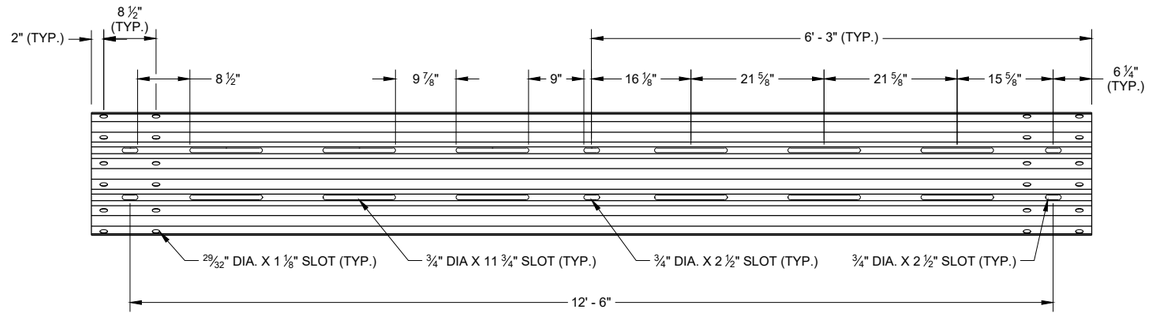

SLOTTED THRIE BEAM RAIL E3

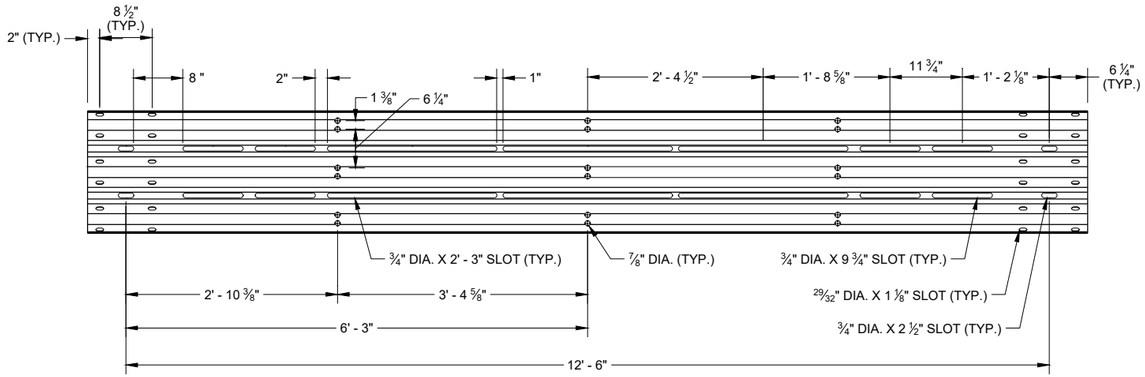

ELEVATION VIEW NON - RADIUSED
SLOTTED THRIE BEAM RAIL E2

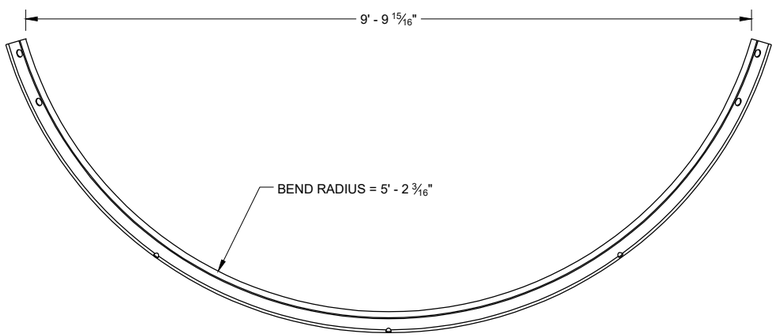

PLAN VIEW
SLOTTED THRIE BEAM RAIL E2

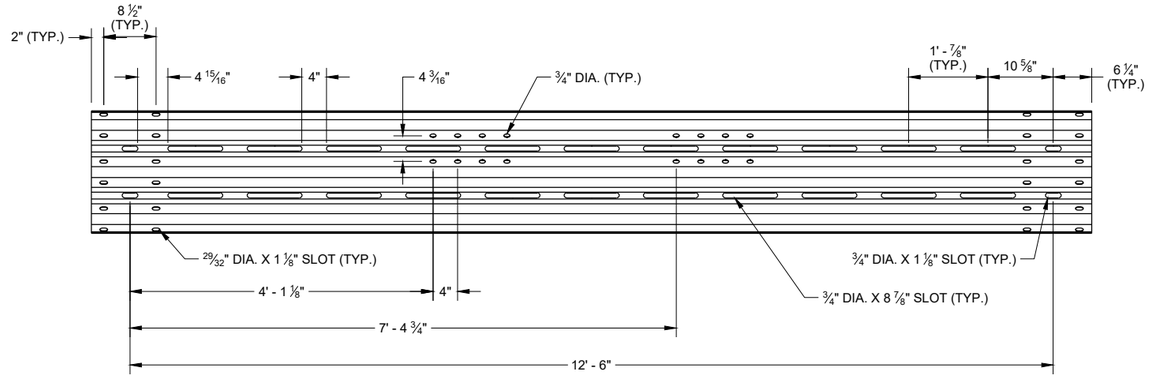

ELEVATION VIEW NON - RADIUSED
SLOTTED THRIE BEAM RAIL E4

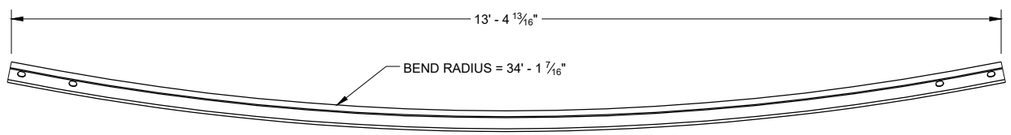

PLAN VIEW
SLOTTED THRIE BEAM RAIL E4

6

SDD 14B26 - 05f

STEEL THRIE BEAM BULLNOSE TERMINAL

STATE OF WISCONSIN
DEPARTMENT OF TRANSPORTATION

6

SDD 14B26 - 05f

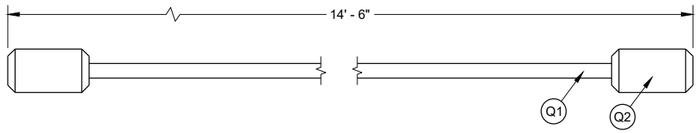

NOSE CABLE AND SWAGE BUTTON

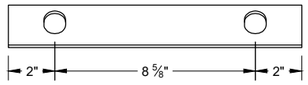

PLAN VIEW

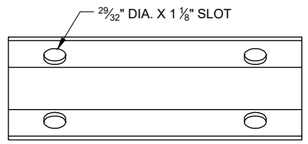

ELEVATION VIEW

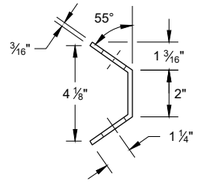

PROFILE VIEW

NOSE CABLE ANCHOR (R1)

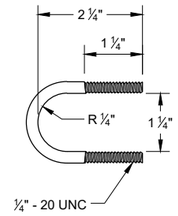

U - BOLT (T1)

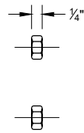

U - BOLT NUT (T3)

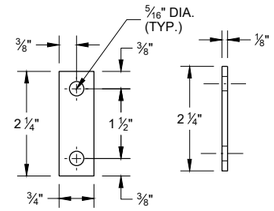

ELEVATION VIEW **PROFILE VIEW**

U - BOLT PLATE WASHER (T2)

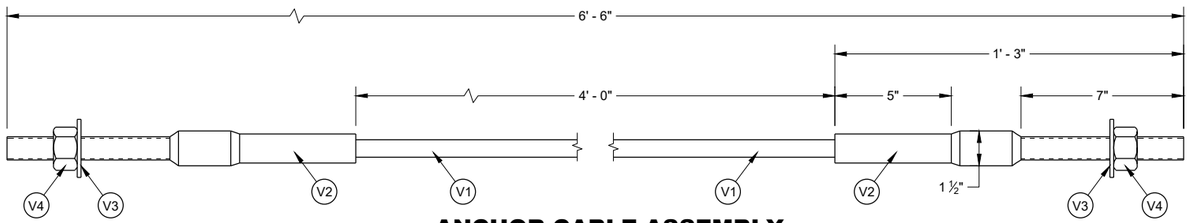

ANCHOR CABLE ASSEMBLY

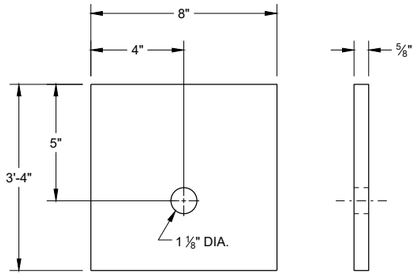

ELEVATION VIEW **PROFILE VIEW**

BCT BEARING PLATE (A3)

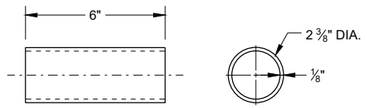

ELEVATION VIEW **PROFILE VIEW**

BCT POST SLEEVE (L2)

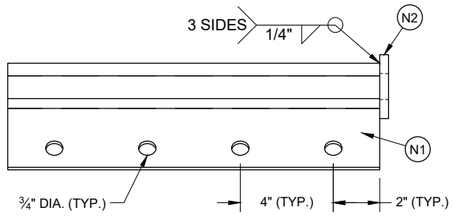

PLAN VIEW

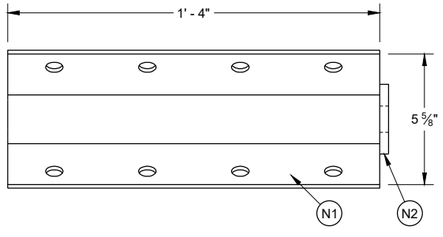

ELEVATION VIEW

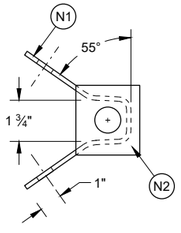

PROFILE VIEW

ANCHOR BRACKET ASSEMBLY (N1)

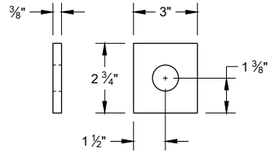

ANCHOR BRACKET END PLATE (N2)

STEEL THRIE BEAM BULLNOSE TERMINAL

STATE OF WISCONSIN
DEPARTMENT OF TRANSPORTATION

6

SDD 14B26 - 05g

SDD 14B26 - 05g

BILL OF MATERIALS LIST

PART NUMBER	DESCRIPTION	MATERIAL SPECIFICATION
A1	LONG FOUNDATION TUBE	AASHTO M111/ASTM A123 ASTM A500 GRADE B OR ASTM A-501
A2	FOUNDATION TUBE	AASHTO M111/ASTM A123 ASTM A500 GRADE B OR ASTM A-501
A3	BEARING PLATE AT POST	AASHTO M111/ASTM A123 ASTM A36 MIN STRENGTH 36 KSI, OR ASTM A529 MAX. STRENGTH 50 KSI, OR ASTM A572 MAX. STRENGTH 50 KSI, OR ASTM A709 MAX. STRENGTH 50 KSI, OR ASTM A992 MAX. STRENGTH 50 KSI
B1	LOWER SLIP POST ASSEMBLY - PLATE	AASHTO M111/ASTM A123 ASTM A36 MIN STRENGTH 36 KSI, OR ASTM A529 MAX. STRENGTH 50 KSI, OR ASTM A572 MAX. STRENGTH 50 KSI, OR ASTM A709 MAX. STRENGTH 50 KSI, OR ASTM A992 MAX. STRENGTH 50 KSI
B2	LOWER SLIP POST ASSEMBLY - TUBE	AASHTO M111/ASTM A123 ASTM A500 GRADE B OR ASTM A-501
C1	UPPER SLIP POST ASSEMBLY - PLATE	AASHTO M111/ASTM A123 ASTM A36 MIN STRENGTH 36 KSI, OR ASTM A529 MAX. STRENGTH 50 KSI, OR ASTM A572 MAX. STRENGTH 50 KSI, OR ASTM A709 MAX. STRENGTH 50 KSI, OR ASTM A992 MAX. STRENGTH 50 KSI
C2	UPPER SLIP POST ASSEMBLY - POST	AASHTO M111/ASTM A123 ASTM A6 W6X9 OR W6X8.5 ASTM A36 MIN STRENGTH 36 KSI, OR ASTM A529 MAX. STRENGTH 50 KSI, OR ASTM A572 MAX. STRENGTH 50 KSI, OR ASTM A709 MAX. STRENGTH 50 KSI, OR ASTM A992 MAX. STRENGTH 50 KSI
D1	BLOCK FOR STEEL POST - WOOD	WISDOT SPEC. 614
D2	TAPERED BLOCK FOR STEEL POST - WOOD	WISDOT SPEC. 614
D3	TAPERED BLOCK FOR BCT POST - WOOD	WISDOT SPEC. 614
E1	THRIE BEAM RAIL	AASHTO M180 CLASS A TYPE 2 APPROVED PRODUCER
E2	THRIE BEAM RAIL - SHOP BENT AND PUNCHED	AASHTO M180 CLASS A TYPE 2 APPROVED PRODUCER. INDICATE RADIUS BEAM GUARD IS BENT TO ON THE BACKSIDE OF RAIL. FOLLOW AASHTO M180. MARK RADIUS.
E3	THRIE BEAM RAIL - PUNCHED	AASHTO M180 CLASS A TYPE 2 APPROVED PRODUCER
E4	THRIE BEAM RAIL - SHOP BENT AND PUNCHED	AASHTO M180 CLASS A TYPE 2 APPROVED PRODUCER. INDICATE RADIUS BEAM GUARD IS BENT TO ON THE BACKSIDE OF RAIL. FOLLOW AASHTO M180. MARK RADIUS.
F1	5/8" DIA. HEX HEAD GROUND STRUT AND YOKE BOLT	HOT DIP AASHTO M232 CLASS / ASTM A153 CLASS C / ASTM F2329 C OR MECHANICAL GAL. TO AASHTO M298 CLASS 50 TYPE 1/ ASTM B695 CLASS 50 TYPE 1 UNC HEAVY HEX HEAD ASTM A307 GRADE B OR SAE J429 GRADE 2 OR ASTM F1554 GRADE 36
F2	5/8" DIA. GROUND STRUT AND YOKE BOLT - WASHER	HOT DIP AASHTO M232 CLASS / ASTM A153 CLASS C / ASTM F2329 C OR MECHANICAL GAL. TO AASHTO M298 CLASS 50 TYPE 1/ ASTM B695 CLASS 50 TYPE 1 F436 TYPE 1 (HARDEN WASHER ONLY)
F3	GROUND STRUT AND YOKE BOLT - NUT	HOT DIP AASHTO M232 CLASS / ASTM A153 CLASS C / ASTM F2329 C OR MECHANICAL GAL. TO AASHTO M298 CLASS 50 TYPE 1/ ASTM B695 CLASS 50 TYPE 1 UNC OVER TAP NUTS AS SPECIFIED IN AASHTO 291/ASTM A 563 HEAVY HEX HEAD ASTM A563DH OR SAE J995 GRADE 5
G1	5/8 " DIA. POST BOLT	HOT DIP AASHTO M232 CLASS / ASTM A153 CLASS C / ASTM F2329 C OR MECHANICAL GAL. TO AASHTO M298 CLASS 50 TYPE 1/ ASTM B695 CLASS 50 TYPE 1 F436 TYPE 1 (HARDEN WASHER TYPICALLY USED WITH STEEL POSTS) OR ASTM F844 (UNHARDENED WASHER TYPICALLY USED WITH WOOD)
G2	POST BOLT - WASHER	HOT DIP AASHTO M232 CLASS / ASTM A153 CLASS C / ASTM F2329 C OR MECHANICAL GAL. TO AASHTO M298 CLASS 50 TYPE 1/ ASTM B695 CLASS 50 TYPE 1 F436 TYPE 1 (HARDEN WASHER TYPICALLY USED WITH STEEL POSTS) OR ASTM F844 (UNHARDENED WASHER TYPICALLY USED WITH WOOD)
G3	POST BOLT - NUT	HOT DIP AASHTO M232 CLASS / ASTM A153 CLASS C / ASTM F2329 C OR MECHANICAL GAL. TO AASHTO M298 CLASS 50 TYPE 1/ ASTM B695 CLASS 50 TYPE 1 UNC OVER TAP NUTS AS SPECIFIED IN AASHTO 291/ASTM A 563 AASHTO M180 RECESSED HEAVY HEX HEAD ASTM A563DH OR SAE J995 GRADE 5
H1	7/8" DIA. SOIL TUBE BOLT	HOT DIP AASHTO M232 CLASS / ASTM A153 CLASS C / ASTM F2329 C OR MECHANICAL GAL. TO AASHTO M298 CLASS 50 TYPE 1/ ASTM B695 CLASS 50 TYPE 1 UNC OVER TAP NUTS AS SPECIFIED IN AASHTO 291/ASTM A 563 HEAVY HEX HEAD 7/8" ASTM A563DH OR SAE J995 GRADE 5
H2	SOIL TUBE BOLT - WASHER	HOT DIP AASHTO M232 CLASS / ASTM A153 CLASS C / ASTM F2329 C OR MECHANICAL GAL. TO AASHTO M298 CLASS 50 TYPE 1/ ASTM B695 CLASS 50 TYPE 1 7/8" ASTM F844 TYPE 1 (HARDEN WASHER ONLY)
H3	SOIL TUBE BOLT - NUT	HOT DIP AASHTO M232 CLASS / ASTM A153 CLASS C / ASTM F2329 C OR MECHANICAL GAL. TO AASHTO M298 CLASS 50 TYPE 1/ ASTM B695 CLASS 50 TYPE 1 UNC OVER TAP NUTS AS SPECIFIED IN AASHTO 291/ASTM A 563 HEAVY HEX HEAD 7/8" ASTM A563DH OR SAE J995 GRADE 5
J1	16D DOUBLE HEAD NAIL	ASTM A153 HOT DIPPED CLASS D DOUBLE HEAD ASTM F1667 TYPE 1 STYLE 12 (16 DOUBLE HEADED)
L1	BCT TIMBER POST	WISDOT SPEC. 614 S4S FINISH ON 4 SIDE
L2	BCT POST SLEEVE	AASHTO M111/ASTM A123 2 3/8" OD ASTM 53 GRADE B
M1	W6X8.5 OR W6X9 STEEL POST	AASHTO M111/ASTM A123 ASTM A6 W6X9 OR W6X8.5 ASTM A36 MIN. STRENGTH 36 KSI, OR ASTM A529 MAX. STRENGTH 50 KSI, OR ASTM A572 MAX. STRENGTH 50 KSI, OR ASTM A709 MAX. STRENGTH 50 KSI, OR ASTM A992 MAX. STRENGTH 50 KSI
M2	W6X8.5 OR W6X9 STEEL POST	AASHTO M111/ASTM A123 ASTM A6 W6X9 OR W6X8.5 ASTM A36 MIN. STRENGTH 36 KSI, OR ASTM A529 MAX. STRENGTH 50 KSI, OR ASTM A572 MAX. STRENGTH 50 KSI, OR ASTM A709 MAX. STRENGTH 50 KSI, OR ASTM A992 MAX. STRENGTH 50 KSI
N1	ANCHOR BRACKET	AASHTO M111/ASTM A123 ASTM A36 MIN. STRENGTH 36 KSI, OR ASTM A529 MAX. STRENGTH 50 KSI, OR ASTM A572 MAX. STRENGTH 50 KSI, OR ASTM A709 MAX. STRENGTH 50 KSI, OR ASTM A992 MAX. STRENGTH 50 KSI
N2	ANCHOR BRACKET - BEARING PLATE	AASHTO M111/ASTM A123 ASTM A36 MIN. STRENGTH 36 KSI, OR ASTM A529 MAX. STRENGTH 50 KSI, OR ASTM A572 MAX. STRENGTH 50 KSI, OR ASTM A709 MAX. STRENGTH 50 KSI, OR ASTM A992 MAX. STRENGTH 50 KSI

PART NUMBER	DESCRIPTION	MATERIAL SPECIFICATION
P1	5/8" DIA. ANCHOR BRACKET BOLT	HOT DIP AASHTO M232 CLASS / ASTM A153 CLASS C / ASTM F2329 C OR MECHANICAL GAL. TO AASHTO M298 CLASS 50 TYPE 1/ ASTM B695 CLASS 50 TYPE 1 UNC HEAVY HEX HEAD 5/8" ASTM A307 GRADE B OR SAE J429 GRADE 2 OR ASTM F1554 GRADE 36
P2	ANCHOR BRACKET BOLT - WASHER	HOT DIP AASHTO M232 CLASS / ASTM A153 CLASS C / ASTM F2329 C OR MECHANICAL GAL. TO AASHTO M298 CLASS 50 TYPE 1/ ASTM B695 CLASS 50 TYPE 1 F436 TYPE 1 (HARDEN WASHER ONLY)
P3	SOIL TUBE BOLT - NUT	HOT DIP AASHTO M232 CLASS / ASTM A153 CLASS C / ASTM F2329 C OR MECHANICAL GAL. TO AASHTO M298 CLASS 50 TYPE 1/ ASTM B695 CLASS 50 TYPE 1 UNC OVER TAP NUTS AS SPECIFIED IN AASHTO 291/ASTM A 563 HEAVY HEX HEAD ASTM A563DH OR SAE J995 GRADE 5
Q1	5/8" DIA. NOSE CABLE	6X19 AASTHO M30 / ASTM A741 XIPS INDEPENDENT WIRE CORE (IWRC) PR 6X25 XIPS, IWRC NOMINAL BREAKING STRENGTH OF 41.2 KIPS.
Q2	NOSE CABLE-SWAGE BUTTON	COLD TUFF BUTTON, S-409 SIZE NO. 12 STOCK NUMBER 1040395 OR ANY OTHER SIMILAR SIZED WAGED-GRIP-BUTTON FERRULES. ASTM A576 GRADE 1035 SWAGE FITTING ARE TO BE FIELD SWAGED PER MANUFACTURERS RECOMMENDATION. NOMINAL BREAKING STRENGTH OF 41.2 KIPS.
R1	NOSE CABLE ANCHOR BRACKET	AASHTO M111/ASTM A123 ASTM A36 MIN. STRENGTH 36 KSI, OR ASTM A529 MAX. STRENGTH 50 KSI, OR ASTM A572 MAX. STRENGTH 50 KSI, OR ASTM A709 MAX. STRENGTH 50 KSI, OR ASTM A992 MAX. STRENGTH 50 KSI
S1	5/8" DIA. SPLICE BOLT - BOLT	HOT DIP AASHTO M232 CLASS / ASTM A153 CLASS C / ASTM F2329 C OR MECHANICAL GAL. TO AASHTO M298 CLASS 50 TYPE 1 / ASTM B695 CLASS 50 TYPE 1 UNC AASHTO M180 HEAD ASTM A307 GRADE B OR SAE J429 GRADE 2 OR ASTM F1554 GRADE 36
S2	SPLICE - BOLT NUT	HOT DIP AASHTO M232 CLASS / ASTM A153 CLASS C / ASTM F2329 C OR MECHANICAL GAL. TO AASHTO M298 CLASS 50 TYPE 1 / ASTM B695 CLASS 50 TYPE 1 UNC OVER TAP NUTS AS SPECIFIED IN AASHTO 291/ASTM A 563 AASHTO M180 RECESSED HEAVY HEX HEAD 5/8" ASTM A563DH OR SAE J995 GRADE 5
T1	1/4" DIA. NOSE CABLE - U BOLT	HOT DIP AASHTO M232 CLASS / ASTM A153 CLASS C / ASTM F2329 C OR MECHANICAL GAL. TO AASHTO M298 CLASS 50 TYPE 1 / ASTM B695 CLASS 50 TYPE 1 UNC HEAVY HEX HEAD ASTM A307 GRADE B OR SAE J429 GRADE 2 OR ASTM F1554 GRADE 36
T2	U-BOLT - PLATE WASHER	HOT DIP AASHTO M232 CLASS / ASTM A153 CLASS C / ASTM F2329 C OR MECHANICAL GAL. TO AASHTO M298 CLASS 50 TYPE 1 / ASTM B695 CLASS 50 TYPE 1 F436 TYPE 1 (HARDEN WASHER ONLY)
T3	U-BOLT NUT	HOT DIP AASHTO M232 CLASS / ASTM A153 CLASS C / ASTM F2329 C OR MECHANICAL GAL. TO AASHTO M298 CLASS 50 TYPE 1/ ASTM B695 CLASS 50 TYPE 1 UNC OVER TAP NUTS AS SPECIFIED IN AASHTO 291 / ASTM A 563 HEAVY HEX HEAD ASTM A563DH OR SAE J995 GRADE 5
U1	7/16" DIA. SLIP POST ASSEMBLY - BREAKAWAY BOLT	ASTM A153 OR B695 CLASS 55 OR F2329 UNC FULLY THREADED HEX HEAD TAP BOLT ASTM A449 OR SAE J429 GRADE 5
U2	7/16" DIA. SLIP POST ASSEBLY - BREAKAWAY BOLT - WASHER	ASTM F436 TYPE I (HARDEN TYPICALLY USED WITH STEEL) GALV. AASHTO M111/ASTM A 123 OR GALV. HOT DIP. TO POST BOLT CLASS C / ASTM F2329 OR GALV. MECHANICALLY TO AASHTO M232 CLASS C / ASTM A153 CLASS C / ASTM AASHTO M298 CLASS 50, TYPE 1 / ASTM B695 CLASS 55, F2329
U3	SLIP POST ASSEBLY - BREAKAWAY BOLT - NUT	HOT DIP AASHTO M232 CLASS / ASTM A153 CLASS C / ASTM F2329 C OR MECHANICAL GAL. TO AASHTO M298 CLASS 50 TYPE 1 / STM B695 CLASS 50 TYPE 1 UNC OVER TAP NUTS AS SPECIFIED IN AASHTO 291/ASTM A 563 HEAVY HEX HEAD ASTM A563DH OR SAE J995 GRADE 5
V1	¾" DIA. BCT CABLE	AASHTO M30 / ASTM A741 6X19 INDEPENDENT WIRE CORE (IWRC) IMPROVED PLOW STEEL (IPS), 6X19 INDEPENDENT WIRE CORE (IWRC) IMPROVED PLOW STEEL (IPS) TYPE II OR IIC, CLASS C ZINC COATED MIN BREAKING STRENGTH OF 42.7 KIPS
V2	ANCHOR CABLE-SWAGE FITTING	UNC ASTM A576 GRADE 1035 SWAGE FITTING ARE TO BE FACTORY SWAGED. MIN. BREAKING STRENGTH OF 42.7 KIPS. ASME B30.26 "FORGED, CAST, OR DIE STAMPED WITH THE FOLLOWING IN TO CONNECTION: NAME OF MANUFACTURE OR TRADEMARK OF CONNECTION'S MANUFACTURER, SIZE OR RATED LOAD, GRADE FOR ALLOY EYEBOLTS."
V3	1" DIA. ANCHOR CABLE-WASHER	HOT DIP AASHTO M232 CLASS / ASTM A153 CLASS C / ASTM F2329 C OR MECHANICAL GAL. TO AASHTO M298 CLASS 50 TYPE 1 / ASTM B695 CLASS 50 TYPE 1 F436 TYPE 1 (HARDEN WASHER ONLY)
V4	1" DIA. ANCHOR CABLE-NUT	HOT DIP AASHTO M232 CLASS / ASTM A153 CLASS C / ASTM F2329 C OR MECHANICAL GAL. TO AASHTO M298 CLASS 50 TYPE 1/ ASTM B695 CLASS 50 TYPE 1 UNC OVER TAP NUTS AS SPECIFIED IN AASHTO 291 / ASTM A 563 HEAVY HEX HEAD ASTM A563DH OR SAE J995 GRADE 5
W1	REFLECTOR	SEE SDD 15A4

STEEL THRIE BEAM BULLNOSE TERMINAL

STATE OF WISCONSIN
DEPARTMENT OF TRANSPORTATION

APPROVED
August 2020 — DATE
/S/ Rodney Taylor — ROADWAY STANDARDS DEVE ENGINEER
FHWA

6

SDD 14B26 - 05h

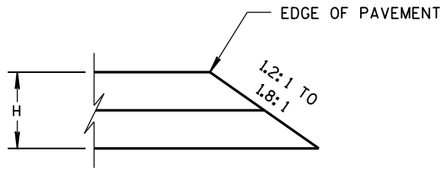

CONSTRUCTED WITH FINAL TWO LAYERS

FOR H 5" OR LESS

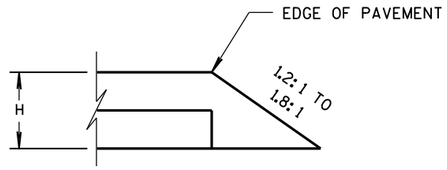

CONSTRUCTED WITH FINAL LAYER

FOR H 5" OR LESS

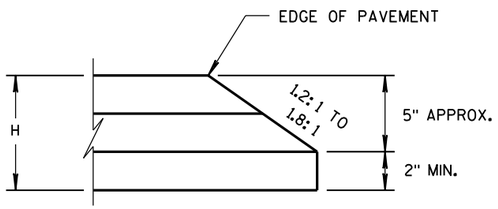

CONSTRUCTED WITH FINAL TWO LAYERS

FOR H GREATER THAN 5"

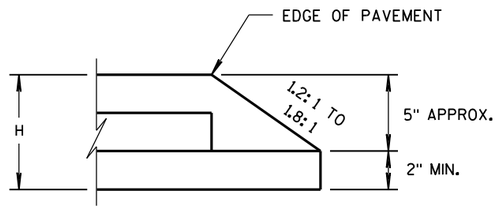

CONSTRUCTED WITH FINAL LAYER

FOR H GREATER THAN 5"

HMA PAVEMENT AND HMA OVERLAYS

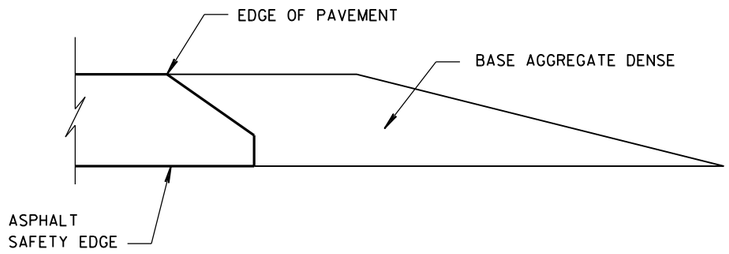

FINISHED SHOULDER AGGREGATE PLACEMENT

6

6

S.D.D. 14 B 29-1

S.D.D. 14 B 29-1

SAFETY EDGE SM

STATE OF WISCONSIN
DEPARTMENT OF TRANSPORTATION

APPROVED

11/30/2012
DATE

/S/ Jerry H. Zoda
ROADWAY STANDARDS DEVELOPMENT ENGINEER

FHWA

(1) WOOD OR STEEL POSTS (w6X9 OR w6X8.5) MAY BE USED. DO NOT INTERMIX WOOD AND STEEL POSTS. INSTALL STEEL POSTS WITH HOLES ON APPROACHING TRAFFIC SIDE.

(2) USE WOOD OR APPROVED PLASTIC BLOCKOUTS. WOOD BLOCKOUTS MAY BE CONSTRUCTED OUT OF TWO OR MORE WOOD BLOCKOUTS. SEE ALTERNATE WOOD BLOCKOUT DETAIL. DIMENSIONS OF APPROVED PLASTIC BLOCKOUTS MAY VARY.

(3) IF ROCK IS ENCOUNTERED DURING EXCAVATION, PROVIDE A HOLE 12 INCHES IN DIAMETER EXTENDING 20 INCHES DEEP INTO THE ROCK. PLACE APPROXIMATELY 2 1/2" INCHES OF GRANULAR MATERIAL IN THE BOTTOM OF THE HOLE. CUT THE POSTS THE TO LENGTH AMD INSTALL. BACKFILL WITH EXCAVATED MATERIAL AND COMPACT. BACKFILL IS TO BE FREE OF LARGE ROCKS.

(4) WHEN THE DISTANCE FROM BACK OF POST TO SHOULDER HINGE POINT IS LESS THAN 2 FEET INSTALL LONGER POST AT HALF POST SPACING (K).

(5) FOR NEW MGS INSTALLATION TOP OF W-BEAM RAIL TOLERANCE IS ±1". FOR EXISTING MGS INSTALLATION TOP OF W-BEAM IS BETWEEN 27 ¾" TO 32".

(6) WHEN USING STEEL POST AND WOOD BLOCKOUTS INSTALL FOUR 16D GALVANIZED NAILS. INSTALL NAILS AT THE BACK CORNERS OF THE BLOCK AND BEND THE NAILS OVER THE FLANGE OF THE STEEL POST.

(7) TOTAL POST LENGTH FOR TYPE K IS 7' - 0".
TOTAL POST LENGTH FOR OTHER MGS TYPES IS 6' - 0".

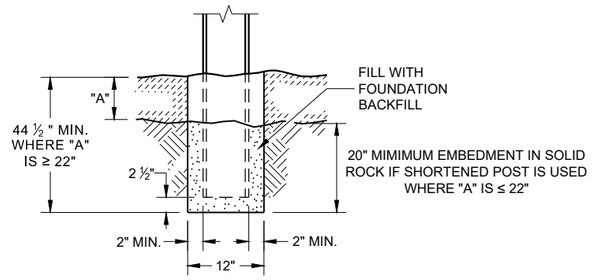

END VIEW
SETTING STEEL OR WOOD POST IN ROCK (3)

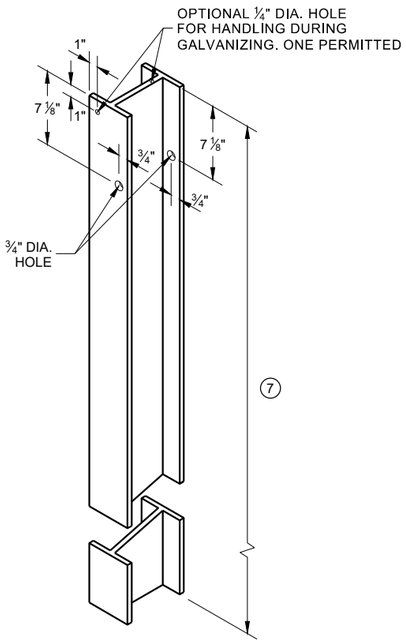

STEEL POST & HOLE PUNCHING DETAIL (W 6 X 9) (1)

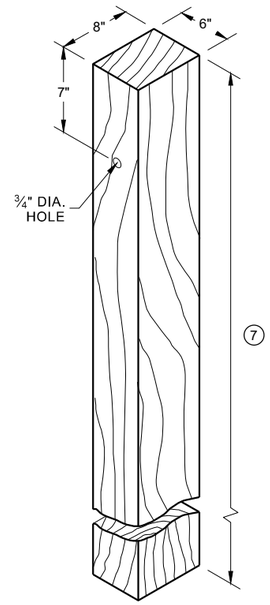

WOOD POST (6" X 8") NOMINAL (1)

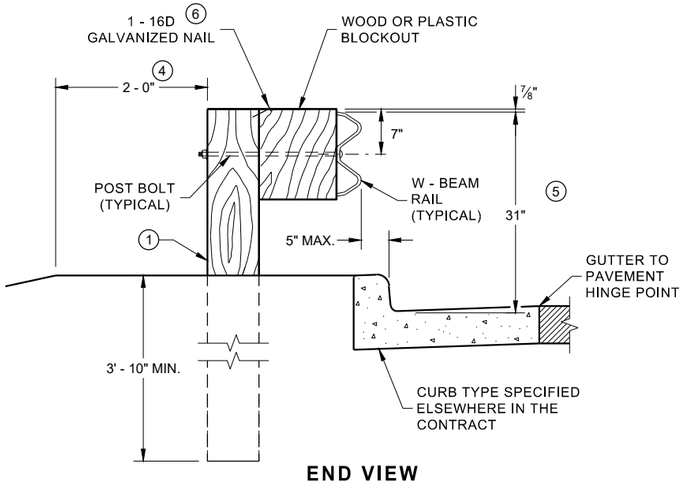

END VIEW
LOCATED ALONG A CURBED ROADWAY

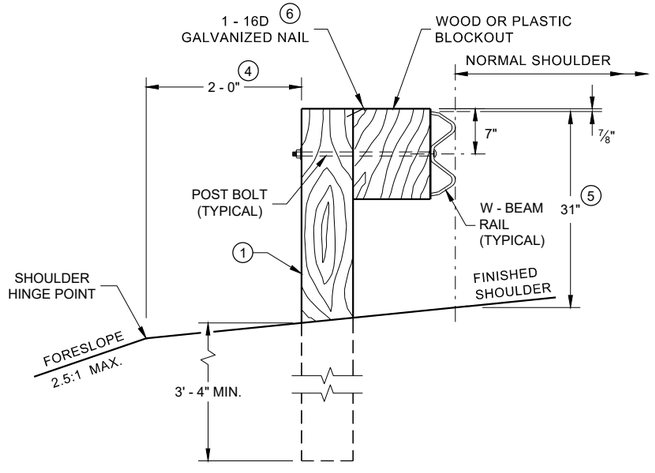

END VIEW
LOCATED ALONG A ROADWAY SHOULDER STANDARD INSTALLATION

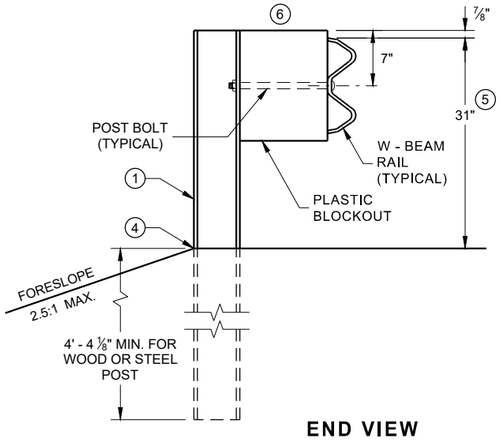

END VIEW
MGS LONGER POST AT HALFPOST SPACING W BEAM (K)

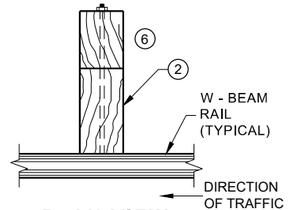

PLAN VIEW
WOOD POST, BLOCKOUT & BEAM

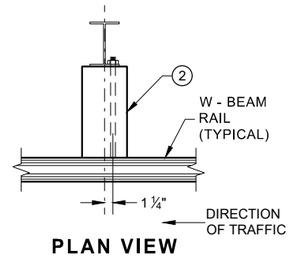

PLAN VIEW
STEEL POST, PLASTIC BLOCKOUT & BEAM

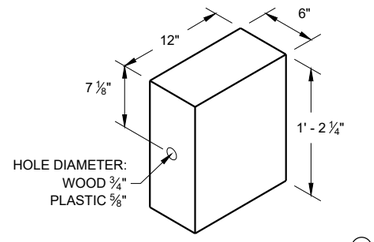

WOOD OR PLASTIC BLOCKOUT (2)

MIDWEST GUARDRAIL SYSTEM (MGS) GUARDRAIL

STATE OF WISCONSIN
DEPARTMENT OF TRANSPORTATION

6

SDD 14B42 - 07a

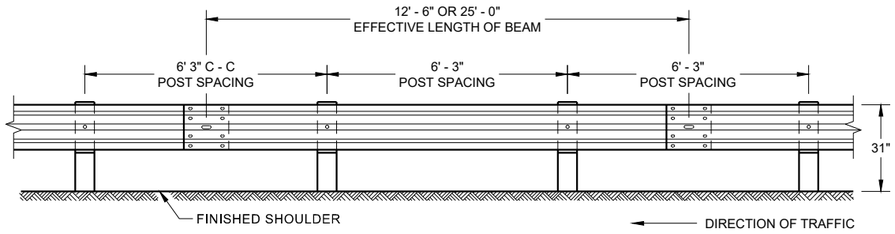

FRONT VIEW
POST SPACING STANDARD INSTALLATION

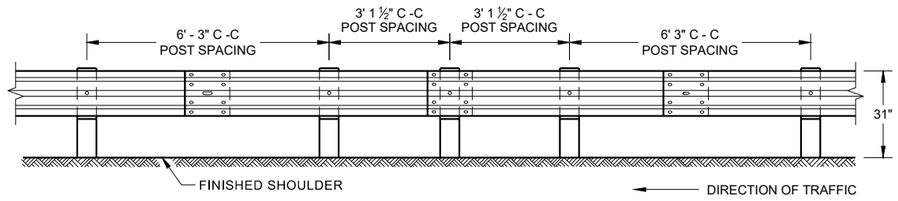

FRONT VIEW
HALF POST SPACING (HS) AND
HALF POST SPACING WITH LONGER POSTS (K)

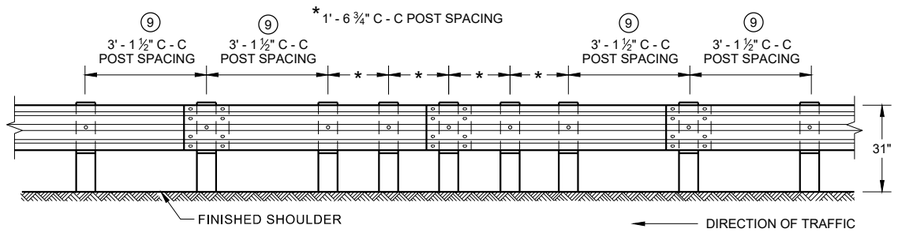

FRONT VIEW
QUARTER POST SPACING (QS)

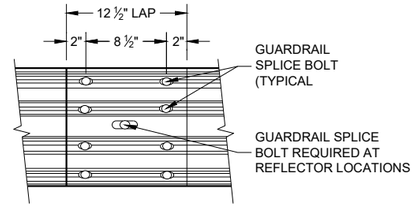

FRONT VIEW
MID-SPAN BEAM SPLICE

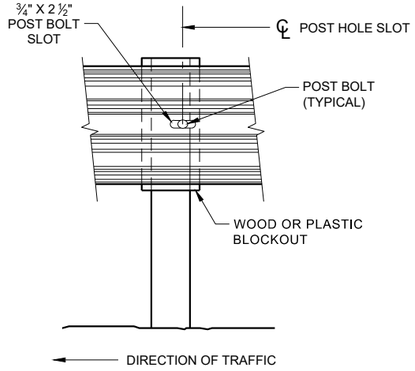

FRONT VIEW AT STEEL POST

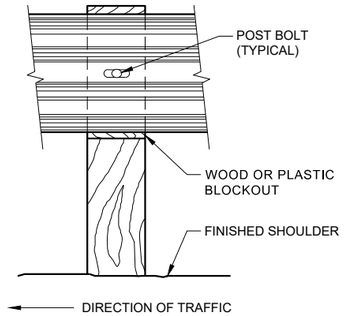

FRONT VIEW AT WOOD POST

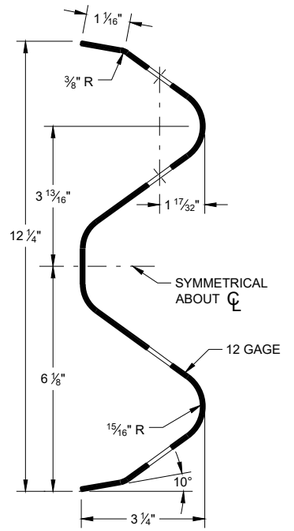

SECTION THRU W-BEAM RAIL

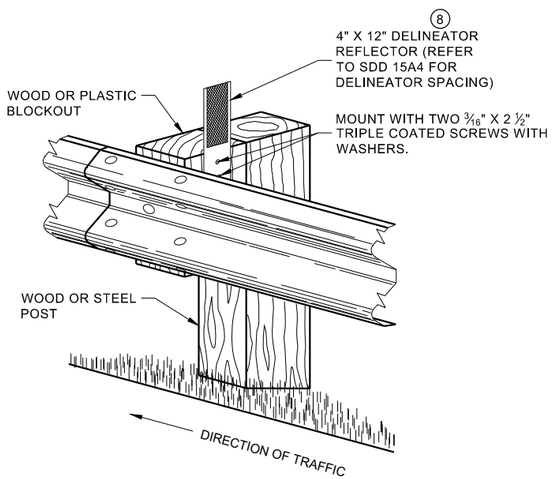

ONE SIDED REFLECTOR DETAIL
AND TYPICAL INSTALLATION

GENERAL NOTES

⑧ DO NOT INSTALL REFLECTORS ON THE FIRST 50 FEET OF THE APPROACH END OF THE ENERGY ABSORBING TERMINAL.

⑨ 25 FEET OF HALF POST SPACING IS REQUIRED ON APPROACH AND DEPARTURE ENDS OF QUARTER POST SPACING.

POST BOLTS ARE A ⅝" DIAMETER ASTM A307 GUARDRAIL BOLT. A POST BOLT REQUIRES ⅝" DIAMETER A563A DOUBLE RECESSED (DR) HEAVY HEX NUT AND ⅝" DIAMETER F844 FLAT WASHER. POST BOLTS MAY BE LONGER IF MULTIPLE BLOCKOUTS ARE BEING USED.

GUARD RAIL SPLICE BOLTS ARE A ⅝" DIAMETER ASTM A307 GUARDRAIL HEAD BOLT. A GUARDRAIL SPLICE BOLT REQUIRES ⅝" DIAMETER A563A DOUBLE RECESSED (DR) HEAVY HEX NUT.

MIDWEST GUARDRAIL SYSTEM (MGS) GUARDRAIL

STATE OF WISCONSIN
DEPARTMENT OF TRANSPORTATION

6

SDD 14B42 - 07b

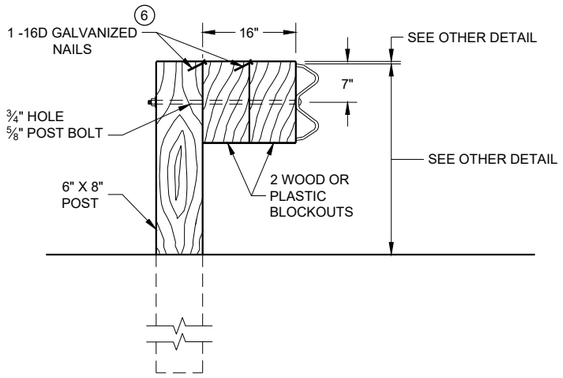

DETAIL FOR 16" BLOCKOUT DEPTH

IT IS ACCEPTABLE TO USE BLOCKOUTS UP TO 16" DEEP TO INCREASE THE POST OFFSET TO AVOID UNDERGROUND OBSTACLES. THERE IS NO LIMIT TO THE NUMBER OF POSTS THAT CAN HAVE ADDITIONAL BLOCKOUTS UP TO 16" DEEP.

NOTE:

1. ALL FILLETS SHALL HAVE A MINIMUM RADIUS OF 3⁄16".
2. IF THE BOLT EXTENDS MORE THAN ¼" FROM THE NUT THE BOLT SHOULD BE TRIMMED BACK.

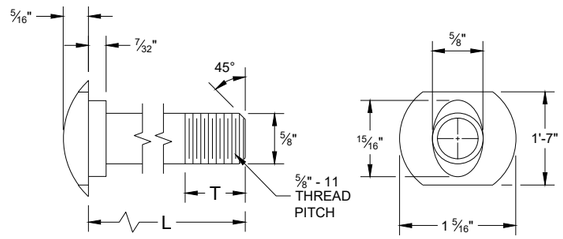

POST BOLT TABLE

L	T (MIN.)
1 ¼"	1 ⅛"
2"	1 ¾"
10"	4"
14"	4 1⁄16"
18"	4"
21"	4 1⁄16"
25"	4"

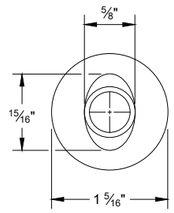

ALTERNATE BOLT HEAD

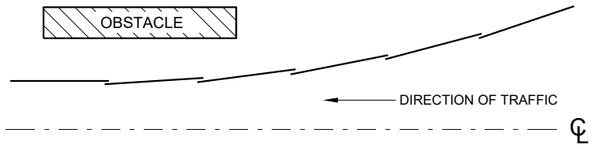

PLAN VIEW
BEAM LAPPING DETAIL

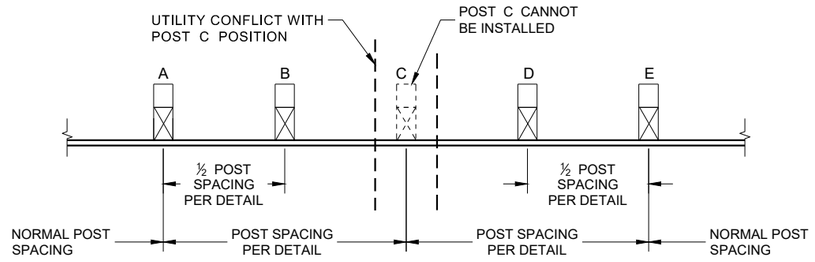

POST DRIVING FOR CONTINUOUS UNDERGROUND OBSTRUCTION

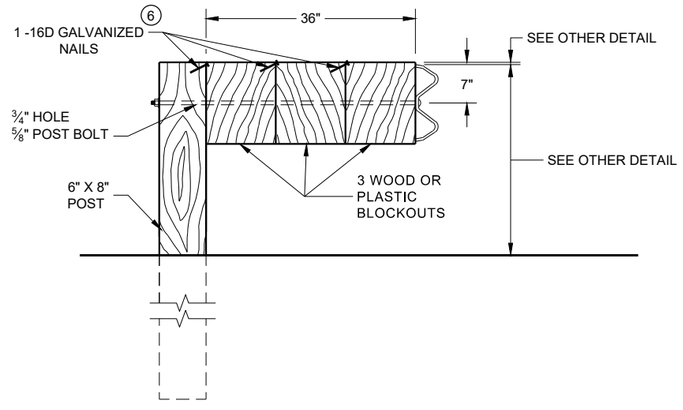

DETAIL FOR 36" BLOCKOUT DEPTH

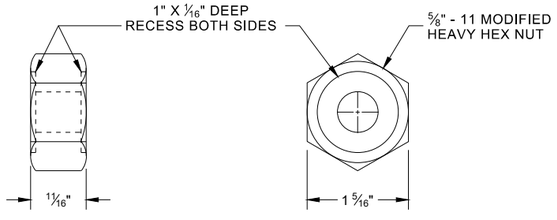

POST BOLT, SPLICE BOLT AND RECESS NUT

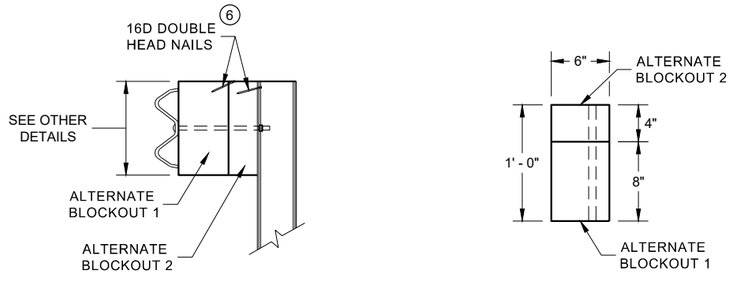

SIDE VIEW

PLAN VIEW

ALTERNATE WOOD BLOCKOUT DETAIL

NOTES: UNDER SPECIAL CIRCUMSTANCES, SUCH AS AVOIDING OBSTACLES THAT ARE NOT RELOCATED, IT IS ACCEPTABLE TO INSTALL ADDITIONAL BLOCKOUTS TO OBTAIN UP TO 36" DEPTH FOR ONE OR TWO POSTS IN A SECTION OF GUARDRAIL.

DO NOT USE 16" OR 36" BLOCKOUTS IF IT CAUSES THE POST TO BE DRIVEN BEYOND SHOULDER HINGE POINT OR CAUSES A FIXED OBJECT TO BE WITHIN THE DEFLECTION DISTANCE OF THE BARRIER.

(6) WHEN USING STEEL POST AD WOOD BLOCKOUTS, INSTALL FOUR 16D GALVANIZED NAILS. INSTALL NAILS AT THE BACK CORNERS OF THE BLOCK AND BEND THE NAILS OVER THE FLANGE OF THE STEEL POST.

MIDWEST GUARDRAIL SYSTEM (MGS) GUARDRAIL

6

SDD 14B42 - 07c

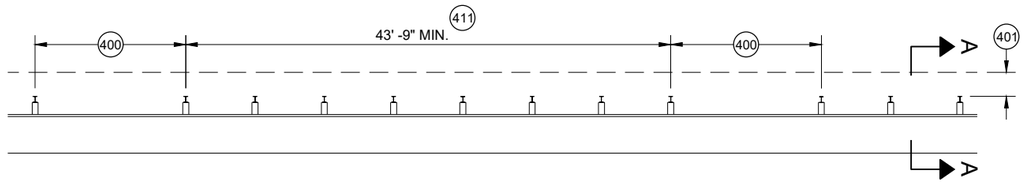

MISSING POST IN MGS GUARDRAIL

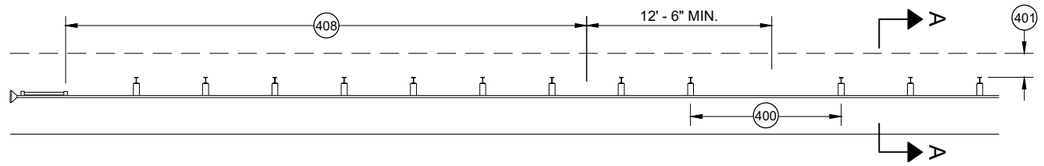

MISSING POST IN MGS GUARDRAIL NEAR EAT

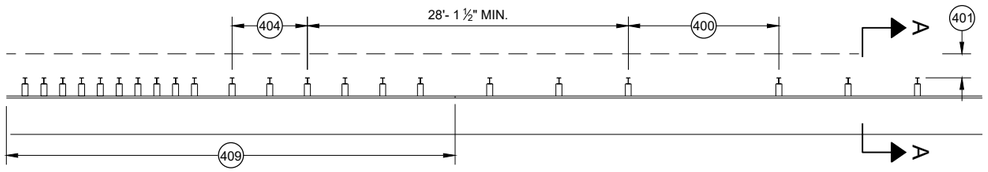

MISSING POST IN MGS GUARDRAIL NEAR AN APPROACH TRANSITION

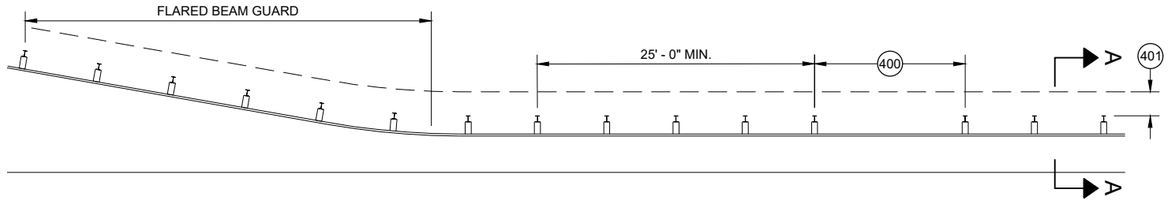

MISSING POST IN MGS GUARDRAIL NEAR FLARED BEAM GUARD

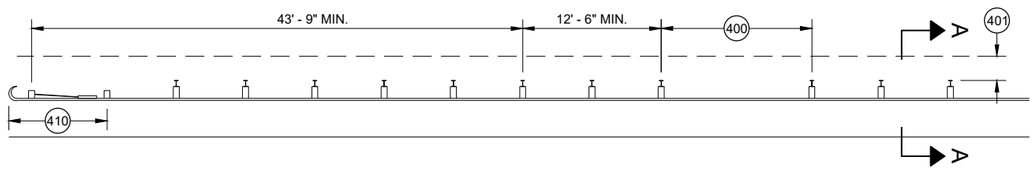

MISSING POST IN MGS GUARDRAIL NEAR A TYPE 2 END TERMINAL

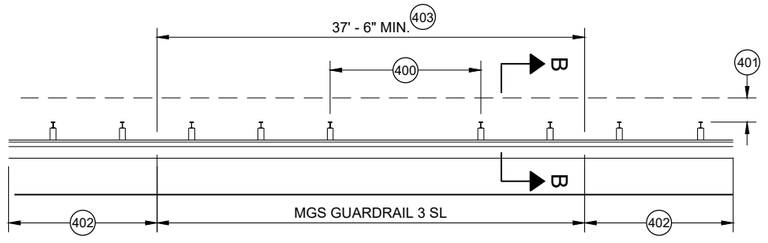

MISSING POST IN SHORT SPAN MGS GUARDRAIL NEAR CURB (SL) 407

(400) MAX SPAN 12' - 6"
(401) 2' MIN.
(402) MGS GUARDRAIL 3
(403) NESTING BEAM GUARD
(404) ASYMMETRIC TRANSITION
(405) SOIL WELL DRAINED AND COMPACTED
(406) SEE OTHER DRAWINGS IN THIS SDD
(407) SEE OTHER DRAWINGS FOR MIN. SPACING BETWEEN SPANS
(408) SEE SDD 14B44
(409) SEE SDD 14B45
(410) SEE SDD 14B47
(411) MINIMUM DISTANCE BETWEEN MISSING POST SPANS.

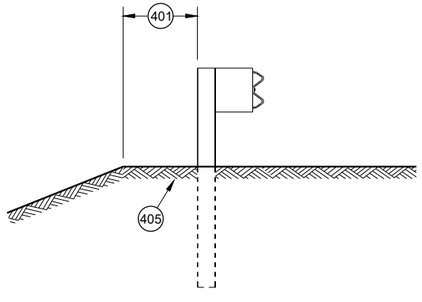

SECTION A - A 406

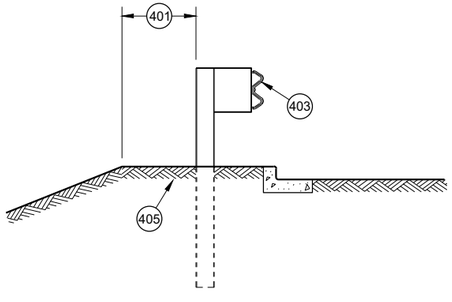

SECTION B - B 406

MIDWEST GUARDRAIL SYSTEM (MGS) GUARDRAIL

STATE OF WISCONSIN
DEPARTMENT OF TRANSPORTATION

APPROVED
May 2021
DATE
/S/ Rodney Taylor
ROADWAY STANDARDS DEVE
UNIT SUPERVISOR

FHWA

6

SDD 14B42 - 07d

GENERAL NOTES

(A) THE SLOPE IN THE AREA BOUNDED BY THE GRADELINE, THE HINGE POINT LINE (HPL) AND THE CLEAR ZONE LIMITS (CZL) SHALL BE 4:1 OR FLATTER.

(B) AFTER FINAL ASSEMBLY, RECHECK CABLE TO BE SURE IT IS TAUT AND HAS NOT RELAXED

(C) DIFFERENT MANUFACTURERS REQUIRE DIFFERENT PERFORATED W - BEAM RAIL END PANELS. SEE MANUFACTURER'S INFORMATION.

(D) ATTACH ALUMINUM SHEET TO E.A.T. HEAD USING 4 STAINLESS STEEL SELF - TAPPING SCREWS. ONE SCREW PER CORNER.

(E) HARDWARE MAY VARY BETWEEN MANUFACTURER. SEE MANUFACTURER'S DRAWING FOR INFORMATION.

DIMENSIONS MAY VARY, MANUFACTURER'S INFORMATION.

SEE SDD 14B42 FOR MORE INFORMATION.

* DO NOT ATTACH BLOCKOUTS TO POST 1 AND 2.

DO NOT INSTALL REFLECTORS ON THE FIRST 50 FEET OF THE APPROACH END OF THE ENERGY ABSORBING TERMINAL.

SEE MANUFACTURER'S DRAWING FOR SPLICE LOCATION, HARDWARE DIMENSIONS AND INSTALLATION INSTRUCTIONS.

THE CENTER OF THE UPPER 3 ½" DIAMETER HOLE ON POST NUMBER 3 THROUGH POST 9 IS TO BE FLUSH WITH THE GROUND LINE UP TO A MAXIMUM OF 2" ABOVE GROUND LINE. WOOD BLOCKS ON POSTS NUMBERED 3 THROUGH 9 MAY BE ADJUSTED UP TO 3" ABOVE THE TOP OF POST.

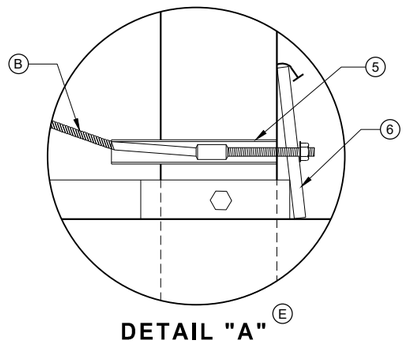

DETAIL "A" (E)

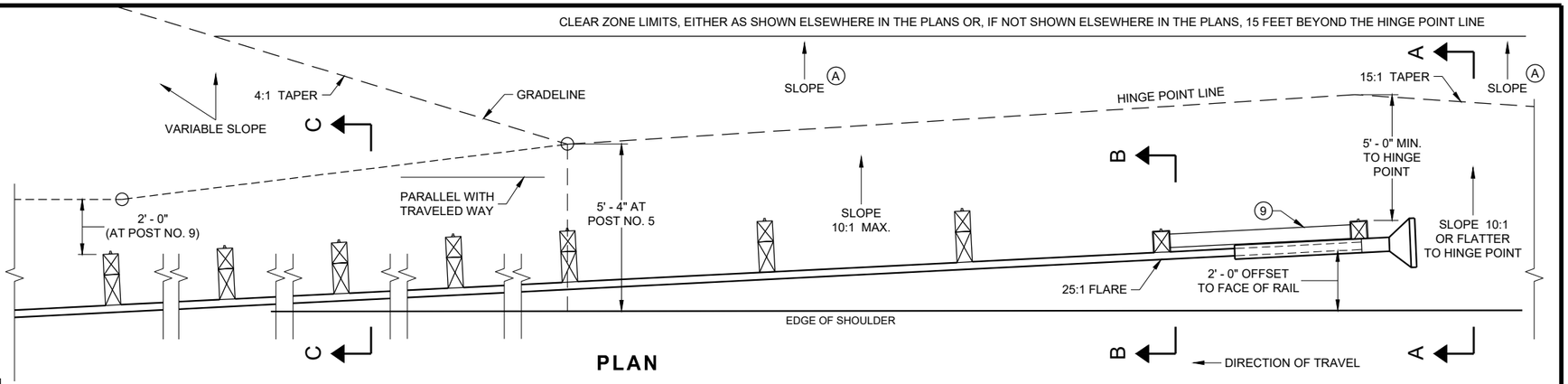

PLAN

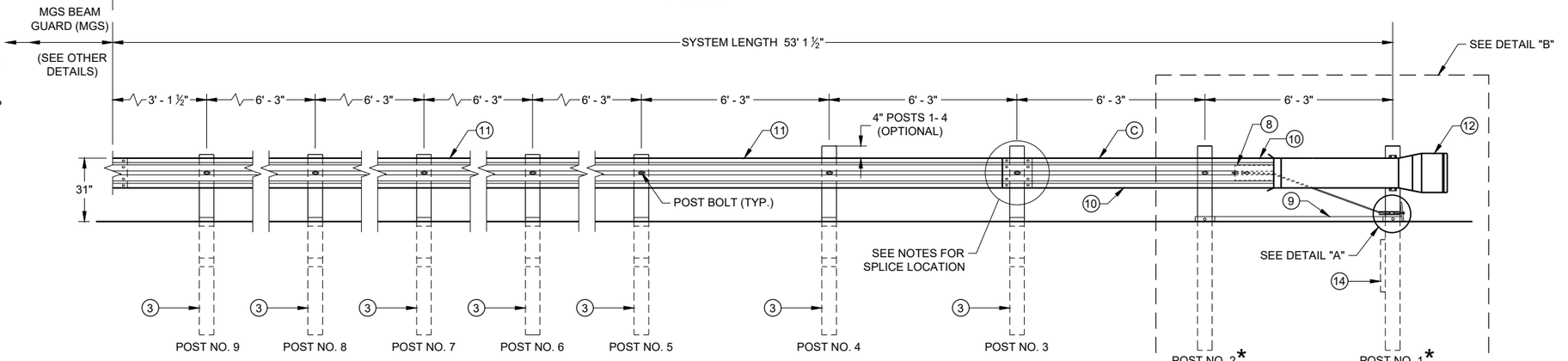

ELEVATION

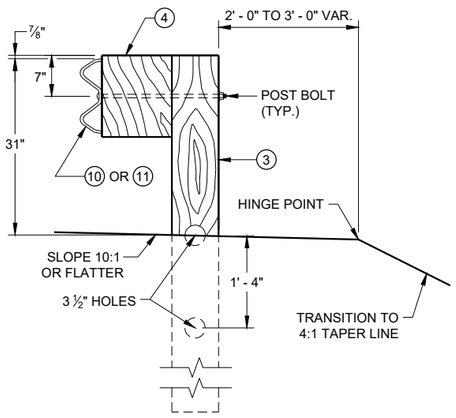

SECTION C - C
TYPICAL AT POST NOS. 3 - 9

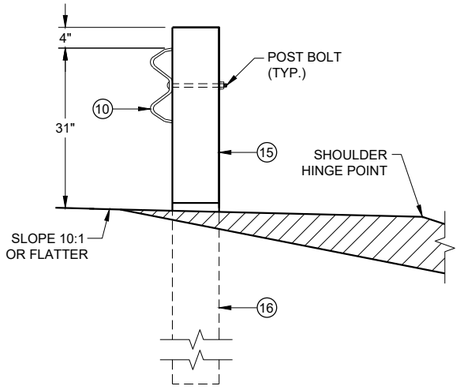

SECTION B - B
TYPICAL AT POST NO. 2*

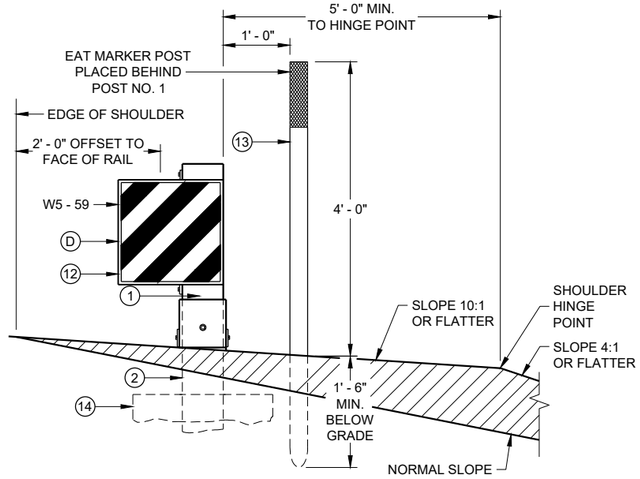

SECTION A - A
TYPICAL AT POST NO. 1*

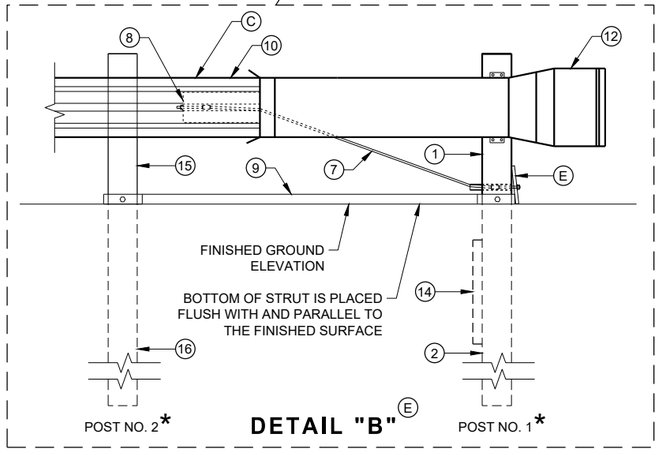

DETAIL "B" (E)

MIDWEST GUARDRAIL SYSTEM
ENERGY ABSORBING TERMINAL (MGS)

STATE OF WISCONSIN
DEPARTMENT OF TRANSPORTATION

SDD 14B44 - 04a

SDD 14B44 - 04a

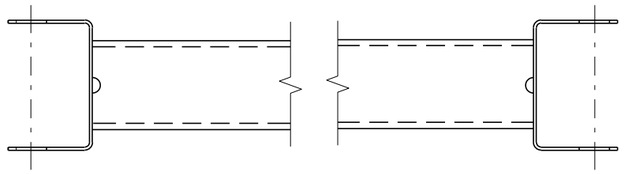

GENERIC GROUND STRUT ⑨ Ⓔ

BILL OF MATERIALS

PART NO.	DESCRIPTION MATERIALS PROVIDED BY MGS EAT MANUFACTURER. SEE MANUGACTURER'S DETAILS FOR MORE INFORMATION.
①	UPPER POST NO. 1 6" X 6" TUBE
②	LOWER POST NO. 1
③	WOOD CRT
④	WOOD BLOCKOUT
⑤	PIPE SLEEVE
⑥	BEARING PLATE
⑦	BCT CABLE ASSEMBLY
⑧	ANCHOR CABLE BOX
⑨	GROUND STRUT
⑩	PERFORATED W-BEAM RAIL END PANEL, 12'-6" LONG.
⑪	STANDARD W-BEAM RAIL. MULTIPLE SECTIONS REQUIRED. SECTIONS VARY IN LENGTH.
⑫	IMPACT HEAD
⑬	EAT MARKER POST - YELLOW (SEE APPROVED PRODUCTS LIST)
⑭	SOIL PLATE
⑮	UPPER POST NO. 2
⑯	LOWER POST NO. 2

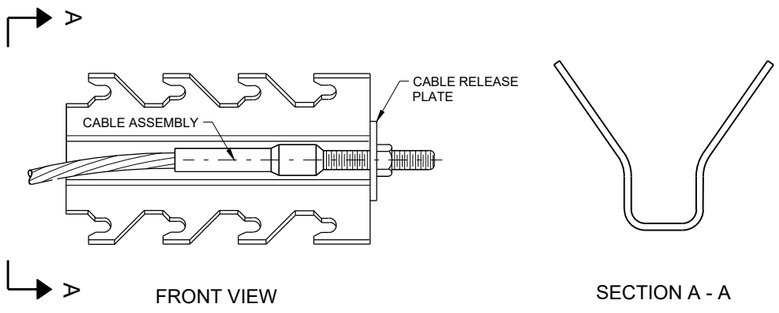

GENERIC ANCHOR CABLE BOX ⑨ Ⓔ

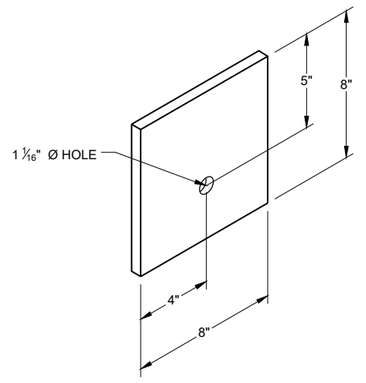

BEARING PLATE ⑥ Ⓔ

6

6

SDD 14B44 - 04b

SDD 14B44 - 04b

MIDWEST GUARDRAIL SYSTEM
ENERGY ABSORBING TERMINAL
(MGS)

STATE OF WISCONSIN
DEPARTMENT OF TRANSPORTATION

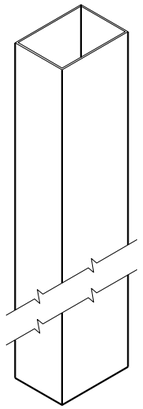

UPPER POST NO. 1 (1) (E)

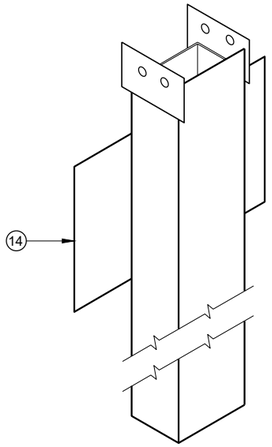

LOWER POST NO. 1 (2) (E)

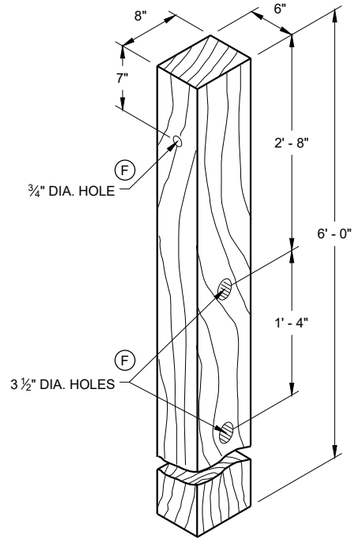

WOOD CRT POST (3) (E)
POSTS NUMBER 3-9

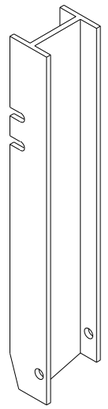

UPPER POST NO. 2 (15) (E)

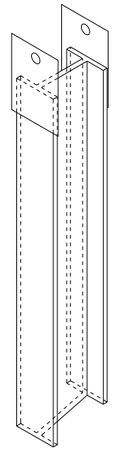

LOWER POST NO. 2 (16) (E)

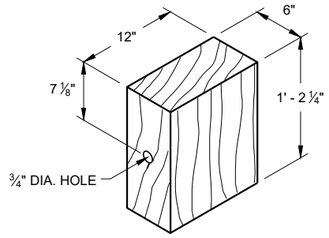

WOOD BLOCKOUT (4)
REQ'D. AT ALL POSTS EXCEPT POST NO'S 1 & 2

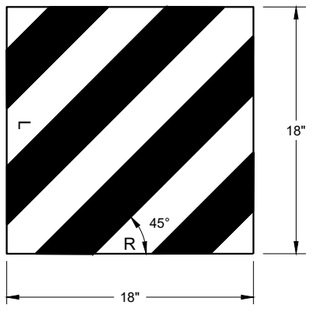

W5 - 59

REFLECTIVE SHEETING DETAIL (E)

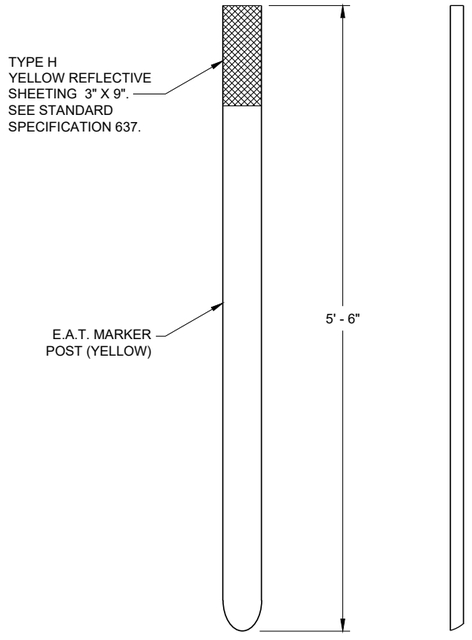

FRONT VIEW SIDE VIEW

E.A.T. MARKER POST (13)

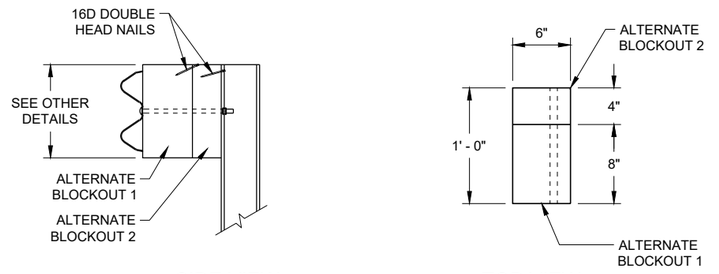

SIDE VIEW TOP VIEW

ALTERNATE WOOD BLOCKOUT DETAIL

MIDWEST GUARDRAIL SYSTEM ENERGY ABSORBING TERMINAL (MGS)

STATE OF WISCONSIN
DEPARTMENT OF TRANSPORTATION

APPROVED
7/2018
DATE
/S/ Rodney Taylor
ROADWAY STANDARDS DEVE
UNIT SUPERVISOR

FHWA

6

SDD 14B44 - 04c

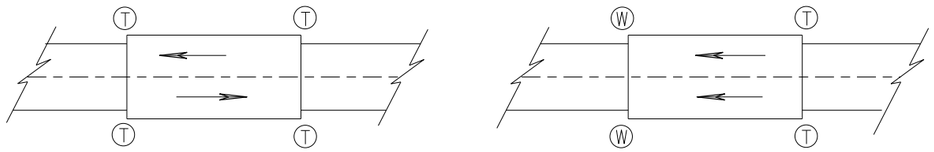

TWO WAY TRAFFIC

ONE WAY TRAFFIC

(T) THRIE BEAM CONNECTION

(W) W-BEAM CONNECTION WHEN REQUIRED

TYPICAL LOCATIONS OF THRIE BEAM AND W-BEAM CONNECTIONS TO BRIDGE

GENERAL NOTES

IF ROCK IS ENCOUNTERED, REMOVE ROCK TO FULL DEPTH OF POST PLUS 2½", AND 12" DIAMETER AROUND POST. SEE 14B42 FOR MORE DETAILS.

TRANSITION USES STEEL POSTS ONLY.

SEE STANDARD DETAIL DRAWING 14 B 42 FOR MORE INFORMATION.

POST 2 THROUGH 17 USES STEEL POST ONLY

(1) BRIDGE RAILING TYPE "W" DOES NOT REQUIRE A TERMINAL CONNECTOR.

(2) OPTIONAL CURB AND GUTTER OR DRAINAGE FEATURE SEE PLAN FOR INFORMATION.

(13) STEEL OR WOOD POST IS ACCEPTABLE AT POST 1. SEE SDD14B42

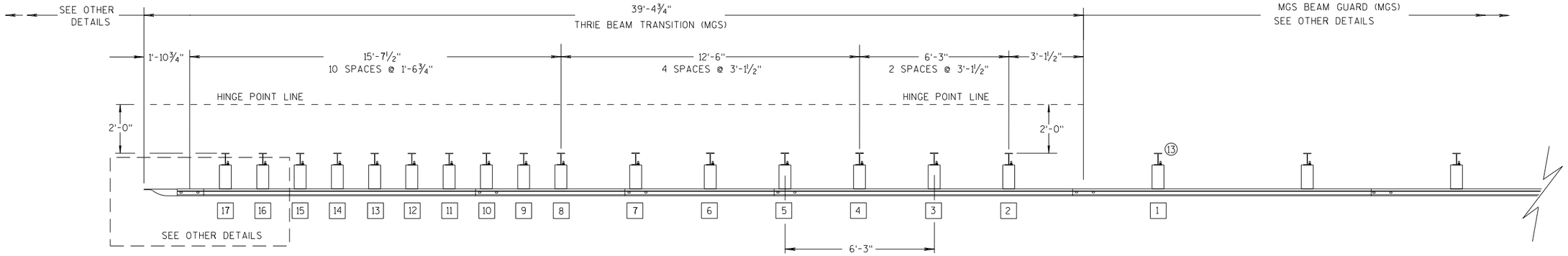

PLAN VIEW

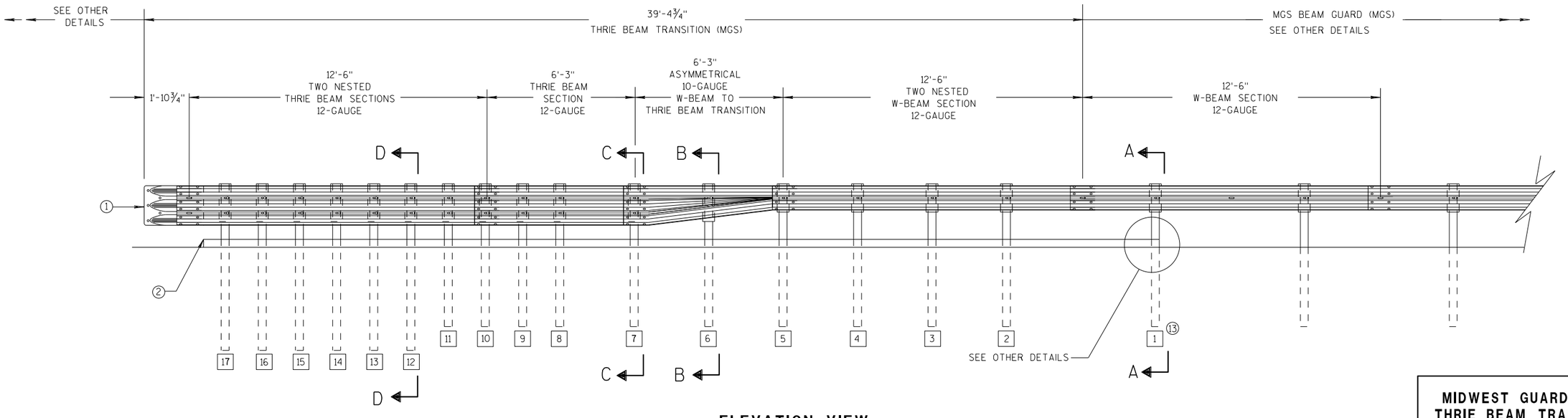

ELEVATION VIEW

MIDWEST GUARDRAIL SYSTEM THRIE BEAM TRANSITION

MIDWEST GUARDRAIL SYSTEM
THRIE BEAM TRANSITION (MGS)

STATE OF WISCONSIN
DEPARTMENT OF TRANSPOR 478

6

S.D.D. 14 B 45-5a

6

S.D.D. 14 B 45-5a

GENERAL NOTES

(2) OPTIONAL CURB AND GUTTER OR DRAINAGE FEATURE SEE PLAN FOR INFORMATION.

(3) WHEN USING STEEL POSTS AND WOOD BLOCKOUTS INSTALL FOUR 10D GALVANIZED NAILS. INSTALL NAILS AT THE BACK CORNERS OF THE BLOCK AND BEND THE NAILS OVER THE FLANGE OF THE STEEL POST.

(4) TOLERANCE FOR TOP OF W-BEAM RAIL IS ± 1".

(13) STEEL OR WOOD POST IS ACCEPTABLE AT POST 1. SEE SDD 14B42

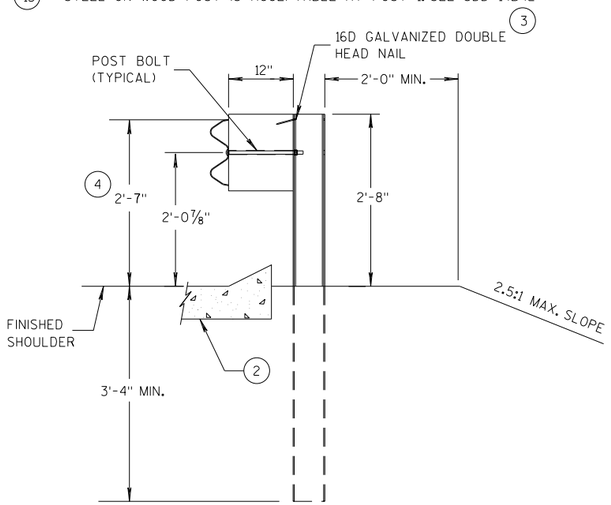

SECTION A-A (13)

POSTS 1-5

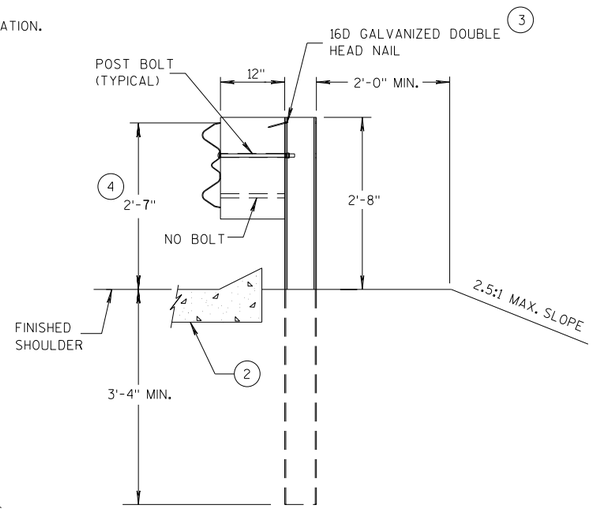

SECTION B-B

POST 6

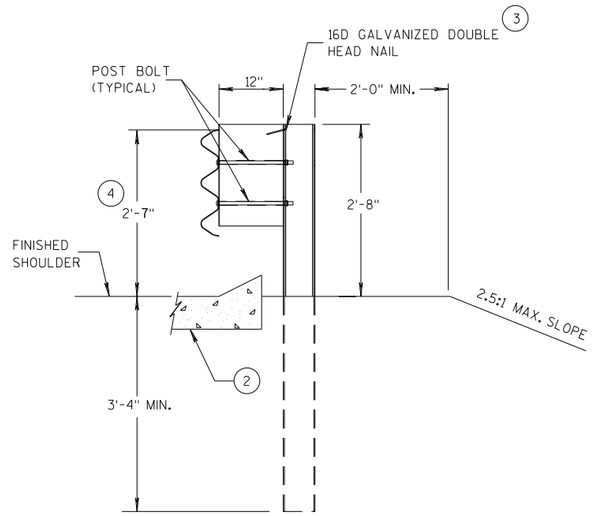

SECTION C-C

POSTS 7-11

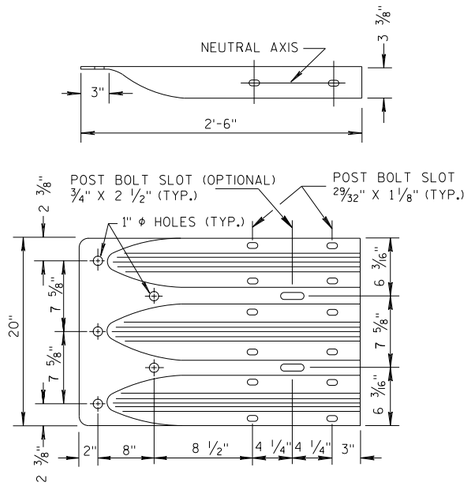

THRIE BEAM TERMINAL CONNECTOR

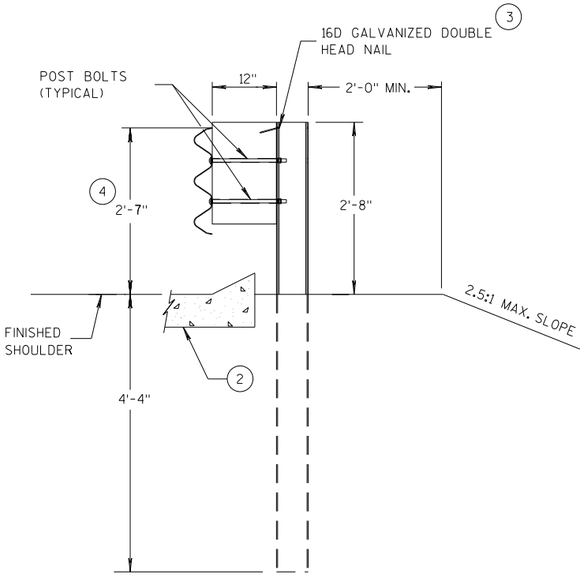

SECTION D-D

POSTS 12-17

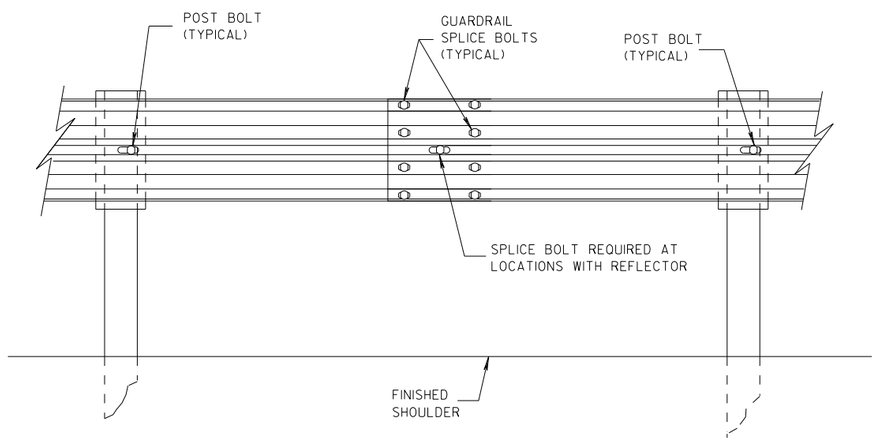

SPLICE DETAIL

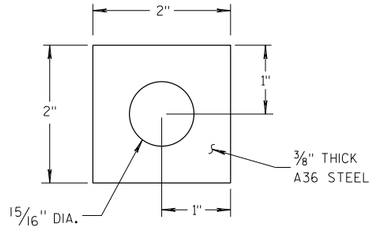

PLATE WASHER DETAIL

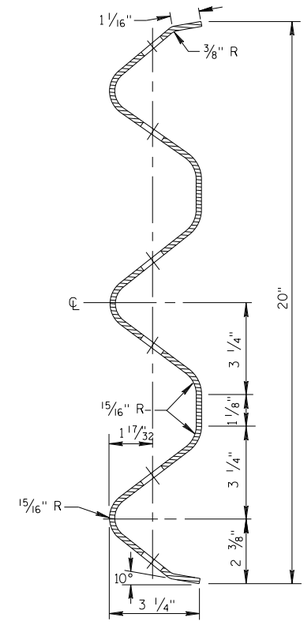

SECTION THRU THRIE BEAM RAIL ELEMENT

MIDWEST GUARDRAIL SYSTEM
THRIE BEAM TRANSITION (MGS)

STATE OF WISCONSIN
DEPARTMENT OF TRANSPOR 479

6

S.D.D. 14 B 45-5b

6

S.D.D. 14 B 45-5b

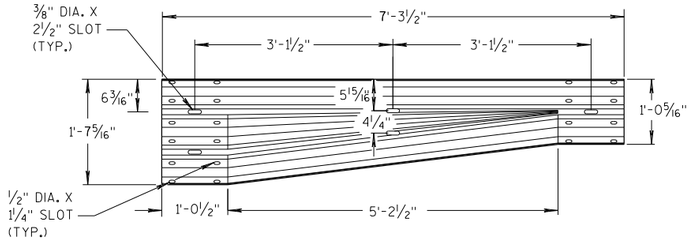

W-BEAM TO THRIE BEAM TRANSITION SECTION

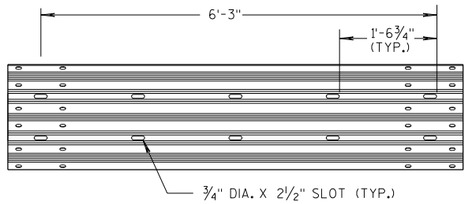

6'-3" THRIE BEAM SECTION

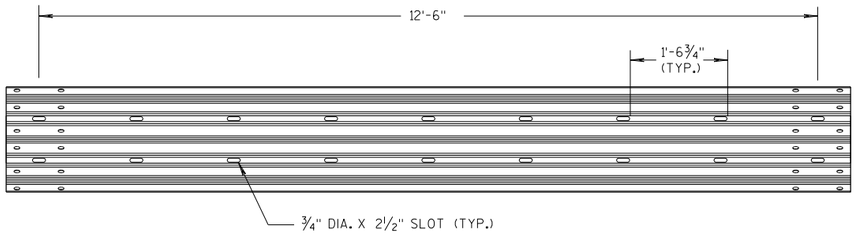

12'-6" THRIE BEAM SECTION

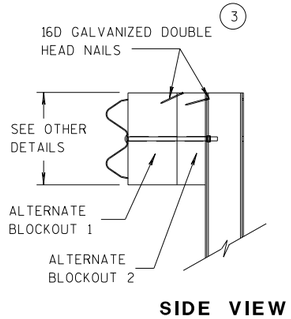

SIDE VIEW

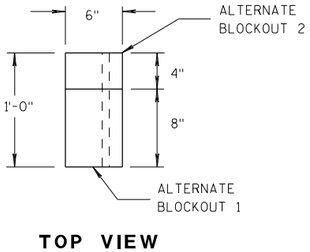

TOP VIEW

ALTERNATE WOOD BLOCKOUT DETAIL

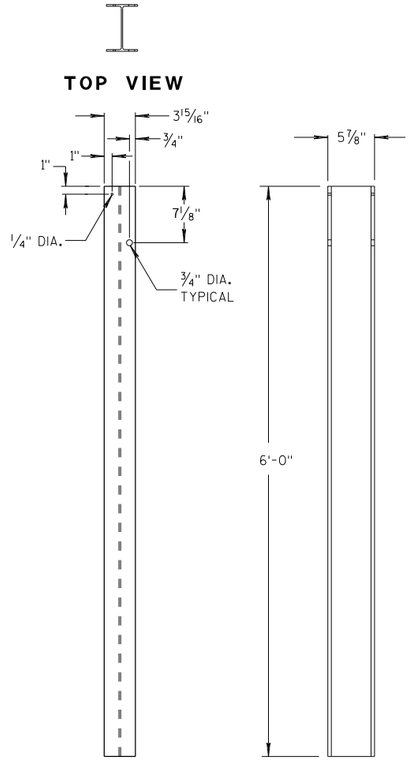

FRONT VIEW SIDE VIEW

STEEL POSTS 1-5 (13)

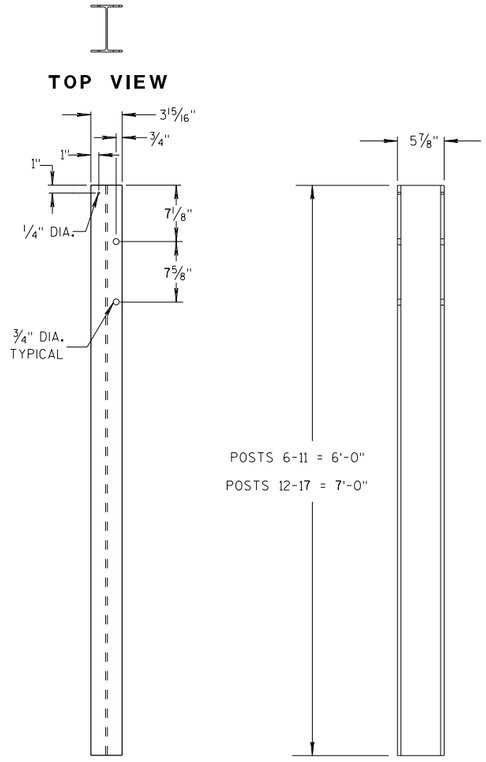

FRONT VIEW SIDE VIEW

STEEL POSTS 6-17

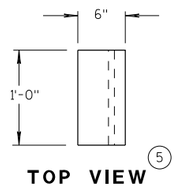

TOP VIEW (5)

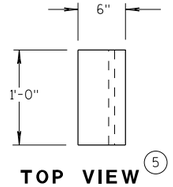

TOP VIEW (5)

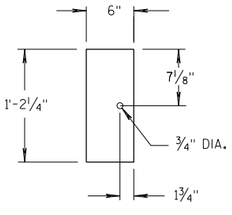

FRONT VIEW

BLOCKOUT POSTS 1-5

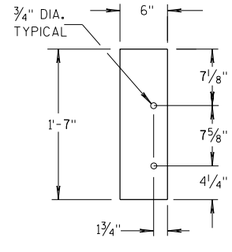

FRONT VIEW

BLOCKOUT POSTS 6-17

GENERAL NOTES

STEEL POSTS ARE W6X9 OR W6X8.5.

BOLT HOLES FOR POST ARE ON FRONT AND OF SIDE OF POST.

(3) WHEN USING STEEL POSTS AND WOOD BLOCKOUTS INSTALL FOUR 16D GALVANIZED NAILS. INSTALL NAILS AT THE BACK CORNERS OF THE BLOCK AND BEND THE NAILS OVER THE FLANGE OF THE STEEL POST.

(5) WOOD BLOCKS MAY BE CONSTRUCTED OUT OF 2 WOOD BLOCKS. SEE ALTERNATE WOOD BLOCK DETAIL.

(13) STEEL OR WOOD POST IS ACCEPTABLE AT POST 1. SEE SDD 14B42.

MIDWEST GUARDRAIL SYSTEM
THRIE BEAM TRANSITION (MGS)

STATE OF WISCONSIN
DEPARTMENT OF TRANSPOR 480

6
S.D.D. 14 B 45-5c

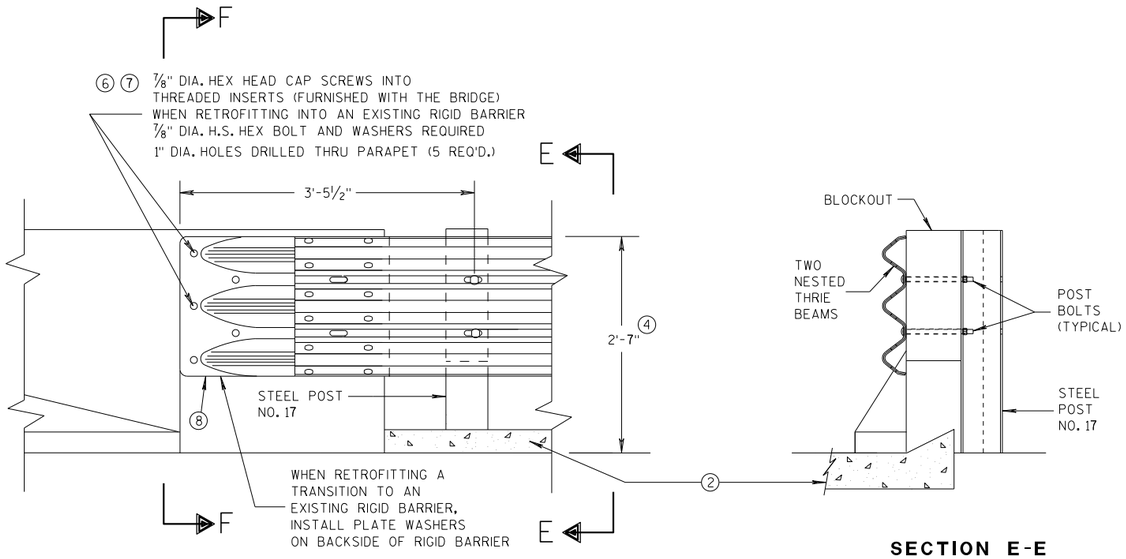

FRONT VIEW

SECTION E-E

THRIE BEAM CONNECTION TO BRIDGE PARAPET WITH SQUARE ENDS

GENERAL NOTES

THESE ARE TYPICAL CONNECTION DETAILS. ADJUST THE POSTION OF CONNECTIONS TO EXISTING BRIDGES TO FIT THE ACTUAL BRIDGE AND SITE DIMENSIONS.

② OPTIONAL CURB AND GUTTER OR DRAINAGE FEATURE SEE PLAN FOR INFORMATION.

④ TOLERANCE FOR TOP OF BEAM IS ± 1".

⑥ DRILLING BOLT HOLES THROUGH THE PARAPET, BOLTS, NUTS, WASHERS AND REPAIRING DAMAGED CONCRETE ARE INCIDENTAL TO THE CONTRACT.

⑦ BOLTS MAY BE A325 BOLTS OR A449 BOLTS. BOLT LENGTH AND THREADING LENGTH ARE TO ALLOW FOR A TIGHT CONNECTION BETWEEN RIGID BARRIER AND THRIE BEAM CONNECTION PLATE. CONTRACTOR IS TO FIELD VERIFY BOLT LENGTH AND THREAD LENGTH. ONE ROUND WASHER REQUIRED BETWEEN BOLT HEAD AND THRIE BEAM CONNECTOR PLATE. BOLTS THAT EXTEND THROUGH THE PARAPET AND OUT THE BACK FACE REQUIRE A HARDENED ROUND STEEL WASHER THAT IS 2" O.D. X 5/32" THICK AND ONE PLATE WASHER. REPAIR ANY DAMAGED CONCRETE FROM BOLT INSTALLATION.

⑧ THE RECESS FOR A W-BEAM CONNECTION, WHICH EXISTS ON SOME PARAPETS OF THIS TYPE, SHALL BE FILLED WITH A TREATED TIMBER BLOCKOUT. BLOCKOUT SIZE IS 1'-6" X 2'-0" X 3 1/2".

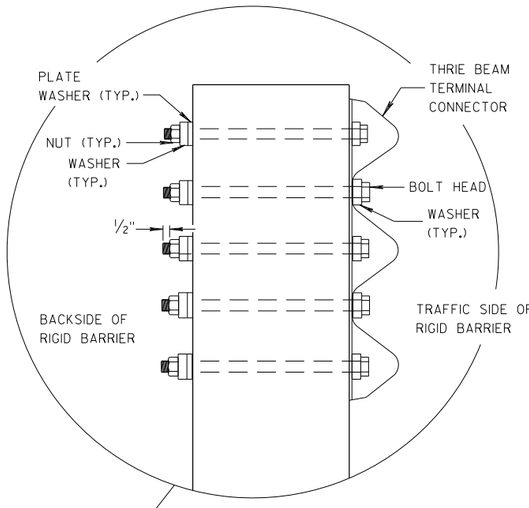

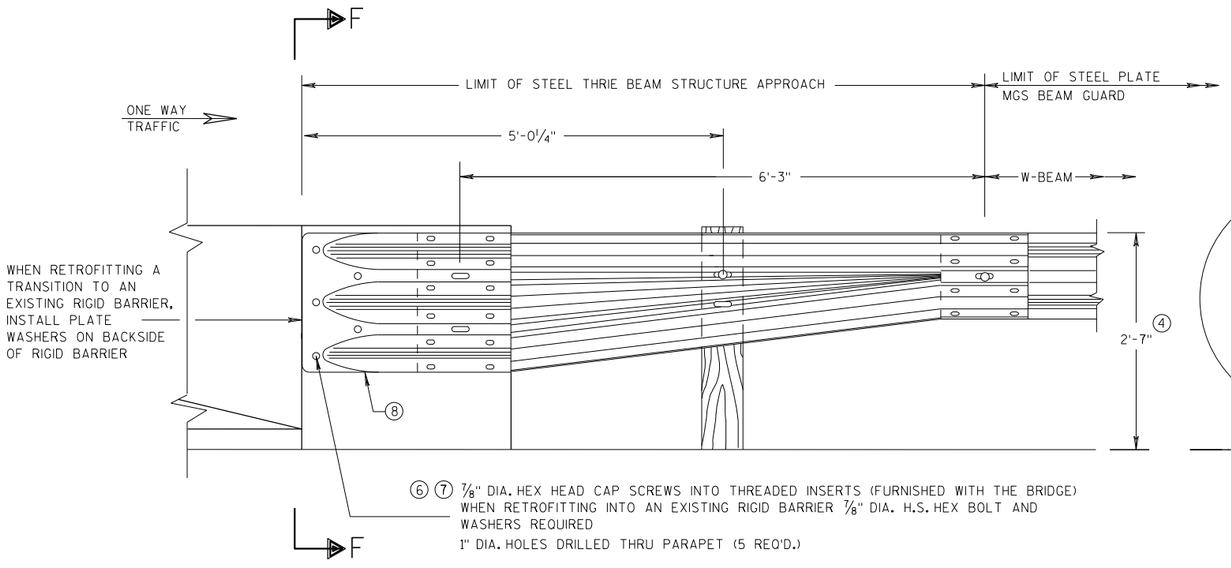

FRONT VIEW

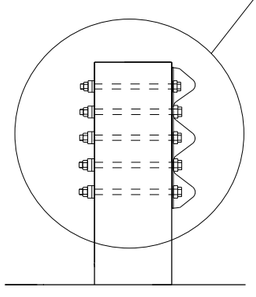

SECTION F-F

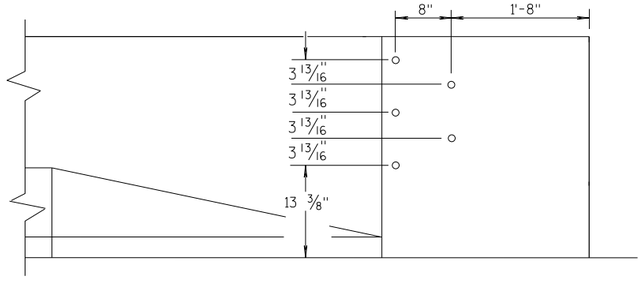

DRILL HOLE LOCATION

W BEAM TRANSITION AND CONNECTION TO BRIDGE PARAPETS WITH SQUARE ENDS

(USE ONLY ON THE TRAFFIC EXIT END OF ONE WAY BRIDGES)

MIDWEST GUARDRAIL SYSTEM
THRIE BEAM TRANSITION (MGS)

STATE OF WISCONSIN
DEPARTMENT OF TRANSPORTATION

APPROVED
07/2018 — DATE
/S/ Rodney Taylor — ROADWAY STANDARDS D UNIT SUPERVIS ...NT
FHWA

6

S.D.D. 14 B 45-5d

6

S.D.D. 14 B 45-5d

GENERAL NOTES

THESE ARE TYPICAL CONNECTION DETAILS. ADJUST THE POSTION OF CONNECTIONS TO EXISTING BRIDGES TO FIT THE ACTUAL BRIDGE AND SITE DIMENSIONS.

(2) OPTIONAL CURB AND GUTTER OR DRAINAGE FEATURE SEE PLAN FOR INFORMATION.

(4) TOLERANCE FOR TOP OF BEAM IS ± 1".

(6) DRILLING BOLT HOLES THROUGH THE PARAPET, BOLTS, NUTS, WASHERS AND REPAIRING DAMAGED CONCRETE ARE INCIDENTAL TO THE CONTRACT.

(7) BOLTS MAY BE A325 BOLTS OR A449 BOLTS. BOLT LENGTH AND THREADING LENGTH ARE TO ALLOW FOR A TIGHT CONNECTION BETWEEN RIGID BARRIER AND THRIE BEAM CONNECTION PLATE. CONTRACTOR IS TO FIELD VERIFY BOLT LENGTH AND THREAD LENGTH. ONE ROUND WASHER REQUIRED BETWEEN BOLT HEAD AND THRIE BEAM CONNECTOR PLATE. BOLTS THAT EXTEND THROUGH THE PARAPET AND OUT THE BACK FACE REQUIRE A HARDENED ROUND STEEL WASHER THAT IS 2" O.D. X 5/32" THICK AND ONE PLATE WASHER. REPAIR ANY DAMAGED CONCRETE FROM BOLT INSTALLATION.

(8) THE RECESS FOR A W-BEAM CONNECTION, WHICH EXISTS ON SOME PARAPETS OF THIS TYPE, SHALL BE FILLED WITH A TREATED TIMBER BLOCKOUT. BLOCKOUT SIZE IS 1'-6" X 2'-0" X 3 ½".

(9) BOLT, NUT AND WASHERS NOT REQUIRED FOR THIS LOCATION WHEN RETROFITTING AN EXISTING PAPAPET AND THE HOLE IS EITHER ABOVE PARAPET OR WITHIN 4 INCHES OF THE EDGE OF PARAPET.

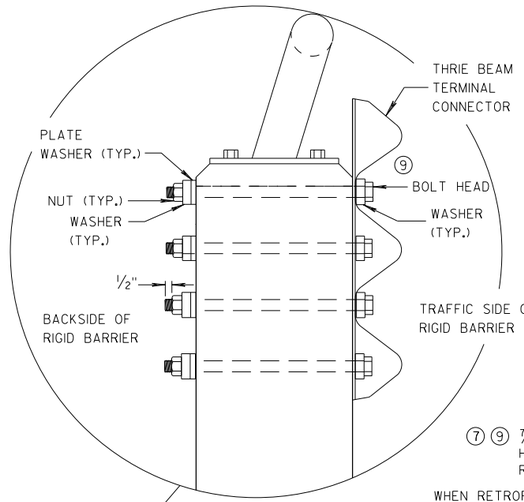

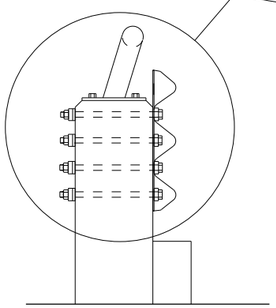

SECTION G-G

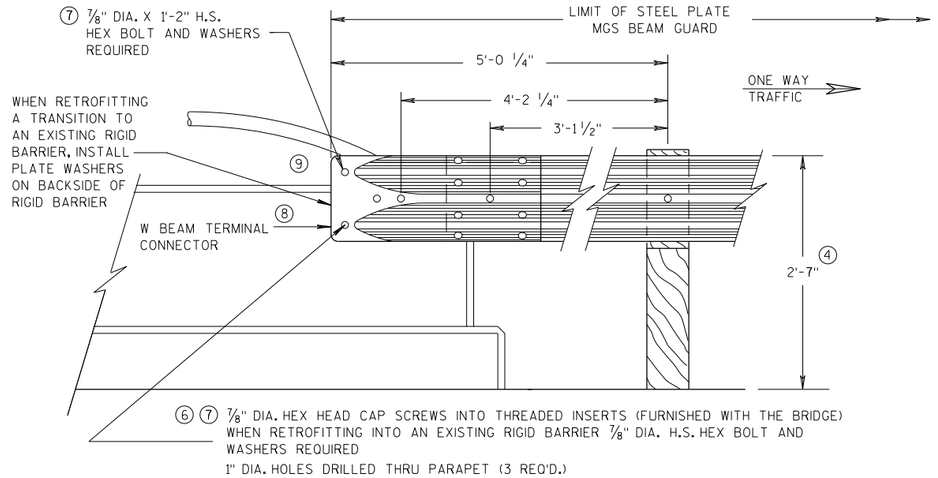

FRONT VIEW

W BEAM CONNECTION TO VERTICAL FACE PARAPET

(USE ONLY ON THE TRAFFIC EXIT END OF ONE WAY BRIDGES)

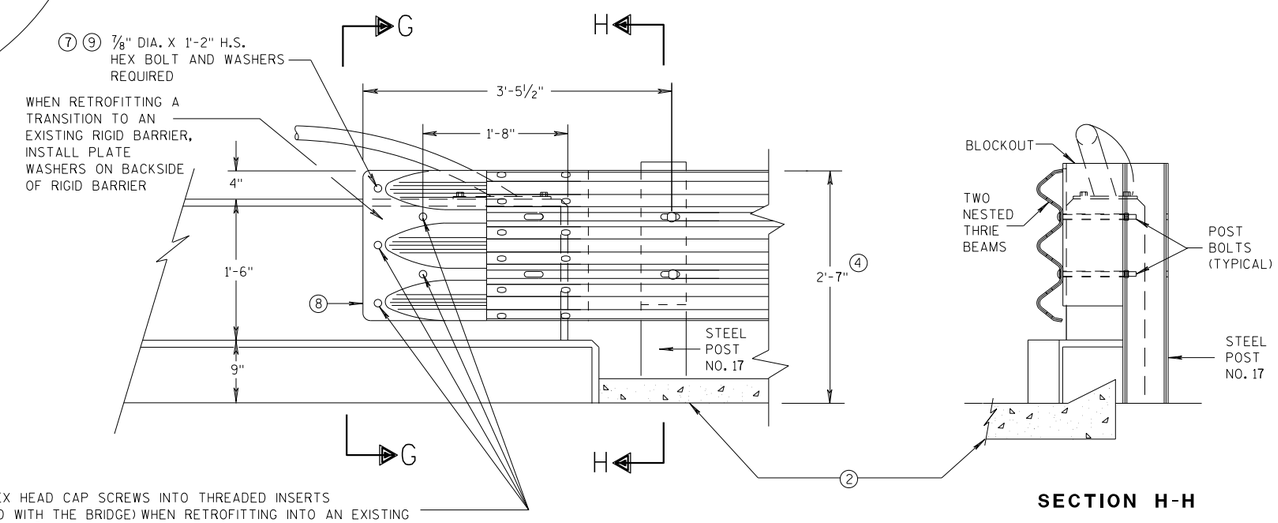

FRONT VIEW

SECTION H-H

THRIE BEAM CONNECTION TO VERTICAL FACED PARAPETS

MIDWEST GUARDRAIL SYSTEM
THRIE BEAM TRANSITION (MGS)

STATE OF WISCONSIN
DEPARTMENT OF TRANSPORTATION

APPROVED
07/2018
DATE
FHWA

/S/ Rodney Taylor
ROADWAY STANDARDS D UNIT SUPERVIS NT

6

S.D.D. 14 B 45-5e

6

S.D.D. 14 B 45-5e

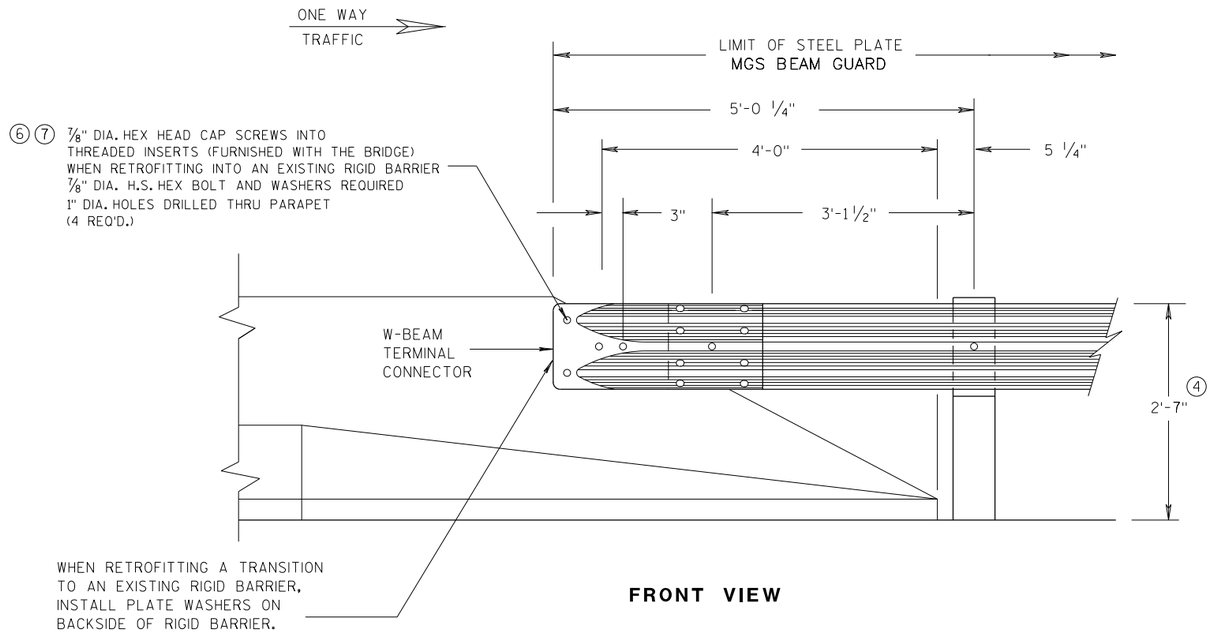

FRONT VIEW

W BEAM CONNECTION TO PARAPETS WITH SLOPED ENDS

(USE ONLY AT TRAFFIC EXIT END OF ONE WAY BRIDGE)

GENERAL NOTES

② OPTIONAL CURB AND GUTTER OR DRAINAGE FEATURE SEE PLAN FOR INFORMATION.

④ TOLERANCE FOR TOP OF BEAM IS ± 1".

⑥ DRILLING BOLT HOLES THROUGH THE PARAPET, BOLTS, NUTS, WASHERS AND REPAIRING DAMAGED CONCRETE ARE INCIDENTAL TO THE CONTRACT.

⑦ BOLTS MAY BE A325 BOLTS OR A449 BOLTS. BOLT LENGTH AND THREADING LENGTH ARE TO ALLOW FOR A TIGHT CONNECTION BETWEEN RIGID BARRIER AND THRIE BEAM CONNECTION PLATE. CONTRACTOR IS TO FIELD VERIFY BOLT LENGTH AND THREAD LENGTH. ONE ROUND WASHER REQUIRED BETWEEN BOLT HEAD AND THRIE BEAM CONNECTOR PLATE. BOLTS THAT EXTEND THROUGH THE PARAPET AND OUT THE BACK FACE REQUIRE A HARDENED ROUND STEEL WASHER THAT IS 2" O.D. X 5/32" THICK AND ONE PLATE WASHER. REPAIR ANY DAMAGED CONCRETE FROM BOLT INSTALLATION.

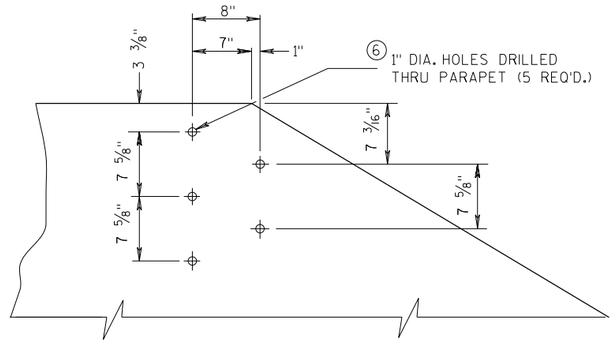

DRILL HOLE LOCATION AND PATTERN FOR THRIE BEAM CONNECTION

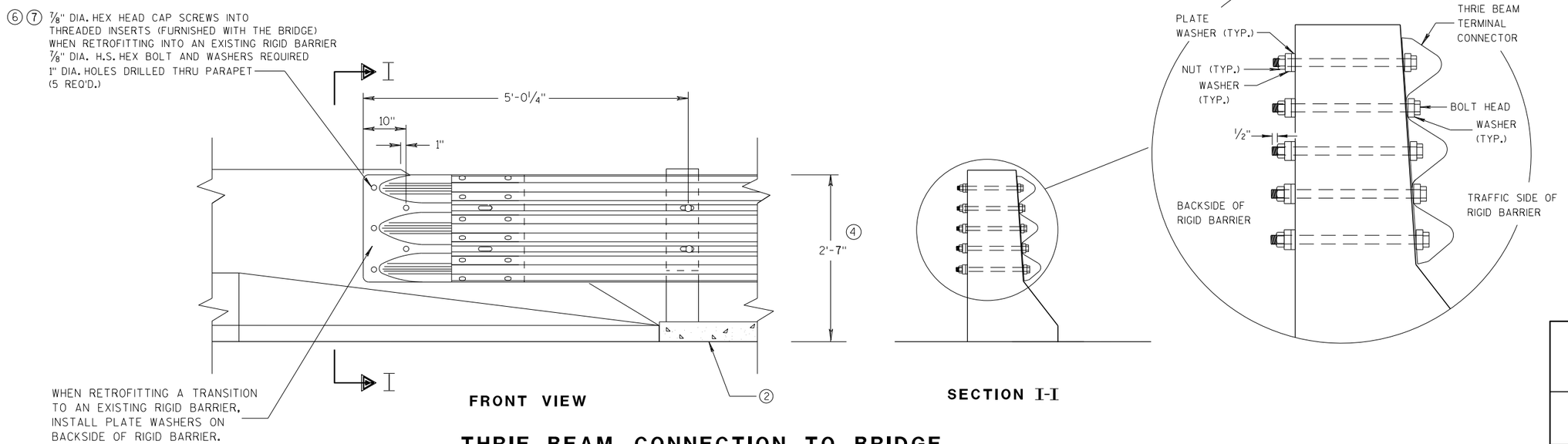

FRONT VIEW

SECTION I-I

THRIE BEAM CONNECTION TO BRIDGE PARAPETS WITH SLOPED ENDS

MIDWEST GUARDRAIL SYSTEM
THRIE BEAM TRANSITION (MGS)

STATE OF WISCONSIN
DEPARTMENT OF TRANSPORTATION

APPROVED
07/2018 — DATE
/S/ Rodney Taylor
ROADWAY STANDARDS [illegible] UNIT SUPERVI[illegible]ENT
FHWA

6

S.D.D. 14 B 45-5f

6

S.D.D. 14 B 45-5f

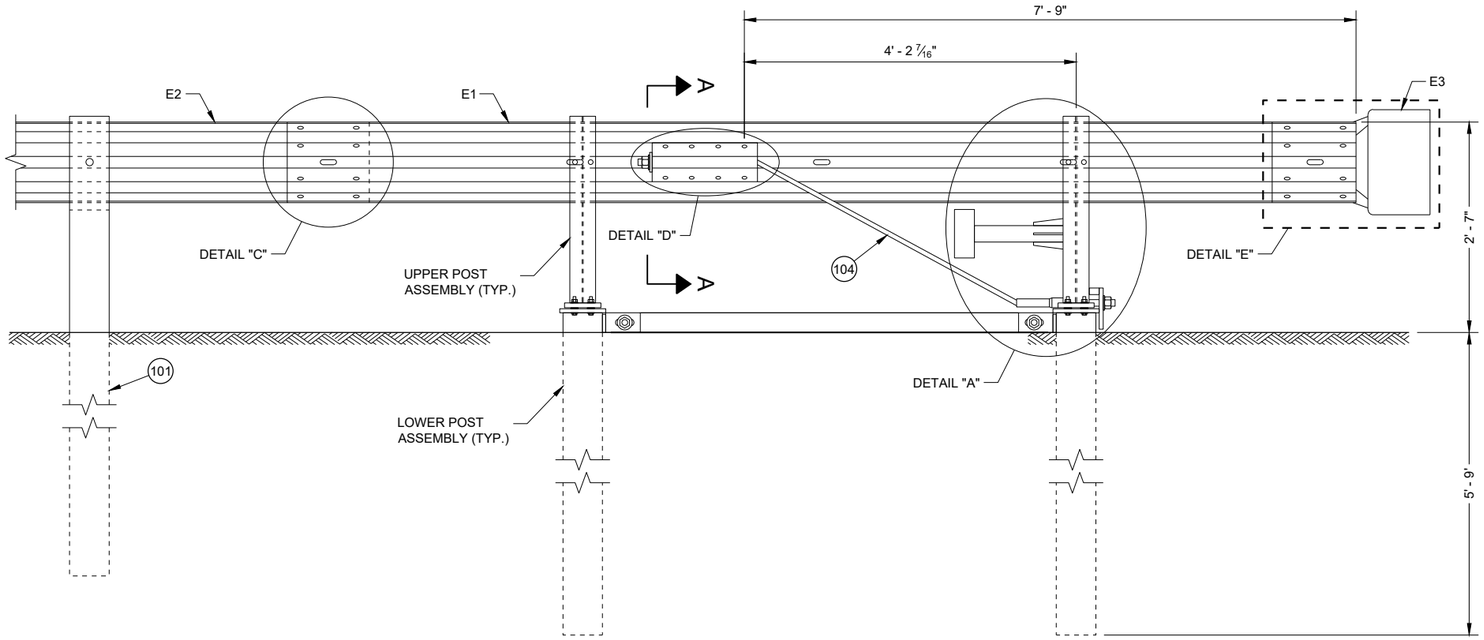

BACK VIEW
TYPE 2 TERMINAL

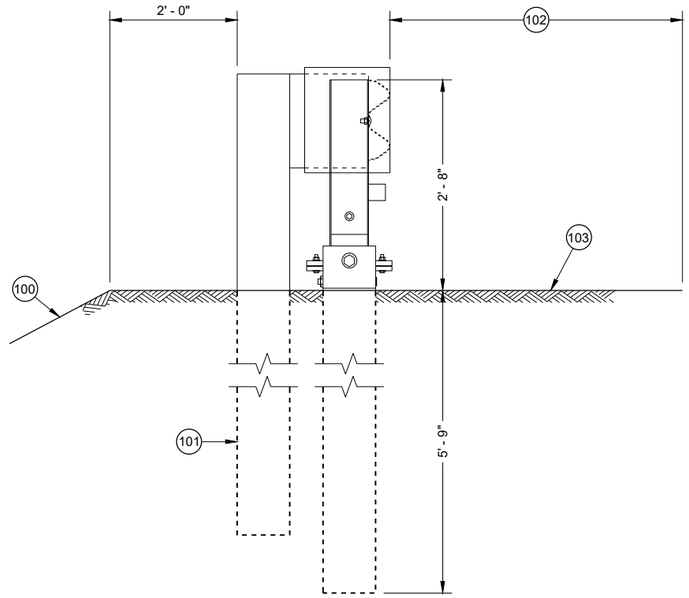

SIDE VIEW
TYPE 2 TERMINAL

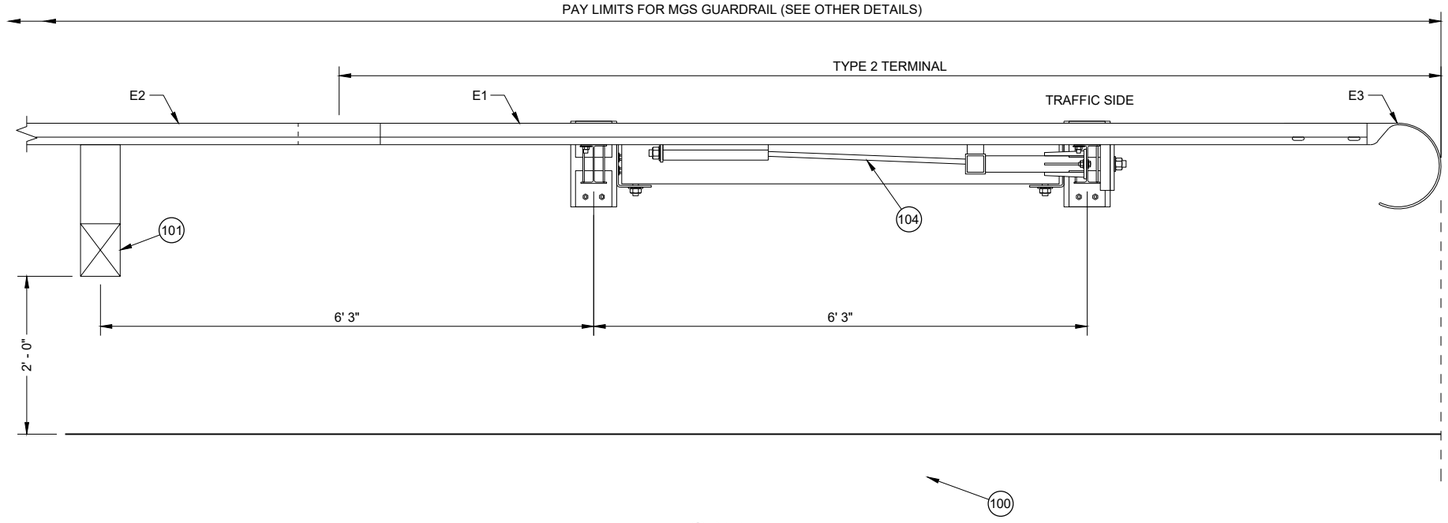

TOP VIEW
TYPE 2 TERMINAL

GENERAL NOTES

(100) MAXIMUM SLOPE IS 2.5:1.

(101) SEE SDD 14B42 FOR MORE INFORMATION.

(102) SHOULDER

(103) MAXIMUM SLOPE IS 10:1.

(104) AFTER ASSEMBLY, CABLE IS TO BE TIGHTENED WITHOUT TWISTING THE CABLE.

MIDWEST GUARDRAIL SYSTEM (MGS)
TYPE 2 TERMINAL

STATE OF WISCONSIN
DEPARTMENT OF TRANSPORTATION

6

SDD 14B47 - 03a

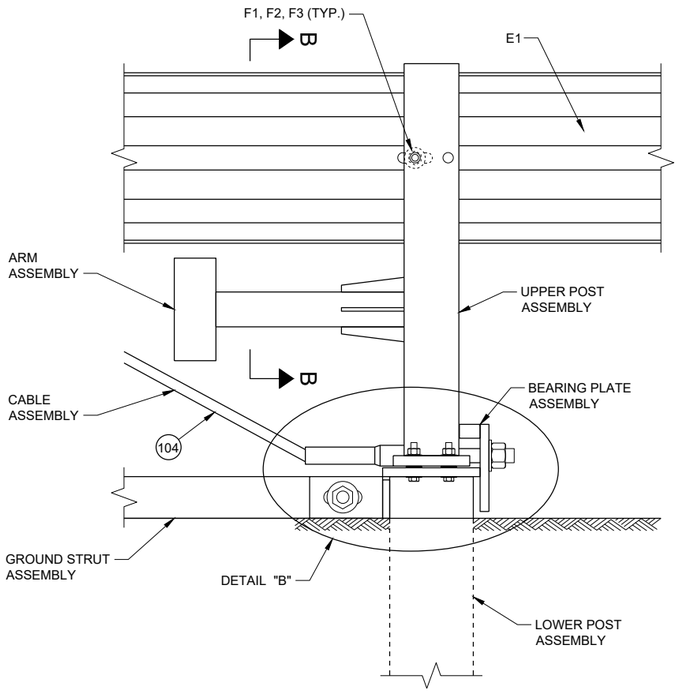

DETAIL "A"

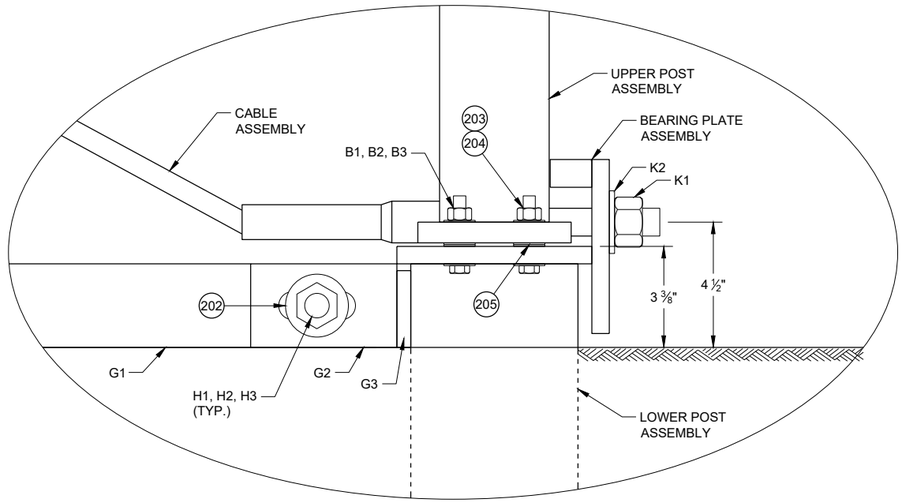

DETAIL "B"

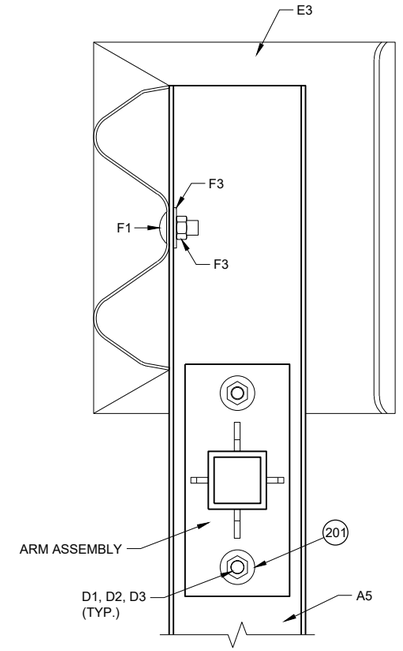

SECTION B - B

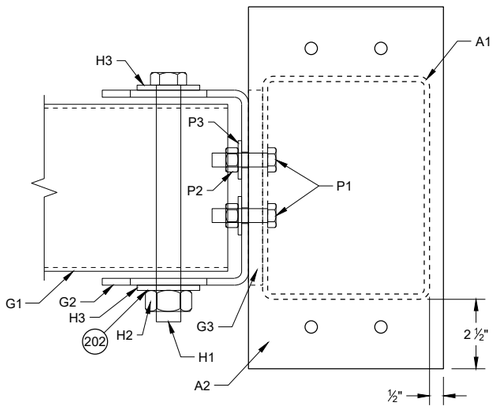

TOP VIEW

GROUND STRUT CONNECTION DETAIL

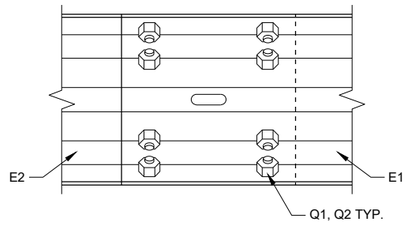

DETAIL "C"

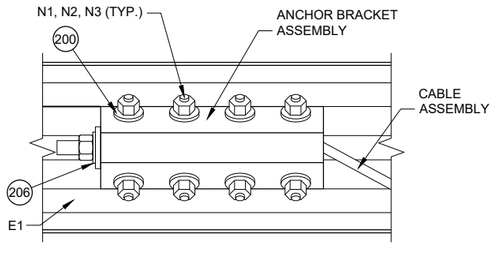

DETAIL "D"

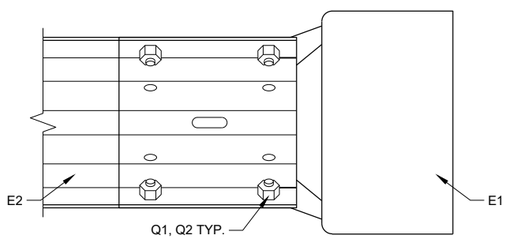

DETAIL "E"

GENERAL NOTES

200 INSTALL ONE WASHER UNDER BOLT HEAD AND RAIL AND ON WASHER BETWEEN NUT AND ANCHOR BRACKET ASSEMBLY.

201 INSTALL ONE WASHER UNDER BOLT HEAD AND UPPER POST ASSEMBLY AND ONE WASHER BETWEEN NUT AND ARM PLATE.

202 INSTALL ONE WASHER UNDER BOLT HEAD AND GROUND STRUT CONNECTOR AND ONE WASHER BETWEEN NUT AND GROUND STRUT CONNECTOR.

203 INSTALL ONE WASHER UNDER BOLT HEAD AND LOWER POST ASSEMBLY AND ONE WASHER BETWEEN NUT AND UPPER POST ASSEMBLY.

204 TORQUE VALUE IS BETWEEN 60 - 75 FT-LB.

205 TWO WASHERS BETWEEN UPPER AND LOWER POST ASSEMBLY.

206 INSTALL ONE WASHER BETWEEN NUT AND ANCHOR BRACKET ASSEMBLY.

MIDWEST GUARDRAIL SYSTEM (MGS) TYPE 2 TERMINAL

STATE OF WISCONSIN
DEPARTMENT OF TRANSPORTA

6

SDD 14B47 - 03b

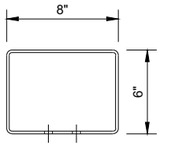

TOP VIEW

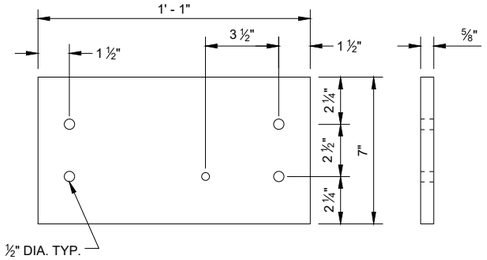

LOWER PLATE (A2)

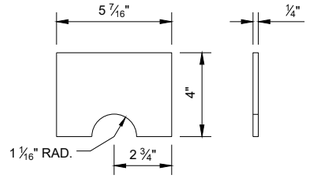

POST GUSSET (A3)

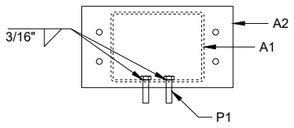

PLAN VIEW

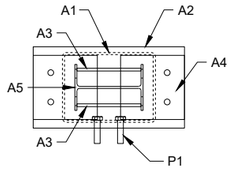

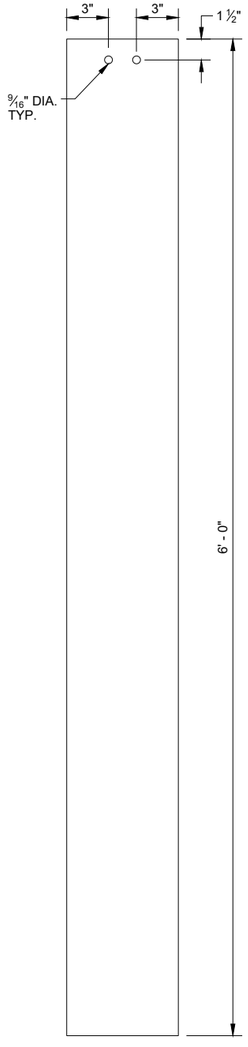

SIDE VIEW

FOUNDATION TUBE (A1)

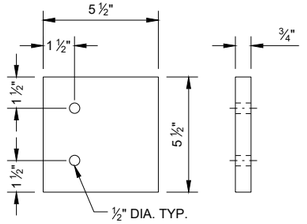

UPPER PLATE (A4)

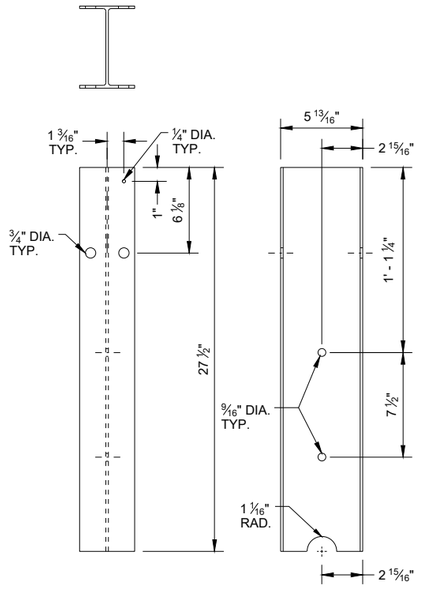

FRONT VIEW SIDE VIEW

TYPE 2 POST (A5)

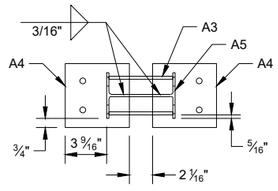

PLAN VIEW

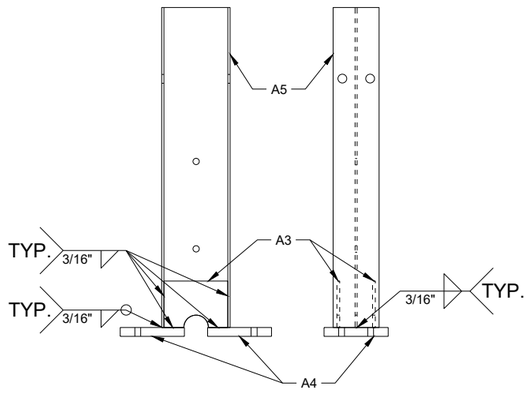

SIDE VIEW FRONT VIEW

UPPER POST ASSEMBLY

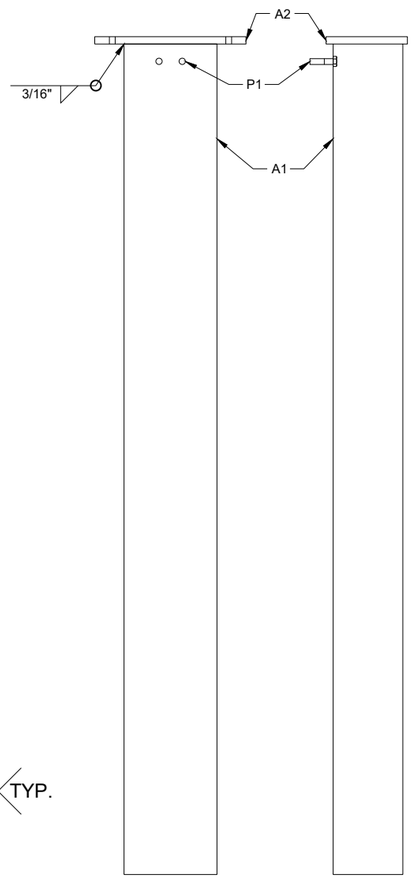

FRONT VIEW SIDE VIEW

LOWER POST ASSEMBLY

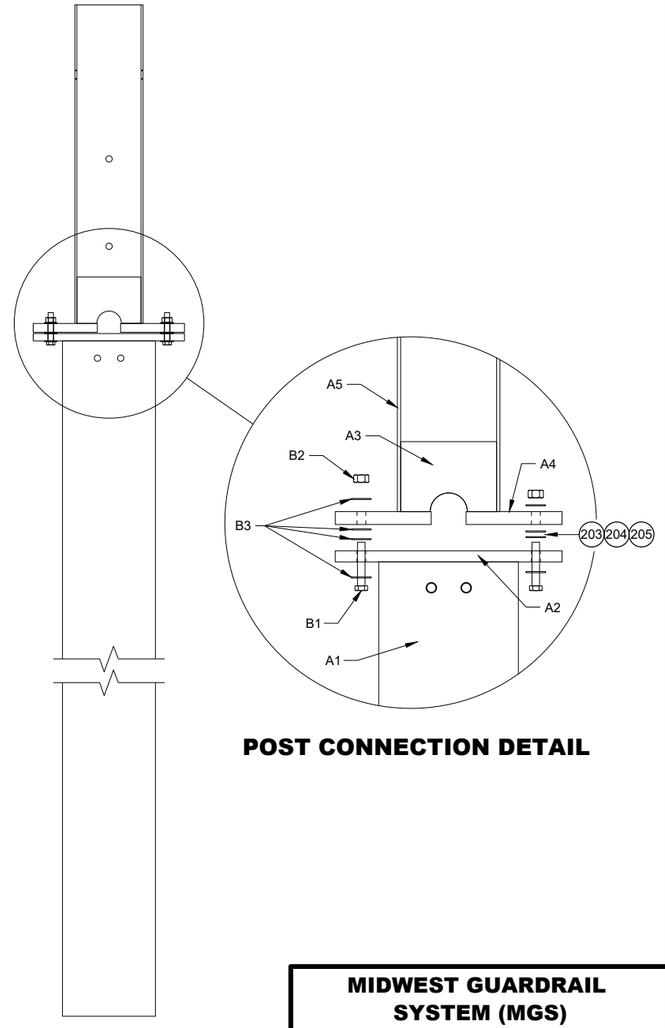

ASSEMBLED POST

POST CONNECTION DETAIL

MIDWEST GUARDRAIL SYSTEM (MGS) TYPE 2 TERMINAL

STATE OF WISCONSIN
DEPARTMENT OF TRANSPORTATION

6

SDD 14B47 - 03c

6

SDD 14B47 - 03c

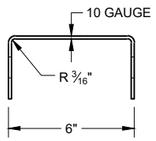

SIDE VIEW

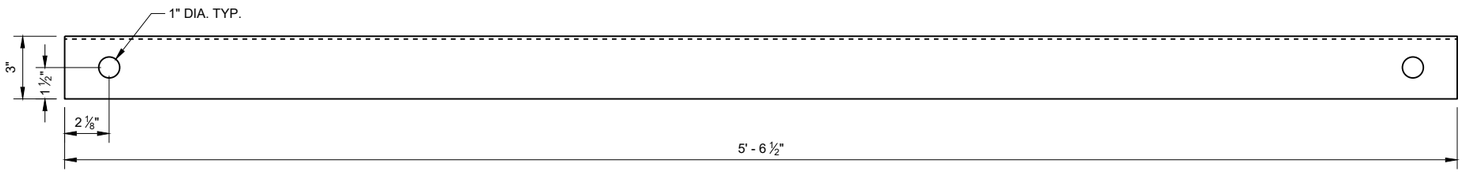

FRONT VIEW

GROUND STRUT CHANNEL (G1)

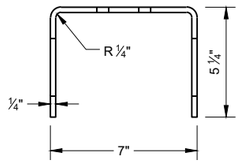

TOP VIEW

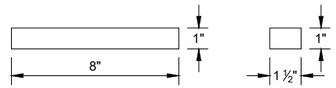

BEARING PLATE FLANGE (L2)

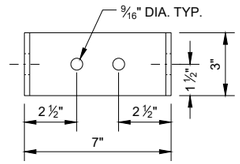

FRONT VIEW

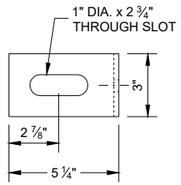

SIDE VIEW

GROUND STRUT CONNECTOR (G2)

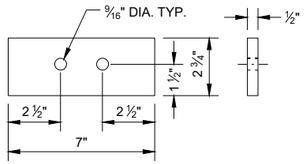

GROUND STRUT PLATE (G3)

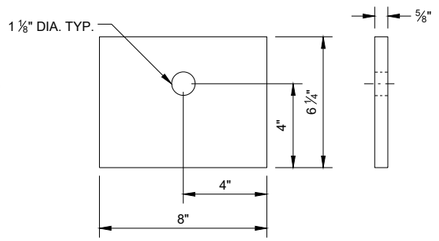

BEARING PLATE (L1)

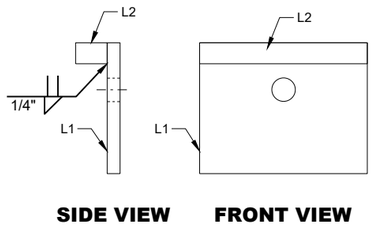

SIDE VIEW FRONT VIEW

BEARING PLATE ASSEMBLY

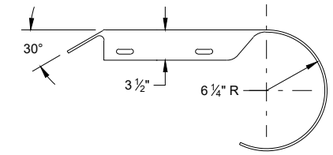

PLAN VIEW

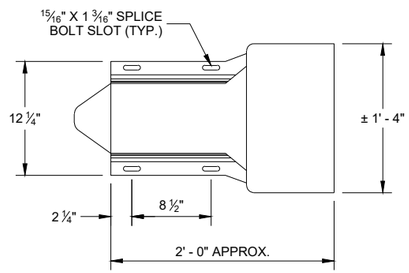

ELEVATION VIEW

ROUNDED BUFFER END (E3)

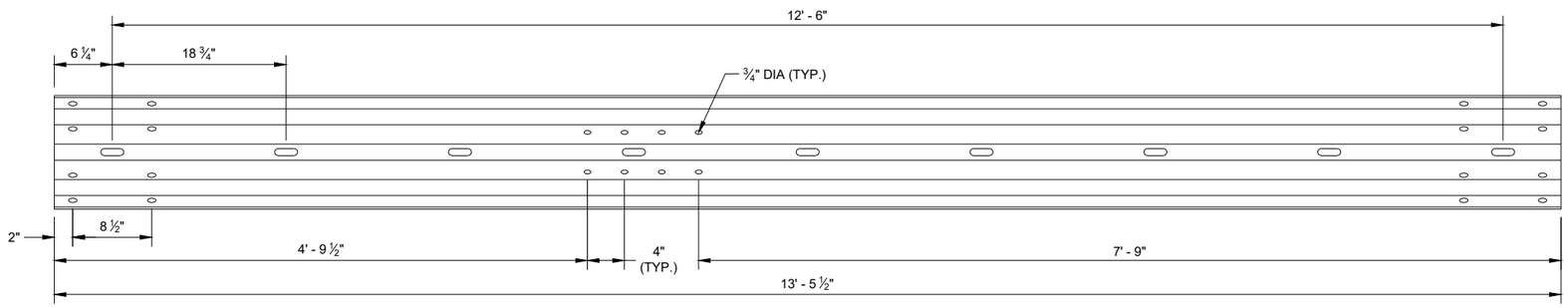

TYPE 2 GUARDRAIL (E1)

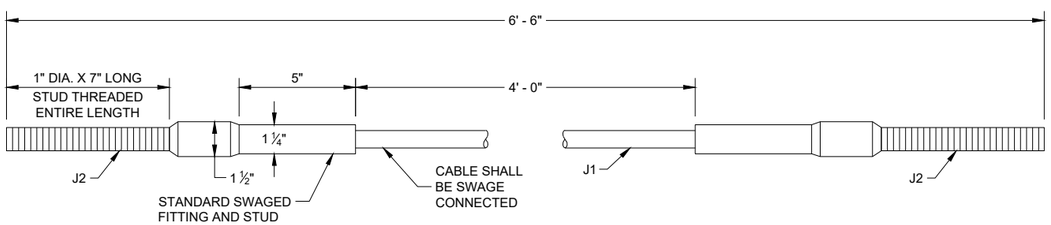

CABLE ASSEMBLY

6

6

SDD 14B47 - 03d

SDD 14B47 - 03d

MIDWEST GUARDRAIL SYSTEM (MGS) TYPE 2 TERMINAL

STATE OF WISCONSIN
DEPARTMENT OF TRANSPORTATION

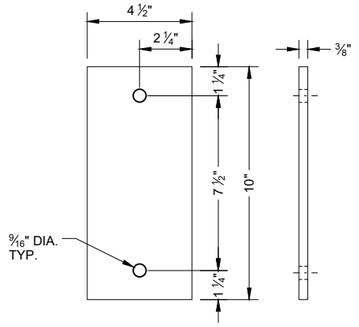

ARM PLATE (C1)

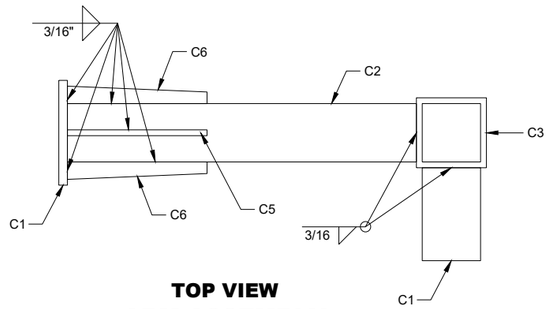

TOP VIEW
ARM ASSEMBLY

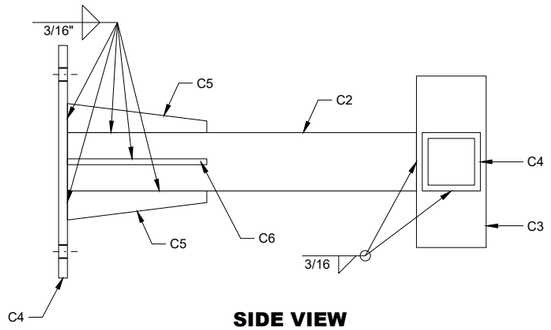

SIDE VIEW
ARM ASSEMBLY

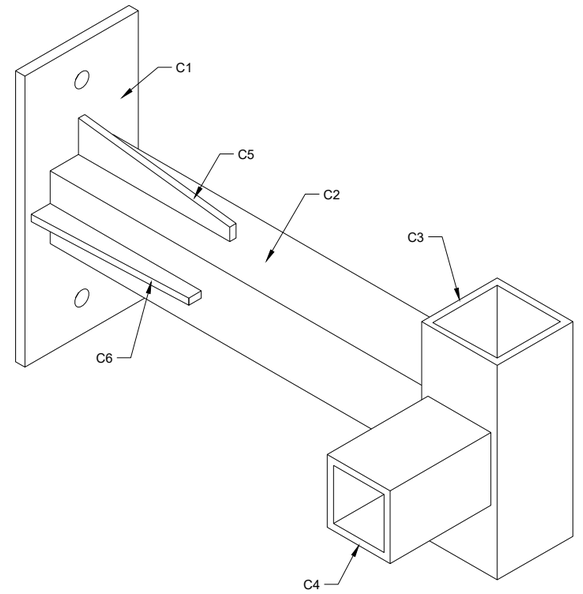

ISOMETRIC VIEW
ARM ASSEMBLY

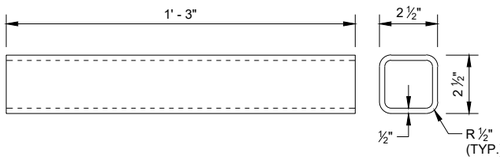

ARM TUBE 1 (C2)

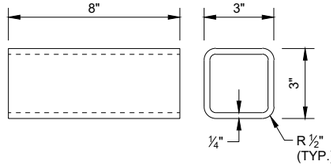

ARM TUBE 2 (C3)

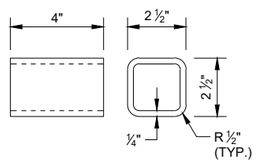

ARM TUBE 3 (C4)

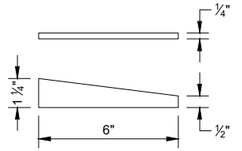

ARM GUSSET PLATE 1 (C5)

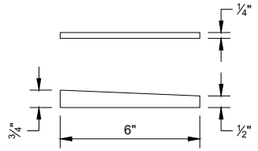

ARM GUSSET PLATE 2 (C6)

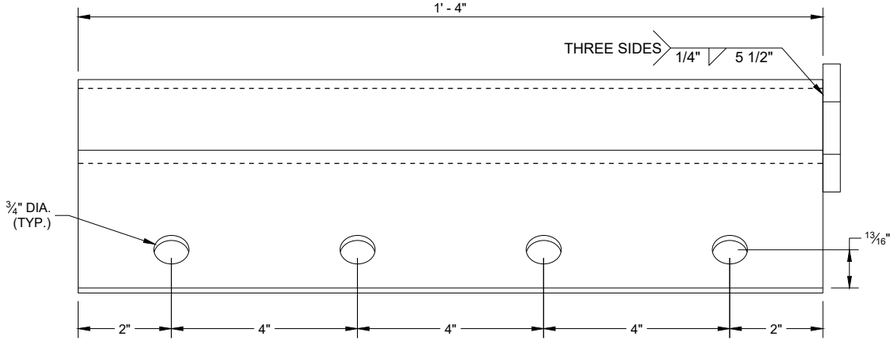

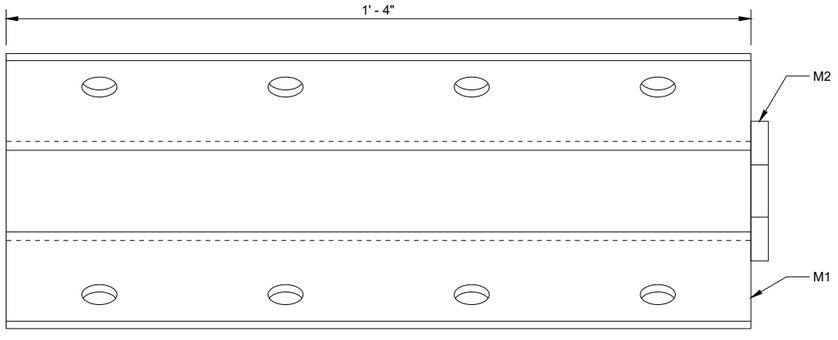

ANCHOR BRACKET (M1, M2)

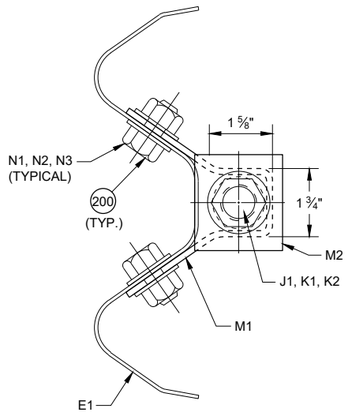

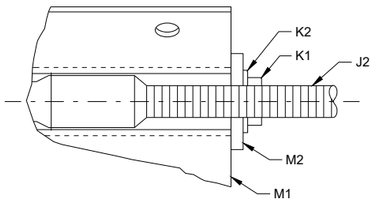

SECTION A - A

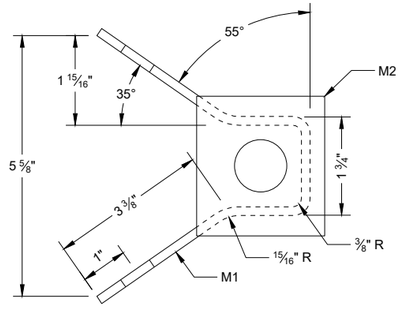

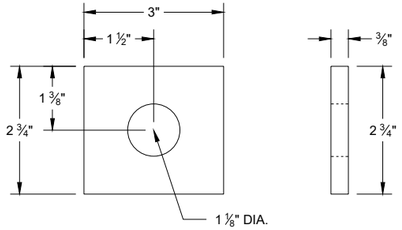

ANCHOR BRACKET BEARING PLATE (M2)

MIDWEST GUARDRAIL SYSTEM (MGS) TYPE 2 TERMINAL

STATE OF WISCONSIN
DEPARTMENT OF TRANSPORTATION

6

SDD 14B47 - 03e
SDD 14B47 - 03e

BILL OF MATERIALS - TYPE 2 TERMINAL (MGS)

PART	DESCRIPTION	MATERIALS SPECIFICATIONS	NOTES
A1	TYPE 2 FOUNDATION TUBE	AASHTO M111 / ASTM A123 ASTM A500 GRADE B OR ASTM A-501	TS 8" x 6" x 3/16"
A2	LOWER PLATE	AASHTO M111 / ASTM A123 ASTM A36 MIN. STRENGTH 36 KSI, OR ASTM A529 MAX. STRENGTH 50 KSI, OR ASTM A572 MAX STRENGTH 50 KSI, OR ASTM A709 MAX STRENGTH 50 KSI, OR ASTM A992 MAX STRENGTH 50 KSI	5/8" THICKNESS
A3	POST GUSSET	AASHTO M111 / ASTM A123 ASTM A36 MIN. STRENGTH 36 KSI, OR ASTM A529 MAX. STRENGTH 50 KSI, OR ASTM A572 MAX STRENGTH 50 KSI, OR ASTM A709 MAX STRENGTH 50 KSI, OR ASTM A992 MAX STRENGTH 50 KSI	1/4" THICKNESS
A4	UPPER PLATE	AASHTO M111 / ASTM A123 ASTM A36 MIN. STRENGTH 36 KSI, OR ASTM A529 MAX. STRENGTH 50 KSI, OR ASTM A572 MAX STRENGTH 50 KSI, OR ASTM A709 MAX STRENGTH 50 KSI, OR ASTM A992 MAX STRENGTH 50 KSI	3/4" THICKNESS
A5	TYPE 2 POST	AASHTO M111 / ASTM A123 ASTM A36 MIN. STRENGTH 36 KSI, OR ASTM A529 MAX. STRENGTH 50 KSI, OR ASTM A572 MAX STRENGTH 50 KSI, OR ASTM A709 MAX STRENGTH 50 KSI, OR ASTM A992 MAX STRENGTH 50 KSI	
B1	BREAKAWAY BOLT	HOT DIP AASHTO M232 CLASS / ASTM A153 CLASS C / ASTM F2329 C OR MECHANICAL GAL. TO AASHTO M298 CLASS 50 TYPE 1 / ASTM B695 CLASS 50 TYPE 1 UNC HEAVY HEX HEAD ASTM F3125 GRADE A325 TYPE 1 HEAVY HEX HEAD OR SAE J429 GRADE 5 HEAVY HEX HEAD / ASTM A449 TYPE 1 HEAVY HEX HEAD. BOLTS MAY BE FULLY THREADED . PROVIDE ENOUGH THREADING FOR PROPER TIGHTENING OF BOLT.	7/16" DIA.
B2	BREAKAWAY BOLT WASHER	HOT DIP AASHTO M232 CLASS / ASTM A153 CLASS C / ASTM F2329 C OR MECHANICAL GAL. TO AASHTO M298 CLASS 50 TYPE 1 / ASTM B695 CLASS 50 TYPE 1 F436 TYPE 1 (HARDEN WASHER ONLY)	7/16" DIA.
B3	BREAKAWAY BOLT NUT	HOT DIP AASHTO M232 CLASS / ASTM A153 CLASS C / ASTM F2329 C OR MECHANICAL GAL. TO AASHTO M298 CLASS 50 TYPE 1 / ASTM B695 CLASS 50 TYPE 1 UNC OVER TAP NUTS AS SPECIFIED IN AASHTO 291/ASTM A 563 HEAVY HEX HEAD ASTM A563DH OR SAE J995 GRADE 5	
C1	ARM ASSEMBLY PLATE	AASHTO M111 / ASTM A123 ASTM A36 MIN. STRENGTH 36 KSI, OR ASTM A529 MAX. STRENGTH 50 KSI, OR ASTM A572 MAX STRENGTH 50 KSI, OR ASTM A709 MAX STRENGTH 50 KSI, OR ASTM A992 MAX STRENGTH 50 KSI	3/8" THICKNESS
C2	ARM ASSEMBLY TUBE 1	AASHTO M111 / ASTM A123 ASTM A500 GRADE B OR ASTM A-501	TS 8" x 6" x 3/16"
C3	ARM ASSEMBLY TUBE 2	AASHTO M111 / ASTM A123 ASTM A500 GRADE B OR ASTM A-501	TS 3" x 3" x 1/4"
C4	ARM ASSEMBLY TUBE 3	AASHTO M111 / ASTM A123 ASTM A500 GRADE B OR ASTM A-501	TS 2 1/2" x 2 1/2" X 1/4"
C5	ARM ASSEMBLY GUSSET PLATE 1	AASHTO M111 / ASTM A123 ASTM A36 MIN. STRENGTH 36 KSI, OR ASTM A529 MAX. STRENGTH 50 KSI, OR ASTM A572 MAX STRENGTH 50 KSI, OR ASTM A709 MAX STRENGTH 50 KSI, OR ASTM A992 MAX STRENGTH 50 KSI	1/4" THICKNESS
C6	ARM ASSEMBLY GUSSET PLATE 2	AASHTO M111 / ASTM A123 ASTM A36 MIN. STRENGTH 36 KSI, OR ASTM A529 MAX. STRENGTH 50 KSI, OR ASTM A572 MAX STRENGTH 50 KSI, OR ASTM A709 MAX STRENGTH 50 KSI, OR ASTM A992 MAX STRENGTH 50 KSI	1/4" THICKNESS
D1	ARM ASSEMBLY BOLT	HOT DIP AASHTO M232 CLASS / ASTM A153 CLASS C / ASTM F2329 C OR MECHANICAL GAL. TO AASHTO M298 CLASS 50 TYPE 1 / ASTM B695 CLASS 50 TYPE 1 UNC HEAVY HEX HEAD ASTM A307 GRADE B OR SAE J429 GRADE 2 OR ASTM F1554 GRADE 36	1/2" DIA.
D2	ARM ASSEMBLY WASHER	HOT DIP AASHTO M232 CLASS / ASTM A153 CLASS C / ASTM F2329 C OR MECHANICAL GAL. TO AASHTO M298 CLASS 50 TYPE 1 / ASTM B695 CLASS 50 TYPE 1 F436 TYPE 1 (HARDEN WASHER ONLY)	1/2" DIA.
D3	ARM ASSEMBLY NUT	HOT DIP AASHTO M232 CLASS / ASTM A153 CLASS C / ASTM F2329 C OR MECHANICAL GAL. TO AASHTO M298 CLASS 50 TYPE 1 / ASTM B695 CLASS 50 TYPE 1 UNC OVER TAP NUTS AS SPECIFIED IN AASHTO 291 / ASTM A 563 HEAVY HEX HEAD ASTM A563DH OR SAE J995 GRADE 5	1/2" DIA.
E1	TYPE 2 GUARD RAIL	AASHTO M180 CLASS A TYPE 2 12 GAUGE APPROVED PRODUCER	
E2	BEAM GUARD RAIL	AASHTO M180 CLASS A TYPE 2 12 GAUGE APPROVED PRODUCER	
E3	BEAM GUARD ROUNDED BUFFER END	AASHTO M180 CLASS A TYPE 2 12 GAUGE APPROVED PRODUCER	
F1	POST BOLT	HOT DIP AASHTO M232 CLASS / ASTM A153 CLASS C / ASTM F2329 C OR MECHANICAL GAL. TO AASHTO M298 CLASS 50 TYPE 1 / ASTM B695 CLASS 50 TYPE 1 UNC UNC HEAVY HEX HEAD ASTM A307 GRADE B OR SAE J429 GRADE 2 OR ASTM F1554 GRADE 36	5/8" DIA.
F2	POST BOLT WASHER	HOT DIP AASHTO M232 CLASS / ASTM A153 CLASS C / ASTM F2329 C OR MECHANICAL GAL. TO AASHTO M298 CLASS 50 TYPE 1 / ASTM B695 CLASS 50 TYPE 1 F436 TYPE 1 (HARDEN WASHER ONLY)	5/8" DIA.
F3	POST BOLT NUT	HOT DIP AASHTO M232 CLASS / ASTM A153 CLASS C / ASTM F2329 C OR MECHANICAL GAL. TO AASHTO M298 CLASS 50 TYPE 1 / ASTM B695 CLASS 50 TYPE 1 UNC OVER TAP NUTS AS SPECIFIED IN AASHTO 291/ASTM A 563 AASHTO M180 RECESSED HEAVY HEX HEAD ASTM A563DH OR SAE J995 GRADE 5	
G1	GROUND STRUT CHANNEL	AASHTO M111 / ASTM A123 ASTM A36 MIN. STRENGTH 36 KSI, OR ASTM A529 MAX. STRENGTH 50 KSI, OR ASTM A572 MAX STRENGTH 50 KSI, OR ASTM A709 MAX STRENGTH 50 KSI, OR ASTM A992 MAX STRENGTH 50 KSI	1/2" x 11 3/4" x 10 GAUGE
G2	GROUND STRUT CONNECTOR	AASHTO M111 / ASTM A123 ASTM A36 MIN. STRENGTH 36 KSI, OR ASTM A529 MAX. STRENGTH 50 KSI, OR ASTM A572 MAX STRENGTH 50 KSI, OR ASTM A709 MAX STRENGTH 50 KSI, OR ASTM A992 MAX STRENGTH 50 KSI	1/4" THICKNESS
G3	GROUND STRUT PLATE	AASHTO M111 / ASTM A123 ASTM A36 MIN. STRENGTH 36 KSI, OR ASTM A529 MAX. STRENGTH 50 KSI, OR ASTM A572 MAX STRENGTH 50 KSI, OR ASTM A709 MAX STRENGTH 50 KSI, OR ASTM A992 MAX STRENGTH 50 KSI	1/2" THICKNESS

6

MIDWEST GUARDRAIL SYSTEM (MGS) TYPE 2 TERMINAL

STATE OF WISCONSIN
DEPARTMENT OF TRANSPORTA

SDD 14B47 - 03f

BILL OF MATERIALS - TYPE 2 TERMINAL (MGS)

PART	DESCRIPTION	MATERIALS SPECIFICATIONS	NOTES
H1	GROUND STRUT BOLT	HOT DIP AASHTO M232 CLASS / ASTM A153 CLASS C / ASTM F2329 C OR MECHANICAL GAL. TO AASHTO M298 CLASS 50 TYPE 1 / ASTM B695 CLASS 50 TYPE 1 UNC HEAVY HEX HEAD ASTM A307 GRADE B OR SAE J429 GRADE 2 OR ASTM F1554 GRADE 36	7/8" DIA.
H2	GROUND STRUT BOLT WASHER	HOT DIP AASHTO M232 CLASS / ASTM A153 CLASS C / ASTM F2329 C OR MECHANICAL GAL. TO AASHTO M298 CLASS 50 TYPE 1/ ASTM B695 CLASS 50 TYPE 1 F436 TYPE 1 (HARDEN WASHER ONLY)	7/8" DIA.
H3	GROUND STRUT BOLT NUT	HOT DIP AASHTO M232 CLASS / ASTM A153 CLASS C / ASTM F2329 C OR MECHANICAL GAL. TO AASHTO M298 CLASS 50 TYPE 1 / ASTM B695 CLASS 50 TYPE 1 UNC HEAVY HEX HEAD 5/8" ASTM A307 GRADE B OR SAE J429 GRADE 2 OR ASTM F1554 GRADE 36	
J1	BCT CABLE	AASHTO M30 / ASTM A741 6 x 19 INDEPENDENT WIRE CORE (IWRC) IMPROVED PLOW STEEL (IPS), 6 x 19 INDEPENDENT WIRE CORE (IWRC) IMPROVED PLOW STEEL (IPS) TYPE II OR IIC, CLASS C ZINC COATED MIN. BREAKING STRENGTH OF 42.7 KIPS	**3/4" DIA.**
J2	BCT CABLE	UNC 1" ASTM A576 GRADE 1035 SWAGE FITTINGS ARE TO BE FACTORY SWEDGED. MIN BREAKING STRENGTH OF 42.7 KIPS ASME B30.26 "FORGED, CAST, OR DIE STAMPED WITH THE FOLLOWING IN TO CONNECTION: NAME OF MANUFACTURE OR TRADEMARK OF CONNECTION'S MANUFACTURER, SIZE OR RATED LOAD, GRADE FOR ALLOY EYEBOLTS."	
K1	CABLE ASSEMBLY NUT	HOT DIP AASHTO M232 CLASS / ASTM A153 CLASS C / ASTM F2329 C OR MECHANICAL GAL. TO AASHTO M298 CLASS 50 TYPE 1 / ASTM B695 CLASS 50 TYPE 1 UNC OVER TAP NUTS AS SPECIFIED IN AASHTO 291 / ASTM A 563 HEAVY HEX HEAD ASTM A563DH OR SAE J995 GRADE 5	1" DIA.
K2	CABLE ASSEMBLY WASHER	HOT DIP AASHTO M232 CLASS / ASTM A153 CLASS C / ASTM F2329 C OR MECHANICAL GAL. TO AASHTO M298 CLASS 50 TYPE 1	1" DIA.
L1	BEARING PLATE	AASHTO M111 / ASTM A123 ASTM A36 MIN. STRENGTH 36 KSI, OR ASTM A529 MAX. STRENGTH 50 KSI, OR ASTM A572 MAX STRENGTH 50 KSI, OR ASTM A709 MAX STRENGTH 50 KSI, OR ASTM A992 MAX STRENGTH 50 KSI	5/8" THICKNESS
L2	BEARING PLATE FLANGE	AASHTO M111 / ASTM A123 ASTM A36 MIN. STRENGTH 36 KSI, OR ASTM A529 MAX. STRENGTH 50 KSI, OR ASTM A572 MAX STRENGTH 50 KSI, OR ASTM A709 MAX STRENGTH 50 KSI, OR ASTM A992 MAX STRENGTH 50 KSI	1" THICKNESS
M1	BEAM GUARD ANCHOR BRACKET	AASHTO M111 / ASTM A123 ASTM A36 MIN. STRENGTH 36 KSI, OR ASTM A529 MAX. STRENGTH 50 KSI, OR ASTM A572 MAX STRENGTH 50 KSI, OR ASTM A709 MAX STRENGTH 50 KSI, OR ASTM A992 MAX STRENGTH 50 KSI	
M2	BEAM GUARD ANCHOR END PLATE	AASHTO M111 / ASTM A123 ASTM A36 MIN. STRENGTH 36 KSI, OR ASTM A529 MAX. STRENGTH 50 KSI, OR ASTM A572 MAX STRENGTH 50 KSI, OR ASTM A709 MAX STRENGTH 50 KSI, OR ASTM A992 MAX STRENGTH 50 KSI	3/8" THICKNESS
N1	ANCHOR BRACKET BOLT	HOT DIP AASHTO M232 CLASS / ASTM A153 CLASS C / ASTM F2329 C OR MECHANICAL GAL. TO AASHTO M298 CLASS 50 TYPE 1 / ASTM B695 CLASS 50 TYPE 1 UNC AASHTO M180 HEAD ASTM A307 GRADE B OR SAE J429 GRADE 2 OR ASTM F1554 GRADE 36	5/8" DIA.
N2	ANCHOR BRACKET BOLT WASHER	HOT DIP AASHTO M232 CLASS / ASTM A153 CLASS C / ASTM F2329 C OR MECHANICAL GAL. TO AASHTO M298 CLASS 50 TYPE 1/ ASTM B695 CLASS 50 TYPE 1 F436 TYPE 1 (HARDEN WASHER ONLY)	5/8" DIA.
N3	ANCHOR BRACKET BOLT NUT	HOT DIP AASHTO M232 CLASS / ASTM A153 CLASS C / ASTM F2329 C OR MECHANICAL GAL. TO AASHTO M298 CLASS 50 TYPE 1 / ASTM B695 CLASS 50 TYPE 1 UNC OVER TAP NUTS AS SPECIFIED IN AASHTO 291 /ASTM A 563 HEAVY HEX HEAD ASTM A563DH OR SAE J995 GRADE 5	
P1	FOUNDATION TUBE BOLT	HOT DIP AASHTO M232 CLASS / ASTM A153 CLASS C / ASTM F2329 C OR MECHANICAL GAL. TO AASHTO M298 CLASS 50 TYPE 1 / ASTM B695 CLASS 50 TYPE 1 UNC OVER TAP NUTS AS SPECIFIED IN AASHTO 291 /ASTM A 563 HEAVY HEX HEAD ASTM A563DH OR SAE J995 GRADE 5	1/2" DIA.
P2	FOUNDATION TUBE WASHER	HOT DIP AASHTO M232 CLASS / ASTM A153 CLASS C / ASTM F2329 C OR MECHANICAL GAL. TO AASHTO M298 CLASS 50 TYPE 1/ ASTM B695 CLASS 50 TYPE 1 7/8" ASTM F844 TYPE 1 (HARDENED WASHER ONLY)	1/2" DIA.
P3	FOUNDATION TUBE NUT	HOT DIP AASHTO M232 CLASS / ASTM A153 CLASS C / ASTM F2329 C OR MECHANICAL GAL. TO AASHTO M298 CLASS 50 TYPE 1/ ASTM B695 CLASS 50 TYPE 1 UNC OVER TAP NUTS AS SPECIFIED IN AASHTO 291 / ASTM A 563 AASHTO M180 RECESSED HEAVY HEX HEAD ASTM A563DH OR SAE J995 GRADE 5	
Q1	SPLICE BOLT	HOT DIP AASHTO M232 CLASS / ASTM A153 CLASS C / ASTM F2329 C OR MECHANICAL GAL. TO AASHTO M298 CLASS 50 TYPE 1 / ASTM B695 CLASS 50 TYPE 1 UNC AASHTO M180 HEAD ASTM A307 GRADE B OR SAE J429 GRADE 2 OR ASTM F1554 GRADE 36	
Q2	SPLICE NUT	HOT DIP AASHTO M232 CLASS / ASTM A153 CLASS C / ASTM F2329 C OR MECHANICAL GAL. TO AASHTO M298 CLASS 50 TYPE 1 / ASTM B695 CLASS 50 TYPE 1 UNC OVER TAP NUTS AS SPECIFIED IN AASHTO 291 / ASTM A 563 AASHTO M180 RECESSED HEAVY HEX HEAD ASTM A563DH OR SAE J995 GRADE 5	5/8" DIA.

6

MIDWEST GUARDRAIL SYSTEM (MGS) TYPE 2 TERMINAL

STATE OF WISCONSIN
DEPARTMENT OF TRANSPORTATION

APPROVED
August 2021
DATE
/S/ Rodney Taylor
ROADWAY STANDARDS DEVE ENGINEER
FHWA

SDD 14B47 - 03g

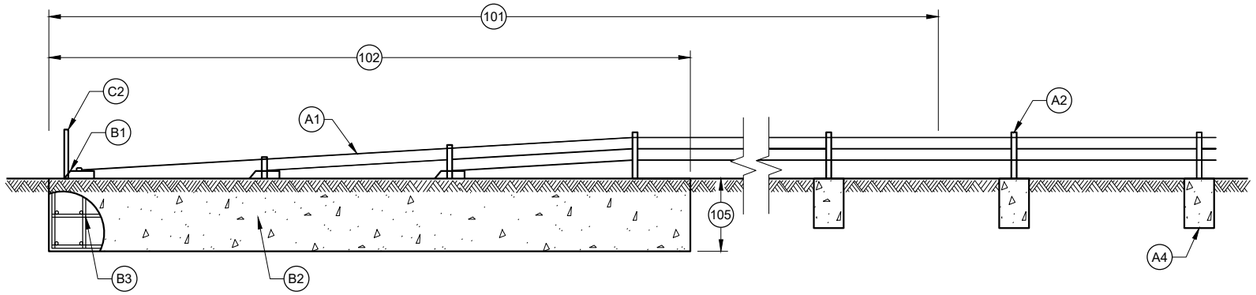

PROFILE VIEW

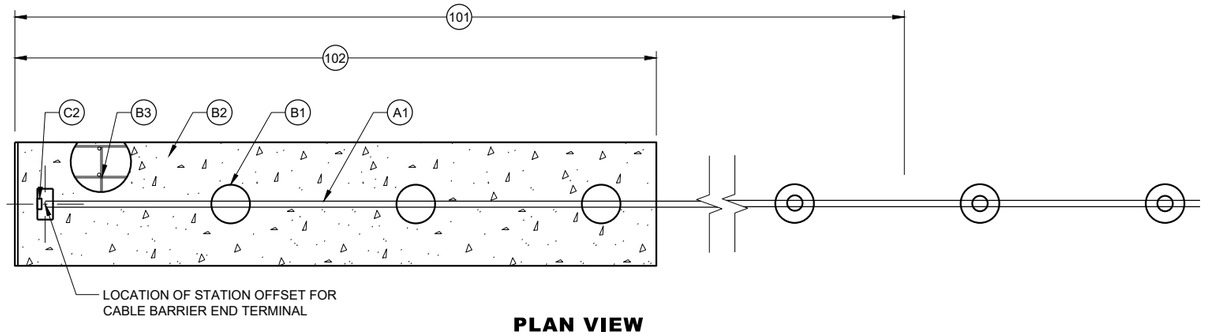

PLAN VIEW

TRANSITION FROM CABLE BARRIER TERMINAL TO CABLE BARRIER LINE POSTS

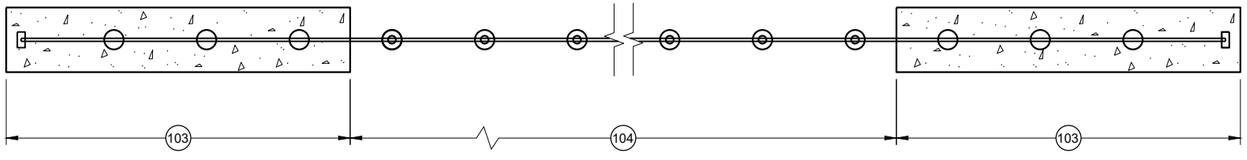

TYPICAL PLAN VIEW

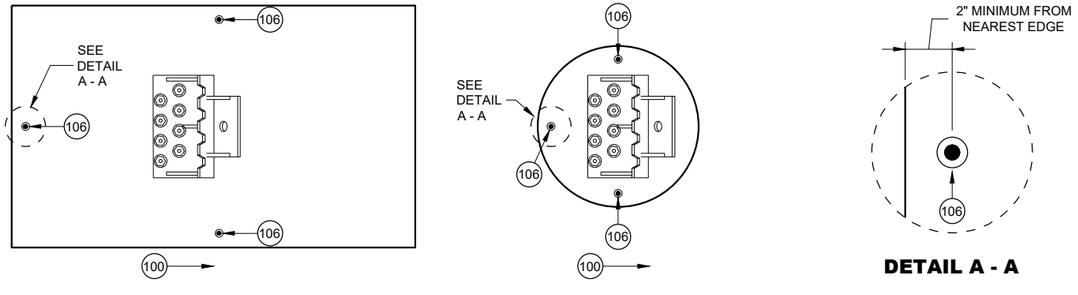

DETAIL A - A

ANCHOR MONITOR POINTS FOR CABLE BARRIER END TERMINAL ANCHORS

GENERAL NOTES

DRAWINGS ARE GENERAL IN NATURE. SEE MANUFACTURER'S INFORMATION FOR MORE DETAIL.

PROVIDE 2 INCH CLEAR COVER FROM OUTER EDGE OF CONCRETE FOOTINGS TO REINFORCEMENT.

INSTALL LINE POSTS PLUMB. LINE POSTS ARE TO BE EASILY REMOVED BY HAND AND HOLD CABLES AT THE PROPER ELEVATION.

PROVIDE CABLE BARRIER SYSTEM FROM APPROVED PRODUCT LIST.

PROVIDE A SYSTEM TO HAVE THE WORKING WIDTH INDICATED IN PLAN.

PROVIDE DOCUMENTATION HOW POST SPACING, RADIUS OF CURVE AND ANCHOR SPACING INFLUENCES WORKING WIDTH TO CONSTRUCTION STAFF.

CONSTRUCT SHAFTS VERTICALLY. VERTICAL TOLERANCE OF SHAFT IS $\frac{1}{8}$" PER FOOT OF DEPTH. SHAFTS ARE TO MINIMIZE DISTURBANCE TO ADJACENT SOILS.

SECURE STEEL REINFORCEMENT AND STEEL SLEEVE PRIOR TO PLACEMENT OF CONCRETE. MAINTAIN CLEAR DISTANCE BETWEEN SOIL AND REINFORCEMENT CAGE.

PLACE CONCRETE IN ONE CONTINUOUS POUR FOR EACH FOOTING. USE VIBRATION TO CONSOLIDATE CONCRETE.

PROVIDE CASING AS NECESSARY TO PREVENT INTRUSION OF UNCONSOLIDATED MATERIALS OR WATER. USE CASINGS WHEN THERE IS 3 OR MORE INCHES OF WATER IN EXCAVATION.

PROVIDE WISCONSIN PROFESSIONAL ENGINEER SIGNED AND APPROVED FOOTING DESIGN USING A CASING AND CONSTRUCTION SEQUENCE. PROJECT ENGINEER WILL REVIEW AND APPROVED CASING DESIGN AND CONSTRUCTION SEQUENCE. CASING IS TO HAVE INTIMATE CONTACT WITH SHAFT SIDEWALL. CASING IT TO WITHSTAND INSERTION STRESS, REMOVAL STRESS, CONCRETE PRESSURE AND SOIL PRESSURE. REMOVE CASING DURING CONCRETE PLACEMENT OR IMMEDIATELY AFTER CONCRETE PLACEMENT. NO TEMPORARY CASING MAY REMAIN IN-PLACE.

PROVIDE WISCONSIN PROFESSIONAL ENGINEER SIGNED AND APPROVED FOOTING DESIGN AND CONSTRUCTION SEQUENCE WHEN OVER EXCAVATION IS REQUIRED NEAR A FOOTING. PROJECT ENGINEER WILL REVIEW AND APPROVED DESIGN AND CONSTRUCTION SEQUENCE.

FINISH TOP OF FOOTINGS TO THE DIMENSIONS INDICATED IN PLAN. REMOVE EXCESS CONCRETE.

DESIGN POST FOOTINGS SO THAT LINE POST FOOTING MOVE LESS THAN 1 INCH WHEN LINE POST IS IMPACTED BY A NCHRP 350 TL-3 SMALL CAR.

USE MARINE GRADE ANTI-SEIZE LUBRICANT FOR THREADING FITTINGS THAT IS ACCEPTABLE FOR USE ON GALVANIZED STEEL.

(100) DIRECTION THAT THE CABLE PULLS THE END ANCHOR FOOTING

(101) LOCATION OF LENGTH OF NEED POINT FOR CABLE BARRIER END TERMINAL VARIES. (SEE MANUFACTURER'S INFORMATION)

(102) PAY LIMIT FOR CABLE BARRIER END TERMINAL. LENGTH OF CABLE BARRIER END TERMINAL VARIES. (SEE MANUFACTURER'S INFORMATION)

(103) CABLE BARRIER END TERMINAL

(104) CABLE BARRIER AND LINE POSTS

(105) IN SOIL MINIMUM DEPTH OF CABLE BARRIER END TERMINAL FOOTING IS 60 INCHES. DEEPER FOOTINGS PER MANUFACTURER'S RECOMMENDATION ARE ACCEPTABLE.

(106) ANCHOR MONITOR POINTS ARE GALVANIZED SURVEY NAIL, OR MASONRY NAIL, PLACED INTO CONCRETE FOOTING BEFORE HARDENING. IF THERE ARE MULTIPLE ANCHOR POINTS WITHIN A PAY LIMIT FOR A CABLE BARRIER END TERMINAL, EACH ANCHOR POINT NEEDS THREE ANCHOR MONITOR POINTS.

CABLE BARRIER TYPE 1 LAYOUT

STATE OF WISCONSIN
DEPARTMENT OF TRANSPORTATION

6

SDD14B52 - 03a

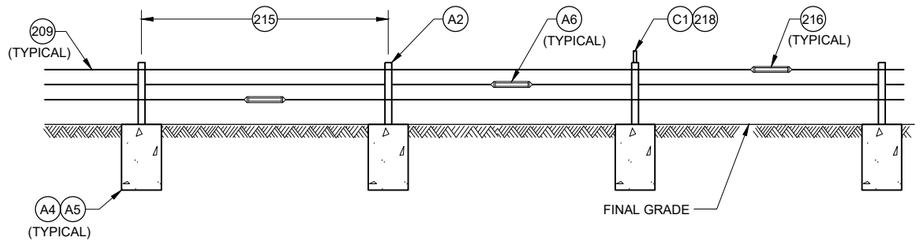

PROFILE VIEW
LINE POST INSTALLATION

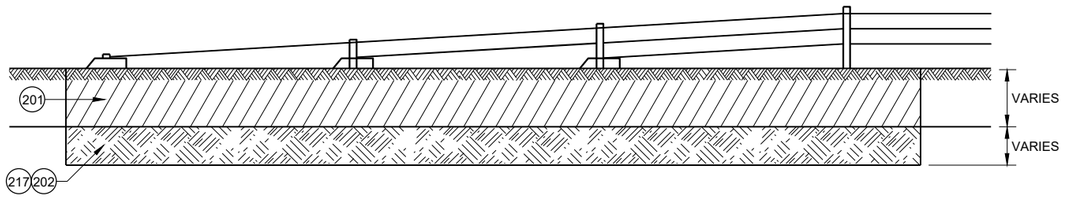

CABLE BARRIER END TERMINAL
ROCK EXCAVATION DETAIL

GENERAL NOTES

201 SOIL TO BE EXCAVATED FOR CABLE BARRIER END TERMINAL (VARIES)

202 ROCK TO BE EXCAVATED FOR CABLE BARRIER END TERMINAL (VARIES)

203 SOIL TO BE EXCAVATED FOR LINE POST (VARIES)

204 ROCK TO BE EXCAVATED FOR LINE POST (VARIES)

205 EXCAVATE AND GRADE LINE FOR LINE POST FOOTINGS. INSTALL LINE POST FOOTING TO MINIMIZE 4 INCH TALL OBJECT ON 5 FOOT CHORD.

206 2 INCHES OF CLEAR COVER FROM EDGE OF CONCRETE TO REINFORCEMENT.

207 DIAMETER OF LINE POST FOOTING VARIES. SEE MANUFACTURERS' INFORMATION.

208 MINIMUM DEPTH OF LINE POST FOOTING IS 4' - 0" IN SOIL. DEEPER FOOTINGS PER MANUFACTURER'S RECOMMENDATION ARE ACCEPTABLE.

209 NUMBER AND LOCATION OF CABLES VARY. SEE MANUFACTURERS' INFORMATION.

210 LINE POST DIMENSIONS AND CONNECTION HARDWARE VARY. SEE MANUFACTURERS' INFORMATION.

211 LANE OF ROADWAY (VARIES). SEE PLAN FOR MORE INFORMATION.

212 PAVED SHOULDER (VARIES). SEE PLAN FOR MORE INFORMATION.

213 GRAVEL SHOULDER (VARIES). SEE PLAN FOR MORE INFORMATION.

214 CABLE BARRIER OFFSET FROM CENTERLINE OF MEDIAN DITCH (8 FOOT MINIMUM). SEE PLAN FOR MORE INFORMATION.

215 MAXIMUM POST SPACING IS 15 FEET.

216 STAGGER TURNBUCKLES (TYPICAL).

217 SEE MANUFACTURER'S DESIGN WHEN ROCK IS ENCOUNTERED.

218 LINE POST DELINEATOR SPACING IS 100 FEET.

219 MINIMUM LINE POST FOOTING REINFORCEMENT SHOWN. MANUFACTURER IS TO INDICATE REINFORCEMENT IS ADEQUATE FOR THEIR SYSTEM. IF REINFORCEMENT IS NOT ADEQUATE, PROVIDE FOOTING DESIGN WITH A ADEQUATE REINFORCEMENT.

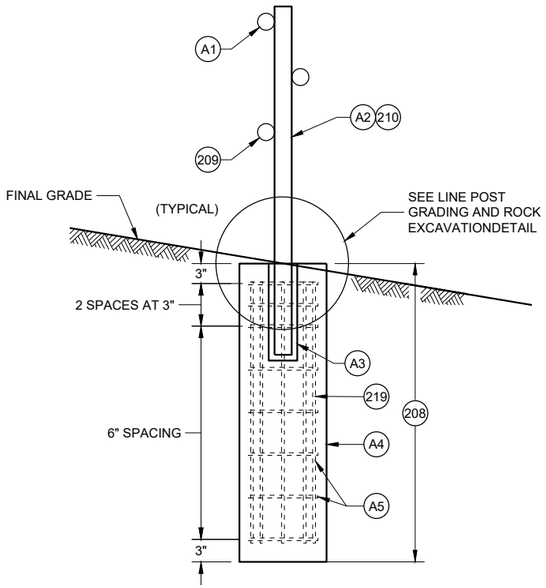

CROSS SECTION

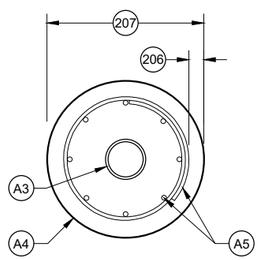

PROFILE VIEW
(LINE POSTS AND CABLES NOT SHOWN)

LINE POST DETAILS

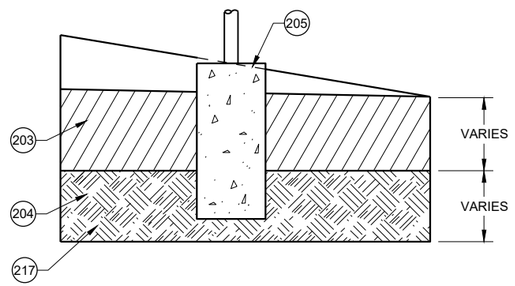

LINE POST GRADING
AND ROCK EXCAVATION DETAIL

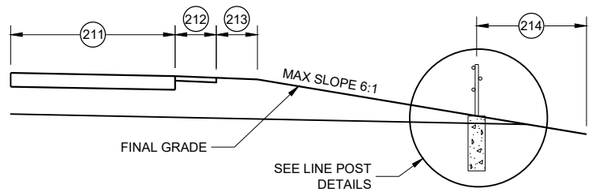

CABLE BARRIER OFFSET FROM DITCH LINE

CABLE BARRIER
TYPE 1 LAYOUT

STATE OF WISCONSIN
DEPARTMENT OF TRANSPORTATION

6

SDD 14B52 - 03b

6

SDD 14B52 - 03b

BILL OF MATERIALS

PART NUMBER	QTY.	DESCRIPTION	MATERIALS SPECIFICATIONS
(A1)	3 OR 4	¾" 3x7 PRESTRECHED GALVANIZED STEEL WIRE ROPE	AASHTO M30 TYPE 1 CLASS A OR ASTM A741 TYPE 1 CLASS A WITH MINIMUM BREAKING STRENGTH = 39 KIPS (173.5 KN)
(A2)	1 PER LINE POST	GALVANIZED REMOVABLE STEEL LINE POST	SEE MANUFACTURER'S INFORMATION ON DIMENSIONS AND MATERIAL REQUIREMENTS.
			ASTM A123 (GALVANIZATION).
(A3)	1 PER LINE POST	GALVANIZED STEEL SLEEVE	SEE MANUFACTURER'S INFORMATION ON DIMENSIONS AND MATERIAL REQUIREMENTS.
			ASTM A123 (GALVANIZATION).
(A4)	VARIES	CONCRETE FOR LINE POST FOOTING	A, A-FA.A-T, OR A-IP OF STANDARD SPECIFICATION 501.2 OR AS MANUFACTURER SPECIFIES.
			STANDARD SPECIFICATION 716 QMP FOR CLASS II ANCILLARY CONCRETE
			SEE MANUFACTURER'S INFORMATION ON DIMENSIONS.
(A5)	MINIMUM REINFORCEMENT: 8 HORIZONTAL LOOP BARS 8 VERTICAL BARS	EPOXY COATED STEEL REINFORCEMENT	STANDARD SPECIFICATION 505.
			ALL BARS ARE NO. 4 BARS
(A6)	VARIES	TURNBUCKLES AND OTHER CABLE CONNECTING HARDWARE	SEE MANUFACTURER'S INFORMATION ON DIMENSIONS.
			MINIMUM BREAKING STRENGTH OF TURNBUCKLES AND CONNECTION HARDWARE IS EQUAL TO CABLE.
			TURNBUCKLES AND OTHER CABLE CONNECTION HARDWARE IS FIELD SWAGED PER MANUFACTURER'S RECOMMENDATION AND DETAILS.
			PROVIDE DOCUMENTATION THAT THE FITTINGS ARE STRONGER THAN THE CABLE BARRIER. DOCUMENTATION IS TO INCLUDE: MANUFACTURER NAME, TESTING RESULTS, AND DATE OF TESTING.
(B1)	VARIES	CABLE CONNECTION TO CABLE BARRIER END TERMINAL	SEE MANUFACTURER'S INFORMATION ON DIMENSIONS AND MATERIAL REQUIREMENTS.
(B2)	VARIES	CONCRETE FOR CABLE BARRIER END TERMINAL	A, A-FA.A-T, OR A-IP OF STANDARD SPECIFICATION 501.2.
			STANDARD SPECIFICATION 716 QMP FOR CLASS II ANCILLARY CONCRETE
(B3)	VARIES	EPOXY COATED STEEL REINFORCEMENT	STANDARD SPECIFICATION 505.
(C1)	VARIES	LINE POST DELINEATOR	REFLECTIVE SHEETING TYPE SH. SEE APPROVED PRODUCT LIST YELLOW.
(C2)	VARIES	CABLE BARRIER END TERMINAL DELINEATOR	REFLECTIVE SHEETING TYPE SH. SEE APPROVED PRODUCT LIST OBJECT MARKER TYPE 3 PATTERN

6

6

SDD 14B52 - 03c

SDD 14B52 - 03c

CABLE BARRIER TYPE 1 LAYOUT

STATE OF WISCONSIN
DEPARTMENT OF TRANSPORTATION

APPROVED
May 2022
DATE

/S/ Rodney Taylor
ROADWAY STANDARDS DEVE ENGINEER

FHWA

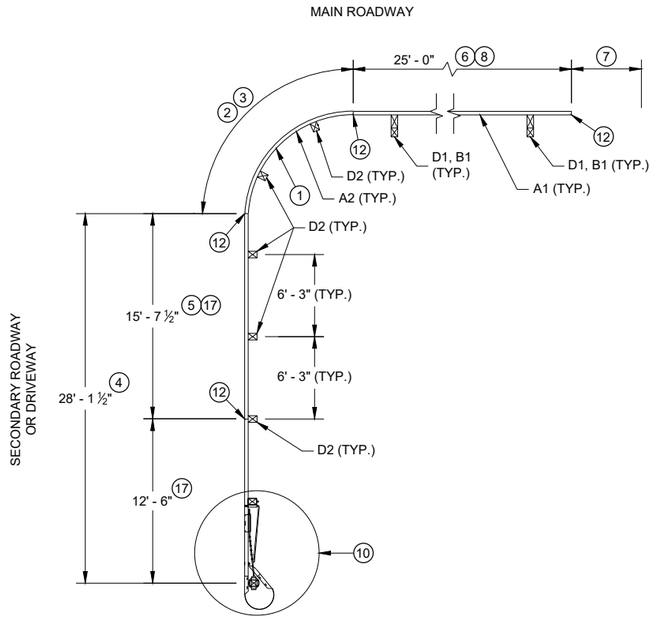

PLAN VIEW

SHORT RADIUS BEAM GUARD WITH SHORT RADIUS TERMINAL ON SECONDARY ROAD OR DRIVEWAY

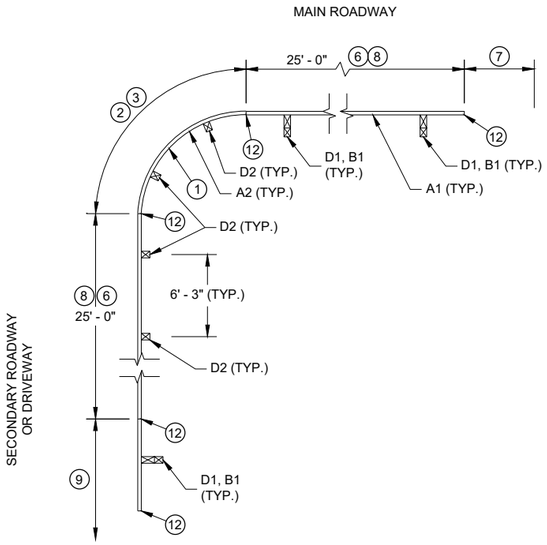

PLAN VIEW

SHORT RADIUS BEAM GUARD WITH EAT, ADDITIONAL BEAM GUARD OR TRANSITION TO RIGID BARRIER ON SECONDARY ROAD OR DRIVEWAY

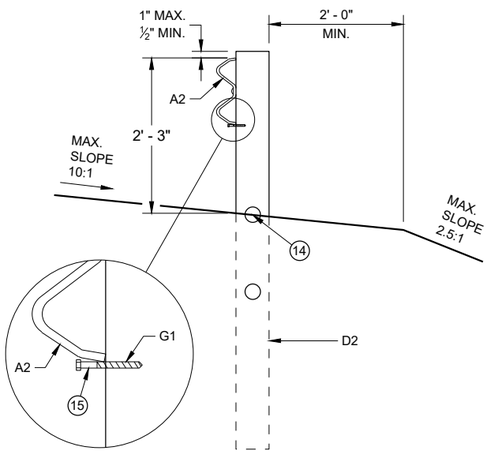

CONTROLLED RELEASE TERMINAL POST (CRT) IN RADIUS

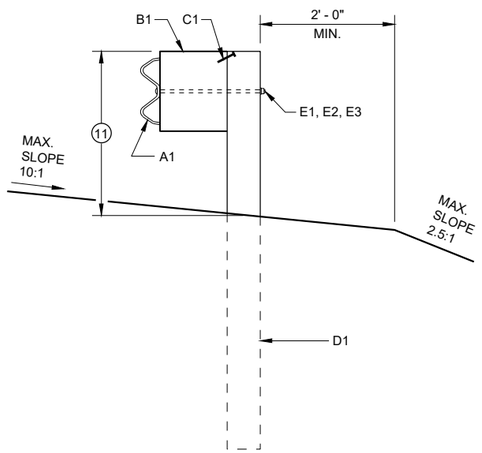

BEAM GUARD POSTS IN HEIGHT TRANSITION

TABLE FOR RADIUS OF 32' AND LESS

RADIUS (FT)	LENGTH (FT)	WIDTH (FT)
8	25	15
16	30	15
24	40	20
32	50	30

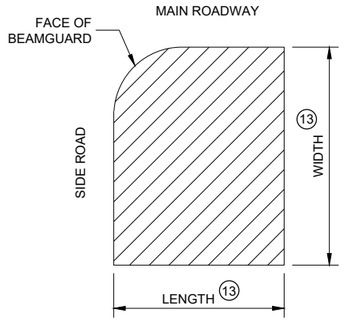

AREA FREE OF FIXED OBJECTS FOR RADIUS 32' AND LESS

16

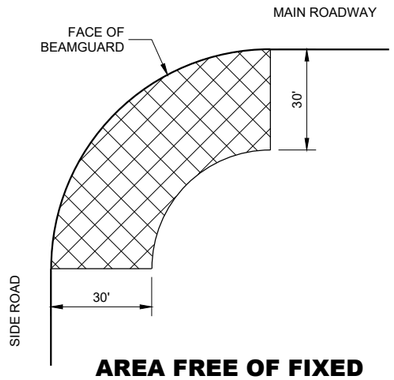

AREA FREE OF FIXED OBJECTS FOR RADIUS GREATER THAN 32'

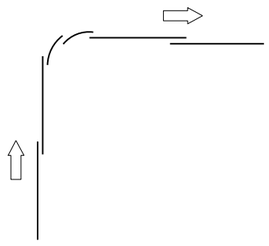

LAP SPLICE DETAIL

GENERAL NOTES

SEE PLANS FOR OTHER BARRIER SYSTEM AND LOCATION SPECIFICS.

SEE SDD 14B42 FOR MORE INFORMATION ON BEAM GUARD INSTALLATION, PARTS, MATERIALS, AND INSTALLATION INFORMATION.

GALVANIZE PARTS AFTER FABRICATION.

WELDING TO FOLLOW CURRENT REQUIREMENTS OF THE AMERICAN WELDING SOCIETY STRUCTURAL WELDING CODE ANSI / AWS D1.1.

UNLESS NOTED OTHERWISE, ALL PLATES ARE FLAT AND FREE OF WARP.

UNLESS NOTED OTHERWISE, ALL EDGES ARE SMOOTH, STRAIGHT AND VERTICAL.

ALL CUTS AND HOLES, EXCEPT IN BEAM GUARD RAIL ARE TO BE MACHINED OR MACHINE FLAME CUT.

UNLESS NOTED OTHERWISE, CUT OR PROVIDE BOLTS THAT ARE ¼" TO ½" BEYOND THE NUT.

DRAWINGS ARE NOT TO SCALE.

1. RADIUS MEASURE FROM INSIDE OF RAIL. LENGTH OF BEAM GUARD SHORT RADIUS GUARD MEASURED ALONG TRAFFIC SIDE OF RAIL. RADIUS BETWEEN 8 FEET TO 150 FEET. SEE PLAN FOR REQUIRED RADIUS. BEAM GUARD RAIL IN RADIUS IS SHOP BENT. ODD RAIL LENGTH OR FIELD CUTS MAY BE REQUIRED.
2. CONTROLLED RELEASE TERMINAL (CRT) POSTS ARE USED IN THE RADIUS. CONTROLLED RELEASE TERMINAL (CRT) POSTS ARE SPACED 6' - 3". SEE PLAN FOR NUMBER OF CONTROLLED RELEASE (CRT) POSTS.
3. WITHIN RADIUS BEAM GUARD RAILS ARE NOT BOLTED TO POSTS. BEAM GUARD RAIL IS RESTED ON TOP OF LAG SCREW.
4. MINIMUM LENGTH OF BEAM GUARD ALONG SIDE ROAD OR DRIVEWAY TO INSTALL SHORT RADIUS TERMINAL. BEAM GUARD IS PAID WITH BEAM GUARD ITEM.
5. ODD LENGTH OF BEAM GUARD REQUIRED TO INSTALL SHORT RADIUS TERMINAL.
6. MINIMUM AMOUNT OF BEAM GUARD TO BE INSTALLED PRIOR TO TRANSITION TO RIGID BARRIER. ADDITIONAL BEAM GUARD, OR EAT. BEAM GUARD PAID FOR WITH BEAM GUARD ITEM. SEE PLANS FOR MORE DETAIL.
7. BEAM GUARD, EAT, OR TRANSITION TO RIGID BARRIER. SEE PLAN.
8. TOP OF BEAM GUARD BY THE RADIUS IS 27". HEIGHT OF BEAM GUARD IS 31" BY TRANSITION TO RIGID BARRIER, ADDITIONAL BEAM GUARD OR EAT.
9. ADDITIONAL BEAM GUARD, EAT OR TRANSITION TO RIGID BARRIER. BEAM GUARD SHOWN. SEE PLAN FOR DETAILS.
10. SHORT RADIUS TERMINAL (SEE OTHER DETAILS).
11. HEIGHT VARIES. SEE NOTE 8 AND 8 .
12. BEAM GUARD RAIL SPLICE LOCATION. SPLICE LOCATION REQUIRES PART F1 AND F2. SEE SDD 14B42 FOR DETAILS.
13. SEE TABLE FOR VALUES.
14. MAXIMUM HEIGHT FOR CENTER OF HOLE IS ¾" ABOVE FINISHED GROUND ±1".
15. DRILL POST $^{15}/_{64}$" DIA. PILOT HOLE. DO NOT HAMMER LAG SCREW INTO POST.
16. SMALL SIGNS ON BREAKAWAY HARDWARE ARE ACCEPTABLE.
17. TOP OF RAIL HEIGHT IS 27" WHEN USING A SHORT RADIUS TERMINAL (CRT).

SHORT RADIUS BEAM GUARD (MGS) SHORT RADIUS TERMINAL (MGS)

6

SDD 14B53 - 02a

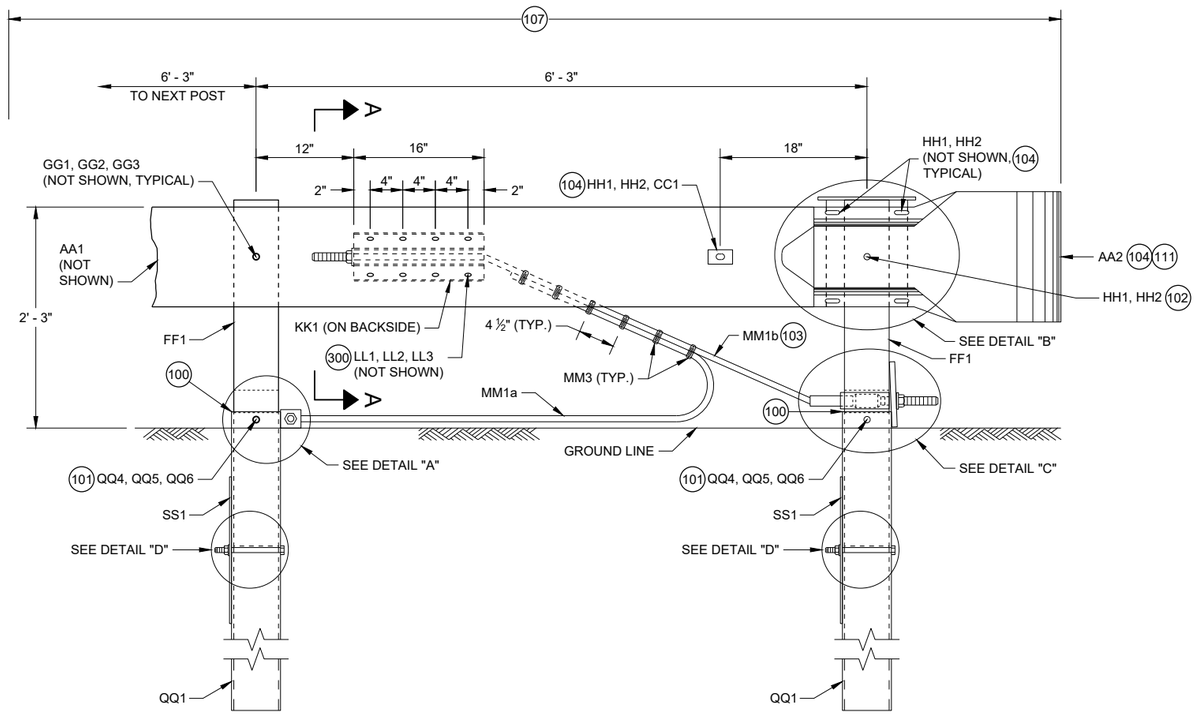

PROFILE VIEW

SHORT RADIUS TERMINAL

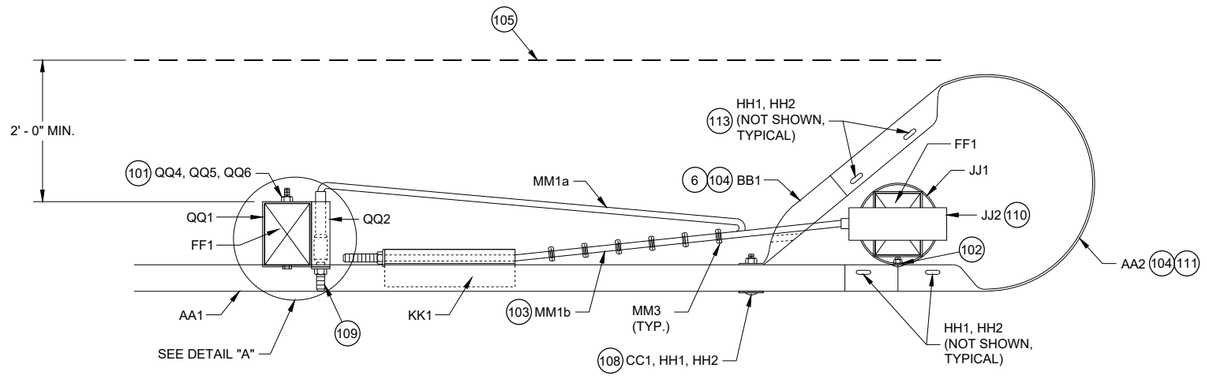

TOP VIEW

SHORT RADIUS TERMINAL

GENERAL NOTES

100 TOP OF FOUNDATION TUBE 2 INCHES MAXIMUM ABOVE FINISHED GROUND.

101 WASHERS REQUIRED BETWEEN BOLT HEAD AND FOUNDATION TUBE AND BETWEEN NUT AND FOUNDATION TUBE.

102 SPLICE BOLT AND NUT CONNECTS BEAM GUARD RAIL, W-BEAM SECTION BUFFER, AND STEEL PIPE ASSEMBLY. NO WASHER REQUIRED. SEE DETAIL "B".

103 CABLE IS TAUT.

104 ADJUST AA2 AND BB1 TO FIT.

105 BREAK POINT OF SHOULDER.

106 TACK WELD CABLE CONNECTOR TUBE PLATE TO CABLE CONNECTION TUBE. SEE DETAIL "A" PROFILE VIEW.

107 PAY LIMIT FOR BEAM GUARD.

108 SQUARE WASHER BETWEEN HEAD OF BOLT AND TRAFFIC FACE OF BEAM GUARD. ROUND WASHER REQUIRED BETWEEN NUT AND BB1.

109 CUT OR PROVIDE THREADED STUD THAT IS FLUSH WITH FACE OF BEAM GUARD RAIL KK1 (PLUS OR MINUS ½" TOLERANCE). DEBURR AFTER CUTTING.

110 SEE STEEL PIPE ASSEMBLY DETAILS.

111 ATTACH UU2 WITH UU3. SHOP APPLY UU1 TO UU2.

112 FOUR (4) HH1 AND HH2 REQUIRED TO ATTACH AA1 TO AA2.

113 FOUR (4) HH1 AND HH2 REQUIRED TO ATTACH AA2 TO BB1.

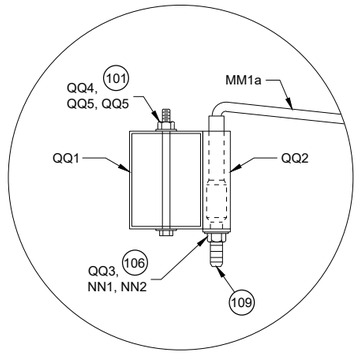

TOP VIEW

DETAIL "A"

(WOOD BREAKAWAY AND BEAM GUARD RAIL POSTS NOT SHOWN)

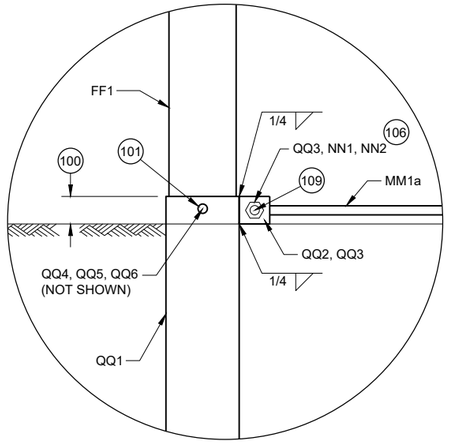

PROFILE VIEW

DETAIL "A"

SHORT RADIUS BEAM GUARD (MGS) SHORT RADIUS TERMINAL (MGS)

STATE OF WISCONSIN
DEPARTMENT OF TRANSPORTATION

6

SDD 14B53 - 02b

GENERAL NOTES

(200) TWO (2) NAILS SPACED 4 INCHES CENTER TO CENTER.

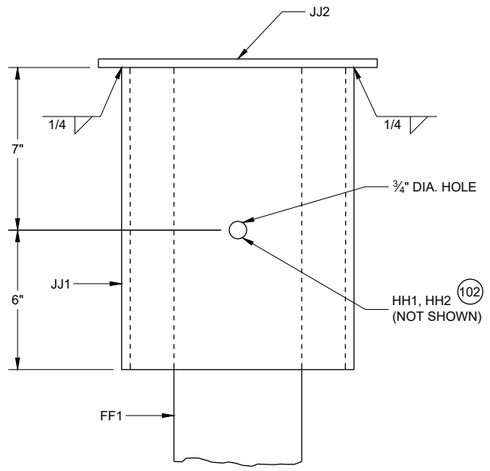

PROFILE VIEW

DETAIL "B"
STEEL PIPE ASSEMBLY
(BEAM GUARD AND W BEAM END SECTION NOT SHOWN)

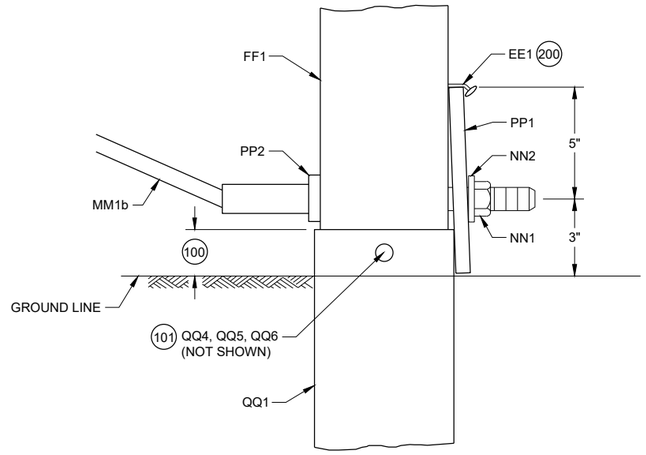

PROFILE VIEW

DETAIL "C"

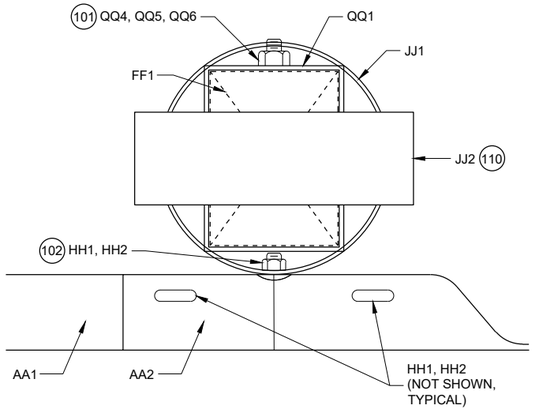

PLAN VIEW

DETAIL "B"
STEEL PIPE ASSEMBLY

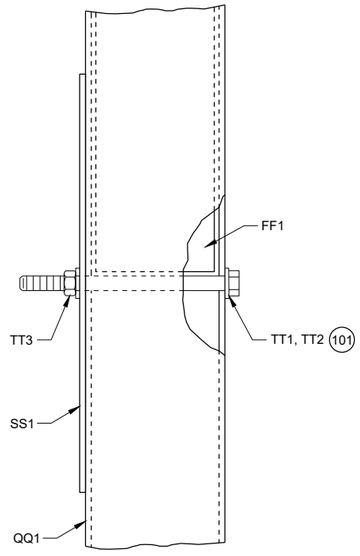

PROFILE VIEW

DETAIL "D"

SHORT RADIUS BEAM GUARD (MGS) SHORT RADIUS TERMINAL (MGS)

STATE OF WISCONSIN
DEPARTMENT OF TRANSPORTATION

6

SDD 14B53 - 02c

6

SDD 14B53 - 02c

GENERAL NOTES

(300) WASHERS REQUIRED BETWEEN BOLT HEAD AND BEAM GUARD RAIL AND BETWEEN NUT AND ANCHOR BRACKET. EIGHT (8) LL1 AND LL3 REQUIRED. SIXTEEN (16) LL2 REQUIRED.

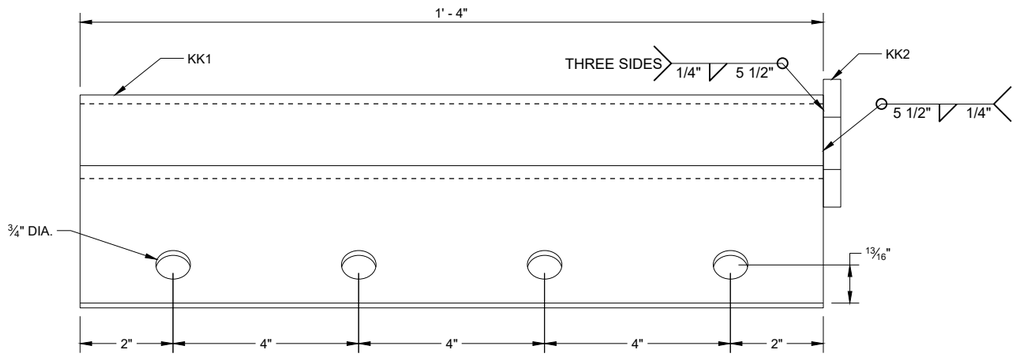

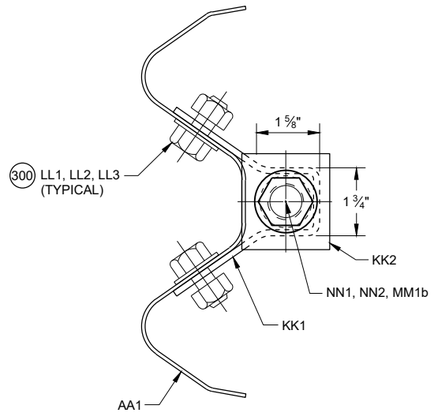

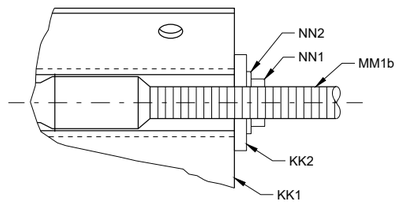

SECTION A - A

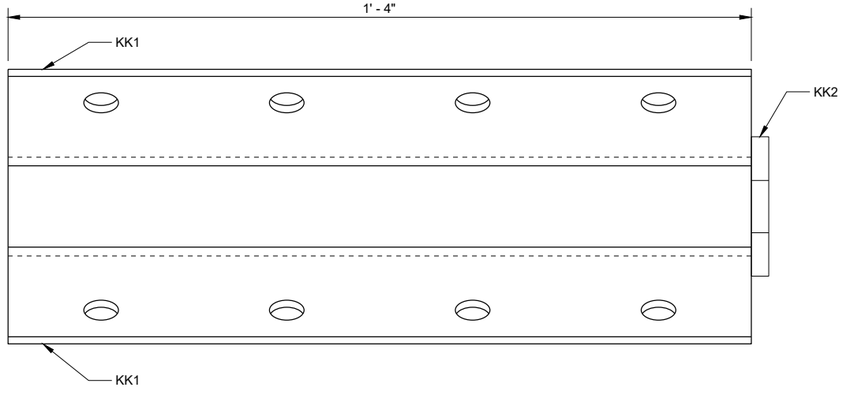

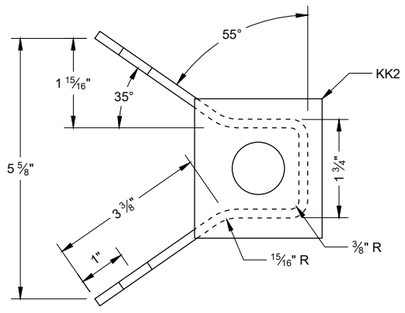

ANCHOR BRACKET (KK1, KK2)

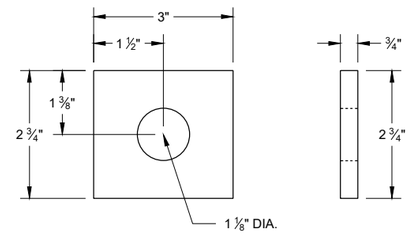

ANCHOR BRACKET BEARING PLATE (KK2)

6

SDD 14B53 - 02d

SHORT RADIUS BEAM GUARD (MGS) SHORT RADIUS TERMINAL (MGS)

STATE OF WISCONSIN
DEPARTMENT OF TRANSPORTATION

6

SDD 14B53 - 02d

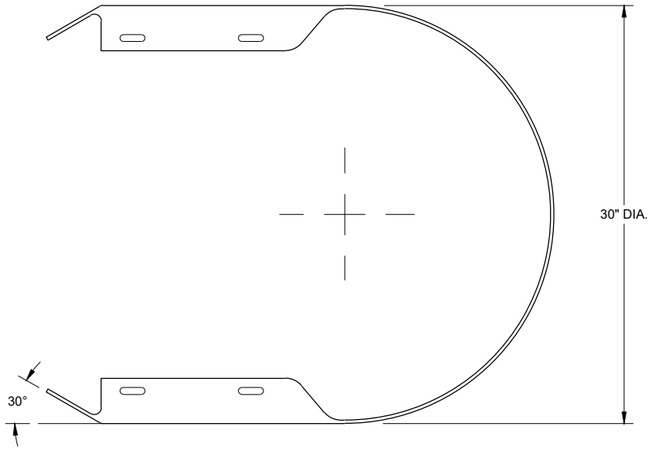

TOP VIEW

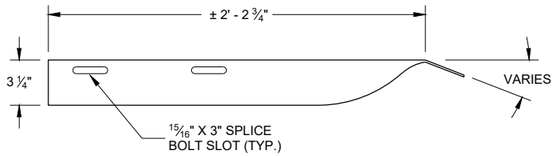

TOP VIEW

GENERAL NOTES

(400) CROSS SECTION OF PART IS TO FIT OVER AA1 .

(401) CROSS SECTION OF PART IS TO FIT OVER OR UNDER AA1 .

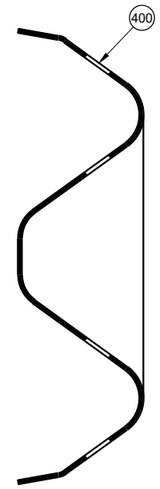

SECTION B -B

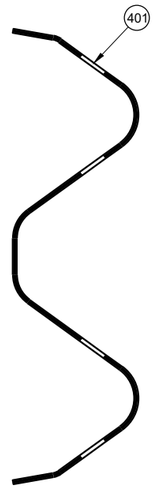

SECTION C -C

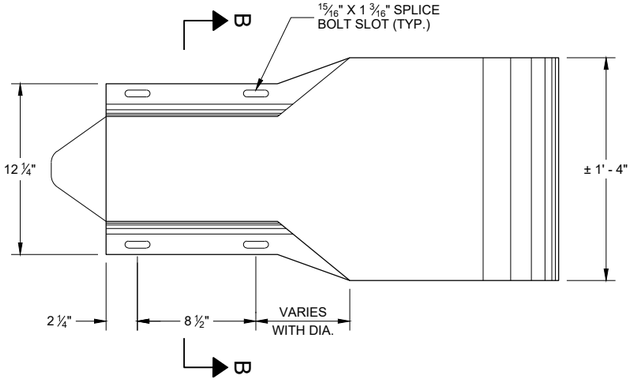

PROFILE VIEW

W BEAM
END SECTION BUFFER (AA2)

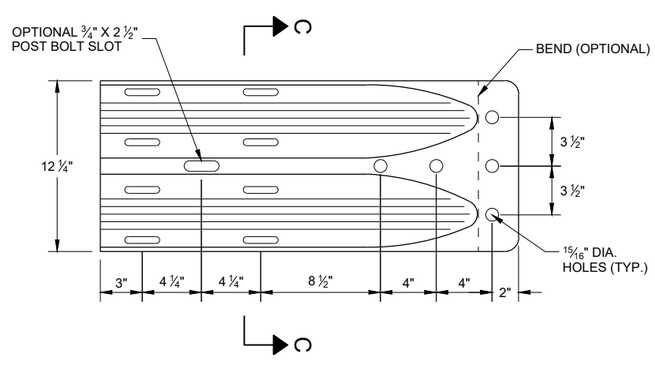

PROFILE VIEW

W BEAM
TERMINAL CONNECTOR (BB1)

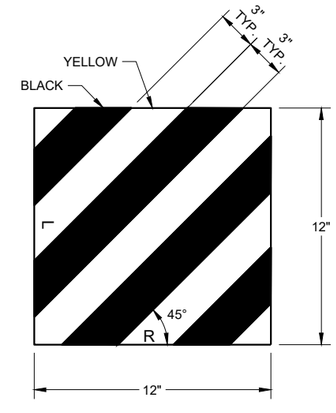

REFLECTIVE SHEETING (UU1, UU2)

SHORT RADIUS BEAM GUARD (MGS) SHORT RADIUS TERMINAL (MGS)

STATE OF WISCONSIN
DEPARTMENT OF TRANSPORTATION

6

SDD 14B53 - 02e

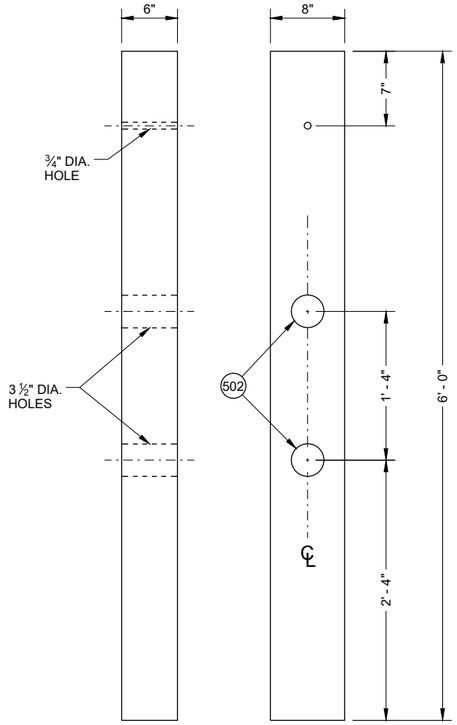

FRONT VIEW SIDE VIEW

CONTROLLED RELEASE POST (CRT) (DD2)

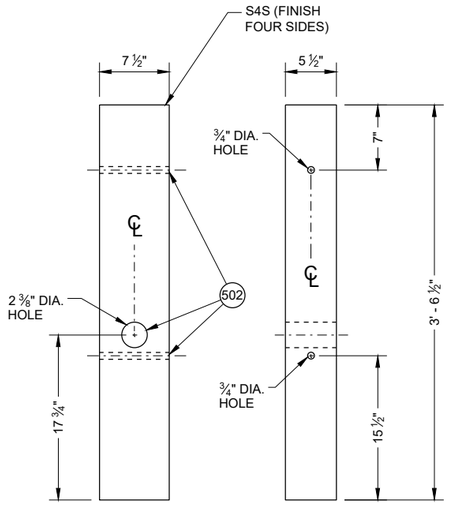

FRONT VIEW SIDE VIEW

WOOD BREAKAWAY POST (FF1)

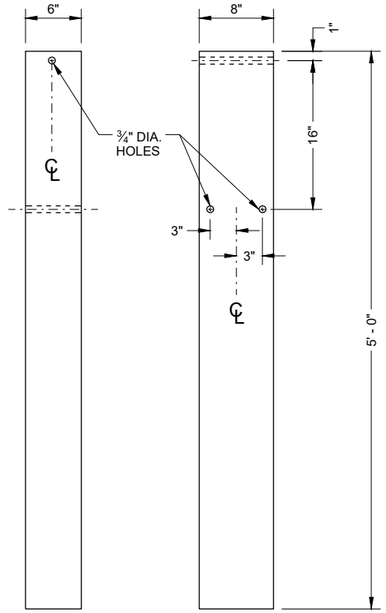

FRONT VIEW SIDE VIEW

FOUNDATION TUBE (QQ1) (500)

GENERAL NOTES

(500) SEE DETAIL "D" FOR LOCATION AND ATTACHMENT OF SS1.

(501) FOR MM1a THREADED STUD ONLY REQUIRED ON ONE END. SWAGED FITTING REQUIRED.

(502) LOCATE HOLES ON THE CENTERLINE OF THE SIDE OF THE POST.

(503) MM1a MAY HAVE ONE THREADED STUD 4 INCHES LONG. SEE NOTE (109).

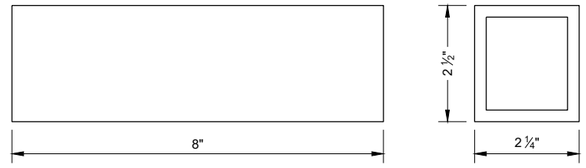

FOUNDATION TUBE - ANCHOR CABLE TUBE (QQ2)

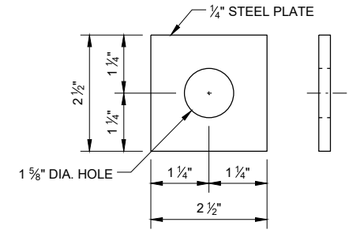

ANCHOR CABLE TUBE END PLATE (QQ3)

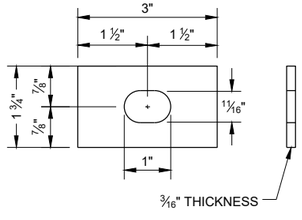

RECTANGULAR PLATE WASHER (CC1)

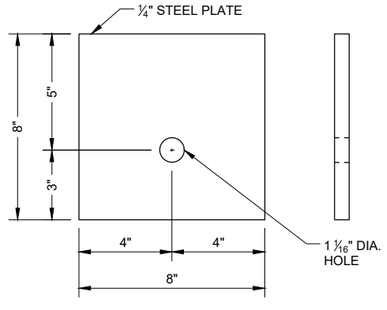

BEARING PLATE (PP1)

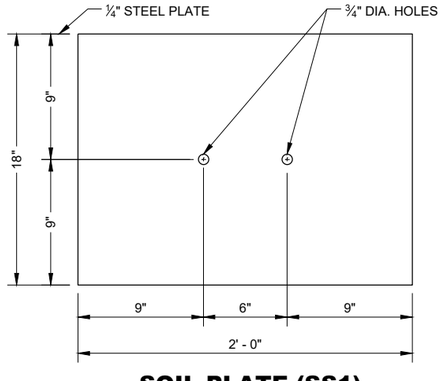

SOIL PLATE (SS1)

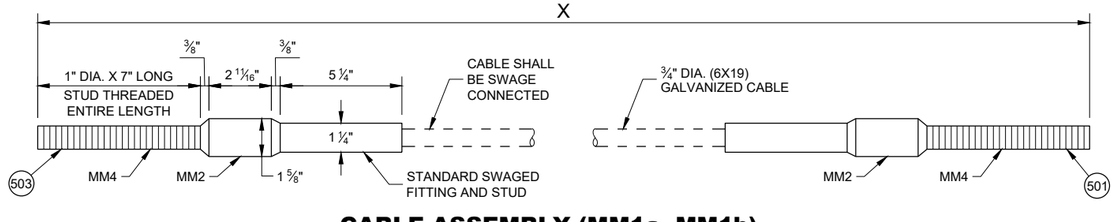

CABLE ASSEMBLY (MM1a, MM1b)

"X" LENGTH

MM1b	9' - 0"
MM1b	6' - 8"

SHORT RADIUS BEAM GUARD (MGS) SHORT RADIUS TERMINAL (MGS)

STATE OF WISCONSIN
DEPARTMENT OF TRANSPORTATION

6

SDD 14B53 - 02f

BILL OF MATERIALS - SHORT RADIUS BEAM GUARD (MGS)

PART	DESCRIPTION	MATERIALS SPECIFICATIONS	NOTES
A1	BEAM GUARD RAIL	AASHTO M180, CLASS A, TYPE 2	
		APPROVED PRODUCER	
A2	BEAM GUARD RAIL - SHOP BENT	INDICATE ON BACK OF RAIL THE RADIUS THAT RAIL WAS BENT TO. SHOP BEND RADIUS IS TO THE NEAREST FOOT. FOLLOW AASHTO M180 ON HOW TO MARK RADIUS INFORMATION.	
		AASHTO M180, CLASS A, TYPE 2	
		APPROVED PRODUCER	
B1	BLOCK - WOOD	WISDOT SPEC. 614	SEE SDD 14B42
C1	NAIL	ASTM A153 HOT DIP CLASS D	
		ASTM F1667 TYPE 1 STYLE 12 (16 DOUBLE HEAD)	
D1	POST-STRONG POST-WOOD	WISDOT SPEC. 614	SEE SDD 14B42
D2	POST-CRT-WOOD	WISDOT SPEC. 614	
E1	POST BOLT	ASTM A307 GRADE A OR SAE J429 GRADE 2	5/8" DIA. SEE SDD 14B42 FOR BOLT GEOMETRY
		AASHTO M180	
		GALV. HOT DIP TO AASHTO M232 CLASS C / ASTM A153 CLASS C / ASTM F2329 OR GALV. MECHANICALLY TO AASHTO M298 CLASS 50, TYPE 1 / ASTM B695 CLASS 50, TYPE 1	
		UNC	
E2	POST BOLT - WASHER	ASTM F436 TYPE 1 (HARDEN TYPICALLY USED WITH STEEL) OR ASTM F844 (UNHARDENED TYPICALLY WITH WOOD)	5/8" DIA.
		GALV. AASHTO M111 / ASTM A 123 OR GALV. HOT DIP. TO AASHTO M232 CLASS C / ASTM A153 CLASS C / ASTM F2329	
E3	POST BOLT - NUT	AASHTO M180 DOUBLE RECESSED HEAVY HEX HEAD	5/8" DIA. SEE SDD 14B42 FOR BOLT GEOMETRY
		GALV. HOT DIP TO AASHTO M232 CLASS C / ASTM A153 CLASS C / ASTM F2329 OR GALV. MECHANICALLY TO AASHTO M298 CLASS 50, TYPE 1 / ASTM B695 CLASS 50, TYPE 1	
		UNC	
		OVER TAPPED NUTS OVER-SIZE AS SPECIFIED IN AASHTO 291 / ASTM A 563	
		ASTM A563 GRADE A HEAVY HEX HEAD	
F1	SPLICE BOLT	GALV. HOT DIP TO AASHTO M232 CLASS C / ASTM A153 CLASS C / ASTM F2329 OR GALV. MECHANICALLY TO AASHTO M298 CLASS 50, TYPE 1 / ASTM B695 CLASS 50, TYPE 1	5/8" DIA. SEE SDD 14B42 FOR BOLT GEOMETRY
		ASTM A307 GRADE A OR SAE J429 GRADE 2	
		UNC	
		AASHTO M180	

PART	DESCRIPTION	MATERIALS SPECIFICATIONS	NOTES
F2	SPLICE BOLT - NUT	ASTM A563 GRADE A	5/8" DIA. SEE SDD 14B42 FOR BOLT GEOMETRY
		AASHTO M180 DOUBLE RECESSED HEAVY HEX HEAD	
		GALV. HOT DIP TO AASHTO M232 CLASS C/ASTM A153 CLASS C/ASTM F2329 OR GALV. MECHANICALLY TO AASHTO M298 CLASS 50, TYPE 1/ASTM B695 CLASS 50, TYPE 1	
		OVER TAPPED NUTS OVER-SIZE AS SPECIFIED IN AASHTO 291 / ASTM A 563	
		UNC	
G1	LAG SCREW	ASTM A308 GRADE A ASTM A153 CLASS D	1/2" DIA. 6" LONG
H1	DELINEATOR - BEAM GUARD		SEE SDD 14B42 FOR MORE INFORMATION
H2	DELINEATION - SHEETING	YELLOW OR WHITE	
		WISDOT SPEC 637 TYPE SH	
		APPROVED PRODUCT LIST	
J1	FOUNDATION BACKFILL	STANDARD SPEC. 614	
AA1	BEAM GUARD RAIL - PUNCHED	AASHTO M180, CLASS A, TYPE 2	
		APPROVED PRODUCER	
AA2	BEAM GUARD RAIL - END SECTION BUFFER	AASHTO M180, CLASS A, TYPE 2	
		APPROVED PRODUCER	
BB1	BEAM GUARD RAIL - TERMINAL CONNECTOR MODIFIED	AASHTO M180, CLASS A, TYPE 2	
		APPROVED PRODUCER	
CC1	SHORT RADIUS - SQUARE WASHER	AASHTO M180	
		GALV. AASHTO M111 / ASTM A123	
EE1	NAIL	ASTM A153 HOT DIP CLASS D	
		ASTM F1667 TYPE 1 STYLE 12 (16 DOUBLE HEADED)	
FF1	POST - BCT - WOOD	S4S FINISH ON 4 SIDES	
		WISDOT SPEC. 614	
GG1	POST BOLT	ASTM A307 GRADE A OR SAE J429 GRADE 2	3/8" DIA. SEE SDD 14B42 FOR BOLT GEOMETRY
		AASHTO M180	
		GALV. HOT DIP TO AASHTO M232 CLASS C/ASTM A153 CLASS C/ASTM F2329 OR GALV. MECHANICALLY TO AASHTO M298 CLASS 50, TYPE 1/ASTM B695 CLASS 50, TYPE 1	
		UNC	
GG2	POST BOLT - WASHER	ASTM F436 TYPE 1 (HARDEN TYPICALLY USED WITH STEEL) OR ASTM F844 (UNHARDENED TYPICALLY WITH WOOD)	3/8" DIA.
		GALV. AASHTO M111 / ASTM A 123 OR GALV. HOT DIP. TO AASHTO M232 CLASS C/ASTM A153 CLASS C / ASTM F2329	

SHORT RADIUS BEAM GUARD (MGS) SHORT RADIUS TERMINAL (MGS)

STATE OF WISCONSIN
DEPARTMENT OF TRANSPORTA 500

6

SDD 14B53 - 02g

BILL OF MATERIALS - SHORT RADIUS BEAM GUARD (MGS)

PART	DESCRIPTION	MATERIALS SPECIFICATIONS	NOTES
GG3	POST BOLT - NUT	ASTM A563 GRADE A	⅜" DIA. SEE 14B42 FOR GEOMETRY
		AASHTO M180 DOUBLE RECESSED HEAVY HEX HEAD	
		GALV. HOT DIP TO AASHTO M232 CLASS C / ASTM A153 CLASS C / ASTM F2329 OR GALV. MECHANICALLY TO AASHTO M298 CLASS 50, TYPE 1 / ASTM B695 CLASS 50, TYPE 1	
		UNC	
		OVER TAPPED NUTS OVER-SIZE AS SPECIFIED IN AASHTO 291 / ASTM A 563	
		ASTM A563 GRADE A HEAVY HEX HEAD	
HH1	SPLICE BOLT	GALV. HOT DIP TO AASHTO M232 CLASS C / ASTM A153 CLASS C / ASTM F2329 OR GALV. MECHANICALLY TO AASHTO M298 CLASS 50, TYPE 1 / ASTM B695 CLASS 50, TYPE 1	⅜" DIA. SEE SDD 14B42 FOR BOLT GEOMETRY
		ASTM A307 GRADE A OR SAE J429 GRADE 2	
		UNC	
		AASHTO M180 HEAD GEOMETRY	
HH2	SPLICE BOLT - NUT	ASTM A563 GRADE A	⅜" DIA. SEE SDD 14B42 FOR BOLT GEOMETRY
		AASHTO M180 DOUBLE RECESSED HEAVY HEX HEAD	
		GALV. HOT DIP TO AASHTO M232 CLASS C / ASTM A153 CLASS C / ASTM F2329 OR GALV. MECHANICALLY TO AASHTO M298 CLASS 50, TYPE 1 / ASTM B695 CLASS 50, TYPE 1	
		OVER TAPPED NUTS OVER-SIZE AS SPECIFIED IN AASHTO 291 / ASTM A 563	
		UNC	
JJ1	PIPE - STEEL	ASTM A53 GALVANIZED GRADE B SCHEDULE 40	10" O.D.
JJ2	TOP PLATE	ASTM A36 MIN. STRENGTH 36 KSI, OR ASTM A529 MAX. STRENGTH 50 KSI, OR ASTM A572 MAX STRENGTH 50 KSI OR ASTM A709 MAX STRENGTH 50 KSI OR ASTM A992 MAX STRENGTH 50 KSI	DIMENSIONS ⅜" X 4" X 1' - 0"
		GALV. AASHTO M111 / ASTM A123	
KK1	ANCHOR BRACKET	ASTM A36 MIN. STRENGTH 36 KSI, OR ASTM A529 MAX. STRENGTH 50 KSI, OR ASTM A572 MAX STRENGTH 50 KSI OR ASTM A709 MAX STRENGTH 50 KSI OR ASTM A992 MAX STRENGTH 50 KSI	
		GALV. AASHTO M111 / ASTM A123	
KK2	ANCHOR BRACKET - BEARING PLATE	ASTM A36 MIN. STRENGTH 36 KSI, OR ASTM A529 MAX. STRENGTH 50 KSI, OR ASTM A572 MAX STRENGTH 50 KSI OR ASTM A709 MAX STRENGTH 50 KSI OR ASTM A992 MAX STRENGTH 50 KSI	
		GALV. AASHTO M111 / ASTM A123	
LL1	ANCHOR BRACKET - BOLT	ASTM A307 GRADE B HEAVY HEX HEAD OR SAE J429 GRADE 2 HEAVY HEX HEAD	⅝" DIA.
		GALV. HOT DIP TO AASHTO M232 CLASS C / ASTM A153 CLASS C / ASTM F2329 OR GALV. MECHANICALLY TO AASHTO M298 CLASS 50, TYPE 1 / ASTM B695 CLASS 50, TYPE 1	
		UNC	

PART	DESCRIPTION	MATERIALS SPECIFICATIONS	NOTES
LL2	ANCHOR BRACKET - WASHER	ASTM F436 TYPE 1 (HARDEN WASHER ONLY)	⅝" DIA.
		GALV. AASHTO M111 / ASTM A123 OR GALV. HOT DIP TO AASHTO M232 CLASS C / ASTM A153 CLASS C / ASTM F2329	
LL3	ANCHOR BRACKET - NUT	ASTM A563 GRADE A	⅝" DIA.
		GALV. HOT DIP TO AASHTO M232 CLASS C / ASTM A153 CLASS C / ASTM F2329 OR GALV. MECHANICALLY TO AASHTO M298 CLASS 50, TYPE 1 / ASTM B695 CLASS 50, TYPE 1	
		OVER TAPPED NUTS OVER-SIZE AS SPECIFIED IN AASHTO 291 / ASTM A 563	
		UNC	
MM1a	ANCHOR CABLE	AASHTO M30 / ASTM A741 INDEPENDENT WIRE CORE (IWRC) OR WIRE STRAND CORE (WCS), IMPROVED PLOW STEEL (IPS), 6X19, TYPE II OR IIc CLASS C ZINC COATED	
MM1b	ANCHOR CABLE	AASHTO M30 / ASTM A741 INDEPENDENT WIRE CORE (IWRC) OR WIRE STRAND CORE (WCS), IMPROVED PLOW STEEL (IPS), 6X19, TYPE II OR IIc CLASS C ZINC COATED	
MM2	ANCHOR CABLE - SWAGE FITTING	ASTM A576 GRADE 1035	
		SWAGE FITTINGS ARE TO BE FACTORY SWEDGED. WITH A BREAKING STRENGTH 40,000 LBS.	
		GALV. AASHTO M111 / ASTM A123	
		ASME B30.26 FORGED, CAST, OR DIE STAMPED WITH THE FOLLOWING INTO CONNECTION: NAME OF MANUFACTURER OR TRADEMARK OF CONNECTION'S MANUFACTURER, SIZE OR RATED LOAD, GRADE.	
MM3	WIRE ROPE CABLE CLAMPS	FF-C-450D TYPE 1 CLASS 1	¾"
		ASTM A153 HOT DIP CLASS D	
MM4	ANCHOR CABLE - SWAGE FITTING - STUD	ASTM F3125 GRADE A325 TYPE 1 OR SAE GRADE 5 OR ASTM A449 TYPE 1 HEAVY HEX HEAD	
		GALV. HOT DIP TO AASHTO M232 CLASS C / ASTM A153 CLASS C / ASTM F2329 OR GALV. MECHANICALLY TO AASHTO M298 CLASS 50, TYPE 1 / ASTM B695 CLASS 50, TYPE 1	
		UNC	
NN1	ANCHOR CABLE - NUT	ASTM A563 GRADE A	1" DIA.
		AASHTO M180 DOUBLE RECESSED HEAVY HEX HEAD	
		GALV. HOT DIP TO AASHTO M232 CLASS C / ASTM A153 CLASS C / ASTM F2329 OR GALV. MECHANICALLY TO AASHTO M298 CLASS 50, TYPE 1 / ASTM B695 CLASS 50, TYPE 1	
		OVER TAPPED NUTS OVER-SIZE AS SPECIFIED IN AASHTO 291 / ASTM A 563	
		UNC	
NN2	ANCHOR CABLE - NUT - WASHER	ASTM F436 TYPE 1 (HARDEN WASHER ONLY)	1" DIA.
		GALV. AASHTO M111 / ASTM A123 OR GALV. HOT DIP TO AASHTO M232 CLASS C / ASTM A153 CLASS C / ASTM F2329	

BILL OF MATERIALS - SHORT RADIUS BEAM GUARD (MGS)

PART	DESCRIPTION	MATERIALS SPECIFICATIONS	NOTES
PP1	BEARING PLATE AT POST	ASTM A36 MIN. STRENGTH 36 KSI, OR ASTM A529 MAX. STRENGTH 50 KSI, OR ASTM A572 MAX STRENGTH 50 KSI OR ASTM A709 MAX STRENGTH 50 KSI OR ASTM A992 MAX STRENGTH 50 KSI	
		GALV. AASHTO M111 / ASTM A123	
PP2	PIPE - STEEL	ASTM A53 GALVANIZED GRADE B SCHEDULE 40	2" DIA. x 6" LONG
QQ1	FOUNDATION TUBE	ASTM A500 GRADE B	8" X 6" X 3/16"
		GALV. AASHTO M111 / ASTM A123	
QQ2	SHORT RADIUS - FOUNDATION TUBE - ANCHOR CABLE - TUBE	ASTM A500 GRADE B	DIMENSIONS 2 1/2" X 2 1/4" X 1/4" X 8"
		GALV. AASHTO M111 / ASTM A123	
QQ3	SHORT RADIUS - SOIL TUBE - ANCHOR CABLE - TUBE - END PLATE	ASTM A36 MIN. STRENGTH 36 KSI, OR ASTM A529 MAX. STRENGTH 50 KSI, OR ASTM A572 MAX STRENGTH 50 KSI OR ASTM A709 MAX STRENGTH 50 KSI OR ASTM A992 MAX STRENGTH 50 KSI	DIMENSIONS 2 1/2" X 2 1/2" X 1/4"
		GALV. AASHTO M111 / ASTM A123	
QQ4	GROUND STRUT AND YOKE - BOLT	GALV. HOT DIP TO AASHTO M232 CLASS C / ASTM A153 CLASS C / ASTM F2329 OR GALV. MECHANICALLY TO AASHTO M298 CLASS 50, TYPE 1 / ASTM B695 CLASS 50, TYPE 1	5/8 DIA.
		ASTM A307 GRADE B HEAVY HEX HEAD OR SAE J429 GRADE 2 HEAVY HEX HEAD	
		UNC	
QQ5	GROUND PLATE AND YOKE - WASHER	ASTM F436 TYPE 1 (HARDEN WASHER ONLY)	5/8 DIA.
		GALV. AASHTO M111 / ASTM A123 OR GALV. HOT DIP TO AASHTO M232 CLASS C / ASTM A153 CLASS C / ASTM F2329	
QQ6	GROUND STRUT AND YOKE - NUT	HEAVY HEX	5/8 DIA.
		UNC	
		ASTM A563 GRADE A	
		OVER TAPPED NUTS AS SPECIFIED IN AASHTO 291 / ASTM A 563	
		GALV. HOT DIP TO AASHTO M232 CLASS C / ASTM A153 CLASS C / ASTM F2329 OR GALV. MECHANICALLY TO AASHTO M298 CLASS 50, TYPE 1 / ASTM B695 CLASS 50, TYPE 1	

PART	DESCRIPTION	MATERIALS SPECIFICATIONS	NOTES
SS1	SOIL PLATE	ASTM A36 MIN. STRENGTH 36 KSI, OR ASTM A529 MAX. STRENGTH 50 KSI, OR ASTM A572 MAX STRENGTH 50 KSI OR ASTM A709 MAX STRENGTH 50 KSI OR ASTM A992 MAX STRENGTH 50 KSI	
		GALV. AASHTO M111 / A123	
TT1	SOIL PLATE - BOLT	ASTM A307 GRADE B HEAVY HEX HEAD OR SAE J429 GRADE 2 HEAVY HEX HEAD	5/8 DIA.
		GALV. HOT DIP TO AASHTO M232 CLASS C / ASTM A153 CLASS C / ASTM F2329 OR GALV. MECHANICALLY TO AASHTO M298 CLASS 50, TYPE 1 / ASTM B695 CLASS 50, TYPE 1	
		UNC	
TT2	SOIL PLATE - WASHER	ASTM F436 TYPE 1 (HARDEN WASHER ONLY)	5/8 DIA.
		GALV. AASHTO M111 / ASTM A123 OR GALV. HOT DIP TO AASHTO M232 CLASS C / ASTM A153 CLASS C / ASTM F2329	
TT3	SOIL PLATE - NUT	GALV. HOT DIP TO AASHTO M232 CLASS C / ASTM A153 CLASS C / ASTM F2329 OR GALV. MECHANICALLY TO AASHTO M298 CLASS 50, TYPE 1 / ASTM B695 CLASS 50, TYPE 1	5/8 DIA.
UU1	OBJECT MARKER - SHEETING	MUTCD / WISDOT OBJECT MARKER TYPE 3	PATTERN AND COLOR FOR SHEETING. SHEETING TYPE FOR MARKER.
		WISDOT SPEC 637 TYPE F	
		APPROVED PRODUCT LIST	
UU2	OBJECT MARKER - ALUMINUM PLATE	WISDOT SPEC 637 ALUMINUM PLATE	MATERIAL AND THICKNESS OF MATERIALS
UU3	OBJECT MARKER - SCREWS	STAINLESS SELF-TAPPING SCREWS	
VV1	FOUNDATION BACKFILL	WISDOT SPEC 614	

6

SHORT RADIUS BEAM GUARD (MGS) SHORT RADIUS TERMINAL (MGS)

STATE OF WISCONSIN
DEPARTMENT OF TRANSPORTATION

APPROVED
May 2022 — DATE
/S/ Rodney Taylor — ROADWAY STANDARDS DEVE ENGINEER

FHWA

SDD 14B53 - 02i

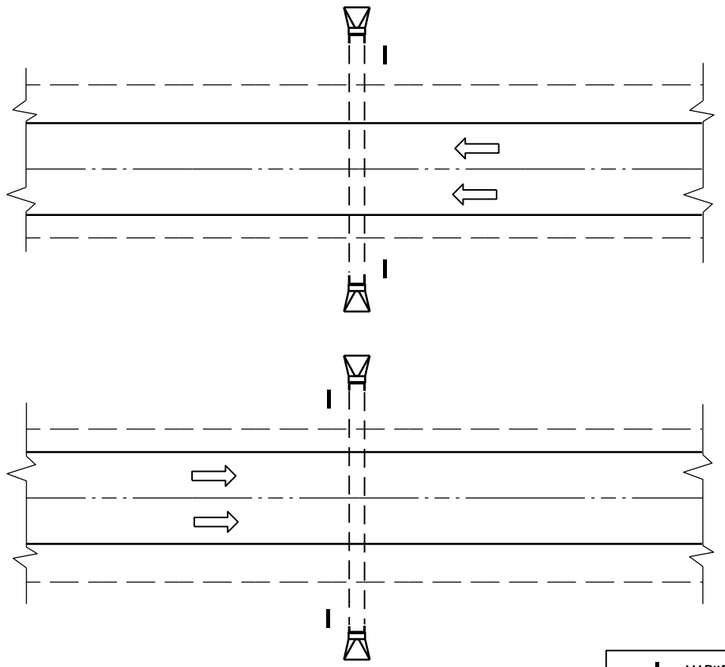

PLAN VIEW

DIVIDED HIGHWAY

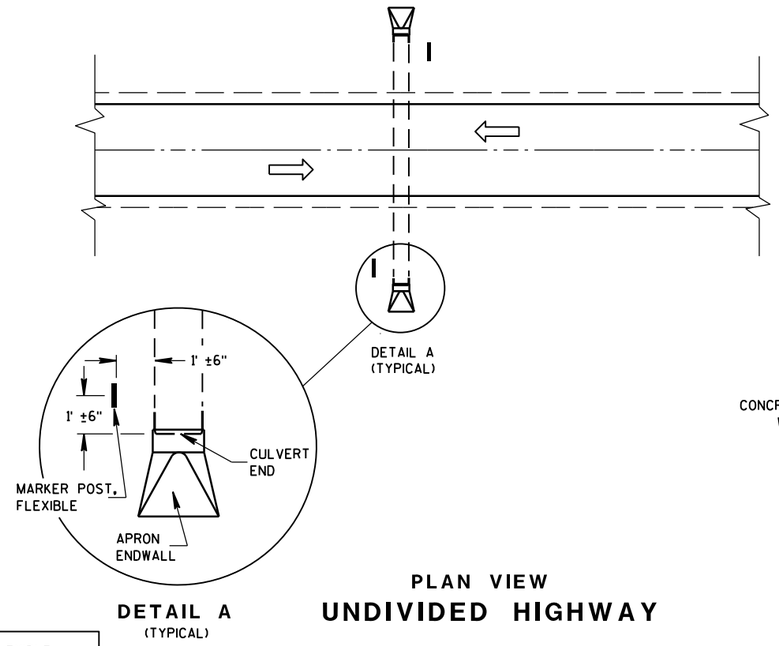

DETAIL A
(TYPICAL)

PLAN VIEW

UNDIVIDED HIGHWAY

MARKER POST, FLEXIBLE

DIRECTION OF TRAFFIC FLOW

GENERAL NOTES

DETAILS OF CONSTRUCTION, MATERIALS AND WORKMANSHIP NOT SHOWN ON THIS DRAWING SHALL CONFORM TO THE PERTINENT REQUIREMENTS OF THE STANDARD SPECIFICATIONS AND THE APPLICABLE SPECIAL PROVISIONS.

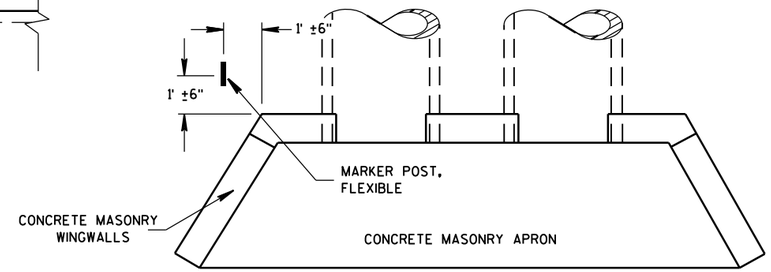

PLAN VIEW

CONCRETE MASONRY ENDWALLS FOR CULVERT PIPE AND PIPE ARCH

FLEXIBLE MARKER POST LOCATION

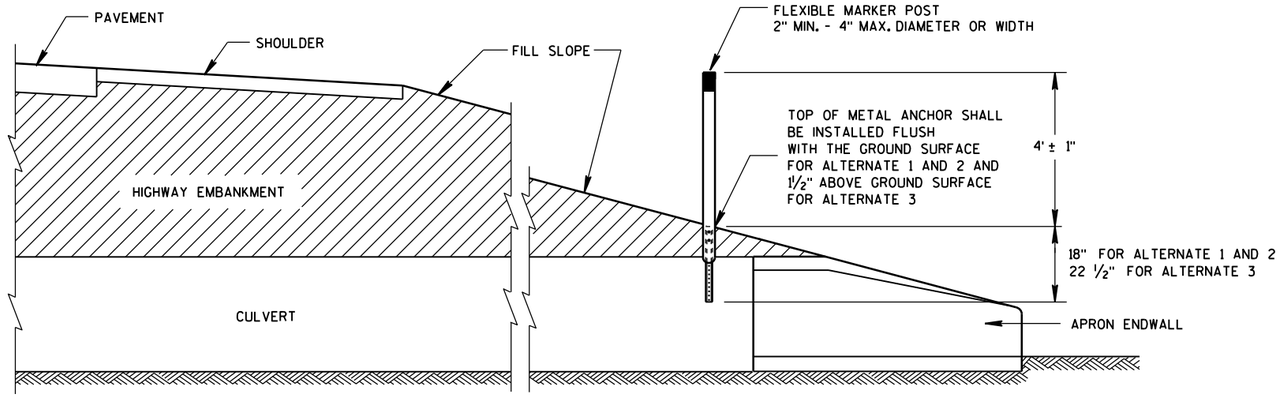

CROSS SECTION

FLEXIBLE MARKER POST

FLEXIBLE MARKER POST
FOR CULVERT END

STATE OF WISCONSIN
DEPARTMENT OF TRANSPOR

6

S.D.D. 15 A 3-2a

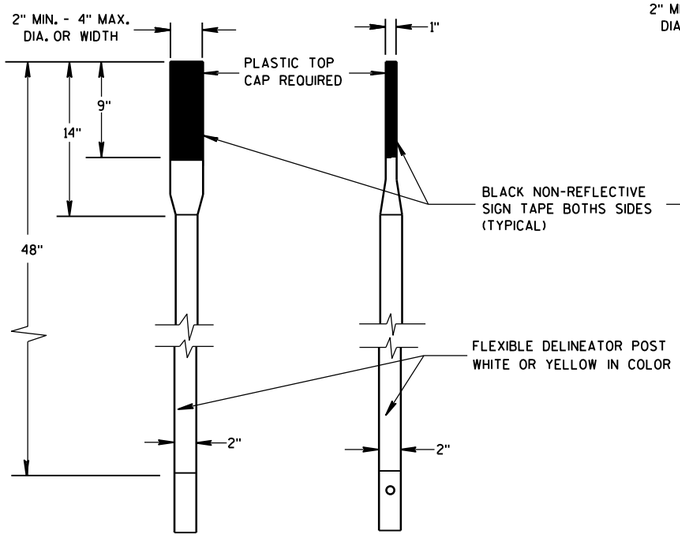

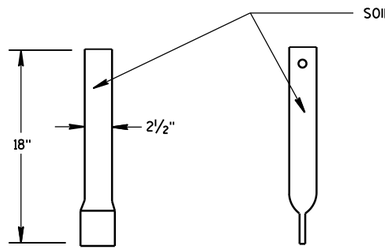

FRONT VIEW SIDE VIEW

ALTERNATE 1

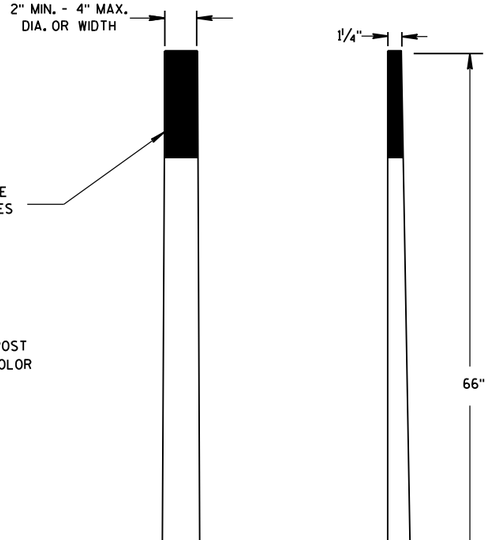

FRONT VIEW SIDE VIEW

ALTERNATE 2

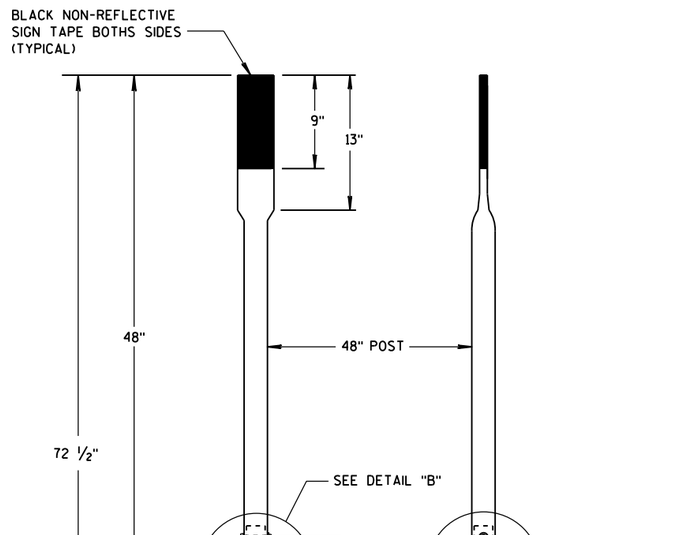

FRONT VIEW SIDE VIEW

ALTERNATE 3

FLEXIBLE MARKER POSTS

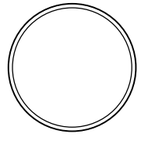

SECTION A-A

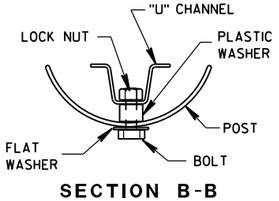

SECTION B-B

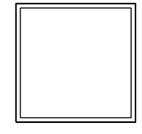

SECTION C-C

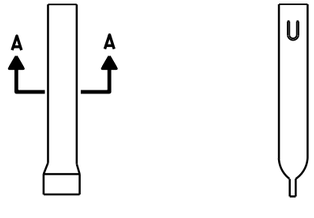

FRONT VIEW SIDE VIEW

ALTERNATE 1

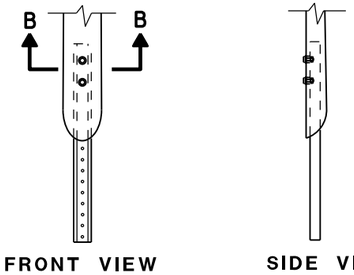

FRONT VIEW SIDE VIEW

ALTERNATE 2

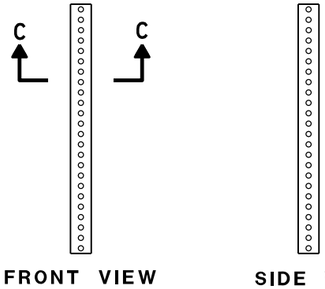

FRONT VIEW SIDE VIEW

ALTERNATE 3

FLEXIBLE MARKER POST ANCHORS

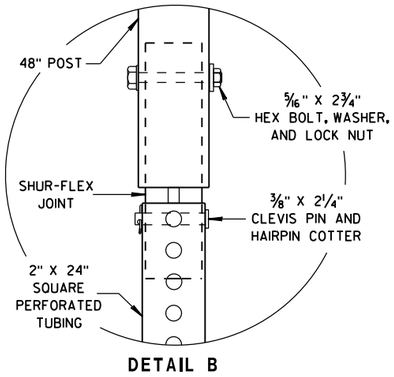

DETAIL B

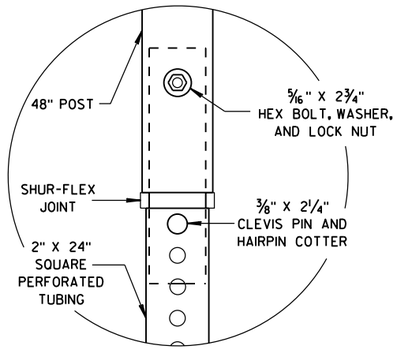

DETAIL C

FLEXIBLE MARKER POST
FOR CULVERT END

STATE OF WISCONSIN
DEPARTMENT OF TRANSPORTATION

APPROVED
10/1/2012 — DATE
/S/ Travis Feltes — STATE TRAFFIC ENGINEER
FHWA

6

S.D.D. 15 A 3-2b

6

S.D.D. 15 A 3-2b

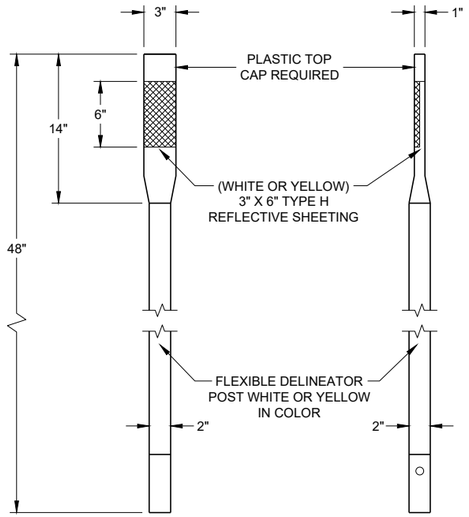

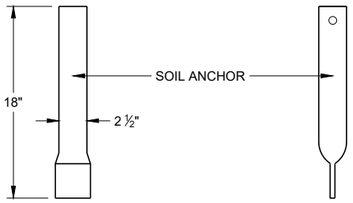

FRONT VIEW SIDE VIEW

ALTERNATE 1

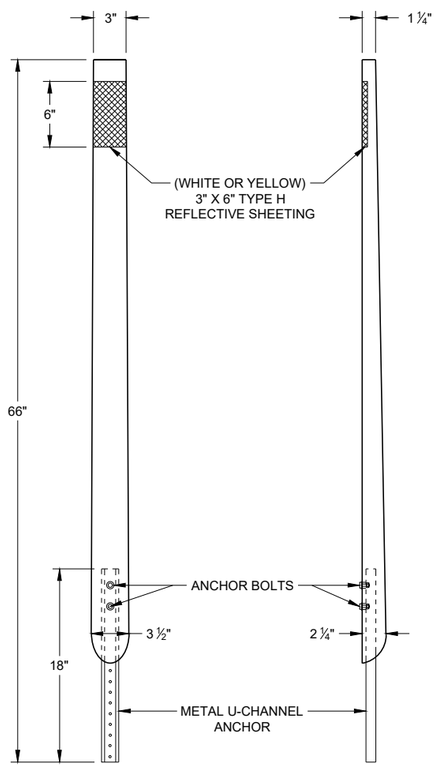

FRONT VIEW SIDE VIEW

ALTERNATE 2

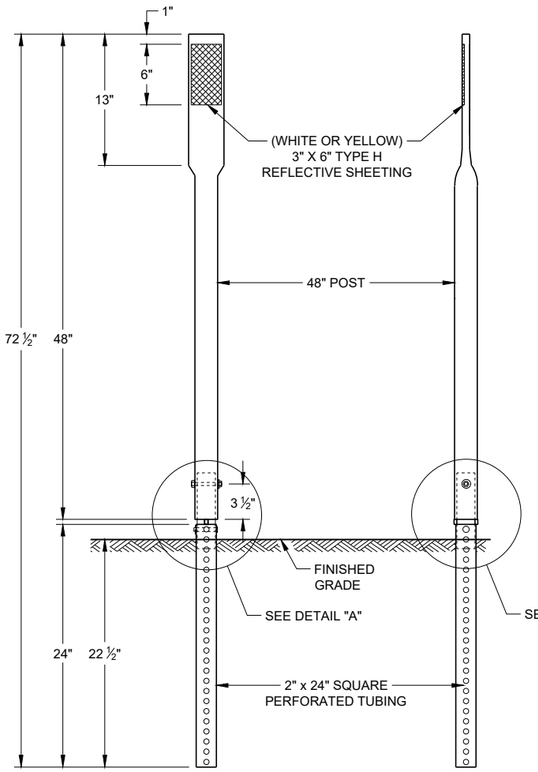

FRONT VIEW SIDE VIEW

ALTERNATE 3

FLEXIBLE DELINEATOR POSTS

GENERAL NOTES

DETAILS OF CONSTRUCTION NOT SHOWN ON THIS DRAWING SHALL CONFORM TO THE PERTINENT REQUIREMENTS OF THE STANDARD SPECIFICATIONS AND THE APPLICABLE SPECIAL PROVISIONS.

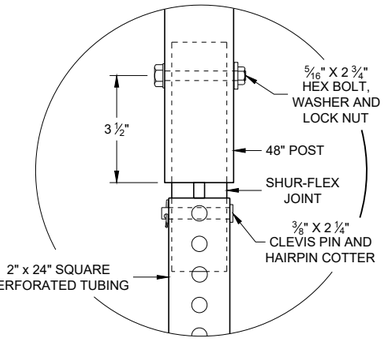

DETAIL A

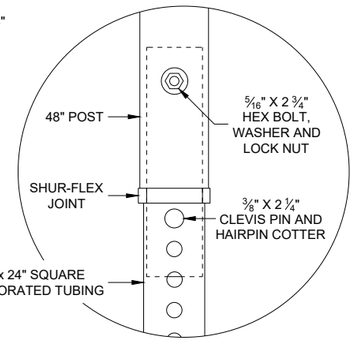

DETAIL B

REFLECTOR SPACING TABLE

REFLECTOR SPACING	LOCATION
* 100' C-C	RAMPS
400' C-C	MAINLINE

* START AT BEGINNING OF RAMP TAPER AND END AT END OF RAMP TAPER

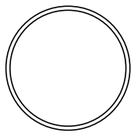

SECTION A - A

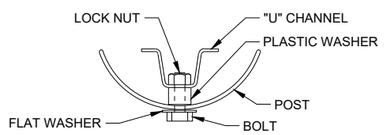

SECTION B - B

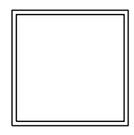

SECTION C - C

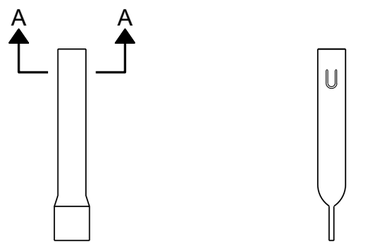

FRONT VIEW SIDE VIEW

ALTERNATE 1

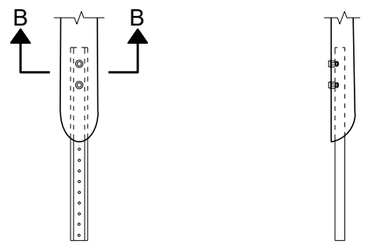

FRONT VIEW SIDE VIEW

ALTERNATE 2

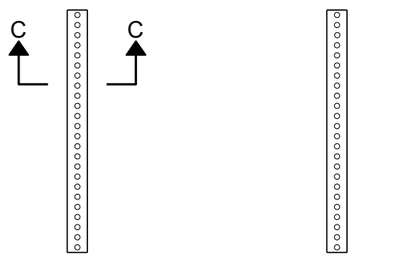

FRONT VIEW SIDE VIEW

ALTERNATE 3

FLEXIBLE MARKER POST ANCHORS

FLEXIBLE DELINEATOR POST

STATE OF WISCONSIN
DEPARTMENT OF TRANSPORTATION

APPROVED
November 2021
DATE

/S/ Matthew Rauch
STATE SIGNING AND MAF ENGINEER

FHWA

6

SDD 15A04 - 07a

SDD 15A04 - 07a

NOTE: PULL OR STRETCHER POST ASSEMBLIES SHALL BE PLACED MIDWAY BETWEEN END POSTS AND CORNER POSTS WHERE A RUN OF FENCE EXCEEDS 660' BUT IS LESS THAN 1,320'. FOR RUNS OF FENCE IN EXCESS OF 1,320' MAXIMUM SPACING OF PULL OR STRETCHER POST ASSEMBLIES SHALL BE 660'± C-C.

ILLUSTRATION SHOWS POSITION OF STANDARD STEEL BRACE, DOUBLE STRAND GALVANIZED WIRE, AND THE POST TO BE EMBEDDED IN CONCRETE WHEN WIRE FENCE IS INSTALLED FROM LEFT TO RIGHT. THE BRACES SHALL BE POSITIONED ON THE OPPOSITE DIAGONALS AND THE OPPOSITE POST SHALL BE EMBEDDED IN CONCRETE WHEN WIRE FENCE IS INSTALLED FROM RIGHT TO LEFT.

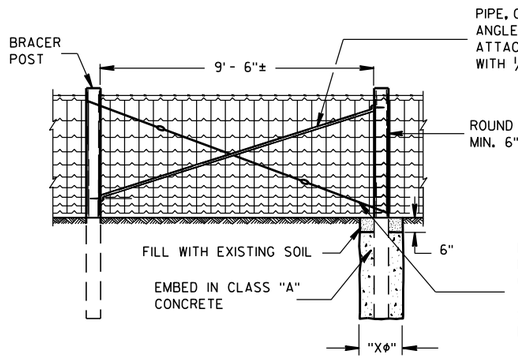

PULL OR STRETCHER POSTS ASSEMBLY

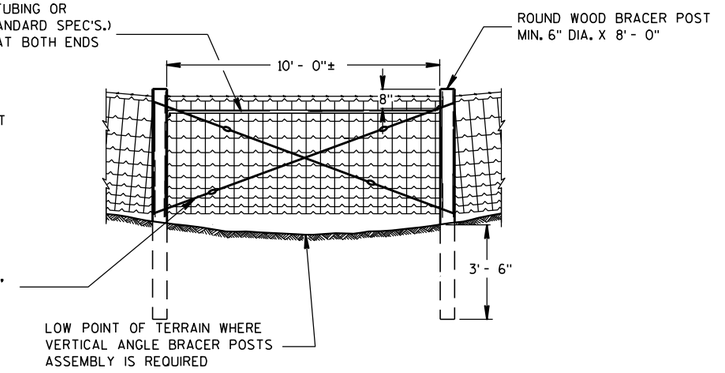

VERTICAL ANGLE BRACER POSTS ASSEMBLY

GENERAL NOTES

"XΦ" = DIAMETER OF THE POST PLUS 12".

FENCE STAPLES SHOULD NEVER BE DRIVEN VERTICALLY INTO WOOD POSTS (WITH BOTH LEGS PARALLEL WITH THE WOOD GRAIN). DOING SO CAN SEPARATE THE GRAIN AND SIGNIFICANTLY REDUCE THE HOLDING POWER. ROTATING THE STAPLES SLIGHTLY OFF VERTICAL STRADDLES THE GRAIN AND PROVIDES MORE RESISTANCE TO PULL-OUT.

DO NOT STAPLE WIRE TIGHT TO THE LINE POSTS. ALLOW MOVEMENT OF WIRE FOR EXPANSION AND CONTRACTION. STAPLE ARRANGEMENT SHALL BE THE SAME FOR ALL OTHER POSTS EXCEPT THAT THEY SHALL BE DRIVEN TIGHT TO POSTS. ALL STAPLES SHALL BE 2" X 9 GAGE AND SHALL BE MANUFACTURED FROM GALVANIZED WIRE OR HOT DIP GALVANIZED AFTER FORMING. STAPLES SHALL HAVE SLASH-CUT POINTS.

FENCE SHALL BE LOCATED 3'-0" INSIDE THE RIGHT OF WAY LINE UNLESS OTHERWISE INDICATED ON THE PLANS.

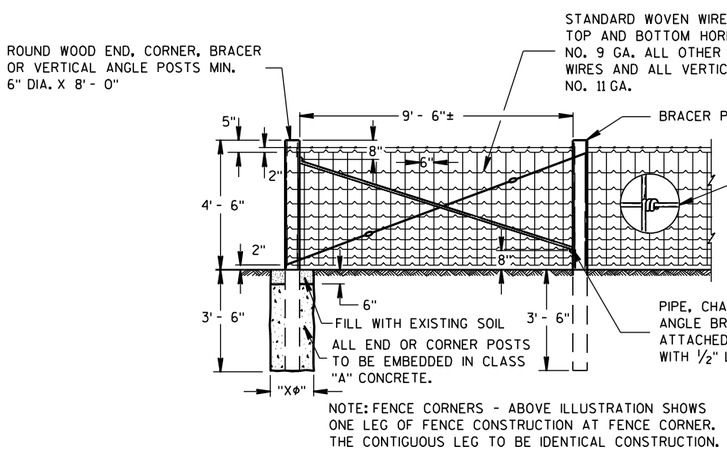

NOTE: FENCE CORNERS - ABOVE ILLUSTRATION SHOWS ONE LEG OF FENCE CONSTRUCTION AT FENCE CORNER. THE CONTIGUOUS LEG TO BE IDENTICAL CONSTRUCTION.

END OR CORNER POSTS ASSEMBLY

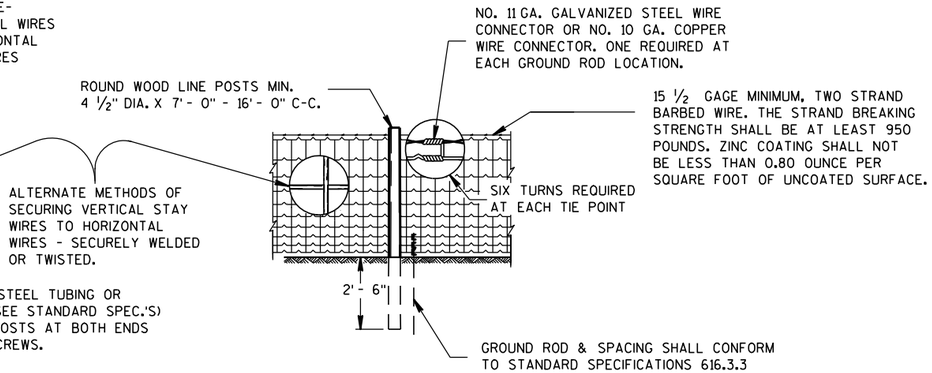

LINE FENCE CONSTRUCTION

GENERAL ROADSIDE VIEW OF WOVEN WIRE FENCE

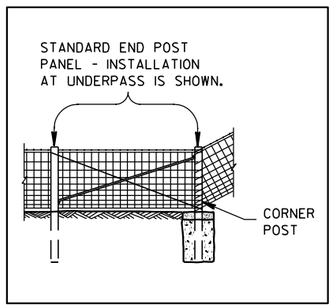

ALTERNATE FENCE DESIGN AT STRUCTURE

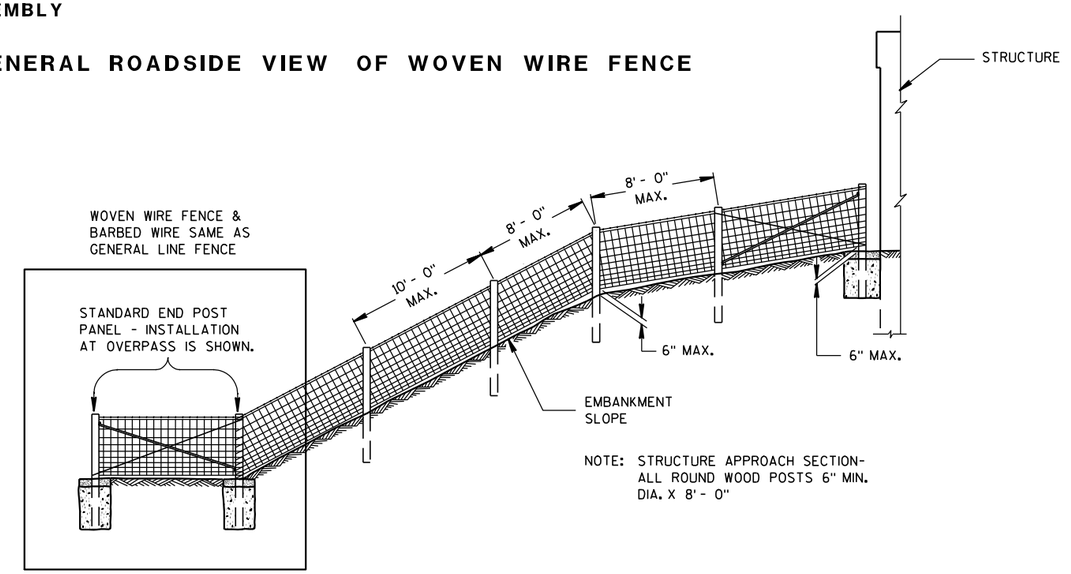

NOTE: STRUCTURE APPROACH SECTION- ALL ROUND WOOD POSTS 6" MIN. DIA. X 8' - 0"

FENCE DESIGN AT STRUCTURE APPROACH

FENCE WOVEN WIRE

STATE OF WISCONSIN
DEPARTMENT OF TRANSPORTATION

6

S.D.D. 15 B 1-8a

NOTE: TREE IN NORMAL FENCE LINE SPECIFICALLY ORDERED BY ENGINEER TO REMAIN IN PLACE.

2" X 6" DOUGLAS FIR OR SO. YELLOW PINE PLACED BETWEEN TREE AND WOVEN WIRE FENCE. WOVEN WIRE FENCE AND BARBED WIRE TO BE STAPLED TO 2" X 6" LIKE AS TO LINE POST. 2" X 6" NOT FASTENED TO TREE.

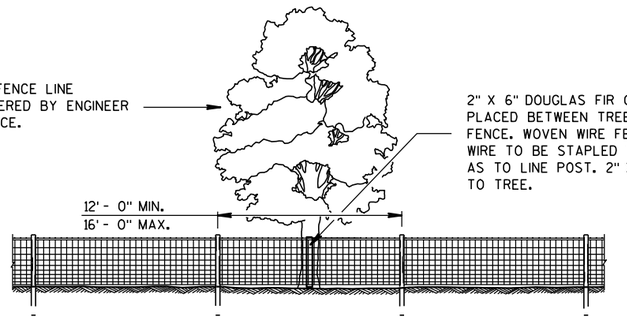

ROADSIDE ELEVATION (LOOKING TOWARDS ROADWAY)

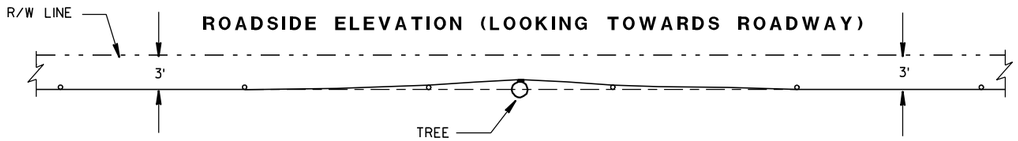

PLAN VIEW

FENCE DESIGN AT TREES REMAINING IN NORMAL FENCE LINE

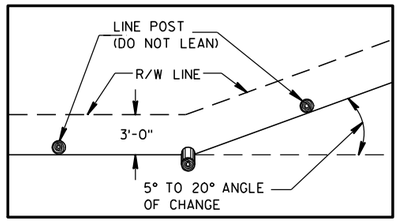

PLAN VIEW
SINGLE POST CORNER

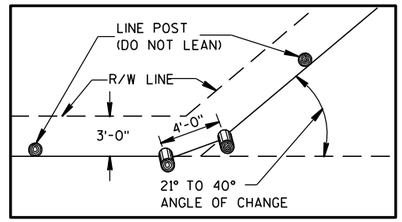

PLAN VIEW
DOUBLE POST CORNER

RIGHT OF WAY LINE CHANGE 40° AND LESS

NOTE: SINGLE AND DOUBLE POSTS SHALL BE A MIN. 6" DIA. X 8'-0" WITH A LEAN OF 4" TOWARD THE OUTSIDE OF THE CURVE.

WHEN THE RIGHT OF WAY LINE CHANGE IS MORE THAN 40° USE THE CORNER OR STRETCHER POSTS ASSEMBLY.

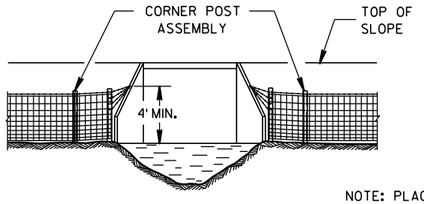

NOTE: PLACE A MINIMUM OF 4 STRANDS OF BARBED WIRE, 6" MAXIMUM CENTERS IN FAN SHAPE CONNECTED TO AN EYE BOLT ON WINGWALL OR SET A LONE POST WHEN NECESSARY TO CONNECT BARBED WIRE.

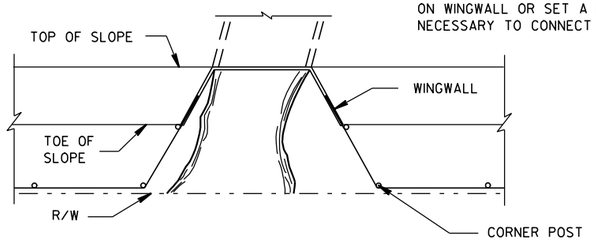

FENCE INSTALLATION TO WINGWALLS

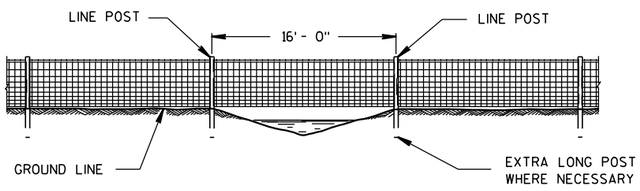

FENCE CONSTRUCTION OVER STREAM COURSES OF 15 FT. OR LESS IN WIDTH

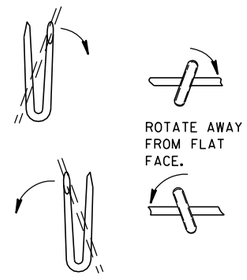

LINE POST

NOTE: WHEN POSTS ARE DRIVEN THE SMALL END SHALL BE DOWN.

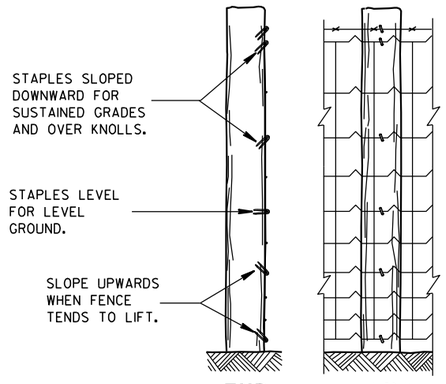

END ELEVATION — FARM SIDE ELEVATION

FENCE MOUNTING DETAIL

NOTE: △ NOT LESS THAN 45°

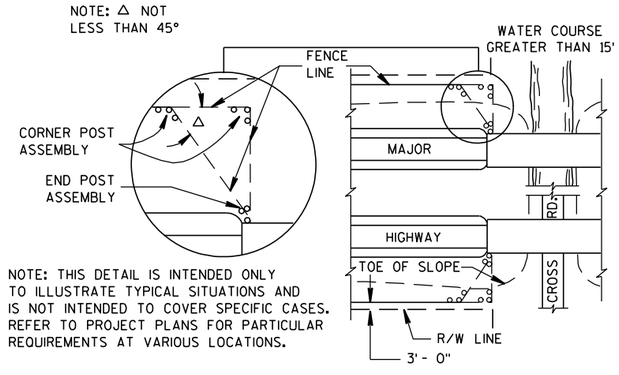

NOTE: THIS DETAIL IS INTENDED ONLY TO ILLUSTRATE TYPICAL SITUATIONS AND IS NOT INTENDED TO COVER SPECIFIC CASES. REFER TO PROJECT PLANS FOR PARTICULAR REQUIREMENTS AT VARIOUS LOCATIONS.

PLAN VIEW
MAJOR HIGHWAY OVERPASS OR STREAM COURSE CROSSING OF GREATER THAN 15 FT. IN WIDTH

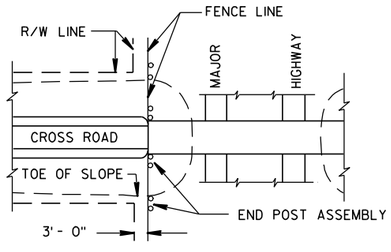

PLAN VIEW
MAJOR HIGHWAY UNDERPASS

FENCE LOCATION AT STRUCTURES

FENCE WOVEN WIRE

STATE OF WISCONSIN
DEPARTMENT OF TRANSPORTATION

APPROVED
4/4/2008
DATE
/S/ Jerry H. Zogg
ROADWAY STANDARDS DEVELOPMENT ENGINEER
FHWA

6
S.D.D. 15 B 1-8b

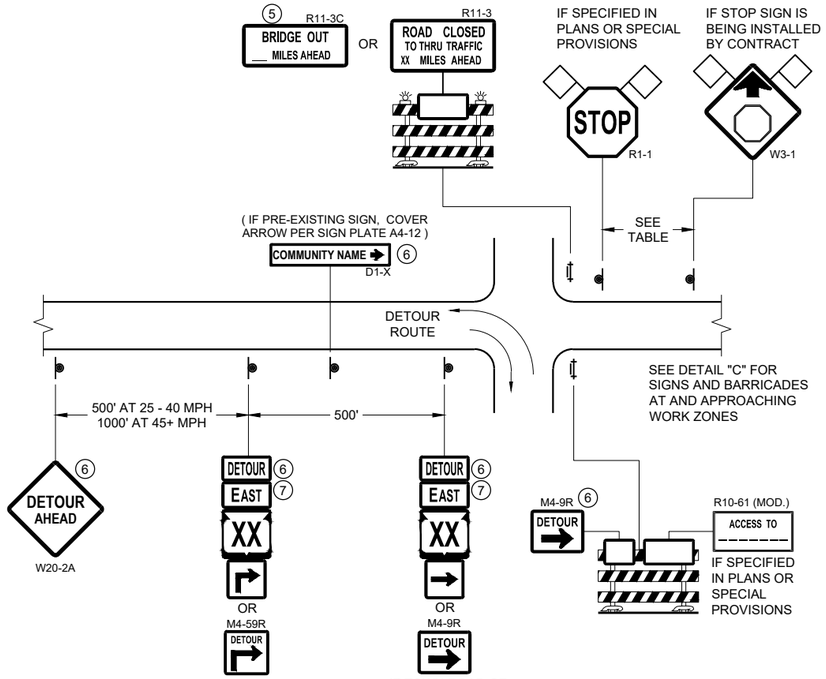

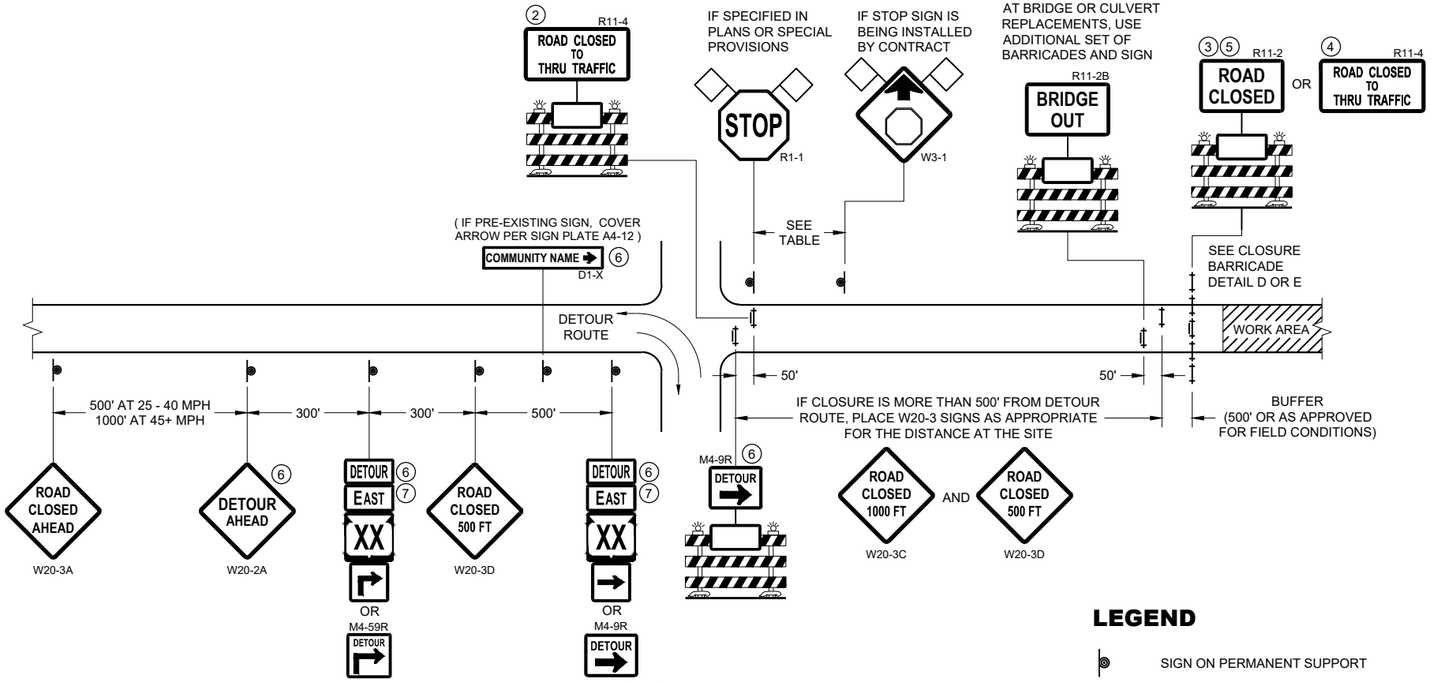

DETAIL A
MAINLINE CLOSURE WITH POSTED DETOUR

WORK ZONE GREATER THAN OR EQUAL TO ½ MILE FROM DETOUR ROUTE (1000 FEET IF URBAN)

DETAIL B
MAINLINE CLOSURE WITH POSTED DETOUR

WORK ZONE LESS THAN ½ MILE FROM DETOUR ROUTE (1000 FEET IF URBAN)

LEGEND

- SIGN ON PERMANENT SUPPORT
- TYPE III BARRICADE
- TYPE III BARRICADE WITH ATTACHED SIGN
- TYPE "A" WARNING LIGHT (FLASHING)
- WORK AREA
- FLAGS, 16" X 16" MIN. (ORANGE)

DETOUR M4 - 8

EAST M3 - X

XX M1 - 4 OR XX M1 - 6 OR COUNTY X M1 - 5A

M05 - 1 OR M06 - 1

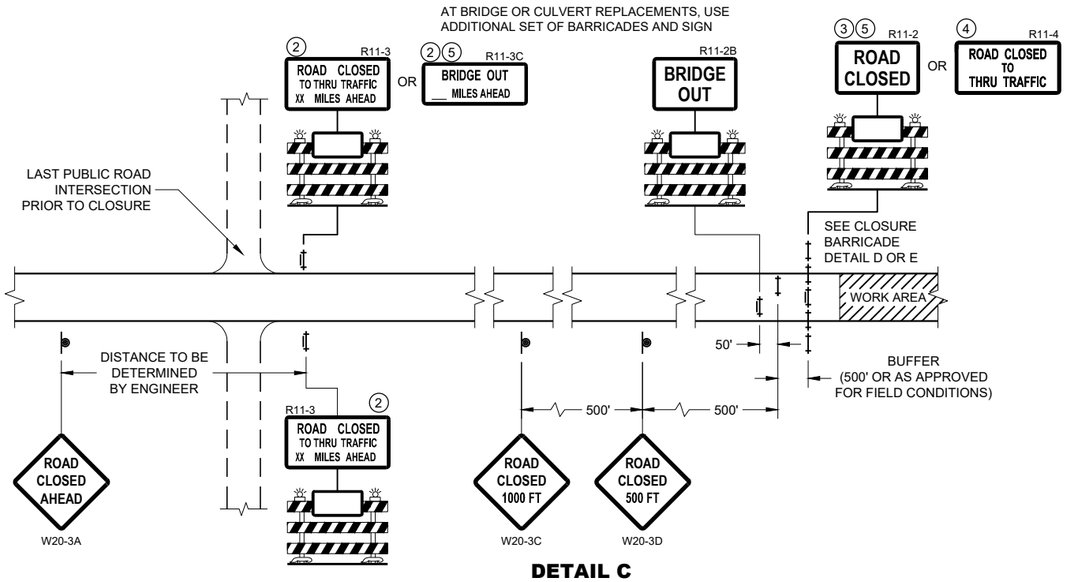

DETAIL C
MAINLINE CLOSURE, NO POSTED DETOUR

SPEED LIMIT (MPH)	"STOP AHEAD" ADVANCE WARNING DISTANCE (FT)
25	200
30	200
35	350
40	350
45	500
50	550
55	750

SEE SDD 15C2-SHEET "b" FOR GENERAL NOTES AND FOOTNOTES ① THROUGH ⑦

BARRICADES AND SIGNS FOR MAINLINE CLOSURES

STATE OF WISCONSIN
DEPARTMENT OF TRANSPORTATION

APPROVED
February 2020
DATE

/S/ Andrew Heidtke
WORK ZONE ENGINEER

508

FHWA

6

SDD 15C02 - 08a

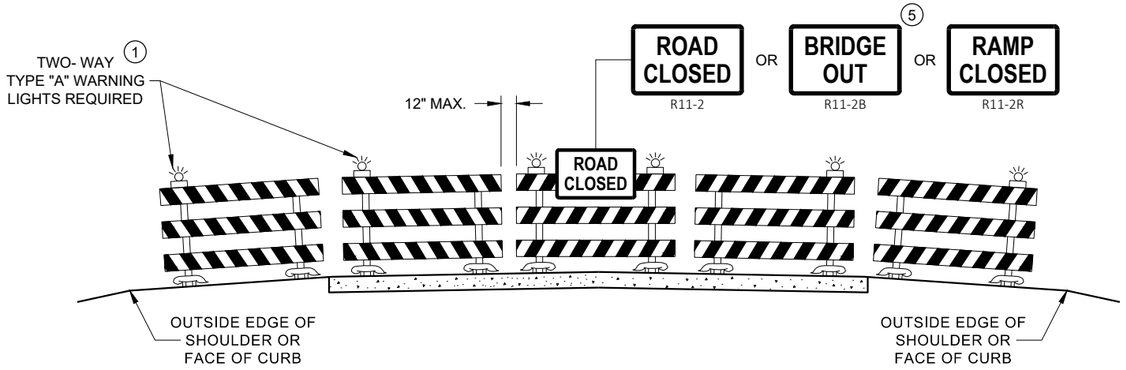

DETAIL D
ROAD CLOSURE BARRICADE DETAIL
APPROACH VIEW

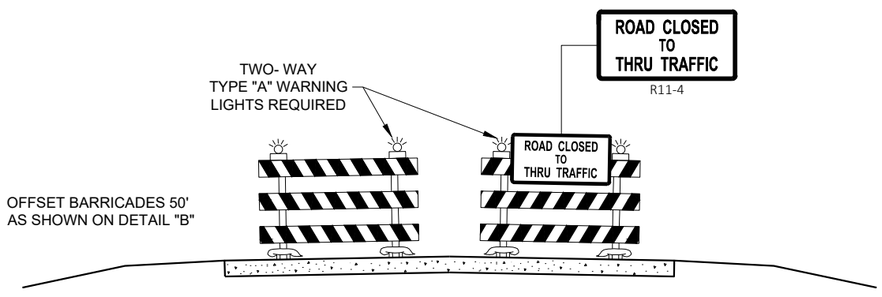

DETAIL E
LANE CLOSURE BARRICADE DETAIL
APPROACH VIEW

SEE SDD 15C2 - SHEET "a" FOR LEGEND

GENERAL NOTES

THE EXACT NUMBER, LOCATION, AND SPACING OF ALL SIGNS AND BARRICADES SHALL BE ADJUSTED TO FIT FIELD CONDITIONS AS APPROVED BY THE ENGINEER.

ANY SIGNS TEMPORARY OR EXISTING, WHICH CONFLICT WITH TRAFFIC CONTROL "IN USE", SHALL BE REMOVED OR COVERED AS NEEDED AND AS APPROVED BY THE ENGINEER.

THE SPACING BETWEEN TRAFFIC CONTROL SIGNS SHOULD BE ADJUSTED TO NOT CONFLICT WITH AND SHOULD PROVIDE A DESIRABLE MINIMUM OF 200 FEET CLEARANCE TO EXISTING SIGNS THAT WILL REMAIN IN PLACE.

BARRICADES THAT MUST BE MOVED FOR A WORK OPERATION SHALL BE IMMEDIATELY RE-ESTABLISHED UPON COMPLETION OF THE OPERATION, OR FOR CONTINUING OPERATIONS, AT THE END OF EACH WORKING DAY.

SIGNS THAT WILL BE IN PLACE LESS THAN 7 CONTINUOUS DAYS AND NIGHTS MAY BE MOUNTED ON PORTABLE SUPPORTS.

ALL TYPE III BARRICADES SHALL HAVE RAILS REFLECTORIZED ON BOTH FACES. STRIPES SHALL BE PROPERLY SLOPED DOWN TOWARD THE TRAFFIC SIDE OR AS SHOWN IN THE ROAD CLOSURE BARRICADE DETAIL "D" FOR FULL ROAD CLOSURES.

TYPE "A" LOW - INTENSITY FLASHING WARNING LIGHTS SHALL BE VISIBLE ON BOTH SIDES OF THE BARRICADE.

THE R11 - 2, R11 - 3, M4 - 9, R11 - 4, AND R10 - 61 SIGNS PLACED ON THE BARRICADES SHALL COVER NO MORE THAN THE TOP RAIL. THE SIGNS SHALL NOT COVER ANY PORTION OF THE MIDDLE RAIL OR BOTTOM RAILS.

"WO" AND "MO" SIGNS ARE THE SAME AS "W" AND "M" SIGNS EXCEPT THE BACKGROUND IS ORANGE.

ALL SIGNS SHALL BE 48" X 48" UNLESS OTHERWISE NOTED BELOW:
- R11 - 2 SHALL BE 48" X 30"
- R11 - 3 SHALL, R11 - 4 AND R10 - 61 SHALL BE 60 " X 30"
- M4 - 9 SHALL BE 30" X 24"
- M3 - X SHALL BE 24" X 12" (36" X 18" IF NEEDED TO MATCH EXISTING SIGNS)
- M4 - 8 SHALL BE 24" X 12" (36" X 18" IF NEEDED TO MATCH EXISTING SIGNS)
- M1 - 4, M1 - 5A AND M1 - 6 SHALL BE 24" X 24" (36" X 36" IF NEEDED TO MATCH EXISTING SIGNS)
- MO5 - 1 AND MO6 - 1 SHALL BE 21" X 21" (30" X 30" IF NEEDED TO MATCH EXISTING SIGNS)
- D1 - X SHALL BE AS SHOWN ON SPECIFIC PROJECT SIGNING DETAIL SHEETS.
- R1 - 1 SHALL BE 36" X 36"

(1) TWO WARNING LIGHTS SHALL BE PROVIDED ON THE CENTER BARRICADE AND A MINIMUM OF ONE WARNING LIGHT SHALL BE PROVIDED ON EACH OF THE OTHER BARRICADES WITHIN THE ROADWAY LIMITS. SPACING OF THE WARNING LIGHTS SHALL BE UNIFORM TO THE EDGE OF ROADWAY AS SHOWN (APPROX. 8 FOOT LIGHT SPACING.

(2) THESE SIGNS AND BARRICADES ARE NOT REQUIRED IF ROAD CLOSURE BEGINS AT AN INTERSECTION.

(3) FOR ROAD CLOSURE WITHOUT LOCAL ACCESS TO PROJECT, SEE ROAD CLOSURE BARRICADE DETAIL "D".

(4) FOR ROAD CLOSURE WITH LOCAL ACCESS TO PROJECT, SEE ROAD CLOSURE BARRICADE DETAIL "E".

(5) FOR BRIDGE OR CULVERT REPLACEMENTS, SUBSTITUTE "BRIDGE OUT" INSTEAD OF "ROAD CLOSED" ON R11 - 2 AND R11 - 3 SIGNS.

(6) INSTALL DETOUR AND COMMUNITY GUIDE SIGNS AND ARROWS ONLY IF SPECIFIED IN THE CONTRACT. IF THERE ARE EXISTING ROUTE MARKER ASSEMBLIES THAT WILL REMAIN IN PLACE, ADJUST THE LOCATION OF THE DETOUR ROUTE SIGNS TO CORRESPOND WITH THE EXISTING ASSEMBLIES. MODIFY EXISTING SIGNS WHERE POSSIBLE. SEE SPECIFIC PROJECT DETOUR SIGNING DETAIL SHEETS. IF DETOUR SIGNS ARE BEING INSTALLED BY OTHERS, PLACE THE CONTRACTED TRAFFIC CONTROL SIGNS TO ALLOW FOR PLACEMENT OF ALL WARNING, DETOUR AND GUIDE SIGNS AS SHOWN.

(7) "EAST" CARDINAL DIRECTION MARKERS AND RIGHT TURN ARROWS ARE SHOWN. USE OTHER CARDINAL DIRECTIONS AND ARROWS AS APPROPRIATE.

BARRICADES AND SIGNS FOR VARIOUS CLOSURES

STATE OF WISCONSIN
DEPARTMENT OF TRANSPORTATION

APPROVED
February 2020
DATE
/S/ Andrew Heidtke
WORK ZONE ENGINEE
FHWA

6

SDD 15C02 - 08b

6

SDD 15C02 - 08b

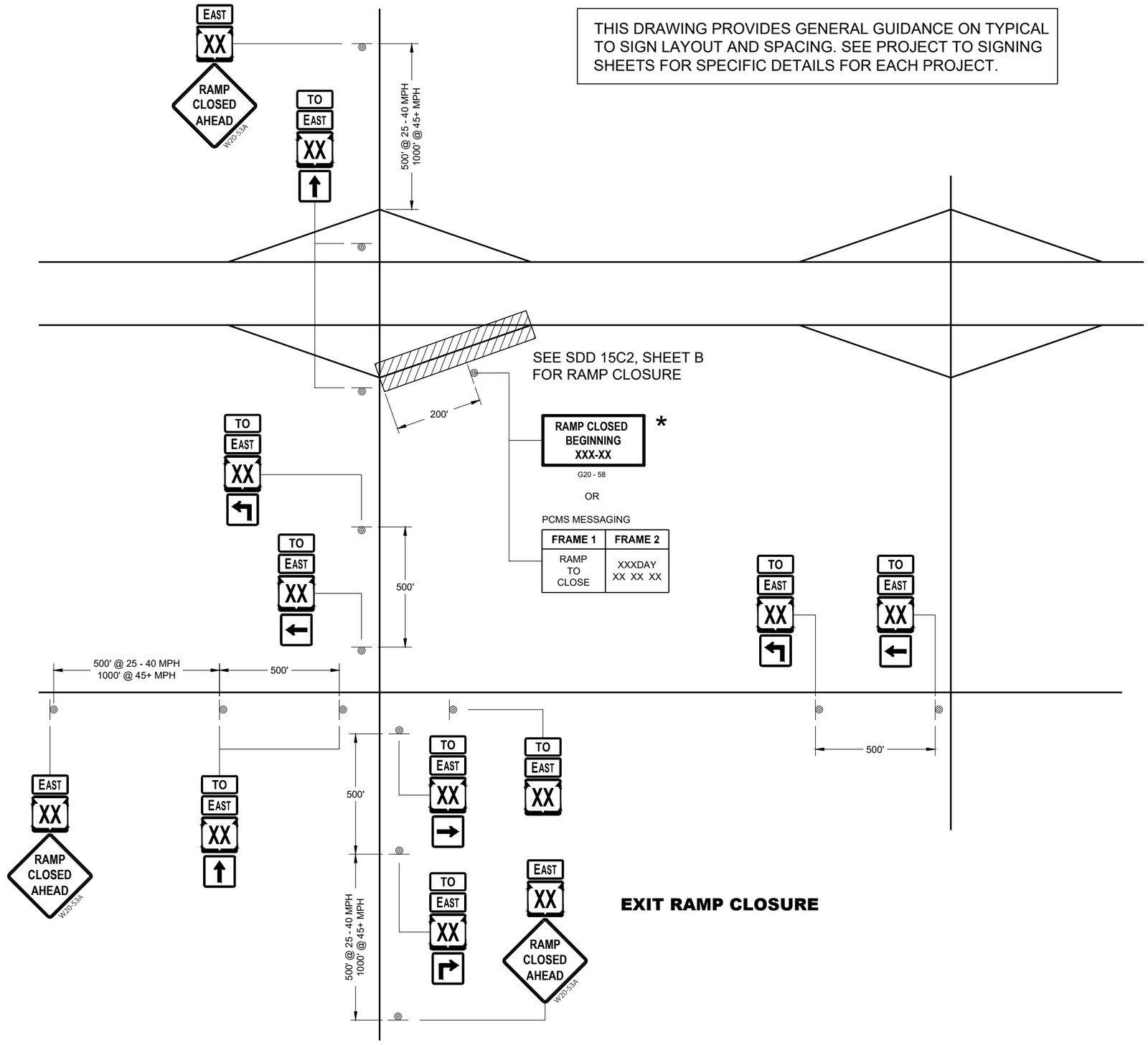

THIS DRAWING PROVIDES GENERAL GUIDANCE ON TYPICAL TO SIGN LAYOUT AND SPACING. SEE PROJECT TO SIGNING SHEETS FOR SPECIFIC DETAILS FOR EACH PROJECT.

LEGEND

SIGN ON PERMANENT SUPPORT

TO EAST — MO4 - 5, M3 - X

XX M1 - 6 OR XX M1 - 4 OR INTERSTATE XX M1 - 1

M05 - 1 OR M06 - 1 OR M06 - 1

GENERAL NOTES

THE EXACT NUMBER, LOCATION AND SPACING OF ALL SIGNS SHALL BE ADJUSTED TO FIT FIELD CONDITIONS AS APPROVED BY THE ENGINEER.

IF THERE ARE ANY ROUTE MARKER ASSEMBLIES THAT WILL REMAIN IN PLACE, ADJUST THE LOCATION OF THE TO ROUTE SIGNS TO CORRESPOND WITH THE EXISTING ASSEMBLIES. SEE SPECIFIC PROJECT TO SIGNING DETAIL SHEETS. MODIFY EXISTING SIGNS WHERE POSSIBLE.

THE SPACING BETWEEN TRAFFIC CONTROL AND TO SIGNS SHOULD BE ADJUSTED TO NOT CONFLICT WITH AND TO PROVIDE A DESIRABLE MINIMUM OF 200 FEET CLEARANCE TO EXISTING SIGNS THAT WILL REMAIN IN PLACE.

ANY SIGNS TEMPORARY OR EXISTING, WHICH CONFLICT WITH TRAFFIC CONTROL " IN USE" SHALL BE REMOVED OR COVERED AS NEEDED AND AS APPROVED BY THE ENGINEER.

SIGNS THAT SHALL BE IN PLACE LESS THAN 7 CONTINUOUS DAYS AND NIGHTS MAY BE MOUNTED ON PORTABLE SUPPORTS.

"MO" SIGNS ARE THE SAME AS "M" SIGNS EXCEPT THE BACKGROUND IS ORANGE.

SIGN SIZES SHALL BE AS FOLLOW:
- M3 - X SHALL BE 24" X 12". (36" X 18" IF NEEDED TO MATCH EXISTING SIGNS).
- MO4 - 5 SHALL BE 24" X 12". (36" X 18" IF NEEDED TO MATCH EXISTING SIGNS).
- M1 - 1, M1 - 4, AND M1 - 6 SHALL BE 24" X 24" (36" X 36" IF NEEDED TO MATCH EXISTING SIGNS).
- MO5 - 1, MO5 - 2, AND MO6 - 1, SHALL BE 21" X 21". (30" X 30" IF NEEDED TO MATCH EXISTING SIGNS).
- W20 - 53A SHALL BE 48" X 48"

* PLACE "RAMP CLOSED BEGINNING" SIGN 7 CALENDAR DAYS PRIOR TO CLOSURE OR AS DIRECTED BY THE ENGINEER. SEE WISCONSIN STANDARD SIGN PLATES FOR LAYOUT.

EXIT RAMP CLOSURE

ON RAMP LANE CLOSURE

STATE OF WISCONSIN
DEPARTMENT OF TRANSPORTATION

APPROVED
February 2020 — DATE
/S/ Andrew Heidtke — WORK ZONE ENGINEER
FHWA

6

SDD 15C02 - 08d

THIS DRAWING PROVIDES GENERAL GUIDANCE ON TYPICAL "TO" MO-4 SIGN LAYOUT AND SPACING. SEE PROJECT TO SIGNING SHEETS FOR SPECIFIC DETAILS FOR EACH PROJECT.

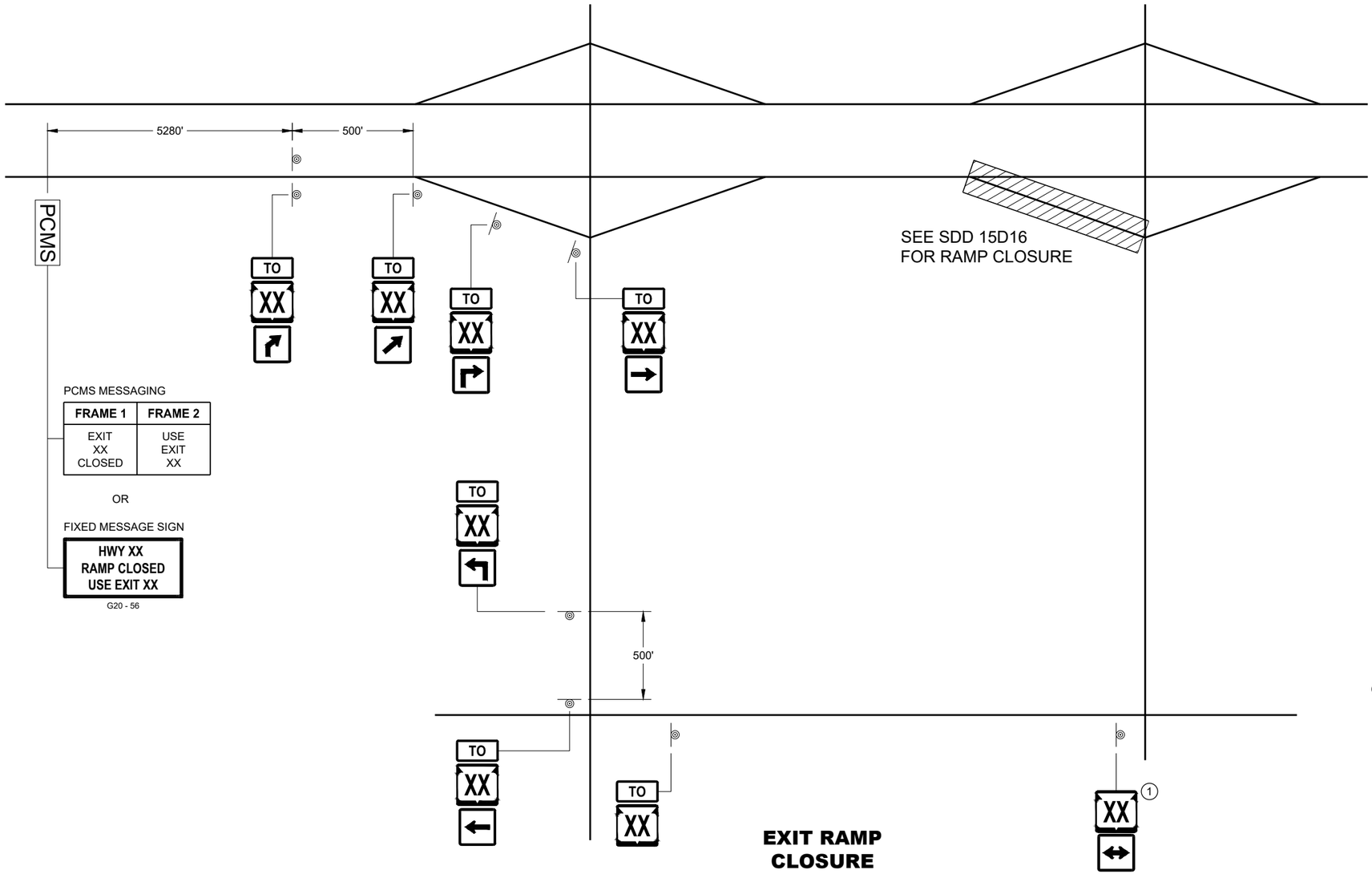

PCMS MESSAGING

FRAME 1	FRAME 2
EXIT XX CLOSED	USE EXIT XX

OR

FIXED MESSAGE SIGN

HWY XX
RAMP CLOSED
USE EXIT XX

G20 - 56

EXIT RAMP CLOSURE

LEGEND

SIGN ON PERMANENT SUPPORT

PCMS PORTABLE CHANGEABLE MESSAGE SIGN

TO MO4 - 5

XX M1 - 4 OR XX M1 - 6 OR COUNTY X M1 - 5A

M05 - 1 OR M05 - 2 OR M06 - 1 OR M06 - 2 OR M06 - 4

GENERAL NOTES

SEE SDD 15D16 "TRAFFIC CONTROL, EXIT RAMP CLOSURE" DETAIL FOR TRAFFIC CONTROL AT EXIT RAMP CLOSURE.

THE EXACT NUMBER, LOCATION AND SPACING OF ALL SIGNS SHALL BE ADJUSTED TO FIT FIELD CONDITIONS AS APPROVED BY THE ENGINEER.

IF THERE ARE ANY ROUTE MARKER ASSEMBLIES THAT WILL REMAIN IN PLACE, ADJUST THE LOCATION OF THE "TO" MO-4 ROUTE SIGNS TO CORRESPOND WITH THE EXISTING ASSEMBLIES. SEE SPECIFIC PROJECT TO SIGNING DETAIL SHEETS. MODIFY EXISTING SIGNS WHERE POSSIBLE.

THE SPACING BETWEEN TRAFFIC CONTROL AND "TO" MO-4 SIGNS SHOULD BE ADJUSTED TO NOT CONFLICT WITH AND TO PROVIDE A DESIRABLE MINIMUM OF 200 FEET CLEARANCE TO EXISTING SIGNS THAT WILL REMAIN IN PLACE.

ANY SIGNS TEMPORARY OR EXISTING, WHICH CONFLICT WITH TRAFFIC CONTROL " IN USE" SHALL BE REMOVED OR COVERED AS NEEDED AND AS APPROVED BY THE ENGINEER.

SIGNS THAT SHALL BE IN PLACE LESS THAN 7 CONTINUOUS DAYS AND NIGHTS MAY BE MOUNTED ON PORTABLE SUPPORTS.

"MO" SIGNS ARE THE SAME AS "M" SIGNS EXCEPT THE BACKGROUND IS ORANGE.

SIGN SIZES SHALL BE AS FOLLOW:
- MO4 - 5 SHALL BE 24" X 12". (36" X 18" IF NEEDED TO MATCH EXISTING SIGNS).
- M1 - 4, M1 - 5A, AND M1 - 6 SHALL BE 24" X 24" (36" X 36" IF NEEDED TO MATCH EXISTING SIGNS).
- MO5 - 1, MO5 - 2, AND MO6 - 1, SHALL BE 21" X 21". (30" X 30" IF NEEDED TO MATCH EXISTING SIGNS).

(1) ONLY ADD IF THERE ARE NO EXISTING ROUTE MARKERS FOR THE INTERSECTING ROADWAY.

OFF RAMP LANE CLOSURE

STATE OF WISCONSIN
DEPARTMENT OF TRANSPORTATION

APPROVED
February 2020 DATE
/S/ Andrew Heidtke WORK ZONE ENGINEER
FHWA

SDD 15C02 - 08e

SDD 15C02 - 08e

GENERAL NOTES

THE EXACT NUMBER, LOCATION, AND SPACING OF ALL SIGNS AND DEVICES SHALL BE ADJUSTED TO FIT FIELD CONDITIONS.

THE SPACING BETWEEN TRAFFIC CONTROL SIGNS SHOULD BE ADJUSTED TO NOT CONFLICT WITH AND SHOULD PROVIDE A MINIMUM OF 200 FEET (500 FEET DESIRABLE) CLEARANCE TO EXISTING SIGNS THAT WILL REMAIN IN PLACE.

ALL SIGNS ARE 48" X 48" UNLESS OTHERWISE NOTED.

SIGNS THAT WILL BE IN PLACE LESS THAN SEVEN CONTINUOUS DAYS AND NIGHTS MAY BE MOUNTED ON PORTABLE SUPPORTS.

IF A "STOP" SIGN MUST BE REMOVED FOR A WORK OPERATION, A TEMPORARY "STOP" SIGN SHALL BE PLACED PRIOR TO THE SIGN REMOVAL, OR A FLAGGER SHALL BE PROVIDED UNTIL THE SIGN IS REESTABLISHED.

* OMIT G20-1 SIGNS IF LENGTH OF WORK AREA IS 2 MILES OR LESS

** PLACE AN ADDITIONAL W20-1A "ROAD WORK AHEAD" SIGN IF WORK AREA WITHIN THE PROJECT IS SEPARATED BY MORE THAN 2 MILES FROM PREVIOUS WORK AREA.

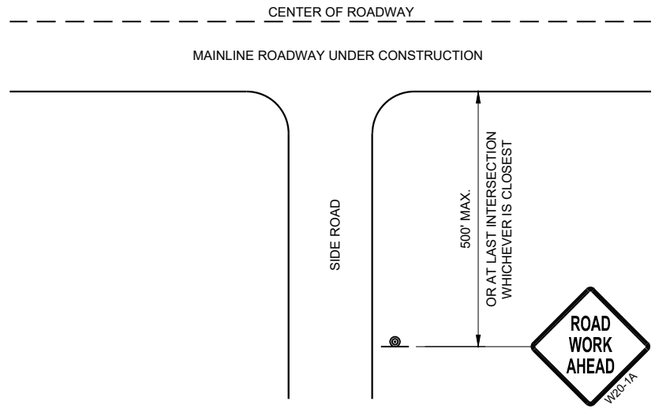

TYPICAL SIDE ROAD APPROACH WARNING SIGN DETAIL

LEGEND

SIGN ON PERMANENT SUPPORT

DIRECTION OF TRAFFIC

WORK AREA

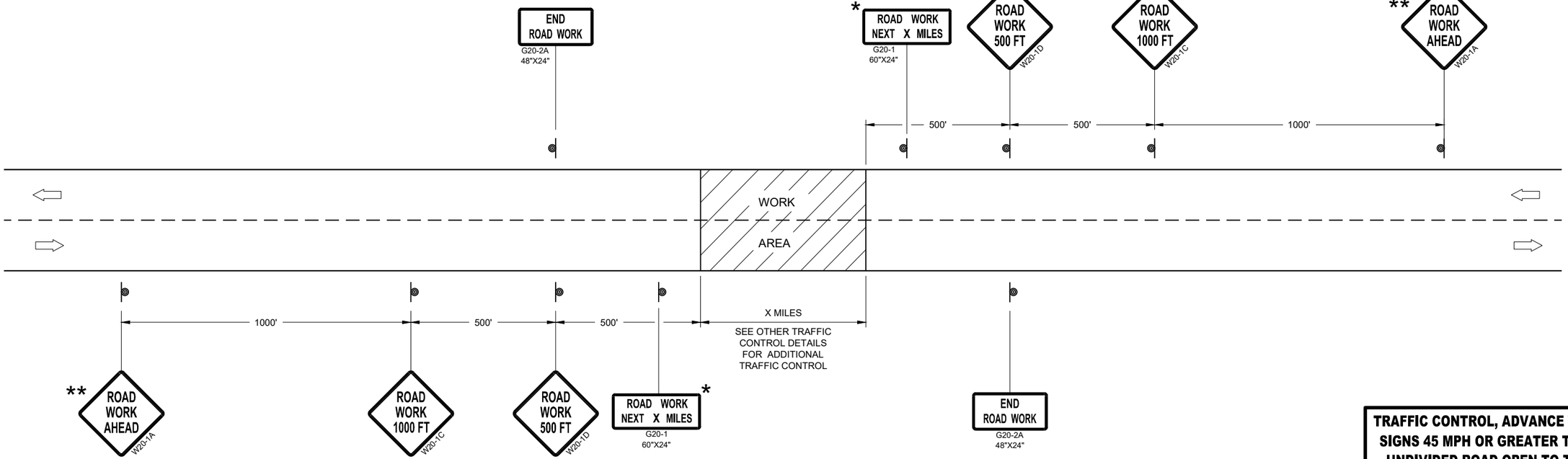

TRAFFIC CONTROL, ADVANCE WARNING SIGNS 45MPH OR GREATER

TRAFFIC CONTROL, ADVANCE WARNING SIGNS 45 MPH OR GREATER TWO-WAY UNDIVIDED ROAD OPEN TO TRAFFIC

STATE OF WISCONSIN
DEPARTMENT OF TRANSPORTATION

APPROVED
July 2018
DATE

/S/ Andrew Heidtke
WORK ZONE ENGINEE

FHWA

6

SDD 15C04 - 05

GENERAL NOTES

THE EXACT NUMBER, LOCATION, AND SPACING OF ALL SIGNS AND DEVICES SHALL BE ADJUSTED TO FIT FIELD CONDITIONS.

THE SPACING BETWEEN TRAFFIC CONTROL SIGNS SHOULD BE ADJUSTED TO NOT CONFLICT WITH AND SHOULD PROVIDE A MINIMUM OF 200 FEET (500 FEET DESIRABLE) CLEARANCE TO EXISTING SIGNS THAT WILL REMAIN IN PLACE.

ALL SIGNS ARE 48" X 48" UNLESS OTHERWISE NOTED. IF NECESSARY DUE TO SPACE CONSTRAINTS, 36"X36" SIGNS MAY BE USED INSTEAD OF 48" X 48" SIGNS.

SIGNS THAT WILL BE IN PLACE LESS THAN SEVEN CONTINUOUS DAYS AND NIGHTS MAY BE MOUNTED ON PORTABLE SUPPORTS.

IF A "STOP" SIGN MUST BE REMOVED FOR A WORK OPERATION, A TEMPORARY "STOP" SIGN SHALL BE PLACED PRIOR TO THE SIGN REMOVAL, OR A FLAGGER SHALL BE PROVIDED UNTIL THE SIGN IS REESTABLISHED.

* THE THIRD W20-1 SIGN IS REQUIRED ONLY IF THERE IS AN INTERSECTION BETWEEN THE "ROAD WORK 500 FEET" SIGN AND THE WORK ZONE. ADJUST THE PLACEMENT OF THIS SIGN BASED ON INTERSECTION LOCATION AND OTHER FIELD CONDITIONS.

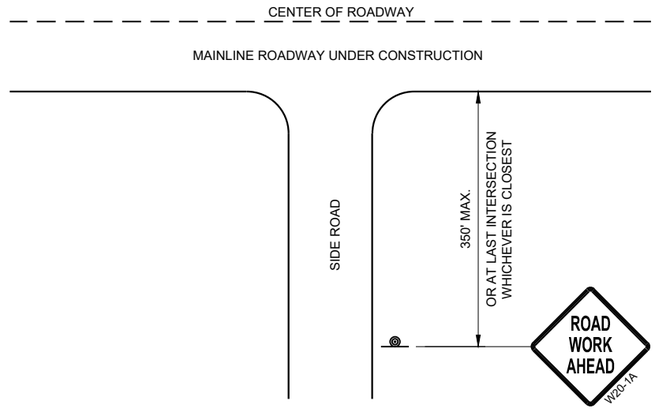

TYPICAL SIDE ROAD APPROACH WARNING SIGN DETAIL

LEGEND

SIGN ON PERMANENT SUPPORT

DIRECTION OF TRAFFIC

WORK AREA

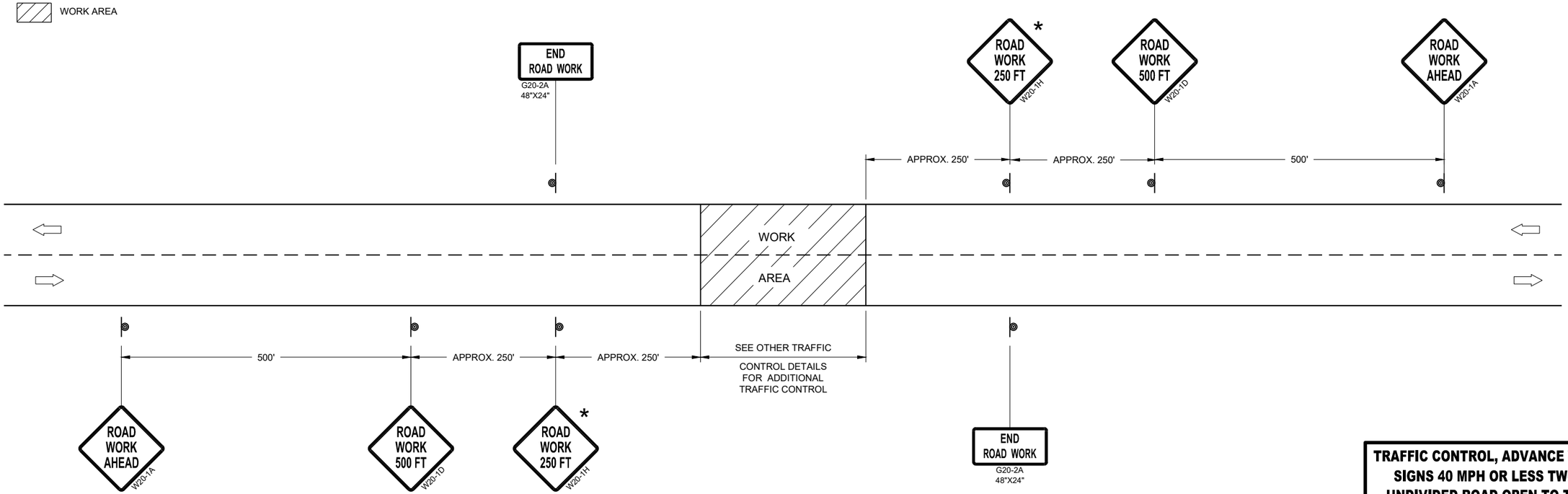

TRAFFIC CONTROL, ADVANCE WARNING SIGNS 40MPH OR LESS

TRAFFIC CONTROL, ADVANCE WARNING SIGNS 40 MPH OR LESS TWO-WAY UNDIVIDED ROAD OPEN TO TRAFFIC

STATE OF WISCONSIN
DEPARTMENT OF TRANSPORTATION

APPROVED
July 2018
DATE

/S/ Andrew Heidtke
WORK ZONE ENGINEE

FHWA

6

SDD 15C05 - 05

GENERAL NOTES

DETAILS OF INSTALLATION, MATERIALS AND WORKMANSHIP NOT SHOWN ON THIS DRAWING SHALL CONFORM TO THE PERTINENT REQUIREMENTS OF THE STANDARD SPECIFICATIONS AND APPLICABLE SPECIAL PROVISIONS.

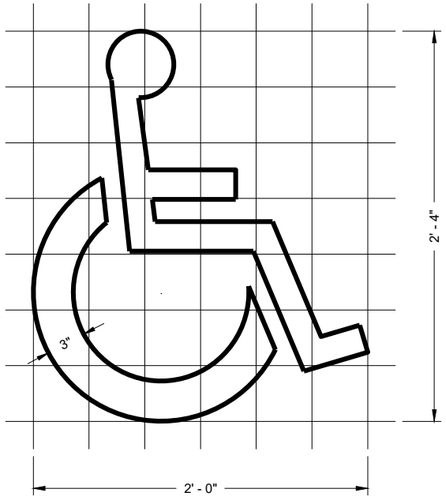

HANDICAP SYMBOL

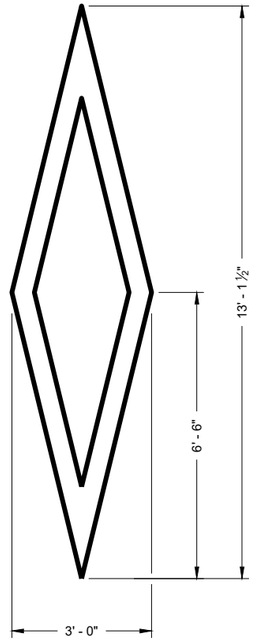

PREFERENTIAL LANE SYMBOL

6

6

SDD 15C07 - 15a

SDD 15C07 - 15a

PAVEMENT MARKING SYMBOLS

STATE OF WISCONSIN
DEPARTMENT OF TRANSPORTATION

APPROVED
November 2019
DATE

/S/ Matthew Rauch
STATE SIGNING AND MAR ENGINEER

FHWA

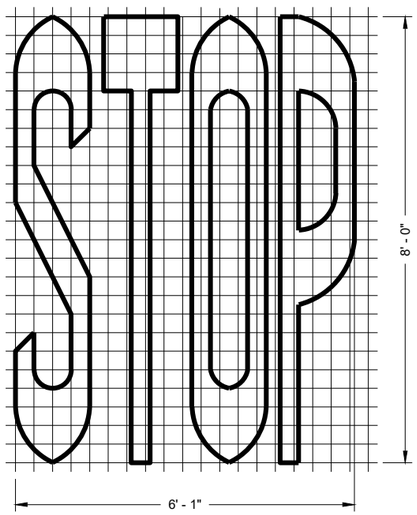

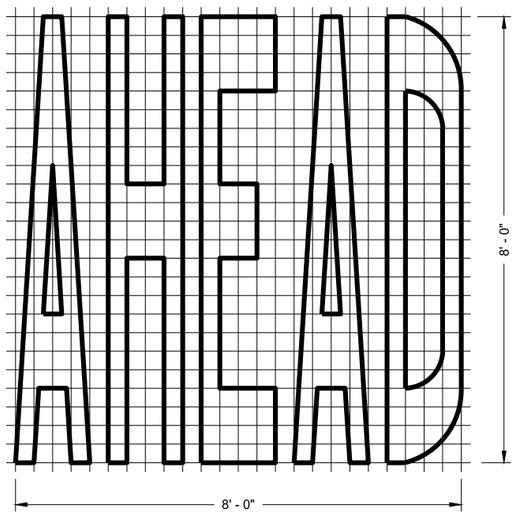

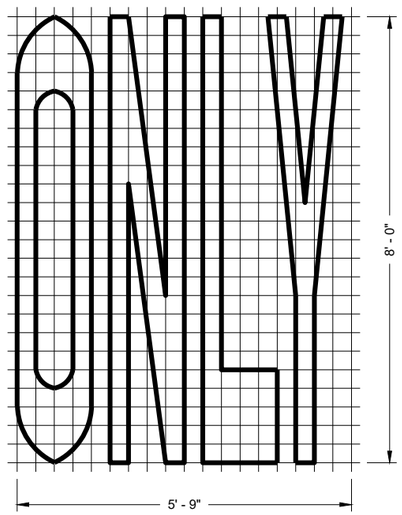

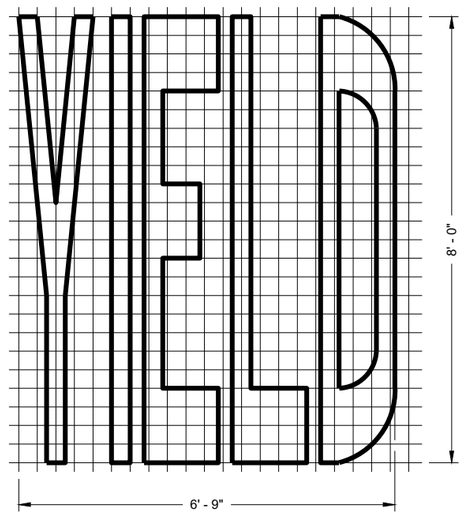

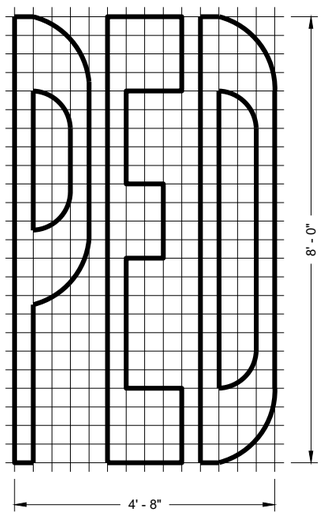

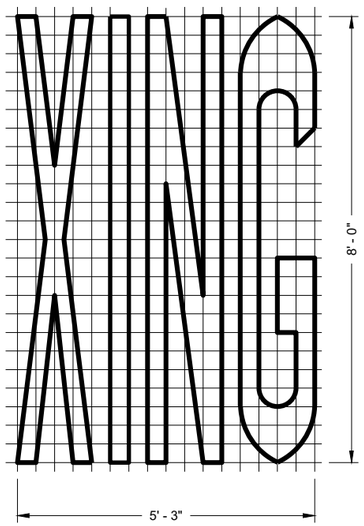

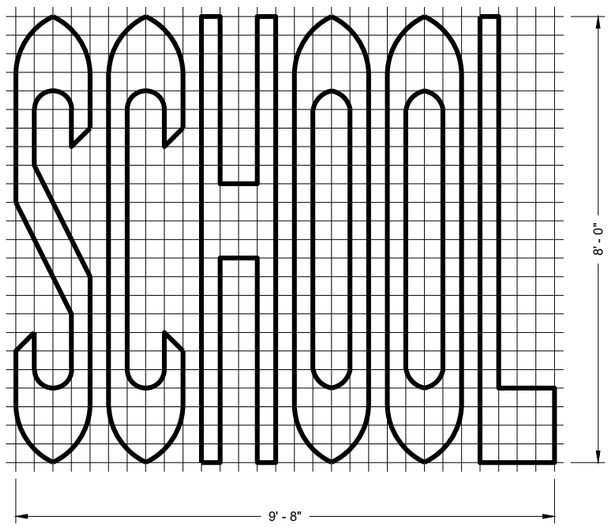

SINGLE LANE

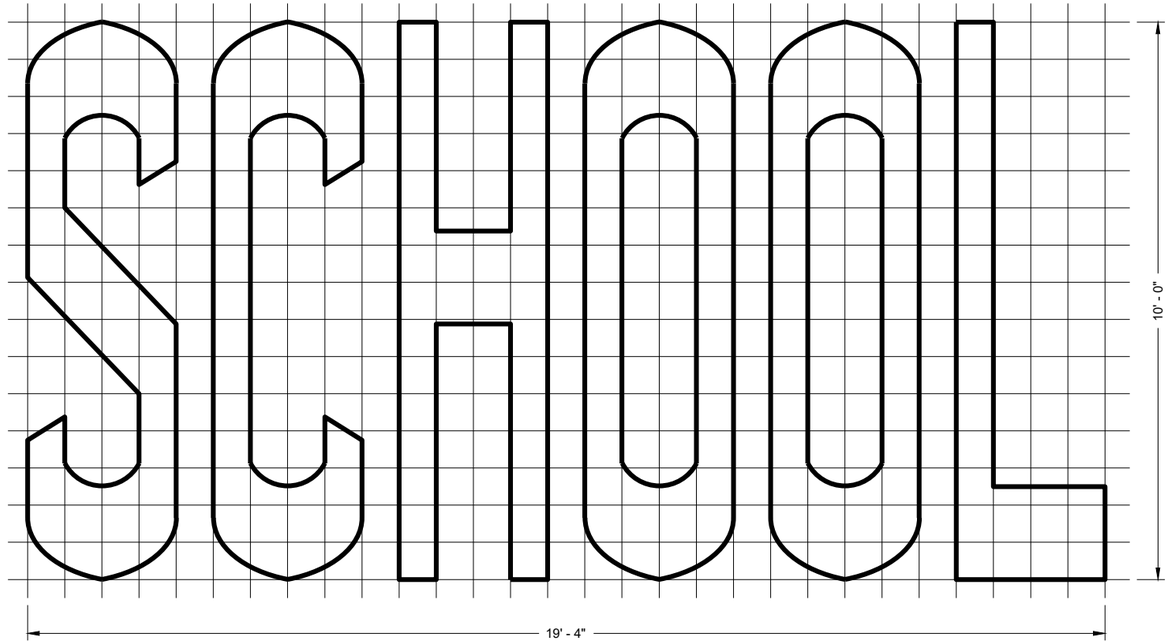

TWO - LANE

GENERAL NOTES

DETAILS OF INSTALLATION, MATERIALS AND WORKMANSHIP NOT SHOWN ON THIS DRAWING SHALL CONFORM TO THE PERTINENT REQUIREMENTS OF THE STANDARD SPECIFICATIONS AND APPLICABLE SPECIAL PROVISIONS.

PAVEMENT MARKING WORDS

STATE OF WISCONSIN
DEPARTMENT OF TRANSPORTATION

APPROVED
November 2019
DATE

/S/ Matthew Rauch
STATE SIGNING AND MAF ENGINEER

FHWA

515

6

6

SDD 15C07 - 15b

SDD 15C07 - 15b

GENERAL NOTES

DETAILS OF INSTALLATION, MATERIALS AND WORKMANSHIP NOT SHOWN ON THIS DRAWING SHALL CONFORM TO THE PERTINENT REQUIREMENTS OF THE STANDARD SPECIFICATIONS AND APPLICABLE SPECIAL PROVISIONS.

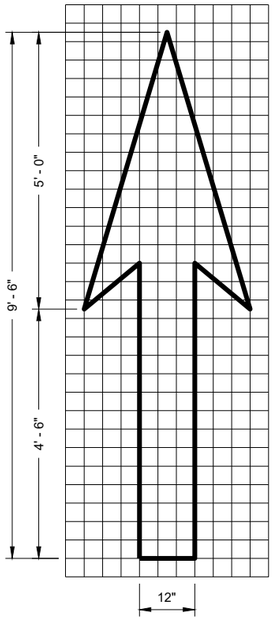

TYPE 1

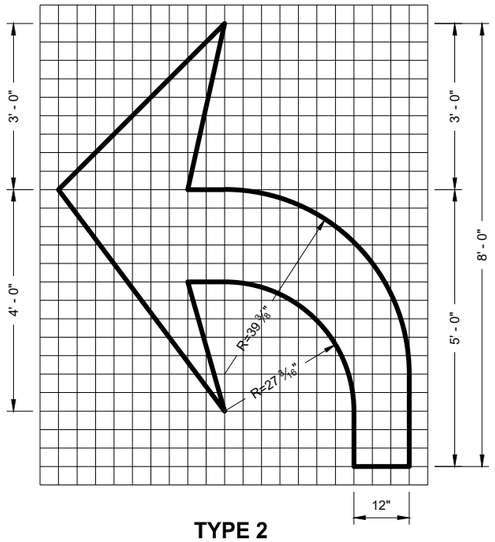

TYPE 2

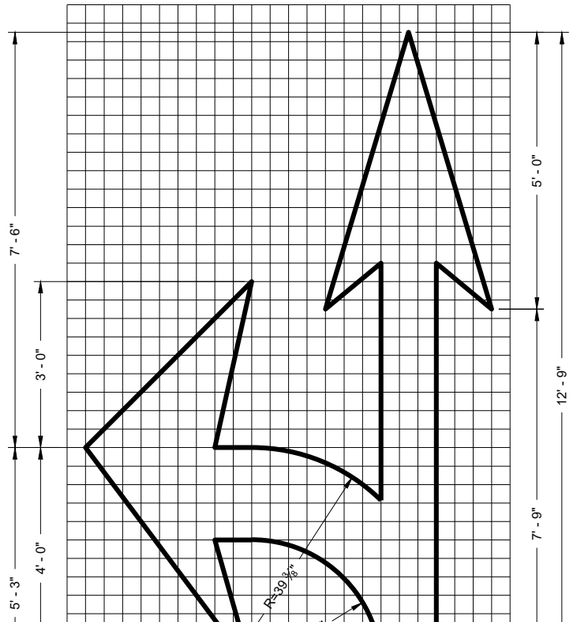

TYPE 3

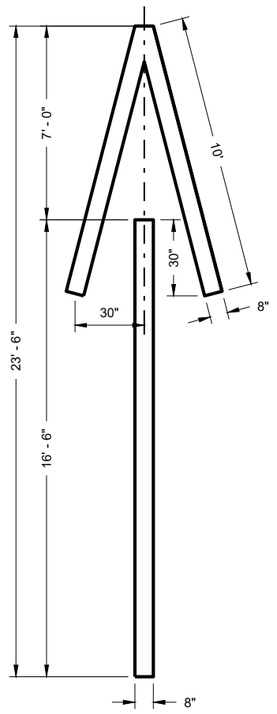

TYPE 4

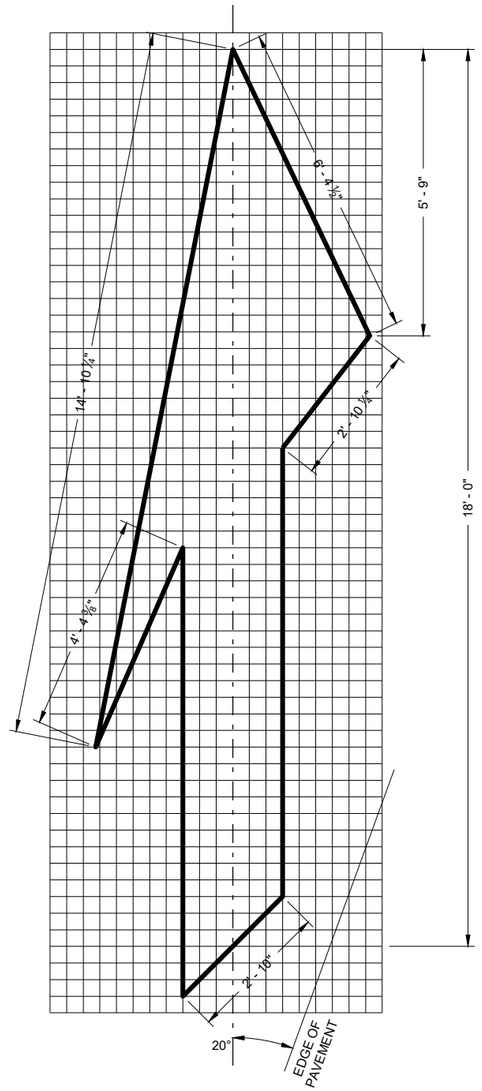

TYPE 5 LANE DROP ARROW

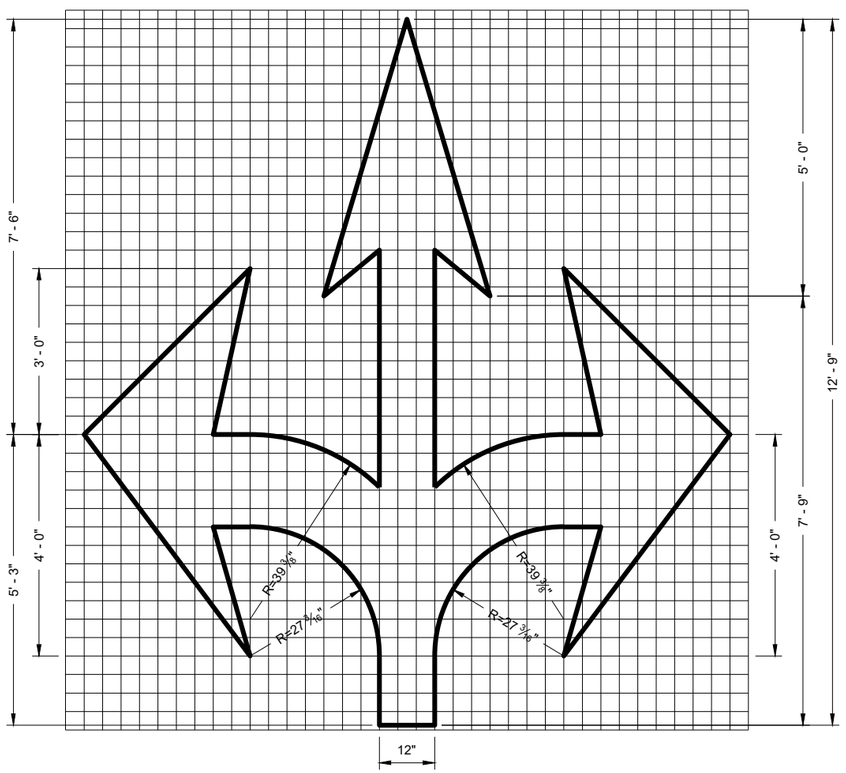

TYPE 6

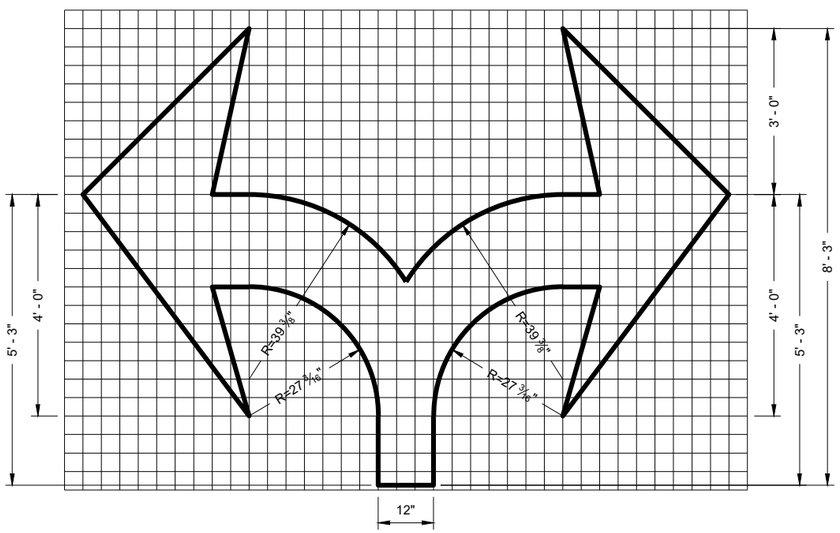

TYPE 7

PAVEMENT MARKING ARROWS

STATE OF WISCONSIN
DEPARTMENT OF TRANSPORTATION

APPROVED
November 2019 — DATE
/S/ Matthew Rauch — STATE SIGNING AND MAF ENGINEER

FHWA

6

SDD 15C07 - 15c

6

SDD 15C07 - 15c

GENERAL NOTES

DETAILS OF CONSTRUCTION NOT SHOWN ON THIS DRAWING SHALL CONFORM TO STANDARD SPECIFICATIONS AND SPECIAL PROVISIONS.

(1) LOCATE THE NO PASSING ZONE W14-3 SIGN WITHIN 50 FEET OF THE "T" MARKING

(2) MEASURE FROM EDGE OF MARKING TO JOINT LINE. THIS DOES NOT INCLUDE SPACE NEEDED FOR GROOVING OPERATIONS.

LEGEND

"T" MARKING

SIGN ON PERMANENT SUPPORT

DIRECTION OF TRAFFIC

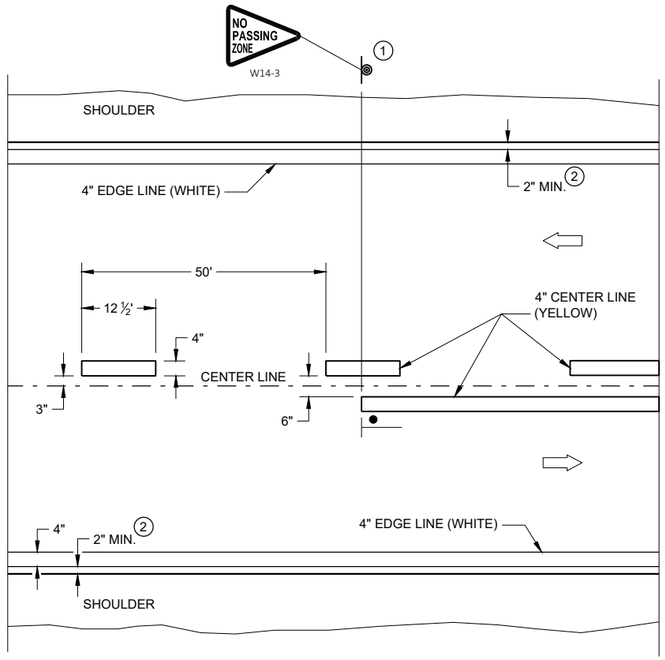

TWO WAY TRAFFIC

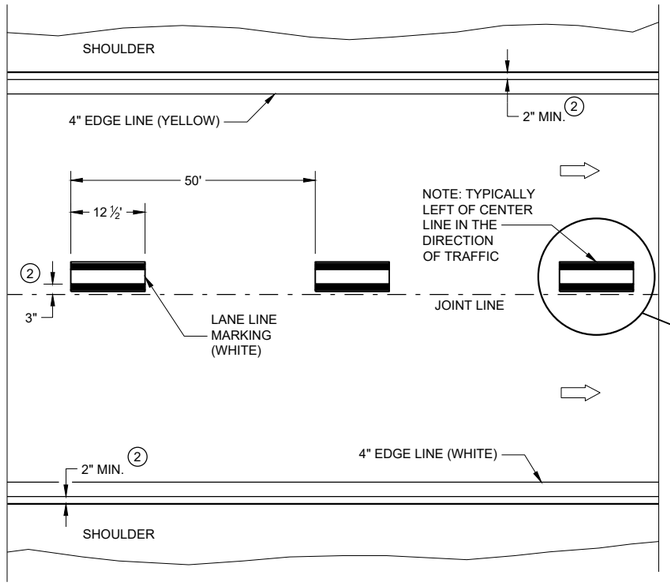

ONE WAY TRAFFIC

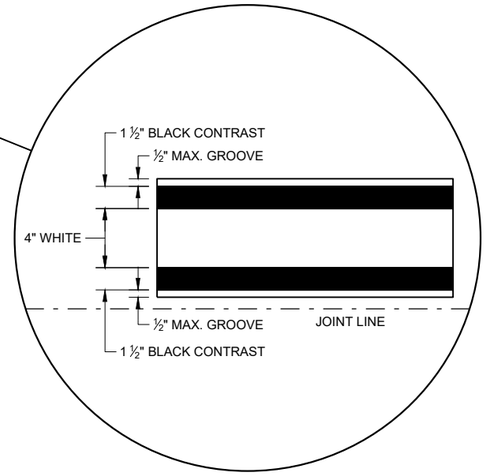

PERMANENT PAVEMENT MARKING

PERMANENT LONGITUDINAL PAVEMENT MARKINGS

STATE OF WISCONSIN
DEPARTMENT OF TRANSPORTATION

APPROVED
May 2022
DATE

/S/ Jeannie Silver
STATEWIDE SIGNING AND M
ENGINEER

FHWA

6

SDD 15C08 - 22a

6

SDD 15C08 - 22a

GENERAL NOTES

1. A SET OF ARROWS IS REQUIRED EVERY 400 FEET OR NEAR INTERSECTIONS OR DRIVEWAYS WITH TURNING TRAFFIC.
2. 8" WHITE
3. TURN BAY LENGTH OF LESS THAN 48' DOES NOT REQUIRE PAVEMENT ARROWS OR TEXT.

DIRECTION OF TRAFFIC

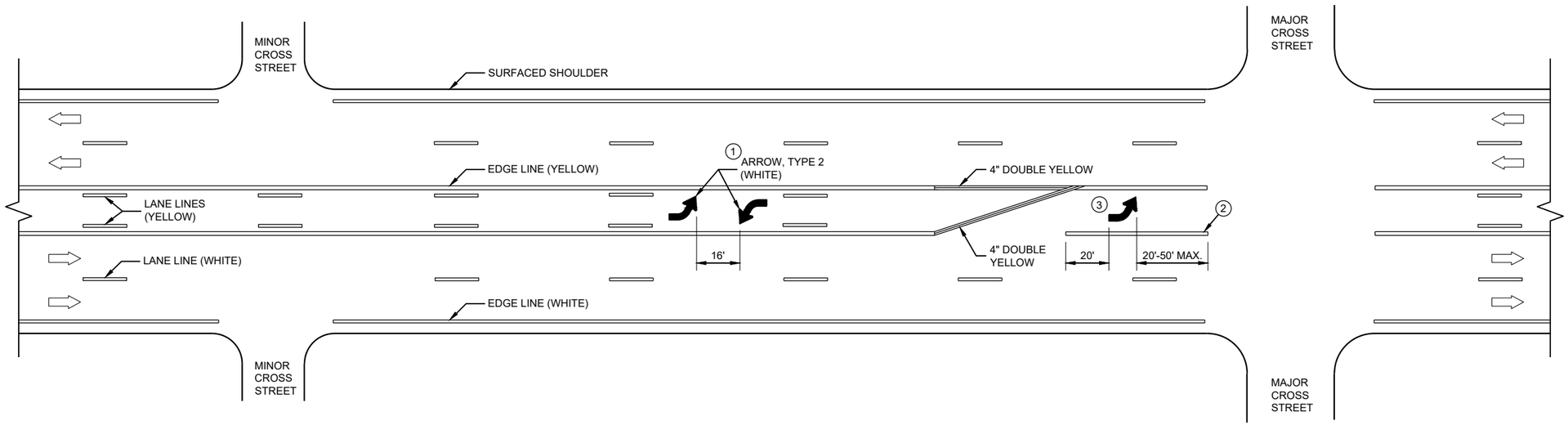

TWO WAY LEFT TURN LANE

6

SDD 15C08 - 22c

PAVEMENT MARKING (TURN LANES)

STATE OF WISCONSIN
DEPARTMENT OF TRANSPORTATION

6

SDD 15C08 - 22c

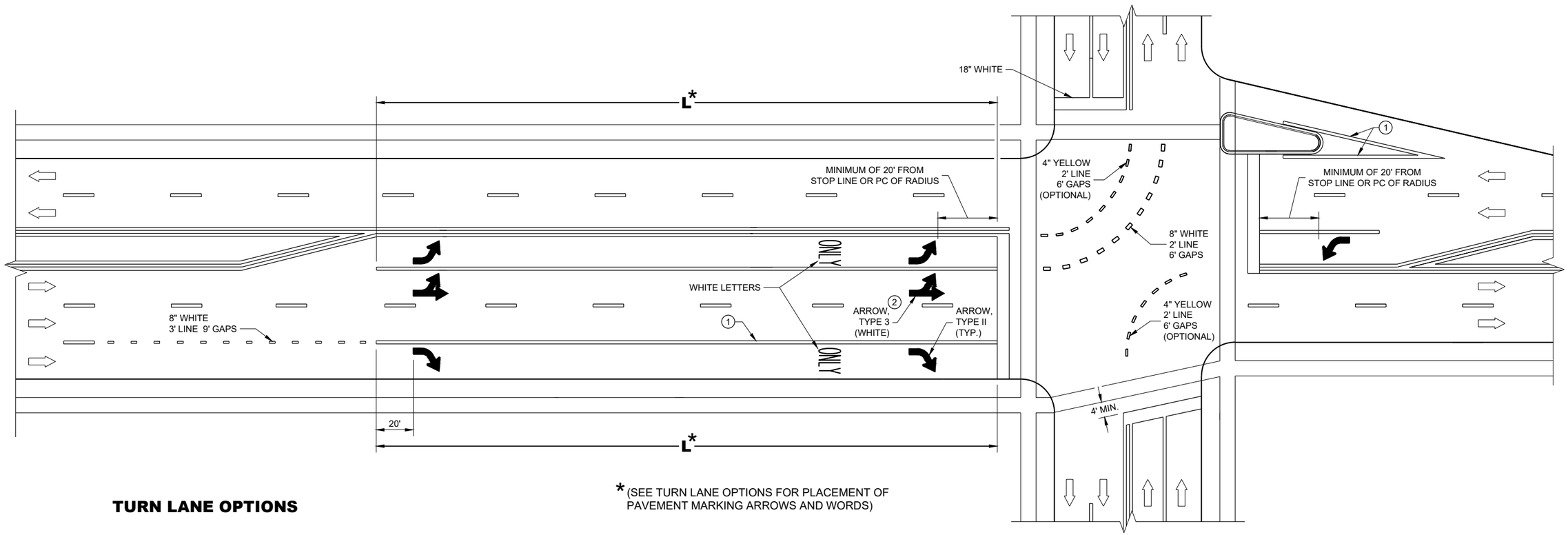

* (SEE TURN LANE OPTIONS FOR PLACEMENT OF PAVEMENT MARKING ARROWS AND WORDS)

TURN LANE OPTIONS

LENGTH OF TURN BAY (**L**) OF 0 - 47' DOES NOT REQUIRE PAVEMENT MARKING ARROWS OR WORDS

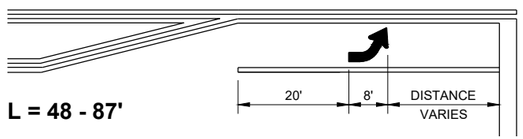

L = 48 - 87'

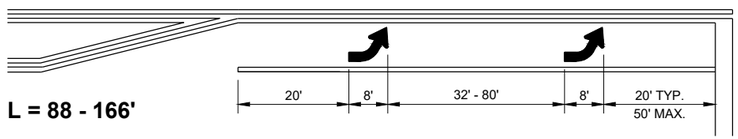

L = 88 - 166'

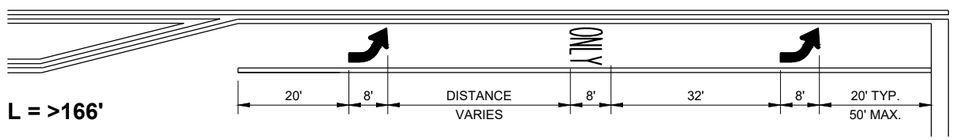

L = >166'

GENERAL NOTES

1. 8" WHITE
2. QUANTITY AND LOCATION OF TYPE 3 ARROWS ARE THE SAME AS THE TYPE II ARROWS IN THE ADJACENT TURN LANE. FOR TURN LANES WITH A PHYSICAL SEPARATION IN THE SAME DIRECTION OF TRAVEL, THE ARROWS AND "ONLY" MARKING MAY BE ELIMINATED.

DIRECTION OF TRAFFIC

L = LENGTH OF TURN BAY

PAVEMENT MARKING (TURN LANES)

STATE OF WISCONSIN
DEPARTMENT OF TRANSPORTATION

6

SDD 15C08 - 22d

GENERAL NOTES

1. REFLECTIVE SHEETING SHALL FOLLOW THE REQUIREMENTS IN THE APPROVED PRODUCTS LISTING FOR SIGN SHEETING.
2. LOCATION OF WARNING LIGHTS WHEN SHOWN ON THE PLAN.

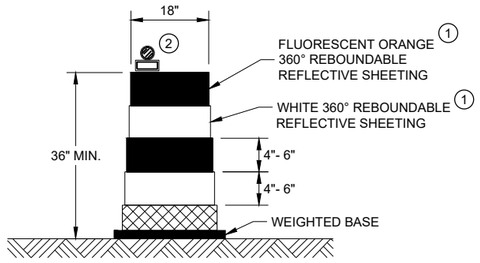

DRUM

BALLAST WIDTHS
RANGE FROM 24"-36"

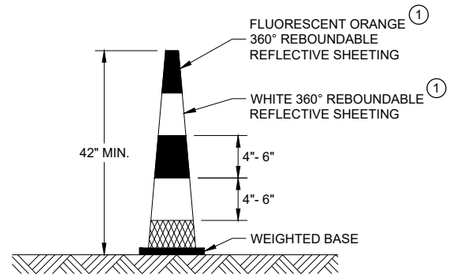

42" CONE

DO NOT USE IN TAPERS
½ SPACING OF DRUMS

BALLAST WIDTHS
RANGE FROM 14"-20"

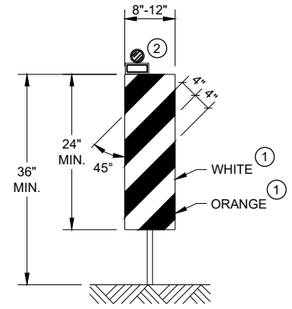

VERTICAL PANEL

THE STRIPES SHALL SLOPE DOWNWARD TO
THE TRAFFIC SIDE FOR CHANNELIZATION.

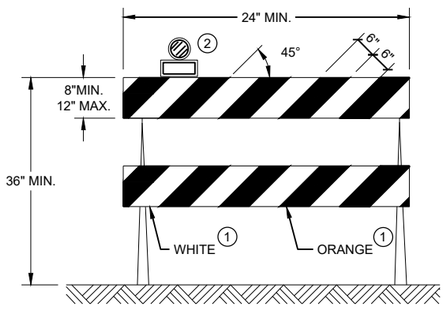

TYPE II BARRICADE

FOR RAILS LESS THAN 36" LONG, 4" WIDE STRIPES
MAY BE USED. ALL STRIPES SHALL SLOPE DOWNWARD
TO THE TRAFFIC SIDE FOR CHANNELIZATION.

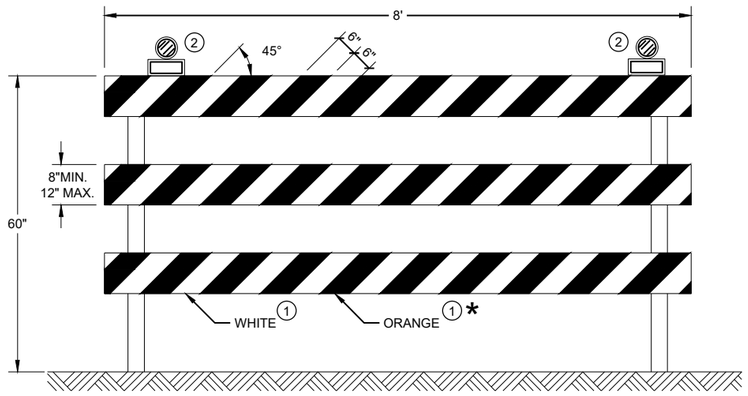

TYPE III BARRICADE

IF SIGN MOUNTED, DO NOT COVER MORE THAN 50% OF THE TOP
TWO RAILS OR 33% OF THE TOTAL AREA OF THE THREE RAILS.

* IF USED FOR A PERMANENT APPLICATION USE RED SHEETING.

CHANNELIZING DEVICES DRUMS, CONES, BARRICADES AND VERTICAL PANELS

STATE OF WISCONSIN
DEPARTMENT OF TRANSPORTATION

APPROVED
November 2022
DATE

/S/ Andrew Heidtke
WORK ZONE ENGINEE

520

FHWA

6

SDD 15C11 - 10b

6

SDD 15C11 - 10b

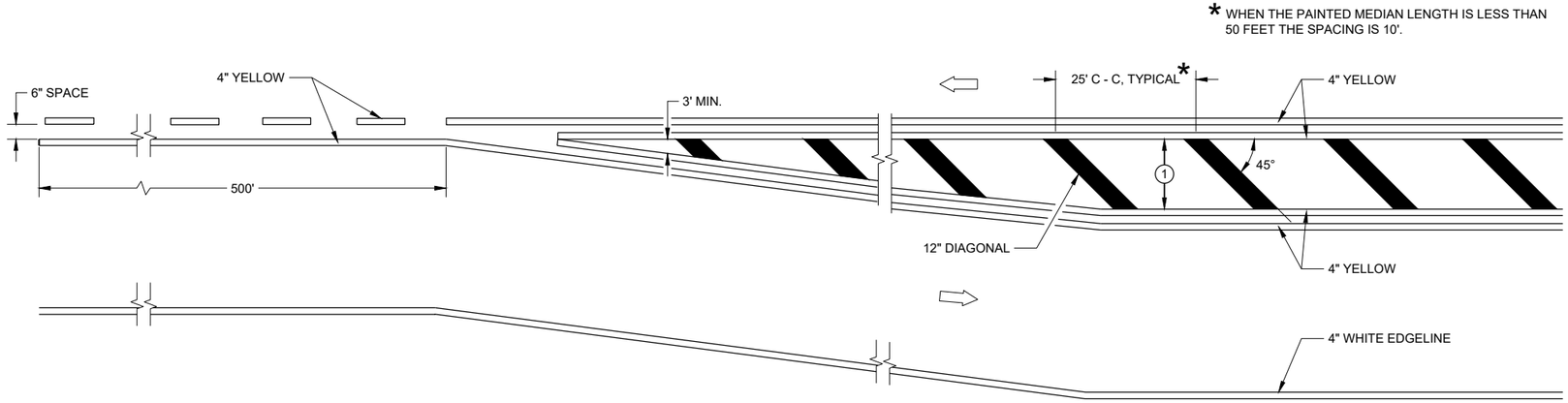

MEDIAN ISLAND DETAIL

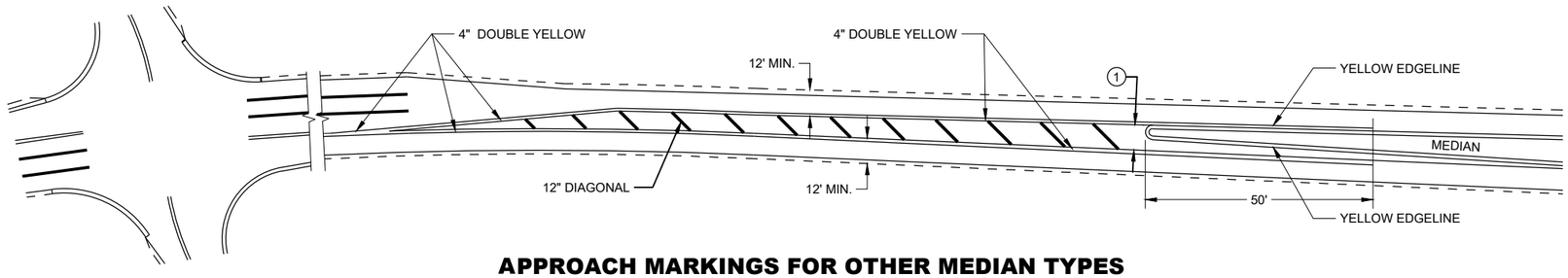

APPROACH MARKINGS FOR OTHER MEDIAN TYPES

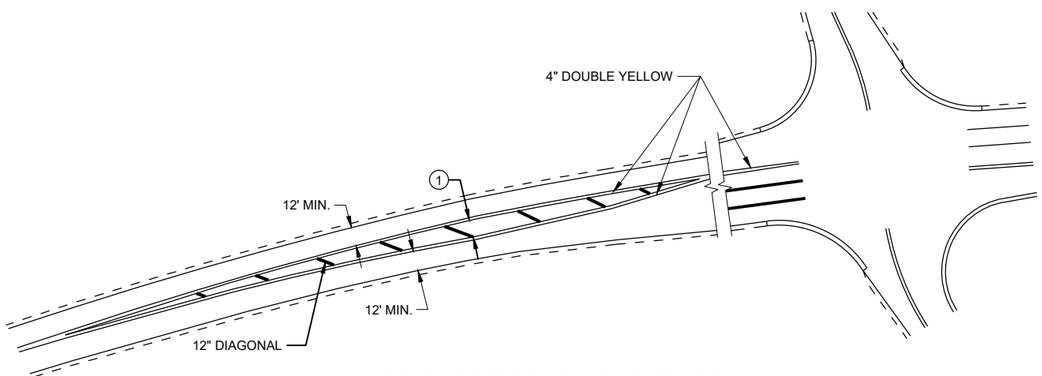

NON-APPROACH MARKINGS

GENERAL NOTES

1. DIAGONALS ARE OPTIONAL WHEN PAINTED ISLAND IS LESS THAN 6 FEET AT THE WIDEST POINT. OMIT DIAGONALS IF WIDTH IS LESS THAN 4 FEET.

⇨ DIRECTION OF TRAVEL

MEDIAN ISLAND PAVEMENT MARKINGS

STATE OF WISCONSIN
DEPARTMENT OF TRANSPORTATION

APPROVED
May 2022 — DATE
/S/ Jeannie Silver — STATE SIGNING AND MAF ENGINEER
FHWA

6

SDD 15C18 - 06a

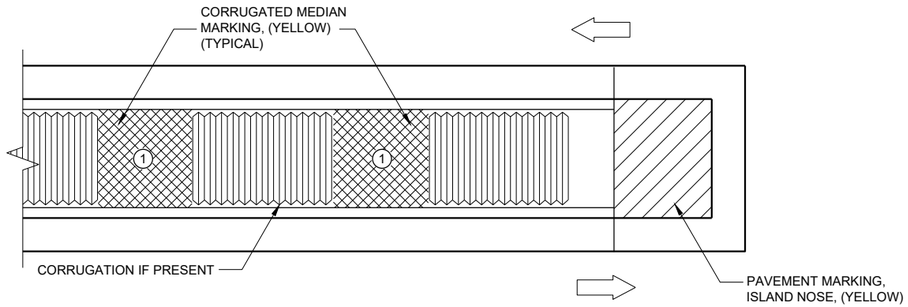

MEDIAN ISLAND WITH SQUARE BLUNT NOSE

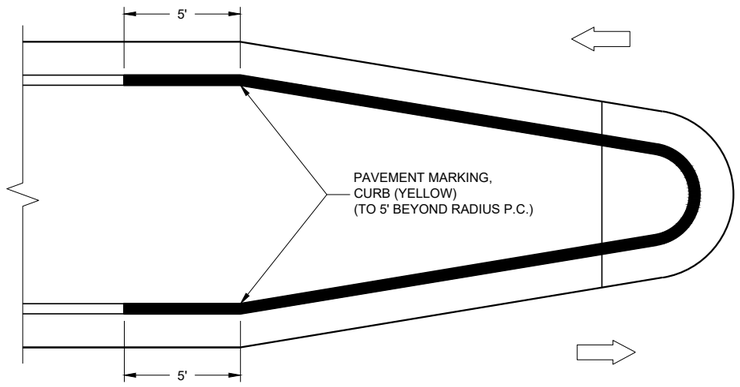

MEDIAN ISLAND WITH ROUND BLUNT NOSE

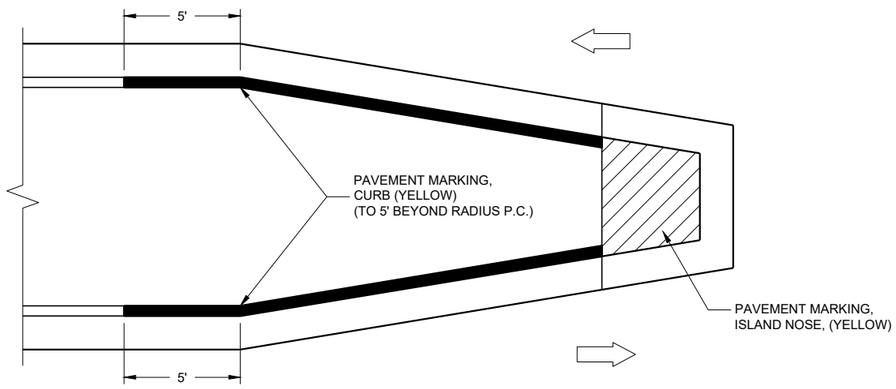

MEDIAN ISLAND WITH SLOPED NOSE

TYPICAL PLACEMENT OF PAVEMENT MARKING ON MEDIAN ISLANDS

GENERAL NOTES

WHEN CONCRETE CORRUGATED MEDIAN IS CONSTRUCTED TO SEPARATE TRAFFIC OPERATING IN THE OPPOSING DIRECTION, YELLOW PAVEMENT MARKING SHALL BE APPLIED TO THE FLAT PORTION OF THE CONCRETE CORRUGATED MEDIAN. THE ITEM OF PAVEMENT MARKING, CONCRETE CORRUGATED MEDIAN, WILL BE MEASURED IN PLACE AND ACCEPTED IN ACCORDANCE WITH THE CONTRACT AND PAID FOR AT THE CONTRACT UNIT PRICE PER SQUARE FOOT.

(1) APPLY PAVEMENT MARKING TO THE FLAT PORTION OF CORRUGATED MEDIAN.

ISLAND NOSE MARKING

CURB MARKING

CORRUGATED MEDIAN MARKING

DIRECTION OF TRAVEL

PAVEMENT MARKINGS, MEDIAN ISLAND NOSE

STATE OF WISCONSIN
DEPARTMENT OF TRANSPORTATION

APPROVED

November 2022
DATE

/S/ Jeannie Silver
STATE SIGNING AND MAF ENGINEER

FHWA

6

SDD15C18 - 07b

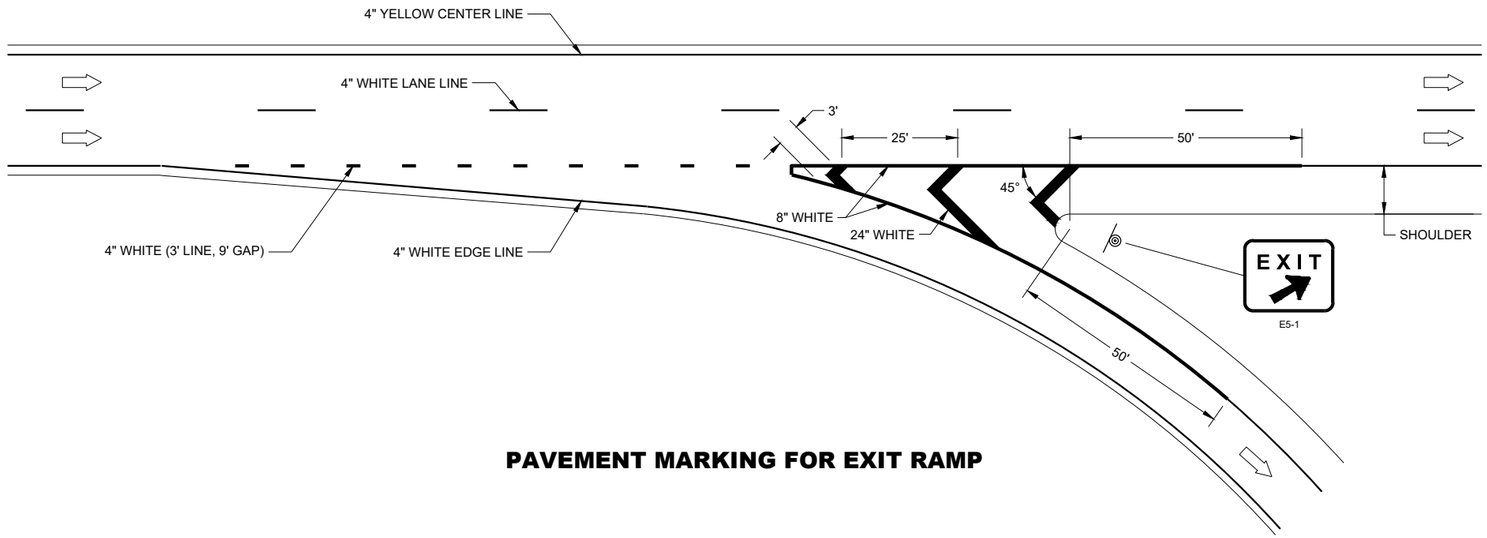

PAVEMENT MARKING FOR EXIT RAMP

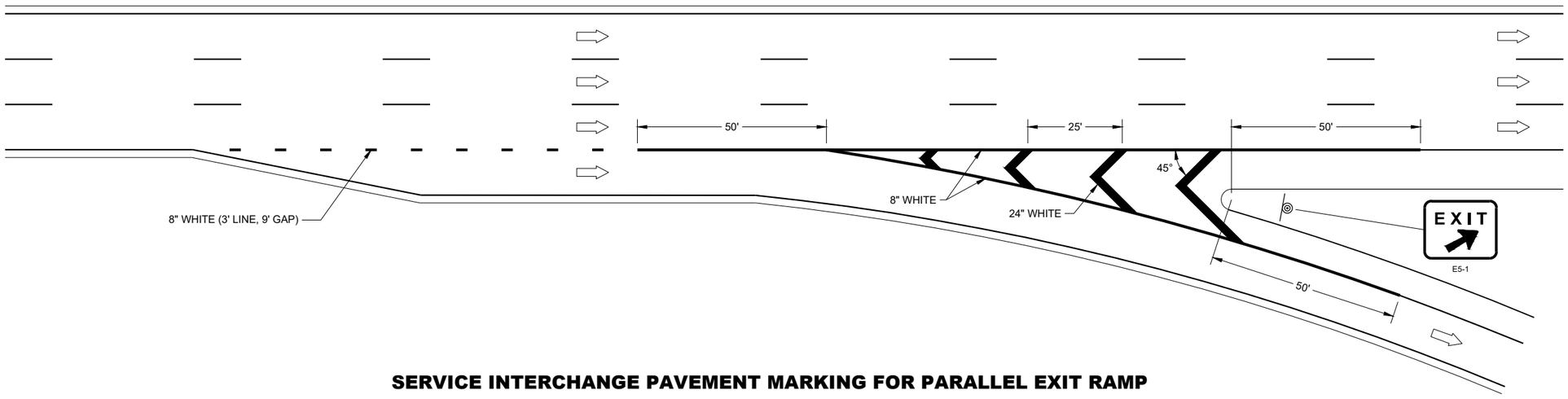

SERVICE INTERCHANGE PAVEMENT MARKING FOR PARALLEL EXIT RAMP

GENERAL NOTES

PLACE GROOVE 3 INCHES LEFT OF JOINT.

LEGEND

SIGN ON PERMANENT SUPPORT

DIRECTION OF TRAVEL

6

SDD 15C31 - 04a

PAVEMENT MARKING, EXIT RAMP AND PARALLEL EXIT RAMP

STATE OF WISCONSIN
DEPARTMENT OF TRANSPORTATION

6

SDD 15C31 - 04a

GENERAL NOTES

PLACE GROOVE 3 INCHES LEFT OF JOINT.

LEGEND

SIGN ON PERMANENT SUPPORT

DIRECTION OF TRAVEL

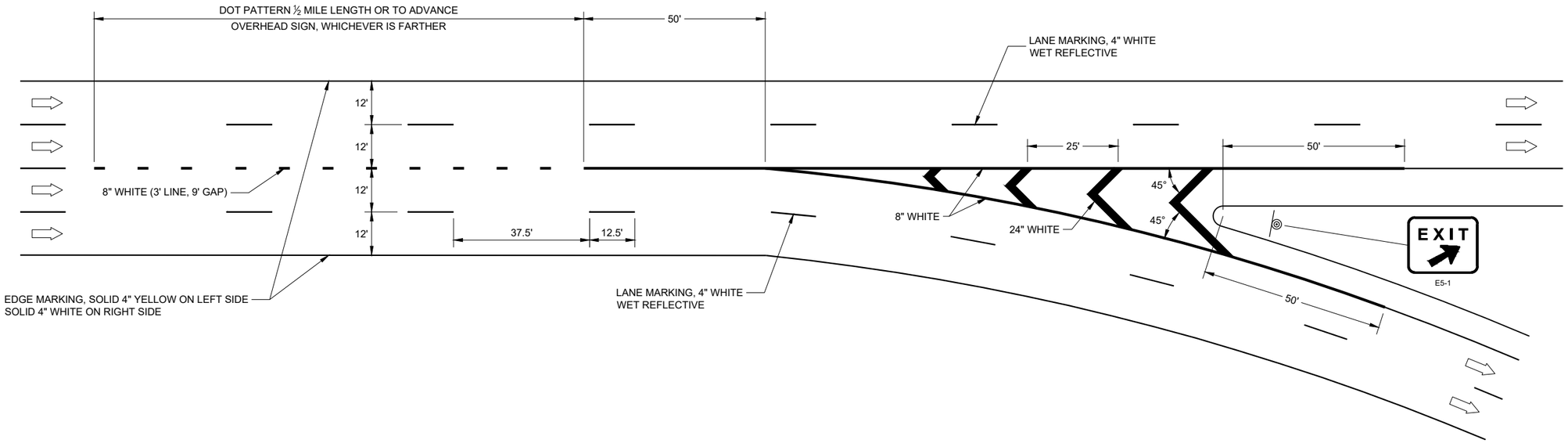

6

6

SDD 15C31 - 04b

SDD 15C31 - 04b

PAVEMENT MARKING, MAJOR SPLIT FREEWAY TO FREEWAY

STATE OF WISCONSIN
DEPARTMENT OF TRANSPORTATION

GENERAL NOTES

PLACE GROOVE 3 INCHES LEFT OF JOINT.

1 ½ LENGTH OF FULL WIDTH ACCELERATION LANE.

LEGEND

DIRECTION OF TRAVEL

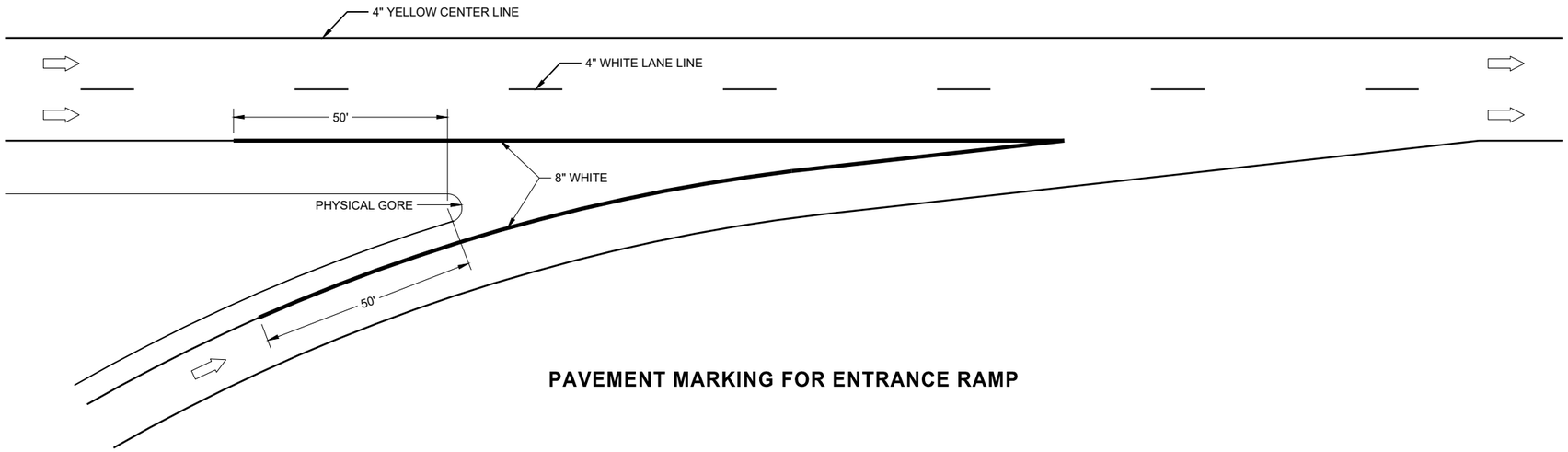

PAVEMENT MARKING FOR ENTRANCE RAMP

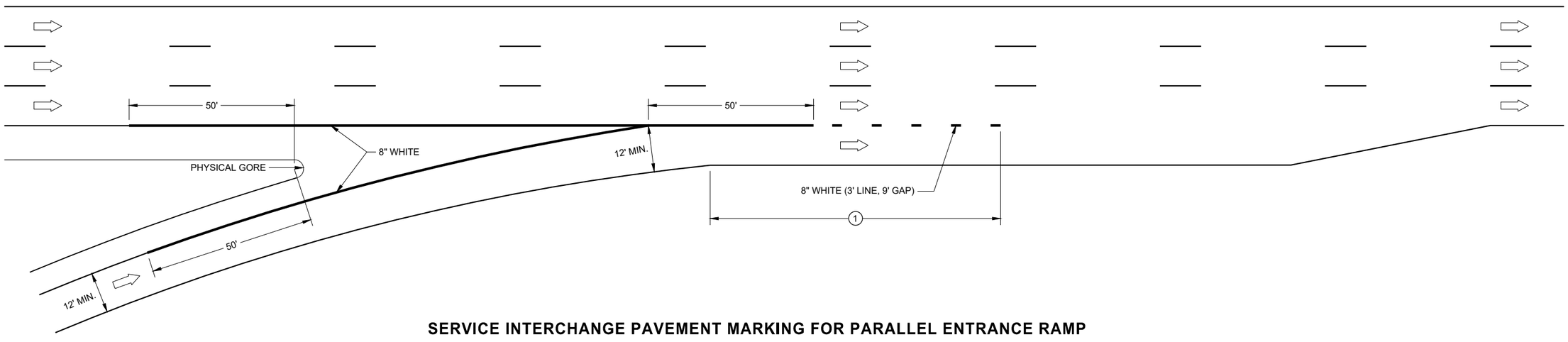

SERVICE INTERCHANGE PAVEMENT MARKING FOR PARALLEL ENTRANCE RAMP

PAVEMENT MARKING, ENTRANCE RAMP AND PARALLEL ENTRANCE RAMP

STATE OF WISCONSIN
DEPARTMENT OF TRANSPORTAT

6

SDD 14C31 - 04c

LEGEND

DIRECTION OF TRAVEL

GENERAL NOTES

PLACE GROOVE 3 INCHES LEFT OF JOINT.

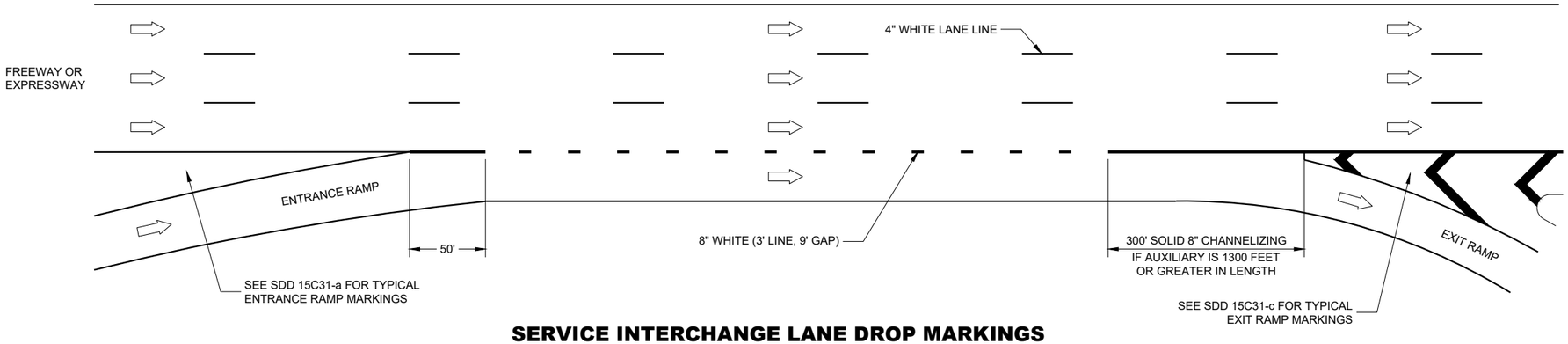

SERVICE INTERCHANGE LANE DROP MARKINGS

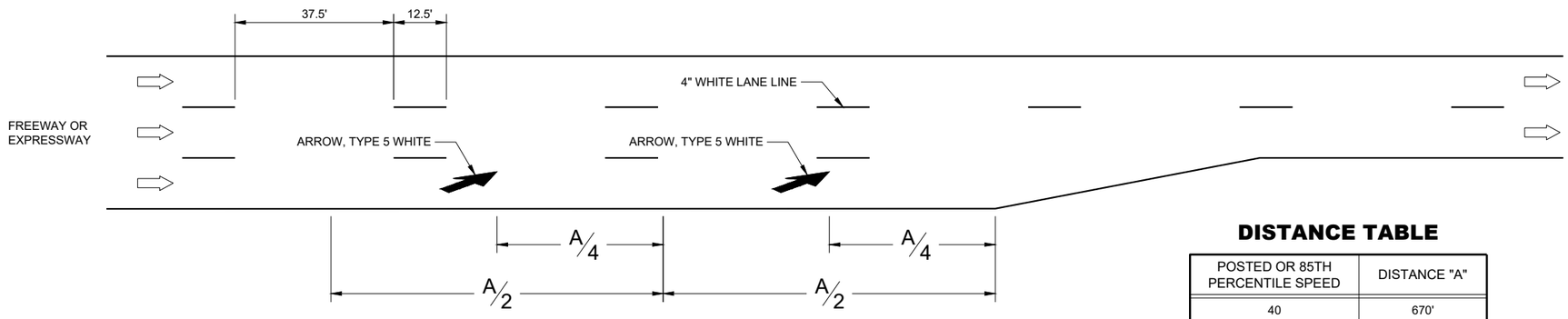

LANE REDUCTION MARKINGS

DISTANCE TABLE

POSTED OR 85TH PERCENTILE SPEED	DISTANCE "A"
40	670'
45	775'
50	885'
55	990'
60	1100'
65	1200'
70	1250'

PAVEMENT MARKING, LANE DROP AND LANE REDUCTION

STATE OF WISCONSIN
DEPARTMENT OF TRANSPORTATION

APPROVED
May 2021 — DATE
/S/ Matthew Rauch — STATE MARKING AND SIG ENGINEER

FHWA

6

SDD 15C31 - 04d

GENERAL NOTES

STOP SIGN SHALL BE PLACED A MINIMUM OF 6 FEET TO A MAXIMUM OF 50 FEET FROM THE EDGELINE LOCATION.

1. 18-INCH STOP LINES MAY BE DELETED OR ADDED BY THE REGION MARKING ENGINEER BASED ON VISIBILITY AND SIGHT LINES.
2. NO STOP LINE IS REQUIRED IF STOP SIGN IS LESS THAN OR EQUAL TO 40 FEET FROM THE EDGELINE.
3. NO STOP LINE IS REQUIRED IF STOP SIGN IS LESS THAN OR EQUAL TO 30 FEET FROM THE FLANGELINE EXTENSION.
4. MOVE CLOSER TO THE EDGE OF TRAVEL LINE AS NEEDED FOR VISIBILITY AND SIGHT LINES (NO CLOSER THAN 4 FEET).
5. LADDER BAR CROSSWALKS SHOULD ONLY BE USED FOR MID BLOCK CROSSINGS. USE 2 - 6" TRANSVERSE LINES INSTEAD.

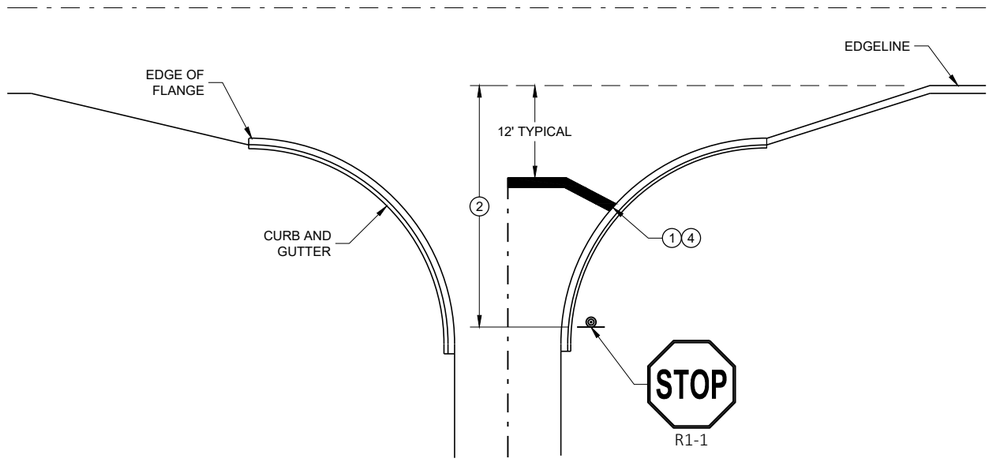

TYPICAL STOP LINE PAVEMENT MARKING WITH CURB AND GUTTER

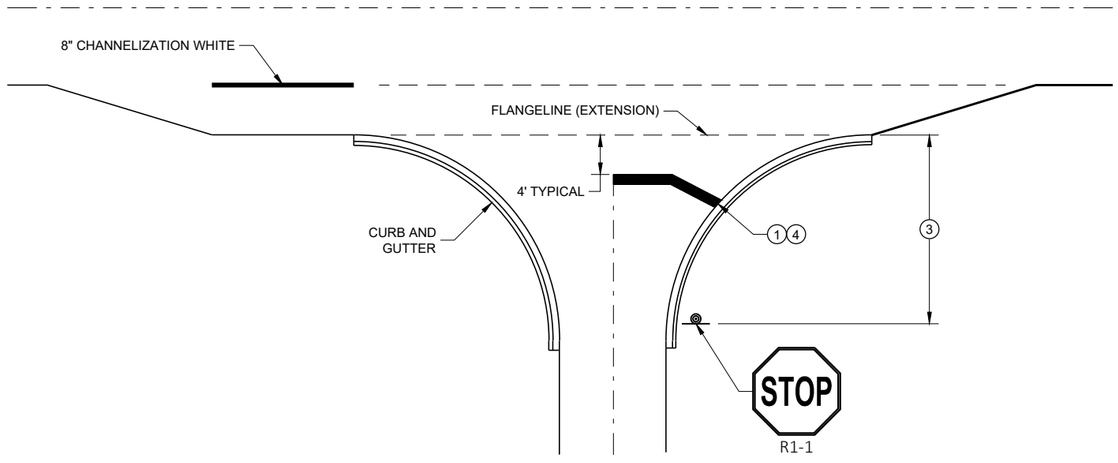

TYPICAL STOP LINE PAVEMENT MARKING FOR SIDEROADS WITH RIGHT TURN LANE

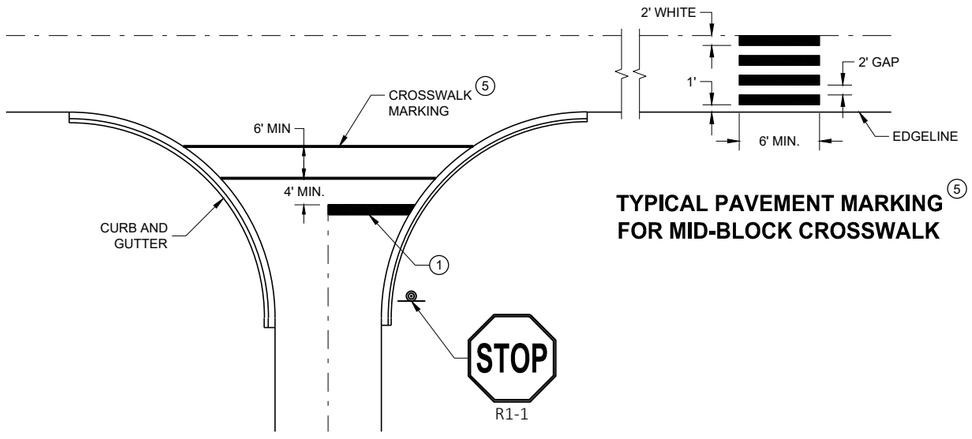

TYPICAL PAVEMENT MARKING FOR MID-BLOCK CROSSWALK 5

TYPICAL STOP LINE PAVEMENT MARKING FOR SIDEROADS WITH CROSSWALK MARKING

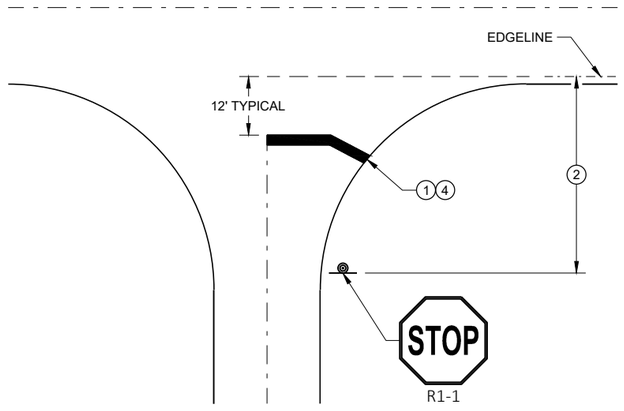

TYPICAL STOP LINE PAVEMENT MARKING WITHOUT CURB AND GUTTER

STOP LINE AND CROSSWALK PAVEMENT MARKING

STATE OF WISCONSIN
DEPARTMENT OF TRANSPORTATION

APPROVED
November 2019
DATE

/S/ Matthew Rauch
STATE SIGNING AND MARKING ENGINEER

FHWA

6
SDD 15C33 - 04

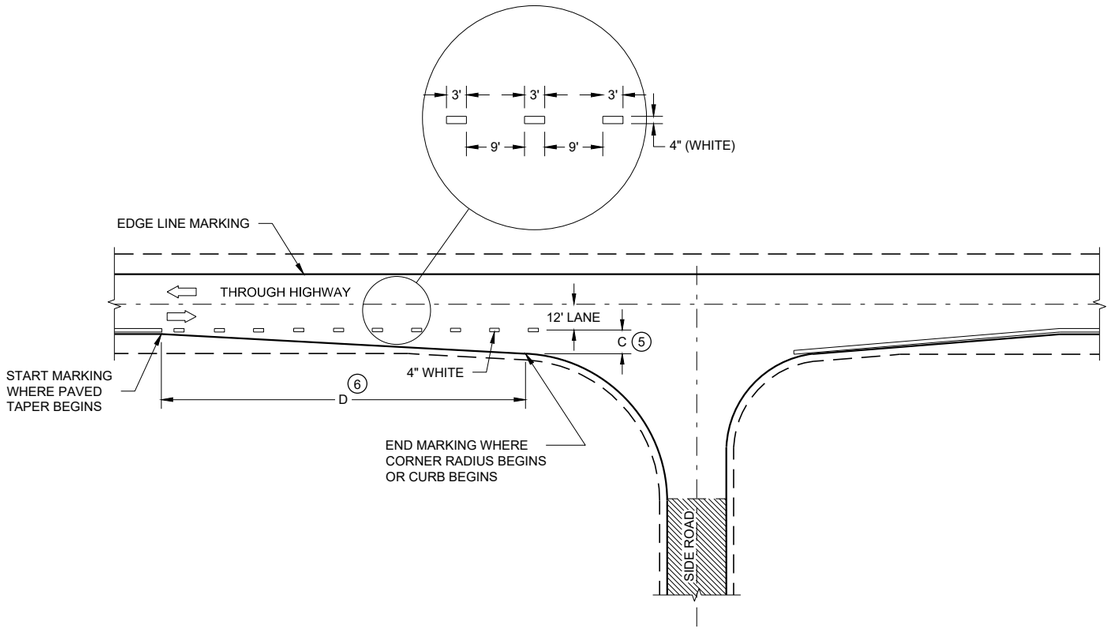

MINOR INTERSECTION

GENERAL NOTES

OMIT EDGE LINES THROUGH INTERSECTIONS. CONTINUE EDGE LINES THROUGH DRIVEWAYS.

1. WHEN DISTANCE "A" IS LESS THAN 250 FEET, OMIT LANE LINE.
2. WHEN DISTANCE "B" IS LESS THAN 100 FEET, OMIT CHANNELIZING LANE LINE.
3. BARRIER LINE ENDS AT SIDE ROAD PAVEMENT / SURFACE EDGE EXTENSION.
4. BARRIER LINE STARTS 500 FEET PRIOR TO THE BYPASS TAPER.
5. WHEN DISTANCE "C" IS LESS THAN 4 FEET, OMIT DOTTED EXTENSION.
6. WHEN DISTANCE "D" IS LESS THAN 50 FEET, OMIT DOTTED EXTENSION.

LEGEND

DIRECTION OF TRAVEL

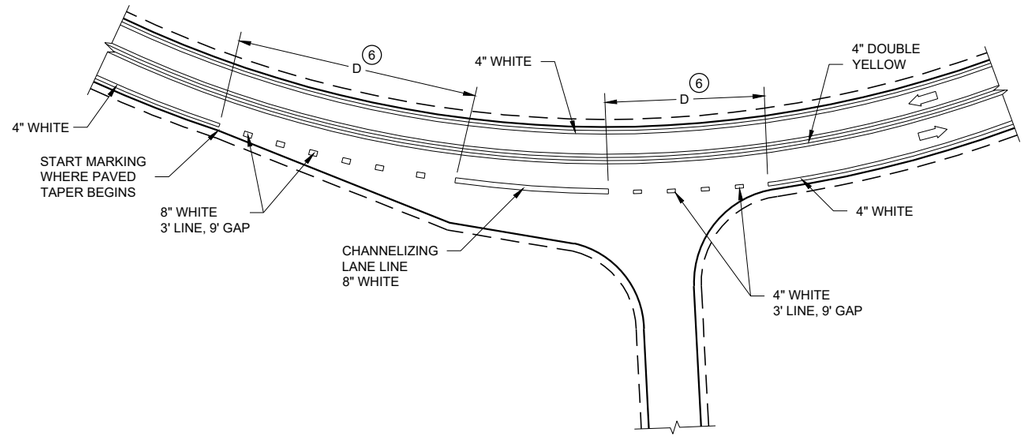

INTERSECTION ON OUTSIDE OF CURVE

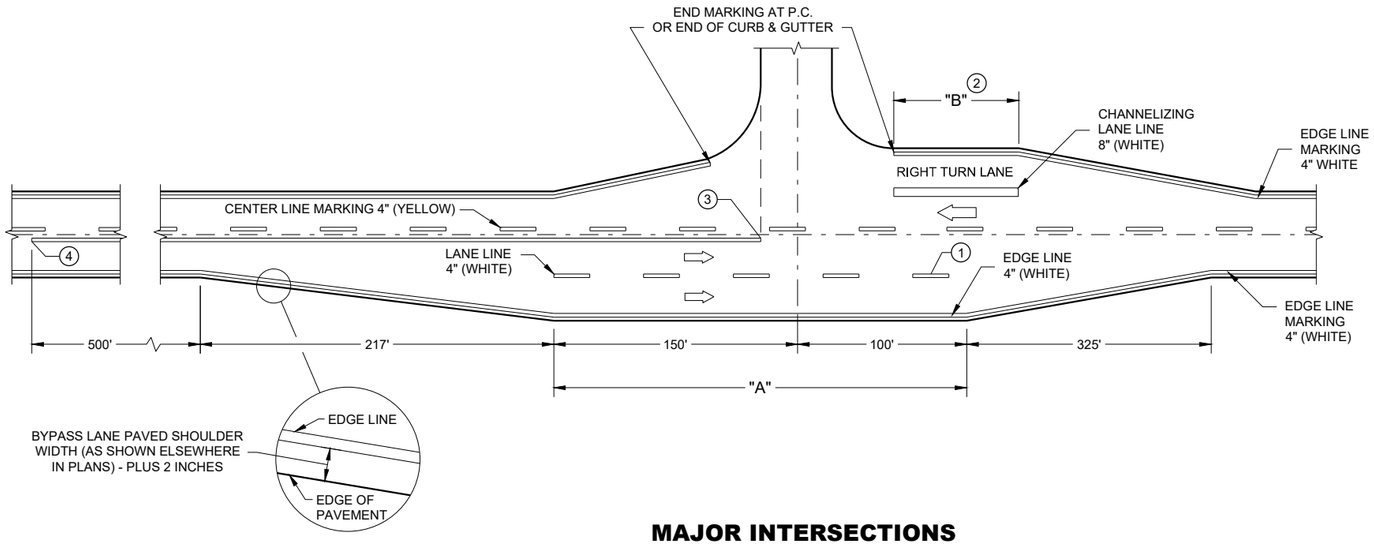

MAJOR INTERSECTIONS

(INTERSECTION WITH FULL RIGHT TURN LANE OR BYPASS LANE)

PAVEMENT MARKING (INTERSECTIONS)

6

SDD15C35 - 05a

GENERAL NOTES

THE EXACT NUMBER, LOCATION, AND SPACING OF ALL SIGNS AND DEVICES SHALL BE ADJUSTED TO FIT FIELD CONDITIONS AS APPROVED BY THE ENGINEER.

THE SPACING BETWEEN SIGNS SHOULD BE ADJUSTED TO NOT CONFLICT WITH AND TO PROVIDE A MINIMUM OF 200 FEET (500 FEET DESIRABLE) CLEARANCE TO EXISTING SIGNS.

THIS LANE CLOSURE IS TYPICAL FOR CLOSING RIGHT LANE - REVERSE FOR CLOSING LEFT LANE.

ALL SIGNS ARE 48" x 48" UNLESS OTHERWISE NOTED.

"WO" SIGNS ARE THE SAME AS "W" SIGNS EXCEPT THE BACKGROUND IS ORANGE.

ANY SIGNS TEMPORARY OR EXISTING, WHICH CONFLICT WITH TRAFFIC CONTROL "IN USE" SHALL BE REMOVED OR COVERED AS NEEDED OR AS APPROVED BY THE ENGINEER.

CONSIDER ROADWAY GEOMETRICS WHEN LOCATING SIGNS AND ARROW BOARD SO THE DRIVER HAS A CLEAR VIEW OF THE ARROW BOARD AND LANE CLOSURE DRUMS.

FOR A LANE CLOSURE THAT IS IN PLACE LESS THAN 7 CONTINUOUS DAYS AND NIGHTS, THE ADVANCED WARNING SIGNS MAY BE MOUNTED ON PORTABLE SUPPORTS.

REMOVE PAVEMENT MARKINGS AND PLACE TEMPORARY PAVEMENT MARKING LINE IF LANE CLOSURE IS TO BE IN PLACE 4 OR MORE CONTINUOUS DAYS AND NIGHTS.

WARNING LIGHTS ARE NOT REQUIRED IF THE LANE CLOSURE IS A DAYTIME ONLY OPERATION.

IF THE HORIZONTAL ALIGNMENT IS SUCH THAT A CURVE MAY REQUIRE ADDITIONAL DELINEATION, THE DEVICE SPACING MAY BE DECREASED TO 50 FEET.

ADJUSTMENTS IN BUFFER SPACE NEED TO BE INCORPORATED WHEN THE LANE CLOSURE OCCURS NEAR AN INTERCHANGE EXIT OR ENTRANCE RAMP OR INTERSECTION. THE LANE CLOSURE MUST TAKE PLACE FAR ENOUGH IN ADVANCE OF AN EXIT OR ENTRANCE RAMP TO STILL ALLOW FOR ADEQUATE BUFFER SPACE. THE MINIMUM LENGTH OF THE BUFFER SPACE BEFORE AN EXIT RAMP SHOULD BE ONE HALF THE LENGTH OF THE TRANSITION AREA. THE ENTRANCE RAMP SHOULD BE FOLLOWED BY THE ORIGINAL BUFFER SPACE LENGTH OF 800 FEET DESIRABLE PRIOR TO ANOTHER TRAFFIC CONTROL CHANGE SUCH AS A CROSSOVER MANEUVER.

(1) A SPEED LIMIT SIGN SHALL BE LOCATED 1500 FEET BEYOND THE END OF THE ACCELERATION LANE OF EACH ENTRANCE RAMP. PLACE A SPEED LIMIT SIGN A MINIMUM OF EVERY 3 MILES. INCLUDE A RESUME SPEED LIMIT SIGN 200 FEET MINIMUM (500 FEET DESIRABLE) BEYOND THE "END OF ROADWORK" SIGN.

LEGEND

- SIGN ON PERMANENT SUPPORT
- TRAFFIC CONTROL DRUM
- TRAFFIC CONTROL DRUM WITH TYPE "C" STEADY BURN LIGHT
- TYPE III BARRICADE WITH ATTACHED SIGN
- TYPE "A" WARNING LIGHT (FLASHING)
- REMOVING PAVEMENT MARKINGS
- DIRECTION OF TRAFFIC
- WORK AREA
- FLASHING ARROW BOARD

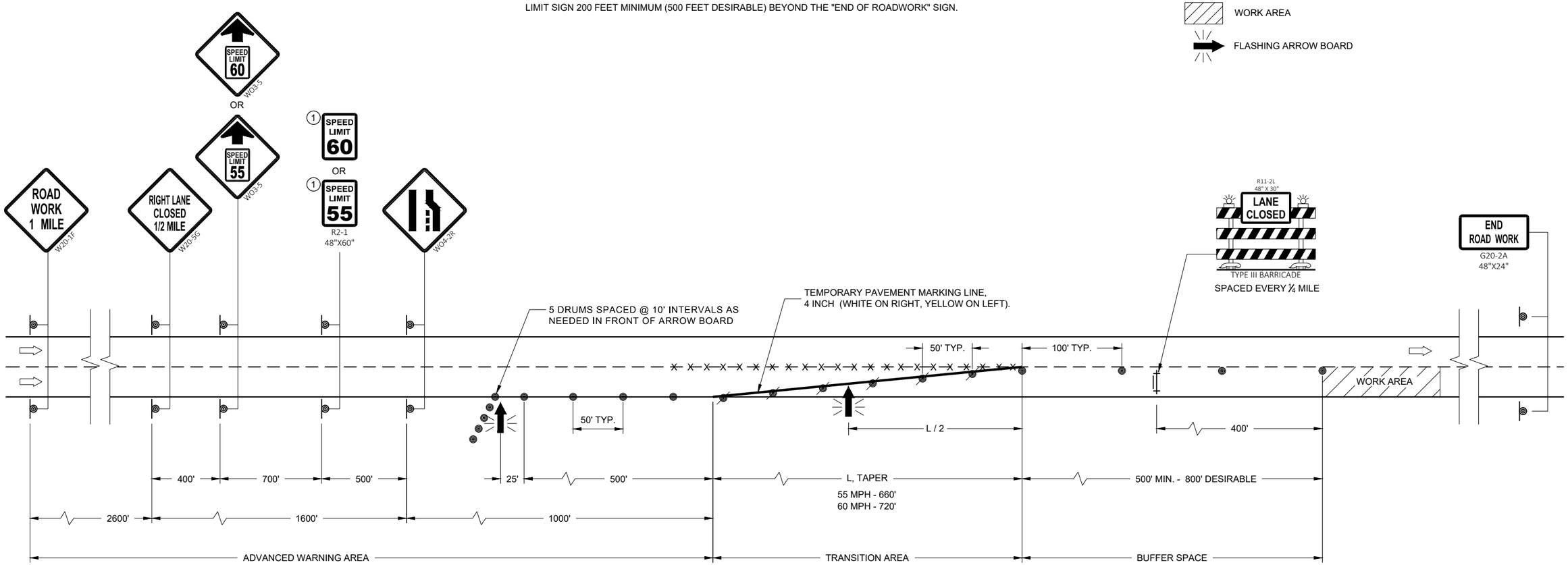

TRAFFIC CONTROL, LANE CLOSURE, SPEED REDUCTION

STATE OF WISCONSIN
DEPARTMENT OF TRANSPORTATION

APPROVED
February 2022
DATE

/S/ Andrew Heidtke
WORK ZONE ENGINEER

FHWA

SDD 15D12 - 10b

6
SDD 15D12 - 10b

LEGEND

- SIGN ON PERMANENT SUPPORT
- TRAFFIC CONTROL DRUM
- TRAFFIC CONTROL DRUM WITH TYPE "C" STEADY BURN LIGHT
- TYPE III BARRICADE WITH ATTACHED SIGN
- TYPE "A" WARNING LIGHT (FLASHING)
- REMOVING PAVEMENT MARKINGS
- DIRECTION OF TRAFFIC
- WORK AREA
- FLASHING ARROW BOARD
- PCMS — PORTABLE CHANGEABLE MESSAGE SIGN
- (S) — PORTABLE TRAFFIC SENSOR (PTS)
- FBS — FLASHING BEACON SIGNS
- STOPPED OR SLOW TRAFFIC WHEN FLASHING — WO8-76, 60x36

GENERAL NOTES

THE EXACT NUMBER, LOCATION, AND SPACING OF ALL SIGNS AND DEVICES SHALL BE ADJUSTED TO FIT FIELD CONDITIONS AS APPROVED BY THE ENGINEER.

THE SPACING BETWEEN SIGNS SHOULD BE ADJUSTED TO NOT CONFLICT WITH AND TO PROVIDE A MINIMUM OF 200 FEET (500 FEET DESIRABLE) CLEARANCE TO EXISTING SIGNS.

ALL SIGNS ARE 48" x 48" UNLESS OTHERWISE NOTED.

"WO" SIGNS ARE THE SAME AS "W" SIGNS EXCEPT THE BACKGROUND IS ORANGE.

ANY SIGNS TEMPORARY OR EXISTING, WHICH CONFLICT WITH TRAFFIC CONTROL "IN USE" SHALL BE REMOVED OR COVERED AS NEEDED OR AS APPROVED BY THE ENGINEER.

FOR A LANE CLOSURE THAT IS IN PLACE LESS THAN 7 CONTINUOUS DAYS AND NIGHTS, THE ADVANCED WARNING SIGNS MAY BE MOUNTED ON PORTABLE SUPPORTS.

REMOVE PAVEMENT MARKINGS AND PLACE TEMPORARY PAVEMENT MARKING LINE IF LANE CLOSURE IS TO BE IN PLACE 4 OR MORE CONTINUOUS DAYS AND NIGHTS.

IF THE HORIZONTAL ALIGNMENT IS SUCH THAT A CURVE MAY REQUIRE ADDITIONAL DELINEATION, THE DEVICE SPACING MAY BE DECREASED TO 50 FEET.

WARNING LIGHTS ARE NOT REQUIRED IF THE LANE CLOSURE IS A DAYTIME ONLY OPERATION. ADJUSTMENTS IN BUFFER SPACE NEED TO BE INCORPORATED WHEN THE LANE CLOSURE OCCURS NEAR AN INTERCHANGE EXIT OR ENTRANCE RAMP OR INTERSECTION. THE LANE CLOSURE MUST TAKE PLACE FAR ENOUGH IN ADVANCE OF AN EXIT OR ENTRANCE RAMP TO STILL ALLOW FOR ADEQUATE BUFFER SPACE. THE MINIMUM LENGTH OF THE BUFFER SPACE BEFORE AN EXIT RAMP SHOULD BE ONE HALF THE LENGTH OF THE TRANSITION AREA. THE ENTRANCE RAMP SHOULD BE FOLLOWED BY THE ORIGINAL BUFFER SPACE LENGTH OF 800 FEET DESIRABLE PRIOR TO ANOTHER TRAFFIC CONTROL CHANGE SUCH AS A CROSSOVER MANEUVER.

CONSIDER ROADWAY GEOMETRICS WHEN LOCATING SIGNS AND ARROW BOARD SO THE DRIVER HAS A CLEAR VIEW OF THE ARROW BOARD AND LANE CLOSURE DRUMS.

PORTABLE TRAFFIC SENSOR (PTS) MAY BE MOUNTED ON PCMS, FBS, ARROW BOARD OR OTHER TRAILER DEVICES.

1. IF THERE ARE MORE THAN TWO LANES, CHANGE FRAME 2 OF THE PCMS TO STATE "USE ALL LANES".
2. PLACE FLASHING BEACON SIGNS EVERY ONE MILE BETWEEN PCMS #1 AND FBS #1. THE NUMBER OF FBS MAY BE MORE THAN SHOWN ON THIS DETAIL.
3. FOR THREE LANE CONFIGURATION, PLACE FBS ON BOTH SIDES OF ROADWAY. CHANGE PCMS #1 FRAME 2 MESSAGE TO "USE ALL LANES".
4. 5 DRUMS SPACED @ 10' INTERVALS AS NEEDED.
5. PCMS SHALL FOLLOW ARROW BOARD STANDARDS WHEN DISPLAYING FLASHING FOUR CORNER CAUTION MODE OR FLASHING ARROW MERGE MODE.
6. TO MINIMIZE OBSTRUCTION OF THE ARROW BOARD BY THE PCMS, OFFSET THE PCMS AS NEEDED FROM THE EDGE LINE
7. IF THERE IS AN APPROVED TEMPORARY SPEED DECLARATION, ADD WO-3-5 SIGNS 400 FEET AFTER THE W20-5G SIGNS AND ADD R2-1 SIGNS (48"x60") 700 FEET AFTER THE WO3-5 SIGNS. A SPEED LIMIT SIGN SHALL BE LOCATED 1500 FEET BEYOND THE END OF THE ACCELERATION LANE OF EACH ENTRANCE RAMP. PLACE A SPEED LIMIT SIGN A MINIMUM OF EVERY 3 MILES. INCLUDE A "RESUME SPEED LIMIT" SIGN 200 FEET MINIMUM (800 FEET DESIRABLE) BEYOND THE G30-3A "END ROAD WORK" SIGN.
8. IF THERE ARE MORE THAN TWO LANES OR IF SPECIFIED IN THE PLANS, PLACE PCMS AND FBS ON THE SAME SIDE OF THE ROADWAY.

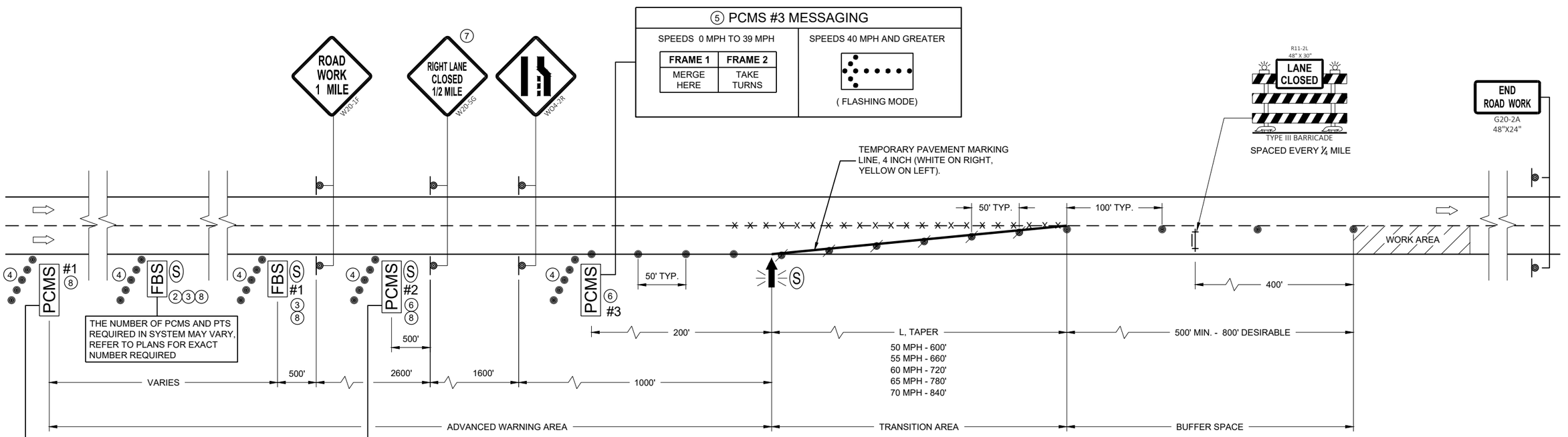

TRAFFIC CONTROL, DYNAMIC LATE MERGE SYSTEM

STATE OF WISCONSIN
DEPARTMENT OF TRANSPORTATION

APPROVED
February 2022 — DATE
/S/ Erin Schwark — WORK ZONE ENGINEER

FHWA

SDD 15D12 - 10c

SDD 15D12 - 10c

LEGEND

- SIGN ON PERMANENT SUPPORT
- TRAFFIC CONTROL DRUM
- TRAFFIC CONTROL DRUM WITH TYPE "C" STEADY BURN LIGHT
- TYPE III BARRICADE WITH ATTACHED SIGN
- TYPE "A" WARNING LIGHT (FLASHING)
- REMOVING PAVEMENT MARKINGS
- DIRECTION OF TRAFFIC
- WORK AREA
- FLASHING ARROW BOARD
- PCMS — PORTABLE CHANGEABLE MESSAGE SIGN
- (S) — PORTABLE TRAFFIC SENSOR (PTS)

GENERAL NOTES

THE EXACT NUMBER, LOCATION, AND SPACING OF ALL SIGNS, INCLUDING FBS AND DEVICES SHALL BE ADJUSTED TO FIT FIELD CONDITIONS AS APPROVED BY THE ENGINEER.

THE SPACING BETWEEN SIGNS SHOULD BE ADJUSTED TO NOT CONFLICT WITH AND TO PROVIDE A MINIMUM OF 200 FEET (500 FEET DESIRABLE) CLEARANCE TO EXISTING SIGNS.

THIS LANE CLOSURE IS TYPICAL FOR CLOSING RIGHT LANE - REVERSE FOR CLOSING LEFT LANE.

ALL SIGNS ARE 48" x 48" UNLESS OTHERWISE NOTED.

"WO" SIGNS ARE THE SAME AS "W" SIGNS EXCEPT THE BACKGROUND IS ORANGE.

ANY SIGNS TEMPORARY OR EXISTING, WHICH CONFLICT WITH TRAFFIC CONTROL "IN USE" SHALL BE REMOVED OR COVERED AS NEEDED OR AS APPROVED BY THE ENGINEER. NO WARNING LIGHTS SHALL BE WORKING ON "COVERED" OR "DOWNED SIGNS.

FOR A LANE CLOSURE THAT IS IN PLACE LESS THAN 7 CONTINUOUS DAYS AND NIGHTS, THE ADVANCED WARNING SIGNS MAY BE MOUNTED ON PORTABLE SUPPORTS.

REMOVE PAVEMENT MARKINGS AND PLACE TEMPORARY PAVEMENT MARKING LINE IF LANE CLOSURE IS TO BE IN PLACE 4 OR MORE CONTINUOUS DAYS AND NIGHTS.

WARNING LIGHTS ARE NOT REQUIRED IF THE LANE CLOSURE IS A DAYTIME ONLY OPERATION.

IF THE HORIZONTAL ALIGNMENT IS SUCH THAT A CURVE MAY REQUIRE ADDITIONAL DELINEATION, THE DEVICE SPACING MAY BE DECREASED TO 50 FEET.

ADJUSTMENTS IN BUFFER SPACE NEED TO BE INCORPORATED WHEN THE LANE CLOSURE OCCURS NEAR AN INTERCHANGE EXIT OR ENTRANCE RAMP OR INTERSECTION. THE LANE CLOSURE MUST TAKE PLACE FAR ENOUGH IN ADVANCE OF AN EXIT OR ENTRANCE RAMP TO STILL ALLOW FOR ADEQUATE BUFFER SPACE. THE MINIMUM LENGTH OF THE BUFFER SPACE BEFORE AN EXIT RAMP SHOULD BE ONE HALF THE LENGTH OF THE TRANSITION AREA. THE ENTRANCE RAMP SHOULD BE FOLLOWED BY THE ORIGINAL BUFFER SPACE LENGTH OF 800 FEET DESIRABLE PRIOR TO ANOTHER TRAFFIC CONTROL CHANGE SUCH AS A CROSSOVER MANEUVER.

CONSIDER ROADWAY GEOMETRICS WHEN LOCATING SIGNS AND ARROW BOARD SO THE DRIVER HAS A CLEAR VIEW OF THE ARROW BOARD AND LANE CLOSURE DRUMS.

PORTABLE TRAFFIC SENSOR (PTS) MAY BE MOUNTED ON PCMS, ARROW BOARD OR OTHER TRAILER DEVICES.

1. 5 DRUMS SPACED AT 10 FOOT INTERVALS AS NEEDED.
2. IF THERE ARE MORE THAN TWO LANES OR IF SPECIFIED IN THE PLANS, PLACE PCMS ON BOTH SIDES OF THE ROADWAY.
3. IF THERE IS AN APPROVED TEMPORARY SPEED DECLARATION, ADD WO-3-5 SIGNS 400 FEET AFTER THE W20-5G SIGNS AND ADD R2-1 SIGNS (48"x60") 700 FEET AFTER THE WO3-5 SIGNS. A SPEED LIMIT SIGN SHALL BE LOCATED 1500 FEET BEYOND THE END OF THE ACCELERATION LANE OF EACH ENTRANCE RAMP. PLACE A SPEED LIMIT SIGN A MINIMUM OF EVERY 3 MILES. INCLUDE A "RESUME SPEED LIMIT" SIGN 200 FEET MINIMUM (800 FEET DESIRABLE) BEYOND THE G30-3A "END ROAD WORK" SIGN.
4. PLACE PCMS EVERY ONE MILE BETWEEN PCMS #1 AND PCMS #2, OR AS THE ENGINEER DIRECTS. THE NUMBER OF PCMS MAY BE MORE THAN SHOWN ON THIS DETAIL.
5. PCMS SHALL FOLLOW ARROW BOARD STANDARDS WHEN DISPLAYING FLASHING FOUR CORNER CAUTION MODE OR FLASHING ARROW MERGE MODE.

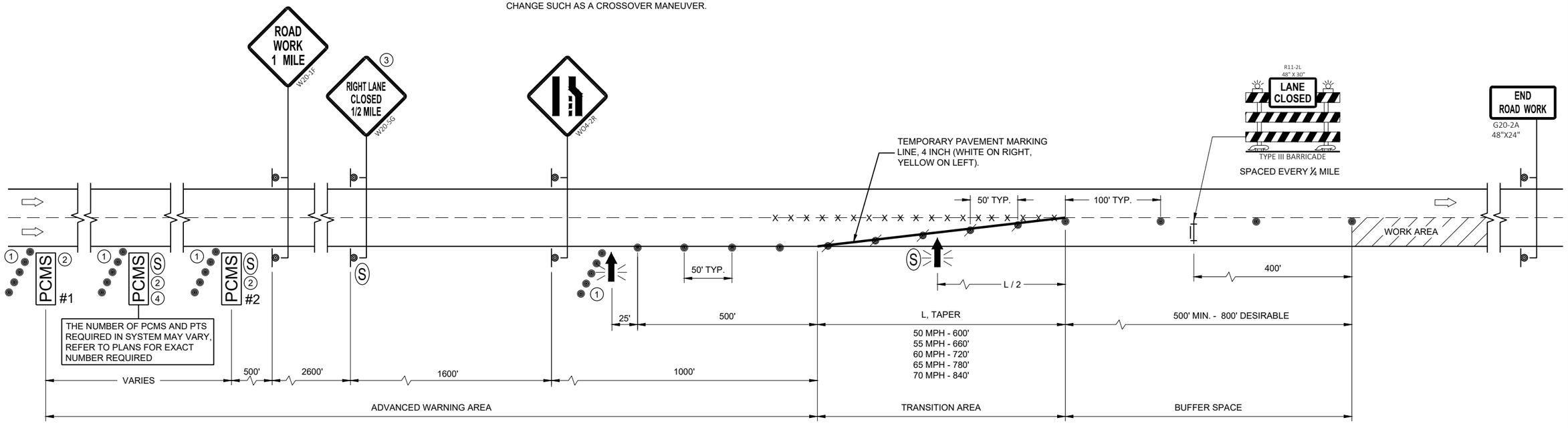

5 PCMS MESSAGING

SPEEDS 0 MPH TO 19 MPH		SPEEDS 20 MPH TO 39 MPH		SPEEDS 40 MPH AND GREATER
FRAME 1	FRAME 2	FRAME 1	FRAME 2	
STOPPED TRAFFIC AHEAD	EXPECT DELAYS	SLOW TRAFFIC AHEAD	PREPARE TO STOP	(FLASHING CAUTION MODE)

TRAFFIC CONTROL, LANE CLOSURE, TRAFFIC QUEUE WARNING SYSTEM

STATE OF WISCONSIN
DEPARTMENT OF TRANSPORTATION

APPROVED
February 2022 — DATE
/S/ Erin Schwark — WORK ZONE ENGINEER
FHWA

SDD 15D12 - 10e

6
SDD 15D12 - 10e

LEGEND

SIGN ON PERMANENT SUPPORT

SIGN ON TEMPORARY SUPPORT

TRAFFIC CONTROL DRUM

TRAFFIC CONTROL DRUM WITH TYPE "C" STEADY BURN LIGHT

REMOVING PAVEMENT MARKING (SEE GENERAL NOTES)

TYPE III BARRICADE WITH ATTACHED SIGN

DIRECTION OF TRAFFIC

GENERAL NOTES

THE INSTALLATIONS SHOWN ON THIS SHEET ARE TYPICAL EXAMPLES AND ARE NOT INTENDED TO REPRESENT ANY PARTICULAR RAMP. AT SPECIFIC FIELD LOCATIONS, SIMILAR INSTALLATIONS SHALL BE USED AND ADJUSTED TO THE GEOMETRICS OF THE RAMP AS COORDINATED WITH THE ENGINEER.

THE EXACT NUMBER, LOCATION, AND SPACING OF ALL SIGNS AND DEVICES SHALL BE ADJUSTED TO FIT FIELD CONDITIONS AS APPROVED BY THE ENGINEER.

THE SPACING BETWEEN TRAFFIC CONTROL SIGNS SHOULD BE ADJUSTED TO NOT CONFLICT WITH AND SHOULD PROVIDE A MINIMUM OF 200 FEET (500 FEET DESIRABLE) CLEARANCE TO EXISTING SIGNS THAT WILL REMAIN IN PLACE.

ALL SIGNS ARE 48" X 48" UNLESS OTHERWISE NOTED.

"WO" IS THE SAME AS "W" EXCEPT THE BACKGROUND IS ORANGE.

SEE SEPARATE LANE CLOSURE DETAIL FOR TYPICAL SPACING OF TYPE III BARRICADES AND R11-2L "LANE CLOSED" SIGNS.

SIGNS THAT WILL BE IN PLACE LESS THAN 7 CONSECUTIVE DAYS AND NIGHTS OR THAT WILL BE PLACED IN A CLOSED LANE, MAY BE MOUNTED ON PORTABLE SUPPORTS. USE SUPPORTS THAT PROVIDE A MINIMUM OF 5 FEET FROM THE BOTTOM OF THE SIGN TO THE PAVEMENT.

IF INDICATED IN MISCELLANEOUS QUANTITIES, SUBSTITUTE FLEXIBLE TUBULAR MARKERS FOR DRUMS IN THE GORE BETWEEN THE ENTRANCE RAMP AND MAINLINE TRAFFIC.

ANY SIGNS TEMPORARY OR EXISTING, WHICH CONFLICT WITH TRAFFIC CONTROL "IN USE" SHALL BE REMOVED OR COVERED AS NEEDED AND AS APPROVED BY THE ENGINEER.

REMOVE PAVEMENT MARKINGS AND PLACE TEMPORARY PAVEMENT MARKING LINES IF LANE CLOSURE IS TO BE IN PLACE FOR 4 OR MORE CONTINUOUS DAYS AND NIGHTS.

WARNING LIGHTS ARE NOT REQUIRED IF THE LANE CLOSURE IS A DAYTIME ONLY OPERATION.

(1) EXTEND THE LENGTH OF THE MERGE ARE IF THE ENTERING (DESIGN) SPEED IS LESS THAN 50MPH OR IF THE MAINLINE GRADE EXCEEDS ±2.2%.

(2) END TEMPORARY PAVEMENT MARKING LINE AT ½ THE LENGTH OF FULL WIDTH OF THE ACCELERATION LANE.

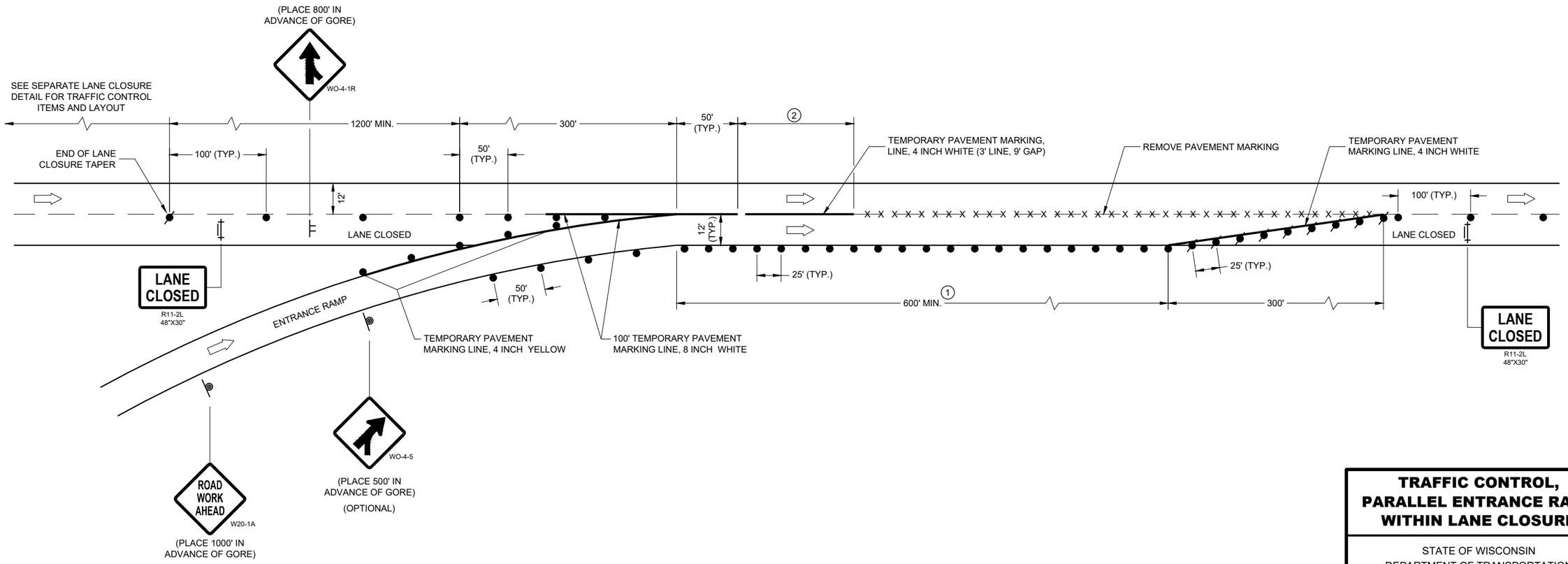

TRAFFIC CONTROL, PARALLEL ENTRANCE RAMP WITHIN LANE CLOSURE

STATE OF WISCONSIN
DEPARTMENT OF TRANSPORTATION

APPROVED
February 2022
DATE

/S/ Andrew Heidtke
WORK ZONE ENGINEER

FHWA

6

SDD 15D15 - 06a

LEGEND

- SIGN ON PERMANENT SUPPORT
- SIGN ON TEMPORARY SUPPORT
- TRAFFIC CONTROL DRUM
- TRAFFIC CONTROL DRUM WITH TYPE "C" STEADY BURN LIGHT
- REMOVING PAVEMENT MARKING (SEE GENERAL NOTES)
- TYPE III BARRICADE WITH ATTACHED SIGN
- DIRECTION OF TRAFFIC

GENERAL NOTES

THE INSTALLATIONS SHOWN ON THIS SHEET ARE TYPICAL EXAMPLES AND ARE NOT INTENDED TO REPRESENT ANY PARTICULAR RAMP. AT SPECIFIC FIELD LOCATIONS, SIMILAR INSTALLATIONS SHALL BE USED AND ADJUSTED TO THE GEOMETRICS OF THE RAMP AS COORDINATED WITH THE ENGINEER.

THE EXACT NUMBER, LOCATION, AND SPACING OF ALL SIGNS AND DEVICES SHALL BE ADJUSTED TO FIT FIELD CONDITIONS AS APPROVED BY THE ENGINEER.

THE SPACING BETWEEN TRAFFIC CONTROL SIGNS SHOULD BE ADJUSTED TO NOT CONFLICT WITH AND SHOULD PROVIDE A MINIMUM OF 200 FEET (500 FEET DESIRABLE) CLEARANCE TO EXISTING SIGNS THAT WILL REMAIN IN PLACE.

ALL SIGNS ARE 48" X 48" UNLESS OTHERWISE NOTED.

"WO" IS THE SAME AS "W" EXCEPT THE BACKGROUND IS ORANGE.

SEE SEPARATE LANE CLOSURE DETAIL FOR TYPICAL SPACING OF TYPE III BARRICADES AND R11-2L "LANE CLOSED" SIGNS.

SIGNS THAT WILL BE IN PLACE LESS THAN 7 CONSECUTIVE DAYS AND NIGHTS OR THAT WILL BE PLACED IN A CLOSED LANE, MAY BE MOUNTED ON PORTABLE SUPPORTS.

IF INDICATED IN MISCELLANEOUS QUANTITIES, SUBSTITUTE FLEXIBLE TUBULAR MARKERS /OR DRUMS IN THE GORE BETWEEN THE EXIT RAMP AND MAINLINE TRAFFIC.

ANY SIGNS TEMPORARY OR EXISTING, WHICH CONFLICT WITH TRAFFIC CONTROL "IN USE" SHALL BE REMOVED OR COVERED AS NEEDED AND AS APPROVED BY THE ENGINEER.

REMOVE PAVEMENT MARKINGS AND PLACE TEMPORARY PAVEMENT MARKING LINES IF LANE CLOSURE IS TO BE IN PLACE FOR 4 OR MORE CONTINUOUS DAYS AND NIGHTS.

WARNING LIGHTS ARE NOT REQUIRED IF THE LANE CLOSURE IS A DAYTIME ONLY OPERATION.

(1) EXTEND THE LENGTH OF THE MERGE AREA IF THE ENTERING (DESIGN) SPEED OF THE RAMP IS LESS THAN 50 MPH OR IF THE MAINLINE GRADE EXCEEDS ±2.2%.

(2) END TEMPORARY PAVEMENT MARKING LINE AT ½ THE LENGTH OF FULL WIDTH OF THE ACCELERATION LANE.

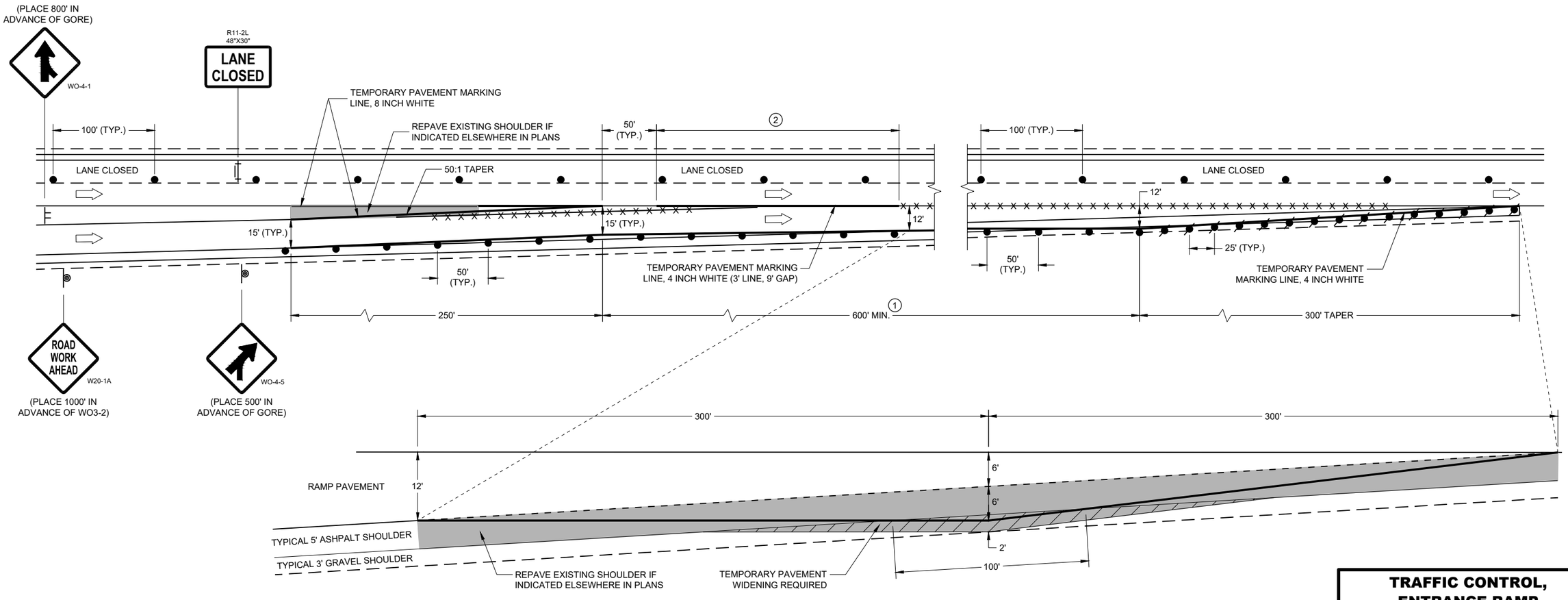

TEMPORARY PAVEMENT DETAIL

(EXISTING RAMP DIMENSIONS MAY VARY, ADJUST TEMPORARY PAVEMENT ACCORDINGLY)

TRAFFIC CONTROL, ENTRANCE RAMP WITHIN LANE CLOSURE

STATE OF WISCONSIN
DEPARTMENT OF TRANSPORTATION

APPROVED
February 2022
DATE

/S/ Andrew Heidtke
WORK ZONE ENGINEE

FHWA

SDD 15D15 - 06b

SDD15D15 - 06b

LEGEND

SIGN ON PERMANENT SUPPORT

SIGN ON TEMPORARY SUPPORT

TRAFFIC CONTROL DRUM

TRAFFIC CONTROL DRUM WITH TYPE "C" STEADY BURN LIGHT

REMOVING PAVEMENT MARKING (SEE GENERAL NOTES)

TYPE III BARRICADE WITH ATTACHED SIGN

FLAGS, 16" X 16" MIN., ORANGE

DIRECTION OF TRAFFIC

GENERAL NOTES

THE INSTALLATIONS SHOWN ON THIS SHEET ARE TYPICAL EXAMPLES AND ARE NOT INTENDED TO REPRESENT ANY PARTICULAR RAMP. AT SPECIFIC FIELD LOCATIONS, SIMILAR INSTALLATIONS SHALL BE USED AND ADJUSTED TO THE GEOMETRICS OF THE RAMP AS COORDINATED WITH THE ENGINEER.

THE EXACT NUMBER, LOCATION, AND SPACING OF ALL SIGNS AND DEVICES SHALL BE ADJUSTED TO FIT FIELD CONDITIONS AS APPROVED BY THE ENGINEER.

THE SPACING BETWEEN TRAFFIC CONTROL SIGNS SHOULD BE ADJUSTED TO NOT CONFLICT WITH AND SHOULD PROVIDE A MINIMUM OF 200 FEET (500 FEET DESIRABLE) CLEARANCE TO EXISTING SIGNS THAT WILL REMAIN IN PLACE.

ALL SIGNS ARE 48" X 48" UNLESS OTHERWISE NOTED.

"WO" IS THE SAME AS "W" EXCEPT THE BACKGROUND IS ORANGE.

SEE SEPARATE LANE CLOSURE DETAIL FOR TYPICAL SPACING OF TYPE III BARRICADES AND R11-2L "LANE CLOSED" SIGNS.

YIELD SIGN AND WARNING SIGNS ON ENTRANCE RAMP ARE ALSO APPROPRIATE FOR CLOSURE OF THE MAINLINE LEFT LANE. OMIT THE YIELD SIGN IF MORE THAN ONE LANE REMAINS OPEN ON THE MAINLINE AND THE RAMP TAPER IS AT LEAST AS LONG AS THE NORMAL ENTRANCE RAMP TAPER AT THE SITE.

SIGNS THAT WILL BE IN PLACE LESS THAN 7 CONSECUTIVE DAYS AND NIGHTS OR THAT WILL BE PLACED IN A CLOSED LANE, MAY BE MOUNTED ON PORTABLE SUPPORTS. USE SUPPORTS THAT PROVIDE A MINIMUM OF 5 FEET FROM THE BOTTOM OF THE SIGN TO THE PAVEMENT.

IF INDICATED IN MISCELLANEOUS QUANTITIES, SUBSTITUTE FLEXIBLE TUBULAR MARKERS FOR DRUMS IN THE GORE BETWEEN THE ENTRANCE RAMP AND MAINLINE TRAFFIC.

ANY SIGNS TEMPORARY OR EXISTING, WHICH CONFLICT WITH TRAFFIC CONTROL "IN USE" SHALL BE REMOVED OR COVERED AS NEEDED AND AS APPROVED BY THE ENGINEER.

REMOVE PAVEMENT MARKINGS AND PLACE TEMPORARY PAVEMENT MARKING LINES IF LANE CLOSURE IS TO BE IN PLACE FOR 4 OR MORE CONTINUOUS DAYS AND NIGHTS.

WARNING LIGHTS ARE NOT REQUIRED IF THE LANE CLOSURE IS A DAYTIME ONLY OPERATION.

(1) CONSULT WITH REGIONAL WORK ZONE ENGINEER IF NEED TO REDUCE LENGTH EXISTS.

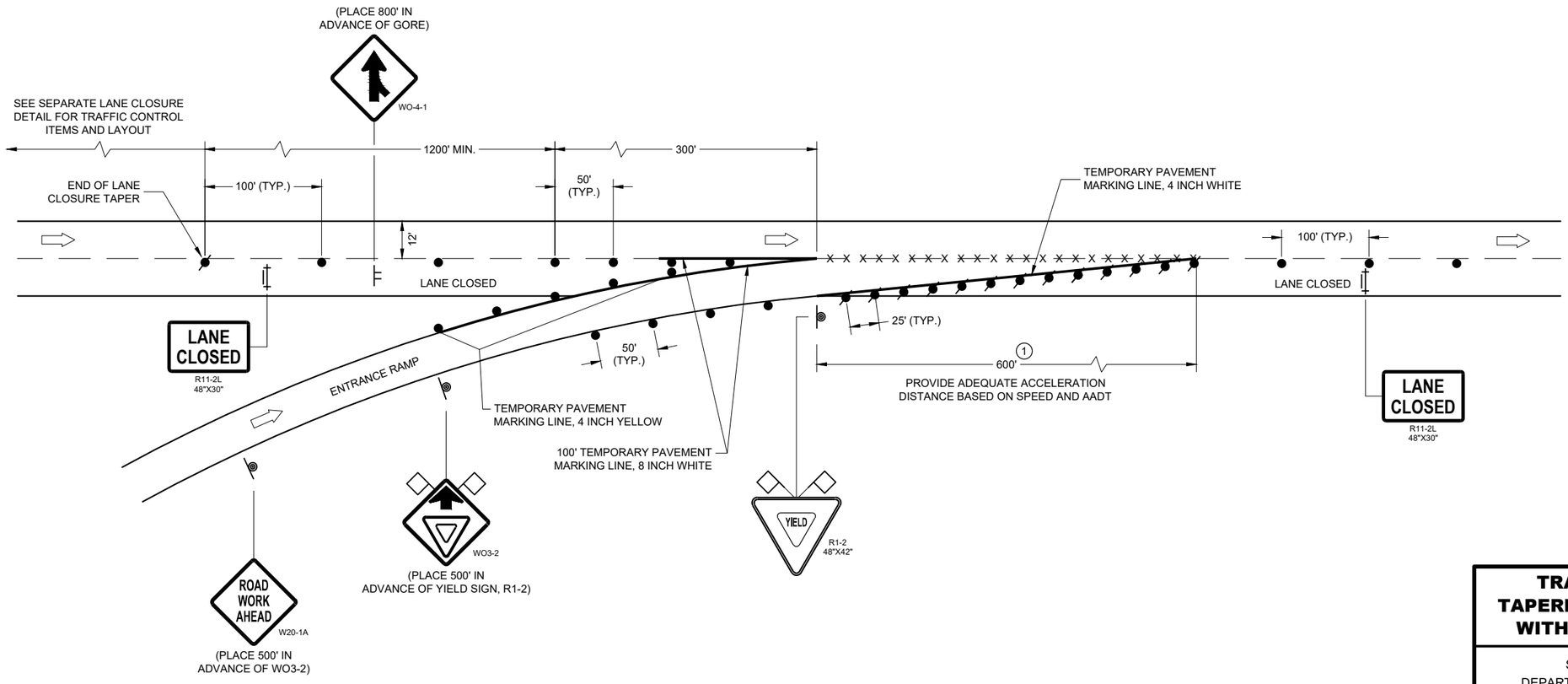

TRAFFIC CONTROL, TAPERED ENTRANCE RAMP WITHIN LANE CLOSURE

STATE OF WISCONSIN
DEPARTMENT OF TRANSPORTATION

APPROVED
February 2022
DATE

/S/ Andrew Heidtke
WORK ZONE ENGINEE

FHWA

6

SDD 15D15 - 06c

6

SDD 15D15 - 06c

LEGEND

SIGN ON PERMANENT SUPPORT

SIGN ON TEMPORARY SUPPORT

TRAFFIC CONTROL DRUM

TRAFFIC CONTROL DRUM WITH TYPE "C" STEADY BURN LIGHT

TYPE III BARRICADE WITH ATTACHED SIGN

FLAGS, 16" X 16" MIN., ORANGE

DIRECTION OF TRAFFIC

GENERAL NOTES

THE INSTALLATIONS SHOWN ON THIS SHEET ARE TYPICAL EXAMPLES AND ARE NOT INTENDED TO REPRESENT ANY PARTICULAR RAMP. AT SPECIFIC FIELD LOCATIONS, SIMILAR INSTALLATIONS SHALL BE USED AND ADJUSTED TO THE GEOMETRICS OF THE RAMP AS COORDINATED WITH THE ENGINEER.

THE EXACT NUMBER, LOCATION, AND SPACING OF ALL SIGNS AND DEVICES SHALL BE ADJUSTED TO FIT FIELD CONDITIONS AS APPROVED BY THE ENGINEER.

THE SPACING BETWEEN TRAFFIC CONTROL SIGNS SHOULD BE ADJUSTED TO NOT CONFLICT WITH AND SHOULD PROVIDE A MINIMUM OF 200 FEET (500 FEET DESIRABLE) CLEARANCE TO EXISTING SIGNS THAT WILL REMAIN IN PLACE.

ALL SIGNS ARE 48" X 48" UNLESS OTHERWISE NOTED.

"WO" IS THE SAME AS "W" EXCEPT THE BACKGROUND IS ORANGE.

SEE SEPARATE LANE CLOSURE DETAIL FOR TYPICAL SPACING OF TYPE III BARRICADES AND R11-2L "LANE CLOSED" SIGNS.

YIELD SIGN AND WARNING SIGNS ON ENTRANCE RAMP ARE ALSO APPROPRIATE FOR CLOSURE OF THE MAINLINE LEFT LANE. OMIT THE YIELD SIGN IF MORE THAN ONE LANE REMAINS OPEN ON THE MAINLINE AND THE RAMP TAPER IS AT LEAST AS LONG AS THE NORMAL ENTRANCE RAMP TAPER AT THE SITE.

SIGNS THAT WILL BE IN PLACE LESS THAN 7 CONSECUTIVE DAYS AND NIGHTS OR THAT WILL BE PLACED IN A CLOSED LANE, MAY BE MOUNTED ON PORTABLE SUPPORTS. USE SUPPORTS THAT PROVIDE A MINIMUM OF 5 FEET FROM THE BOTTOM OF THE SIGN TO THE PAVEMENT.

IF INDICATED IN MISCELLANEOUS QUANTITIES, SUBSTITUTE FLEXIBLE TUBULAR MARKERS FOR DRUMS IN THE GORE BETWEEN THE ENTRANCE RAMP AND MAINLINE TRAFFIC.

ANY SIGNS TEMPORARY OR EXISTING, WHICH CONFLICT WITH TRAFFIC CONTROL "IN USE" SHALL BE REMOVED OR COVERED AS NEEDED AND AS APPROVED BY THE ENGINEER.

WARNING LIGHTS ARE NOT REQUIRED IF THE LANE CLOSURE IS A DAYTIME ONLY OPERATION.

(1) PLACE YIELD SIGN TO PROVIDE ADEQUATE SIGHT DISTANCE AND ACCELERATION DISTANCE.

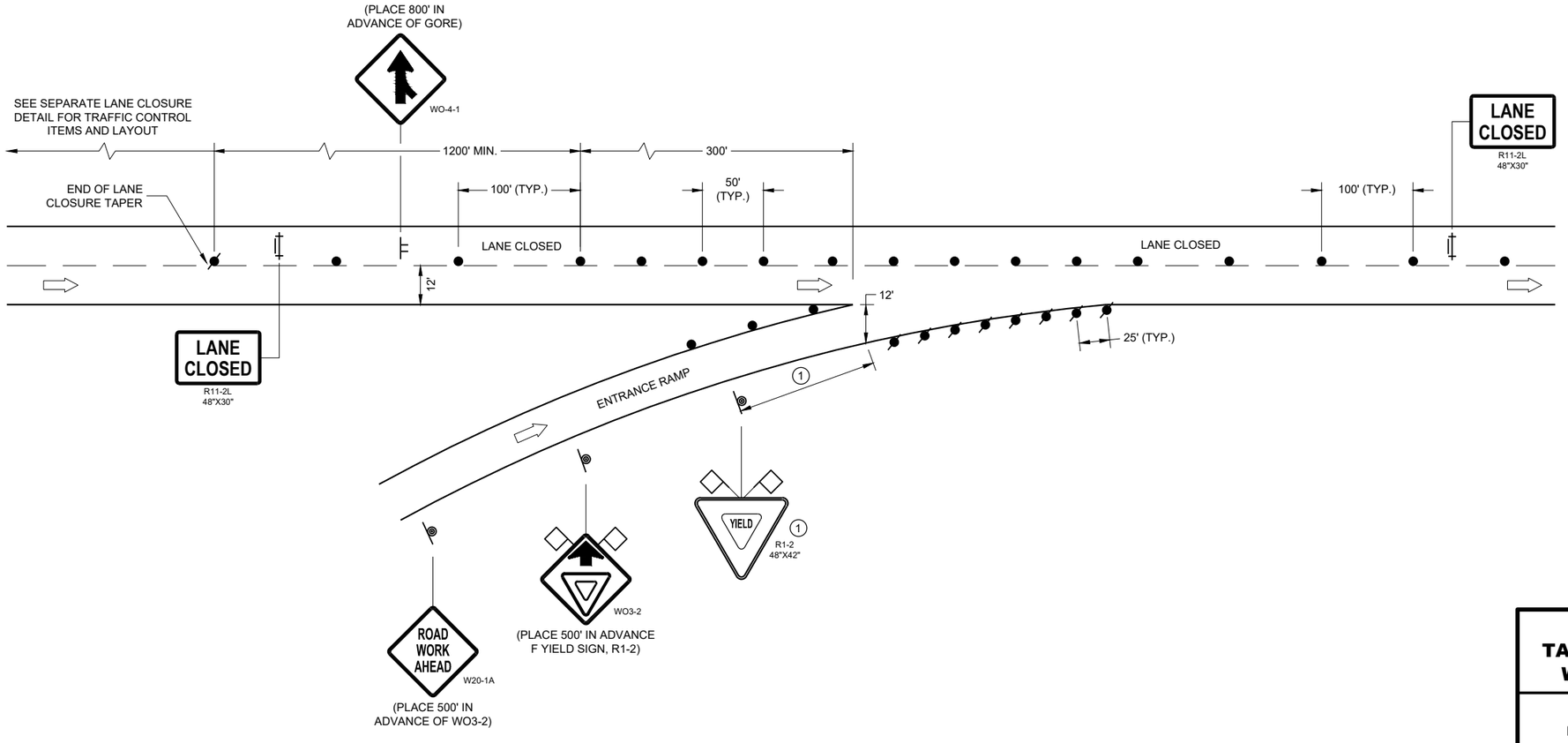

TRAFFIC CONTROL, TAPERED ENTRANCE RAMP WITHIN LANE CLOSURE

STATE OF WISCONSIN
DEPARTMENT OF TRANSPORTATION

APPROVED
February 2022
DATE
/S/ Andrew Heidtke
WORK ZONE ENGINEE 535
FHWA

6

SDD 15D15 - 06d

6

SDD 15D15 - 06d

LEGEND

SIGN ON PERMANENT SUPPORT

SIGN ON TEMPORARY SUPPORT

TRAFFIC CONTROL DRUM

TRAFFIC CONTROL DRUM WITH TYPE "C" STEADY BURN LIGHT

REMOVING PAVEMENT MARKING (SEE GENERAL NOTES)

TYPE III BARRICADE WITH ATTACHED SIGN

DIRECTION OF TRAFFIC

GENERAL NOTES

THE INSTALLATIONS SHOWN ON THIS SHEET ARE TYPICAL EXAMPLES AND ARE NOT INTENDED TO REPRESENT ANY PARTICULAR RAMP. AT SPECIFIC FIELD LOCATIONS, SIMILAR INSTALLATIONS SHALL BE USED AND ADJUSTED TO THE GEOMETRICS OF THE RAMP AS COORDINATED WITH THE ENGINEER.

THE EXACT NUMBER, LOCATION, AND SPACING OF ALL SIGNS AND DEVICES SHALL BE ADJUSTED TO FIT FIELD CONDITIONS AS APPROVED BY THE ENGINEER.

THE SPACING BETWEEN TRAFFIC CONTROL SIGNS SHOULD BE ADJUSTED TO NOT CONFLICT WITH AND SHOULD PROVIDE A MINIMUM OF 200 FEET (500 FEET DESIRABLE) CLEARANCE TO EXISTING SIGNS THAT WILL REMAIN IN PLACE.

ALL SIGNS ARE 48" X 48" UNLESS OTHERWISE NOTED.

"WO" IS THE SAME AS "W" EXCEPT THE BACKGROUND IS ORANGE.

SEE SEPARATE LANE CLOSURE DETAIL FOR TYPICAL SPACING OF TYPE III BARRICADES AND R11-2L "LANE CLOSED" SIGNS.

SIGNS THAT WILL BE IN PLACE LESS THAN 7 CONSECUTIVE DAYS AND NIGHTS OR THAT WILL BE PLACED IN A CLOSED LANE, MAY BE MOUNTED ON PORTABLE SUPPORTS.

IF INDICATED IN MISCELLANEOUS QUANTITIES, SUBSTITUTE FLEXIBLE TUBULAR MARKERS FOR DRUMS IN THE GORE BETWEEN THE EXIT RAMP AND MAINLINE TRAFFIC.

ANY SIGNS TEMPORARY OR EXISTING, WHICH CONFLICT WITH TRAFFIC CONTROL "IN USE" SHALL BE REMOVED OR COVERED AS NEEDED AND AS APPROVED BY THE ENGINEER.

REMOVE PAVEMENT MARKINGS AND PLACE TEMPORARY PAVEMENT MARKING LINES IF LANE CLOSURE IS TO BE IN PLACE FOR 4 OR MORE CONTINUOUS DAYS AND NIGHTS.

WARNING LIGHTS ARE NOT REQUIRED IF THE LANE CLOSURE IS A DAYTIME ONLY OPERATION.

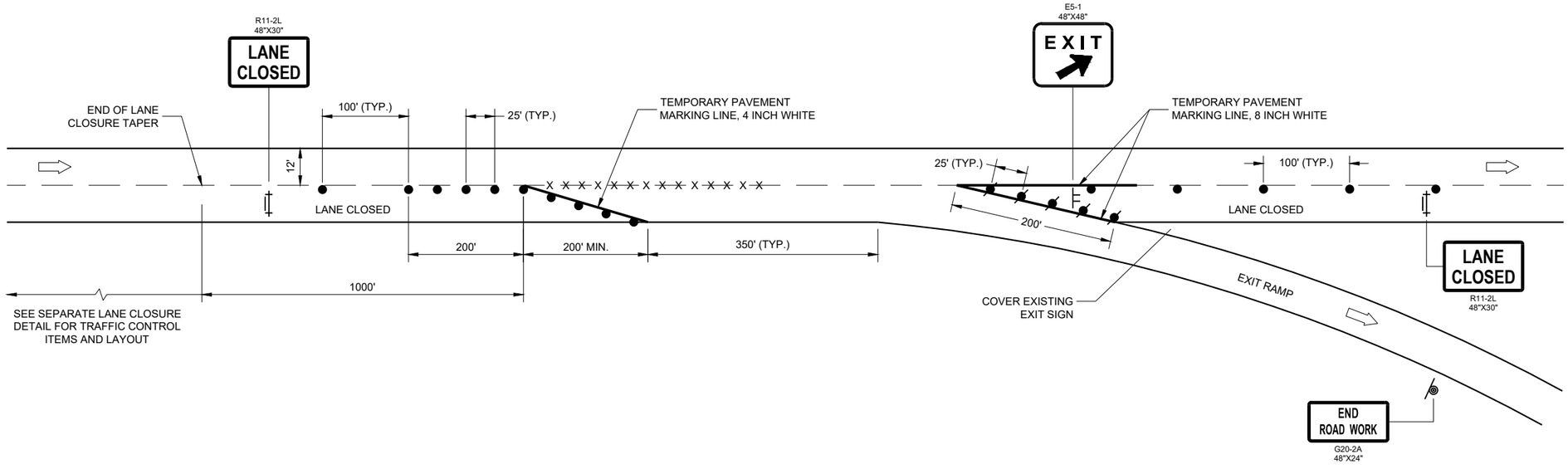

6

SDD 15D15 - 06e

6

SDD15D15 - 06e

TRAFFIC CONTROL, PARALLEL EXIT RAMP WITHIN LANE CLOSURE

STATE OF WISCONSIN
DEPARTMENT OF TRANSPORTATION

APPROVED

February 2022
DATE

/S/ Andrew Heidtke
WORK ZONE ENGINEE

FHWA

LEGEND

- TYPE III BARRICADE
- TYPE III BARRICADE WITH ATTACHED SIGN
- TRAFFIC CONTROL DRUM
- SIGN ON PERMANENT SUPPORT
- TYPE "A" WARNING LIGHT (FLASHING)
- DIRECTION OF TRAFFIC

GENERAL NOTES

THIS RAMP CLOSURE DETAIL IS TYPICAL FOR CLOSING A RIGHT SIDE EXIT RAMP. FOR A LEFT SIDE EXIT RAMP, REVERSE THE TRAFFIC CONTROL.

THE EXACT NUMBER, LOCATION, AND SPACING OF ALL SIGNS AND DEVICES SHALL BE ADJUSTED TO FIT FIELD CONDITIONS AS APPROVED BY THE ENGINEER.

THE SPACING BETWEEN TRAFFIC CONTROL SIGNS SHOULD BE ADJUSTED TO NOT CONFLICT WITH AND SHOULD PROVIDE A MINIMUM OF 200 FEET (500 FEET DESIRABLE) CLEARANCE TO EXISTING SIGNS THAT WILL REMAIN IN PLACE.

ALL SIGNS ARE 48" X 48" UNLESS OTHERWISE NOTED.

SIGNS THAT WILL BE IN PLACE LESS THAN 7 CONTINUOUS DAYS AND NIGHTS MAY BE MOUNTED ON PORTABLE SUPPORTS.

ANY SIGNS, TEMPORARY OR EXISTING, WHICH CONFLICT WITH TRAFFIC CONTROL "IN USE" SHALL BE REMOVED OR COVERED AS NEEDED AND AS APPROVED BY THE ENGINEER.

PLACE TEMPORARY PAVEMENT MARKING LINE IF RAMP CLOSURE IS TO BE IN PLACE 4 OR MORE CONTINUOUS DAYS AND NIGHTS.

WORK AREAS WITH A DROP OFF ALONG THE EDGE OF AN OPEN TRAVEL LANE SHALL BE LEVELED WITH TEMPORARY FILL WHEN THE CONTRACTOR IS NOT WORKING ADJACENT TO THE TRAVEL LANE. DRUMS SHALL BE PLACED ENTIRELY OUTSIDE THE TRAVEL LANE, ALLOWING THE FULL UNOBSTRUCTED LANE WIDTH, WHEN WORK IS NOT IN PROGRESS.

WHERE MEDIAN BARRIER IS IN PLACE, SIGNS SHOWN ON LEFT SIDE OF ROADWAY MAY BE OMITTED FOR RIGHT SIDE RAMP CLOSURES OF LESS THAN 12 - HOUR DURATION.

(1) W20 - 1A AND G20 - 2A SIGNS ARE NOT REQUIRED IF THE RAMP CLOSURE IS WITHIN A LARGER WORK ZONE WHERE THESE SIGNS ARE ALREADY PRESENT.

(2) PLACE "RAMP CLOSED BEGINNING" SIGN OR PCMS 7 CALENDAR DAYS PRIOR TO CLOSURE OR AS DIRECTED BY THE ENGINEER. SEE WISCONSIN STANDARD SIGN PLATES FOR SIGN LAYOUT.

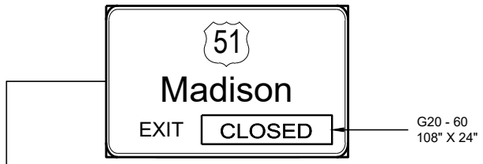

OR

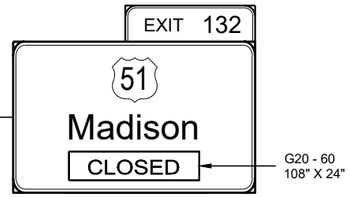

PLACE SIGN G20 - 60 OVER MILEAGE ON EXISTING E1 - 1A SIGN



COVER ARROW ON EXISTING E4 - 1 SIGN (COVERING SIGNS TYPE I)

G20 - 61
120 ' X 30"

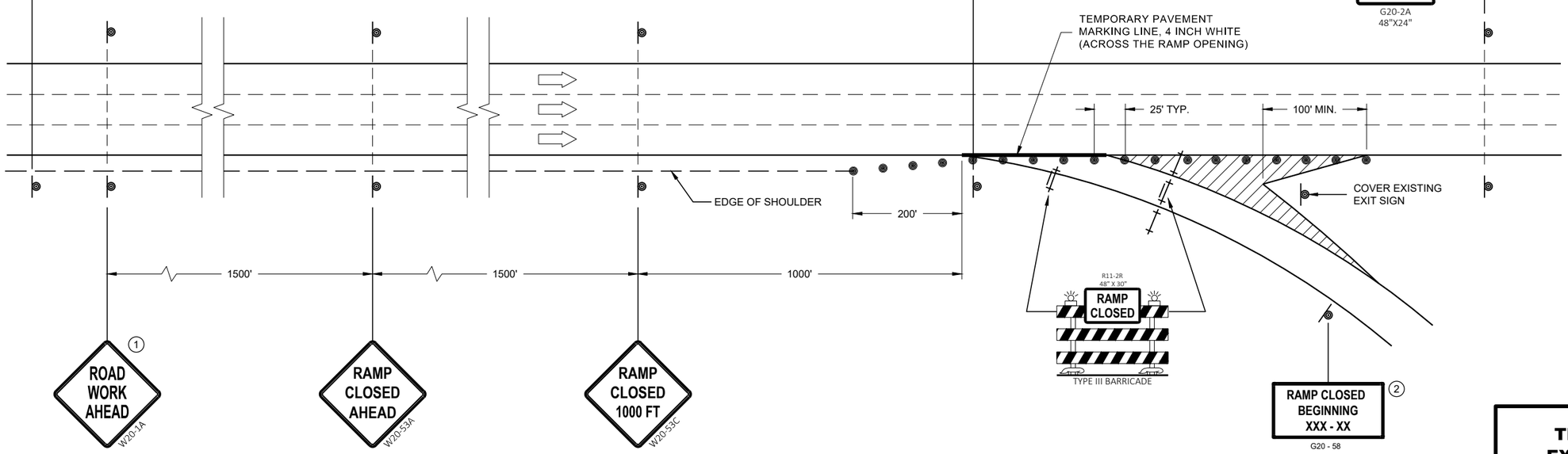

OR

PCMS MESSAGING

FRAME 1	FRAME 2
RAMP TO CLOSE	XXXDAY XX XX XX

TRAFFIC CONTROL, EXIT RAMP CLOSURE

STATE OF WISCONSIN
DEPARTMENT OF TRANSPORTATION

APPROVED
February 2022
DATE

/S/ Andrew Heidtke
ROADWAY STANDARDS DEVE ENGINEER

FHWA

6

SDD 15D16 - 05

LEGEND

- SIGN ON PERMANENT SUPPORT
- TRAFFIC CONTROL DRUM
- TRAFFIC CONTROL DRUM WITH TYPE "C" STEADY BURN LIGHT
- TYPE III BARRICADE WITH ATTACHED SIGN
- TYPE "A" WARNING LIGHT (FLASHING)
- FLASHING ARROW BOARD
- DIRECTION OF TRAFFIC
- REMOVE PAVEMENT MARKING (SEE GENERAL NOTES)
- WORK AREA

GENERAL NOTES

FOR WORK ON ROADWAYS WITH SPEEDS GREATER THAN 45MPH, USE SDD 15D12.

THIS LANE CLOSURE DETAIL IS TYPICAL FOR CLOSING THE LEFT LANE. FOR A RIGHT LANE CLOSURE, REVERSE THE TRAFFIC CONTROL.

THIS DETAIL MAY BE USED FOR ROADWAYS WITH EITHER TWO OR THREE LANES IN EACH DIRECTION.

ALL SIGNS ARE 48"X48" UNLESS OTHERWISE NOTED. IF NECESSARY DUE TO SPACE CONSTRAINTS IN URBAN AREAS, 36"X 36" SIGNS MAY BE USED IF APPROVED BY REGIONAL TRAFFIC UNIT.

"WO" SIGN IS THE SAME AS "W" SIGN EXCEPT THE BACKGROUND IS ORANGE.

ANY SIGNS TEMPORARY OR EXISTING, WHICH CONFLICT WITH THE TRAFFIC CONTROL "IN USE" SHALL BE REMOVED OR COVERED AS NEEDED AND AS APPROVED BY THE ENGINEER. NO WARNING LIGHTS SHALL BE WORKING ON COVERED OR "DOWNED" SIGNS.

SIGNS THAT WILL BE IN PLACE LESS THAN 7 CONTINUOUS DAYS AND NIGHTS OR THAT WILL BE PLACED IN A CLOSED LANE MAY BE MOUNTED ON TEMPORARY SUPPORTS.

THE EXACT NUMBER, LOCATION, AND SPACING OF ALL SIGNS AND DEVICES SHALL BE ADJUSTED TO FIT FIELD CONDITIONS AS APPROVED BY THE ENGINEER.

THE SPACING BETWEEN TRAFFIC CONTROL SIGNS SHOULD BE ADJUSTED TO NOT CONFLICT WITH AND TO PROVIDE A MINIMUM OF 200 FEET (500' DESIRABLE) DISTANCE TO EXISTING SIGNS THAT WILL REMAIN IN PLACE

W20-1A, G20-1 AND G20-2A SIGNS ARE NOT REQUIRED IF THE LANE CLOSURE IS WITHIN A LARGER WORK ZONE WHERE THESE SIGNS ARE ALREADY PRESENT.

REMOVE PAVEMENT MARKINGS AND PLACE TEMPORARY PAVEMENT MARKING LINE IF LANE CLOSURE IS TO BE IN PLACE FOR 4 OR MORE CONTINUOUS DAYS AND NIGHTS.

CONSIDER GEOMETRICS WHEN LOCATING SIGNS AND ARROW BOARDS SO THE APPROACHING DRIVER HAS A CLEAR VIEW OF THE ARROW BOARDS AND LANE CLOSURE DRUMS FOR A MINIMUM 1500 FEET IN FRONT OF DRUMS.

BARRICADES IN A CLOSED LANE THAT MUST BE MOVED FOR A WORK OPERATION SHALL BE IMMEDIATELY REESTABLISHED UPON COMPLETION OF THE OPERATION, OR FOR CONTINUING OPERATIONS, AT THE END OF EACH WORKING DAY.

CHANNELIZING DEVICES PLACED ADJACENT TO WORK AREA SHALL BE PULLED BACK FROM THE TRAVEL LANE WHEN WORK IS NOT IN PROGRESS.

WARNING LIGHTS ARE NOT REQUIRED IF THE LANE CLOSURE IS A DAYTIME ONLY OPERATION.

(1) OMIT G20-1 SIGNS IF LENGTH OF WORK AREA IS 2 MILES OR LESS.

(2) WHERE THE SHOULDER OR TERRACE HAS INSUFFICIENT SPACE TO PLACE THE ARROW BOARD AS SHOWN, PLACE THE ARROW BOARD AT THE END OF THE TAPER.

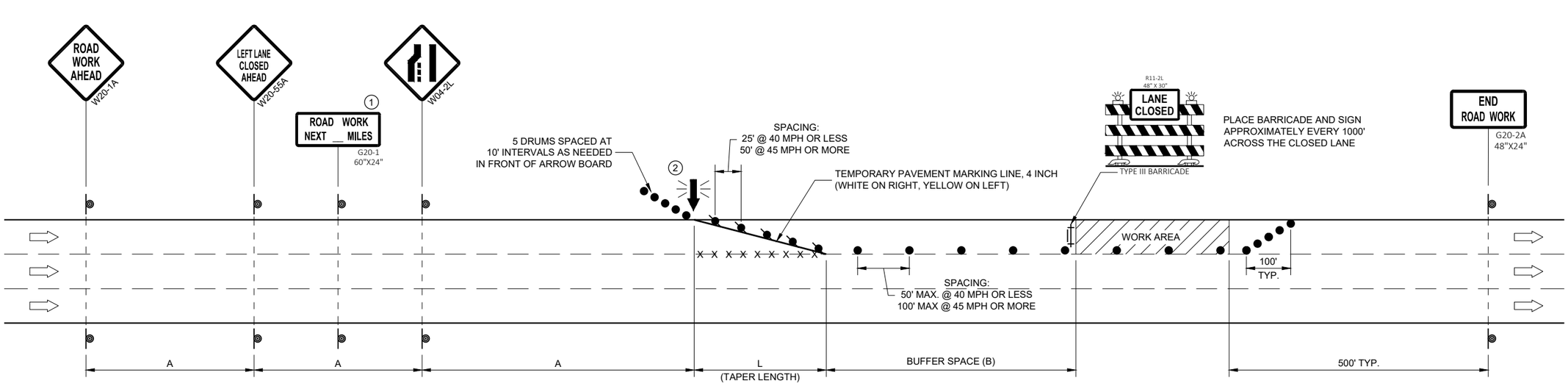

POSTED SPEED LIMIT PRIOR TO WORK STARTING (MPH)	ADVANCE WARNING SIGN SPACING (A) FEET	TAPER LENGTH (12 FT. LANE) (L) FEET	BUFFER SPACE (B) FEET
25	200'	125'	55'
30	200'	180'	85'
35	350'	245'	120'
40	350'	320'	170'
45	500'	540'	220'

TRAFFIC CONTROL, SINGLE LANE CLOSURE, DIVIDED NON-FREEWAY/EXPRESSWAY

STATE OF WISCONSIN
DEPARTMENT OF TRANSPORTATION

APPROVED
February 2022
DATE
/S/ Andrew Heidtke
WORK ZONE ENGINEE

FHWA

6

SDD15D20 - 06a

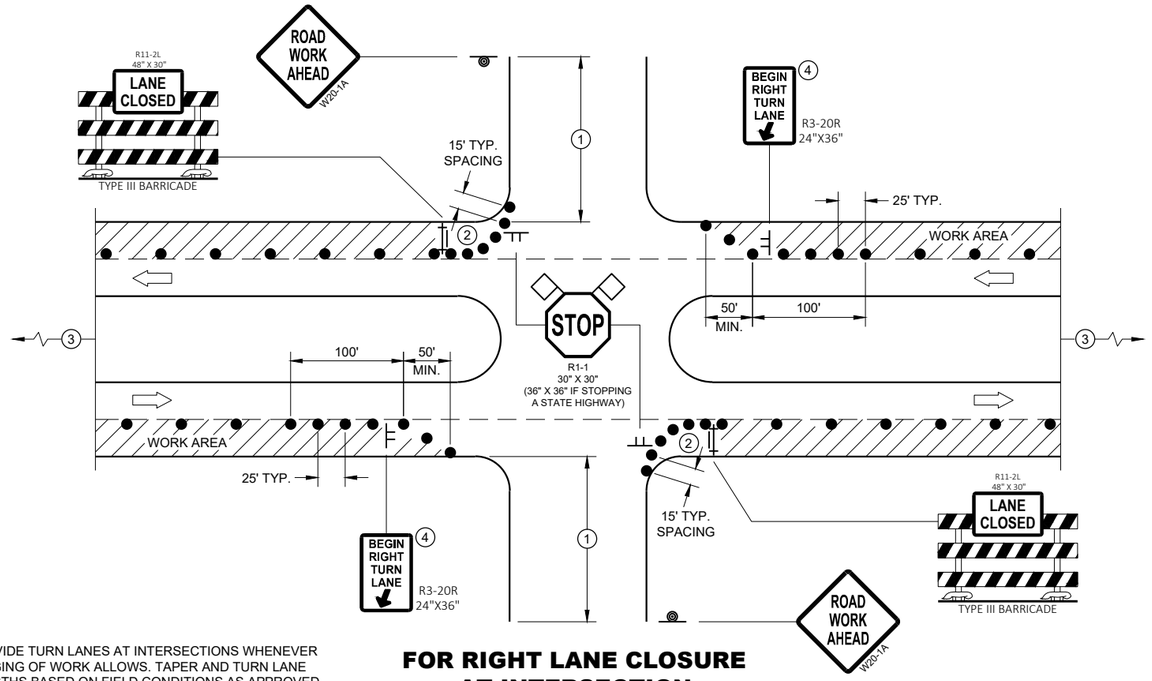

PROVIDE TURN LANES AT INTERSECTIONS WHENEVER STAGING OF WORK ALLOWS. TAPER AND TURN LANE LENGTHS BASED ON FIELD CONDITIONS AS APPROVED BY THE ENGINEER.

FOR RIGHT LANE CLOSURE AT INTERSECTION

GENERAL NOTES

ALL SIGNS ARE 48"X48" UNLESS OTHERWISE NOTED. IF NECESSARY DUE TO SPACE CONSTRAINTS IN URBAN AREAS, 36" X 36" MAY BE USED IF APPROVED BY THE DISTRICT TRAFFIC UNIT.

"WO" SIGN IS THE SAME AS "W" SIGN EXCEPT THE BACKGROUND IS ORANGE.

ANY SIGNS TEMPORARY OR EXISTING, WHICH CONFLICT WITH THE TRAFFIC CONTROL "IN USE" SHALL BE REMOVED OR COVERED AS NEEDED AND AS APPROVED BY THE ENGINEER. NO WARNING LIGHTS SHALL BE WORKING ON COVERED OR "DOWNED" SIGNS.

THE EXACT NUMBER, LOCATION, AND SPACING OF ALL SIGNS AND DEVICES SHALL BE ADJUSTED TO FIT FIELD CONDITIONS AS APPROVED BY THE ENGINEER.

THE SPACING BETWEEN TRAFFIC CONTROL SIGNS SHOULD BE ADJUSTED TO NOT CONFLICT WITH AND TO PROVIDE A MINIMUM OF 200 FEET (500' DESIRABLE) DISTANCE TO EXISTING SIGNS THAT WILL REMAIN IN PLACE

SIGN LAYOUTS SHALL BE IN ACCORDANCE WITH THE FHWA'S MANUAL OF STANDARD HIGHWAY SIGNS OR THE WISCONSIN STANDARD SIGN PLATES.

SIGNS THAT WILL REMAIN IN PLACE LESS THAN 7 CONTINUOUS DAYS AND NIGHTS OR THAT WILL BE PLACED IN A CLOSED LANE MAY BE MOUNTED ON PORTABLE SUPPORTS.

BARRICADES IN A CLOSED LANE THAT MUST BE MOVED FOR A WORK OPERATION SHALL BE IMMEDIATELY REESTABLISHED UPON COMPLETION OF THE OPERATION, OR FOR CONTINUING OPERATIONS, AT THE END OF EACH WORKING DAY.

CHANNELIZING DEVICES PLACED ADJACENT TO WORK AREA SHALL BE PULLED BACK FROM THE TRAVEL LANE WHEN WORK IS NOT IN PROGRESS.

(1) 500' TYPICAL OR AT LAST INTERSECTION, WHICHEVER IS CLOSER.
350' IF 35 - 40 MPH.
200' IF 25 - 30 MPH.

(2) ALSO USE BARRICADE AND 15 FOOT TYPICAL DRUM SPACING AT COMMERCIAL DRIVEWAYS

(3) SEE SEPARATE LANE CLOSURE DETAIL FOR ADDITIONAL TRAFFIC CONTROL.

(4) MINIMUM MOUNTING HEIGHT OF 5 FEET FROM EDGE OF PAVEMENT (AT EDGE LINE LOCATION) TO BOTTOM OF SIGN.

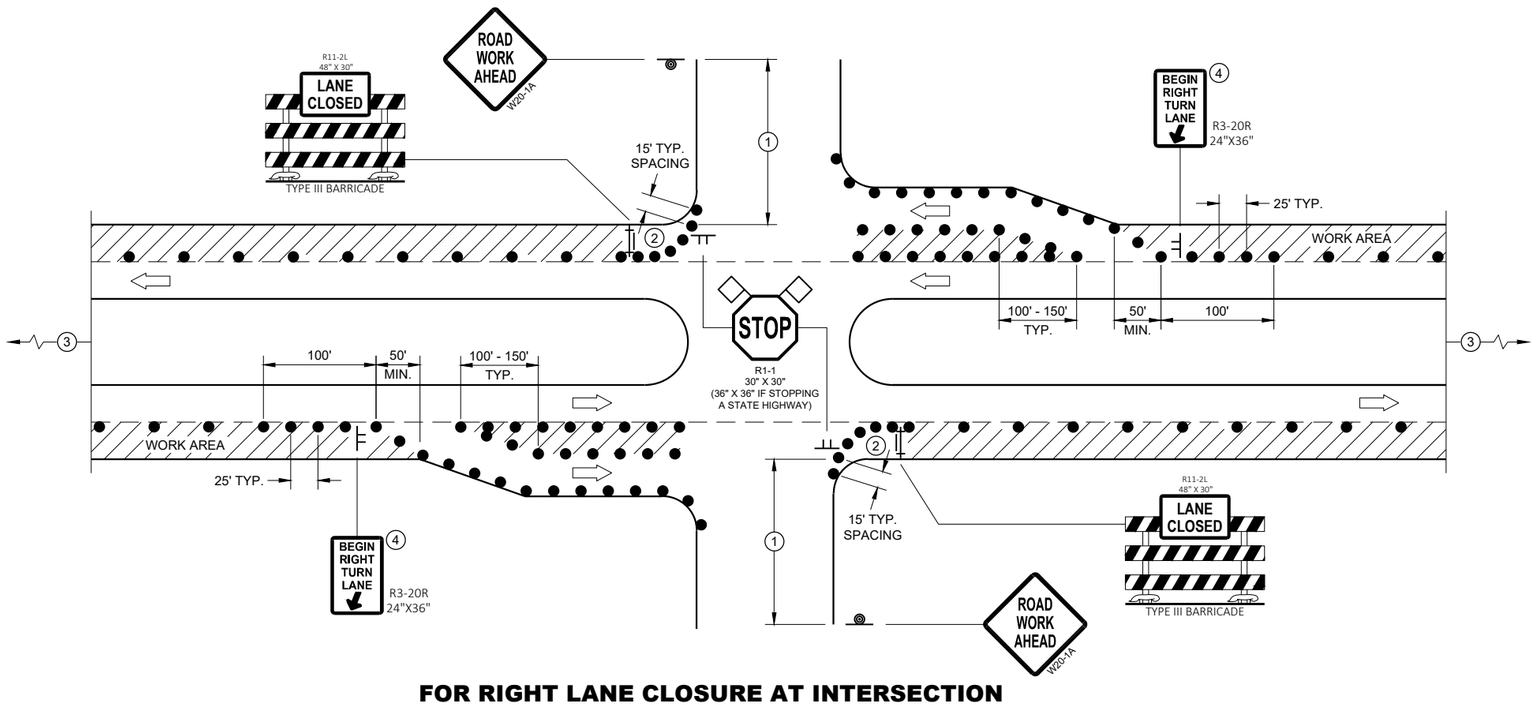

FOR RIGHT LANE CLOSURE AT INTERSECTION (WITH RIGHT TURN BAY OPEN)

LEGEND

- SIGN ON TEMPORARY SUPPORT
- SIGN ON PERMANENT SUPPORT
- TRAFFIC CONTROL DRUM
- TYPE III BARRICADE WITH ATTACHED SIGN
- DIRECTION OF TRAFFIC
- FLAGS, 16" X 16" MIN., ORANGE
- WORK AREA

TRAFFIC CONTROL, INTERSECTION WITHIN SINGLE RIGHT LANE CLOSURE

STATE OF WISCONSIN
DEPARTMENT OF TRANSPORTATION

6

SDD 15D21 - 07a
SDD 15D21 - 07a

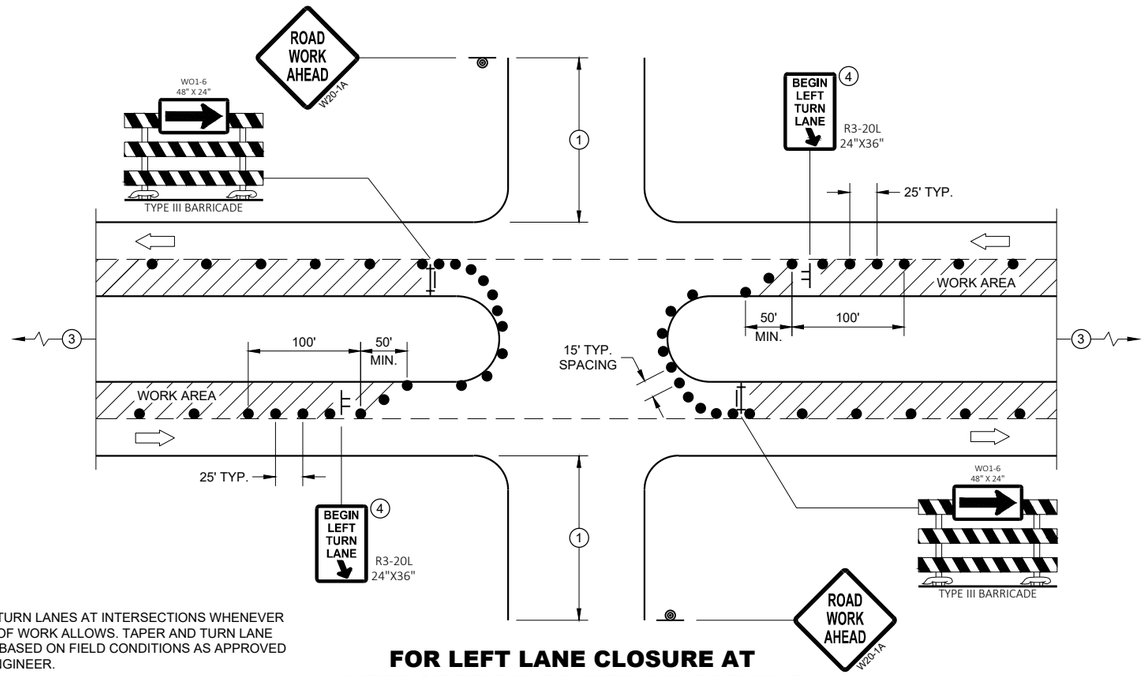

PROVIDE TURN LANES AT INTERSECTIONS WHENEVER STAGING OF WORK ALLOWS. TAPER AND TURN LANE LENGTHS BASED ON FIELD CONDITIONS AS APPROVED BY THE ENGINEER.

FOR LEFT LANE CLOSURE AT INTERSECTION OR MEDIAN OPENING

GENERAL NOTES

ALL SIGNS ARE 48"X48" UNLESS OTHERWISE NOTED. IF NECESSARY DUE TO SPACE CONSTRAINTS IN URBAN AREAS, 36" X 36" MAY BE USED IF APPROVED BY THE DISTRICT TRAFFIC UNIT.

"WO" SIGN IS THE SAME AS "W" SIGN EXCEPT THE BACKGROUND IS ORANGE.

ANY SIGNS TEMPORARY OR EXISTING, WHICH CONFLICT WITH THE TRAFFIC CONTROL "IN USE" SHALL BE REMOVED OR COVERED AS NEEDED AND AS APPROVED BY THE ENGINEER. NO WARNING LIGHTS SHALL BE WORKING ON COVERED OR "DOWNED" SIGNS.

THE EXACT NUMBER, LOCATION, AND SPACING OF ALL SIGNS AND DEVICES SHALL BE ADJUSTED TO FIT FIELD CONDITIONS AS APPROVED BY THE ENGINEER.

THE SPACING BETWEEN TRAFFIC CONTROL SIGNS SHOULD BE ADJUSTED TO NOT CONFLICT WITH AND TO PROVIDE A MINIMUM OF 200 FEET (500' DESIRABLE) DISTANCE TO EXISTING SIGNS THAT WILL REMAIN IN PLACE

SIGN LAYOUTS SHALL BE IN ACCORDANCE WITH THE FHWA'S MANUAL OF STANDARD HIGHWAY SIGNS OR THE WISCONSIN STANDARD SIGN PLATES.

SIGNS THAT WILL REMAIN IN PLACE LESS THAN 7 CONTINUOUS DAYS AND NIGHTS OR THAT WILL BE PLACED IN A CLOSED LANE MAY BE MOUNTED ON PORTABLE SUPPORTS.

BARRICADES IN A CLOSED LANE THAT MUST BE MOVED FOR A WORK OPERATION SHALL BE IMMEDIATELY REESTABLISHED UPON COMPLETION OF THE OPERATION, OR FOR CONTINUING OPERATIONS, AT THE END OF EACH WORKING DAY.

CHANNELIZING DEVICES PLACED ADJACENT TO WORK AREA SHALL BE PULLED BACK FROM THE TRAVEL LANE WHEN WORK IS NOT IN PROGRESS.

(1) 500' TYPICAL OR AT LAST INTERSECTION, WHICHEVER IS CLOSER.
350' IF 35 - 40 MPH.
200' IF 25 - 30 MPH.

(2) ALSO USE BARRICADE AND 15 FOOT TYPICAL DRUM SPACING AT COMMERCIAL DRIVEWAYS

(3) SEE SEPARATE LANE CLOSURE DETAIL FOR ADDITIONAL TRAFFIC CONTROL.

(4) MINIMUM MOUNTING HEIGHT OF 5 FEET FROM EDGE OF PAVEMENT (AT EDGE LINE LOCATION) TO BOTTOM OF SIGN.

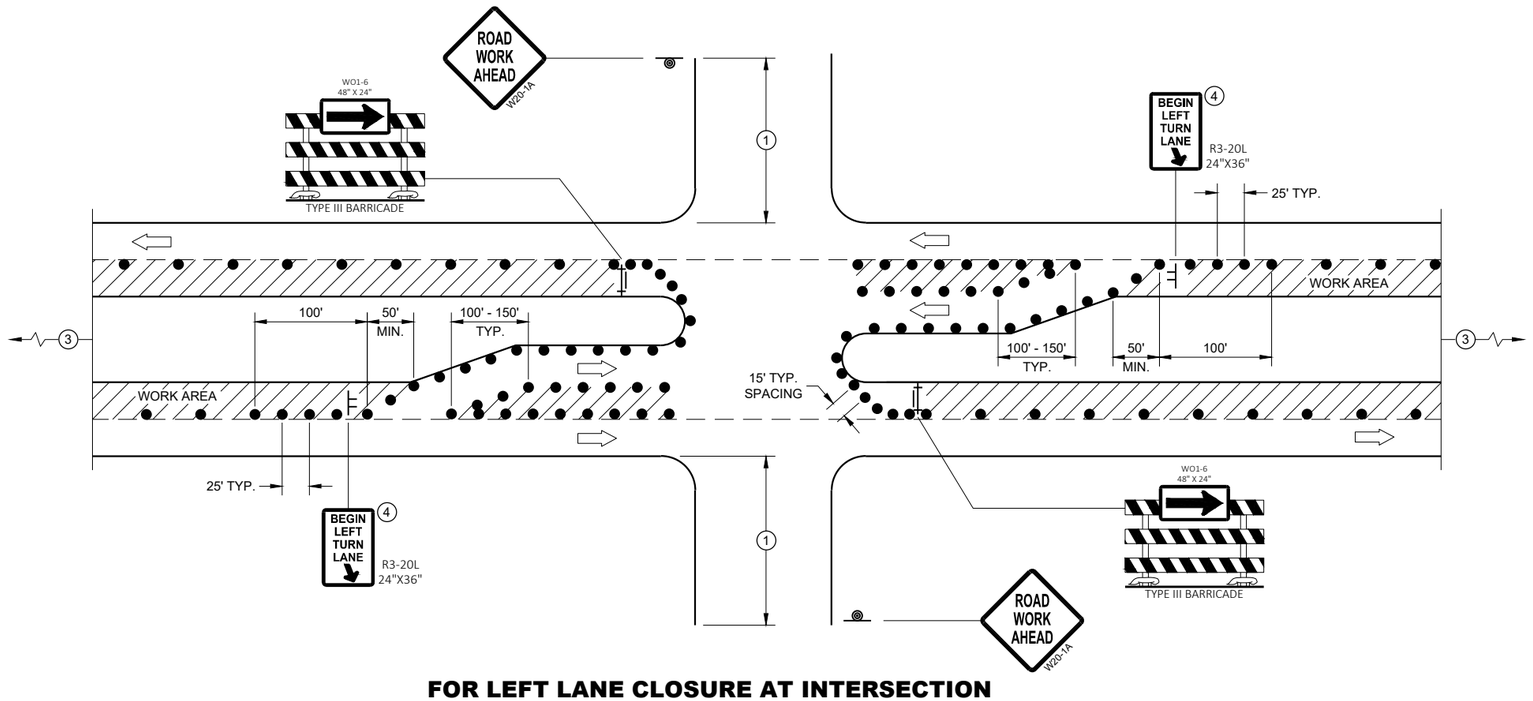

FOR LEFT LANE CLOSURE AT INTERSECTION OR MEDIAN OPENING (WITH LEFT TURN BAY OPEN)

LEGEND

- SIGN ON TEMPORARY SUPPORT
- SIGN ON PERMANENT SUPPORT
- TRAFFIC CONTROL DRUM
- TYPE III BARRICADE WITH ATTACHED SIGN
- DIRECTION OF TRAFFIC
- FLAGS, 16" X 16" MIN., ORANGE
- WORK AREA

TRAFFIC CONTROL, INTERSECTION WITHIN SINGLE LEFT LANE CLOSURE

STATE OF WISCONSIN
DEPARTMENT OF TRANSPORTATION

APPROVED
August 2020
DATE

/S/ Andrew Heidtke
WORK ZONE ENGINEER

FHWA

6

SDD 15D21 - 07b

6

SDD 15D21 - 07b

LEGEND

- TRAFFIC CONTROL DRUM
- SIGN ON PERMANENT SUPPORT
- DIRECTION OF TRAFFIC
- FLASHING ARROW BOARD
- WORK AREA

GENERAL NOTES

THIS DETAIL IS TYPICAL FOR CLOSING THE RIGHT SHOULDER. FOR CLOSING THE LEFT SHOULDER, REVERSE THE TRAFFIC CONTROL.

THIS DETAIL MAY BE USED FOR DIVIDED ROADWAYS WITH ANY NUMBER OF TRAVEL LANES.

THE EXACT NUMBER, LOCATION AND SPACING OF ALL SIGNS AND DEVICES SHALL BE ADJUSTED TO FIT FIELD CONDITIONS AS APPROVED BY THE ENGINEER.

ALL SIGNS ARE 48" X 48" UNLESS OTHERWISE NOTED.

SIGN LAYOUTS SHALL BE IN ACCORDANCE WITH THE FHWA'S MANUAL OF STANDARD HIGHWAY SIGNS OR THE WISCONSIN STANDARD SIGN PLATES.

SIGNS THAT WILL BE IN PLACE LESS THAN 7 CONTINUOUS DAYS AND NIGHTS MAY BE MOUNTED ON PORTABLE SUPPORTS.

ANY SIGNS TEMPORARY OR EXISTING, WHICH CONFLICT WITH TRAFFIC CONTROL "IN USE" SHALL BE REMOVED OR COVERED AS NEEDED AND AS APPROVED BY THE ENGINEER.

CHANNELIZING DEVICES PLACED ADJACENT TO THE WORK AREA SHALL BE PULLED BACK FROM THE TRAVEL LANE WHEN WORK IS NOT IN PROGRESS.

WHEN A RAMP INTERSECTS THE FACILITY ON WHICH THE WORK IS BEING PERFORMED, ADDITIONAL TRAFFIC CONTROLS SHALL BE PROVIDED AS SPECIFIED IN THE PLANS AND/OR THE SPECIAL PROVISIONS OR AS APPROVED BY THE ENGINEER.

*FOR SHORT DURATION SHOULDER WORK OF LESS THAN ONE HOUR, THE W21-5a SIGN MAY BE OMITTED.

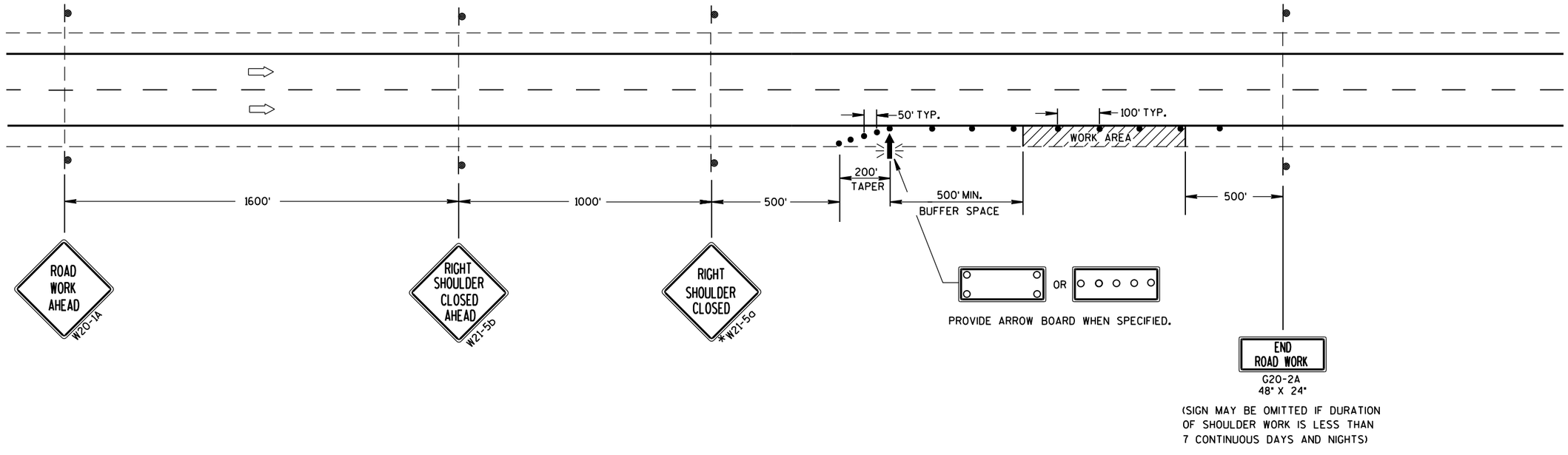

TRAFFIC CONTROL SHOULDER CLOSURE ON DIVIDED ROADWAY, SPEEDS GREATER THAN 40 MPH

STATE OF WISCONSIN
DEPARTMENT OF TRANSPORTATION

APPROVED

June 2016 — DATE

/S/ Peter Amakobe Atepe
STATEWIDE WORK ZO[illegible] SAFETY ENGI[illegible]

FHWA

6

S.D.D. 15 D 27-3

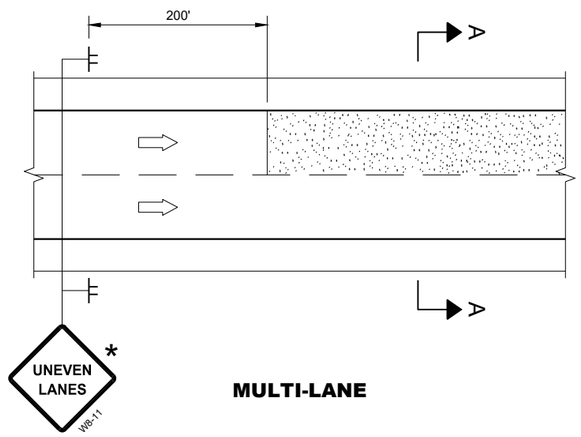

MULTI-LANE

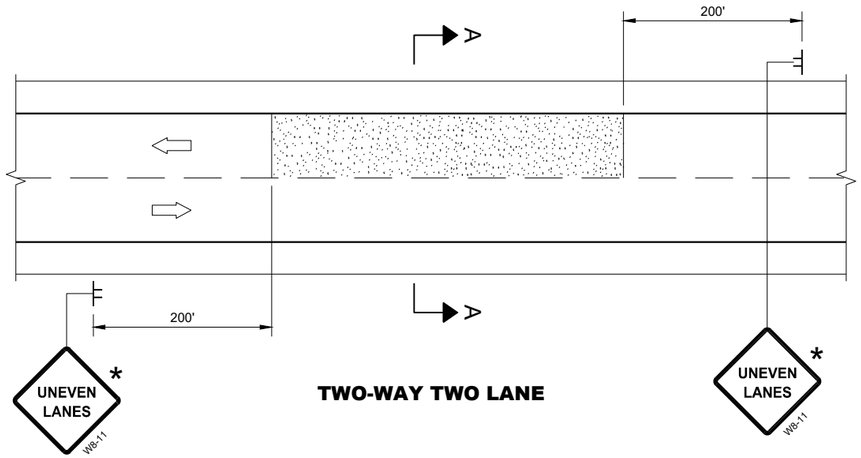

TWO-WAY TWO LANE

GENERAL NOTES

FOR SPOT LOCATIONS USE ENGINEERING JUDGEMENT WHEN PLACING ADDITIONAL SIGNS.

ALL SIGNS ARE 48" X 48" UNLESS OTHERWISE NOTED.

"WO" SIGNS ARE THE SAME AS "W" SIGNS EXCEPT THE BACKGROUND IS ORANGE.

WARNING LIGHTS ARE NOT REQUIRED IF THE LANE CLOSURE IS A DAYTIME ONLY OPERATION.

* IF THE DROP-OFF IS CONTINUOUS ALONG THE PROJECT, PLACE ADDITIONAL SIGNS EVERY 1 MILE AND AFTER EVERY ENTRANCE RAMP.

(1) USE CLOSER SPACING WHEN DELINEATING DROP-OFF.

LEGEND

- SIGN ON TEMPORARY SUPPORT
- TRAFFIC CONTROL DRUM
- TYPE III BARRICADE WITH ATTACHED SIGN
- TYPE "A" WARNING LIGHT (FLASHING)
- DIRECTION OF TRAFFIC
- WORK AREA WITH DROP-OFF
- MILLED SURFACE

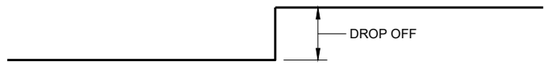

SECTION A - A

OR

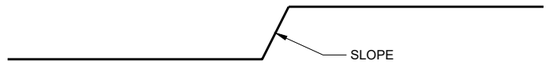

SECTION A - A

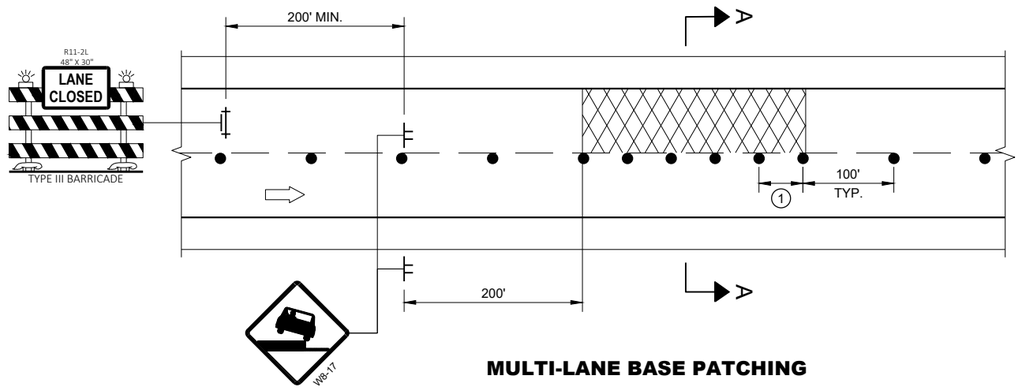

MULTI-LANE BASE PATCHING

ADJACENT LANE DROP-OFFS

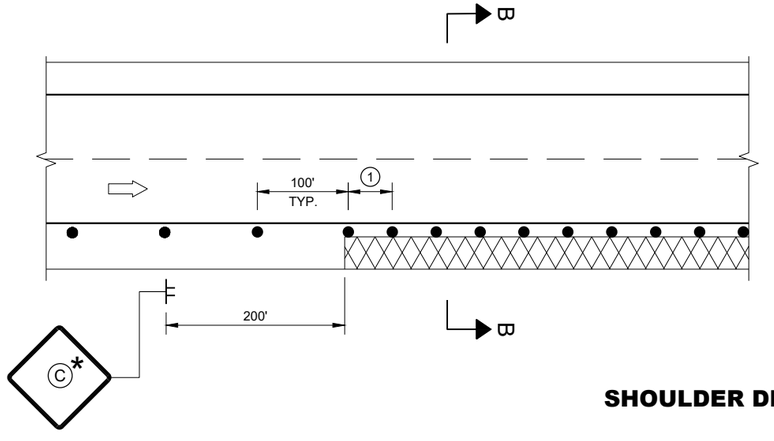

SHOULDER DROP-OFFS

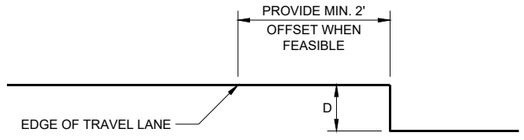

SECTION B - B

D	SIGN (C)
< 2" WITH A SLOPE STEEPER THAN 3:1	LOW SHOULDER WO8-9
2" < 6" WITH A SLOPE STEEPER THAN 3:1	SHOULDER DROP - OFF W8-9A PROVIDE A 3:1 OR FLATTER SLOPE OF MATERIAL ADJACENT TO THE PAVEMENT

TRAFFIC CONTROL, DROP-OFF SIGNING

STATE OF WISCONSIN
DEPARTMENT OF TRANSPORTATION

APPROVED
March 2018
DATE

/S/ Andrew Heidtke
WORK ZONE ENGINEE

FHWA

6

SDD 15D39 - 02

6

SDD 15D39 - 02

LEGEND

- TYPE III BARRICADE WITH ATTACHED SIGN
- SIGN ON PERMANENT SUPPORT
- TRAFFIC CONTROL DRUM
- TRAFFIC CONTROL DRUM WITH TYPE "C" STEADY BURN LIGHT
- TYPE "A" WARNING LIGHT (FLASHING)
- DIRECTION OF TRAFFIC
- WORK AREA
- REMOVING PAVEMENT MARKING (SEE GENERAL NOTES)
- CONCRETE BARRIER TEMPORARY PRECAST

GENERAL NOTES

THE EXACT NUMBER, LOCATION, AND SPACING OF ALL SIGNS AND DEVICES SHALL BE ADJUSTED TO FIT FIELD CONDITIONS AS APPROVED BY THE ENGINEER.

THE SPACING BETWEEN SIGNS SHOULD BE ADJUSTED TO NOT CONFLICT WITH AND TO PROVIDE A MINIMUM OF 200 FEET, (500 FEET DESIRABLE) DISTANCE TO EXISTING SIGNS.

THIS LANE CLOSURE IS TYPICAL FOR LANE SHIFT RIGHT - REVERSE FOR SHIFTING LEFT.

ALL SIGNS ARE 48"x48" UNLESS OTHERWISE NOTED.

"WO" IS THE SAME AS "W" EXCEPT THE BACKGROUND IS ORANGE.

ANY SIGNS TEMPORARY OR EXISTING, WHICH CONFLICT WITH TRAFFIC CONTROL "IN USE" SHALL BE REMOVED OR COVERED AS NEEDED AND AS APPROVED BY THE ENGINEER. NO WARNING LIGHTS SHALL BE WORKING ON ANY "COVERED" OR "DOWNED" SIGNS.

CONSIDER GEOMETRICS WHEN LOCATING SIGNS AND ARROW BOARDS SO THE DRIVER HAS A CLEAR VIEW OF THE ARROW BOARD AND LANE CLOSURE DRUMS FOR A MINIMUM 1500 FEET IN FRONT OF DRUMS.

FOR A LANE CLOSURE THAT IS IN PLACE LESS THAN 7 CONTINUOUS DAYS AND NIGHTS, THE ADVANCED WARNING SIGNS MAY BE MOUNTED ON PORTABLE SUPPORTS.

REMOVE PAVEMENT MARKINGS AND PLACE TEMPORARY PAVEMENT MARKING LINES IF LANE CLOSURE IS TO BE IN PLACE FOR 4 OR MORE CONTINUOUS DAYS AND NIGHTS.

WARNING LIGHTS ARE NOT REQUIRED IF THE LANE CLOSURE IS A DAYTIME ONLY OPERATION.

IF THE HORIZONTAL ALIGNMENT IS SUCH THAT A CURVE MAY REQUIRE ADDITIONAL DELINEATION, THE DEVICE SPACING MAY BE DECREASED TO 50 FEET.

ADJUSTMENTS IN BUFFER SPACE NEED TO BE INCORPORATED WHEN THE LANE SHIFT OCCURS NEAR AN INTERCHANGE EXIT OR ENTRANCE RAMP. THE LANE SHIFT MUST TAKE PLACE FAR ENOUGH IN ADVANCE OF AN EXIT OR ENTRANCE RAMP TO STILL ALLOW FOR ADEQUATE BUFFER
SPACE. THE MINIMUM LENGTH OF THE BUFFER SPACE BEFORE AN EXIT RAMP SHOULD BE 1/2 THE LENGTH OF THE TRANSITION AREA. THE ENTRANCE RAMP SHOULD BE FOLLOWED BY THE ORIGINAL BUFFER SPACE LENGTH OF 800 FEET DESIRABLE PRIOR TO ANOTHER TRAFFIC CONTROL
CHANGE SUCH AS A CROSSOVER MANEUVER.

(1) USE ONLY IF DESIGN SPEED IS 10 MPH BELOW POSTED SPEED.

(2) BARRIER FLARE RATE: 6:1 @ 40 MPH OR LESS
8:1 @ 45 MPH OR GREATER

POSTED SPEED LIMIT PRIOR TO WORK STARTING (MPH)	ADVANCE WARNING SIGN SPACING (A) FEET	SHIFTING TAPER L/2 W, LATERAL OFFSET (FT)					BUFFER SPACE (B) FEET
		10	11	12	13	14	
25	200	52	57	63	68	73	55
30	200	75	83	90	98	105	85
35	350	102	112	123	133	143	120
40	350	133	147	160	173	187	170
45	500	225	248	270	293	315	220

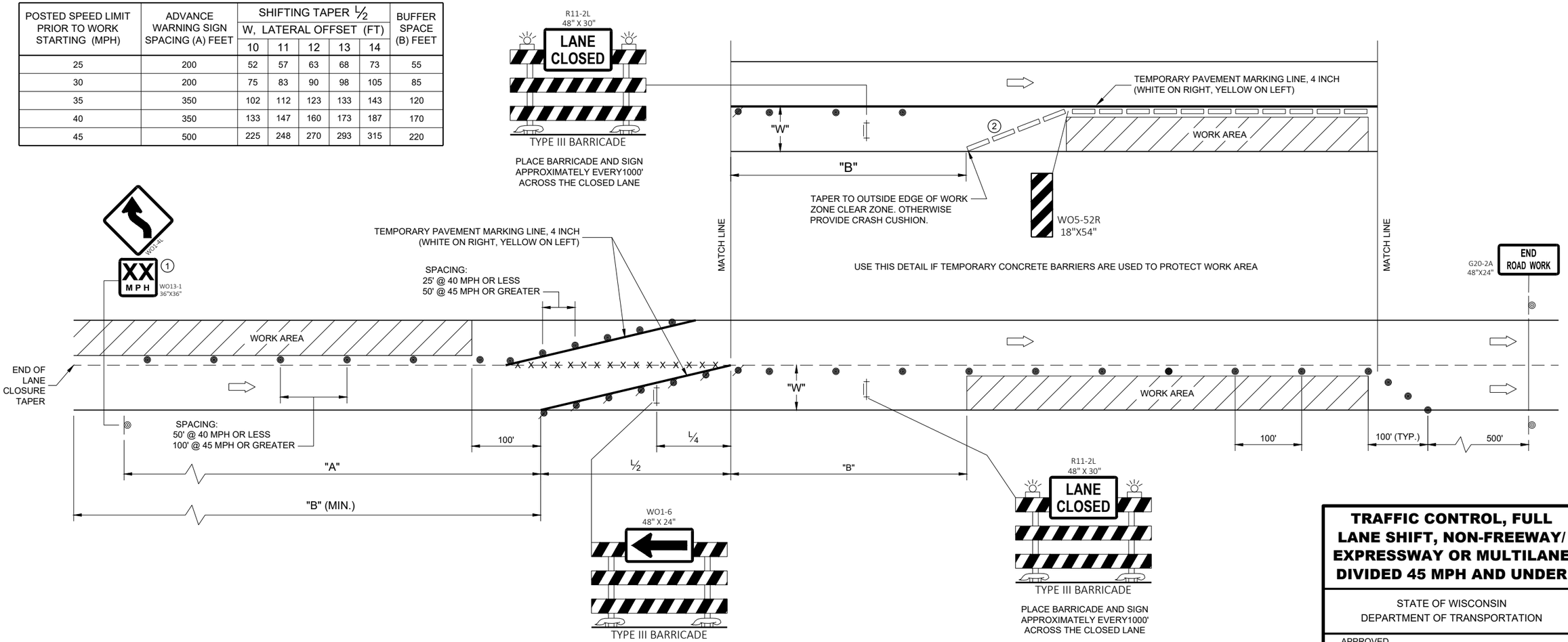

TRAFFIC CONTROL, FULL LANE SHIFT, NON-FREEWAY/ EXPRESSWAY OR MULTILANE DIVIDED 45 MPH AND UNDER

STATE OF WISCONSIN
DEPARTMENT OF TRANSPORTATION

APPROVED
May 2022
DATE

/S/ Andrew Heidtke
WORK ZONE ENGINEER

FHWA

SDD 15D40 - 04a

SDD 15D40 - 04a

LEGEND

- TYPE III BARRICADE WITH ATTACHED SIGN
- SIGN ON PERMANENT SUPPORT
- TRAFFIC CONTROL DRUM
- TRAFFIC CONTROL DRUM WITH TYPE "C" STEADY BURN LIGHT
- TYPE "A" WARNING LIGHT (FLASHING)
- DIRECTION OF TRAFFIC
- WORK AREA
- REMOVING PAVEMENT MARKING (SEE GENERAL NOTES)
- CONCRETE BARRIER TEMPORARY PRECAST

POSTED SPEED LIMIT PRIOR TO WORK STARTING (MPH)	SHIFTING TAPER L/2 W, LATERAL OFFSET (FT)				
	10	11	12	13	14
50	250	275	300	325	350
55	275	303	330	358	385
60	300	330	360	390	420
65	325	358	390	423	455
70	350	385	420	455	490

GENERAL NOTES

THE EXACT NUMBER, LOCATION, AND SPACING OF ALL SIGNS AND DEVICES SHALL BE ADJUSTED TO FIT FIELD CONDITIONS AS APPROVED BY THE ENGINEER.

THE SPACING BETWEEN SIGNS SHOULD BE ADJUSTED TO NOT CONFLICT WITH AND TO PROVIDE A MINIMUM OF 200 FEET, (500 FEET DESIRABLE) DISTANCE TO EXISTING SIGNS.

THIS LANE CLOSURE IS TYPICAL FOR LANE SHIFT RIGHT - REVERSE FOR SHIFTING LEFT.

ALL SIGNS ARE 48"x48" UNLESS OTHERWISE NOTED.

"WO" IS THE SAME AS "W" EXCEPT THE BACKGROUND IS ORANGE.

ANY SIGNS TEMPORARY OR EXISTING, WHICH CONFLICT WITH TRAFFIC CONTROL "IN USE" SHALL BE REMOVED OR COVERED AS NEEDED AND AS APPROVED BY THE ENGINEER. NO WARNING LIGHTS SHALL BE WORKING ON ANY "COVERED" OR "DOWNED" SIGNS.

CONSIDER GEOMETRICS WHEN LOCATING SIGNS AND ARROW BOARDS SO THE DRIVER HAS A CLEAR VIEW OF THE ARROW BOARD AND LANE CLOSURE DRUMS FOR A MINIMUM 1500 FEET IN FRONT OF DRUMS.

FOR A LANE CLOSURE THAT IS IN PLACE LESS THAN 7 CONTINUOUS DAYS AND NIGHTS, THE ADVANCED WARNING SIGNS MAY BE MOUNTED ON PORTABLE SUPPORTS.

REMOVE PAVEMENT MARKINGS AND PLACE TEMPORARY PAVEMENT MARKING LINES IF LANE CLOSURE IS TO BE IN PLACE FOR 4 OR MORE CONTINUOUS DAYS AND NIGHTS.

WARNING LIGHTS ARE NOT REQUIRED IF THE LANE CLOSURE IS A DAYTIME ONLY OPERATION.

IF THE HORIZONTAL ALIGNMENT IS SUCH THAT A CURVE MAY REQUIRE ADDITIONAL DELINEATION, THE DEVICE SPACING MAY BE DECREASED TO 50 FEET.

ADJUSTMENTS IN BUFFER SPACE NEED TO BE INCORPORATED WHEN THE LANE SHIFT OCCURS NEAR AN INTERCHANGE EXIT OR ENTRANCE RAMP. THE LANE SHIFT MUST TAKE PLACE FAR ENOUGH IN ADVANCE OF AN EXIT OR ENTRANCE RAMP TO STILL ALLOW FOR ADEQUATE BUFFER SPACE. THE MINIMUM LENGTH OF THE BUFFER SPACE BEFORE AN EXIT RAMP SHOULD BE ½ THE LENGTH OF THE TRANSITION AREA. THE ENTRANCE RAMP SHOULD BE FOLLOWED BY THE ORIGINAL BUFFER SPACE LENGTH OF 800 FEET DESIRABLE PRIOR TO ANOTHER TRAFFIC CONTROL CHANGE SUCH AS A CROSSOVER MANEUVER.

(1) USE ONLY IF DESIGN SPEED IS 10 MPH BELOW POSTED SPEED.

(2) IF BEGINNING OF LANE SHIFT IS 1200' OF LESS FROM THE END OF THE LANE CLOSURE TAPER, PLACE THE WO1-4L SIGN 200 FEET AFTER THE END OF THE LANE CLOSURE TAPER.

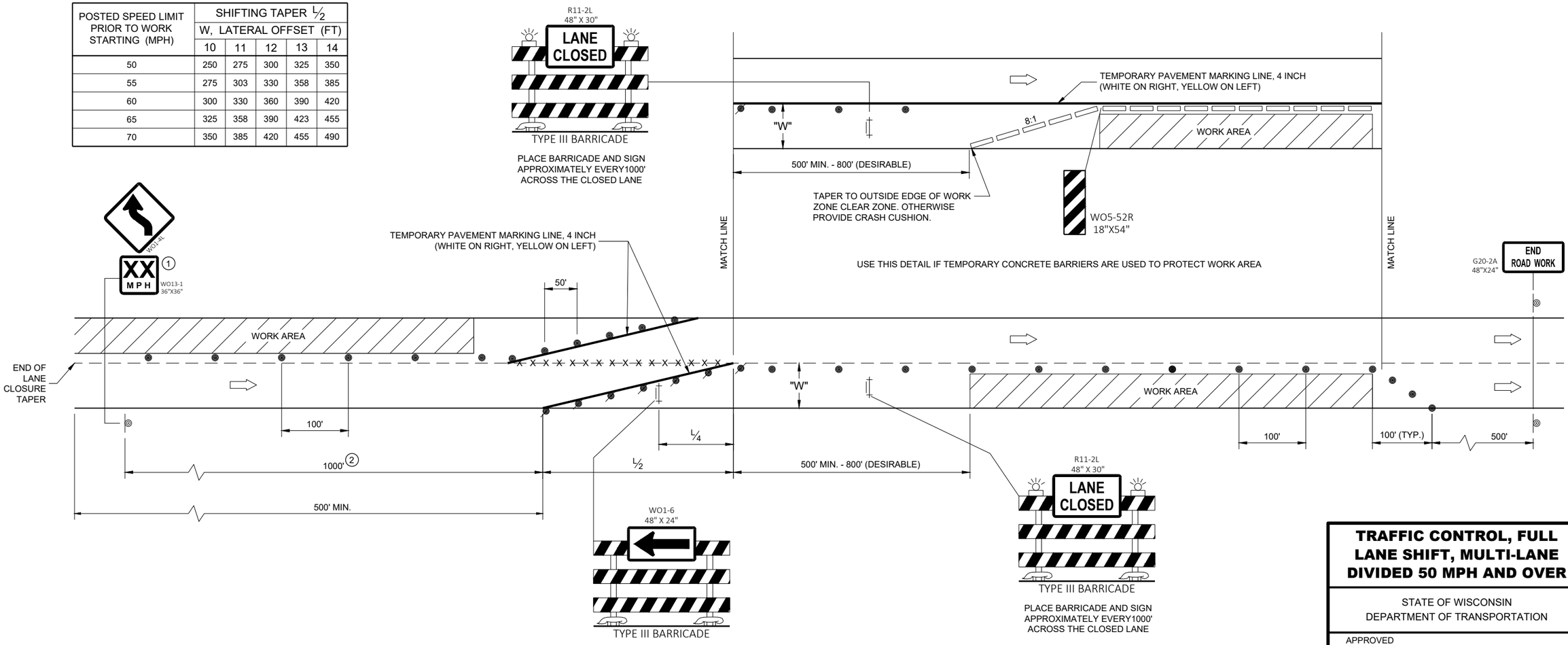

TRAFFIC CONTROL, FULL LANE SHIFT, MULTI-LANE DIVIDED 50 MPH AND OVER

STATE OF WISCONSIN
DEPARTMENT OF TRANSPORTATION

APPROVED
May 2022
DATE

/S/ Andrew Heidtke
WORK ZONE ENGINEER

544

FHWA

SDD 15D40 - 04b

SDD 15D40 - 04b

6

6

LEGEND

- TYPE III BARRICADE WITH ATTACHED SIGN
- SIGN ON PERMANENT SUPPORT
- TRAFFIC CONTROL DRUM
- TRAFFIC CONTROL DRUM WITH TYPE "C" STEADY BURN LIGHT
- TYPE "A" WARNING LIGHT (FLASHING)
- DIRECTION OF TRAFFIC
- WORK AREA
- REMOVING PAVEMENT MARKING (SEE GENERAL NOTES)
- CONCRETE BARRIER TEMPORARY PRECAST

GENERAL NOTES

THE EXACT NUMBER, LOCATION, AND SPACING OF ALL SIGNS AND DEVICES SHALL BE ADJUSTED TO FIT FIELD CONDITIONS AS APPROVED BY THE ENGINEER.

THE SPACING BETWEEN SIGNS SHOULD BE ADJUSTED TO NOT CONFLICT WITH AND TO PROVIDE A MINIMUM OF 200 FEET, (500 FEET DESIRABLE) DISTANCE TO EXISTING SIGNS.

THIS LANE CLOSURE IS TYPICAL FOR LANE SHIFT LEFT - REVERSE FOR SHIFTING RIGHT.

ALL SIGNS ARE 48"x48" UNLESS OTHERWISE NOTED.

"WO" IS THE SAME AS "W" EXCEPT THE BACKGROUND IS ORANGE.

ANY SIGNS TEMPORARY OR EXISTING, WHICH CONFLICT WITH TRAFFIC CONTROL "IN USE" SHALL BE REMOVED OR COVERED AS NEEDED AND AS APPROVED BY THE ENGINEER. NO WARNING LIGHTS SHALL BE WORKING ON ANY "COVERED" OR "DOWNED" SIGNS.

CONSIDER GEOMETRICS WHEN LOCATING SIGNS AND ARROW BOARDS SO THE DRIVER HAS A CLEAR VIEW OF THE ARROW BOARD AND LANE CLOSURE DRUMS FOR A MINIMUM 1500 FEET IN FRONT OF DRUMS.

FOR A LANE CLOSURE THAT IS IN PLACE LESS THAN 7 CONTINUOUS DAYS AND NIGHTS, THE ADVANCED WARNING SIGNS MAY BE MOUNTED ON PORTABLE SUPPORTS.

REMOVE PAVEMENT MARKINGS AND PLACE TEMPORARY PAVEMENT MARKING LINES IF LANE CLOSURE IS TO BE IN PLACE FOR 4 OR MORE CONTINUOUS DAYS AND NIGHTS.

WARNING LIGHTS ARE NOT REQUIRED IF THE LANE CLOSURE IS A DAYTIME ONLY OPERATION.

IF THE HORIZONTAL ALIGNMENT IS SUCH THAT A CURVE MAY REQUIRE ADDITIONAL DELINEATION, THE DEVICE SPACING MAY BE DECREASED TO 50 FEET.

ADJUSTMENTS IN BUFFER SPACE NEED TO BE INCORPORATED WHEN THE LANE SHIFT OCCURS NEAR AN INTERCHANGE EXIT OR ENTRANCE RAMP. THE LANE SHIFT MUST TAKE PLACE FAR ENOUGH IN ADVANCE OF AN EXIT OR ENTRANCE RAMP TO STILL ALLOW FOR ADEQUATE BUFFER SPACE. THE MINIMUM LENGTH OF THE BUFFER SPACE BEFORE AN EXIT RAMP SHOULD BE 1/2 THE LENGTH OF THE TRANSITION AREA. THE ENTRANCE RAMP SHOULD BE FOLLOWED BY THE ORIGINAL BUFFER SPACE LENGTH OF 800 FEET DESIRABLE PRIOR TO ANOTHER TRAFFIC CONTROL CHANGE SUCH AS A CROSSOVER MANEUVER.

(1) USE ONLY WHEN T<600', OMIT WO1-4R.

(2) IF NEEDED, USE ONLY IF DESIGN SPEED IS 10 MPH BELOW POSTED SPEED.

(3) BARRIER FLARE RATE: 6:1 @ 40 MPH OR LESS
8:1 @ 45 MPH OR GREATER

POSTED SPEED LIMIT PRIOR TO WORK STARTING (MPH)	ADVANCE WARNING SIGN SPACING (A) FEET	SHIFTING TAPER L/2 W, LATERAL OFFSET (FT)									BUFFER SPACE (B) FEET
		1	2	3	4	5	6	7	8	9	
25	200	5	10	16	21	26	31	36	42	47	55
30	200	8	15	23	30	38	45	53	60	68	85
35	350	10	20	31	41	51	61	71	82	92	120
40	350	13	27	40	53	67	80	93	107	120	170
45	500	23	45	68	90	113	135	158	180	203	220

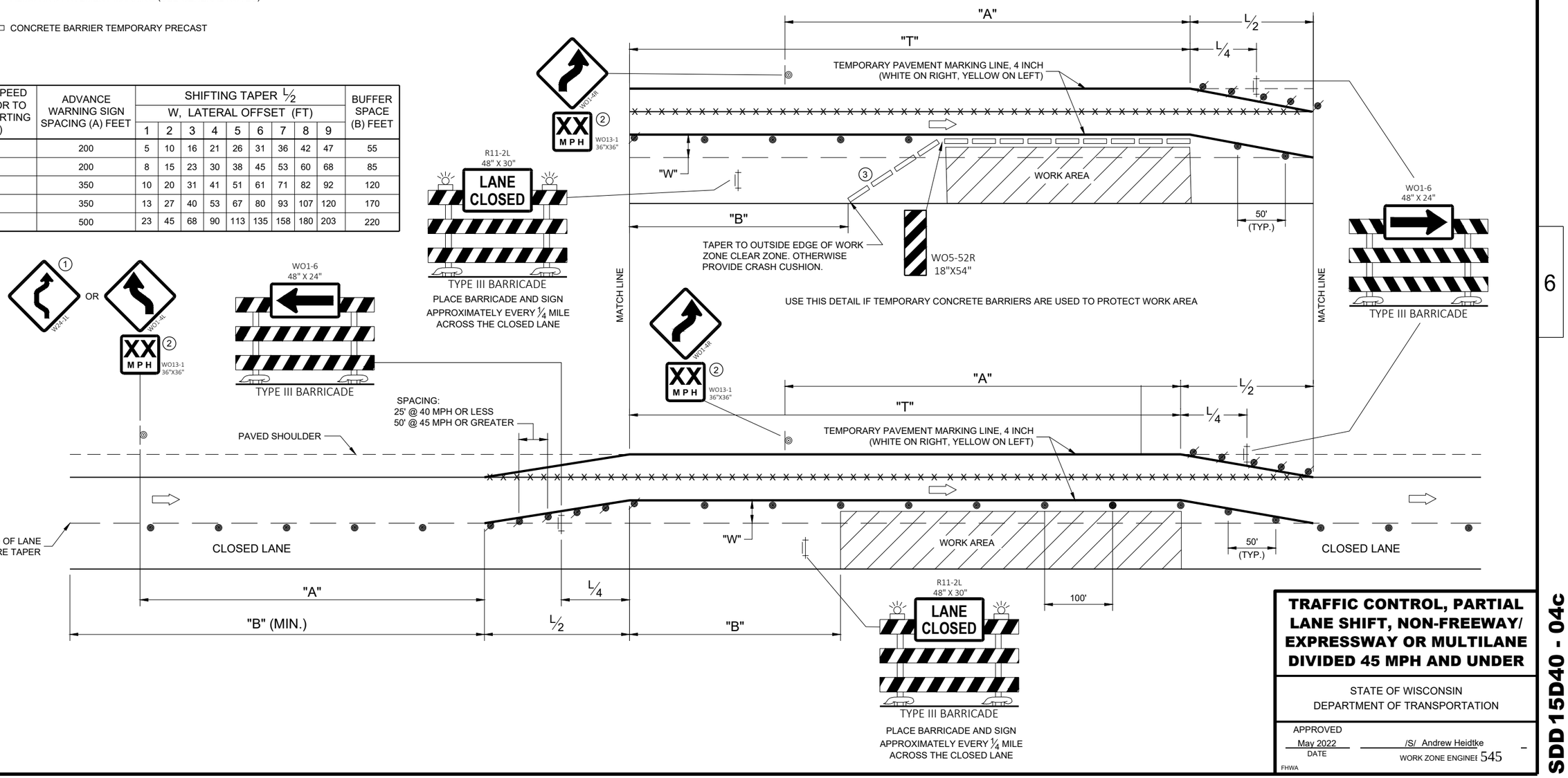

TRAFFIC CONTROL, PARTIAL LANE SHIFT, NON-FREEWAY/ EXPRESSWAY OR MULTILANE DIVIDED 45 MPH AND UNDER

STATE OF WISCONSIN
DEPARTMENT OF TRANSPORTATION

APPROVED
May 2022
DATE

/S/ Andrew Heidtke
WORK ZONE ENGINEE 545

FHWA

SDD 15D40 - 04c

SDD 15D40 - 04c

6

6

LEGEND

- TYPE III BARRICADE WITH ATTACHED SIGN
- SIGN ON PERMANENT SUPPORT
- TRAFFIC CONTROL DRUM
- TRAFFIC CONTROL DRUM WITH TYPE "C" STEADY BURN LIGHT
- TYPE "A" WARNING LIGHT (FLASHING)
- DIRECTION OF TRAFFIC
- WORK AREA
- REMOVING PAVEMENT MARKING (SEE GENERAL NOTES)
- CONCRETE BARRIER TEMPORARY PRECAST

POSTED SPEED LIMIT PRIOR TO WORK STARTING (MPH)	SHIFTING TAPER L/2 W, LATERAL OFFSET (FT)								
	1	2	3	4	5	6	7	8	9
50	25	50	75	100	125	150	175	200	225
55	28	55	83	110	138	165	193	220	248
60	30	60	90	120	150	180	210	240	270
65	33	65	98	130	163	195	228	260	293
70	35	70	105	140	175	210	245	280	315

GENERAL NOTES

THE EXACT NUMBER, LOCATION, AND SPACING OF ALL SIGNS AND DEVICES SHALL BE ADJUSTED TO FIT FIELD CONDITIONS AS APPROVED BY THE ENGINEER.

THE SPACING BETWEEN SIGNS SHOULD BE ADJUSTED TO NOT CONFLICT WITH AND TO PROVIDE A MINIMUM OF 200 FEET, (500 FEET DESIRABLE) DISTANCE TO EXISTING SIGNS.

THIS LANE CLOSURE IS TYPICAL FOR LANE SHIFT LEFT - REVERSE FOR SHIFTING RIGHT.

ALL SIGNS ARE 48"x48" UNLESS OTHERWISE NOTED.

"WO" IS THE SAME AS "W" EXCEPT THE BACKGROUND IS ORANGE.

ANY SIGNS TEMPORARY OR EXISTING, WHICH CONFLICT WITH TRAFFIC CONTROL "IN USE" SHALL BE REMOVED OR COVERED AS NEEDED AND AS APPROVED BY THE ENGINEER. NO WARNING LIGHTS SHALL BE WORKING ON ANY "COVERED" OR "DOWNED" SIGNS.

CONSIDER GEOMETRICS WHEN LOCATING SIGNS AND ARROW BOARDS SO THE DRIVER HAS A CLEAR VIEW OF THE ARROW BOARD AND LANE CLOSURE DRUMS FOR A MINIMUM 1500 FEET IN FRONT OF DRUMS.

FOR A LANE CLOSURE THAT IS IN PLACE LESS THAN 7 CONTINUOUS DAYS AND NIGHTS, THE ADVANCED WARNING SIGNS MAY BE MOUNTED ON PORTABLE SUPPORTS.

REMOVE PAVEMENT MARKINGS AND PLACE TEMPORARY PAVEMENT MARKING LINES IF LANE CLOSURE IS TO BE IN PLACE FOR 4 OR MORE CONTINUOUS DAYS AND NIGHTS.

WARNING LIGHTS ARE NOT REQUIRED IF THE LANE CLOSURE IS A DAYTIME ONLY OPERATION.

IF THE HORIZONTAL ALIGNMENT IS SUCH THAT A CURVE MAY REQUIRE ADDITIONAL DELINEATION, THE DEVICE SPACING MAY BE DECREASED TO 50 FEET.

ADJUSTMENTS IN BUFFER SPACE NEED TO BE INCORPORATED WHEN THE LANE SHIFT OCCURS NEAR AN INTERCHANGE EXIT OR ENTRANCE RAMP. THE LANE SHIFT MUST TAKE PLACE FAR ENOUGH IN ADVANCE OF AN EXIT OR ENTRANCE RAMP TO STILL ALLOW FOR ADEQUATE BUFFER SPACE. THE MINIMUM LENGTH OF THE BUFFER SPACE BEFORE AN EXIT RAMP SHOULD BE 1/2 THE LENGTH OF THE TRANSITION AREA. THE ENTRANCE RAMP SHOULD BE FOLLOWED BY THE ORIGINAL BUFFER SPACE LENGTH OF 800 FEET DESIRABLE PRIOR TO ANOTHER TRAFFIC CONTROL CHANGE SUCH AS A CROSSOVER MANEUVER.

1. USE ONLY WHEN T<600', OMIT WO1-4R.
2. IF NEEDED, USE ONLY IF DESIGN SPEED IS 10 MPH BELOW POSTED SPEED.
3. IF THE BEGINNING OF LANE SHIFT TAPER IS 1200 FEET OR LESS FROM END OF LANE CLOSURE TAPER, PLACE THE WO1-4L SIGN 200 FEET AFTER THE END OF THE LANE CLOSURE TAPER.
4. IF THE BEGINNING OF THE SECOND LANE SHIFT TAPER IS 1200 FEET OR LESS FROM END OF THE FIRST LANE CLOSURE TAPER, PLACE THE WO1-4L SIGN 200 FEET AFTER THE END OF THE FIRST LANE CLOSURE TAPER.

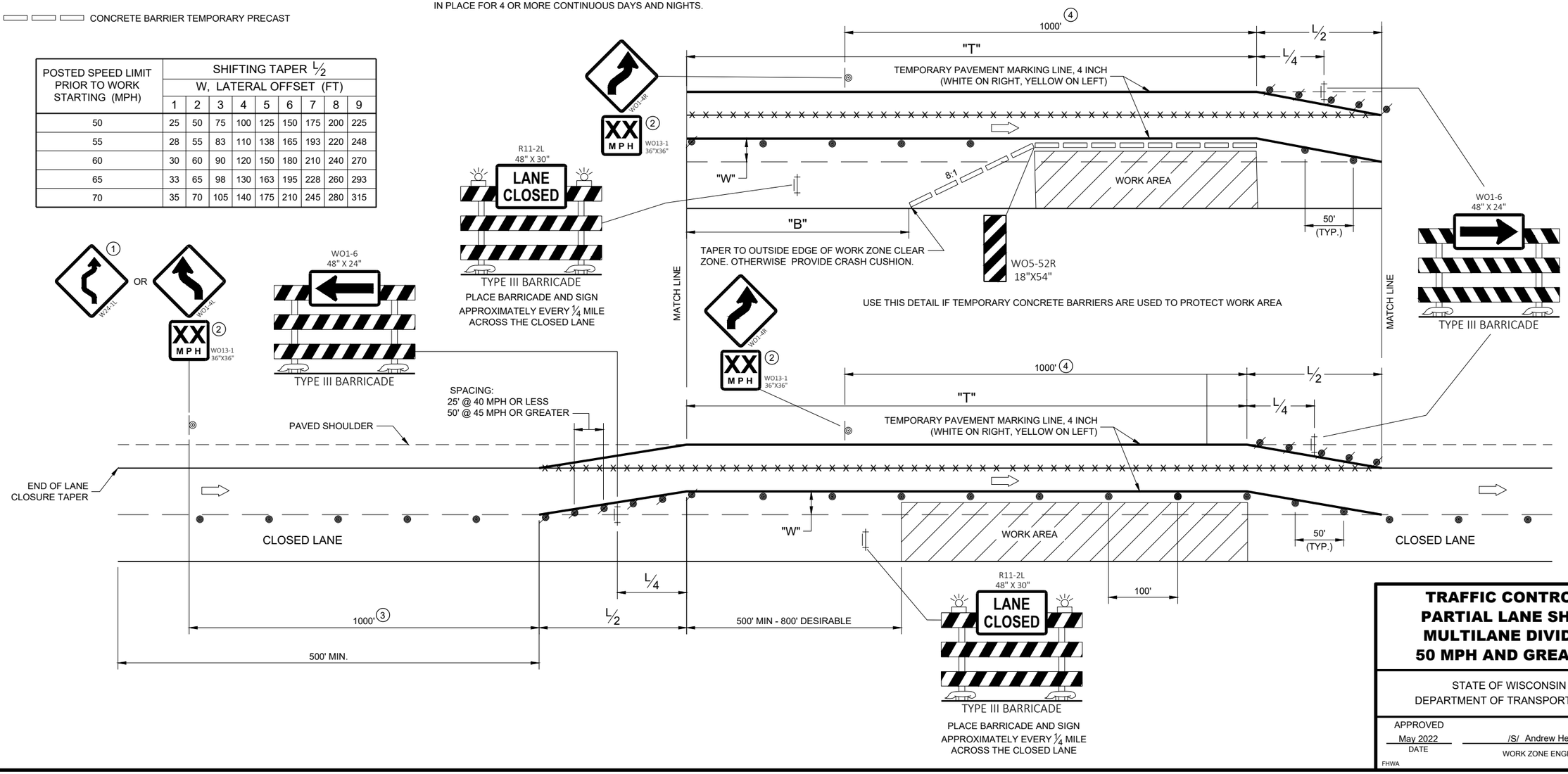

TRAFFIC CONTROL, PARTIAL LANE SHIFT MULTILANE DIVIDED 50 MPH AND GREATER

STATE OF WISCONSIN
DEPARTMENT OF TRANSPORTATION

APPROVED
May 2022
DATE

/S/ Andrew Heidtke
WORK ZONE ENGINEER

FHWA

SDD 15D40 - 04d

SDD 15D40 - 04d

LEGEND

- SIGN ON PERMANENT SUPPORT
- SIGN ON TEMPORARY SUPPORT
- TRAFFIC CONTROL DRUM
- DELINEATOR, FLEXIBLE TUBULAR MARKER
- TRAFFIC CONTROL DRUM WITH TYPE "C" STEADY BURN LIGHT
- TYPE III BARRICADE WITH ATTACHED SIGN
- DIRECTION OF TRAFFIC
- CONSTRUCTION TRAFFIC
- WORK AREA
- CC — CRASH CUSHION TEMPORARY
- EXISTING CONCRETE BARRIER TEMPORARY PRECAST

GENERAL NOTES

ALL SIGNS ARE 48"X48" UNLESS OTHERWISE NOTED.

"WO" SIGN IS THE SAME AS "W" SIGN EXCEPT THE BACKGROUND IS ORANGE.

ANY SIGNS TEMPORARY OR EXISTING, WHICH CONFLICT WITH THE TRAFFIC CONTROL "IN USE" SHALL BE REMOVED OR COVERED AS NEEDED AND AS APPROVED BY THE ENGINEER. NO WARNING LIGHTS SHALL BE WORKING ON COVERED OR "DOWNED" SIGNS.

THE EXACT NUMBER, LOCATION, AND SPACING OF ALL SIGNS AND DEVICES SHALL BE ADJUSTED TO FIT FIELD CONDITIONS AS APPROVED BY THE ENGINEER.

WORK ZONE INGRESS/EGRESS LOCATIONS SHALL BE APPROVED BY THE ENGINEER. LOCATIONS FOR WORK ZONE ACCESS TO/FROM THE FREEWAY SHALL NOT BE USED FOR INGRESS AND EGRESS AT THE SAME TIME.

THIS ACCESS DETAIL IS TYPICAL FOR LEFT LANE ACCESS, FOR RIGHT LANE ACCESS, REVERSE THE TRAFFIC CONTROL

TEMPORARY SUPPORTS MAY BE USED IF PLACED BEHIND TEMPORARY BARRIER WALL

TRUCKS SHALL USE FLASHING YELLOW BEACON WHEN ENTERING AND EXITING LIVE TRAFFIC.

1. WIDEN BARRIER AS NECESSARY TO ACCOMMODATE CRASH CUSHION WIDTH.
2. USE TUBULAR MARKERS TO HELP DELINEATE TEMPORARY CRASH CUSHION.
3. REMOVE DRUMS / BARRICADES WHEN INGRESS / EGRESS ARE IN USE.
4. REMOVE OR COVER WHEN ACCESS IS NOT NEEDED.

TABLE 1

S (MPH)	INGRESS, L	EGRESS, L
50	435'	720'
55	480'	960'
60	530'	1200'
65	570'	1410'
70	615'	1620'

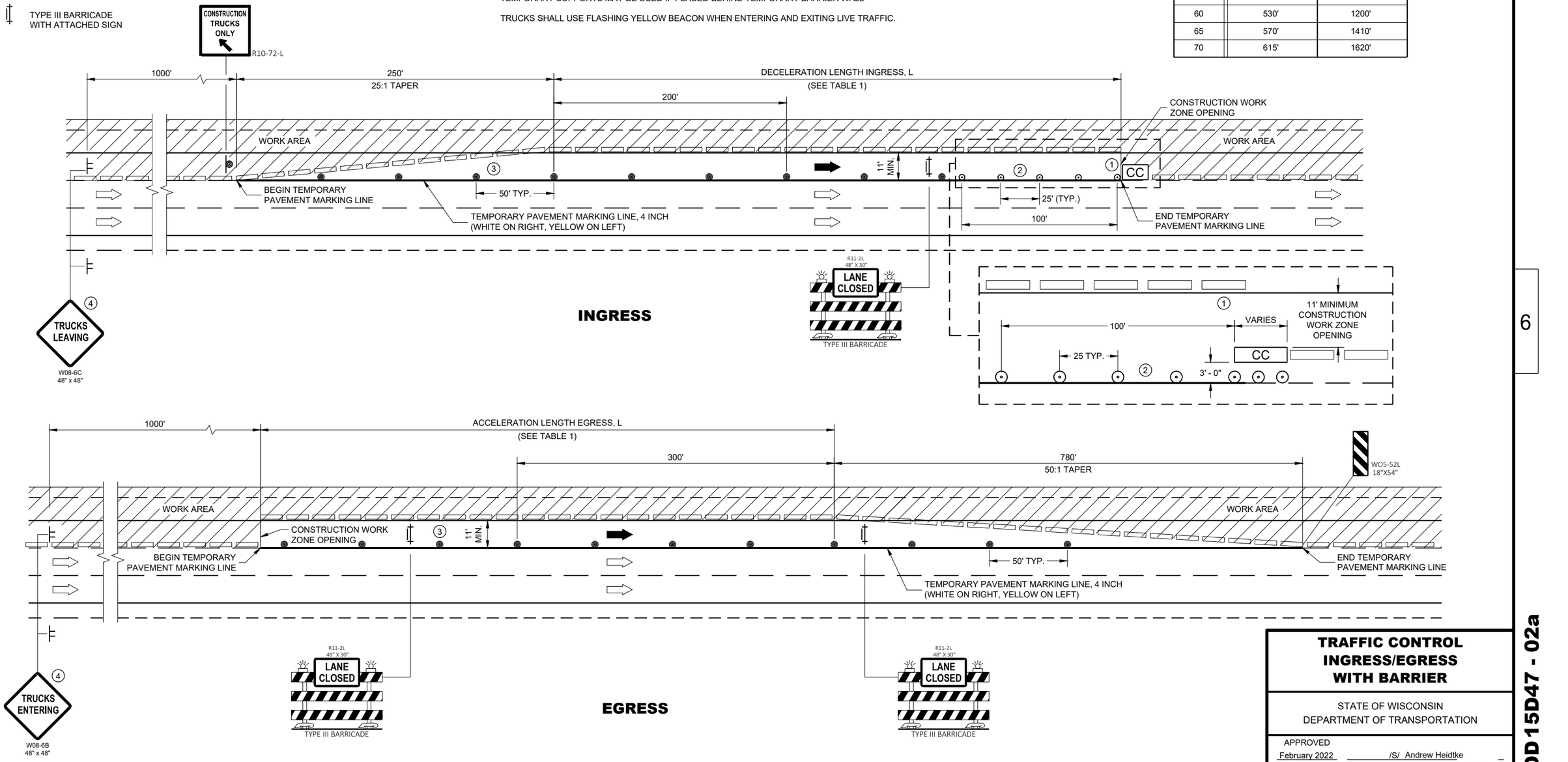

TRAFFIC CONTROL INGRESS/EGRESS WITH BARRIER

STATE OF WISCONSIN
DEPARTMENT OF TRANSPORTATION

APPROVED
February 2022
DATE

/S/ Andrew Heidtke
WORK ZONE ENGINEER

547

FHWA

6

SDD 15D47 - 02a

6

SDD 15D47 - 02a

LEGEND

SIGN ON PERMANENT SUPPORT

TRAFFIC CONTROL DRUM

TRAFFIC CONTROL DRUM WITH TYPE "C" STEADY BURN LIGHT

TYPE III BARRICADE WITH ATTACHED SIGN

DIRECTION OF TRAFFIC

CONSTRUCTION TRAFFIC

WORK AREA

TABLE 1

S (MPH)	INGRESS, L	EGRESS, L
50	435'	720'
55	480'	960'
60	530'	1200'
65	570'	1410'
70	615'	1620'

LEGEND

ALL SIGNS ARE 48"X48" UNLESS OTHERWISE NOTED.

"WO" SIGN IS THE SAME AS "W" SIGN EXCEPT THE BACKGROUND IS ORANGE.

ANY SIGNS TEMPORARY OR EXISTING, WHICH CONFLICT WITH THE TRAFFIC CONTROL "IN USE" SHALL BE REMOVED OR COVERED AS NEEDED AND AS APPROVED BY THE ENGINEER. NO WARNING LIGHTS SHALL BE WORKING ON COVERED OR "DOWNED" SIGNS.

THE EXACT NUMBER, LOCATION, AND SPACING OF ALL SIGNS AND DEVICES SHALL BE ADJUSTED TO FIT FIELD CONDITIONS AS APPROVED BY THE ENGINEER.

WORK ZONE INGRESS/EGRESS LOCATIONS SHALL BE APPROVED BY THE ENGINEER. LOCATIONS FOR WORK ZONE ACCESS TO/FROM THE FREEWAY SHALL NOT BE USED FOR INGRESS AND EGRESS AT THE SAME TIME.

THIS ACCESS DETAIL IS TYPICAL FOR LEFT LANE ACCESS, FOR RIGHT LANE ACCESS, REVERSE THE TRAFFIC CONTROL

TEMPORARY SUPPORTS MAY BE USED IF PLACED BEHIND TEMPORARY BARRIER WALL

TRUCKS SHALL USE FLASHING YELLOW BEACON WHEN ENTERING AND EXITING LIVE TRAFFIC.

(1) REMOVE OR COVER WHEN ACCESS IS NOT NEEDED.

(2) WHEN INGRESS / EGRESS IS NOT IN USE, PLACE DRUMS WITH 100' SPACING ALONG THE LANE LINE OF THE ENTRANCE / EXIT OF THE INGRESS / EGRESS.

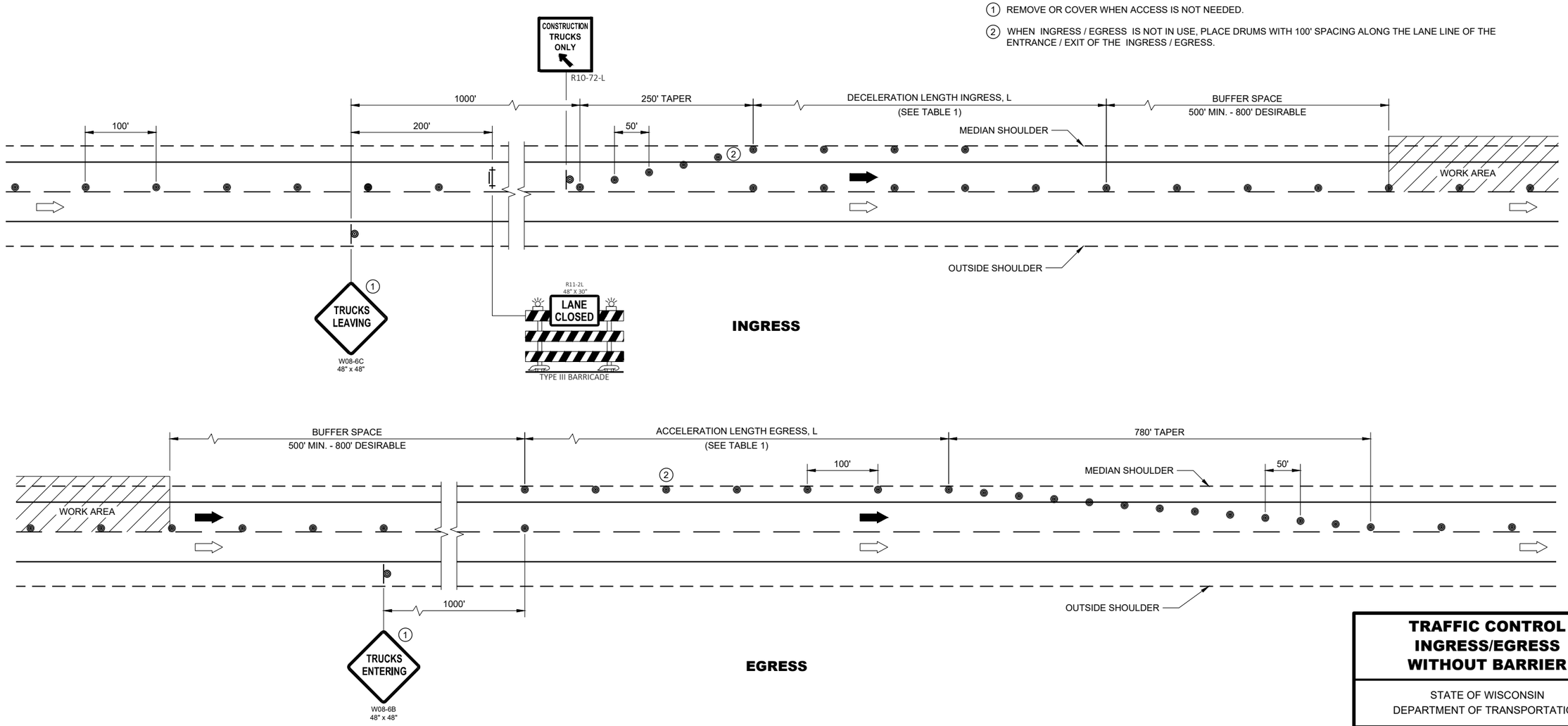

TRAFFIC CONTROL INGRESS/EGRESS WITHOUT BARRIER

STATE OF WISCONSIN
DEPARTMENT OF TRANSPORTATION

APPROVED
February 2022
DATE

/S/ Andrew Heidtke
WORK ZONE ENGINEE

FHWA

6

6

SDD 15D47 - 02b

SDD 15D47 - 02b

TYPICAL ASSEMBLIES

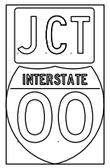

J1-1

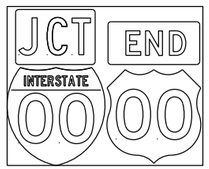

J1-2

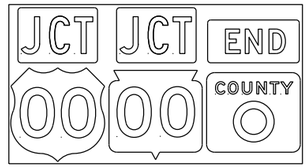

J1-3



JR1-1



J2-1

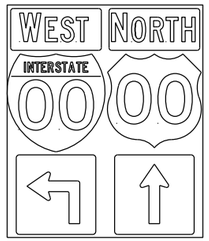

J2-2

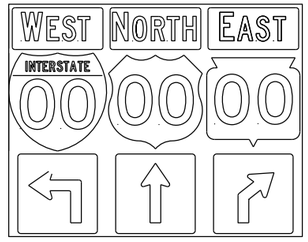

J2-3



JV
(Typical Vertical J-Assembly
See Note 10 and 11)

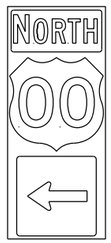

J3-1

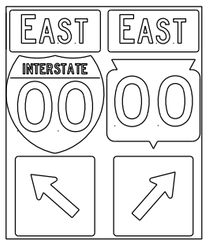

J3-2

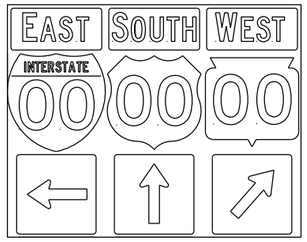

J3-3

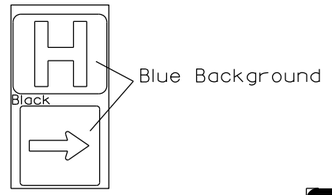

JH-1



J4-1

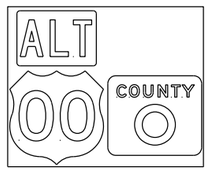

J4-2

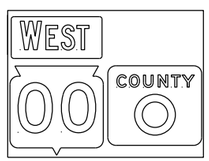

J4-2



J12-1

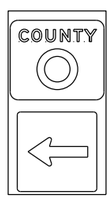

J13-1



J32-1



J33-1

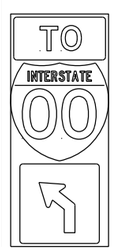

J22-1

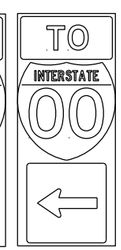

J23-1



JR13-1



JR23-1



JR99-1

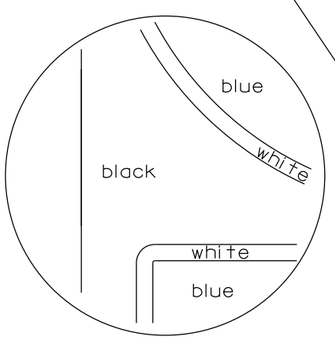

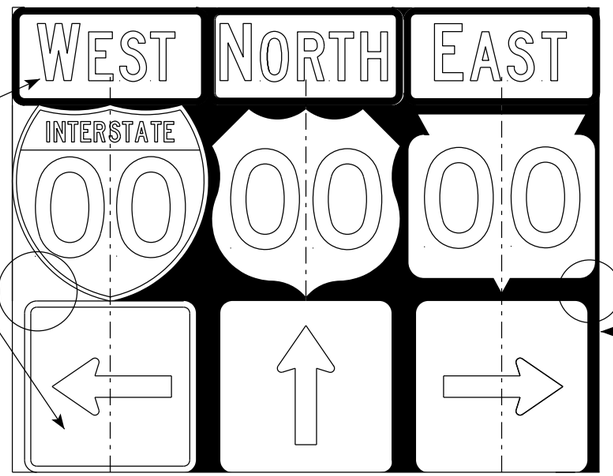

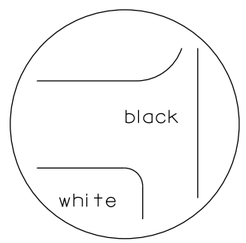

black background

NOTES

1. Signs are Type II - Type H Reflective
2. Color:
   Background - Black Non-reflective
   Message - see Note 5
3. Message Series - See Note 5
4. Corners shall be square or rounded if base material is plywood. If base material is metal the corners shall be rounded.
5. The colors and message spacing on each marker shall be according to the applicable route marker panel specifications.
6. Certain marker heads require the component pieces to be the same color. As an example, all the components used with an M1-1 Interstate marker shall be blue.
7. Single panel j-assemblies shall only be used with route marker shields that are same size. If the route marker shields are different size use multiple piece component.
8. Route assemblies that have 24 inch route shields and have dimensions greater than 48 inches (both vertical and horizontal) shall have one horizontal splice between the arrows and route shields. Vertical splices shall not be used on route assemblies with a horizontal dimension of 144 inches or less. The contractor shall not use more than one vertical joint per sign and the joint shall be between route shields.
9. Route assemblies that have 36 inch shields and have dimensions greater than 48 inchs (both vertical and horizontal) shall have two horizontal splices. One horizontal splice shall be between the cardinal direction and route shields and the other horizontal splice shall be between the arrows and route shields. Vertical splices shall not be used on route assemblies with a horizontal dimension of 144 or less. The contractor shall not use more than one vertical joint per sign and the joint shall be between route shields.
10. All Vertical J Assemblies are given a Sign Code of JV
11. For JV Assemblies that have a mixture of Interstate and non Interstate shields, arrows and cardinals shall be white on blue.

ROUTE MARKERS & COMPONENTS
IN TYPICAL ASSEMBLIES

WISCONSIN DEPT OF TRANSPORTATION

APPROVED Matthew R Rauch
for State Traffic Engineer

DATE 3/18/21 PLATE NO. A2-1S.9

PROJECT NO:

SHEET NO: 549 E

URBAN AREA

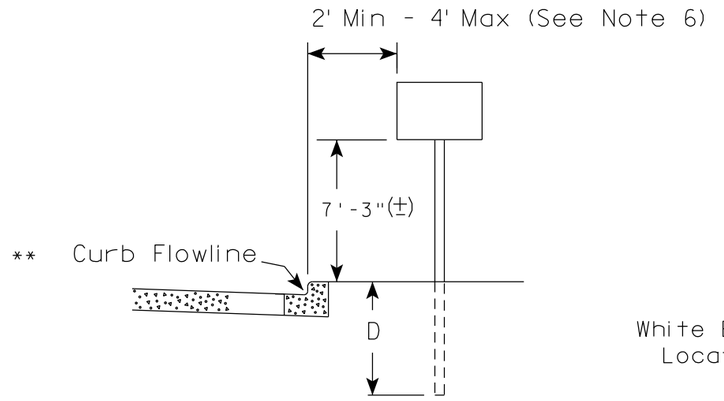

RURAL AREA (See Note 2)

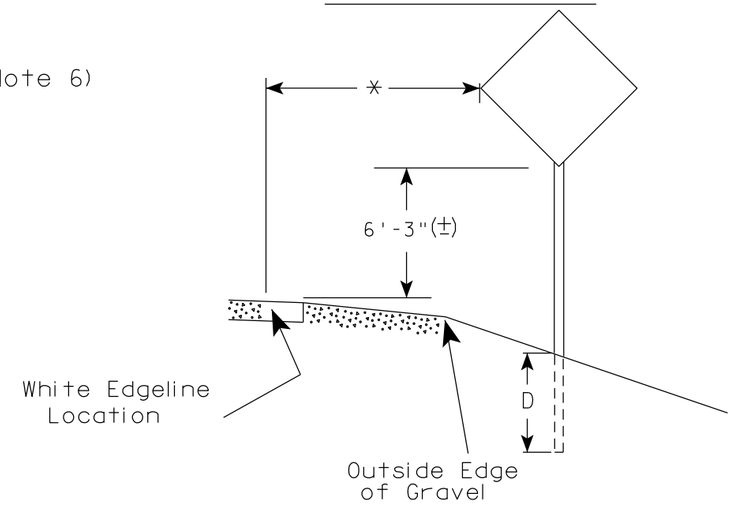

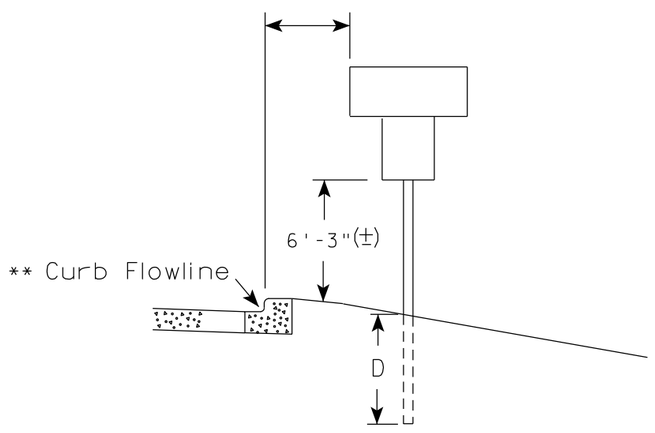

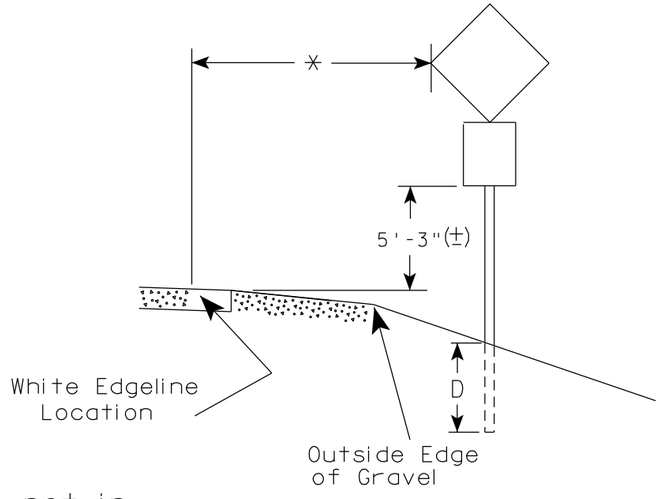

** The existence of curb and gutter does not in itself mandate the vertical clearance illustrated. That height is typically measured where there is sidewalk adjacent to the roadway or parking is permitted. In the absence of sidewalk vertical clearance is measured from the top of the curb. Offset of signs is measured from the flow line.

* 6 feet from edge of a paved shoulder or 12 feet from the edge of pavement (edge line location) or 2 feet from outside edge of gravel, whichever is greater unless directed by project engineer.

POST EMBEDMENT DEPTH

Area of Sign Installation (Sq.Ft.)	D (Min)
20 or Less	4'
Greater than 20	5'

GENERAL NOTES

1. Signs wider than 4 feet or 20 sq.ft or larger, shall be mounted on multiple posts. Refer to plate A4-4.
2. If signs are mounted on or behind barrier wall, see A4-10 sign plate.
   The Double Arrow sign (W12-1D) shall be mounted at a height of 2'-3" (±). The Chevron sign (W1-8), Roundabout Chevron panel (R6-4B), Enhanced Reference Markers, Clearance Markers (W5-52), Mile Markers (D10 series), In Road Object Markers (W5-54) & End of Road Markers (W5-56) shall be mounted at a height of 4'-3" (±).
3. For expressways and freeways, mounting height is 7'- 3" (±) or 6'-3" (±) depending upon existence of a sub-sign.
4. Minimum mounting height for signs mounted on traffic signal poles is 5'- 3" (±).
5. Offset distance shall be consistent with existing signs or consistent throughout length of project.
6. The (±) tolerance for mounting height is 3 inches.
7. Folding signs shall be mounted at a height of 5'-3" (±) or as directd by the Engineer.

TYPICAL INSTALLATION OF PERMANENT TYPE II SIGNS ON SINGLE POSTS

WISCONSIN DEPT OF TRANSPORTATION

APPROVED Matthew R Rauch
for State Traffic Engineer

DATE 5/13/2020 PLATE NO. A4-3.22

PROJECT NO:	HWY:	COUNTY:		SHEET NO: 550	E

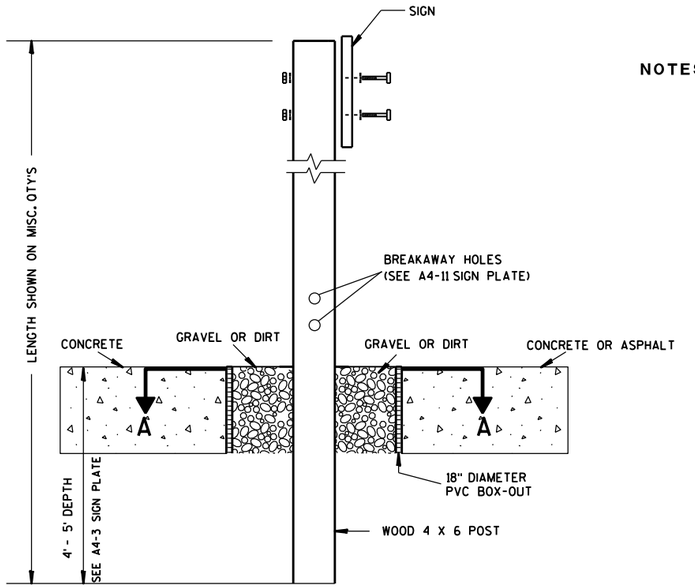

ELEVATION VIEW

DETAIL OF WOOD 4 X 6 SIGN POST IN BOX-OUT

NOTES:
1. ALL MATERIAL TO BE APPROVED BY ENGINEER PRIOR TO INSTALLATION
2. SEE SIGN PLATE A4-8 FOR SIGN HARDWARE REQUIREMENTS
3. 18 INCH X 18 INCH SQUARE BOX-OUTS MAY BE USED FOR INSTALLATIONS IN EXISTING CONCRETE OR ASPHALT LOCATIONS.

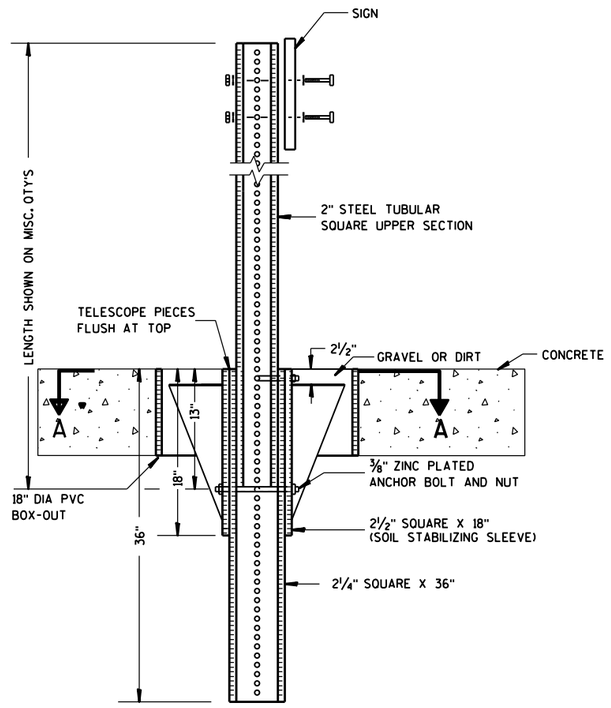

ELEVATION VIEW

DETAIL OF STEEL 2 X 2 SIGN POST IN BOX-OUT

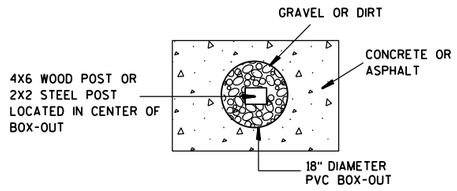

PLAN VIEW

FOR NEW CONCRETE/ASPHALT INSTALLATIONS

SIGN POST BOX-OUTS A4-3B

WISCONSIN DEPT OF TRANSPORTATION

APPROVED Matthew R Rauch
for State Traffic Engineer

DATE 1/27/14 PLATE NO. A4-3B.1

PROJECT NO:	HWY:	COUNTY:		SHEET NO:	E

FILE NAME : C:\CAEFiles\Projects\tr_stdplate\A43B.DGN PLOT DATE : 27-JAN-2014 09:48 PLOT BY : mscsja PLOT NAME : PLOT SCALE : 13.659812:1.000000 WISDOT/CADDS SHEET 42

URBAN AREA

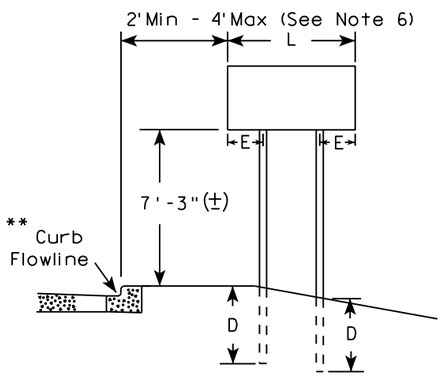

RURAL AREA (See Note 3)

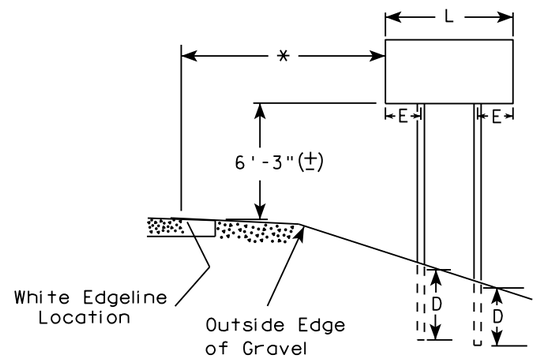

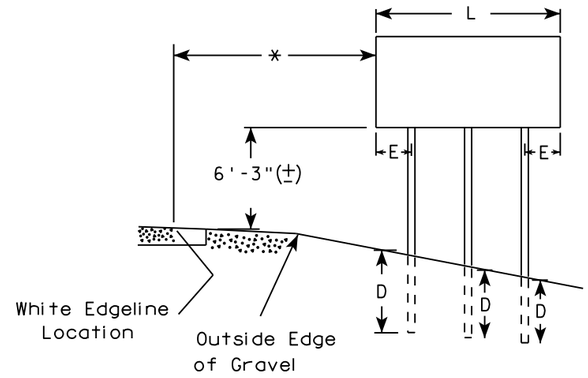

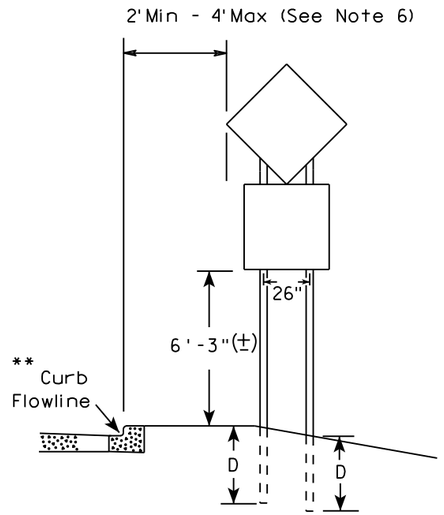

48" DIAMOND WARNING SIGN

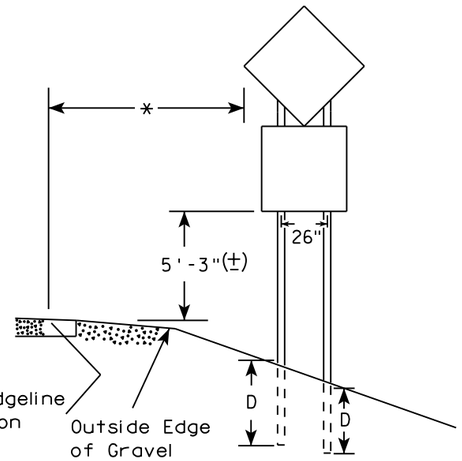

48" DIAMOND WARNING SIGN

SIGN SHAPE OTHER THAN DIAMOND (TWO POSTS REQUIRED)		
	L	E
***	Greater than 48" Less than 60"	12"
	60" to 108"	L/5

SIGN SHAPE OTHER THAN DIAMOND (THREE POSTS REQUIRED)	
L	E
Greater than 108" to 144"	12"

GENERAL NOTES

1. For 3 or 4 post installations, individual post spacing shall be greater than 3'-6".
2. See tables below for required number of posts.
3. For expressways and freeways, mounting height is 7'-3" (±) or 6'-3" (±) depending upon existence of sub-sign.
4. The (±) tolerance for mounting height is 3 inches.
5. J-Assemblies are considered to be one sign for mounting height.
6. Offset distance shall be consistent with existing signs or consistent throughout length of project.
7. Folding signs shall be mounted at a height of 5'-3" (±) or as directed by the engineer.
8. The Double Arrow sign (W12-1) shall be mounted at a height of 2'-3" (±). The Chevron sign (W1-8), Roundabout Chevron panel (R6-4B), Clearance Markers (W5-52), Mile Markers (D10 series), In Road Object Markers (W5-54) & End of Road Markers (W5-56) shall be mounted at a height of 4"-3" (±).

* 6 feet from edge of a paved shoulder or 12 feet from the edge of pavement (edge line location) or 2 feet from outside edge of gravel, whichever is greater unless directed by project engineer.

** The existence of curb and gutter does not in itself mandate the vertical clearance illustrated. That height is typically measured where there is sidewalk adjacent to the roadway or parking is permitted. In the absence of sidewalk vertical clearance is measured from the top of the curb. Offset of signs is measured from the flow line.

*** See A4-3 sign plate for signs 4' or less in width and less than 20 S.F. in area.

POST EMBEDMENT DEPTH

Area of Sign Installation (Sq. Ft.)	D (Min)
20 or Less	4'
Greater than 20	5'

TYPICAL INSTALLATION OF TYPE II SIGNS ON MULTIPLE POSTS

WISCONSIN DEPT OF TRANSPORTATION

APPROVED Matthew R Rauch
For State Traffic Engineer

DATE 8/21/17 PLATE NO. A4-4.15

PROJECT NO:	HWY:	COUNTY:		SHEET NO: 552	E

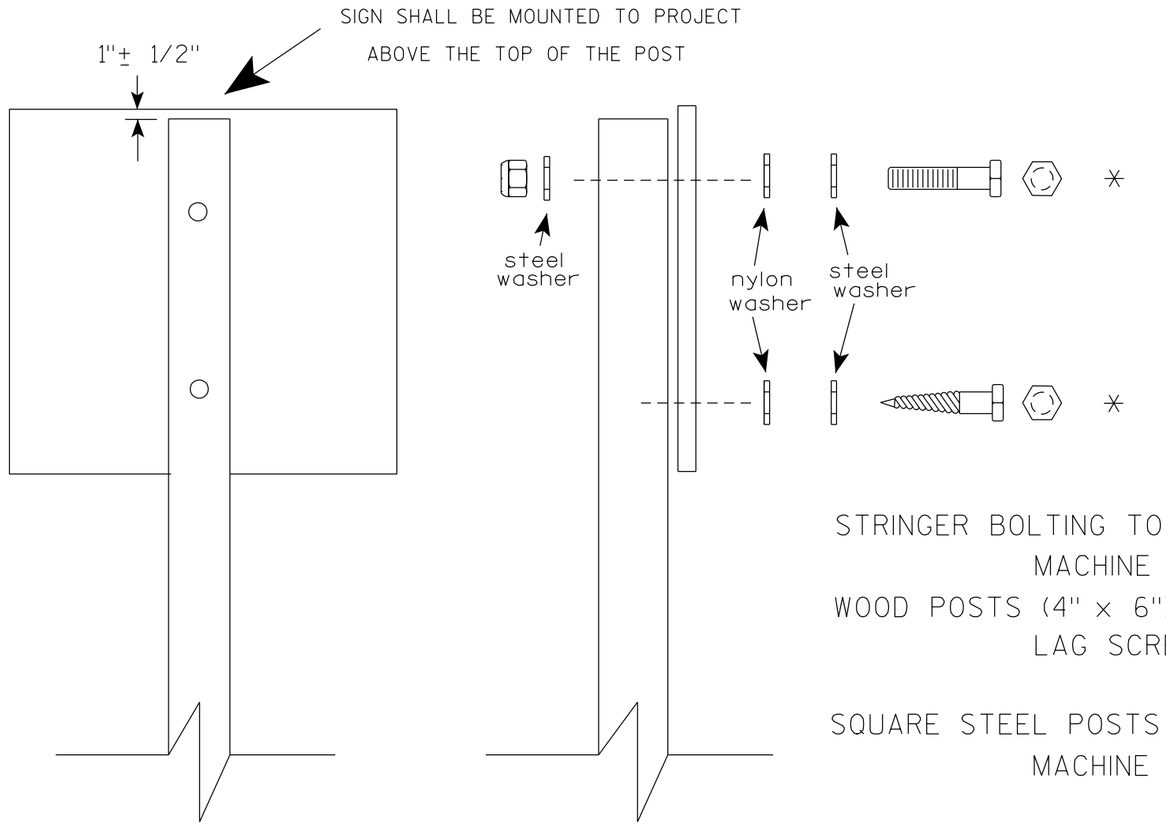

Nuts, bolts and lags used for mounting signs shall have hexagonal heads and shall be either :

a. Hot dip galvanized in accordance with ASTM Designation: A 153, Class D, or SC 3

b. Electro-galvanized in accordance with ASTM Designation : B 633, TYPE III, SC 3.

Threads on bolts and nuts shall be manufactured with sufficient allowance for the cadmium plate or galvanized coating to permit the nuts to run freely on the bolts.

STRINGER BOLTING TO ALUMINUM SIGNS (SEE SIGN PLATE A4-18)

MACHINE BOLTS - 5/16" X 1-3/4" Length w/ lock nuts

WOOD POSTS (4" x 6")

LAG SCREWS - 3/8" X 3" (NO STRINGERS ON BACK OF SIGN)
3/8" X 4" (STRINGERS ON BACK OF SIGN)

SQUARE STEEL POSTS (2" x 2")

MACHINE BOLTS - 3/8" X 3-1/4" Length w/ nuts (NO STRINGER ON BACK OF SIGN)
3/8" X 5" Length w/ nuts (STRINGERS ON BACK OF SIGN)

RIVETS - 9/32" (6605-9-6) BULB-TITE, TRI-FOLD, ALUMINUM BODY/MANDREL
O.D. FLANGE .720-.765 INCH, GRIP RANGE .042-.375 INCH

WASHERS (ALL POSTS) -

1-1/4" O.D. X 3/8" I.D. X 1/16" STEEL
1-1/4" O.D. X 3/8" I.D. X .080 NYLON

* Two different fastening systems are shown for illustration purposes. On any individual sign, either one or the other system shall be used. Actual number of fasteners per sign varies with the sign area, but normally there are two. For a single post installation, all signs greater than 9 sq. ft. require the use of 3 fasteners.

ATTACHMENT OF SIGNS TO POSTS

WISCONSIN DEPT OF TRANSPORTATION

APPROVED Matthew R Rauch
for State Traffic Engineer

DATE 4/1/2020 PLATE NO. A4-8.9

PROJECT NO:

SHEET NO: 553 E

TELESCOPIC TUBING ANCHORS
TWO PIECE SYSTEM

2 1/4 " SQUARE
12 GAUGE
PERFORATED
GALVANIZED FINISH

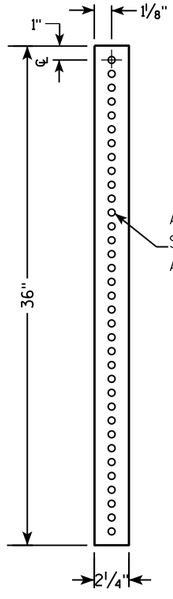

2 1/2 " SQUARE
12 GAUGE
OMNI-DIRECTIONAL
PERFORATED
SOIL STABILIZING SLEEVE
GALVANIZED FINISH

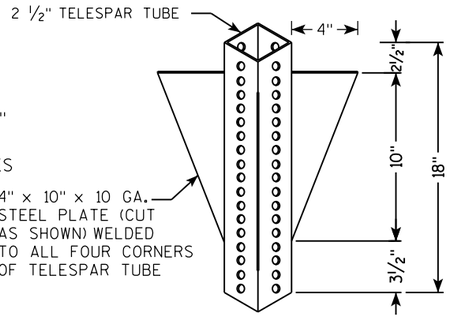

DETAIL OF TUBULAR STEEL SIGN POST
(IN POURED CONCRETE OR ASPHALT)

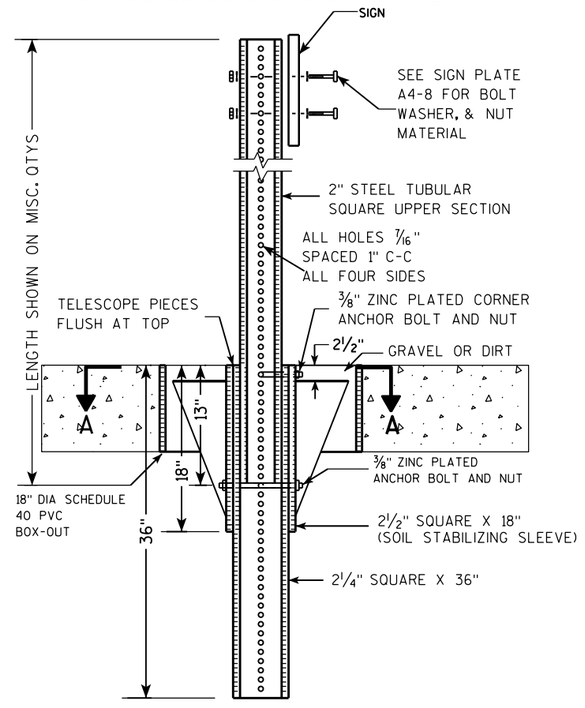

DETAIL OF TUBULAR STEEL SIGN POST
(IN LOCATIONS OTHER THAN POURED CONCRETE OR ASPHALT)

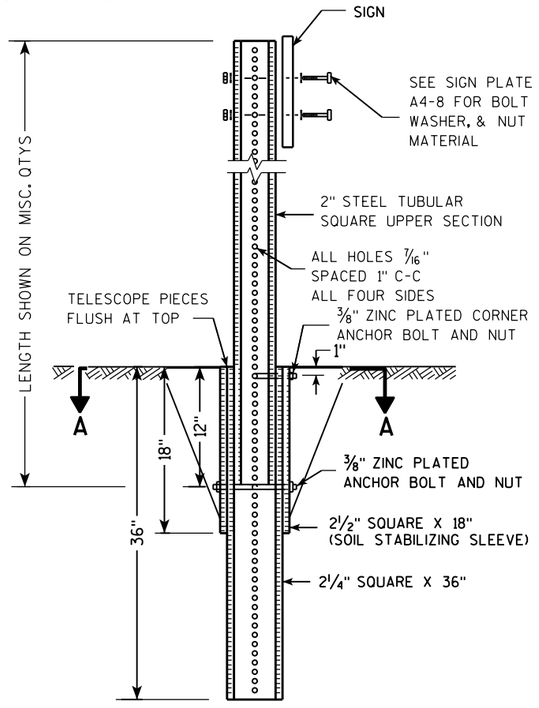

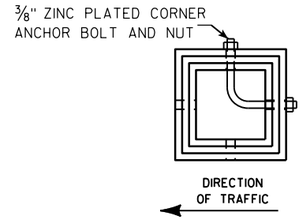

SECTION A-A

Area of Sign Installation (Sq. Ft.)	Number of Required Posts
9 or less	1
Greater than 9 less than or equal to 18	2
Greater than 18 less than or equal to 27	3

Signs wider than 3 feet or larger than 9 sq. ft shall be mounted on multiple posts (see above table).

TUBULAR STEEL
SIGN POST
A4-9

WISCONSIN DEPT OF TRANSPORTATION

APPROVED Matthew R Rauch
for State Traffic Engineer

DATE 2/05/15 PLATE 554 A4-9.9

PROJECT NO:	HWY:	COUNTY:		SHEET NO:	E

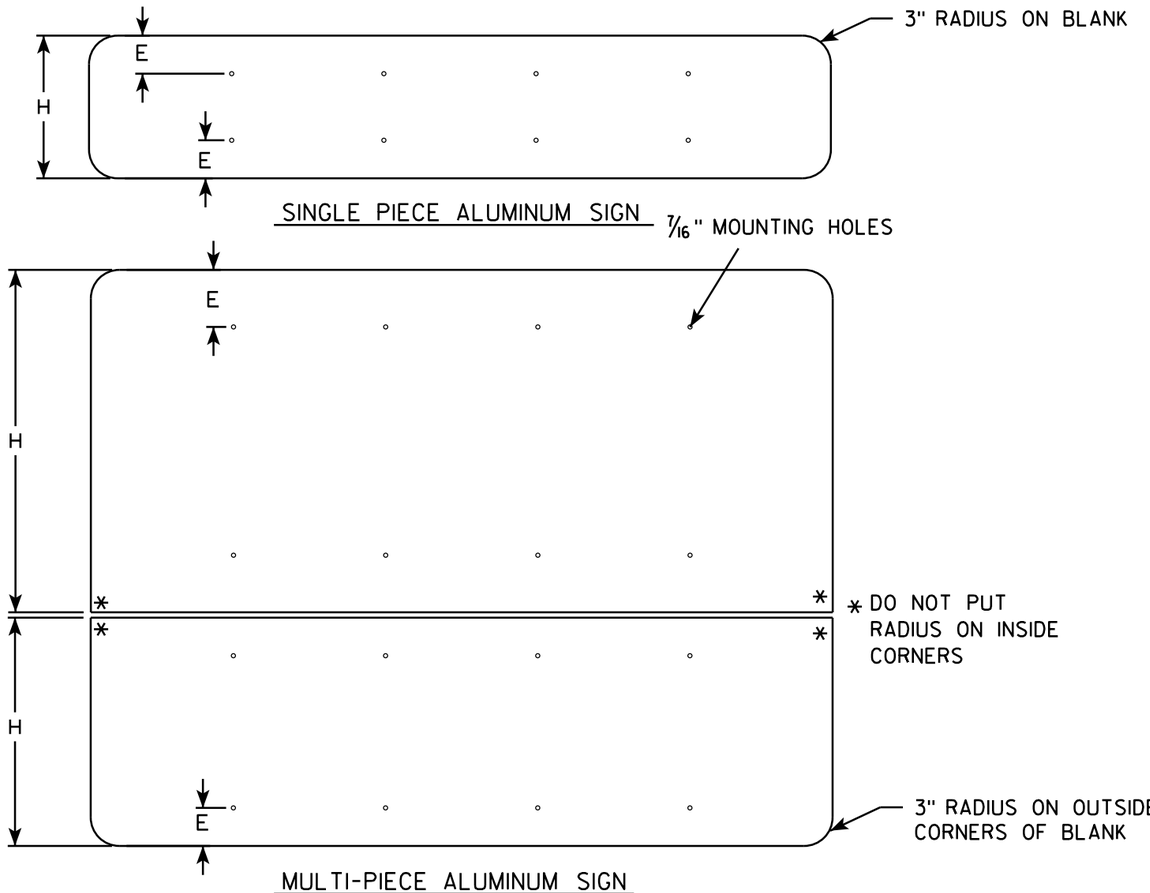

GENERAL NOTES

- ALL SIGNS OVER 60" IN WIDTH SHALL HAVE A 3" RADIUS ON THE OUTSIDE CORNERS OF THE ALUMINUM BLANK.
- MOUNTING HOLES SHALL BE 7/16" DIAMETER.
- SEE CHART FOR HOLE SPACING REQUIREMENTS
- FOR SIGN PANELS WITH DIMENSION (H) 36" AND OVER, DIMENSION E SHALL BE 6"
- FOR SIGN PANELS WITH DIMENSION (H) UNDER 36", DIMENSION E SHALL BE 4"
- SIGN STRINGER MATERIAL SHALL CONSIST OF STEEL CHANNEL POST SECTIONS, WEIGHING 1.12 LBS/FT IN ACCORDANCE WITH SECTION 633.2.1 OF THE STANDARD SPECIFICATIONS FOR HIGHWAY AND STRUCTURE CONSTRUCTION.
- SEE SIGN PLATE A4-8 FOR SIGN STRINGER BOLTING REQUIREMENTS.

SIGN WIDTH	STRINGER WIDTH	POSTS	HOLE SPACING	MOUNTING HOLES
78"	72"	2	16"	15" 31" 47" 63"
84"	72"	2	17"	16½" 33½" 50½" 67½"
90"	72"	2	18"	18" 36" 54" 72"
96"	90"	2	19"	19½" 38½" 57½" 76½"
102"	90"	2	20"	21" 41" 61" 81"
108"	90"	2	21"	22½" 43½" 64½" 85½"
114"	108"	3	15"	12" 27" 42" 57" 72" 87" 102"
120"	108"	3	16"	12" 28" 44" 60" 76" 92" 108"
126"	108"	3	17"	12" 29" 46" 63" 80" 97" 114"
132"	126"	3	18"	12" 30" 48" 66" 84" 102" 120"
138"	126"	3	19"	12" 31" 50" 69" 88" 107" 126"
144"	126"	3	20"	12" 32" 52" 72" 92" 112" 132"

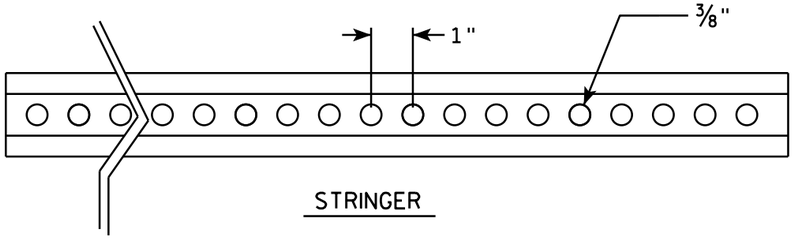

STRINGER

CROSS SECTION VIEW OF CHANNEL

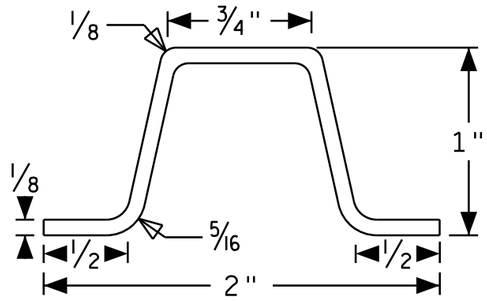

POST MOUNTING

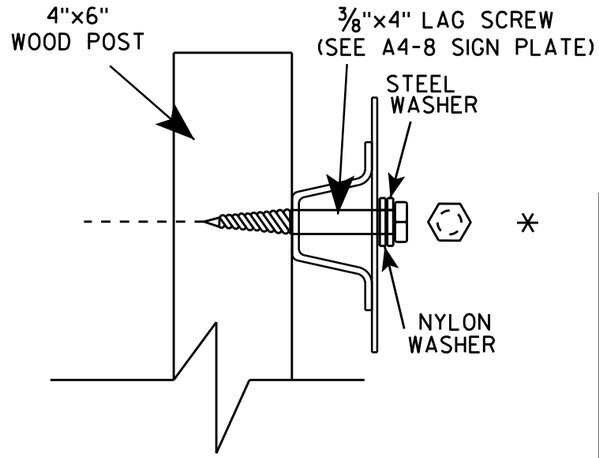

SIGN STRINGER MOUNTING REQUIREMENTS

WISCONSIN DEPT OF TRANSPORTATION

APPROVED Matthew R Rauch

for State Traffic Engineer

DATE 4/26/16 PLATE NO A4-18.1

PROJECT NO:	HWY:	COUNTY:		SHEET NO:	E

FILE NAME : C:\CAEfiles\Projects\tr_stdplate\A418.dgn PLOT DATE : 27-APR-2016 13:56 PLOT BY : mscj9h PLOT NAME : PLOT SCALE : 41.805205:1.000000 WISDOT/CADDS SHEET 42

BANDING

SINGLE SIGN

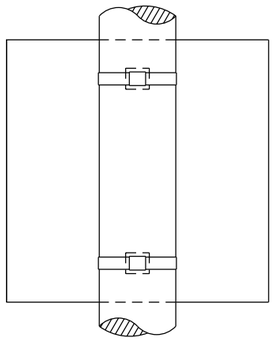

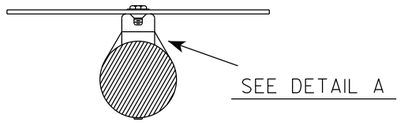

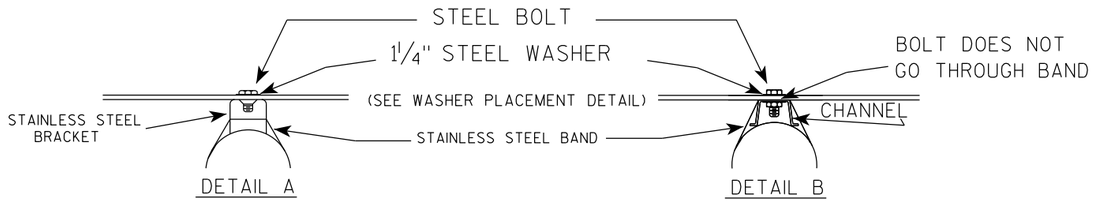

GENERAL NOTES

1. Any sign over 3 feet in width shall use the V-Block banding method. See A5-10 standard plate.
2. Signs 3 feet or greater in height shall have three bracket bands installed. Signs less than 3 feet in height shall have two bracket bands installed.
3. Banding and assembly bracket shall be stainless steel. All bands shall be ¾" in width and 0.025" thickness.
4. ALL SIGN MOUNTING BOLTS AND WASHERS SHALL BE EITHER:
   a. Hot dip or mechanically galvanized in accordance with ASTM Designation: A 153, Class D
   b. Electro-galvanized in accordance with ASTM designation: B 633, Type III, SC 3

"J" ASSEMBLY

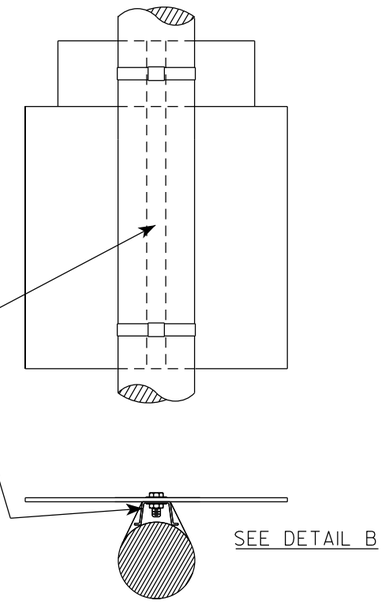

WASHER PLACEMENT

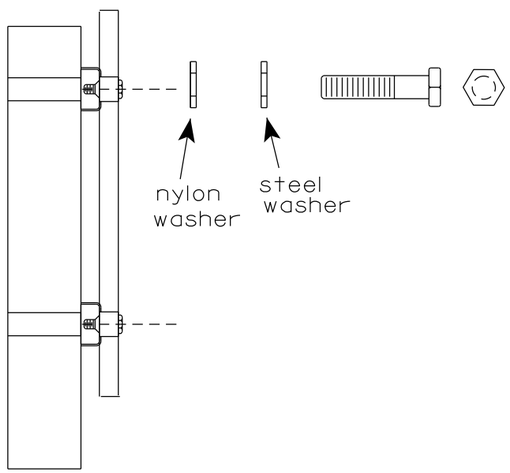

WASHERS (ALL POSTS) -
1-1/4" O.D. X ⅜" I.D. X 1/16" STEEL
1-1/4" O.D. X ⅜" I.D. X .080 NYLON
FOR ALL TYPE H SIGNS

STANDARD SIGN
SIGN BANDING DETAILS

WISCONSIN DEPT OF TRANSPORTATION

APPROVED Matthew R Rauch
for State Traffic Engineer

DATE 6/10/19 PLATE NO. A5-9.4

PROJECT NO:	HWY:	COUNTY:		SHEET NO: 556	E

FILE NAME : C:\CAEfiles\Projects\tr_stdplate\A59.dgn PLOT DATE : 10-JUN 2019 4:10 PLOT BY : mscj9h PLOT NAME : PLOT SCALE : $$.....plotscale.....$$ WISDOT/CADDS SHEET 42

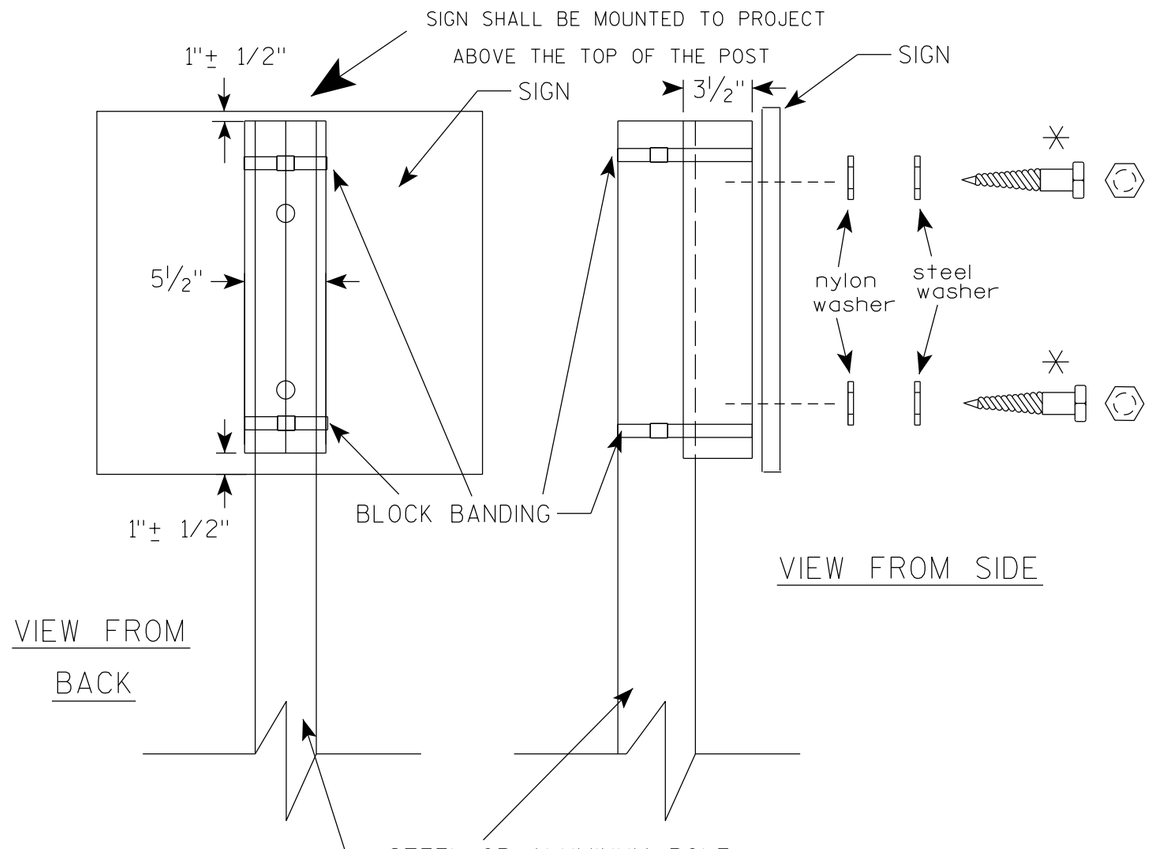

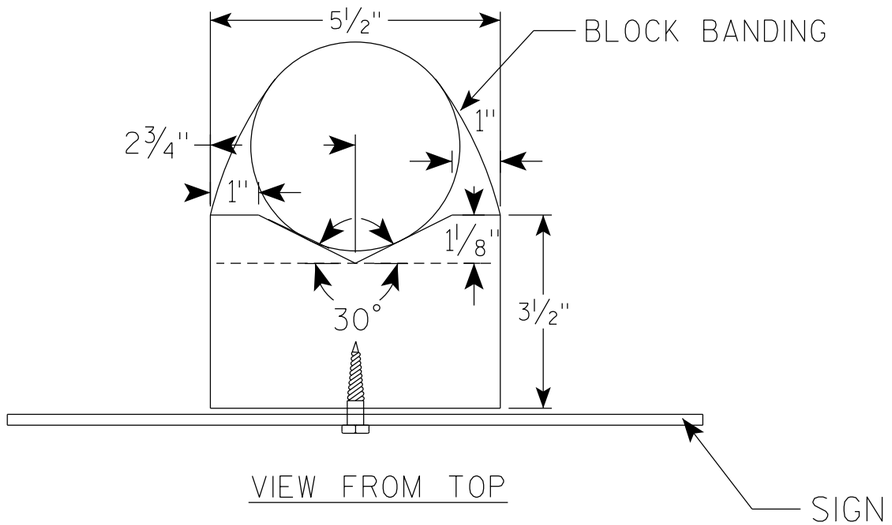

GENERAL NOTES

1. WOOD 4"X6" POST MATERIAL SHALL CONFORM TO 507.2.2 OF THE WisDOT STANDARD SPECIFICATIONS
2. BLOCK BANDING AND CLIPS SHALL BE STAINLESS STEEL, ¾" WIDTH AND 0.025" THICKNESS
3. SIGNS 3' OR GREATER IN HEIGHT SHALL UTILIZE 3 BLOCK BANDS. SIGNS UNDER 3' IN HEIGHT SHALL UTILIZE 2 BLOCK BANDS
4. ACTUAL NUMBER OF FASTENERS PER SIGN VARIES WITH THE SIGN AREA, BUT NORNALLY THERE ARE TWO. FOR SIGNS GREATER THAN 9 S.F. 3 FASTENERS SHALL BE USED.
5. ALL SIGN MOUNTING BOLTS AND WASHERS SHALL BE EITHER:
   a. Hot dip or mechanically galvanized in accordance with ASTM Designation: A 153, Class D
   b. Electro-galvanized in accordance with ASTM Designation : B 633, TYPE III, SC 3
6. ALL BOLTS SHALL HAVE HEXAGONAL HEADS.
7. STEEL WASHERS SHALL BE 1¼" O.D. X ⅜" I.D. X 1/16"
8. NYLON WASHERS SHALL BE 1¼" O.D. X ⅜" I.D. X .080 FOR TYPE H OR TYPE F FACE SIGN

✳ LAG BOLTS SHALL BE ⅜" X 2½"

BLOCK BANDING DETAIL (V-BLOCK OPTION)

WISCONSIN DEPT OF TRANSPORTATION

APPROVED Matthew R Rauch
for State Traffic Engineer

DATE 4/19/2022 PLATE NO. A5-10.3

PROJECT NO:

SHEET NO: 557 E

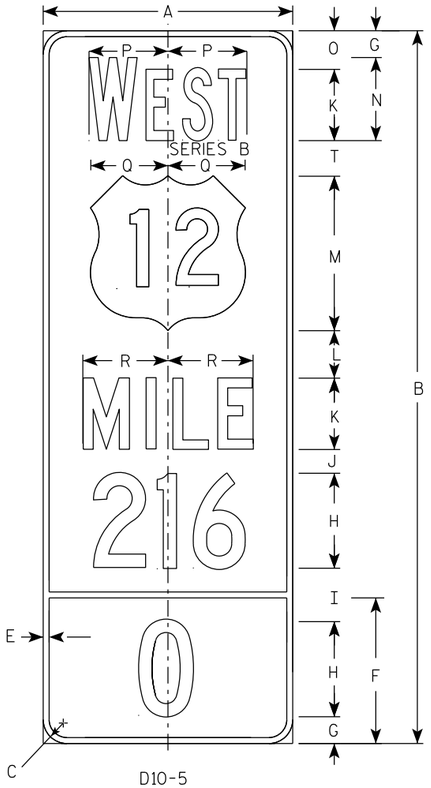

D10-5

SERIES B

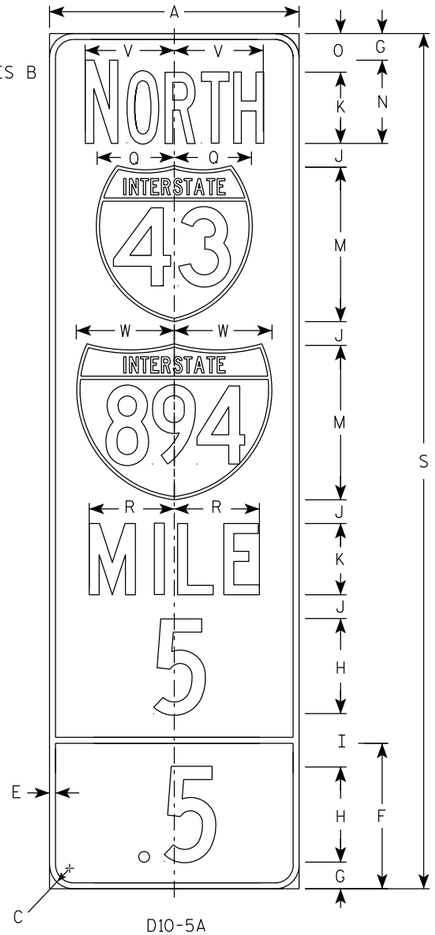

D10-5A

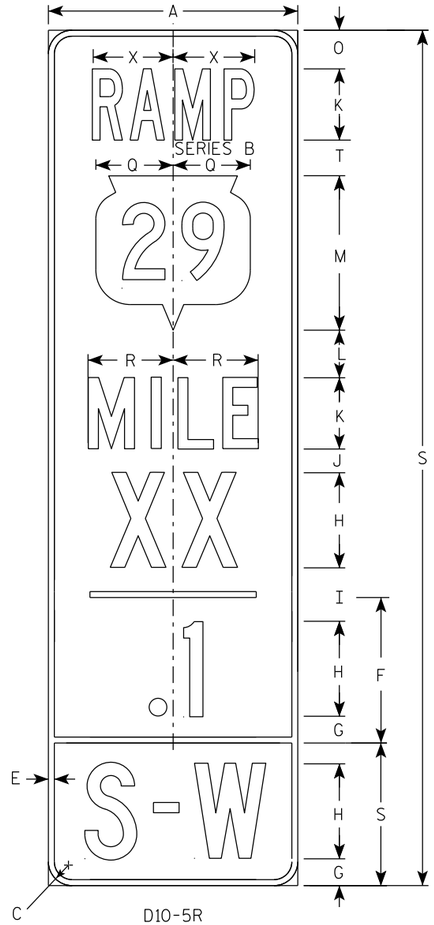

D10-5R



SERIES B



SERIES B

NOTES

1. Sign is Type II - Type H Reflective
2. Color:
   Background - BLUE
   Message - WHITE
3. Interstate Shield Color
   Background - Top Red
   - Bottom Blue
   Message - White
4. Message Series - C or as noted on the Sign.
5. The decimal point is required for all digits except "0".
6. Optically adjust mileage numbers about the centerline of the sign to achieve proper balance.
7. Optically adjust Ramp direction letters about the centerline of the sign to achieve proper balance.

SIZE	A	B	C	D	E	F	G	H	I	J	K	L	M	N	O	P	Q	R	S	T	U	V	W	X	Y	Z	D10-5 Area sq. ft.	D10-5A Area sq. ft.	D10-5R Area sq. ft.
1																													
2																													
3																													
4	21	60	1 ½		½	12 ¼	2 ¼	8	4 ½	2	6	4	13	6 ⅝	3 ¼	7	6 ½	7 ⅛	72	3		7 ½	8 ¼	6 ¾			8.75	10.5	10.5
5	21	60	1 ½		½	12 ¼	2 ¼	8	4 ½	2	6	4	13	6 ⅝	3 ¼	7	6 ½	7 ⅛	72	3		7 ½	8 ¼	6 ¾			8.75	10.5	10.5

STANDARD SIGN
D10-5

WISCONSIN DEPT OF TRANSPORTATION

APPROVED Matthew R Rauch
for State Traffic Engineer

DATE 7/11/18 PLATE NO. D10-5.3

PROJECT NO:

SHEET NO: 558 E

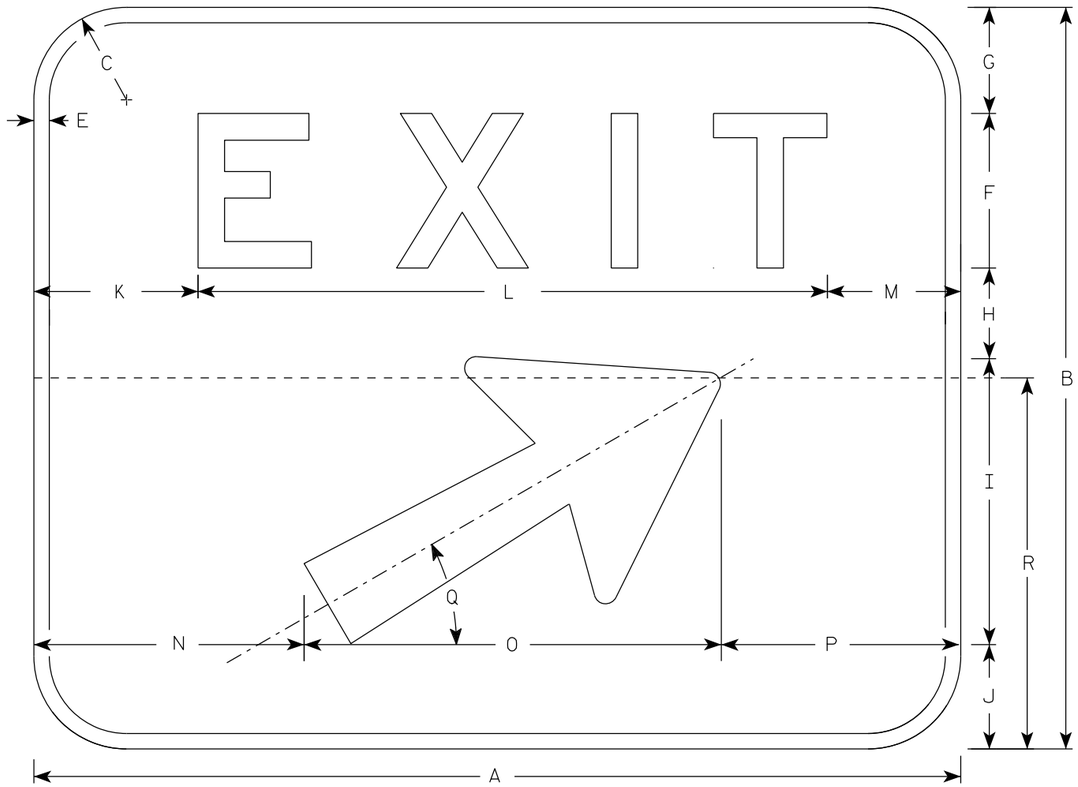

E5-1

NOTES

1. Sign is Type II - Type H reflective
2. Color:
   Background - Green
   Message - White
3. Message Series - E
4. Sign shall be split into two seperate pieces as shown on the detail by the dashed line (----------) for sizes 4 & 5.
5. Arrow is Type "A" from sign plate A1-1.
6. As per the Standard Spec's, this sign shall not have a vertical joint.
7. Size 3 E5-1 shall only be used in a Work Zone application with a Temporary Sign Support

SIZE	A	B	C	D	E	F	G	H	I	J	K	L	M	N	O	P	Q	R	S	T	U	V	W	X	Y	Z	Area sq. ft.
1																											
2																											
3	48	48	6		1	10	6 7/8	5 7/8	18 1/2	6 3/4	8 1/2	31 1/8	8 3/8	11 1/2	27	9 1/2	30°	30									16.0
4	60	48	6		1	10	6 7/8	5 7/8	18 1/2	6 3/4	10 5/8	40 3/4	8 5/8	17 1/2	27	15 1/2	30°	30									20.0
5	72	60	6		1	12	9 3/4	10	18 1/2	9 3/4	13 1/4	48 1/2	10 1/4	23 1/2	27	21 1/2	30°	30									30.0

STANDARD SIGN
E5-1

WISCONSIN DEPT OF TRANSPORTATION

APPROVED Matthew R Rauch
for State Traffic Engineer

DATE 2/9/2022 PLATE NO. E5-1.11

PROJECT NO: | HWY: | COUNTY: | SHEET NO: 559 | E

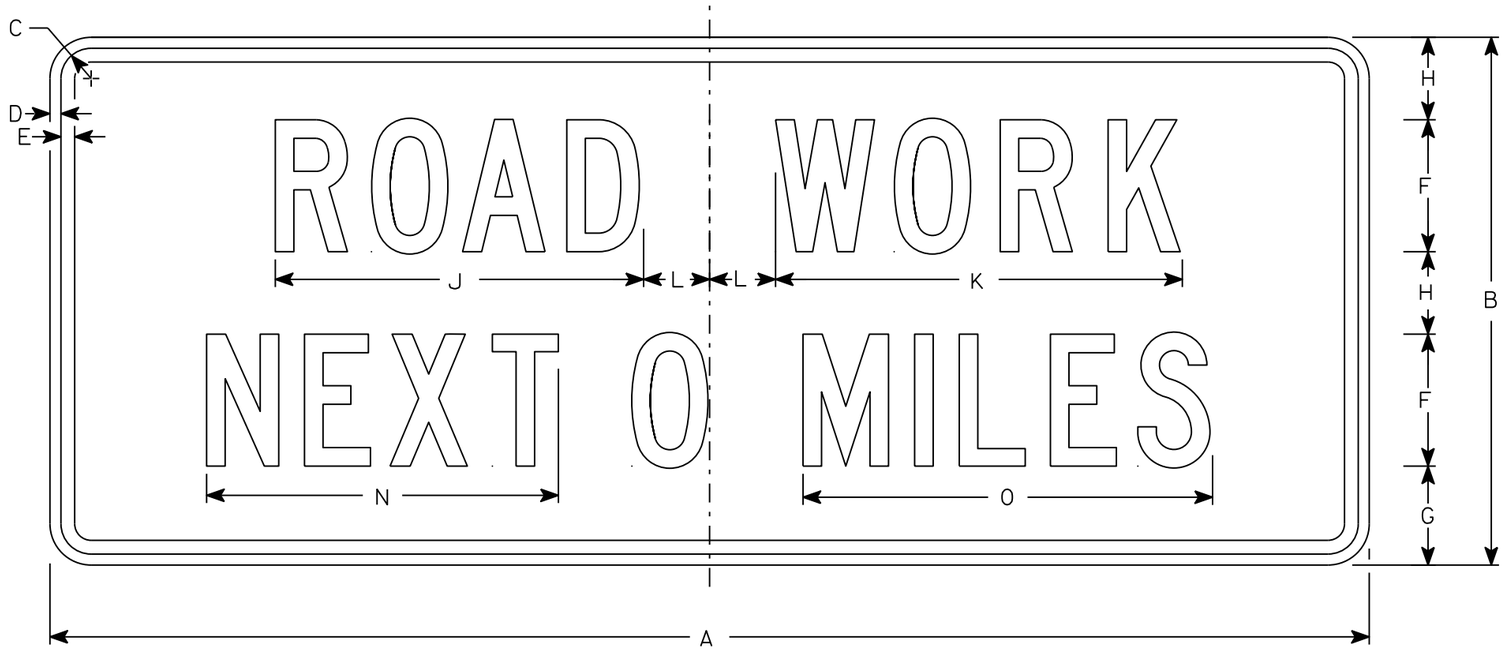

G20-1

NOTES

1. Sign is Type II - Type F Reflective
2. Color:
   Background - Orange
   Message - Black
3. Message Series - C
4. Corners may be square or rounded when base material is plywood but borders shall be rounded as shown. When base material is metal, the corners and borders shall be rounded.
5. Round distance to nearest whole Mile and substitute appropriate numerals and optically adjust spacing to achieve proper balance

SIZE	A	B	C	D	E	F	G	H	I	J	K	L	M	N	O	P	Q	R	S	T	U	V	W	X	Y	Z	Area sq. ft.
1																											
2	60	24	1 3/8	1/2	5/8	6	4 1/2	3 3/4		16 3/4	18 1/2	3		16	18 5/8												10
3																											
4	60	24	1 3/8	1/2	5/8	6	4 1/2	3 3/4		16 3/4	18 1/2	3		16	18 5/8												10
5																											

STANDARD SIGN
G20-1

WISCONSIN DEPT OF TRANSPORTATION

APPROVED Matthew R Rauch
for State Traffic Engineer

DATE 3/14/17 PLATE NO. G20-1.8

PROJECT NO:	HWY:	COUNTY:		SHEET NO: 560	E

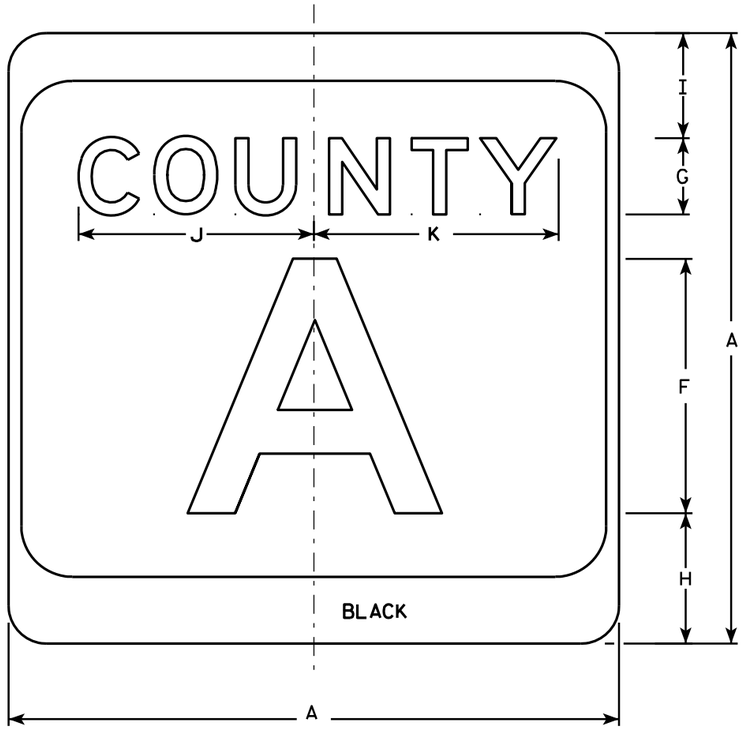

M1-5A

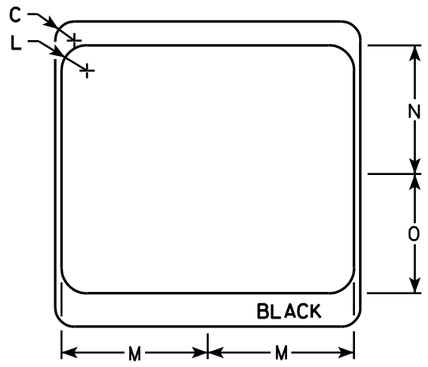

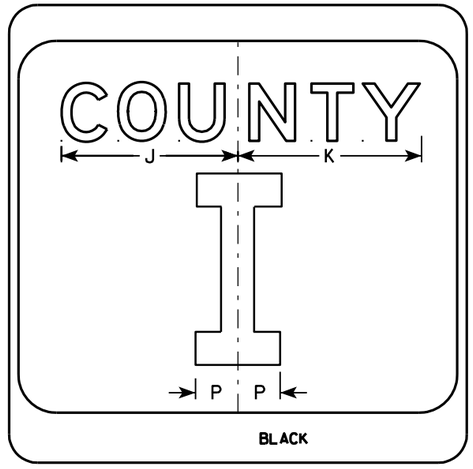

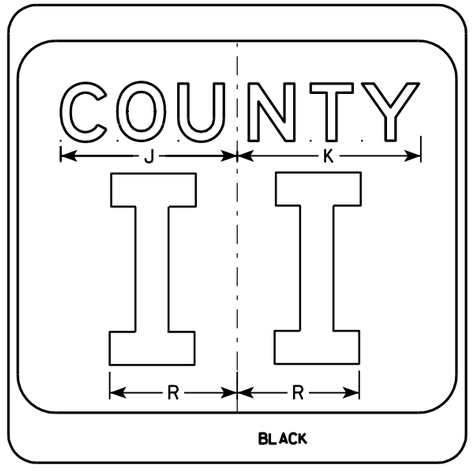

NOTES

1. Sign is Type II - see Note 7 - reference WIS DOT Standard Specification for HIGHWAY and STRUCTURE CONSTRUCTION latest edition.
2. Color:
   Background - White & Black - See Note 7
   Message - Black
3. Message Series - see Note 5
4. Corners may be square or rounded when base material is plywood but borders shall be rounded as shown. When base material is metal, the corners and borders shall be rounded.
5. Message Series E for 1 letter.
   Message Series D for 2 letters unless message is too big then Series C.
   Message Series C for 3 letters unless message is too big then Series B.
6. Substitute appropriate letters & optically center to achieve proper balance.
7. Permanent Signs
   Background - Type H Reflective
   Detour or temporary Signs
   Background - Reflective

SIZE	A	B	C	D	E	F	G	H	I	J	K	L	M	N	O	P	Q	R	S	T	U	V	W	X	Y	Z	Area sq. ft.
1																											
2	24		1 1/2			10	3	5 1/8	4 1/8	9 1/4	9 5/8	2	11 1/2	10 1/8	9 3/8	2 1/4		6 5/8									4.0
3	36		2 1/4			16	4	7 5/8	5 5/8	12 1/4	12 7/8	3	17 1/8	15 1/4	14	3 3/8		10									9.0
4	36		2 1/4			16	4	7 5/8	5 5/8	12 1/4	12 7/8	3	17 1/8	15 1/4	14	3 3/8		10									9.0
5	36		2 1/4			16	4	7 5/8	5 5/8	12 1/4	12 7/8	3	17 1/8	15 1/4	14	3 3/8		10									9.0

CTH MARKER
M1-5A FOR ASSEMBLIES

WISCONSIN DEPT OF TRANSPORTATION

APPROVED Matthew R Rauch
for State Traffic Engineer

DATE 9/27/11 PLATE NO. M1-5A.8

PROJECT NO:	HWY:	COUNTY:		SHEET NO: 561	E

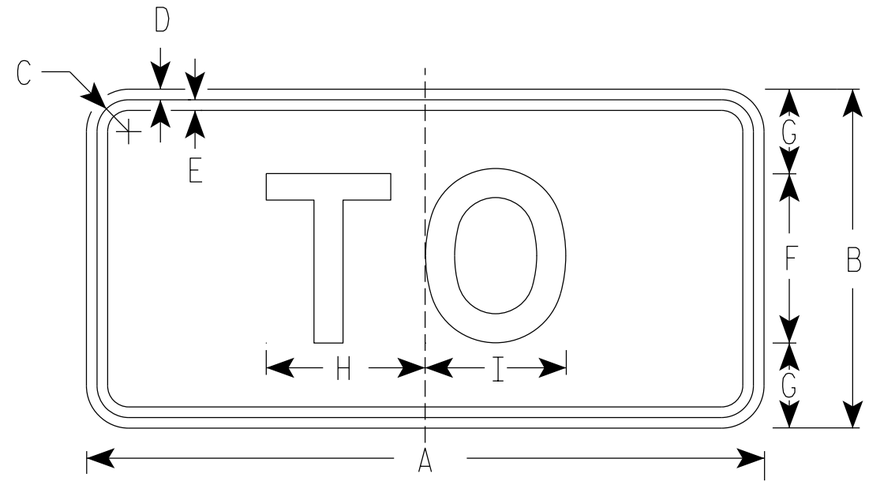

M4-5
MM4-5
MP4-5
M04-5

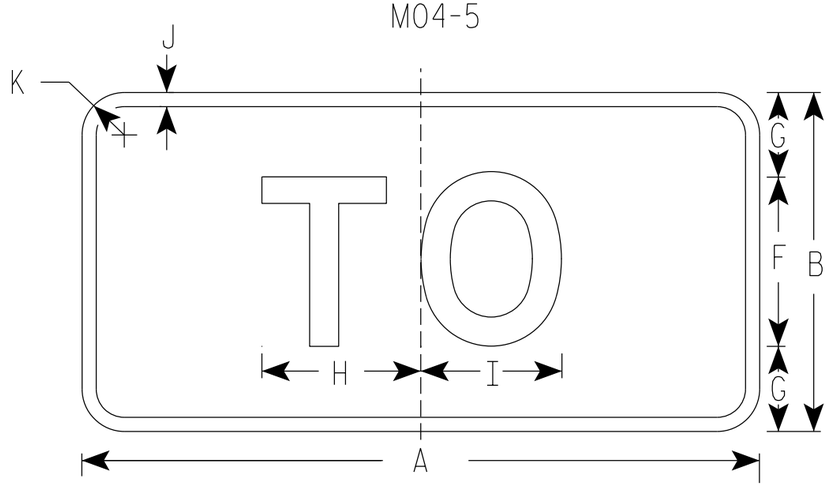

MB4-5
MK4-5
MN4-5

NOTES

1. Sign is Type II - Type H Reflective
2. Color:
   Background - See note 5
   Message - See note 5
3. Message Series - E
4. Corners may be square or rounded when base material is plywood but borders shall be rounded as shown. When base material is metal, the corners and borders shall be rounded.
5. M4-5 Background - White
   Message - Black

   MB4-5 Background - Blue
   Message - White

   MK4-5 Background - Green
   Message - White

   MM4-5 Background - White
   Message - Green

   MN4-5 Background - Brown
   Message - White

   MP4-5 Background - White
   Message - Blue

   M04-5 Background - Orange Type F Reflective
   Message - Black

SIZE	A	B	C	D	E	F	G	H	I	J	K	L	M	N	O	P	Q	R	S	T	U	V	W	X	Y	Z	Area sq. ft.
1																											
2	24	12	1 1/8	3/8	3/8	6	3	5 3/8	5 1/4	1/2	1 1/2																2.00
3	36	18	1 3/8	3/8	1/2	9	4 1/2	8 1/4	8 3/8	1/2	1 1/2																4.5
4	36	18	1 3/8	3/8	1/2	9	4 1/2	8 1/4	8 3/8	1/2	1 1/2																4.5
5	36	18	1 3/8	3/8	1/2	9	4 1/2	8 1/4	8 3/8	1/2	1 1/2																4.5

STANDARD SIGN
M4-5

WISCONSIN DEPT OF TRANSPORTATION

APPROVED Matthew R Rauch
for State Traffic Engineer

DATE 03/7/19 PLATE NO. M4-5.9

PROJECT NO: | HWY: | COUNTY: | SHEET NO: 562 | E

7

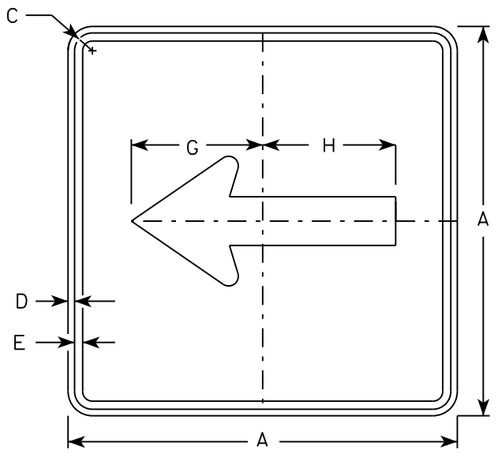

M6-1
MM6-1
MO6-1
MP6-1

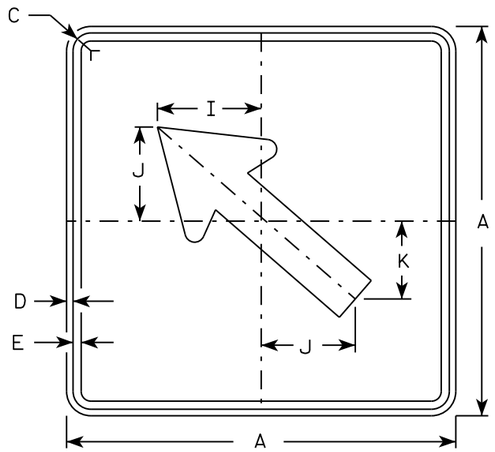

M6-2
MM6-2
MO6-2
MP6-2

NOTES

1. Signs are Type II - Type H except as Shown
2. Color:
   Background - See note 4
   Message - See note 4
3. Corners may be square or rounded when base material is plywood but borders shall be rounded as shown. When base material is metal, the corners and borders shall be rounded.
4. M6-1 and M6-2 Background - White
   Message - Black
   MB6-1 and MB6-2 Background - Blue
   Message - White
   MK6-1 and MK6-2 Background - Green
   Message - White
   MM6-1 and MM6-2 Background - White
   Message - Green
   MN6-1 and MN6-2 Background - Brown
   Message - White
   MO6-1 and MO6-2 Background - Orange - Type F Reflective
   Message - Black
   MP6-1 and MP6-2 Background - White
   Message - Blue
   MR6-1 and MR6-2 Background - Brown
   Message - Yellow

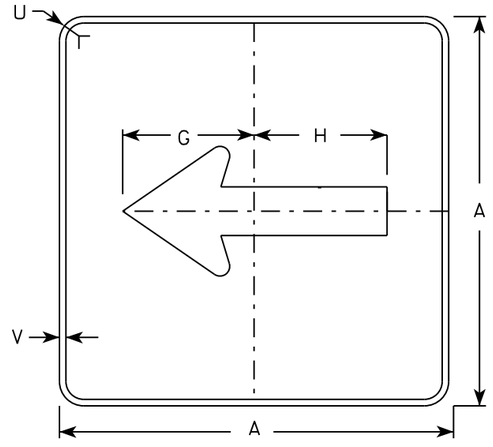

MB6-1
MK6-1
MN6-1
MR6-1

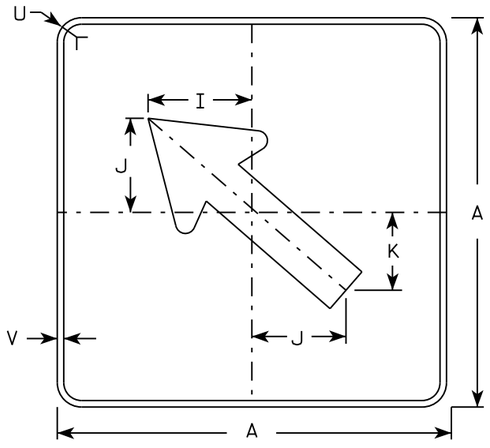

MB6-2
MK6-2
MN6-2
MR6-2

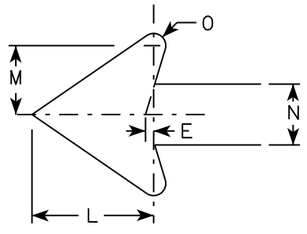

SIZE	A	B	C	D	E	F	G	H	I	J	K	L	M	N	O	P	Q	R	S	T	U	V	W	X	Y	Z	Area sq. ft.
1																											
2	21		1 1/8	3/8	3/8		7 1/2	7 1/8	5 5/8	5	4 1/4	5 1/4	3	2 5/8	1/2						1 1/2	1/2						3.06
3	30		1 3/8	1/2	5/8		10 3/4	10 1/4	8	7 1/4	6	7 1/2	4 1/4	3 3/4	3/4						1 7/8	1/2						6.25
4	30		1 3/8	1/2	5/8		10 3/4	10 1/4	8	7 1/4	6	7 1/2	4 1/4	3 3/4	3/4						1 7/8	1/2						6.25
5	30		1 3/8	1/2	5/8		10 3/4	10 1/4	8	7 1/4	6	7 1/2	4 1/4	3 3/4	3/4						1 7/8	1/2						6.25

STANDARD SIGN
M6-1 & M6-2
SERIES

WISCONSIN DEPT OF TRANSPORTATION

APPROVED Matthew R Rauch
for State Traffic Engineer

DATE 10/15/15 PLATE 563 M6-1.15

PROJECT NO:	HWY:	COUNTY:		SHEET NO:	E

FILE NAME : C:\CAEfiles\Projects\tr_stdplate\M61.DGN PLOT DATE : 01-DEC-2015 17:57 PLOT BY : $$ plotuser $$ PLOT NAME : PLOT SCALE : 11.675051:1.000000

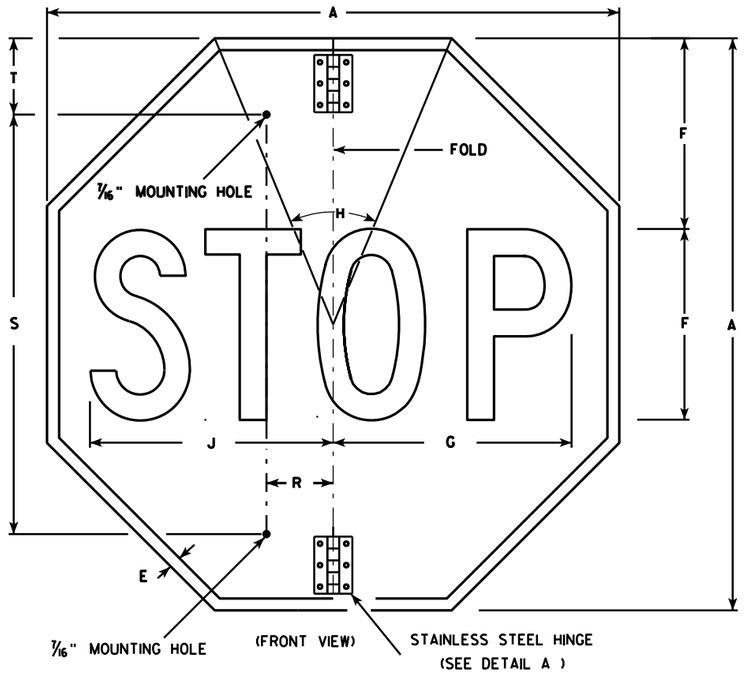

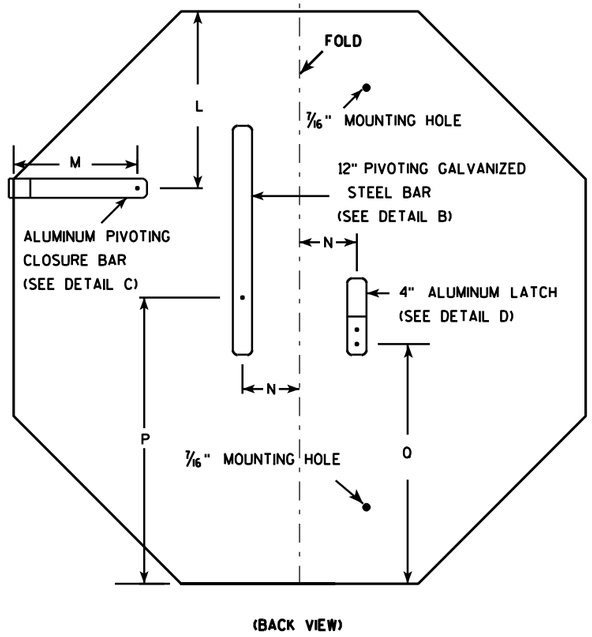

NOTES

1. Sign is Type II - Type H Reflective - reference WIS DOT Standard Specification for HIGHWAY and STRUCTURE CONSTRUCTION latest edition.
2. Color:
   Background - Red
   Message - White
3. Message Series - C
4. All hardware used on the folding STOP sign installation shall conform to 637.2.4 of the WIS DOT Standard Specification.

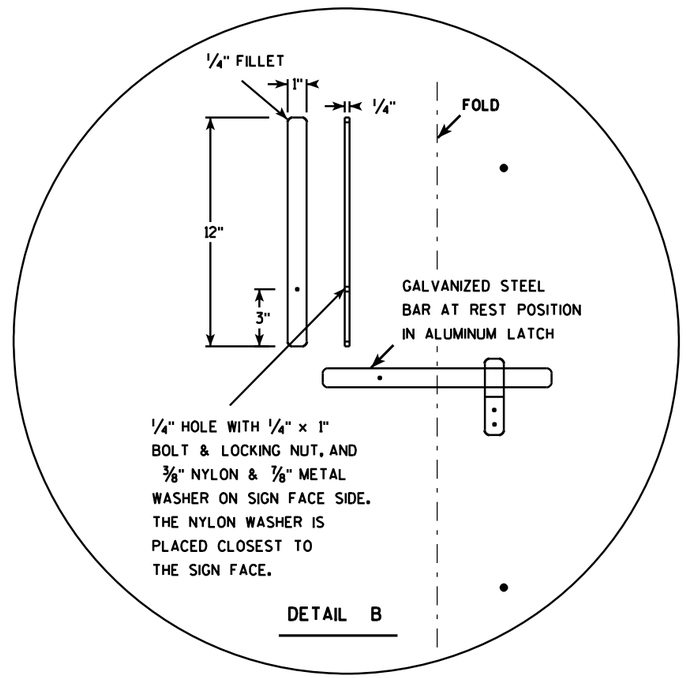

DETAIL B

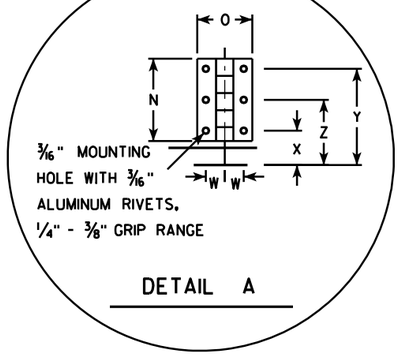

DETAIL A

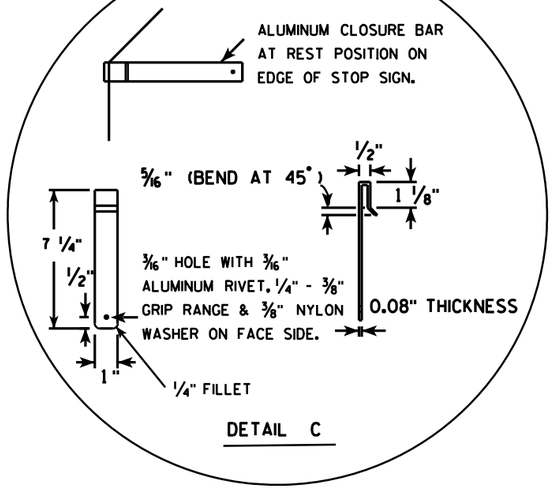

DETAIL C

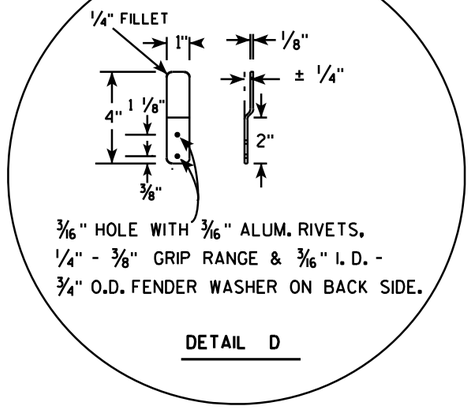

DETAIL D

SIZE	A	B	C	D	E	F	G	H	I	J	K	L	M	N	O	P	O	R	S	T	U	V	W	X	Y	Z	Area sq. ft.
1																											
2S	30				5/8	10	12 1/2	45		12 3/4		9 1/4	6 1/2	3	2	15	12 3/8	2 1/2	22	5			11/16	1 1/4	3 1/2	2 3/8	5.18
2M	36				3/4	12	15	45		15 3/8		11	6 1/2	3	2	18	15 3/8	2 1/2	26	5			11/16	1 1/4	3 1/2	2 3/8	7.46
3	36				3/4	12	15	45		15 3/8		11	6 1/2	3	2	18	15 3/8	2 1/2	26	5			11/16	1 1/4	3 1/2	2 3/8	7.46
4																											
5																											

STANDARD SIGN
R1-1F

WISCONSIN DEPT OF TRANSPORTATION

APPROVED Matthew R Rauch
for State Traffic Engineer

DATE 12/03/10 PLATE NO. R1-1F.3

PROJECT NO: | HWY: | COUNTY: | SHEET NO: 564 | E

FILE NAME : C:\Users\PROJECTS\tr_stdplate\R11F.DGN PLOT DATE : 02-DEC-2010 15:26 PLOT BY : dotsja PLOT NAME : PLOT SCALE : 7.945391:1.000000

WISDOT/CADDS SHEET 42

7

7

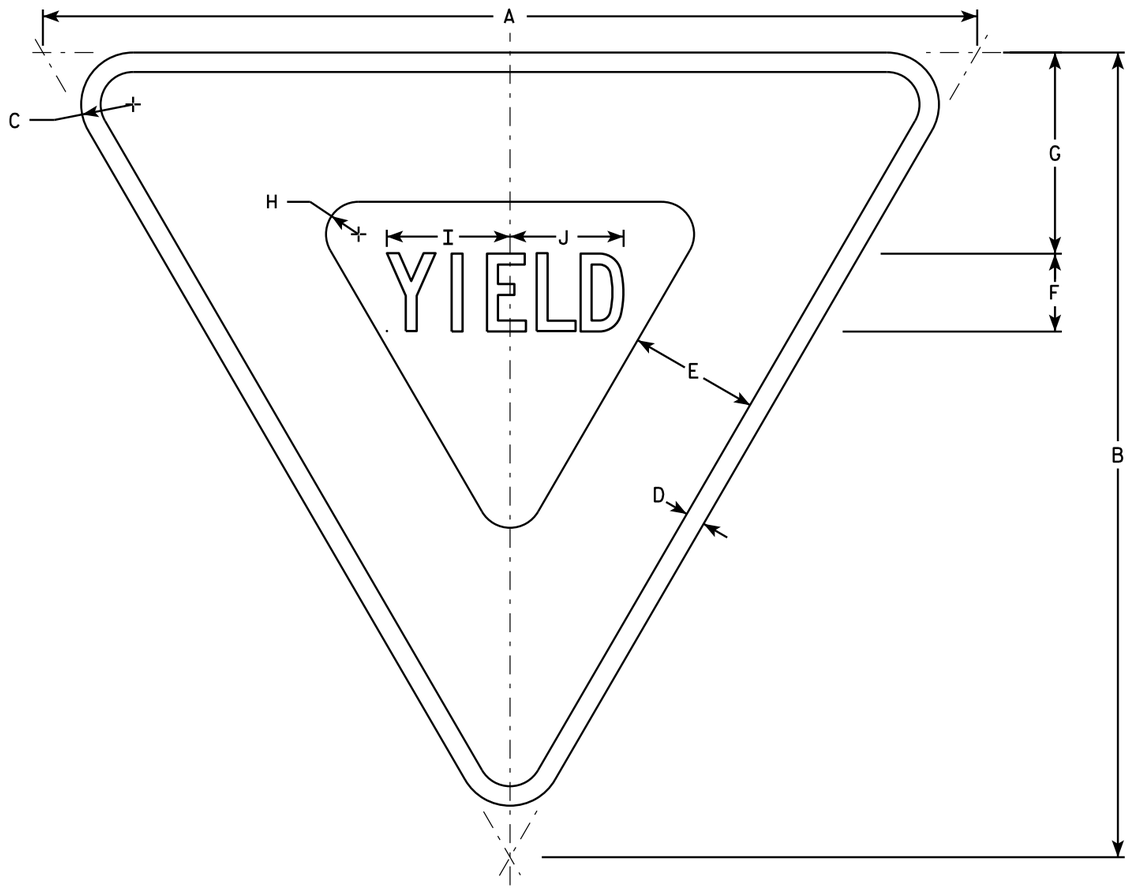

R1-2

NOTES

1. Sign is Type II - Type H Reflective - reference WIS DOT Standard Specification for HIGHWAY and STRUCTURE CONSTRUCTION latest edition.
2. Color:
   Background - White
   Message - See note 5
3. Message Series - C
4. Corners may be square or rounded when base material is plywood but borders shall be rounded as shown. When base material is metal, the corners and borders shall be rounded.
5. The border strip and word message are reflectorized red.

SIZE	A	B	C	D	E	F	G	H	I	J	K	L	M	N	O	P	Q	R	S	T	U	V	W	X	Y	Z	Area sq. ft.
1	30	26	1 1/2	5/8	4	2 1/2	6 3/8	7/8	4	3 5/8																	2.71
2S	36	31	2	3/4	5	3	7 3/4	1 1/4	4 3/4	4 3/8																	3.88
2M	48	42	3	1	6	4	9 3/4	2	6 1/4	5 7/8																	7.00
3	48	42	3	1	6	4	9 3/4	2	6 1/4	5 7/8																	7.00
4	48	42	3	1	6	4	9 3/4	2	6 1/4	5 7/8																	7.00
5	60	52	3	1 1/2	8	5	13	2 1/2	7 7/8	7 1/4																	10.83
6																											
7	18	15 1/2	1	3/8	2 1/2	1 1/2	3 7/8	5/8	2 3/8	2 1/4																	0.97

STANDARD SIGN
R1-2

WISCONSIN DEPT OF TRANSPORTATION

APPROVED Matthew R Rauch
for State Traffic Engineer

DATE 10/13/14 PLATE R1-2.12

PROJECT NO:	HWY:	COUNTY:		SHEET NO:	E

FILE NAME : C:\CAEFiles\Projects\tr_stdplate\R12.DGN PLOT DATE : 13-OCT-2014 15:12 PLOT BY : mscsja PLOT NAME : PLOT SCALE : 5.837526:1.000000
WISDOT/CADDS SHEET 42

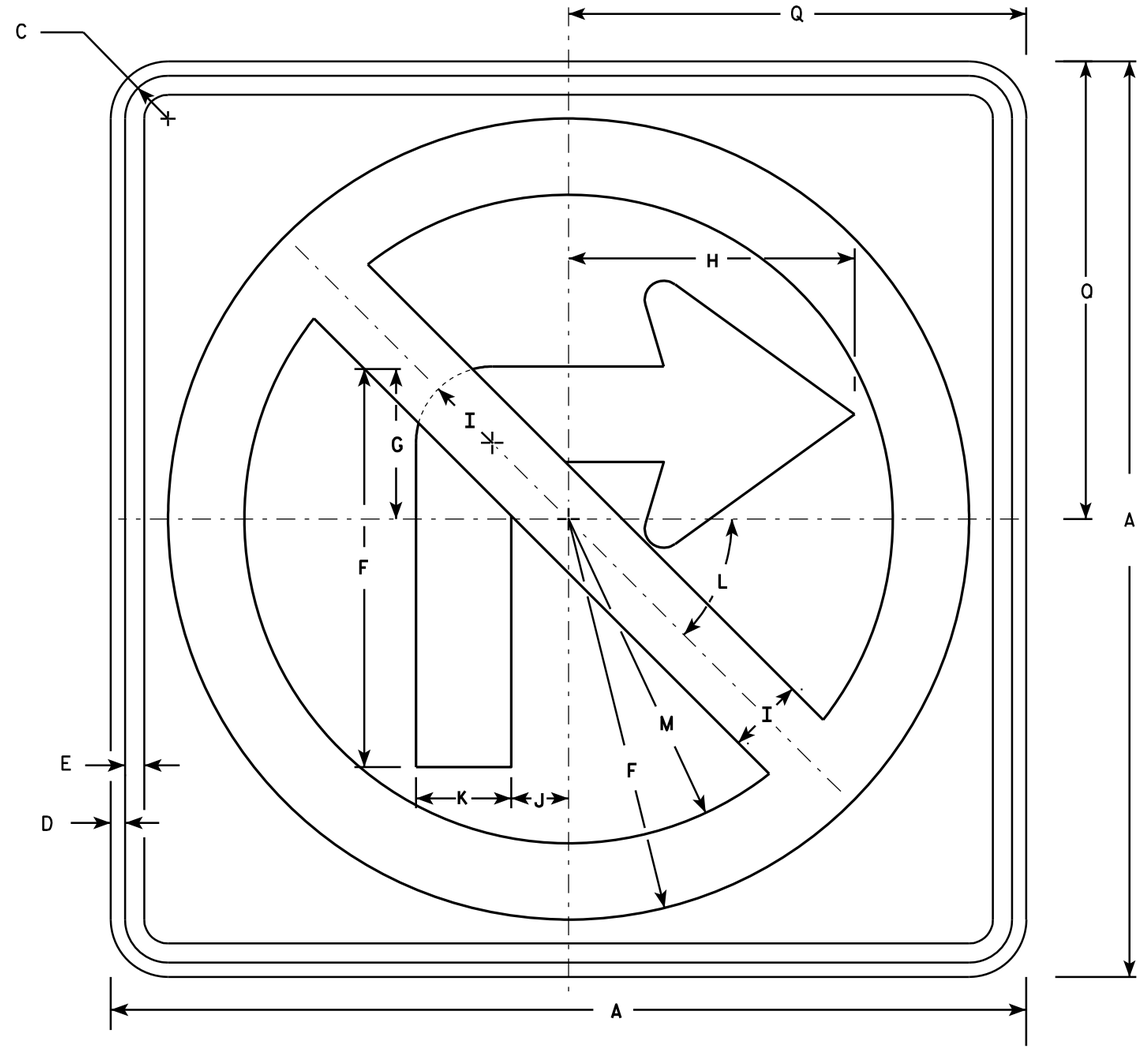

R3-1

NOTES

1. Sign is Type II - Type H Reflective - reference WIS DOT Standard Specification for HIGHWAY and STRUCTURE CONSTRUCTION latest edition.
2. Color:
   Background - White
   Message - See note 4
3. Corners may be square or rounded when base material is plywood but borders shall be rounded as shown. When base material is metal, the corners and borders shall be rounded.
4. Border & Arrow are non reflective black, the circle with diagonal bar is reflective red.

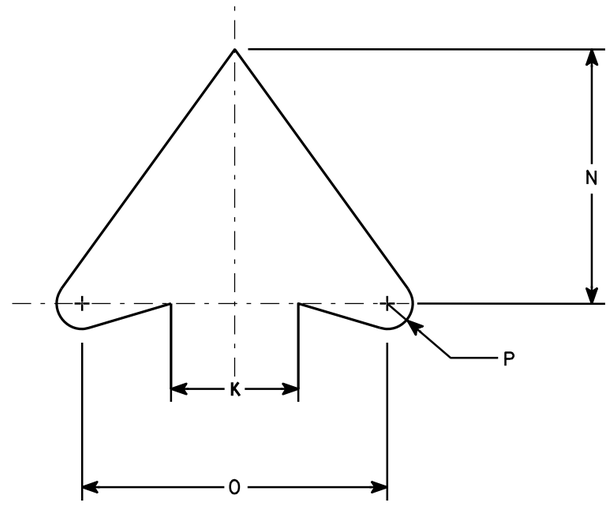

ARROW DETAIL

SIZE	A	B	C	D	E	F	G	H	I	J	K	L	M	N	O	P	Q	R	S	T	U	V	W	X	Y	Z	Area sq. ft.
1	24		1 1/8	3/8	1/2	10 1/2	4	7 1/2	2	1 1/2	2 1/2	45	8 1/2	5	6	1/2	12										4.0
2S	24		1 1/8	3/8	1/2	10 1/2	4	7 1/2	2	1 1/2	2 1/2	45°	8 1/2	5	6	1/2	12										4.0
2M	36		1 5/8	5/8	3/4	15 3/4	6	11 1/4	3	2 1/4	3 3/4	45	12 3/4	7 1/2	9	3/4	18										9.0
3	36		1 5/8	5/8	3/4	15 3/4	6	11 1/4	3	2 1/4	3 3/4	45	12 3/4	7 1/2	9	3/4	18										9.0
4	36		1 5/8	5/8	3/4	15 3/4	6	11 1/4	3	2 1/4	3 3/4	45°	12 3/4	7 1/2	9	3/4	18										9.0
5	48		2 1/4	3/4	1	21	8	15	4	3	5	45°	17	10	12	1	24										16.0

STANDARD SIGN
R3-1

WISCONSIN DEPT OF TRANSPORTATION

APPROVED Matthew R Rauch
for State Traffic Engineer

DATE 12/08/10 PLATE NO. R3-1.5

PROJECT NO:	HWY:	COUNTY:		SHEET NO: 566	E

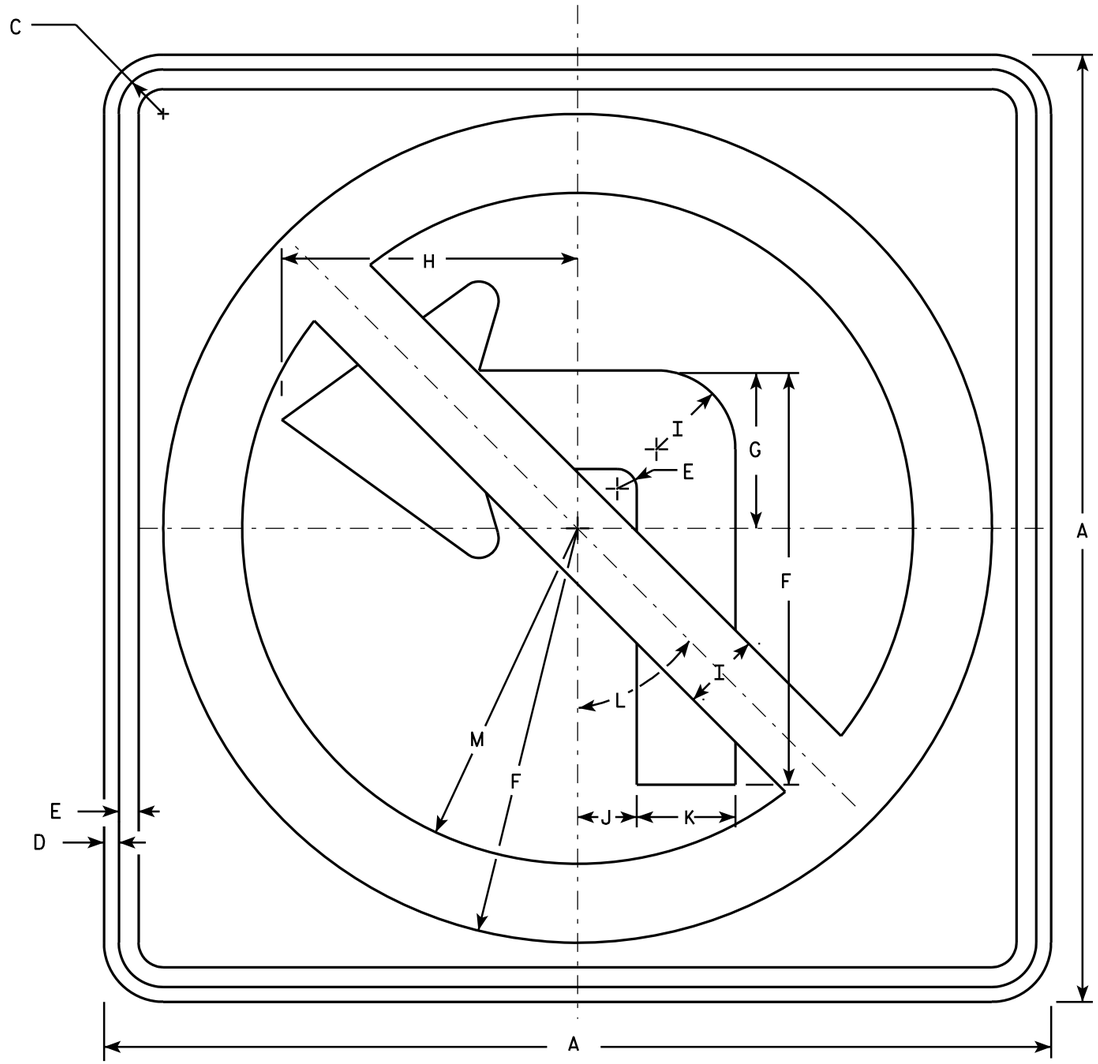

R3-2

NOTES

1. Sign is Type II - Type H Reflective - reference WIS DOT Standard Specification for HIGHWAY and STRUCTURE CONSTRUCTION latest edition.
2. Color:
   Background - White
   Message - See note 4
3. Corners may be square or rounded when base material is plywood but borders shall be rounded as shown. When base material is metal, the corners and borders shall be rounded.
4. Border & Arrow are non reflective black, the circle with diagonal bar is reflective red.

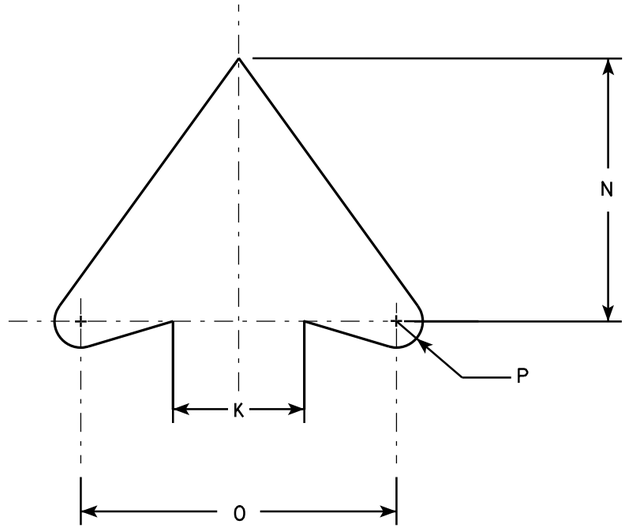

ARROW DETAIL

SIZE	A	B	C	D	E	F	G	H	I	J	K	L	M	N	O	P	Q	R	S	T	U	V	W	X	Y	Z	Area sq. ft.
1	24		1 1/8	3/8	1/2	10 1/2	4	7 1/2	2	1 1/2	2 1/2	45°	8 1/2	5	6	1/2											4.0
2S	24		1 1/8	3/8	1/2	10 1/2	4	7 1/2	2	1 1/2	2 1/2	45°	8 1/2	5	6	1/2											4.0
2M	36		1 5/8	5/8	3/4	15 3/4	6	11 1/4	3	2 1/4	3 3/4	45°	12 3/4	7 1/2	9	3/4											9.0
3	36		1 5/8	5/8	3/4	15 3/4	6	11 1/4	3	2 1/4	3 3/4	45°	12 3/4	7 1/2	9	3/4											9.0
4	36		1 5/8	5/8	3/4	15 3/4	6	11 1/4	3	2 1/4	3 3/4	45°	12 3/4	7 1/2	9	3/4											9.0
5	48		2 1/4	3/4	1	21	8	15	4	3	5	45°	17	10	12	1											16.0

STANDARD SIGN
R3-2

WISCONSIN DEPT OF TRANSPORTATION

APPROVED Matthew R Rauch
for State Traffic Engineer

DATE 12/08/10 PLATE NO. R3-2.10

PROJECT NO:	HWY:	COUNTY:		SHEET NO: 567	E

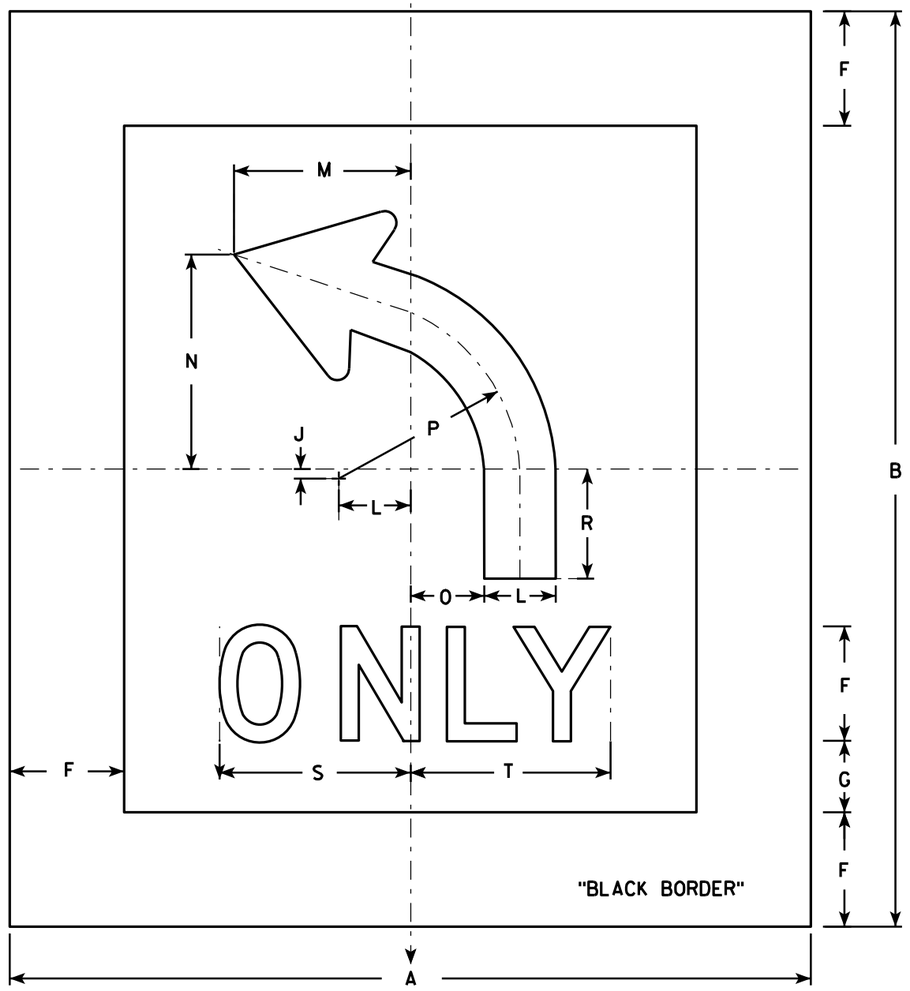

R3-5L

NOTES

1. Sign is Type II - Type H Reflective - reference WIS DOT Standard Specification for HIGHWAY and STRUCTURE CONSTRUCTION latest edition.
2. Color:
   Background - White
   Message - Black
3. Message Series - D
4. Corners may be square or rounded when base material is plywood. When base material is metal, the corners shall be rounded.
5. R3-5R is the same as R3-5L except curved portion of arrow points right.
6. The 6" border is non-reflective black.

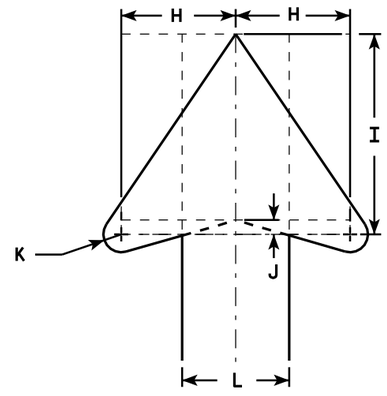

ARROW DETAIL

SIZE	A	B	C	D	E	F	G	H	I	J	K	L	M	N	O	P	Q	R	S	T	U	V	W	X	Y	Z	Area sq. ft.
1																											
2S	42	48				6	3 3/4	4	7	1/2	5/8	3 3/4	9 1/4	11 1/4	3 7/8	9 1/2		5 3/4	10	10 1/2							1.26
2M	42	48				6	3 3/4	4	7	1/2	5/8	3 3/4	9 1/4	11 1/4	3 7/8	9 1/2		5 3/4	10	10 1/2							1.26
3																											
4																											
5																											

STANDARD SIGN
R3-5

WISCONSIN DEPT OF TRANSPORTATION

APPROVED Matthew R Rauch
for State Traffic Engineer

DATE 2/24/11 PLATE NO. R3-5.6

PROJECT NO: | HWY: | COUNTY: | SHEET NO: 568 | E

FILE NAME : C:\Users\PROJECTS\tr_stdplate\R35.DGN PLOT DATE : 24-FEB-2011 14:53 PLOT BY : mscsja PLOT NAME : PLOT SCALE : 7.945391:1.000000

WISDOT/CADDS SHEET 42

7

7

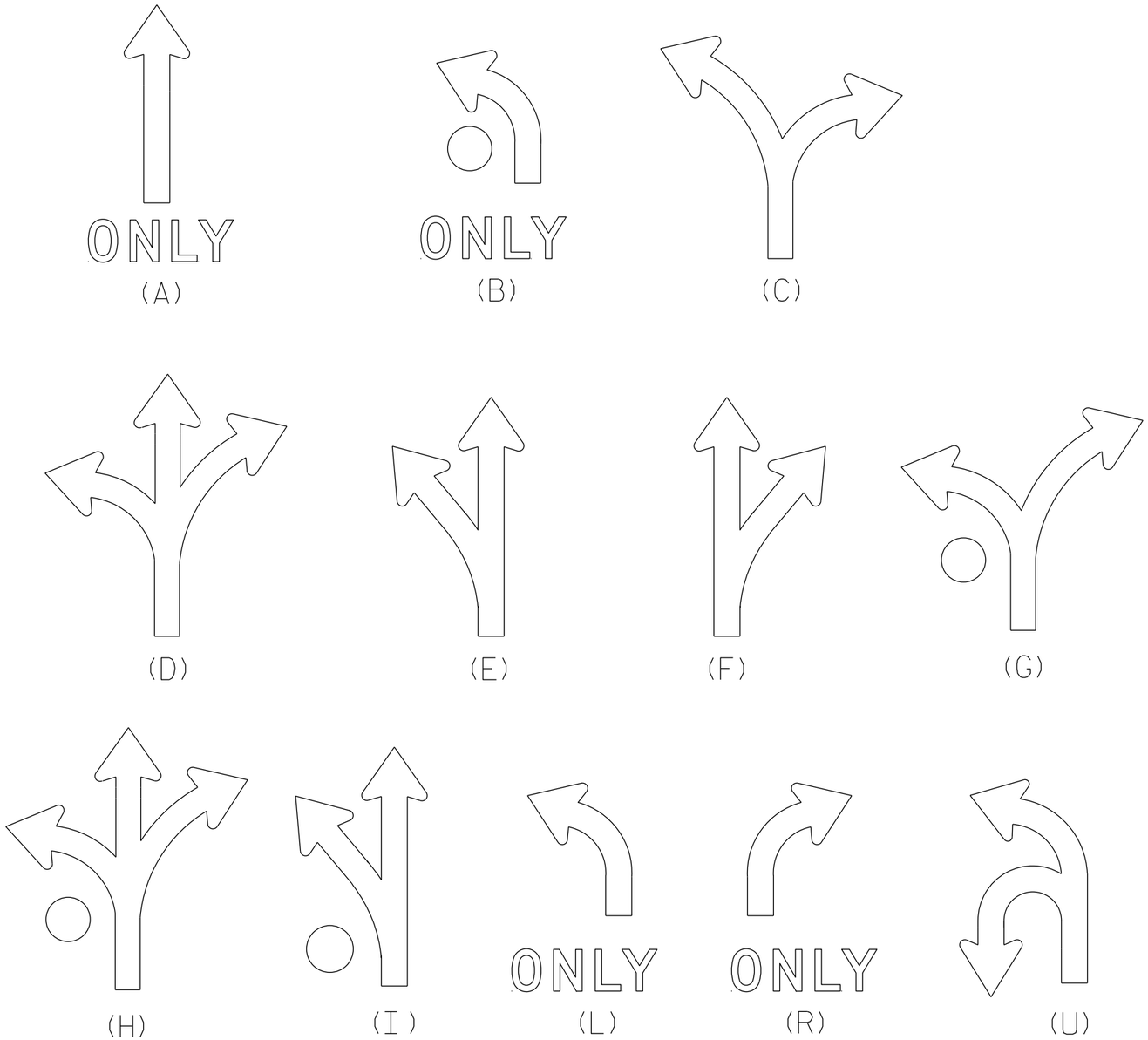

NOTES

1. Sigs are Type II - Type H Reflective
2. Color:
   Background - White
   Message - Black
3. Message Series - D
4. Use appropriate Letter for Sign Code
   Each letter added makes sign wider. Example R3-8EAR
5. Square footage of sign varies by letters

1 Letter =	3.75 sq ft	for Size 2
	6.0 sq ft	for Size 3
	10.0 sq ft	for Size 4 or 5
2 Letters =	7.5 sq ft	for Size 2
	12.0 sq ft	for Size 3
	20.0 sq ft	for Size 4 or 5
3 Letters =	11.25 sq ft	for Size 2
	18.0 sq ft	for Size 3
	30.0 sq ft	for Size 4 or 5
4 Letters =	15.0 sq ft	for Size 2
	24.0 sq ft	for Size 3
	40.0 sq ft	for Size 4 or 5
5 Letters =	18.75 sq ft	for Size 2
	30.0 sq ft	for Size 3
	50.0 sq ft	for Size 4 or 5
6 Letters =	22.5 sq ft	for Size 2
	36.0 sq ft	for Size 3
	60.0 sq ft	for Size 4 or 5

6. When letters C,D,G,H are used on the Left or Right end of the sign the Sq. Ft. changes. Add the amounts when these letters are used:
   1.25 sq ft for Size 2
   1.5 sq ft for Size 3
   2.0 sq ft for Size 4 or 5

STANDARD SIGN
R3-8 Series

WISCONSIN DEPT OF TRANSPORTATION

APPROVED Matthew R Rauch
for State Traffic Engineer

DATE 5/21/19 PLATE NO. R3-8.1

7

7

PROJECT NO:

SHEET NO: 569 E

NOTES

1. Sign is Type II - Type H Reflective
2. Color:
   Background - White
   Message - Black
3. Message Series - D

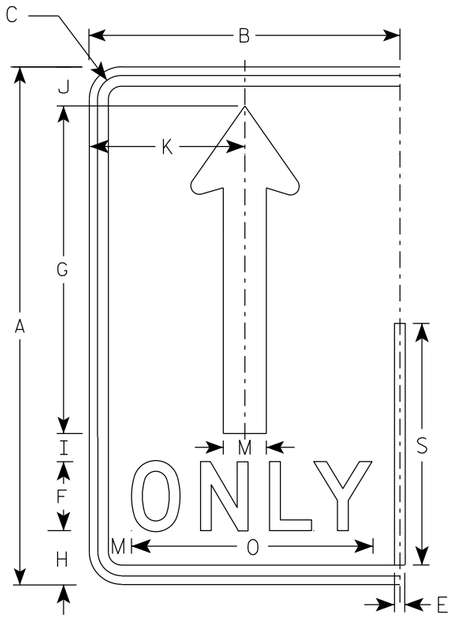

(A)

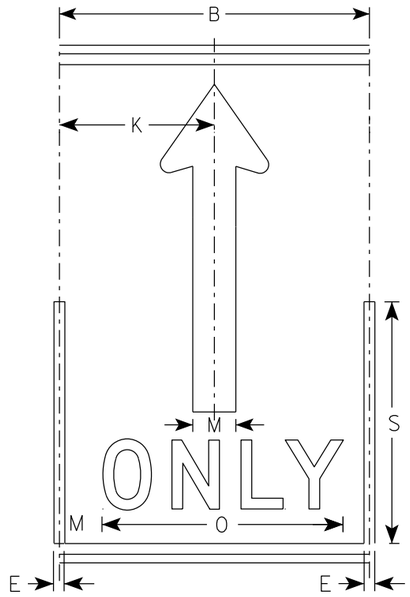

(A)

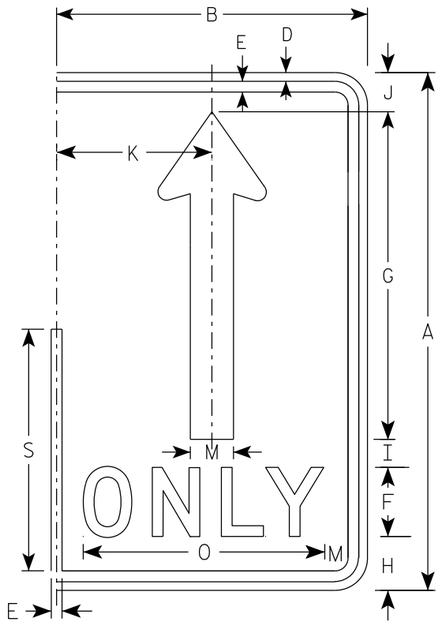

(A)

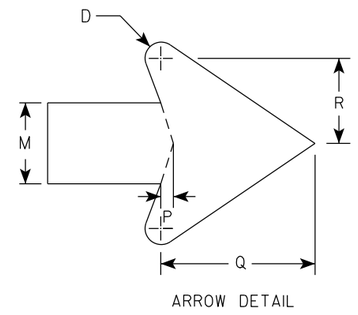

ARROW DETAIL

SIZE	A	B	C	D	E	F	G	H	I	J	K	L	M	N	O	P	Q	R	S	T	U	V	W	X	Y	Z	Area sq. ft.
1																											
2S	30	18	1 3/8	1/2	5/8	4	19	3 1/8	1 5/8	2 1/4	9		2 1/2		14	3/8	4 3/4	2 5/8	14								3.75
2M	30	18	1 3/8	1/2	5/8	4	19	3 1/8	1 5/8	2 1/4	9		2 1/2		14	3/8	4 3/4	2 5/8	14								3.75
3	36	24	1 3/8	1/2	5/8	5	22 3/4	3 3/4	1 3/4	2 3/4	12		3		17 5/8	1/2	5 3/4	3 1/8	16 3/4								6.0
4	48	30	2 1/4	3/4	1	6	30 3/8	5 1/8	2 7/8	3 5/8	15		4		21 3/4	5/8	7 5/8	4 1/4	22 3/8								10.0
5	48	30	2 1/4	3/4	1	6	30 3/8	5 1/8	2 7/8	3 5/8	15		4		21 3/4	5/8	7 5/8	4 1/4	22 3/8								10.0

STANDARD SIGN
R3-8 (A) Arrow

WISCONSIN DEPT OF TRANSPORTATION

APPROVED Matthew R Rauch
for State Traffic Engineer

DATE 5/21/19 PLATE NO. R3-8.1

PROJECT NO: | HWY: | COUNTY: | SHEET NO: 570 | E

NOTES

1. Sign is Type II - Type H Reflective
2. Color:
   Background - White
   Message - Black
   Message Series - D

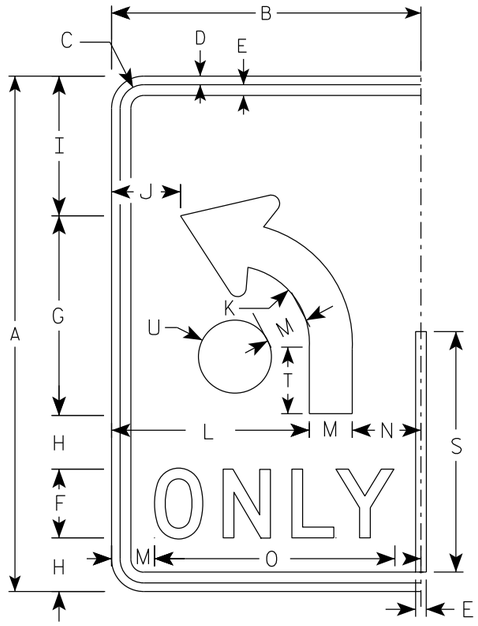

(B)

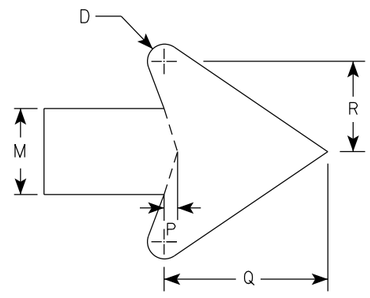

ARROW DETAIL

SIZE	A	B	C	D	E	F	G	H	I	J	K	L	M	N	O	P	Q	R	S	T	U	V	W	X	Y	Z	Area sq. ft.
1																											
2S	30	18	1 3/8	1/2	5/8	4	11 5/8	3 1/8	8 1/8	4	4 1/2	11 1/2	2 1/2	4	14	3/8	4 3/4	2 5/8	14	3 7/8	2 1/8						3.75
2M	30	18	1 3/8	1/2	5/8	4	11 5/8	3 1/8	8 1/8	4	4 1/2	11 1/2	2 1/2	4	14	3/8	4 3/4	2 5/8	14	3 7/8	2 1/8						3.75
3	36	24	1 3/8	1/2	5/8	5	14	3 1/2	9 3/4	6	5 3/8	15	3	6	17 5/8	1/2	5 3/4	3 1/8	16 3/4	4 5/8	2 1/2						6.0
4	48	30	2 1/4	3/4	1	6	18 5/8	5 1/8	13 1/8	6 1/8	7 1/4	18	4	8	21 3/4	5/8	7 5/8	4 1/4	22 3/8	6 1/4	3 3/8						10.0
5	48	30	2 1/4	3/4	1	6	18 5/8	5 1/8	13 1/8	6 1/8	7 1/4	18	4	8	21 3/4	5/8	7 5/8	4 1/4	22 3/8	6 1/4	3 3/8						10.0

STANDARD SIGN

R3-8 (B) Arrow

WISCONSIN DEPT OF TRANSPORTATION

APPROVED Matthew R Rauch

for State Traffic Engineer

DATE 5/21/19 PLATE NO. R3-8.1

PROJECT NO:

SHEET NO: 571 E

NOTES

1. Sign is Type II - Type H Reflective
2. Color:
   Background - White
   Message - Black
3. Message Series - None

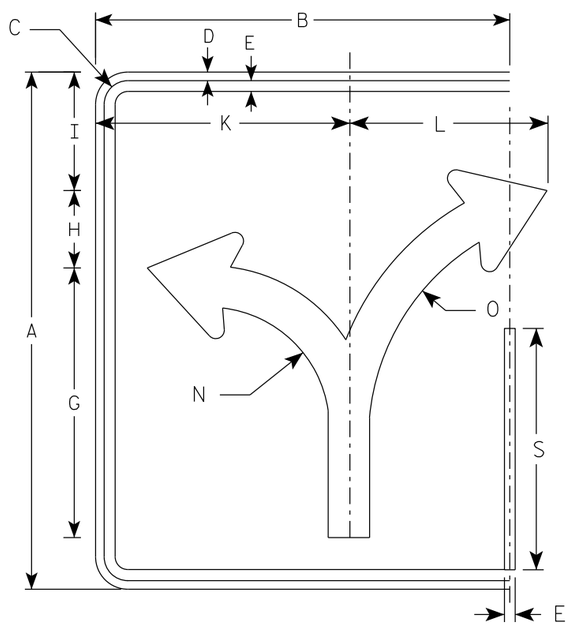

(C)

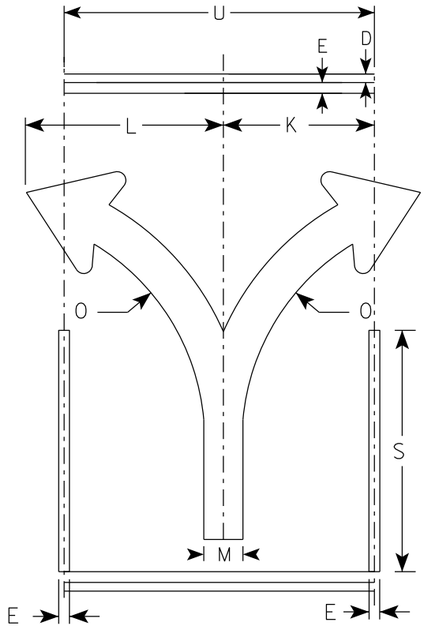

(C)

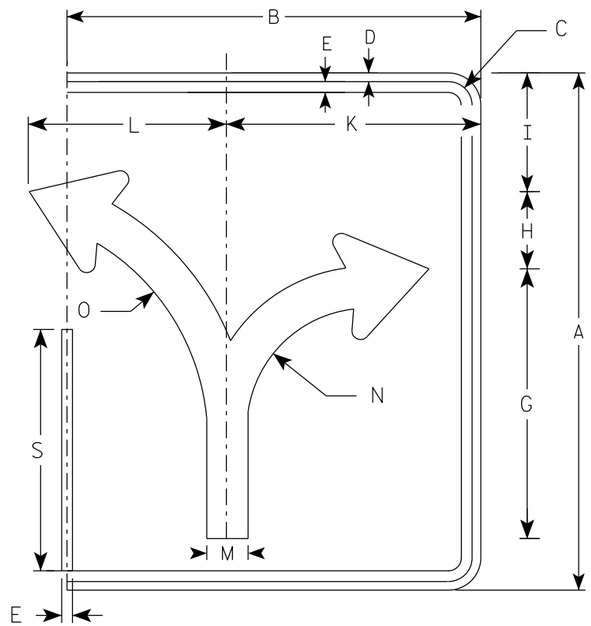

(C)

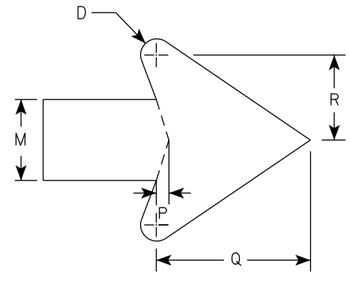

ARROW DETAIL

SIZE	A	B	C	D	E	F	G	H	I	J	K	L	M	N	O	P	Q	R	S	T	U	V	W	X	Y	Z	ENDS Area sq. ft.	MIDDLE Area sq. ft.
1																												
2S	30	24	1 3/8	1/2	5/8		15 5/8	4 1/2	6 7/8		14 3/4	11 1/2	2 3/8	7	13 1/4	3/8	4 1/2	2 1/2	14		18						5.0	3.75
2M	30	24	1 3/8	1/2	5/8		15 5/8	4 1/2	6 7/8		14 3/4	11 1/2	2 3/8	7	13 1/4	3/8	4 1/2	2 1/2	14		18						5.0	3.75
3	36	30	1 3/8	1/2	5/8		18 3/4	5 1/2	8 1/4		17 1/4	17 1/4	2 7/8	8 3/8	16	1/2	5 1/2	3	16 3/4		24						7.5	6.0
4	48	36	2 1/4	3/4	1		24 7/8	7 1/4	11		23 1/8	18	3 3/4	11 1/8	21 1/4	5/8	7 1/8	4	22 3/8		30						12.0	10.0
5	48	36	2 1/4	3/4	1		24 7/8	7 1/4	11		23 1/8	18	3 3/4	11 1/8	21 1/4	5/8	7 1/8	4	22 3/8		30						12.0	10.0

STANDARD SIGN
R3-8 (C) Arrow

WISCONSIN DEPT OF TRANSPORTATION

APPROVED Matthew R Rauch
for State Traffic Engineer

DATE 5/21/19 PLATE NO. R3-8.1

PROJECT NO: | HWY: | COUNTY: | SHEET NO: 572 | E

NOTES

1. Sign is Type II - Type H Reflective
2. Color:
   Background - White
   Message - Black
3. Message Series - None

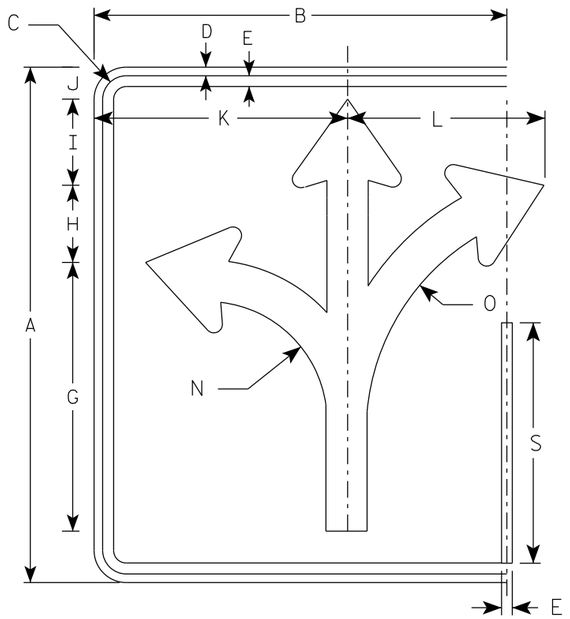

(D)

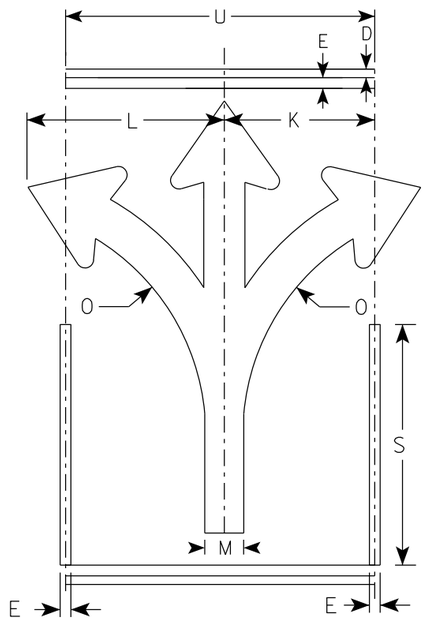

(D)

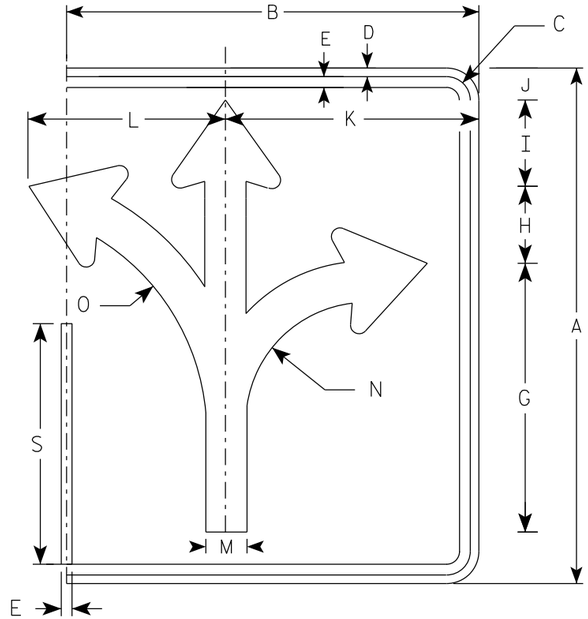

(D)

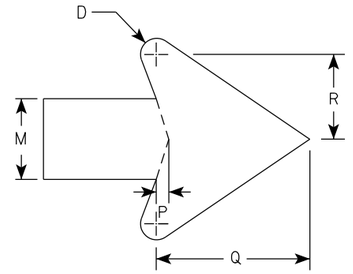

ARROW DETAIL

SIZE	A	B	C	D	E	F	G	H	I	J	K	L	M	N	O	P	Q	R	S	T	U	V	W	X	Y	Z	ENDS Area sq. ft.	MIDDLE Area sq. ft.
1																												
2S	30	24	1 3/8	1/2	5/8		15 5/8	4 1/2	5	1 7/8	14 3/4	11 1/2	2 3/8	7	13 1/4	3/8	4 1/2	2 1/2	14		18						5.0	3.75
2M	30	24	1 3/8	1/2	5/8		15 5/8	4 1/2	5	1 7/8	14 3/4	11 1/2	2 3/8	7	13 1/4	3/8	4 1/2	2 1/2	14		18						5.0	3.75
3	36	30	1 3/8	1/2	5/8		18 3/4	5 1/2	6	2 1/4	17 1/4	17 1/4	2 7/8	8 3/8	16	1/2	5 1/2	3	16 3/4		24						7.5	6.0
4	48	36	2 1/4	3/4	1		24 7/8	7 1/4	7 7/8	3 1/8	23 1/8	18	3 3/4	11 1/8	21 1/4	5/8	7 1/8	4	22 3/8		30						12.0	10.0
5	48	36	2 1/4	3/4	1		24 7/8	7 1/4	7 7/8	3 1/8	23 1/8	18	3 3/4	11 1/8	21 1/4	5/8	7 1/8	4	22 3/8		30						12.0	10.0

STANDARD SIGN
R3-8 (D) Arrow

WISCONSIN DEPT OF TRANSPORTATION

APPROVED Matthew R Rauch
for State Traffic Engineer

DATE 5/21/19 PLATE NO. R3-8.1

PROJECT NO: | HWY: | COUNTY: | SHEET NO: 573 | E

7

7

NOTES

1. Sign is Type II - Type H Reflective
2. Color:
   Background - White
   Message - Black
3. Message Series - None

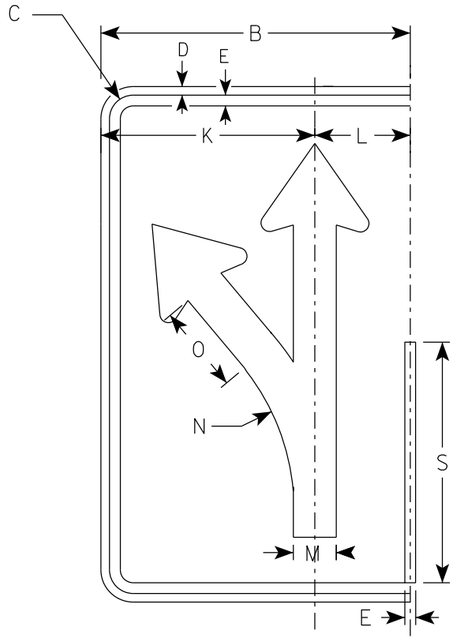

(E)

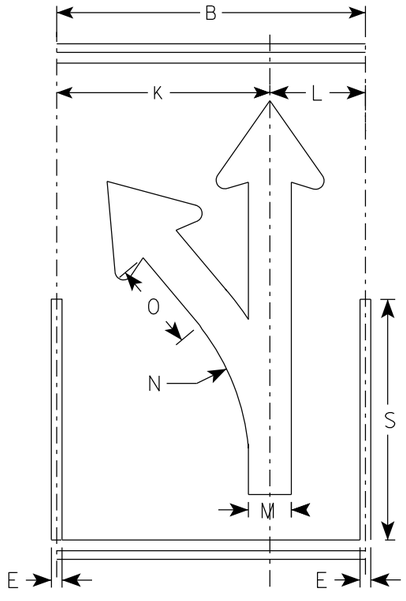

(E)

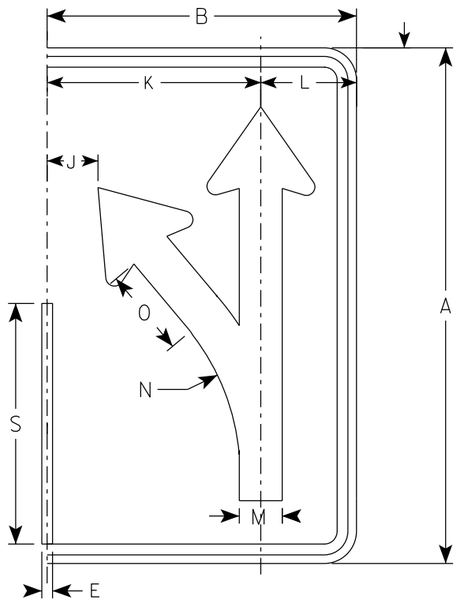

(E)

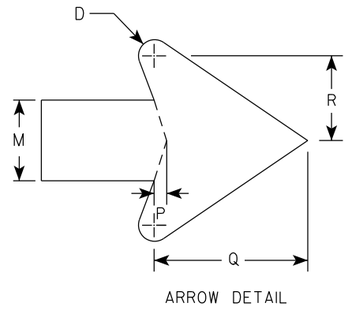

ARROW DETAIL

SIZE	A	B	C	D	E	F	G	H	I	J	K	L	M	N	O	P	Q	R	S	T	U	V	W	X	Y	Z	Area sq. ft.
1																											
2S	30	18	1 3/8	1/2	5/8		18 1/4	4 3/4	3 1/4	3	12 1/2	5 1/2	2 1/2	13 1/4	5 1/8	3/8	4 3/4	2 5/8	14								3.75
2M	30	18	1 3/8	1/2	5/8		18 1/4	4 3/4	3 1/4	3	12 1/2	5 1/2	2 1/2	13 1/4	5 1/8	3/8	4 3/4	2 5/8	14								3.75
3	36	24	1 3/8	1/2	5/8		21 7/8	5 5/8	4	4 7/8	16 1/8	7 3/4	3	15 7/8	6 1/8	1/2	5 3/4	3 1/8	16 3/4								6.0
4	48	30	2 1/4	3/4	1		29 1/8	7 1/2	5 1/4	5 3/8	20 1/2	9 1/2	4	21 1/4	8 1/4	5/8	7 5/8	4 1/4	22 3/8								10.0
5	48	30	2 1/4	3/4	1		29 1/8	7 1/2	5 1/4	5 3/8	20 1/2	9 1/2	4	21 1/4	8 1/4	5/8	7 5/8	4 1/4	22 3/8								10.0

STANDARD SIGN
R3-8 (E) Arrow

WISCONSIN DEPT OF TRANSPORTATION

APPROVED Matthew R Rauch
For State Traffic Engineer

DATE 5/21/19 PLATE NO. R3-8.1

PROJECT NO: | HWY: | COUNTY: | SHEET NO: 574 | E

NOTES

1. Sign is Type II - Type H Reflective
2. Color:
   Background - White
   Message - Black
3. Message Series - None

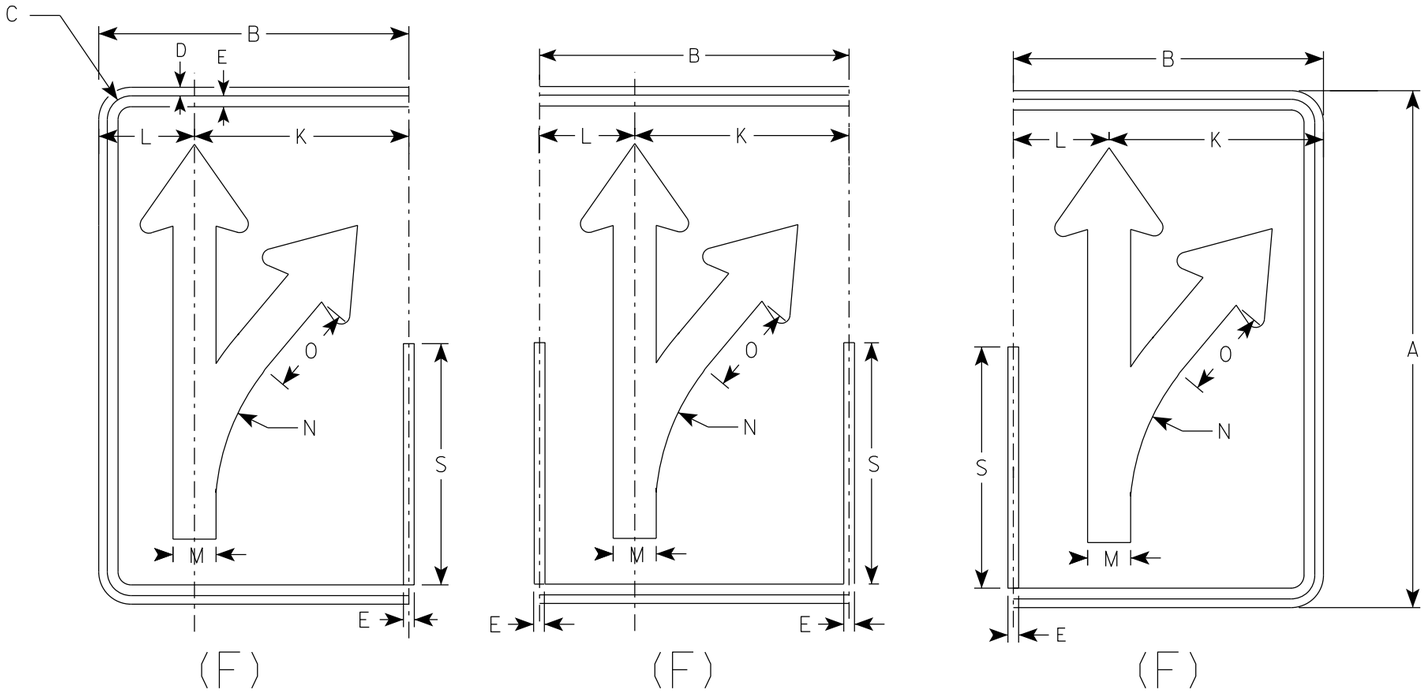

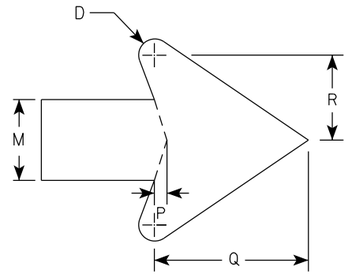

ARROW DETAIL

SIZE	A	B	C	D	E	F	G	H	I	J	K	L	M	N	O	P	Q	R	S	T	U	V	W	X	Y	Z	Area sq. ft.
1																											
2S	30	18	1 3/8	1/2	5/8		18 1/4	4 3/4	3 1/4	3	12 1/2	5 1/2	2 1/2	13 1/4	5 1/8	3/8	4 3/4	2 5/8	14								3.75
2M	30	18	1 3/8	1/2	5/8		18 1/4	4 3/4	3 1/4	3	12 1/2	5 1/2	2 1/2	13 1/4	5 1/8	3/8	4 3/4	2 5/8	14								3.75
3	36	24	1 3/8	1/2	5/8		21 7/8	5 5/8	4	4 7/8	16 1/8	7 3/4	3	15 7/8	6 1/8	1/2	5 3/4	3 1/8	16 3/4								6.0
4	48	30	2 1/4	3/4	1		29 1/8	7 1/2	5 1/4	5 3/8	20 1/2	9 1/2	4	21 1/4	8 1/4	5/8	7 5/8	4 1/4	22 3/8								10.0
5	48	30	2 1/4	3/4	1		29 1/8	7 1/2	5 1/4	5 3/8	20 1/2	9 1/2	4	21 1/4	8 1/4	5/8	7 5/8	4 1/4	22 3/8								10.0

STANDARD SIGN
R3-8 (F) Arrow

WISCONSIN DEPT OF TRANSPORTATION

APPROVED Matthew R Rauch
for State Traffic Engineer

DATE 5/21/19 PLATE NO. R3-8.1

PROJECT NO: | HWY: | COUNTY: | SHEET NO: 575 | E

NOTES

1. Sign is Type II - Type H Reflective
2. Color:
   Background - White
   Message - Black
3. Message Series - None

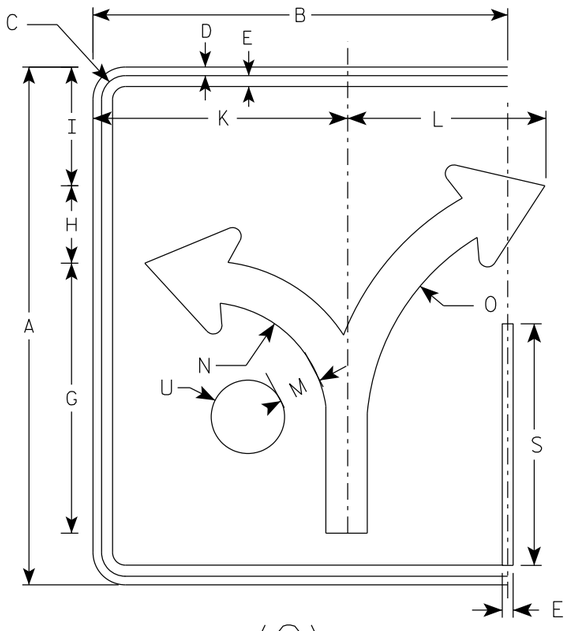

(G)

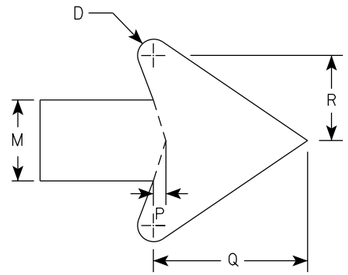

ARROW DETAIL

SIZE	A	B	C	D	E	F	G	H	I	J	K	L	M	N	O	P	Q	R	S	T	U	V	W	X	Y	Z	Area sq. ft.
1																											
2S	30	24	1 3/8	1/2	5/8		15 5/8	4 1/2	6 7/8		14 3/4	11 1/2	2 3/8	7	13 1/4	3/8	4 1/2	2 1/2	14		2 1/8						5.0
2M	30	24	1 3/8	1/2	5/8		15 5/8	4 1/2	6 7/8		14 3/4	11 1/2	2 3/8	7	13 1/4	3/8	4 1/2	2 1/2	14		2 1/8						5.0
3	36	30	1 3/8	1/2	5/8		18 3/4	5 1/2	8 1/4		17 1/4	17 1/4	2 7/8	8 3/8	16	1/2	5 1/2	3	16 3/4		2 1/2						7.5
4	48	36	2 1/4	3/4	1		24 7/8	7 1/4	11		23 1/8	18	3 3/4	11 1/8	21 1/4	5/8	7 1/8	4	22 3/8		3 3/8						12.0
5	48	36	2 1/4	3/4	1		24 7/8	7 1/4	11		23 1/8	18	3 3/4	11 1/8	21 1/4	5/8	7 1/8	4	22 3/8		3 3/8						12.0

STANDARD SIGN
R3-8 (G) Arrow

WISCONSIN DEPT OF TRANSPORTATION

APPROVED Matthew R Rauch
for State Traffic Engineer

DATE 5/21/19 PLATE NO. R3-8.1

PROJECT NO: | HWY: | COUNTY: | SHEET NO: 576 | E

NOTES

1. Sign is Type II - Type H Reflective
2. Color:
   Background - White
   Message - Black
3. Message Series - None

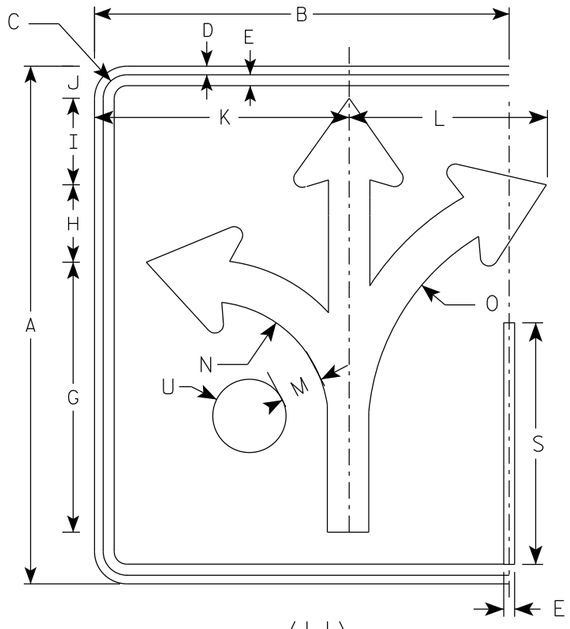

(H)

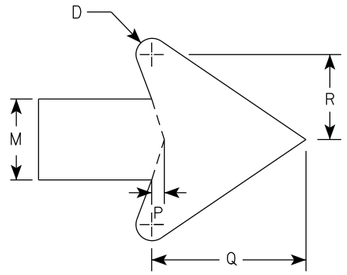

ARROW DETAIL

SIZE	A	B	C	D	E	F	G	H	I	J	K	L	M	N	O	P	Q	R	S	T	U	V	W	X	Y	Z	Area sq. ft.
1																											
2S	30	24	1 3/8	1/2	5/8		15 5/8	4 1/2	5	1 7/8	14 3/4	11 1/2	2 3/8	7	13 1/4	3/8	4 1/2	2 1/2	14		2 1/8						5.0
2M	30	24	1 3/8	1/2	5/8		15 5/8	4 1/2	5	1 7/8	14 3/4	11 1/2	2 3/8	7	13 1/4	3/8	4 1/2	2 1/2	14		2 1/8						5.0
3	36	30	1 3/8	1/2	5/8		18 3/4	5 1/2	6	3 1/8	17 1/4	17 1/4	2 7/8	8 3/8	16	1/2	5 1/2	3	16 3/4		2 1/2						7.5
4	48	36	2 1/4	3/4	1		24 7/8	7 1/4	7 7/8	3 1/8	23 1/8	18	3 3/4	11 1/8	21 1/4	5/8	7 1/8	4	22 3/8		3 3/8						12.0
5	48	36	2 1/4	3/4	1		24 7/8	7 1/4	7 7/8	3 1/8	23 1/8	18	3 3/4	11 1/8	21 1/4	5/8	7 1/8	4	22 3/8		3 3/8						12.0

STANDARD SIGN
R3-8 (H) Arrow

WISCONSIN DEPT OF TRANSPORTATION

APPROVED Matthew R Rauch
for State Traffic Engineer

DATE 5/21/19 PLATE NO. R3-8.1

PROJECT NO:	HWY:	COUNTY:		SHEET NO: 577	E

NOTES

1. Sign is Type II - Type H Reflective
2. Color:
   Background - White
   Message - Black
3. Message Series - None

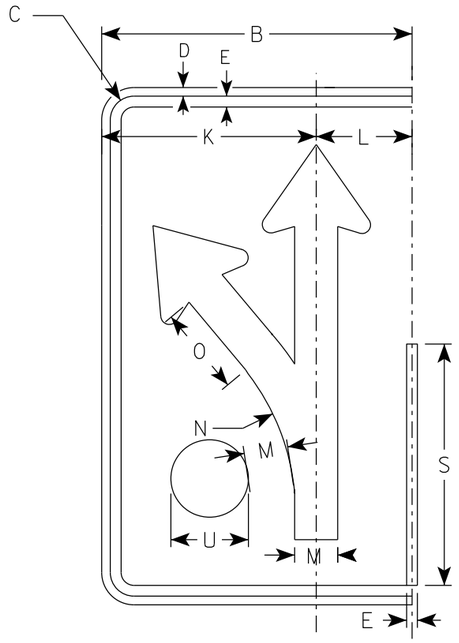

(I)

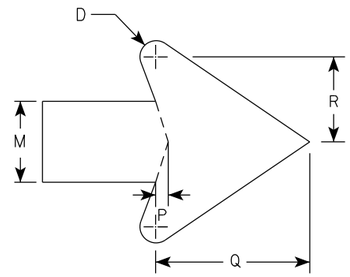

ARROW DETAIL

SIZE	A	B	C	D	E	F	G	H	I	J	K	L	M	N	O	P	Q	R	S	T	U	V	W	X	Y	Z	Area sq. ft.
1																											
2S	30	18	1 3/8	1/2	5/8		18 1/4	4 3/4	3 1/4	3	12 1/2	5 1/2	2 1/2	13 1/4	5 1/8	3/8	4 3/4	2 5/8	14		2 1/8						3.75
2M	30	18	1 3/8	1/2	5/8		18 1/4	4 3/4	3 1/4	3	12 1/2	5 1/2	2 1/2	13 1/4	5 1/8	3/8	4 3/4	2 5/8	14		2 1/8						3.75
3	36	24	1 3/8	1/2	5/8		21 7/8	5 5/8	4	4 7/8	16 1/8	7 3/4	3	15 7/8	6 1/8	1/2	5 3/4	3 1/8	16 3/4		2 1/2						6.0
4	48	30	2 1/4	3/4	1		29 1/8	7 1/2	5 1/4	5 3/8	20 1/2	9 1/2	4	21 1/4	8 1/4	5/8	7 5/8	4 1/4	22 3/8		3 3/8						10.0
5	48	30	2 1/4	3/4	1		29 1/8	7 1/2	5 1/4	5 3/8	20 1/2	9 1/2	4	21 1/4	8 1/4	5/8	7 5/8	4 1/4	22 3/8		3 3/8						10.0

STANDARD SIGN
R3-8 (I) Arrow

WISCONSIN DEPT OF TRANSPORTATION

APPROVED Matthew R Rauch
For State Traffic Engineer

DATE 5/21/19 PLATE NO. R3-8.1

PROJECT NO: | HWY: | COUNTY: | SHEET NO: 578 | E

NOTES

1. Sign is Type II - Type H Reflective
2. Color:
   Background - White
   Message - Black
3. Message Series - D

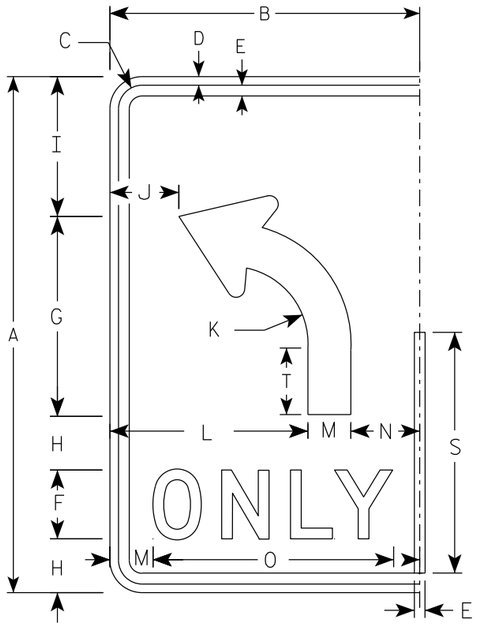

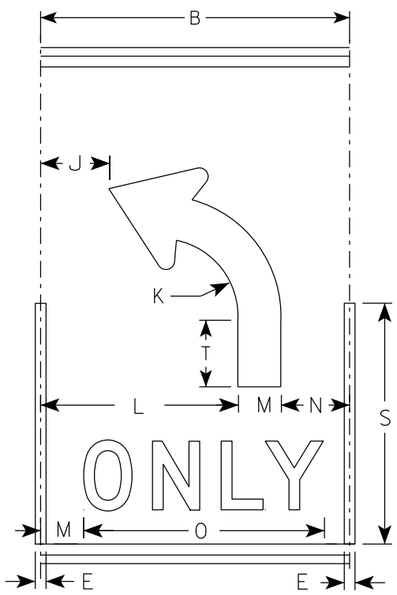

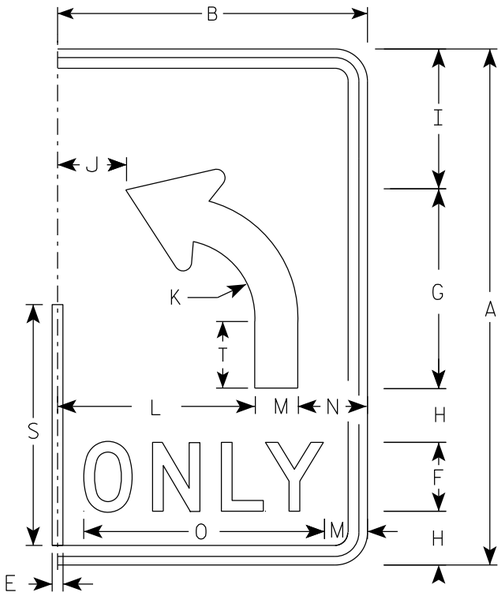

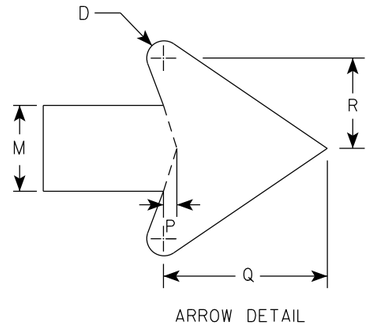

ARROW DETAIL

SIZE	A	B	C	D	E	F	G	H	I	J	K	L	M	N	O	P	Q	R	S	T	U	V	W	X	Y	Z	Area sq. ft.
1																											
2S	30	18	1 3/8	1/2	5/8	4	11 5/8	3 1/8	8 1/8	4	4 1/2	11 1/2	2 1/2	4	14	3/8	4 3/4	2 5/8	14	3 7/8							3.75
2M	30	18	1 3/8	1/2	5/8	4	11 5/8	3 1/8	8 1/8	4	4 1/2	11 1/2	2 1/2	4	14	3/8	4 3/4	2 5/8	14	3 7/8							3.75
3	36	24	1 3/8	1/2	5/8	5	14	3 1/2	9 3/4		5 3/8	15	3	6	17 5/8	1/2	5 3/4	3 1/8	16 3/4	4 5/8							6.0
4	48	30	2 1/4	3/4	1	6	18 5/8	5 1/8	13 1/8	6 1/8	7 1/4	18	4	8	21 3/4	5/8	7 5/8	4 1/4	22 3/8	6 1/4							10.0
5	48	30	2 1/4	3/4	1	6	18 5/8	5 1/8	13 1/8	6 1/8	7 1/4	18	4	8	21 3/4	5/8	7 5/8	4 1/4	22 3/8	6 1/4							10.0

STANDARD SIGN

R3-8 (L) Arrow

WISCONSIN DEPT OF TRANSPORTATION

APPROVED Matthew R Rauch
for State Traffic Engineer

DATE 5/21/19 PLATE NO. R3-8.1

PROJECT NO:

SHEET NO: 579 E

NOTES

1. Sign is Type II - Type H Reflective
2. Color:
   Background - White
   Message - Black
3. Message Series - D

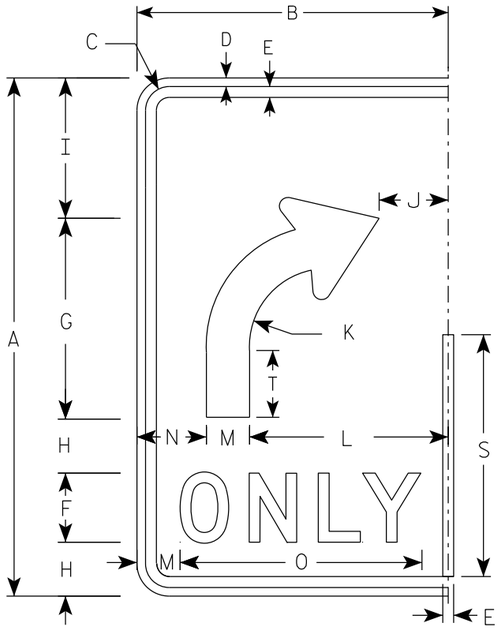

(R)

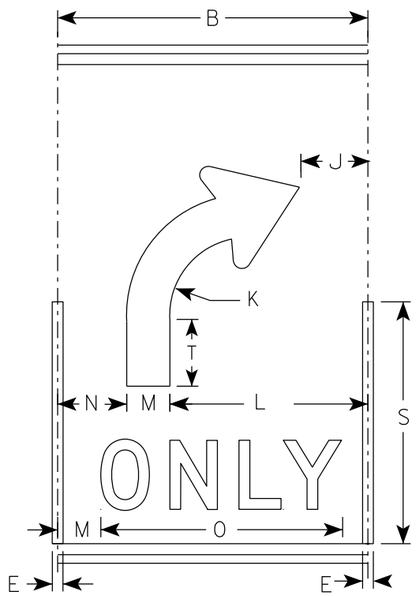

(R)

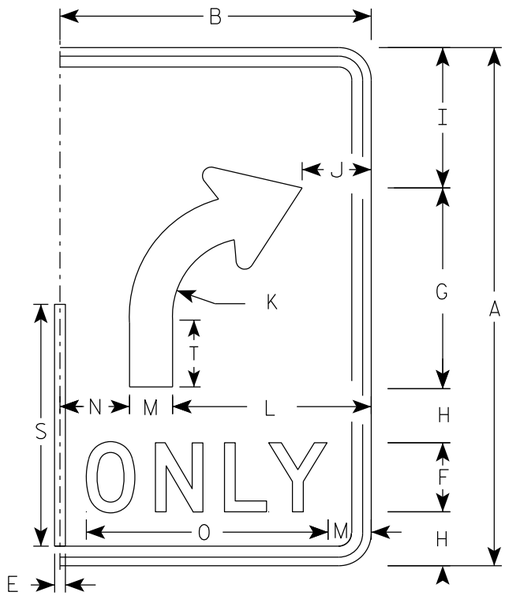

(R)

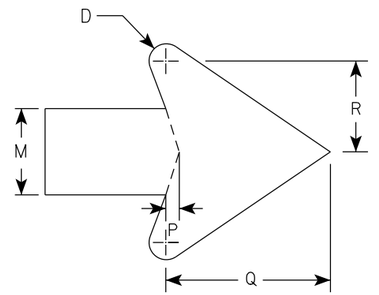

ARROW DETAIL

SIZE	A	B	C	D	E	F	G	H	I	J	K	L	M	N	O	P	Q	R	S	T	U	V	W	X	Y	Z	Area sq. ft.
1																											
2S	30	18	1 3/8	1/2	5/8	4	11 5/8	3 1/8	8 1/8	4	4 1/2	11 1/2	2 1/2	4	14	3/8	4 3/4	2 5/8	14	3 7/8							3.75
2M	30	18	1 3/8	1/2	5/8	4	11 5/8	3 1/8	8 1/8	4	4 1/2	11 1/2	2 1/2	4	14	3/8	4 3/4	2 5/8	14	3 7/8							3.75
3	36	24	1 3/8	1/2	5/8	5	14	3 1/2	9 3/4	6	5 3/8	15	3	6	17 5/8	1/2	5 3/4	3 1/8	16 3/4	4 5/8							6.0
4	48	30	2 1/4	3/4	1	6	18 5/8	5 1/8	13 1/8	6 1/8	7 1/4	18	4	8	21 3/4	5/8	7 5/8	4 1/4	22 3/8	6 1/4							10.0
5	48	30	2 1/4	3/4	1	6	18 5/8	5 1/8	13 1/8	6 1/8	7 1/4	18	4	8	21 3/4	5/8	7 5/8	4 1/4	22 3/8	6 1/4							10.0

STANDARD SIGN
R3-8 (R) Arrow

WISCONSIN DEPT OF TRANSPORTATION

APPROVED Matthew R Rauch
for State Traffic Engineer

DATE 5/21/19 PLATE NO. R3-8.1

PROJECT NO:

SHEET NO: 580 E

NOTES

1. Sign is Type II - Type H Reflective
2. Color:
   Background - White
   Message - Black
3. Message Series - None

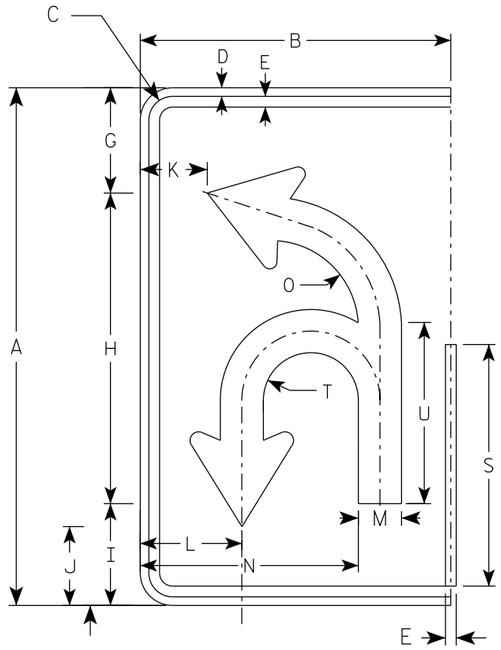

(U)

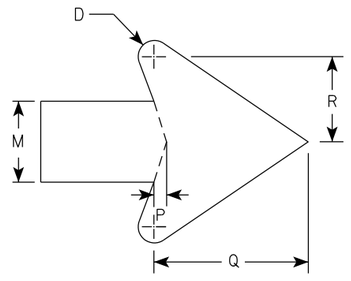

ARROW DETAIL

SIZE	A	B	C	D	E	F	G	H	I	J	K	L	M	N	O	P	Q	R	S	T	U	V	W	X	Y	Z	Area sq. ft.
1																											
2S	30	18	1 3/8	1/2	5/8		6 1/8	18	5 7/8	4 5/8	3 7/8	5 7/8	2 1/2	12 5/8	5 1/8	3/8	4 3/4	2 5/8	14	2 3/4	10 1/2						3.75
2M	30	18	1 3/8	1/2	5/8		6 1/8	18	5 7/8	4 5/8	3 7/8	5 7/8	2 1/2	12 5/8	5 1/8	3/8	4 3/4	2 5/8	14	2 3/4	10 1/2						3.75
3	36	24	1 3/8	1/2	5/8		21 7/8	21 5/8	7 1/8	5 1/2	5 7/8	8 1/4	3	16 3/8	6 1/8	1/2	5 3/4	3 1/8	16 3/4	3 1/4	12 5/8						6.0
4	48	30	2 1/4	3/4	1		29 1/8	28 3/4	9 3/8	7 1/4	6 7/8	10	4	20 7/8	8 1/8	5/8	7 5/8	4 1/4	22 3/8	4 3/8	16 3/4						10.0
5	48	30	2 1/4	3/4	1		29 1/8	28 3/4	9 3/8	7 1/4	6 7/8	10	4	20 7/8	8 1/8	5/8	7 5/8	4 1/4	22 3/8	4 3/8	16 3/4						10.0

STANDARD SIGN
R3-8 (U) Arrow

WISCONSIN DEPT OF TRANSPORTATION

APPROVED Matthew R Rauch
for State Traffic Engineer

DATE 5/21/19 PLATE NO. R3-8.1

PROJECT NO: | HWY: | COUNTY: | SHEET NO: 581 | E

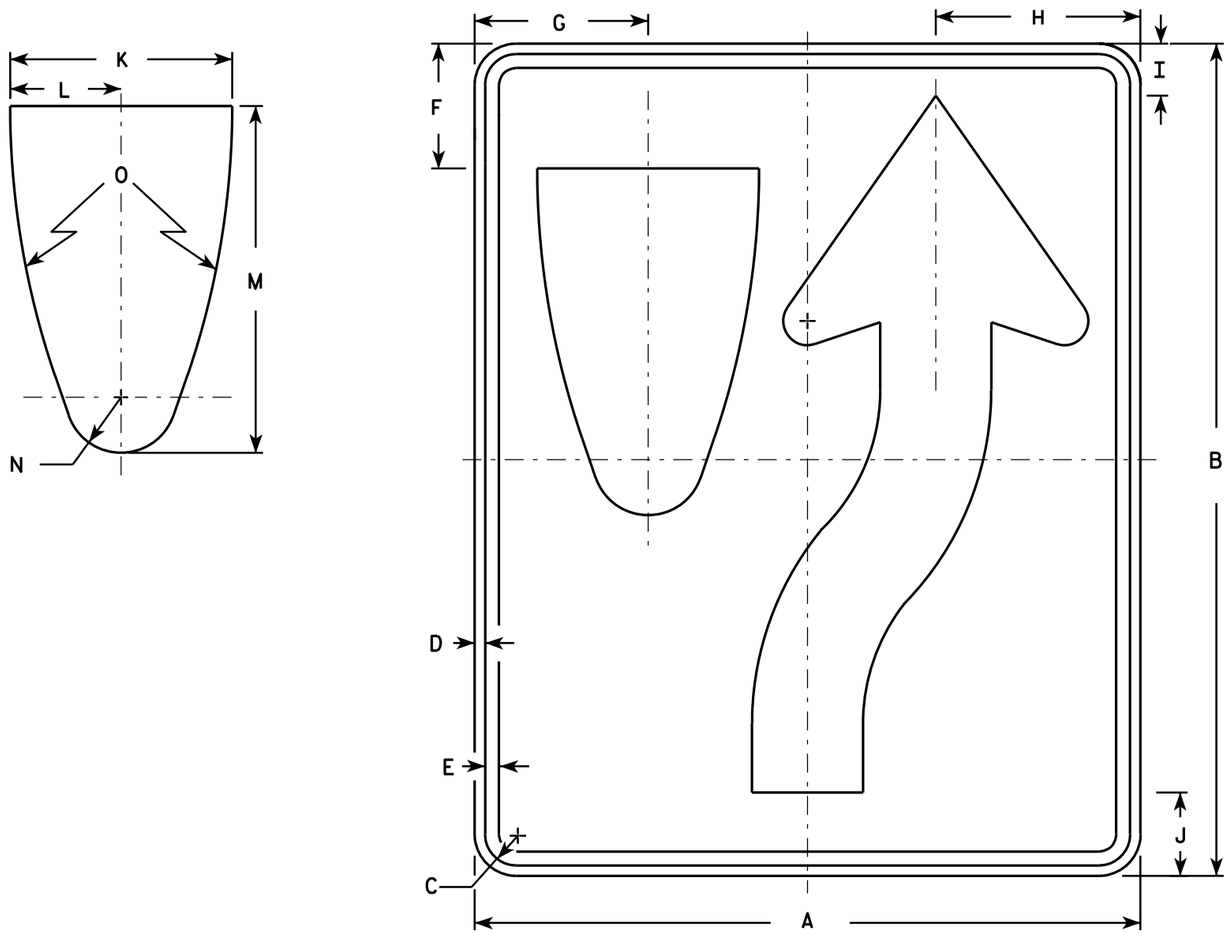

R4-7

NOTES

1. Sign is Type II - Type H Reflective - reference WIS DOT Standard Specification for HIGHWAY and STRUCTURE CONSTRUCTION latest edition. material is plywood but borders shall be rounded
2. Color:
   Background - White
   Message - Black
3. Corners may be square or rounded when base as shown. When base material is metal, the corners and borders shall be rounded.
4. R4-8 is the same as R4-7 except Legend is reversed.

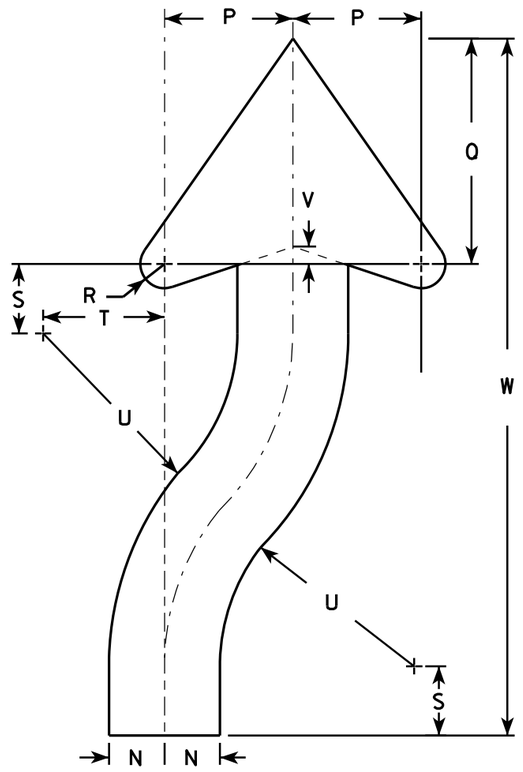

ARROW DETAIL

SIZE	A	B	C	D	E	F	G	H	I	J	K	L	M	N	O	P	Q	R	S	T	U	V	W	X	Y	Z	Area sq. ft.
1	18	24	1 1/8	3/8	1/2	3 3/8	4 3/4	5 1/2	1 3/8	2 1/4	6	3	9 3/8	1 1/2	22 1/2	3 1/2	6 1/8	5/8	1 7/8	3 1/4	6 3/4	1/2	20 3/8				3.0
2S	24	30	1 1/8	3/8	1/2	4 1/2	6 1/4	7 3/8	1 7/8	3	8	4	12 1/2	2	30	4 5/8	8 1/8	7/8	2 1/2	4 3/8	9	5/8	25 1/8				5.0
2M	24	30	1 1/8	3/8	1/2	4 1/2	6 1/4	7 3/8	1 7/8	3	8	4	12 1/2	2	30	4 5/8	8 1/8	7/8	2 1/2	4 3/8	9	5/8	25 1/8				5.0
3	36	48	1 3/4	1/2	5/8	6 3/4	9 3/8	11 1/8	2 7/8	4 1/2	12	6	18 3/4	3	45	6 7/8	12 1/4	1 1/4	3 3/4	6 5/8	13 1/2	1	40 3/4				12.0
4	36	48	1 3/4	1/2	5/8	6 3/4	9 3/8	11 1/8	2 7/8	4 1/2	12	6	18 3/4	3	45	6 7/8	12 1/4	1 1/4	3 3/4	6 5/8	13 1/2	1	40 3/4				12.0
5	48	60	2 1/4	3/4	1	9	12 1/2	14 3/4	3 3/4	6	16	8	25	4	60	9 1/4	16 1/4	1 5/8	5	8 3/4	18	1 1/4	50 1/4				20.0

STANDARD SIGN
R4-7 & R4-8

WISCONSIN DEPT OF TRANSPORTATION

APPROVED Matthew R Rauch for State Traffic Engineer

DATE 3/25/2011 PLATE NO. R4-7.8

PROJECT NO:	HWY:	COUNTY:		SHEET NO: 582	E

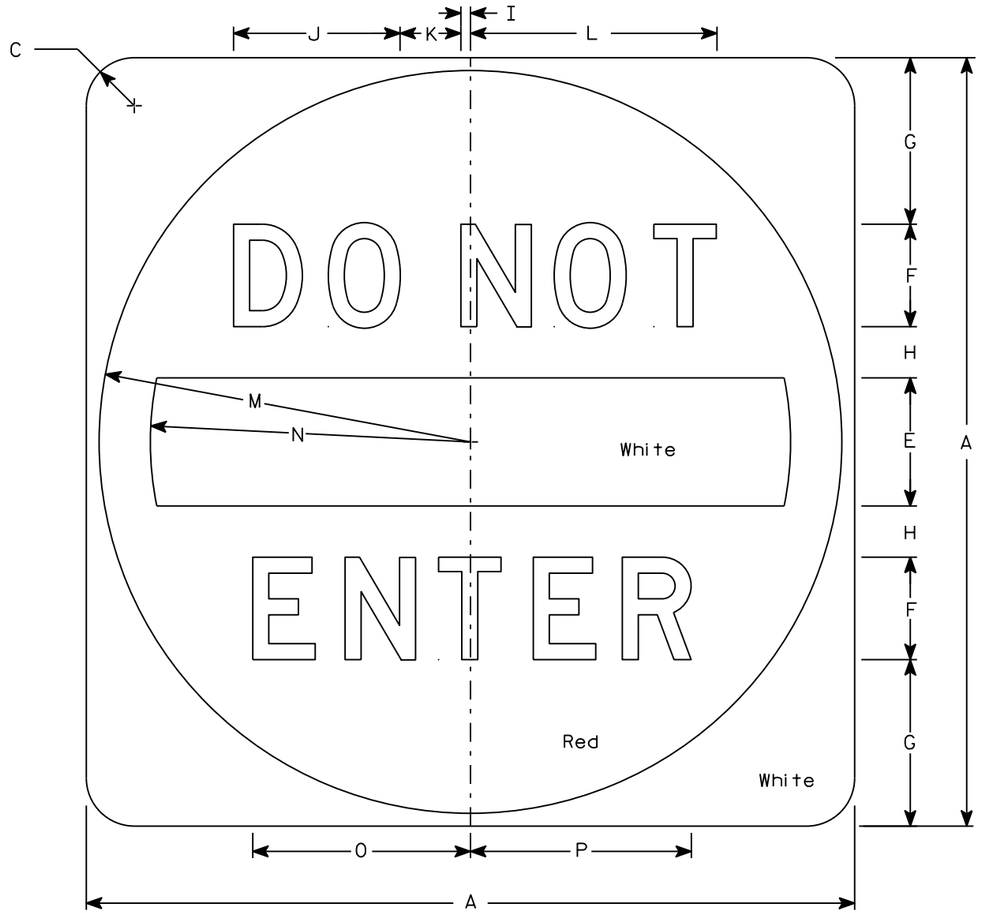

R5-1

NOTES

1. Sign is Type II - Type H Reflective
2. Color:
   Background - See detail
   Message - White
3. Message Series - D

SIZE	A	B	C	D	E	F	G	H	I	J	K	L	M	N	O	P	Q	R	S	T	U	V	W	X	Y	Z	Area sq. ft.
1																											
2S	30		1 7/8		5	4	6 1/2	2	3/8	6 1/2	2 3/8	9 5/8	14 1/2	12 1/2	8 1/2	8 5/8											6.25
2M	36		2 1/4		6	5	7 1/2	2 1/2	1/2	8 1/8	3	12 1/8	17 1/2	15	10 5/8	10 3/4											9.0
3	36		2 1/4		6	5	7 1/2	2 1/2	1/2	8 1/8	3	12 1/8	17 1/2	15	10 5/8	10 3/4											9.0
4	36		2 1/4		6	5	7 1/2	2 1/2	1/2	8 1/8	3	12 1/8	17 1/2	15	10 5/8	10 3/4											9.0
5	48		3		8	6	11	3	5/8	9 3/4	3 5/8	14 1/2	23 1/2	20	12 3/4	12 7/8											16.0

STANDARD SIGN
R5-1

WISCONSIN DEPT OF TRANSPORTATION

APPROVED Matthew R Rauch
for State Traffic Engineer

DATE 3/15/18 PLATE NO. R5-1.16

PROJECT NO: | HWY: | COUNTY: | SHEET NO: 583 | E

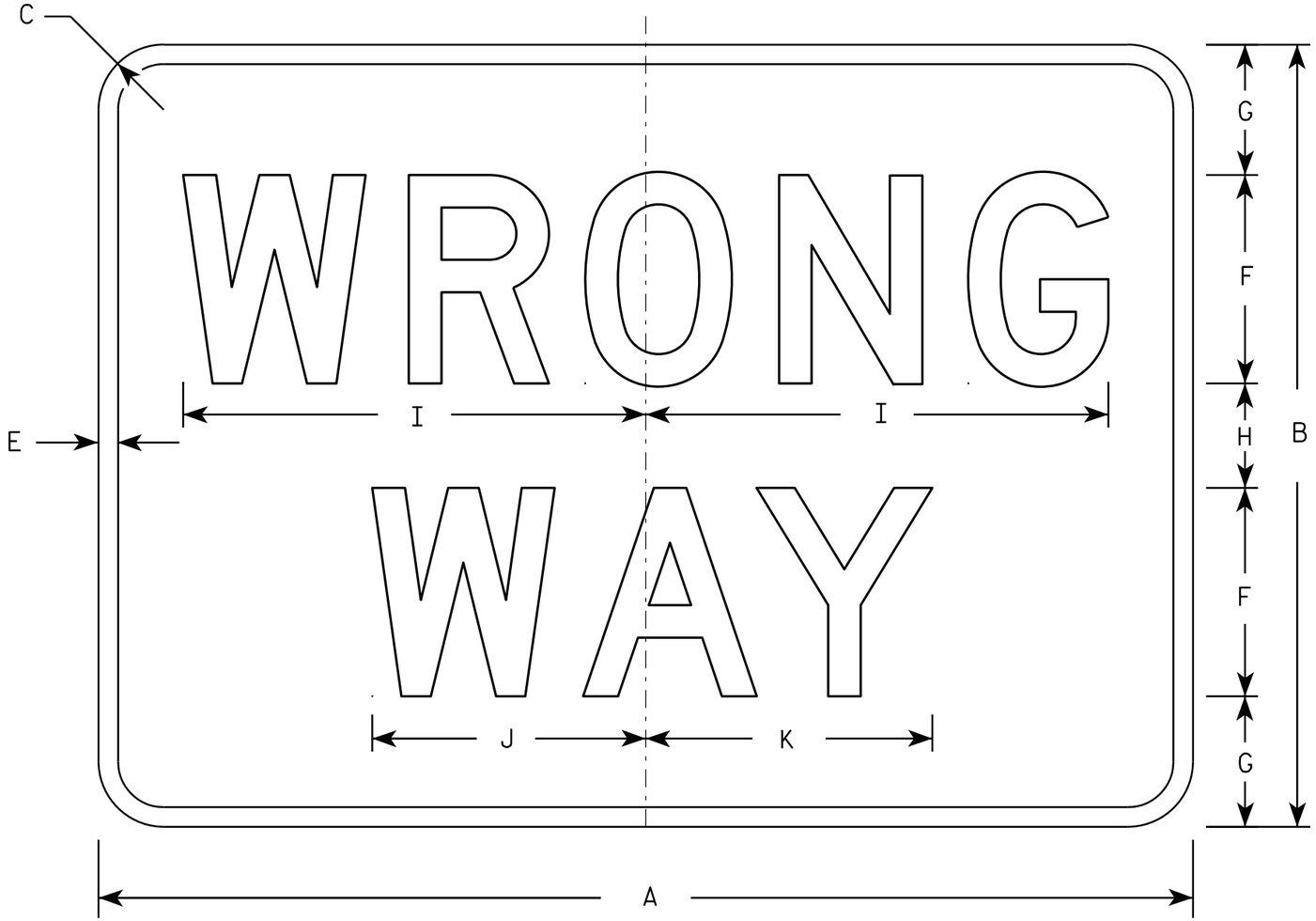

R5-1A

NOTES

1. Sign is Type II - Type H Reflective - reference WIS DOT Standard Specification for HIGHWAY and STRUCTURE CONSTRUCTION latest edition.
2. Color:
   Background - Red
   Message - White
3. Message Series - D
4. Corners may be square or rounded when base material is plywood but borders shall be rounded as shown. When base material is metal, the corners and borders shall be rounded.

SIZE	A	B	C	D	E	F	G	H	I	J	K	L	M	N	O	P	Q	R	S	T	U	V	W	X	Y	Z	Area sq. ft.
1	30	18	1 1/2		1/2	5	3	2	11	6 1/2	6 7/8																3.75
2S	36	24	2		5/8	6	4 1/2	3	13 1/4	7 7/8	8 1/4																6.00
2M	42	30	2 1/2		3/4	8	5	4	17 3/4	10 1/2	11																8.75
3	42	30	2 1/2		3/4	8	5	4	17 3/4	10 1/2	11																8.75
4	42	30	2 1/2		3/4	8	5	4	17 3/4	10 1/2	11																8.75
5	42	30	2 1/2		3/4	8	5	4	17 3/4	10 1/2	11																8.75

STANDARD SIGN
R5-1A

WISCONSIN DEPT OF TRANSPORTATION

APPROVED Matthew R Rauch
for State Traffic Engineer

DATE 12/17/10 PLATE NO. R5-1A.2

PROJECT NO:	HWY:	COUNTY:		SHEET NO: 584	E

FILE NAME : C:\Users\PROJECTS\tr_stdplate\R51A.DGN PLOT DATE : 17-DEC-2010 12:42 PLOT BY : dotsja PLOT NAME : PLOT SCALE : 5.462457:1.000000

WISDOT/CADDS SHEET 42

7

7

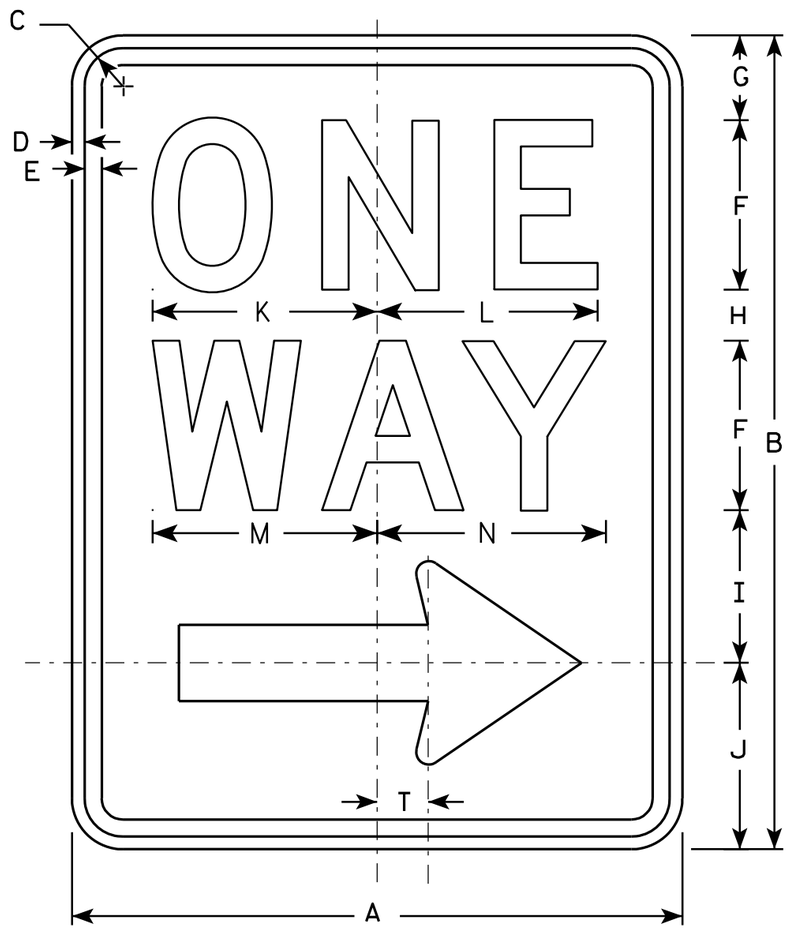

R6-2R

NOTES

1. Sign is Type II - Type H Reflective - reference WIS DOT Standard Specification for HIGHWAY and STRUCTURE CONSTRUCTION latest edition.
2. Color:
   Background - White
   Message - Black
3. Message Series - D
4. Corners may be square or rounded when base material is plywood but borders shall be rounded as shown. When base material is metal, the corners and borders shall be rounded.
5. R6-2L same as R6-2R except arrow points to the left.

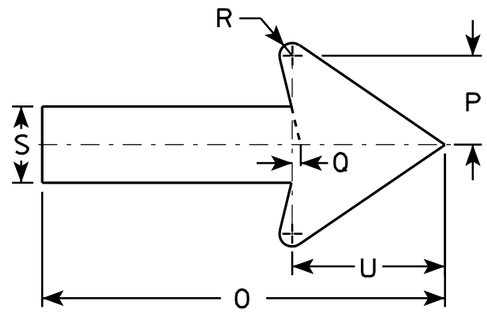

SIZE	A	B	C	D	E	F	G	H	I	J	K	L	M	N	O	P	Q	R	S	T	U	V	W	X	Y	Z
1	18	24	1 1/8	3/8	1/2	5	2 1/2	1 1/2	4 1/2	5 1/2	6 5/8	6 1/2	6 5/8	6 3/4	11 7/8	2 5/8	1/4	3/8	2 1/4	1 1/2	4 1/2					
2S	24	30	1 1/8	3/8	1/2	6	3	2 1/2	5 1/2	7	8 1/8	8 1/8	8 1/2	8 5/8	16	3 1/2	3/8	1/2	3	2	6					
2M	30	36	1 3/8	1/2	5/8	8	2 1/2	2 5/8	6 7/8	8	10 1/2	10 1/2	11 1/4	11 1/4	20	4 3/8	1/2	5/8	3 3/4	2 1/2	7 1/2					
3	36	48	1 7/8	1/2	5/8	10	5 1/4	3 1/4	9	10 1/2	12 3/4	12 3/4	13 1/4	13 1/2	24	5 5/8	1/2	3/4	4 3/4	3	9					
4	36	48	1 7/8	1/2	5/8	10	5 1/4	3 1/4	9	10 1/2	12 3/4	12 3/4	13 1/4	13 1/2	24	5 5/8	1/2	3/4	4 3/4	3	9					
5																										

STANDARD SIGN
R6-2 R&L

WISCONSIN DEPT OF TRANSPORTATION

APPROVED Matthew R Rauch
for State Traffic Engineer

DATE 11/2/10 PLATE NO. R6-2.8

PROJECT NO:	HWY:	COUNTY:		SHEET NO: 585	E

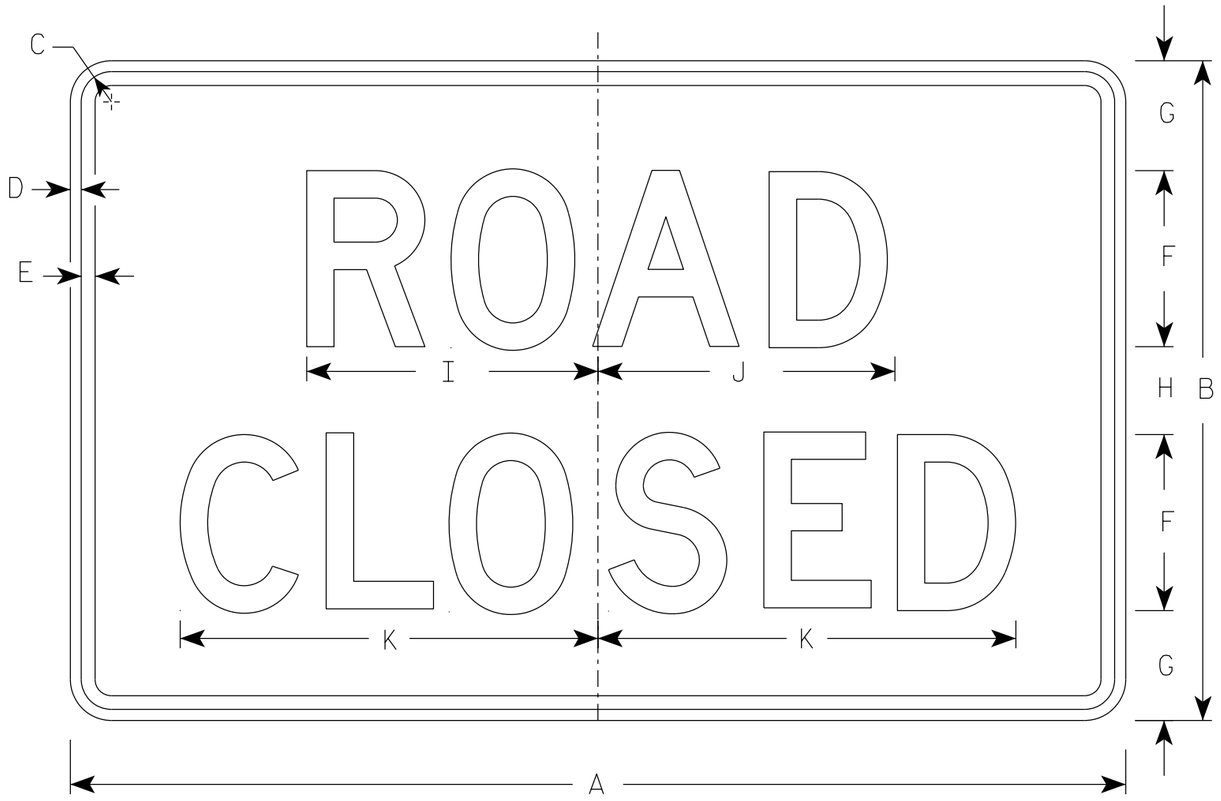

R11-2

NOTES

1. Sign is Type II - Type H Reflective
2. Color:
   Background - White
   Message - Black
3. Message Series - D
4. Corners may be square or rounded when base material is plywood but borders shall be rounded as shown. When base material is metal, the corners and borders shall be rounded.
5. Modify the message as required.

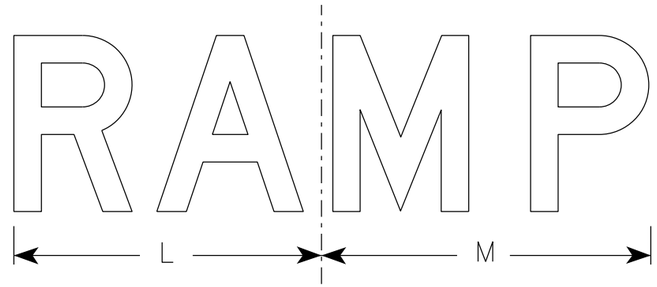

R11-2R

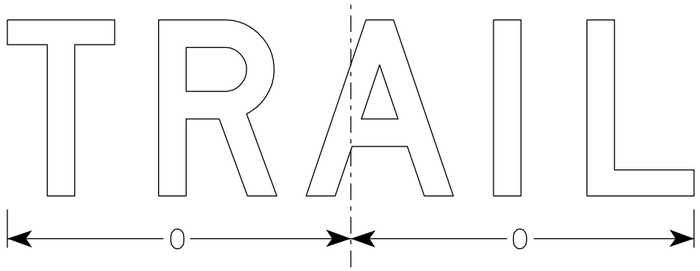

R11-2T

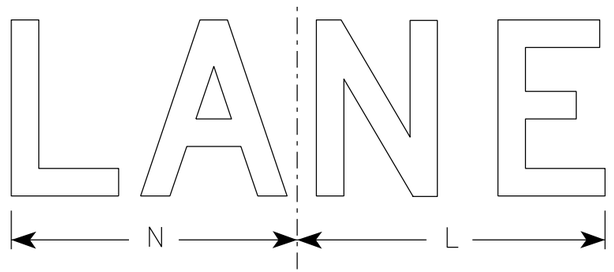

R11-2L

SIZE	A	B	C	D	E	F	G	H	I	J	K	L	M	N	O	P	Q	R	S	T	U	V	W	X	Y	Z	Area sq. ft.
1																											
2S	48	30	1 3/8	1/2	5/8	8	5	4	13 1/4	13 1/2	19	14	15	13	15 5/8												10.0
2M	48	30	1 3/8	1/2	5/8	8	5	4	13 1/4	13 1/2	19	14	15	13	15 5/8												10.0
3	48	30	1 3/8	1/2	5/8	8	5	4	13 1/4	13 1/2	19	14	15	13	15 5/8												10.0
4	48	30	1 3/8	1/2	5/8	8	5	4	13 1/4	13 1/2	19	14	15	13	15 5/8												10.0
5	48	30	1 3/8	1/2	5/8	8	5	4	13 1/4	13 1/2	19	14	15	13	15 5/8												10.0

STANDARD SIGN
R11-2

WISCONSIN DEPT OF TRANSPORTATION

APPROVED Matthew R Rauch
for State Traffic Engineer

DATE 3/29/2021 PLATE NO. R11-2.11

PROJECT NO:	HWY:	COUNTY:		SHEET NO: 586	E

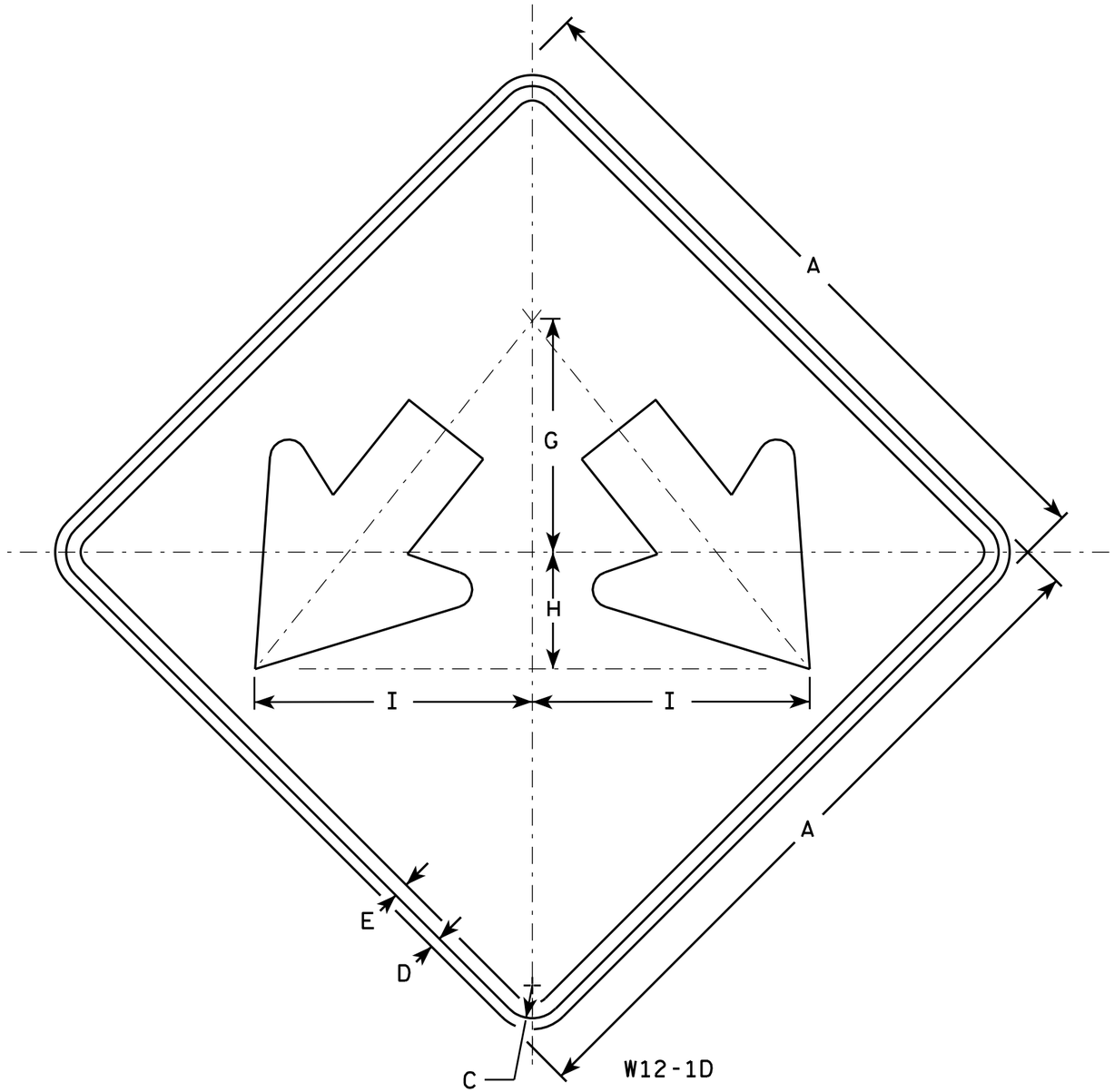

NOTES

1. Sign is Type II - Type F Reflective - reference WIS DOT Standard Specification for HIGHWAY and STRUCTURE CONSTRUCTION latest edition.
2. Color:
   Background - Yellow
   Message - Black
3. Corners may be square or rounded when base material is plywood but borders shall be rounded as shown. When base material is metal, the corners and borders shall be rounded.

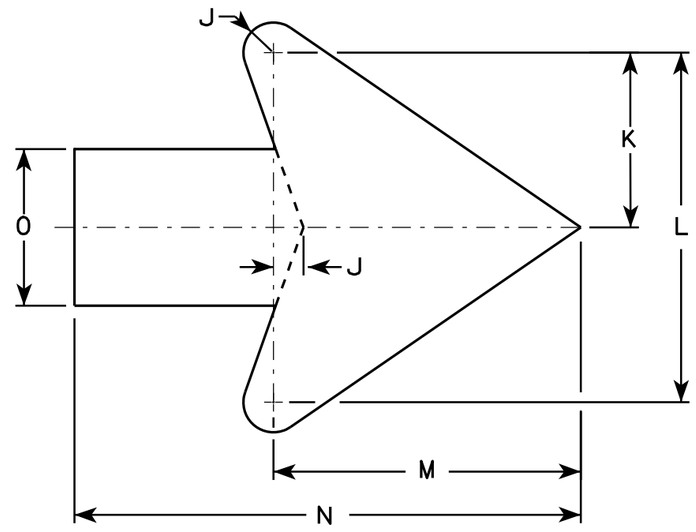

Arrow Detail

SIZE	A	B	C	D	E	F	G	H	I	J	K	L	M	N	O	P	Q	R	S	T	U	V	W	X	Y	Z	Area sq. ft.
1																											
2S	24		1 1/8	1/2	3/8		8	4	9 1/2	3/8	3 3/8	7 1/4	6 3/8	10 3/8	3 1/4												4.0
2M	24		1 1/8	1/2	3/8		8	4	9 1/2	3/8	3 3/8	7 1/4	6 3/8	10 3/8	3 1/4												4.0
3	30		1 3/8	1/2	5/8		10	5	11 7/8	3/4	4 1/2	9	7 7/8	13	4												6.25
4	36		1 3/8	1/2	5/8		12	6	14 1/4	1	5 1/2	10 7/8	9 5/8	15 3/4	4 3/4												9.0
5	48		2 1/4	3/4	1		16	8	19	1 1/4	7 1/4	14 1/2	12 3/4	21	6 1/4												16.0

STANDARD SIGN
W12-1D

WISCONSIN DEPT OF TRANSPORTATION

APPROVED Matthew R Rauch
for State Traffic Engineer

DATE 3/13/13 PLATE NO. W12-1D.15

PROJECT NO:	HWY:	COUNTY:		SHEET NO: 587	E

FILE NAME : C:\CAEFiles\Projects\tr_stdplate\W121D.DGN PLOT DATE : 13-MAR-2013 13:26 PLOT BY : mscj9h PLOT NAME : PLOT SCALE : 4.713802:1.000000

WISDOT/CADDS SHEET 42

7

7

NOTES

1. Sign is Type II - Type F Reflective
2. Color:
   Background - Orange
   Message - Black
3. Message Series - C
4. Corners may be square or rounded when base material is plywood but borders shall be rounded as shown. When base material is metal, the corners and borders shall be rounded.

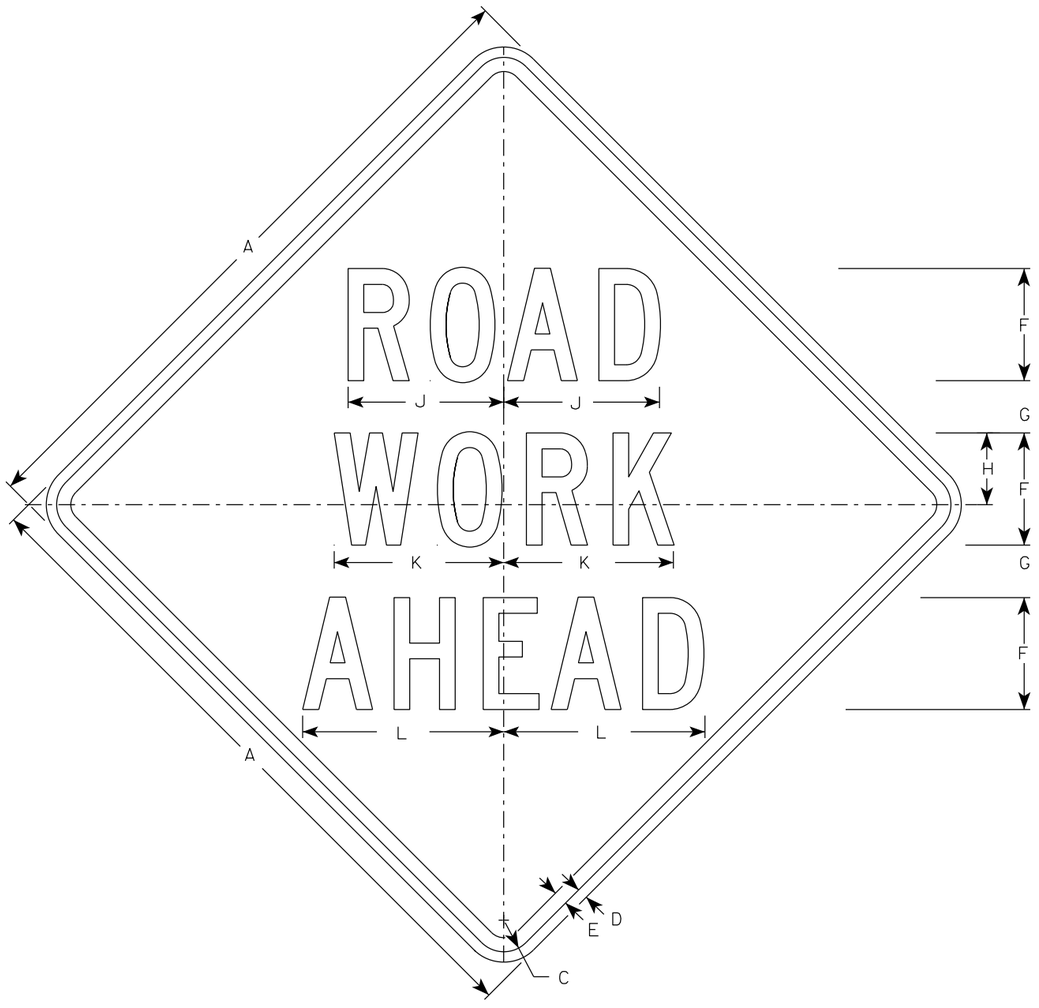

W20-1A

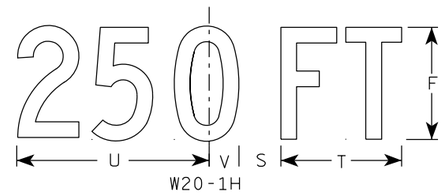

W20-1H

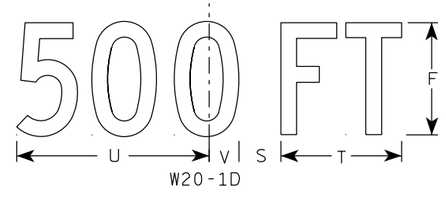

W20-1D



W20-1C

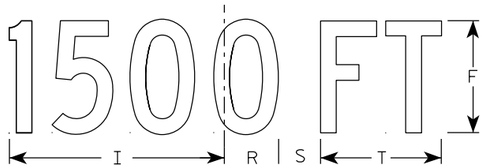

W20-1B

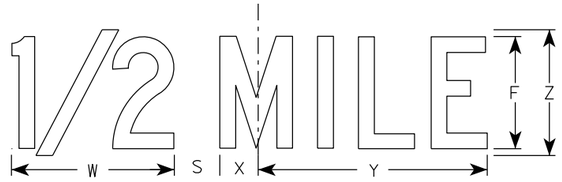

W20-1G

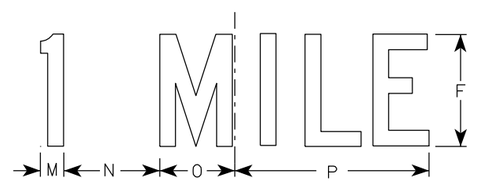

W20-1F

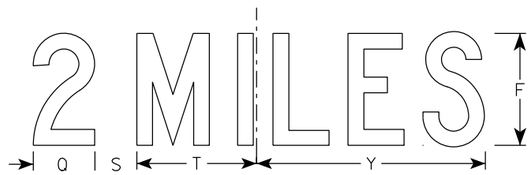

W20-1E

SIZE	A	B	C	D	E	F	G	H	I	J	K	L	M	N	O	P	Q	R	S	T	U	V	W	X	Y	Z	Area sq. ft.
1	36		1 5/8	5/8	3/4	5	2 5/8	3 1/4	10 1/8	7	7 5/8	8 7/8	1 1/8	4 1/2	3 1/2	9	3 1/4	2 1/2	2 1/4	5 5/8	9	1 3/8	8	1 3/4	10 3/4	6	9.0
2S	48		2 1/4	3/4	1	8	3 3/4	5 1/8	15 3/8	11 1/8	12 1/8	14 3/8	1 5/8	6 7/8	5 3/8	13 7/8	4 3/8	3 7/8	3	8 5/8	13 3/4	2 1/8	11 7/8	2 3/4	16 3/8	9	16.0
2M	48		2 1/4	3/4	1	8	3 3/4	5 1/8	15 3/8	11 1/8	12 1/8	14 3/8	1 5/8	6 7/8	5 3/8	13 7/8	4 3/8	3 7/8	3	8 5/8	13 3/4	2 1/8	11 7/8	2 3/4	16 3/8	9	16.0
3	48		2 1/4	3/4	1	8	3 3/4	5 1/8	15 3/8	11 1/8	12 1/8	14 3/8	1 5/8	6 7/8	5 3/8	13 7/8	4 3/8	3 7/8	3	8 5/8	13 3/4	2 1/8	11 7/8	2 3/4	16 3/8	9	16.0
4	48		2 1/4	3/4	1	8	3 3/4	5 1/8	15 3/8	11 1/8	12 1/8	14 3/8	1 5/8	6 7/8	5 3/8	13 7/8	4 3/8	3 7/8	3	8 5/8	13 3/4	2 1/8	11 7/8	2 3/4	16 3/8	9	16.0
5	48		2 1/4	3/4	1	8	3 3/4	5 1/8	15 3/8	11 1/8	12 1/8	14 3/8	1 5/8	6 7/8	5 3/8	13 7/8	4 3/8	3 7/8	3	8 5/8	13 3/4	2 1/8	11 7/8	2 3/4	16 3/8	9	16.0

STANDARD SIGN
W20-1A, B, C, D, E, F, G & H

WISCONSIN DEPT OF TRANSPORTATION

APPROVED Matthew R Rauch
For State Traffic Engineer

DATE 3/25/2020 PLATE NO. W20-1.11

PROJECT NO:

SHEET NO: E

FILE NAME : C:\CAEfiles\Projects\tr_stdplate\W201.DGN PLOT DATE : 25-MARCH-2020 PLOT BY : dotc4c

WISDOT/CADDS SHEET 42

7

7

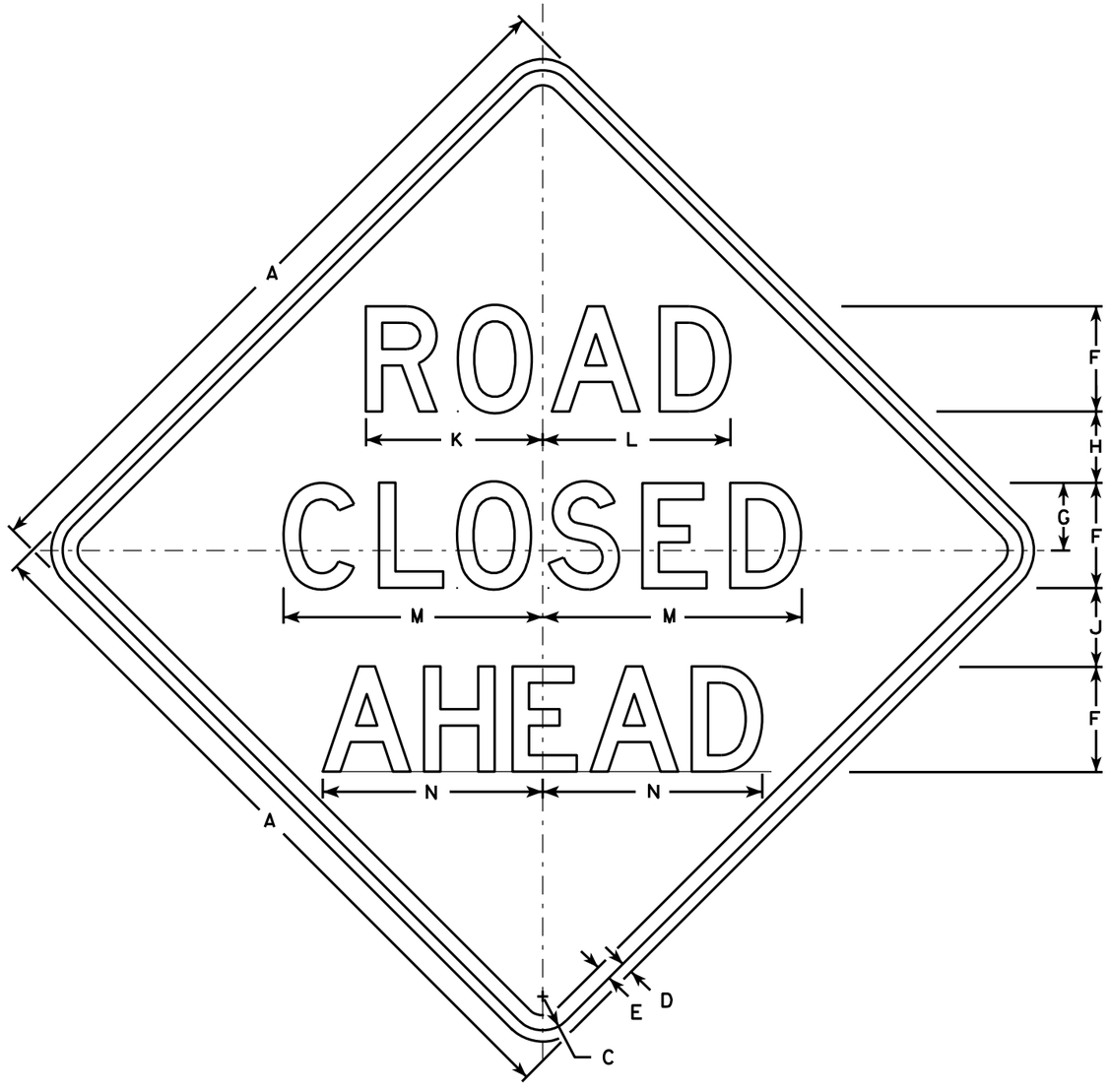

W20-3A

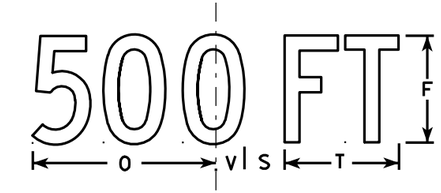

W20-3D

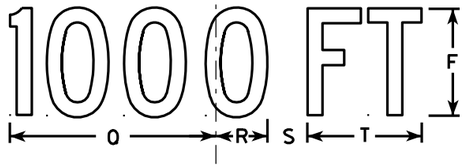

W20-3C

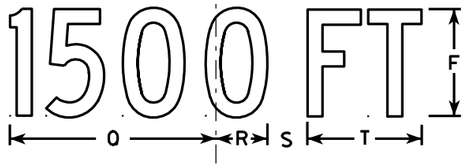

W20-3B

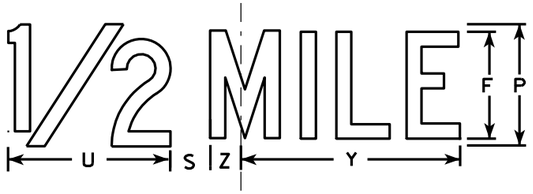

W20-3G

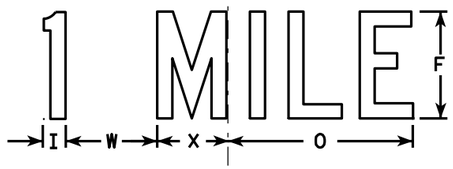

W20-3F

NOTES

1. Sign is Type II - Type F Reflective - reference WIS DOT Standard Specification for HIGHWAY and STRUCTURE CONSTRUCTION latest edition.
2. Color:
   Background - Orange
   Message - Black
3. Message Series - see note 5
4. Corners may be square or rounded when base material is plywood but borders shall be rounded as shown. When base material is metal, the corners and borders shall be rounded.
5. Lines 1 and 2 are Series D.
   Line 3 is Series D for AHEAD and Series C for all other distances.

SIZE	A	B	C	D	E	F	G	H	I	J	K	L	M	N	O	P	Q	R	S	T	U	V	W	X	Y	Z	Area sq. ft.
1	36		1 5/8	5/8	3/4	5	3 3/8	3 1/2	1 1/8	4	8 3/8	8 7/8	12 1/2	11	9	6	10 1/8	2 1/2	1 7/8	5 5/8	8	1 3/8	4 1/2	3 1/2	10 3/4	1 3/4	9.0
2S	48		2 1/4	3/4	1	7	4 1/2	4 3/4	1 1/2	5 1/4	11 3/4	12 1/2	17 1/4	14 5/8	12	8	13 1/2	3 3/8	2 5/8	7 1/2	10 5/8	1 7/8	6	4 5/8	14 3/8	2 3/8	16.0
2M	48		2 1/4	3/4	1	7	4 1/2	4 3/4	1 1/2	5 1/4	11 3/4	12 1/2	17 1/4	14 5/8	12	8	13 1/2	3 3/8	2 5/8	7 1/2	10 5/8	1 7/8	6	4 5/8	14 3/8	2 3/8	16.0
3	48		2 1/4	3/4	1	7	4 1/2	4 3/4	1 1/2	5 1/4	11 3/4	12 1/2	17 1/4	14 5/8	12	8	13 1/2	3 3/8	2 5/8	7 1/2	10 5/8	1 7/8	6	4 5/8	14 3/8	2 3/8	16.0
4	48		2 1/4	3/4	1	7	4 1/2	4 3/4	1 1/2	5 1/4	11 3/4	12 1/2	17 1/4	14 5/8	12	8	13 1/2	3 3/8	2 5/8	7 1/2	10 5/8	1 7/8	6	4 5/8	14 3/8	2 3/8	16.0
5	48		2 1/4	3/4	1	7	4 1/2	4 3/4	1 1/2	5 1/4	11 3/4	12 1/2	17 1/4	14 5/8	12	8	13 1/2	3 3/8	2 5/8	7 1/2	10 5/8	1 7/8	6	4 5/8	14 3/8	2 3/8	16.0

STANDARD SIGN
W20-3A, B, C, D, F & G

WISCONSIN DEPT OF TRANSPORTATION

APPROVED Matthew R Rauch
for State Traffic Engineer
DATE 3/18/11 PLATE NO. W20-3.7

PROJECT NO: | HWY: | COUNTY: | SHEET NO: 589 | E

7

FILE NAME : C:\Users\PROJECTS\tr_stdplate\W203.DGN PLOT DATE : 18-MAR-2011 12:08 PLOT BY : mscj9h PLOT NAME : PLOT SCALE : 9.931739:1.000000
WISDOT/CADDS SHEET 42



W20-56A

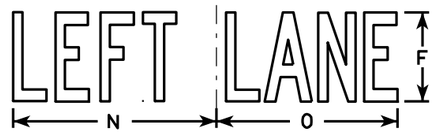

W20-55A

W20-5A

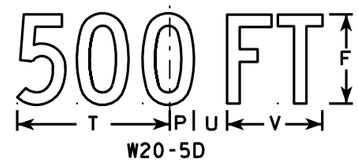

W20-5D

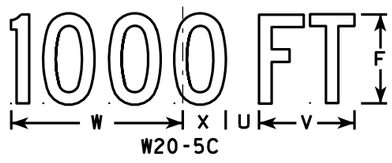

W20-5C

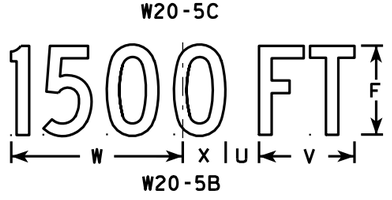

W20-5B

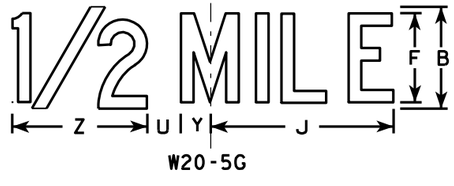

W20-5G



W20-5F

NOTES

1. Sign is Type II - Type F Reflective - reference WIS DOT Standard Specification for HIGHWAY and STRUCTURE CONSTRUCTION latest edition.
2. Color:
   Background - Orange
   Message - Black
3. Message Series - See Note 5
4. Corners may be square or rounded when base material is plywood but borders shall be rounded as shown. When base material is metal, the corners and borders shall be rounded.
5. " _____ LANE" is Series B.
   All other copy is Series C.

SIZE	A	B	C	D	E	F	G	H	I	J	K	L	M	N	O	P	Q	R	S	T	U	V	W	X	Y	Z	Area sq. ft.
1	36	6	1 5/8	5/8	3/4	5	1/8	2 1/2	13 1/8	10 3/4	9 1/2	14 1/4	13 5/8	12	12	1 3/8	1 1/8	4 1/2	3 1/2	9	1 1/8	5 5/8	10 1/8	2 1/2	1 3/4	8	9.0
2S	48	8	2 1/4	3/4	1	7	1 1/4	3 1/4	17 1/2	14 3/8	12 5/8	19	18 3/8	16	14 1/4	1 7/8	1 1/2	6	4 5/8	12	2 5/8	7 1/2	13 1/2	3 3/8	2 3/8	10 5/8	16.0
2M	48	8	2 1/4	3/4	1	7	1 1/4	3 1/4	17 1/2	14 3/8	12 5/8	19	18 3/8	16	14 1/4	1 7/8	1 1/2	6	4 5/8	12	2 5/8	7 1/2	13 1/2	3 3/8	2 3/8	10 5/8	16.0
3	48	8	2 1/4	3/4	1	7	1 1/4	3 1/4	17 1/2	14 3/8	12 5/8	19	18 3/8	16	14 1/4	1 7/8	1 1/2	6	4 5/8	12	2 5/8	7 1/2	13 1/2	3 3/8	2 3/8	10 5/8	16.0
4	48	8	2 1/4	3/4	1	7	1 1/4	3 1/4	17 1/2	14 3/8	12 5/8	19	18 3/8	16	14 1/4	1 7/8	1 1/2	6	4 5/8	12	2 5/8	7 1/2	13 1/2	3 3/8	2 3/8	10 5/8	16.0
5	48	8	2 1/4	3/4	1	7	1 1/4	3 1/4	17 1/2	14 3/8	12 5/8	19	18 3/8	16	14 1/4	1 7/8	1 1/2	6	4 5/8	12	2 5/8	7 1/2	13 1/2	3 3/8	2 3/8	10 5/8	16.0

STANDARD SIGN
W20-5A, B, C, D, F & G

WISCONSIN DEPT OF TRANSPORTATION

APPROVED Matthew R Rauch
for State Traffic Engineer

DATE 3/18/11 PLATE NO. W20-5.11

PROJECT NO:	HWY:	COUNTY:		SHEET NO: 590	E

7

FILE NAME : C:\Users\PROJECTS\tr_stdplate\W205.DGN PLOT DATE : 18-MAR-2011 12:15 PLOT BY : mscj9h PLOT NAME : PLOT SCALE : 11.918087:1.000000
WISDOT/CADDS SHEET 42

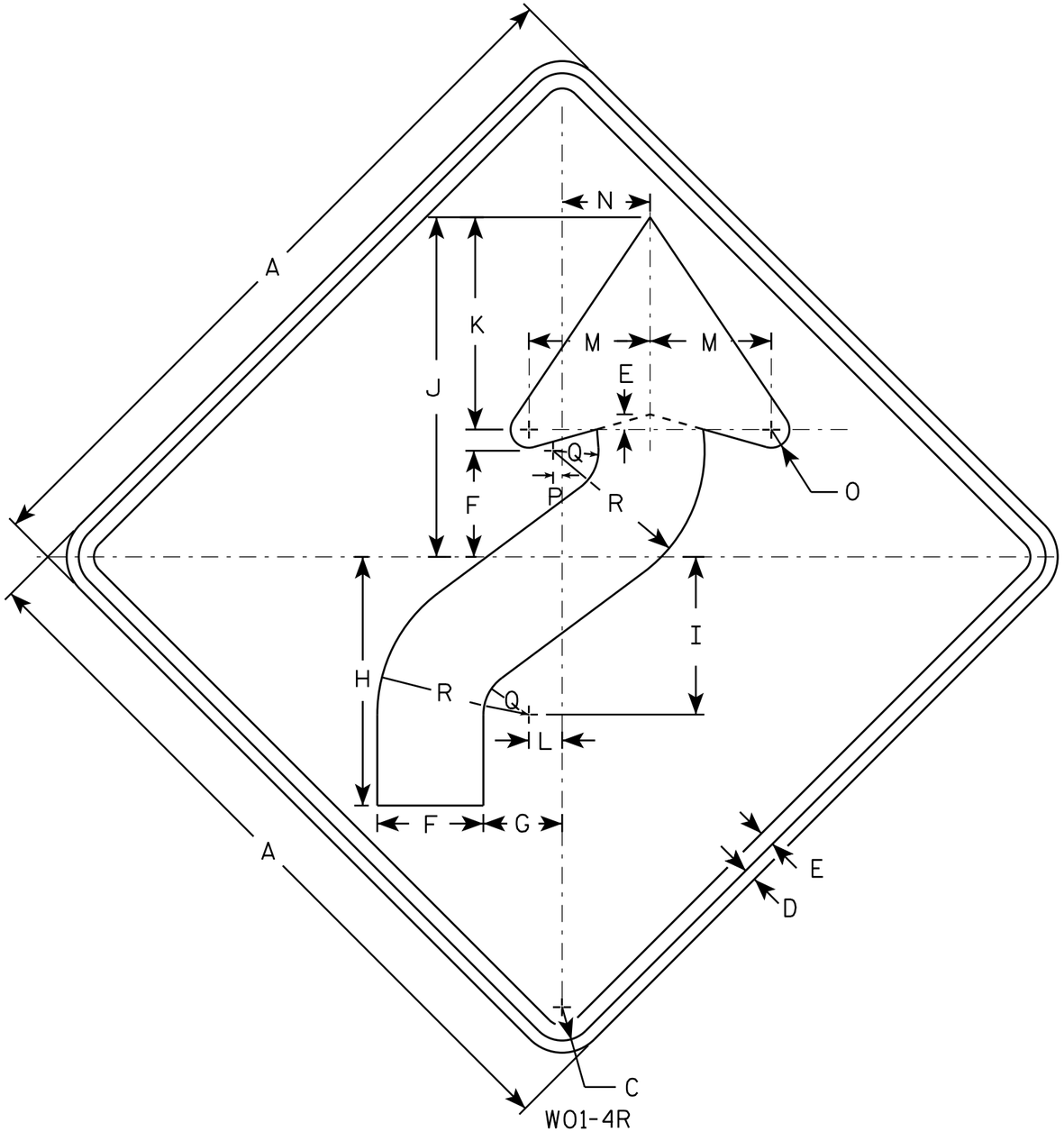

W01-4R

NOTES

1. Sign is Type II - Type F Reflective - reference WIS DOT Standard Specification for HIGHWAY and STRUCTURE CONSTRUCTION latest edition.
2. Color:
   Background - Orange
   Message - Black
3. Corners may be square or rounded when base material is plywood but borders shall be rounded as shown. When base material is metal, the corners and borders shall be rounded.
4. W01-4L is the same as W01-4R except the arrow is reversed along the vertical centerline.

SIZE	A	B	C	D	E	F	G	H	I	J	K	L	M	N	O	P	Q	R	S	T	U	V	W	X	Y	Z	Area sq. ft.
1	36		1 5/8	5/8	3/4	5 1/4	4	12 3/8	7 7/8	16 7/8	10 1/2	1 5/8	6	4 1/2	1	1/2	2 1/4	7 1/2									9.0
2S	48		2 1/4	3/4	1	7	5 1/4	16 1/2	10 1/2	22 1/2	14	2 1/4	8	6	1 1/4	5/8	3	10									16.0
2M	48		2 1/4	3/4	1	7	5 1/4	16 1/2	10 1/2	22 1/2	14	2 1/4	8	6	1 1/4	5/8	3	10									16.0
3	48		2 1/4	3/4	1	7	5 1/4	16 1/2	10 1/2	22 1/2	14	2 1/4	8	6	1 1/4	5/8	3	10									16.0
4	48		2 1/4	3/4	1	7	5 1/4	16 1/2	10 1/2	22 1/2	14	2 1/4	8	6	1 1/4	5/8	3	10									16.0
5	48		2 1/4	3/4	1	7	5 1/4	16 1/2	10 1/2	22 1/2	14	2 1/4	8	6	1 1/4	5/8	3	10									16.0

STANDARD SIGN
W01-4

WISCONSIN DEPT OF TRANSPORTATION

APPROVED Matthew R Rauch
for State Traffic Engineer

DATE 11/18/13 PLATE NO W01-4.1

PROJECT NO:	HWY:	COUNTY:		SHEET NO:	E

FILE NAME : C:\CAEfiles\Projects\tr_stdplate\W014.DGN PLOT DATE : 28-FEB-2014 11:35 PLOT BY : mscj9h PLOT NAME : PLOT SCALE : 6.755110:1.000000 WISDOT/CADDS SHEET 42

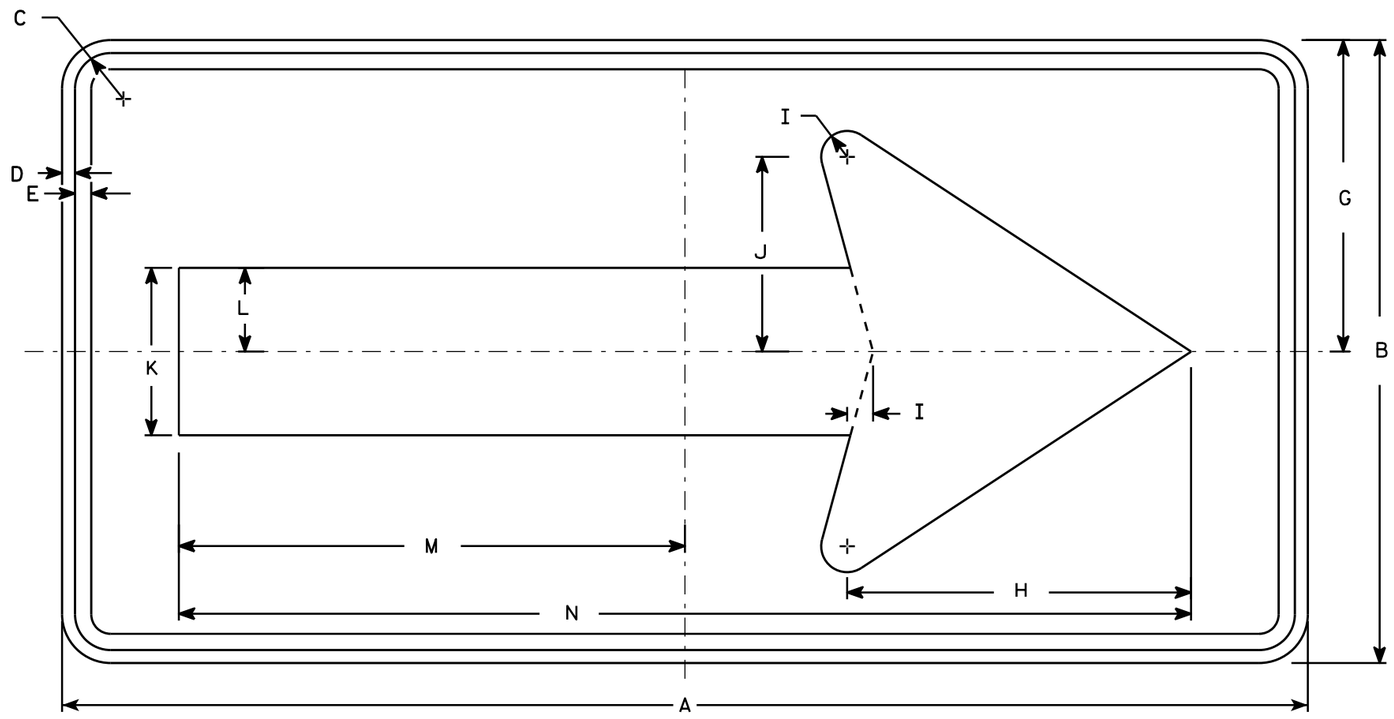

W01-6

NOTES

1. Sign is Type II - Type F Reflective - reference WIS DOT Standard Specification for HIGHWAY and STRUCTURE CONSTRUCTION latest edition.
2. Color:
   Background - Orange
   Message - Black
3. Corners may be square or rounded when base material is plywood but borders shall be rounded as shown. When base material is metal, the corners and borders shall be rounded.

SIZE	A	B	C	D	E	F	G	H	I	J	K	L	M	N	O	P	Q	R	S	T	U	V	W	X	Y	Z	Area sq. ft.
1																											
2S	48	24	1 3/8	1/2	5/8		12	13 1/4	1	7 1/2	6 1/2	3 1/4	19 1/2	39													8.0
2M	48	24	1 3/8	1/2	5/8		12	13 1/4	1	7 1/2	6 1/2	3 1/4	19 1/2	39													8.0
3	60	30	1 3/8	1/2	5/8		15	16 1/4	1 1/4	9 1/4	8	4	24 3/8	48 3/4													12.5
4	60	30	1 3/8	1/2	5/8		15	16 1/4	1 1/4	9 1/4	8	4	24 3/8	48 3/4													12.5
5	60	30	1 3/8	1/2	5/8		15	16 1/4	1 1/4	9 1/4	8	4	24 3/8	48 3/4													12.5

STANDARD SIGN
W01-6

WISCONSIN DEPT OF TRANSPORTATION

APPROVED Matthew R Rauch
for State Traffic Engineer

DATE 11/18/13 PLATE NO. W01-6.1

PROJECT NO:	HWY:	COUNTY:		SHEET NO:	E

FILE NAME : C:\CAEfiles\Projects\tr_stdplate\W016.DGN PLOT DATE : 28-FEB-2014 11:37 PLOT BY : mscj9h PLOT NAME : PLOT SCALE : 5.837526:1.000000 WISDOT/CADDS SHEET 42

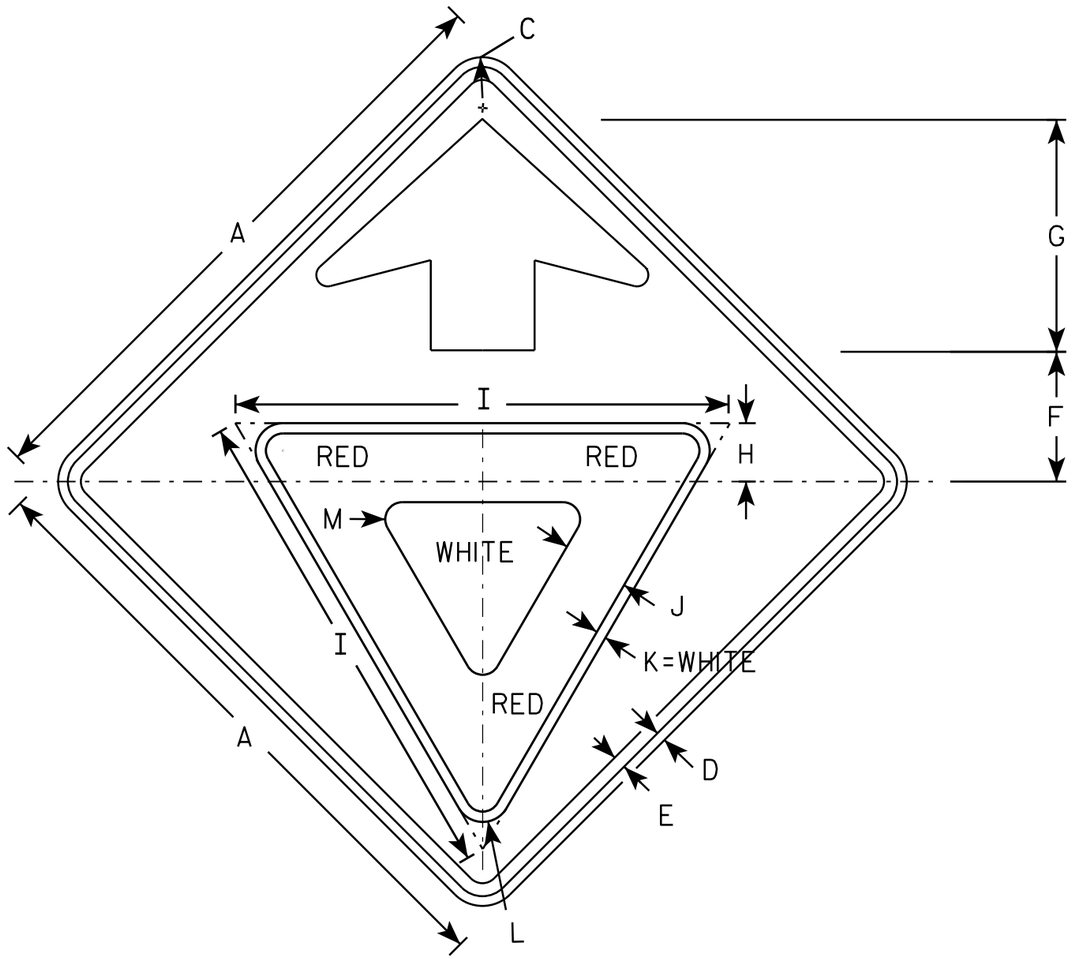

W03-2

NOTES

1. All Signs Type II - Type F Reflective - reference WIS DOT Standard Specification for HIGHWAY and STRUCTURE CONSTRUCTION latest edition.
2. Color:
   Background - ORANGE
   Arrow & Border - BLACK
   Yield Symbol - WHITE BORDER ON RED BACKGROUND

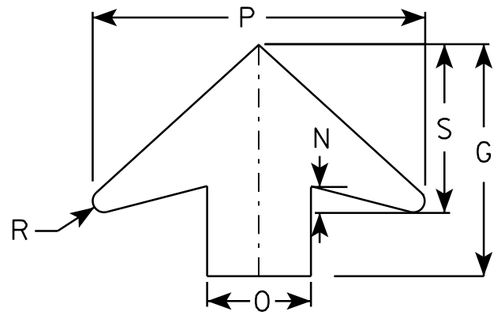

ARROW DETAIL

SIZE	A	B	C	D	E	F	G	H	I	J	K	L	M	N	O	P	Q	R	S	T	U	V	W	X	Y	Z	Area sq. ft.
1	36		1 5/8	5/8	3/4	7 1/2	13 1/2	3 3/8	28	3 3/4	5/8	1 1/2	1	1 5/8	6	19 1/4		5/8	9 3/4								9.0
2S	48		2 1/4	3/4	1	10	17 7/8	4 1/2	38	5	3/4	2 1/8	1 3/8	2	8	25 5/8		7/8	13								16.0
2M	48		2 1/4	3/4	1	10	17 7/8	4 1/2	38	5	3/4	2 1/8	1 3/8	2	8	25 5/8		7/8	13								16.0
3	48		2 1/4	3/4	1	10	17 7/8	4 1/2	38	5	3/4	2 1/8	1 3/8	2	8	25 5/8		7/8	13								16.0
4	48		2 1/4	3/4	1	10	17 7/8	4 1/2	38	5	3/4	2 1/8	1 3/8	2	8	25 5/8		7/8	13								16.0
5	48		2 1/4	3/4	1	10	17 7/8	4 1/2	38	5	3/4	2 1/8	1 3/8	2	8	25 5/8		7/8	13								16.0

STANDARD SIGN
W03-2

WISCONSIN DEPT OF TRANSPORTATION

APPROVED Matthew R Rauch
for State Traffic Engineer

DATE 11/20/13 PLATE NO. W03-2.1

PROJECT NO:

SHEET NO: E

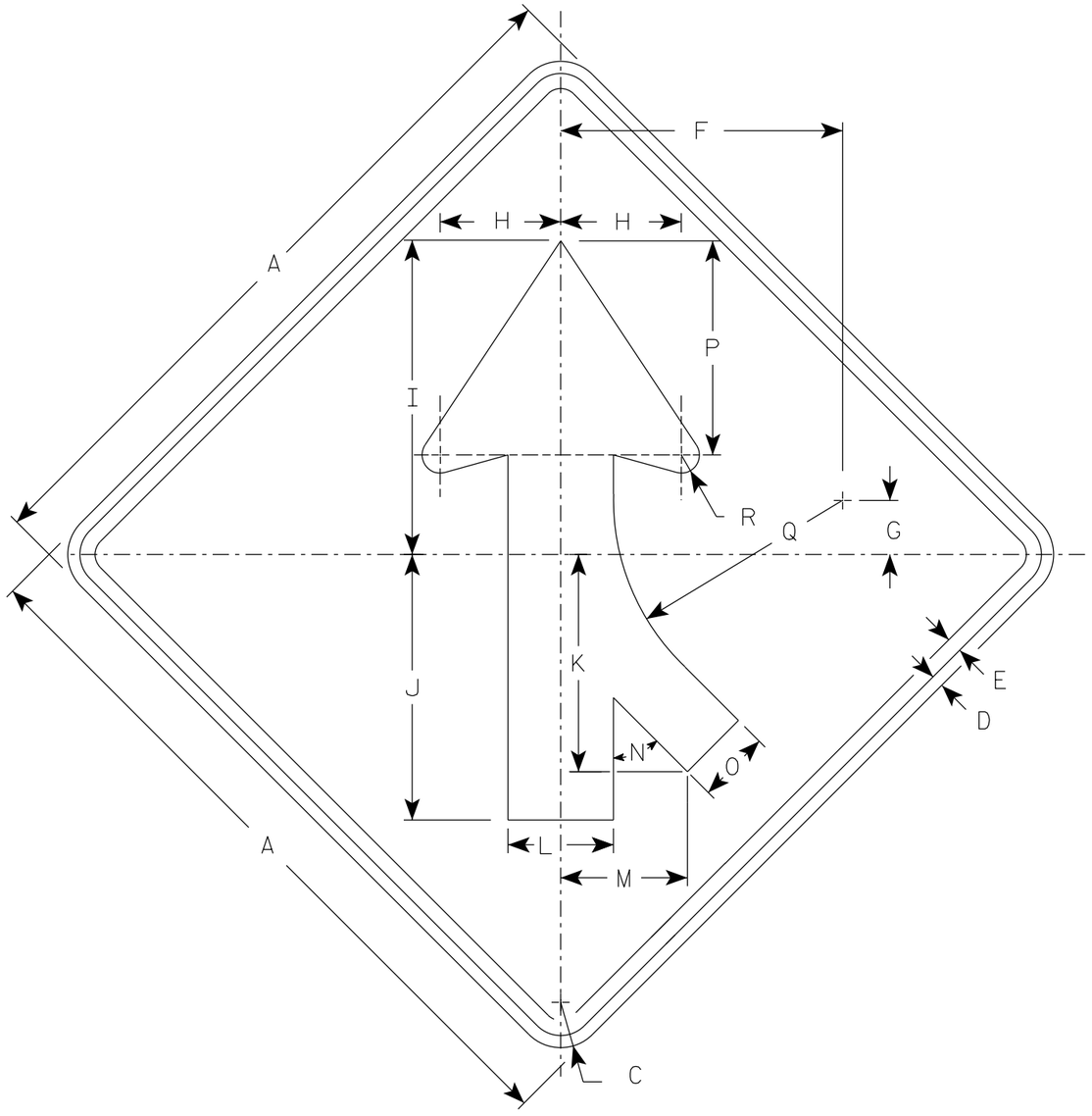

W04-1R

NOTES

1. Sign is Type II - Type F Reflective
2. Color:
   Background - Orange
   Message - Black
3. Corners may be square or rounded when base material is plywood but borders shall be rounded as shown. When base material is metal, the corners and borders shall be rounded.
4. W04-1L is the same as W04-1R except the arrow is reversed along the vertical centerline.

SIZE	A	B	C	D	E	F	G	H	I	J	K	L	M	N	O	P	Q	R	S	T	U	V	W	X	Y	Z	Area sq. ft.
1	36		1 5/8	5/8	3/4	14	2 3/4	6	15 3/4	13 1/4	10 1/4	5 1/4	6 3/8	45°	3 5/8	10 5/8	11 3/8	7/8									9.0
2S	48		2 1/4	3/4	1	18 3/4	3 5/8	8	20 1/2	17 1/2	14 3/8	7	8 3/8	45°	4 3/4	14 1/4	15 1/4	1 1/4									16.0
2M	48		2 1/4	3/4	1	18 3/4	3 5/8	8	20 1/2	17 1/2	14 3/8	7	8 3/8	45°	4 3/4	14 1/4	15 1/4	1 1/4									16.0
3	48		2 1/4	3/4	1	18 3/4	3 5/8	8	20 1/2	17 1/2	14 3/8	7	8 3/8	45°	4 3/4	14 1/4	15 1/4	1 1/4									16.0
4	48		2 1/4	3/4	1	18 3/4	3 5/8	8	20 1/2	17 1/2	14 3/8	7	8 3/8	45°	4 3/4	14 1/4	15 1/4	1 1/4									16.0
5	48		2 1/4	3/4	1	18 3/4	3 5/8	8	20 1/2	17 1/2	14 3/8	7	8 3/8	45°	4 3/4	14 1/4	15 1/4	1 1/4									16.0

STANDARD SIGN
W04-1

WISCONSIN DEPT OF TRANSPORTATION

APPROVED Matthew R Rauch
for State Traffic Engineer

DATE 3/31/2021 PLATE NO. W04-1.2

PROJECT NO: | HWY: | COUNTY: | SHEET NO: E

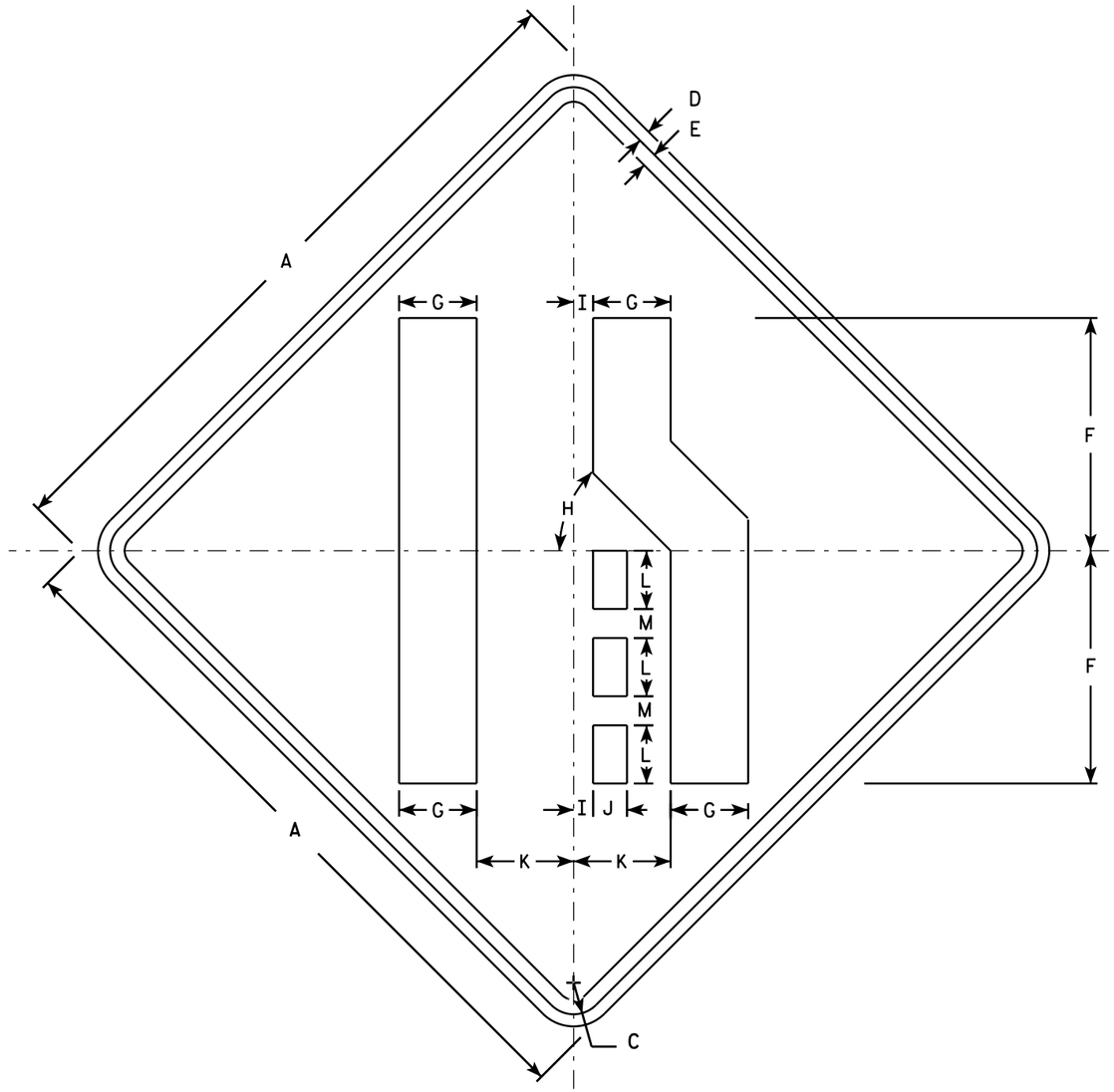

W04-2R

NOTES

1. Sign is Type II - Type F Reflective - reference WIS DOT Standard Specification for HIGHWAY and STRUCTURE CONSTRUCTION latest edition.
2. Color:
   Background - Orange
   Message - Black
3. Corners may be square or rounded when base material is plywood but borders shall be rounded as shown. When base material is metal, the corners and borders shall be rounded.
4. W04-2L is the same as W04-2R except the symbol is reversed along the vertical centerline.

SIZE	A	B	C	D	E	F	G	H	I	J	K	L	M	N	O	P	Q	R	S	T	U	V	W	X	Y	Z	Area sq. ft.
1	36		1 5/8	5/8	3/4	12	4	45°	1	1 3/4	5	3	1 1/2														9.0
2S	48		2 1/4	3/4	1	16	5 3/8	45°	1 1/4	2 3/8	6 3/4	4	2														16.0
2M	48		2 1/4	3/4	1	16	5 3/8	45°	1 1/4	2 3/8	6 3/4	4	2														16.0
3	48		2 1/4	3/4	1	16	5 3/8	45°	1 1/4	2 3/8	6 3/4	4	2														16.0
4	48		2 1/4	3/4	1	16	5 3/8	45°	1 1/4	2 3/8	6 3/4	4	2														16.0
5	48		2 1/4	3/4	1	16	5 3/8	45°	1 1/4	2 3/8	6 3/4	4	2														16.0

STANDARD SIGN
W04-2

WISCONSIN DEPT OF TRANSPORTATION

APPROVED Matthew R Rauch
for State Traffic Engineer

DATE 11/20/13 PLATE 595 W04-2.1

PROJECT NO:

SHEET NO: E

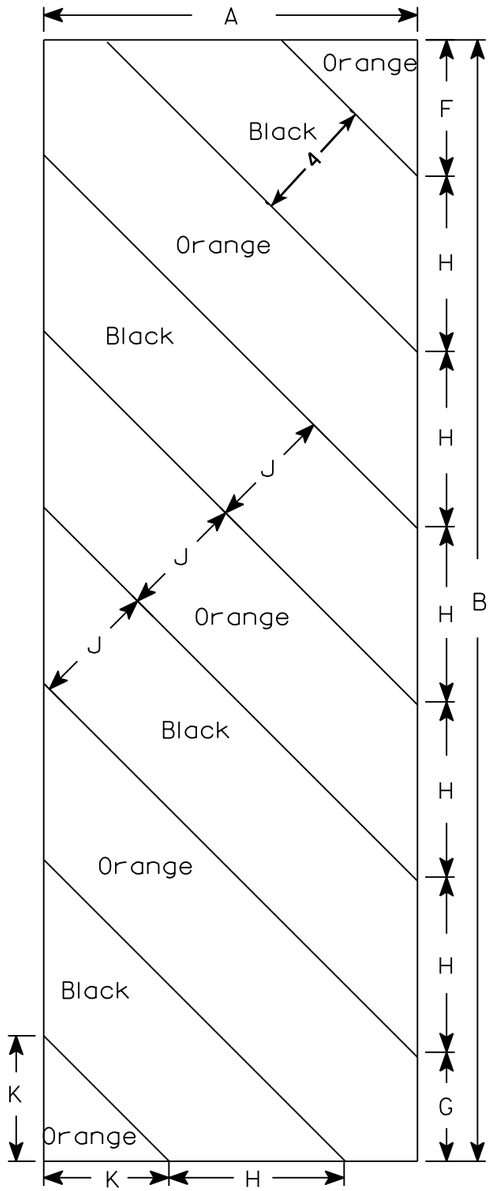

W05-52L

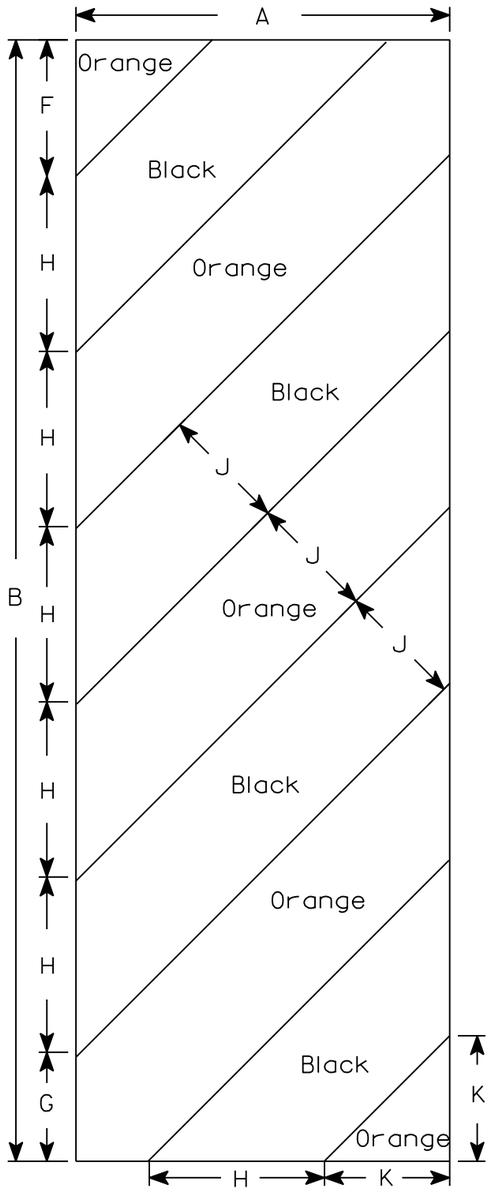

W05-52R

NOTES

1. Sign is Type II - Type F Reflective - reference WIS DOT Standard Specification for HIGHWAY and STRUCTURE CONSTRUCTION latest edition.
2. Color:
   Background - Orange
   Message - Black
3. Corners may be square or rounded when base material is plywood but borders shall be rounded as shown. When base material is metal, the corners and borders shall be rounded.
4. Alternate colors of stripes as shown.

SIZE	A	B	C	D	E	F	G	H	I	J	K	L	M	N	O	P	Q	R	S	T	U	V	W	X	Y	Z	Area sq. ft.
1																											
2S	12	36				4 3/8	3 1/2	5 5/8	45°	4	4																3.0
2M	12	36				4 3/8	3 1/2	5 5/8	45°	4	4																3.0
3	18	54				6	5 1/2	8 1/2	45°	6	6 9/16																6.75
4																											
5																											

STANDARD SIGN
W05-52L & W05-52R

WISCONSIN DEPT OF TRANSPORTATION

APPROVED Matthew R Rauch
for State Traffic Engineer

DATE 11/20/13 PLATE W05-52.1

PROJECT NO:	HWY:	COUNTY:		SHEET NO:	E

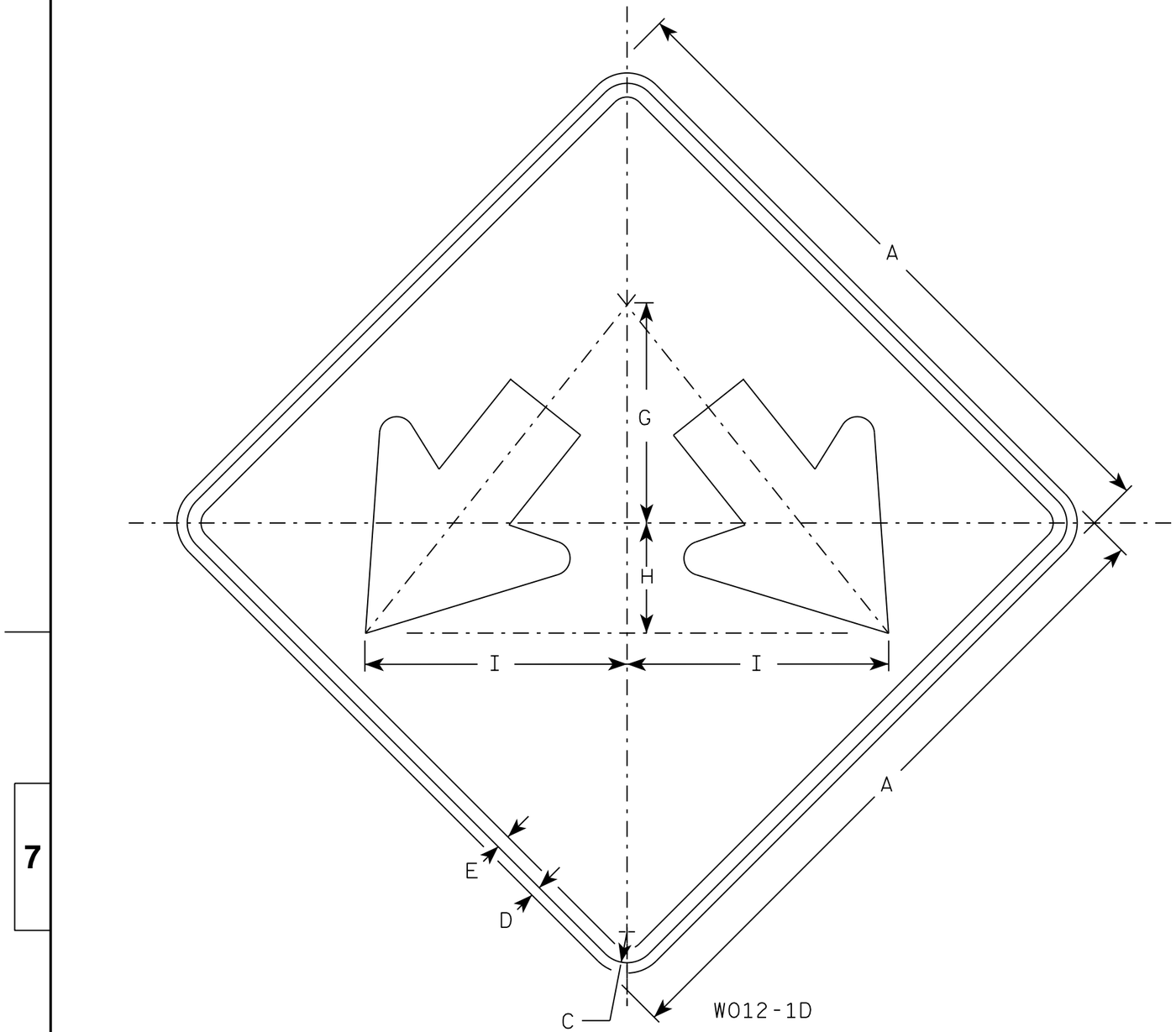

W012-1D

NOTES

1. Sign is Type II - Type F Reflective
2. Color:
   Background - Orange
   Message - Black
3. Corners may be square or rounded when base material is plywood but borders shall be rounded as shown. When base material is metal, the corners and borders shall be rounded.

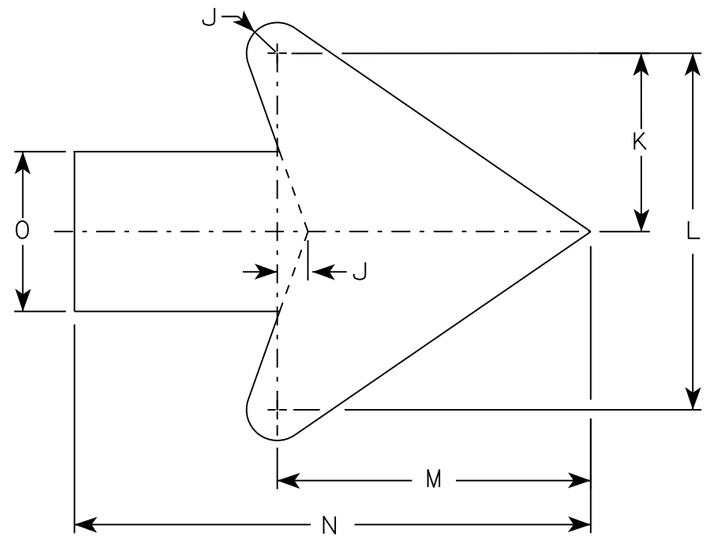

Arrow Detail

SIZE	A	B	C	D	E	F	G	H	I	J	K	L	M	N	O	P	Q	R	S	T	U	V	W	X	Y	Z	Area sq. ft.
1	24		1 1/8	1/2	3/8		8	4	9 1/2	3/8	3 3/8	7 1/4	6 3/8	10 3/8	3 1/4												4.0
2S	24		1 1/8	1/2	3/8		8	4	9 1/2	3/8	3 3/8	7 1/4	6 3/8	10 3/8	3 1/4												4.0
2M	24		1 1/8	1/2	3/8		8	4	9 1/2	3/8	3 3/8	7 1/4	6 3/8	10 3/8	3 1/4												4.0
3	30		1 3/8	1/2	5/8		10	5	11 7/8	3/4	4 1/2	9	7 7/8	13	4												6.25
4	36		1 3/8	1/2	5/8		12	6	14 1/4	1	5 1/2	10 7/8	9 5/8	15 3/4	4 3/4												9.0
5	36		1 3/8	1/2	5/8		12	6	14 1/4	1	5 1/2	10 7/8	9 5/8	15 3/4	4 3/4												9.0

STANDARD SIGN
W012-1D

WISCONSIN DEPT OF TRANSPORTATION

APPROVED Matthew R Rauch
for State Traffic Engineer

DATE 7/28/16 PLATE NO W012-1D.2

PROJECT NO:	HWY:	COUNTY:		SHEET NO:	E

FILE NAME : C:\CADfiles\Projects\tr_stdplate\W0121D.DGN PLOT DATE : 11-AUG-2016 11:28 PLOT BY : $$ plotuser $$ PLOT NAME : PLOT SCALE : 4.621375:1.000000

NOTES

1. Signs are Type I - Type SH Reflective
2. Color:
   Background - Green
   Message - White
3. Message Series - E Modified except all Cap Words Series E

25-01

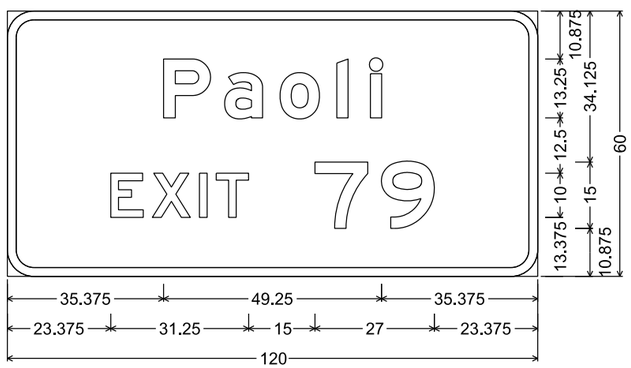

E3-1; 6.000" Radius, 2.000" Border

12-01

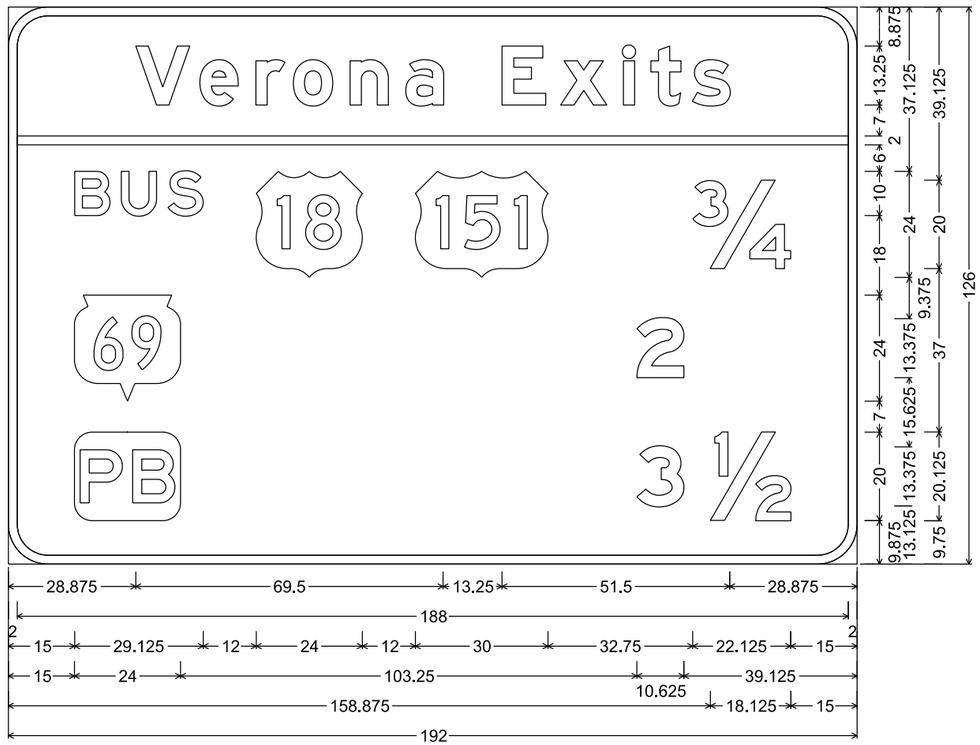

E8-1A; 9.000" Radius, 2.000" Border

STATE PROJECT NUMBER
1204-08-65

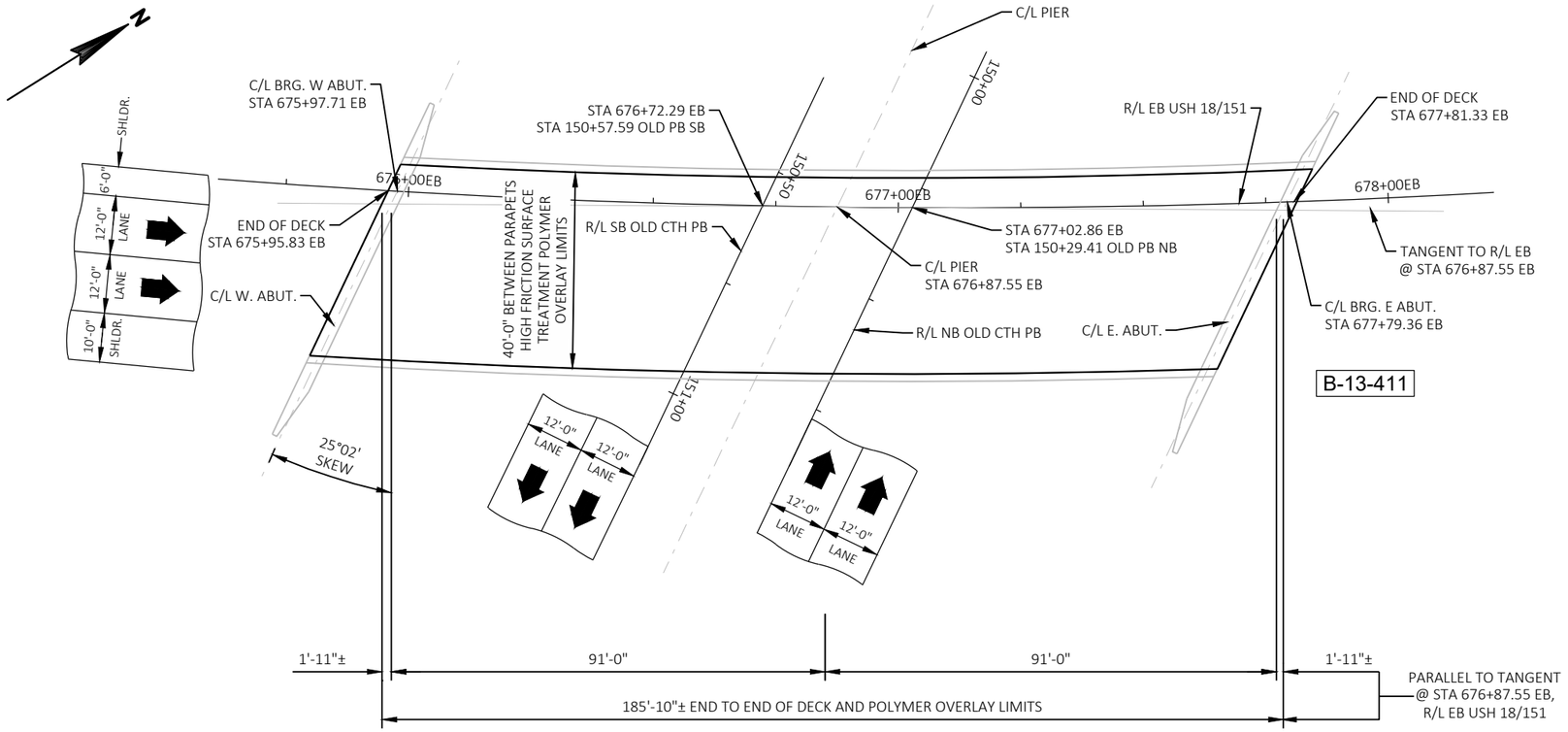

PLAN

TOP OF DECK SHOWN
(POLYMER OVERLAY)

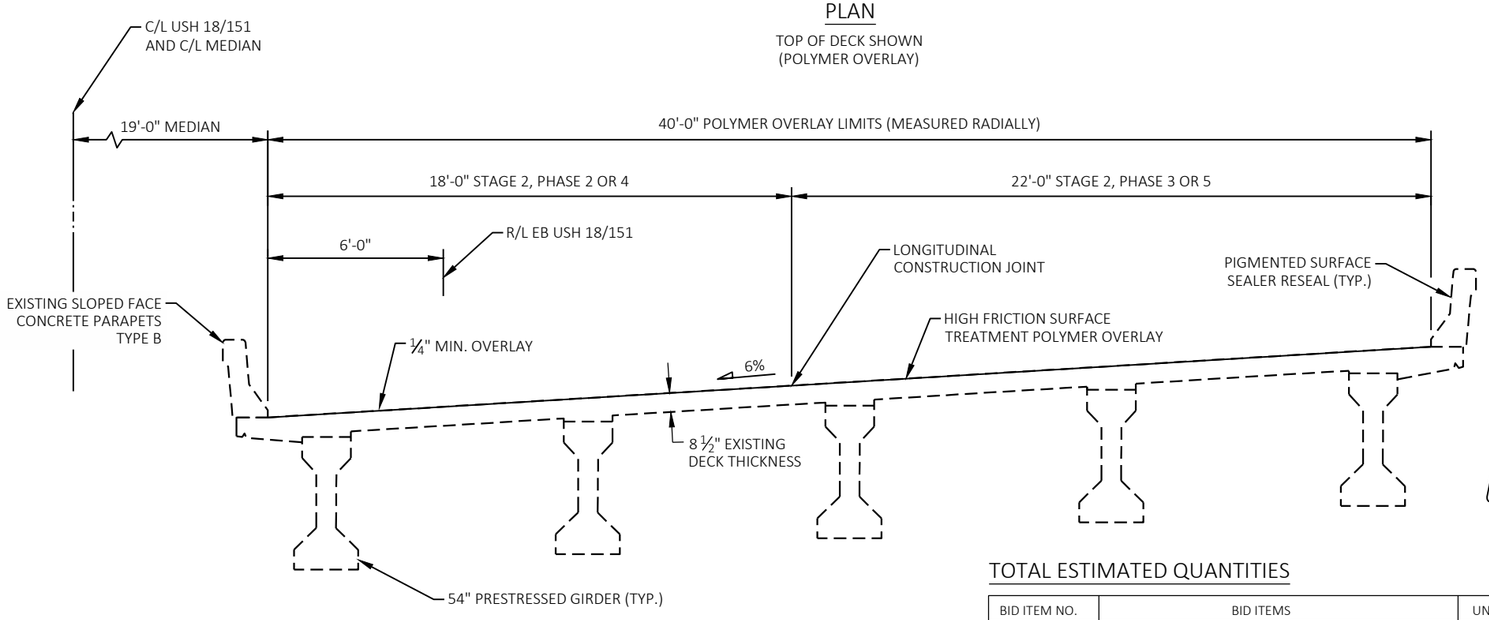

TYPICAL DECK SECTION

LOOKING EAST

TOTAL ESTIMATED QUANTITIES

BID ITEM NO.	BID ITEMS	UNIT	TOTAL
502.3205	PIGMENTED SURFACE SEALER RESEAL	SY	149
509.0301	PREPARATION DECKS TYPE 1	SY	7
509.0310.S	SAWING PAVEMENT DECK PREPARATION AREAS	LF	50
SPV.0035	RAPID SET DECK REPAIR	CY	0.6
SPV.0180	HIGH FRICTION SURFACE TREATMENT POLYMER OVERLAY	SY	824

DESIGN DATA

LIVE LOAD:
DESIGN LOADING: HS-20
INVENTORY RATING: HS-28
OPERATING RATING: HS-48
WISCONSIN STANDARD PERMIT VEHICLE (WIS-SPV) = 250 KIPS

STRUCTURE IS DESIGNED FOR A FUTURE WEARING SURFACE OF 20 POUNDS PER SQUARE FOOT.

TRAFFIC DATA

USH 18/151

A.A.D.T. = 28,020 (2023)
A.A.D.T. = 36,200 (2043)
RDS = 70 MPH

NOTES

DRAWINGS SHALL NOT BE SCALED.

SHOT BLASTING, DECK SURFACE PREPARATIONS AND TRANSITIONAL AREAS INCLUDED IN THE BID ITEM "POLYMER OVERLAY".

DIMENSIONS ARE BASED ON ORIGINAL STRUCTURE PLANS.

APPLY PIGMENTED SURFACE SEALER RESEAL TO TOP AND INSIDE FACES OF PARAPETS.

TRAFFIC WILL BE STAGED TO PLACE HIGH FRICTION SURFACE TREATMENT POLYMER OVERLAY. SEE ROADWAY PLANS FOR STAGING DETAILS.

PROPOSED WORK INCLUDES PLACEMENT OF HIGH FRICTION SURFACE TREATMENT POLYMER OVERLAY ON BRIDGE DECK SURFACE. HIGH FRICTION SURFACE TREATMENT POLYMER OVERLAY IS NOT APPLIED TO APPROACH SLABS.

"PREPARATION DECKS TYPE 1" AREAS ARE ON THE WEST END OF DECK IN THE LEFT LANE. LOCATIONS AND EXTENTS SHALL BE DETERMINED BY THE ENGINEER AND SHALL BE FILLED WITH "RAPID SET DECK REPAIR".

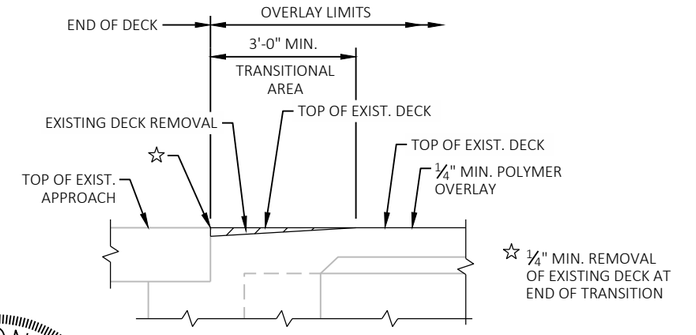

SECTION THRU ABUTMENT TRANSITIONAL AREA OF DECK

(REMOVAL AND OVERLAY THICKNESS NOT TO SCALE)

WISCONSIN
CHAD D. HALVERSON
E-34364
MADISON, WI
PROFESSIONAL ENGINEER

December 02, 2022

LIST OF DRAWINGS

1. HIGH FRICTION POLYMER OVERLAY

STRUCTURE DESIGN CONTACTS
BUREAU OF STRUCTURES:
AARON BONK (608) 261-0261
CONSULTANT:
CHAD HALVERSON (608) 663-1218

NO.	DATE	REVISION	BY

KL Engineering
[A] Better Experience

STATE OF WISCONSIN
DEPARTMENT OF TRANSPORTATION

ACCEPTED SDR 12/05/22
CHIEF STRUCTURES DESIGN ENGINEER DATE

STRUCTURE B-13-411

EB USH 18/151 OVER CTH PB

COUNTY	TOWN/~~CITY/VILLAGE~~
DANE	VERONA

DESIGN SPEC. REHABILITATION N/A

DESIGNED BY	DESIGN CK'D.	DRAWN BY	PLANS CK'D.
CDH	CAH	STD	CDH

HIGH FRICTION POLYMER OVERLAY

SHEET 1 OF 1
599

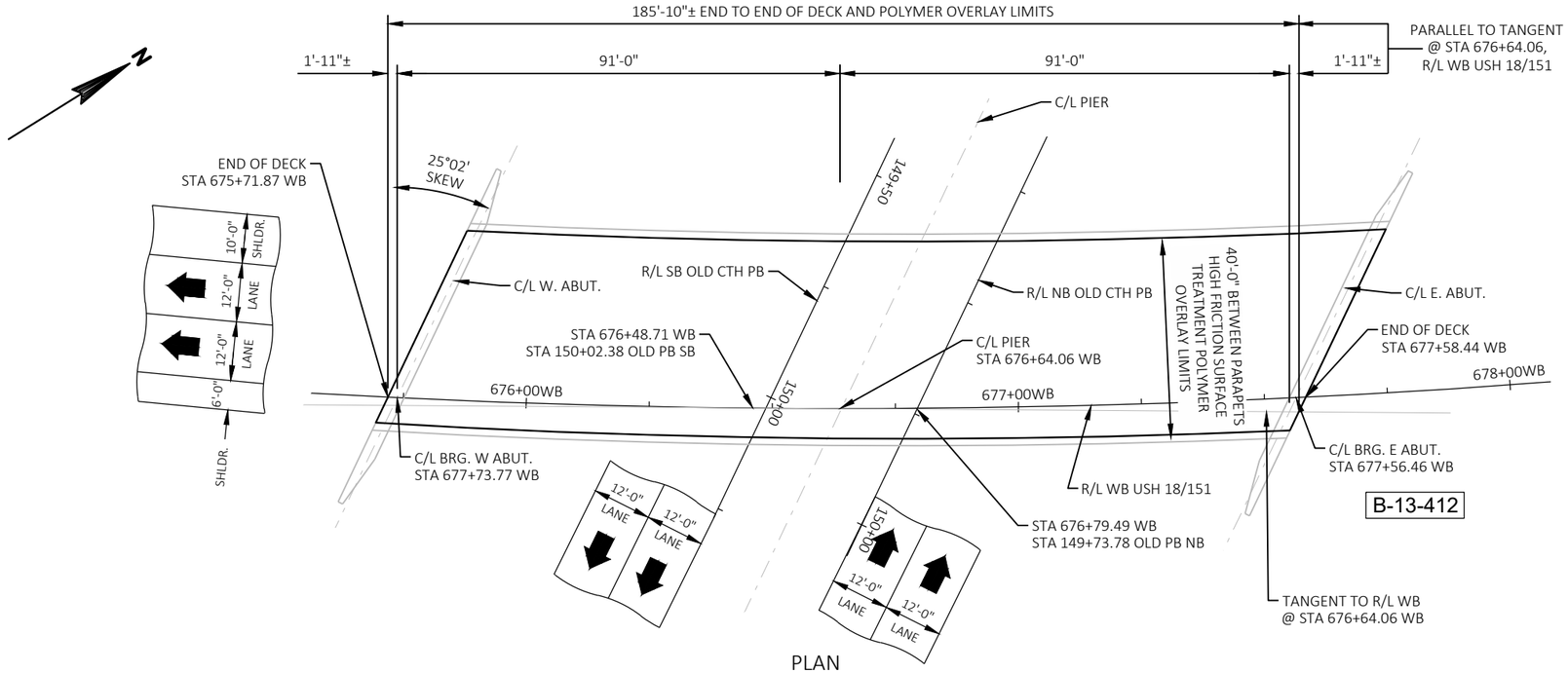

PLAN

TOP OF DECK SHOWN
(POLYMER OVERLAY)

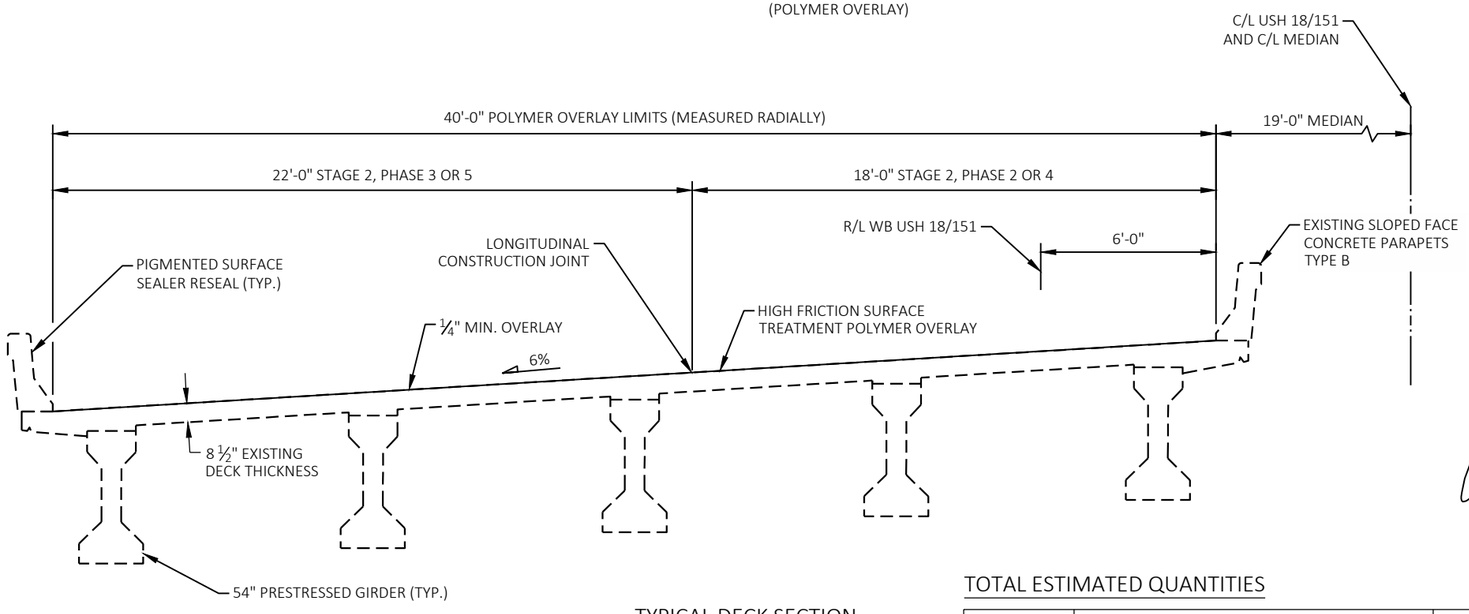

TYPICAL DECK SECTION

LOOKING EAST

TOTAL ESTIMATED QUANTITIES

BID ITEM NO.	BID ITEMS	UNIT	TOTAL
502.3205	PIGMENTED SURFACE SEALER RESEAL	SY	147
509.0301	PREPARATION DECKS TYPE 1	SY	18
509.0310.S	SAWING PAVEMENT DECK PREPARATION AREAS	LF	80
SPV.0035	RAPID SET DECK REPAIR	CY	1.5
SPV.0180	HIGH FRICTION SURFACE TREATMENT POLYMER OVERLAY	SY	816

DESIGN DATA

LIVE LOAD:
DESIGN LOADING: HS-20
INVENTORY RATING: HS-28
OPERATING RATING: HS-48
WISCONSIN STANDARD PERMIT VEHICLE (WIS-SPV) = 250 KIPS

STRUCTURE IS DESIGNED FOR A FUTURE WEARING SURFACE OF 20 POUNDS PER SQUARE FOOT.

TRAFFIC DATA

USH 18/151

A.A.D.T. = 28,020 (2023)
A.A.D.T. = 36,200 (2043)
RDS = 70 MPH

NOTES

DRAWINGS SHALL NOT BE SCALED.

SHOT BLASTING, DECK SURFACE PREPARATIONS AND TRANSITIONAL AREAS INCLUDED IN THE BID ITEM "POLYMER OVERLAY".

DIMENSIONS ARE BASED ON ORIGINAL STRUCTURE PLANS.

APPLY PIGMENTED SURFACE SEALER RESEAL TO TOP AND INSIDE FACES OF PARAPETS.

TRAFFIC WILL BE STAGED TO PLACE HIGH FRICTION SURFACE TREATMENT POLYMER OVERLAY. SEE ROADWAY PLANS FOR STAGING DETAILS.

PROPOSED WORK INCLUDES PLACEMENT OF HIGH FRICTION SURFACE TREATMENT POLYMER OVERLAY ON BRIDGE DECK SURFACE. HIGH FRICTION SURFACE TREATMENT POLYMER OVERLAY IS NOT APPLIED TO APPROACH SLABS.

"PREPARATION DECKS TYPE 1" AREAS ARE ON THE EAST END OF DECK. LOCATIONS AND EXTENTS SHALL BE DETERMINED BY THE ENGINEER AND SHALL BE FILLED WITH "RAPID SET DECK REPAIR".

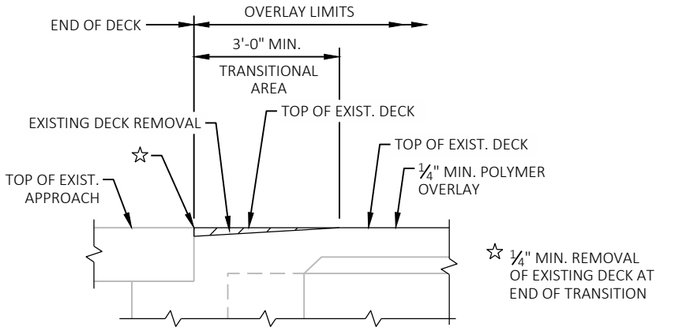

SECTION THRU ABUTMENT TRANSITIONAL AREA OF DECK

(REMOVAL AND OVERLAY THICKNESS NOT TO SCALE)

WISCONSIN
CHAD D. HALVERSON
E-34364
MADISON, WI
PROFESSIONAL ENGINEER

December 02, 2022

LIST OF DRAWINGS

1. HIGH FRICTION POLYMER OVERLAY

STRUCTURE DESIGN CONTACTS
BUREAU OF STRUCTURES:
AARON BONK (608) 261-0261
CONSULTANT:
CHAD HALVERSON (608) 663-1218

STATE PROJECT NUMBER
1204-08-65

NO.	DATE	REVISION	BY

KL Engineering
[A] Better Experience

STATE OF WISCONSIN
DEPARTMENT OF TRANSPORTATION

ACCEPTED SDR 12/05/22
CHIEF STRUCTURES DESIGN ENGINEER DATE

STRUCTURE B-13-412

WB USH 18/151 OVER CTH PB

COUNTY	TOWN ~~CITY/VILLAGE~~
DANE	VERONA

DESIGN SPEC. REHABILITATION N/A

DESIGNED BY	DESIGN CK'D.	DRAWN BY	PLANS CK'D.
CDH	CAH	STD	CDH

HIGH FRICTION POLYMER OVERLAY

SHEET 1 OF 1
600

DIVISION 1 -- TEMPORARY WIDENING								
		AREA (SF)		INCREMENTAL VOL (CY) (UNADJUSTED)		CUMULATIVE VOL (CY)		
STATION	DISTANCE	CUT	EILL	CUT	EILL	CUT 1.00	EXPANDED EILL 1.00	MASS ORDINATE
678+02.301	0.00	15.79	-	-	-	-	-	0
679+00	97.70	11.45	-	49	-	49	-	49
680+00	100.00	10.10	-	40	-	89	-	89
681+00	100.00	7.19	-	32	-	121	-	121
682+00	100.00	6.83	0.71	26	1	147	1	146
683+00	100.00	6.56	1.17	25	3	172	4	168
684+00	100.00	7.93	0.65	27	3	199	7	192
685+00	100.00	10.85	2.82	35	6	234	13	221
686+00	100.00	8.14	4.05	35	13	269	26	243
687+00	100.00	7.86	6.27	30	19	299	45	254
687+82.167	82.17	12.89	2.68	32	14	331	59	272

9

9

PROJECT NO: 1204-08-65 | HWY: USH 18/151 | COUNTY: DANE | EARTHWORK DATA | SHEET 601 | E

DIVISION -- 2 (1)								
		AREA (SF)		INCREMENTAL VOL (CY) (UNADJUSTED)		CUMULATIVE VOL (CY)		
STATION	DISTANCE	CUT	FILL	CUT	FILL	CUT 1.00	EXPANDED FILL 1.00	MASS ORDINATE
338+83.929	0.00	-	-	-	-	-	-	0
338+90.86	6.93	2.89	-	-	-	-	-	0
339+00	9.14	3.02	-	1	-	1	-	1
339+70.633	70.63	3.17	1.11	8	1	9	1	8
339+79.282	8.65	3.34	1.27	1	-	10	1	9
339+99.281	20.00	3.96	2.01	3	1	13	2	11
340+00	0.72	3.97	2.01	-	-	13	2	11
340+11.758	11.76	4.27	1.67	2	1	15	3	12
340+24.264	12.51	4.64	0.79	2	1	17	4	13
340+36.741	12.48	5.00	0.33	2	-	19	4	15
340+49.246	12.51	5.38	-	2	-	21	4	17
340+61.723	12.48	5.09	0.19	2	-	23	4	19
341+00	38.28	3.91	0.99	6	1	29	5	24
342+00	100.00	4.26	2.18	15	6	44	11	33
342+75	75.00	7.56	0.52	16	4	60	15	45

DIVISION -- 2 (2)								
		AREA (SE)		INCREMENTAL VOL (CY) (UNADJUSTED)		CUMULATIVE VOL (CY)		
STATION	DISTANCE	CUT	EILL	CUT	EILL	CUT 1.00	EXPANDED FILL 1.00	MASS ORDINATE
345+03.897	0.00	7.49	2.52	-	-	-	-	0
346+00	96.10	5.93	2.57	24	9	24	9	15
346+66.996	67.00	5.26	9.33	14	15	38	24	14
346+91.98	24.98	5.32	13.34	5	10	43	34	9
347+00	8.02	5.32	14.76	2	4	45	38	7
347+02.161	2.16	5.33	15.24	-	1	45	39	6
347+16.96	14.80	5.74	18.35	3	9	48	48	0
347+27.143	10.18	5.96	19.58	2	7	50	55	-5
347+52.077	24.93	6.23	26.37	6	21	56	76	-20
347+56.341	4.26	5.83	24.11	1	4	57	80	-23
348+00	43.66	3.28	17.48	7	34	64	114	-50
348+25	25.00	2.71	9.50	3	12	67	126	-59
348+71.62	46.62	2.79	0.34	5	8	72	134	-62

9

9

PROJECT NO: 1204-08-65 | HWY: USH 18/151 | COUNTY: DANE | EARTHWORK DATA | SHEET 602 | E

FILE NAME : G:\WDOTSW\20007-000 USH 18\CIVIL 3D\SHEETSPLAN\090101_EW.DWG
LAYOUT NAME - 1

PLOT DATE : 11/30/2022 9:24 AM PLOT BY : ERIC ANDRITSCH PLOT NAME : PLOT SCALE : 1" = 1'

DIVISION -- 2 (3)								
		AREA (SF)		INCREMENTAL VOL (CY) (UNADJUSTED)		CUMULATIVE VOL (CY)		
STATION	DISTANCF	CUT	FILL	CUT	FILL	CUT 1.00	EXPANDED FILL 1.00	MASS ORDINATF
483+59.321	0.00	6.71	5.69	-	-	-	-	0
483+75	15.68	-	-	2	2	2	2	0
484+00	25.00	-	-	-	-	2	2	0
484+39.368	39.37	-	-	-	-	2	2	0
484+78.396	39.03	-	-	-	-	2	2	0
485+00	21.60	-	-	-	-	2	2	0
485+03.379	3.38	-	-	-	-	2	2	0
485+16.278	12.90	-	-	-	-	2	2	0
485+28.361	12.08	-	-	-	-	2	2	0
485+41.129	12.77	-	-	-	-	2	2	0
485+66.281	25.15	-	-	-	-	2	2	0
486+00	33.72	-	-	-	-	2	2	0
486+31.684	31.68	-	-	-	-	2	2	0
487+00	68.32	-	-	-	-	2	2	0
487+71.668	71.67	-	-	-	-	2	2	0
487+91.28	19.61	-	-	-	-	2	2	0

DIVISION -- 2 (4)								
		AREA (SE)		INCREMENTAL VOL (CY) (UNADJUSTED)		CUMULATIVE VOL (CY)		
STATION	DISTANCE	CUT	EILL	CUT	FILL	CUT 1.00	EXPANDED EILL 1.00	MASS ORDINATE
490+18.393	0.00	25.25	-	-	-	-	-	0
491+00	81.61	25.68	2.60	77	4	77	4	73
491+66.175	66.18	26.58	2.78	64	7	141	11	130
491+91.157	24.98	17.88	5.52	21	4	162	15	147
492+00	8.84	18.35	6.22	6	2	168	17	151
492+16.14	16.14	10.79	-	9	2	177	19	158
493+00	83.86	9.60	7.51	32	12	209	31	178

DIVISION -- 2 (5)								
		AREA (SF)		INCREMENTAL VOL (CY) (UNADJUSTED)		CUMULATIVE VOL (CY)		
STATION	DISTANCE	CUT	FILL	CUT	FILL	CUT 1.00	EXPANDED FILL 1.00	MASS ORDINATE
581+00	0.00	7.91	7.32	-	-	-	-	0
581+30.39	30.39	8.79	15.51	9	13	9	13	-4
581+33.302	2.91	8.88	15.65	1	2	10	15	-5
581+43.88	10.58	8.70	17.40	3	6	13	21	-8
581+68.895	25.01	9.94	20.27	9	17	22	38	-16
581+73.302	4.41	10.19	21.10	2	3	24	41	-17
581+93.875	20.57	10.07	24.51	8	17	32	58	-26
581+98.285	4.41	10.39	25.90	2	4	34	62	-28
582+00	1.72	10.71	26.29	1	2	35	64	-29
582+23.27	23.27	11.99	26.87	10	23	45	87	-42
582+28	4.73	12.77	26.79	2	5	47	92	-45
583+00	72.00	20.67	3.28	45	40	92	132	-40
584+00	100.00	49.02	-	129	6	221	138	83
584+21.394	21.39	23.34	1.95	29	1	250	139	111

DIVISION -- 2 (6)								
		AREA (SF)		INCREMENTAL VOL (CY) (UNADJUSTED)		CUMULATIVE VOL (CY)		
STATION	DISTANCE	CUT	FILL	CUT	FILL	CUT 1.00	EXPANDED FILL 1.00	MASS ORDINATE
587+19.536	0.00	-	-	-	-	-	-	0
588+00	80.46	8.92	0.75	13	1	13	1	12
589+00	100.00	5.82	2.71	27	6	40	7	33
589+32.184	32.18	4.80	6.14	6	5	46	12	34
589+40.369	8.18	4.70	6.78	1	2	47	14	33
589+57.23	16.86	4.53	7.20	3	4	50	18	32
589+65.351	8.12	4.44	8.11	1	2	51	20	31
589+82.277	16.93	4.31	10.10	3	6	54	26	28
589+90.333	8.06	4.30	9.40	1	3	55	29	26
590+00	9.67	4.10	8.85	2	3	57	32	25
590+30.333	30.33	3.89	9.08	4	10	61	42	19
590+89.992	59.66	3.28	5.24	8	16	69	58	11

DIVISION -- 2 (7)								
		AREA (SF)		INCREMENTAL VOL (CY) (UNADJUSTED)		CUMULATIVE VOL (CY)		
STATION	DISTANCE	CUT	FILL	CUT	FILL	CUT 1.00	EXPANDED FILL 1.00	MASS ORDINATE
587+57.273	0.00	25.58	0.26	-	-	-	-	0
588+00	42.73	22.92	0.79	38	1	38	1	37
589+00	100.00	13.75	2.71	68	6	106	7	99
590+00	100.00	9.00	9.37	42	22	148	29	119

DIVISION -- 2 (8)								
		AREA (SF)		INCREMENTAL VOL (CY) (UNADJUSTED)		CUMULATIVE VOL (CY)		
STATION	DISTANCE	CUT	EILL	CUT	FILL	CUT 1.00	EXPANDED FILL 1.00	MASS ORDINATE
671+45.216	0.00	6.25	-	-	-	-	-	0
672+00	54.78	5.33	0.60	12	1	12	1	11
672+19.356	19.36	5.63	0.40	4	-	16	1	15
672+60.454	41.10	6.09	0.25	9	-	25	1	24
672+85.54	25.09	3.75	0.14	5	-	30	1	29
672+96.655	11.12	3.63	-	2	-	32	1	31
673+00	3.35	3.59	-	-	-	32	1	31
673+00	0.00	3.59	-	-	-	32	1	31
673+10.144	10.14	3.41	-	1	-	33	1	32
673+33.421	23.28	3.88	-	3	-	36	1	35
673+57.575	24.15	4.97	-	4	-	40	1	39
673+82.091	24.52	4.67	-	4	-	44	1	43
674+00	17.91	4.29	-	3	-	47	1	46
675+00	100.00	9.50	-	26	-	73	1	72
675+50	50.00	-	-	9	-	82	1	81
675+70.139	20.14	-	-	-	-	82	1	81

9

9

PROJECT NO: 1204-08-65	HWY: USH 18/151	COUNTY: DANE	EARTHWORK DATA	SHEET 604	E

DIVISION -- 2 (9)

STATION	DISTANCE	AREA (SE) CUT	AREA (SE) FILL	INCREMENTAL VOL (CY) (UNADJUSTED) CUT	INCREMENTAL VOL (CY) (UNADJUSTED) FILL	CUMULATIVE VOL (CY) CUT 1.00	CUMULATIVE VOL (CY) EXPANDED FILL 1.00	MASS ORDINATE
671+45.216	0.00	9.08	2.27	-	-	-	-	0
672+00	54.78	3.80	5.75	13	8	13	8	5
672+19.356	19.36	3.08	6.63	2	4	15	12	3
672+60.454	41.10	2.26	6.57	4	10	19	22	-3
672+85.54	25.09	3.33	6.64	3	6	22	28	-6
672+96.655	11.12	3.58	6.77	1	3	23	31	-8
673+00	3.35	3.29	7.57	-	1	23	32	-9
673+00	0.00	3.29	7.57	-	-	23	32	-9
673+10.144	10.14	4.14	6.46	1	3	24	35	-11
673+33.421	23.28	3.85	7.65	3	6	27	41	-14
673+57.575	24.15	5.10	6.16	4	6	31	47	-16
673+82.091	24.52	6.12	5.43	5	5	36	52	-16
674+00	17.91	6.48	4.80	4	3	40	55	-15
675+00	100.00	-	-	12	9	52	64	-12
675+50	50.00	-	-	-	-	52	64	-12
675+70.139	20.14	-	-	-	-	52	64	-12

DIVISION -- 2 (10)

STATION	DISTANCE	AREA (SF) CUT	AREA (SF) FILL	INCREMENTAL VOL (CY) (UNADJUSTED) CUT	INCREMENTAL VOL (CY) (UNADJUSTED) FILL	CUMULATIVE VOL (CY) CUT 1.00	CUMULATIVE VOL (CY) EXPANDED FILL 1.00	MASS ORDINATE
674+00	0.00	12.53	16.18	-	-	-	-	0
674+54.794	54.79	28.21	7.08	41	24	41	24	17
675+00	45.21	22.42	8.18	42	13	83	37	46
675+50	50.00	-	-	21	8	104	45	59

DIVISION -- 2 (11)

STATION	DISTANCE	ARFA (SF) CUT	ARFA (SF) FILL	INCRFMFNTAL VOL (CY) (UNADJUSTFD) CUT	INCRFMFNTAL VOL (CY) (UNADJUSTFD) FILL	CUMULATIVE VOL (CY) CUT 1.00	CUMULATIVE VOL (CY) FXPANDFD FILL 1.00	MASS ORDINATF
680+00	0.00	50.36	-	-	-	-	-	0
681+00	100.00	53.96	-	193	-	193	-	193
682+00	100.00	53.91	-	200	-	393	-	393
683+00	100.00	51.20	-	195	-	588	-	588
684+00	100.00	48.52	-	185	-	773	-	773
684+34.689	34.69	48.98	-	63	-	836	-	836
684+66.04	31.35	51.36	-	58	-	894	-	894
685+00	33.96	51.77	-	65	-	959	-	959
685+07.51	7.51	51.51	-	14	-	973	-	973
685+32.669	25.16	49.34	-	47	-	1,020	-	1,020
685+57.81	25.14	47.98	-	45	-	1,065	-	1,065
686+00	42.19	48.08	-	75	-	1,140	-	1,140
687+00	100.00	44.91	-	172	-	1,312	-	1,312
687+79.215	79.21	32.60	0.18	114	-	1,426	-	1,426

DIVISION -- 2 (12)

STATION	DISTANCE	AREA (SF) CUT	AREA (SF) FILL	INCREMENTAL VOL (CY) (UNADJUSTED) CUT	INCREMENTAL VOL (CY) (UNADJUSTED) FILL	CUMULATIVE VOL (CY) CUT 1.00	CUMULATIVE VOL (CY) EXPANDED FILL 1.00	MASS ORDINATE
683+60.702	0.00	19.93	35.64	-	-	-	-	0
683+67.334	6.63	19.70	31.76	5	8	5	8	-3
685+00	132.67	18.04	29.08	93	149	98	157	-59
686+00	100.00	17.11	28.12	65	106	163	263	-100
687+00	100.00	14.82	23.35	59	95	222	358	-136
688+00	100.00	2.40	4.06	32	51	254	409	-155
689+40.132	61.27	2.30	4.32	5	10	259	419	-160
689+65.114	24.98	2.69	4.79	2	4	261	423	-162
689+90.097	24.98	1.94	13.57	2	8	263	431	-168
690+00	9.90	2.48	13.01	1	5	264	436	-172
690+35.095	35.10	2.73	9.23	3	14	267	450	-183
690+91.779	56.68	4.34	35.02	7	46	274	496	-222
690+99.157	7.38	4.50	30.99	1	9	275	505	-230

DIVISION -- 2 (13)

STATION	DISTANCE	AREA (SF) CUT	AREA (SF) EILL	INCREMENTAL VOL (CY) (UNADJUSTED) CUT	INCREMENTAL VOL (CY) (UNADJUSTED) EILL	CUMULATIVE VOL (CY) CUT 1.00	CUMULATIVE VOL (CY) EXPANDED FILL 1.00	MASS ORDINATE
693+24.15	0.00	7.65	-	-	-	-	-	0
694+00	75.85	6.69	-	20	-	20	-	20
695+00	100.00	3.96	-	20	-	40	-	40
695+24.611	24.61	3.69	0.29	3	-	43	-	43
695+33.336	8.73	3.68	0.58	1	-	44	-	44
695+49.594	16.26	3.34	0.62	2	-	46	-	46
695+58.318	8.72	3.26	0.70	1	-	47	-	47
695+74.574	16.26	3.26	1.08	2	1	49	1	48
695+83.3	8.73	3.32	1.29	1	-	50	1	49
696+00	16.70	3.45	0.56	2	1	52	2	50
696+04.573	4.57	3.48	0.41	1	-	53	2	51
696+74.165	69.59	4.74	-	11	1	64	3	61

DIVISION -- 2 (14)

STATION	DISTANCE	AREA (SF) CUT	AREA (SF) EILL	INCREMENTAL VOL (CY) (UNADJUSTED) CUT	INCREMENTAL VOL (CY) (UNADJUSTED) EILL	CUMULATIVE VOL (CY) CUT 1.00	CUMULATIVE VOL (CY) EXPANDED EILL 1.00	MASS ORDINATE
719+31.025	0.00	11.10	-	-	-	-	-	0
719+75	43.97	7.76	-	15	-	15	-	15
720+00	25.00	9.63	-	8	-	23	-	23
720+93.978	93.98	6.28	0.24	28	-	51	-	51
721+00	6.02	6.18	0.17	1	-	52	-	52
721+18.96	18.96	5.88	-	4	-	56	-	56
721+41.066	22.11	5.27	0.31	5	-	61	-	61
721+45.555	4.49	5.12	0.38	1	-	62	-	62
721+66.048	20.49	4.65	0.62	4	-	66	-	66
721+91.03	24.98	3.41	4.61	4	2	70	2	68
722+00	8.97	3.01	5.04	1	2	71	4	67
722+39.389	39.39	2.79	5.66	4	8	75	12	63
723+00	60.61	3.15	-	7	6	82	18	64
723+10.909	10.91	3.21	-	1	-	83	18	65

DIVISION -- 2 (15)								
STATION	DISTANCE	AREA (SE)		INCREMENTAL VOL (CY) (UNADJUSTED)		CUMULATIVE VOL (CY)		
		CUT	EILL	CUT	FILL	CUT 1.00	EXPANDED EILL 1.00	MASS ORDINATE
746+34.426	0.00	-	-	-	-	-	-	0
747+00	124.37	6.06	-	14	-	14	-	14
748+00	100.00	4.87	1.98	20	4	34	4	30
748+25.459	25.46	4.33	1.70	4	2	38	6	32
748+50.441	24.98	3.85	3.37	4	2	42	8	34
748+75	24.56	3.87	6.58	4	5	46	13	33
749+00	25.00	3.91	4.71	4	5	50	18	32
750+00	100.00	-	-	7	9	57	27	30
750+58.551	58.55	-	-	-	-	57	27	30
750+83.533	24.98	-	-	-	-	57	27	30
751+00	16.47	-	-	-	-	57	27	30
751+08.515	8.52	-	-	-	-	57	27	30
751+50	41.48	-	-	-	-	57	27	30
752+00	50.00	-	-	-	-	57	27	30
752+30.973	30.97	-	-	-	-	57	27	30

DIVISION -- 2 (16)								
STATION	DISTANCE	AREA (SE)		INCREMENTAL VOL (CY) (UNADJUSTED)		CUMULATIVE VOL (CY)		
		CUT	FILL	CUT	EILL	CUT 1.00	EXPANDED EILL 1.00	MASS ORDINATE
818+06.364	0.00	-	-	-	-	-	-	0
819+00	93.64	-	-	-	-	-	-	0
819+01.785	1.79	-	-	-	-	-	-	0
819+26.765	24.98	-	-	-	-	-	-	0
819+50	23.23	-	-	-	-	-	-	0
820+00	50.00	-	-	-	-	-	-	0
820+50	50.00	2.65	2.87	2	3	2	3	-1
821+00	50.00	2.85	4.26	5	7	7	10	-3
821+45.815	45.82	5.06	5.01	7	8	14	18	-4
821+58.945	13.13	3.98	7.19	2	3	16	21	-5
821+70.798	11.85	3.56	5.68	2	3	18	24	-6
821+95.78	24.98	3.14	7.99	3	6	21	30	-9
822+00	4.22	3.12	9.14	-	1	21	31	-10
823+00	100.00	4.63	4.13	14	25	35	56	-21
824+00	100.00	5.78	1.57	19	11	54	67	-13
824+50	50.00	6.93	0.25	12	2	66	69	-3

DIVISION -- 3 (1)								
		AREA (SF)		INCREMENTAL VOL (CY) (UNADJUSTED)		CUMULATIVE VOL (CY)		
STATION	DISTANCE	CUT	FILL	CUT	FILL	CUT 1.00	EXPANDED FILL 1.00	MASS ORDINATE
338+83.929	0.00	-	-	-	-	-	-	0
338+90.86	6.93	2.26	14.19	-	2	-	2	-2
339+00	9.14	2.20	17.81	1	5	1	7	-6
339+70.633	70.63	2.74	66.67	6	110	7	117	-110
339+79.282	8.65	2.77	73.87	1	23	8	140	-132
339+99.281	20.00	2.91	89.14	2	60	10	200	-190
340+00	0.72	2.92	89.48	-	2	10	202	-192
340+11.758	11.76	2.97	93.96	1	40	11	242	-231
340+24.264	12.51	3.41	80.45	1	40	12	282	-270
340+36.741	12.48	3.93	67.20	2	34	14	316	-302
340+49.246	12.51	4.47	60.91	2	30	16	346	-330
340+61.723	12.48	4.48	56.33	2	27	18	373	-355
341+00	38.28	4.44	52.80	6	77	24	450	-426
342+00	100.00	6.54	4.40	20	106	44	556	-512
342+75	75.00	11.80	0.01	25	6	69	562	-493

DIVISION -- 3 (2)								
		AREA (SF)		INCREMENTAL VOL (CY) (UNADJUSTED)		CUMULATIVE VOL (CY)		
STATION	DISTANCE	CUT	FILL	CUT	FILL	CUT 1.00	EXPANDED FILL 1.00	MASS ORDINATE
365+07.516	0.00	3.57	18.24	-	-	-	-	0
365+36.342	28.83	3.28	6.16	4	13	4	13	-9
366+50	113.66	1.47	8.41	10	31	14	44	-30
366+75	25.00	1.82	5.23	2	6	16	50	-34
368+08.605	133.60	3.18	0.77	12	15	28	65	-37
368+34.532	25.93	3.31	3.13	3	2	31	67	-36
369+12.886	78.35	2.77	15.09	9	26	40	93	-53
369+22.084	9.20	2.64	7.92	1	4	41	97	-56
369+35.084	13.00	3.15	0.75	1	2	42	99	-57

DIVISION -- 3 (3)								
		AREA (SF)		INCREMENTAL VOL (CY) (UNADJUSTED)		CUMULATIVE VOL (CY)		
STATION	DISTANCE	CUT	FILL	CUT	FILL	CUT 1.00	EXPANDED FILL 1.00	MASS ORDINATE
378+47.881	0.00	1.98	5.42	-	-	-	-	0
379+27.393	79.51	3.77	10.50	8	23	8	23	-15
379+67.383	39.99	5.59	7.42	7	13	15	36	-21
379+92.493	25.11	5.68	3.69	5	5	20	41	-21
380+17.593	25.10	-	2.91	3	3	23	44	-21
381+00	82.41	5.23	3.61	8	10	31	54	-23
382+00	100.00	5.11	2.00	19	10	50	64	-14
382+45.489	45.49	12.80	-	15	2	65	66	-1
382+63.208	17.72	10.64	0.47	8	-	73	66	7

DIVISION -- 3 (4)								
		AREA (SF)		INCREMENTAL VOL (CY) (UNADJUSTED)		CUMULATIVE VOL (CY)		
STATION	DISTANCE	CUT	FILL	CUT	FILL	CUT 1.00	EXPANDED FILL 1.00	MASS ORDINATE
483+59.321	0.00	11.38	2.25	-	-	-	-	0
483+75	15.68	9.25	2.25	6	1	6	1	5
484+00	25.00	6.69	3.34	7	3	13	4	9
484+39.368	39.37	3.65	5.81	8	7	21	11	10
484+78.396	39.03	2.87	28.07	5	24	26	35	-9
485+00	21.60	3.73	38.70	3	27	29	62	-33
485+03.379	3.38	3.87	39.52	-	5	29	67	-38
485+16.278	12.90	4.67	35.58	2	18	31	85	-54
485+28.361	12.08	5.15	23.18	2	13	33	98	-65
485+41.129	12.77	6.08	11.41	3	8	36	106	-70
485+66.281	25.15	9.66	1.02	7	6	43	112	-69
486+00	33.72	10.92	0.25	13	1	56	113	-57
486+31.684	31.68	11.14	0.14	13	-	69	113	-44
487+00	68.32	15.77	-	34	-	103	113	-10
487+71.668	71.67	17.64	-	44	-	147	113	34
487+91.28	19.61	10.93	0.33	10	-	157	113	44

DIVISION -- 3 (5)								
		AREA (SF)		INCREMENTAL VOL (CY) (UNADJUSTED)		CUMULATIVE VOL (CY)		
STATION	DISTANCE	CUT	EILL	CUT NOTE 1	FILL NOTE 3	CUT 1.00 NOTE 1	EXPANDED EILL 1.00	MASS ORDINATE NOTE 8
580+34.502	34.50	-	-	-	-	-	-	0
581+00	65.50	3.66	3.73	4	5	4	5	-1
581+30.39	30.39	4.36	3.78	5	4	9	9	0
581+33.302	2.91	4.49	3.69	-	-	9	9	0
581+43.88	10.58	4.96	3.58	2	1	11	10	1
581+68.895	25.01	5.40	4.43	5	4	16	14	2
581+73.302	4.41	5.43	4.79	1	1	17	15	2
581+93.875	20.57	5.60	2.62	4	3	21	18	3
581+98.285	4.41	5.70	2.21	1	-	22	18	4
582+00	1.72	5.78	2.08	-	-	22	18	4
582+23.27	23.27	7.03	1.12	6	1	28	19	9
582+28	4.73	7.75	1.02	1	-	29	19	10
583+00	72.00	10.48	0.15	24	2	53	21	32
584+00	100.00	20.69	-	58	-	111	21	90
584+21.394	21.39	-	-	8	-	119	21	98

DIVISION -- 3 (6)								
STATION	DISTANCE	AREA (SF)		INCREMENTAL VOL (CY) (UNADJUSTED)		CUMULATIVE VOL (CY)		
		CUT	FILL	CUT	FILL	CUT 1.00	EXPANDED FILL 1.00	MASS ORDINATE
671+45.216	0.00	-	-	-	-	-	-	0
672+00	54.78	-	-	-	-	-	-	0
672+19.356	19.36	-	-	-	-	-	-	0
672+60.454	41.10	4.19	0.26	3	-	3	-	3
672+85.54	25.09	5.25	0.80	4	-	7	-	7
672+96.655	11.12	5.75	0.98	2	-	9	-	9
673+00	3.35	5.99	0.99	1	-	10	-	10
673+00	0.00	5.99	0.99	-	-	10	-	10
673+10.144	10.14	6.18	1.63	2	-	12	-	12
673+33.421	23.28	6.27	2.67	5	2	17	2	15
673+57.575	24.15	7.65	-	6	1	23	3	20
673+82.091	24.52	9.29	-	8	-	31	3	28
674+00	17.91	10.35	-	7	-	38	3	35
675+00	100.00	16.78	-	50	-	88	3	85
675+50	50.00	12.97	0.59	28	1	116	4	112
675+70.139	20.14	-	-	5	-	121	4	117

DIVISION -- 3 (7)								
STATION	DISTANCE	AREA (SE)		INCREMENTAL VOL (CY) (UNADJUSTED)		CUMULATIVE VOL (CY)		
		CUT	EILL	CUT	EILL	CUT 1.00	EXPANDED EILL 1.00	MASS ORDINATE
713+81.149	0.00	5.23	0.47	-	-	-	-	0
714+00	18.85	3.90	1.03	3	1	3	1	2
714+58.958	58.96	4.95	1.28	10	3	13	4	9
714+98.626	39.67	6.83	1.28	9	2	22	6	16
715+00	1.37	6.46	1.50	-	-	22	6	16
715+23.609	23.61	6.94	-	6	1	28	7	21
715+50	26.39	5.82	0.31	6	-	34	7	27
716+00	50.00	13.45	-	18	-	52	7	45
717+00	100.00	17.51	-	57	-	109	7	102
717+50.821	50.82	20.75	1.61	36	2	145	9	136

DIVISION -- 3 (8)								
		AREA (SF)		INCREMENTAL VOL (CY) (UNADJUSTED)		CUMULATIVE VOL (CY)		
STATION	DISTANCE	CUT	FILL	CUT	FILL	CUT 1.00	EXPANDED FILL 1.00	MASS ORDINATE
740+50	0.00	8.14	-	-	-	-	-	0
741+00	50.00	5.52	6.56	13	6	13	6	7
741+43.051	43.05	6.85	14.43	10	17	23	23	0
741+68.512	25.46	7.66	4.08	7	9	30	32	-2
741+93.939	25.43	9.16	1.80	8	3	38	35	3
742+00	6.06	5.79	3.53	2	1	40	36	4
743+00	100.00	3.64	3.31	17	13	57	49	8
744+00	100.00	9.99	0.20	25	7	82	56	26
744+19.553	19.55	5.18	1.63	5	1	87	57	30

DIVISION -- 3 (9)								
		AREA (SF)		INCREMENTAL VOL (CY) (UNADJUSTED)		CUMULATIVE VOL (CY)		
STATION	DISTANCE	CUT	FILL	CUT	FILL	CUT 1.00	EXPANDED FILL 1.00	MASS ORDINATE
818+06.364	0.00	4.36	13.04	-	-	-	-	0
819+00	93.64	4.61	13.08	16	45	16	45	-29
819+01.785	1.79	4.84	14.15	-	1	16	46	-30
819+26.765	24.98	2.87	19.69	4	16	20	62	-42
819+50	23.23	2.99	14.39	3	15	23	77	-54
820+00	50.00	4.41	14.49	7	27	30	104	-74
820+50	50.00	5.33	7.07	9	20	39	124	-85
821+00	50.00	5.79	4.24	10	10	49	134	-85
821+45.815	45.82	5.16	3.51	9	7	58	141	-83
821+58.945	13.13	4.96	3.63	2	2	60	143	-83
821+70.798	11.85	4.93	3.65	2	2	62	145	-83
821+95.78	24.98	5.80	3.08	5	3	67	148	-81
822+00	4.22	5.72	3.58	1	1	68	149	-81
823+00	100.00	6.14	3.83	22	14	90	163	-73
824+00	100.00	9.15	1.39	28	10	118	173	-55
824+50	50.00	-	-	8	1	126	174	-48

9

9

DIVISION – 4 (1)

STATION	DISTANCF	ARFA (SF)		INCRFMFNTAL VOL (CY) (UNADJUSTFD)		CUMULATIVF VOL (CY)		
		CUT	FILL	CUT	FILL	CUT 1.00	FXPANDFD FILL 1.00	MASS ORDINATF
345+03.897	0.00	13.80	-	-	-	-	-	0
346+00	96.10	11.68	2.04	45	4	45	4	41
346+66.996	67.00	6.78	11.88	23	17	68	21	47
346+91.98	24.98	6.10	13.07	6	12	74	33	41
347+00	8.02	5.66	13.66	2	4	76	37	39
347+02.161	2.16	5.52	13.75	-	1	76	38	38
347+16.96	14.80	5.38	13.27	3	7	79	45	34
347+27.143	10.18	5.35	10.44	2	4	81	49	32
347+52.077	24.93	3.35	10.22	4	10	85	59	26
347+56.341	4.26	3.09	9.81	1	2	86	61	25
348+00	43.66	2.35	6.02	4	13	90	74	16
348+25	25.00	2.55	3.94	2	5	92	79	13
348+71.62	46.62	-	-	2	3	94	82	12

DIVISION – 4 (2)

STATION	DISTANCE	AREA (SE)		INCREMENTAL VOL (CY) (UNADJUSTED)		CUMULATIVE VOL (CY)		
		CUT	EILL	CUT	EILL	CUT 1.00	EXPANDED EILL 1.00	MASS ORDINATE
490+18.393	0.00	12.21	4.35	-	-	-	-	0
491+00	81.61	10.84	1.68	35	9	35	9	26
491+66.175	66.18	10.87	0.54	27	3	62	12	50
491+91.157	24.98	8.32	1.01	9	1	71	13	58
492+00	8.84	7.04	1.44	3	-	74	13	61
492+16.14	16.14	5.78	1.91	4	1	78	14	64
493+00	83.86	3.97	8.20	15	16	93	30	63
493+31.5	31.50	3.77	8.12	5	10	98	40	58
494+00	68.50	4.19	8.91	10	22	108	62	46
494+81.03	81.03	4.39	10.56	13	29	121	91	30
495+00	18.97	4.75	12.21	3	8	124	99	25
495+06.012	6.01	4.87	12.80	1	3	125	102	23
495+30.994	24.98	4.47	21.29	4	16	129	118	11
495+70.994	40.00	4.60	17.78	7	29	136	147	-11
496+00	29.01	4.61	17.76	5	19	141	166	-25
496+51.086	51.09	4.86	4.67	9	21	150	187	-37
497+00	48.91	-	-	4	4	154	191	-37
498+00	100.00	-	-	-	-	154	191	-37
499+00	100.00	-	-	-	-	154	191	-37
500+00	100.00	-	-	-	-	154	191	-37
501+00	100.00	-	-	-	-	154	191	-37
501+75	75.00	-	-	-	-	154	191	-37
502+00	25.00	-	-	-	-	154	191	-37
503+00	100.00	-	-	-	-	154	191	-37
504+00	100.00	-	-	-	-	154	191	-37
504+36.553	36.55	-	-	-	-	154	191	-37
504+61.512	24.96	-	-	-	-	154	191	-37
504+86.473	24.96	-	-	-	-	154	191	-37
505+00	13.53	-	-	-	-	154	191	-37
505+36.872	36.87	-	-	-	-	154	191	-37
505+80.098	43.23	-	-	-	-	154	191	-37

DIVISION – 4 (3)

STATION	DISTANCE	AREA (SE)		INCREMENTAL VOL (CY) (UNADJUSTED)		CUMULATIVE VOL (CY)		
		CUT	EILL	CUT	EILL	CUT 1.00	EXPANDED EILL 1.00	MASS ORDINATE
587+19.536	0.00	-	-	-	-	-	-	0
588+00	80.46	4.42	-	7	-	7	-	7
589+00	100.00	12.95	-	32	-	39	-	39
589+32.184	32.18	9.77	-	14	-	53	-	53
589+40.369	8.18	9.32	0.11	3	-	56	-	56
589+57.23	16.86	8.17	0.63	5	-	61	-	61
589+65.351	8.12	7.66	0.98	2	-	63	-	63
589+82.277	16.93	6.65	3.01	4	1	67	1	66
589+90.333	8.06	5.96	10.06	2	2	69	3	66
590+00	9.67	4.99	10.62	2	4	71	7	64
590+30.333	30.33	4.80	5.15	5	9	76	16	60
590+89.992	59.66	3.71	3.37	9	9	85	25	60

DIVISION – 4 (4)

STATION	DISTANCE	AREA (SF)		INCREMENTAL VOL (CY) (UNADJUSTED)		CUMULATIVE VOL (CY)		
		CUT	FILL	CUT	FILL	CUT 1.00	EXPANDED FILL 1.00	MASS ORDINATE
693+24.15	0.00	19.71	-	-	-	-	-	0
694+00	75.85	14.80	-	48	-	48	-	48
695+00	100.00	8.66	0.83	43	2	91	2	89
695+24.611	24.61	7.62	1.25	7	1	98	3	95
695+33.336	8.73	6.30	1.41	2	-	100	3	97
695+49.594	16.26	7.68	1.76	4	1	104	4	100
695+58.318	8.72	7.90	2.09	3	1	107	5	102
695+74.574	16.26	7.21	2.66	5	1	112	6	106
695+83.3	8.73	4.37	2.71	2	1	114	7	107
696+00	16.70	4.67	2.98	3	2	117	9	108
696+04.573	4.57	4.48	3.03	1	1	118	10	108
696+74.165	69.59	3.16	3.59	10	9	128	19	109

DIVISION – 4 (5)

STATION	DISTANCE	AREA (SF)		INCREMENTAL VOL (CY) (UNADJUSTED)		CUMULATIVE VOL (CY)		
		CUT	FILL	CUT	FILL	CUT 1.00	EXPANDED FILL 1.00	MASS ORDINATE
719+31.025	0.00	14.42	-	-	-	-	-	0
719+75	43.97	10.43	0.28	20	-	20	-	20
720+00	25.00	8.21	1.37	9	1	29	1	28
720+93.978	93.98	6.05	1.58	25	5	54	6	48
721+00	6.02	5.82	2.00	1	-	55	6	49
721+18.96	18.96	5.52	1.84	4	1	59	7	52
721+41.066	22.11	5.96	3.58	5	2	64	9	55
721+45.555	4.49	5.94	2.63	1	1	65	10	55
721+66.048	20.49	5.48	2.38	4	2	69	12	57
721+91.03	24.98	5.05	3.66	5	3	74	15	59
722+00	8.97	5.07	2.98	2	1	76	16	60
722+39.389	39.39	-	-	4	2	80	18	62
723+00	60.61	-	-	-	-	80	18	62
723+10.909	10.91	-	-	-	-	80	18	62

DIVISION -- 4 (6)								
		AREA (SF)		INCREMENTAL VOL (CY) (UNADJUSTED)		CUMULATIVE VOL (CY)		
STATION	DISTANCE	CUT	FILL	CUT	FILL	CUT 1.00	EXPANDED FILL 1.00	MASS ORDINATE
743+41.596	0.00	12.60	-	-	-	-	-	0
743+49.253	7.66	12.40	-	4	-	4	-	4
743+57.036	7.78	15.28	0.59	4	-	8	-	8
744+00	42.96	18.40	-	27	-	35	-	35
744+25	25.00	19.50	-	18	-	53	-	53

DIVISION -- 4 (7)								
		AREA (SF)		INCREMENTAL VOL (CY) (UNADJUSTED)		CUMULATIVE VOL (CY)		
STATION	DISTANCE	CUT	FILL	CUT	FILL	CUT 1.00	EXPANDED FILL 1.00	MASS ORDINATE
746+34.426	0.00	16.43	-	-	-	-	-	0
747+00	124.37	20.53	-	85	-	85	-	85
748+00	100.00	15.96	-	68	-	153	-	153
748+25.459	25.46	13.40	0.11	14	-	167	-	167
748+50.441	24.98	12.83	1.19	12	1	179	1	178
748+75	24.56	13.07	1.99	12	1	191	2	189
749+00	25.00	12.99	0.85	12	1	203	3	200
750+00	100.00	8.39	2.28	40	6	243	9	234
750+58.551	58.55	5.96	3.00	16	6	259	15	244
750+83.533	24.98	5.04	7.54	5	5	264	20	244
751+00	16.47	3.45	14.28	3	7	267	27	240
751+08.515	8.52	4.33	16.58	1	5	268	32	236
751+50	41.48	4.48	11.30	7	21	275	53	222
752+00	50.00	4.11	1.54	8	12	283	65	218
752+30.973	30.97	4.94	2.03	5	2	288	67	221

DIVISION -- 4 (8)								
		AREA (SF)		INCREMENTAL VOL (CY) (UNADJUSTED)		CUMULATIVE VOL (CY)		
STATION	DISTANCE	CUT	FILL	CUT	FILL	CUT 1.00	EXPANDED FILL 1.00	MASS ORDINATE
823+44.558	0.00	4.70	1.41	-	-	-	-	0
823+57.009	12.45	5.71	1.21	2	1	2	1	1
824+00	42.99	7.93	0.72	11	2	13	3	10
825+00	100.00	13.72	-	40	1	53	4	49
825+36.682	36.68	-	-	9	-	62	4	58

DIVISION -- 5 - RAMP EV								
		AREA (SE)		INCREMENTAL VOL (CY) (UNADJUSTED)		CUMULATIVE VOL (CY)		
STATION	DISTANCE	CUT	FILL	CUT	EILL	CUT 1.00	EXPANDED EILL 1.00	MASS ORDINATE
542+58.998	0.00	6.55	0.94	-	-	-	-	0
543+00	41.00	5.81	2.80	9	3	9	3	6
543+52.418	52.42	6.52	1.91	12	5	21	8	13
543+77.625	25.21	6.45	-	6	1	27	9	18
544+00	22.37	4.49	-	5	-	32	9	23
544+55	55.00	4.25	1.87	9	2	41	11	30
544+60	5.00	4.04	2.17	1	-	42	11	31
544+68.103	8.10	4.38	1.62	1	1	43	12	31
544+70.82	2.72	4.16	1.42	-	-	43	12	31
544+80.059	9.24	4.26	1.62	1	1	44	13	31
544+83	2.94	4.37	2.82	-	-	44	13	31
545+00	17.00	3.36	2.02	2	2	46	15	31
545+69.49	69.49	0.70	11.48	5	17	51	32	19
545+83.095	13.61	1.15	2.29	-	3	51	35	16

DIVISION -- 6 -RAMP PA								
		AREA (SE)		INCREMENTAL VOL (CY) (UNADJUSTED)		CUMULATIVE VOL (CY)		
STATION	DISTANCE	CUT	EILL	CUT	EILL	CUT 1.00	EXPANDED EILL 1.00	MASS ORDINATE
679+92.292	0.00	67.79	-	-	-	-	-	0
680+50	57.71	57.07	0.13	133	-	133	-	133
681+00	50.00	63.44	-	112	-	245	-	245
681+50	50.00	31.48	0.33	88	-	333	-	333
682+00	50.00	147.87	2.23	166	2	499	2	497
682+50	50.00	25.82	2.43	161	4	660	6	654
683+00	50.00	176.92	1.09	188	3	848	9	839
683+50	50.00	222.90	1.99	370	3	1,218	12	1,206
683+75	25.00	182.02	3.96	187	3	1,405	15	1,390
684+00	25.00	124.90	4.82	142	4	1,547	19	1,528
684+50	50.00	29.57	2.50	143	7	1,690	26	1,664
685+00	50.00	26.08	1.71	52	4	1,742	30	1,712
685+22.028	22.03	10.40	2.44	15	2	1,757	32	1,725
685+50	27.97	7.74	2.27	9	2	1,766	34	1,732
686+00	50.00	0.59	1.63	8	4	1,774	38	1,736
686+50	50.00	-	1.37	1	3	1,775	41	1,734
687+00	50.00	-	0.86	-	2	1,775	43	1,732
687+50	50.00	0.92	1.32	1	2	1,776	45	1,731
687+89.698	39.70	0.96	1.73	1	2	1,777	47	1,730
688+00	10.30	0.68	1.67	-	1	1,777	48	1,729
688+50	50.00	-	1.05	1	3	1,778	51	1,727
688+68.992	18.99	-	7.00	-	3	1,778	54	1,724
689+00	31.01	-	2.90	-	6	1,778	60	1,718
689+50	50.00	2.91	0.59	3	3	1,781	63	1,718
690+00	50.00	6.07	0.18	8	1	1,789	64	1,725
690+25	25.00	9.55	0.07	7	-	1,796	64	1,732

9

9

PROJECT NO: 1204-08-65 | HWY: USH 18/151 | COUNTY: DANE | EARTHWORK DATA | SHEET 615 | E

DIVISION -- 7 - RAMP PB								
		AREA (SF)		INCREMENTAL VOL (CY) (UNADJUSTED)		CUMULATIVE VOL (CY)		
STATION	DISTANCE	CUT	FILL	CUT	FILL	CUT 1.00	EXPANDED FILL 1.00	MASS ORDINATE
686+70.151	0.00	0.25	0.63	-	-	-	-	0
687+11.38	41.23	0.54	5.98	1	5	1	5	-4
687+60.95	49.57	0.55	15.30	1	20	2	25	-23
687+86.05	25.10	0.84	5.51	1	10	3	35	-32
688+07.876	21.83	0.93	3.11	1	3	4	38	-34
689+00	92.12	0.76	1.68	3	8	7	46	-39
690+00	100.00	0.93	2.30	3	7	10	53	-43
690+49.596	49.60	0.00	10.45	1	12	11	65	-54

DIVISION -- 8 - RAMP EE								
		AREA (SF)		INCREMENTAL VOL (CY) (UNADJUSTED)		CUMULATIVE VOL (CY)		
STATION	DISTANCE	CUT	FILL	CUT	FILL	CUT 1.00	EXPANDED FILL 1.00	MASS ORDINATE
740+55.78	0.00	1.00	-	-	-	-	-	0
741+00	44.22	0.77	2.15	1	2	1	2	-1
741+25.091	25.09	0.92	3.66	1	3	2	5	-3
741+74.842	49.75	3.30	0.79	4	4	6	9	-3
741+99.834	24.99	3.18	2.71	3	2	9	11	-2
742+24.97	25.14	4.14	-	3	1	12	12	0
742+50	25.03	4.38	0.02	4	-	16	12	4

DIVISION -- 8 - RAMP EE								
		AREA (SF)		INCREMENTAL VOL (CY) (UNADJUSTED)		CUMULATIVE VOL (CY)		
STATION	DISTANCE	CUT	FILL	CUT	FILL	CUT 1.00	EXPANDED FILL 1.00	MASS ORDINATE
756+00	0.00	-	3.26	-	-	-	-	0
756+25	25.00	-	5.16	-	4	-	4	-4
756+93.719	68.72	-	15.24	-	26	-	30	-30
757+18.734	25.02	-	7.35	-	10	-	40	-40
757+43.873	25.14	-	5.05	-	6	-	46	-46
758+00	56.13	-	5.54	-	11	-	57	-57
759+00	100.00	-	7.92	-	25	-	82	-82
760+00	100.00	-	7.89	-	29	-	111	-111
761+00	100.00	-	4.63	-	23	-	134	-134
762+00	100.00	0.31	8.29	1	24	1	158	-157
762+75	75.00	-	15.88	-	34	1	192	-191
763+00	25.00	-	25.31	-	19	1	211	-210
763+25	25.00	-	1.33	-	12	1	223	-222

DIVISION -- 9 (1)

STATION	DISTANCE	AREA (SE)		INCREMENTAL VOL (CY) (UNADJUSTED)		CUMULATIVE VOL (CY)		
		CUT	FILL	CUT	EILL	CUT 1.00	EXPANDED EILL 1.00	MASS ORDINATE
182+41.52	0.00	-	2.36	-	-	-	-	0
183+00	58.48	1.12	11.51	1	15	1	15	-14
184+00	100.00	0.58	10.93	3	42	4	57	-53
184+37.451	37.45	-	23.48	-	24	4	81	-77
184+55	17.55	-	18.11	-	14	4	95	-91
185+00	45.00	-	16.47	-	29	4	124	-120
186+00	119.67	-	12.24	-	64	4	188	-184
187+00	100.00	-	10.09	-	41	4	229	-225
188+00	100.00	-	12.41	-	42	4	271	-267
189+00	100.00	-	12.61	-	46	4	317	-313
190+00	100.00	-	8.21	-	39	4	356	-352
191+01.308	101.31	0.82	6.26	2	27	6	383	-377
192+00	98.69	-	-	1	11	7	394	-387
193+00	100.00	-	6.56	-	12	7	406	-399
194+00	100.00	-	6.06	-	23	7	429	-422
195+00	100.00	-	5.57	-	22	7	451	-444
196+00	100.00	1.36	3.47	3	17	10	468	-458
197+00	100.00	2.94	2.29	8	11	18	479	-461
198+00	100.00	0.28	7.03	6	17	24	496	-472
199+00	100.00	0.65	3.01	2	19	26	515	-489
200+00	100.00	-	11.46	1	27	27	542	-515
201+00	100.00	-	9.48	-	39	27	581	-554
202+00	100.00	0.34	7.55	1	32	28	613	-585
202+61.473	61.47	-	13.16	-	24	28	637	-609
203+00	38.53	0.94	5.70	1	13	29	650	-621
204+00	100.00	0.28	8.00	2	25	31	675	-644
205+00	100.00	-	6.06	1	26	32	701	-669
206+00	100.00	-	6.25	-	23	32	724	-692
207+00	100.00	-	11.00	-	32	32	756	-724
208+00	100.00	-	16.07	-	50	32	806	-774
209+00	100.00	-	13.07	-	54	32	860	-828
210+00	100.00	-	12.79	-	48	32	908	-876
211+00	100.00	-	8.93	-	40	32	948	-916
212+00	100.00	-	9.29	-	34	32	982	-950
213+00	100.00	-	10.03	-	36	32	1,018	-986
214+35	135.00	-	17.98	-	70	32	1,088	-1,056
214+50	15.00	-	18.90	-	10	32	1,098	-1,066
215+00	50.00	-	27.77	-	43	32	1,141	-1,109
215+57	57.00	-	33.34	-	65	32	1,206	-1,174
215+85	28.00	-	16.84	-	26	32	1,232	-1,200
216+00	15.00	2.02	7.43	1	7	33	1,239	-1,206
217+00	100.00	16.54	6.91	34	27	67	1,266	-1,199
217+50	50.00	20.09	3.22	34	9	101	1,275	-1,174
218+00	50.00	17.81	7.39	35	10	136	1,285	-1,149
218+90	90.00	0.73	9.57	31	28	167	1,313	-1,146
219+00	10.00	-	13.99	-	4	167	1,317	-1,150
220+00	100.00	-	35.69	-	92	167	1,409	-1,242
220+40	40.00	-	24.73	-	45	167	1,454	-1,287

DIVISION -- 9 (2)

STATION	DISTANCE	AREA (SF)		INCREMENTAL VOL (CY) (UNADJUSTED)		CUMULATIVE VOL (CY)		
		CUT	FILL	CUT	FILL	CUT 1.00	EXPANDED FILL 1.00	MASS ORDINATE
223+00	0.00	-	3.04	-	-	-	-	0
224+00	100.00	-	16.90	-	37	-	37	-37
225+00	100.00	-	14.77	-	59	-	96	-96
226+00	100.00	-	17.60	-	60	-	156	-156
227+00	100.00	-	37.12	-	101	-	257	-257
227+12.778	12.78	-	35.38	-	17	-	274	-274
228+00	87.22	-	15.31	-	82	-	356	-356
229+00	100.00	-	13.75	-	54	-	410	-410
230+00	100.00	-	-	-	25	-	435	-435
231+00	100.00	-	-	-	-	-	435	-435
232+00	100.00	-	18.31	-	34	-	469	-469
233+00	100.00	-	12.43	-	57	-	526	-526
234+00	100.00	-	22.60	-	65	-	591	-591
235+00	100.00	-	25.07	-	88	-	679	-679
236+00	100.00	-	18.69	-	81	-	760	-760
237+00	100.00	-	20.06	-	72	-	832	-832
238+00	100.00	-	22.45	-	79	-	911	-911
239+00	100.00	-	24.14	-	86	-	997	-997
240+00	100.00	-	28.93	-	98	-	1,095	-1,095
241+00	100.00	-	22.51	-	95	-	1,190	-1,190
241+39.261	39.26	-	24.42	-	34	-	1,224	-1,224
242+00	83.99	-	17.82	-	66	-	1,290	-1,290
243+00	100.00	-	12.92	-	57	-	1,347	-1,347
244+00	100.00	-	11.84	-	46	-	1,393	-1,393
245+00	100.00	-	12.85	-	46	-	1,439	-1,439
246+00	100.00	-	12.40	-	47	-	1,486	-1,486
247+00	100.00	-	10.82	-	43	-	1,529	-1,529
248+00	100.00	-	14.37	-	47	-	1,576	-1,576
249+00	100.00	-	-	-	27	-	1,603	-1,603
250+00	100.00	-	13.54	-	25	-	1,628	-1,628
251+00	100.00	-	14.35	-	52	-	1,680	-1,680
252+00	100.00	-	12.03	-	49	-	1,729	-1,729
253+00	100.00	-	16.78	-	53	-	1,782	-1,782
254+00	100.00	-	15.53	-	60	-	1,842	-1,842
254+13.249	13.25	2.82	8.87	1	6	1	1,848	-1,847

DIVISION -- 9 (3)								
STATION	DISTANCF	AREA (SF)		INCREMENTAL VOL (CY) (UNADJUSTED)		CUMULATIVE VOL (CY)		
		CUT	FILL	CUT	FILL	CUT 1.00	EXPANDED FILL 1.00	MASS ORDINATE
292+03.076	0.00	11.03	4.95	-	-	-	-	0
293+00	96.92	4.14	20.11	27	45	27	45	-18
294+00	100.00	4.52	26.44	16	86	43	131	-88
294+28.586	28.59	4.82	23.64	5	27	48	158	-110
294+80.789	52.20	4.90	17.42	9	40	57	198	-141
295+00	19.21	4.95	18.15	4	13	61	211	-150
296+00	100.00	5.69	5.09	20	43	81	254	-173
297+00	100.00	3.51	13.84	17	35	98	289	-191
298+00	100.00	3.04	11.29	12	47	110	336	-226
299+00	100.00	4.04	14.34	13	47	123	383	-260
300+00	100.00	4.42	17.44	16	59	139	442	-303
301+00	100.00	3.75	17.46	15	65	154	507	-353
302+00	100.00	5.99	18.02	18	66	172	573	-401
303+00	100.00	4.03	12.86	19	57	191	630	-439
304+00	100.00	4.87	10.34	16	43	207	673	-466
305+00	100.00	6.21	5.16	21	29	228	702	-474
306+00	100.00	4.98	12.16	21	32	249	734	-485
307+00	100.00	3.60	29.49	16	77	265	811	-546
308+00	100.00	3.31	20.19	13	92	278	903	-625
309+00	100.00	6.31	5.68	18	48	296	951	-655
309+81.352	81.35	13.79	1.84	30	11	326	962	-636

DIVISION -- 9 (4)								
STATION	DISTANCE	AREA (SF)		INCREMENTAL VOL (CY) (UNADJUSTED)		CUMULATIVE VOL (CY)		
		CUT	FILL	CUT	FILL	CUT 1.00	EXPANDED FILL 1.00	MASS ORDINATE
311+64.99	0.00	23.68	2.87	-	-	-	-	0
312+00	35.01	21.09	3.67	29	4	29	4	25
313+00	100.00	4.16	8.74	47	23	76	27	49
314+00	100.00	4.25	11.90	16	38	92	65	27
315+00	100.00	4.51	7.46	16	36	108	101	7
316+00	100.00	5.23	6.16	18	25	126	126	0
316+87.581	87.58	14.45	3.05	32	15	158	141	17

DIVISION --9 (5A)

STATION	DISTANCE	AREA (SF)		INCREMENTAL VOL (CY) (UNADJUSTED)		CUMULATIVE VOL (CY)		
		CUT	FILL	CUT	FILL	CUT 1.00	EXPANDED FILL 1.00	MASS ORDINATE
412+50.3	0.00	10.68	7.84	-	-	-	-	0
414+00	149.70	7.24	5.42	50	37	50	37	13
415+00	100.00	6.60	7.25	26	23	76	60	16
416+00	100.00	6.05	6.47	23	25	99	85	14
417+00	100.00	6.61	8.46	23	28	122	113	9
418+00	100.00	7.62	3.00	26	21	148	134	14
419+00	100.00	7.03	5.48	27	16	175	150	25
420+00	100.00	6.56	4.67	25	19	200	169	31
421+00	100.00	8.46	6.06	28	20	228	189	39
422+00	100.00	8.97	4.45	32	19	260	208	52
423+00	100.00	6.79	5.82	29	19	289	227	62
424+00	100.00	5.78	3.40	23	17	312	244	68
425+00	100.00	7.33	4.79	24	15	336	259	77
426+00	100.00	7.97	3.28	28	15	364	274	90
427+00	100.00	6.46	3.91	27	13	391	287	104
428+00	100.00	8.53	3.06	28	13	419	300	119
429+00	100.00	10.21	2.09	35	10	454	310	144
430+00	100.00	6.70	11.48	31	25	485	335	150
431+00	100.00	6.17	7.42	24	35	509	370	139
432+00	100.00	8.26	2.46	27	18	536	388	148
433+00	100.00	10.36	1.36	34	7	570	395	175
434+00	100.00	12.66	0.75	43	4	613	399	214
435+00	100.00	16.38	0.51	54	2	667	401	266
436+00	100.00	18.42	0.81	64	2	731	403	328
437+00	100.00	13.95	0.99	60	3	791	406	385
438+00	100.00	10.28	1.31	45	4	836	410	426
439+00	100.00	6.52	6.81	31	15	867	425	442
440+00	100.00	10.10	1.71	31	16	898	441	457
441+00	100.00	11.83	5.89	41	14	939	455	484
442+00	100.00	15.75	0.63	51	12	990	467	523
443+00	100.00	13.10	0.64	53	2	1,043	469	574
443+46.866	46.87	6.93	11.06	17	10	1,060	479	581
444+00	53.13	10.71	0.83	17	12	1,077	491	586
445+00	100.00	13.35	0.32	45	2	1,122	493	629
446+00	100.00	10.69	5.01	45	10	1,167	503	664
447+00	100.00	10.64	2.77	39	14	1,206	517	689
448+00	100.00	9.16	4.45	37	13	1,243	530	713
449+00	100.00	7.01	5.53	30	18	1,273	548	725
450+00	100.00	6.29	12.88	25	34	1,298	582	716

DIVISION -- 9 (5B)

STATION	DISTANCE	AREA (SF) CUT	AREA (SF) FILL	INCREMENTAL VOL (CY) (UNADJUSTED) CUT NOTE 1	INCREMENTAL VOL (CY) (UNADJUSTED) FILL NOTE 3	CUMULATIVE VOL (CY) CUT 1.00 NOTE 1	CUMULATIVE VOL (CY) EXPANDED FILL 1.00	MASS ORDINATE NOTE 8
451+00	100.00	6.05	9.92	23	42	1,321	624	697
452+00	100.00	5.86	12.66	22	42	1,343	666	677
453+00	100.00	12.41	5.75	34	34	1,377	700	677
453+11.828	11.83	6.04	14.79	4	4	1,381	704	677
454+00	88.17	5.37	12.72	19	45	1,400	749	651
455+00	100.00	6.91	2.29	23	28	1,423	777	646
456+00	100.00	8.21	2.57	28	9	1,451	786	665
457+00	100.00	8.02	3.37	30	11	1,481	797	684
458+00	100.00	6.83	3.84	27	13	1,508	810	698
459+00	100.00	9.94	1.06	31	9	1,539	819	720
459+63	63.00	10.79	1.58	24	3	1,563	822	741
460+00	38.94	6.60	3.65	13	4	1,576	826	750
461+00	100.00	8.75	10.83	28	27	1,604	853	751
461+13	13.00	8.32	11.06	4	5	1,608	858	750
462+00	87.00	8.32	6.10	27	28	1,635	886	749
463+00	100.00	12.45	3.08	38	17	1,673	903	770
464+00	100.00	10.06	2.20	42	10	1,715	913	802
464+25	25.00	12.43	1.11	10	2	1,725	915	810
465+00	75.00	13.63	2.11	36	4	1,761	919	842
465+75	75.00	19.20	1.51	46	5	1,807	924	883
466+00	25.00	18.34	1.36	17	1	1,824	925	899
467+00	100.00	18.66	1.54	69	5	1,893	930	963
468+00	100.00	16.57	2.78	65	8	1,958	938	1,020
469+00	100.00	14.97	1.60	58	8	2,016	946	1,070
470+00	100.00	10.88	1.54	48	6	2,064	952	1,112
471+00	100.00	10.68	2.61	40	8	2,104	960	1,144
472+00	100.00	11.45	5.41	41	15	2,145	975	1,170
473+00	100.00	8.83	6.28	38	22	2,183	997	1,186
474+00	100.00	7.28	4.29	30	20	2,213	1,017	1,196
475+00	100.00	10.39	3.86	33	15	2,246	1,032	1,214
476+00	100.00	9.56	6.14	37	19	2,283	1,051	1,232
477+00	100.00	7.52	6.68	32	24	2,315	1,075	1,240
478+00	100.00	7.65	7.03	28	25	2,343	1,100	1,243
479+00	98.05	8.37	4.58	29	21	2,372	1,121	1,251
479+56.737	56.74	7.99	32.40	17	39	2,389	1,160	1,229
480+00	43.26	19.02	1.52	22	27	2,411	1,187	1,224
481+00	100.00	9.29	4.55	52	11	2,463	1,198	1,265
482+00	100.00	9.45	8.51	35	24	2,498	1,222	1,276
483+00	100.00	13.35	3.74	42	23	2,540	1,245	1,295
484+00	100.00	8.35	11.64	40	28	2,580	1,273	1,307
485+00	100.00	11.25	4.90	36	31	2,616	1,304	1,312
486+00	100.00	18.57	2.60	55	14	2,671	1,318	1,353
486+65	65.00	20.66	-	47	3	2,718	1,321	1,397

DIVISION -- 9 (6)								
STATION	DISTANCE	AREA (SE)		INCREMENTAL VOL (CY) (UNADJUSTED)		CUMULATIVE VOL (CY)		
		CUT	EILL	CUT	FILL	CUT 1.00	EXPANDED EILL 1.00	MASS ORDINATE
493+00	0.00	9.60	7.51	-	-	-	-	0
493+31.5	31.50	11.45	5.01	12	7	12	7	5
494+00	68.50	10.99	5.92	28	14	40	21	19
494+81.03	81.03	8.59	6.94	29	19	69	40	29
495+00	18.97	4.89	6.27	5	5	74	45	29
495+06.012	6.01	6.47	4.12	1	1	75	46	29
495+30.994	24.98	7.48	2.10	6	3	81	49	32
495+70.994	40.00	8.50	2.34	12	3	93	52	41
496+00	29.01	10.99	2.79	10	3	103	55	48
496+51.086	51.09	8.44	3.79	18	6	121	61	60
497+00	48.91	10.88	4.28	18	7	139	68	71
498+00	100.00	15.88	0.41	50	9	189	77	112
499+00	100.00	28.94	-	83	1	272	78	194
500+00	100.00	-	-	54	-	326	78	248
501+00	100.00	-	-	-	-	326	78	248
501+75	75.00	-	-	-	-	326	78	248
502+00	25.00	-	-	-	-	326	78	248
503+00	100.00	-	-	-	-	326	78	248
504+00	100.00	20.14	-	37	-	363	78	285
504+36.553	36.55	16.54	0.65	25	-	388	78	310
504+61.512	24.96	18.26	1.76	16	1	404	79	325
504+86.473	24.96	15.12	8.56	15	5	419	84	335
505+00	13.53	16.89	12.71	8	5	427	89	338
505+36.872	36.87	19.95	-	25	9	452	98	354
505+80.098	43.23	17.41	0.09	30	-	482	98	384

DIVISION -- 9 (7)								
STATION	DISTANCF	ARFA (SF)		INCRFMFNTAL VOL (CY) (UNADJUSTFD)		CUMULATIVF VOL (CY)		
		CUT	FILL	CUT	FILL	CUT 1.00	FXPANDFD FILL 1.00	MASS ORDINATF
493+00	0.00	-	-	-	-	-	-	0
493+31.5	31.50	-	-	-	-	-	-	0
494+00	68.50	-	-	-	-	-	-	0
494+81.03	81.03	-	-	-	-	-	-	0
495+00	18.97	-	-	-	-	-	-	0
495+06.012	6.01	-	-	-	-	-	-	0
495+30.994	24.98	-	-	-	-	-	-	0
495+70.994	40.00	-	-	-	-	-	-	0
496+00	29.01	-	-	-	-	-	-	0
496+51.086	51.09	-	-	-	-	-	-	0
497+00	48.91	7.24	5.77	7	5	7	5	2
498+00	100.00	7.06	3.62	26	17	33	22	11
499+00	100.00	9.28	6.22	30	18	63	40	23
500+00	100.00	23.42	0.27	61	12	124	52	72
501+00	100.00	-	-	43	-	167	52	115
501+75	75.00	-	-	-	-	167	52	115
502+00	25.00	-	-	-	-	167	52	115
503+00	100.00	-	-	-	-	167	52	115
504+00	100.00	-	-	-	-	167	52	115
504+36.553	36.55	-	-	-	-	167	52	115
504+61.512	24.96	-	-	-	-	167	52	115
504+86.473	24.96	-	-	-	-	167	52	115
505+00	13.53	-	-	-	-	167	52	115
505+36.872	36.87	15.87	-	11	-	178	52	126
505+80.098	43.23	14.61	-	24	-	202	52	150

DIVISION --9 (8)

STATION	DISTANCE	AREA (SF)		INCREMENTAL VOL (CY) (UNADJUSTED)		CUMULATIVE VOL (CY)		
		CUT	FILL	CUT	FILL	CUT 1.00	EXPANDED FILL 1.00	MASS ORDINATE
506+00	0.00	18.59	-	-	-	-	-	0
507+00	100.00	15.29	-	63	-	63	-	63
508+00	100.00	11.35	1.15	49	2	112	2	110
509+00	100.00	11.26	1.23	42	4	154	6	148
510+00	100.00	18.77	0.10	56	2	210	8	202
511+00	100.00	14.74	0.79	62	2	272	10	262
512+00	100.00	12.57	0.28	51	2	323	12	311
513+00	100.00	12.57	2.61	47	5	370	17	353
514+00	100.00	14.87	1.58	51	8	421	25	396
515+00	100.00	12.24	2.85	50	8	471	33	438
516+00	100.00	11.08	2.05	43	9	514	42	472
516+69.019	69.02	8.14	4.68	25	9	539	51	488
517+00	30.98	6.19	7.55	8	7	547	58	489
518+00	100.00	5.43	30.74	22	71	569	129	440
518+06.993	6.99	6.40	34.45	2	8	571	137	434
519+00	93.01	8.03	4.78	25	68	596	205	391
520+00	100.00	3.94	12.05	22	31	618	236	382
521+00	100.00	4.96	14.85	16	50	634	286	348
522+00	100.00	5.26	7.25	19	41	653	327	326
522+62.794	62.79	8.84	2.24	16	11	669	338	331
523+00	37.21	12.24	1.34	15	2	684	340	344
524+00	100.00	8.59	4.58	39	11	723	351	372
525+00	100.00	4.41	8.01	24	23	747	374	373
526+00	100.00	3.26	8.99	14	31	761	405	356
526+16.91	16.91	4.95	13.80	3	7	764	412	352
526+35	18.09	5.49	3.49	3	6	767	418	349
527+00	65.00	7.27	5.31	15	11	782	429	353
527+85	85.00	3.65	13.01	17	29	799	458	341
528+00	15.00	4.41	17.14	2	8	801	466	335
529+00	100.00	15.38	2.86	37	37	838	503	335
530+00	100.00	14.65	1.67	56	8	894	511	383
530+90	90.00	7.67	6.93	37	14	931	525	406
531+00	10.00	7.61	6.05	3	2	934	527	407
532+00	100.00	83.47	0.43	169	12	1,103	539	564
532+40	40.00	91.56	-	130	-	1,233	539	694
533+00	60.00	99.95	-	213	-	1,446	539	907
534+00	100.00	80.03	2.12	333	4	1,779	543	1,236
535+00	100.00	7.41	0.39	162	5	1,941	548	1,393
535+64.078	64.08	6.31	0.58	16	1	1,957	549	1,408
536+00	35.92	6.61	0.23	9	1	1,966	550	1,416
537+00	100.00	7.12	0.15	25	1	1,991	551	1,440
538+00	100.00	5.93	25.35	24	47	2,015	598	1,417
539+00	100.00	7.48	0.76	25	48	2,040	646	1,394
539+00	69.81	6.93	-	19	1	2,059	647	1,412
540+00	100.00	7.08	0.40	26	1	2,085	648	1,437
541+00	100.00	8.45	0.74	29	2	2,114	650	1,464
542+00	100.00	8.18	1.37	31	4	2,145	654	1,491
543+00	100.00	8.79	1.63	31	6	2,176	660	1,516
544+00	100.00	9.22	3.50	33	9	2,209	669	1,540
544+40.676	40.68	9.64	1.25	14	4	2,223	673	1,550

DIVISION -- 9 (9)

STATION	DISTANCE	AREA (SF)		INCREMENTAL VOL (CY) (UNADJUSTED)		CUMULATIVE VOL (CY)		
		CUT	FILL	CUT	FILL	CUT 1.00	EXPANDED EILL 1.00	MASS ORDINATE
545+37.174	0.00	2.77	0.95	-	-	-	-	0
545+63	25.83	5.64	25.95	4	13	4	13	-9
546+00	37.00	5.96	18.22	8	30	12	43	-31
547+00	100.00	5.98	9.11	22	51	34	94	-60
548+00	100.00	9.91	9.53	29	35	63	129	-66
549+00	100.00	10.57	11.92	38	40	101	169	-68
550+00	100.00	8.39	1.96	35	26	136	195	-59
551+00	100.00	13.10	-	40	4	176	199	-23
552+00	100.00	12.40	0.71	47	1	223	200	23
553+00	100.00	14.42	1.09	50	3	273	203	70
554+00	100.00	15.91	-	56	2	329	205	124
555+00	100.00	11.41	2.24	51	4	380	209	171
556+00	100.00	10.12	4.90	40	13	420	222	198
557+00	100.00	10.82	4.26	39	17	459	239	220
558+00	100.00	11.83	2.30	42	12	501	251	250
559+00	100.00	11.61	0.93	43	6	544	257	287
560+00	100.00	12.27	1.43	44	4	588	261	327
561+00	100.00	17.78	0.96	56	4	644	265	379
562+00	100.00	20.15	0.15	70	2	714	267	447
563+00	100.00	20.23	1.37	75	3	789	270	519
564+00	100.00	19.46	1.29	73	5	862	275	587
564+85	85.00	12.91	5.72	51	11	913	286	627
565+00	15.00	8.95	15.98	6	6	919	292	627
566+00	100.00	23.59	-	60	30	979	322	657
567+00	100.00	18.91	0.94	79	2	1,058	324	734
568+00	100.00	22.30	-	76	2	1,134	326	808
569+00	100.00	11.35	14.10	62	26	1,196	352	844
570+00	100.00	11.78	8.24	43	41	1,239	393	846
571+00	100.00	6.80	10.56	34	35	1,273	428	845
572+00	100.00	6.03	15.66	24	49	1,297	477	820
573+00	100.00	5.37	10.28	21	48	1,318	525	793
574+00	100.00	5.19	8.90	20	36	1,338	561	777
574+97.06	97.06	8.17	10.46	24	35	1,362	596	766
575+00	2.94	7.02	13.71	1	1	1,363	597	766
576+00	100.00	8.54	6.72	29	38	1,392	635	757
577+00	100.00	9.13	1.94	33	16	1,425	651	774
578+00	100.00	12.57	1.60	40	7	1,465	658	807
579+00	100.00	8.17	1.23	38	5	1,503	663	840
580+00	100.00	10.32	2.17	34	6	1,537	669	868
580+34.502	34.50	13.74	2.76	15	3	1,552	672	880
581+00	65.50	7.91	7.32	26	12	1,578	684	894

DIVISION -- 9 (10A)

STATION	DISTANCE	AREA (SF)		INCREMENTAL VOL (CY) (UNADJUSTED)		CUMULATIVE VOL (CY)		
		CUT	FILL	CUT	FILL	CUT 1.00	EXPANDED FILL 1.00	MASS ORDINATE
590+00	0.00	9.00	9.37	-	-	-	-	0
591+00	100.00	6.59	7.99	29	32	29	32	-3
592+00	100.00	7.06	4.14	25	22	54	54	0
593+00	100.00	7.44	5.93	27	19	81	73	8
594+00	100.00	7.24	2.71	27	16	108	89	19
595+00	100.00	7.68	2.85	28	10	136	99	37
596+00	100.00	6.27	7.17	26	19	162	118	44
596+84.861	84.86	6.41	24.17	20	49	182	167	15
597+00	15.14	6.86	17.12	4	12	186	179	7
598+00	100.00	7.69	1.84	27	35	213	214	-1
599+00	100.00	11.58	0.62	36	5	249	219	30
600+00	100.00	18.86	0.17	56	1	305	220	85
601+00	100.00	10.54	0.95	54	2	359	222	137
602+00	100.00	4.90	8.26	29	17	388	239	149
602+93.621	93.62	6.04	25.77	19	59	407	298	109
603+00	6.38	4.94	31.04	1	7	408	305	103
604+00	100.00	5.25	7.34	19	71	427	376	51
605+00	100.00	4.87	14.11	19	40	446	416	30
606+00	100.00	5.69	6.21	20	38	466	454	12
607+00	100.00	7.71	1.54	25	14	491	468	23
608+00	100.00	5.41	6.61	24	15	515	483	32
609+00	100.00	4.76	7.12	19	25	534	508	26
610+00	100.00	6.66	4.41	21	21	555	529	26
611+00	100.00	10.53	0.25	32	9	587	538	49
611+89.771	89.77	9.78	4.03	34	7	621	545	76
612+00	10.23	10.45	4.75	4	2	625	547	78
613+00	100.00	14.03	0.97	45	11	670	558	112
614+00	100.00	11.75	0.53	48	3	718	561	157
615+00	100.00	18.65	0.42	56	2	774	563	211
616+00	100.00	14.25	1.93	61	4	835	567	268
616+30	30.00	16.69	0.53	17	1	852	568	284
617+00	70.00	8.95	7.05	33	10	885	578	307
617+80	80.00	7.41	25.33	24	48	909	626	283
618+00	20.00	6.92	25.99	5	19	914	645	269
618+62.479	62.48	6.42	13.05	15	45	929	690	239
618+62.544	0.07	6.41	13.04	-	-	929	690	239

DIVISION -- 9 (10B)								
		AREA (SF)		INCREMENTAL VOL (CY) (UNADJUSTED)		CUMULATIVE VOL (CY)		
STATION	DISTANCE	CUT	FILL	CUT	FILL	CUT 1.00	EXPANDED FILL 1.00	MASS ORDINATE
				NOTE 1	NOTE 3	NOTE 1		NOTE 8
619+00	37.46	8.15	12.89	10	18	939	708	231
620+00	100.00	8.65	7.31	31	37	970	745	225
620+12.8	12.80	7.18	9.56	4	4	974	749	225
620+12.88	0.08	7.17	9.57	-	-	974	749	225
620+95	82.12	5.93	15.06	20	37	994	786	208
621+00	5.00	6.37	14.13	1	3	995	789	206
622+00	100.00	9.92	2.98	30	32	1,025	821	204
622+45	45.00	14.40	0.89	20	3	1,045	824	221
623+00	55.00	13.56	1.10	28	2	1,073	826	247
624+00	100.00	13.49	1.93	50	6	1,123	832	291
625+00	100.00	20.10	0.57	62	5	1,185	837	348
626+00	100.00	17.13	1.47	69	4	1,254	841	413
627+00	100.00	9.97	3.68	50	10	1,304	851	453
628+00	100.00	13.84	7.36	44	20	1,348	871	477
629+00	100.00	6.92	9.34	38	31	1,386	902	484
630+00	100.00	10.19	7.63	32	31	1,418	933	485
630+25	25.00	-	-	5	4	1,423	937	486
630+97	72.00	3.56	2.21	5	3	1,428	940	488
632+00	103.00	7.28	8.43	21	20	1,449	960	489
633+00	100.00	8.60	6.51	29	28	1,478	988	490
634+00	100.00	9.04	6.34	33	24	1,511	1,012	499
635+00	100.00	7.50	7.03	31	25	1,542	1,037	505
636+00	100.00	14.41	1.67	41	16	1,583	1,053	530
637+00	100.00	10.14	5.31	45	13	1,628	1,066	562
637+39.386	39.39	4.83	19.44	11	18	1,639	1,084	555
638+00	60.61	7.66	8.36	14	31	1,653	1,115	538
639+00	100.00	6.76	8.37	27	31	1,680	1,146	534
640+00	100.00	6.96	5.48	25	26	1,705	1,172	533
640+50	50.00	8.02	11.66	14	16	1,719	1,188	531
641+00	50.00	10.32	1.81	17	12	1,736	1,200	536
641+20	20.00	9.62	2.31	7	2	1,743	1,202	541
642+00	80.00	10.49	1.03	30	5	1,773	1,207	566
642+70	70.00	10.67	7.48	27	11	1,800	1,218	582
643+00	30.00	10.91	9.09	12	9	1,812	1,227	585
644+00	100.00	23.41	3.44	64	23	1,876	1,250	626
645+00	100.00	10.79	3.03	63	12	1,939	1,262	677
646+00	100.00	11.81	4.50	42	14	1,981	1,276	705
646+20	20.00	10.29	23.18	8	10	1,989	1,286	703
647+00	80.00	8.98	18.62	29	62	2,018	1,348	670
647+70	70.00	6.16	10.56	20	38	2,038	1,386	652
648+00	30.00	6.41	9.42	7	11	2,045	1,397	648
649+00	100.00	10.20	4.97	31	27	2,076	1,424	652
650+00	100.00	11.02	5.11	39	19	2,115	1,443	672
651+00	100.00	5.06	24.80	30	55	2,145	1,498	647
652+00	100.00	4.43	14.51	18	73	2,163	1,571	592

DIVISION -- 9 (10C)								
		AREA (SE)		INCREMENTAL VOL (CY) (UNADJUSTED)		CUMULATIVE VOL (CY)		
STATION	DISTANCE	CUT	EILL	CUT NOTE 1	EILL NOTE 3	CUT 1.00 NOTE 1	EXPANDED EILL 1.00	MASS ORDINATE NOTE 8
653+00	100.00	4.43	15.43	16	55	2,179	1,626	553
654+00	100.00	5.14	10.22	18	48	2,197	1,674	523
655+00	100.00	5.03	11.58	19	40	2,216	1,714	502
656+00	100.00	5.15	12.43	19	44	2,235	1,758	477
657+00	100.00	4.57	25.19	18	70	2,253	1,828	425
658+00	100.00	4.69	13.60	17	72	2,270	1,900	370
659+00	100.00	4.99	6.42	18	37	2,288	1,937	351
660+00	100.00	5.26	4.82	19	21	2,307	1,958	349
661+00	100.00	6.92	3.33	23	15	2,330	1,973	357
662+00	100.00	9.55	1.67	31	9	2,361	1,982	379
663+00	100.00	8.70	1.34	34	6	2,395	1,988	407
663+06.373	6.37	6.29	5.74	2	1	2,397	1,989	408
664+00	93.63	11.72	2.71	31	15	2,428	2,004	424
665+00	100.00	8.07	2.83	37	10	2,465	2,014	451
666+00	100.00	7.34	3.64	29	12	2,494	2,026	468
667+00	100.00	5.09	5.48	23	17	2,517	2,043	474
667+62	62.00	4.64	9.02	11	17	2,528	2,060	468
668+00	38.00	6.51	4.06	8	9	2,536	2,069	467
669+00	100.00	8.74	1.41	28	10	2,564	2,079	485
670+00	100.00	12.84	1.70	40	6	2,604	2,085	519
671+00	100.00	12.63	2.95	47	9	2,651	2,094	557

START USH 18/151 'EB' TEMPORARY WIDENING STA 678+02 TO 687+82

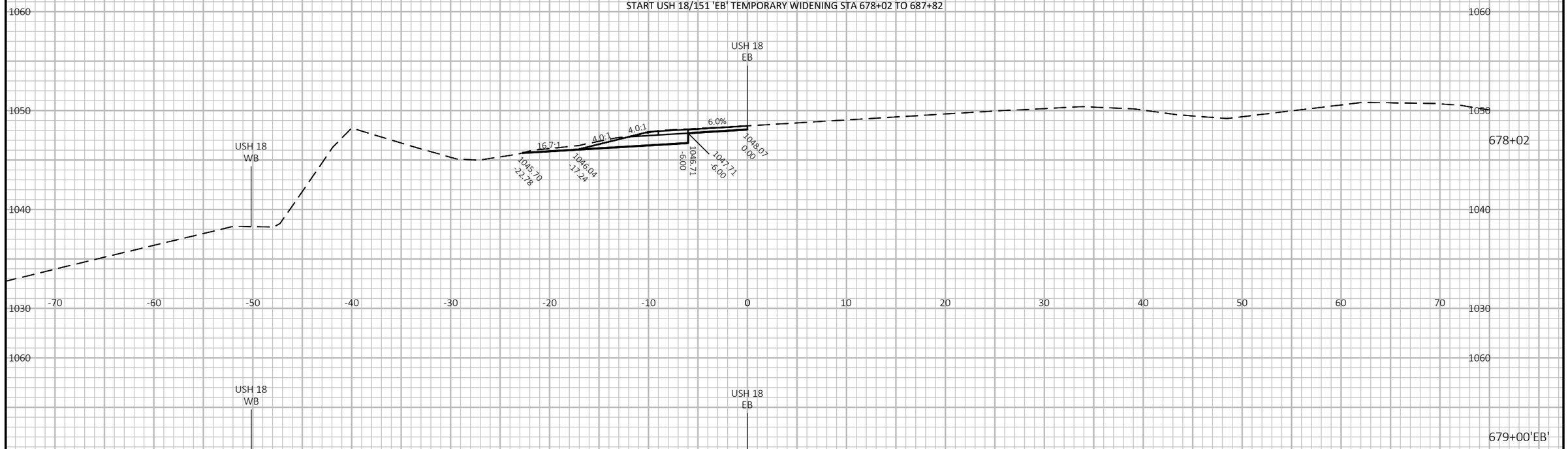

PROJECT NO: 1204-08-65	HWY: USH 18/151	COUNTY: DANE	CROSS SECTIONS: USH 18 EB - TEMP WIDENING	SHEET 629	E

FILE NAME : G:\WDOTSW\20007-000 USH 18\CIVIL 3D\SHEETSPLAN\CROSS SECTIONS\090501-XS_USH 18 EB_TEMP PAVT.DWG
LAYOUT NAME - 1

PLOT DATE : 7/21/2022 1:18 PM PLOT BY : ERIC ANDRITSCH PLOT NAME : PLOT SCALE : 1 IN:10 FT HORZ. / 1 IN:10 FT VERT.

WISDOT/CADDS SHEET 49

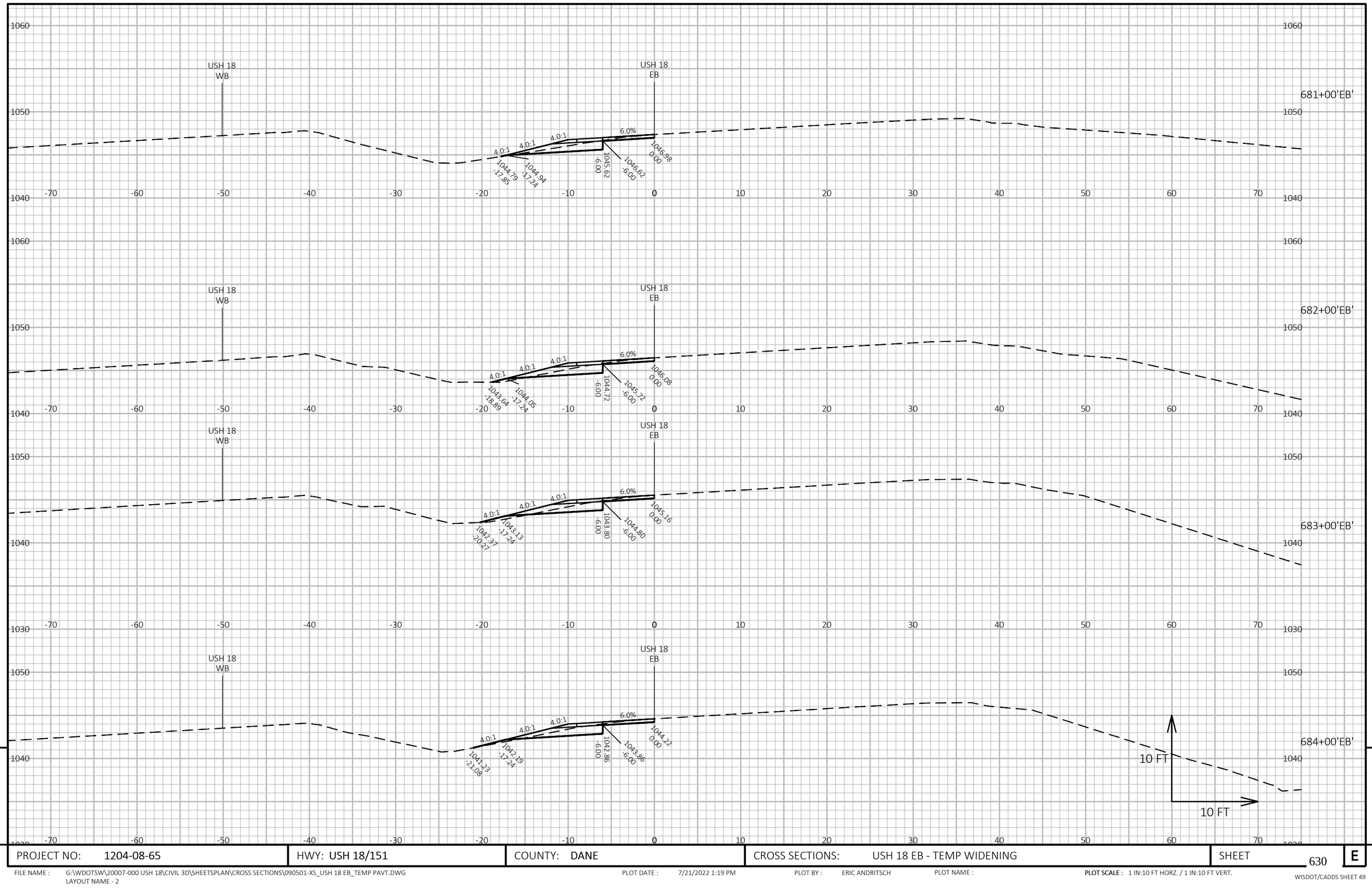

PROJECT NO: 1204-08-65	HWY: USH 18/151	COUNTY: DANE	CROSS SECTIONS: USH 18 EB - TEMP WIDENING	SHEET 630	E

FILE NAME : G:\WDOTSW\20007-000 USH 18\CIVIL 3D\SHEETSPLAN\CROSS SECTIONS\090501-XS_USH 18 EB_TEMP PAVT.DWG
LAYOUT NAME - 2

PLOT DATE : 7/21/2022 1:19 PM PLOT BY : ERIC ANDRITSCH PLOT NAME : PLOT SCALE : 1 IN:10 FT HORZ. / 1 IN:10 FT VERT.

WISDOT/CADDS SHEET 49

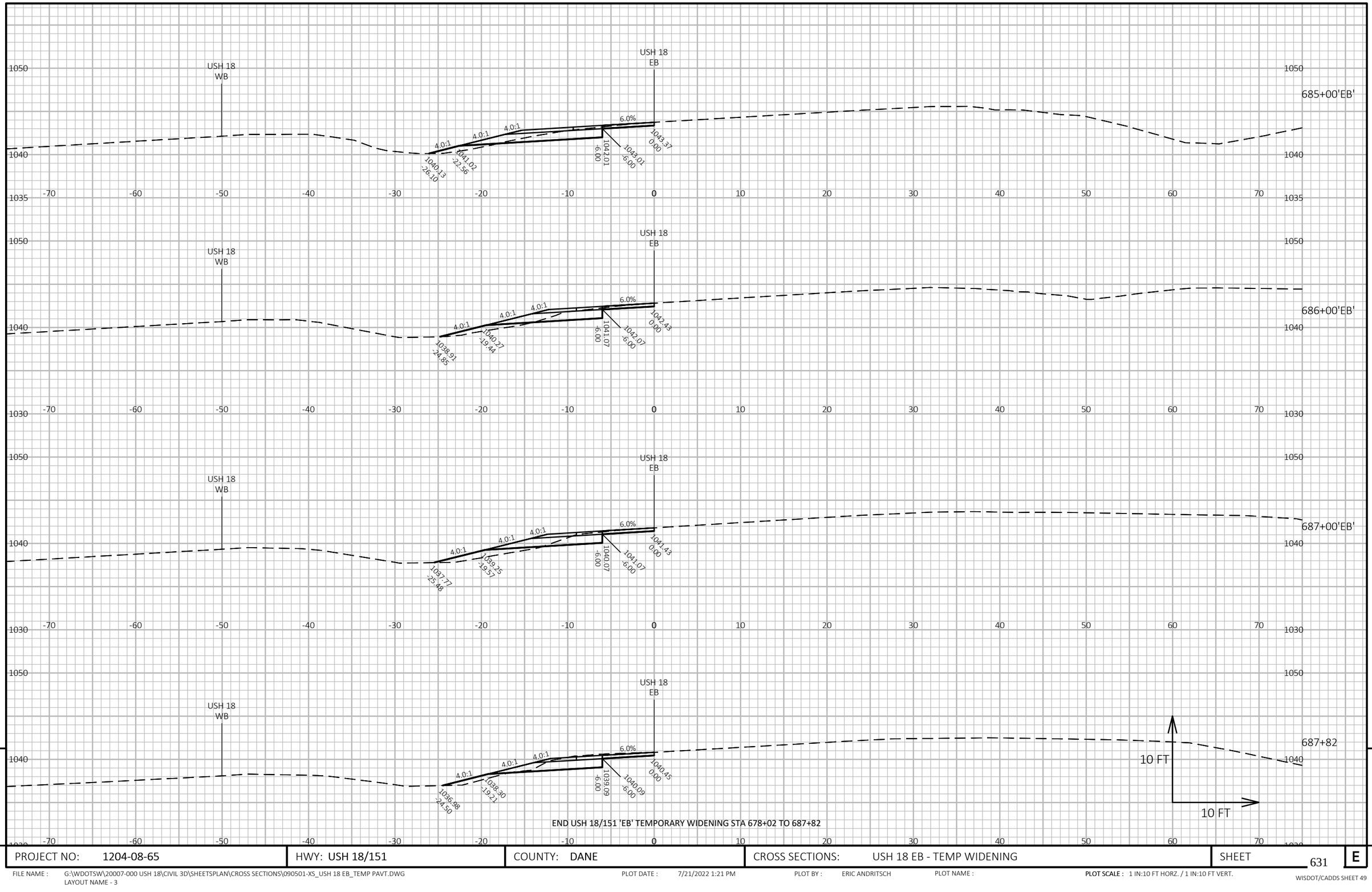

PROJECT NO: 1204-08-65	HWY: USH 18/151	COUNTY: DANE	CROSS SECTIONS: USH 18 EB - TEMP WIDENING	SHEET 631	E

FILE NAME : G:\WDOTSW\20007-000 USH 18\CIVIL 3D\SHEETSPLAN\CROSS SECTIONS\090501-XS_USH 18 EB_TEMP PAVT.DWG
LAYOUT NAME - 3

PLOT DATE : 7/21/2022 1:21 PM PLOT BY : ERIC ANDRITSCH PLOT NAME : PLOT SCALE : 1 IN:10 FT HORZ. / 1 IN:10 FT VERT.

WISDOT/CADDS SHEET 49

START CABLE GUARD SECTIONS 292+03'EB' TO 309+81'EB'

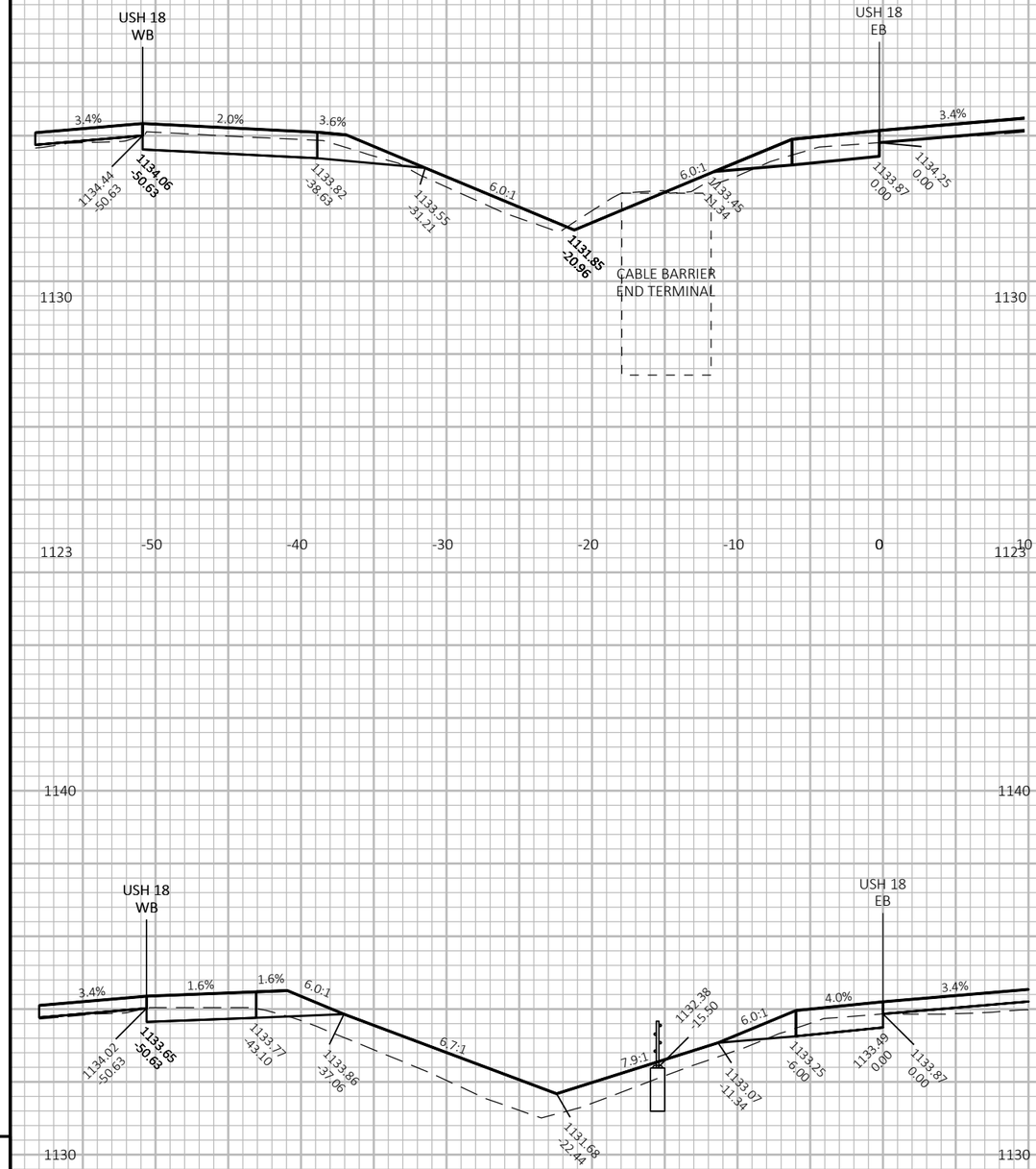

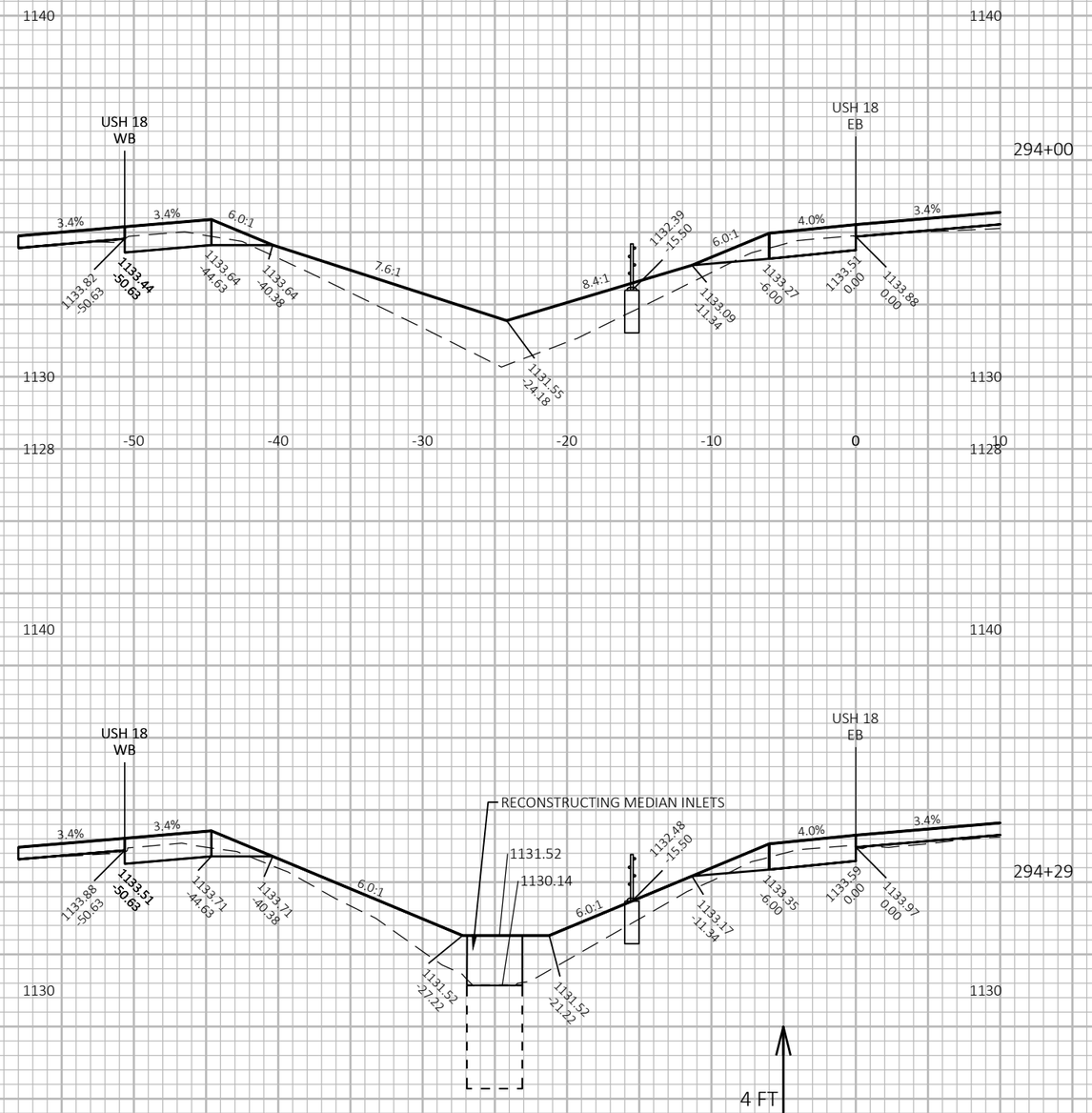

9

9

PROJECT NO: 1204-08-65	HWY: USH 18/151	COUNTY: DANE	CROSS SECTIONS: USH 18 EB	SHEET 632	E

FILE NAME : G:\WDOTSW\20007-000 USH 18\CIVIL 3D\SHEETSPLAN\CROSS SECTIONS\090301-XS_USH 18 EB.DWG
LAYOUT NAME - 18EB-2_1

PLOT DATE : 7/17/2022 1:56 PM

PLOT BY : ERIC ANDRITSCH

PLOT NAME :

PLOT SCALE : 1 IN:10 FT HORZ. / 1 IN:4 FT VERT.

WISDOT/CADDS SHEET 49

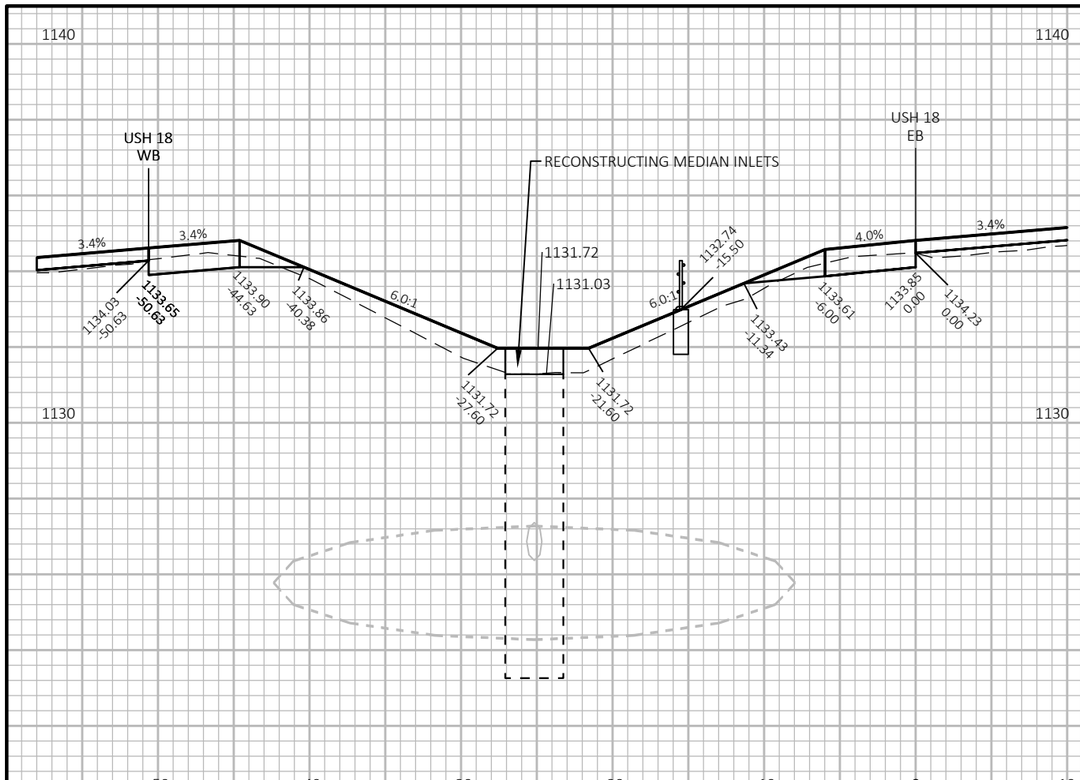

294+81

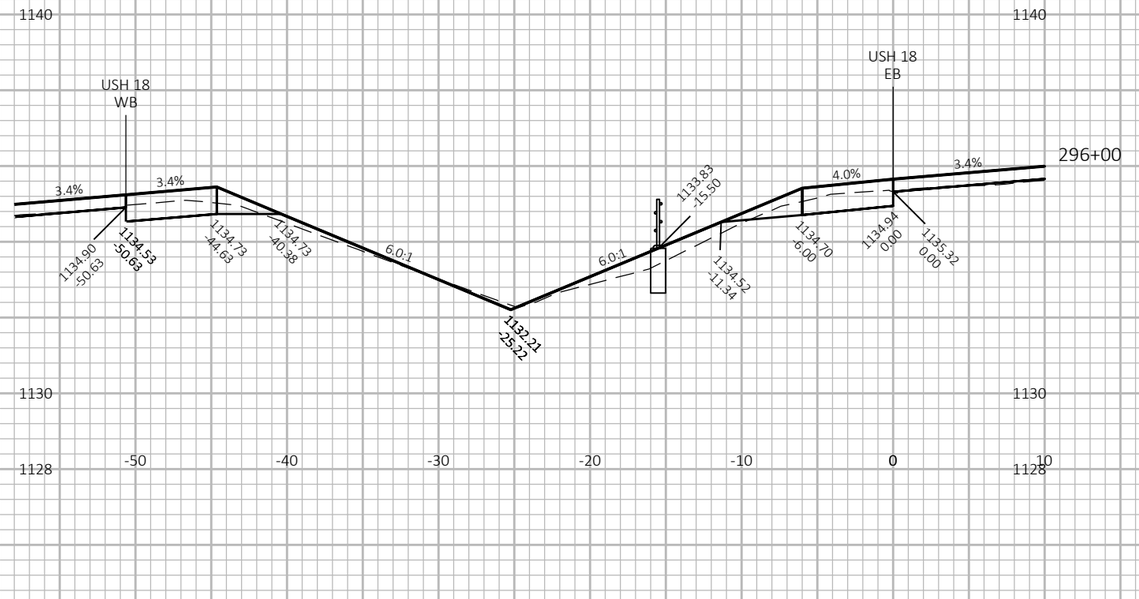

296+00

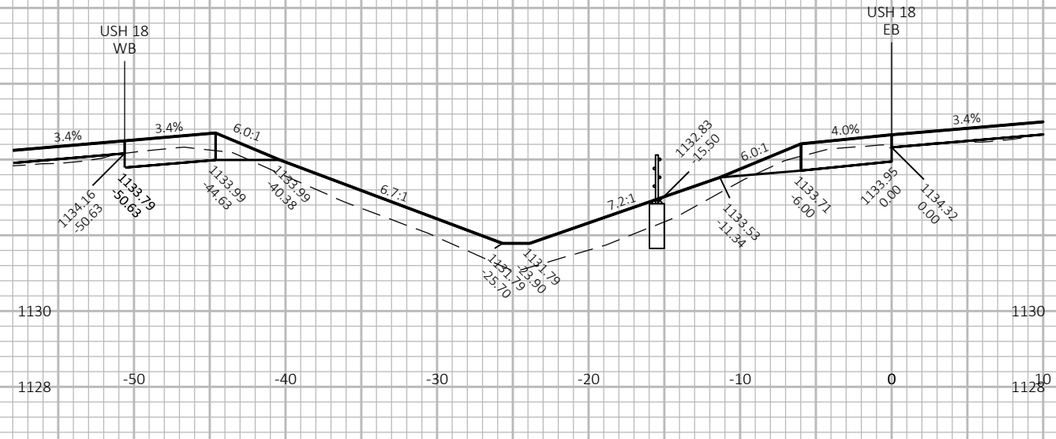

295+00

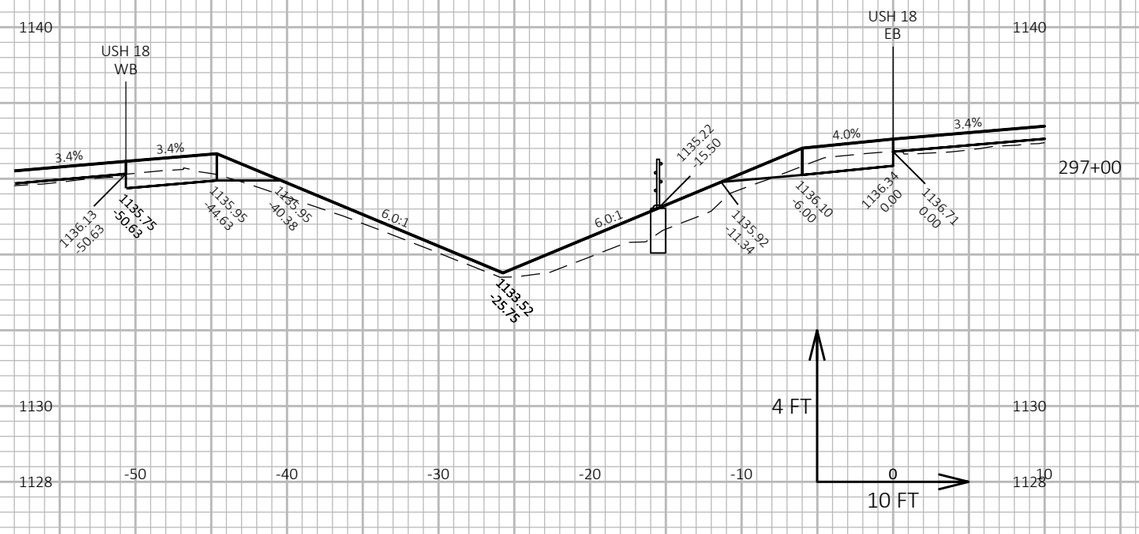

297+00

9

9

PROJECT NO: 1204-08-65	HWY: USH 18/151	COUNTY: DANE	CROSS SECTIONS: USH 18 EB	SHEET 633	E

FILE NAME : G:\WDOTSW\20007-000 USH 18\CIVIL 3D\SHEETSPLAN\CROSS SECTIONS\090301-XS_USH 18 EB.DWG
LAYOUT NAME - 18EB-2_2

PLOT DATE : 7/20/2022 11:40 AM PLOT BY : ERIC ANDRITSCH PLOT NAME : PLOT SCALE : 1 IN:10 FT HORZ. / 1 IN:4 FT VERT.

WISDOT/CADDS SHEET 49

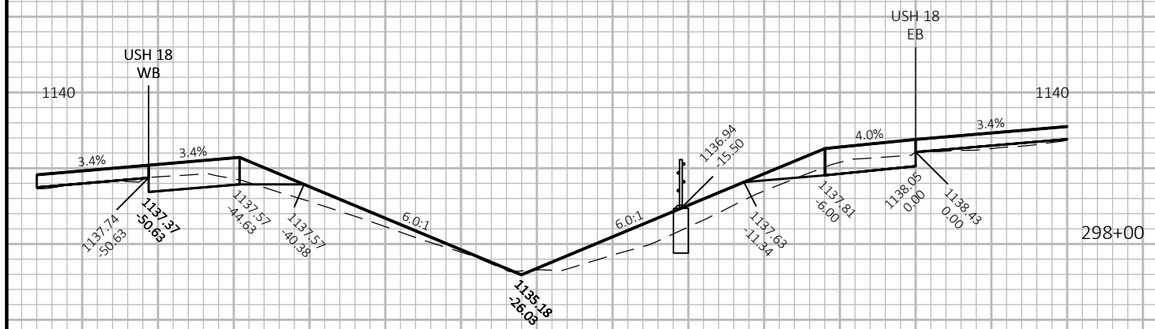

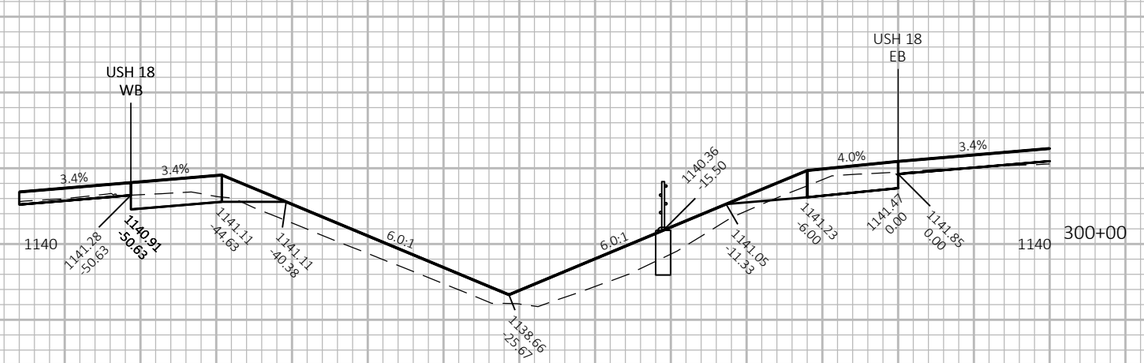

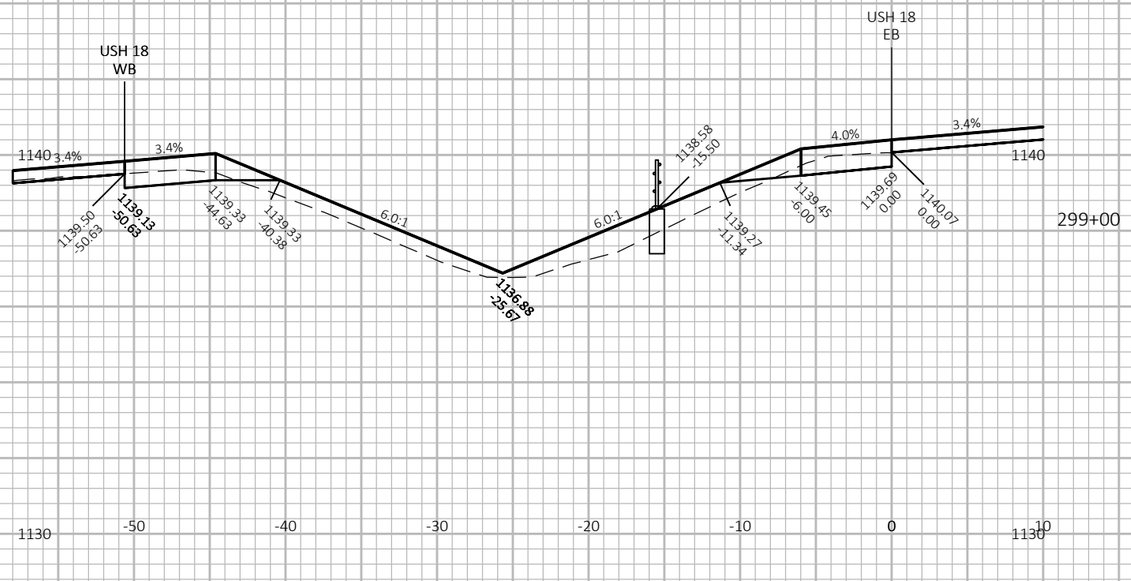

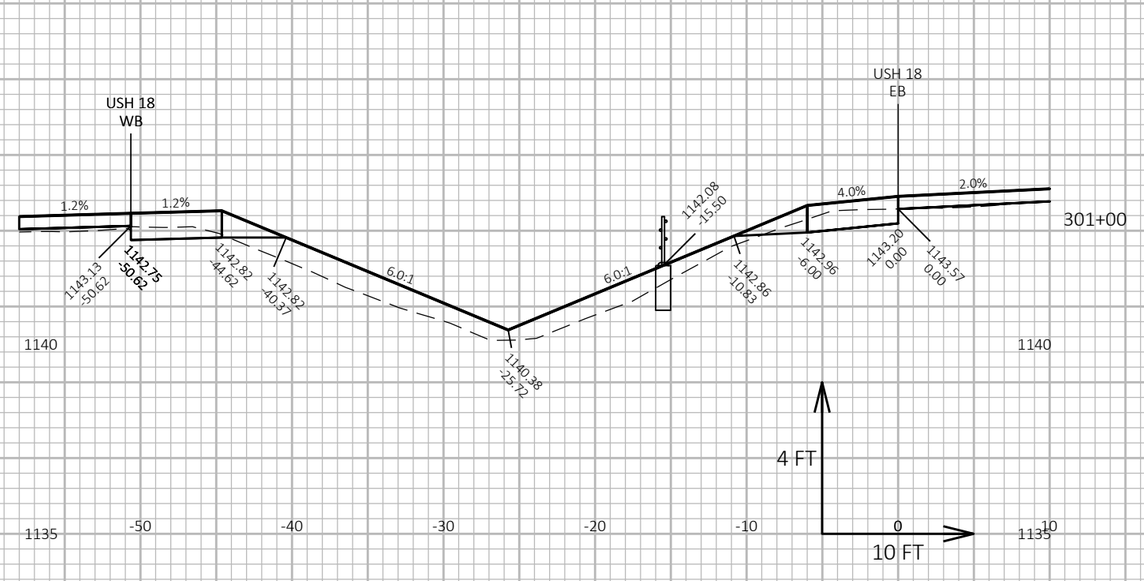

9

9

PROJECT NO: 1204-08-65	HWY: USH 18/151	COUNTY: DANE	CROSS SECTIONS: USH 18 EB	SHEET 634	E

FILE NAME : G:\WDOTSW\20007-000 USH 18\CIVIL 3D\SHEETSPLAN\CROSS SECTIONS\090301-XS_USH 18 EB.DWG
LAYOUT NAME - 18EB-2_3

PLOT DATE : 7/17/2022 1:59 PM

PLOT BY : ERIC ANDRITSCH

PLOT NAME :

PLOT SCALE : 1 IN:10 FT HORZ. / 1 IN:4 FT VERT.

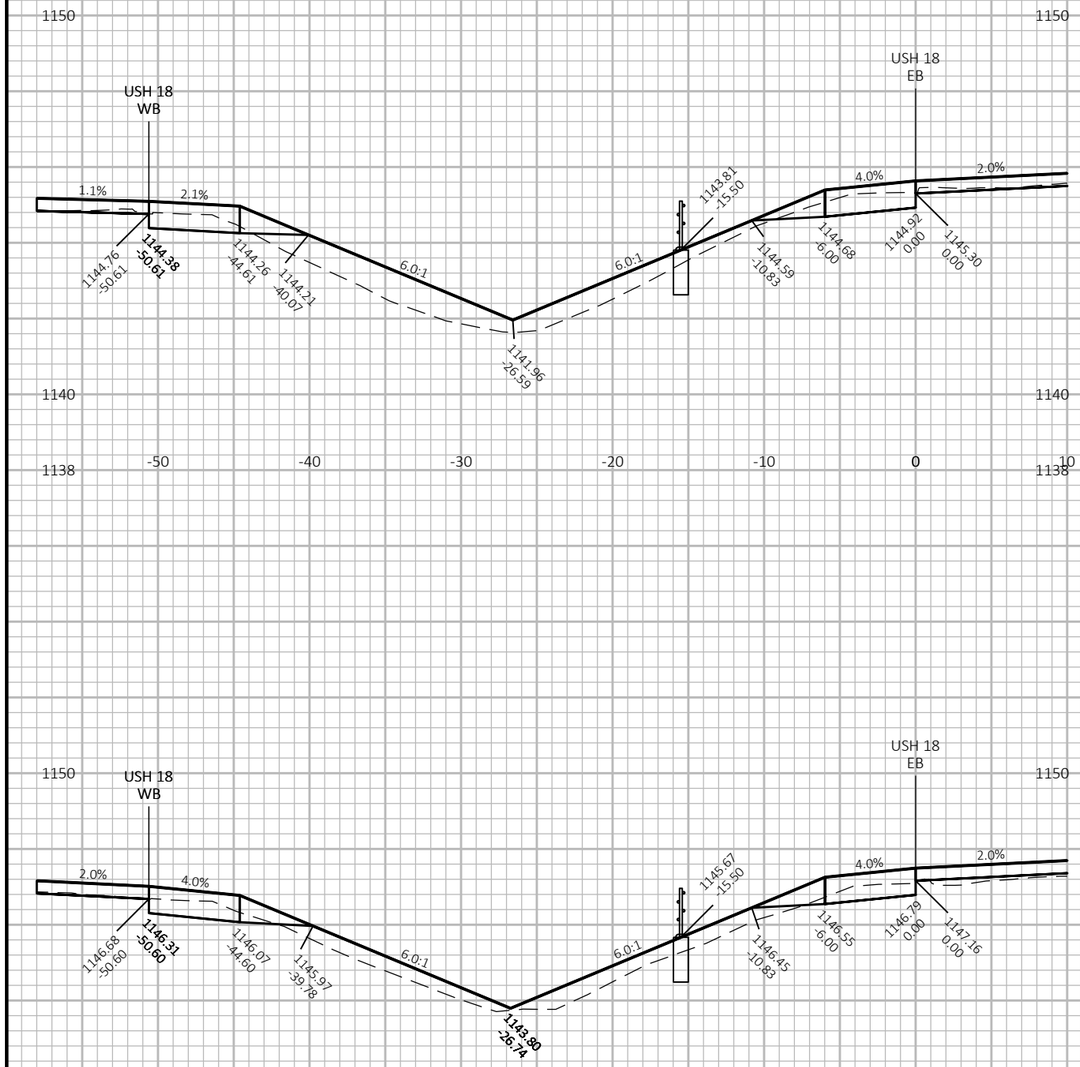

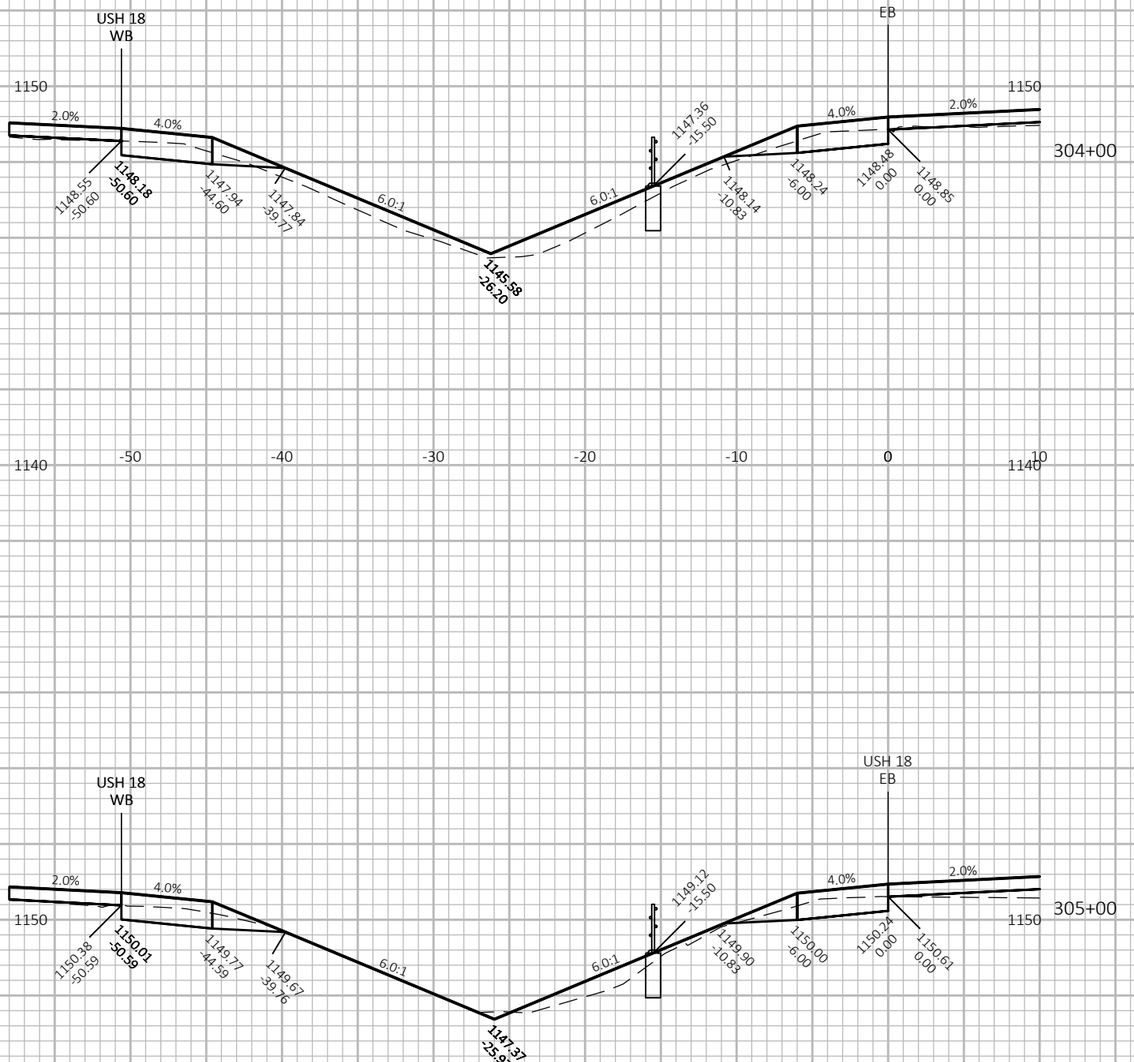

9

9

PROJECT NO: 1204-08-65	HWY: USH 18/151	COUNTY: DANE	CROSS SECTIONS: USH 18 EB	SHEET 635	E

FILE NAME : G:\WDOTSW\20007-000 USH 18\CIVIL 3D\SHEETSPLAN\CROSS SECTIONS\090301-XS_USH 18 EB.DWG
LAYOUT NAME - 18EB-2_4

PLOT DATE : 7/17/2022 2:01 PM

PLOT BY : ERIC ANDRITSCH

PLOT NAME :

PLOT SCALE : 1 IN:10 FT HORZ. / 1 IN:4 FT VERT.

WISDOT/CADDS SHEET 49

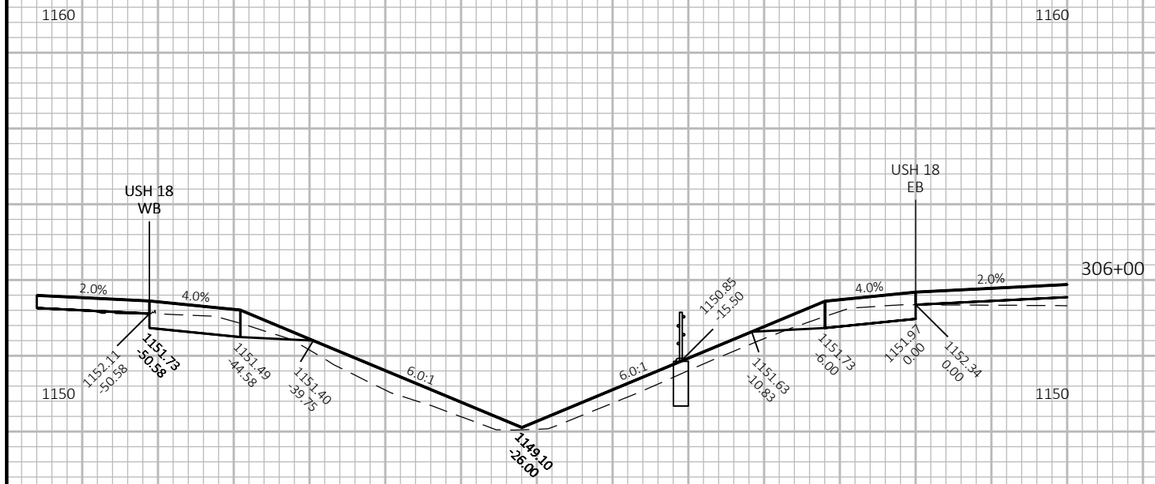

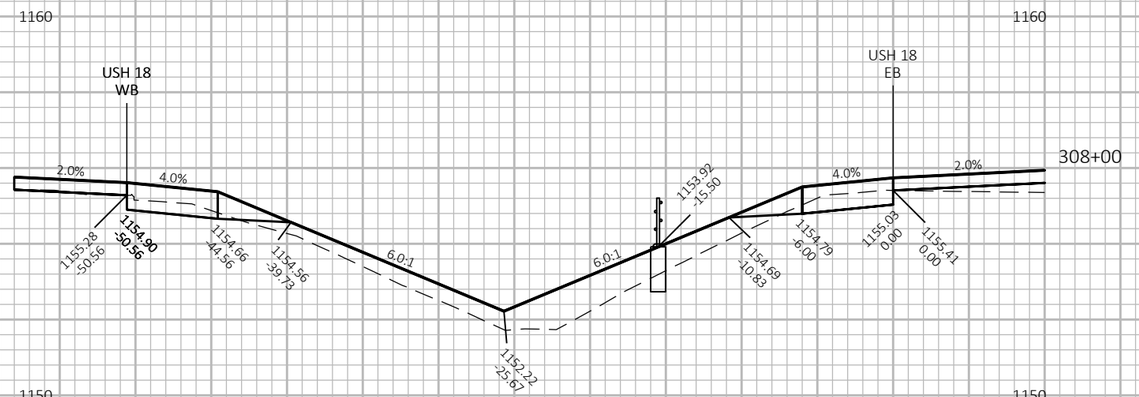

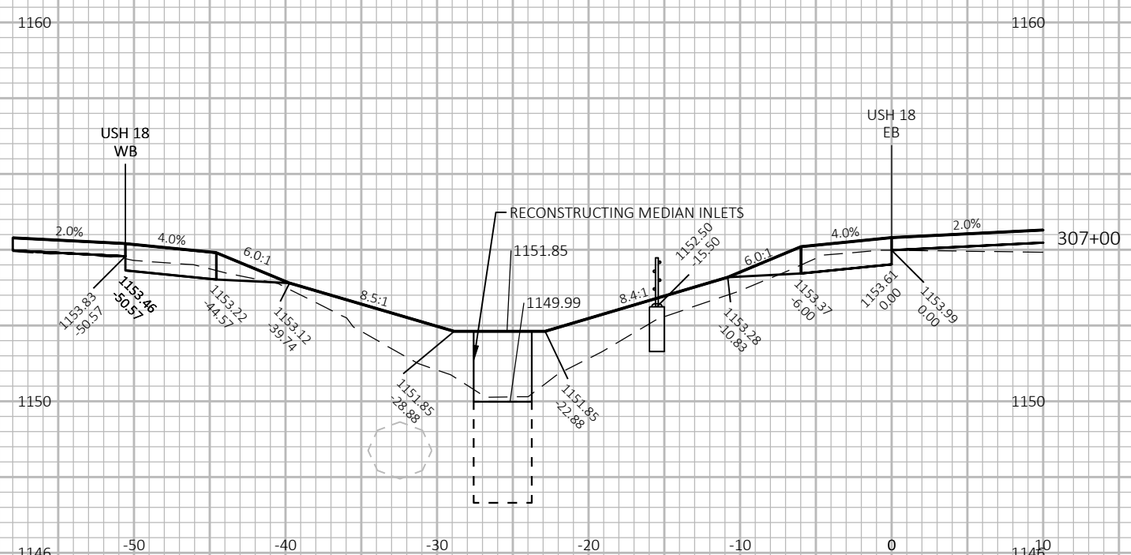

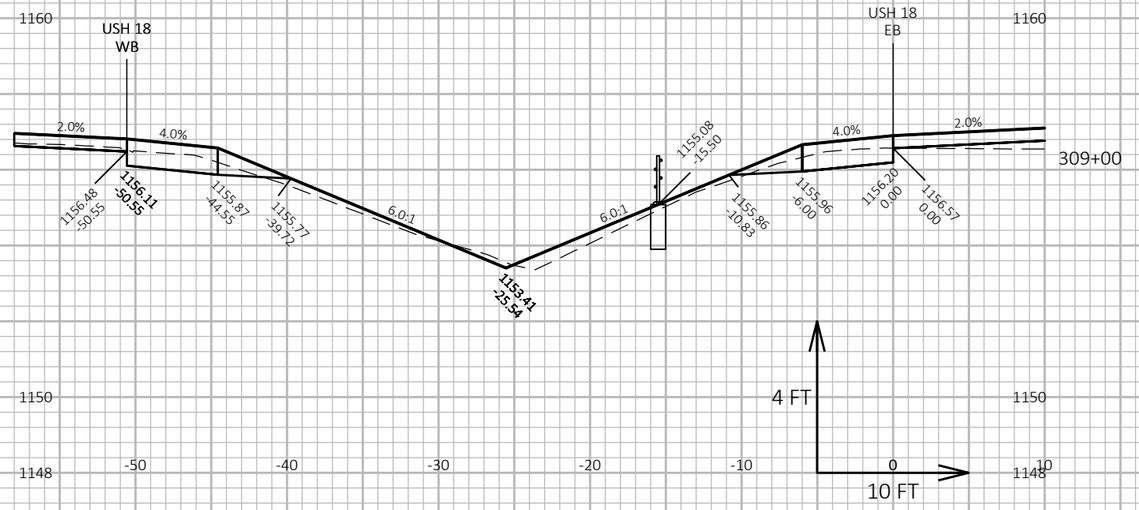

9

9

PROJECT NO: 1204-08-65	HWY: USH 18/151	COUNTY: DANE	CROSS SECTIONS: USH 18 EB	SHEET 636	E

FILE NAME : G:\WDOTSW\20007-000 USH 18\CIVIL 3D\SHEETSPLAN\CROSS SECTIONS\090301-XS_USH 18 EB.DWG
LAYOUT NAME - 18EB-2_5

PLOT DATE : 7/17/2022 2:02 PM

PLOT BY : ERIC ANDRITSCH

PLOT NAME :

PLOT SCALE : 1 IN:10 FT HORZ. / 1 IN:4 FT VERT.

WISDOT/CADDS SHEET 49

END CABLE GUARD SECTIONS 292+03'EB' TO 309+81'EB'

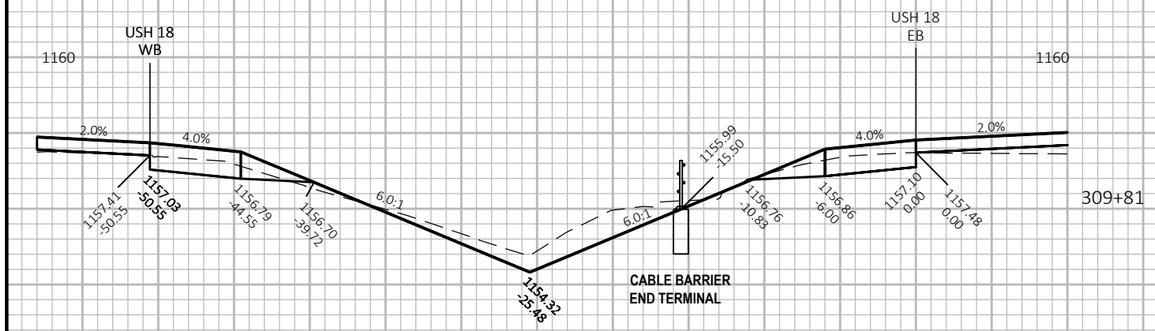

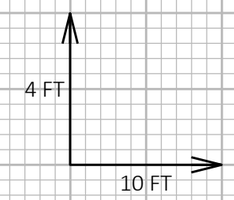

9

9

PROJECT NO: 1204-08-65	HWY: USH 18/151	COUNTY: DANE	CROSS SECTIONS: USH 18 EB	SHEET 637	E

FILE NAME : G:\WDOTSW\20007-000 USH 18\CIVIL 3D\SHEETSPLAN\CROSS SECTIONS\090301-XS_USH 18 EB.DWG
LAYOUT NAME - 18EB-2_6

PLOT DATE : 7/17/2022 2:04 PM PLOT BY : ERIC ANDRITSCH PLOT NAME : PLOT SCALE : 1 IN:10 FT HORZ. / 1 IN:4 FT VERT.

START CABLE GUARD SECTIONS 311+65'EB' TO 316+88'EB'

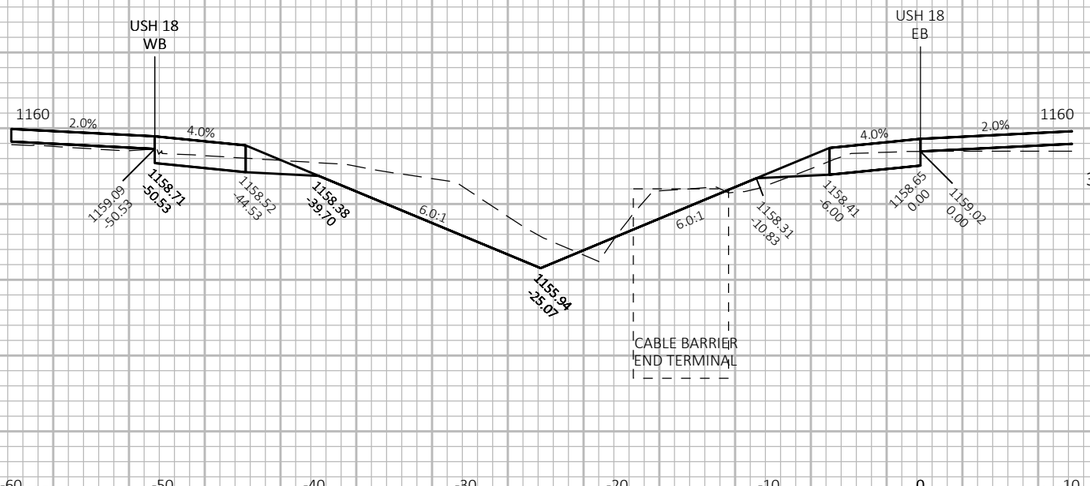

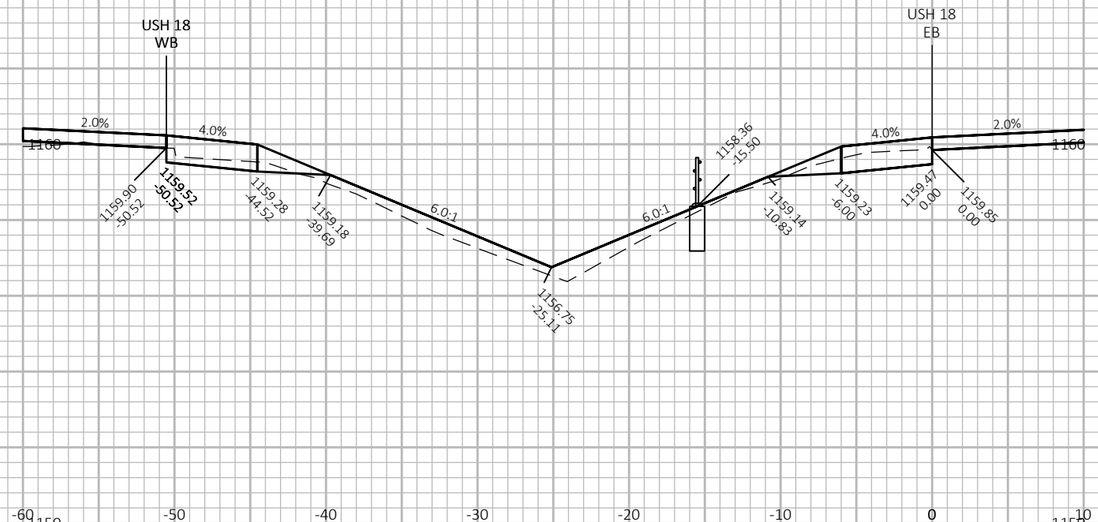

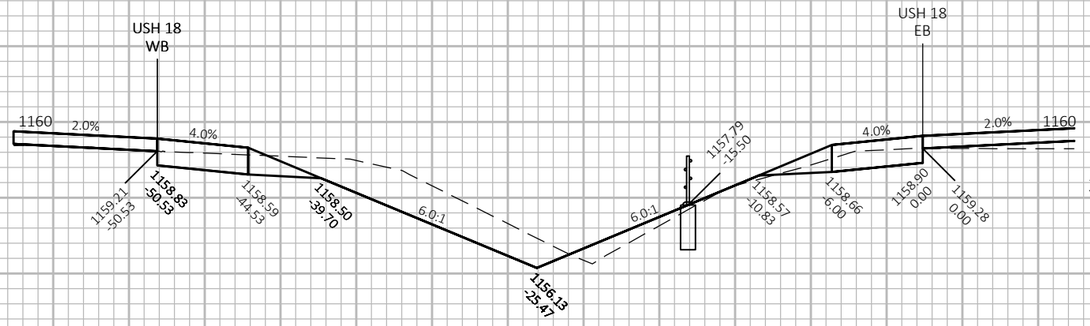

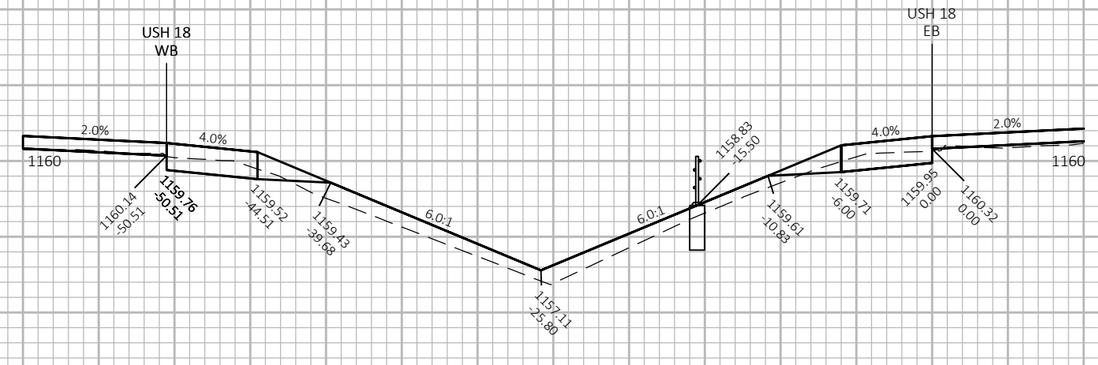

9

9

PROJECT NO: 1204-08-65	HWY: USH 18/151	COUNTY: DANE	CROSS SECTIONS: USH 18 EB	SHEET 638	E

FILE NAME : G:\WDOTSW\20007-000 USH 18\CIVIL 3D\SHEETSPLAN\CROSS SECTIONS\090301-XS_USH 18 EB.DWG
LAYOUT NAME - 18EB-3_1

PLOT DATE : 7/17/2022 2:05 PM PLOT BY : ERIC ANDRITSCH PLOT NAME : PLOT SCALE : 1 IN:10 FT HORZ. / 1 IN:4 FT VERT.

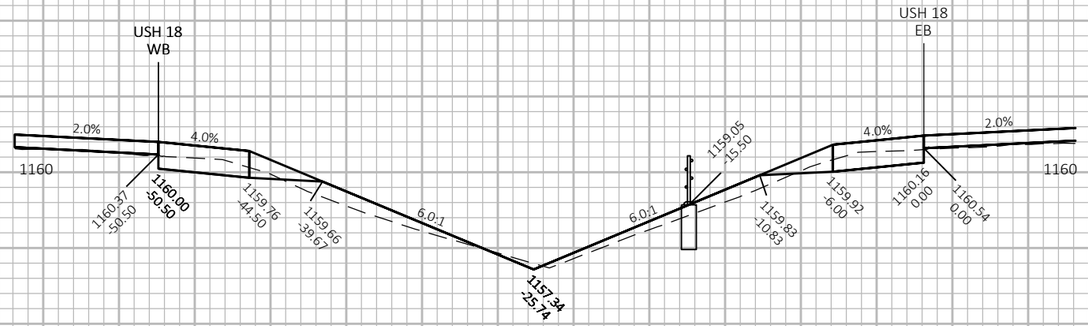

315+00

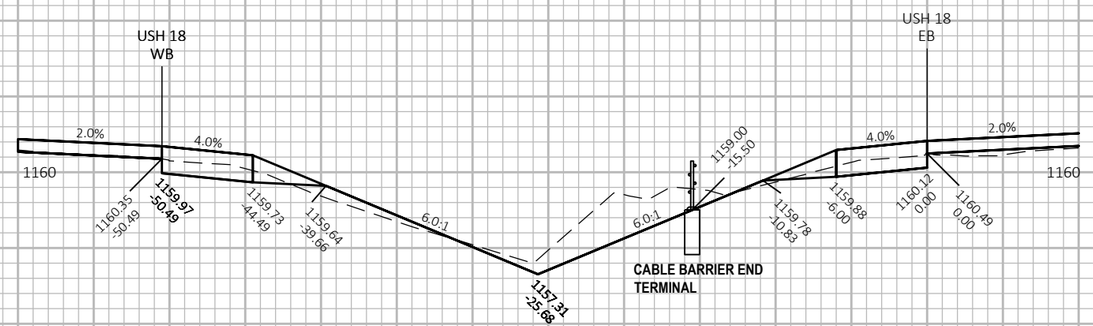

316+88

END CABLE GUARD SECTIONS 311+65'EB' TO 316+88'EB'

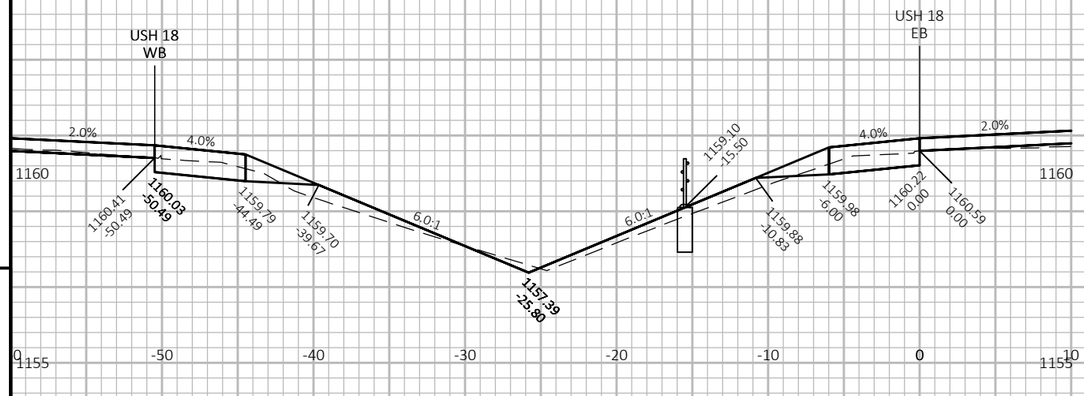

316+00

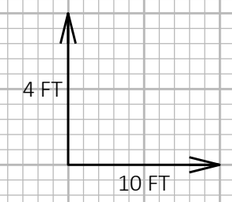

9

9

PROJECT NO: 1204-08-65	HWY: USH 18/151	COUNTY: DANE	CROSS SECTIONS: USH 18 EB	SHEET 639	E

FILE NAME : G:\WDOTSW\20007-000 USH 18\CIVIL 3D\SHEETSPLAN\CROSS SECTIONS\090301-XS_USH 18 EB.DWG
LAYOUT NAME - 18EB-3_2

PLOT DATE : 7/17/2022 2:07 PM PLOT BY : ERIC ANDRITSCH PLOT NAME : PLOT SCALE : 1 IN:10 FT HORZ. / 1 IN:4 FT VERT.

WISDOT/CADDS SHEET 49

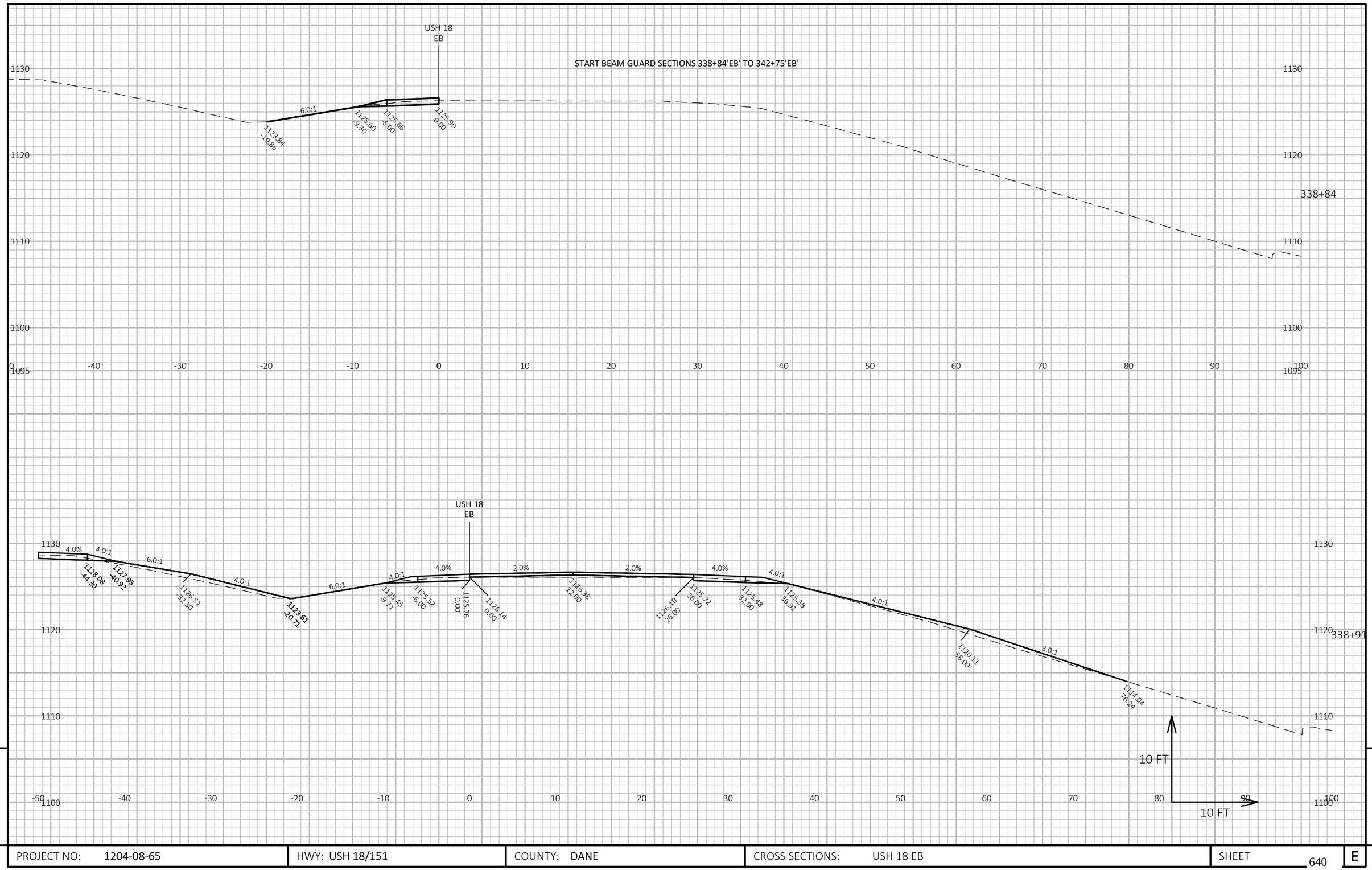

9

9

PROJECT NO: 1204-08-65	HWY: USH 18/151	COUNTY: DANE	CROSS SECTIONS: USH 18 EB	SHEET 640	E

FILE NAME : G:\WDOTSW\20007-000 USH 18\CIVIL 3D\SHEETSPLAN\CROSS SECTIONS\090301-XS_USH 18 EB.DWG
LAYOUT NAME - 18EB-4_1

PLOT DATE : 7/17/2022 2:09 PM PLOT BY : ERIC ANDRITSCH PLOT NAME : PLOT SCALE : 1 IN:10 FT HORZ. / 1 IN:10 FT VERT.

WISDOT/CADDS SHEET 49

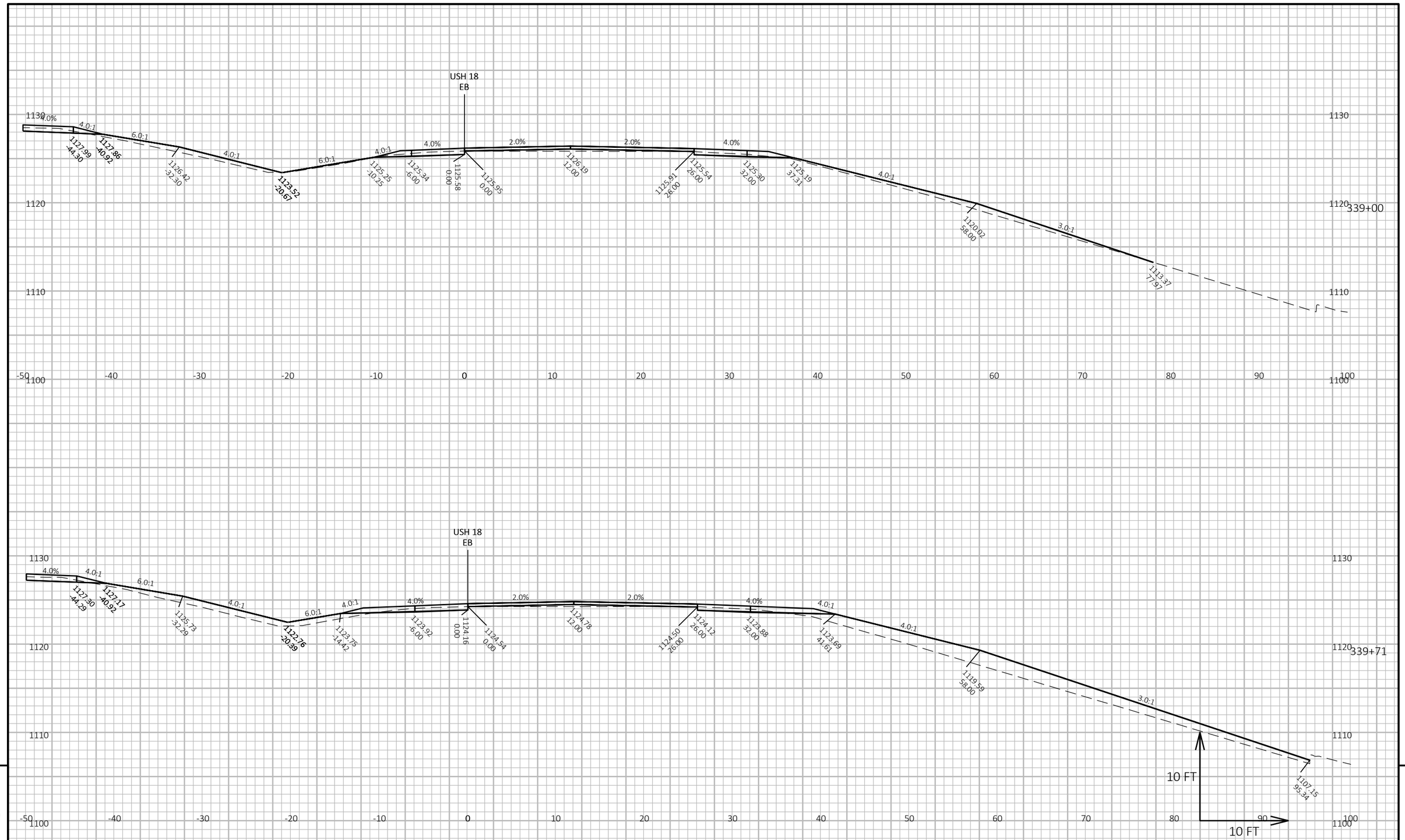

9 9

PROJECT NO: 1204-08-65	HWY: USH 18/151	COUNTY: DANE	CROSS SECTIONS: USH 18 EB	SHEET 641	E

FILE NAME : G:\WDOTSW\20007-000 USH 18\CIVIL 3D\SHEETSPLAN\CROSS SECTIONS\090301-XS_USH 18 EB.DWG
LAYOUT NAME - 18EB-4_2

PLOT DATE : 7/17/2022 2:10 PM PLOT BY : ERIC ANDRITSCH PLOT NAME : **PLOT SCALE :** 1 IN:10 FT HORZ. / 1 IN:10 FT VERT.

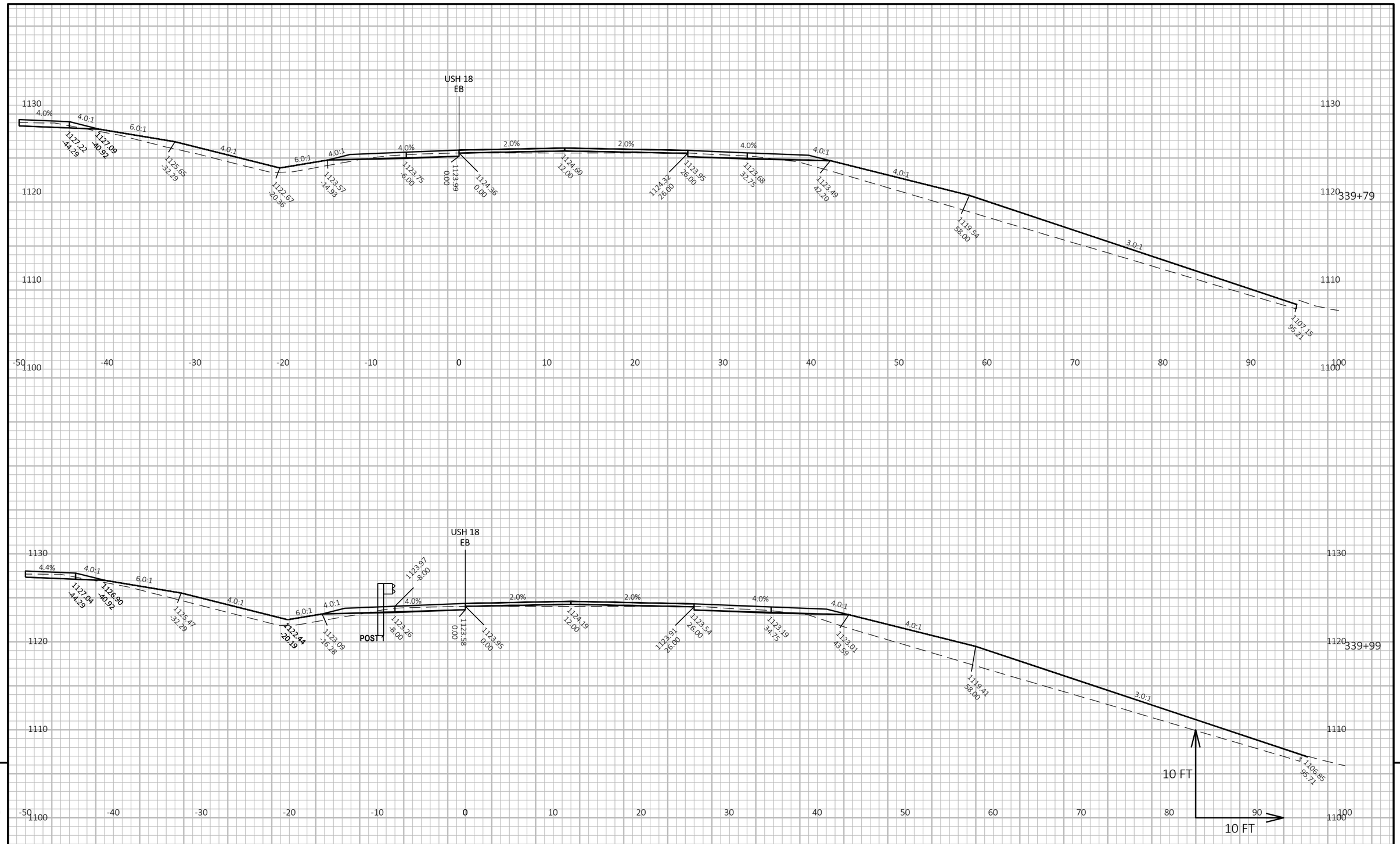

9

9

PROJECT NO: 1204-08-65	HWY: USH 18/151	COUNTY: DANE	CROSS SECTIONS: USH 18 EB	SHEET 642	E

FILE NAME : G:\WDOTSW\20007-000 USH 18\CIVIL 3D\SHEETSPLAN\CROSS SECTIONS\090301-XS_USH 18 EB.DWG
LAYOUT NAME - 18EB-4_3

PLOT DATE : 7/17/2022 2:12 PM

PLOT BY : ERIC ANDRITSCH

PLOT NAME :

PLOT SCALE : 1 IN:10 FT HORZ. / 1 IN:10 FT VERT.

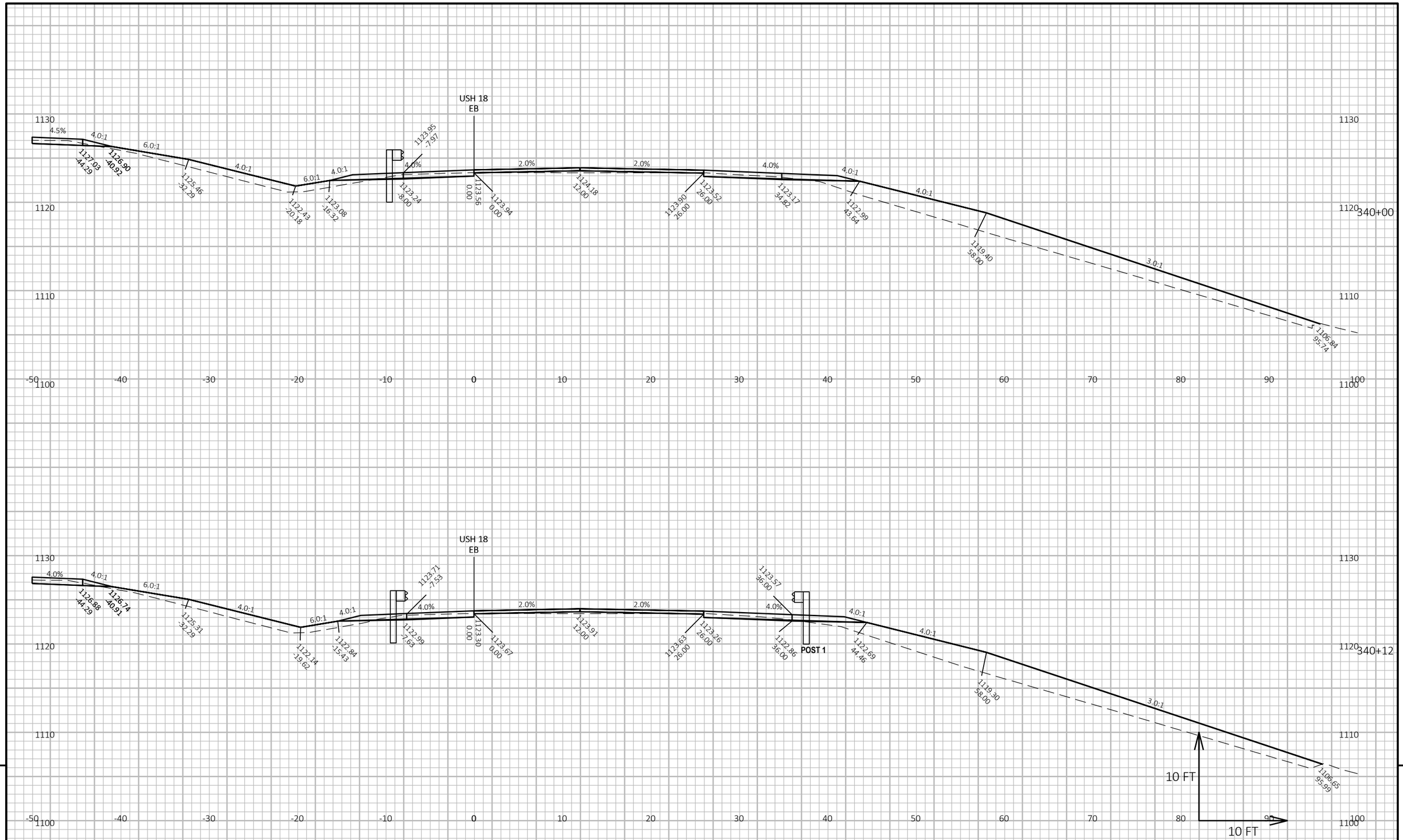

9

9

PROJECT NO: 1204-08-65	HWY: USH 18/151	COUNTY: DANE	CROSS SECTIONS: USH 18 EB	SHEET 643	E

FILE NAME : G:\WDOTSW\20007-000 USH 18\CIVIL 3D\SHEETSPLAN\CROSS SECTIONS\090301-XS_USH 18 EB.DWG
LAYOUT NAME - 18EB-4_4

PLOT DATE : 7/17/2022 2:13 PM

PLOT BY : ERIC ANDRITSCH

PLOT NAME :

PLOT SCALE : 1 IN:10 FT HORZ. / 1 IN:10 FT VERT.

WISDOT/CADDS SHEET 49

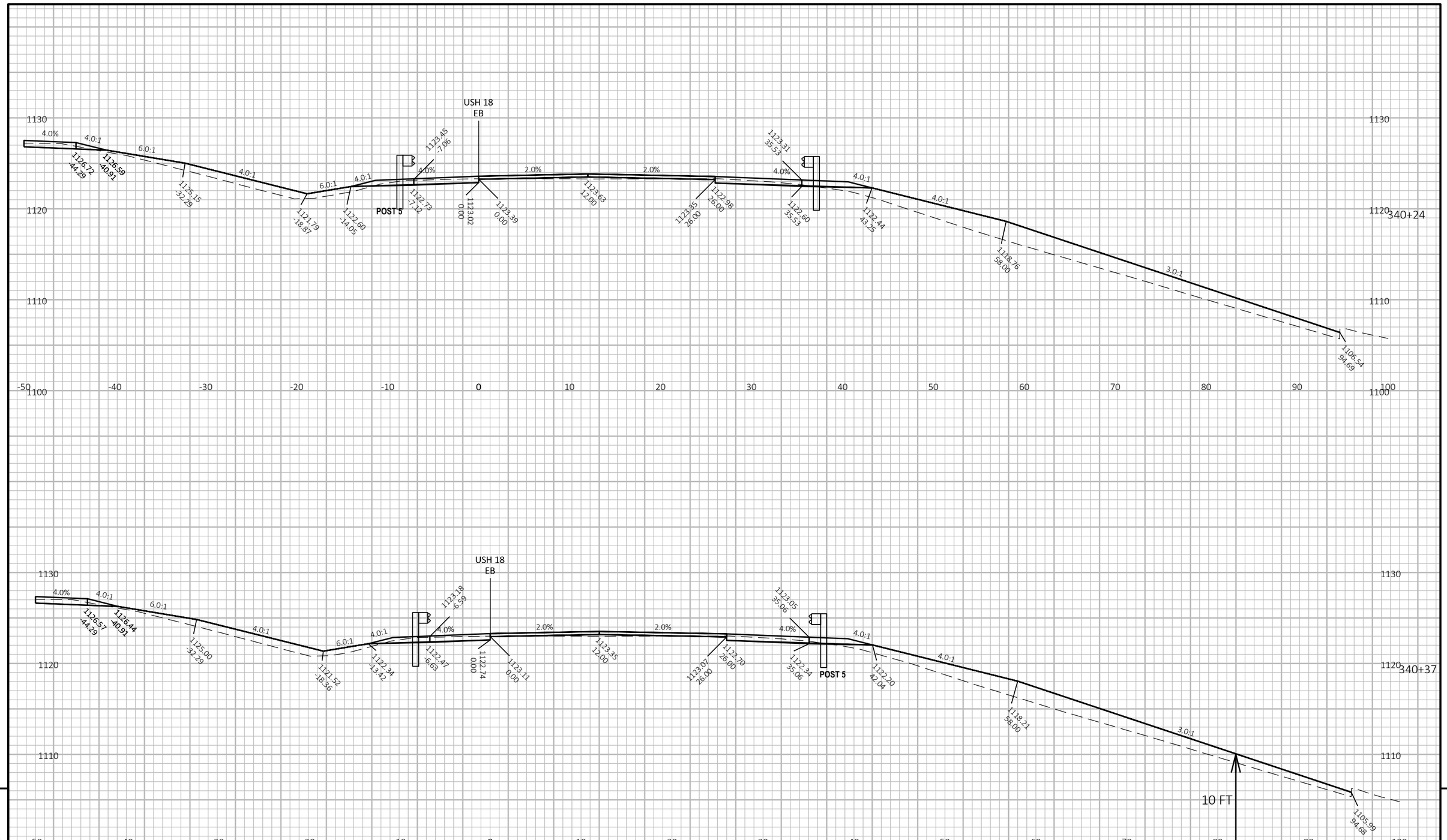

9

9

PROJECT NO: 1204-08-65	HWY: USH 18/151	COUNTY: DANE	CROSS SECTIONS: USH 18 EB	SHEET 644	E

FILE NAME : G:\WDOTSW\20007-000 USH 18\CIVIL 3D\SHEETSPLAN\CROSS SECTIONS\090301-XS_USH 18 EB.DWG
LAYOUT NAME - 18EB-4_5

PLOT DATE : 7/17/2022 2:15 PM

PLOT BY : ERIC ANDRITSCH

PLOT NAME :

PLOT SCALE : 1 IN:10 FT HORZ. / 1 IN:10 FT VERT.

WISDOT/CADDS SHEET 49

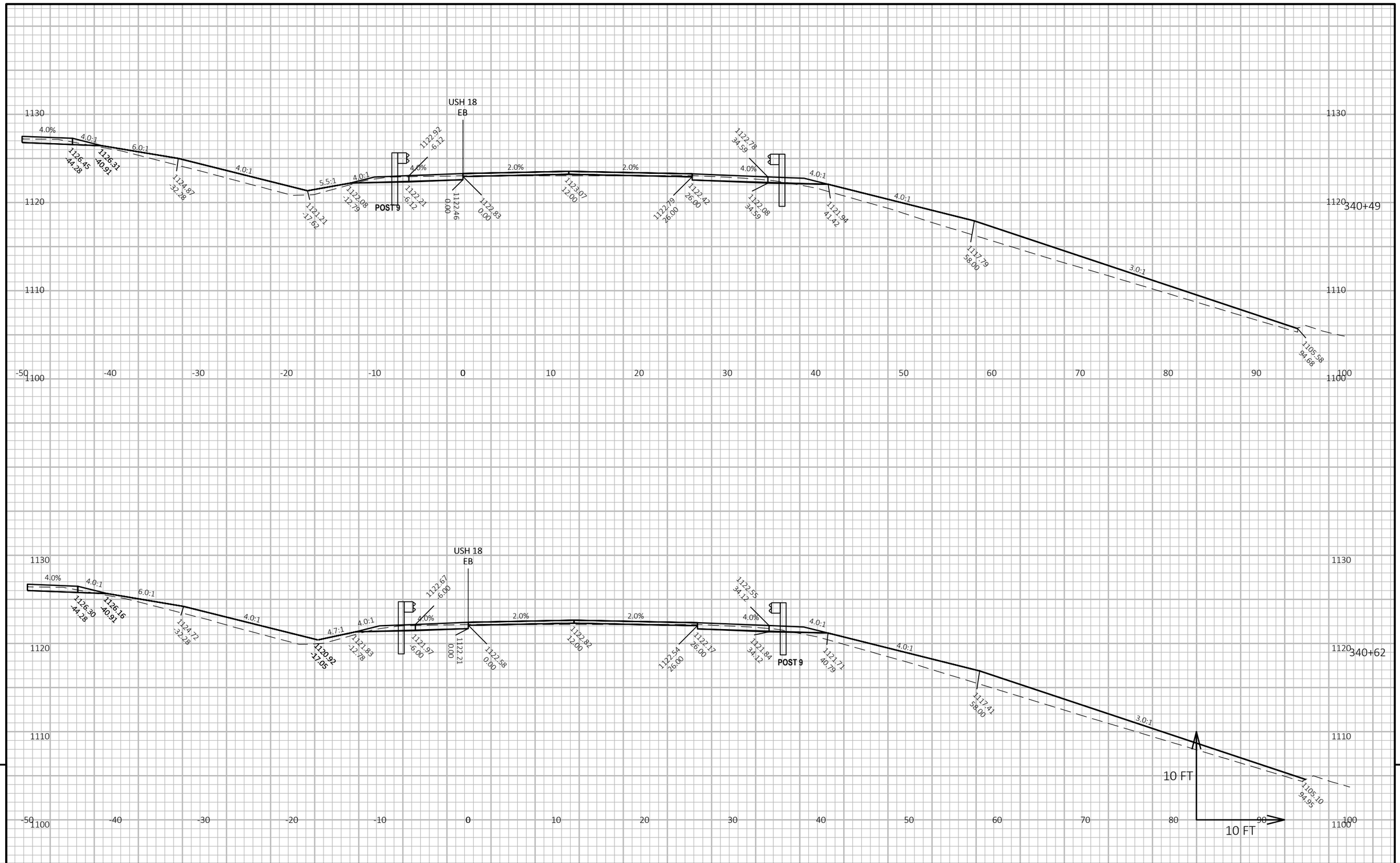

PROJECT NO: 1204-08-65	HWY: USH 18/151	COUNTY: DANE	CROSS SECTIONS: USH 18 EB	SHEET 645 E

FILE NAME : G:\WDOTSW\20007-000 USH 18\CIVIL 3D\SHEETSPLAN\CROSS SECTIONS\090301-XS_USH 18 EB.DWG
LAYOUT NAME - 18EB-4_6

PLOT DATE : 7/17/2022 2:16 PM PLOT BY : ERIC ANDRITSCH PLOT NAME : PLOT SCALE : 1 IN:10 FT HORZ. / 1 IN:10 FT VERT.

WISDOT/CADDS SHEET 49

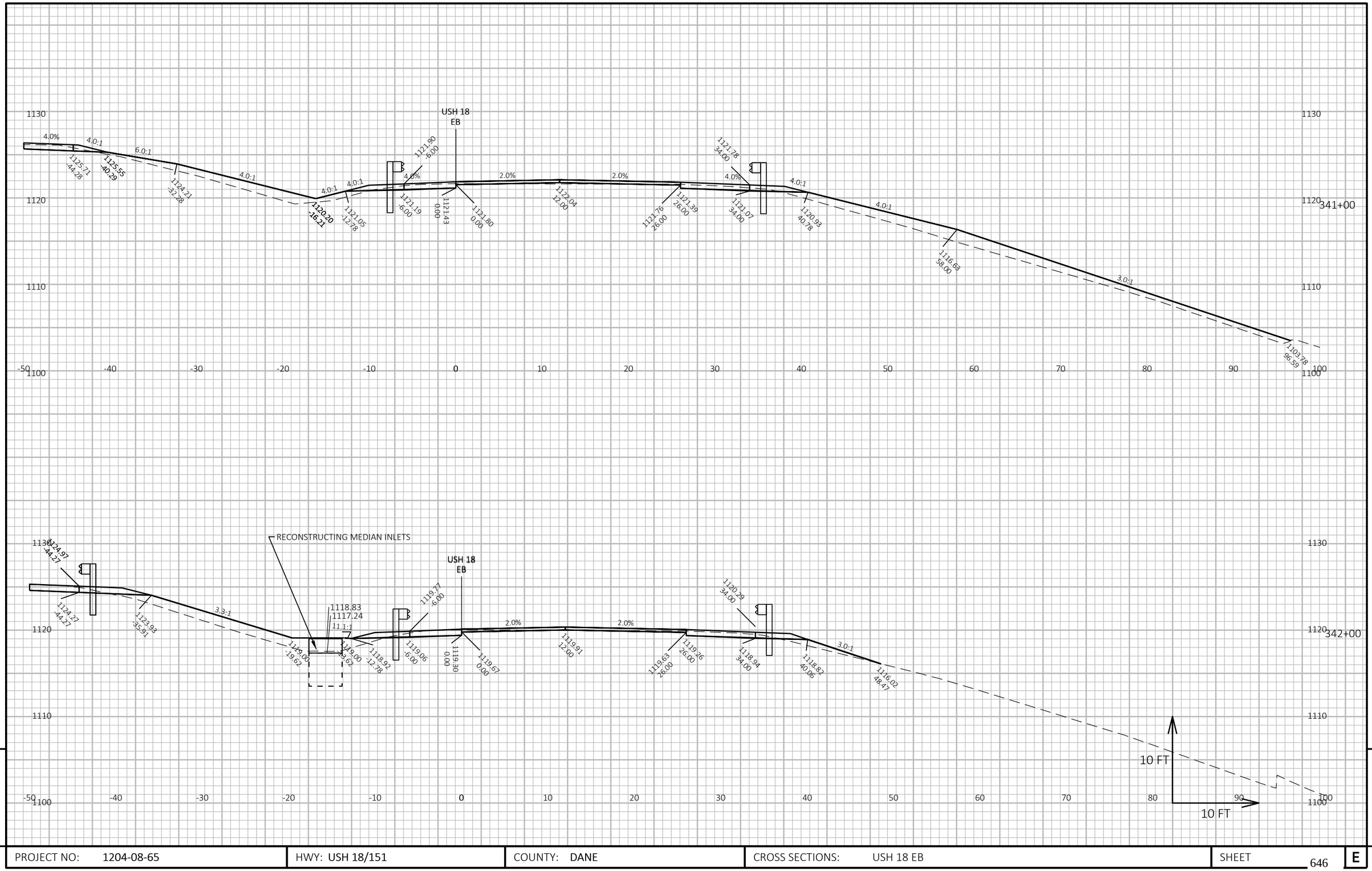

9

PROJECT NO: 1204-08-65	HWY: USH 18/151	COUNTY: DANE	CROSS SECTIONS: USH 18 EB	SHEET 646	E

FILE NAME : G:\WDOTSW\20007-000 USH 18\CIVIL 3D\SHEETSPLAN\CROSS SECTIONS\090301-XS_USH 18 EB.DWG
LAYOUT NAME - 18EB-4_7

PLOT DATE : 7/20/2022 11:37 AM PLOT BY : ERIC ANDRITSCH PLOT NAME :

PLOT SCALE : 1 IN:10 FT HORZ. / 1 IN:10 FT VERT.

WISDOT/CADDS SHEET 49

9

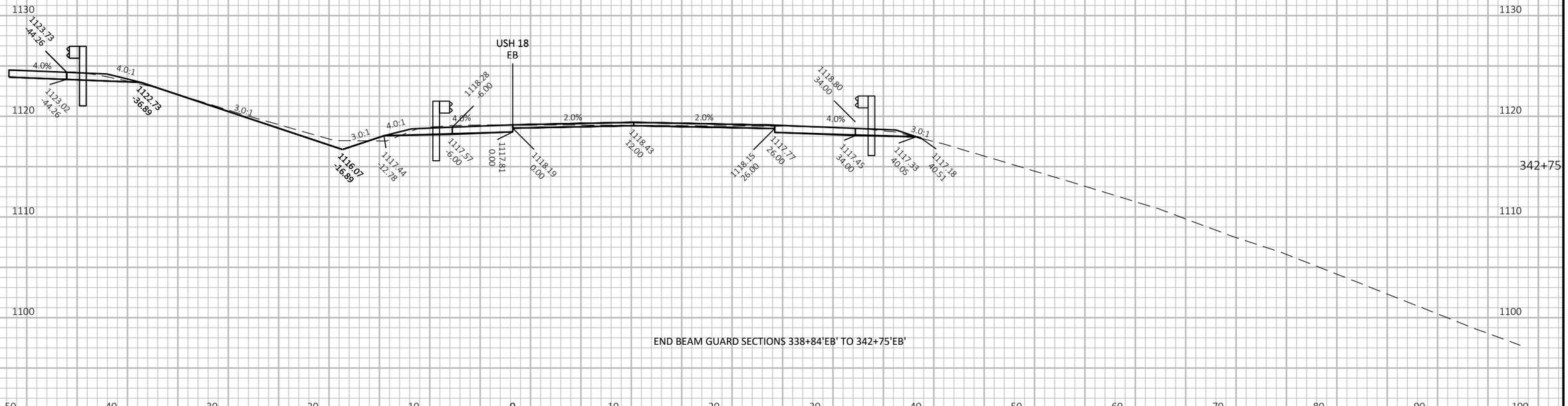

PROJECT NO: 1204-08-65	HWY: USH 18/151	COUNTY: DANE	CROSS SECTIONS: USH 18 EB	SHEET 647	E

FILE NAME : G:\WDOTSW\20007-000 USH 18\CIVIL 3D\SHEETSPLAN\CROSS SECTIONS\090301-XS_USH 18 EB.DWG
LAYOUT NAME - 18EB-4_8

PLOT DATE : 7/17/2022 2:20 PM PLOT BY : ERIC ANDRITSCH PLOT NAME : **PLOT SCALE :** 1 IN:10 FT HORZ. / 1 IN:10 FT VERT.

WISDOT/CADDS SHEET 49

START BEAM GUARD SECTIONS 365+08'EB' TO 369+35'EB'

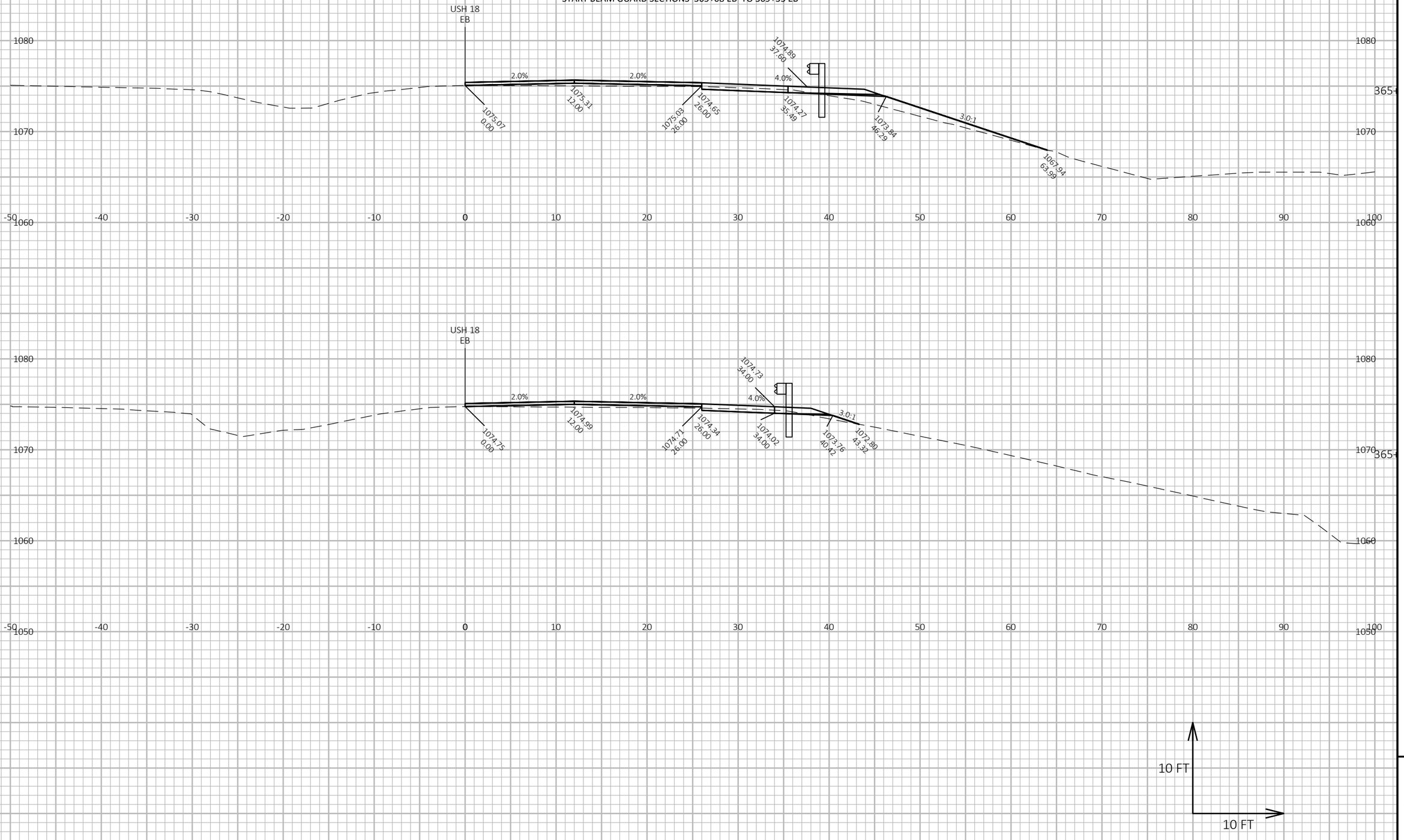

9

9

PROJECT NO: 1204-08-65	HWY: USH 18/151	COUNTY: DANE	CROSS SECTIONS: USH 18 EB	SHEET 648	E

FILE NAME : G:\WDOTSW\20007-000 USH 18\CIVIL 3D\SHEETSPLAN\CROSS SECTIONS\090302-XS_USH 18 EB.DWG
LAYOUT NAME - 18EB-15_1

PLOT DATE : 7/17/2022 8:37 PM PLOT BY : ERIC ANDRITSCH PLOT NAME : **PLOT SCALE :** 1 IN:10 FT HORZ. / 1 IN:10 FT VERT.

WISDOT/CADDS SHEET 49

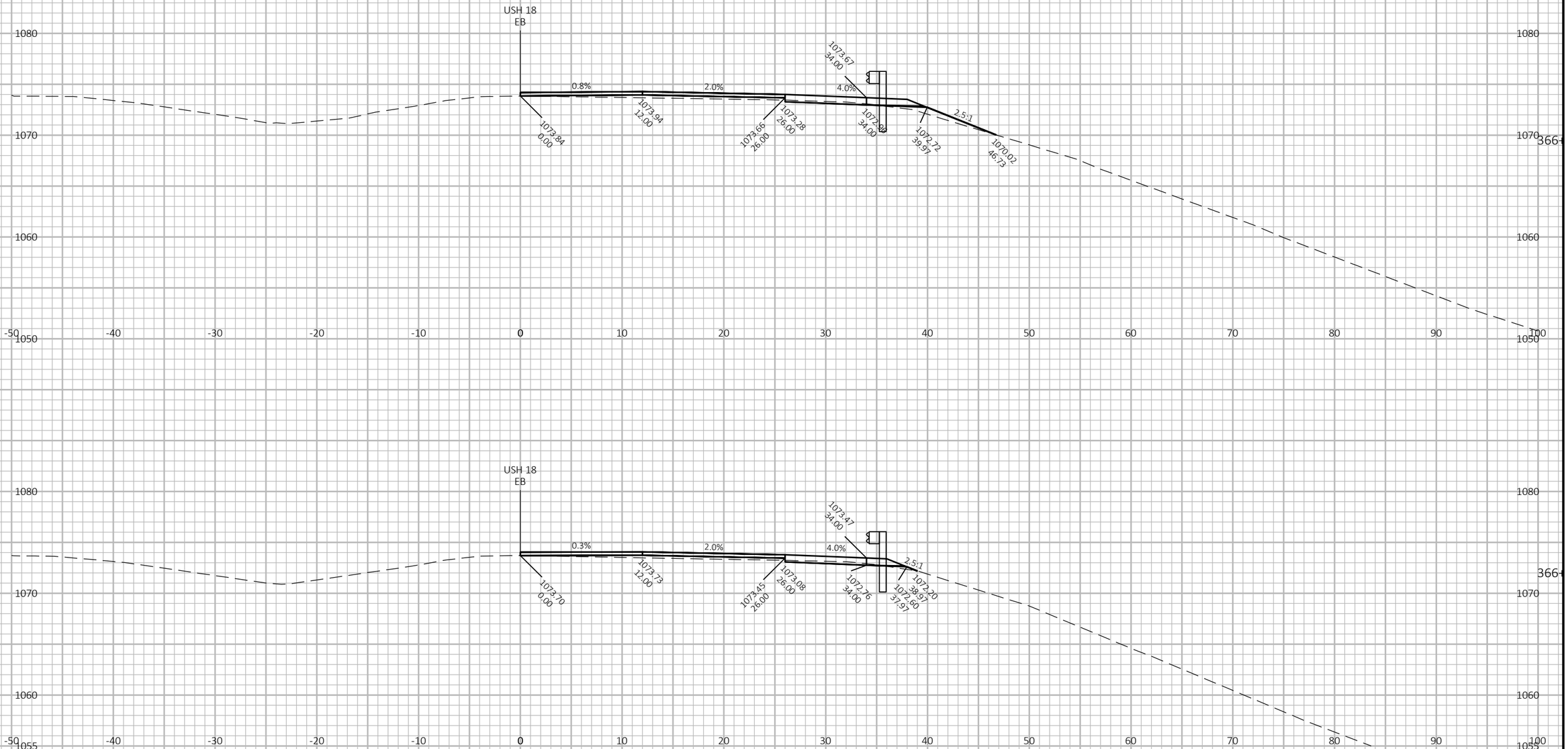

PROJECT NO: 1204-08-65	HWY: USH 18/151	COUNTY: DANE	CROSS SECTIONS: USH 18 EB	SHEET 649	E

FILE NAME : G:\WDOTSW\20007-000 USH 18\CIVIL 3D\SHEETSPLAN\CROSS SECTIONS\090302-XS_USH 18 EB.DWG
LAYOUT NAME - 18EB-15_2

PLOT DATE : 7/17/2022 8:39 PM PLOT BY : ERIC ANDRITSCH PLOT NAME : PLOT SCALE : 1 IN:10 FT HORZ. / 1 IN:10 FT VERT.

WISDOT/CADDS SHEET 49

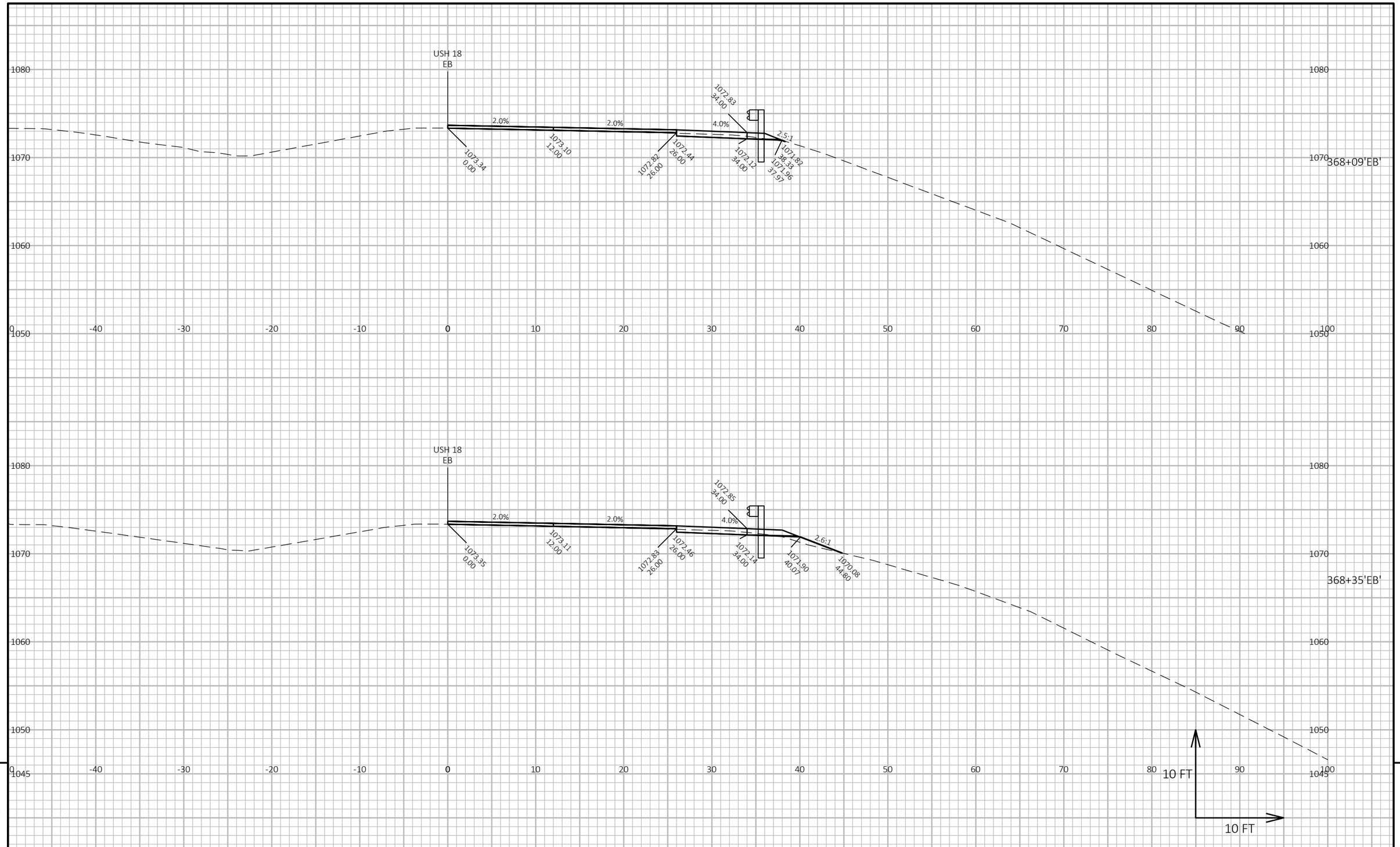

9

9

PROJECT NO: 1204-08-65	HWY: USH 18/151	COUNTY: DANE	CROSS SECTIONS: USH 18 EB	SHEET 650	E

FILE NAME : G:\WDOTSW\20007-000 USH 18\CIVIL 3D\SHEETSPLAN\CROSS SECTIONS\090302-XS_USH 18 EB.DWG
LAYOUT NAME - 18EB-15_3

PLOT DATE : 7/17/2022 8:41 PM PLOT BY : ERIC ANDRITSCH PLOT NAME : **PLOT SCALE :** 1 IN:10 FT HORZ. / 1 IN:10 FT VERT.

WISDOT/CADDS SHEET 49

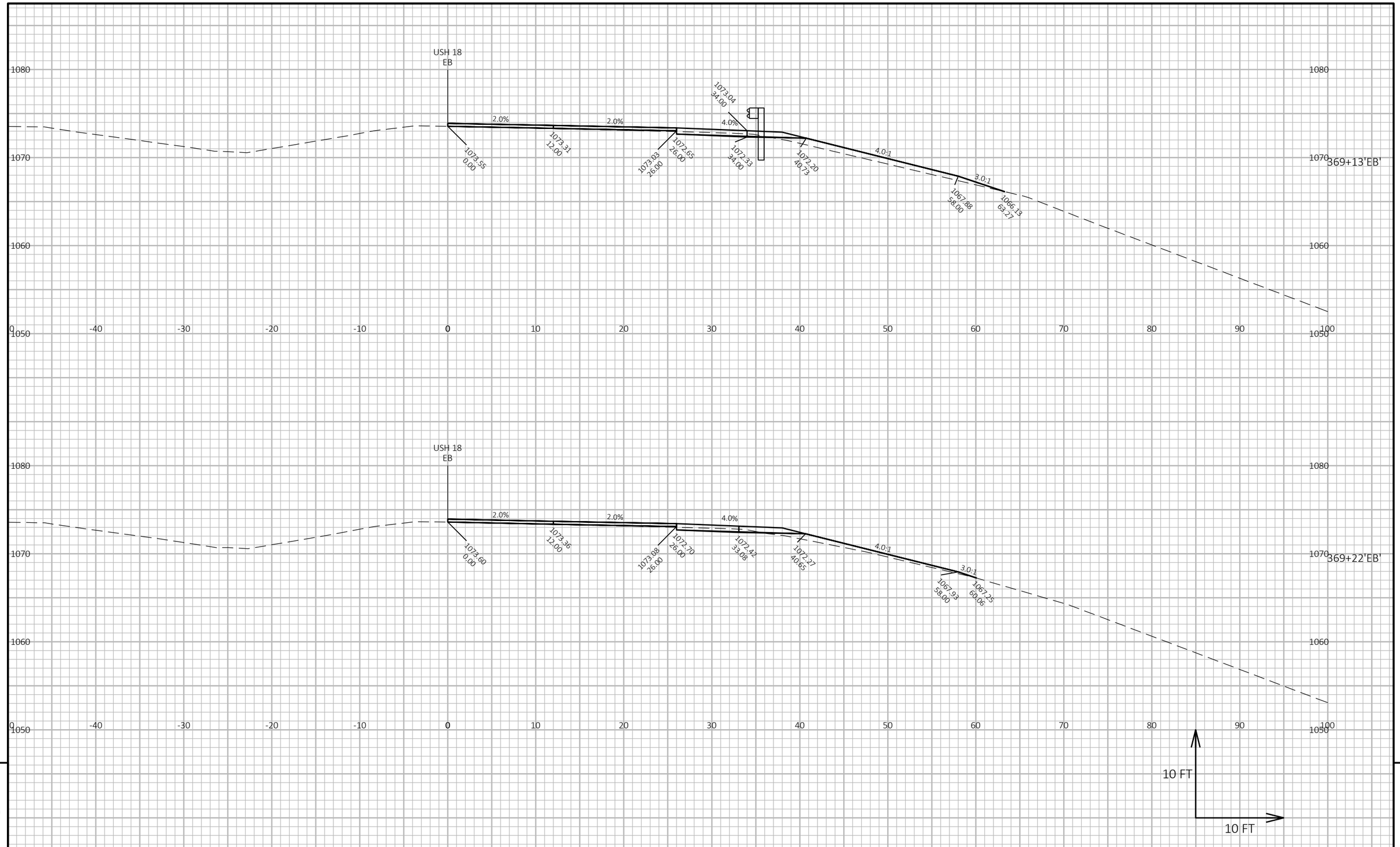

PROJECT NO: 1204-08-65	HWY: USH 18/151	COUNTY: DANE	CROSS SECTIONS: USH 18 EB	SHEET 651	E

FILE NAME : G:\WDOTSW\20007-000 USH 18\CIVIL 3D\SHEETSPLAN\CROSS SECTIONS\090302-XS_USH 18 EB.DWG
LAYOUT NAME - 18EB-15_4

PLOT DATE : 7/17/2022 8:42 PM PLOT BY : ERIC ANDRITSCH PLOT NAME : PLOT SCALE : 1 IN:10 FT HORZ. / 1 IN:10 FT VERT.

WISDOT/CADDS SHEET 49

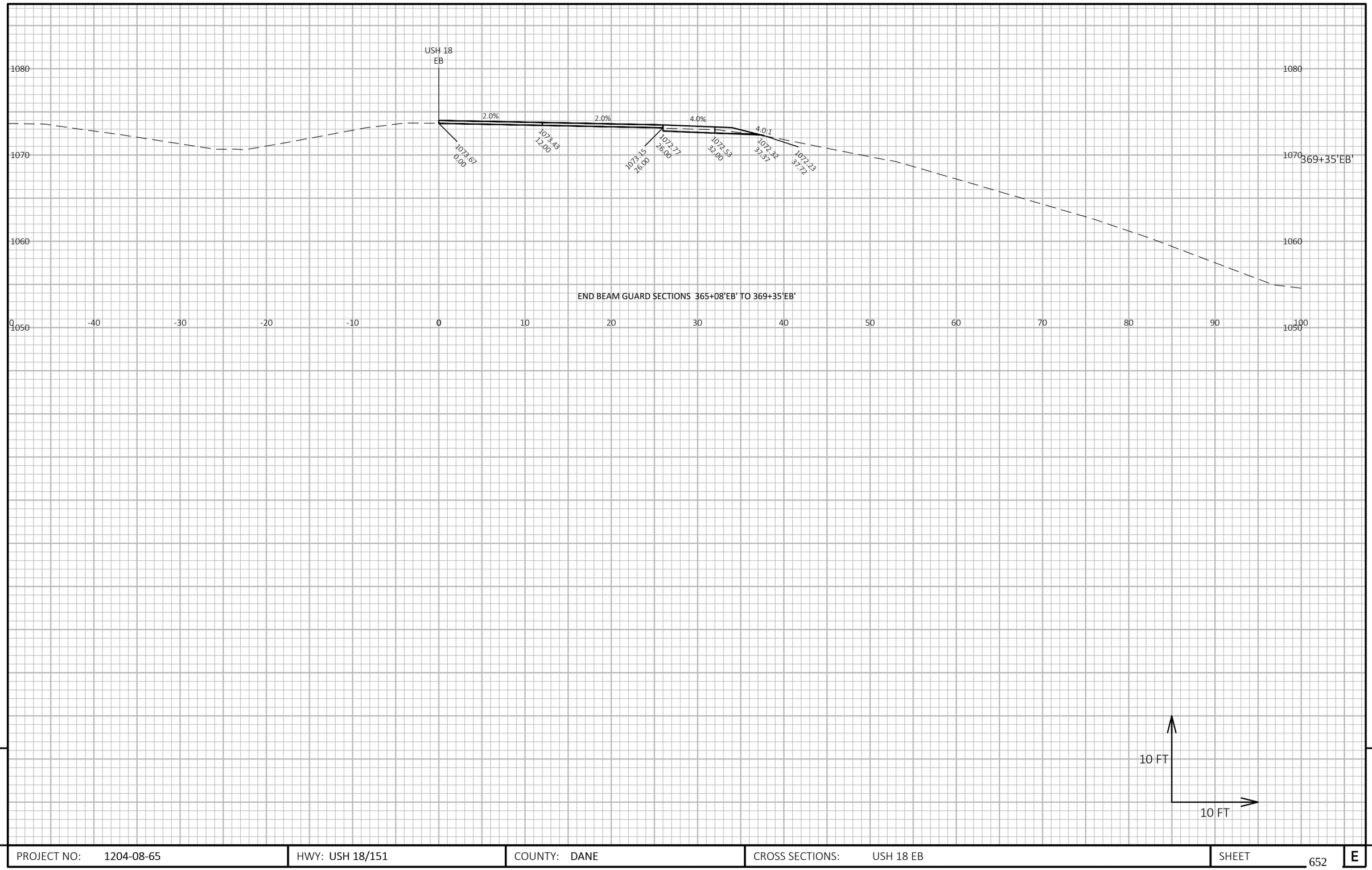

9

9

PROJECT NO: 1204-08-65	HWY: USH 18/151	COUNTY: DANE	CROSS SECTIONS: USH 18 EB	SHEET 652	E

FILE NAME : G:\WDOTSW\20007-000 USH 18\CIVIL 3D\SHEETSPLAN\CROSS SECTIONS\090302-XS_USH 18 EB.DWG
LAYOUT NAME - 18EB-15_5

PLOT DATE : 7/17/2022 8:44 PM PLOT BY : ERIC ANDRITSCH PLOT NAME : **PLOT SCALE :** 1 IN:10 FT HORZ. / 1 IN:10 FT VERT.

START BEAM GUARD SECTIONS 378+48'EB' TO 382+63'EB'

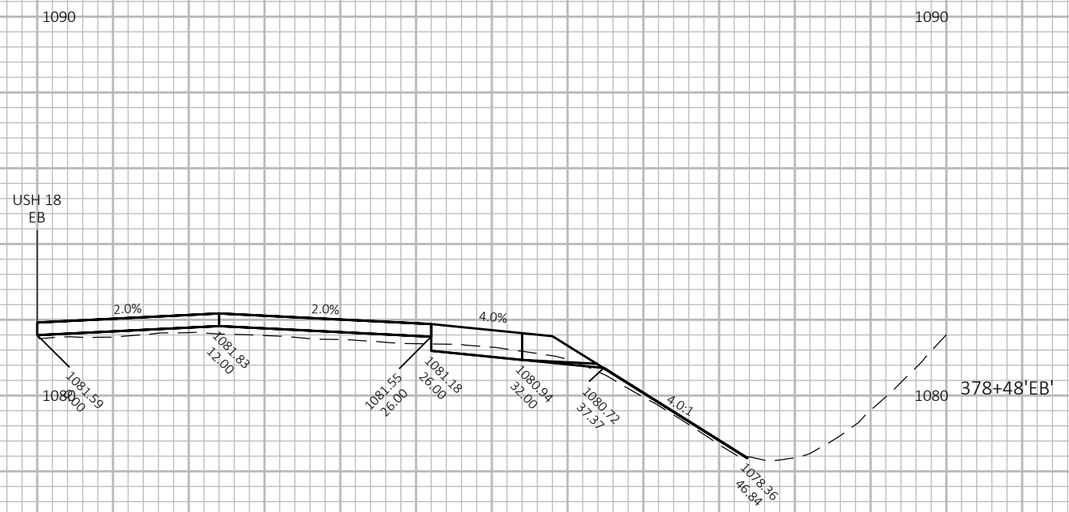

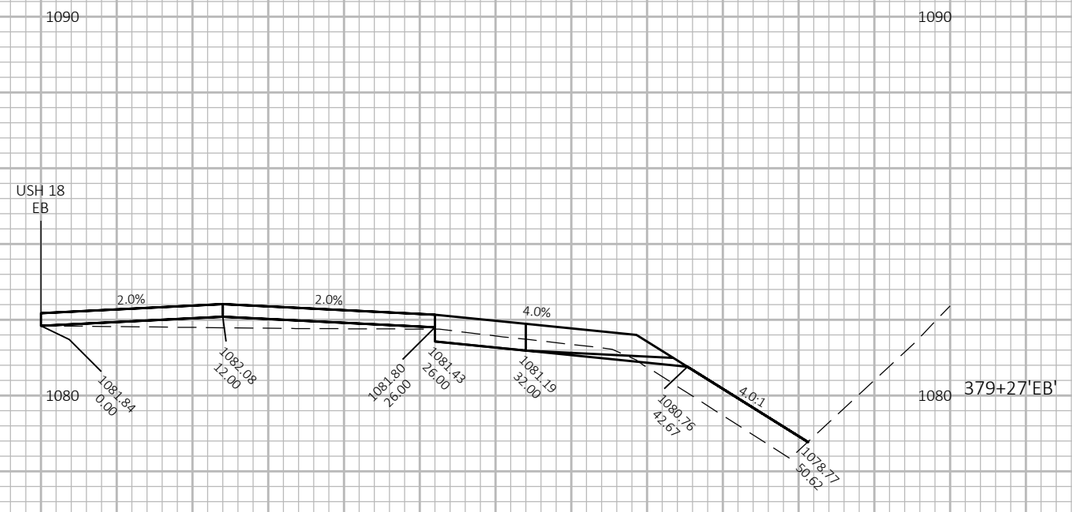

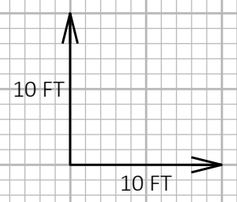

9

9

PROJECT NO: 1204-08-65	HWY: USH 18/151	COUNTY: DANE	CROSS SECTIONS: USH 18 EB	SHEET 653	E

FILE NAME : G:\WDOTSW\20007-000 USH 18\CIVIL 3D\SHEETSPLAN\CROSS SECTIONS\090302-XS_USH 18 EB.DWG
LAYOUT NAME - 18EB-16_1

PLOT DATE : 7/17/2022 8:45 PM PLOT BY : ERIC ANDRITSCH PLOT NAME : **PLOT SCALE :** 1 IN:10 FT HORZ. / 1 IN:10 FT VERT.

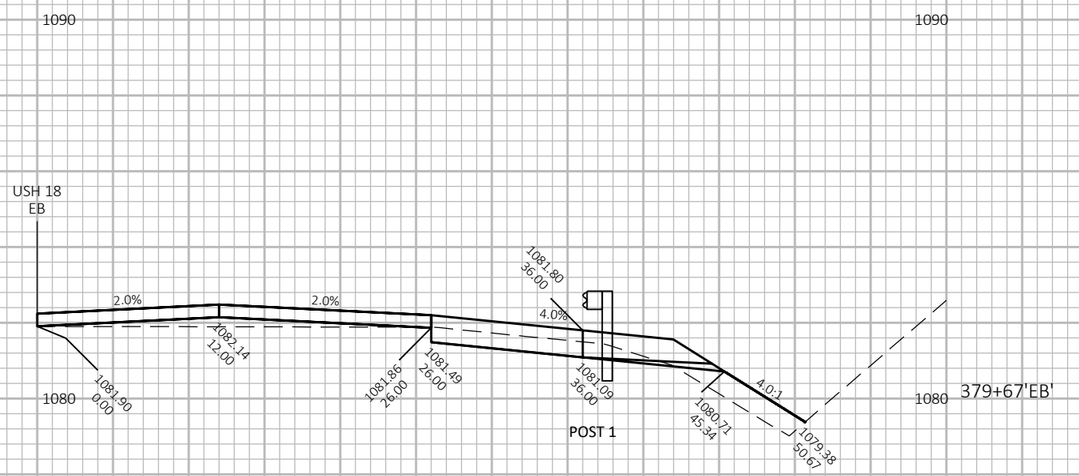

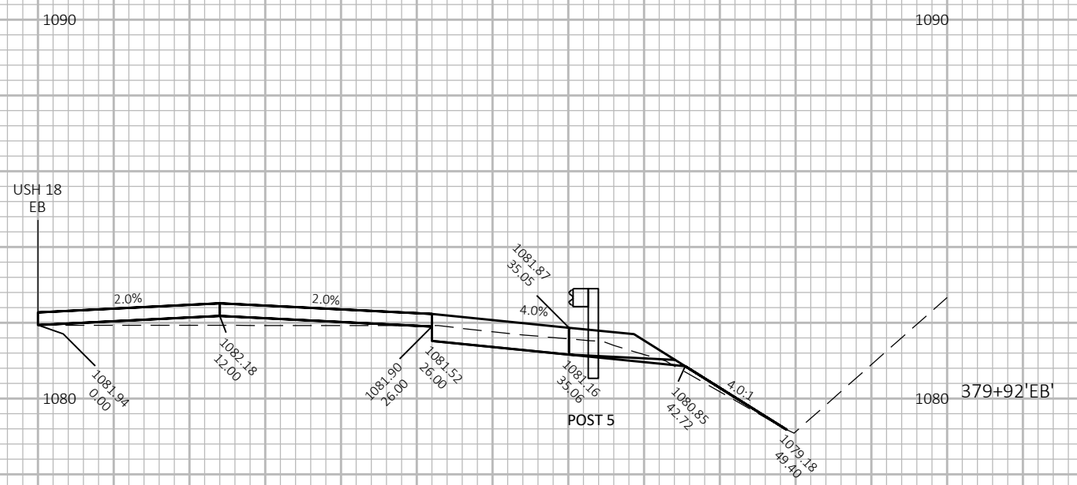

10 FT

10 FT

9

9

PROJECT NO: 1204-08-65	HWY: USH 18/151	COUNTY: DANE	CROSS SECTIONS: USH 18 EB	SHEET 654	E

FILE NAME : G:\WDOTSW\20007-000 USH 18\CIVIL 3D\SHEETSPLAN\CROSS SECTIONS\090302-XS_USH 18 EB.DWG
LAYOUT NAME - 18EB-16_2

PLOT DATE : 7/17/2022 8:47 PM PLOT BY : ERIC ANDRITSCH PLOT NAME : **PLOT SCALE :** 1 IN:10 FT HORZ. / 1 IN:10 FT VERT.

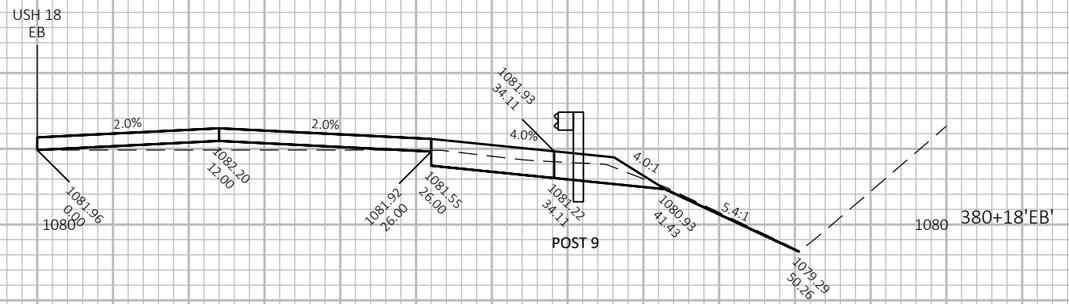

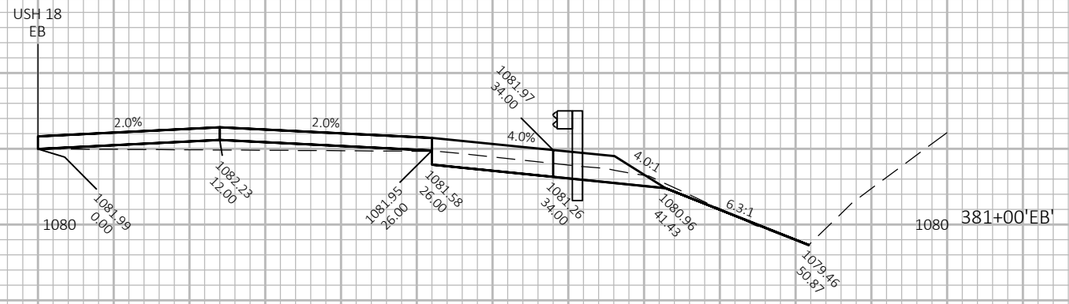

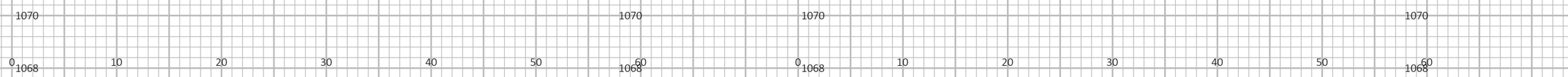

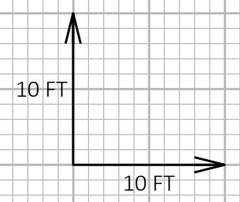

9

9

PROJECT NO: 1204-08-65	HWY: USH 18/151	COUNTY: DANE	CROSS SECTIONS: USH 18 EB	SHEET 655	E

FILE NAME : G:\WDOTSW\20007-000 USH 18\CIVIL 3D\SHEETSPLAN\CROSS SECTIONS\090302-XS_USH 18 EB.DWG
LAYOUT NAME - 18EB-16_3

PLOT DATE : 7/17/2022 8:48 PM PLOT BY : ERIC ANDRITSCH PLOT NAME : **PLOT SCALE :** 1 IN:10 FT HORZ. / 1 IN:10 FT VERT.

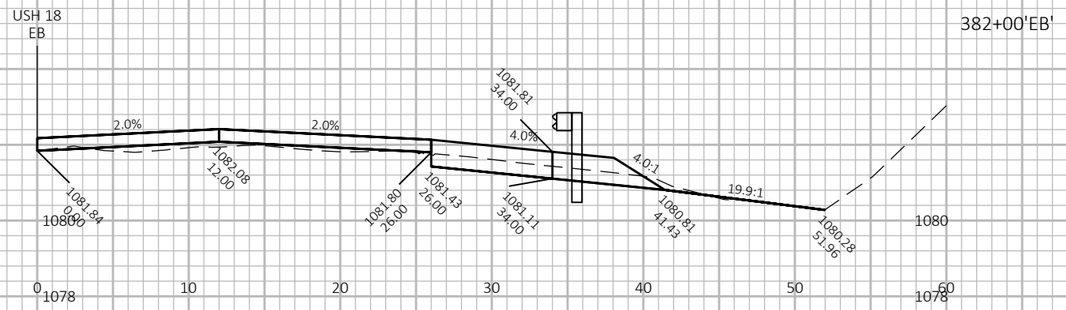

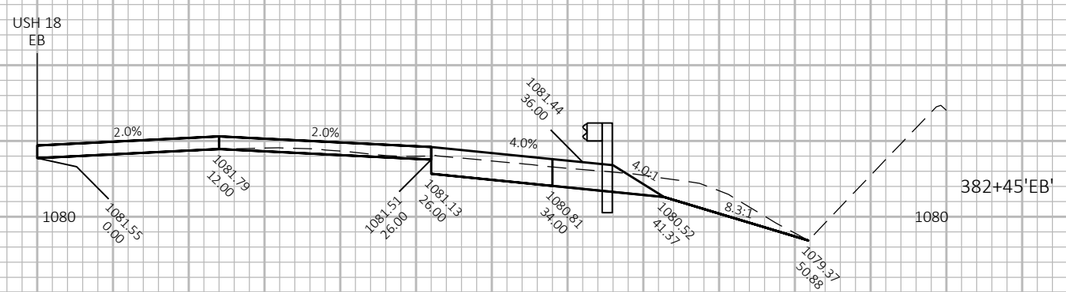

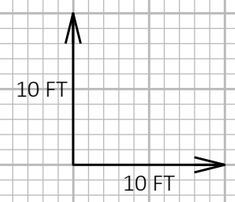

9

9

PROJECT NO: 1204-08-65	HWY: USH 18/151	COUNTY: DANE	CROSS SECTIONS: USH 18 EB	SHEET 656	E

FILE NAME : G:\WDOTSW\20007-000 USH 18\CIVIL 3D\SHEETSPLAN\CROSS SECTIONS\090302-XS_USH 18 EB.DWG
LAYOUT NAME - 18EB-16_4

PLOT DATE : 7/17/2022 8:50 PM PLOT BY : ERIC ANDRITSCH PLOT NAME : **PLOT SCALE :** 1 IN:10 FT HORZ. / 1 IN:10 FT VERT.

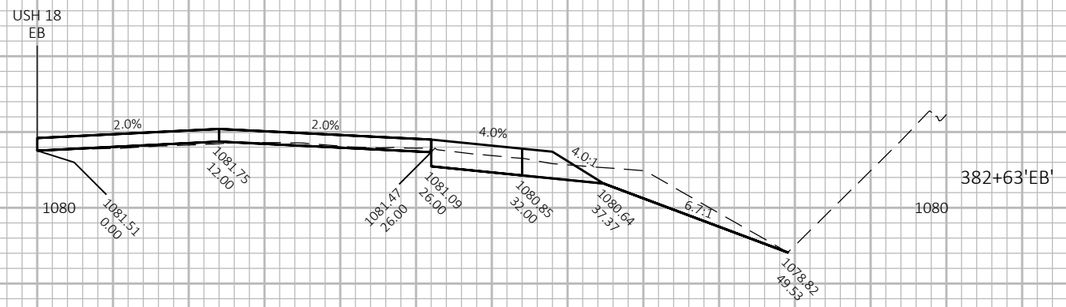

END BEAM GUARD SECTIONS 378+48'EB' TO 382+63'EB'

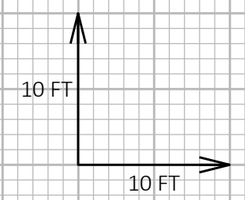

9

9

PROJECT NO: 1204-08-65	HWY: USH 18/151	COUNTY: DANE	CROSS SECTIONS: USH 18 EB	SHEET 657	E

FILE NAME : G:\WDOTSW\20007-000 USH 18\CIVIL 3D\SHEETSPLAN\CROSS SECTIONS\090302-XS_USH 18 EB.DWG
LAYOUT NAME - 18EB-16_5

PLOT DATE : 7/17/2022 8:51 PM PLOT BY : ERIC ANDRITSCH PLOT NAME : **PLOT SCALE :** 1 IN:10 FT HORZ. / 1 IN:10 FT VERT.

WISDOT/CADDS SHEET 49

START BEAM GUARD SECTIONS 483+59'EB' TO 487+91'EB'

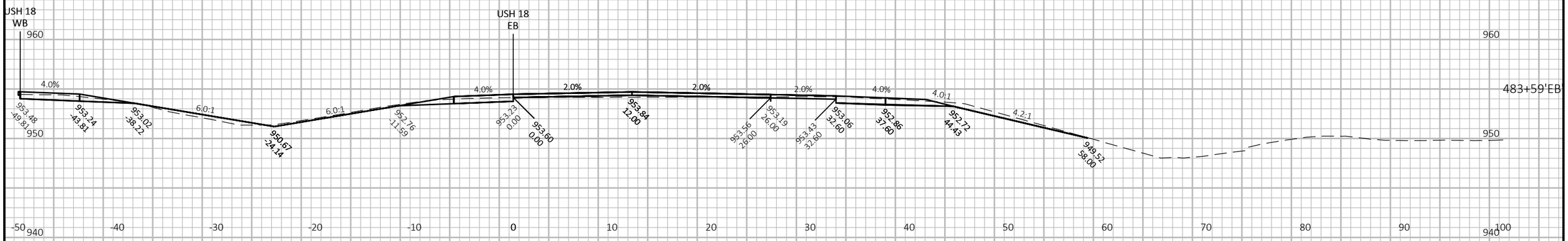

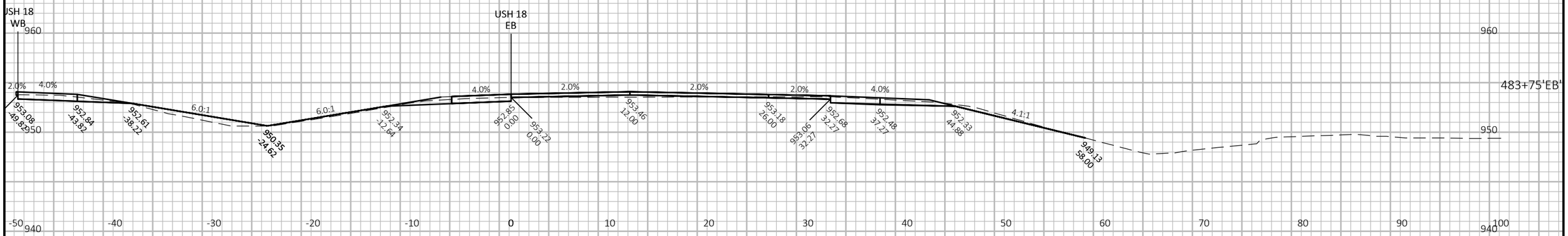

9

9

PROJECT NO: 1204-08-65	HWY: USH 18/151	COUNTY: DANE	CROSS SECTIONS: USH 18 EB	SHEET 658	E

FILE NAME : G:\WDOTSW\20007-000 USH 18\CIVIL 3D\SHEETSPLAN\CROSS SECTIONS\090302-XS_USH 18 EB.DWG
LAYOUT NAME - 18EB-5_1

PLOT DATE : 7/17/2022 8:53 PM PLOT BY : ERIC ANDRITSCH PLOT NAME : PLOT SCALE : 1 IN:10 FT HORZ. / 1 IN:10 FT VERT.

WISDOT/CADDS SHEET 49

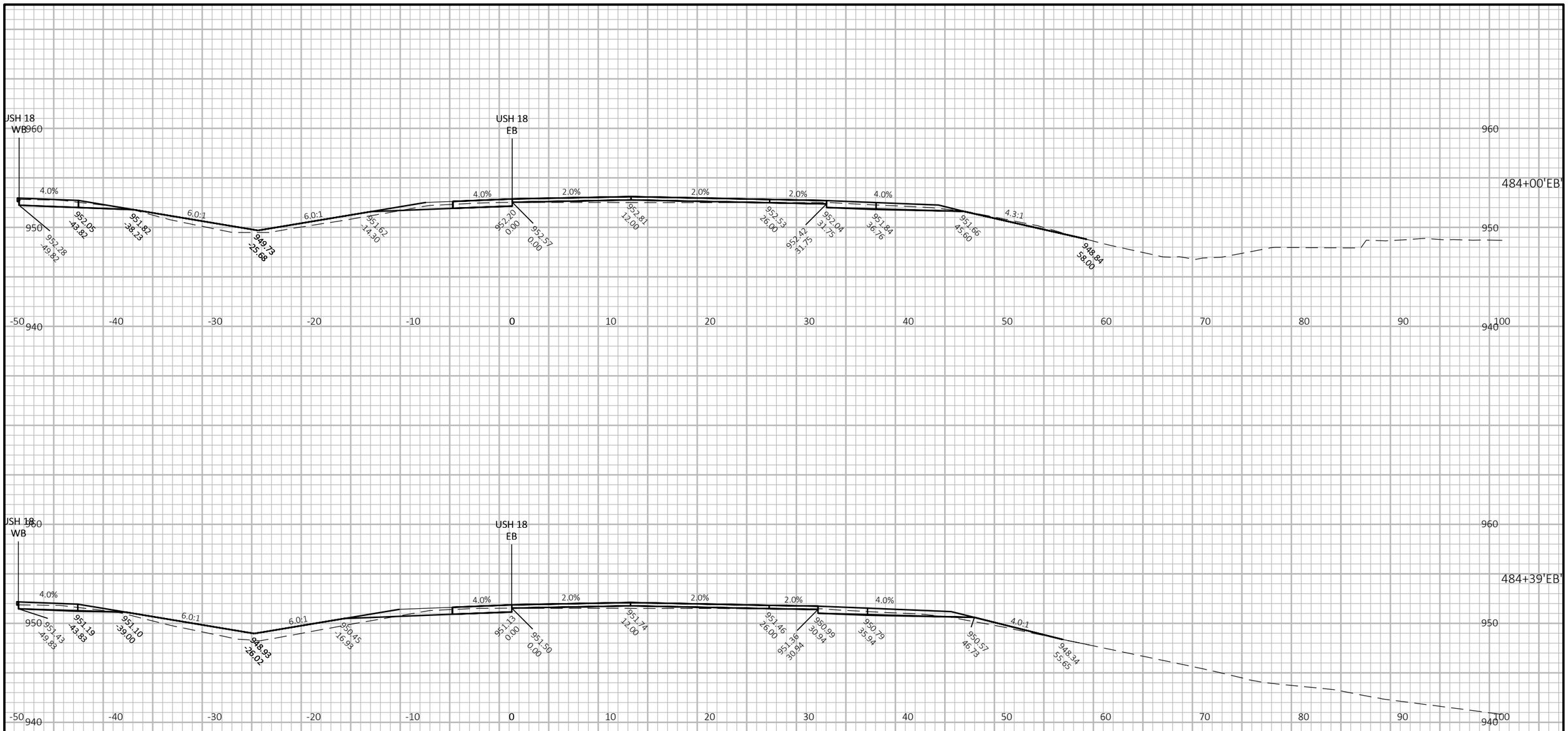

PROJECT NO: 1204-08-65	HWY: USH 18/151	COUNTY: DANE	CROSS SECTIONS: USH 18 EB	SHEET 659	E

FILE NAME : G:\WDOTSW\20007-000 USH 18\CIVIL 3D\SHEETSPLAN\CROSS SECTIONS\090302-XS_USH 18 EB.DWG
LAYOUT NAME - 18EB-5_2

PLOT DATE : 7/17/2022 8:55 PM PLOT BY : ERIC ANDRITSCH PLOT NAME : **PLOT SCALE :** 1 IN:10 FT HORZ. / 1 IN:10 FT VERT.

WISDOT/CADDS SHEET 49

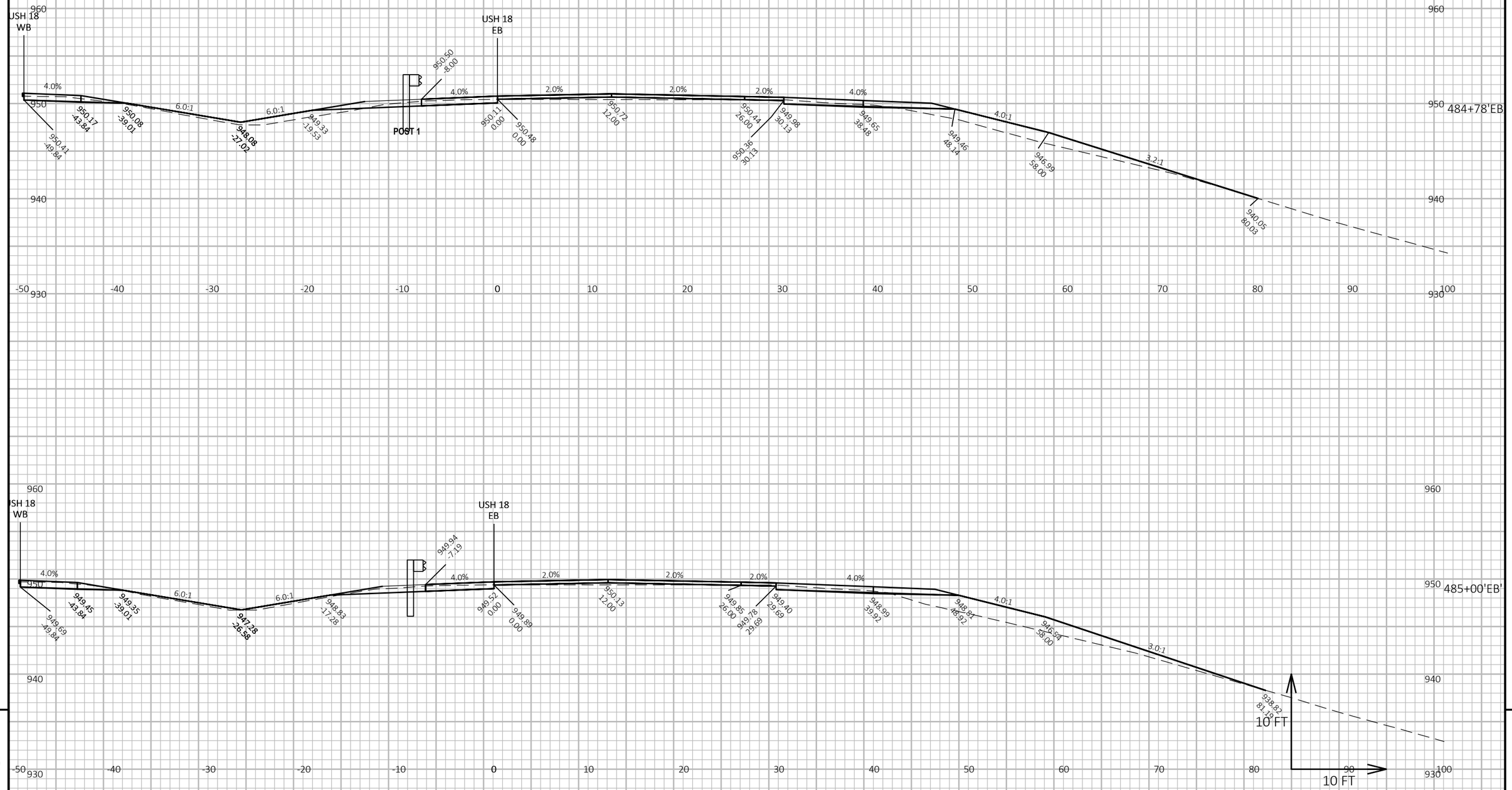

9

9

PROJECT NO: 1204-08-65	HWY: USH 18/151	COUNTY: DANE	CROSS SECTIONS: USH 18 EB	SHEET 660	E

FILE NAME : G:\WDOTSW\20007-000 USH 18\CIVIL 3D\SHEETSPLAN\CROSS SECTIONS\090302-XS_USH 18 EB.DWG
LAYOUT NAME - 18EB-5_3

PLOT DATE : 7/17/2022 8:56 PM

PLOT BY : ERIC ANDRITSCH

PLOT NAME :

PLOT SCALE : 1 IN:10 FT HORZ. / 1 IN:10 FT VERT.

WISDOT/CADDS SHEET 49

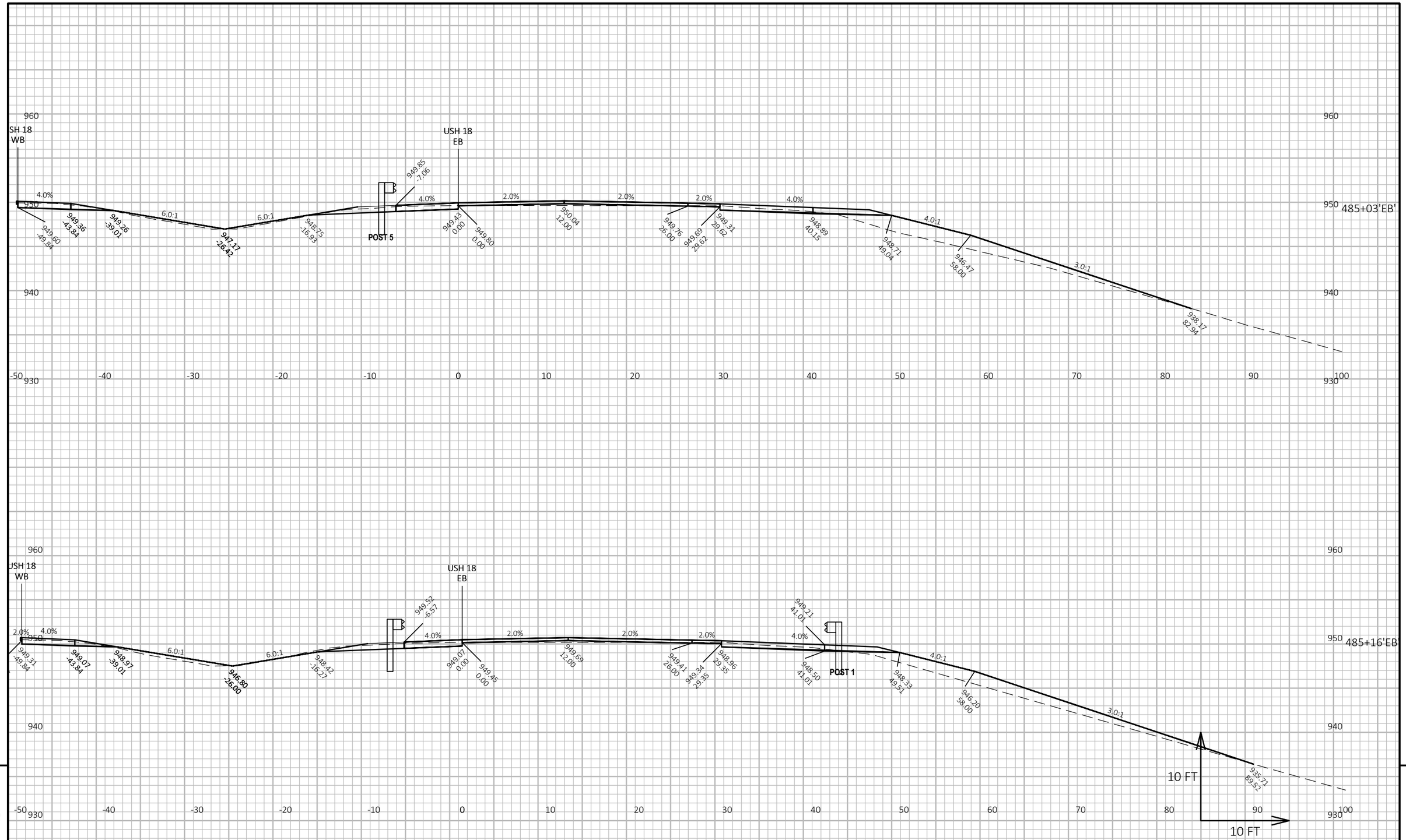

9

9

PROJECT NO: 1204-08-65	HWY: USH 18/151	COUNTY: DANE	CROSS SECTIONS: USH 18 EB	SHEET 661	E

FILE NAME : G:\WDOTSW\20007-000 USH 18\CIVIL 3D\SHEETSPLAN\CROSS SECTIONS\090302-XS_USH 18 EB.DWG
LAYOUT NAME - 18EB-5_4

PLOT DATE : 7/17/2022 8:58 PM

PLOT BY : ERIC ANDRITSCH

PLOT NAME :

PLOT SCALE : 1 IN:10 FT HORZ. / 1 IN:10 FT VERT.

WISDOT/CADDS SHEET 49

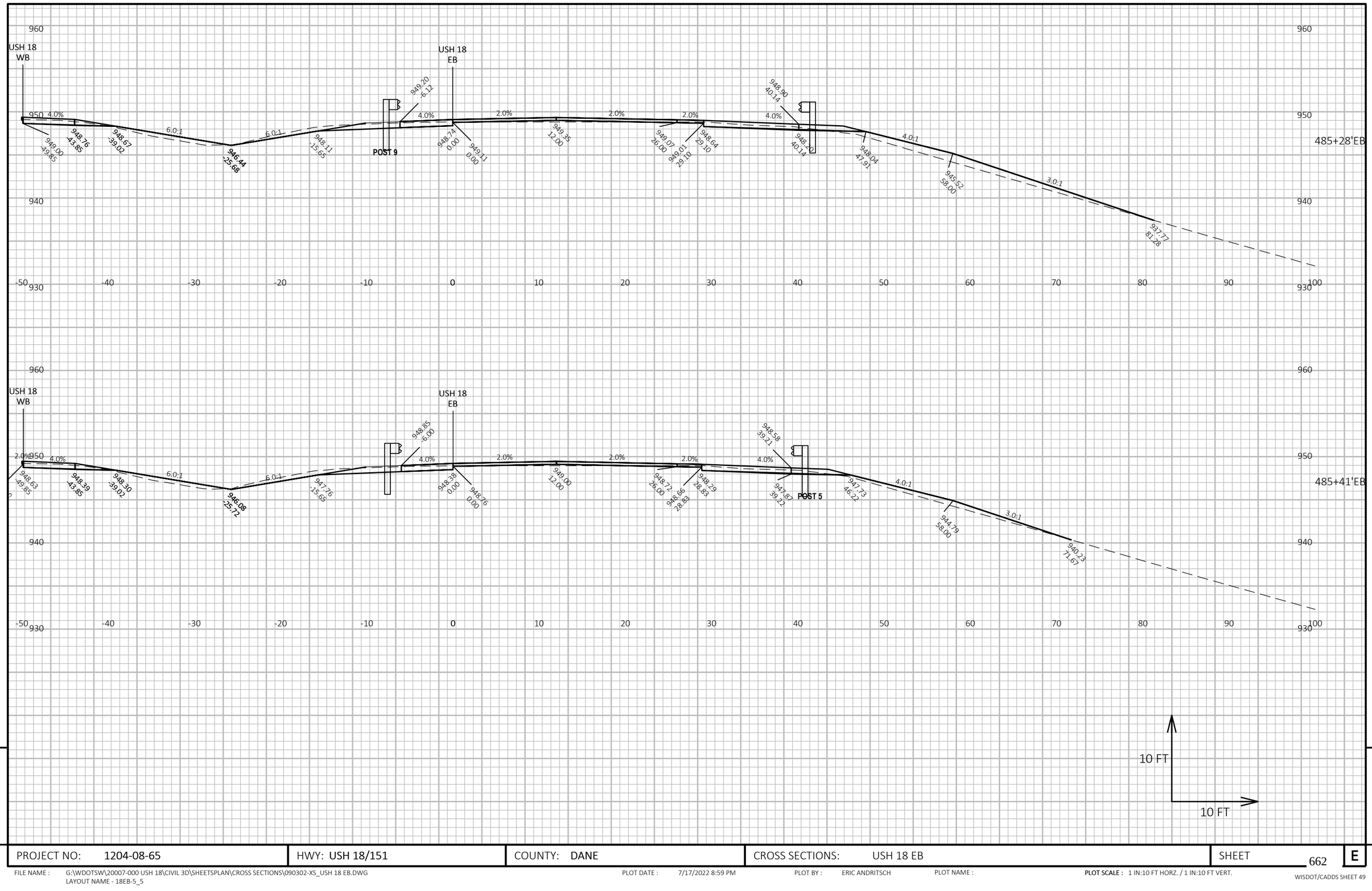

9

9

PROJECT NO: 1204-08-65	HWY: USH 18/151	COUNTY: DANE	CROSS SECTIONS: USH 18 EB	SHEET 662	E

FILE NAME : G:\WDOTSW\20007-000 USH 18\CIVIL 3D\SHEETSPLAN\CROSS SECTIONS\090302-XS_USH 18 EB.DWG
LAYOUT NAME - 18EB-5_5

PLOT DATE : 7/17/2022 8:59 PM PLOT BY : ERIC ANDRITSCH PLOT NAME : PLOT SCALE : 1 IN:10 FT HORZ. / 1 IN:10 FT VERT.

WISDOT/CADDS SHEET 49

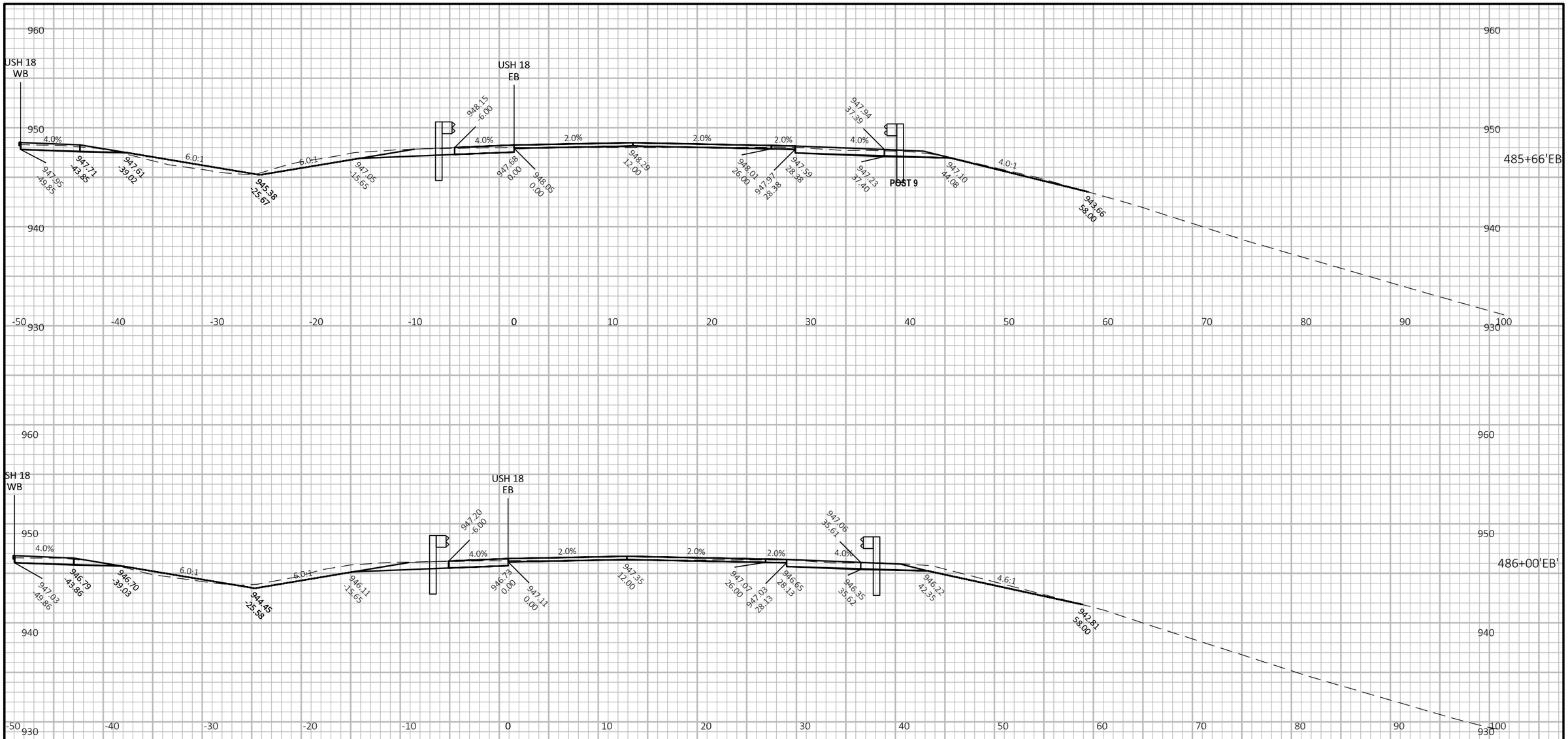

9

9

PROJECT NO: 1204-08-65	HWY: USH 18/151	COUNTY: DANE	CROSS SECTIONS: USH 18 EB	SHEET 663	E

FILE NAME : G:\WDOTSW\20007-000 USH 18\CIVIL 3D\SHEETSPLAN\CROSS SECTIONS\090302-XS_USH 18 EB.DWG
LAYOUT NAME - 18EB-5_6

PLOT DATE : 7/17/2022 9:01 PM PLOT BY : ERIC ANDRITSCH PLOT NAME : PLOT SCALE : 1 IN:10 FT HORZ. / 1 IN:10 FT VERT.

WISDOT/CADDS SHEET 49

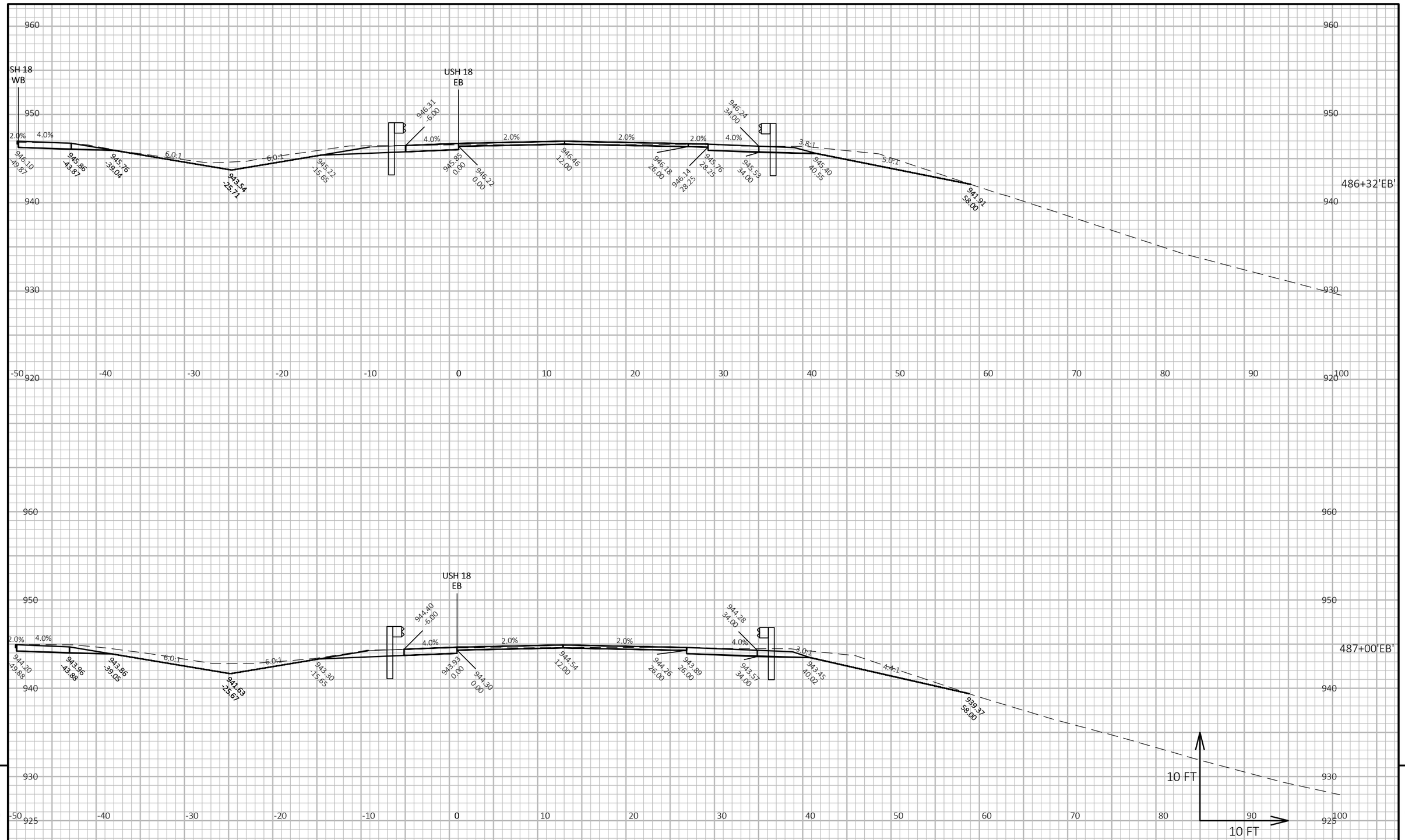

PROJECT NO: 1204-08-65	HWY: USH 18/151	COUNTY: DANE	CROSS SECTIONS: USH 18 EB	SHEET 664	E

FILE NAME : G:\WDOTSW\20007-000 USH 18\CIVIL 3D\SHEETSPLAN\CROSS SECTIONS\090302-XS_USH 18 EB.DWG
LAYOUT NAME - 18EB-5_7

PLOT DATE : 7/17/2022 9:02 PM PLOT BY : ERIC ANDRITSCH PLOT NAME : PLOT SCALE : 1 IN:10 FT HORZ. / 1 IN:10 FT VERT.

WISDOT/CADDS SHEET 49

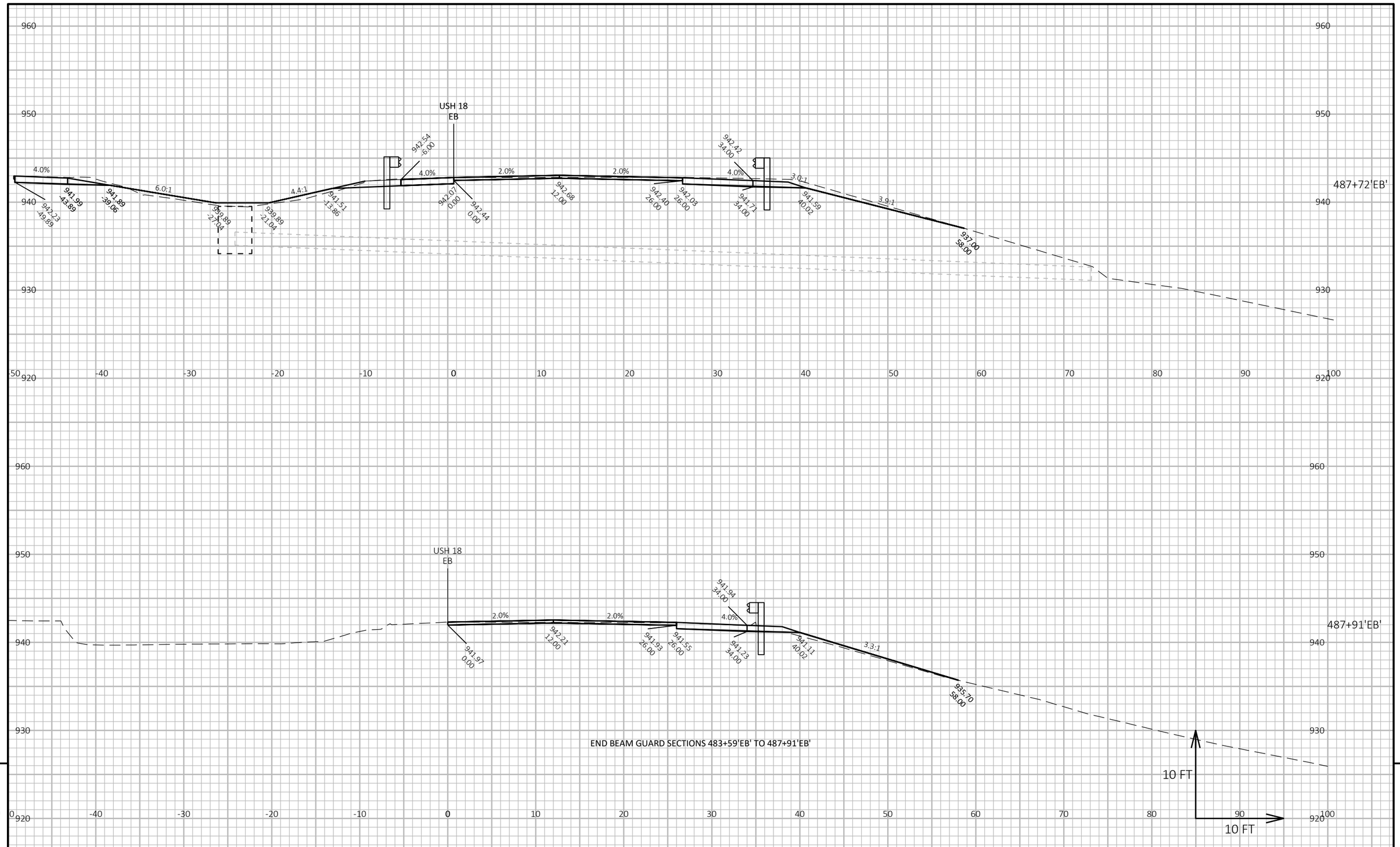

PROJECT NO: 1204-08-65	HWY: USH 18/151	COUNTY: DANE	CROSS SECTIONS: USH 18 EB	SHEET 665 E

FILE NAME : G:\WDOTSW\20007-000 USH 18\CIVIL 3D\SHEETSPLAN\CROSS SECTIONS\090302-XS_USH 18 EB.DWG
LAYOUT NAME - 18EB-5_8

PLOT DATE : 7/17/2022 9:04 PM PLOT BY : ERIC ANDRITSCH PLOT NAME : **PLOT SCALE :** 1 IN:10 FT HORZ. / 1 IN:10 FT VERT.

WISDOT/CADDS SHEET 49

START CABLE GUARD SECTIONS 545+37'EB' TO 580+00'EB'

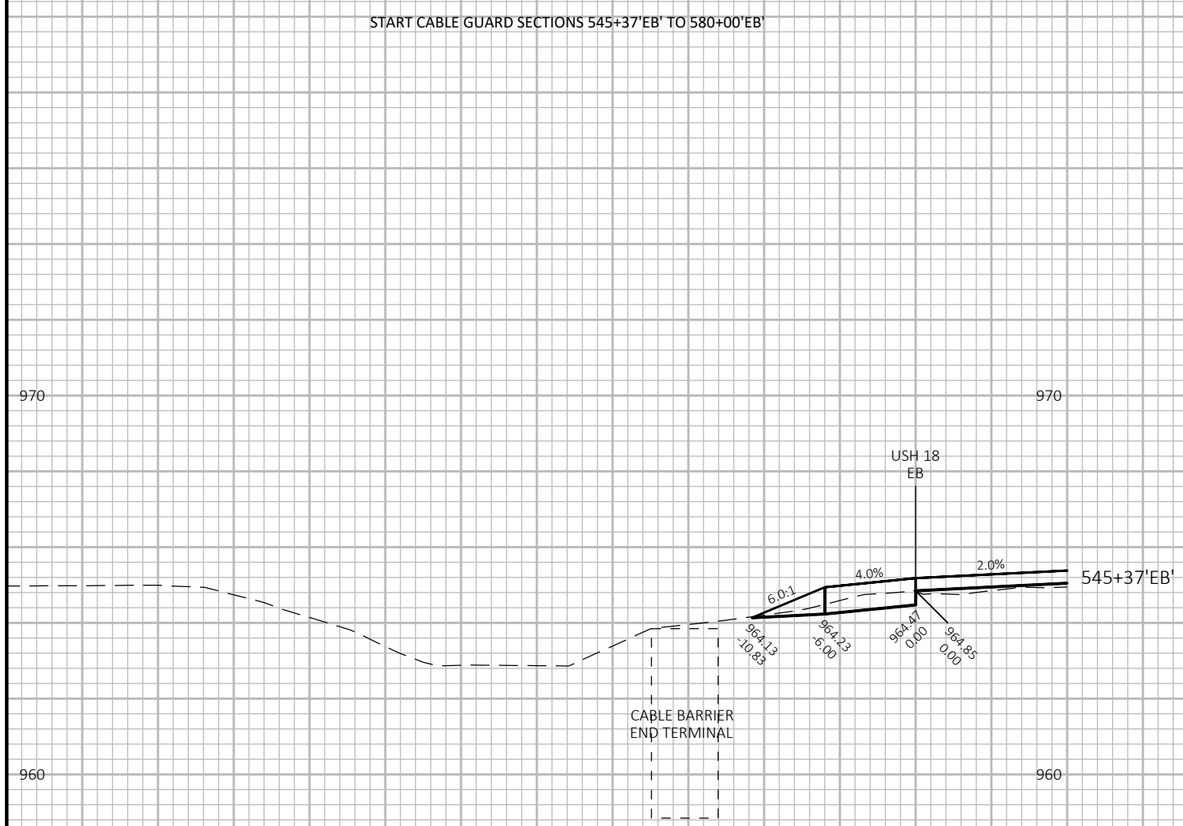

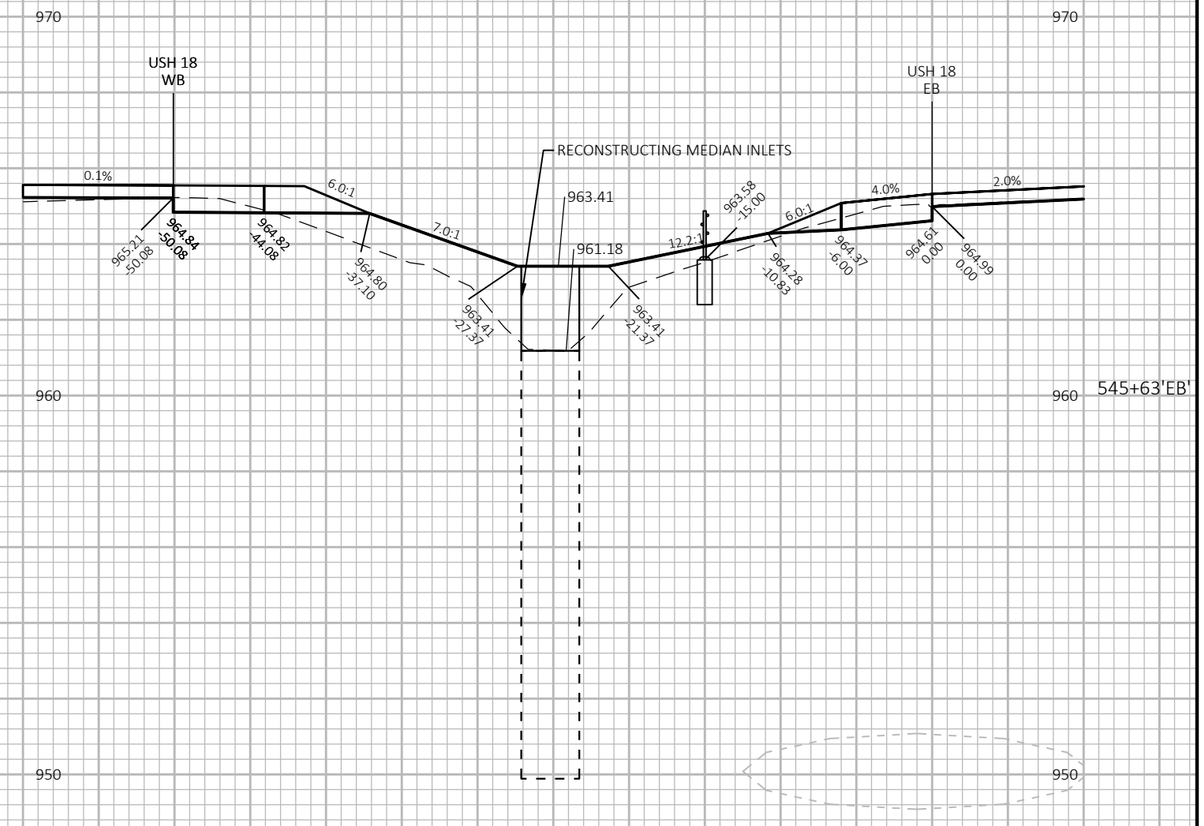

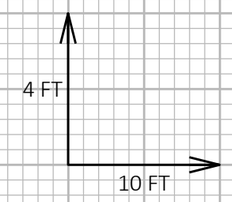

9

9

PROJECT NO: 1204-08-65	HWY: USH 18/151	COUNTY: DANE	CROSS SECTIONS: USH 18 EB	SHEET 666	E

FILE NAME : G:\WDOTSW\20007-000 USH 18\CIVIL 3D\SHEETSPLAN\CROSS SECTIONS\090302-XS_USH 18 EB.DWG
LAYOUT NAME - 18EB-7a_1

PLOT DATE : 7/17/2022 9:05 PM PLOT BY : ERIC ANDRITSCH PLOT NAME : PLOT SCALE : 1 IN:10 FT HORZ. / 1 IN:4 FT VERT.

WISDOT/CADDS SHEET 49

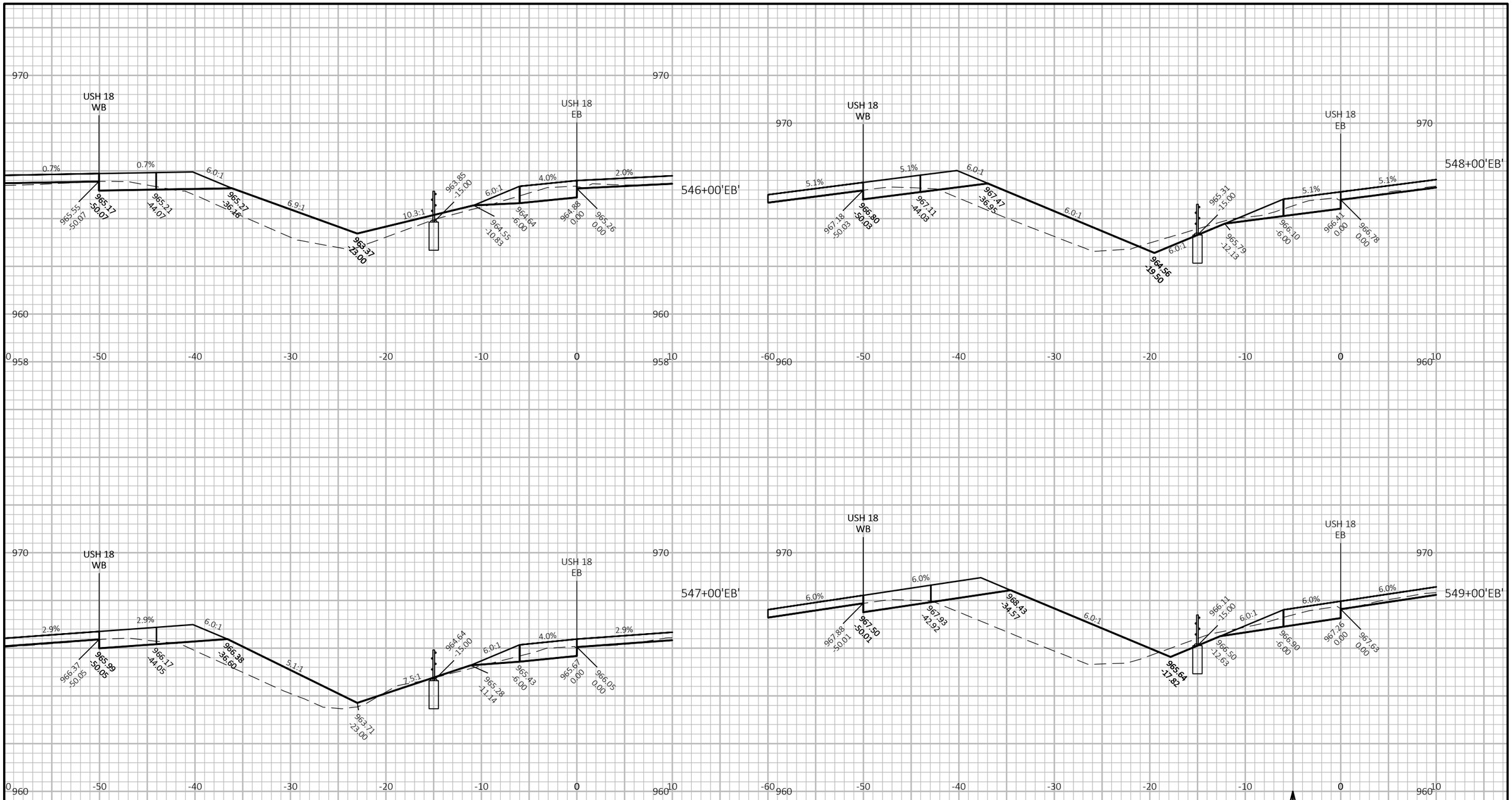

PROJECT NO: 1204-08-65	HWY: USH 18/151	COUNTY: DANE	CROSS SECTIONS: USH 18 EB	SHEET 667 E

FILE NAME : G:\WDOTSW\20007-000 USH 18\CIVIL 3D\SHEETSPLAN\CROSS SECTIONS\090302-XS_USH 18 EB.DWG
LAYOUT NAME - 18EB-7a_2

PLOT DATE : 7/17/2022 9:07 PM PLOT BY : ERIC ANDRITSCH PLOT NAME : PLOT SCALE : 1 IN:10 FT HORZ. / 1 IN:4 FT VERT.

WISDOT/CADDS SHEET 49

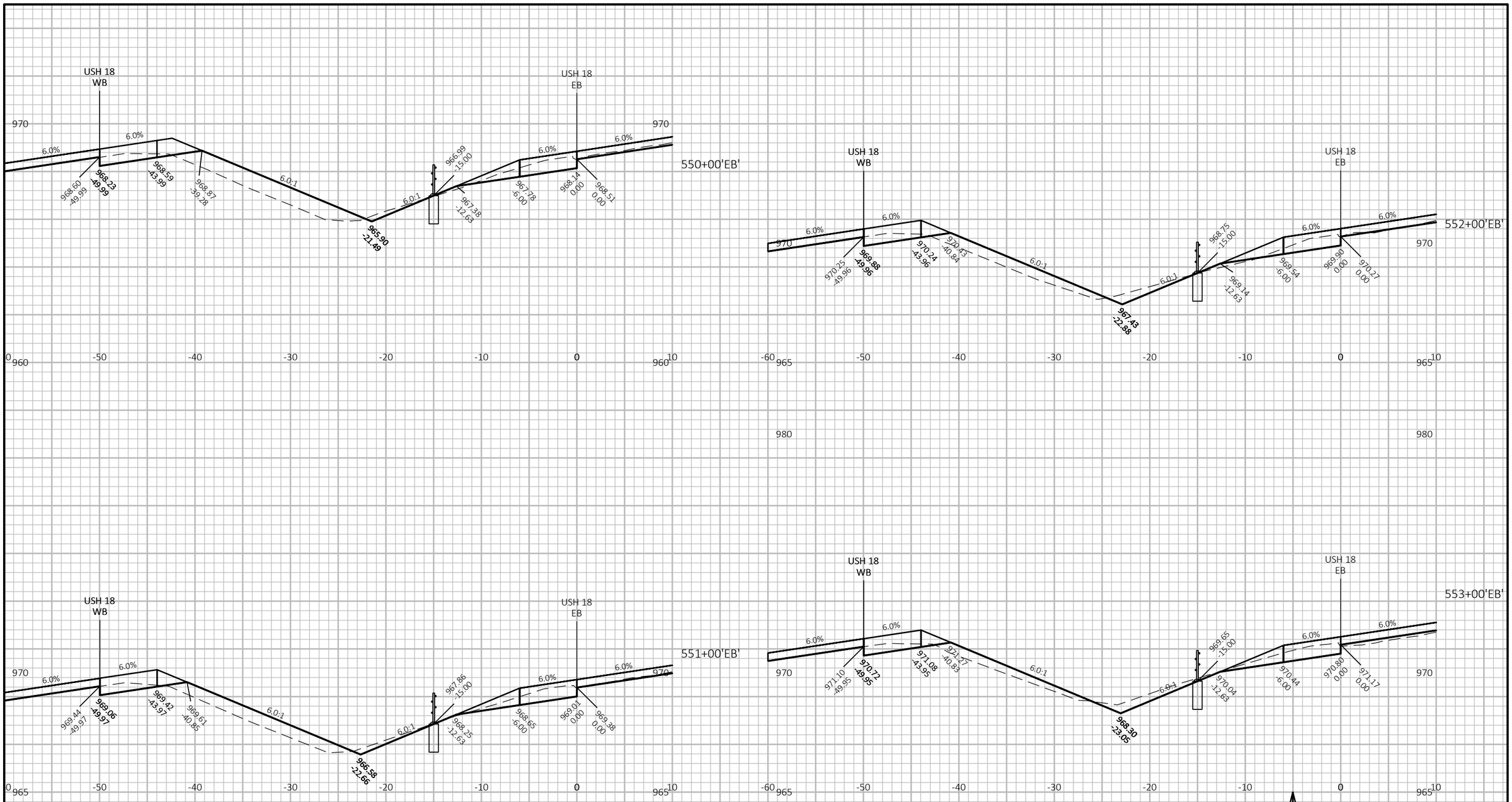

9

9

PROJECT NO: 1204-08-65	HWY: USH 18/151	COUNTY: DANE	CROSS SECTIONS: USH 18 EB	SHEET 668	E

FILE NAME : G:\WDOTSW\20007-000 USH 18\CIVIL 3D\SHEETSPLAN\CROSS SECTIONS\090302-XS_USH 18 EB.DWG
LAYOUT NAME - 18EB-7a_3

PLOT DATE : 7/17/2022 9:09 PM PLOT BY : ERIC ANDRITSCH PLOT NAME : PLOT SCALE : 1 IN:10 FT HORZ. / 1 IN:4 FT VERT.

WISDOT/CADDS SHEET 49

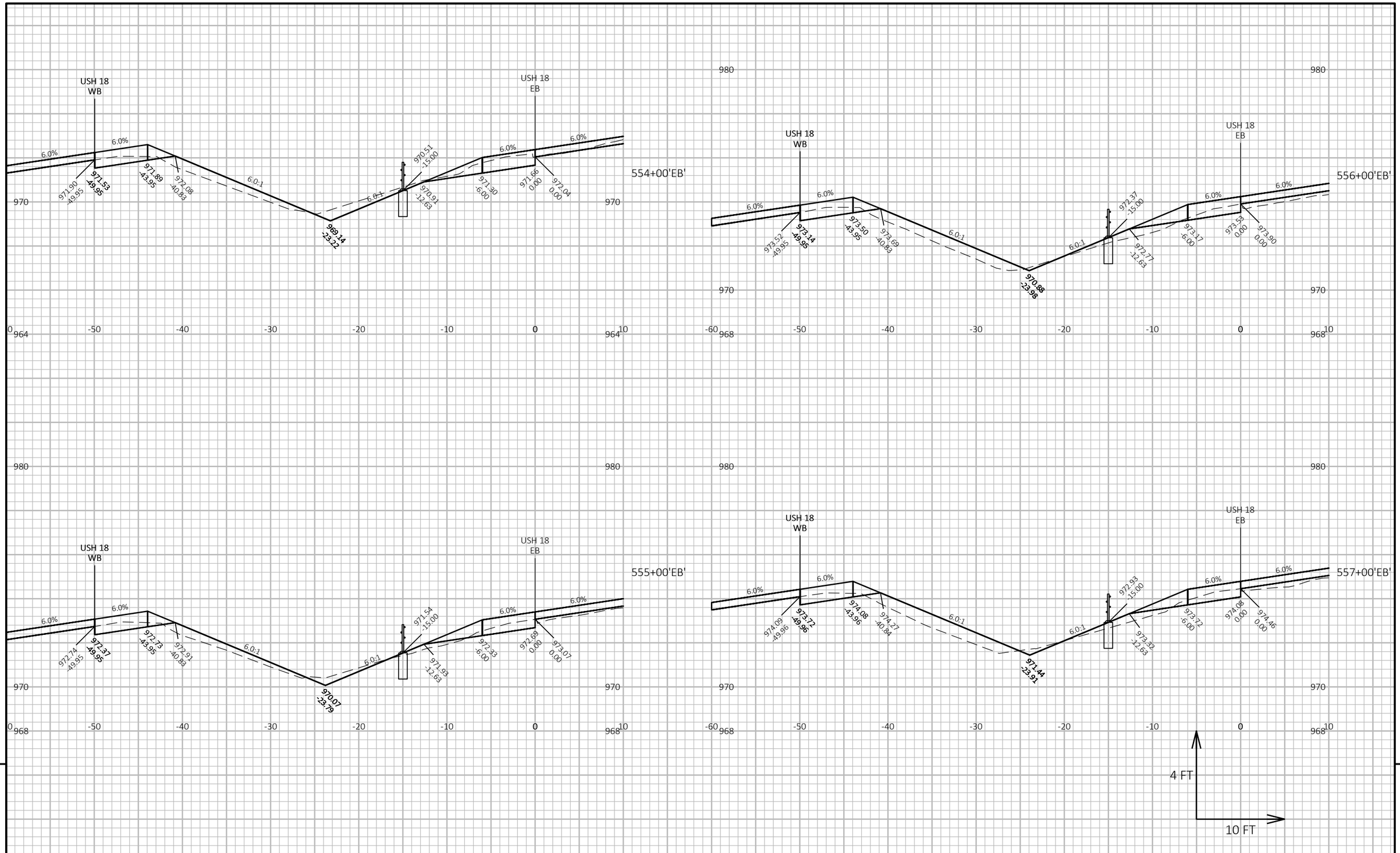

9

9

PROJECT NO: 1204-08-65	HWY: USH 18/151	COUNTY: DANE	CROSS SECTIONS: USH 18 EB	SHEET 669	E

FILE NAME : G:\WDOTSW\20007-000 USH 18\CIVIL 3D\SHEETSPLAN\CROSS SECTIONS\090302-XS_USH 18 EB.DWG
LAYOUT NAME - 18EB-7a_4

PLOT DATE : 7/20/2022 2:25 PM PLOT BY : ERIC ANDRITSCH PLOT NAME : PLOT SCALE : 1 IN:10 FT HORZ. / 1 IN:4 FT VERT.

WISDOT/CADDS SHEET 49

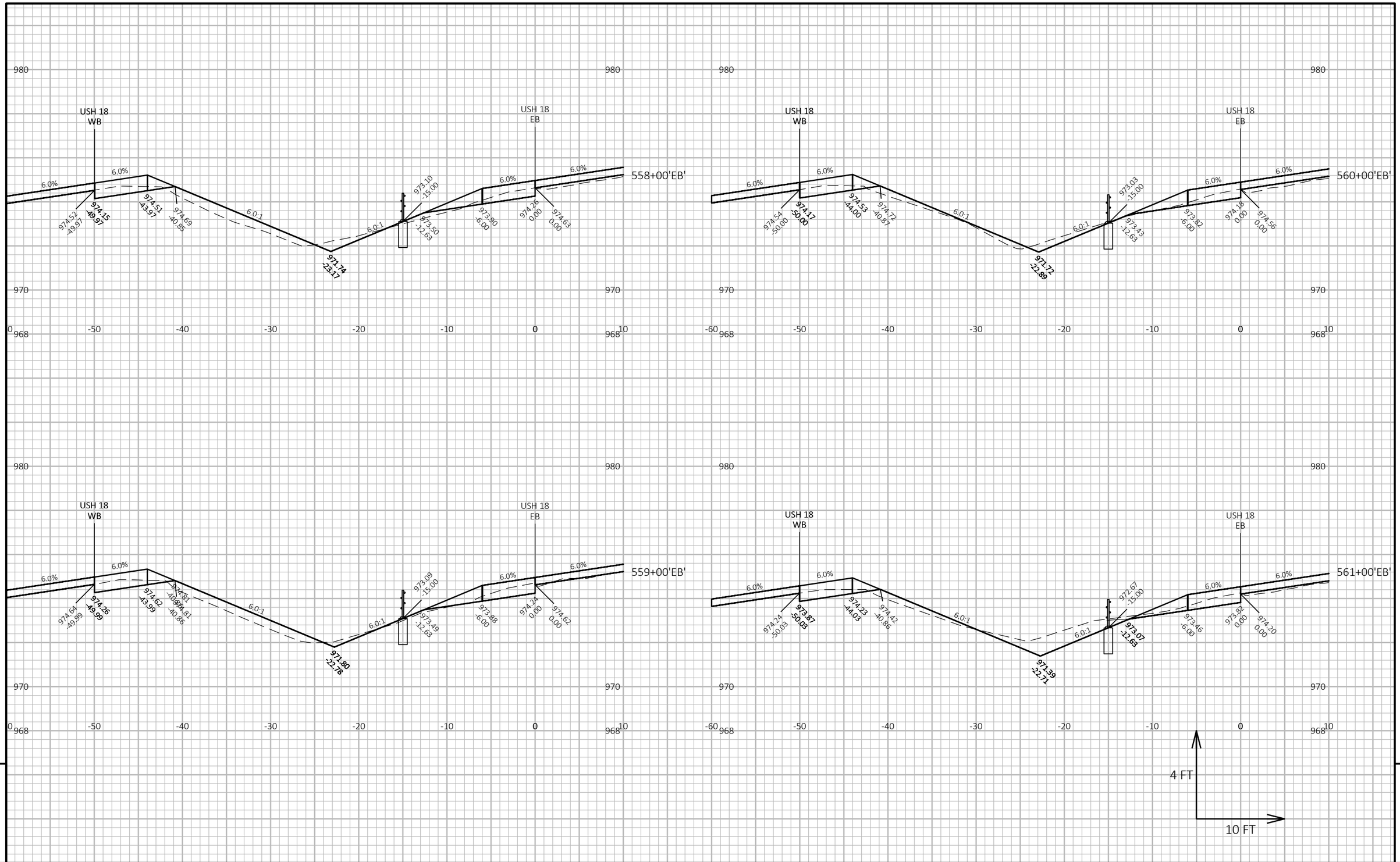

9

9

PROJECT NO: 1204-08-65	HWY: USH 18/151	COUNTY: DANE	CROSS SECTIONS: USH 18 EB	SHEET 670	E

FILE NAME : G:\WDOTSW\20007-000 USH 18\CIVIL 3D\SHEETSPLAN\CROSS SECTIONS\090302-XS_USH 18 EB.DWG
LAYOUT NAME - 18EB-7a_5

PLOT DATE : 7/20/2022 2:27 PM PLOT BY : ERIC ANDRITSCH PLOT NAME : PLOT SCALE : 1 IN:10 FT HORZ. / 1 IN:4 FT VERT.

WISDOT/CADDS SHEET 49

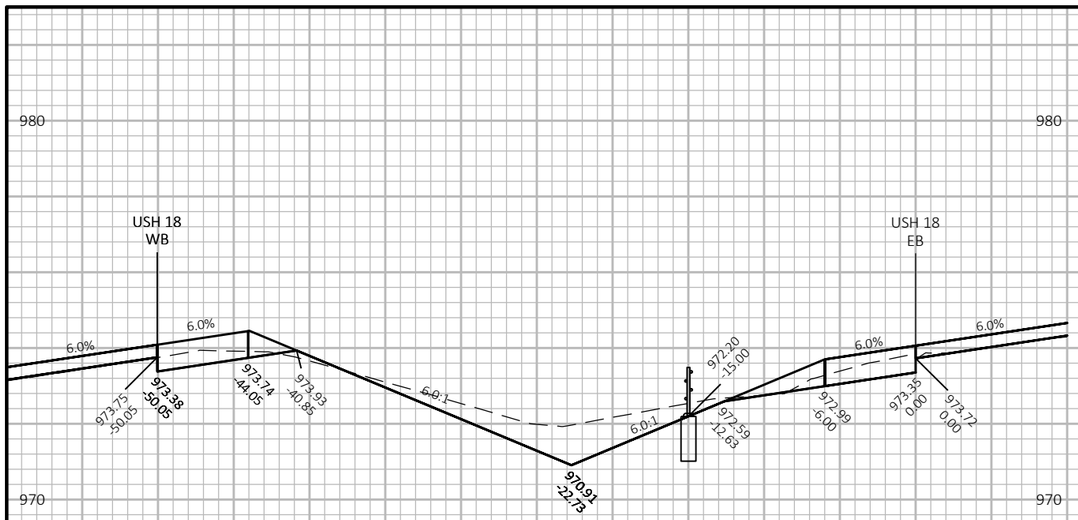

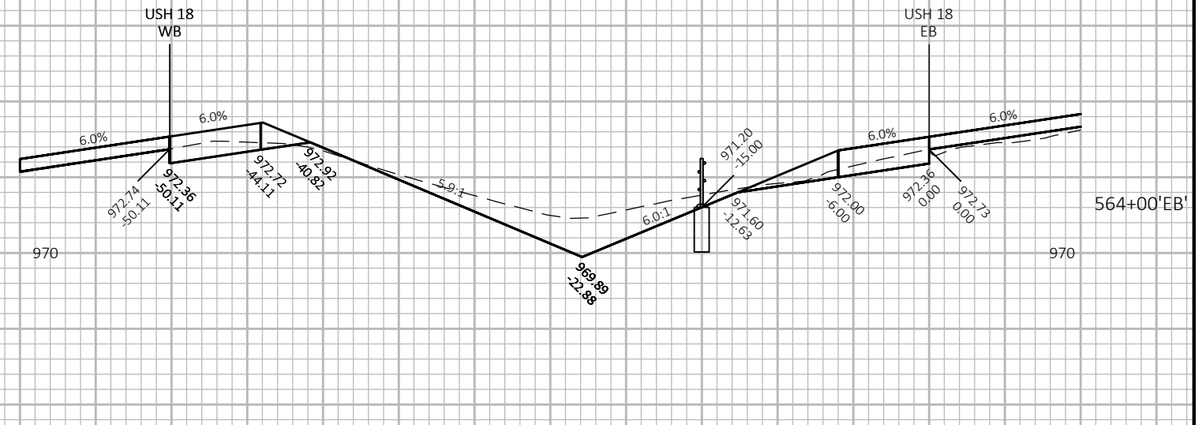

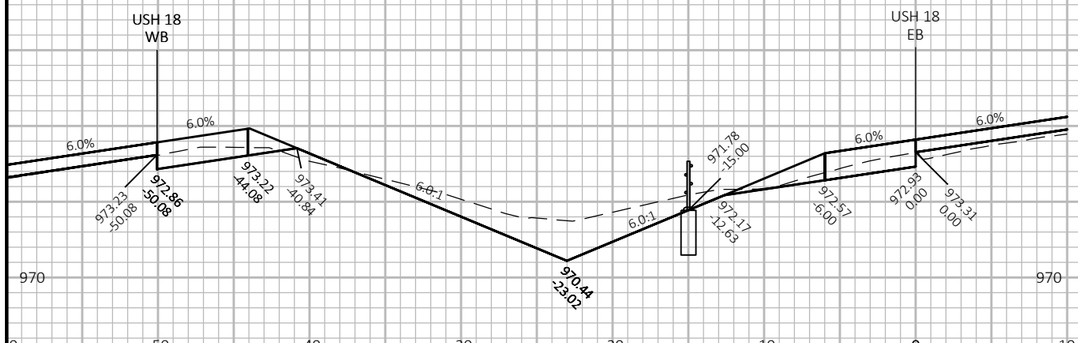

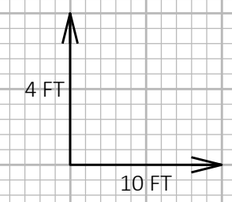

9

9

PROJECT NO: 1204-08-65	HWY: USH 18/151	COUNTY: DANE	CROSS SECTIONS: USH 18 EB	SHEET 671	E

FILE NAME : G:\WDOTSW\20007-000 USH 18\CIVIL 3D\SHEETSPLAN\CROSS SECTIONS\090302-XS_USH 18 EB.DWG
LAYOUT NAME - 18EB-7a_6

PLOT DATE : 7/20/2022 2:28 PM PLOT BY : ERIC ANDRITSCH PLOT NAME : PLOT SCALE : 1 IN:10 FT HORZ. / 1 IN:4 FT VERT.

WISDOT/CADDS SHEET 49

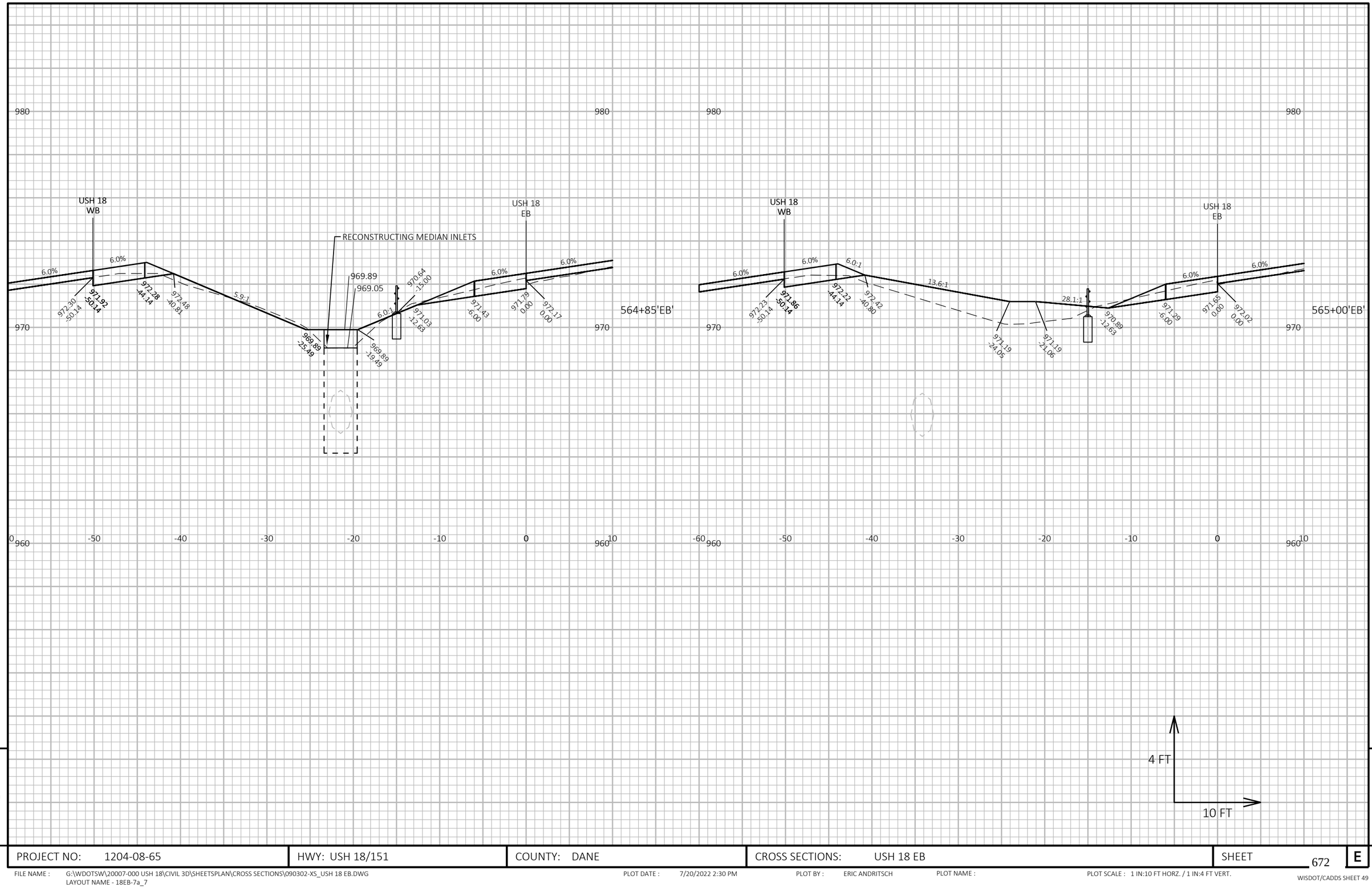

PROJECT NO: 1204-08-65	HWY: USH 18/151	COUNTY: DANE	CROSS SECTIONS: USH 18 EB	SHEET 672	E

FILE NAME : G:\WDOTSW\20007-000 USH 18\CIVIL 3D\SHEETSPLAN\CROSS SECTIONS\090302-XS_USH 18 EB.DWG
LAYOUT NAME - 18EB-7a_7

PLOT DATE : 7/20/2022 2:30 PM PLOT BY : ERIC ANDRITSCH PLOT NAME : PLOT SCALE : 1 IN:10 FT HORZ. / 1 IN:4 FT VERT.

WISDOT/CADDS SHEET 49

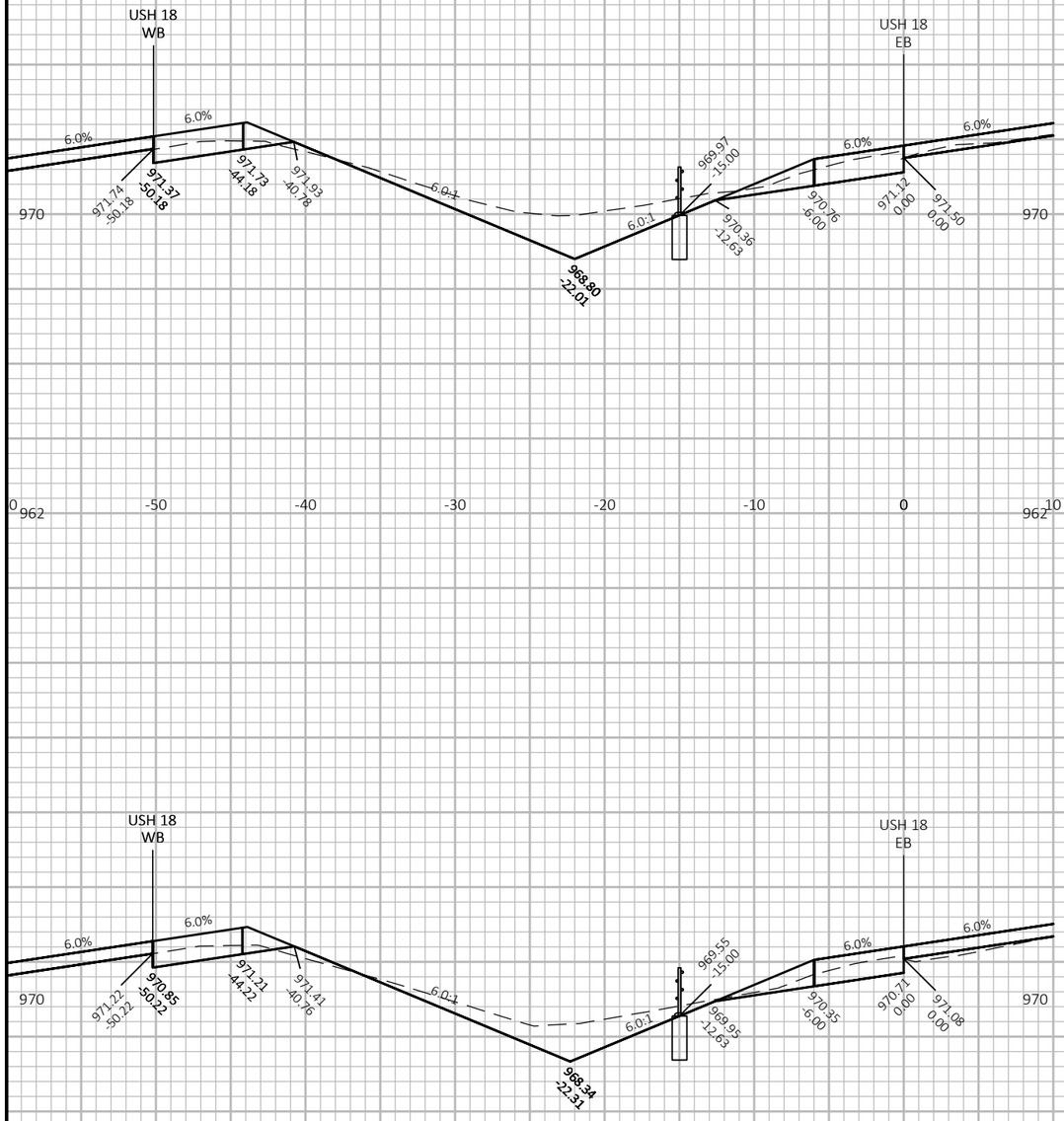

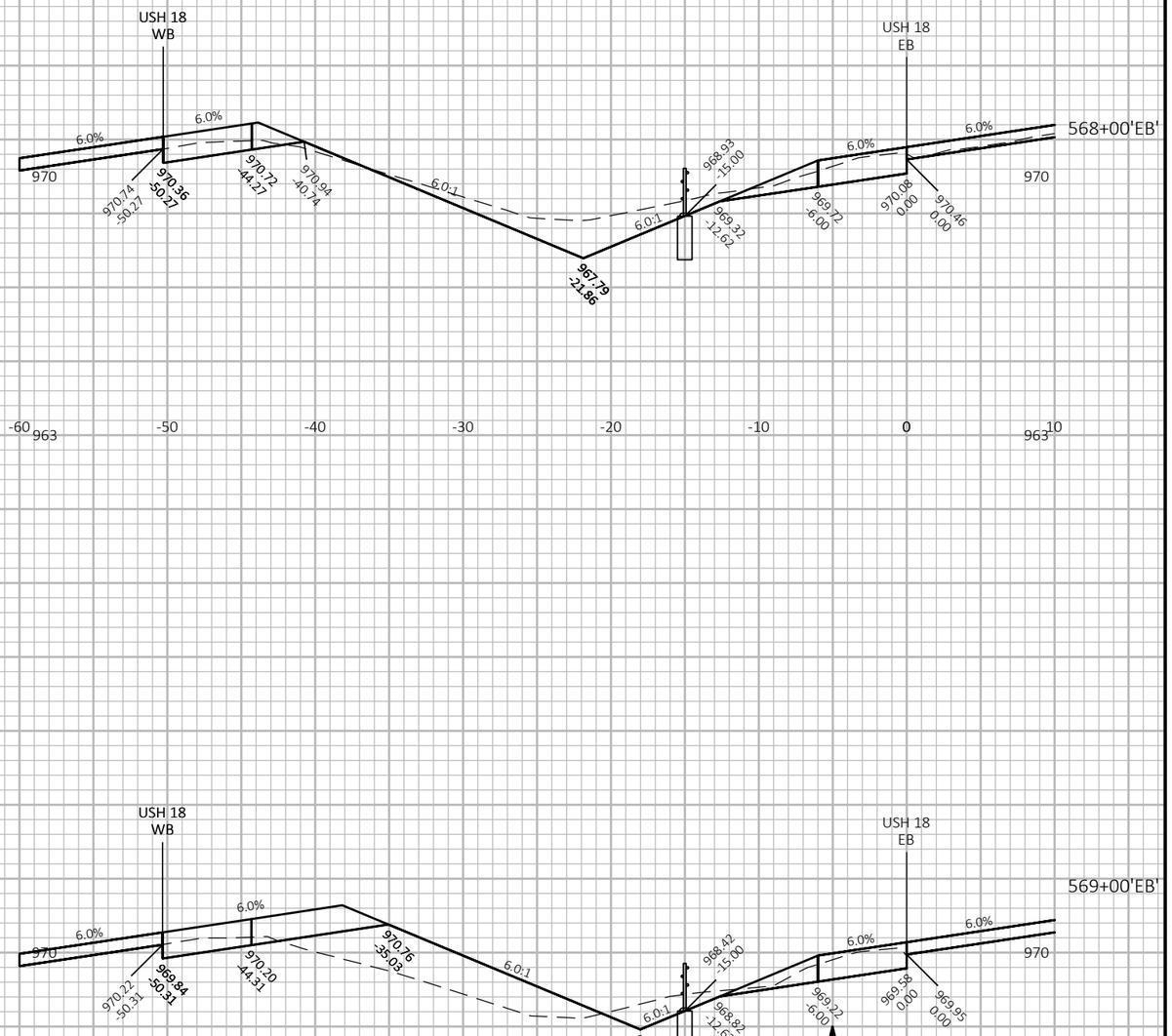

9

9

PROJECT NO: 1204-08-65	HWY: USH 18/151	COUNTY: DANE	CROSS SECTIONS: USH 18 EB	SHEET 673	E

FILE NAME : G:\WDOTSW\20007-000 USH 18\CIVIL 3D\SHEETSPLAN\CROSS SECTIONS\090302-XS_USH 18 EB.DWG
LAYOUT NAME - 18EB-7a_8

PLOT DATE : 7/20/2022 2:31 PM PLOT BY : ERIC ANDRITSCH PLOT NAME : PLOT SCALE : 1 IN:10 FT HORZ. / 1 IN:4 FT VERT.

WISDOT/CADDS SHEET 49

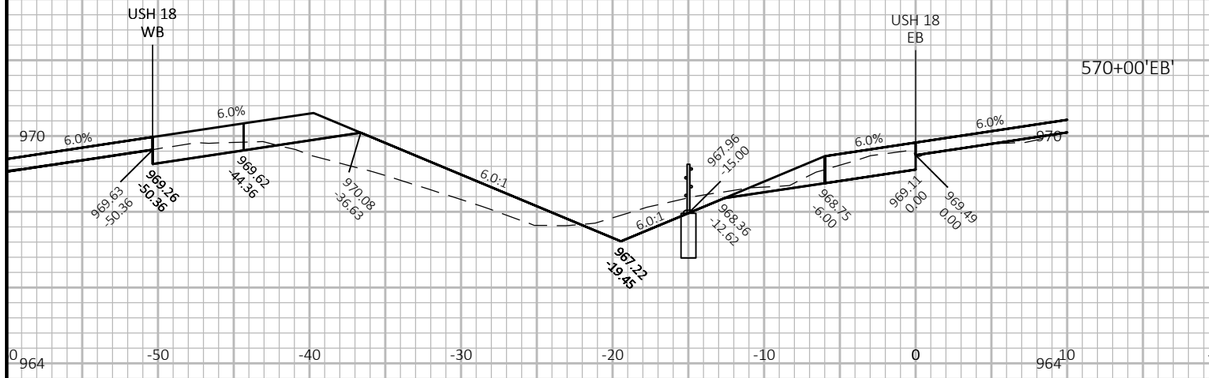

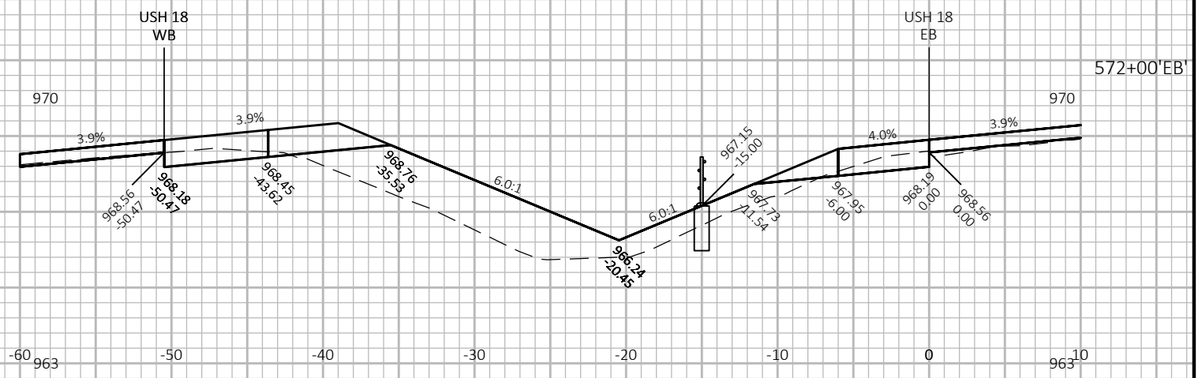

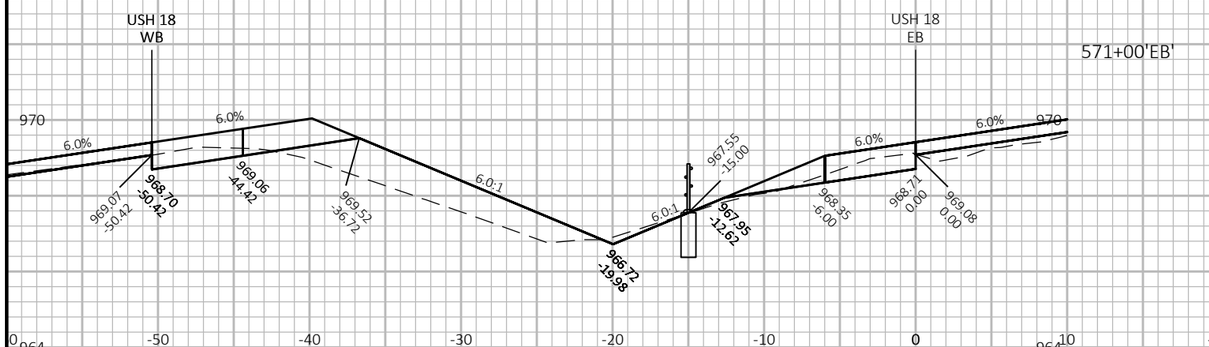

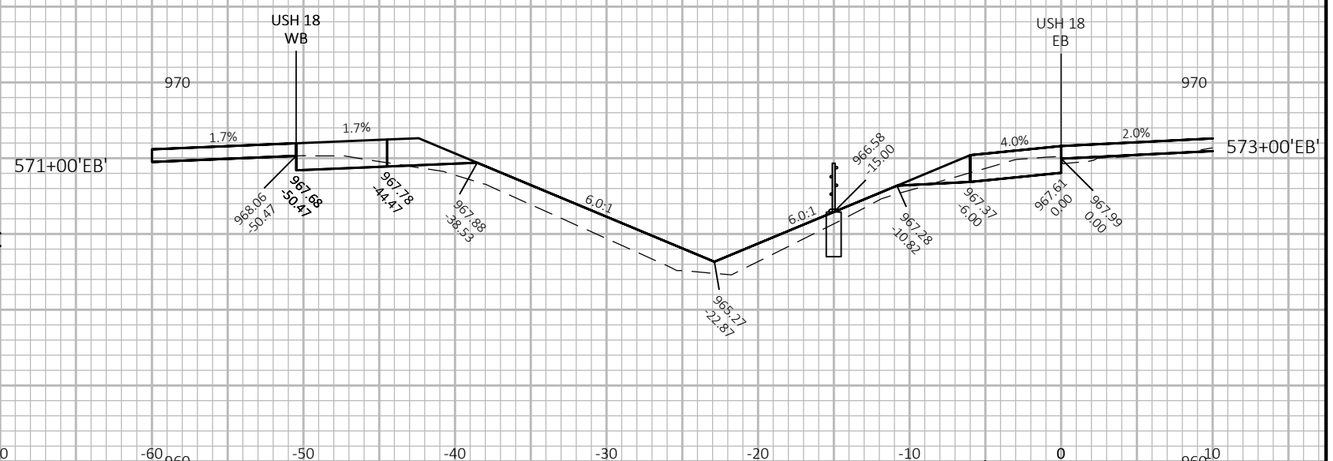

4 FT

10 FT

9

9

PROJECT NO: 1204-08-65	HWY: USH 18/151	COUNTY: DANE	CROSS SECTIONS: USH 18 EB	SHEET 674	E

FILE NAME : G:\WDOTSW\20007-000 USH 18\CIVIL 3D\SHEETSPLAN\CROSS SECTIONS\090302-XS_USH 18 EB.DWG
LAYOUT NAME - 18EB-7a_9

PLOT DATE : 7/20/2022 2:33 PM PLOT BY : ERIC ANDRITSCH PLOT NAME : PLOT SCALE : 1 IN:10 FT HORZ. / 1 IN:4 FT VERT.

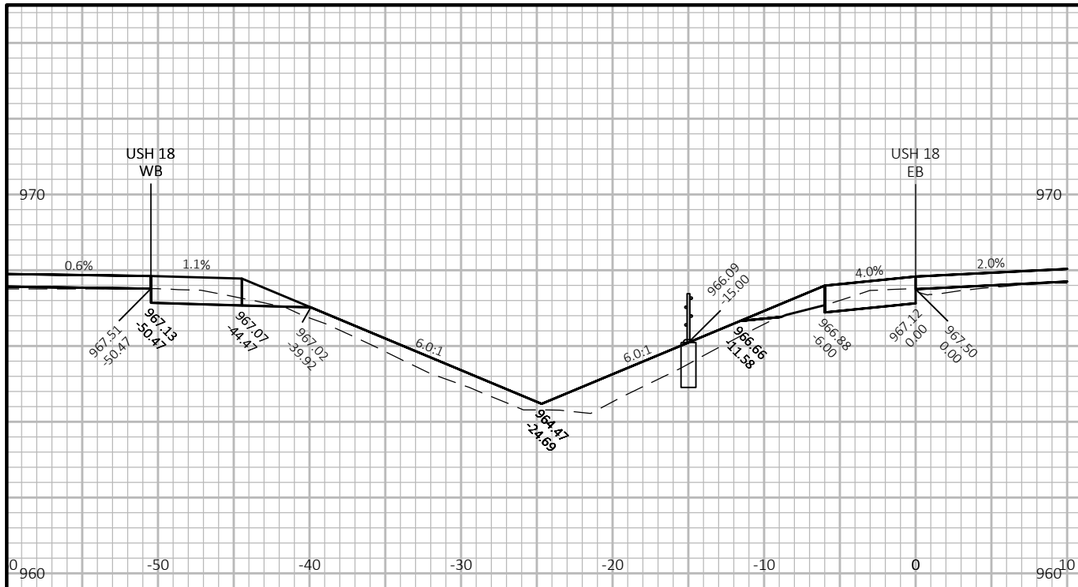

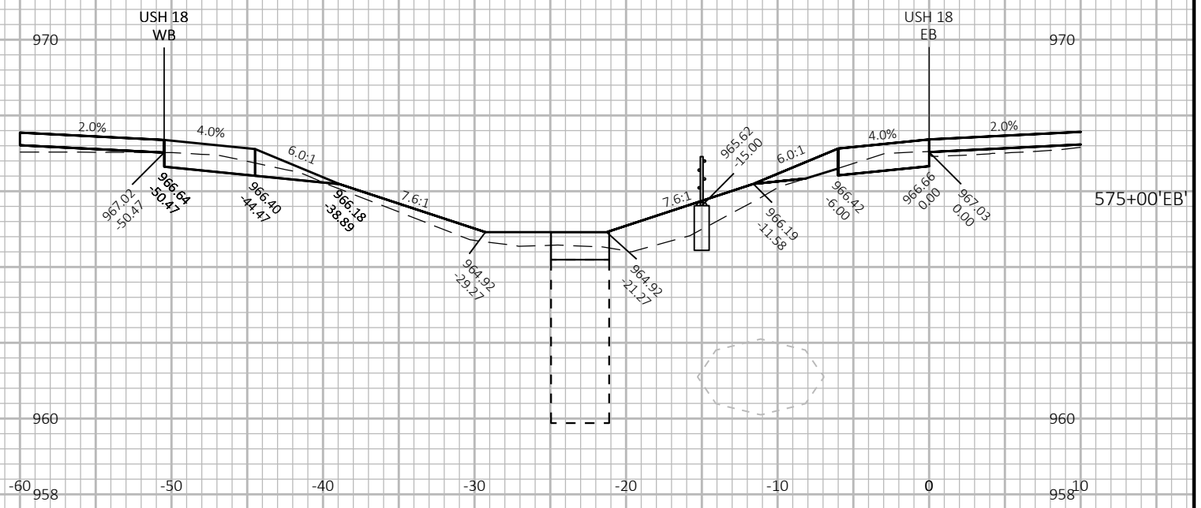

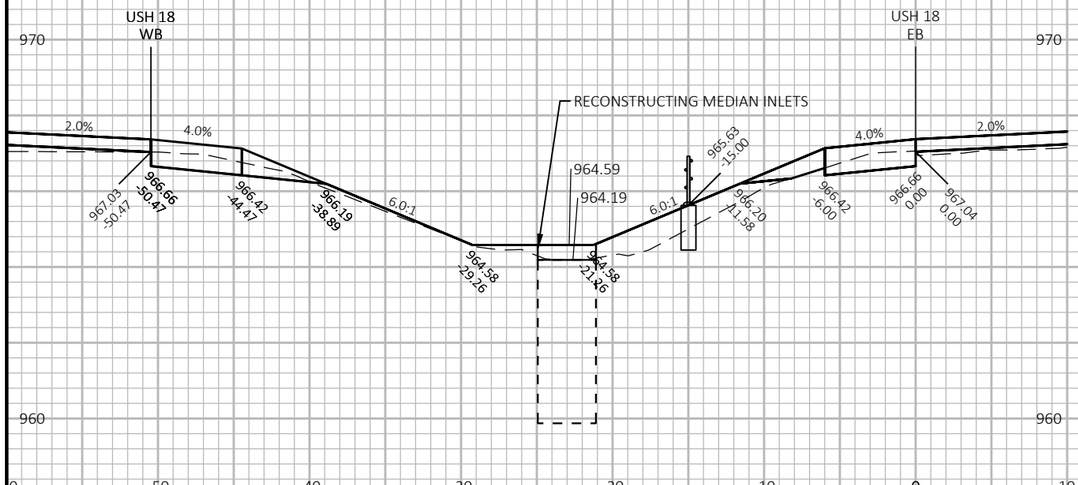

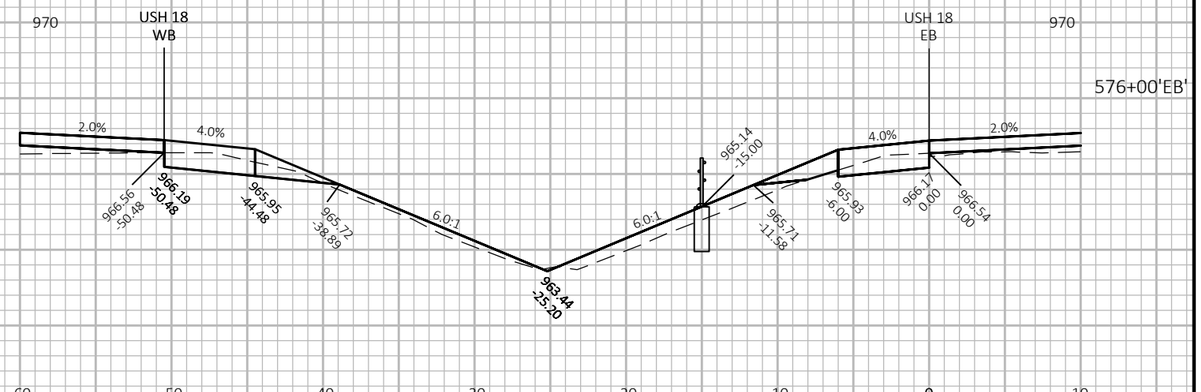

4 FT

10 FT

9

9

PROJECT NO: 1204-08-65	HWY: USH 18/151	COUNTY: DANE	CROSS SECTIONS: USH 18 EB	SHEET 675	E

FILE NAME : G:\WDOTSW\20007-000 USH 18\CIVIL 3D\SHEETSPLAN\CROSS SECTIONS\090302-XS_USH 18 EB.DWG
LAYOUT NAME - 18EB-7a_10

PLOT DATE : 7/20/2022 2:46 PM PLOT BY : ERIC ANDRITSCH PLOT NAME : PLOT SCALE : 1 IN:10 FT HORZ. / 1 IN:4 FT VERT.

WISDOT/CADDS SHEET 49

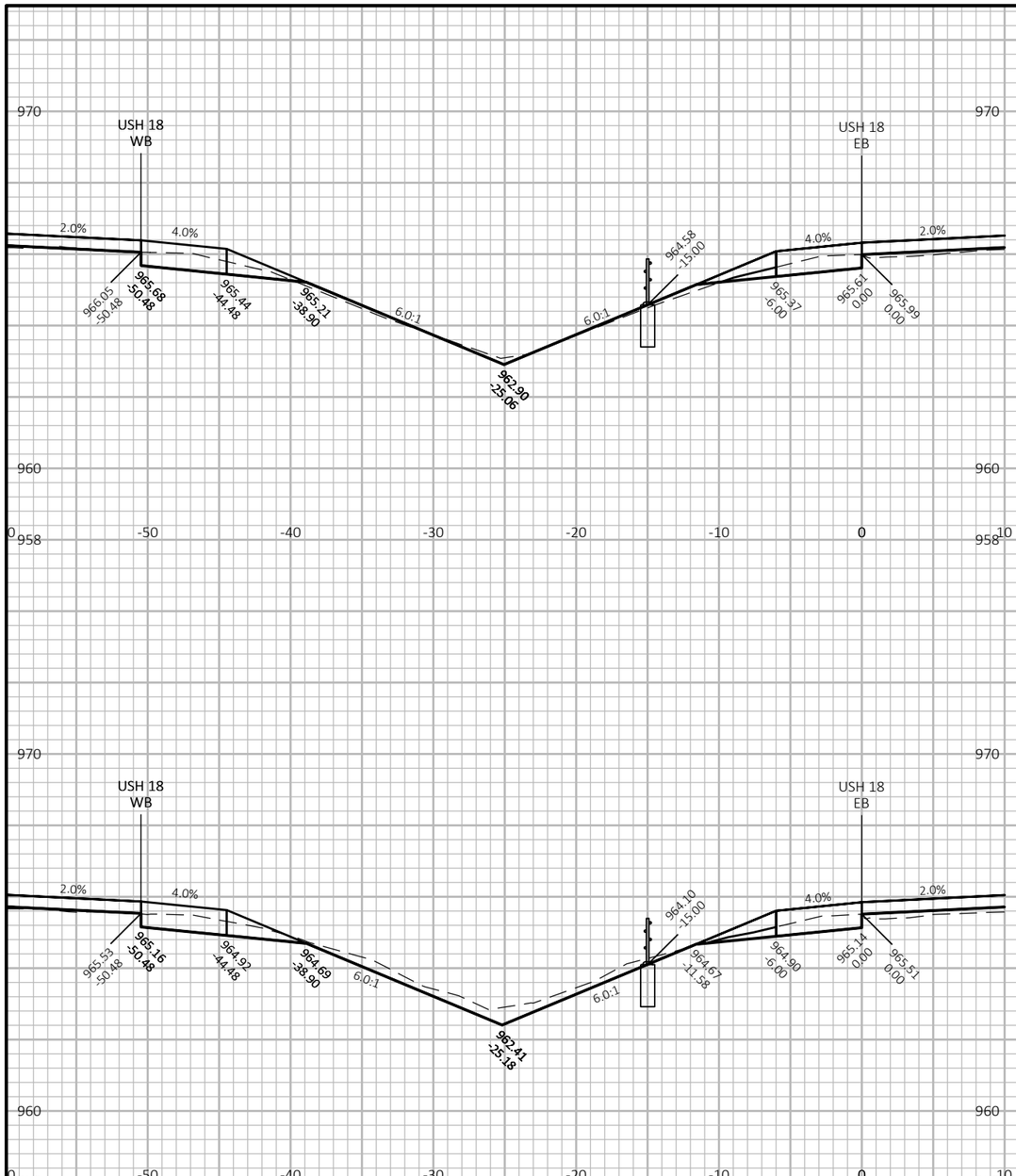

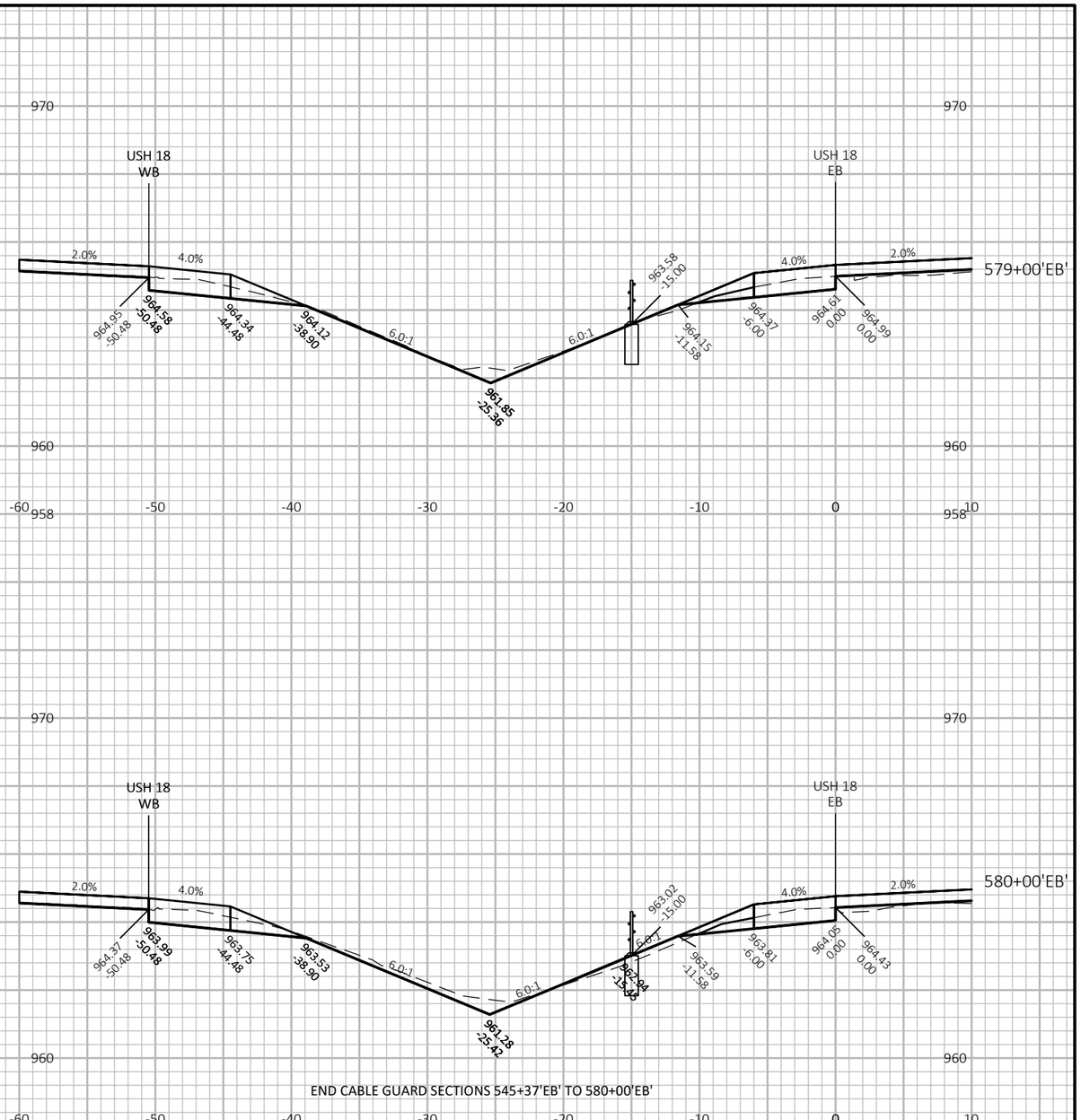

END CABLE GUARD SECTIONS 545+37'EB' TO 580+00'EB'

4 FT

10 FT

9

9

PROJECT NO: 1204-08-65	HWY: USH 18/151	COUNTY: DANE	CROSS SECTIONS: USH 18 EB	SHEET 676	E

FILE NAME : G:\WDOTSW\20007-000 USH 18\CIVIL 3D\SHEETSPLAN\CROSS SECTIONS\090302-XS_USH 18 EB.DWG
LAYOUT NAME - 18EB-7a_11

PLOT DATE : 7/17/2022 9:21 PM PLOT BY : ERIC ANDRITSCH PLOT NAME : PLOT SCALE : 1 IN:10 FT HORZ. / 1 IN:4 FT VERT.

WISDOT/CADDS SHEET 49

START BEAM GUARD SECTIONS 580+35'EB' TO 584+21'EB'

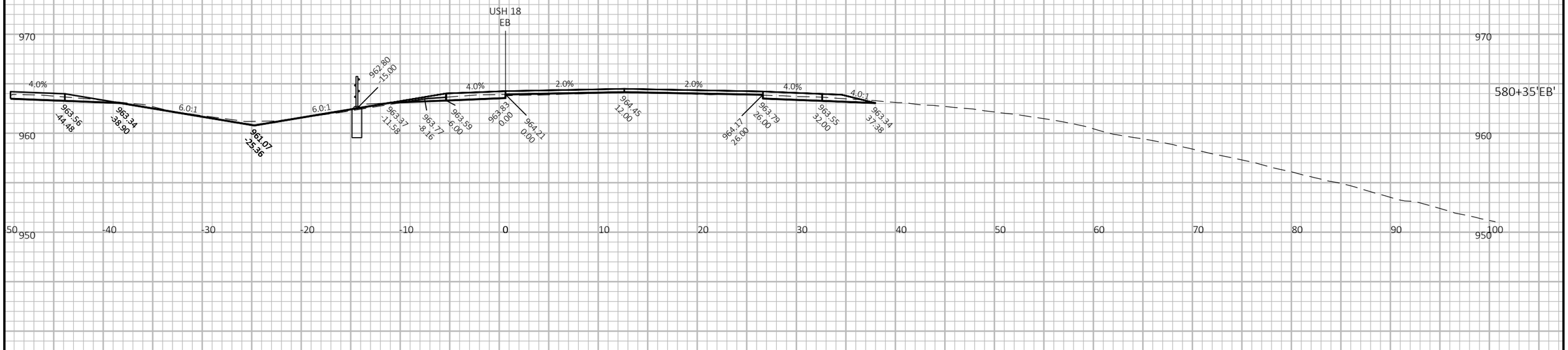

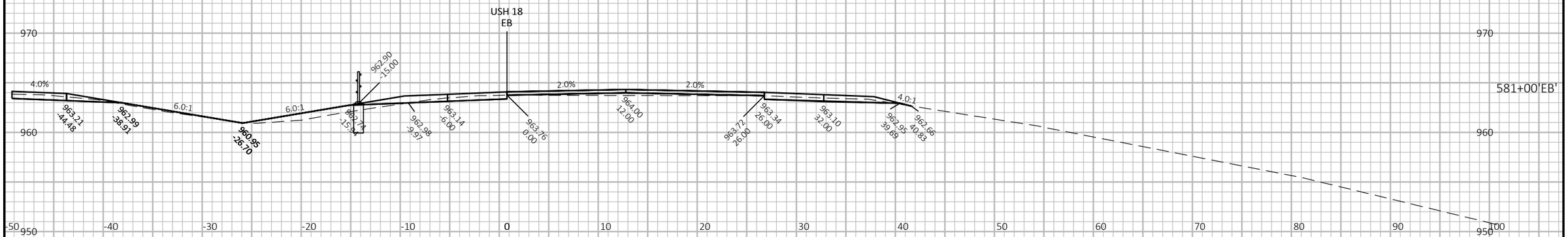

10 FT

10 FT

9

9

PROJECT NO: 1204-08-65	HWY: USH 18/151	COUNTY: DANE	CROSS SECTIONS: USH 18 EB	SHEET 677	E

FILE NAME : G:\WDOTSW\20007-000 USH 18\CIVIL 3D\SHEETSPLAN\CROSS SECTIONS\090302-XS_USH 18 EB.DWG
LAYOUT NAME - 18EB-7b_1

PLOT DATE : 7/17/2022 9:23 PM PLOT BY : ERIC ANDRITSCH PLOT NAME : PLOT SCALE : 1 IN:10 FT HORZ. / 1 IN:10 FT VERT.

WISDOT/CADDS SHEET 49

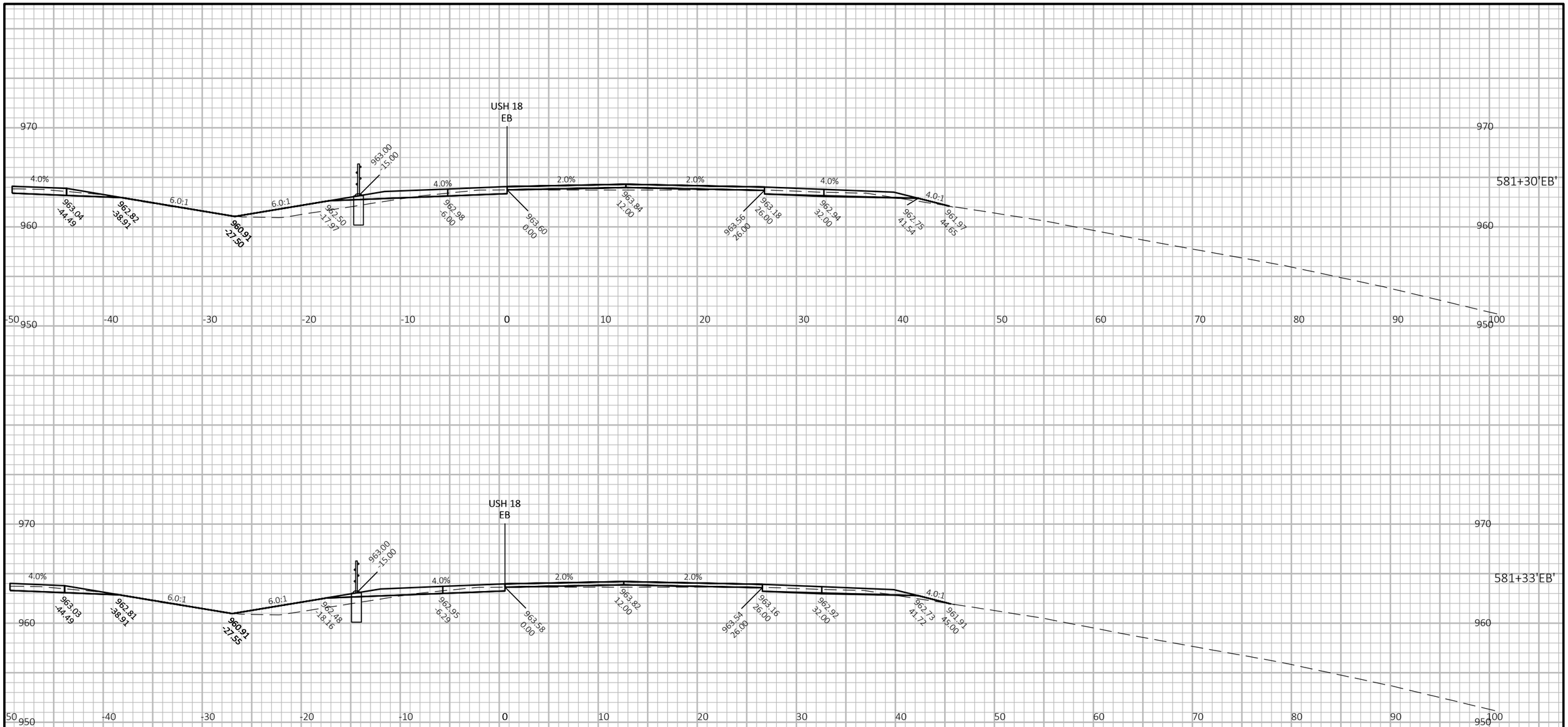

PROJECT NO: 1204-08-65	HWY: USH 18/151	COUNTY: DANE	CROSS SECTIONS: USH 18 EB	SHEET 678	E

FILE NAME : G:\WDOTSW\20007-000 USH 18\CIVIL 3D\SHEETSPLAN\CROSS SECTIONS\090302-XS_USH 18 EB.DWG
LAYOUT NAME - 18EB-7b_2

PLOT DATE : 7/17/2022 9:24 PM PLOT BY : ERIC ANDRITSCH PLOT NAME : **PLOT SCALE :** 1 IN:10 FT HORZ. / 1 IN:10 FT VERT.

WISDOT/CADDS SHEET 49

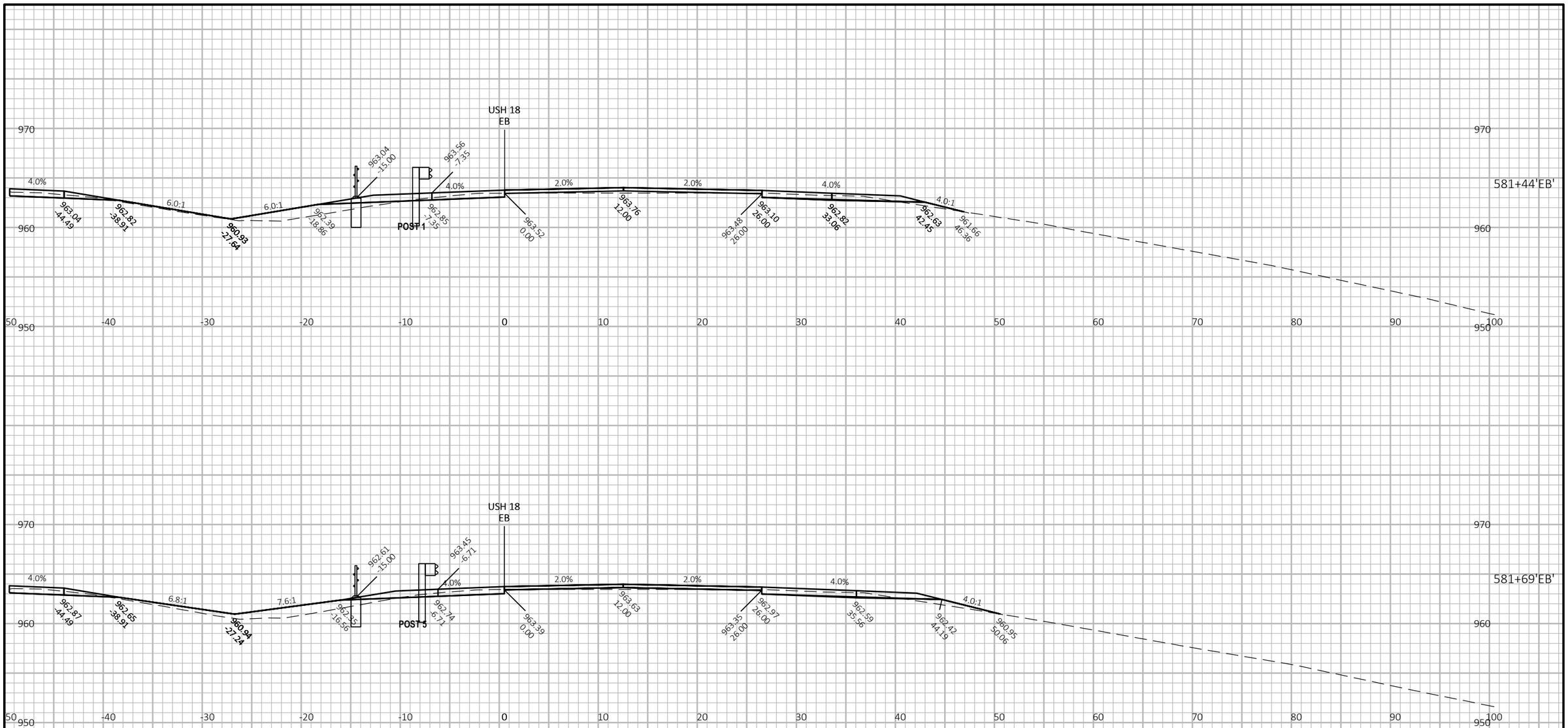

PROJECT NO: 1204-08-65	HWY: USH 18/151	COUNTY: DANE	CROSS SECTIONS: USH 18 EB	SHEET 679	E

FILE NAME : G:\WDOTSW\20007-000 USH 18\CIVIL 3D\SHEETSPLAN\CROSS SECTIONS\090302-XS_USH 18 EB.DWG
LAYOUT NAME - 18EB-7b_3

PLOT DATE : 7/17/2022 9:26 PM PLOT BY : ERIC ANDRITSCH PLOT NAME : **PLOT SCALE :** 1 IN:10 FT HORZ. / 1 IN:10 FT VERT.

WISDOT/CADDS SHEET 49

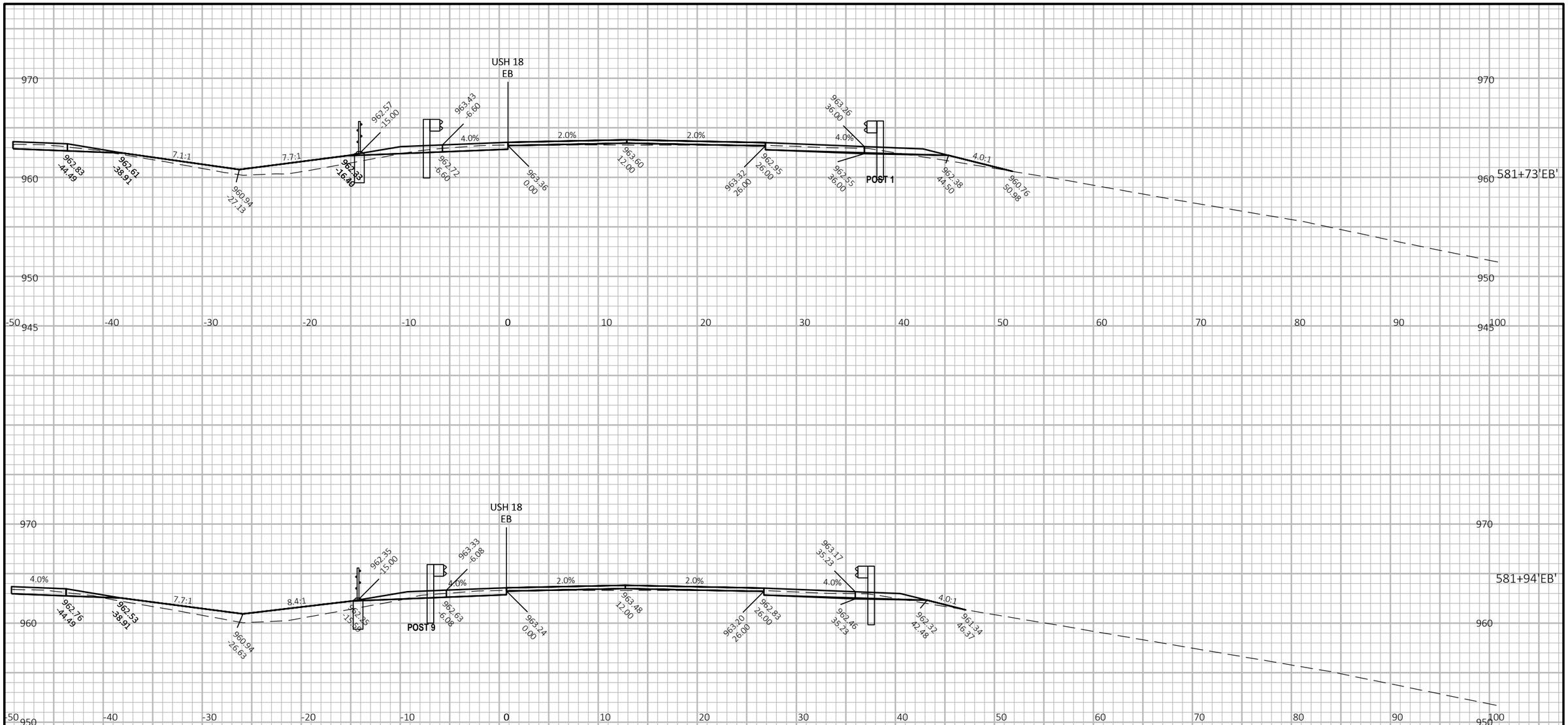

PROJECT NO: 1204-08-65	HWY: USH 18/151	COUNTY: DANE	CROSS SECTIONS: USH 18 EB	SHEET 680	E

FILE NAME : G:\WDOTSW\20007-000 USH 18\CIVIL 3D\SHEETSPLAN\CROSS SECTIONS\090302-XS_USH 18 EB.DWG
LAYOUT NAME - 18EB-7b_4

PLOT DATE : 7/17/2022 9:27 PM PLOT BY : ERIC ANDRITSCH PLOT NAME : **PLOT SCALE :** 1 IN:10 FT HORZ. / 1 IN:10 FT VERT.

WISDOT/CADDS SHEET 49

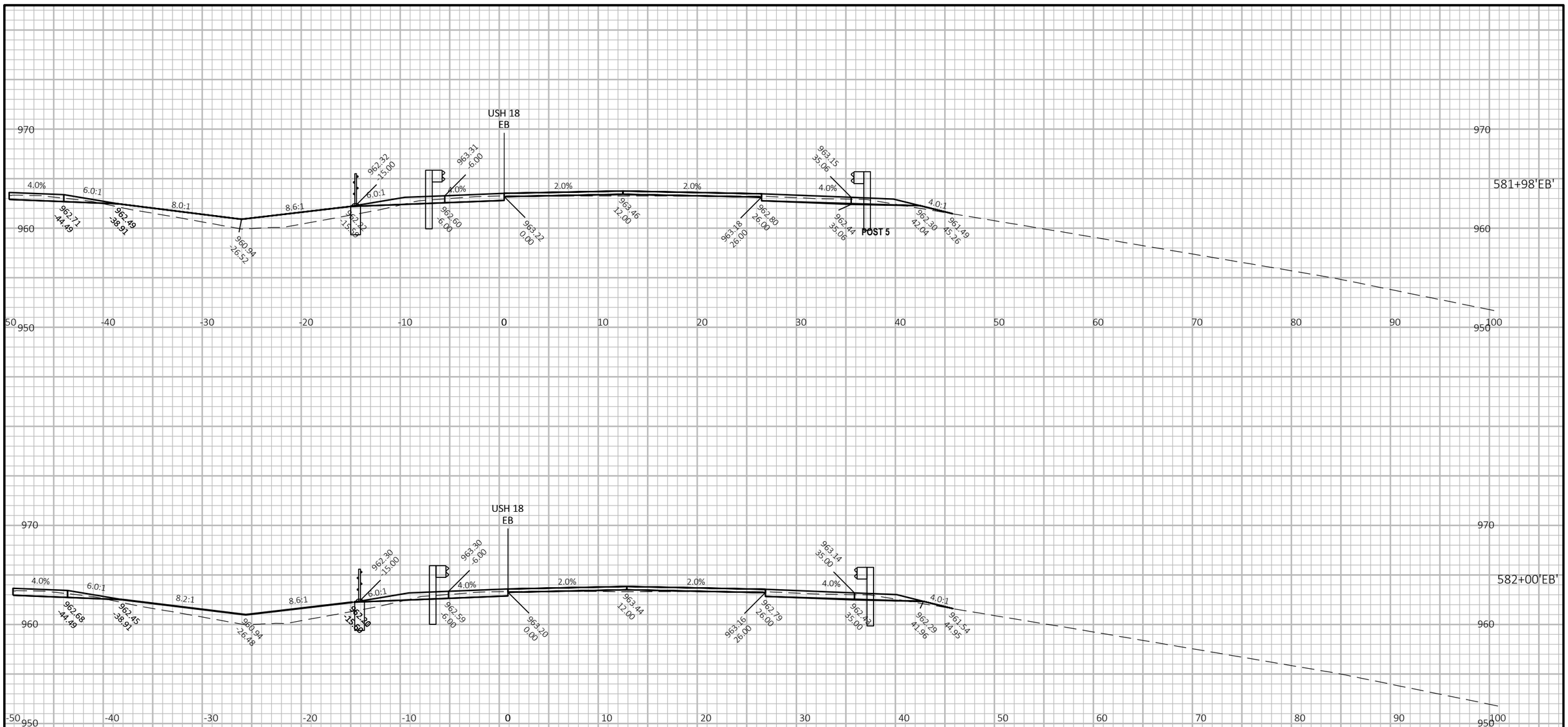

PROJECT NO: 1204-08-65	HWY: USH 18/151	COUNTY: DANE	CROSS SECTIONS: USH 18 EB	SHEET 681	E

FILE NAME : G:\WDOTSW\20007-000 USH 18\CIVIL 3D\SHEETSPLAN\CROSS SECTIONS\090302-XS_USH 18 EB.DWG
LAYOUT NAME - 18EB-7b_5

PLOT DATE : 7/17/2022 9:29 PM PLOT BY : ERIC ANDRITSCH PLOT NAME : PLOT SCALE : 1 IN:10 FT HORZ. / 1 IN:10 FT VERT.

WISDOT/CADDS SHEET 49

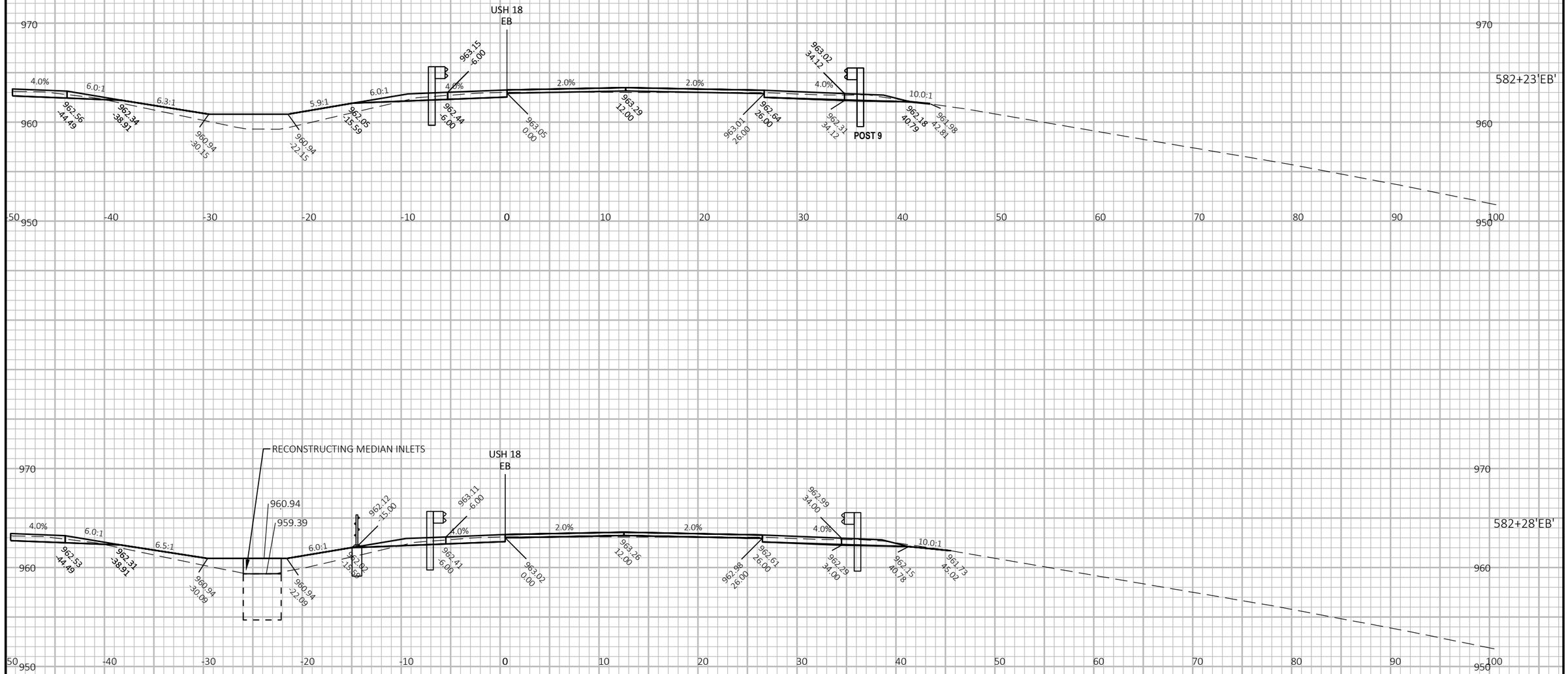

PROJECT NO: 1204-08-65	HWY: USH 18/151	COUNTY: DANE	CROSS SECTIONS: USH 18 EB	SHEET 682	E

FILE NAME : G:\WDOTSW\20007-000 USH 18\CIVIL 3D\SHEETSPLAN\CROSS SECTIONS\090302-XS_USH 18 EB.DWG
LAYOUT NAME - 18EB-7b_6

PLOT DATE : 7/17/2022 9:31 PM PLOT BY : ERIC ANDRITSCH PLOT NAME : **PLOT SCALE :** 1 IN:10 FT HORZ. / 1 IN:10 FT VERT.

WISDOT/CADDS SHEET 49

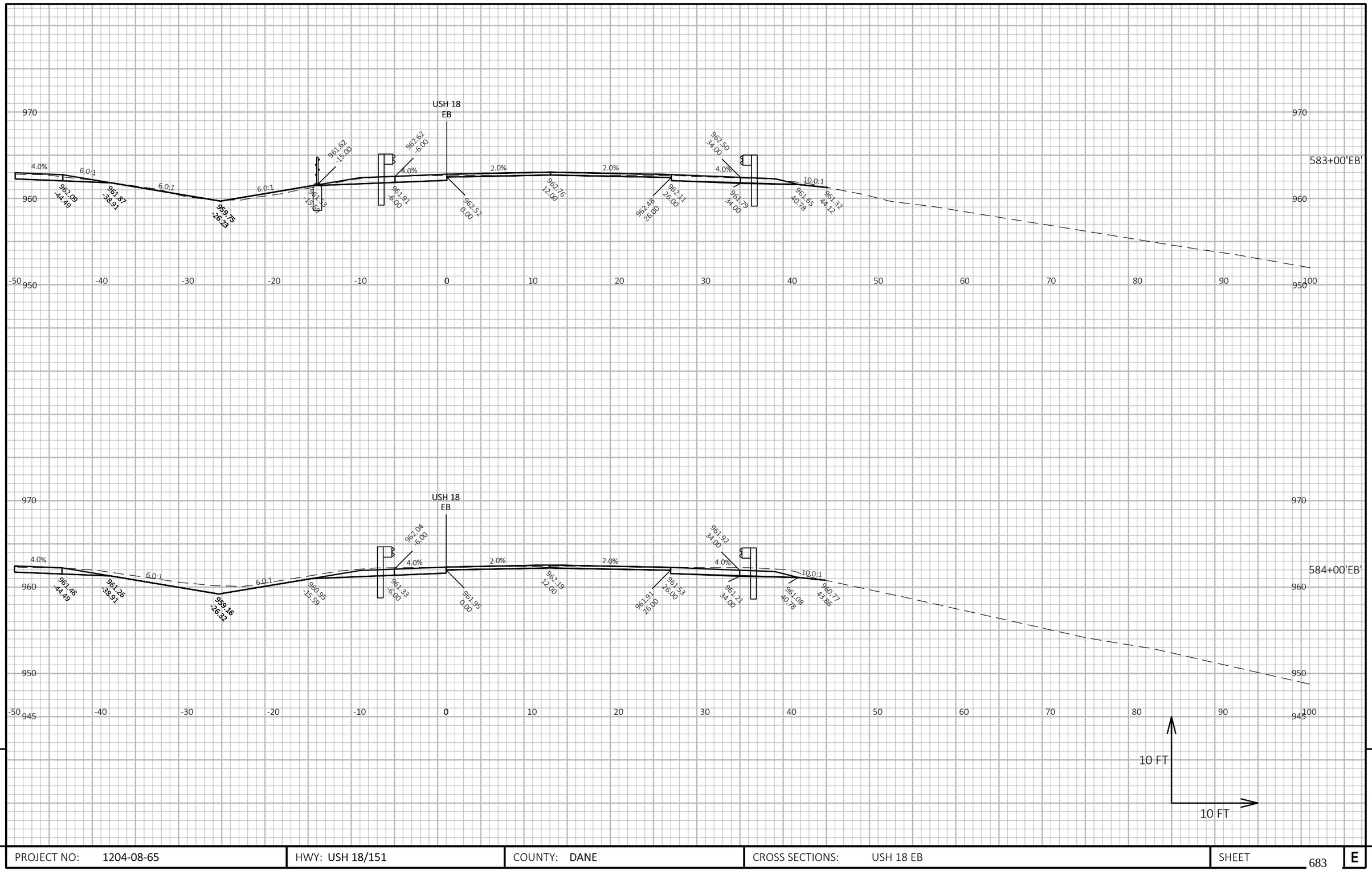

9

9

PROJECT NO: 1204-08-65	HWY: USH 18/151	COUNTY: DANE	CROSS SECTIONS: USH 18 EB	SHEET 683	E

FILE NAME : G:\WDOTSW\20007-000 USH 18\CIVIL 3D\SHEETSPLAN\CROSS SECTIONS\090302-XS_USH 18 EB.DWG
LAYOUT NAME - 18EB-7b_7

PLOT DATE : 7/17/2022 9:32 PM PLOT BY : ERIC ANDRITSCH PLOT NAME : **PLOT SCALE :** 1 IN:10 FT HORZ. / 1 IN:10 FT VERT.

WISDOT/CADDS SHEET 49

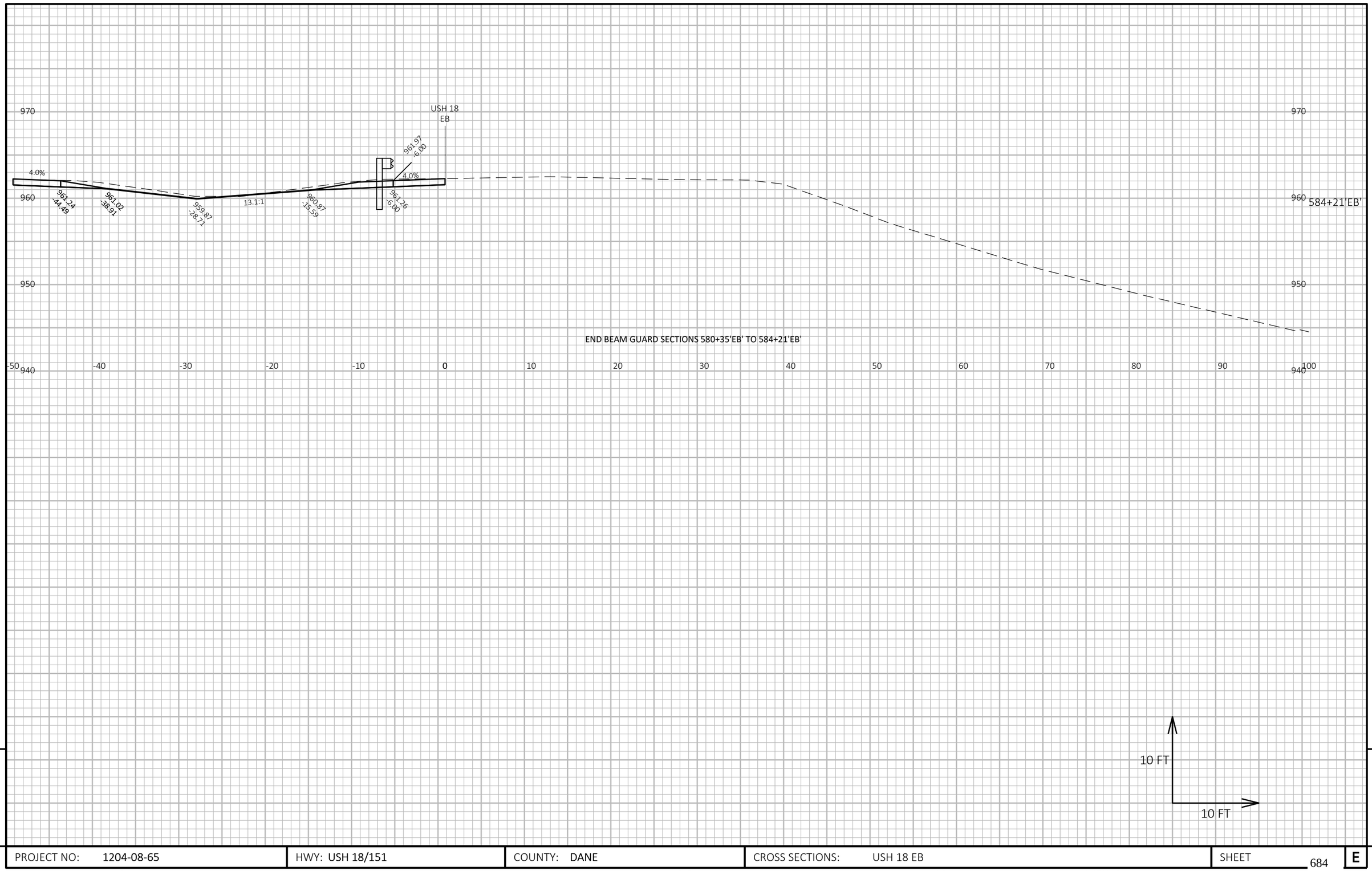

9

9

PROJECT NO: 1204-08-65	HWY: USH 18/151	COUNTY: DANE	CROSS SECTIONS: USH 18 EB	SHEET 684	E

FILE NAME : G:\WDOTSW\20007-000 USH 18\CIVIL 3D\SHEETSPLAN\CROSS SECTIONS\090302-XS_USH 18 EB.DWG
LAYOUT NAME - 18EB-7b_8

PLOT DATE : 7/17/2022 9:34 PM PLOT BY : ERIC ANDRITSCH PLOT NAME :

PLOT SCALE : 1 IN:10 FT HORZ. / 1 IN:10 FT VERT.

WISDOT/CADDS SHEET 49

START CABLE GUARD SECTIONS 587+57'EB' TO 671+00'EB'



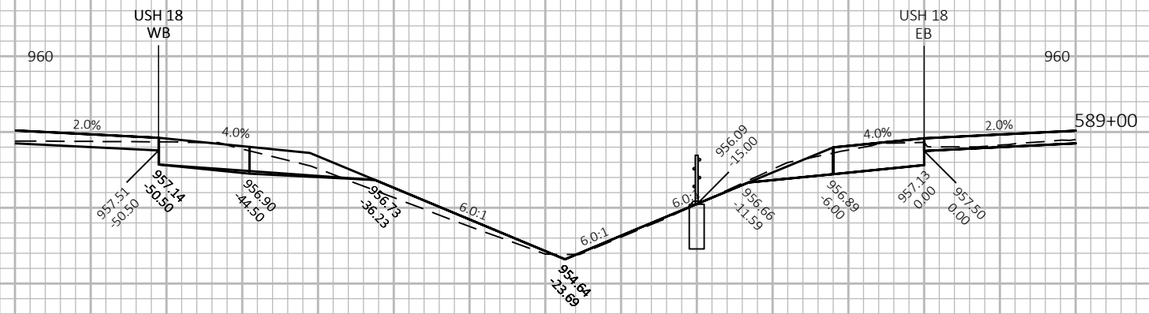

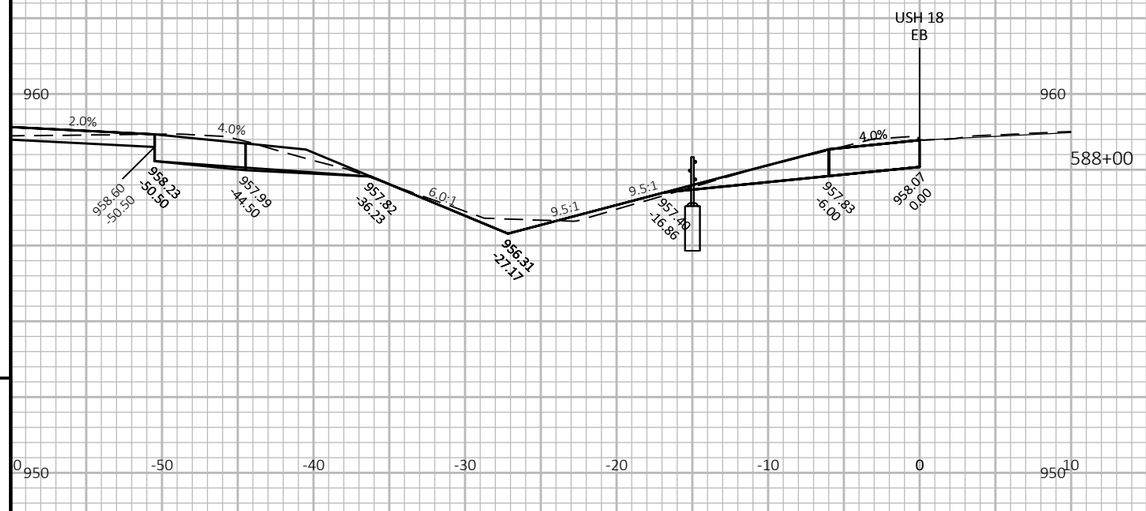

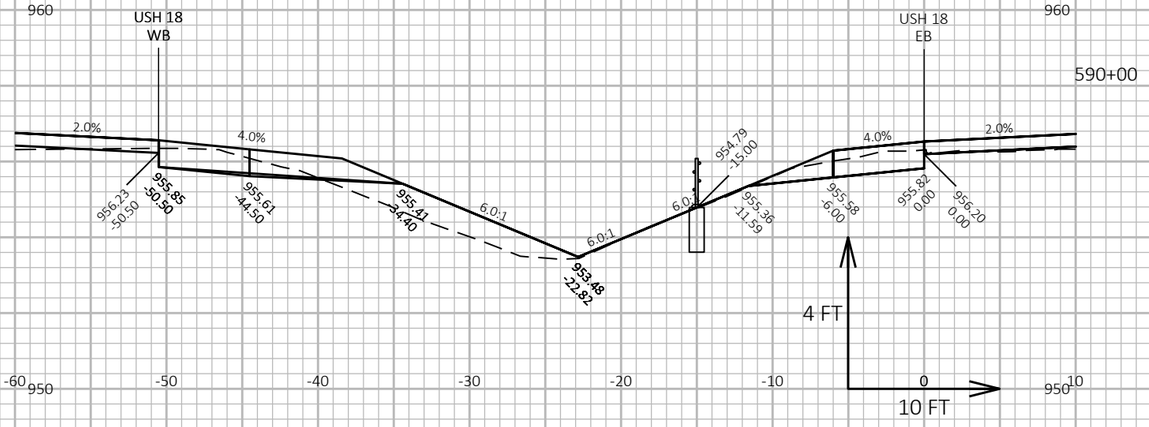

PROJECT NO: 1204-08-65	HWY: USH 18/151	COUNTY: DANE	CROSS SECTIONS: USH 18 EB	SHEET 685 E

FILE NAME : G:\WDOTSW\20007-000 USH 18\CIVIL 3D\SHEETSPLAN\CROSS SECTIONS\090303-XS_USH 18 EB.DWG
LAYOUT NAME - 18EB-8_1

PLOT DATE : 7/19/2022 12:15 AM PLOT BY : ERIC ANDRITSCH PLOT NAME : PLOT SCALE : 1 IN:10 FT HORZ. / 1 IN:4 FT VERT.

WISDOT/CADDS SHEET 49

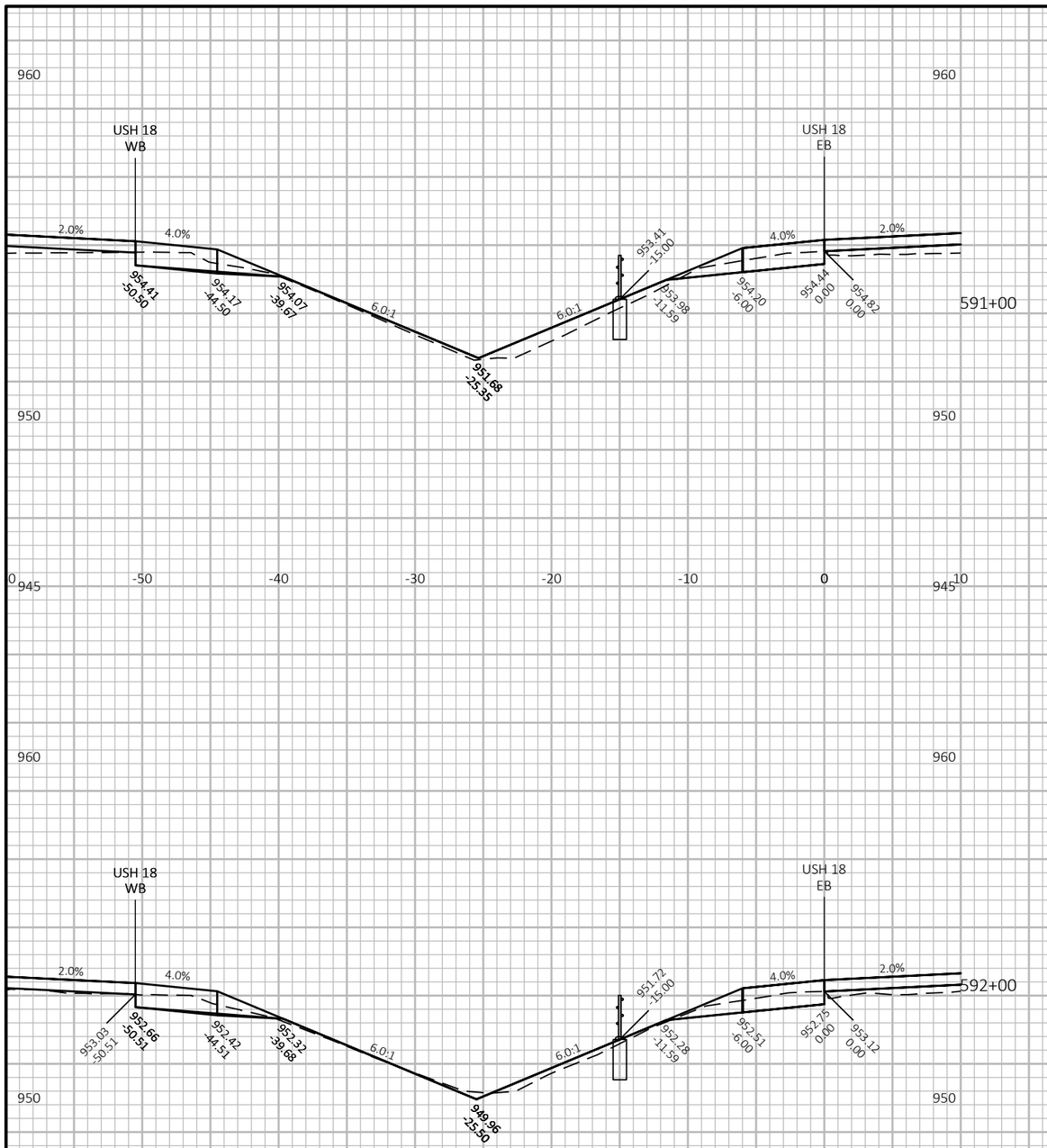

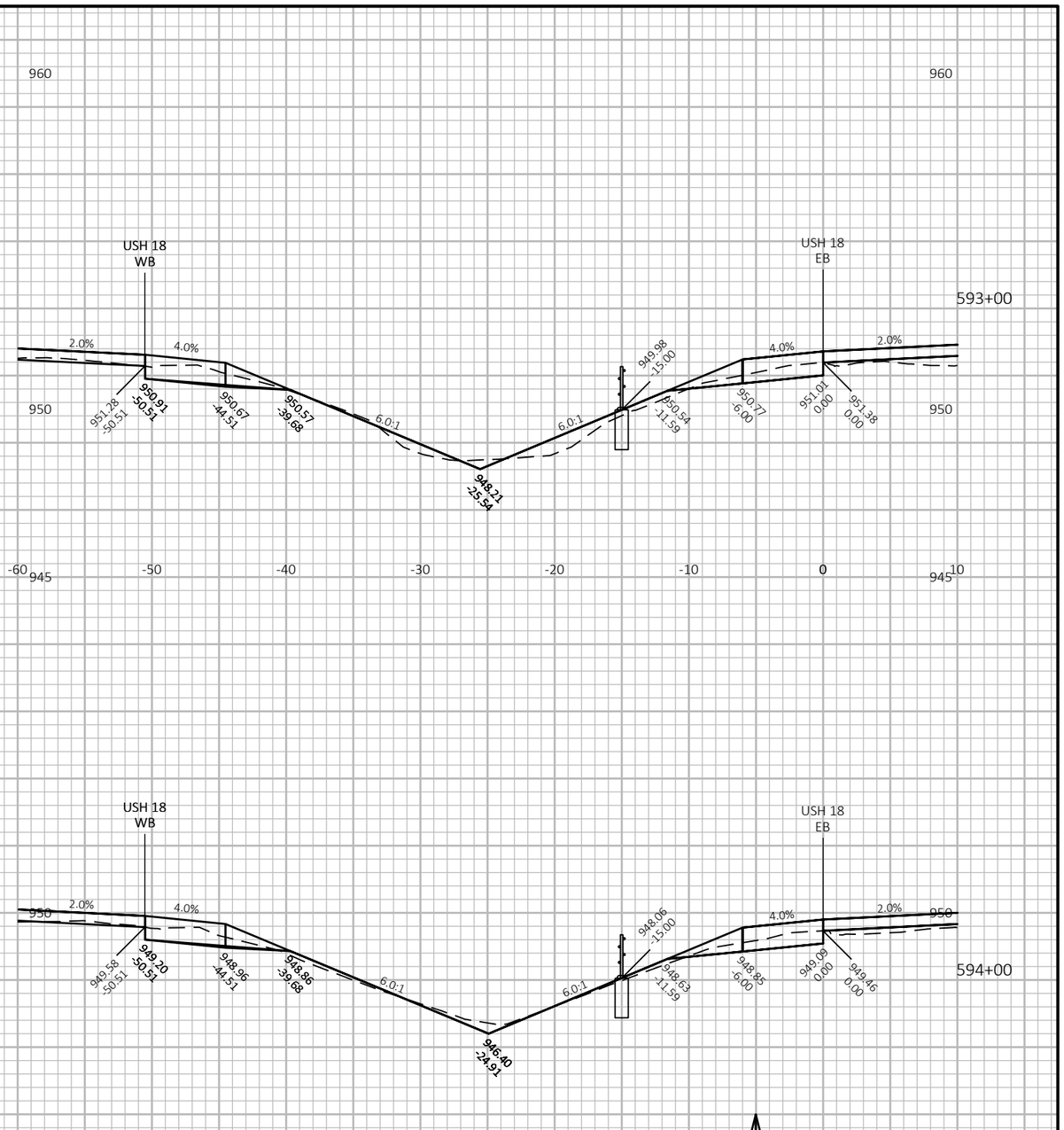

9

9

PROJECT NO: 1204-08-65	HWY: USH 18/151	COUNTY: DANE	CROSS SECTIONS: USH 18 EB	SHEET 686	E

FILE NAME : G:\WDOTSW\20007-000 USH 18\CIVIL 3D\SHEETSPLAN\CROSS SECTIONS\090303-XS_USH 18 EB.DWG
LAYOUT NAME - 18EB-8_2

PLOT DATE : 7/19/2022 12:17 AM

PLOT BY : ERIC ANDRITSCH

PLOT NAME :

PLOT SCALE : 1 IN:10 FT HORZ. / 1 IN:4 FT VERT.

WISDOT/CADDS SHEET 49

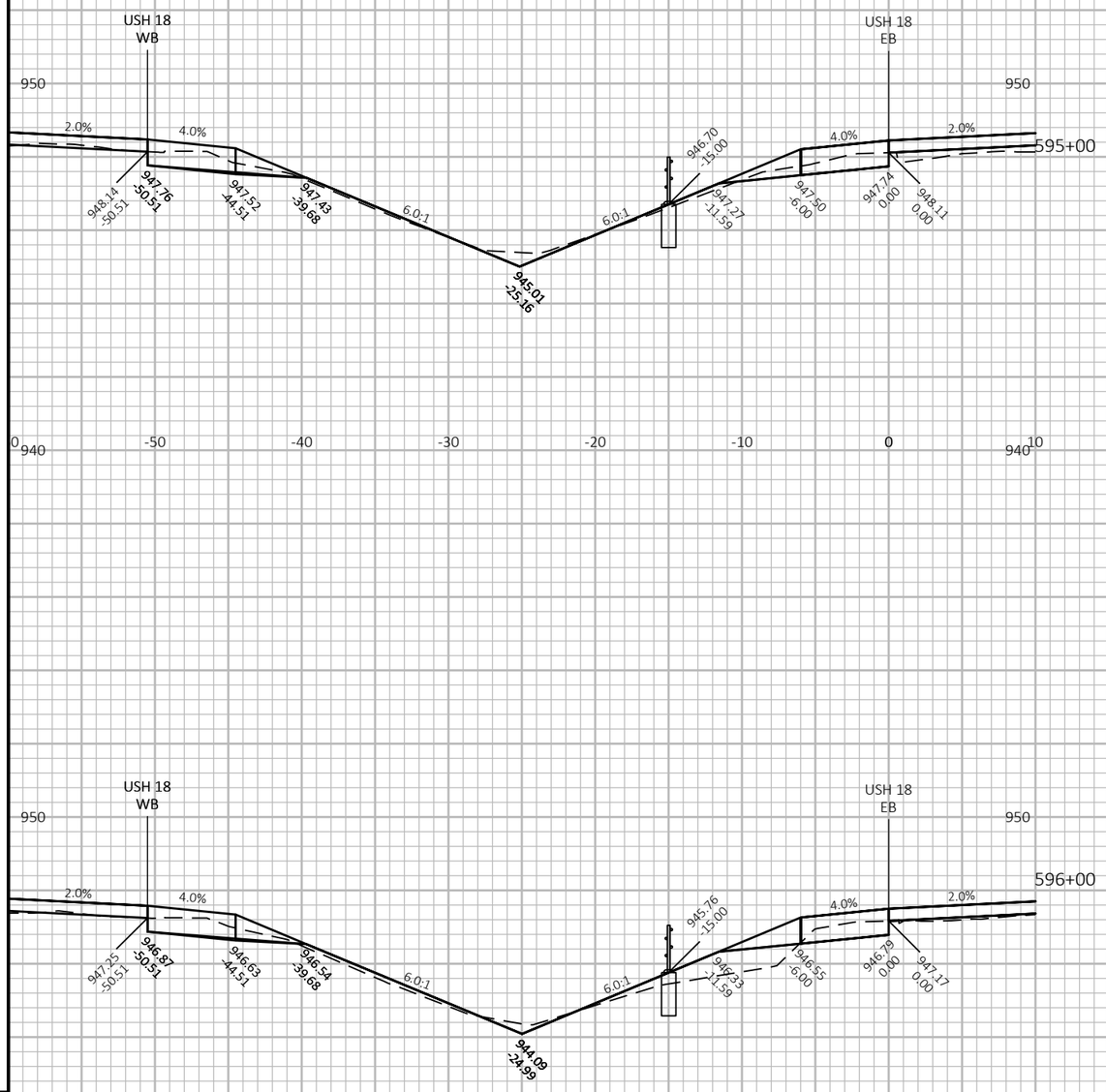

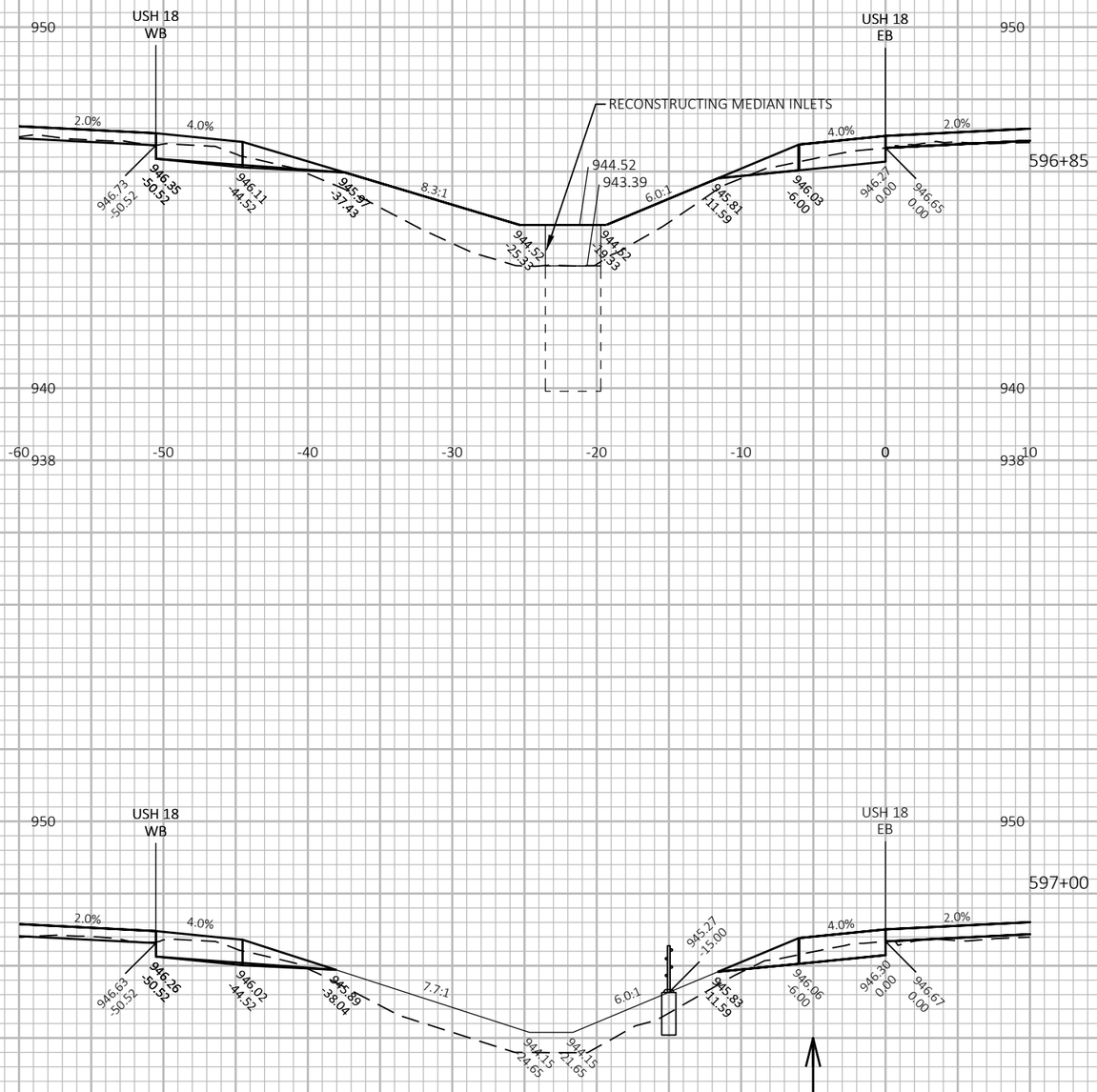

9

9

PROJECT NO: 1204-08-65	HWY: USH 18/151	COUNTY: DANE	CROSS SECTIONS: USH 18 EB	SHEET 687	E

FILE NAME : G:\WDOTSW\20007-000 USH 18\CIVIL 3D\SHEETSPLAN\CROSS SECTIONS\090303-XS_USH 18 EB.DWG
LAYOUT NAME - 18EB-8_3

PLOT DATE : 7/20/2022 11:46 AM PLOT BY : ERIC ANDRITSCH PLOT NAME : PLOT SCALE : 1 IN:10 FT HORZ. / 1 IN:4 FT VERT.

WISDOT/CADDS SHEET 49

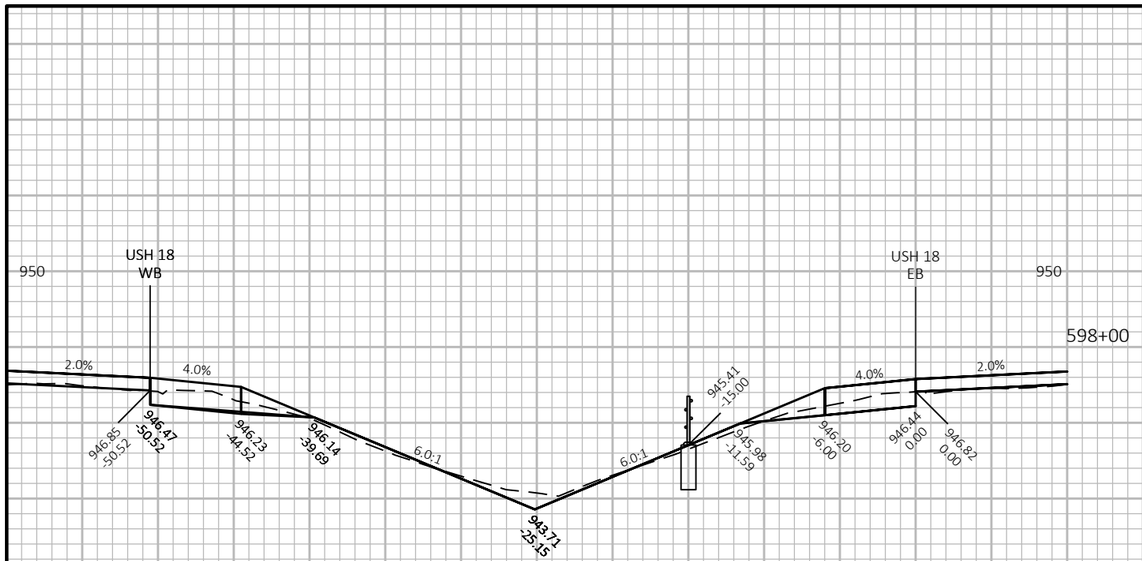

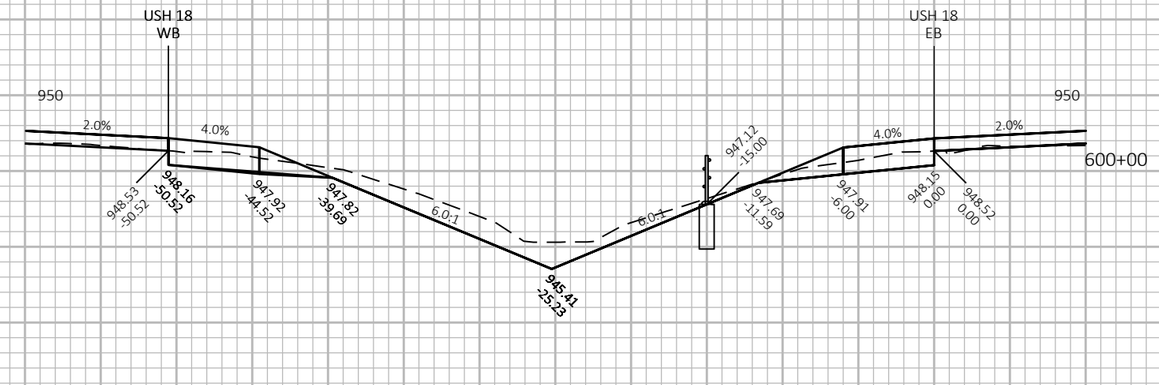

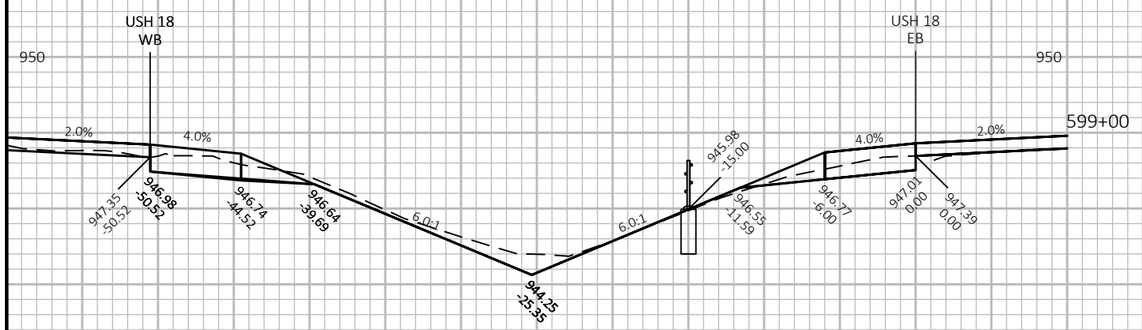

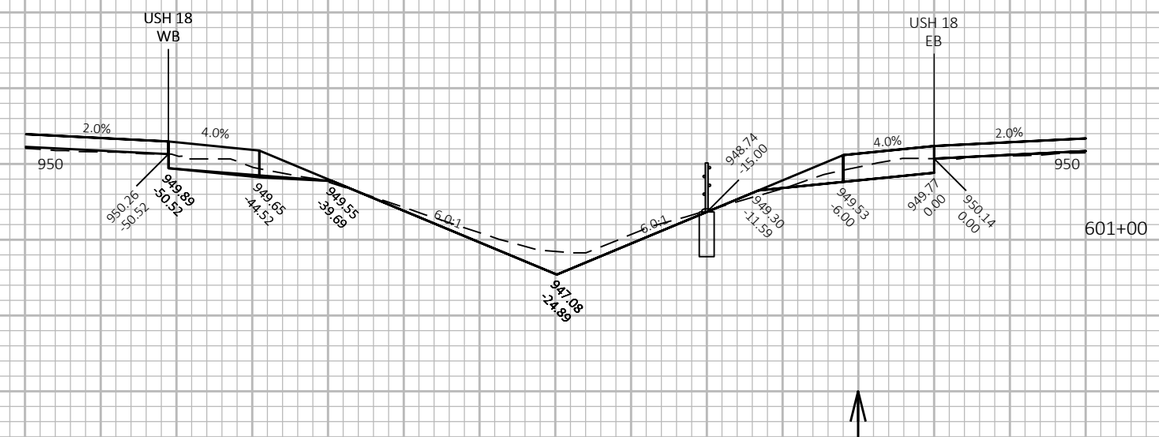

9

9

PROJECT NO: 1204-08-65	HWY: USH 18/151	COUNTY: DANE	CROSS SECTIONS: USH 18 EB	SHEET 688	E

FILE NAME : G:\WDOTSW\20007-000 USH 18\CIVIL 3D\SHEETSPLAN\CROSS SECTIONS\090303-XS_USH 18 EB.DWG
LAYOUT NAME - 18EB-8_4

PLOT DATE : 7/19/2022 12:20 AM PLOT BY : ERIC ANDRITSCH PLOT NAME : PLOT SCALE : 1 IN:10 FT HORZ. / 1 IN:4 FT VERT.

WISDOT/CADDS SHEET 49

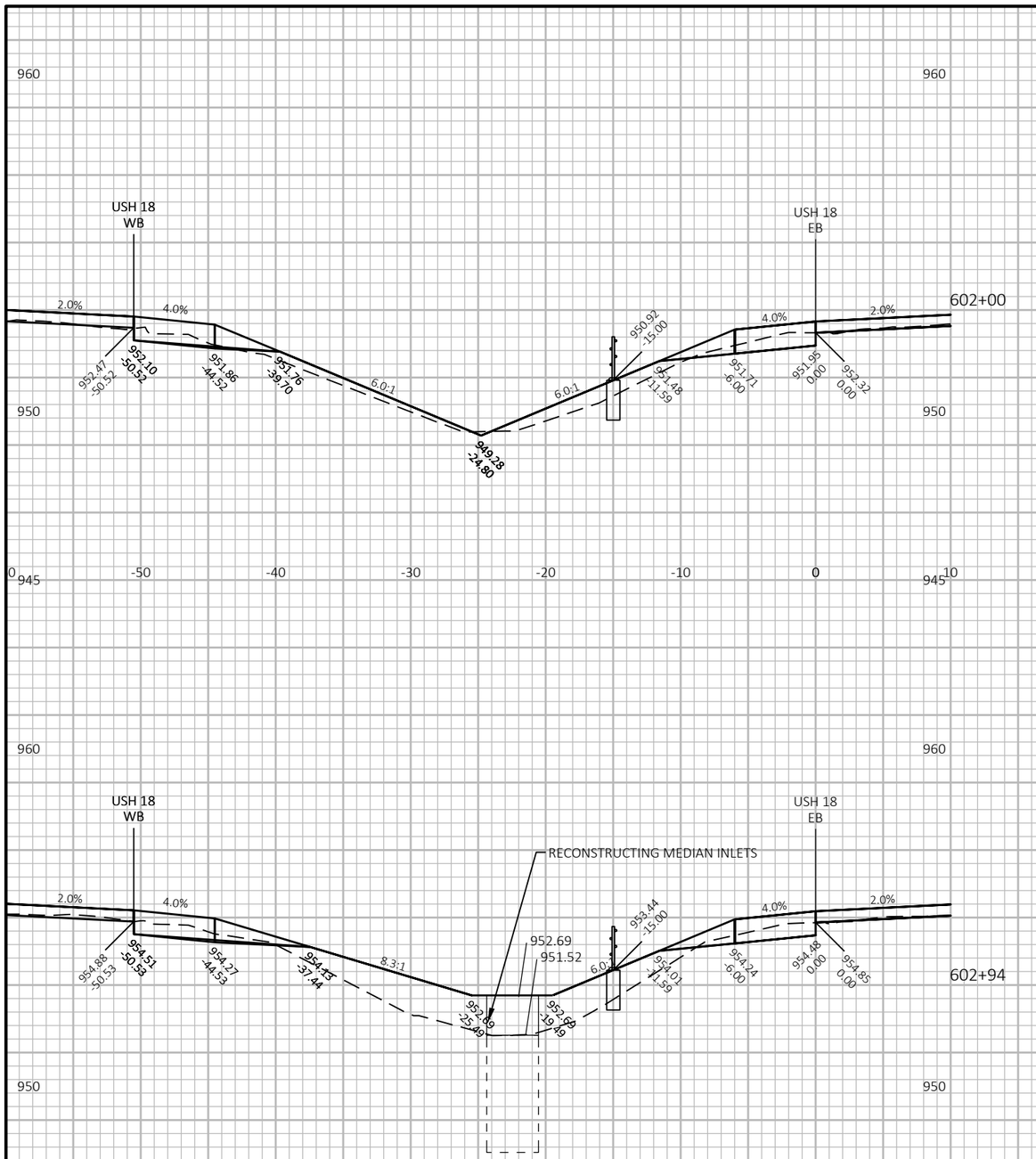

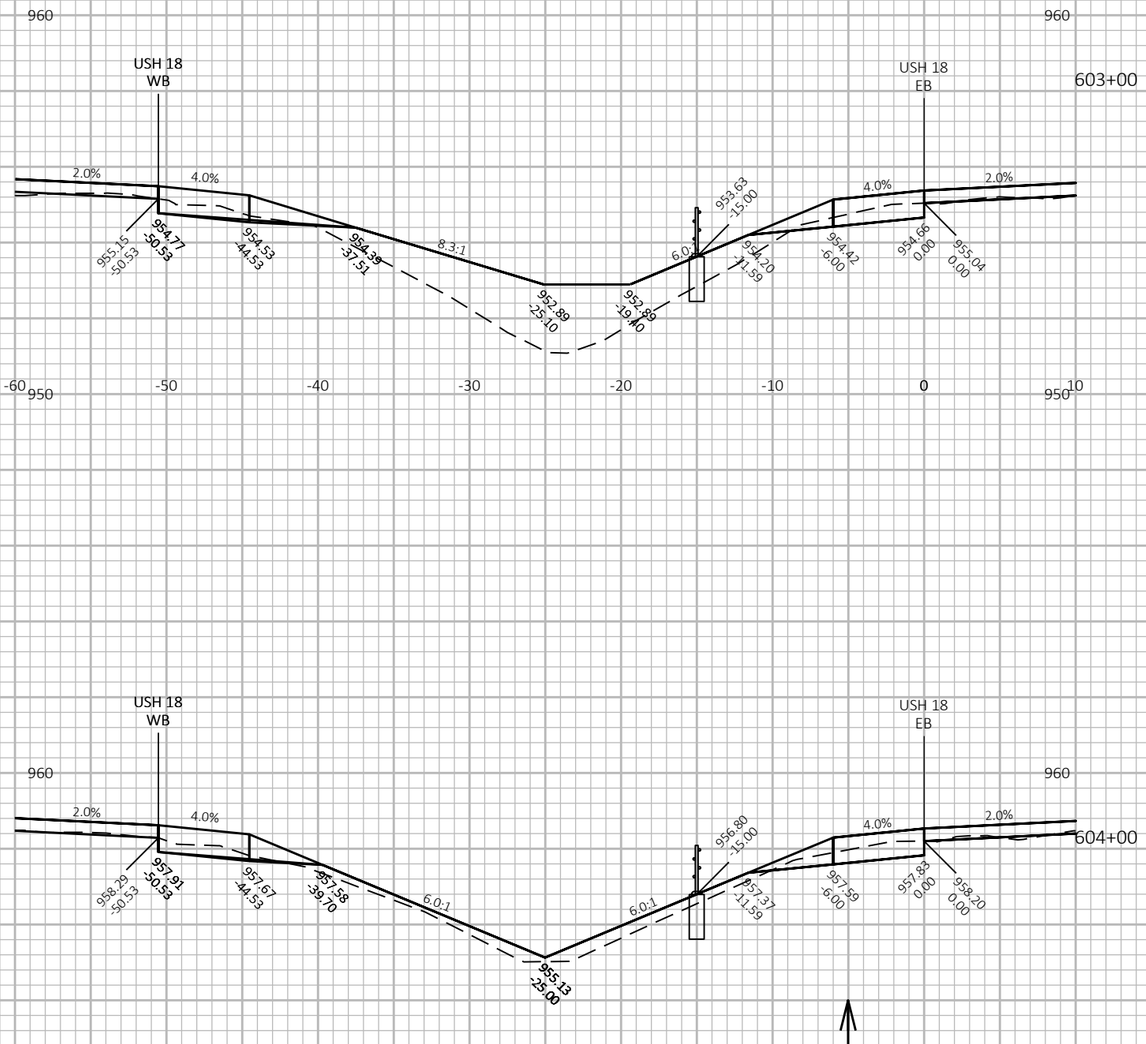

PROJECT NO: 1204-08-65	HWY: USH 18/151	COUNTY: DANE	CROSS SECTIONS: USH 18 EB	SHEET 689 E

FILE NAME : G:\WDOTSW\20007-000 USH 18\CIVIL 3D\SHEETSPLAN\CROSS SECTIONS\090303-XS_USH 18 EB.DWG
LAYOUT NAME - 18EB-8_5

PLOT DATE : 7/20/2022 11:50 AM PLOT BY : ERIC ANDRITSCH PLOT NAME : PLOT SCALE : 1 IN:10 FT HORZ. / 1 IN:4 FT VERT.

WISDOT/CADDS SHEET 49

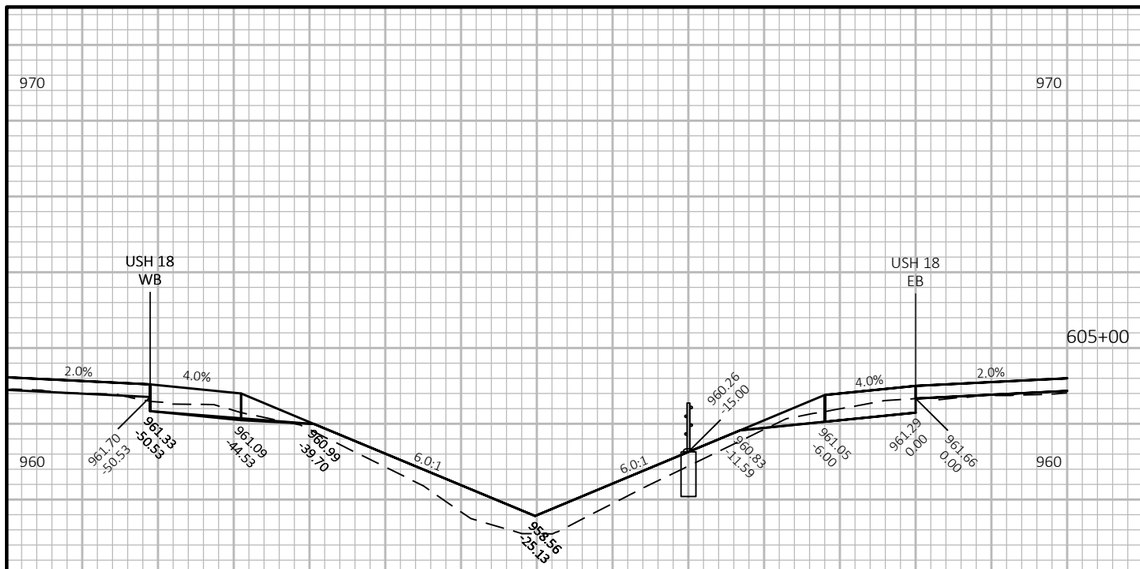

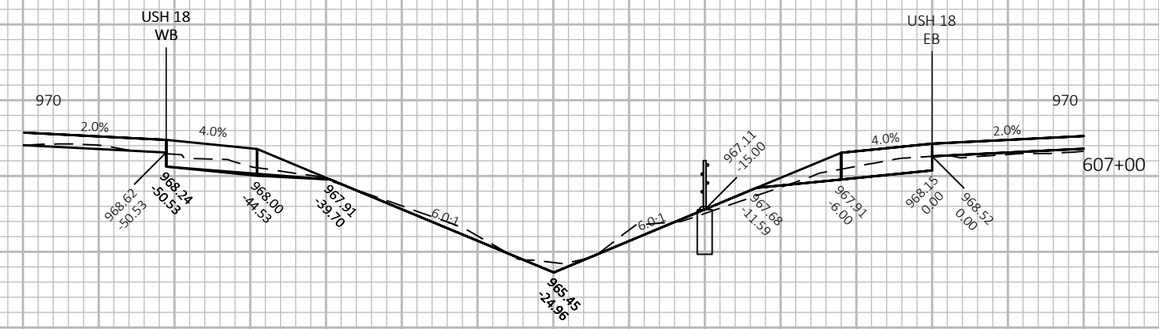

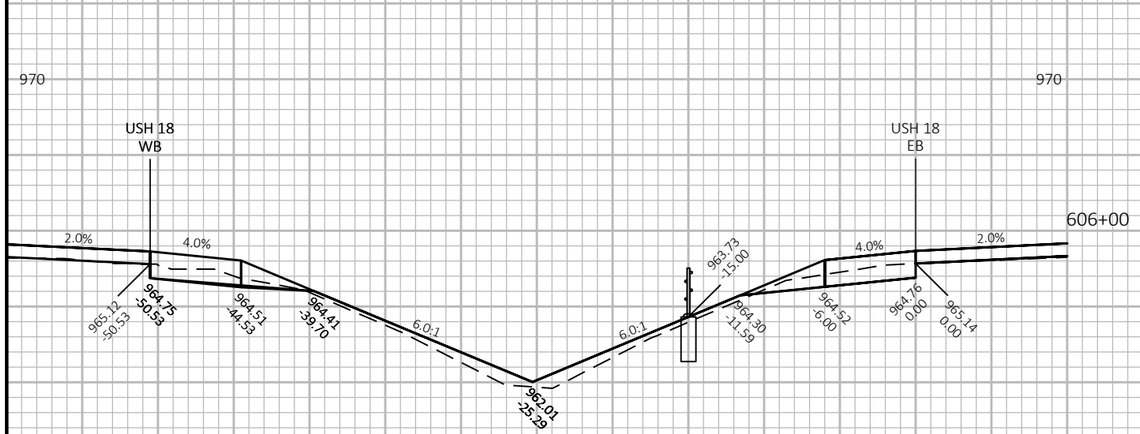

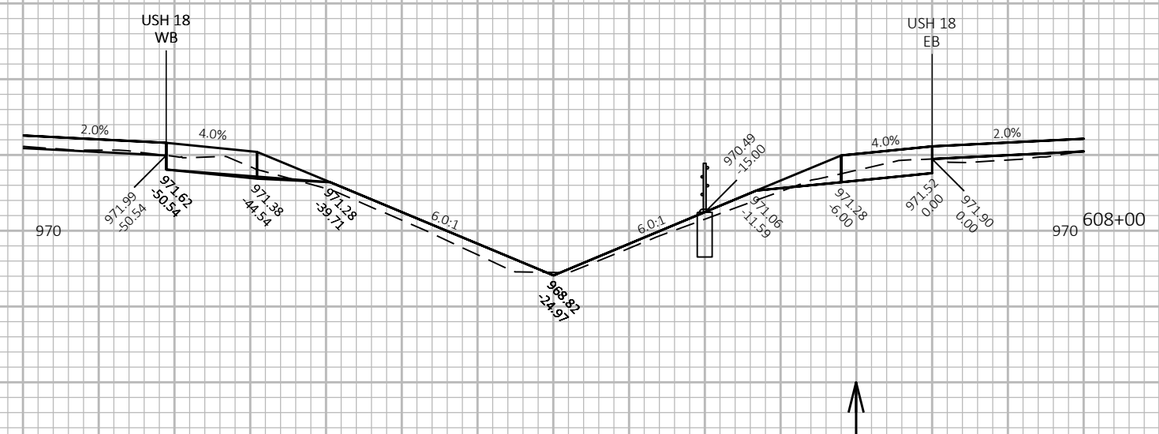

9

9

PROJECT NO: 1204-08-65	HWY: USH 18/151	COUNTY: DANE	CROSS SECTIONS: USH 18 EB	SHEET 690	E

FILE NAME : G:\WDOTSW\20007-000 USH 18\CIVIL 3D\SHEETSPLAN\CROSS SECTIONS\090303-XS_USH 18 EB.DWG
LAYOUT NAME - 18EB-8_6

PLOT DATE : 7/19/2022 12:23 AM PLOT BY : ERIC ANDRITSCH PLOT NAME : PLOT SCALE : 1 IN:10 FT HORZ. / 1 IN:4 FT VERT.

WISDOT/CADDS SHEET 49

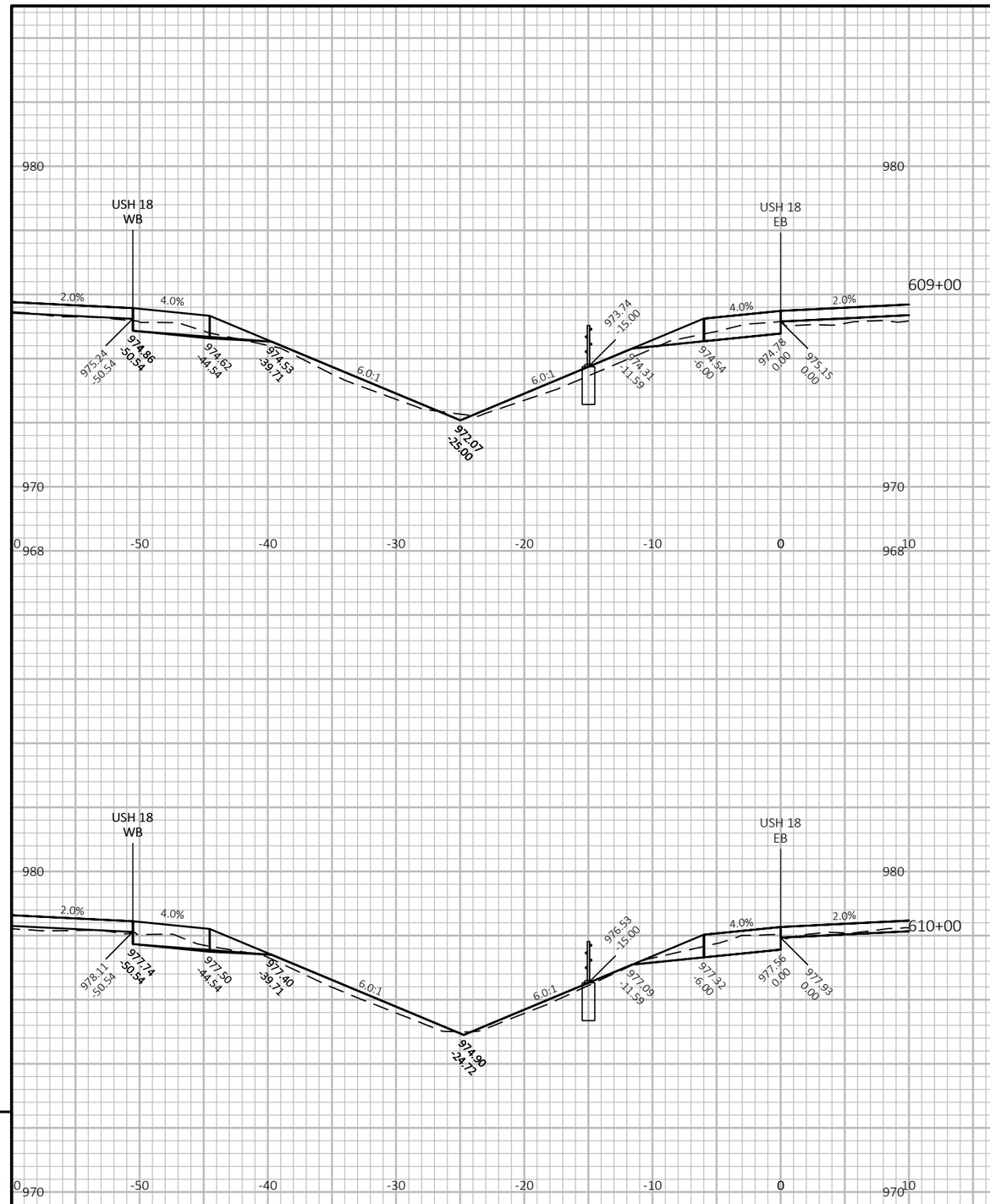

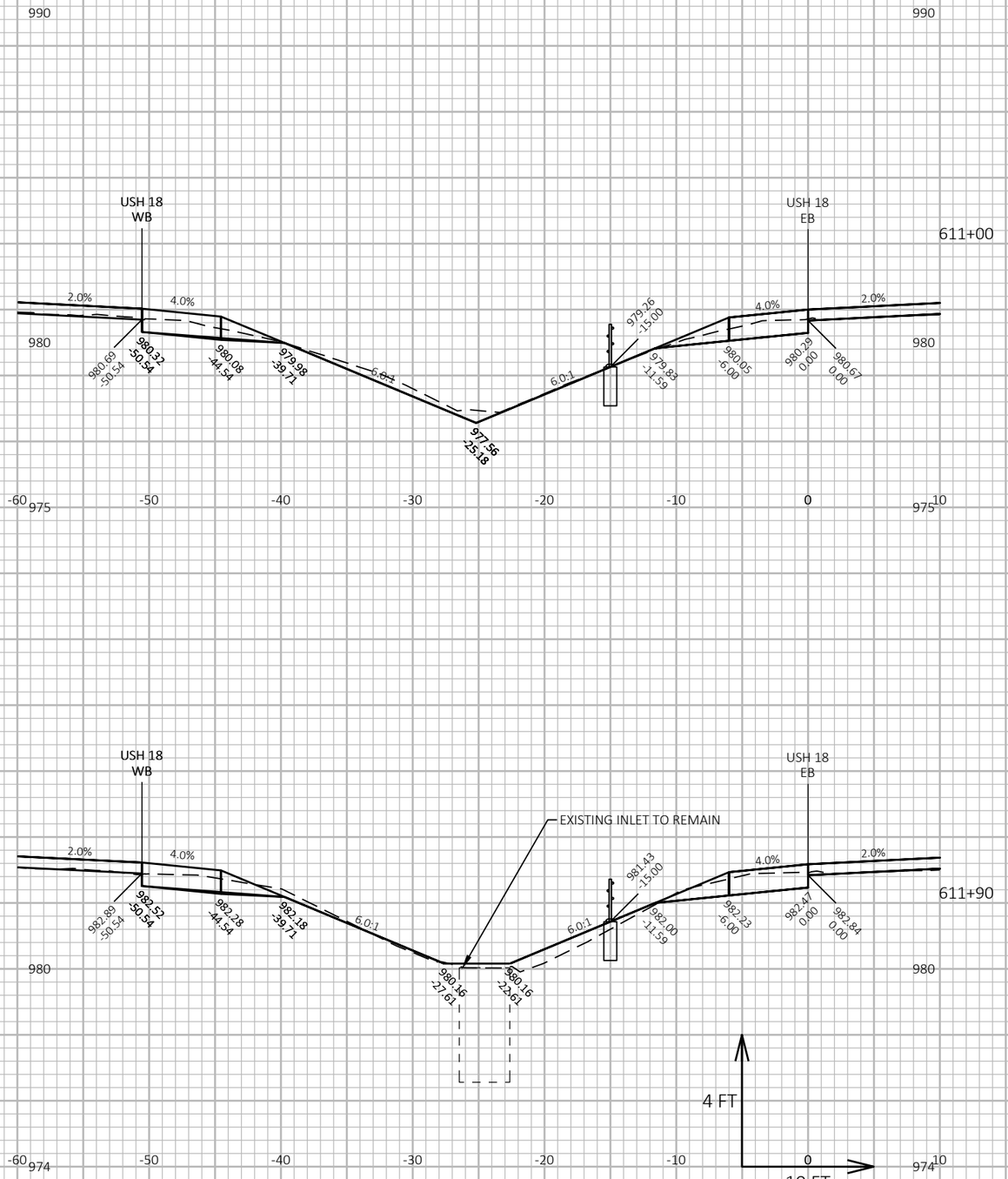

PROJECT NO: 1204-08-65	HWY: USH 18/151	COUNTY: DANE	CROSS SECTIONS: USH 18 EB	SHEET 691 E

FILE NAME : G:\WDOTSW\20007-000 USH 18\CIVIL 3D\SHEETSPLAN\CROSS SECTIONS\090303-XS_USH 18 EB.DWG
LAYOUT NAME - 18EB-8_7

PLOT DATE : 7/20/2022 11:53 AM PLOT BY : ERIC ANDRITSCH PLOT NAME : PLOT SCALE : 1 IN:10 FT HORZ. / 1 IN:4 FT VERT.

WISDOT/CADDS SHEET 49

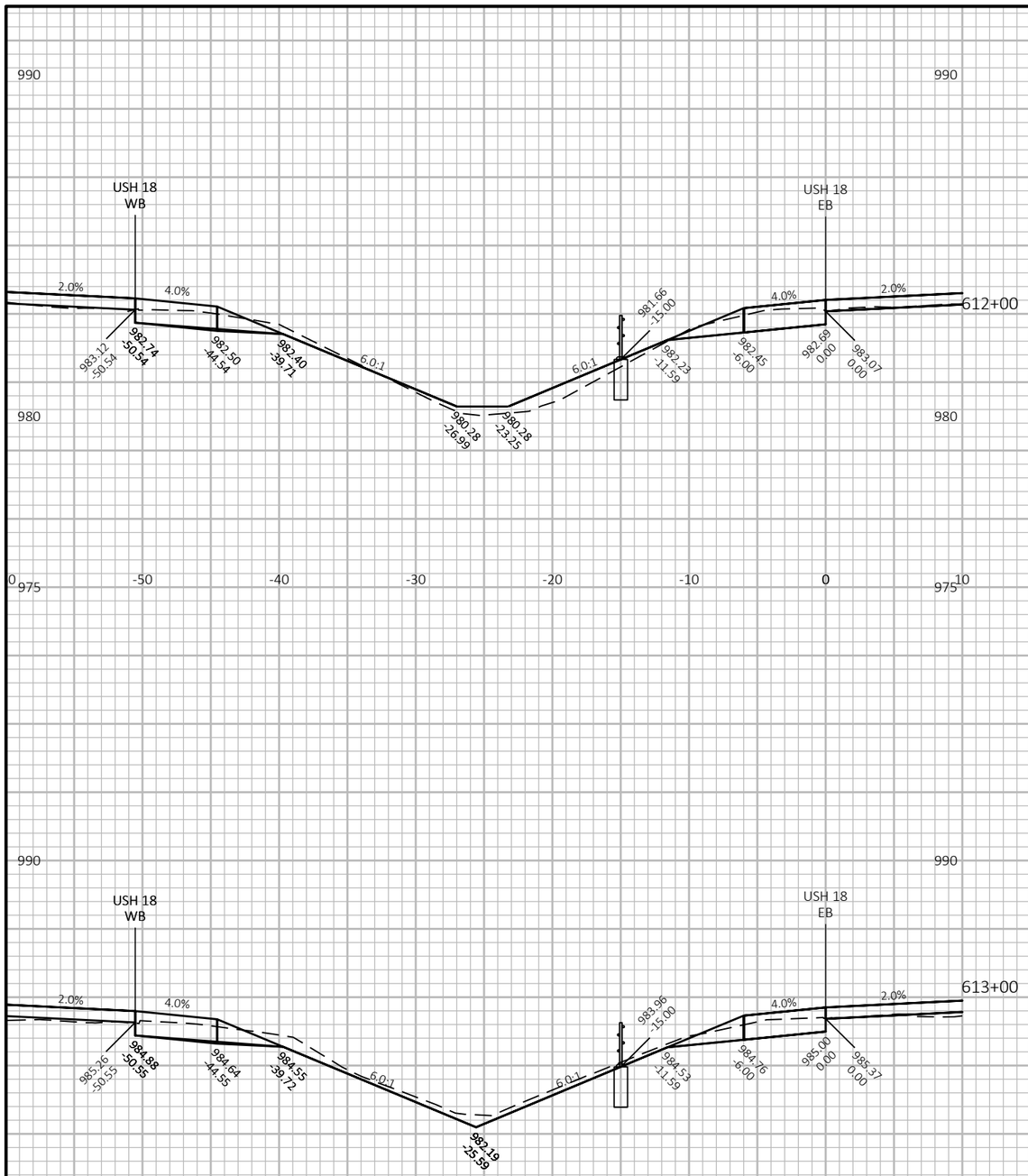

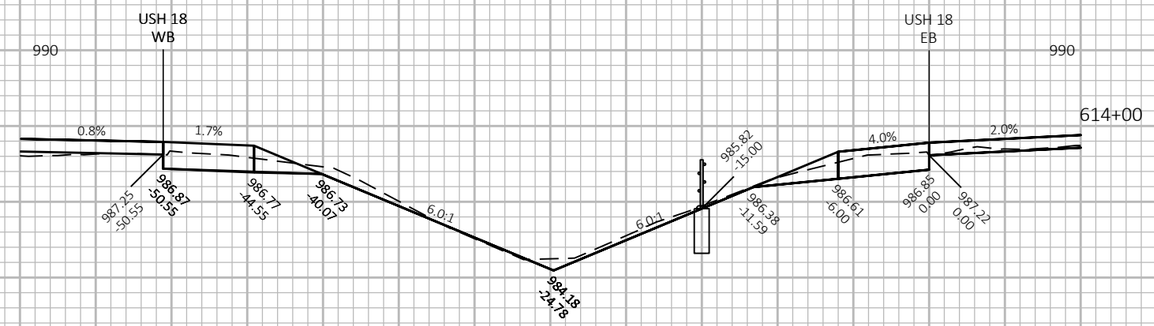

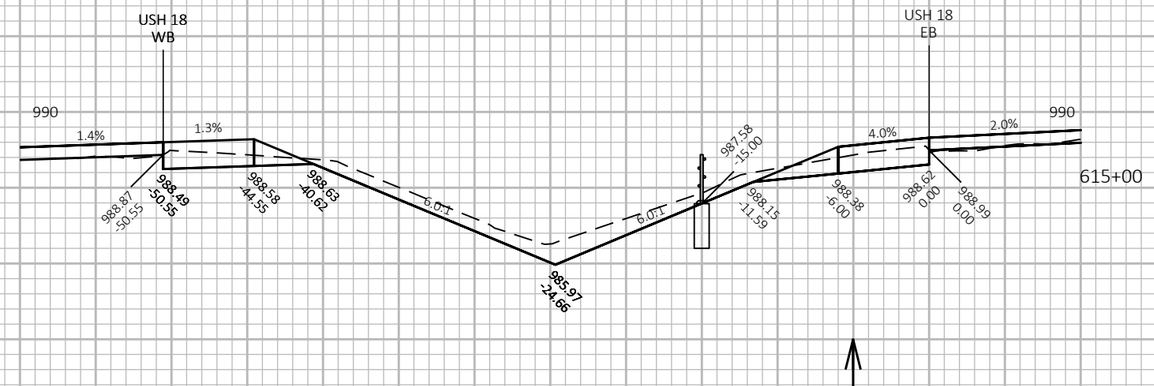

9

9

PROJECT NO: 1204-08-65	HWY: USH 18/151	COUNTY: DANE	CROSS SECTIONS: USH 18 EB	SHEET 692	E

FILE NAME : G:\WDOTSW\20007-000 USH 18\CIVIL 3D\SHEETSPLAN\CROSS SECTIONS\090303-XS_USH 18 EB.DWG
LAYOUT NAME - 18EB-8_8

PLOT DATE : 7/19/2022 12:26 AM PLOT BY : ERIC ANDRITSCH PLOT NAME : PLOT SCALE : 1 IN:10 FT HORZ. / 1 IN:4 FT VERT.

WISDOT/CADDS SHEET 49

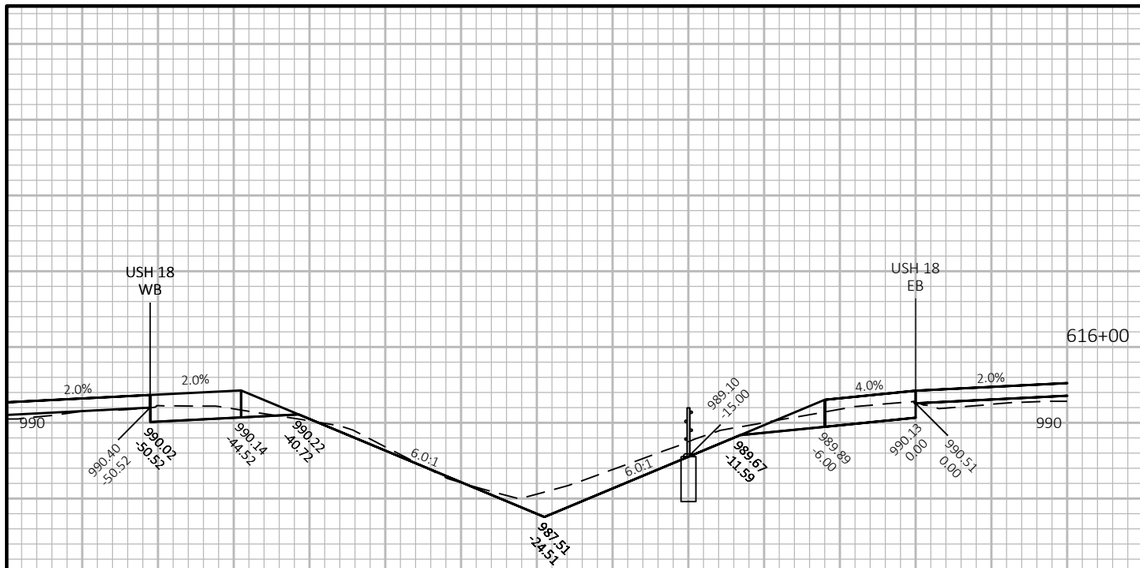

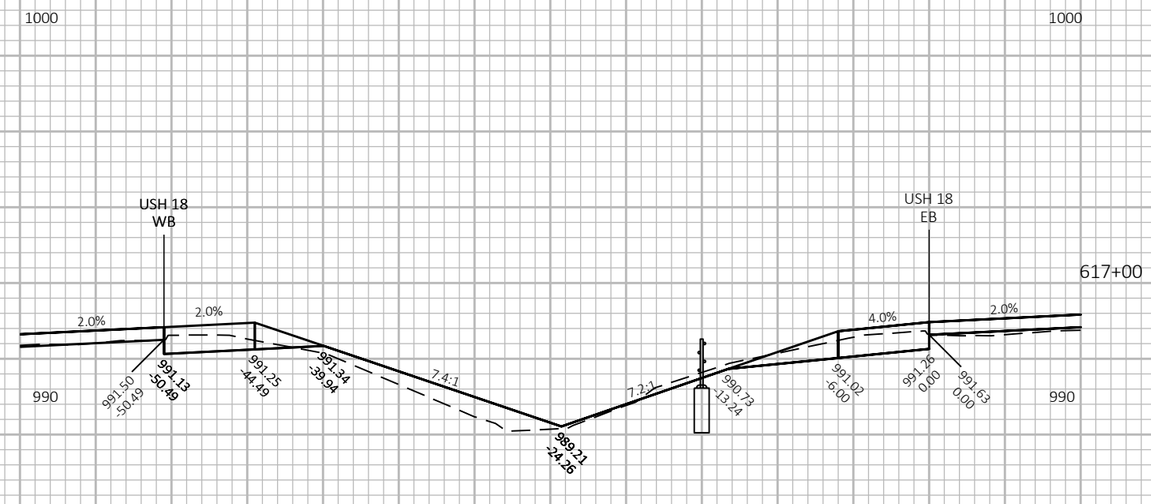

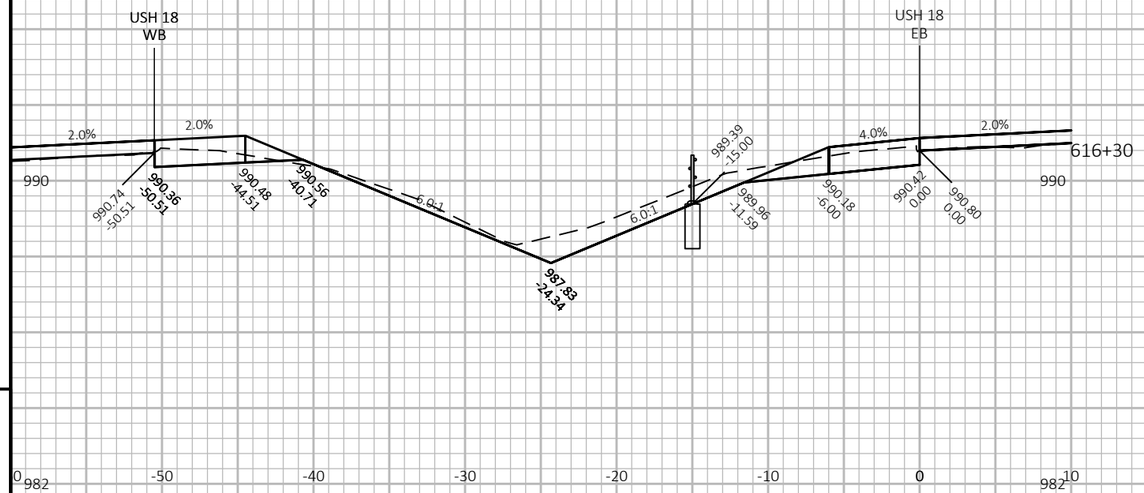

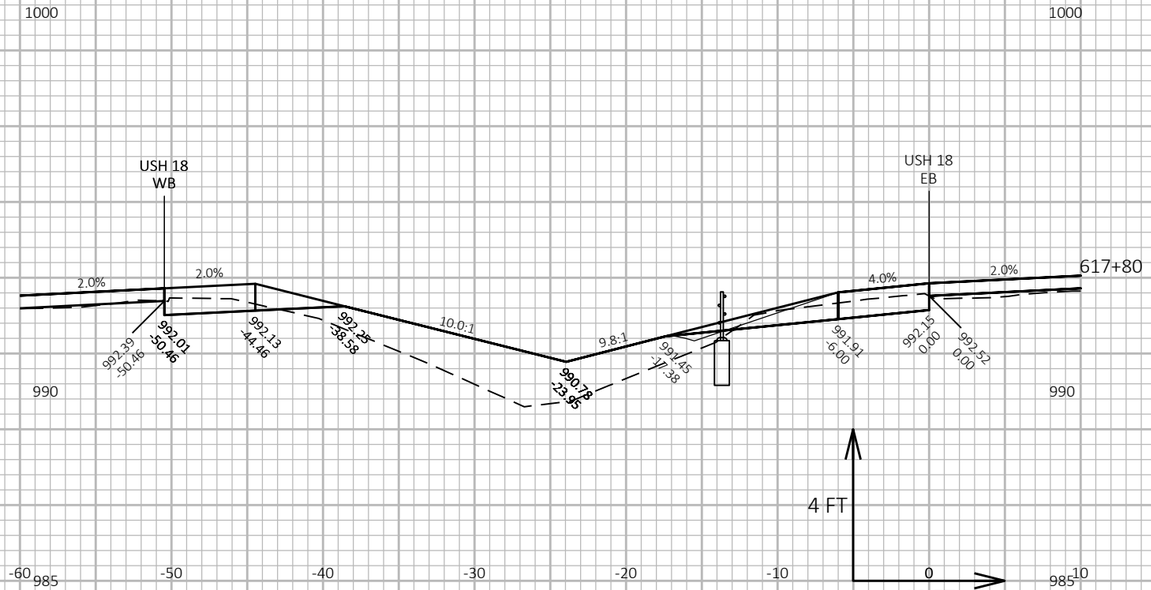

9

9

PROJECT NO: 1204-08-65	HWY: USH 18/151	COUNTY: DANE	CROSS SECTIONS: USH 18 EB	SHEET 693	E

FILE NAME : G:\WDOTSW\20007-000 USH 18\CIVIL 3D\SHEETSPLAN\CROSS SECTIONS\090303-XS_USH 18 EB.DWG
LAYOUT NAME - 18EB-8_9

PLOT DATE : 7/19/2022 12:28 AM PLOT BY : ERIC ANDRITSCH PLOT NAME : PLOT SCALE : 1 IN:10 FT HORZ. / 1 IN:4 FT VERT.

WISDOT/CADDS SHEET 49

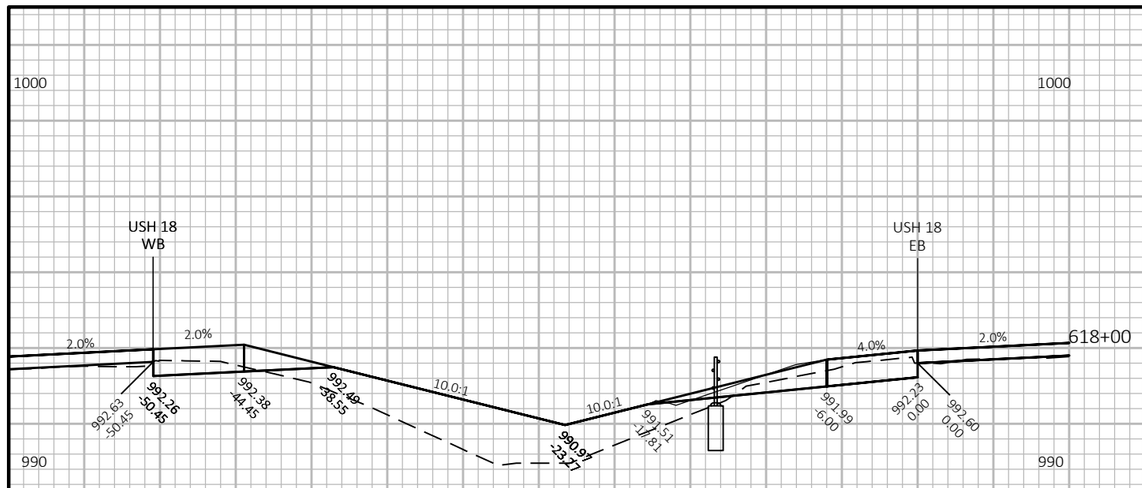

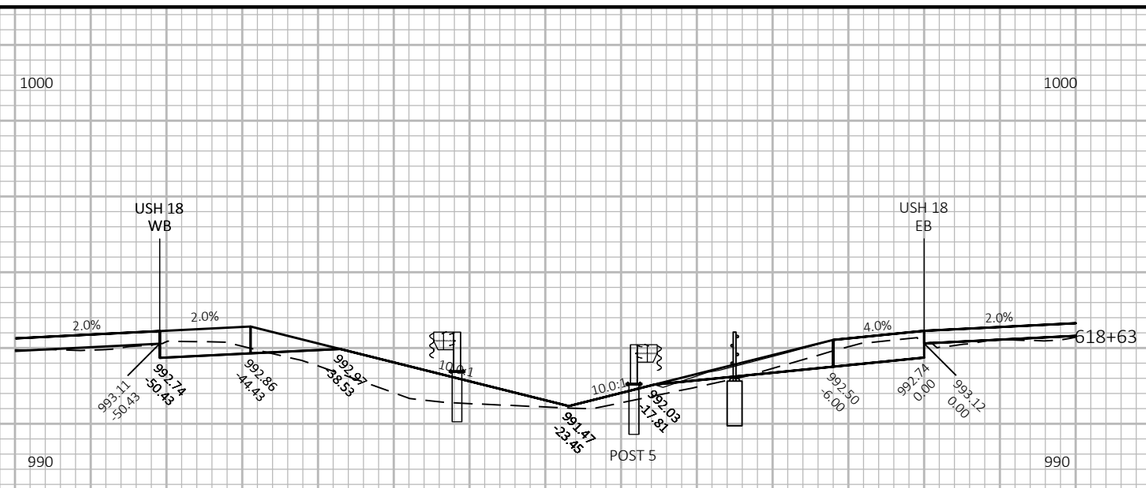

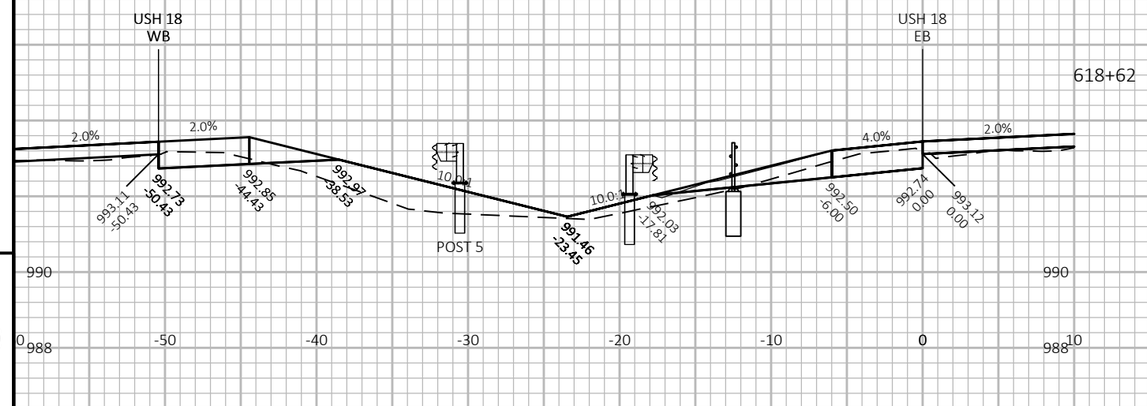

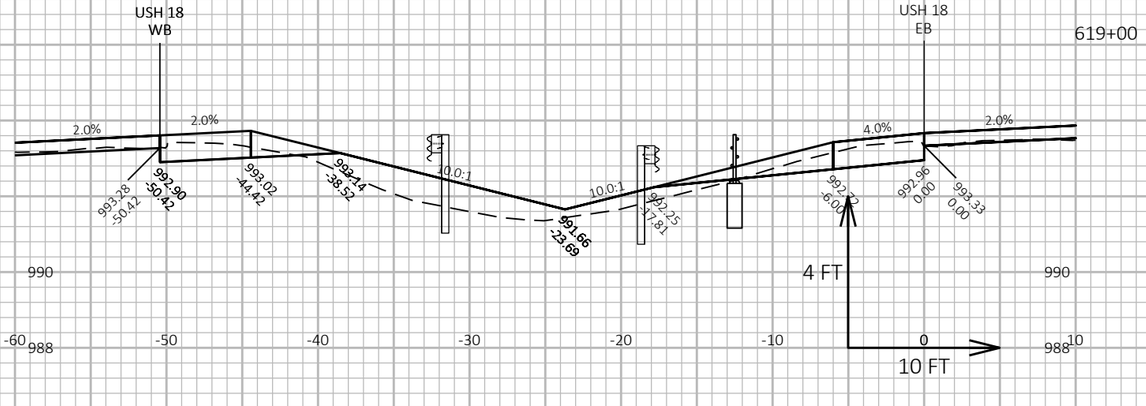

9

9

PROJECT NO: 1204-08-65	HWY: USH 18/151	COUNTY: DANE	CROSS SECTIONS: USH 18 EB	SHEET 694	E

FILE NAME : G:\WDOTSW\20007-000 USH 18\CIVIL 3D\SHEETSPLAN\CROSS SECTIONS\090303-XS_USH 18 EB.DWG
LAYOUT NAME - 18EB-8_10

PLOT DATE : 7/19/2022 12:30 AM PLOT BY : ERIC ANDRITSCH PLOT NAME : PLOT SCALE : 1 IN:10 FT HORZ. / 1 IN:4 FT VERT.

WISDOT/CADDS SHEET 49

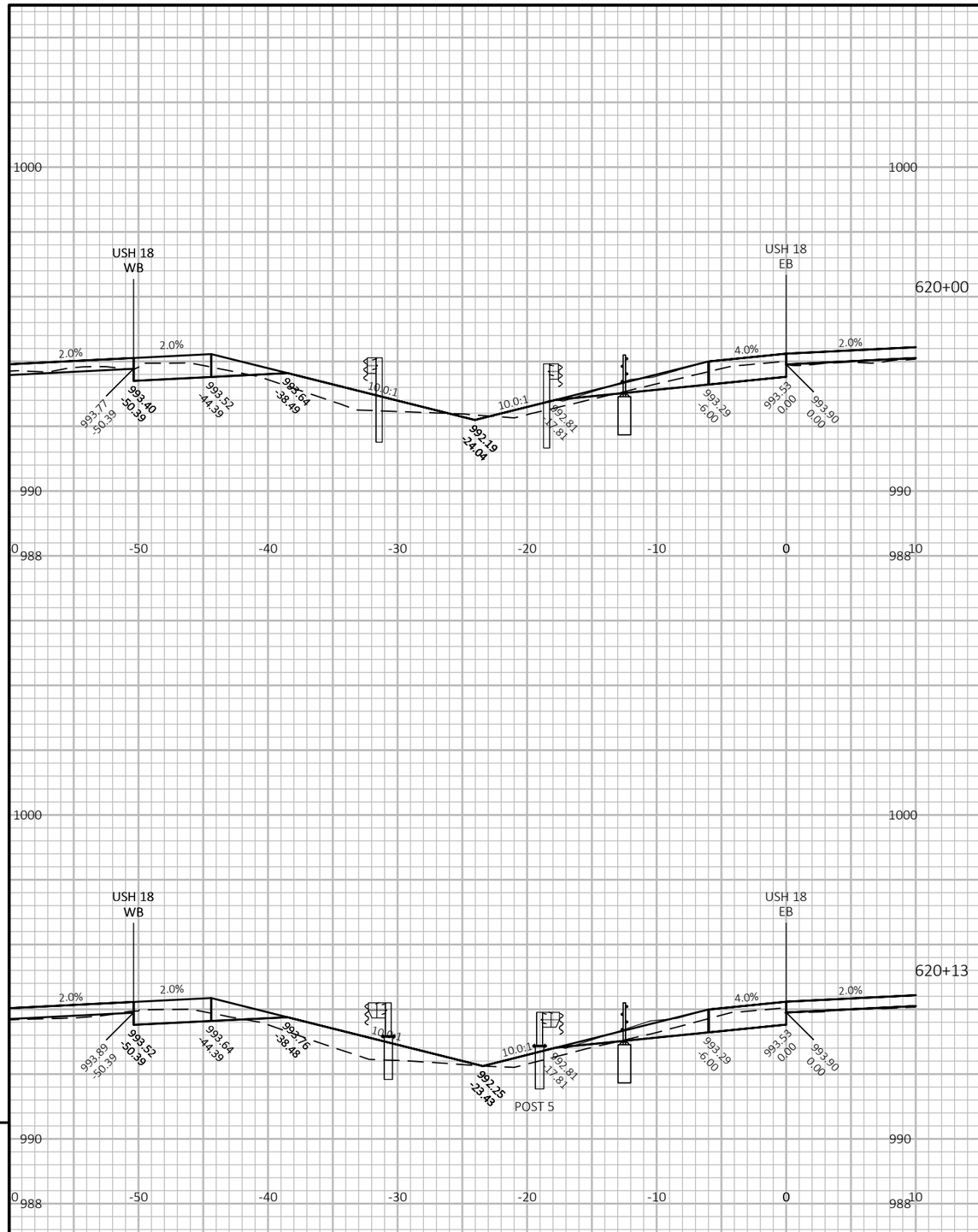

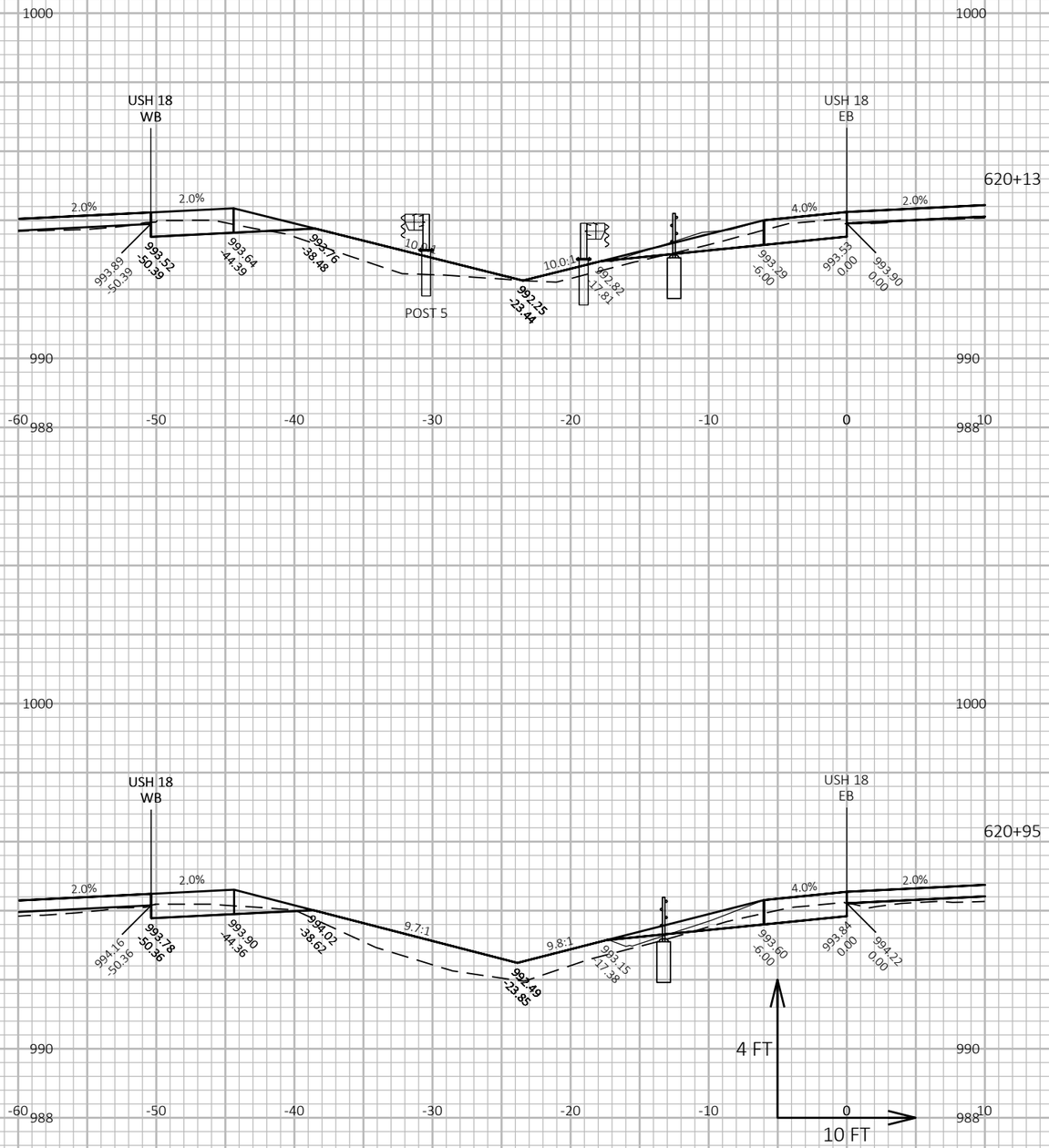

9

9

PROJECT NO: 1204-08-65	HWY: USH 18/151	COUNTY: DANE	CROSS SECTIONS: USH 18 EB	SHEET 695	E

FILE NAME : G:\WDOTSW\20007-000 USH 18\CIVIL 3D\SHEETSPLAN\CROSS SECTIONS\090303-XS_USH 18 EB.DWG
LAYOUT NAME - 18EB-8_11

PLOT DATE : 7/19/2022 12:31 AM PLOT BY : ERIC ANDRITSCH PLOT NAME : PLOT SCALE : 1 IN:10 FT HORZ. / 1 IN:4 FT VERT.

WISDOT/CADDS SHEET 49

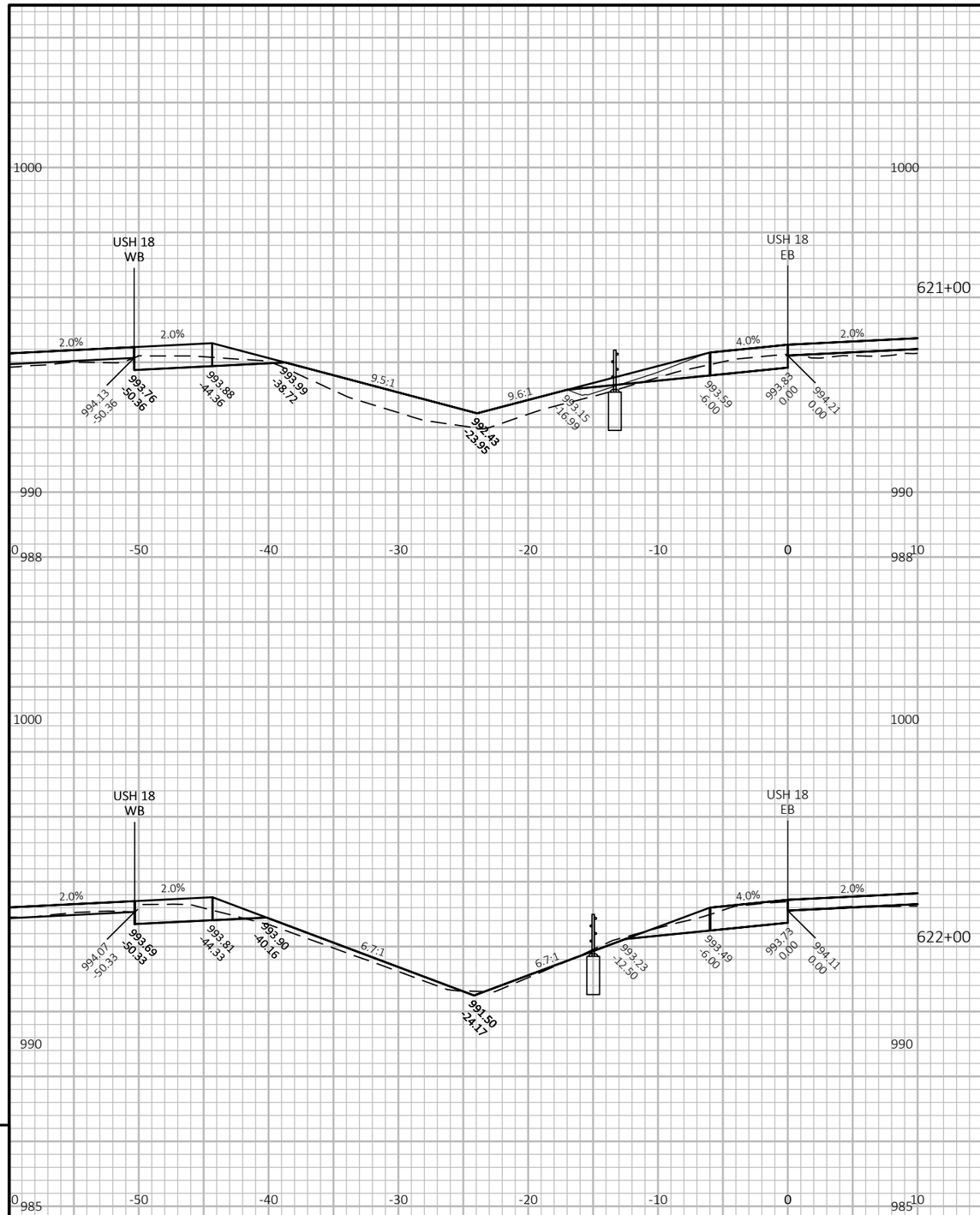

PROJECT NO: 1204-08-65	HWY: USH 18/151	COUNTY: DANE	CROSS SECTIONS: USH 18 EB	SHEET 696 E

FILE NAME : G:\WDOTSW\20007-000 USH 18\CIVIL 3D\SHEETSPLAN\CROSS SECTIONS\090303-XS_USH 18 EB.DWG
LAYOUT NAME - 18EB-8_12

PLOT DATE : 7/19/2022 12:33 AM PLOT BY : ERIC ANDRITSCH PLOT NAME : PLOT SCALE : 1 IN:10 FT HORZ. / 1 IN:4 FT VERT.

WISDOT/CADDS SHEET 49

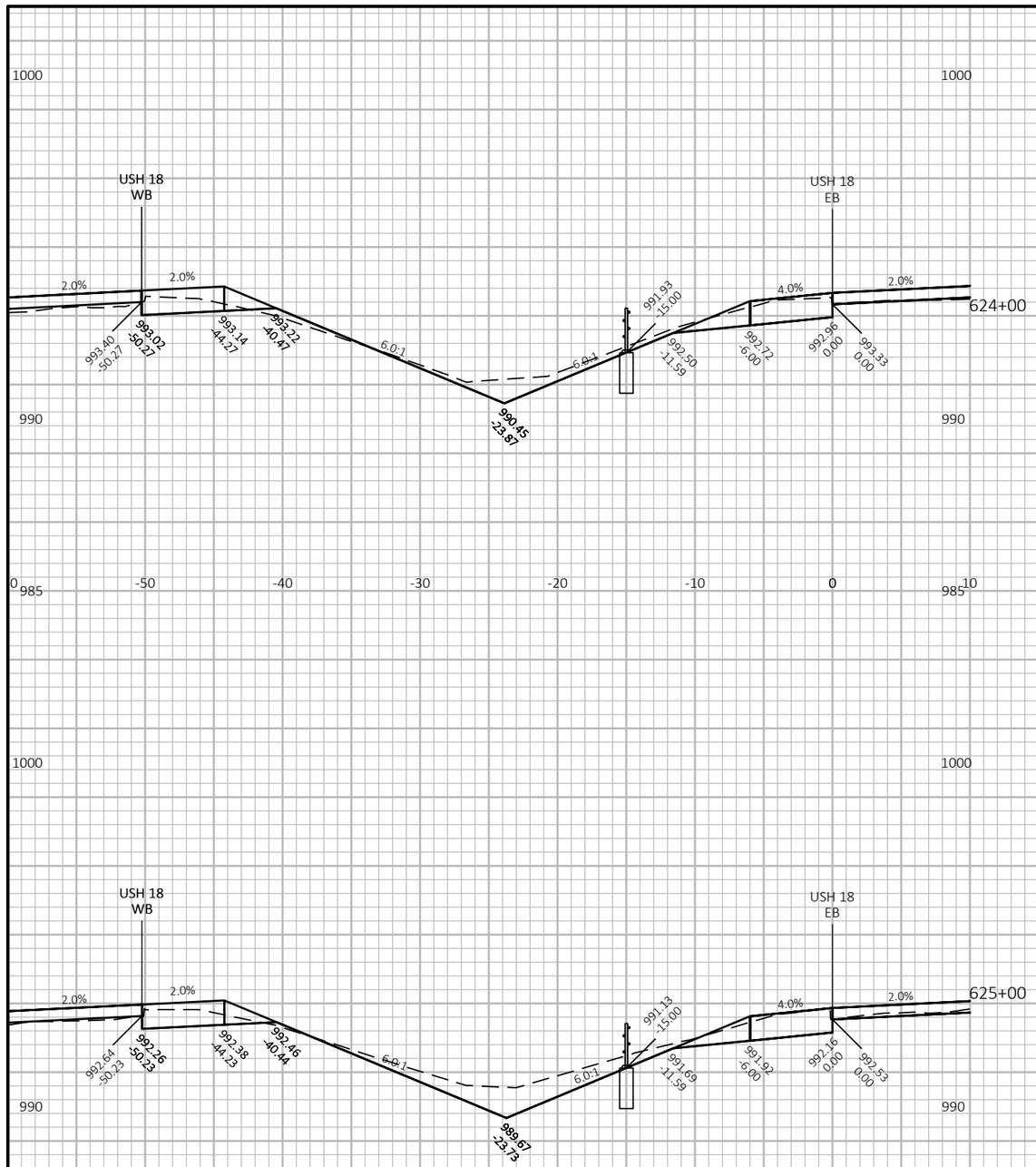

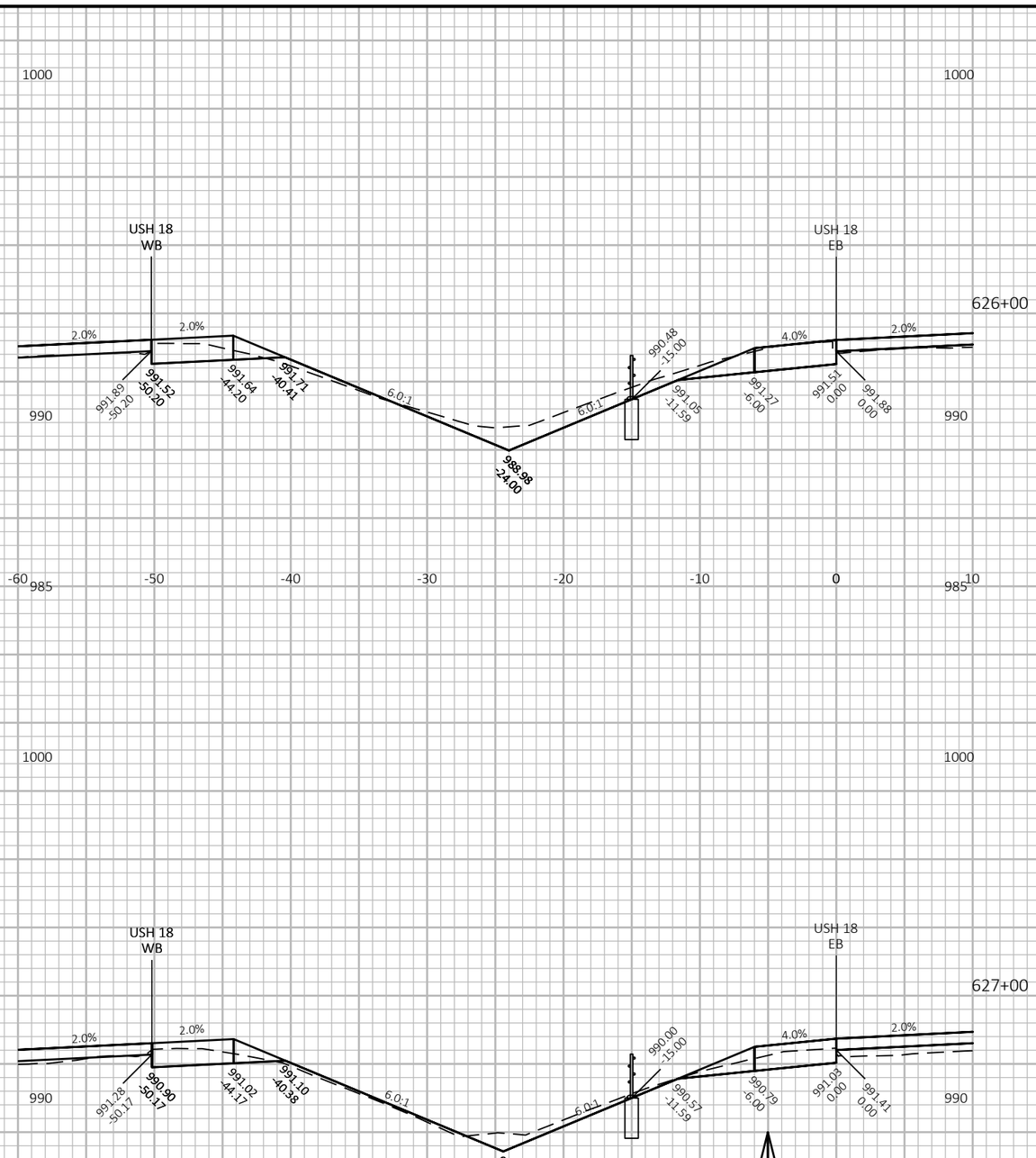

9

9

PROJECT NO: 1204-08-65	HWY: USH 18/151	COUNTY: DANE	CROSS SECTIONS: USH 18 EB	SHEET 697	E

FILE NAME : G:\WDOTSW\20007-000 USH 18\CIVIL 3D\SHEETSPLAN\CROSS SECTIONS\090303-XS_USH 18 EB.DWG
LAYOUT NAME - 18EB-8_13

PLOT DATE : 7/19/2022 12:34 AM PLOT BY : ERIC ANDRITSCH PLOT NAME : PLOT SCALE : 1 IN:10 FT HORZ. / 1 IN:4 FT VERT.

WISDOT/CADDS SHEET 49

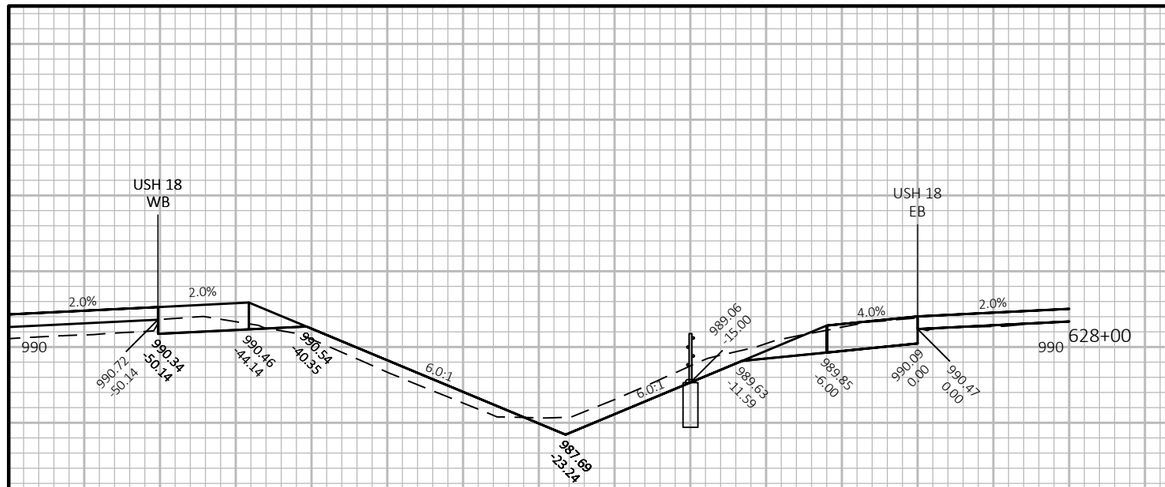

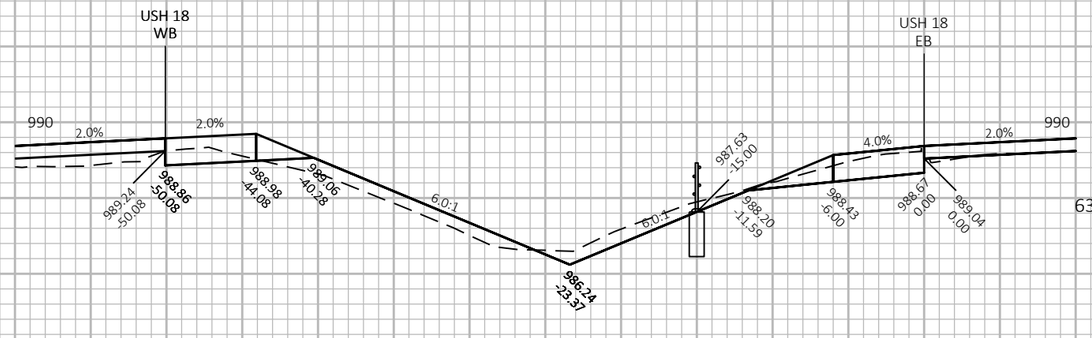

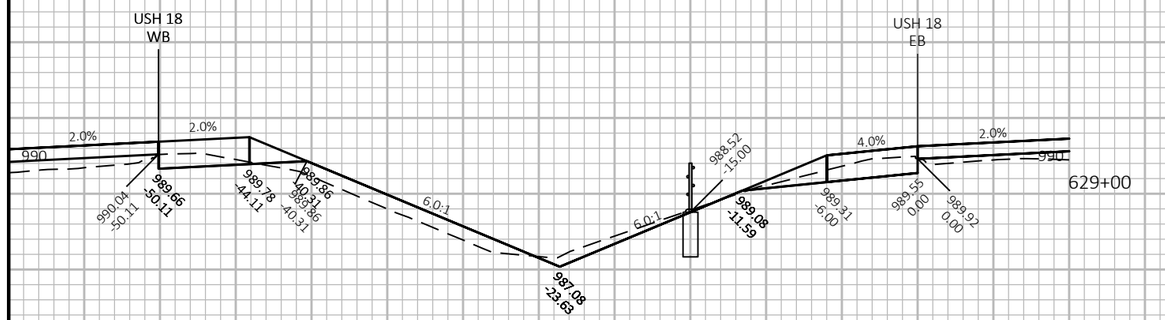

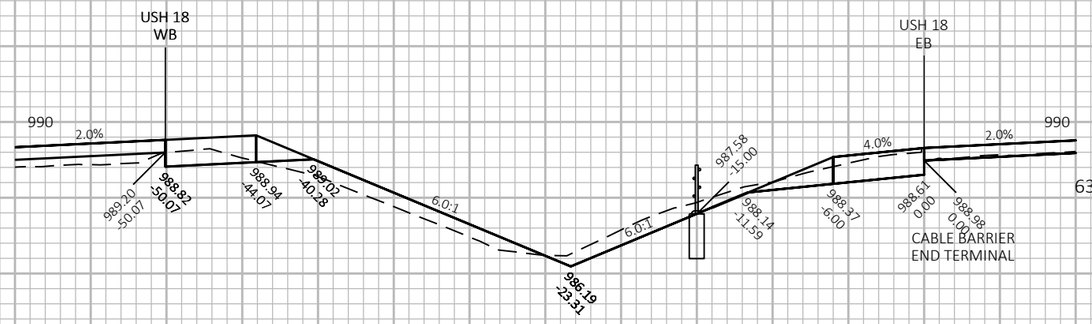

9

9

PROJECT NO: 1204-08-65	HWY: USH 18/151	COUNTY: DANE	CROSS SECTIONS: USH 18 EB	SHEET 698	E

FILE NAME : G:\WDOTSW\20007-000 USH 18\CIVIL 3D\SHEETSPLAN\CROSS SECTIONS\090303-XS_USH 18 EB.DWG
LAYOUT NAME - 18EB-8_14

PLOT DATE : 7/19/2022 12:36 AM PLOT BY : ERIC ANDRITSCH PLOT NAME : PLOT SCALE : 1 IN:10 FT HORZ. / 1 IN:4 FT VERT.

WISDOT/CADDS SHEET 49

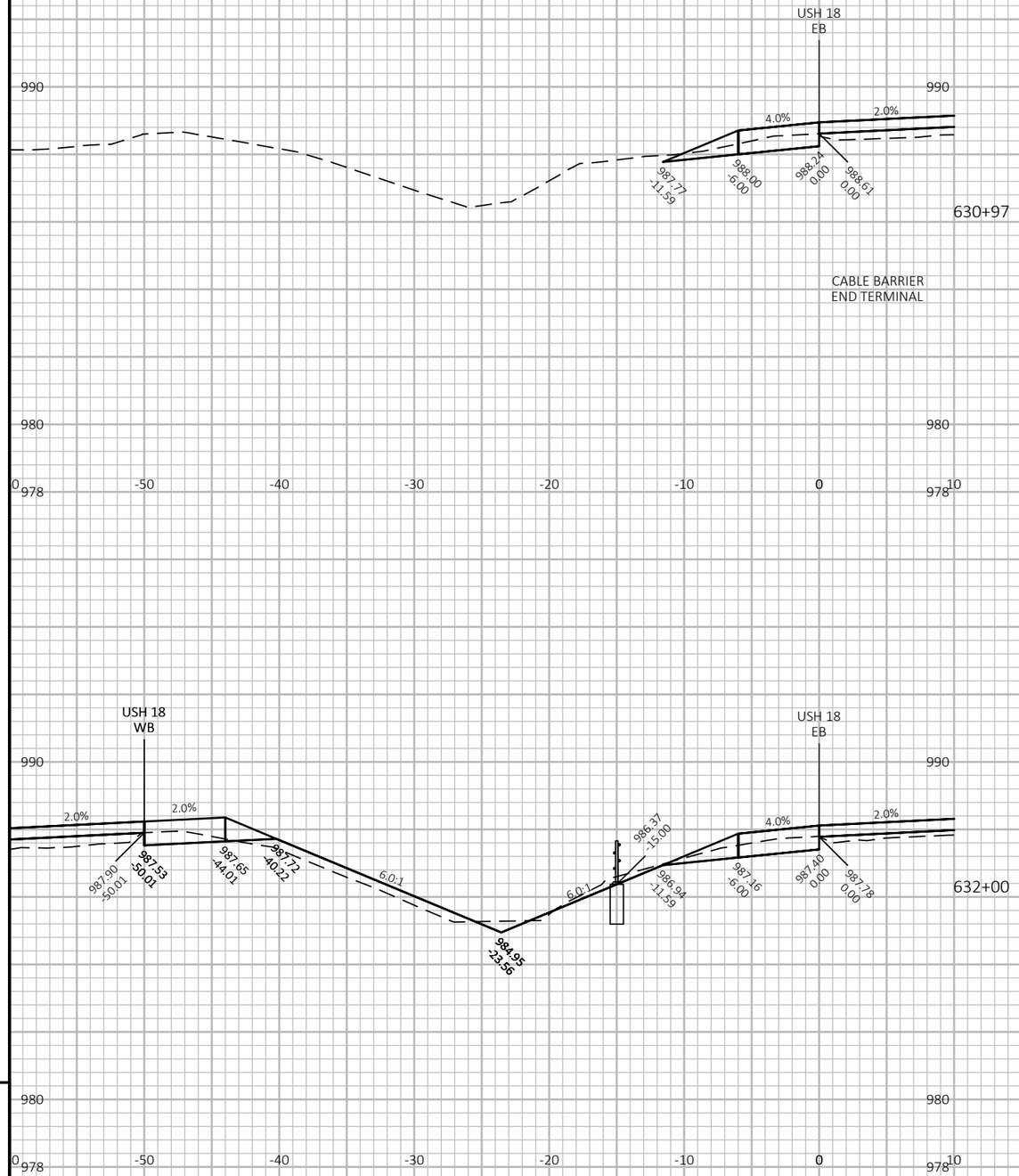

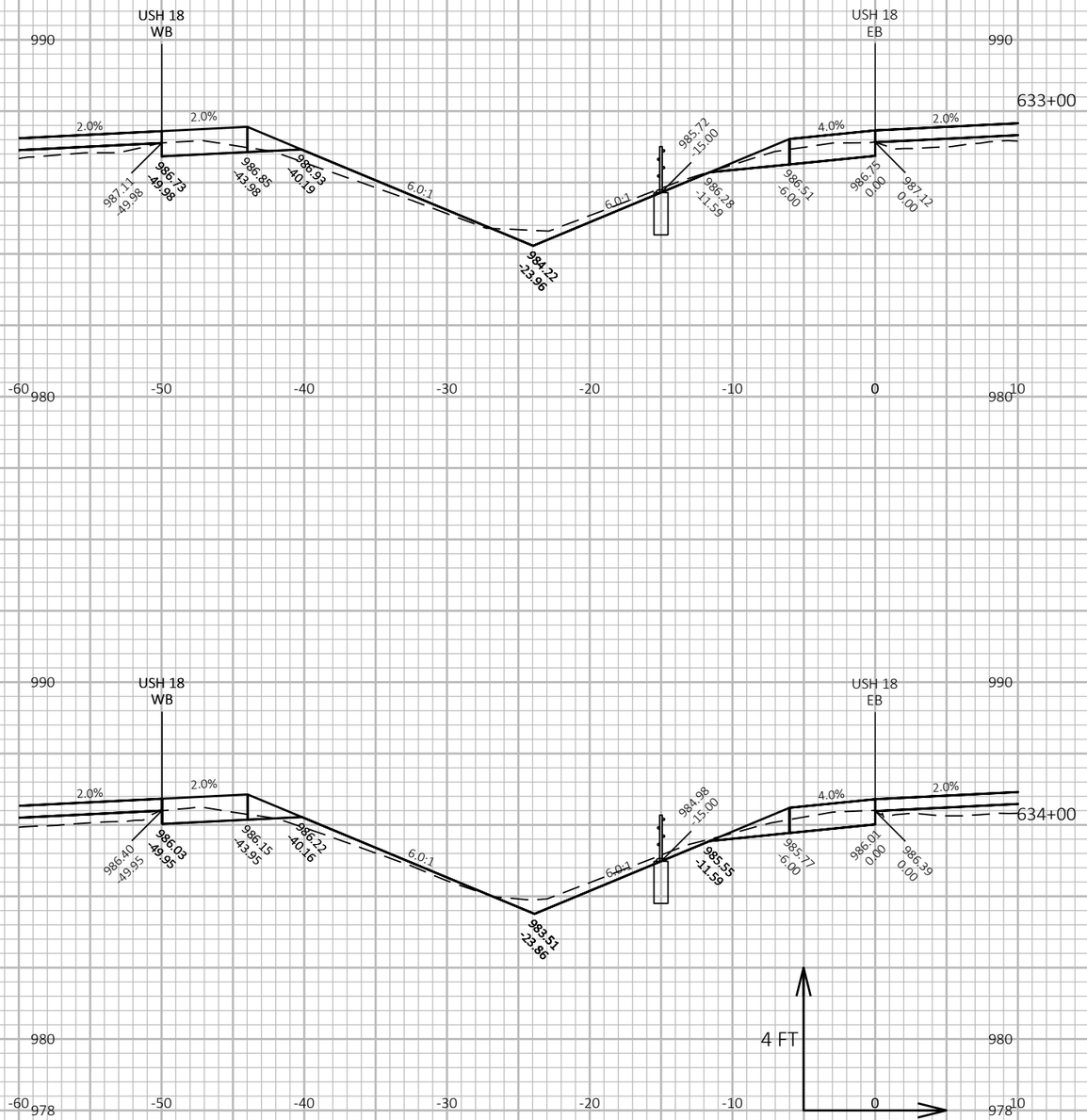

9

9

PROJECT NO: 1204-08-65	HWY: USH 18/151	COUNTY: DANE	CROSS SECTIONS: USH 18 EB	SHEET 699	E

FILE NAME : G:\WDOTSW\20007-000 USH 18\CIVIL 3D\SHEETSPLAN\CROSS SECTIONS\090303-XS_USH 18 EB.DWG
LAYOUT NAME - 18EB-8_15

PLOT DATE : 7/19/2022 12:38 AM PLOT BY : ERIC ANDRITSCH PLOT NAME : PLOT SCALE : 1 IN:10 FT HORZ. / 1 IN:4 FT VERT.

WISDOT/CADDS SHEET 49

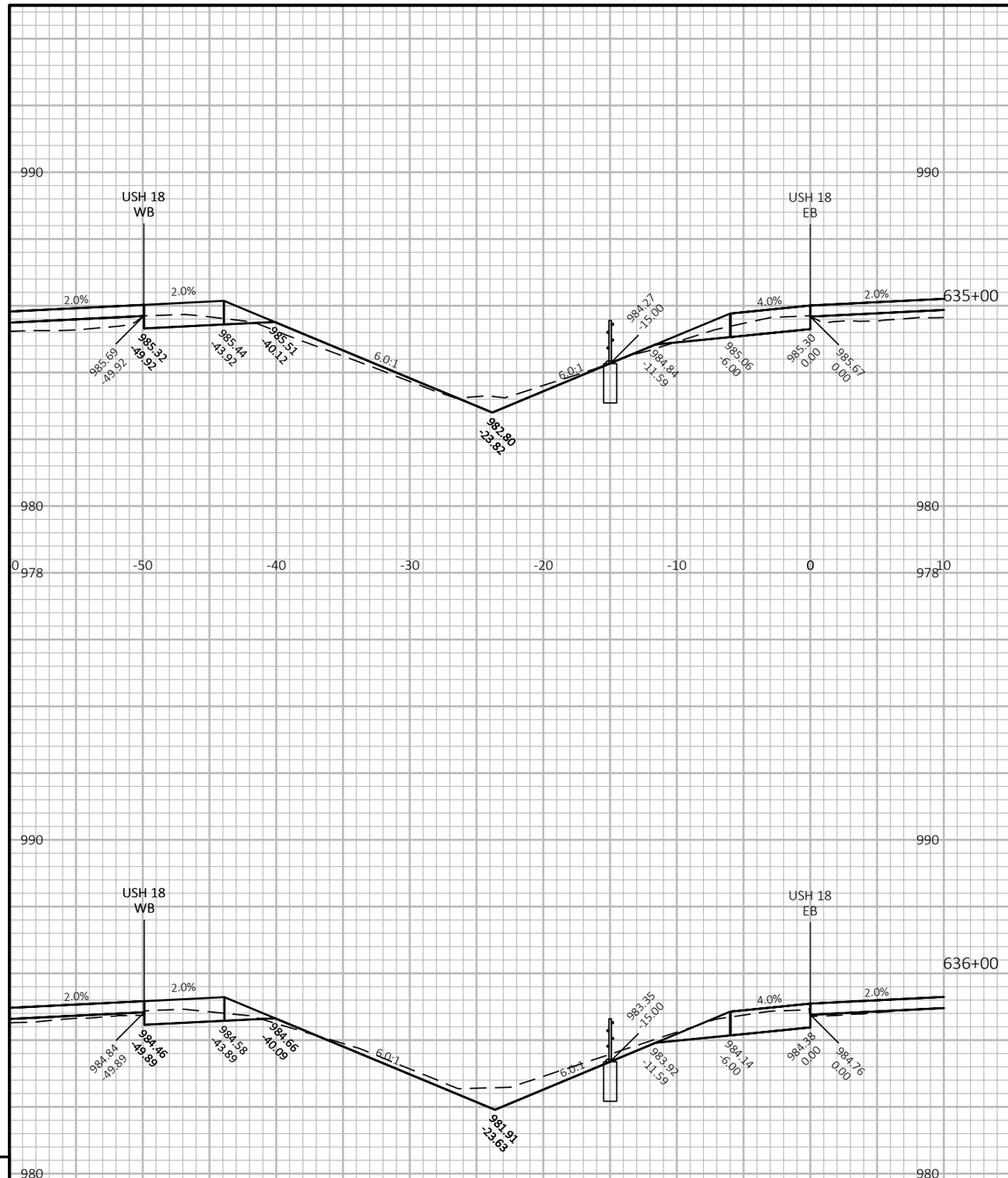

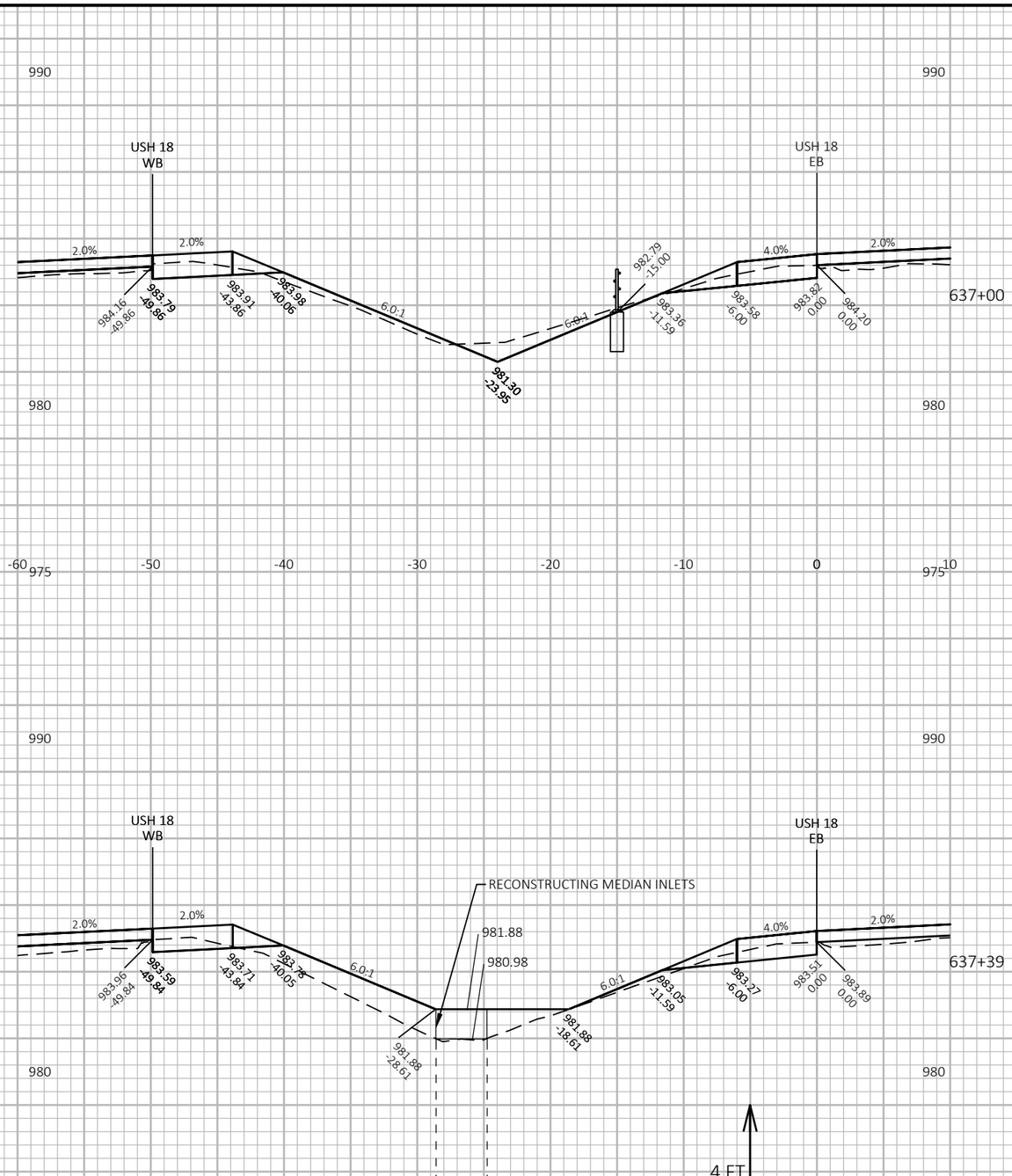

9

9

PROJECT NO: 1204-08-65	HWY: USH 18/151	COUNTY: DANE	CROSS SECTIONS: USH 18 EB	SHEET 700	E

FILE NAME : G:\WDOTSW\20007-000 USH 18\CIVIL 3D\SHEETSPLAN\CROSS SECTIONS\090303-XS_USH 18 EB.DWG
LAYOUT NAME - 18EB-8_16

PLOT DATE : 7/20/2022 12:21 PM PLOT BY : ERIC ANDRITSCH PLOT NAME : PLOT SCALE : 1 IN:10 FT HORZ. / 1 IN:4 FT VERT.

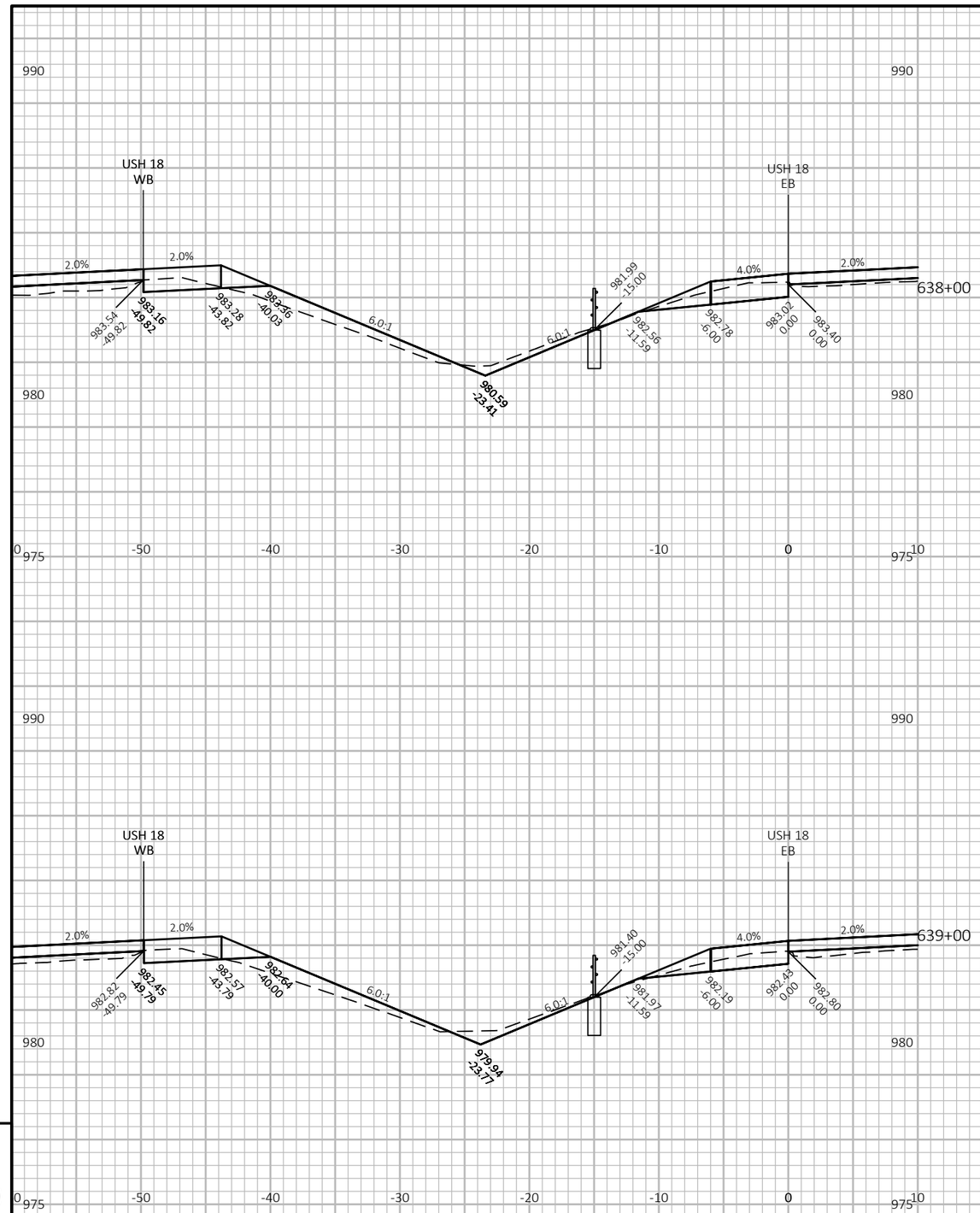

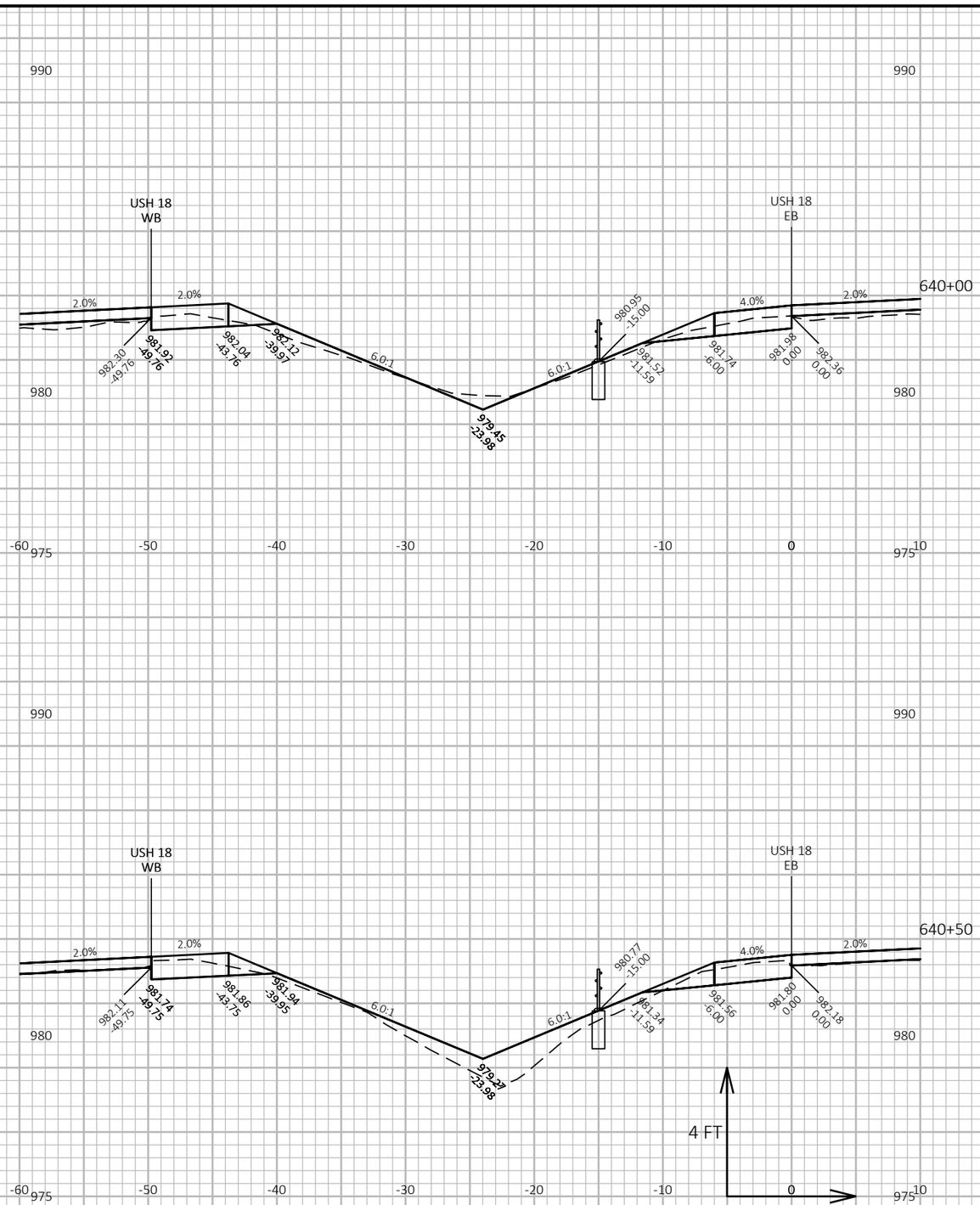

9

9

PROJECT NO: 1204-08-65	HWY: USH 18/151	COUNTY: DANE	CROSS SECTIONS: USH 18 EB	SHEET 701	E

FILE NAME : G:\WDOTSW\20007-000 USH 18\CIVIL 3D\SHEETSPLAN\CROSS SECTIONS\090303-XS_USH 18 EB.DWG
LAYOUT NAME - 18EB-8_17

PLOT DATE : 7/20/2022 12:29 PM PLOT BY : ERIC ANDRITSCH PLOT NAME : PLOT SCALE : 1 IN:10 FT HORZ. / 1 IN:4 FT VERT.

WISDOT/CADDS SHEET 49

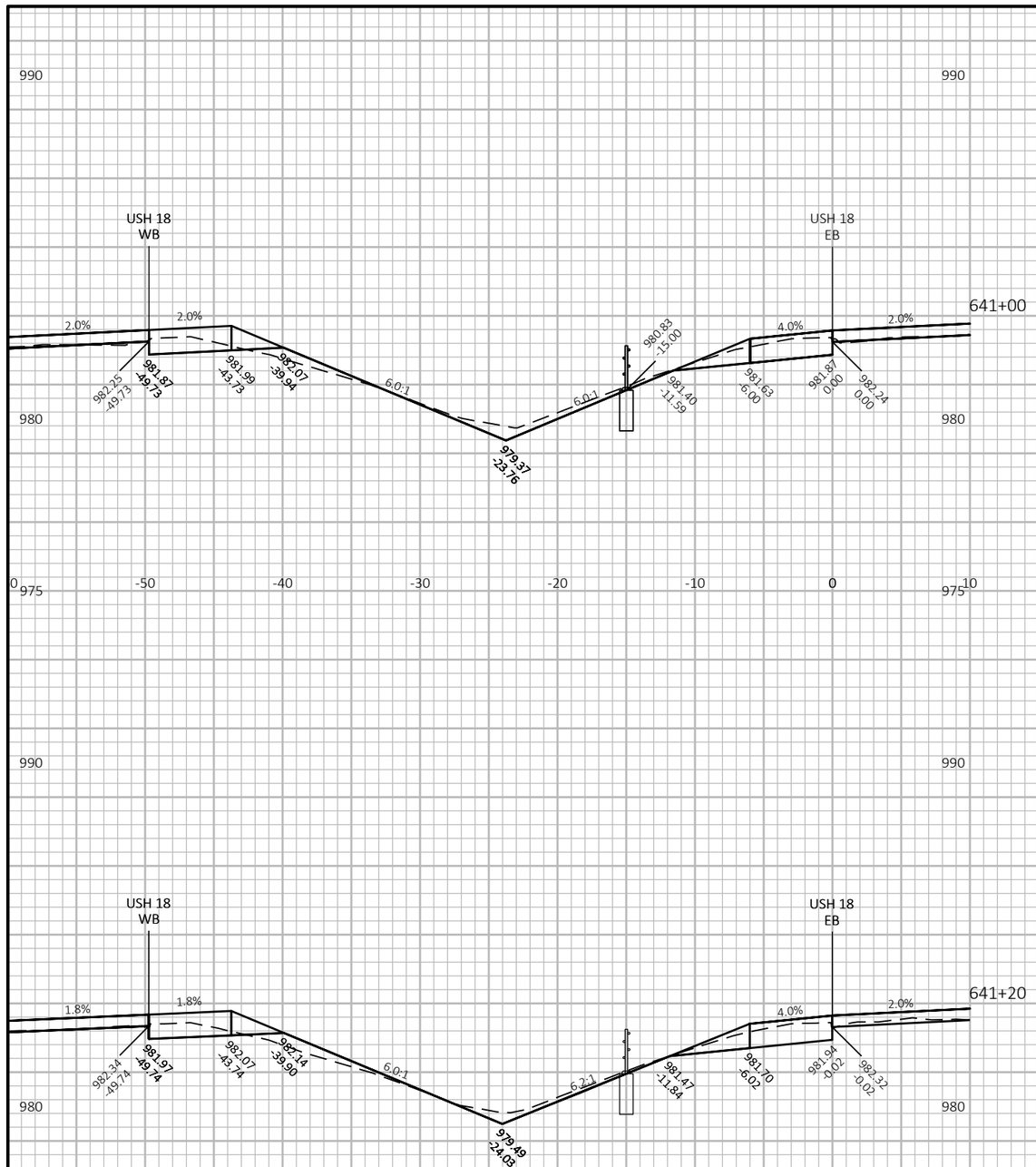

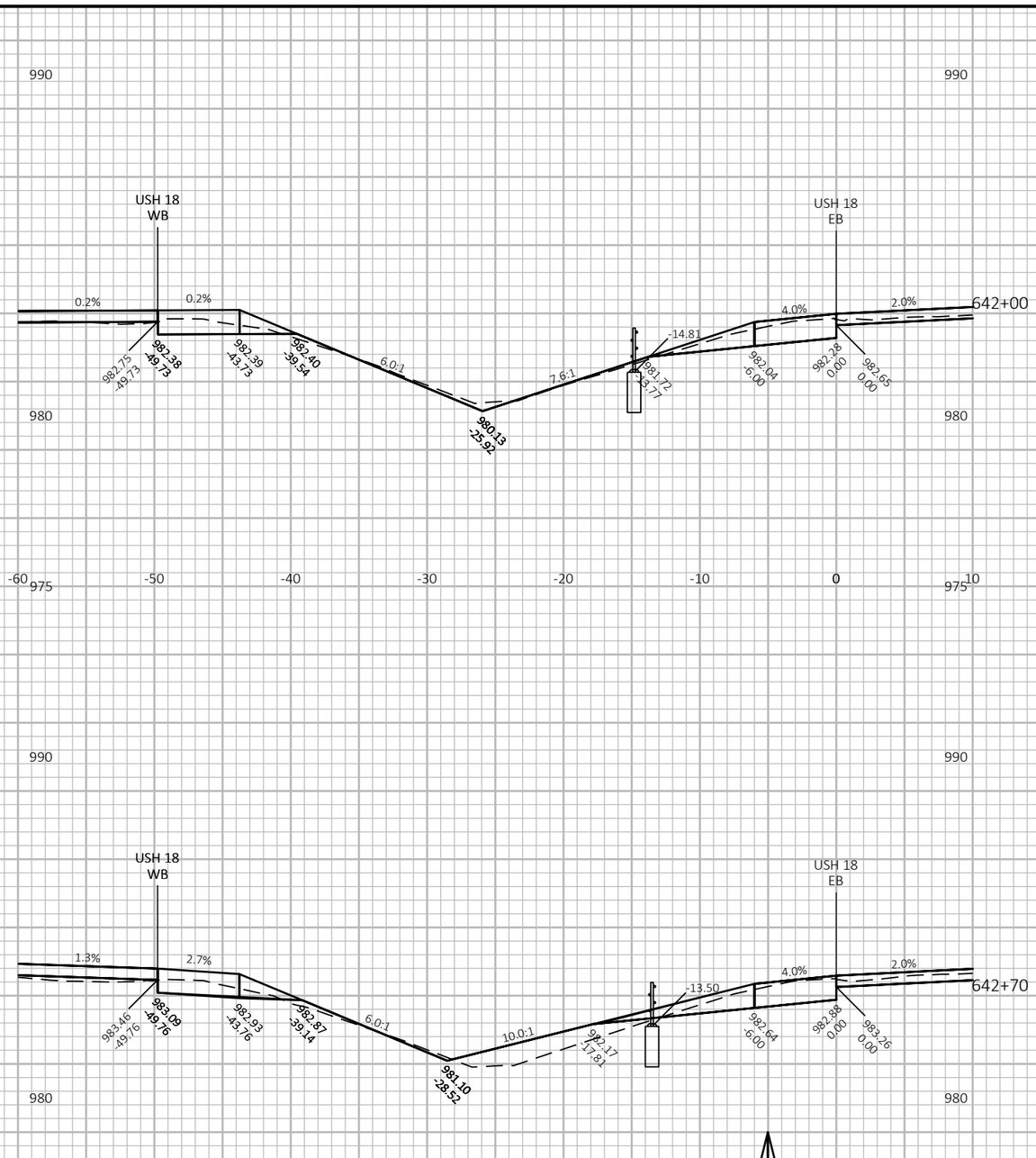

9

9

PROJECT NO: 1204-08-65	HWY: USH 18/151	COUNTY: DANE	CROSS SECTIONS: USH 18 EB	SHEET 702	E

FILE NAME : G:\WDOTSW\20007-000 USH 18\CIVIL 3D\SHEETSPLAN\CROSS SECTIONS\090303-XS_USH 18 EB.DWG
LAYOUT NAME - 18EB-8_18

PLOT DATE : 7/19/2022 12:42 AM PLOT BY : ERIC ANDRITSCH PLOT NAME : PLOT SCALE : 1 IN:10 FT HORZ. / 1 IN:4 FT VERT.

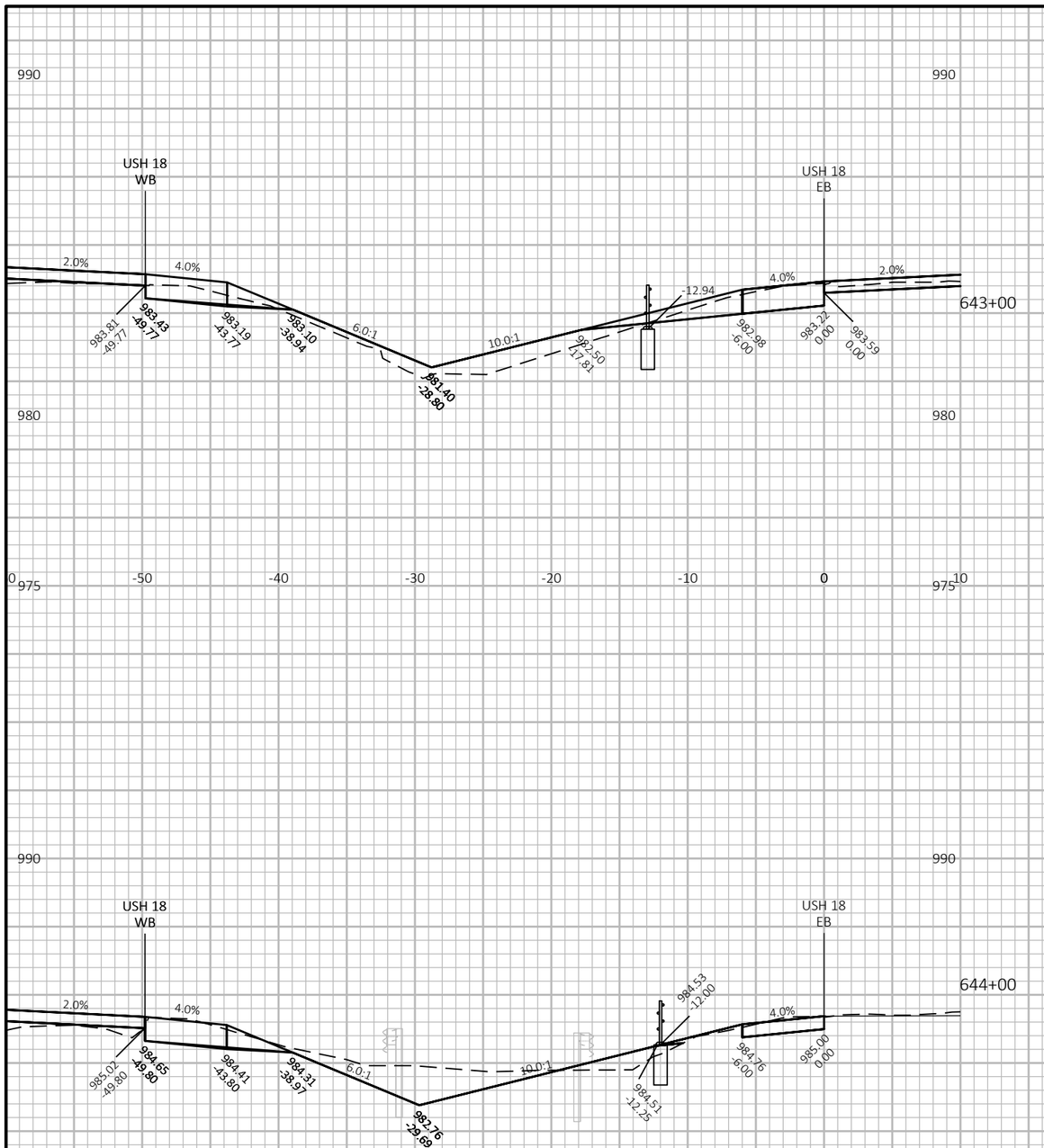

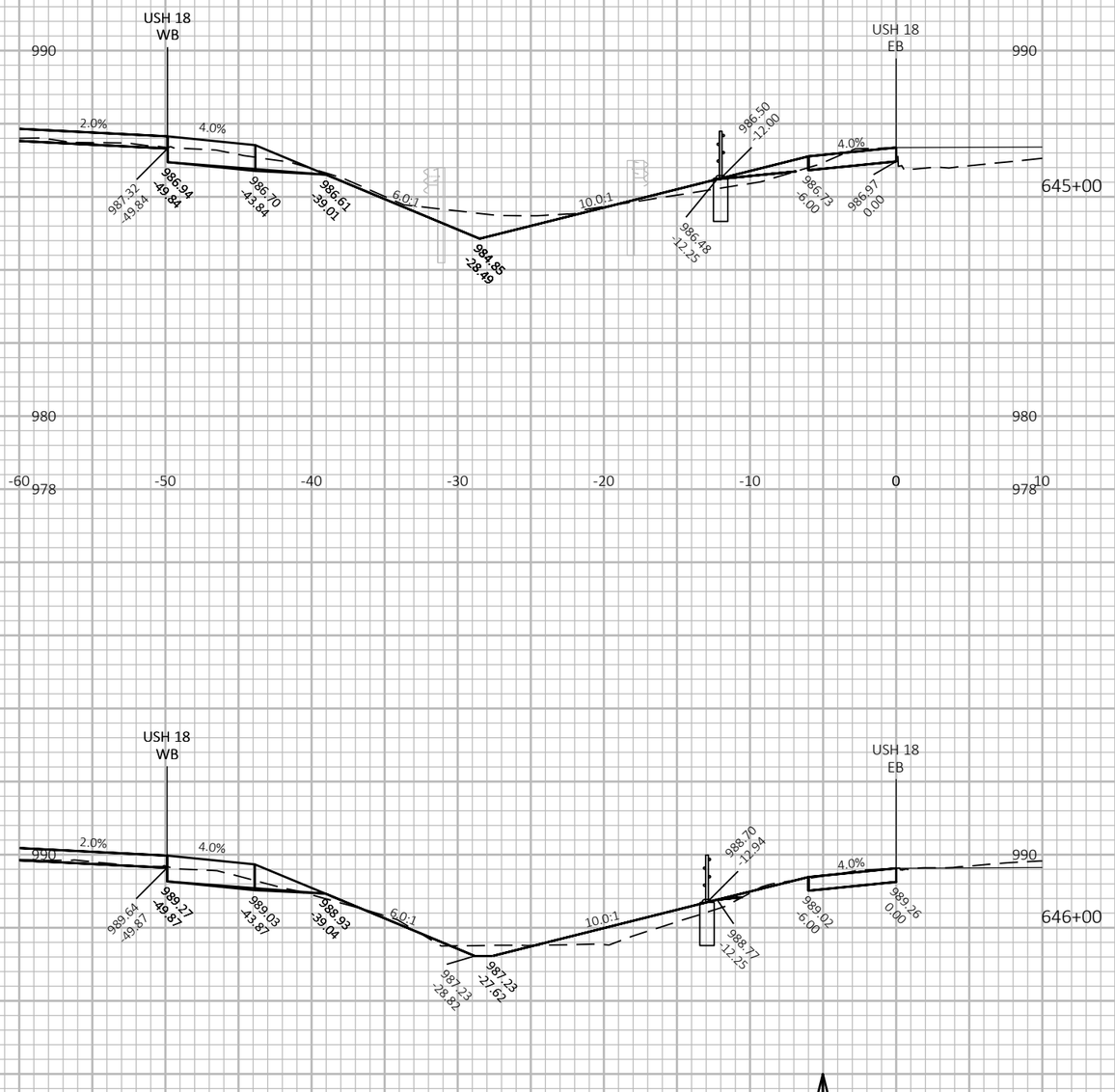

9

9

PROJECT NO: 1204-08-65	HWY: USH 18/151	COUNTY: DANE	CROSS SECTIONS: USH 18 EB	SHEET 703	E

FILE NAME : G:\WDOTSW\20007-000 USH 18\CIVIL 3D\SHEETSPLAN\CROSS SECTIONS\090303-XS_USH 18 EB.DWG
LAYOUT NAME - 18EB-8_19

PLOT DATE : 7/19/2022 12:44 AM PLOT BY : ERIC ANDRITSCH PLOT NAME : PLOT SCALE : 1 IN:10 FT HORZ. / 1 IN:4 FT VERT.

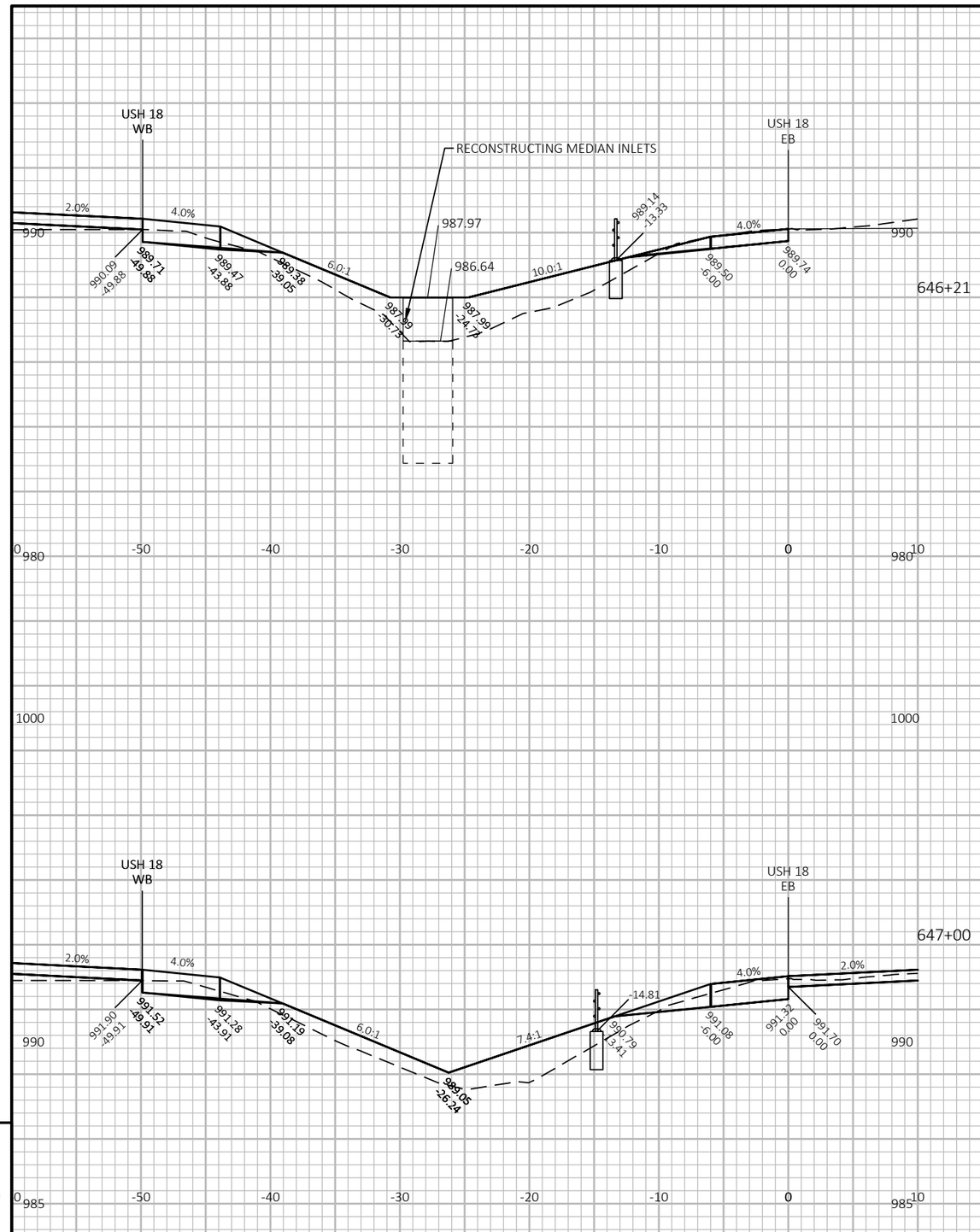

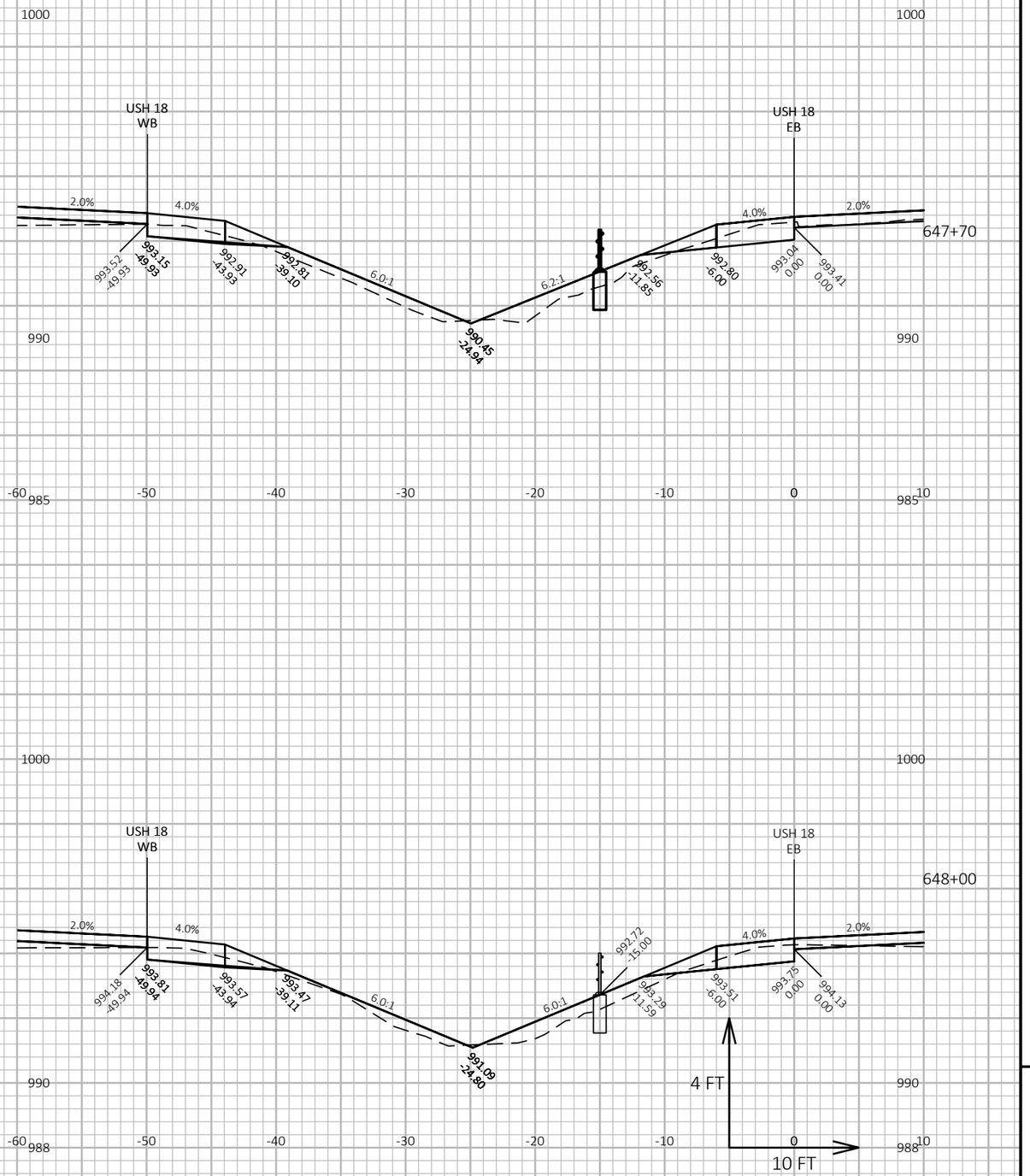

PROJECT NO: 1204-08-65	HWY: USH 18/151	COUNTY: DANE	CROSS SECTIONS: USH 18 EB	SHEET 704 E

FILE NAME : G:\WDOTSW\20007-000 USH 18\CIVIL 3D\SHEETSPLAN\CROSS SECTIONS\090303-XS_USH 18 EB.DWG
LAYOUT NAME - 18EB-8_20

PLOT DATE : 7/20/2022 12:34 PM PLOT BY : ERIC ANDRITSCH PLOT NAME : PLOT SCALE : 1 IN:10 FT HORZ. / 1 IN:4 FT VERT.

WISDOT/CADDS SHEET 49

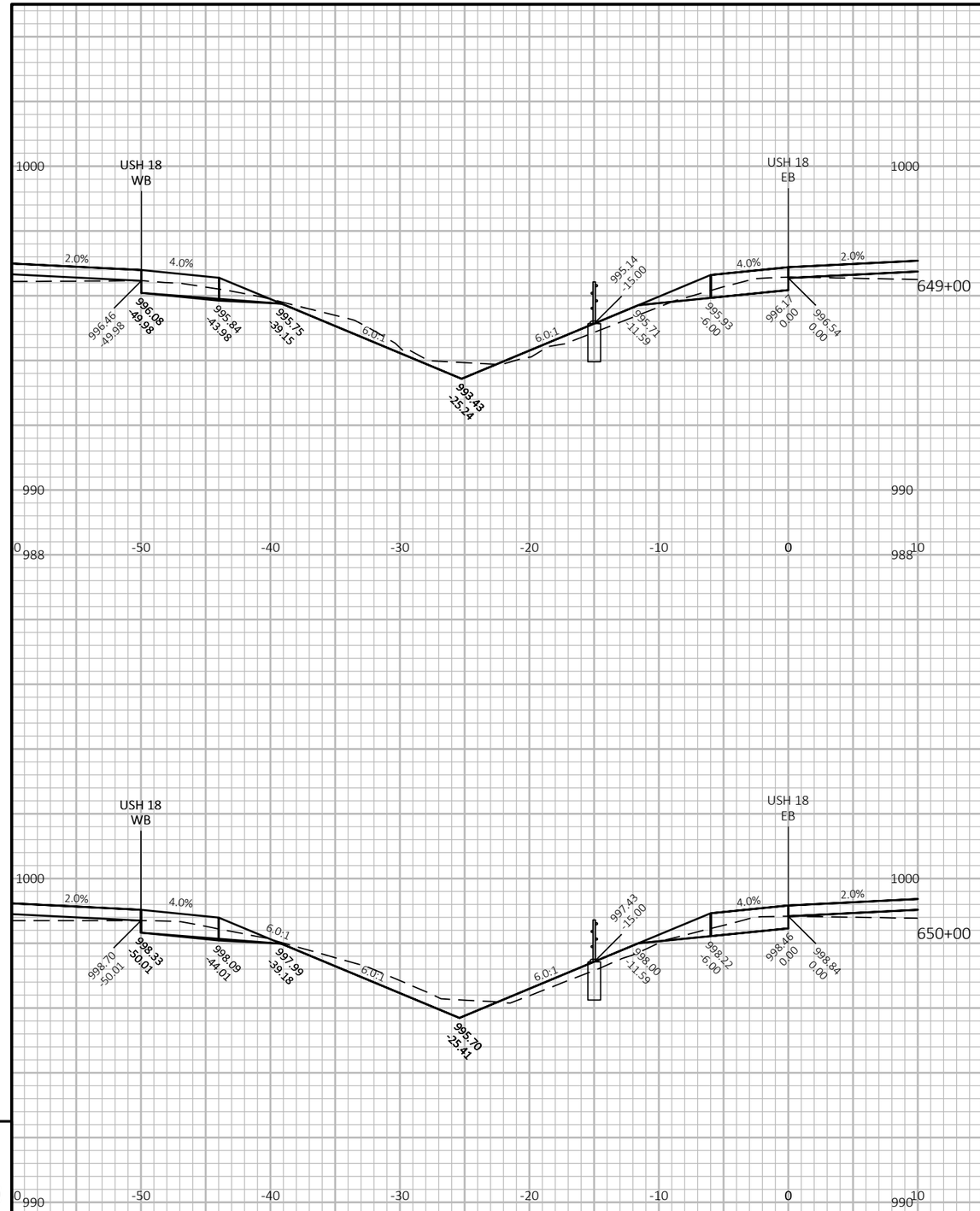

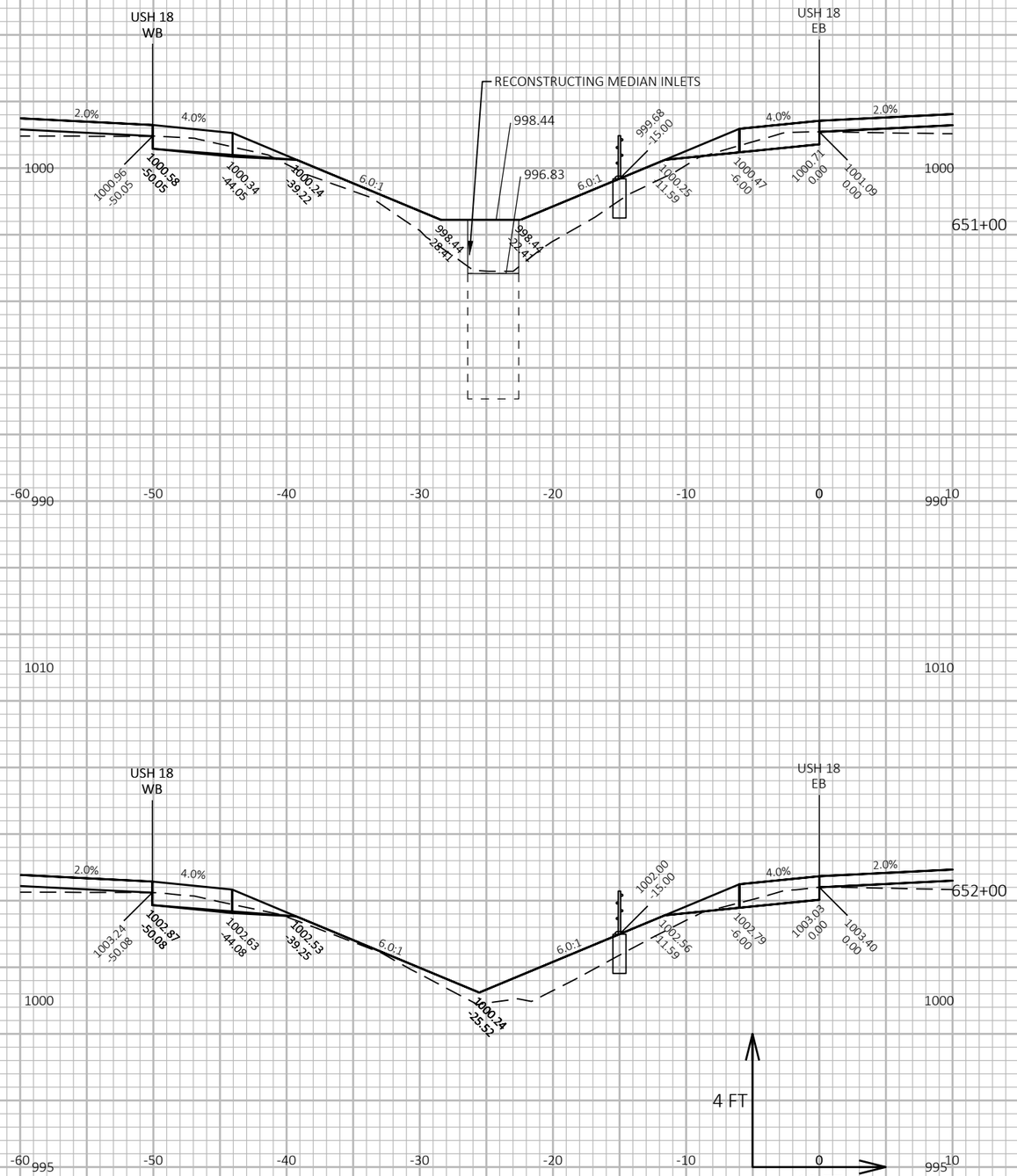

9

9

PROJECT NO: 1204-08-65	HWY: USH 18/151	COUNTY: DANE	CROSS SECTIONS: USH 18 EB	SHEET 705	E

FILE NAME : G:\WDOTSW\20007-000 USH 18\CIVIL 3D\SHEETSPLAN\CROSS SECTIONS\090303-XS_USH 18 EB.DWG
LAYOUT NAME - 18EB-8_21

PLOT DATE : 7/20/2022 12:38 PM PLOT BY : ERIC ANDRITSCH PLOT NAME : PLOT SCALE : 1 IN:10 FT HORZ. / 1 IN:4 FT VERT.

WISDOT/CADDS SHEET 49

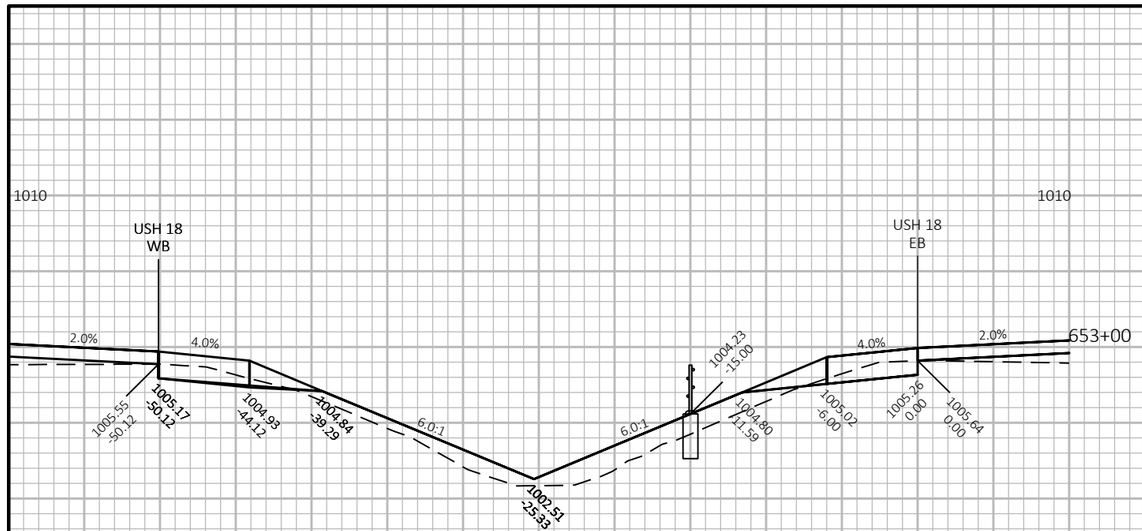

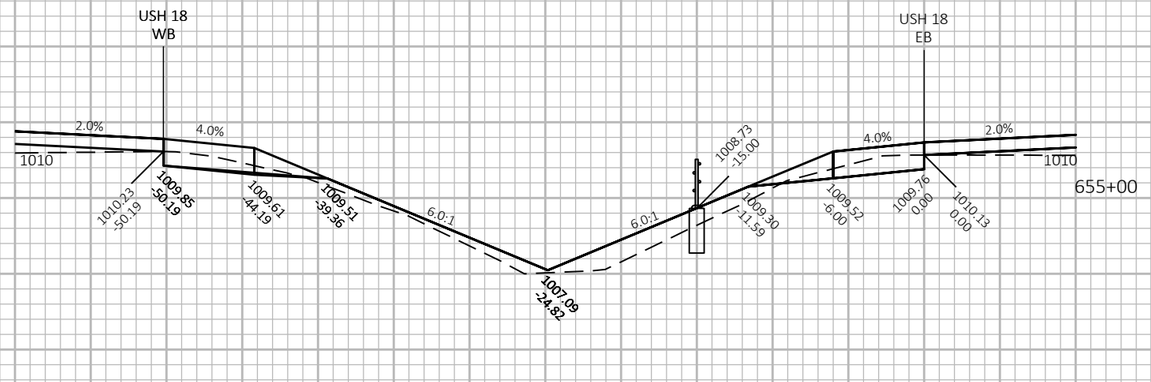

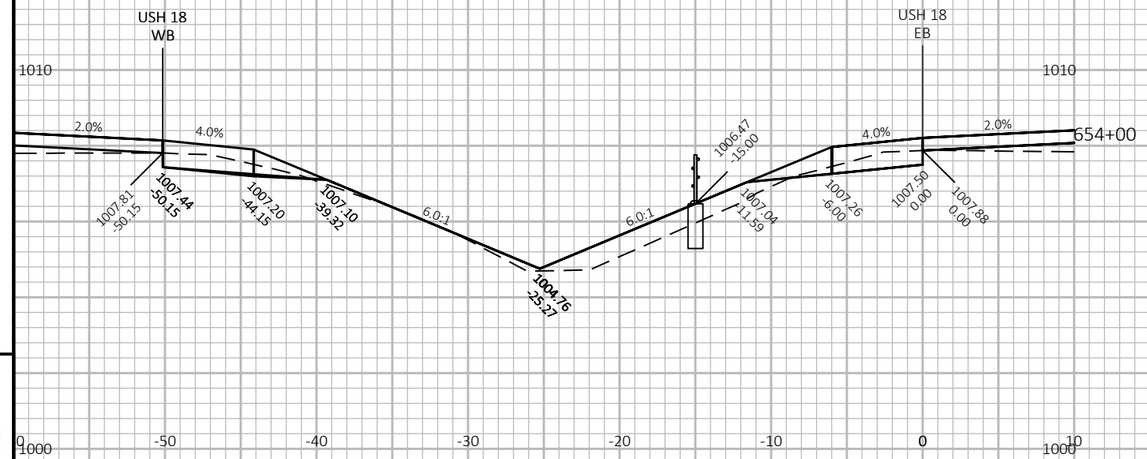

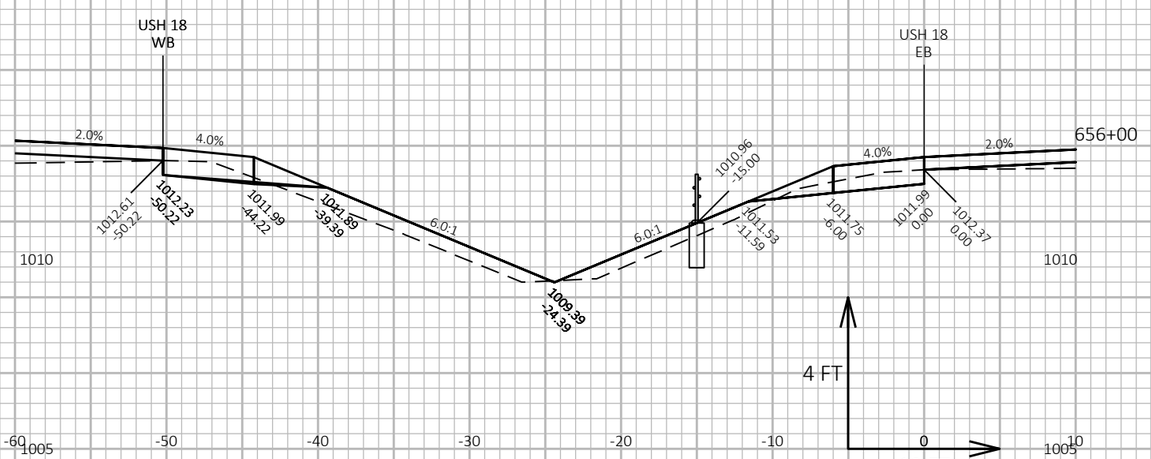

9

9

PROJECT NO: 1204-08-65	HWY: USH 18/151	COUNTY: DANE	CROSS SECTIONS: USH 18 EB	SHEET 706	E

FILE NAME : G:\WDOTSW\20007-000 USH 18\CIVIL 3D\SHEETSPLAN\CROSS SECTIONS\090303-XS_USH 18 EB.DWG
LAYOUT NAME - 18EB-8_22

PLOT DATE : 7/19/2022 12:49 AM PLOT BY : ERIC ANDRITSCH PLOT NAME : PLOT SCALE : 1 IN:10 FT HORZ. / 1 IN:4 FT VERT.

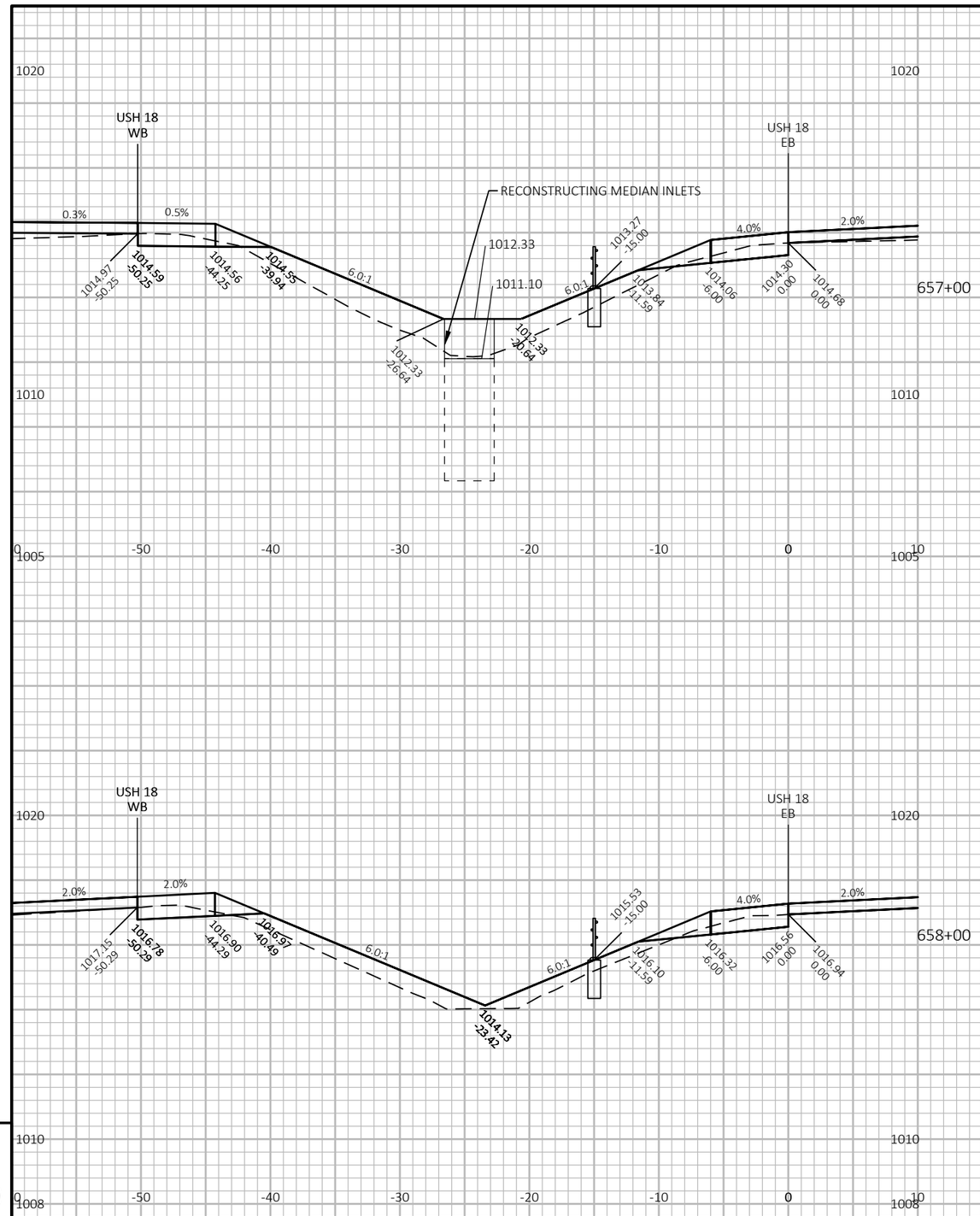

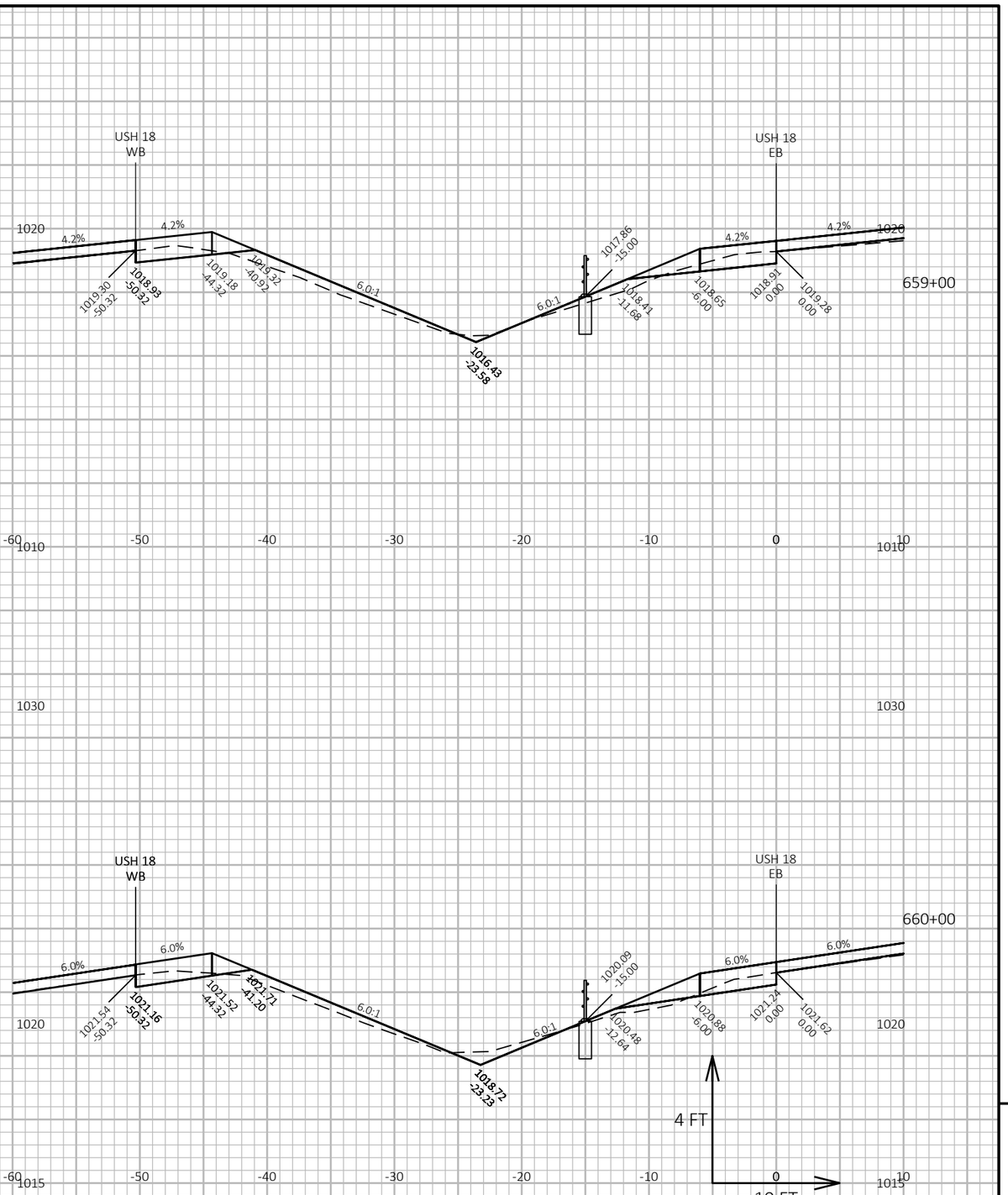

PROJECT NO: 1204-08-65	HWY: USH 18/151	COUNTY: DANE	CROSS SECTIONS: USH 18 EB	SHEET 707	E

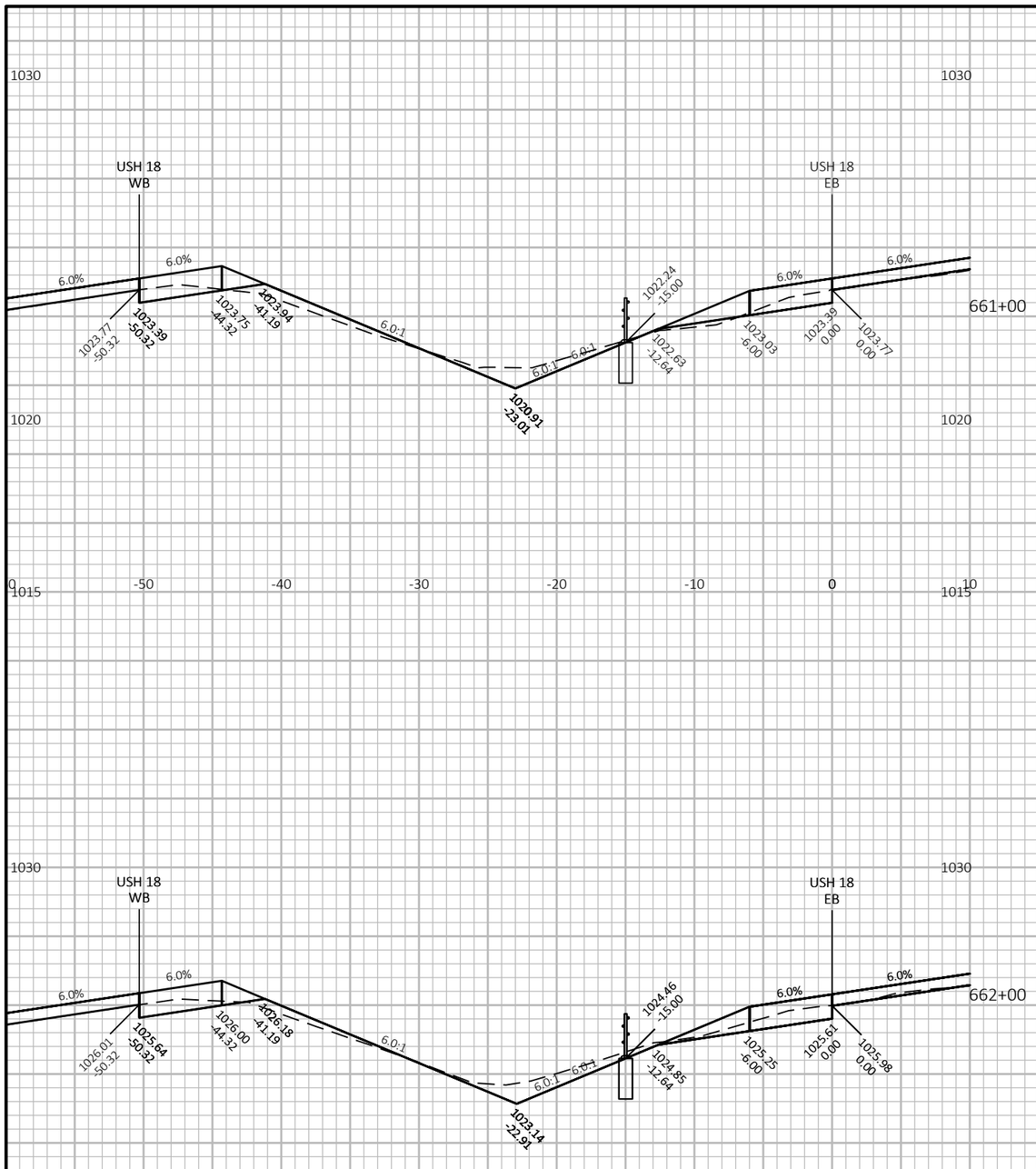

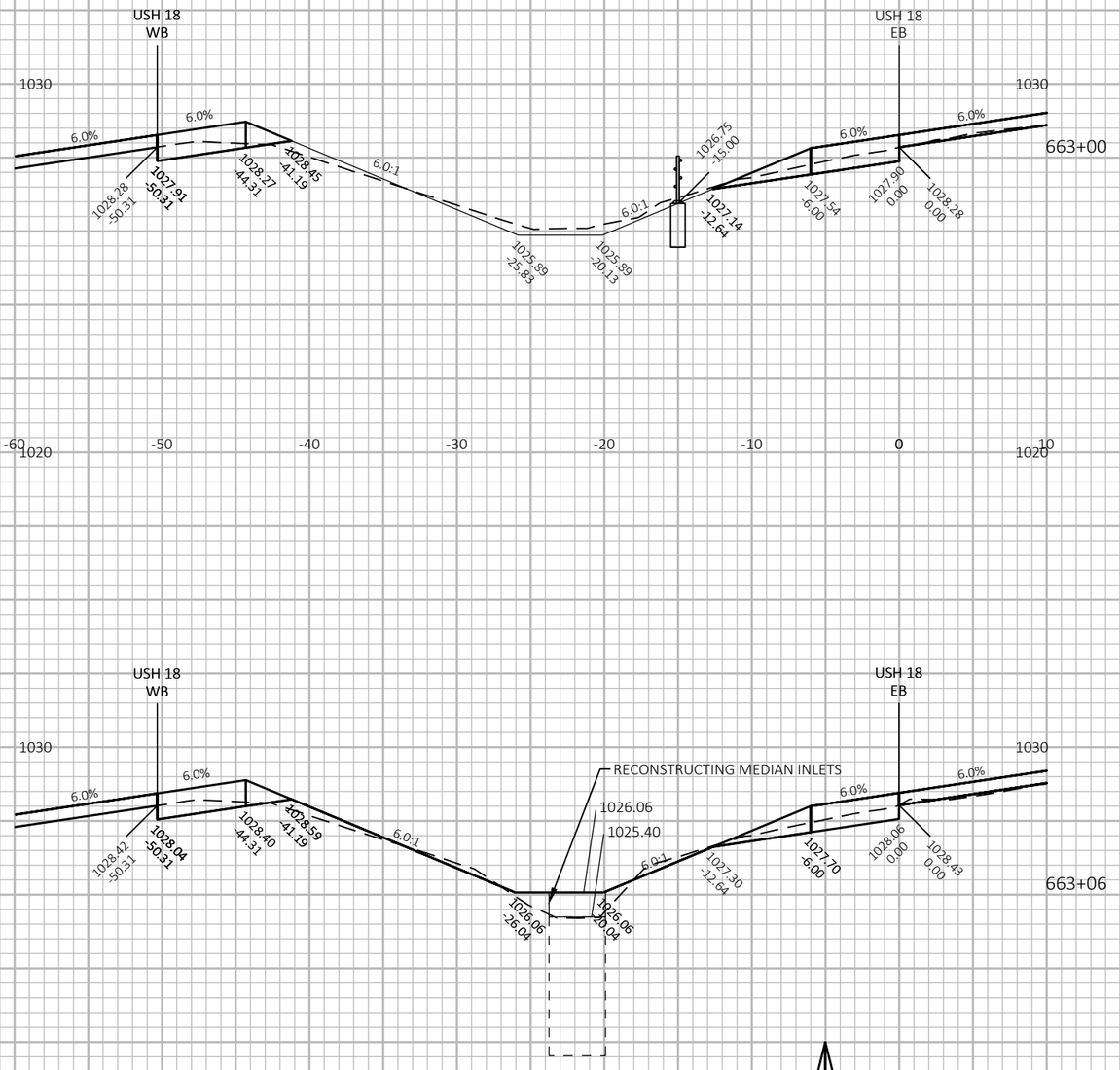

9

9

PROJECT NO: 1204-08-65	HWY: USH 18/151	COUNTY: DANE	CROSS SECTIONS: USH 18 EB	SHEET 708	E

FILE NAME : G:\WDOTSW\20007-000 USH 18\CIVIL 3D\SHEETSPLAN\CROSS SECTIONS\090303-XS_USH 18 EB.DWG
LAYOUT NAME - 18EB-8_24

PLOT DATE : 7/20/2022 12:45 PM PLOT BY : ERIC ANDRITSCH PLOT NAME : PLOT SCALE : 1 IN:10 FT HORZ. / 1 IN:4 FT VERT.

WISDOT/CADDS SHEET 49

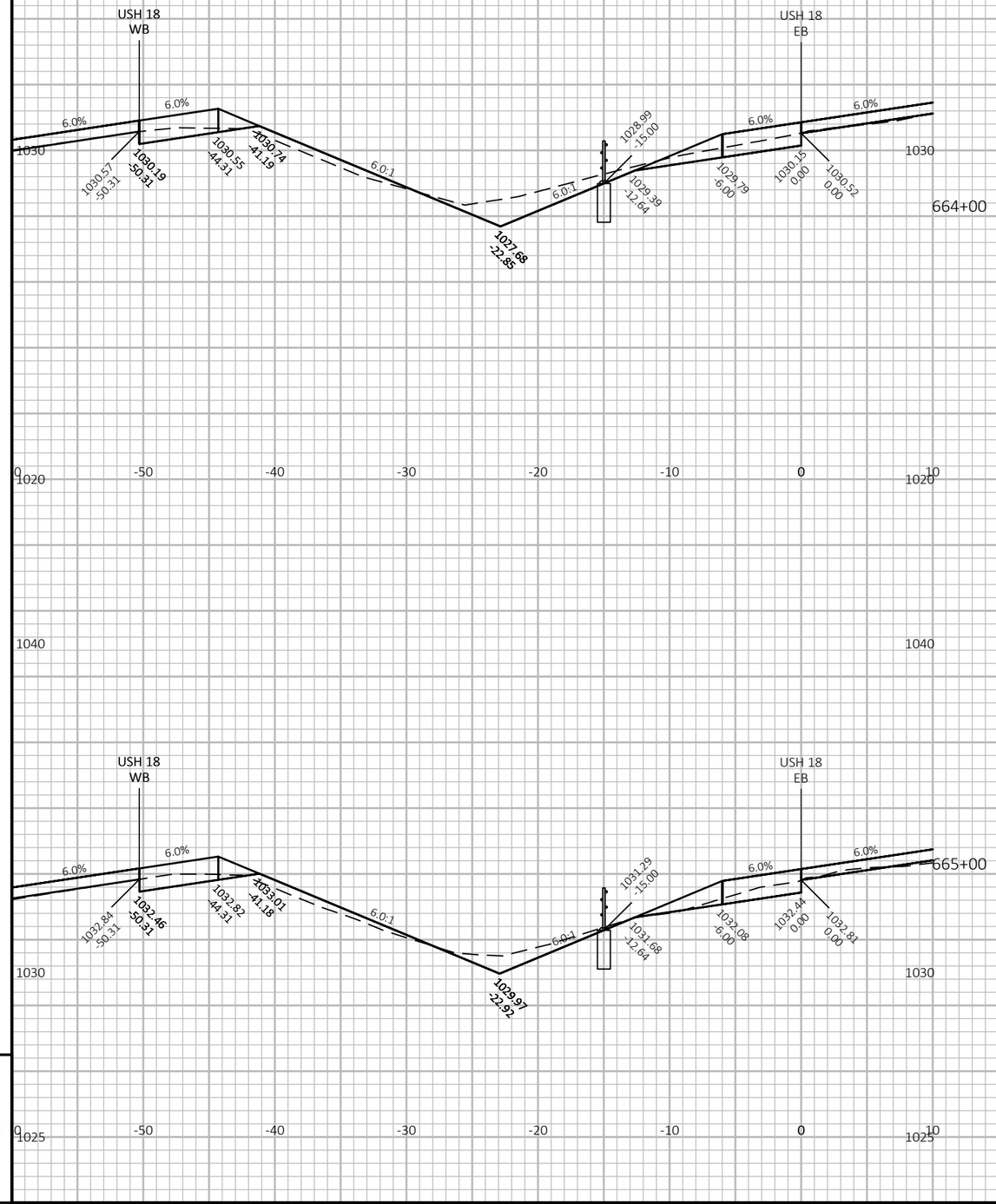

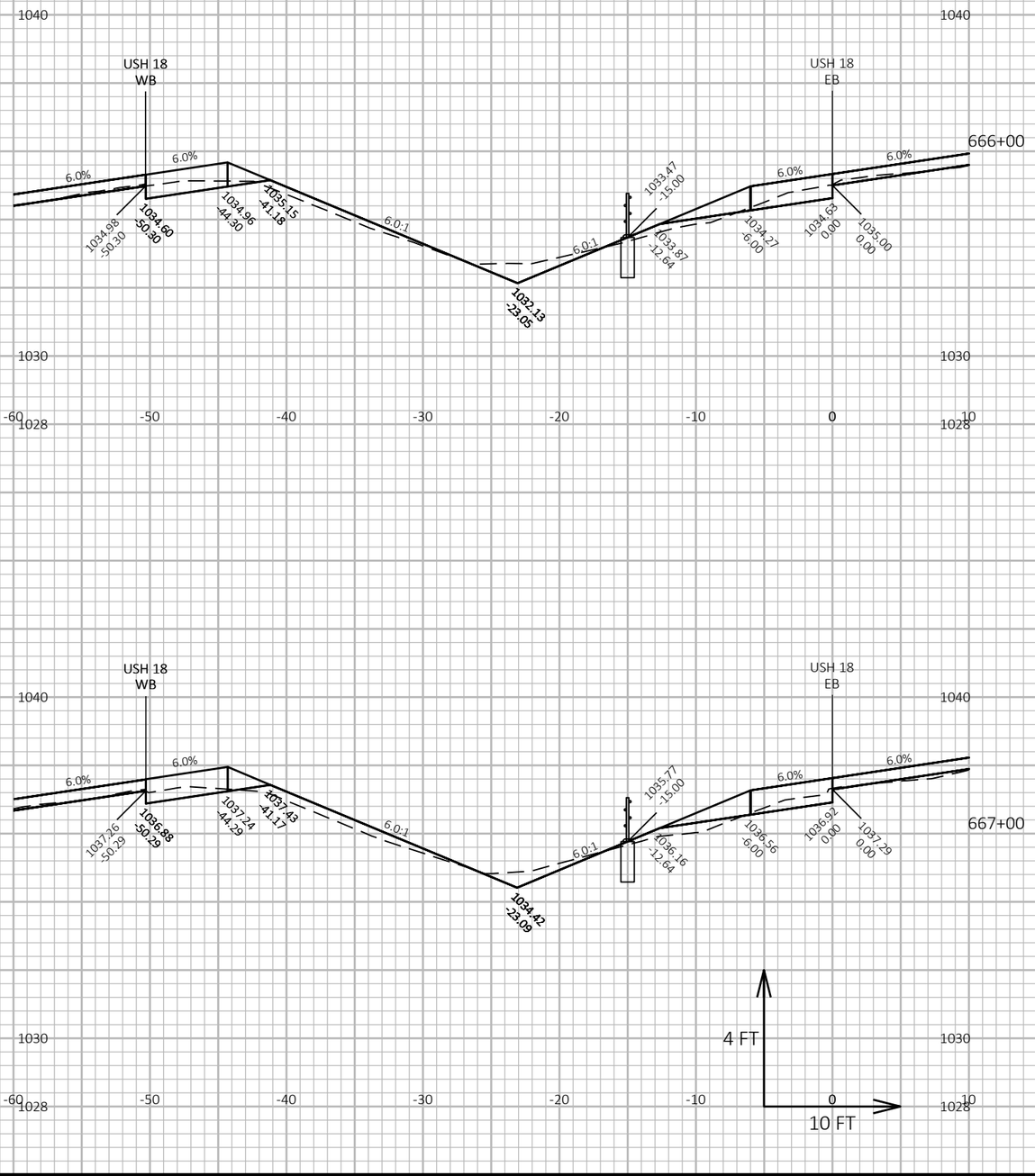

9

9

PROJECT NO: 1204-08-65	HWY: USH 18/151	COUNTY: DANE	CROSS SECTIONS: USH 18 EB	SHEET 709	E

FILE NAME : G:\WDOTSW\20007-000 USH 18\CIVIL 3D\SHEETSPLAN\CROSS SECTIONS\090303-XS_USH 18 EB.DWG
LAYOUT NAME - 18EB-8_25

PLOT DATE : 7/19/2022 12:53 AM PLOT BY : ERIC ANDRITSCH PLOT NAME : PLOT SCALE : 1 IN:10 FT HORZ. / 1 IN:4 FT VERT.

WISDOT/CADDS SHEET 49

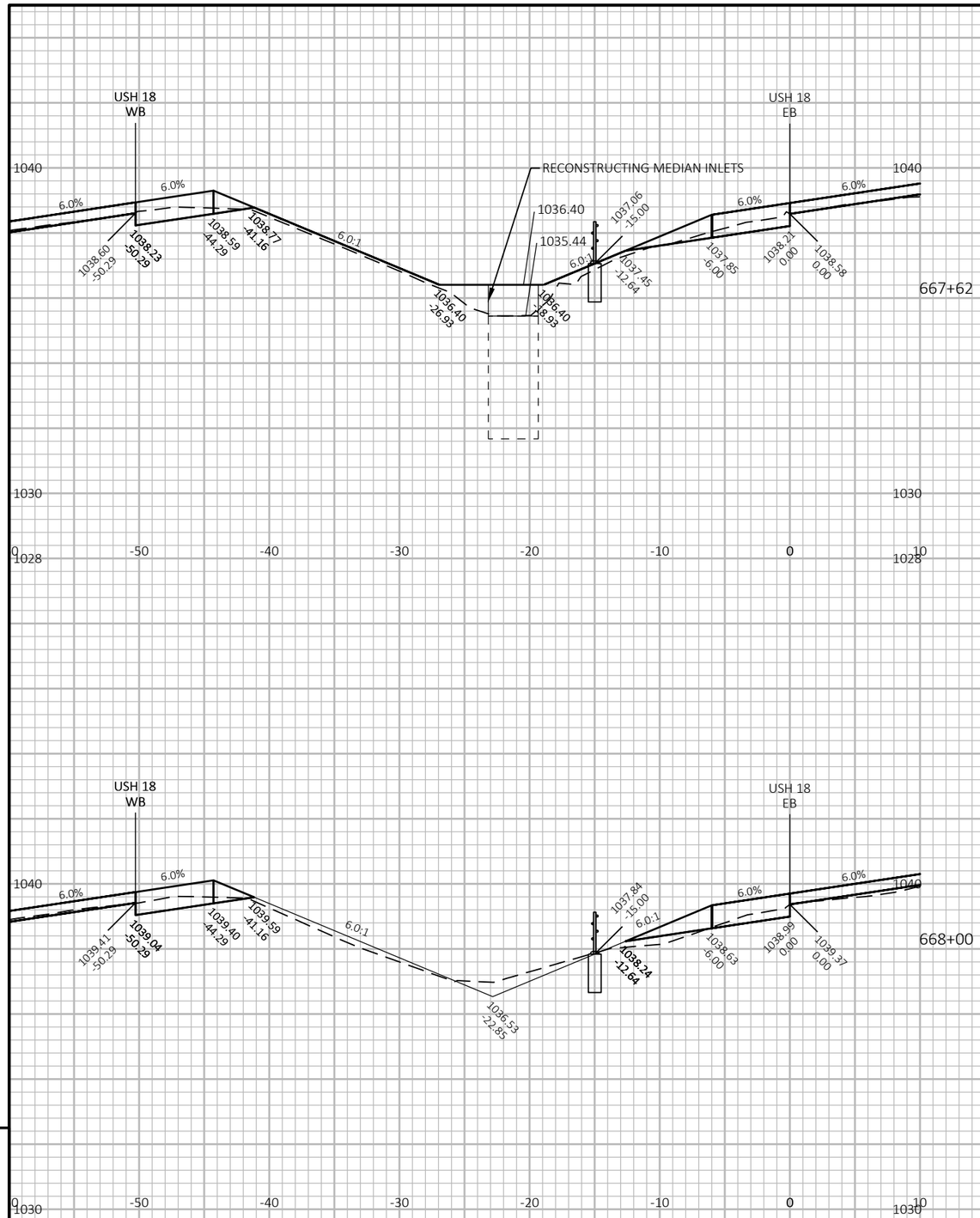

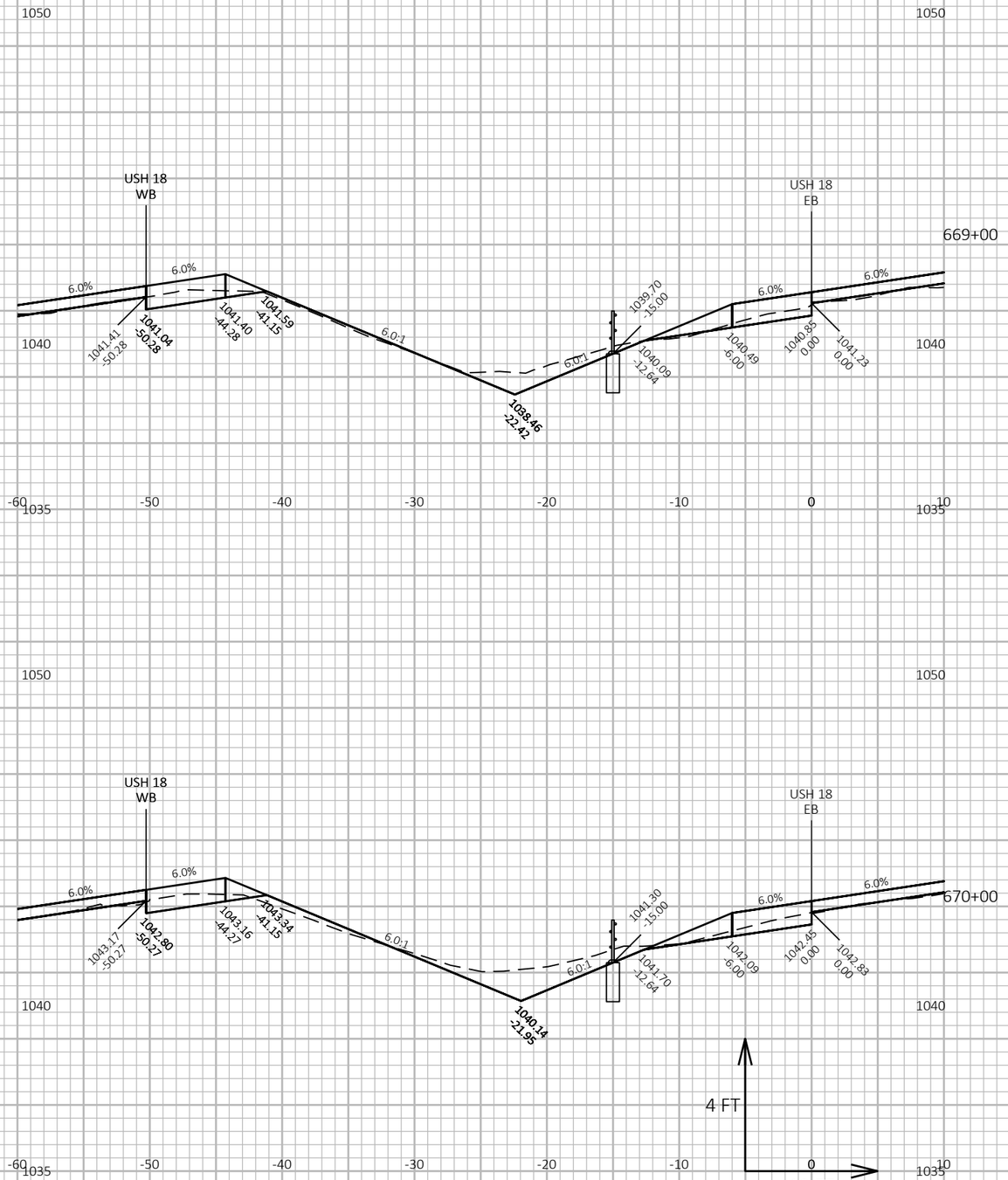

9

9

PROJECT NO: 1204-08-65	HWY: USH 18/151	COUNTY: DANE	CROSS SECTIONS: USH 18 EB	SHEET 710	E

FILE NAME : G:\WDOTSW\20007-000 USH 18\CIVIL 3D\SHEETSPLAN\CROSS SECTIONS\090303-XS_USH 18 EB.DWG
LAYOUT NAME - 18EB-8_26

PLOT DATE : 7/20/2022 12:56 PM PLOT BY : ERIC ANDRITSCH PLOT NAME : PLOT SCALE : 1 IN:10 FT HORZ. / 1 IN:4 FT VERT.

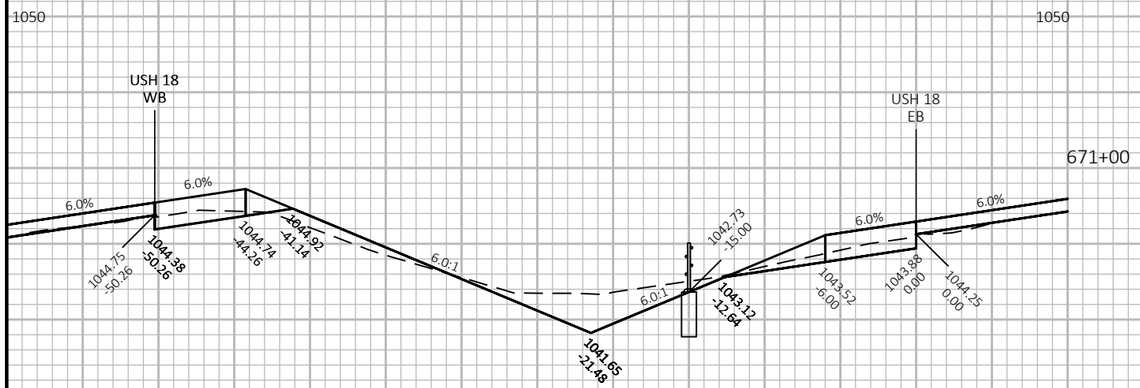

END CABLE GUARD SECTIONS 587+57'EB' TO 671+00'EB'

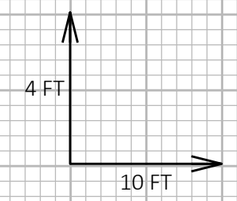

9

9

PROJECT NO: 1204-08-65	HWY: USH 18/151	COUNTY: DANE	CROSS SECTIONS: USH 18 EB	SHEET 711	E

FILE NAME : G:\WDOTSW\20007-000 USH 18\CIVIL 3D\SHEETSPLAN\CROSS SECTIONS\090303-XS_USH 18 EB.DWG
LAYOUT NAME - 18EB-8_27

PLOT DATE : 7/19/2022 12:56 AM PLOT BY : ERIC ANDRITSCH PLOT NAME : PLOT SCALE : 1 IN:10 FT HORZ. / 1 IN:4 FT VERT.

WISDOT/CADDS SHEET 49

START BEAM GUARD SECTIONS 671+45'EB' TO 675+63'EB'

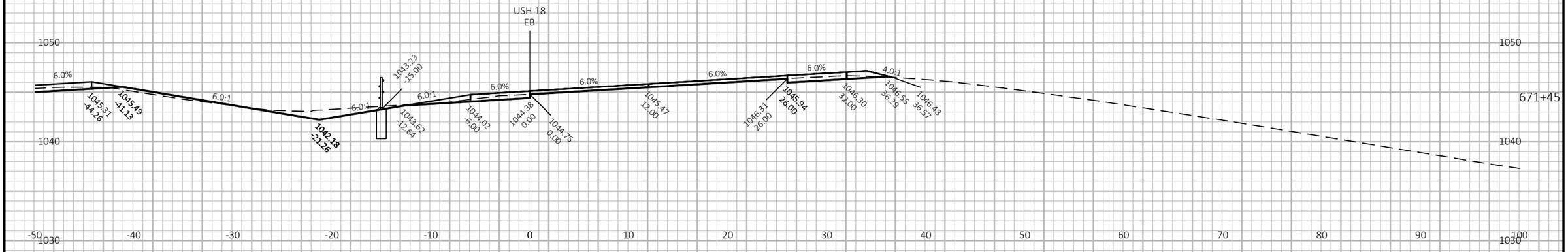

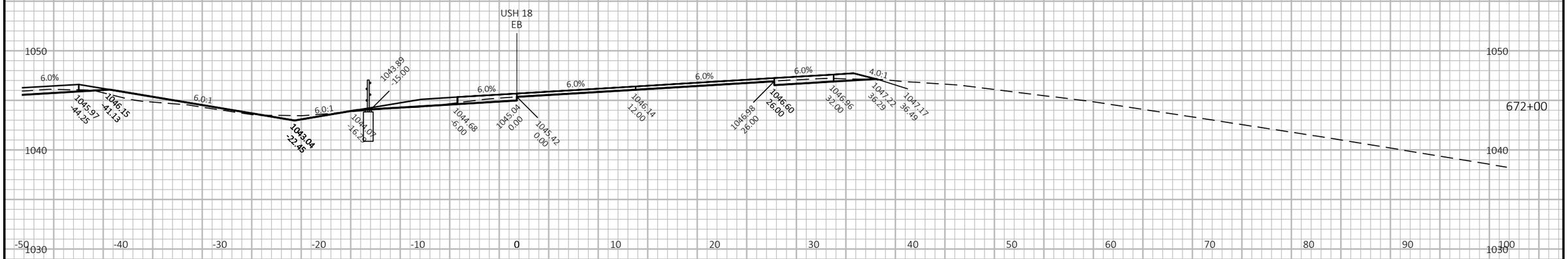

9

9

PROJECT NO: 1204-08-65	HWY: USH 18/151	COUNTY: DANE	CROSS SECTIONS: USH 18 EB	SHEET 712	E

FILE NAME : G:\WDOTSW\20007-000 USH 18\CIVIL 3D\SHEETSPLAN\CROSS SECTIONS\090303-XS_USH 18 EB.DWG
LAYOUT NAME - 18EB-9_1

PLOT DATE : 7/19/2022 12:58 AM PLOT BY : ERIC ANDRITSCH PLOT NAME : **PLOT SCALE :** 1 IN:10 FT HORZ. / 1 IN:10 FT VERT.

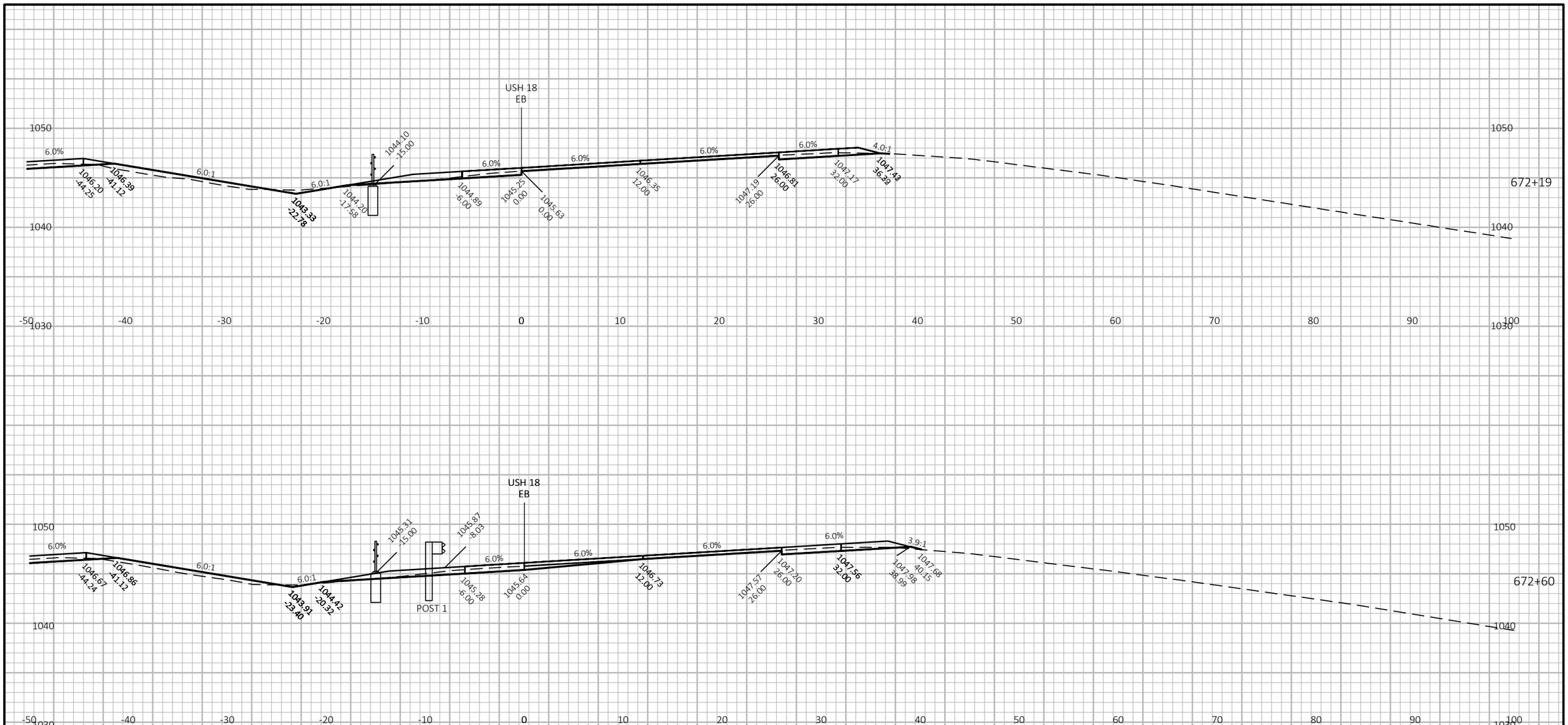

9

9

PROJECT NO: 1204-08-65	HWY: USH 18/151	COUNTY: DANE	CROSS SECTIONS: USH 18 EB	SHEET 713	E

FILE NAME : G:\WDOTSW\20007-000 USH 18\CIVIL 3D\SHEETSPLAN\CROSS SECTIONS\090303-XS_USH 18 EB.DWG
LAYOUT NAME - 18EB-9_2

PLOT DATE : 7/19/2022 1:00 AM PLOT BY : ERIC ANDRITSCH PLOT NAME :

PLOT SCALE : 1 IN:10 FT HORZ. / 1 IN:10 FT VERT.

WISDOT/CADDS SHEET 49

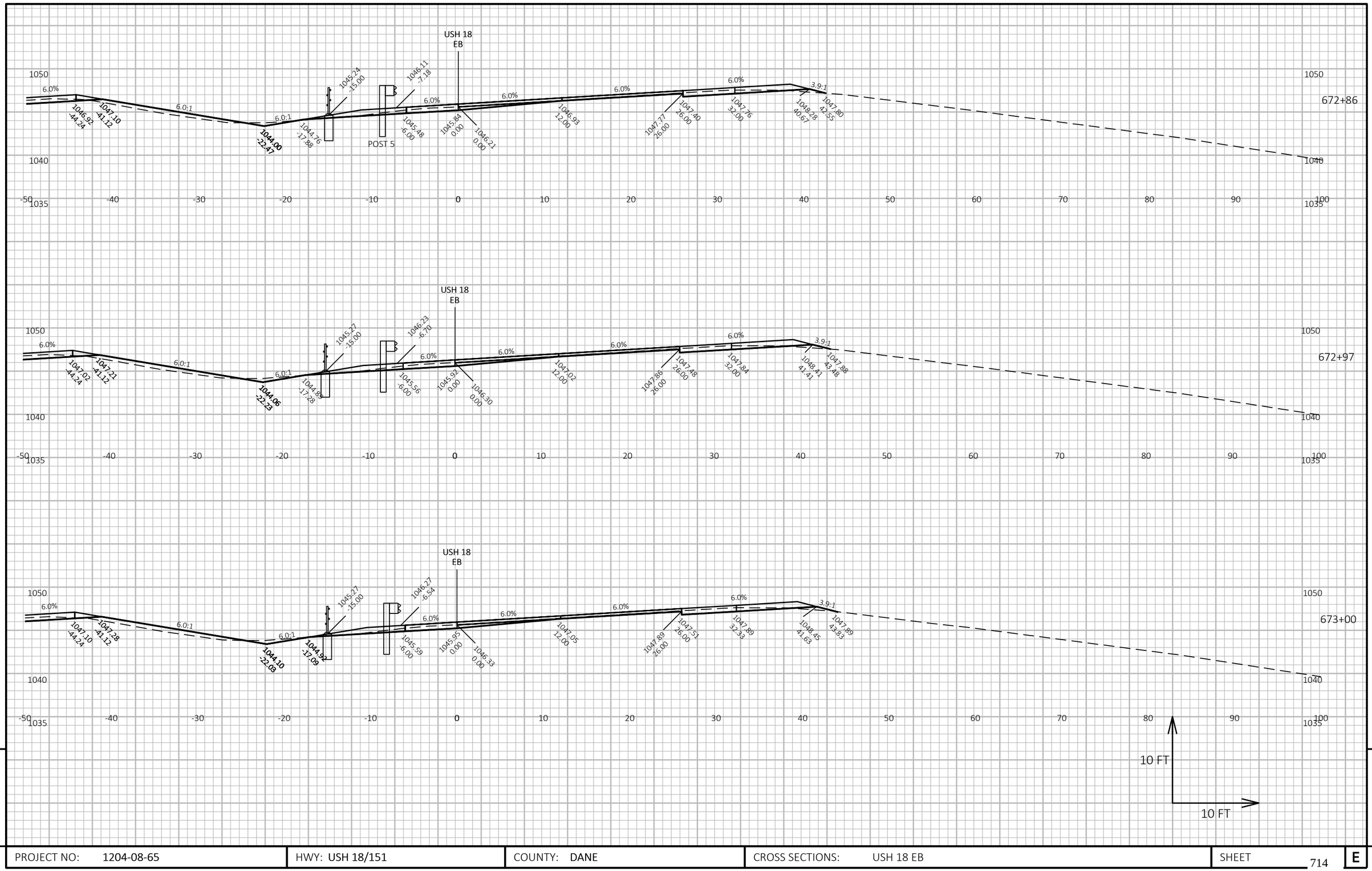

9

9

PROJECT NO: 1204-08-65	HWY: USH 18/151	COUNTY: DANE	CROSS SECTIONS: USH 18 EB	SHEET 714	E

FILE NAME : G:\WDOTSW\20007-000 USH 18\CIVIL 3D\SHEETSPLAN\CROSS SECTIONS\090303-XS_USH 18 EB.DWG
LAYOUT NAME - 18EB-9_3

PLOT DATE : 7/19/2022 1:01 AM

PLOT BY : ERIC ANDRITSCH

PLOT NAME :

PLOT SCALE : 1 IN:10 FT HORZ. / 1 IN:10 FT VERT.

WISDOT/CADDS SHEET 49

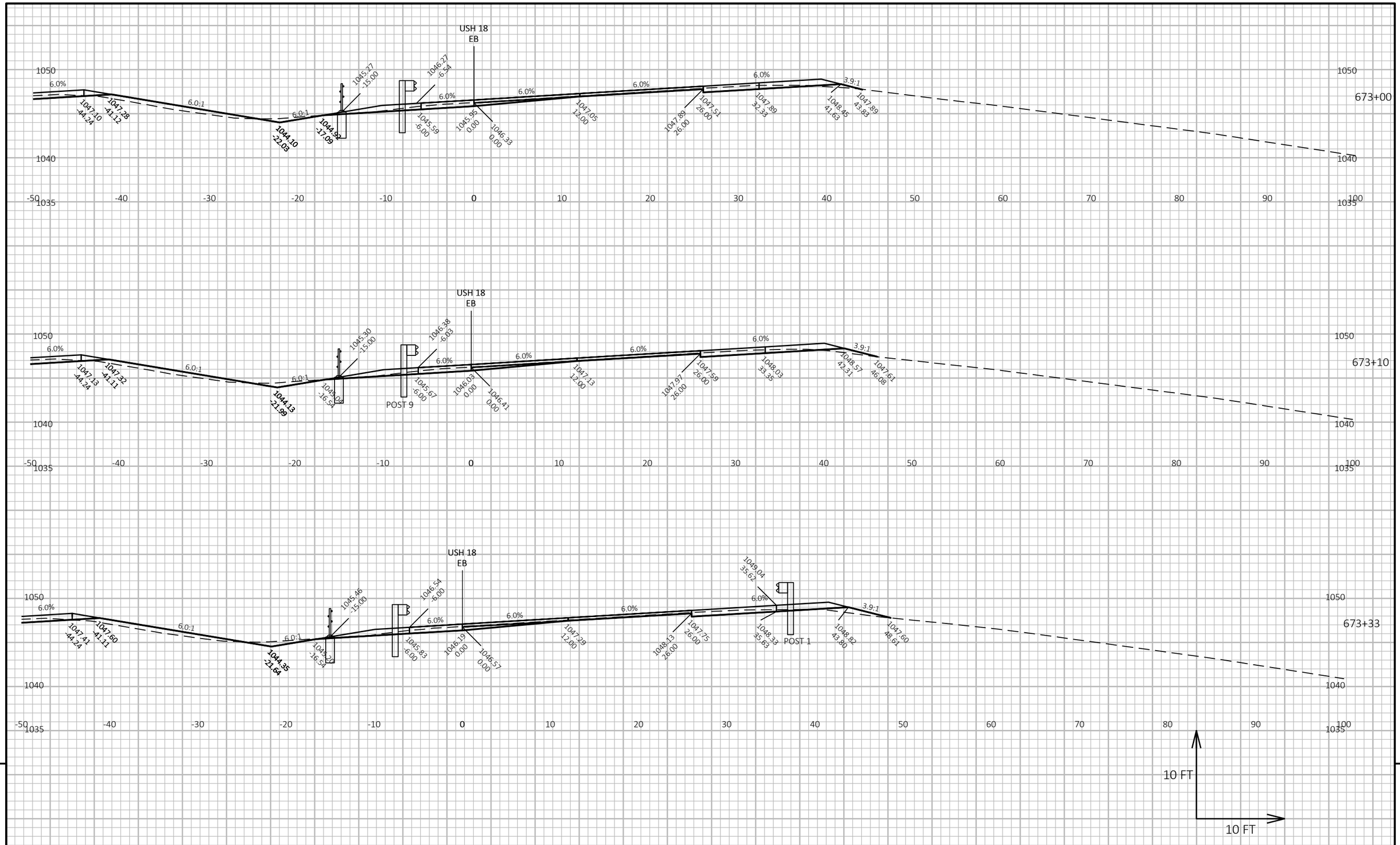

PROJECT NO: 1204-08-65	HWY: USH 18/151	COUNTY: DANE	CROSS SECTIONS: USH 18 EB	SHEET 715	E

FILE NAME : G:\WDOTSW\20007-000 USH 18\CIVIL 3D\SHEETSPLAN\CROSS SECTIONS\090303-XS_USH 18 EB.DWG
LAYOUT NAME - 18EB-9_4

PLOT DATE : 7/19/2022 1:03 AM

PLOT BY : ERIC ANDRITSCH

PLOT NAME :

PLOT SCALE : 1 IN:10 FT HORZ. / 1 IN:10 FT VERT.

WISDOT/CADDS SHEET 49

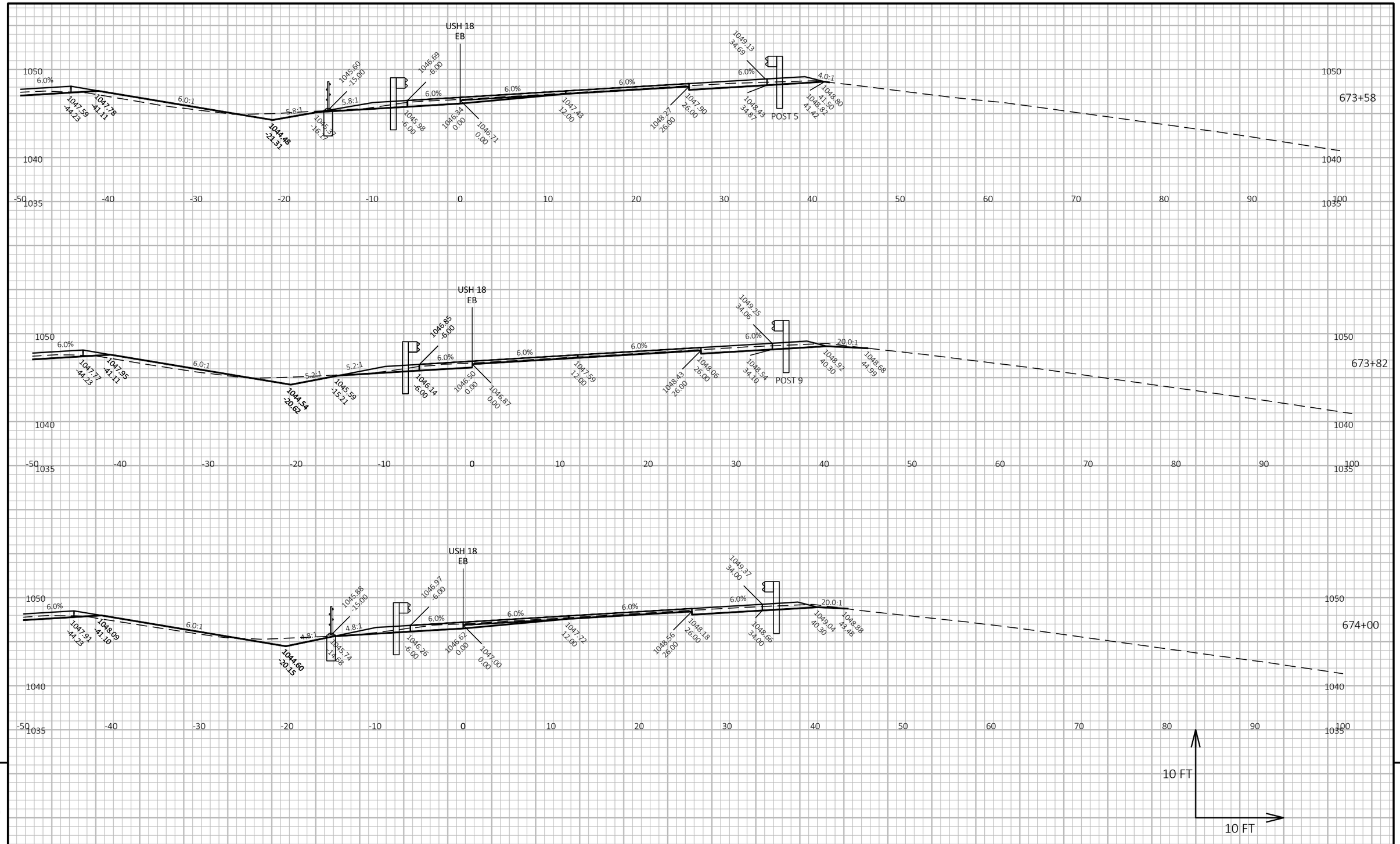

9

9

PROJECT NO: 1204-08-65	HWY: USH 18/151	COUNTY: DANE	CROSS SECTIONS: USH 18 EB	SHEET 716	E

FILE NAME : G:\WDOTSW\20007-000 USH 18\CIVIL 3D\SHEETSPLAN\CROSS SECTIONS\090303-XS_USH 18 EB.DWG
LAYOUT NAME - 18EB-9_5

PLOT DATE : 7/19/2022 1:04 AM

PLOT BY : ERIC ANDRITSCH

PLOT NAME :

PLOT SCALE : 1 IN:10 FT HORZ. / 1 IN:10 FT VERT.

WISDOT/CADDS SHEET 49

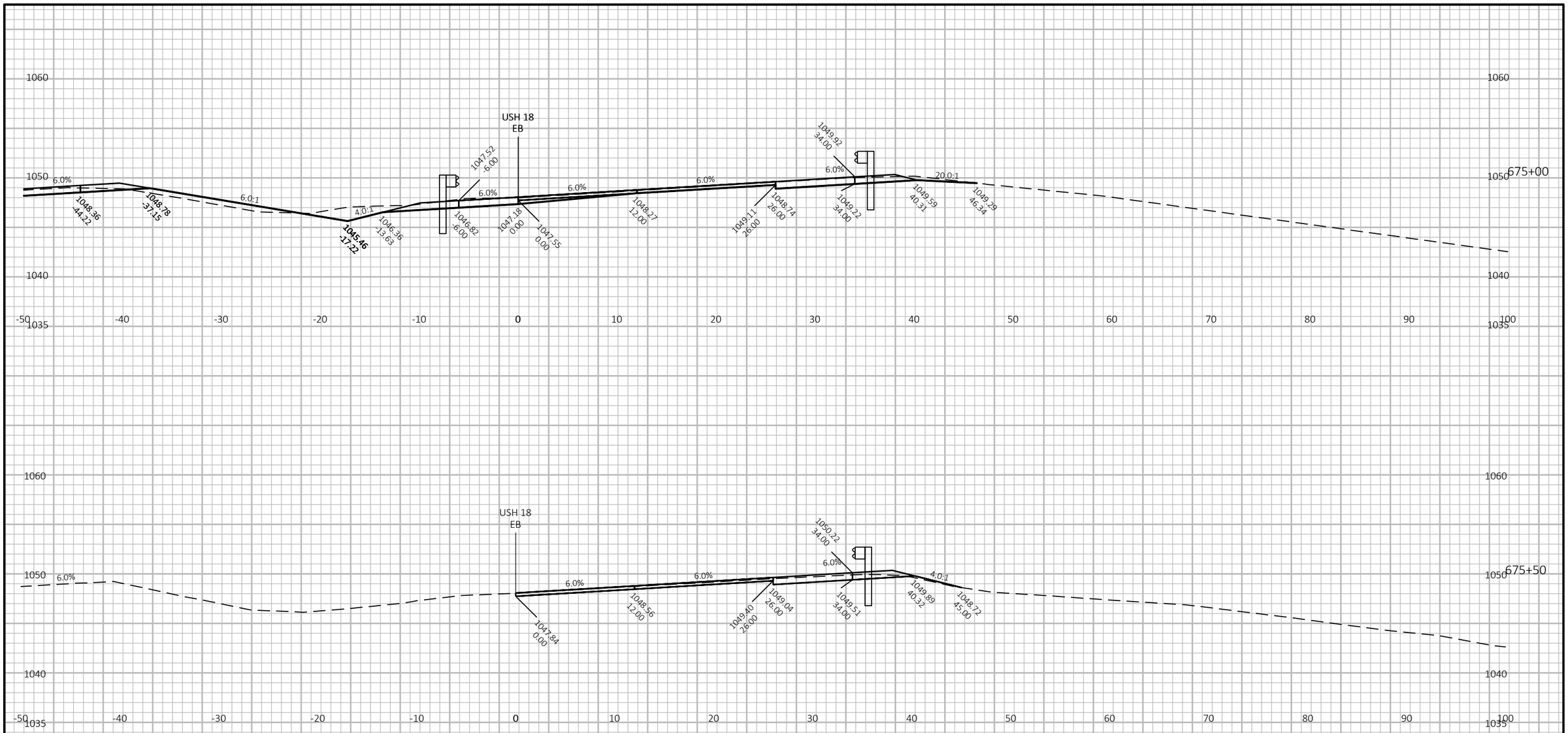

9

9

PROJECT NO: 1204-08-65	HWY: USH 18/151	COUNTY: DANE	CROSS SECTIONS: USH 18 EB	SHEET 717	E

FILE NAME : G:\WDOTSW\20007-000 USH 18\CIVIL 3D\SHEETSPLAN\CROSS SECTIONS\090303-XS_USH 18 EB.DWG
LAYOUT NAME - 18EB-9_6

PLOT DATE : 7/20/2022 1:02 PM PLOT BY : ERIC ANDRITSCH PLOT NAME : **PLOT SCALE :** 1 IN:10 FT HORZ. / 1 IN:10 FT VERT.

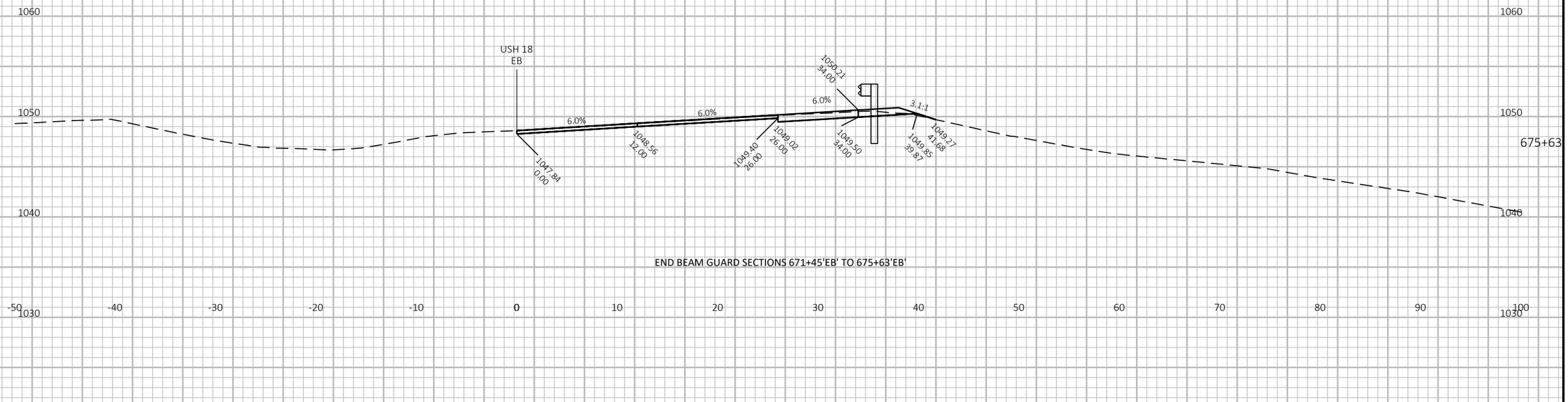

END BEAM GUARD SECTIONS 671+45'EB' TO 675+63'EB'

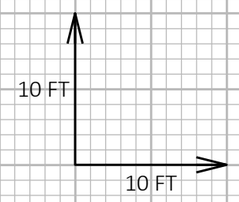

9

9

PROJECT NO: 1204-08-65	HWY: USH 18/151	COUNTY: DANE	CROSS SECTIONS: USH 18 EB	SHEET 718	E

FILE NAME : G:\WDOTSW\20007-000 USH 18\CIVIL 3D\SHEETSPLAN\CROSS SECTIONS\090303-XS_USH 18 EB.DWG
LAYOUT NAME - 18EB-9_7

PLOT DATE : 7/20/2022 1:05 PM PLOT BY : ERIC ANDRITSCH PLOT NAME : **PLOT SCALE :** 1 IN:10 FT HORZ. / 1 IN:10 FT VERT.

START BEAM GUARD SECTIONS 680+00'EB' TO 687+79'EB'

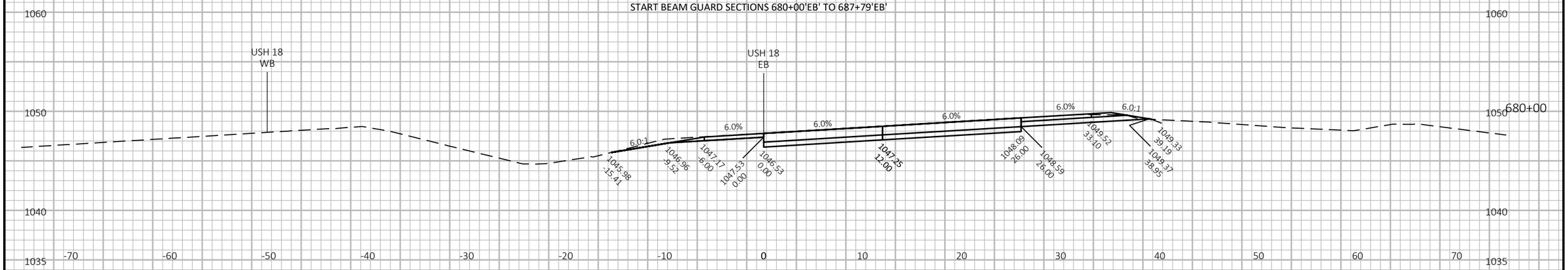

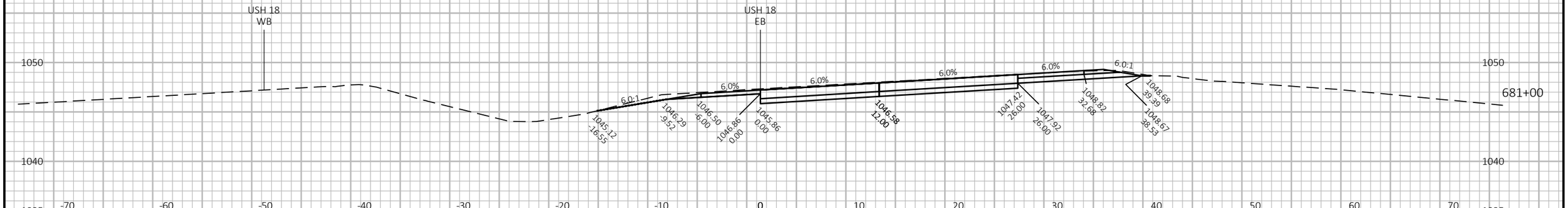

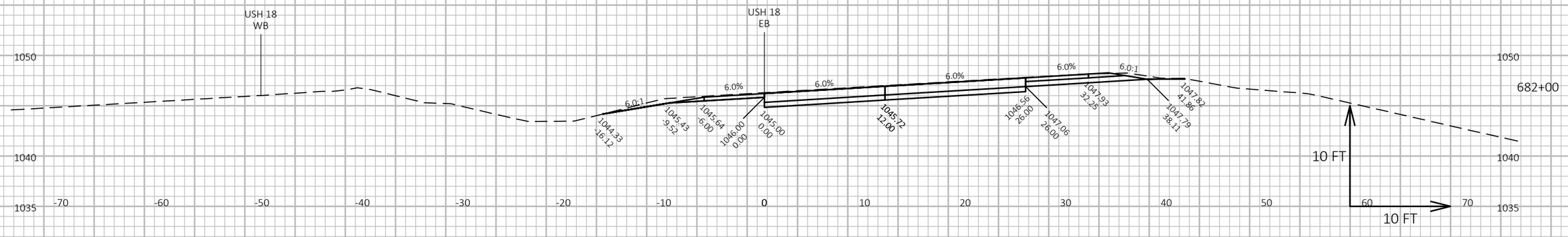

9

9

PROJECT NO: 1204-08-65	HWY: USH 18/151	COUNTY: DANE	CROSS SECTIONS: USH 18 EB	SHEET 719	E

FILE NAME : G:\WDOTSW\20007-000 USH 18\CIVIL 3D\SHEETSPLAN\CROSS SECTIONS\090303-XS_USH 18 EB.DWG
LAYOUT NAME - 18EB-10_1

PLOT DATE : 7/19/2022 1:09 AM PLOT BY : ERIC ANDRITSCH PLOT NAME :

PLOT SCALE : 1 IN:10 FT HORZ. / 1 IN:10 FT VERT.

WISDOT/CADDS SHEET 49

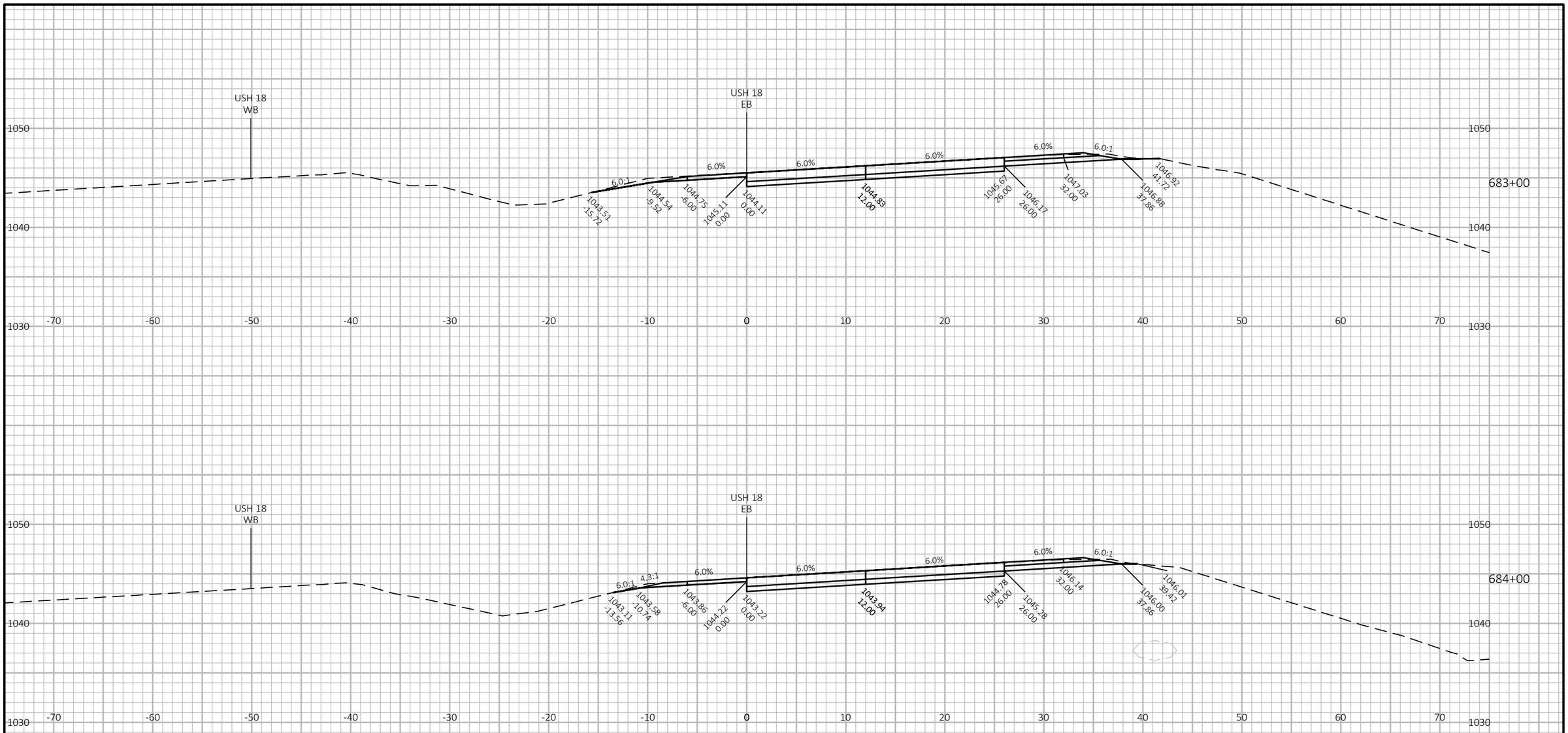

PROJECT NO: 1204-08-65	HWY: USH 18/151	COUNTY: DANE	CROSS SECTIONS: USH 18 EB	SHEET 720	E

FILE NAME : G:\WDOTSW\20007-000 USH 18\CIVIL 3D\SHEETSPLAN\CROSS SECTIONS\090303-XS_USH 18 EB.DWG
LAYOUT NAME - 18EB-10_2

PLOT DATE : 7/19/2022 1:10 AM PLOT BY : ERIC ANDRITSCH PLOT NAME : PLOT SCALE : 1 IN:10 FT HORZ. / 1 IN:10 FT VERT.

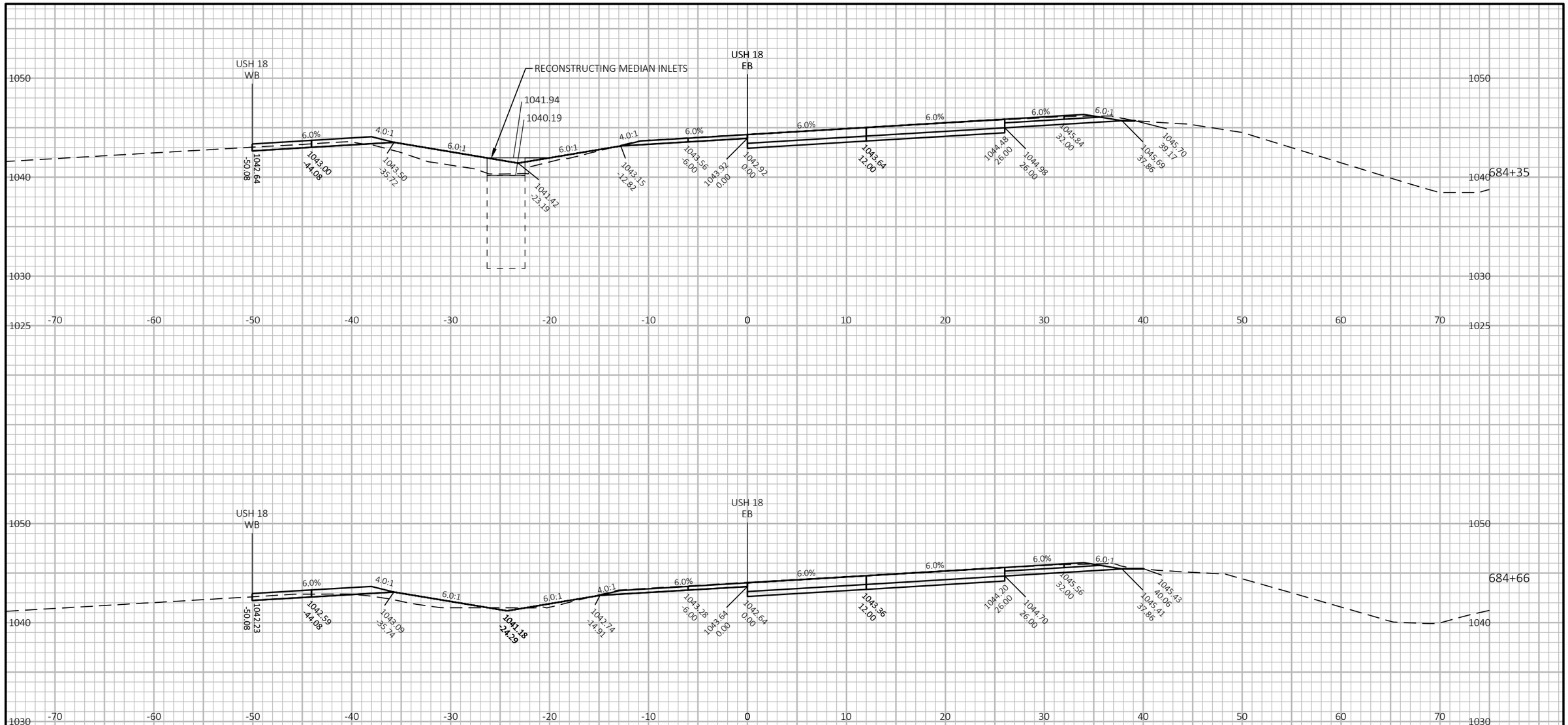

PROJECT NO: 1204-08-65	HWY: USH 18/151	COUNTY: DANE	CROSS SECTIONS: USH 18 EB	SHEET 721	E

FILE NAME : G:\WDOTSW\20007-000 USH 18\CIVIL 3D\SHEETSPLAN\CROSS SECTIONS\090303-XS_USH 18 EB.DWG
LAYOUT NAME - 18EB-10_3

PLOT DATE : 7/20/2022 2:13 PM PLOT BY : ERIC ANDRITSCH PLOT NAME : PLOT SCALE : 1 IN:10 FT HORZ. / 1 IN:10 FT VERT.

WISDOT/CADDS SHEET 49

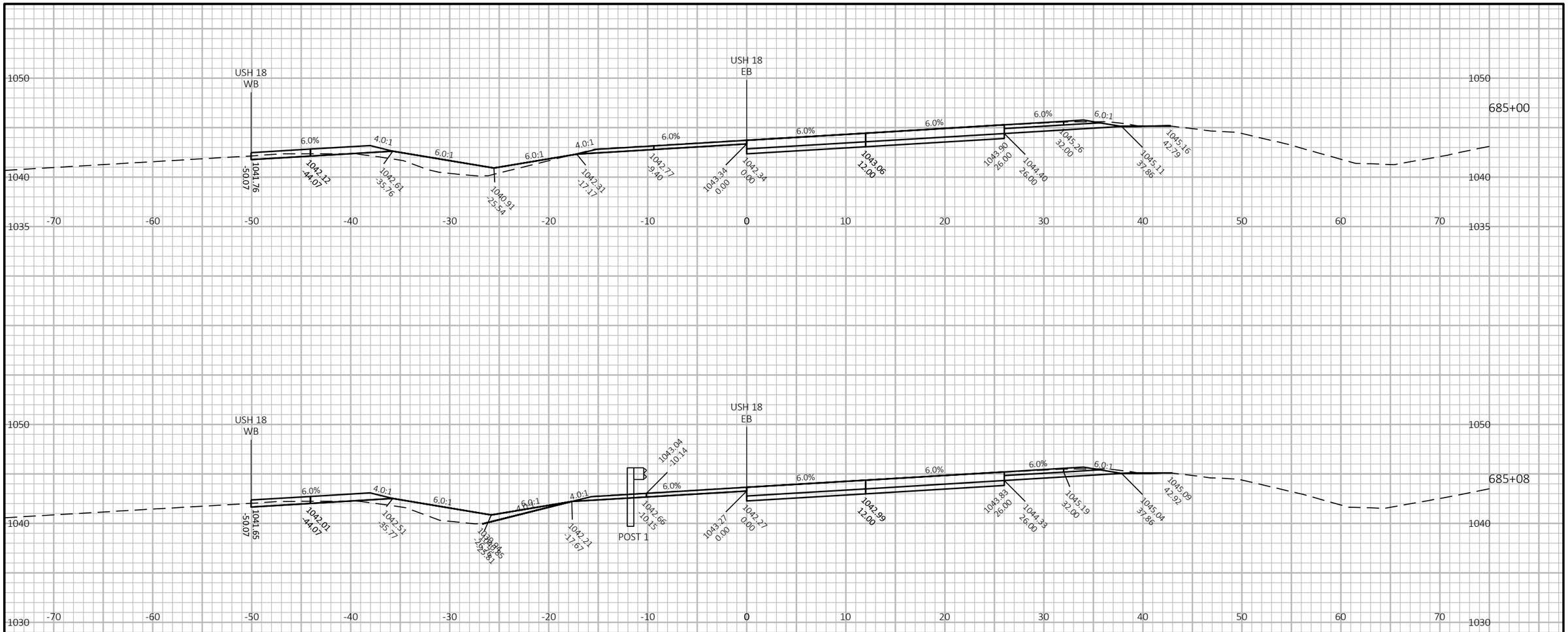

9

PROJECT NO: 1204-08-65	HWY: USH 18/151	COUNTY: DANE	CROSS SECTIONS: USH 18 EB	SHEET 722	E

9

FILE NAME : G:\WDOTSW\20007-000 USH 18\CIVIL 3D\SHEETSPLAN\CROSS SECTIONS\090303-XS_USH 18 EB.DWG
LAYOUT NAME - 18EB-10_4

PLOT DATE : 7/19/2022 1:14 AM PLOT BY : ERIC ANDRITSCH PLOT NAME : **PLOT SCALE :** 1 IN:10 FT HORZ. / 1 IN:10 FT VERT.

WISDOT/CADDS SHEET 49

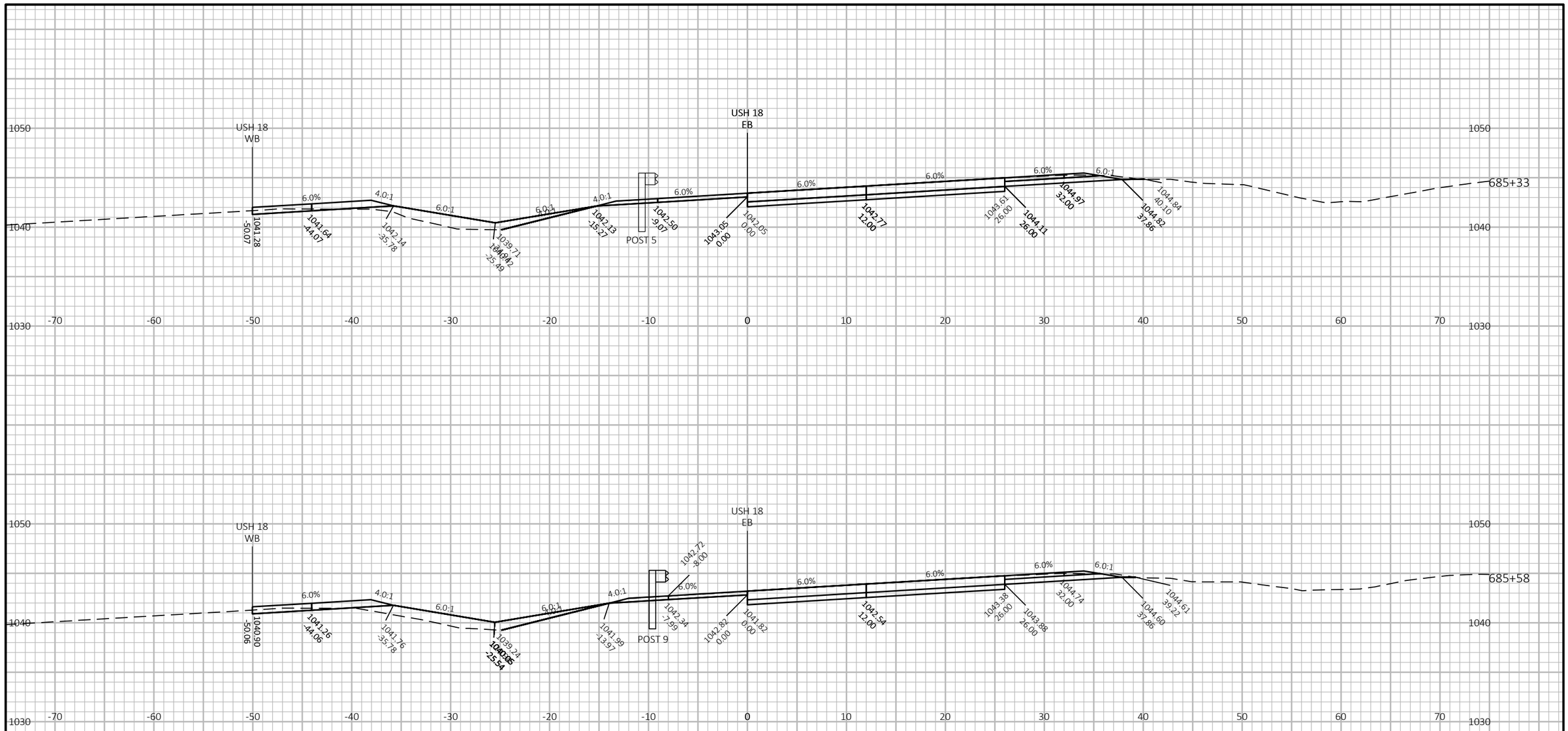

PROJECT NO: 1204-08-65	HWY: USH 18/151	COUNTY: DANE	CROSS SECTIONS: USH 18 EB	SHEET 723 E

FILE NAME : G:\WDOTSW\20007-000 USH 18\CIVIL 3D\SHEETSPLAN\CROSS SECTIONS\090303-XS_USH 18 EB.DWG
LAYOUT NAME - 18EB-10_5

PLOT DATE : 7/19/2022 1:15 AM PLOT BY : ERIC ANDRITSCH PLOT NAME : PLOT SCALE : 1 IN:10 FT HORZ. / 1 IN:10 FT VERT.

WISDOT/CADDS SHEET 49

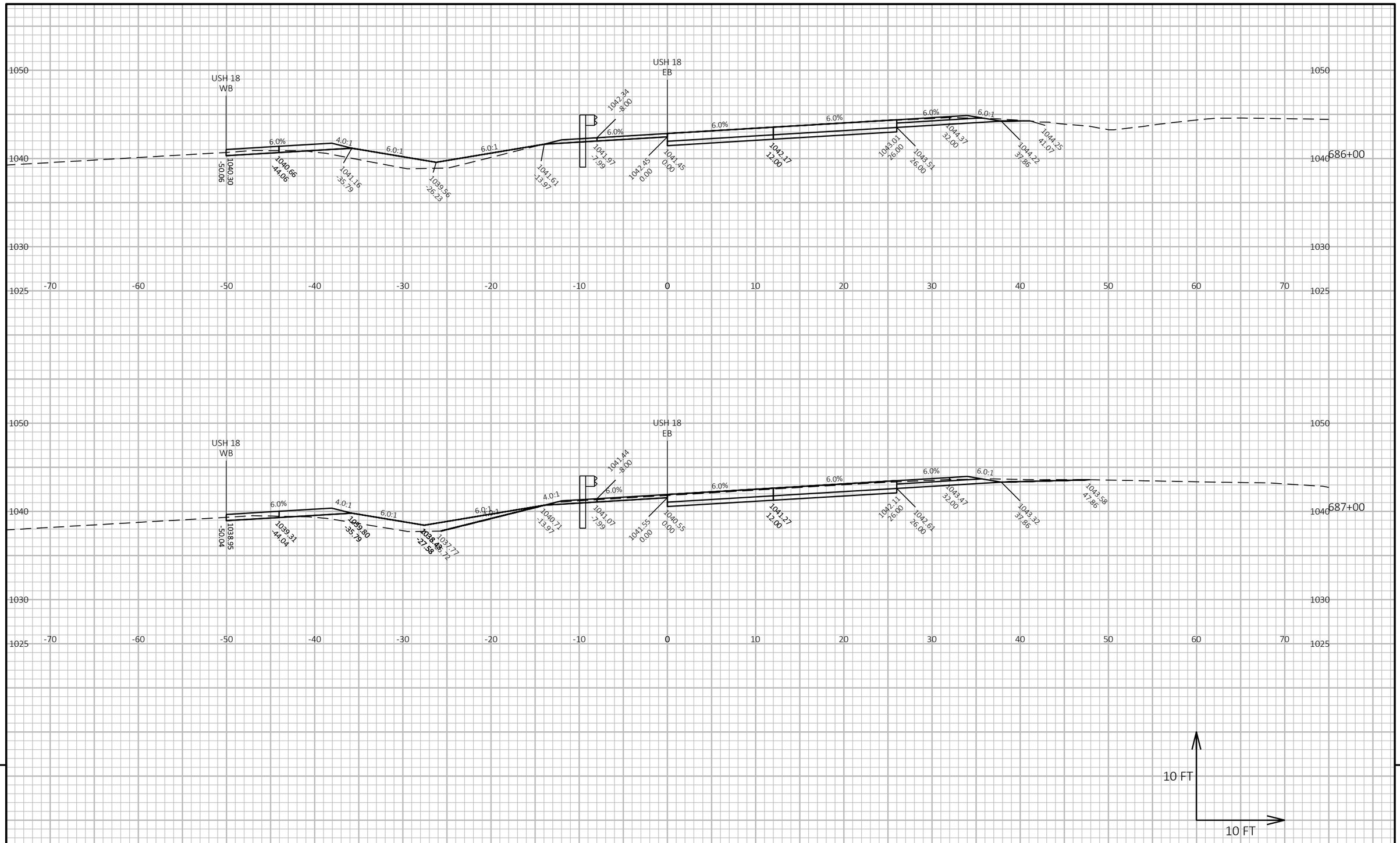

9

9

PROJECT NO: 1204-08-65	HWY: USH 18/151	COUNTY: DANE	CROSS SECTIONS: USH 18 EB	SHEET 724	E

FILE NAME : G:\WDOTSW\20007-000 USH 18\CIVIL 3D\SHEETSPLAN\CROSS SECTIONS\090303-XS_USH 18 EB.DWG
LAYOUT NAME - 18EB-10_6

PLOT DATE : 7/19/2022 1:17 AM PLOT BY : ERIC ANDRITSCH PLOT NAME :

PLOT SCALE : 1 IN:10 FT HORZ. / 1 IN:10 FT VERT.

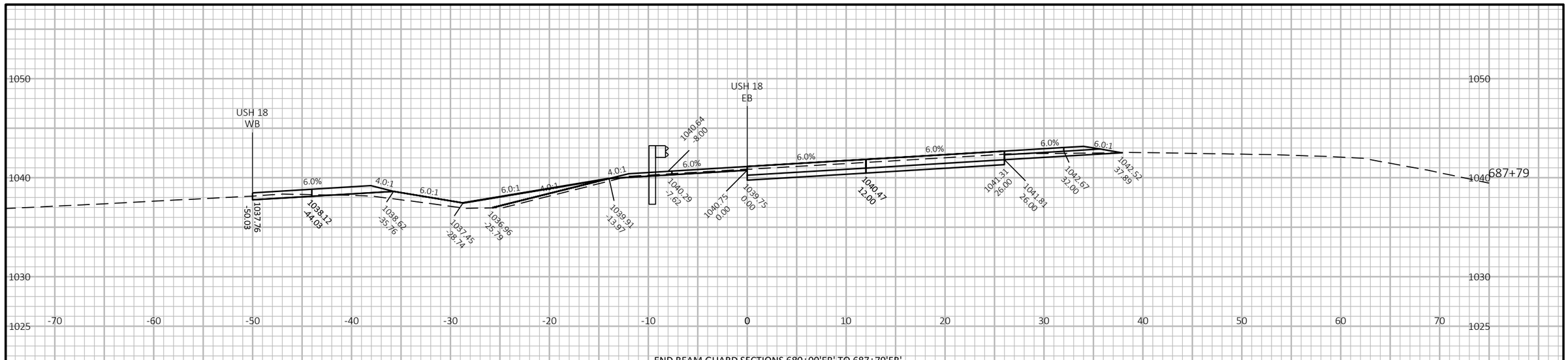

END BEAM GUARD SECTIONS 680+00'EB' TO 687+79'EB'

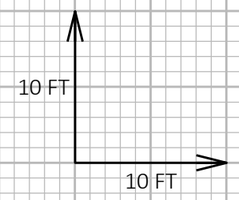

9

9

PROJECT NO: 1204-08-65	HWY: USH 18/151	COUNTY: DANE	CROSS SECTIONS: USH 18 EB	SHEET 725	E

FILE NAME : G:\WDOTSW\20007-000 USH 18\CIVIL 3D\SHEETSPLAN\CROSS SECTIONS\090303-XS_USH 18 EB.DWG
LAYOUT NAME - 18EB-10_7

PLOT DATE : 7/19/2022 1:18 AM PLOT BY : ERIC ANDRITSCH PLOT NAME : PLOT SCALE : 1 IN:10 FT HORZ. / 1 IN:10 FT VERT.

WISDOT/CADDS SHEET 49

START BEAM GUARD SECTIONS 713+81'EB' TO 717+51'EB'

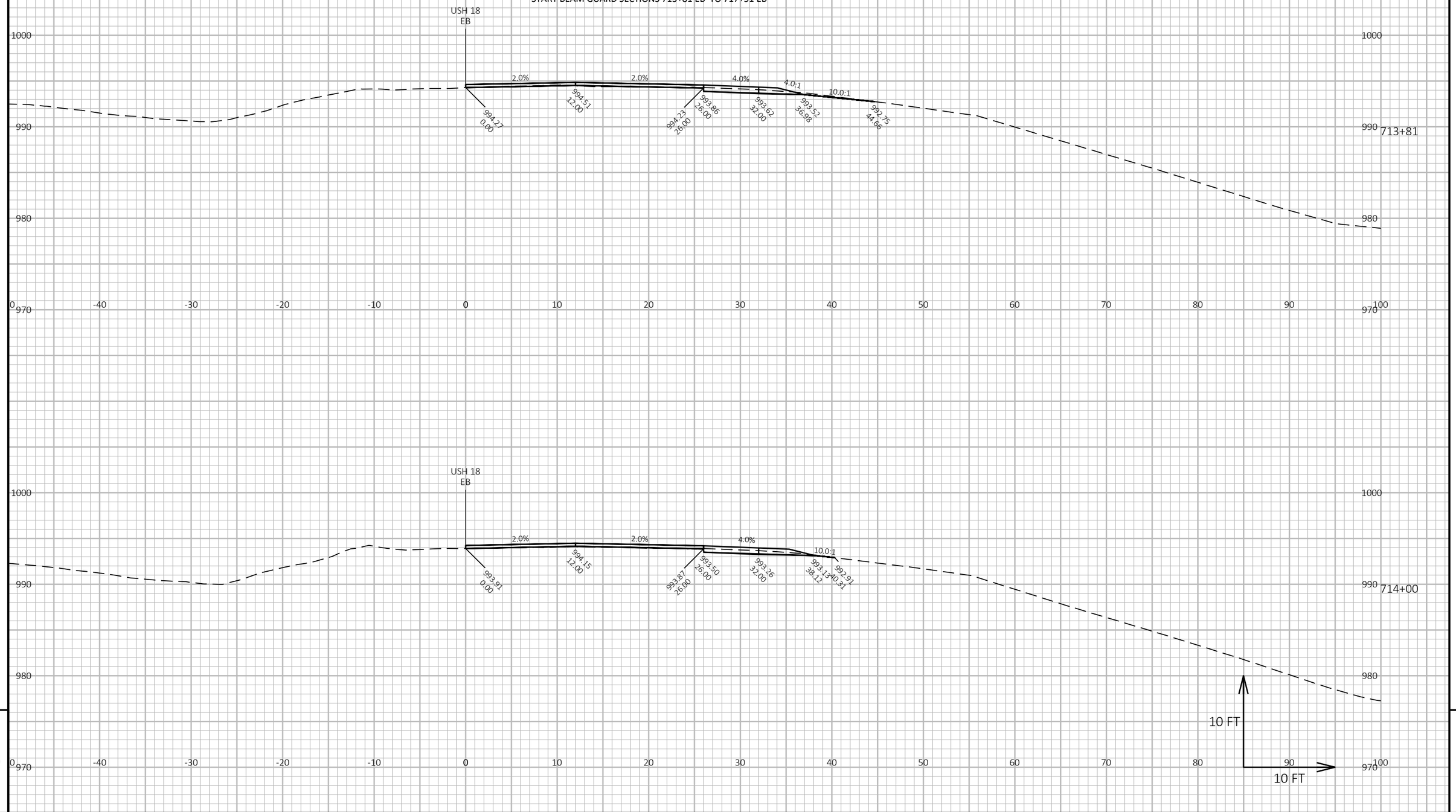

9

9

PROJECT NO: 1204-08-65	HWY: USH 18/151	COUNTY: DANE	CROSS SECTIONS: USH 18 EB	SHEET 726	E

FILE NAME : G:\WDOTSW\20007-000 USH 18\CIVIL 3D\SHEETSPLAN\CROSS SECTIONS\090303-XS_USH 18 EB.DWG
LAYOUT NAME - 18EB-11_1

PLOT DATE : 7/19/2022 1:20 AM

PLOT BY : ERIC ANDRITSCH

PLOT NAME :

PLOT SCALE : 1 IN:10 FT HORZ. / 1 IN:10 FT VERT.

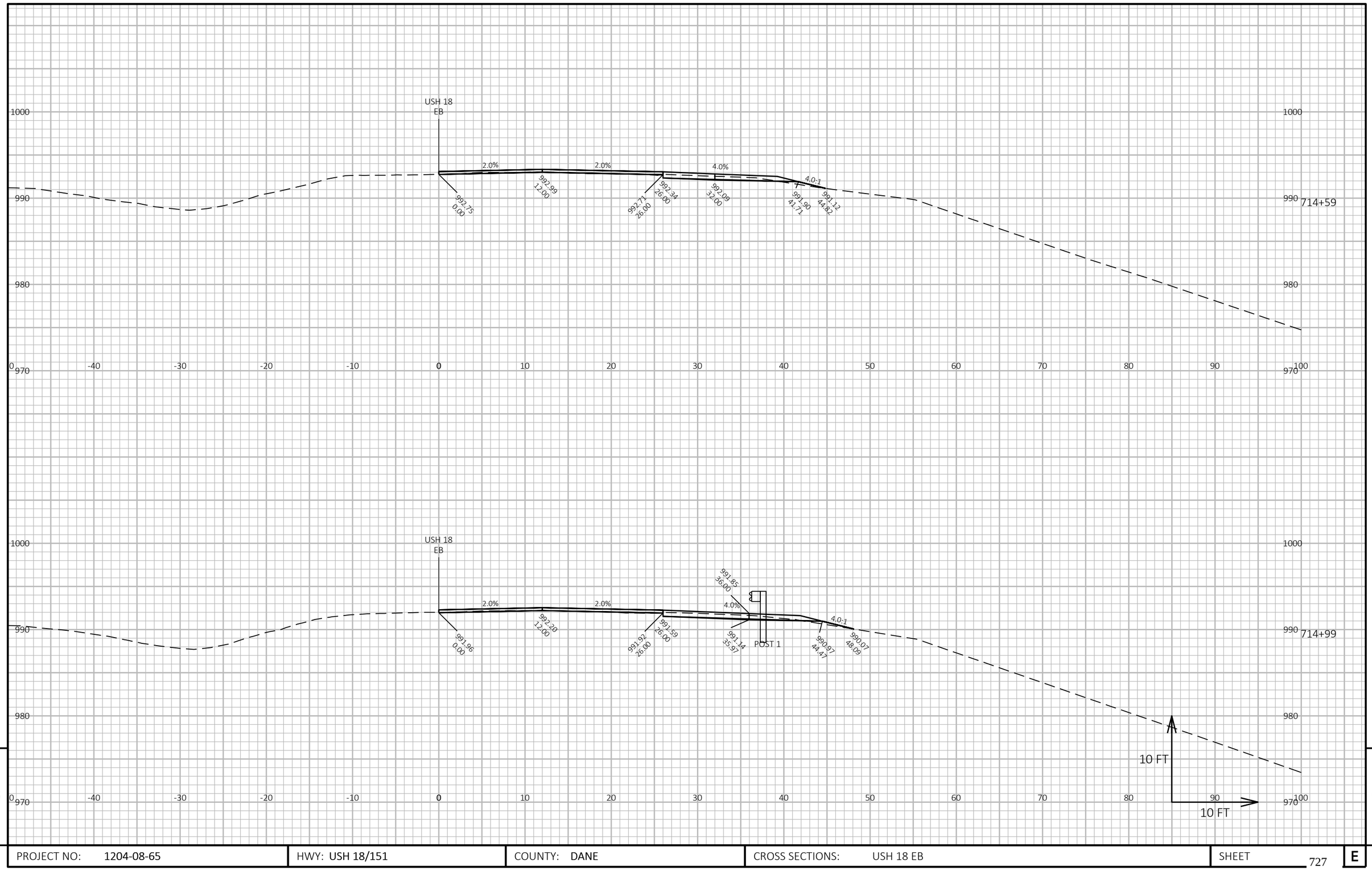

PROJECT NO: 1204-08-65	HWY: USH 18/151	COUNTY: DANE	CROSS SECTIONS: USH 18 EB	SHEET 727	E

FILE NAME : G:\WDOTSW\20007-000 USH 18\CIVIL 3D\SHEETSPLAN\CROSS SECTIONS\090303-XS_USH 18 EB.DWG
LAYOUT NAME - 18EB-11_2

PLOT DATE : 7/19/2022 1:21 AM PLOT BY : ERIC ANDRITSCH PLOT NAME : **PLOT SCALE :** 1 IN:10 FT HORZ. / 1 IN:10 FT VERT.

WISDOT/CADDS SHEET 49

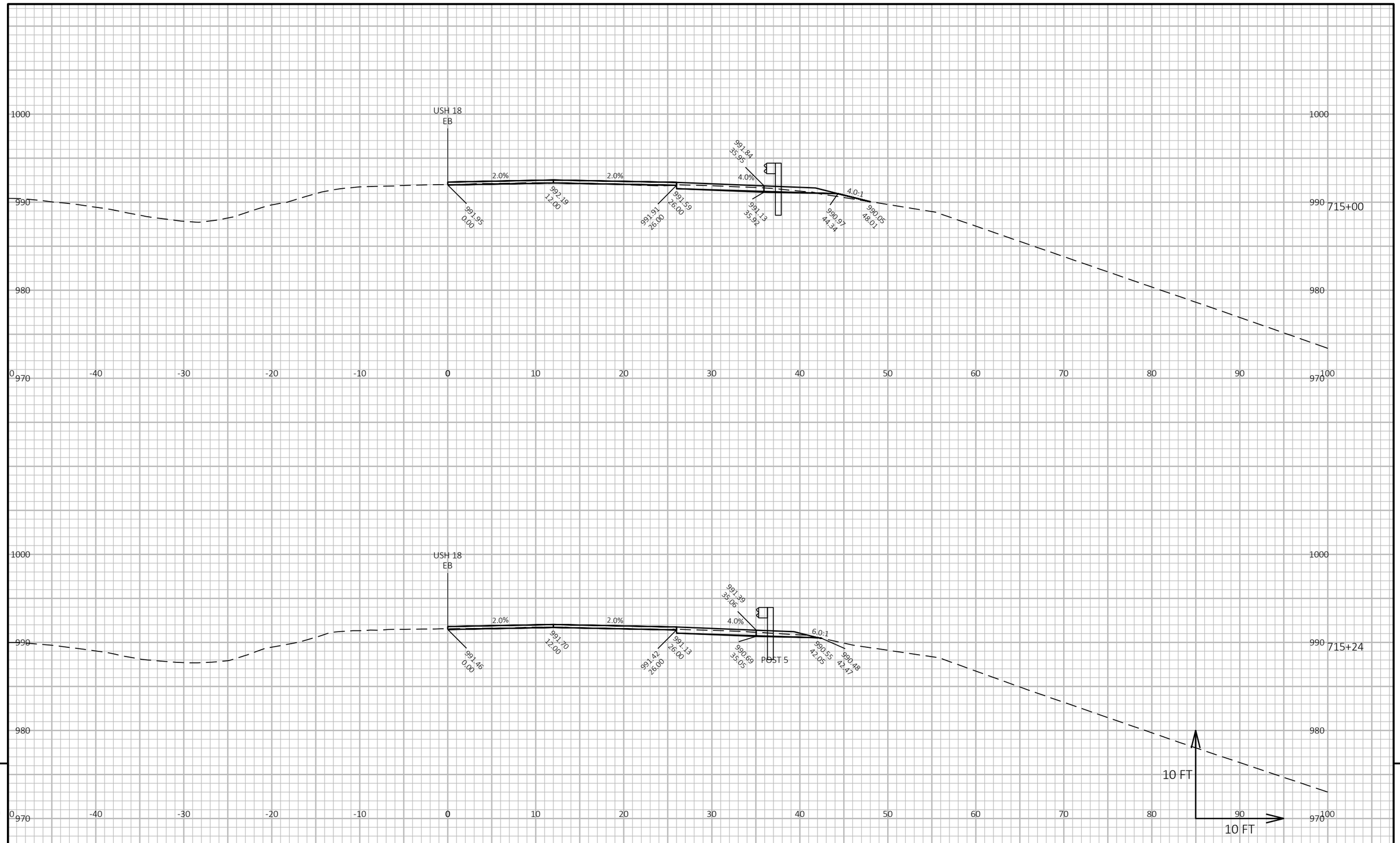

9

9

PROJECT NO: 1204-08-65	HWY: USH 18/151	COUNTY: DANE	CROSS SECTIONS: USH 18 EB	SHEET 728	E

FILE NAME : G:\WDOTSW\20007-000 USH 18\CIVIL 3D\SHEETSPLAN\CROSS SECTIONS\090303-XS_USH 18 EB.DWG
LAYOUT NAME - 18EB-11_3

PLOT DATE : 7/19/2022 1:23 AM

PLOT BY : ERIC ANDRITSCH

PLOT NAME :

PLOT SCALE : 1 IN:10 FT HORZ. / 1 IN:10 FT VERT.

WISDOT/CADDS SHEET 49

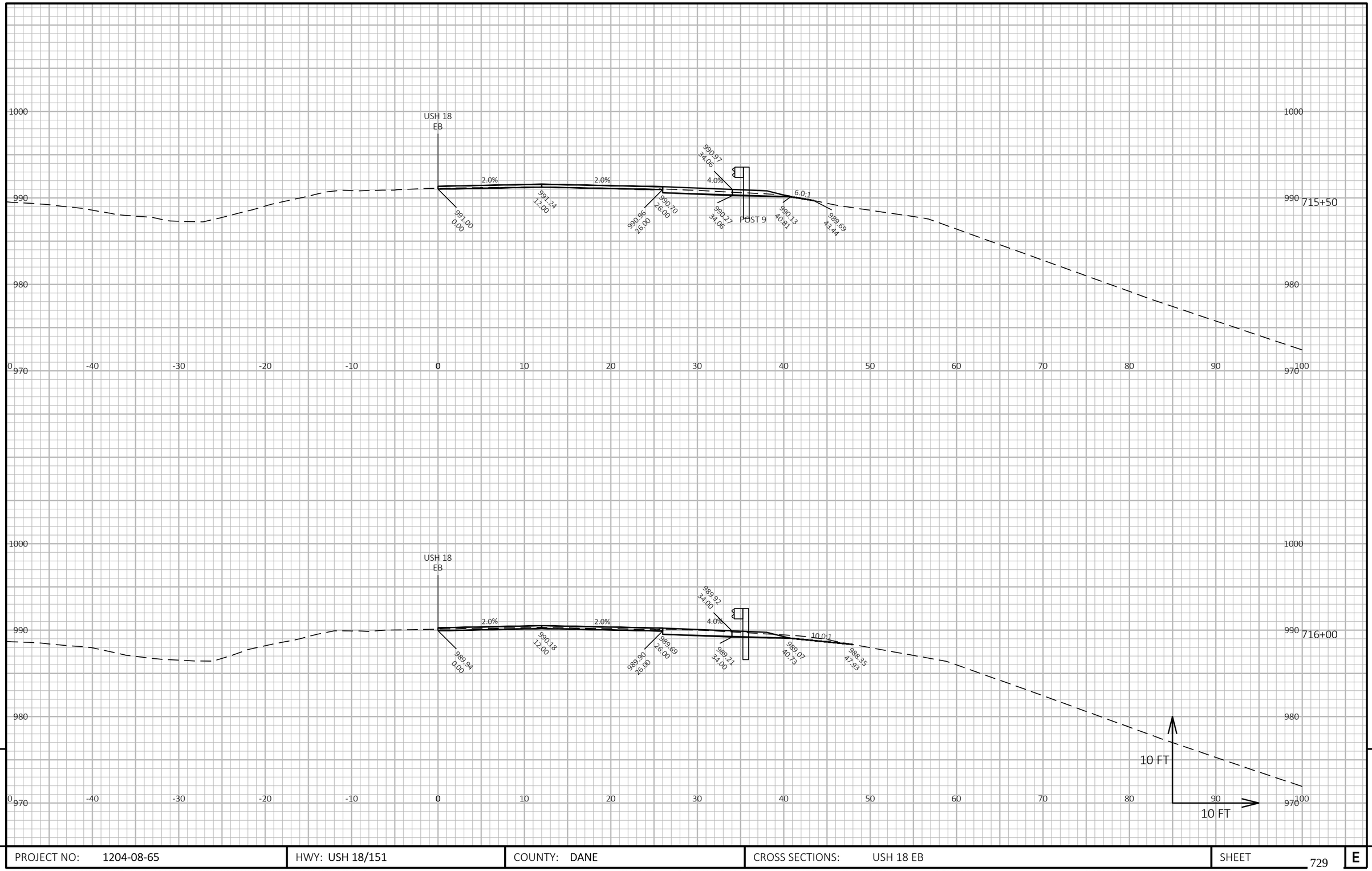

9

9

PROJECT NO: 1204-08-65	HWY: USH 18/151	COUNTY: DANE	CROSS SECTIONS: USH 18 EB	SHEET 729	E

FILE NAME : G:\WDOTSW\20007-000 USH 18\CIVIL 3D\SHEETSPLAN\CROSS SECTIONS\090303-XS_USH 18 EB.DWG
LAYOUT NAME - 18EB-11_4

PLOT DATE : 7/19/2022 1:25 AM

PLOT BY : ERIC ANDRITSCH

PLOT NAME :

PLOT SCALE : 1 IN:10 FT HORZ. / 1 IN:10 FT VERT.

WISDOT/CADDS SHEET 49

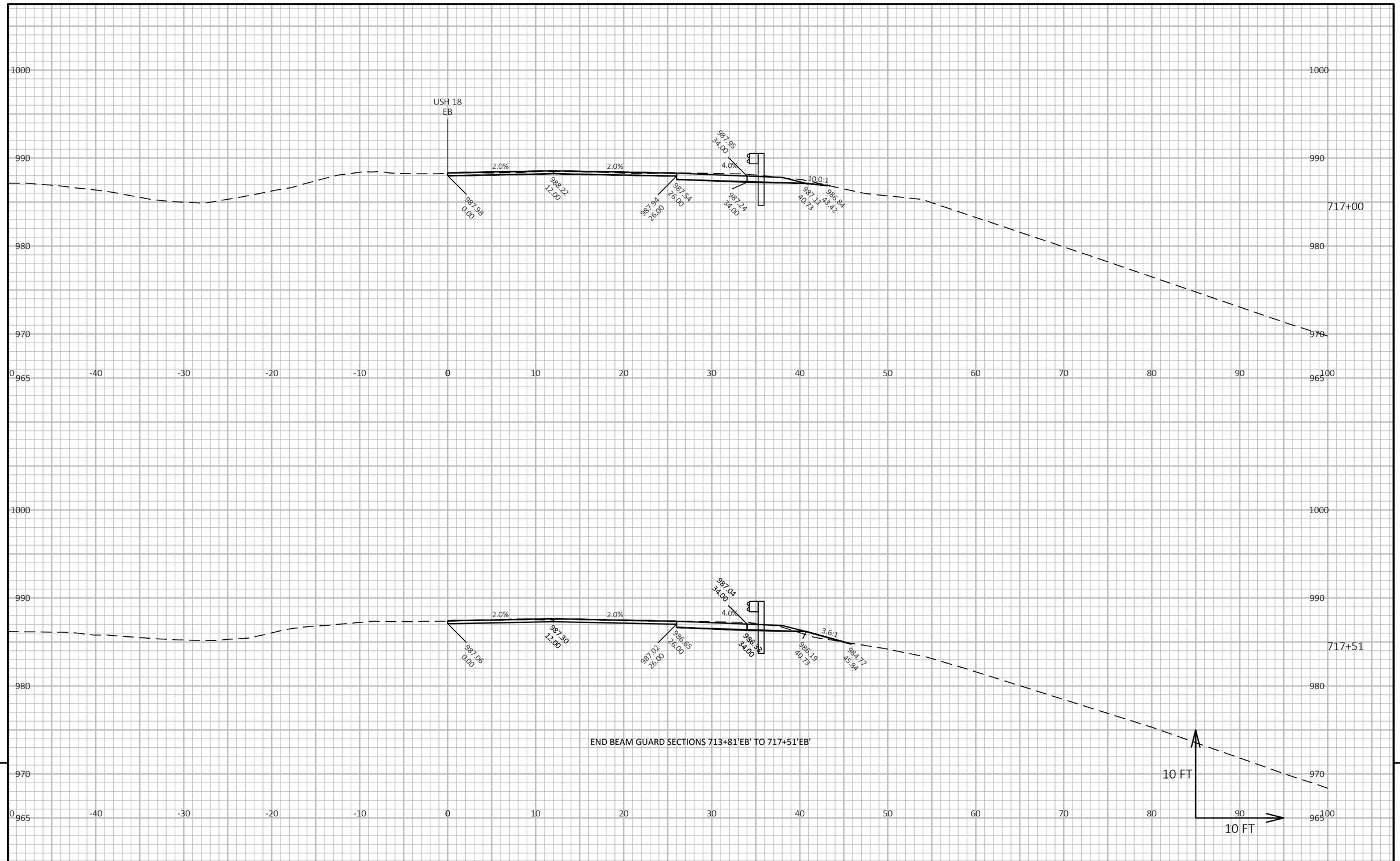

PROJECT NO: 1204-08-65	HWY: USH 18/151	COUNTY: DANE	CROSS SECTIONS: USH 18 EB	SHEET 730	E

FILE NAME : G:\WDOTSW\20007-000 USH 18\CIVIL 3D\SHEETSPLAN\CROSS SECTIONS\090303-XS_USH 18 EB.DWG
LAYOUT NAME - 18EB-11_5

PLOT DATE : 7/19/2022 1:26 AM PLOT BY : ERIC ANDRITSCH PLOT NAME : PLOT SCALE : 1 IN:10 FT HORZ. / 1 IN:10 FT VERT.

WISDOT/CADDS SHEET 49

START BEAM GUARD SECTIONS 740+50'EB' TO 744+20'EB'

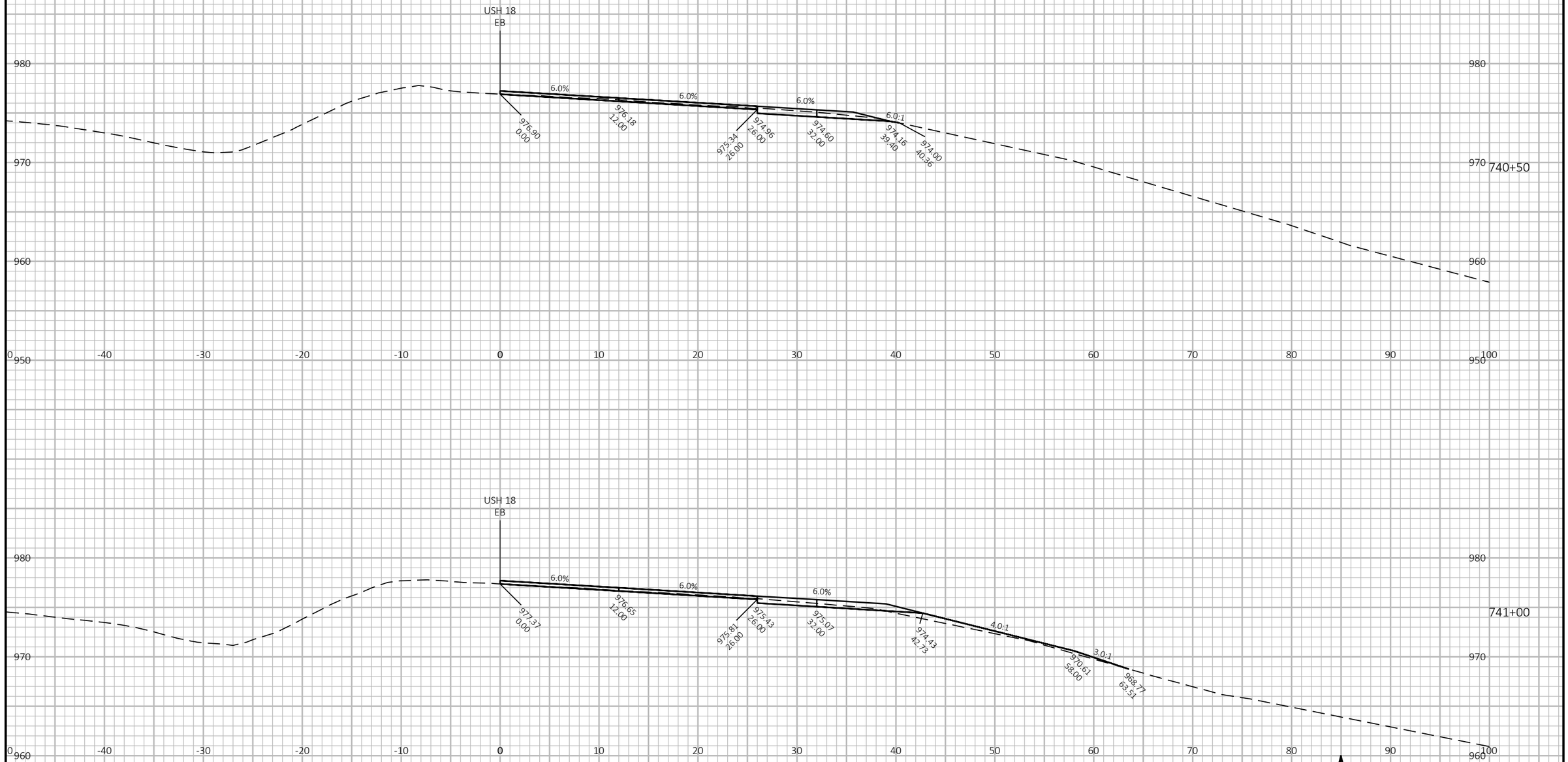

9

9

PROJECT NO: 1204-08-65	HWY: USH 18/151	COUNTY: DANE	CROSS SECTIONS: USH 18 EB	SHEET 731	E

FILE NAME : G:\WDOTSW\20007-000 USH 18\CIVIL 3D\SHEETSPLAN\CROSS SECTIONS\090303-XS_USH 18 EB.DWG
LAYOUT NAME - 18EB-12_1

PLOT DATE : 7/19/2022 1:28 AM PLOT BY : ERIC ANDRITSCH PLOT NAME : **PLOT SCALE :** 1 IN:10 FT HORZ. / 1 IN:10 FT VERT.

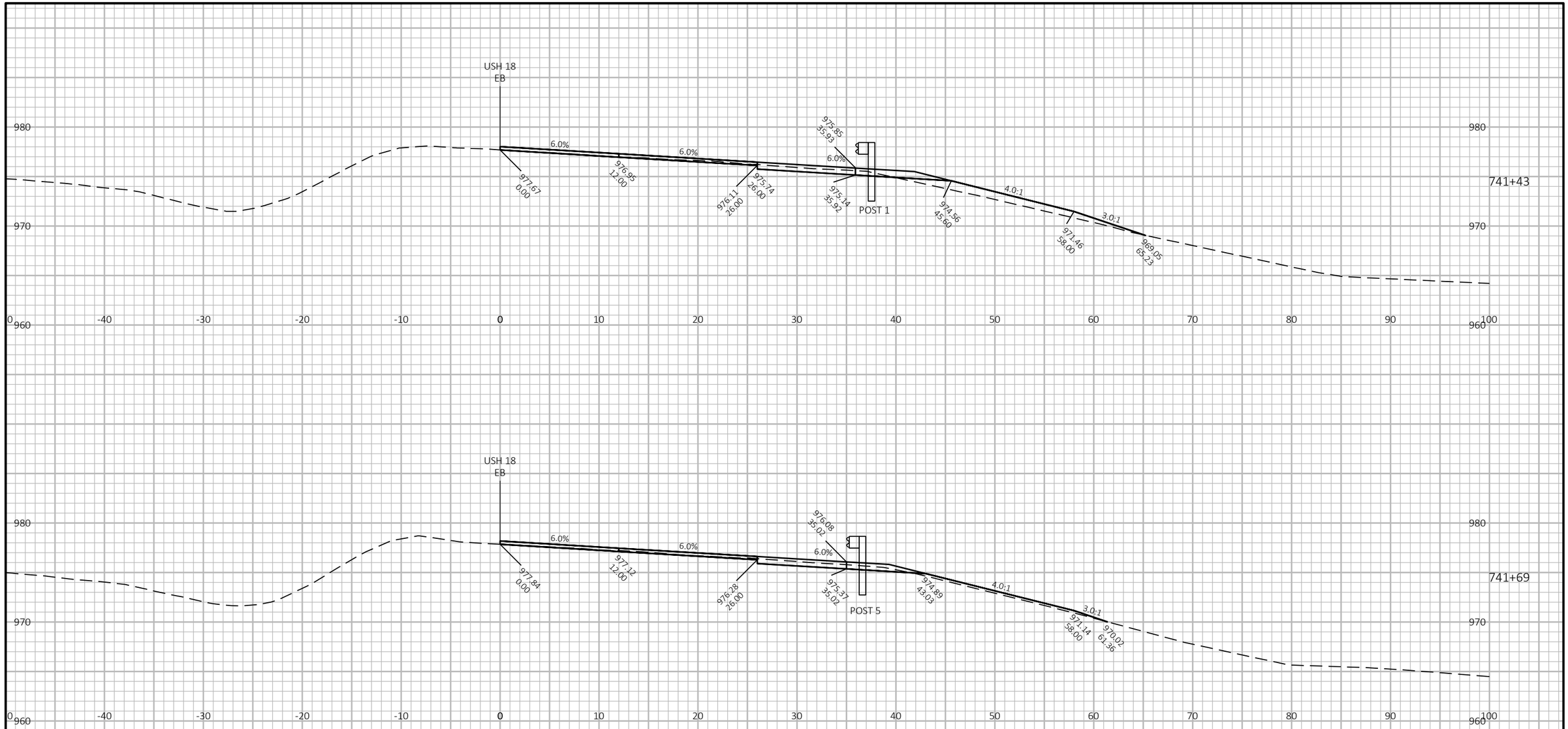

9

9

PROJECT NO: 1204-08-65	HWY: USH 18/151	COUNTY: DANE	CROSS SECTIONS: USH 18 EB	SHEET 732	E

FILE NAME : G:\WDOTSW\20007-000 USH 18\CIVIL 3D\SHEETSPLAN\CROSS SECTIONS\090303-XS_USH 18 EB.DWG
LAYOUT NAME - 18EB-12_2

PLOT DATE : 7/19/2022 1:29 AM

PLOT BY : ERIC ANDRITSCH

PLOT NAME :

PLOT SCALE : 1 IN:10 FT HORZ. / 1 IN:10 FT VERT.

WISDOT/CADDS SHEET 49

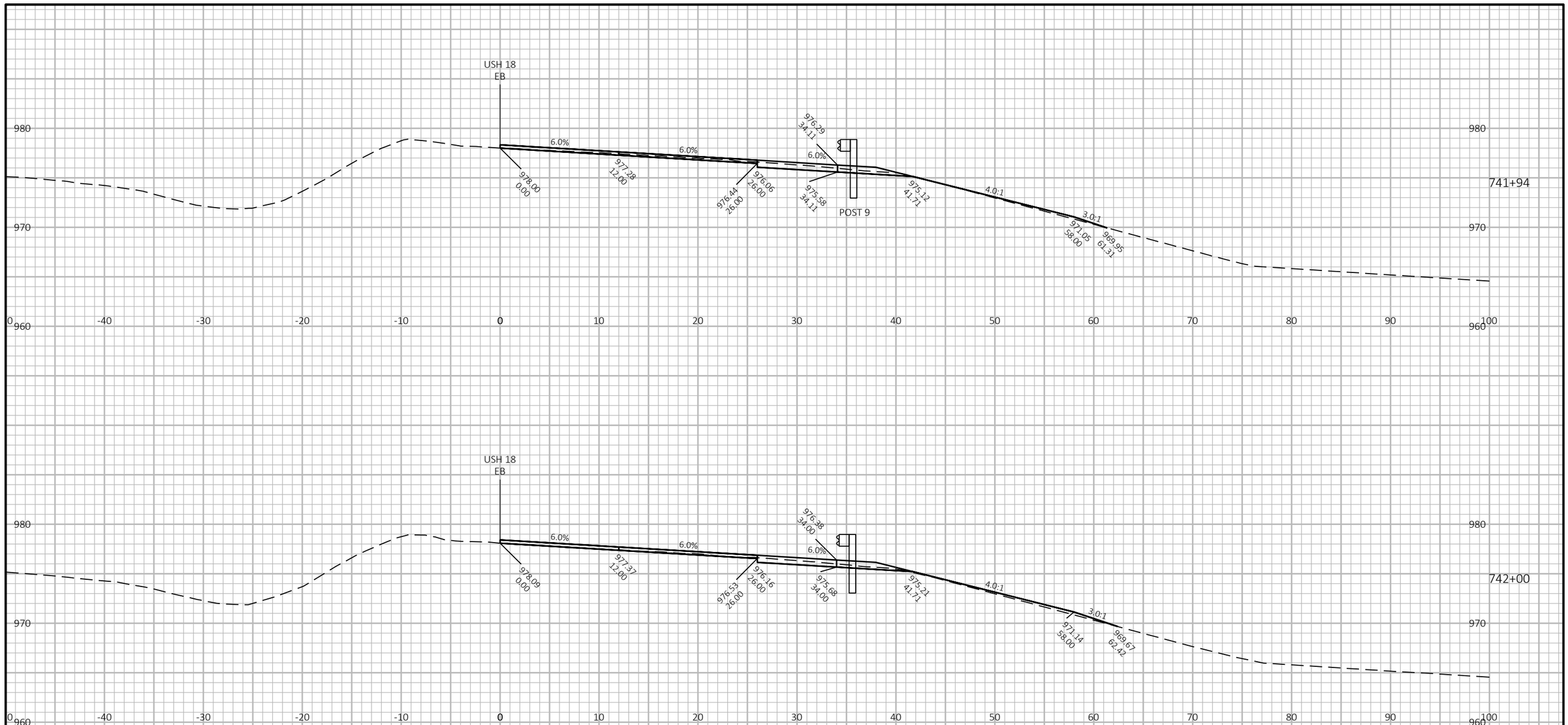

9

9

PROJECT NO: 1204-08-65	HWY: USH 18/151	COUNTY: DANE	CROSS SECTIONS: USH 18 EB	SHEET 733	E

FILE NAME : G:\WDOTSW\20007-000 USH 18\CIVIL 3D\SHEETSPLAN\CROSS SECTIONS\090303-XS_USH 18 EB.DWG
LAYOUT NAME - 18EB-12_3

PLOT DATE : 7/19/2022 1:31 AM PLOT BY : ERIC ANDRITSCH PLOT NAME :

PLOT SCALE : 1 IN:10 FT HORZ. / 1 IN:10 FT VERT.

USH 18
EB

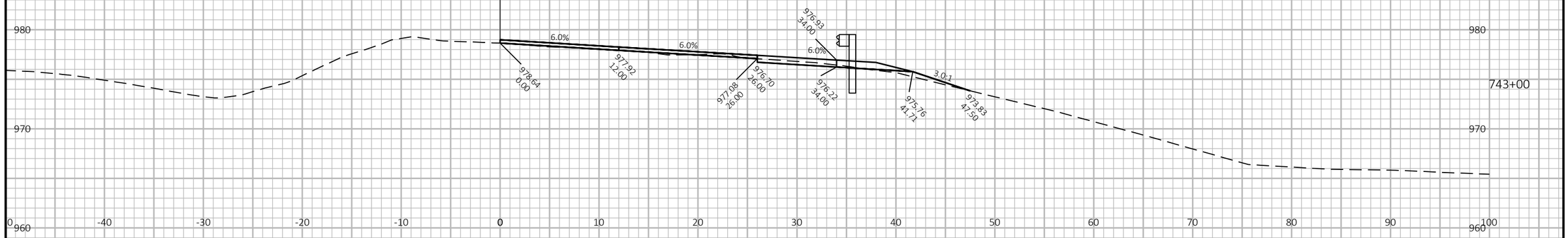

USH 18
EB

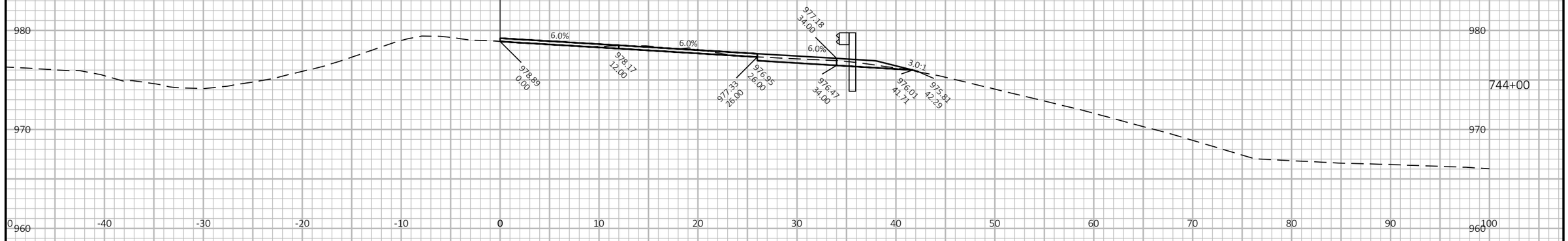

10 FT

10 FT

9

9

PROJECT NO: 1204-08-65	HWY: USH 18/151	COUNTY: DANE	CROSS SECTIONS: USH 18 EB	SHEET 734	E

FILE NAME : G:\WDOTSW\20007-000 USH 18\CIVIL 3D\SHEETSPLAN\CROSS SECTIONS\090303-XS_USH 18 EB.DWG
LAYOUT NAME - 18EB-12_4

PLOT DATE : 7/19/2022 1:32 AM PLOT BY : ERIC ANDRITSCH PLOT NAME :

PLOT SCALE : 1 IN:10 FT HORZ. / 1 IN:10 FT VERT.

WISDOT/CADDS SHEET 49

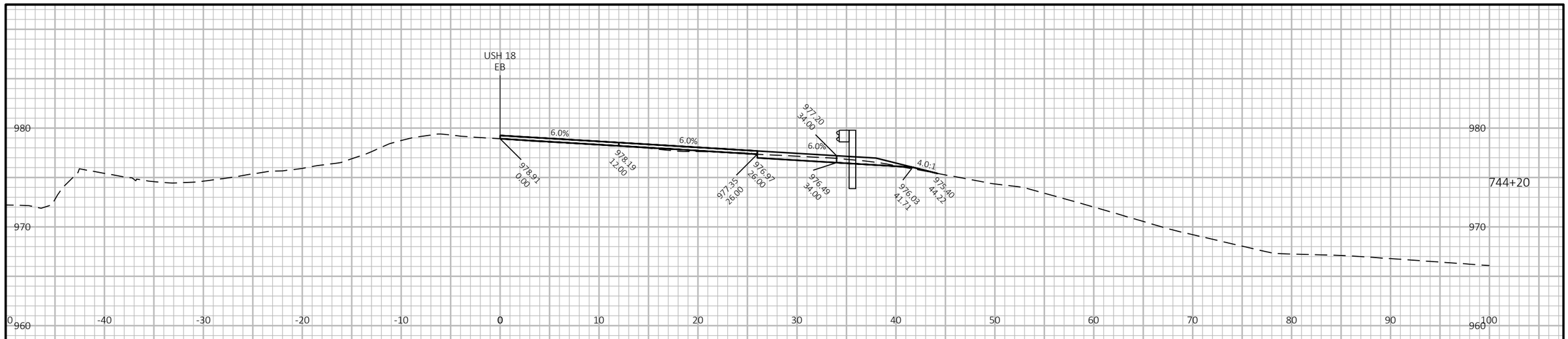

END BEAM GUARD SECTIONS 740+50'EB' TO 744+20'EB'

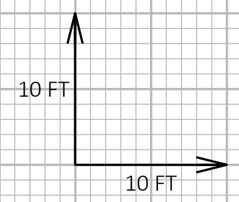

9

9

PROJECT NO: 1204-08-65	HWY: USH 18/151	COUNTY: DANE	CROSS SECTIONS: USH 18 EB	SHEET 735	E

FILE NAME : G:\WDOTSW\20007-000 USH 18\CIVIL 3D\SHEETSPLAN\CROSS SECTIONS\090303-XS_USH 18 EB.DWG
LAYOUT NAME - 18EB-12_5

PLOT DATE : 7/19/2022 1:34 AM PLOT BY : ERIC ANDRITSCH PLOT NAME :

PLOT SCALE : 1 IN:10 FT HORZ. / 1 IN:10 FT VERT.

WISDOT/CADDS SHEET 49

START BEAM GUARD SECTIONS 818+06'EB' TO 824+00'EB'

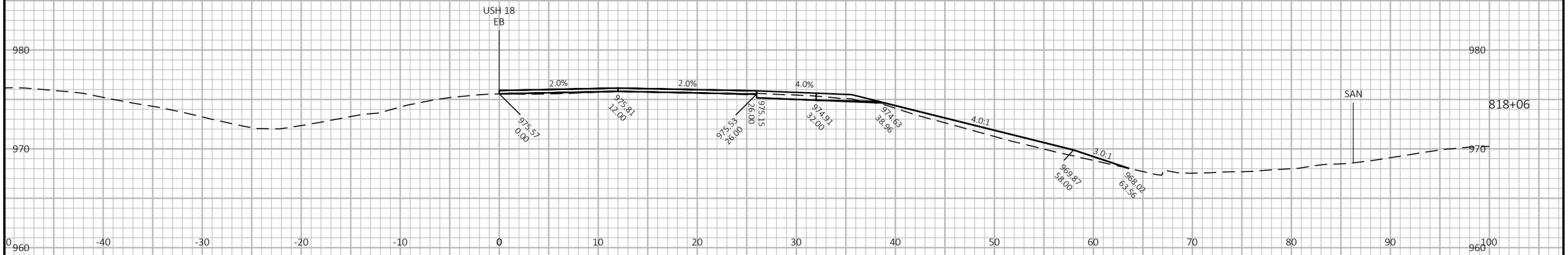

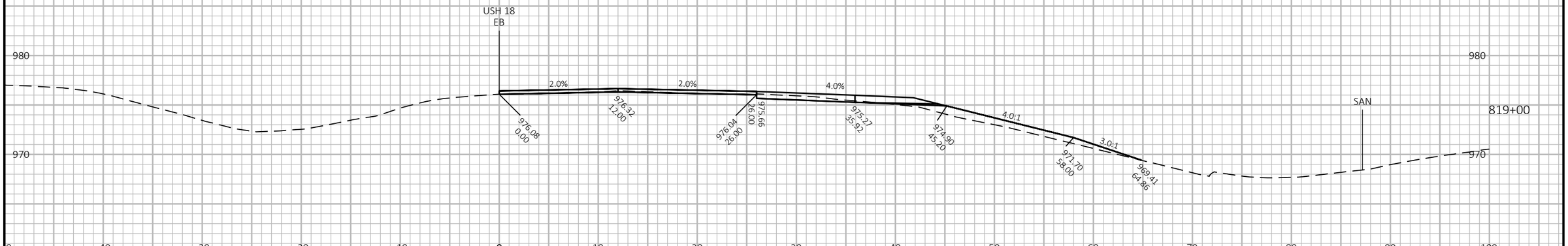

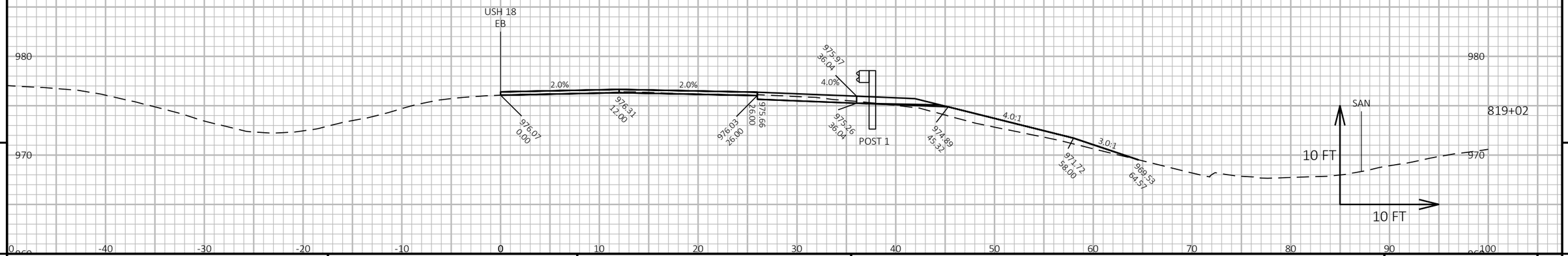

9

9

PROJECT NO: 1204-08-65	HWY: USH 18/151	COUNTY: DANE	CROSS SECTIONS: USH 18 EB	SHEET 736	E

FILE NAME : G:\WDOTSW\20007-000 USH 18\CIVIL 3D\SHEETSPLAN\CROSS SECTIONS\090303-XS_USH 18 EB.DWG
LAYOUT NAME - 18EB-13_1

PLOT DATE : 7/20/2022 2:44 PM PLOT BY : ERIC ANDRITSCH PLOT NAME : PLOT SCALE : 1 IN:10 FT HORZ. / 1 IN:10 FT VERT.

WISDOT/CADDS SHEET 49

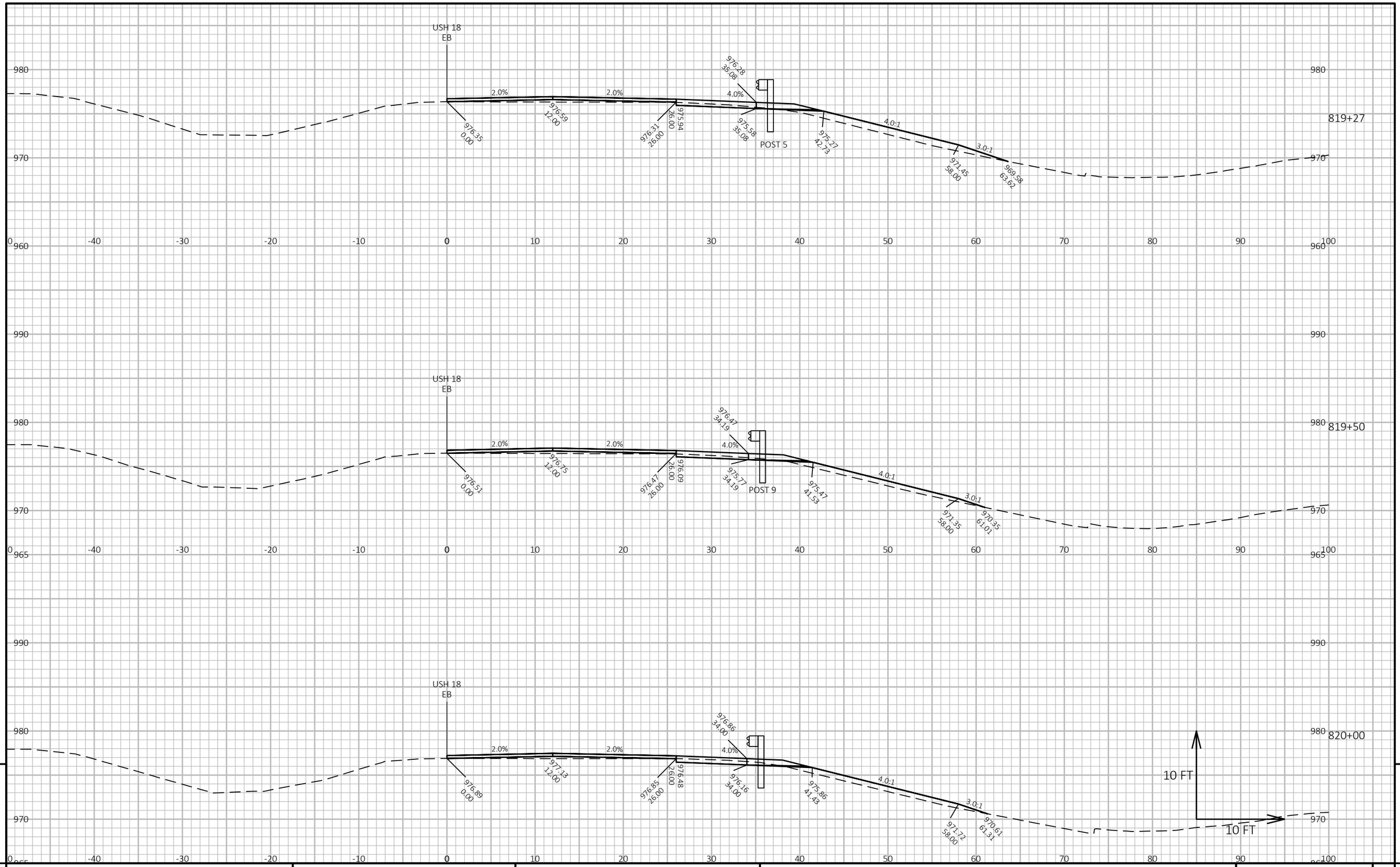

9

9

PROJECT NO: 1204-08-65	HWY: USH 18/151	COUNTY: DANE	CROSS SECTIONS: USH 18 EB	SHEET 737	E

FILE NAME : G:\WDOTSW\20007-000 USH 18\CIVIL 3D\SHEETSPLAN\CROSS SECTIONS\090303-XS_USH 18 EB.DWG
LAYOUT NAME - 18EB-13_2

PLOT DATE : 7/19/2022 1:37 AM PLOT BY : ERIC ANDRITSCH PLOT NAME :

PLOT SCALE : 1 IN:10 FT HORZ. / 1 IN:10 FT VERT.

WISDOT/CADDS SHEET 49

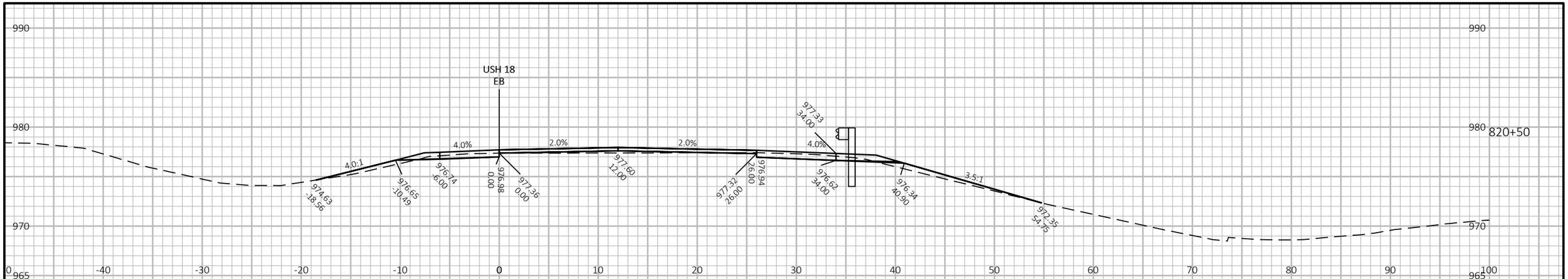

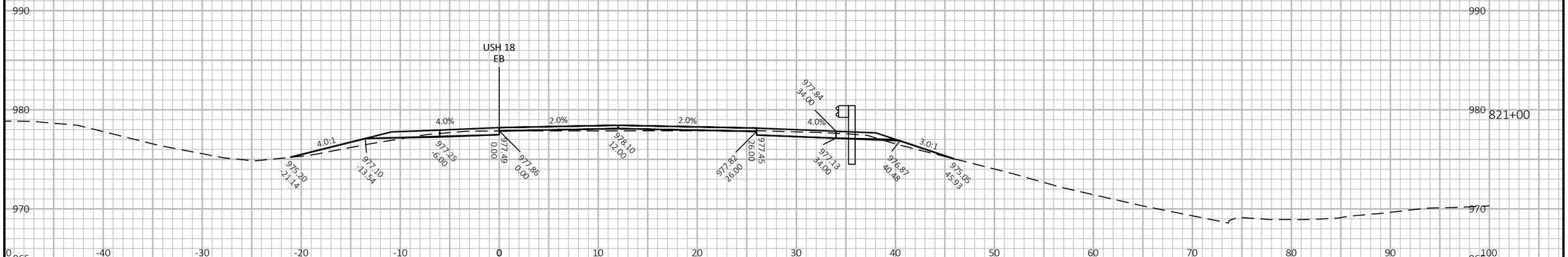

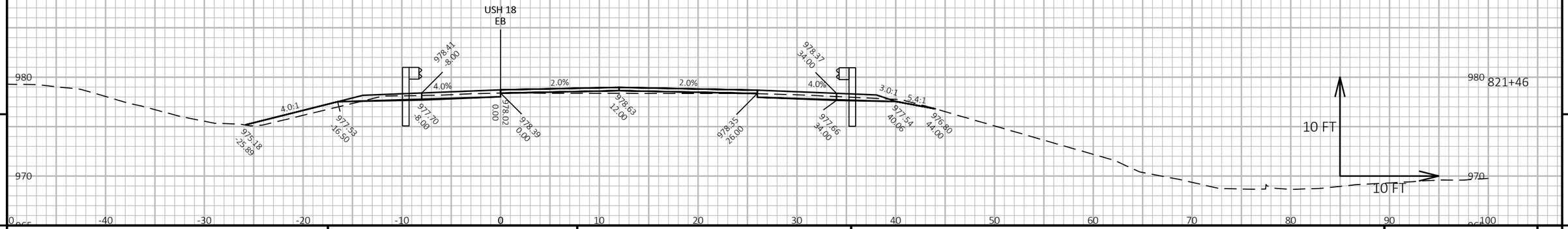

9

9

PROJECT NO: 1204-08-65	HWY: USH 18/151	COUNTY: DANE	CROSS SECTIONS: USH 18 EB	SHEET 738	E

FILE NAME : G:\WDOTSW\20007-000 USH 18\CIVIL 3D\SHEETSPLAN\CROSS SECTIONS\090303-XS_USH 18 EB.DWG
LAYOUT NAME - 18EB-13_3

PLOT DATE : 7/19/2022 1:39 AM PLOT BY : ERIC ANDRITSCH PLOT NAME :

PLOT SCALE : 1 IN:10 FT HORZ. / 1 IN:10 FT VERT.

WISDOT/CADDS SHEET 49

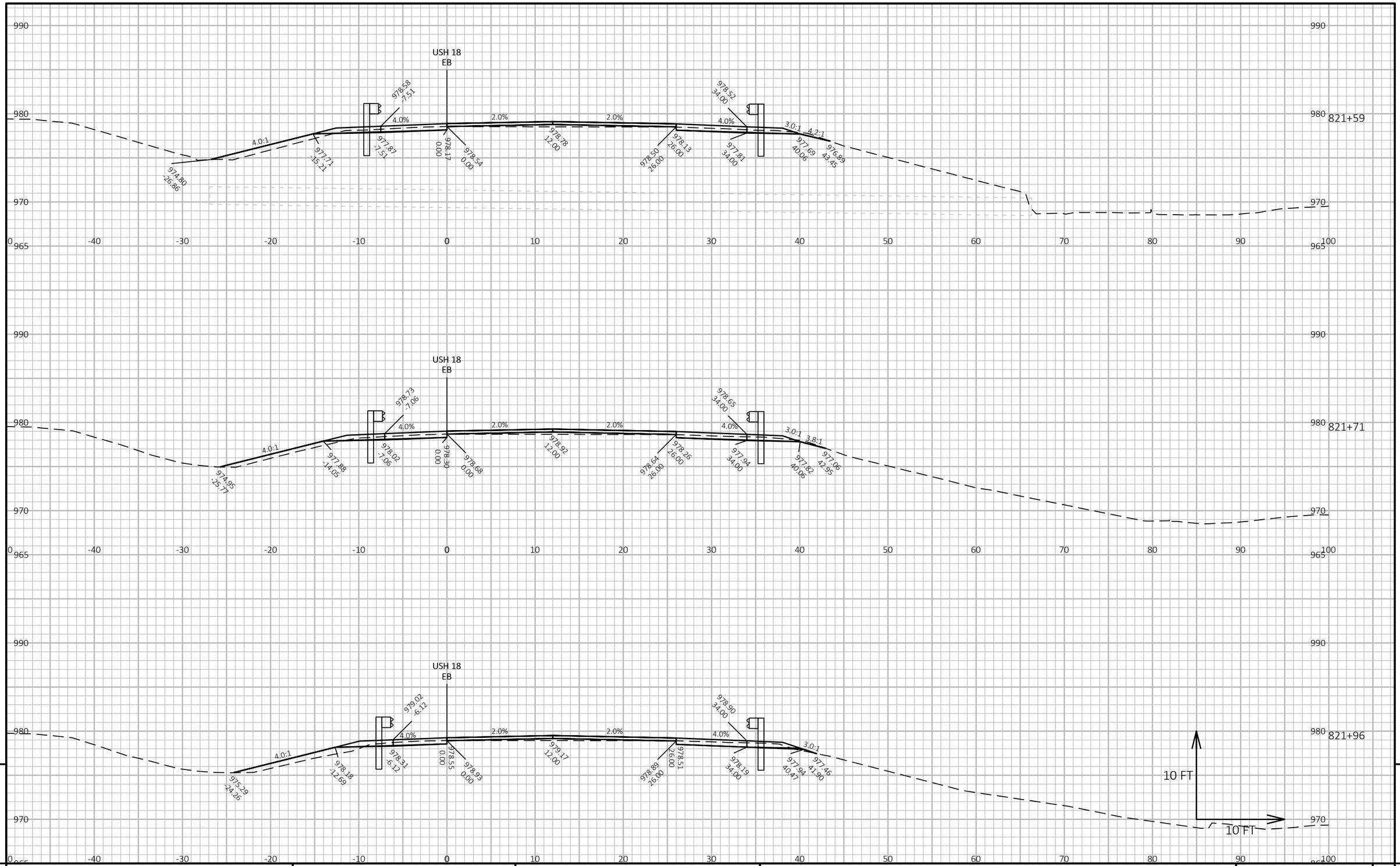

PROJECT NO: 1204-08-65	HWY: USH 18/151	COUNTY: DANE	CROSS SECTIONS: USH 18 EB	SHEET 739 E

FILE NAME : G:\WDOTSW\20007-000 USH 18\CIVIL 3D\SHEETSPLAN\CROSS SECTIONS\090303-XS_USH 18 EB.DWG
LAYOUT NAME - 18EB-13_4

PLOT DATE : 7/19/2022 1:40 AM PLOT BY : ERIC ANDRITSCH PLOT NAME : **PLOT SCALE :** 1 IN:10 FT HORZ. / 1 IN:10 FT VERT.

WISDOT/CADDS SHEET 49

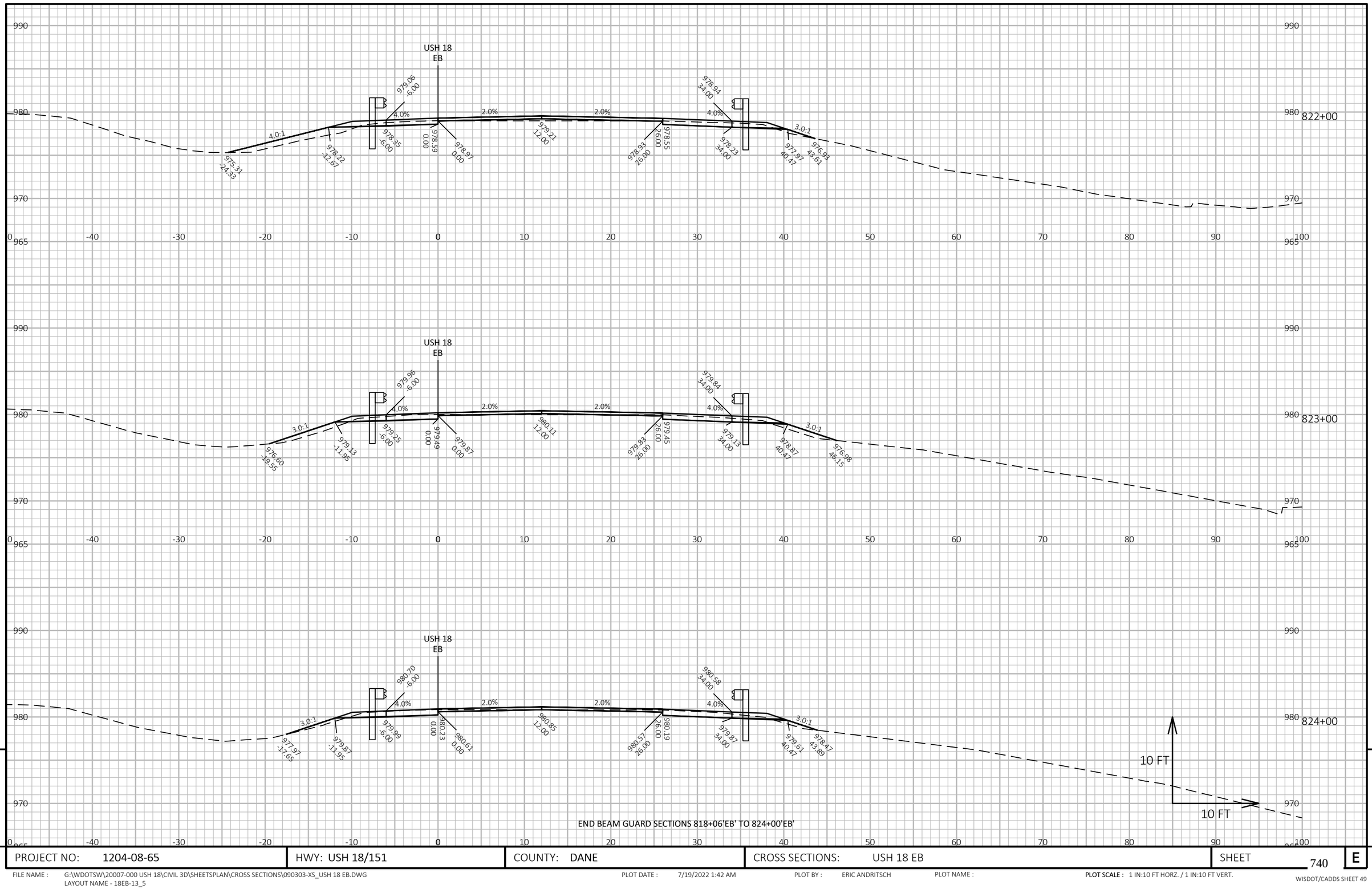

END BEAM GUARD SECTIONS 818+06'EB' TO 824+00'EB'

9 9

PROJECT NO: 1204-08-65	HWY: USH 18/151	COUNTY: DANE	CROSS SECTIONS: USH 18 EB	SHEET 740	E

FILE NAME : G:\WDOTSW\20007-000 USH 18\CIVIL 3D\SHEETSPLAN\CROSS SECTIONS\090303-XS_USH 18 EB.DWG
LAYOUT NAME - 18EB-13_5

PLOT DATE : 7/19/2022 1:42 AM PLOT BY : ERIC ANDRITSCH PLOT NAME : **PLOT SCALE :** 1 IN:10 FT HORZ. / 1 IN:10 FT VERT.

START CABLE GUARD SECTIONS 182+42 to 254+13

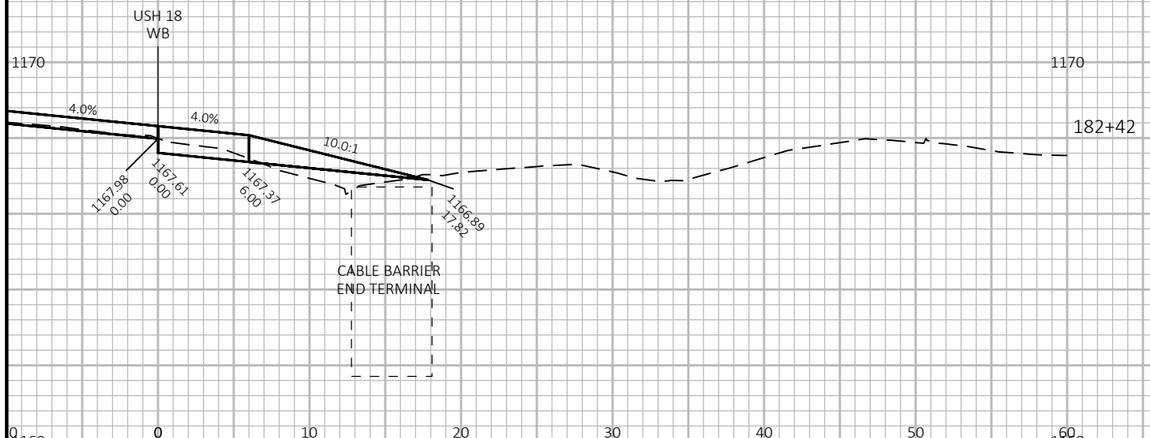

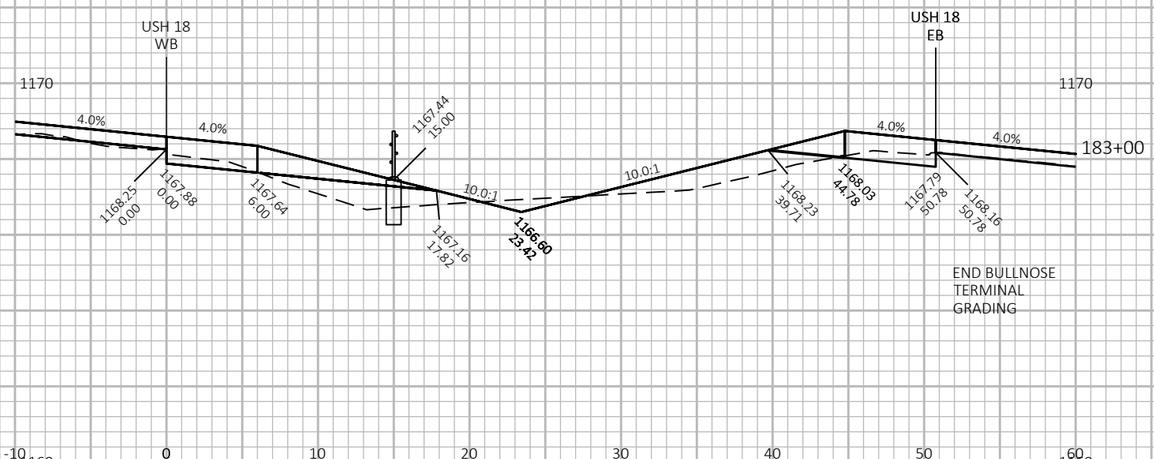

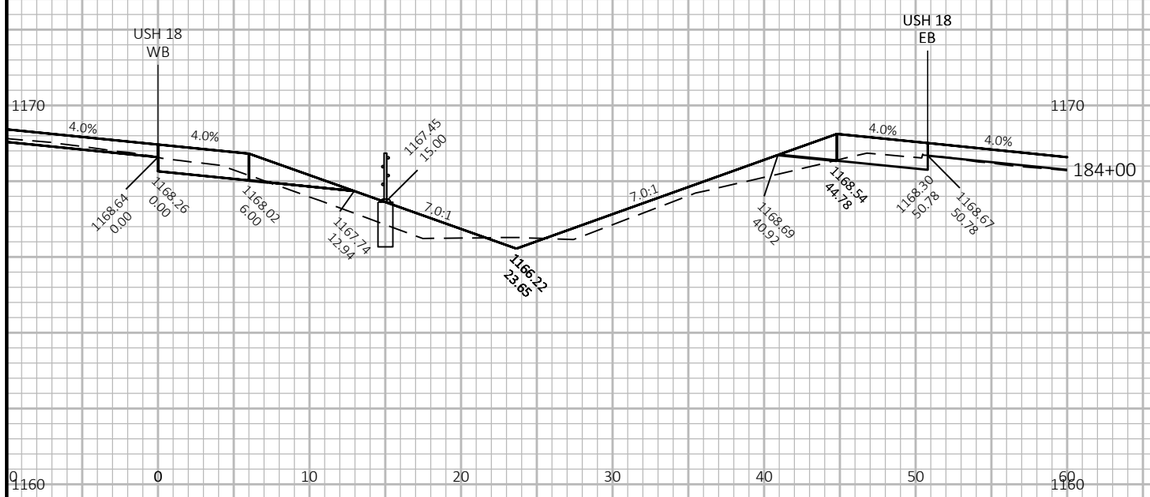

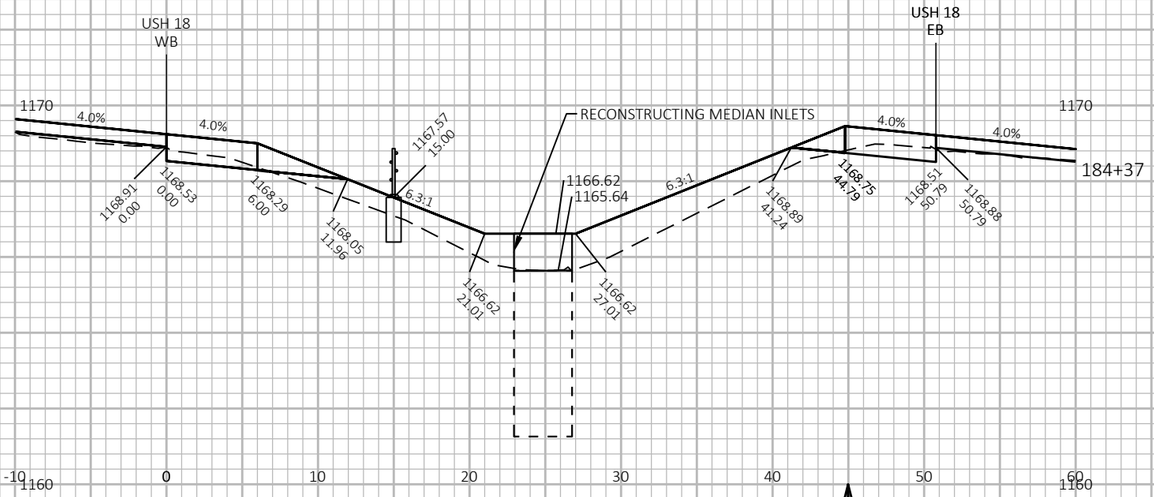

9

9

PROJECT NO: 1204-08-65	HWY: USH 18/151	COUNTY: DANE	CROSS SECTIONS: USH 18 WB	SHEET 741	E

FILE NAME : G:\WDOTSW\20007-000 USH 18\CIVIL 3D\SHEETSPLAN\CROSS SECTIONS\090201-XS_USH 18 WB.DWG
LAYOUT NAME - 18WB-1_1

PLOT DATE : 7/17/2022 12:41 PM PLOT BY : KL ENGINEERING PLOT NAME : PLOT SCALE : 1 IN:10 FT HORZ. / 1 IN:4 FT VERT.

WISDOT/CADDS SHEET 49

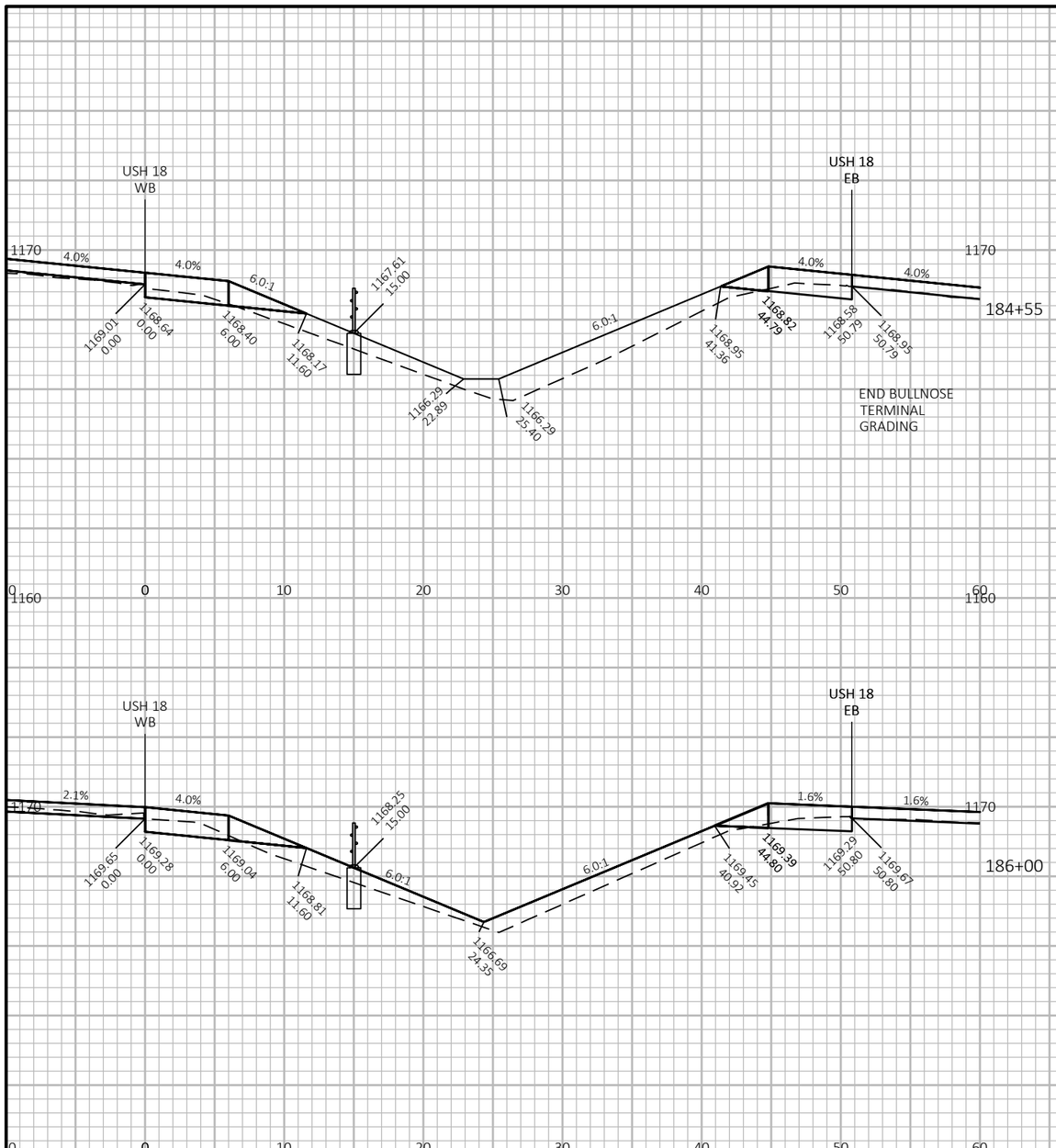

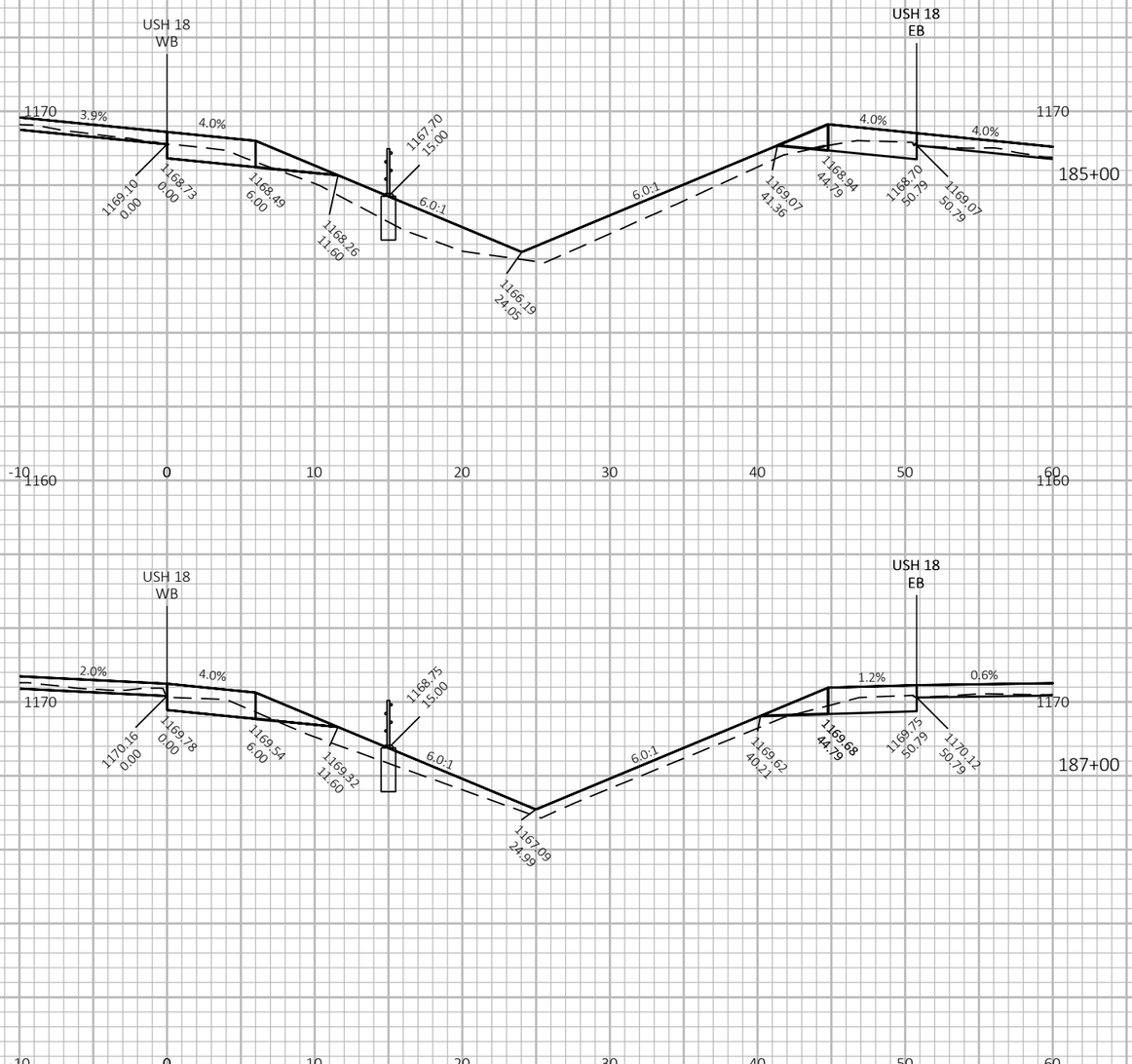

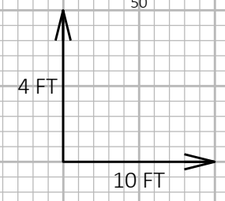

9

9

PROJECT NO: 1204-08-65	HWY: USH 18/151	COUNTY: DANE	CROSS SECTIONS: USH 18 WB	SHEET 742	E

FILE NAME : G:\WDOTSW\20007-000 USH 18\CIVIL 3D\SHEETSPLAN\CROSS SECTIONS\090201-XS_USH 18 WB.DWG
LAYOUT NAME - 18WB-1_2

PLOT DATE : 7/17/2022 12:42 PM PLOT BY : KL ENGINEERING PLOT NAME : PLOT SCALE : 1 IN:10 FT HORZ. / 1 IN:4 FT VERT.

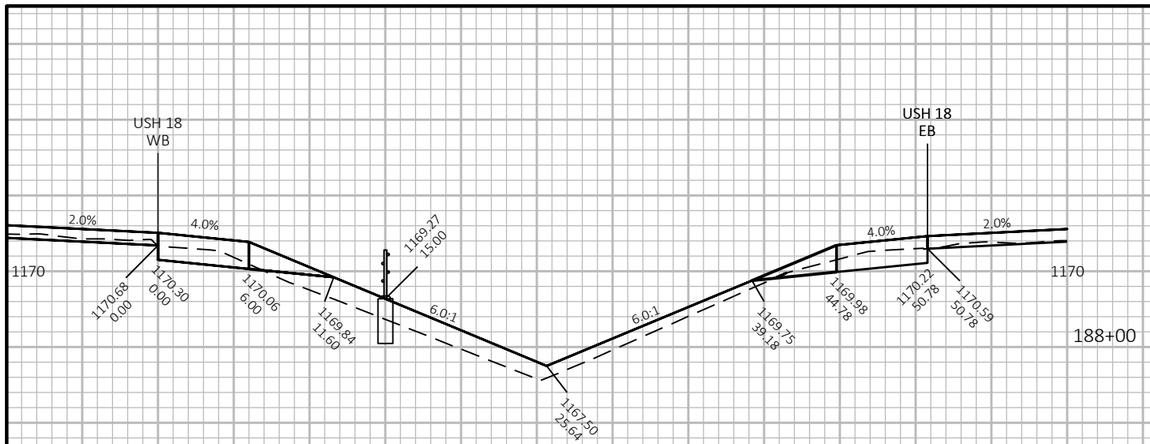

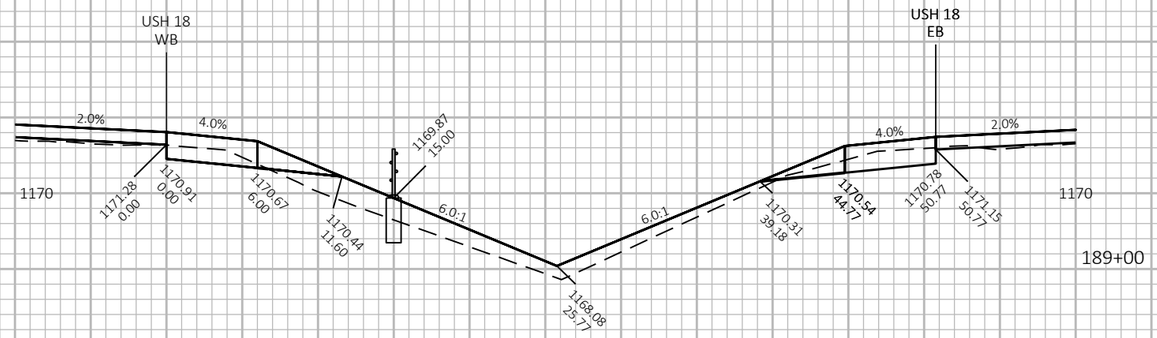

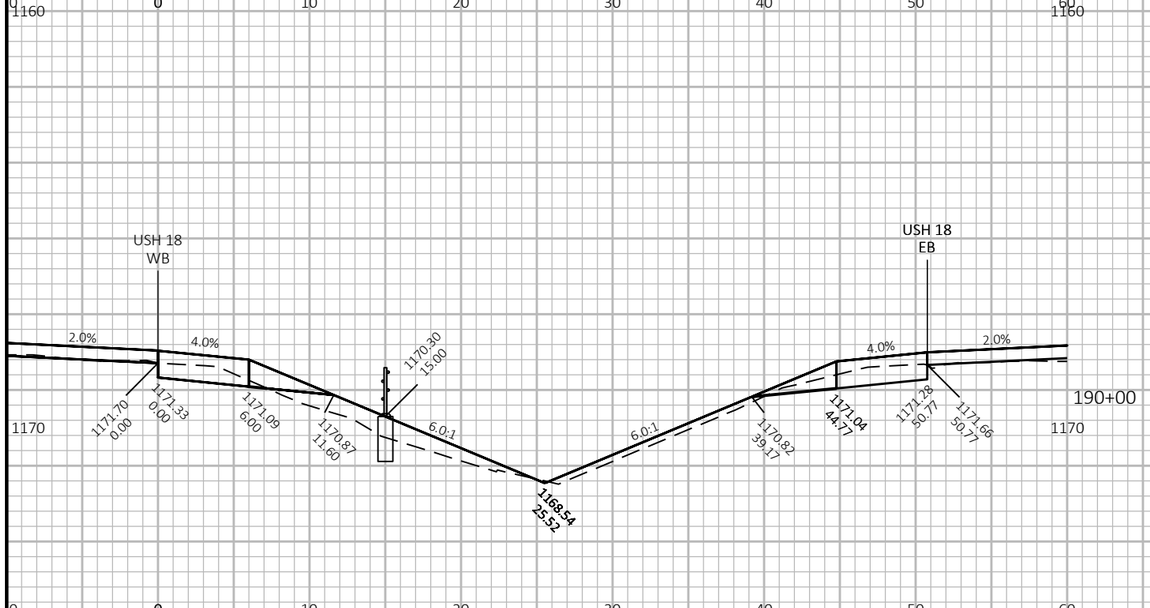

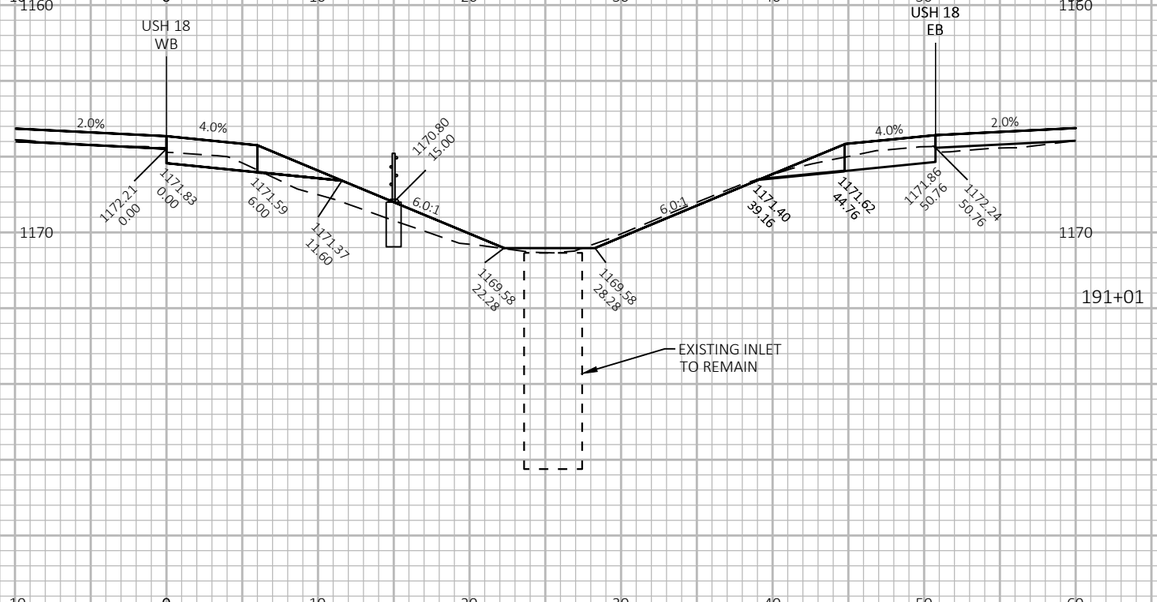

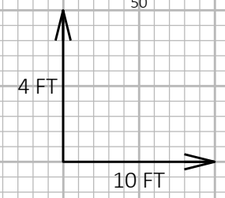

9

9

PROJECT NO: 1204-08-65	HWY: USH 18/151	COUNTY: DANE	CROSS SECTIONS: USH 18 WB	SHEET 743	E

FILE NAME : G:\WDOTSW\20007-000 USH 18\CIVIL 3D\SHEETSPLAN\CROSS SECTIONS\090201-XS_USH 18 WB.DWG
LAYOUT NAME - 18WB-1_3

PLOT DATE : 7/17/2022 12:44 PM PLOT BY : KL ENGINEERING PLOT NAME : PLOT SCALE : 1 IN:10 FT HORZ. / 1 IN:4 FT VERT.

WISDOT/CADDS SHEET 49

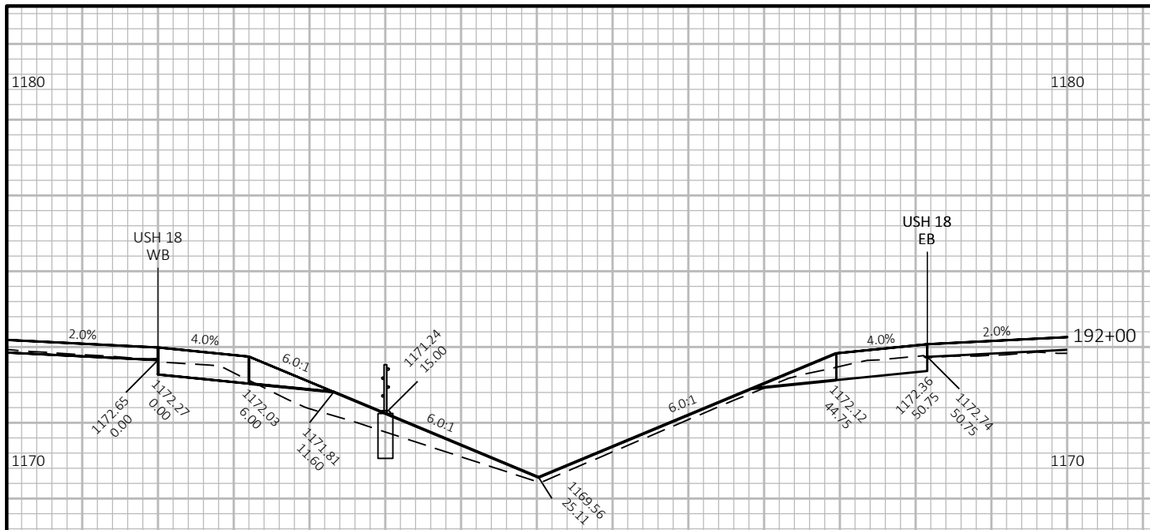

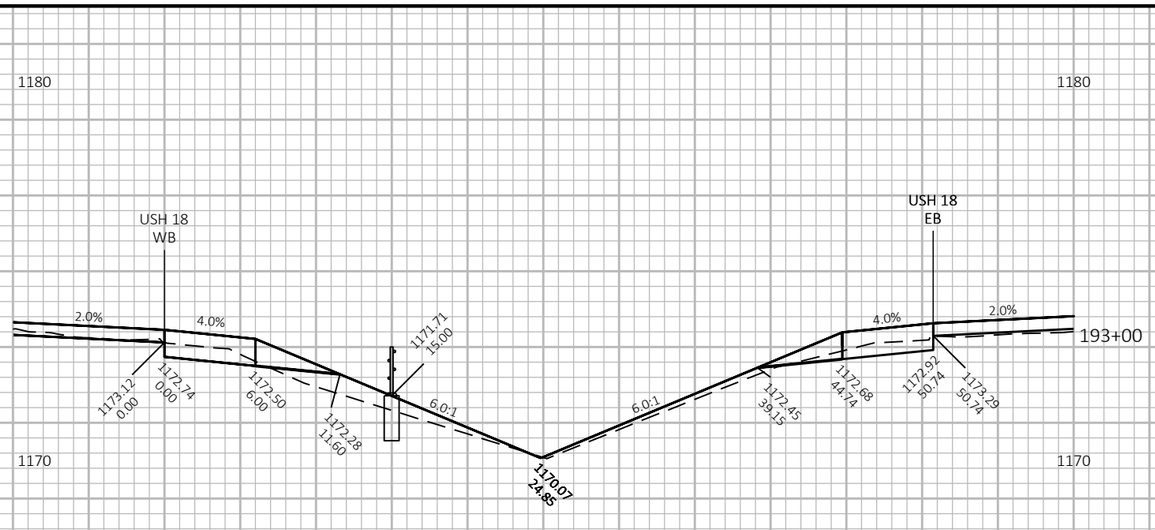

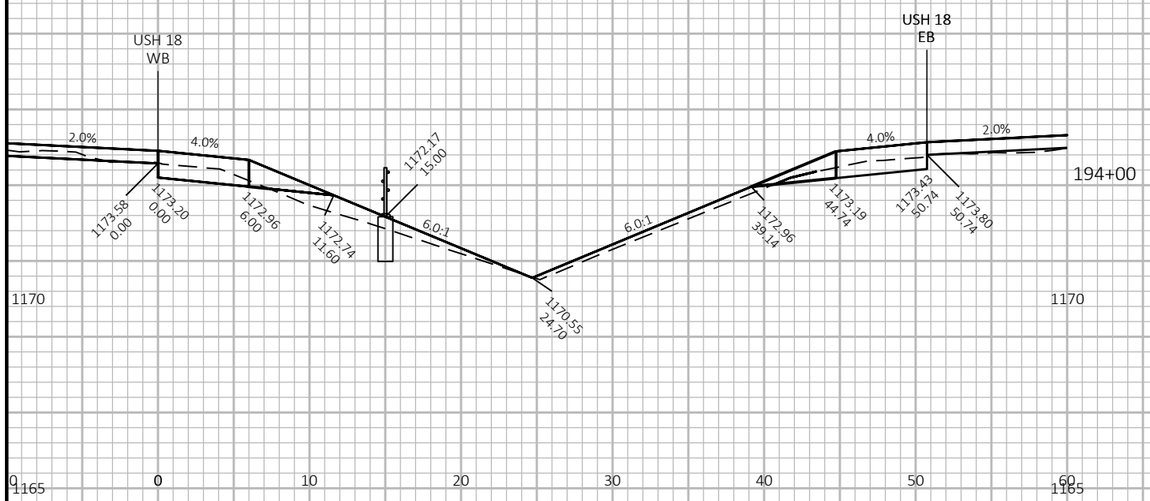

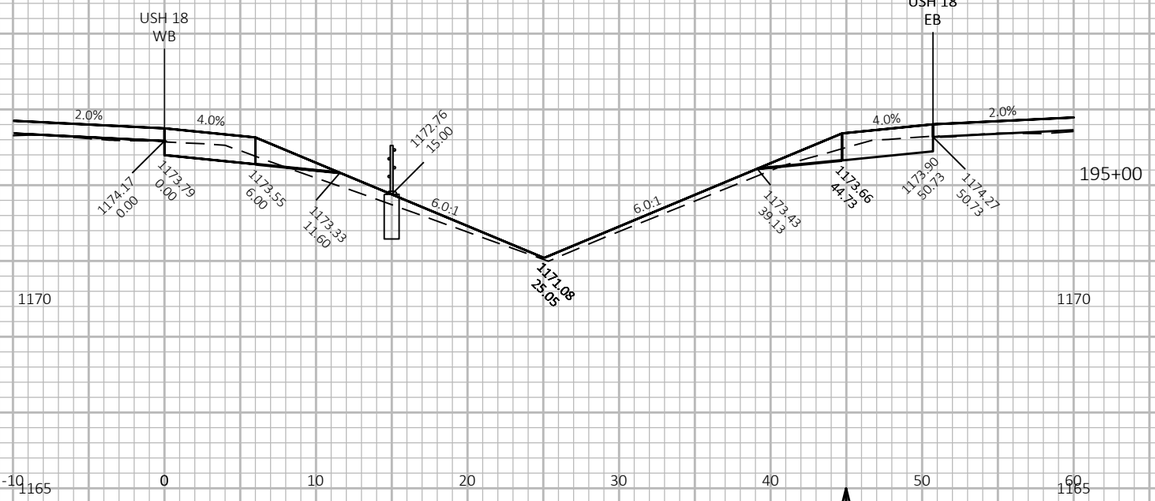

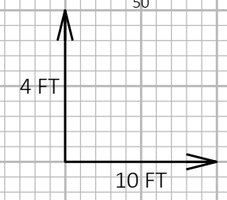

9

9

PROJECT NO: 1204-08-65	HWY: USH 18/151	COUNTY: DANE	CROSS SECTIONS: USH 18 WB	SHEET 744	E

FILE NAME : G:\WDOTSW\20007-000 USH 18\CIVIL 3D\SHEETSPLAN\CROSS SECTIONS\090201-XS_USH 18 WB.DWG
LAYOUT NAME - 18WB-1_4

PLOT DATE : 7/17/2022 12:45 PM PLOT BY : KL ENGINEERING PLOT NAME : PLOT SCALE : 1 IN:10 FT HORZ. / 1 IN:4 FT VERT.

WISDOT/CADDS SHEET 49

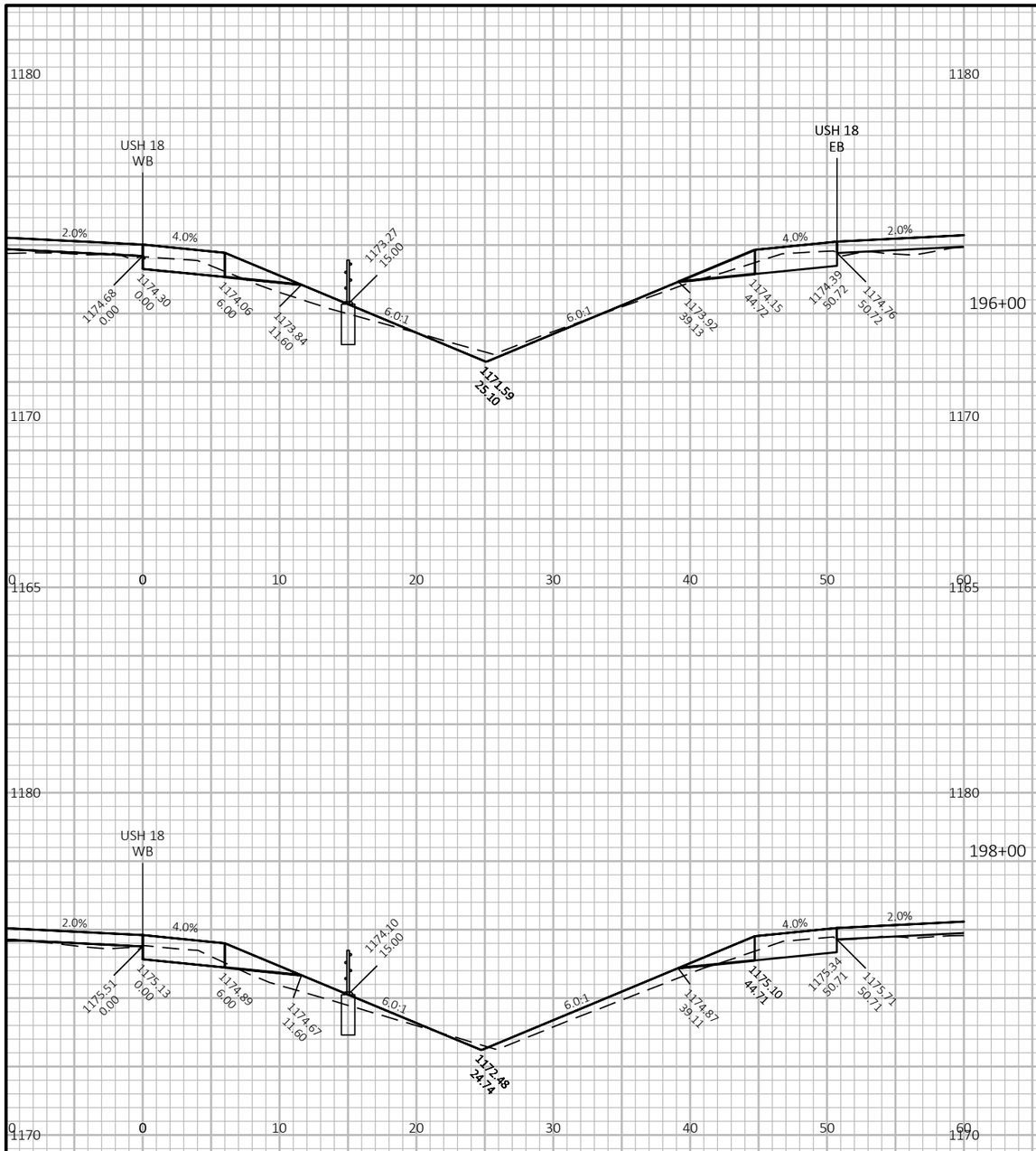

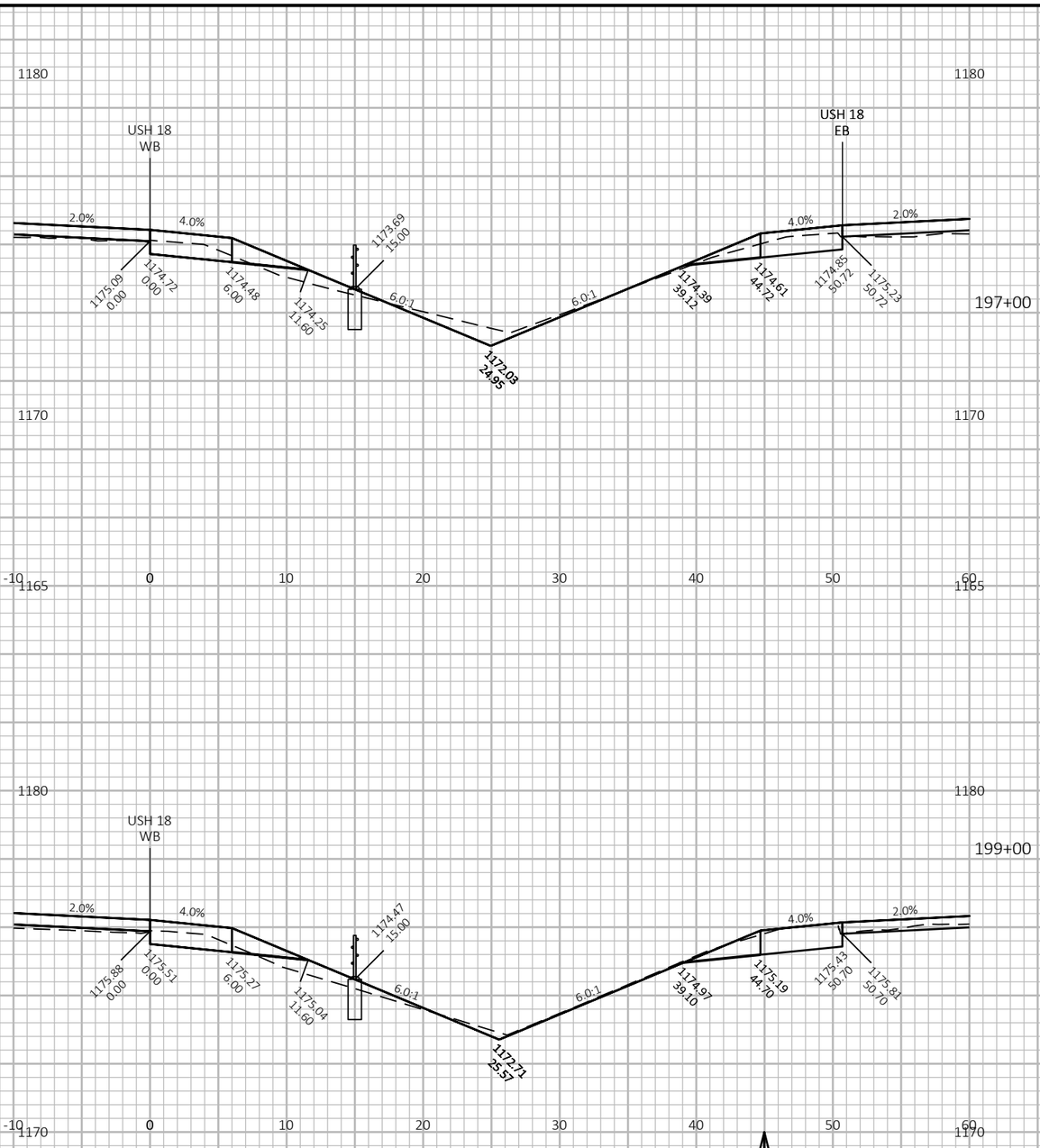

9

9

PROJECT NO: 1204-08-65	HWY: USH 18/151	COUNTY: DANE	CROSS SECTIONS: USH 18 WB	SHEET 745	E

FILE NAME : G:\WDOTSW\20007-000 USH 18\CIVIL 3D\SHEETSPLAN\CROSS SECTIONS\090201-XS_USH 18 WB.DWG
LAYOUT NAME - 18WB-1_5

PLOT DATE : 7/17/2022 12:47 PM

PLOT BY : KL ENGINEERING

PLOT NAME :

PLOT SCALE : 1 IN:10 FT HORZ. / 1 IN:4 FT VERT.

WISDOT/CADDS SHEET 49

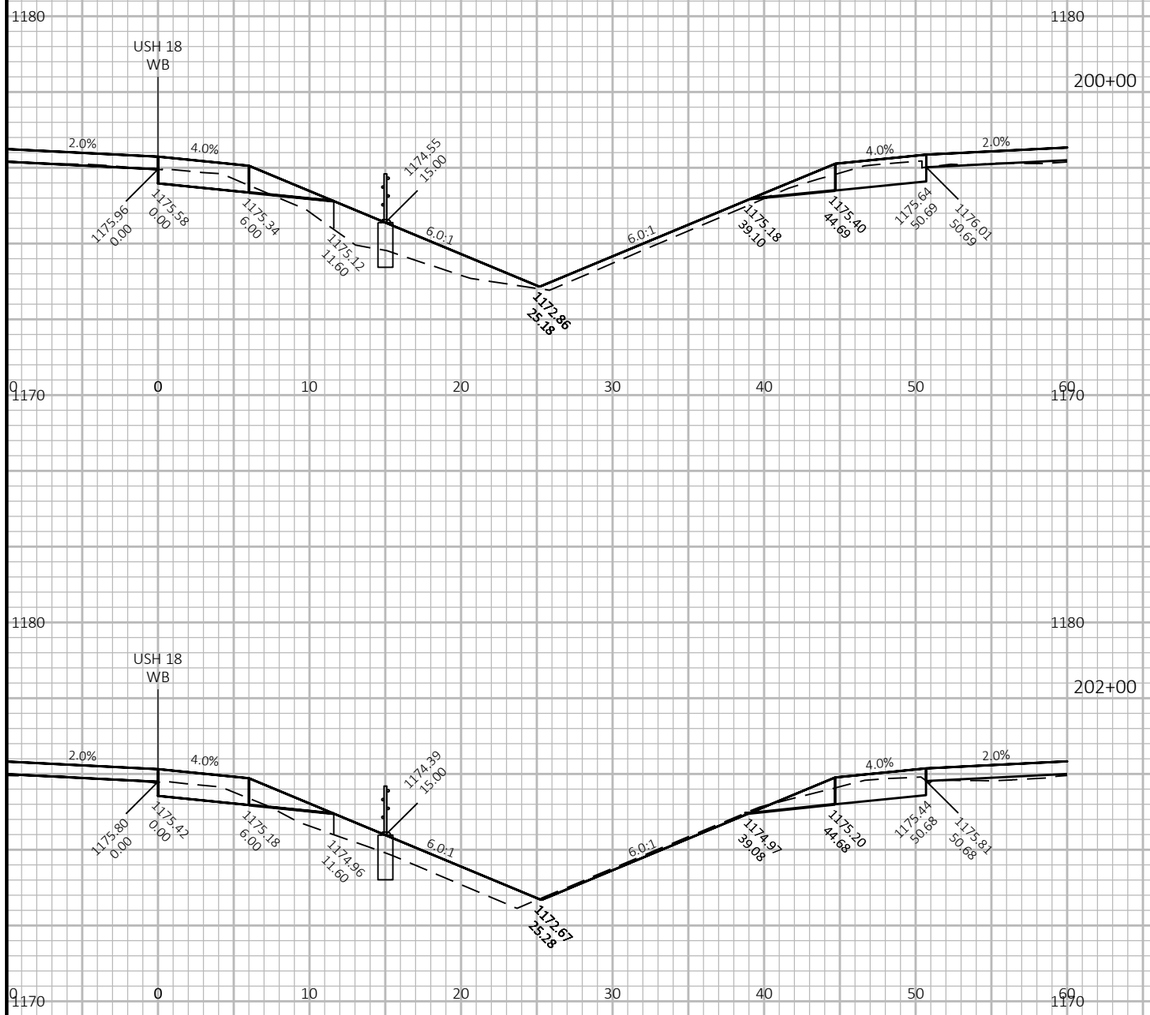

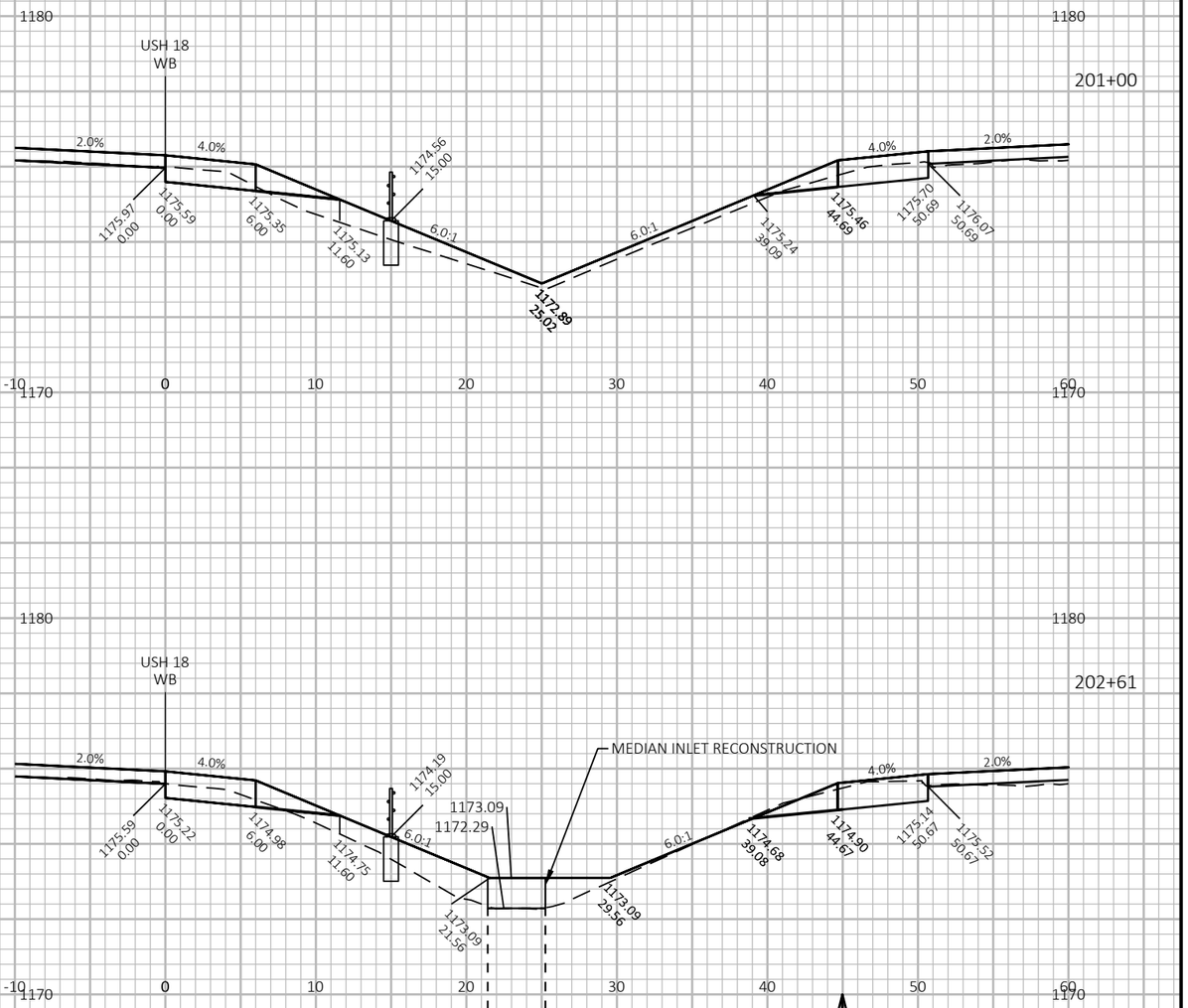

9

9

PROJECT NO: 1204-08-65	HWY: USH 18/151	COUNTY: DANE	CROSS SECTIONS: USH 18 WB	SHEET 746	E

FILE NAME : G:\WDOTSW\20007-000 USH 18\CIVIL 3D\SHEETSPLAN\CROSS SECTIONS\090201-XS_USH 18 WB.DWG
LAYOUT NAME - 18WB-1_6

PLOT DATE : 7/17/2022 12:48 PM PLOT BY : KL ENGINEERING PLOT NAME : PLOT SCALE : 1 IN:10 FT HORZ. / 1 IN:4 FT VERT.

WISDOT/CADDS SHEET 49

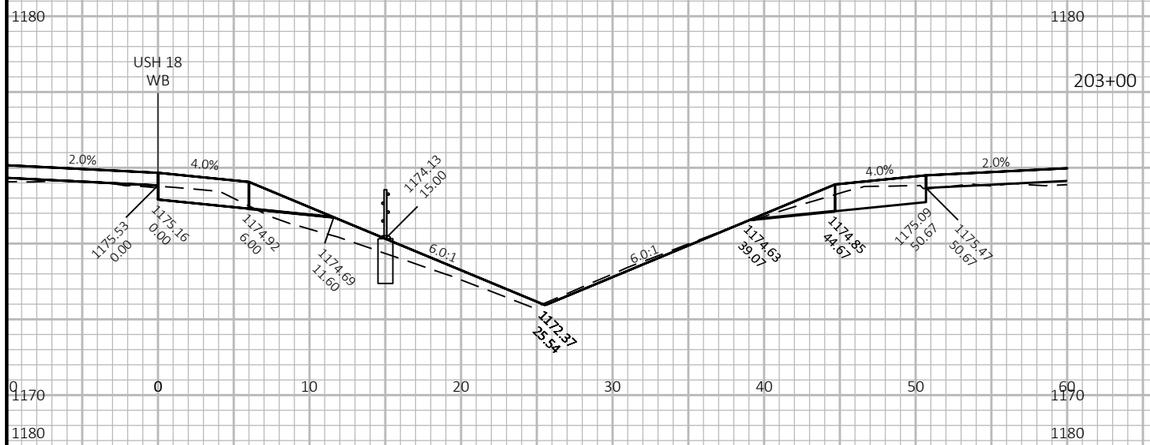

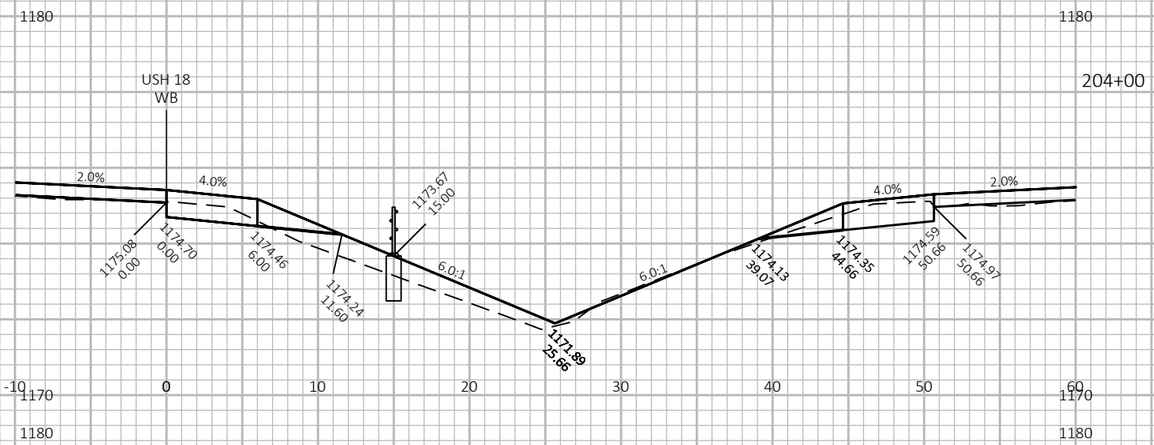

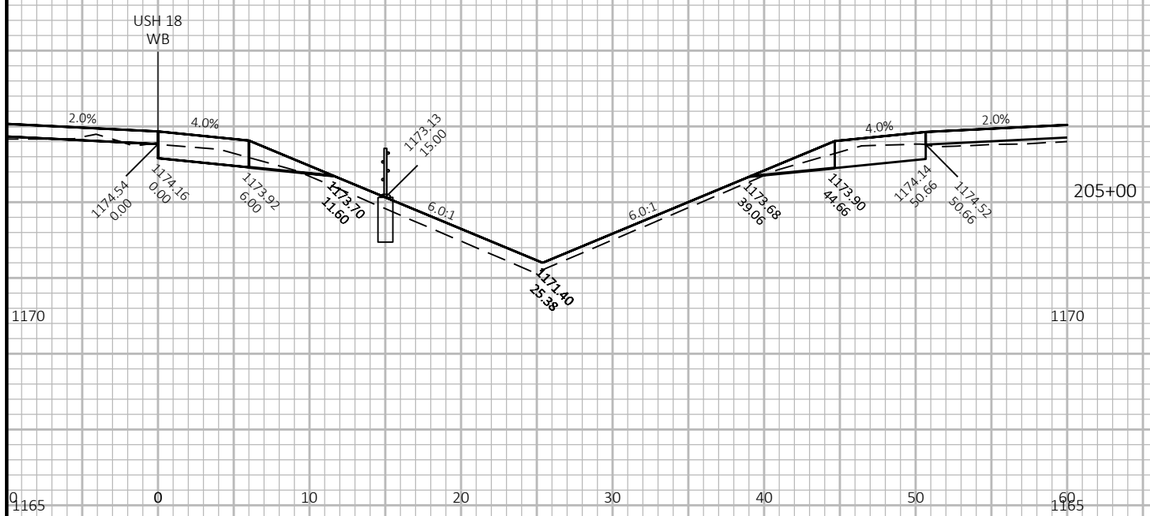

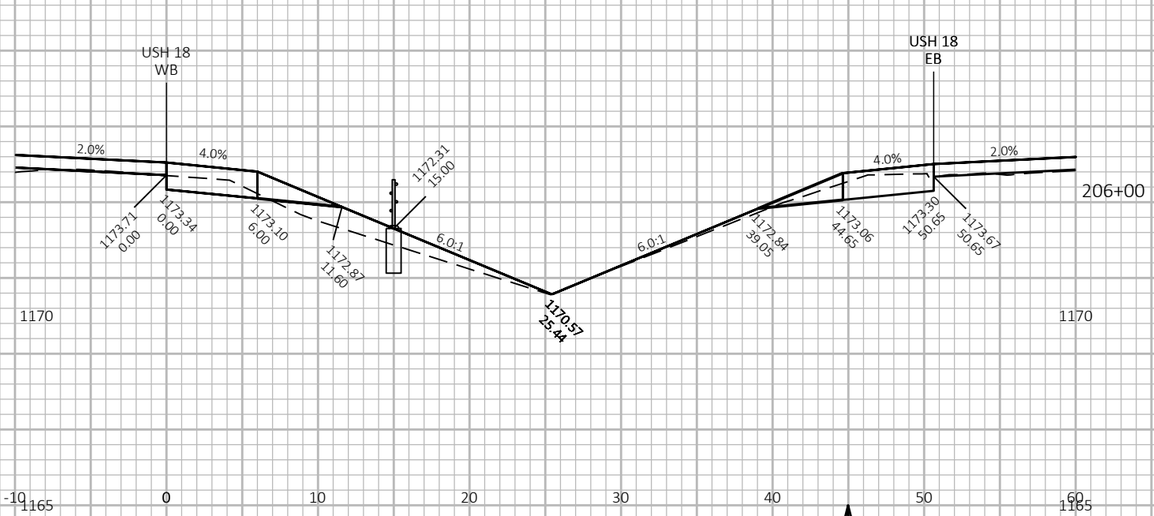

9

9

PROJECT NO: 1204-08-65	HWY: USH 18/151	COUNTY: DANE	CROSS SECTIONS: USH 18 WB	SHEET 747	E

FILE NAME : G:\WDOTSW\20007-000 USH 18\CIVIL 3D\SHEETSPLAN\CROSS SECTIONS\090201-XS_USH 18 WB.DWG
LAYOUT NAME - 18WB-1_7

PLOT DATE : 7/20/2022 8:23 PM PLOT BY : KL ENGINEERING PLOT NAME : PLOT SCALE : 1 IN:10 FT HORZ. / 1 IN:4 FT VERT.

WISDOT/CADDS SHEET 49

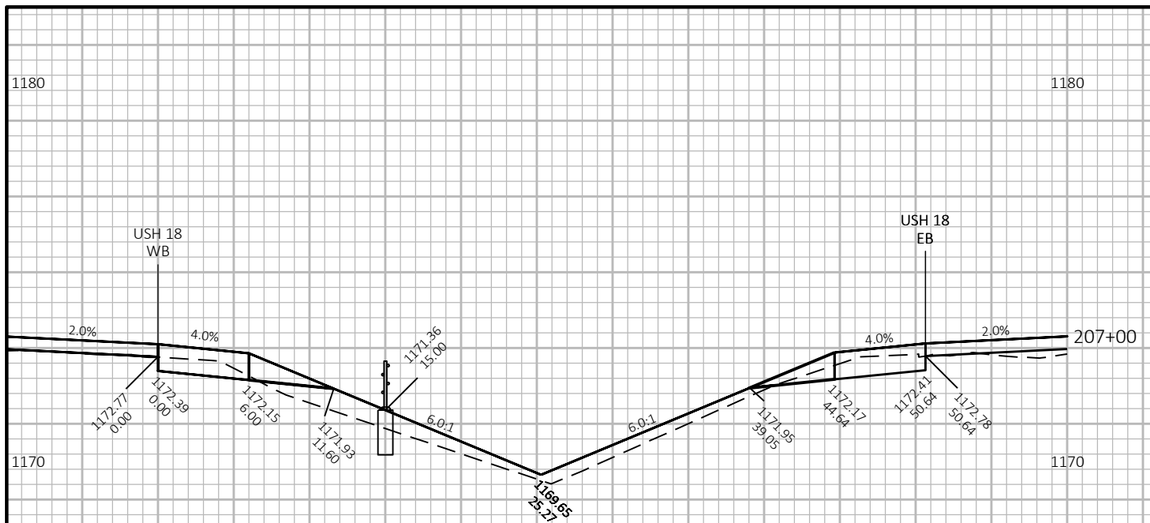

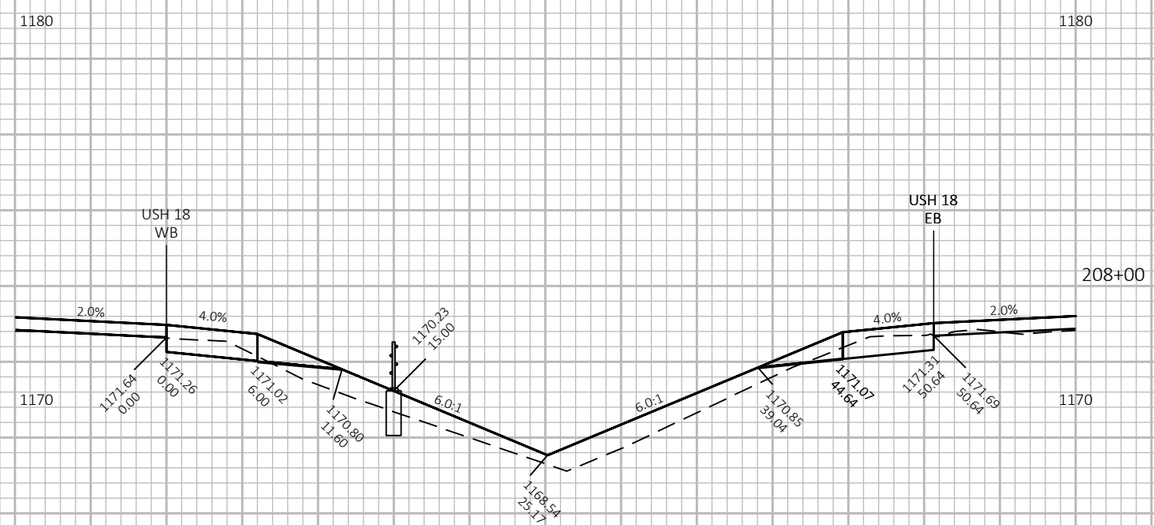

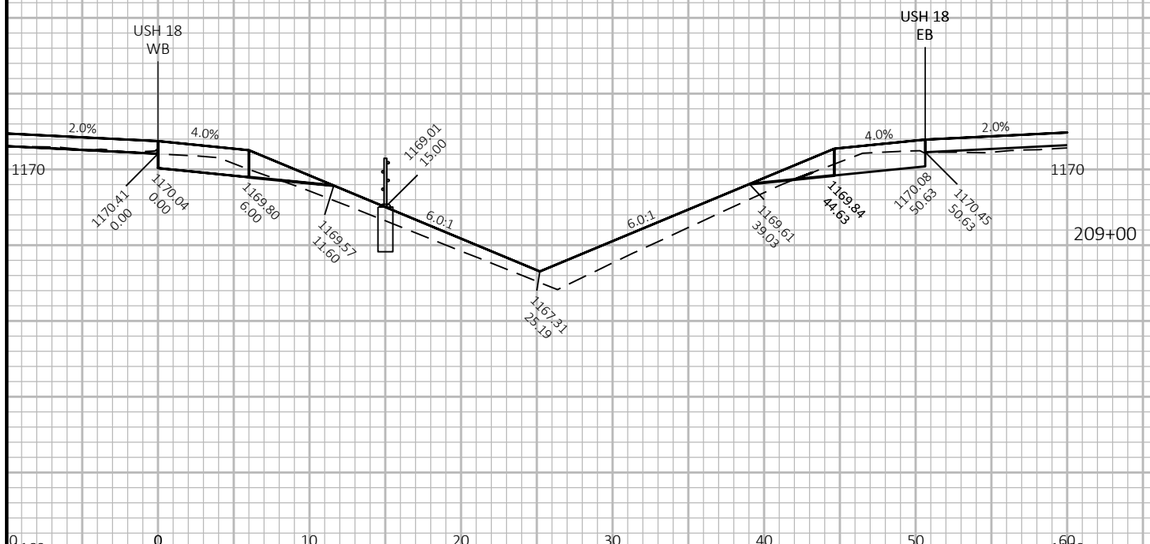

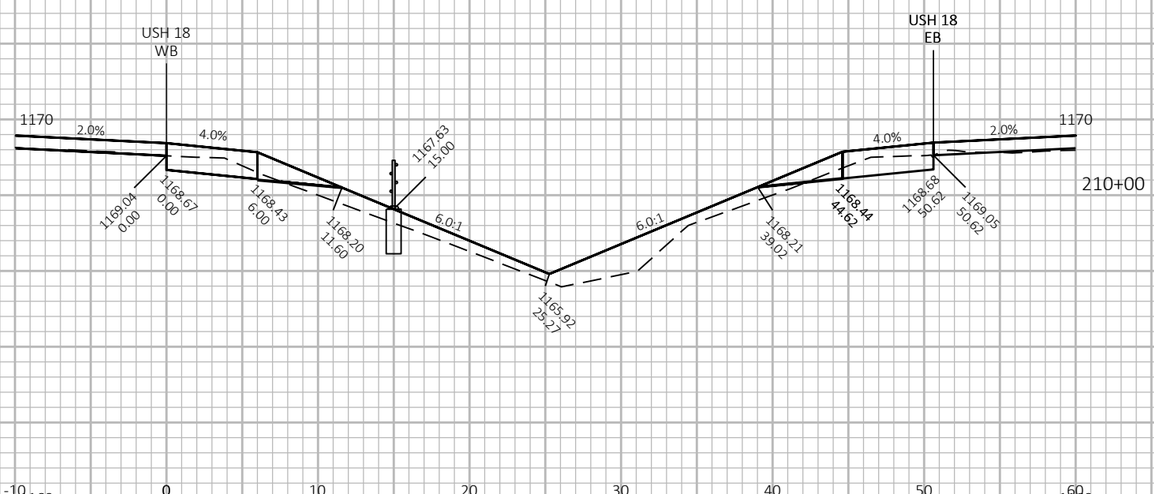

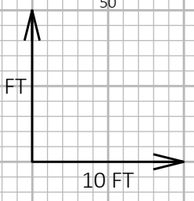

9

9

PROJECT NO: 1204-08-65	HWY: USH 18/151	COUNTY: DANE	CROSS SECTIONS: USH 18 WB	SHEET 748	E

FILE NAME : G:\WDOTSW\20007-000 USH 18\CIVIL 3D\SHEETSPLAN\CROSS SECTIONS\090201-XS_USH 18 WB.DWG
LAYOUT NAME - 18WB-1_8

PLOT DATE : 7/17/2022 12:51 PM PLOT BY : KL ENGINEERING PLOT NAME : PLOT SCALE : 1 IN:10 FT HORZ. / 1 IN:4 FT VERT.

WISDOT/CADDS SHEET 49

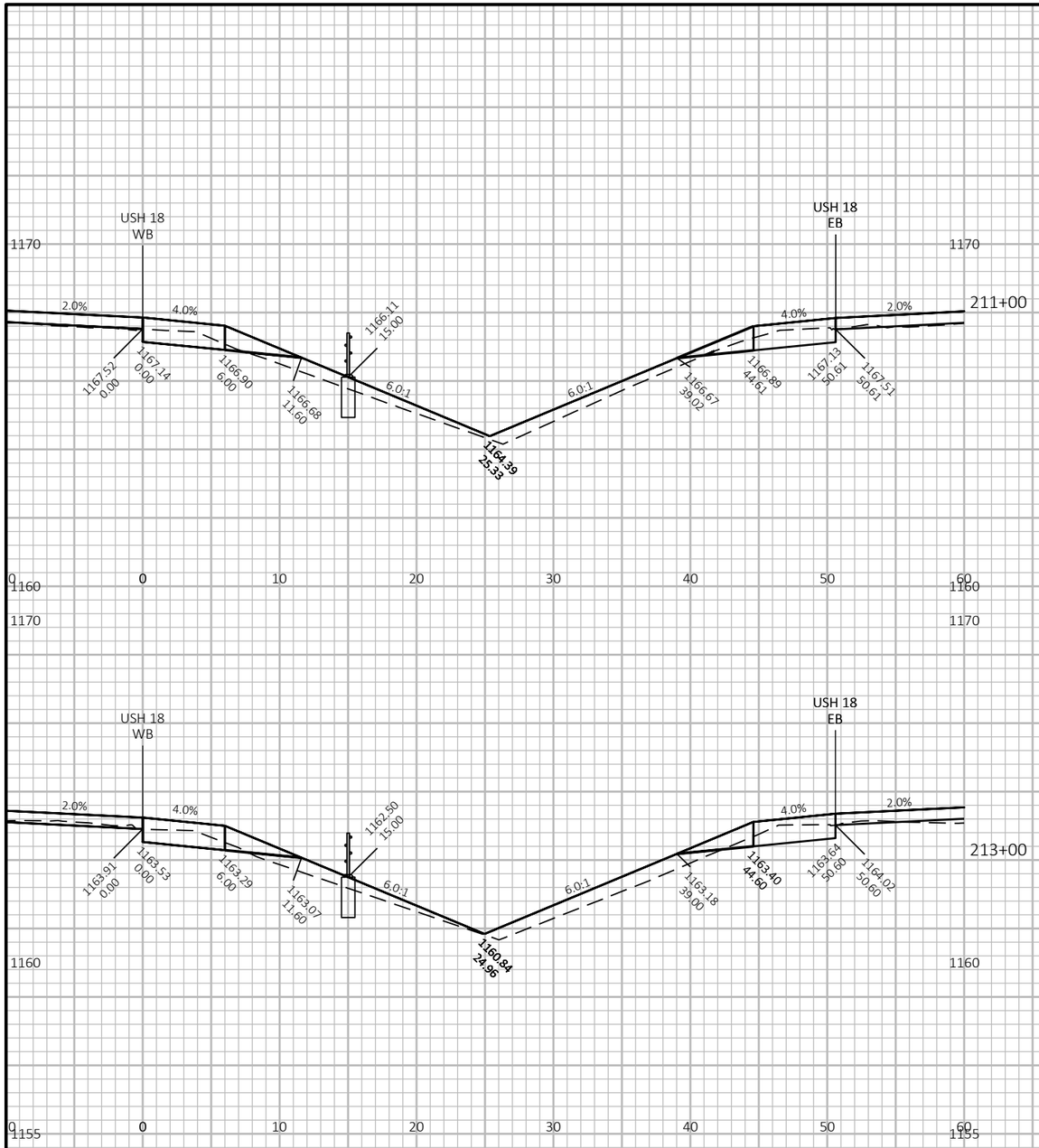

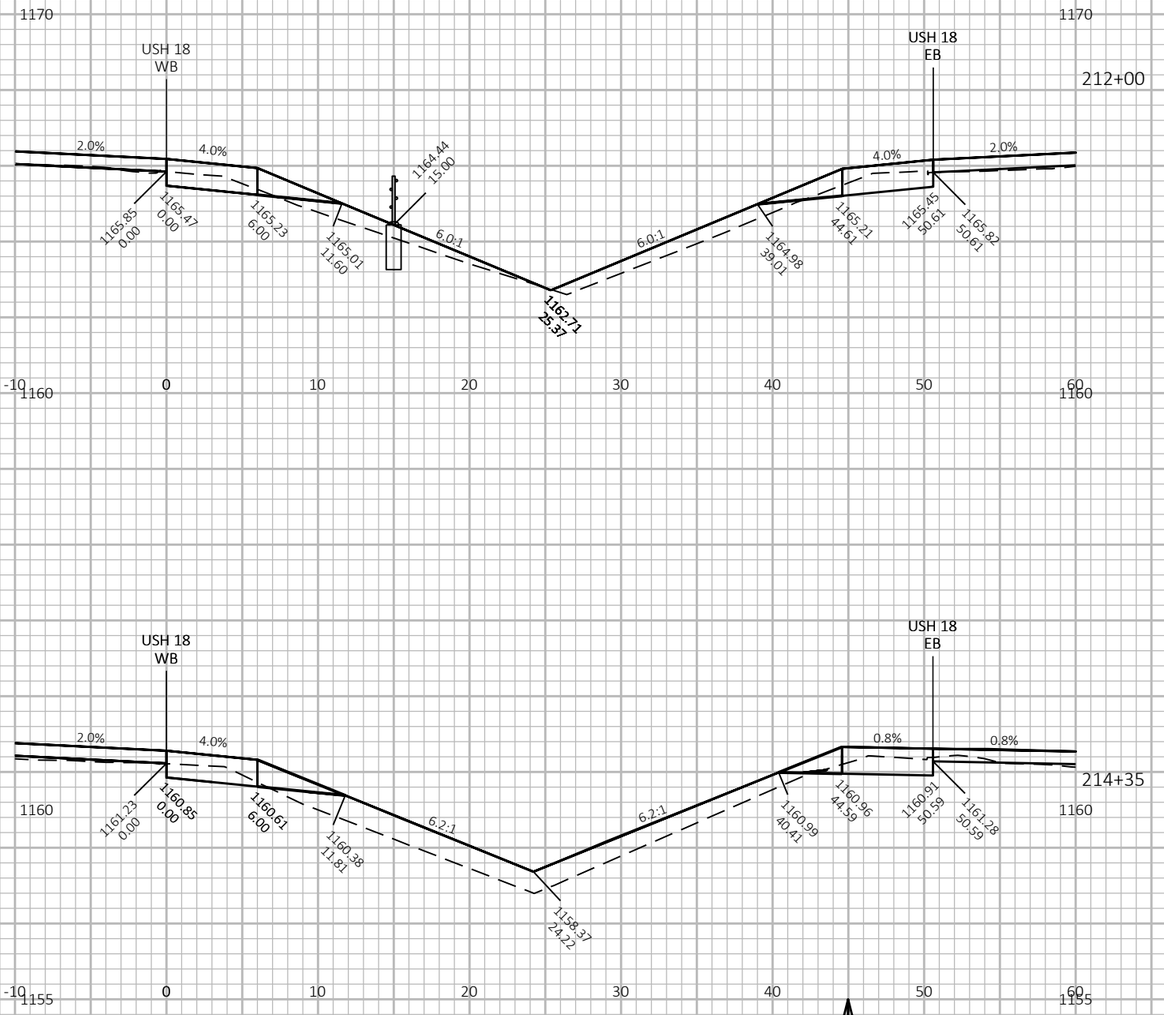

9

9

PROJECT NO: 1204-08-65	HWY: USH 18/151	COUNTY: DANE	CROSS SECTIONS: USH 18 WB	SHEET 749	E

FILE NAME : G:\WDOTSW\20007-000 USH 18\CIVIL 3D\SHEETSPLAN\CROSS SECTIONS\090201-XS_USH 18 WB.DWG
LAYOUT NAME - 18WB-1_9

PLOT DATE : 7/17/2022 12:53 PM PLOT BY : KL ENGINEERING PLOT NAME : PLOT SCALE : 1 IN:10 FT HORZ. / 1 IN:4 FT VERT.

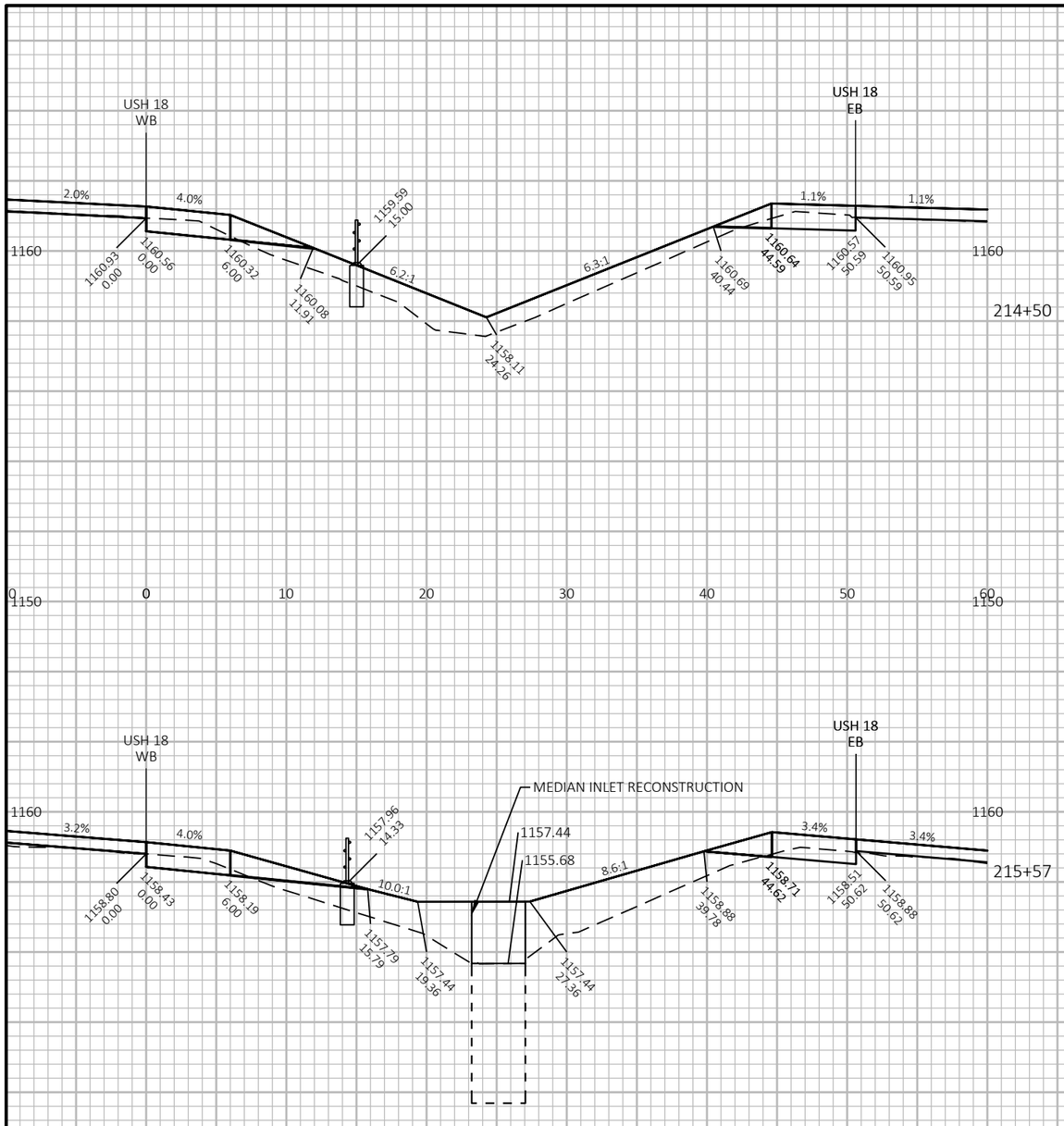

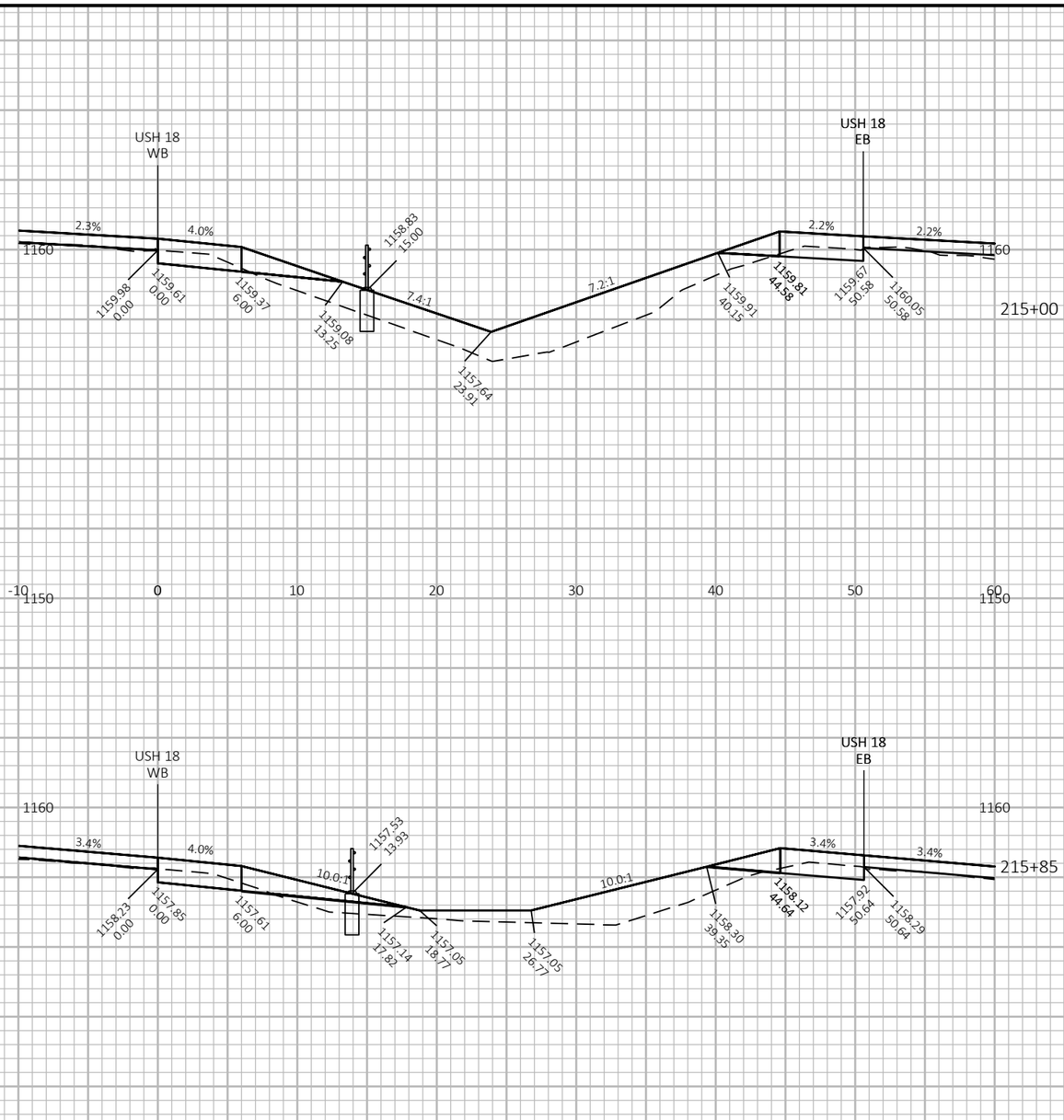

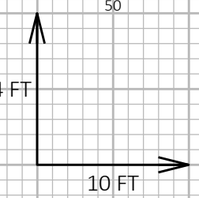

9

9

PROJECT NO: 1204-08-65	HWY: USH 18/151	COUNTY: DANE	CROSS SECTIONS: USH 18 WB	SHEET 750	E

FILE NAME : G:\WDOTSW\20007-000 USH 18\CIVIL 3D\SHEETSPLAN\CROSS SECTIONS\090201-XS_USH 18 WB.DWG
LAYOUT NAME - 18WB-1_10

PLOT DATE : 7/17/2022 12:55 PM PLOT BY : KL ENGINEERING PLOT NAME : PLOT SCALE : 1 IN:10 FT HORZ. / 1 IN:4 FT VERT.

WISDOT/CADDS SHEET 49

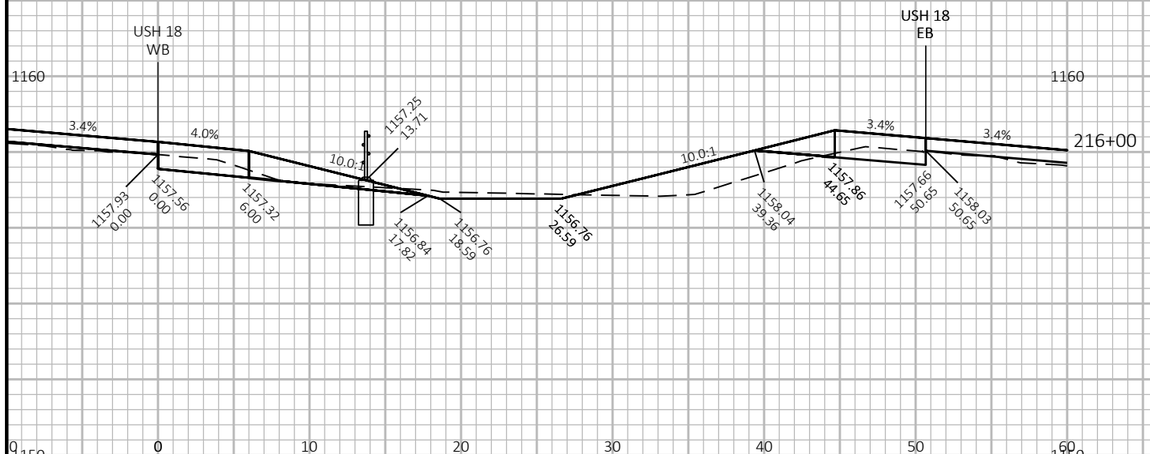

216+00

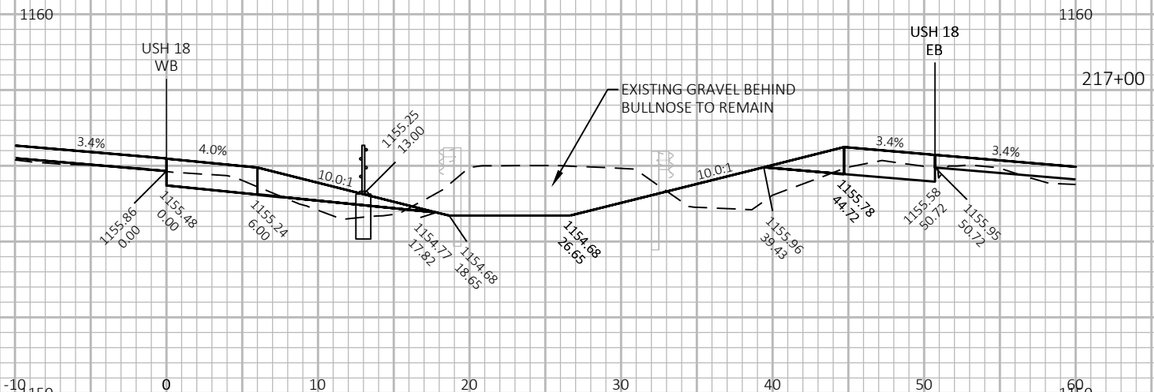

217+00

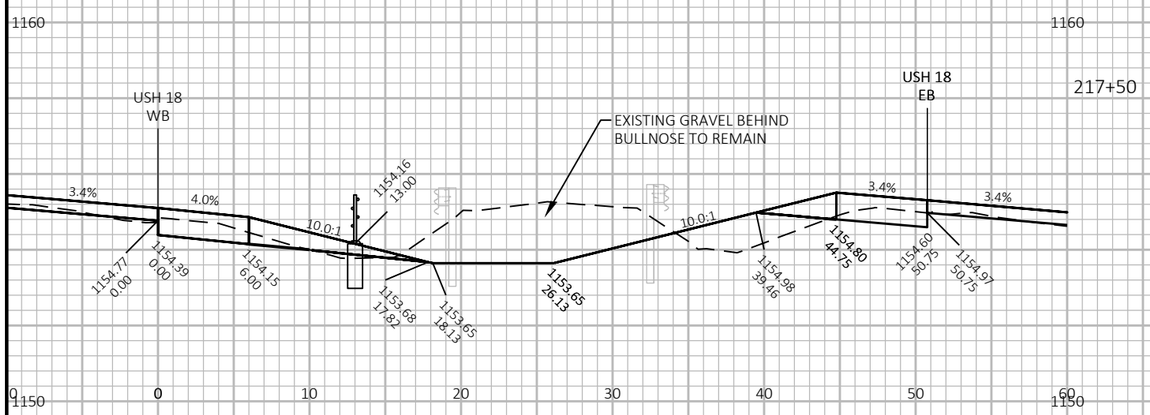

217+50

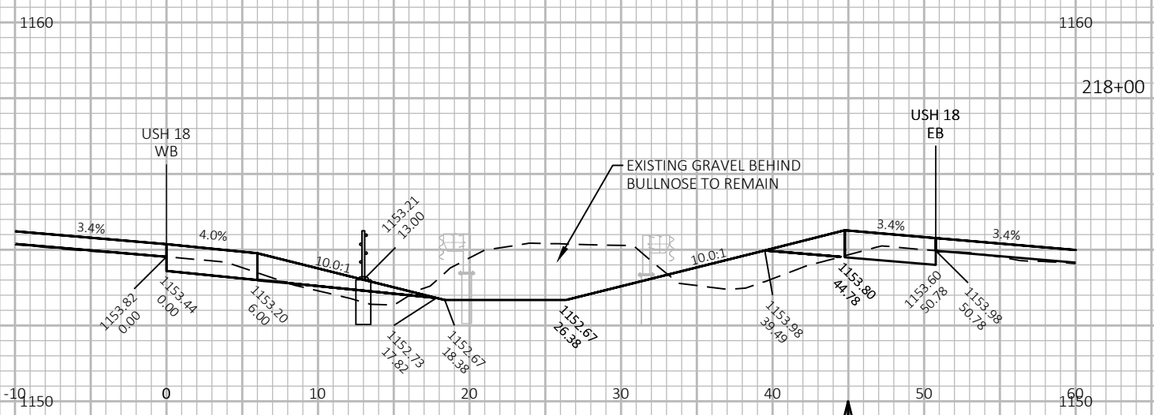

218+00

9

9

PROJECT NO: 1204-08-65	HWY: USH 18/151	COUNTY: DANE	CROSS SECTIONS: USH 18 WB	SHEET 751	E

FILE NAME : G:\WDOTSW\20007-000 USH 18\CIVIL 3D\SHEETSPLAN\CROSS SECTIONS\090201-XS_USH 18 WB.DWG
LAYOUT NAME - 18WB-1_11

PLOT DATE : 7/17/2022 12:56 PM PLOT BY : KL ENGINEERING PLOT NAME : PLOT SCALE : 1 IN:10 FT HORZ. / 1 IN:4 FT VERT.

WISDOT/CADDS SHEET 49

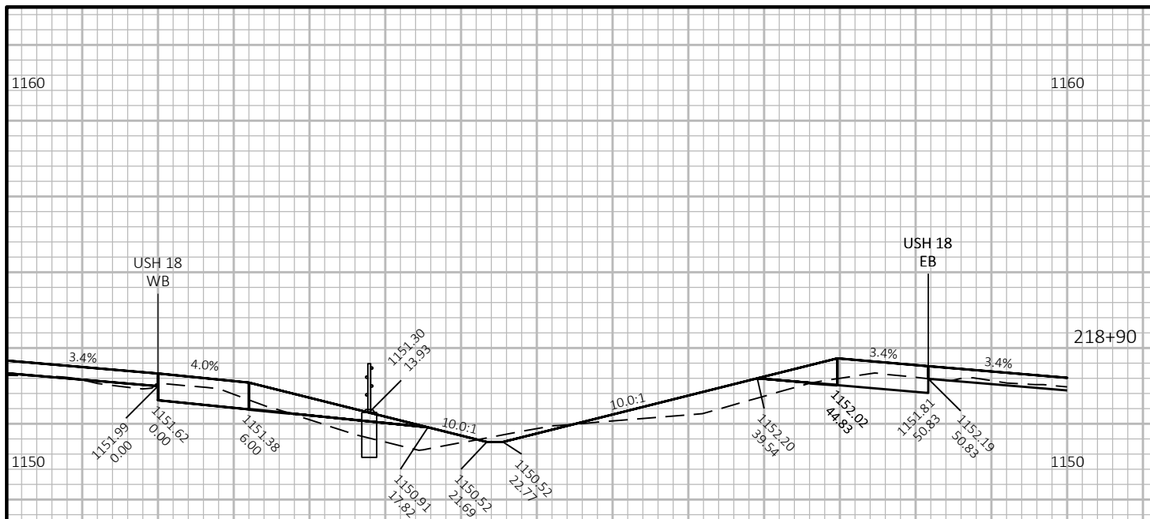

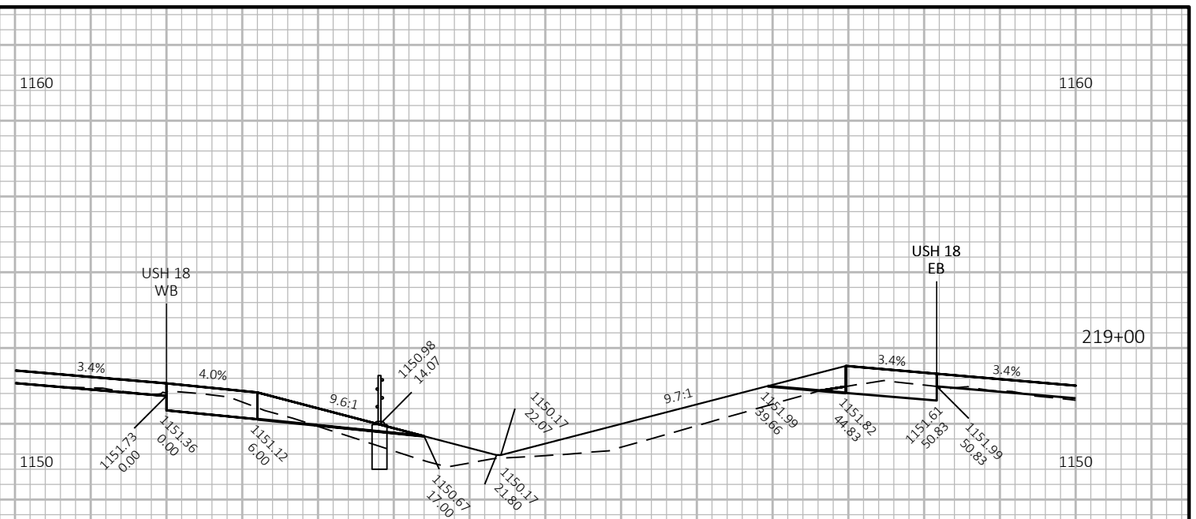

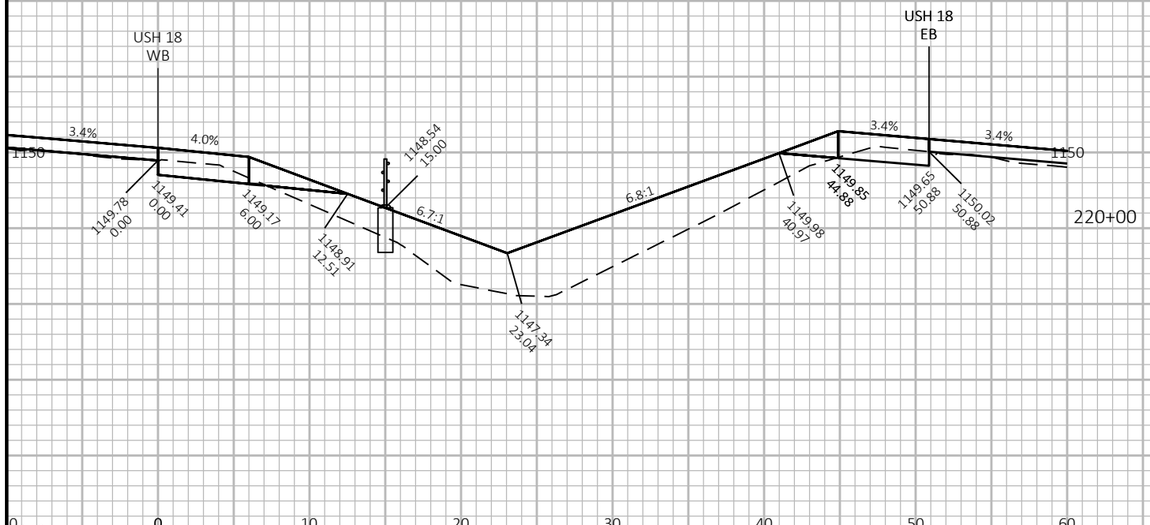

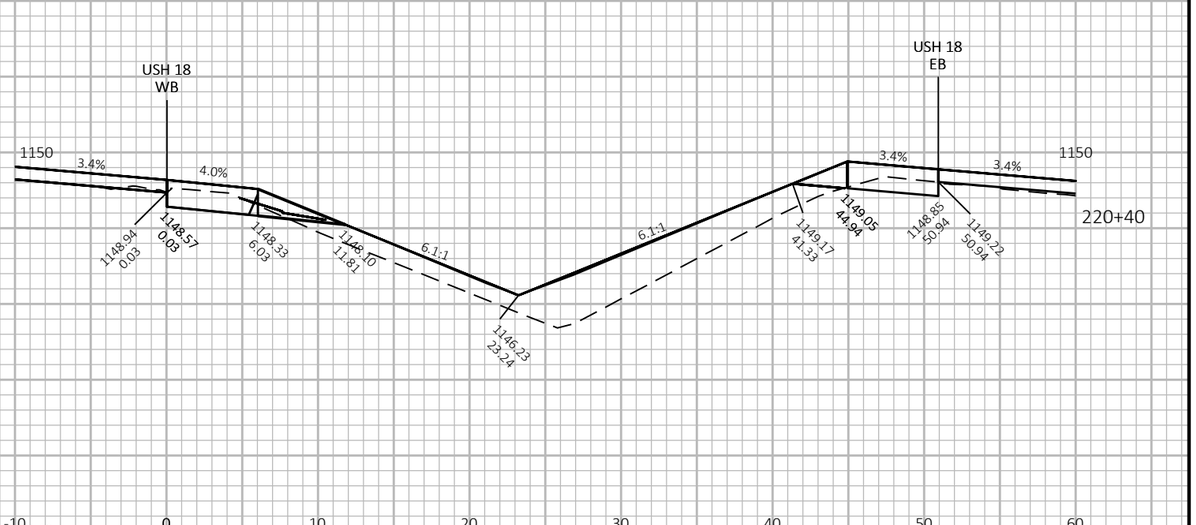

9

9

PROJECT NO: 1204-08-65	HWY: USH 18/151	COUNTY: DANE	CROSS SECTIONS: USH 18 WB	SHEET 752	E

FILE NAME : G:\WDOTSW\20007-000 USH 18\CIVIL 3D\SHEETSPLAN\CROSS SECTIONS\090201-XS_USH 18 WB.DWG
LAYOUT NAME - 18WB-1_12

PLOT DATE : 7/17/2022 12:58 PM PLOT BY : KL ENGINEERING PLOT NAME : PLOT SCALE : 1 IN:10 FT HORZ. / 1 IN:4 FT VERT.

WISDOT/CADDS SHEET 49

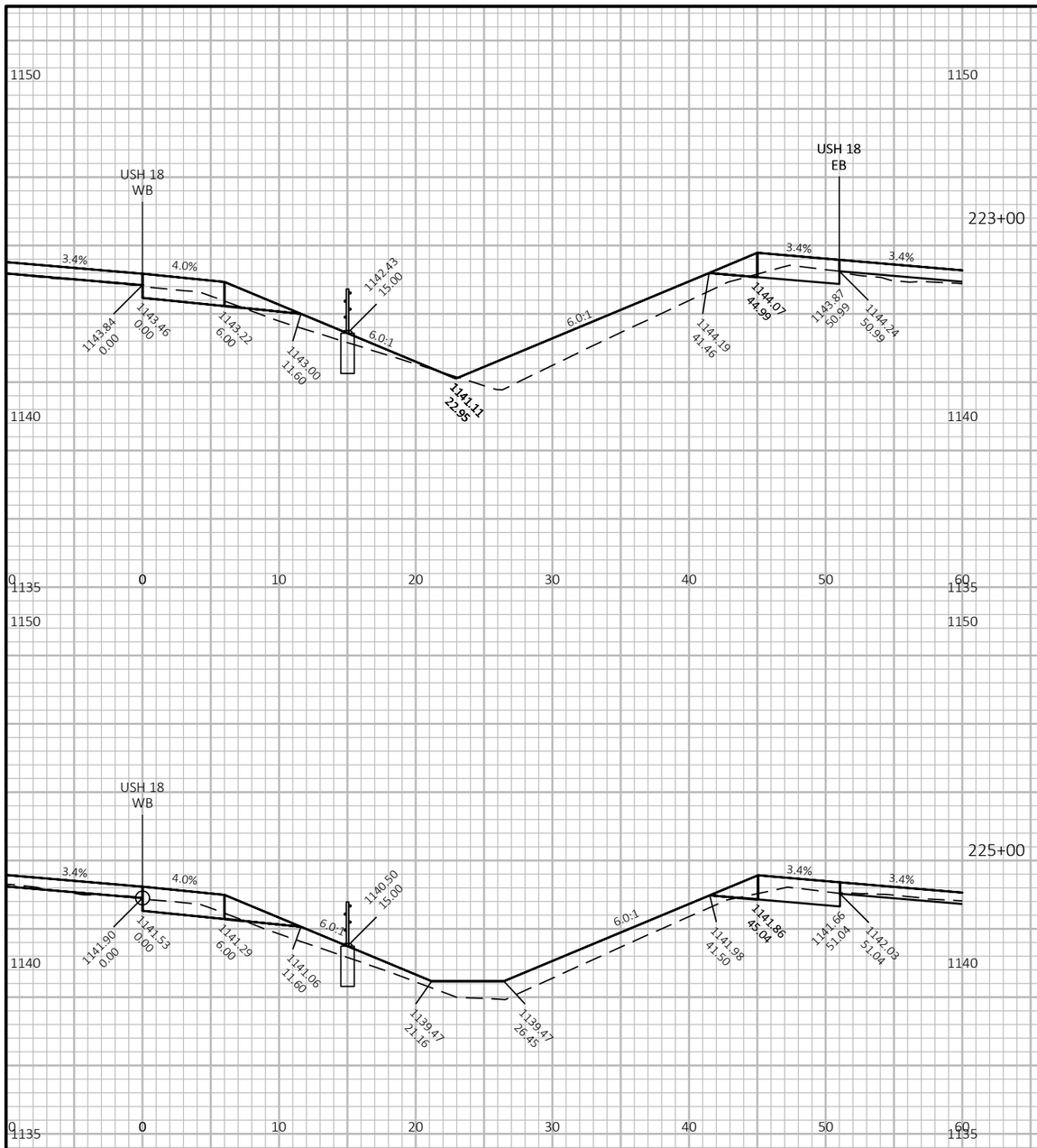

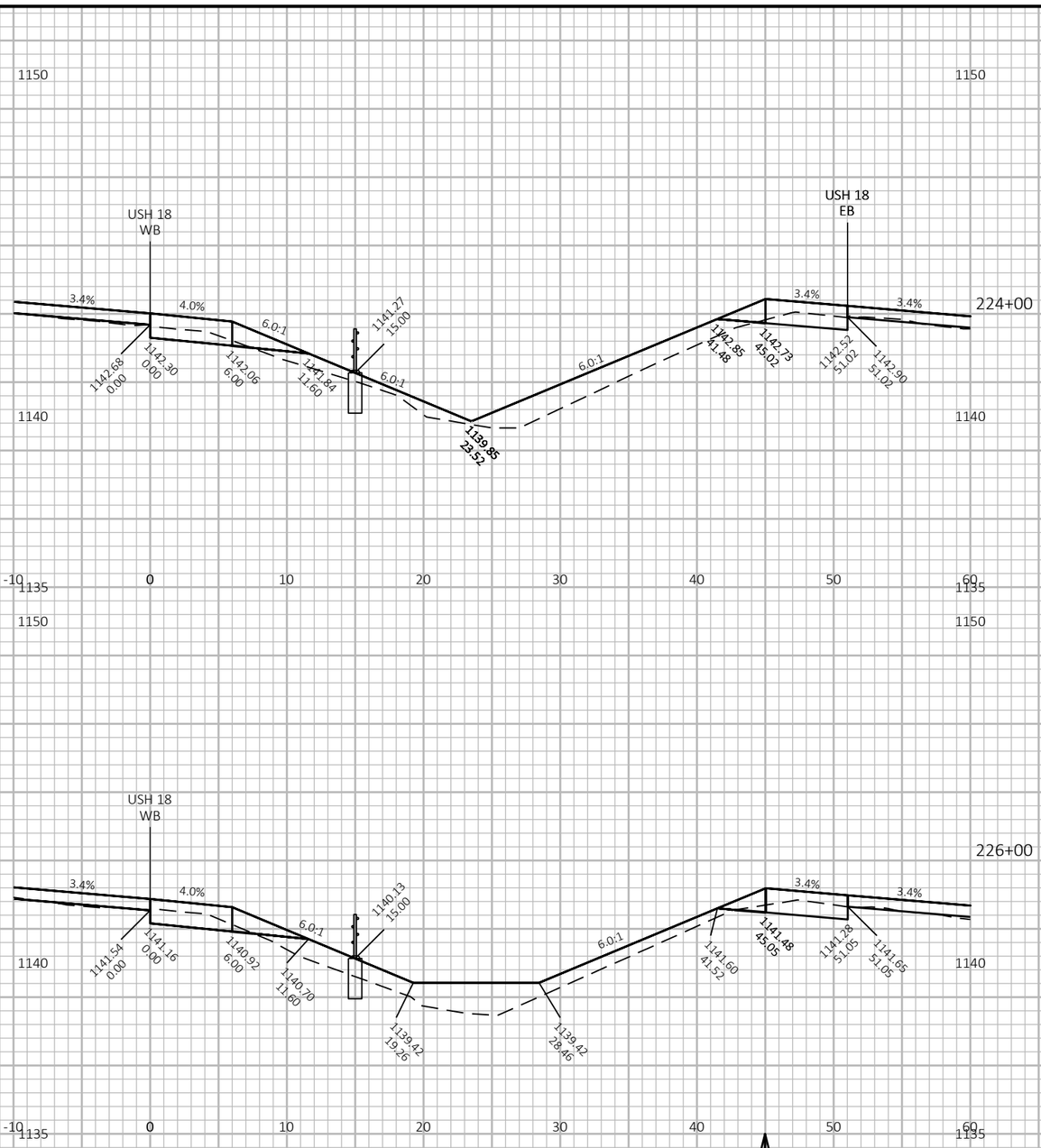

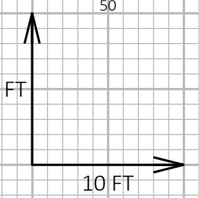

9

9

PROJECT NO: 1204-08-65	HWY: USH 18/151	COUNTY: DANE	CROSS SECTIONS: USH 18 WB	SHEET 753	E

FILE NAME : G:\WDOTSW\20007-000 USH 18\CIVIL 3D\SHEETSPLAN\CROSS SECTIONS\090201-XS_USH 18 WB.DWG
LAYOUT NAME - 18WB-1_13

PLOT DATE : 7/17/2022 12:59 PM PLOT BY : KL ENGINEERING PLOT NAME : PLOT SCALE : 1 IN:10 FT HORZ. / 1 IN:4 FT VERT.

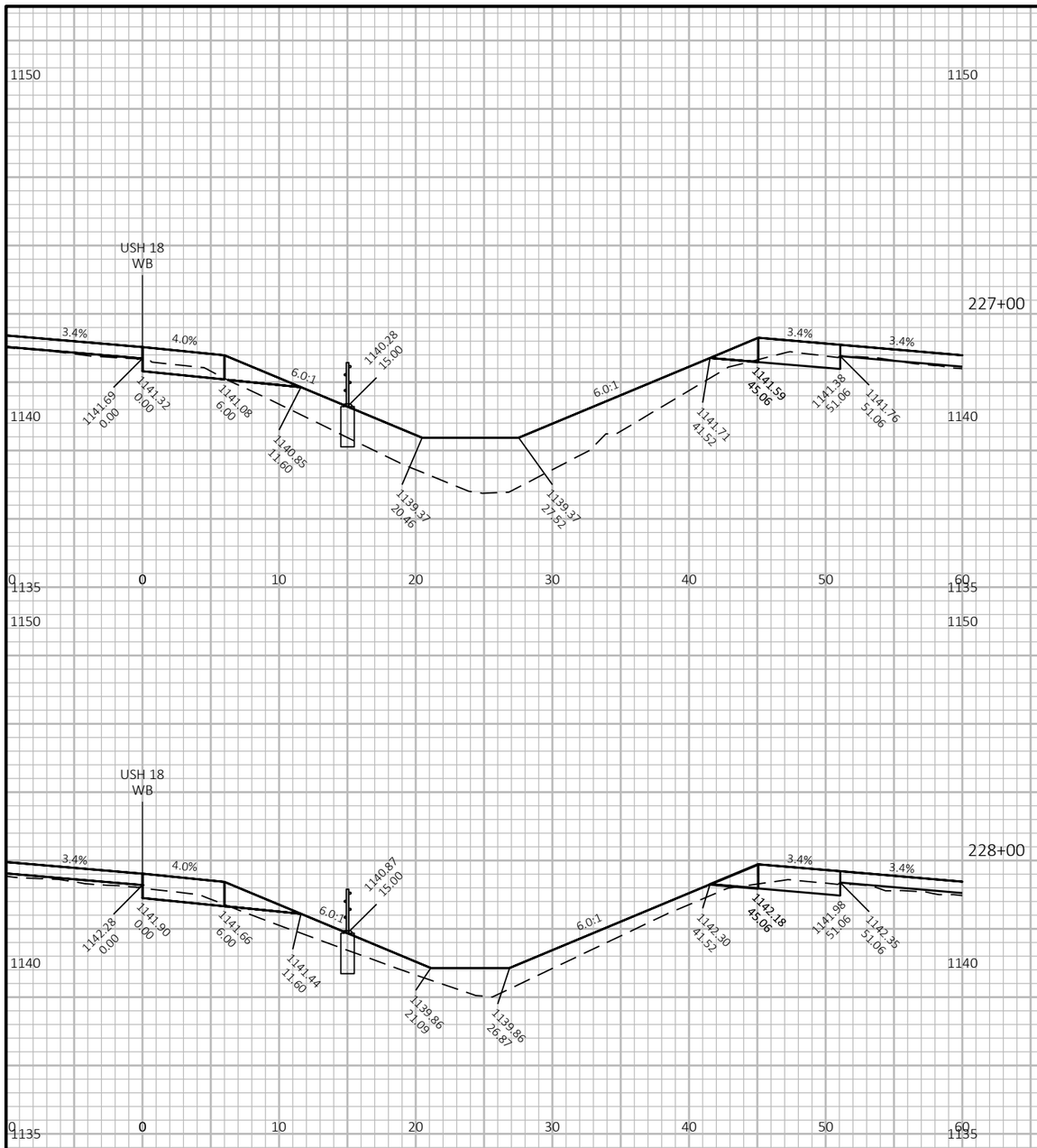

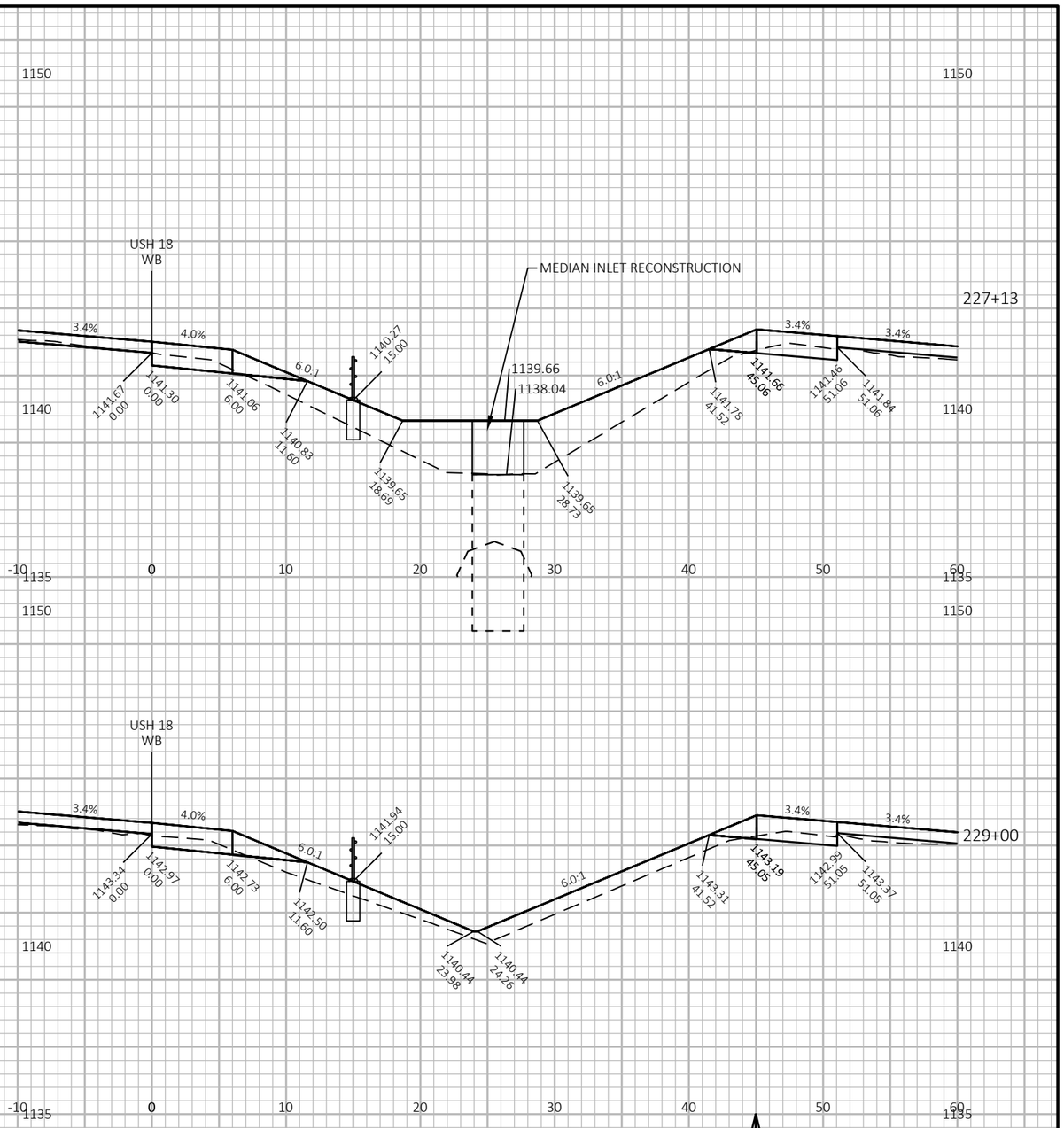

9

9

PROJECT NO: 1204-08-65	HWY: USH 18/151	COUNTY: DANE	CROSS SECTIONS: USH 18 WB	SHEET 754	E

FILE NAME : G:\WDOTSW\20007-000 USH 18\CIVIL 3D\SHEETSPLAN\CROSS SECTIONS\090201-XS_USH 18 WB.DWG
LAYOUT NAME - 18WB-1_14

PLOT DATE : 7/17/2022 1:01 PM PLOT BY : KL ENGINEERING PLOT NAME : PLOT SCALE : 1 IN:10 FT HORZ. / 1 IN:4 FT VERT.

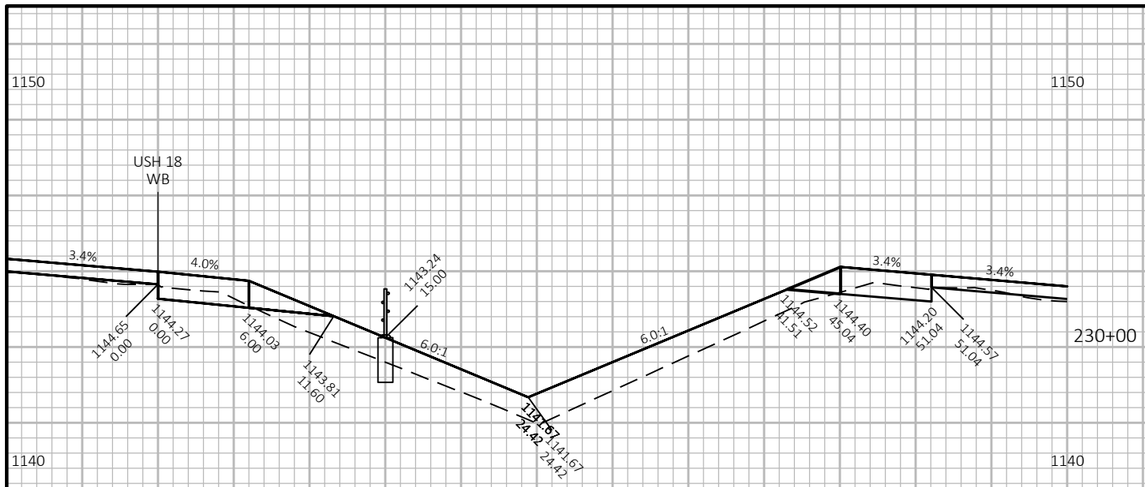

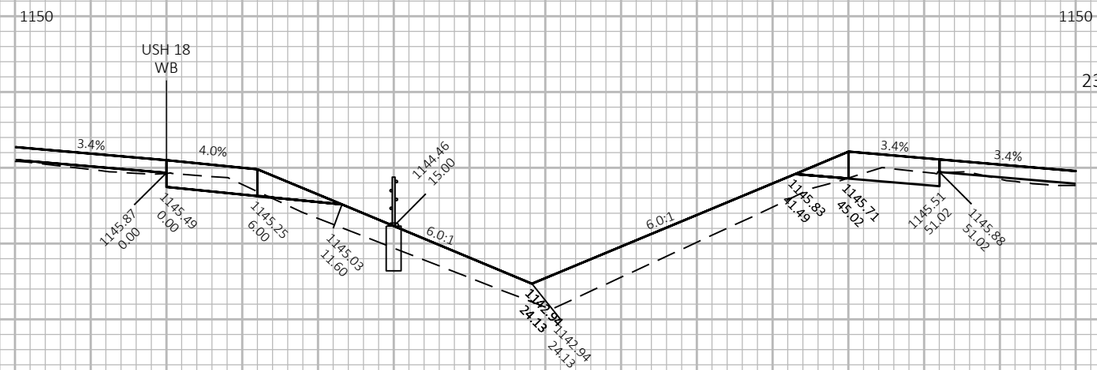

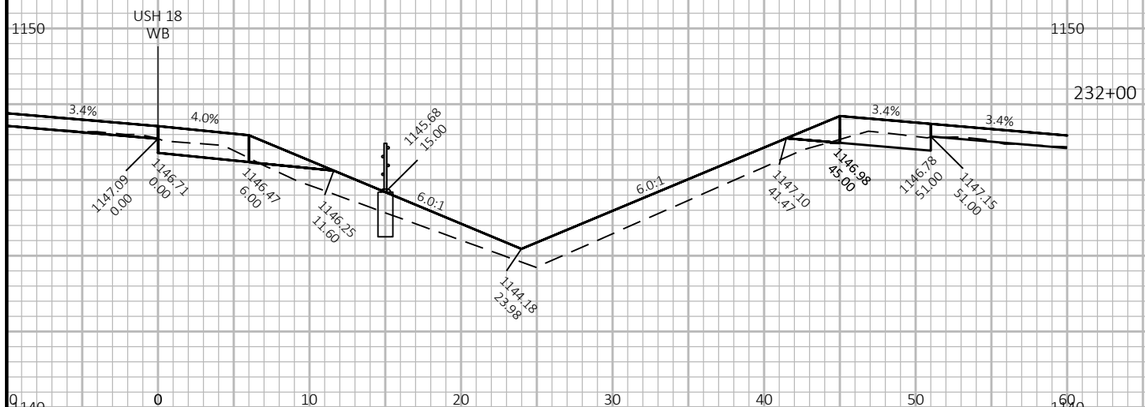

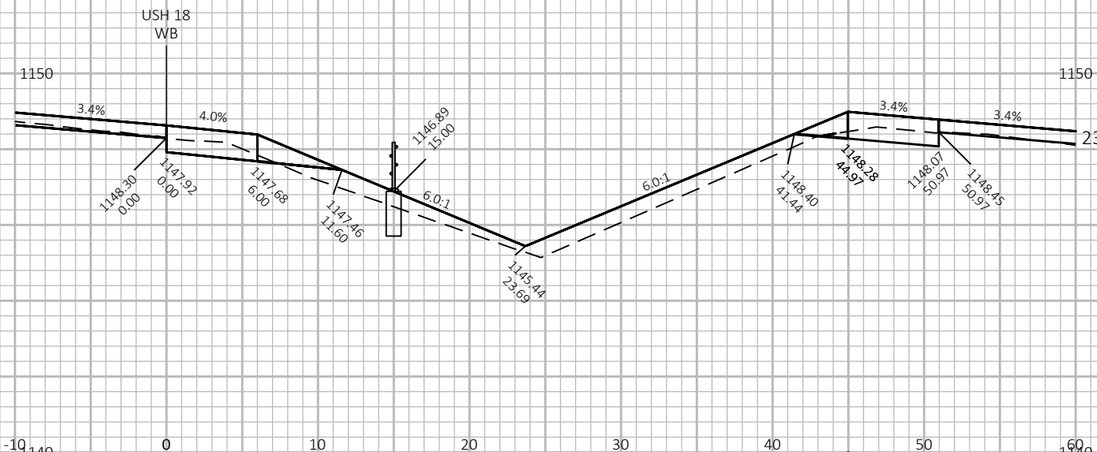

9

9

PROJECT NO: 1204-08-65	HWY: USH 18/151	COUNTY: DANE	CROSS SECTIONS: USH 18 WB	SHEET 755	E

FILE NAME : G:\WDOTSW\20007-000 USH 18\CIVIL 3D\SHEETSPLAN\CROSS SECTIONS\090201-XS_USH 18 WB.DWG
LAYOUT NAME - 18WB-1_15

PLOT DATE : 7/17/2022 1:02 PM PLOT BY : KL ENGINEERING PLOT NAME : PLOT SCALE : 1 IN:10 FT HORZ. / 1 IN:4 FT VERT.

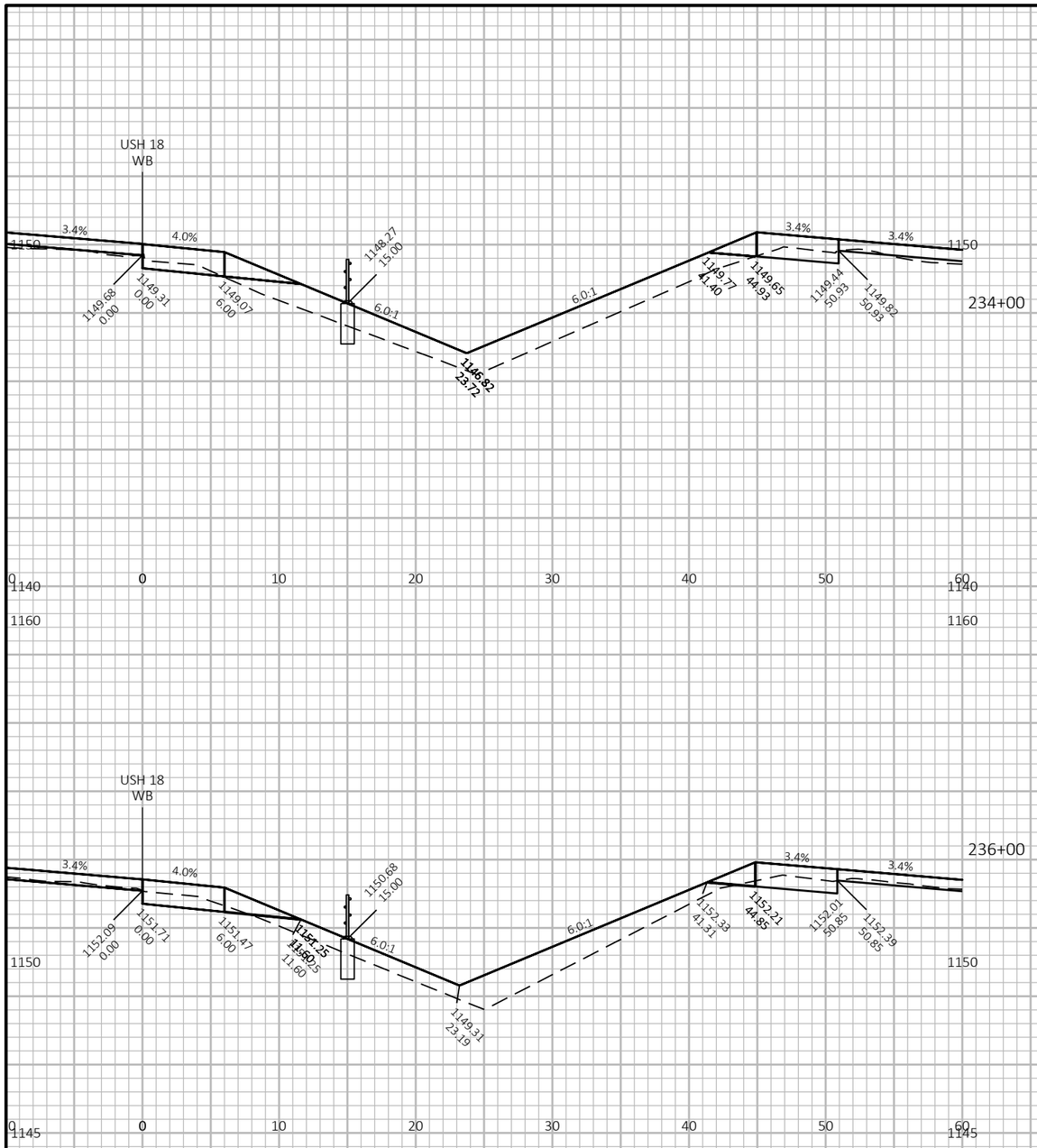

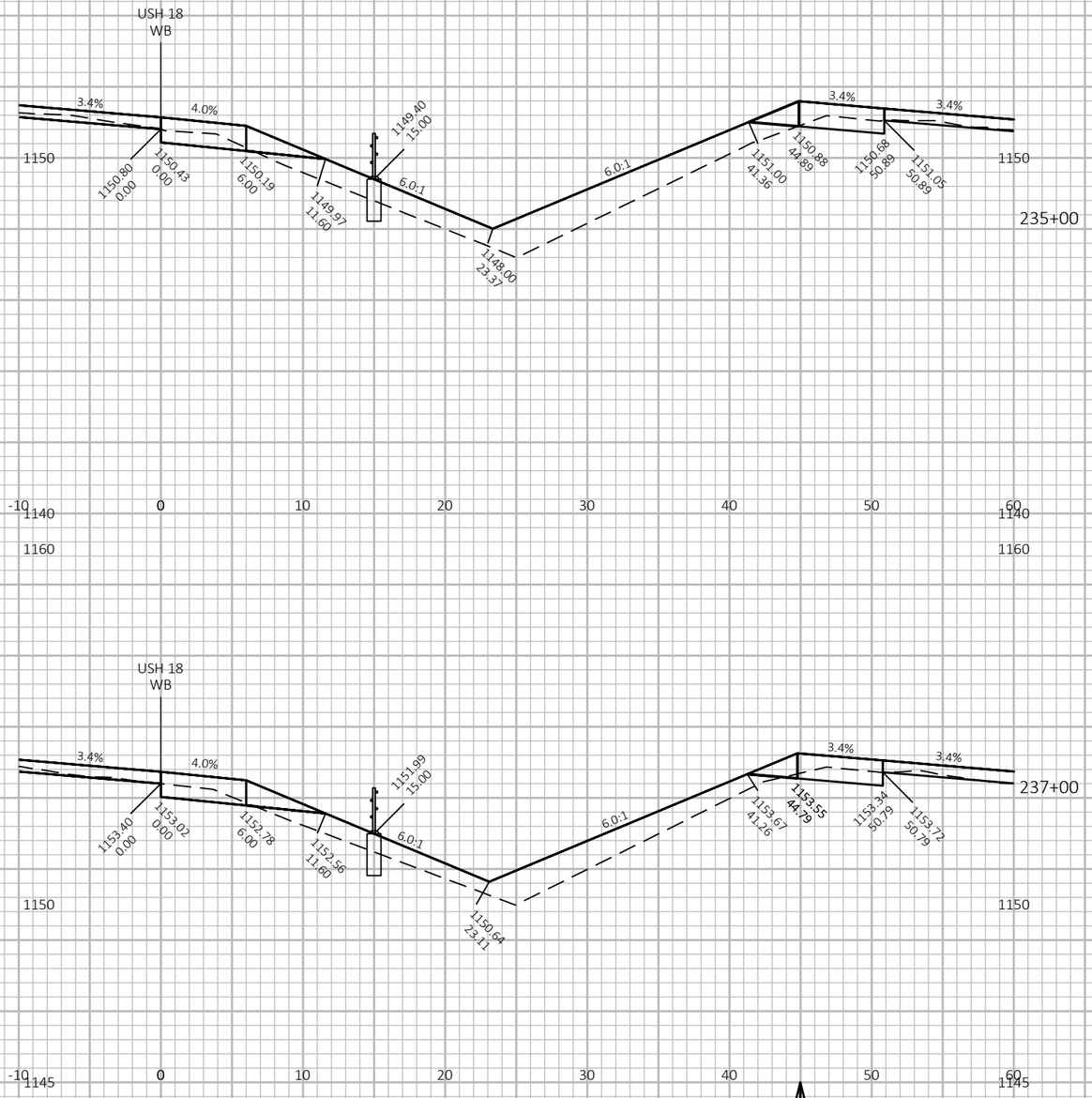

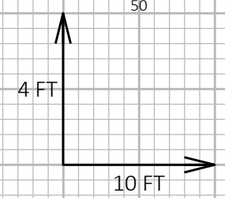

9

9

PROJECT NO: 1204-08-65	HWY: USH 18/151	COUNTY: DANE	CROSS SECTIONS: USH 18 WB	SHEET 756 E

FILE NAME : G:\WDOTSW\20007-000 USH 18\CIVIL 3D\SHEETSPLAN\CROSS SECTIONS\090201-XS_USH 18 WB.DWG
LAYOUT NAME - 18WB-1_16

PLOT DATE : 7/17/2022 1:04 PM

PLOT BY : KL ENGINEERING

PLOT NAME :

PLOT SCALE : 1 IN:10 FT HORZ. / 1 IN:4 FT VERT.

WISDOT/CADDS SHEET 49

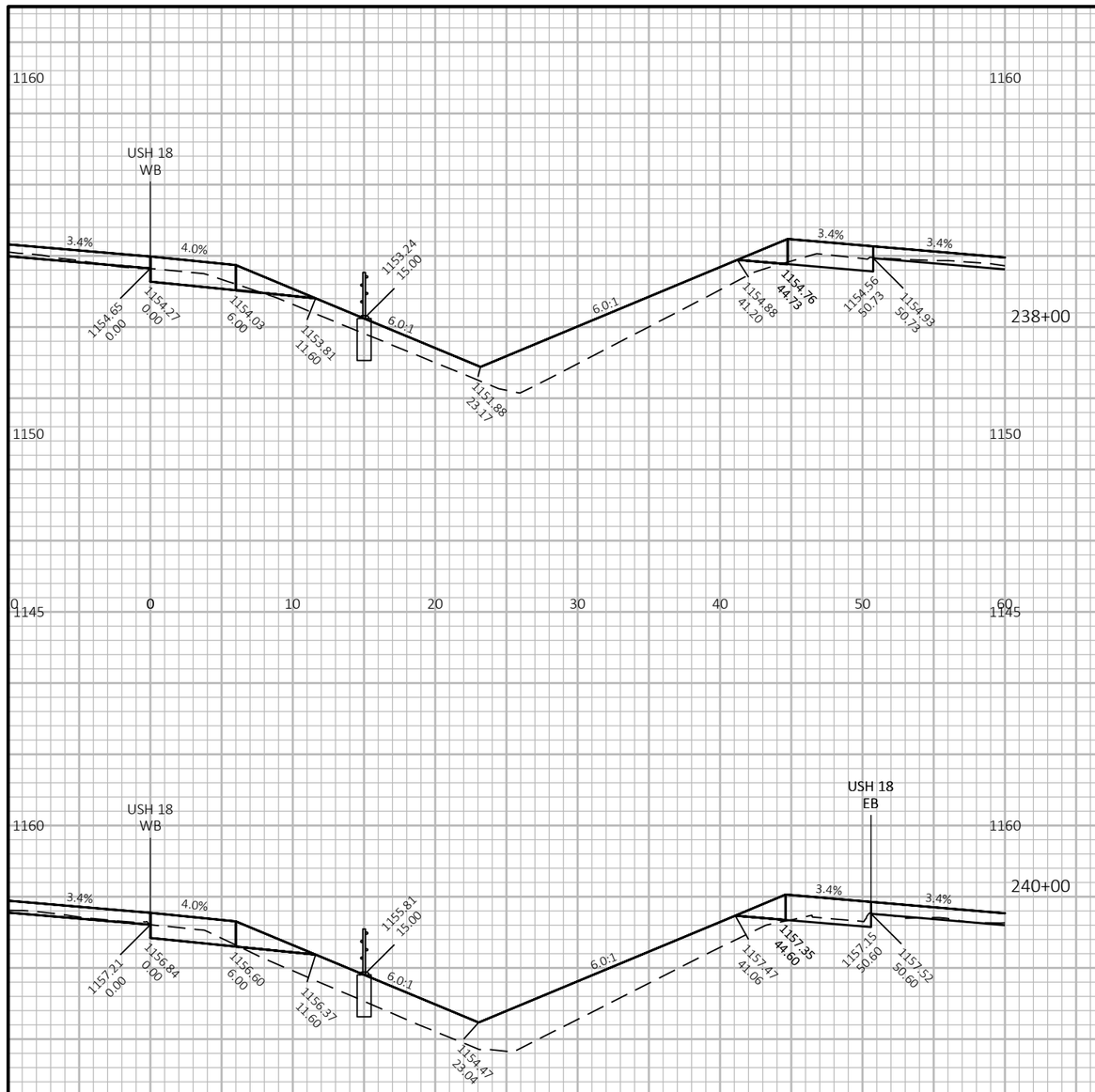

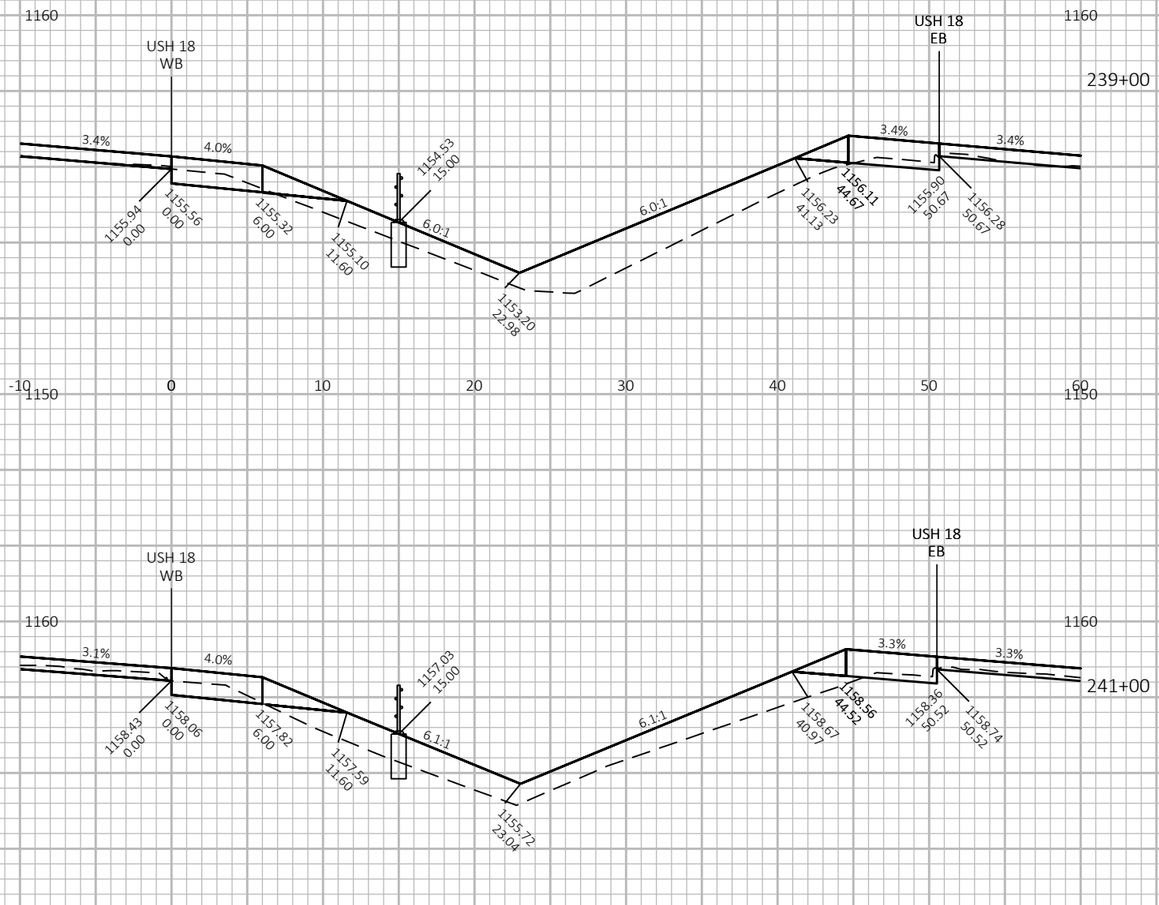

4 FT

10 FT

9

9

PROJECT NO: 1204-08-65	HWY: USH 18/151	COUNTY: DANE	CROSS SECTIONS: USH 18 WB	SHEET 757	E

FILE NAME : G:\WDOTSW\20007-000 USH 18\CIVIL 3D\SHEETSPLAN\CROSS SECTIONS\090201-XS_USH 18 WB.DWG
LAYOUT NAME - 18WB-1_17

PLOT DATE : 7/17/2022 1:05 PM PLOT BY : KL ENGINEERING PLOT NAME : PLOT SCALE : 1 IN:10 FT HORZ. / 1 IN:4 FT VERT.

WISDOT/CADDS SHEET 49

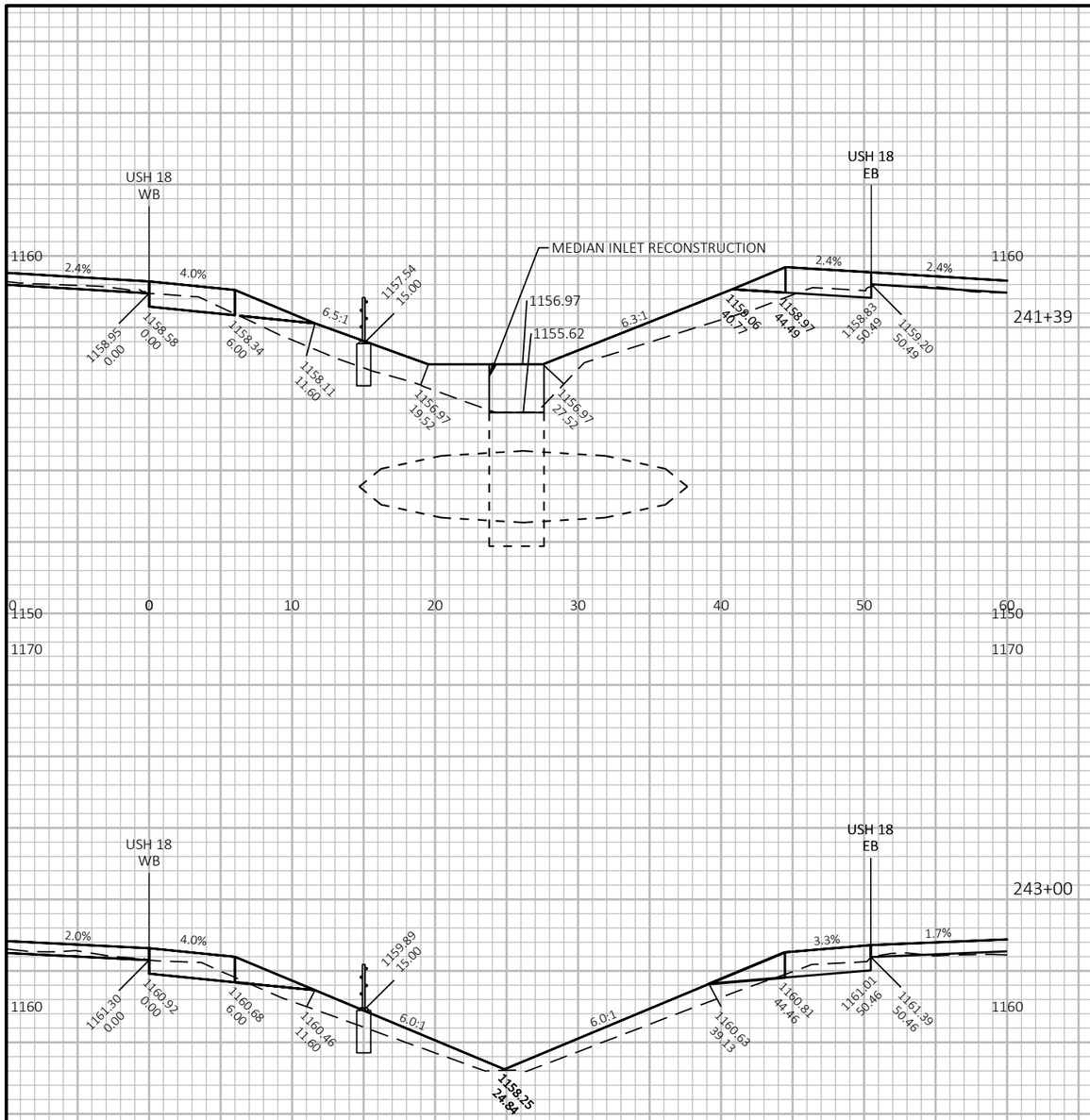

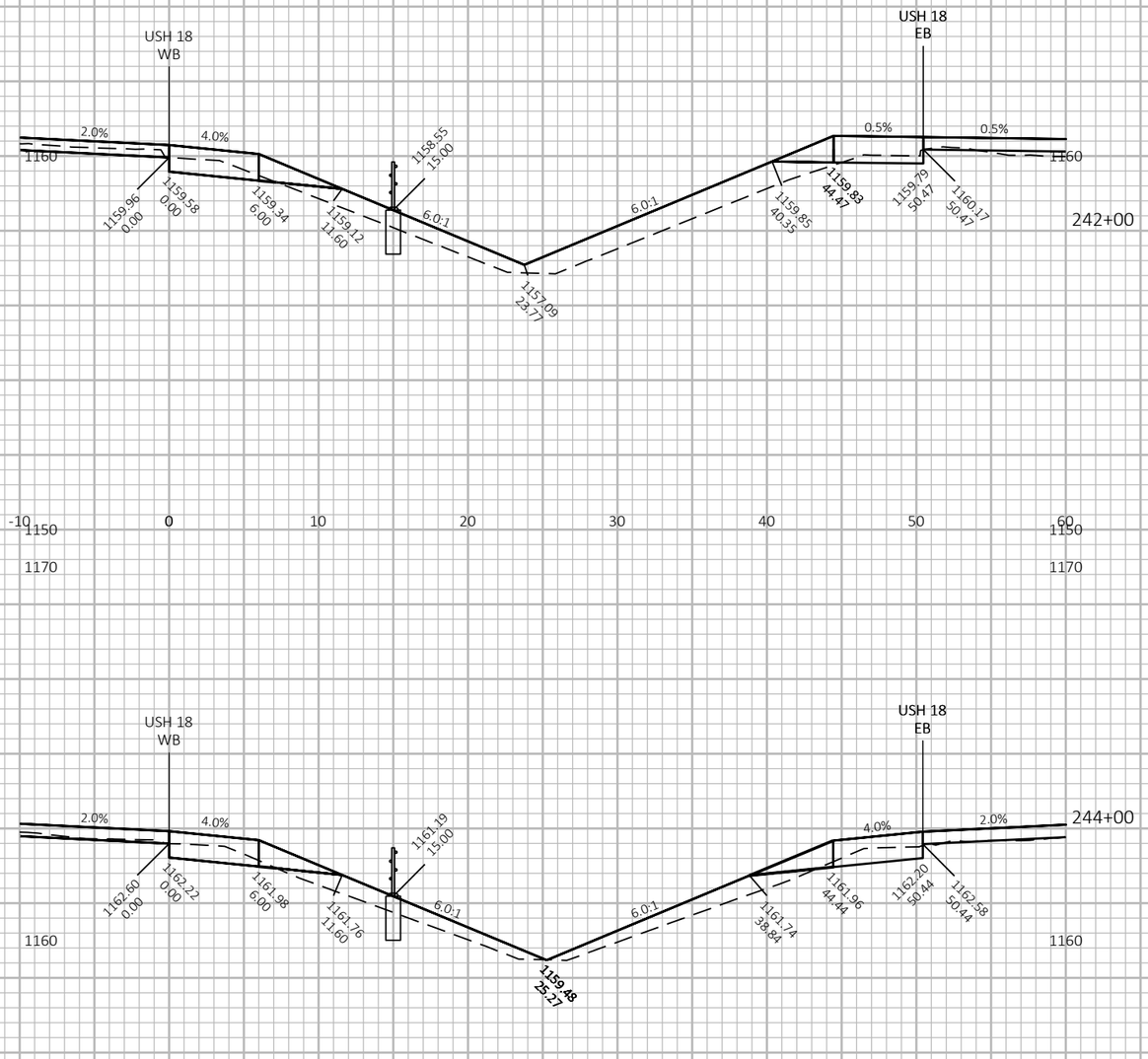

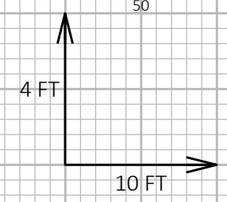

9

9

PROJECT NO: 1204-08-65	HWY: USH 18/151	COUNTY: DANE	CROSS SECTIONS: USH 18 WB	SHEET 758	E

FILE NAME : G:\WDOTSW\20007-000 USH 18\CIVIL 3D\SHEETSPLAN\CROSS SECTIONS\090201-XS_USH 18 WB.DWG
LAYOUT NAME - 18WB-1_18

PLOT DATE : 7/17/2022 1:07 PM

PLOT BY : KL ENGINEERING

PLOT NAME :

PLOT SCALE : 1 IN:10 FT HORZ. / 1 IN:4 FT VERT.

WISDOT/CADDS SHEET 49

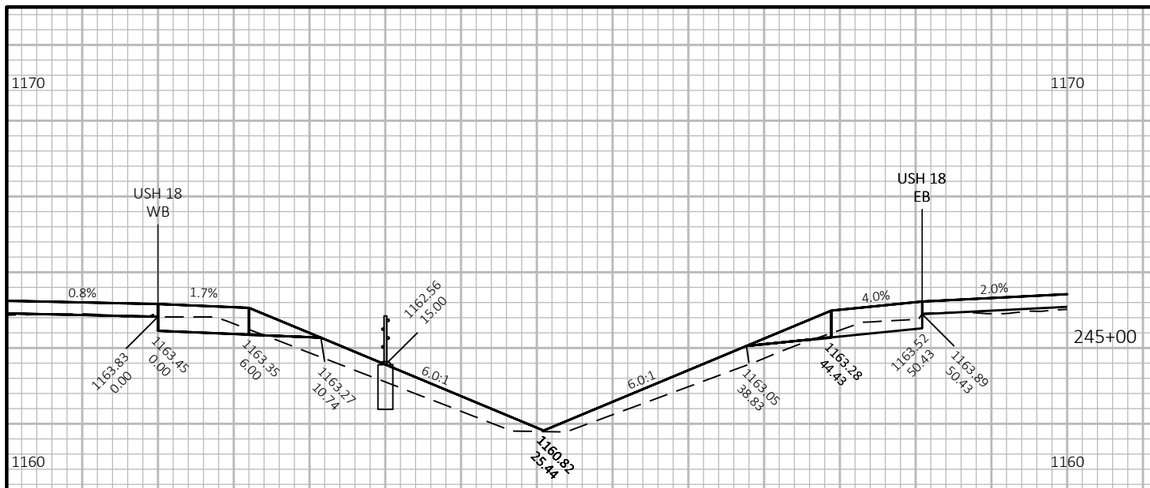

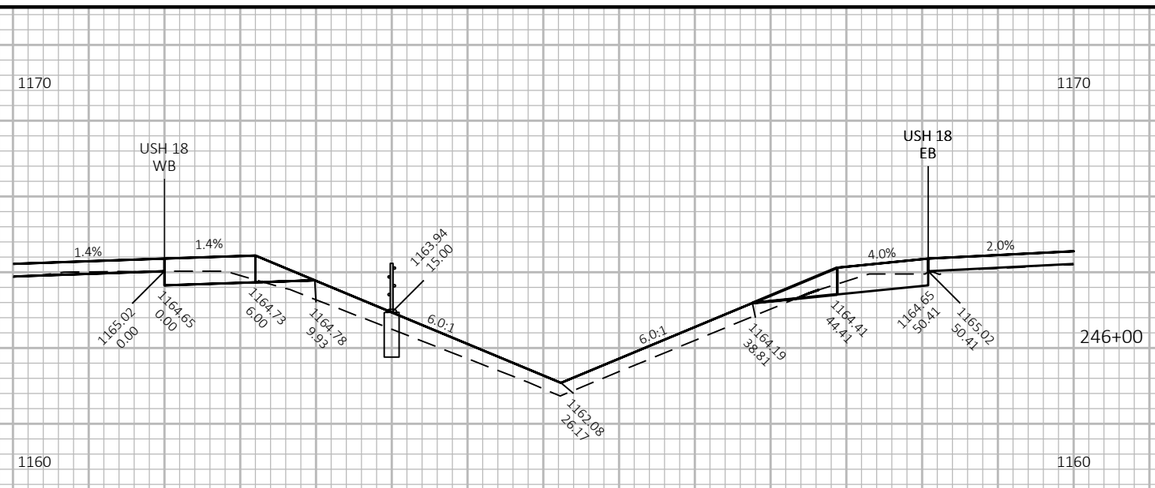

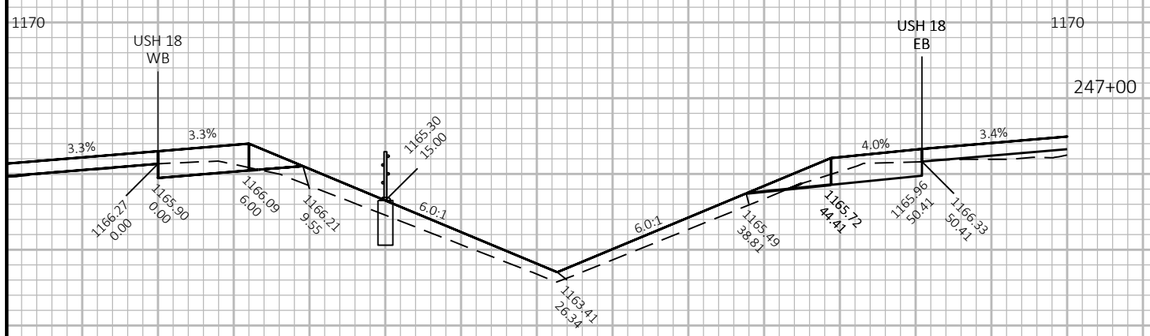

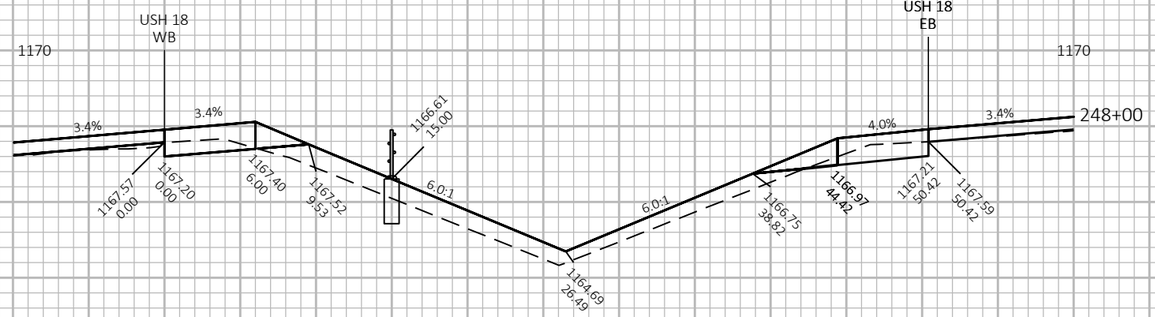

9

9

PROJECT NO: 1204-08-65	HWY: USH 18/151	COUNTY: DANE	CROSS SECTIONS: USH 18 WB	SHEET 759	E

FILE NAME : G:\WDOTSW\20007-000 USH 18\CIVIL 3D\SHEETSPLAN\CROSS SECTIONS\090201-XS_USH 18 WB.DWG
LAYOUT NAME - 18WB-1_19

PLOT DATE : 7/17/2022 1:09 PM

PLOT BY : KL ENGINEERING

PLOT NAME :

PLOT SCALE : 1 IN:10 FT HORZ. / 1 IN:4 FT VERT.

WISDOT/CADDS SHEET 49

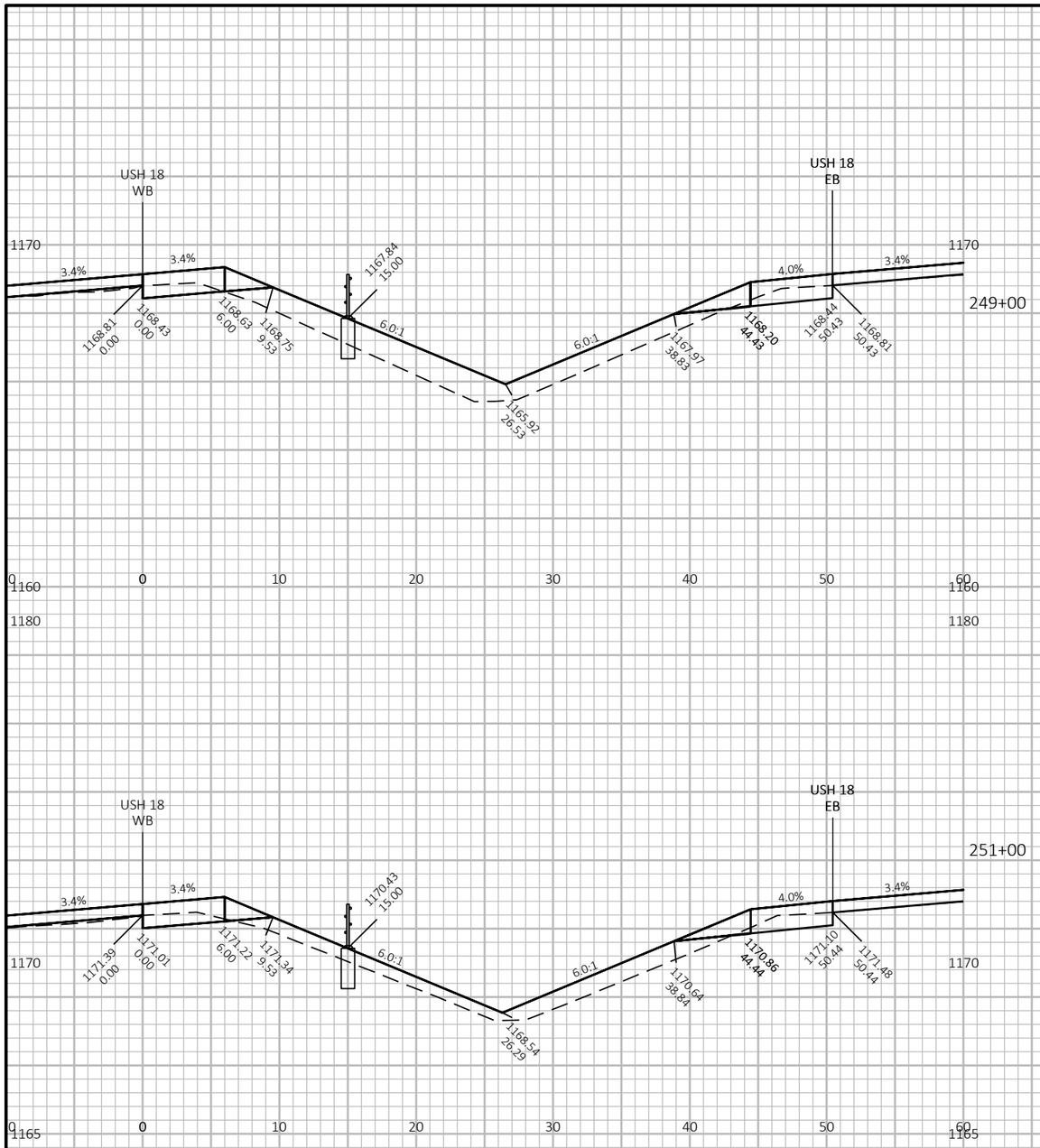

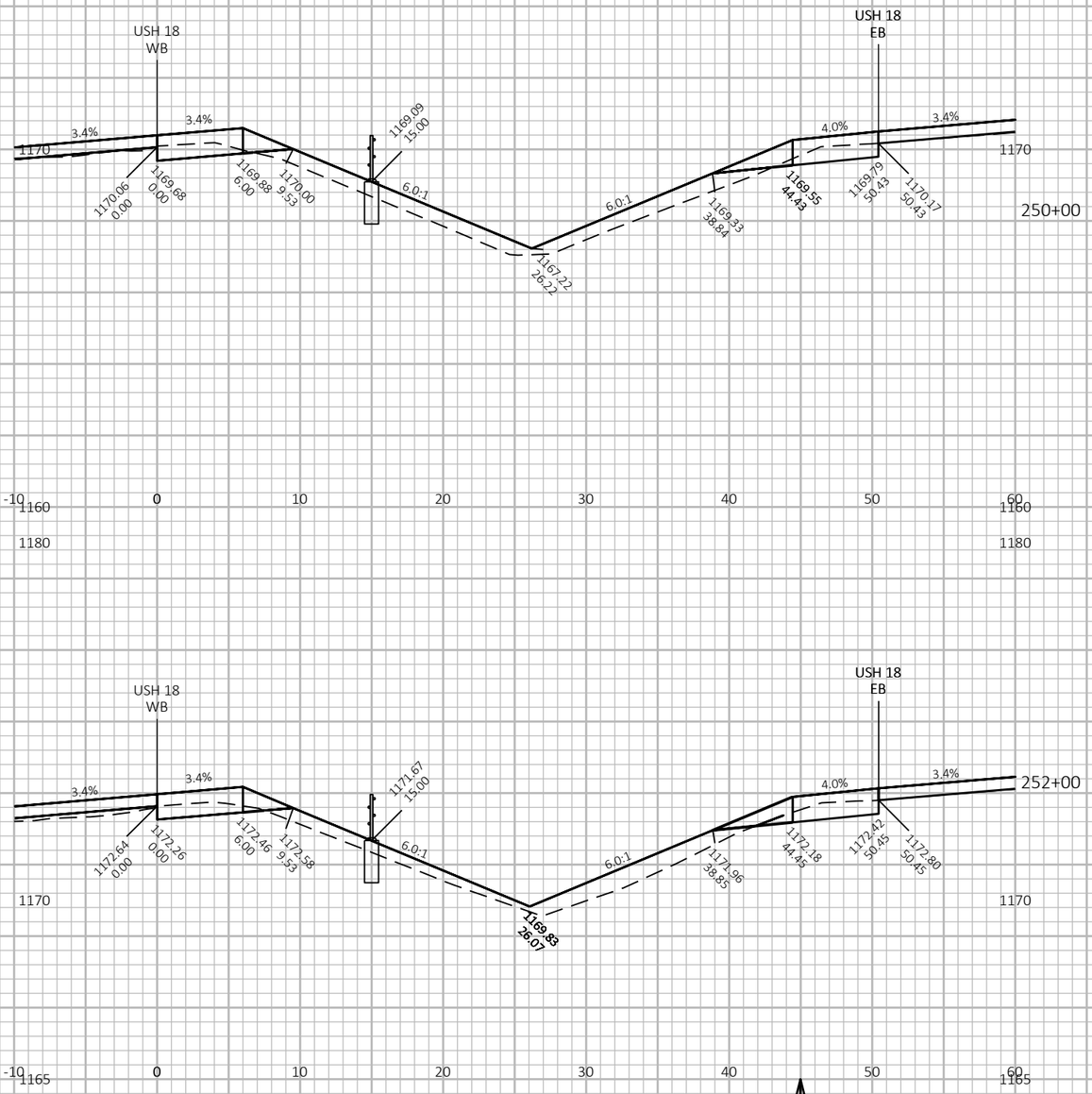

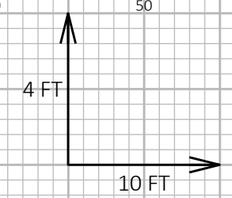

9

9

PROJECT NO: 1204-08-65	HWY: USH 18/151	COUNTY: DANE	CROSS SECTIONS: USH 18 WB	SHEET 760	E

FILE NAME : G:\WDOTSW\20007-000 USH 18\CIVIL 3D\SHEETSPLAN\CROSS SECTIONS\090201-XS_USH 18 WB.DWG
LAYOUT NAME - 18WB-1_20

PLOT DATE : 7/17/2022 1:10 PM PLOT BY : KL ENGINEERING PLOT NAME : PLOT SCALE : 1 IN:10 FT HORZ. / 1 IN:4 FT VERT.

WISDOT/CADDS SHEET 49

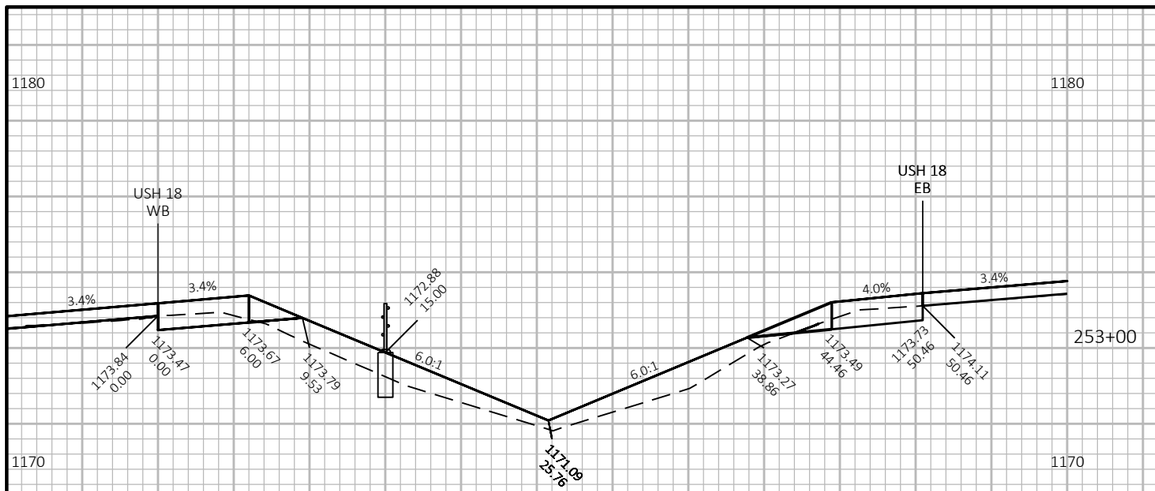

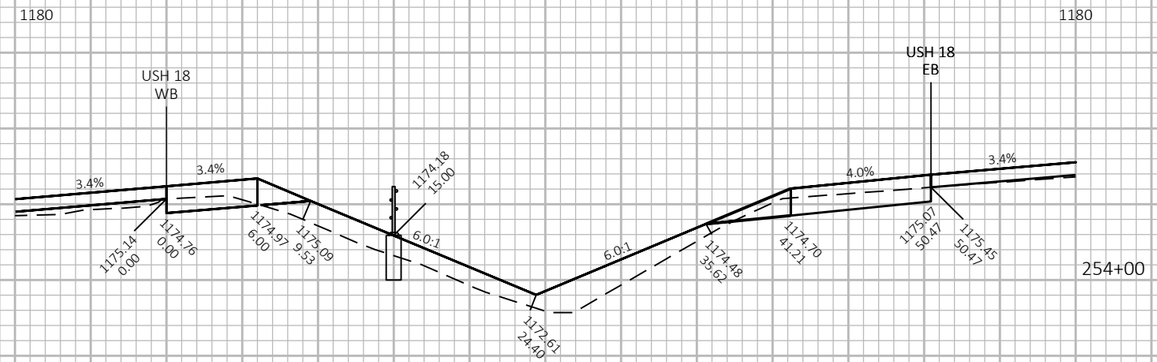

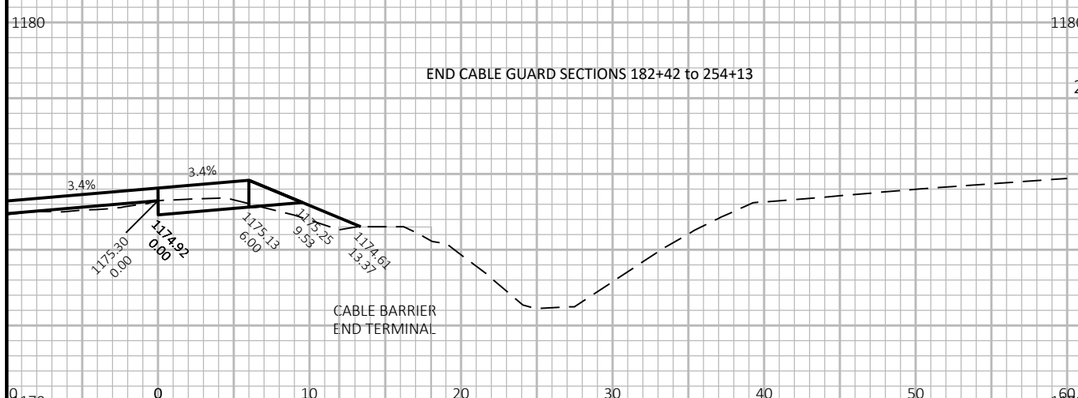

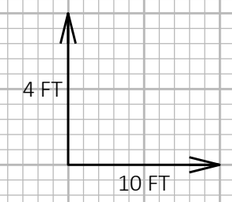

9

9

PROJECT NO: 1204-08-65	HWY: USH 18/151	COUNTY: DANE	CROSS SECTIONS: USH 18 WB	SHEET 761	E

FILE NAME : G:\WDOTSW\20007-000 USH 18\CIVIL 3D\SHEETSPLAN\CROSS SECTIONS\090201-XS_USH 18 WB.DWG
LAYOUT NAME - 18WB-1_21

PLOT DATE : 7/17/2022 1:12 PM PLOT BY : KL ENGINEERING PLOT NAME : PLOT SCALE : 1 IN:10 FT HORZ. / 1 IN:4 FT VERT.

START BEAM GUARD SECTIONS 340+94 to 342+84

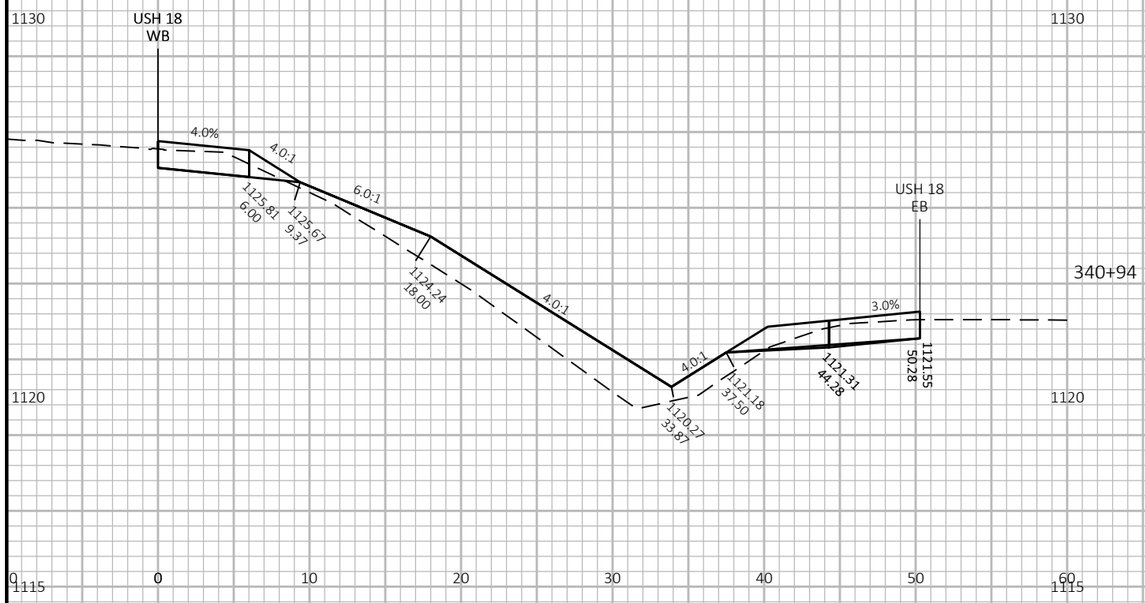

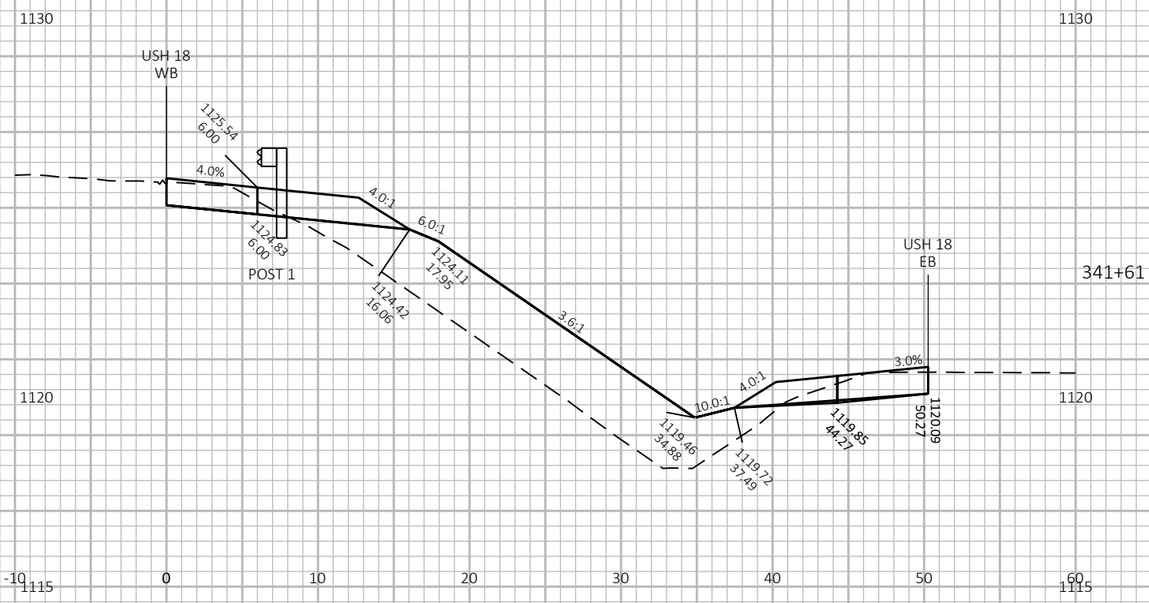

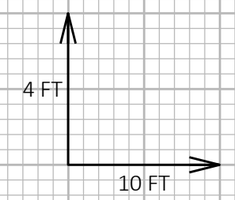

9

9

PROJECT NO: 1204-08-65	HWY: USH 18/151	COUNTY: DANE	CROSS SECTIONS: USH 18 WB	SHEET 762	E

FILE NAME : G:\WDOTSW\20007-000 USH 18\CIVIL 3D\SHEETSPLAN\CROSS SECTIONS\090201-XS_USH 18 WB.DWG
LAYOUT NAME - 18WB-2-1

PLOT DATE : 7/17/2022 1:13 PM PLOT BY : KL ENGINEERING PLOT NAME : PLOT SCALE : 1 IN:10 FT HORZ. / 1 IN:4 FT VERT.

WISDOT/CADDS SHEET 49

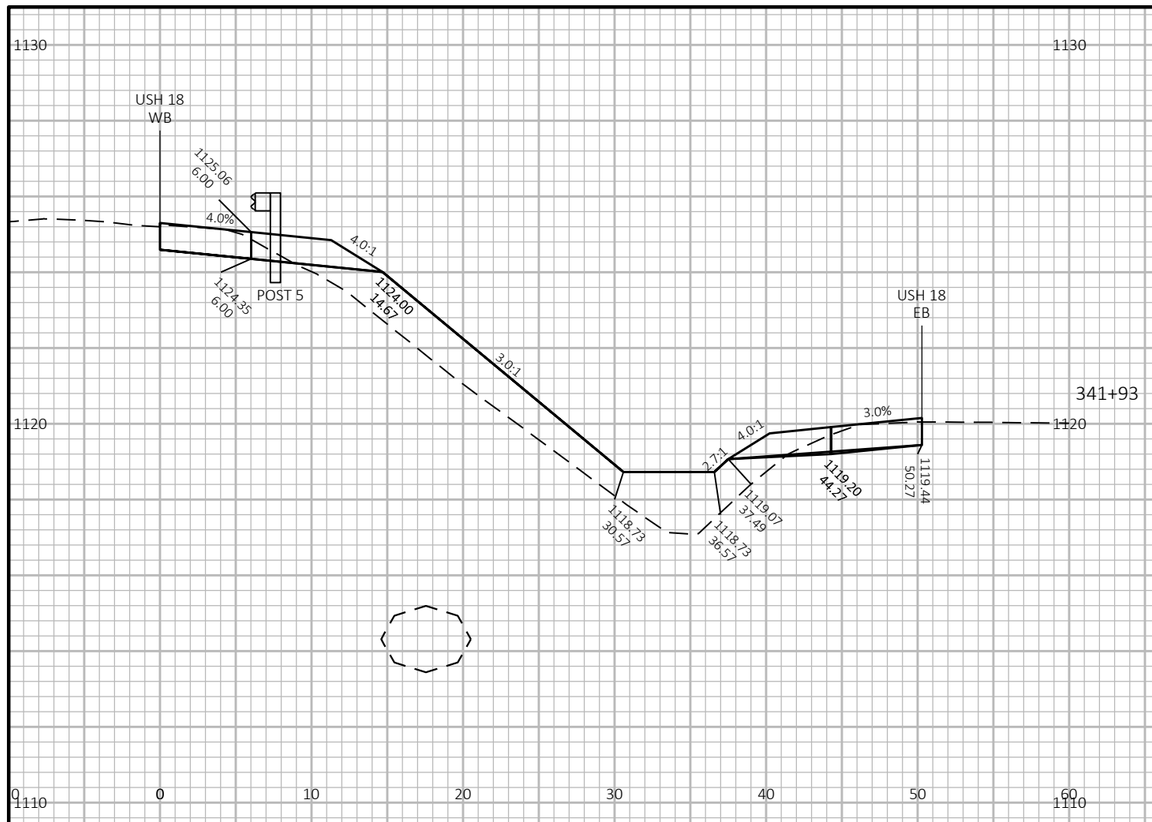

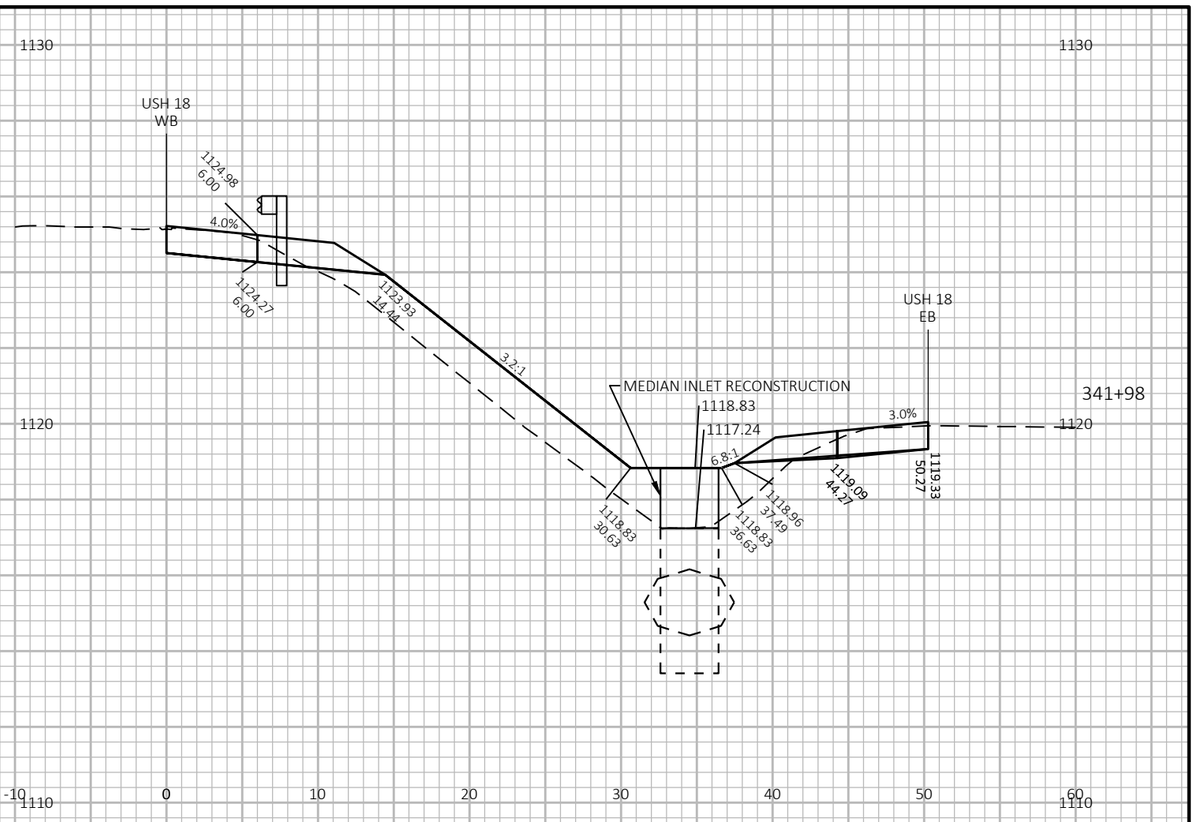

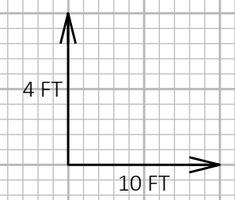

9

9

PROJECT NO: 1204-08-65	HWY: USH 18/151	COUNTY: DANE	CROSS SECTIONS: USH 18 WB	SHEET 763	E

FILE NAME : G:\WDOTSW\20007-000 USH 18\CIVIL 3D\SHEETSPLAN\CROSS SECTIONS\090201-XS_USH 18 WB.DWG
LAYOUT NAME - 18WB-2-2

PLOT DATE : 7/17/2022 1:15 PM PLOT BY : KL ENGINEERING PLOT NAME : PLOT SCALE : 1 IN:10 FT HORZ. / 1 IN:4 FT VERT.

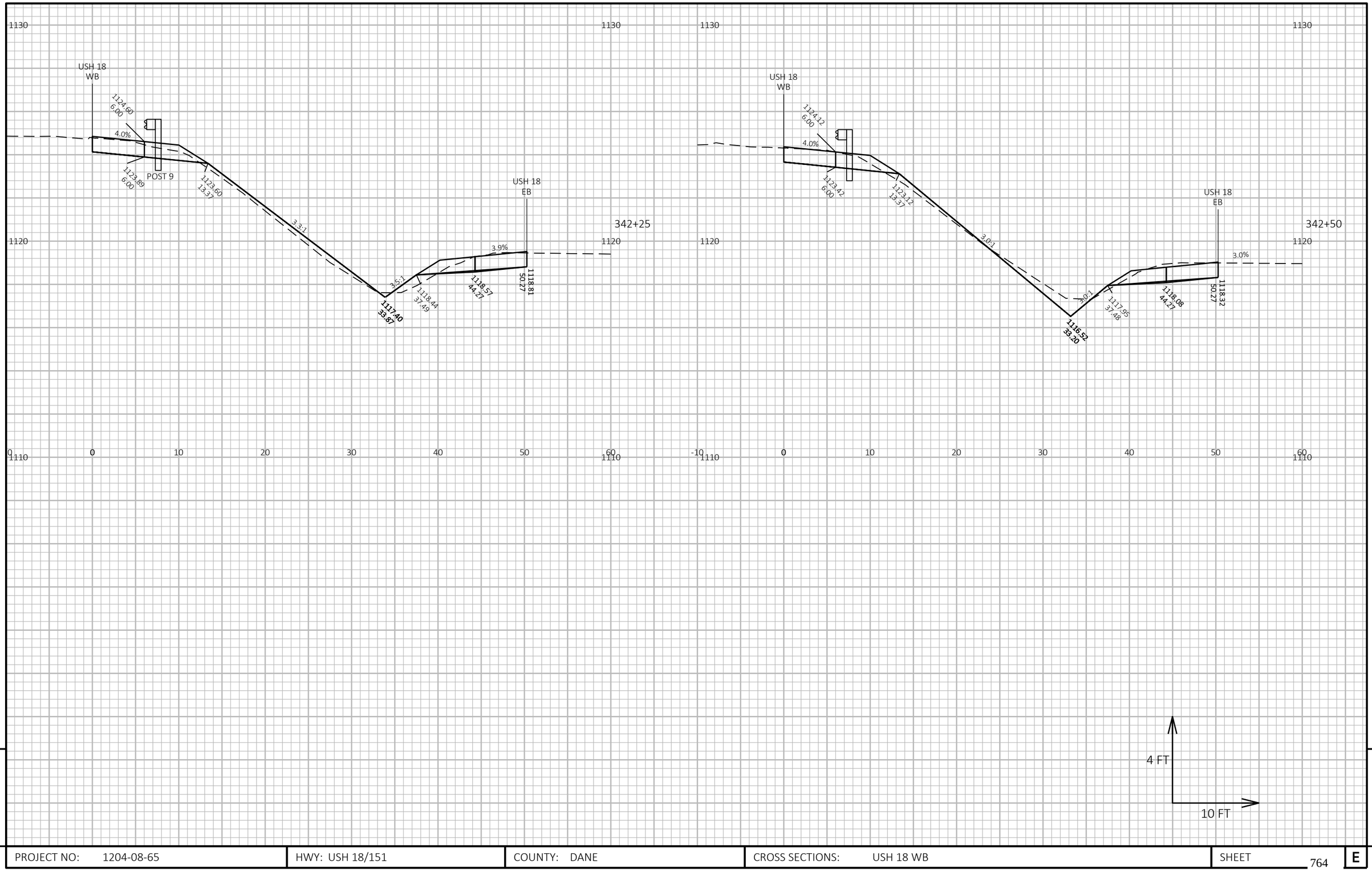

9

9

PROJECT NO: 1204-08-65	HWY: USH 18/151	COUNTY: DANE	CROSS SECTIONS: USH 18 WB	SHEET 764	E

FILE NAME : G:\WDOTSW\20007-000 USH 18\CIVIL 3D\SHEETSPLAN\CROSS SECTIONS\090201-XS_USH 18 WB.DWG
LAYOUT NAME - 18WB-2-3

PLOT DATE : 7/17/2022 1:16 PM PLOT BY : KL ENGINEERING PLOT NAME : PLOT SCALE : 1 IN:10 FT HORZ. / 1 IN:4 FT VERT.

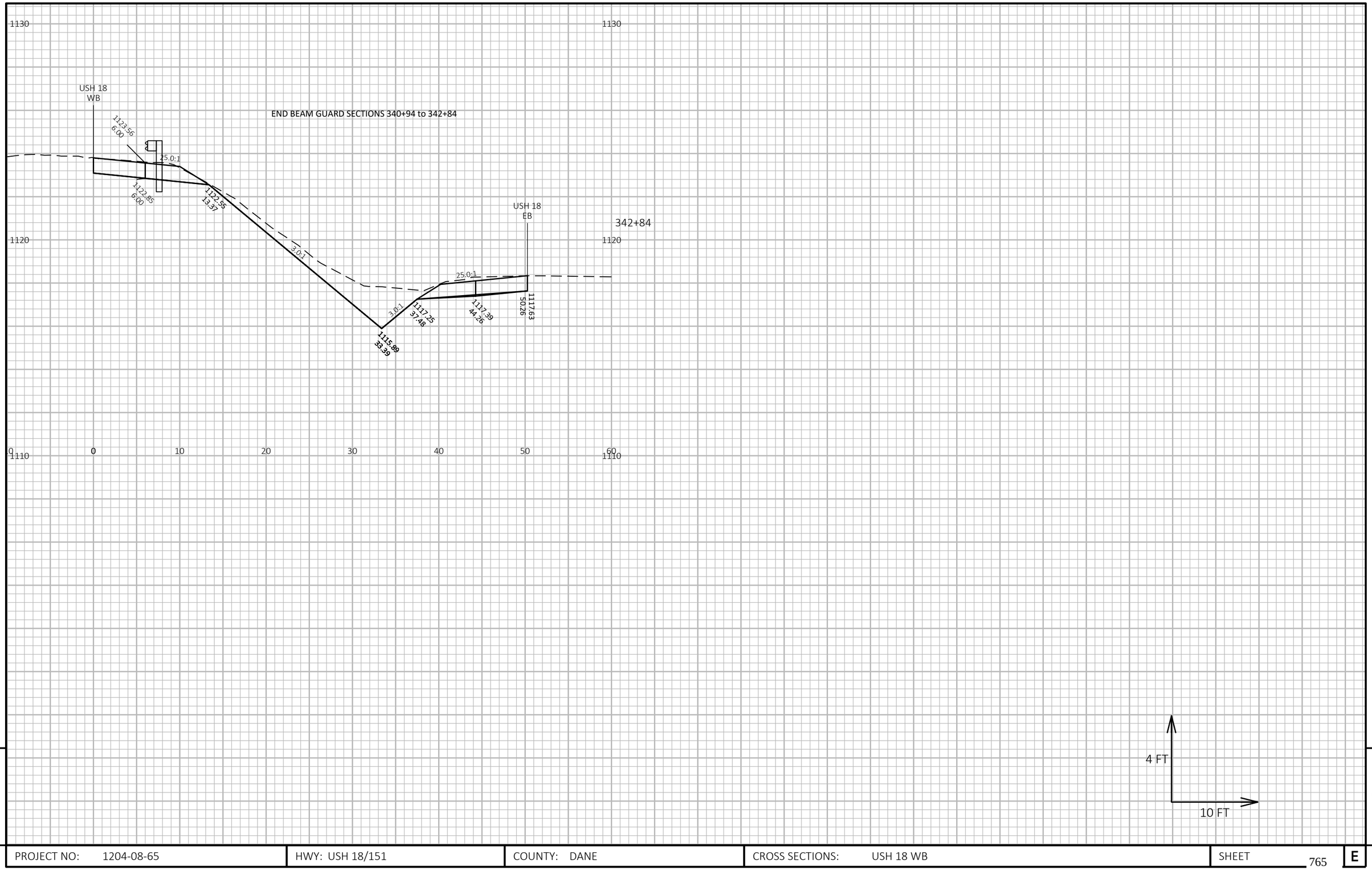

9

9

PROJECT NO: 1204-08-65	HWY: USH 18/151	COUNTY: DANE	CROSS SECTIONS: USH 18 WB	SHEET 765	E

FILE NAME : G:\WDOTSW\20007-000 USH 18\CIVIL 3D\SHEETSPLAN\CROSS SECTIONS\090201-XS_USH 18 WB.DWG
LAYOUT NAME - 18WB-2-4

PLOT DATE : 7/17/2022 1:18 PM PLOT BY : KL ENGINEERING PLOT NAME : PLOT SCALE : 1 IN:10 FT HORZ. / 1 IN:4 FT VERT.

WISDOT/CADDS SHEET 49

START BEAM GUARD SECTION 345+04 TO 348+72

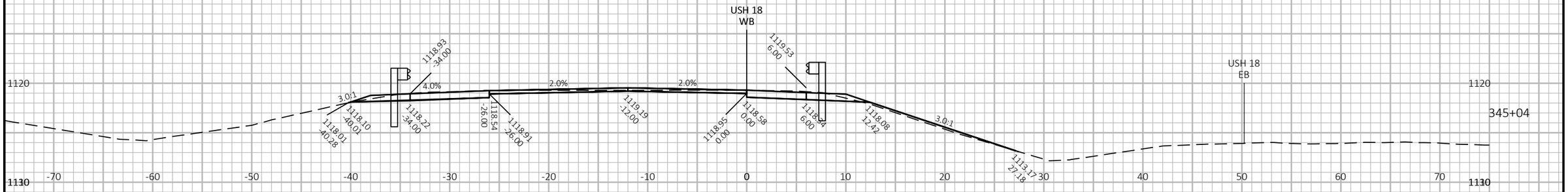

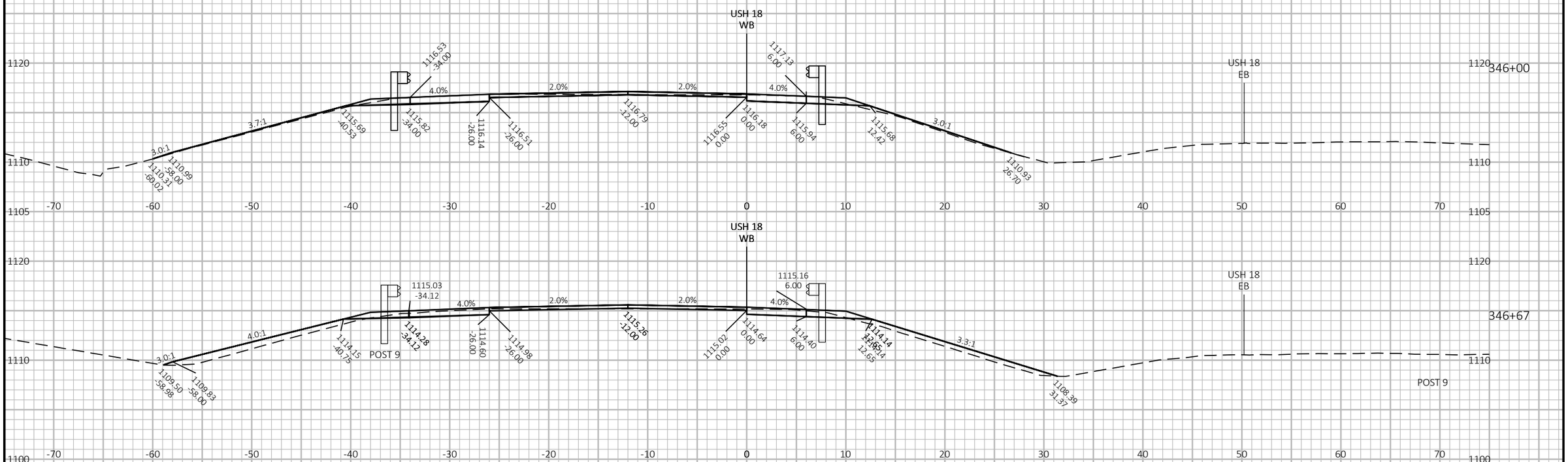

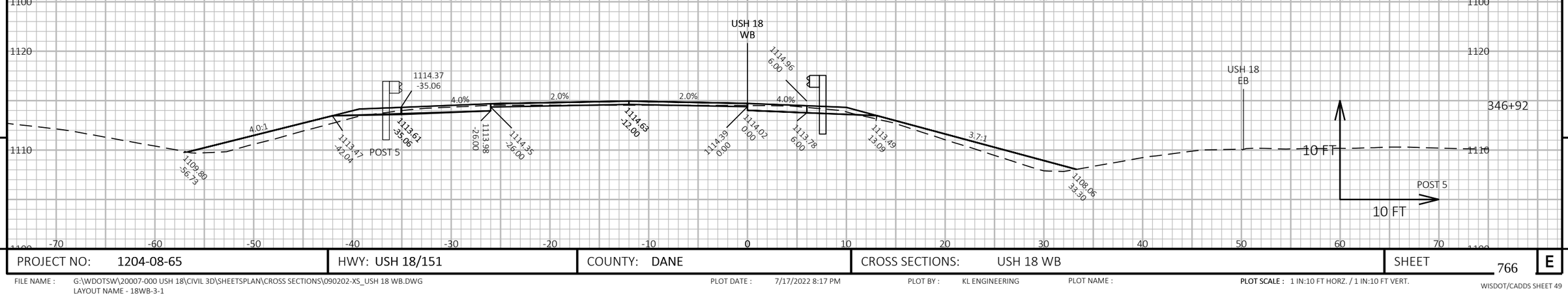

PROJECT NO: 1204-08-65	HWY: USH 18/151	COUNTY: DANE	CROSS SECTIONS: USH 18 WB	SHEET 766	E

FILE NAME : G:\WDOTSW\20007-000 USH 18\CIVIL 3D\SHEETSPLAN\CROSS SECTIONS\090202-XS_USH 18 WB.DWG
LAYOUT NAME - 18WB-3-1

PLOT DATE : 7/17/2022 8:17 PM PLOT BY : KL ENGINEERING PLOT NAME : PLOT SCALE : 1 IN:10 FT HORZ. / 1 IN:10 FT VERT.

WISDOT/CADDS SHEET 49

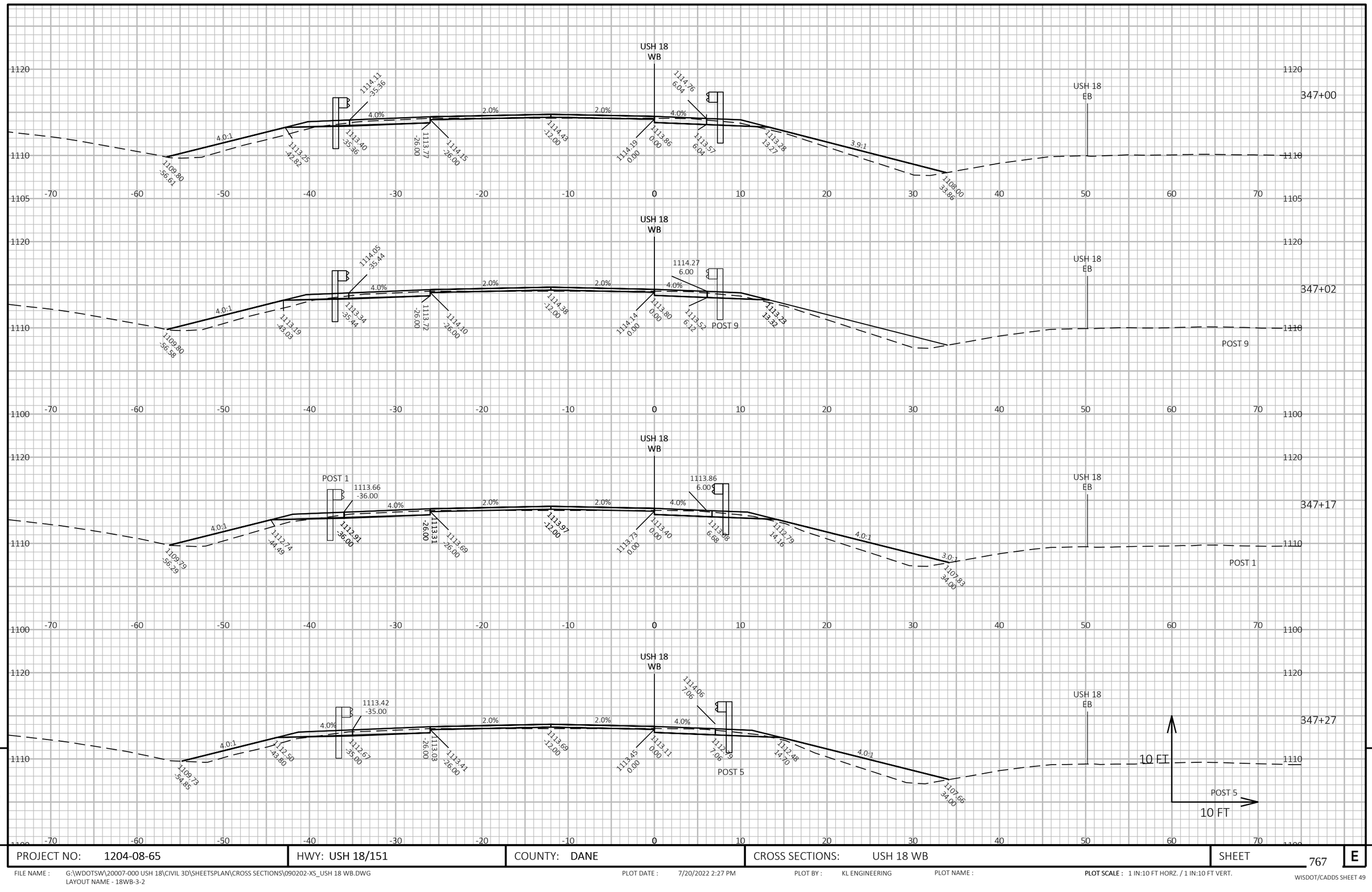

9

9

PROJECT NO: 1204-08-65	HWY: USH 18/151	COUNTY: DANE	CROSS SECTIONS: USH 18 WB	SHEET 767	E

FILE NAME : G:\WDOTSW\20007-000 USH 18\CIVIL 3D\SHEETSPLAN\CROSS SECTIONS\090202-XS_USH 18 WB.DWG
LAYOUT NAME - 18WB-3-2

PLOT DATE : 7/20/2022 2:27 PM

PLOT BY : KL ENGINEERING

PLOT NAME :

PLOT SCALE : 1 IN:10 FT HORZ. / 1 IN:10 FT VERT.

WISDOT/CADDS SHEET 49

END BEAM GUARD SECTION 344+51.50 TO 347+52

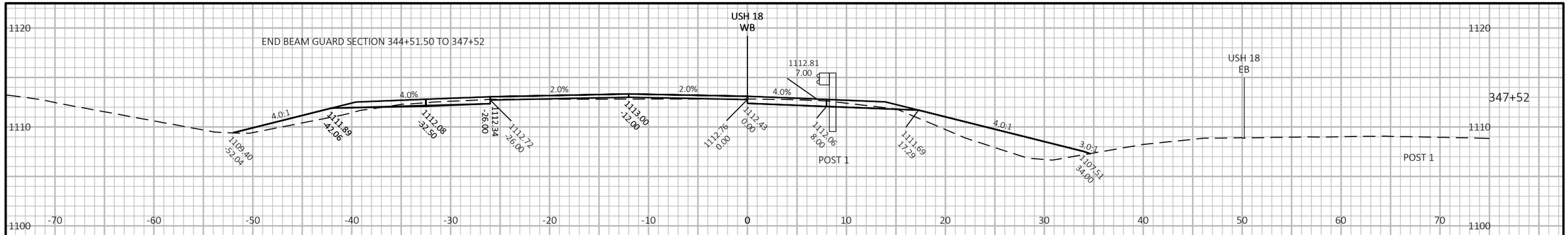

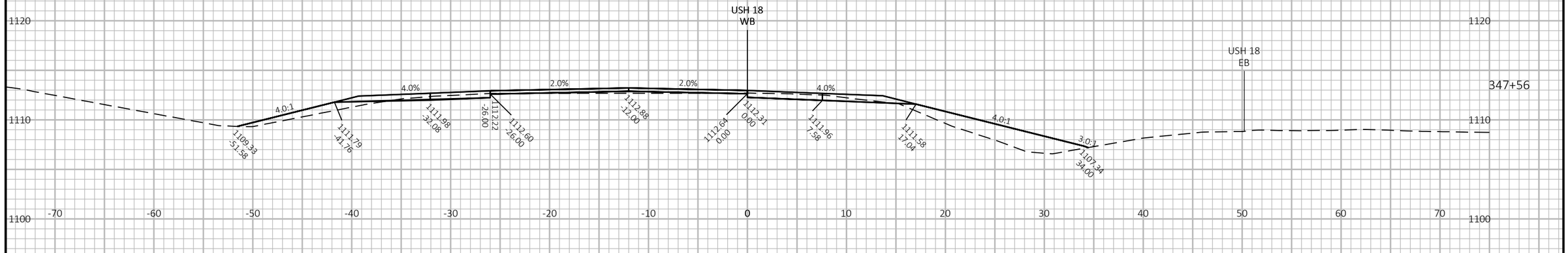

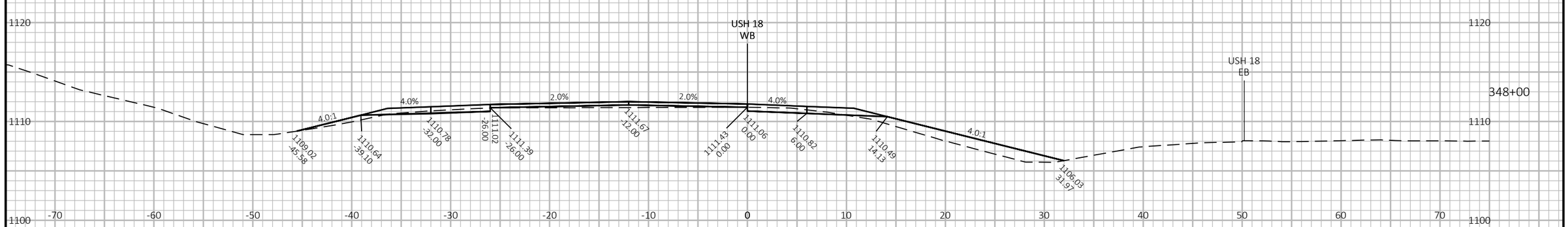

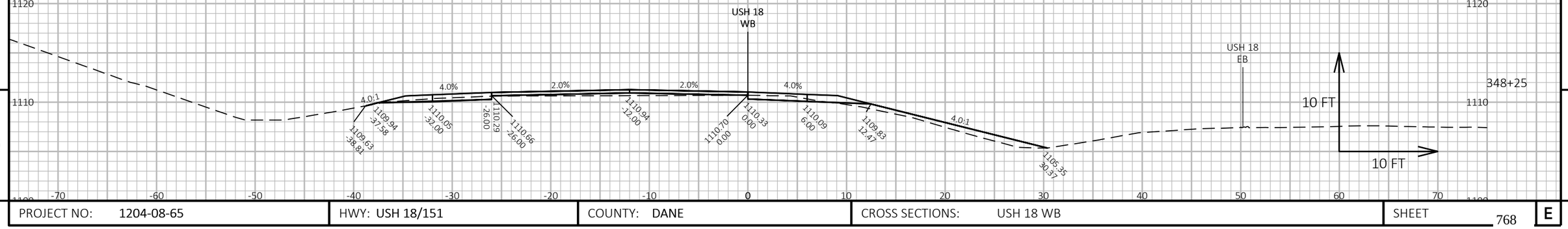

9 9

PROJECT NO: 1204-08-65	HWY: USH 18/151	COUNTY: DANE	CROSS SECTIONS: USH 18 WB	SHEET 768	E

FILE NAME : G:\WDOTSW\20007-000 USH 18\CIVIL 3D\SHEETSPLAN\CROSS SECTIONS\090202-XS_USH 18 WB.DWG
LAYOUT NAME - 18WB-3-3

PLOT DATE : 7/17/2022 8:20 PM PLOT BY : KL ENGINEERING PLOT NAME : **PLOT SCALE :** 1 IN:10 FT HORZ. / 1 IN:10 FT VERT.

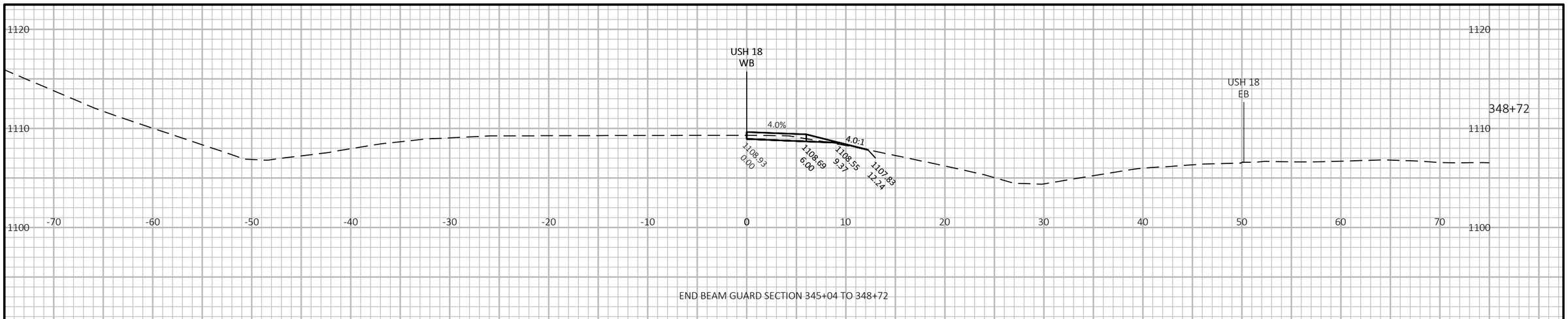

END BEAM GUARD SECTION 345+04 TO 348+72

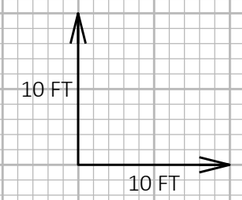

9

9

PROJECT NO: 1204-08-65	HWY: USH 18/151	COUNTY: DANE	CROSS SECTIONS: USH 18 WB	SHEET 769	E

FILE NAME : G:\WDOTSW\20007-000 USH 18\CIVIL 3D\SHEETSPLAN\CROSS SECTIONS\090202-XS_USH 18 WB.DWG
LAYOUT NAME - 18WB-3-4

PLOT DATE : 7/17/2022 8:22 PM PLOT BY : KL ENGINEERING PLOT NAME : **PLOT SCALE :** 1 IN:10 FT HORZ. / 1 IN:10 FT VERT.

WISDOT/CADDS SHEET 49

START CABLE GUARD SECTIONS 412+50 TO 486+65

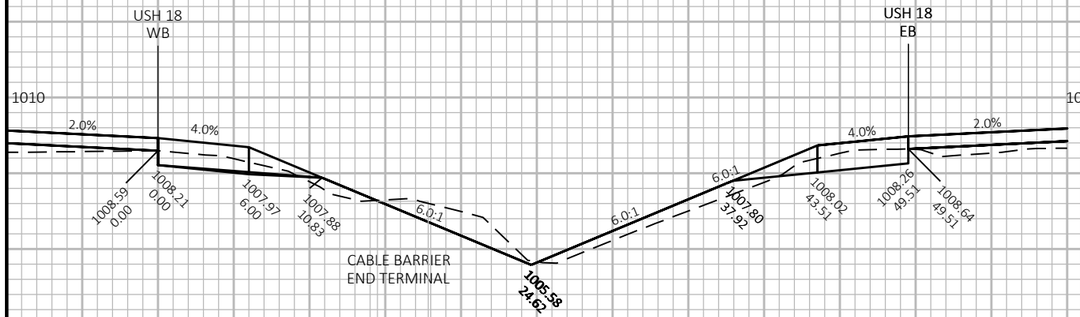

412+50

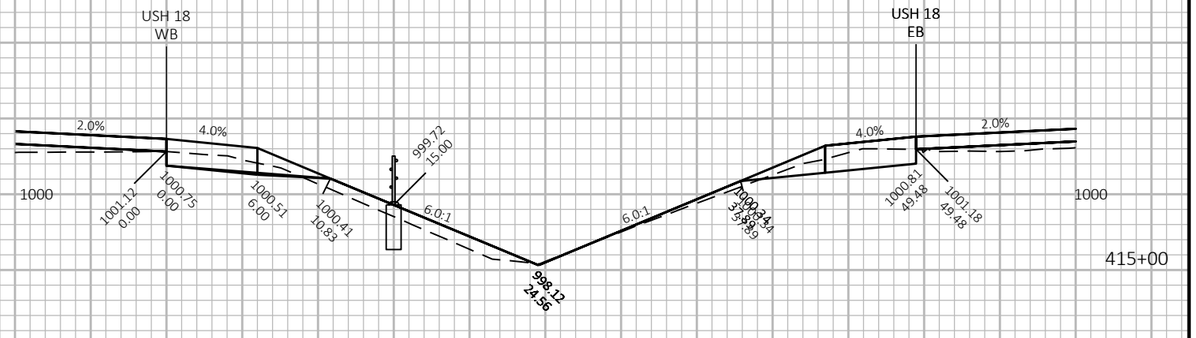

415+00

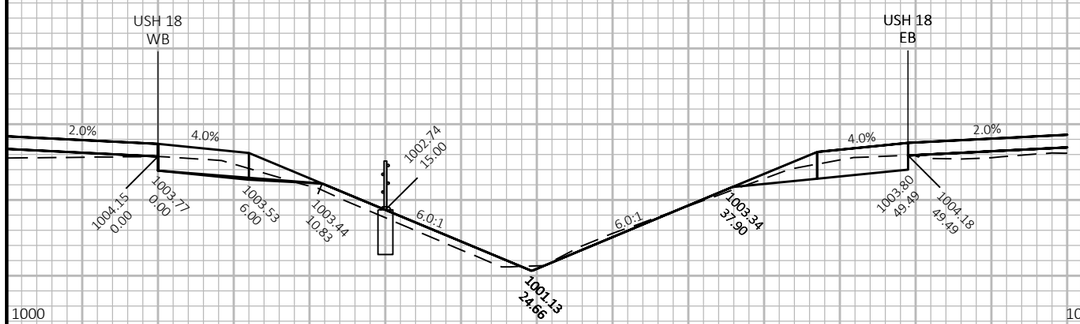

414+00

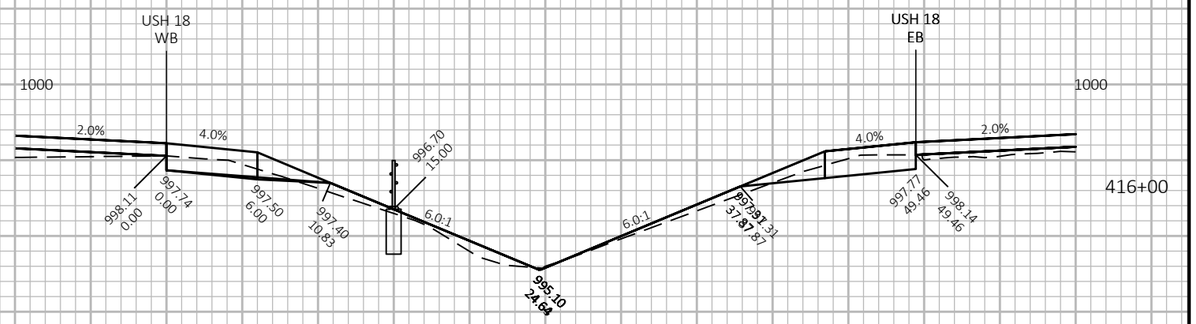

416+00

4 FT

10 FT

9

9

PROJECT NO: 1204-08-65	HWY: USH 18/151	COUNTY: DANE	CROSS SECTIONS: USH 18 WB	SHEET 770	E

FILE NAME : G:\WDOTSW\20007-000 USH 18\CIVIL 3D\SHEETSPLAN\CROSS SECTIONS\090202-XS_USH 18 WB.DWG
LAYOUT NAME - 18WB-4-1

PLOT DATE : 7/18/2022 6:50 PM PLOT BY : KL ENGINEERING PLOT NAME : PLOT SCALE : 1 IN:10 FT HORZ. / 1 IN:4 FT VERT.

WISDOT/CADDS SHEET 49

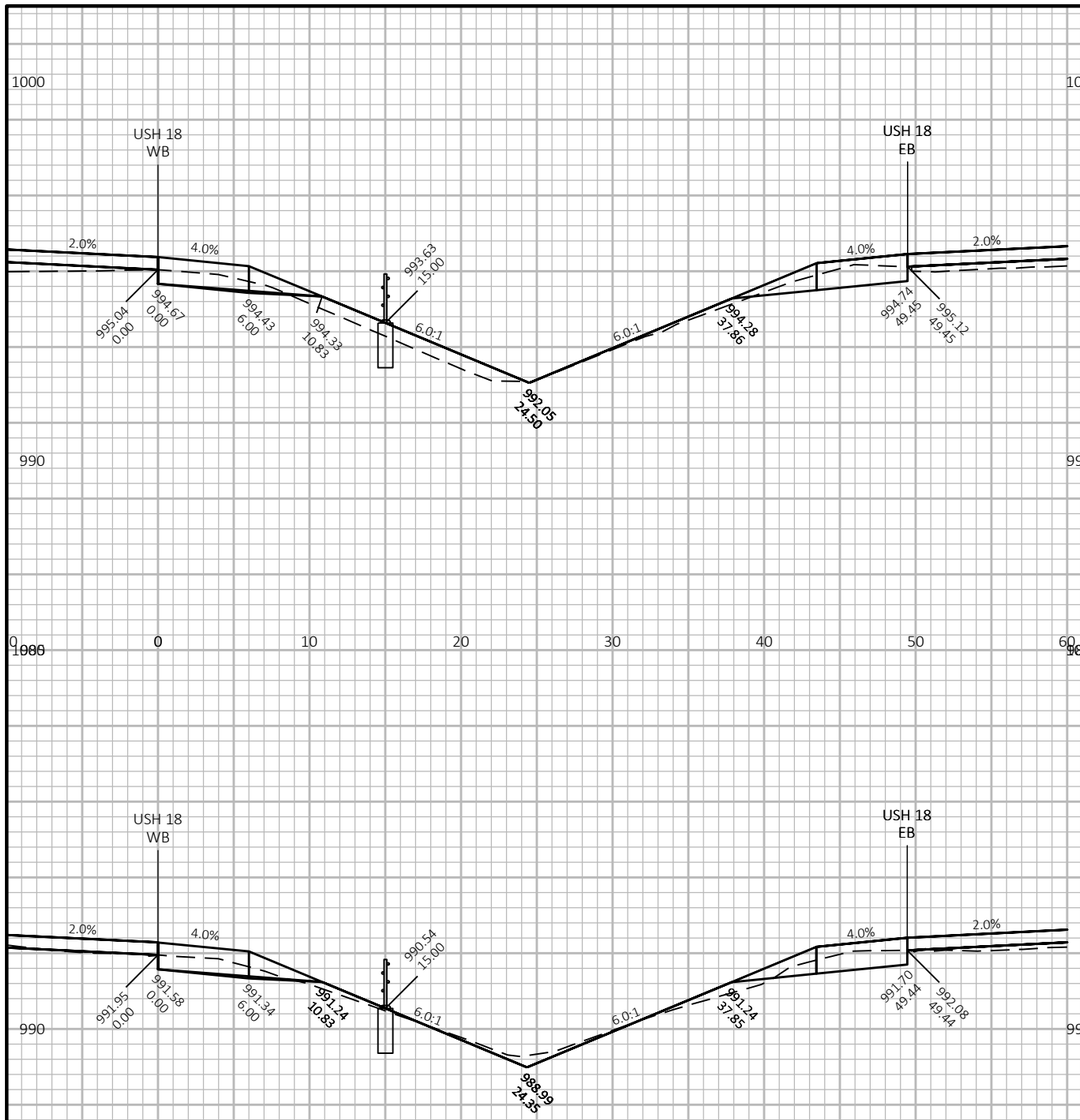

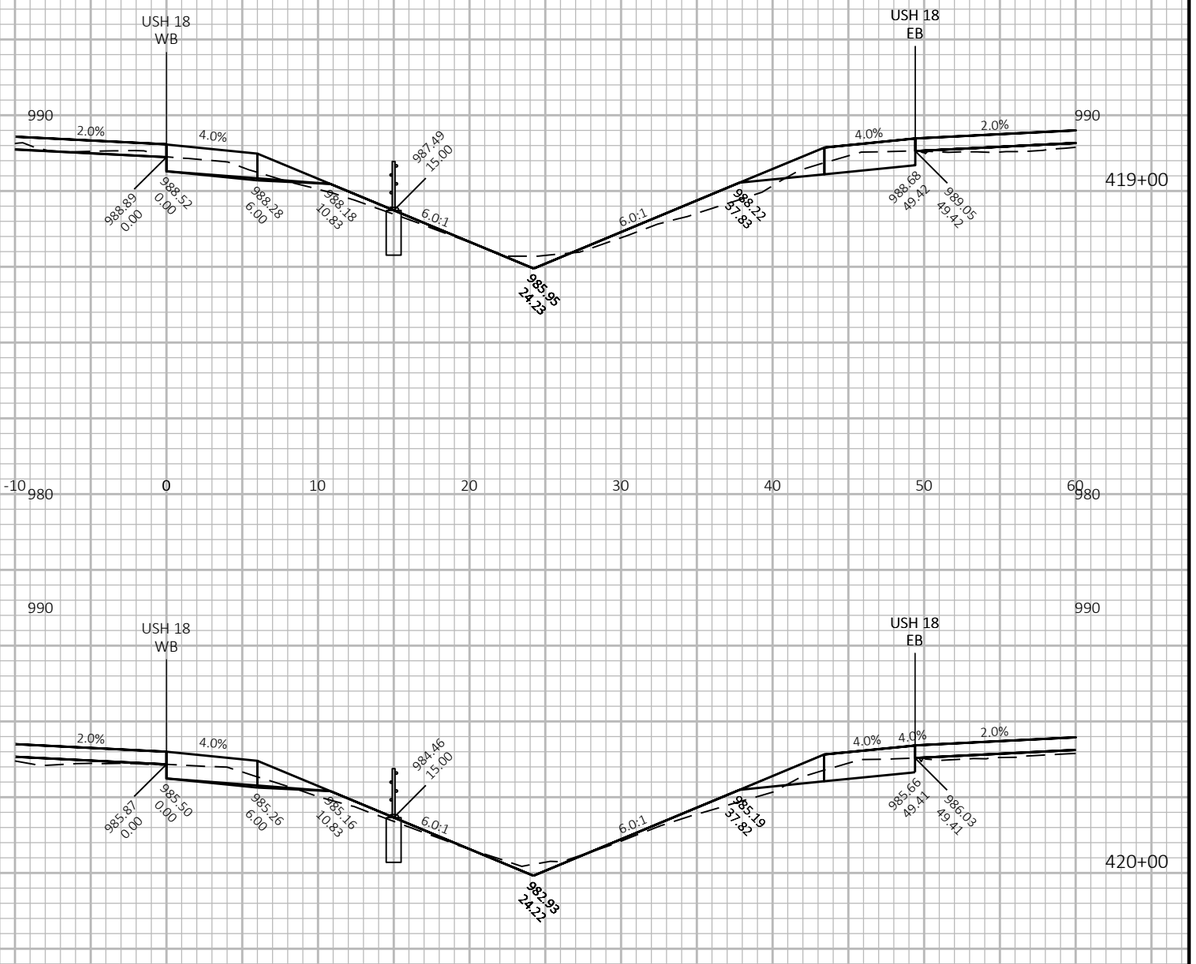

9

9

PROJECT NO: 1204-08-65	HWY: USH 18/151	COUNTY: DANE	CROSS SECTIONS: USH 18 WB	SHEET 771	E

FILE NAME : G:\WDOTSW\20007-000 USH 18\CIVIL 3D\SHEETSPLAN\CROSS SECTIONS\090202-XS_USH 18 WB.DWG
LAYOUT NAME - 18WB-4-2

PLOT DATE : 7/18/2022 6:51 PM

PLOT BY : KL ENGINEERING

PLOT NAME :

PLOT SCALE : 1 IN:10 FT HORZ. / 1 IN:4 FT VERT.

WISDOT/CADDS SHEET 49

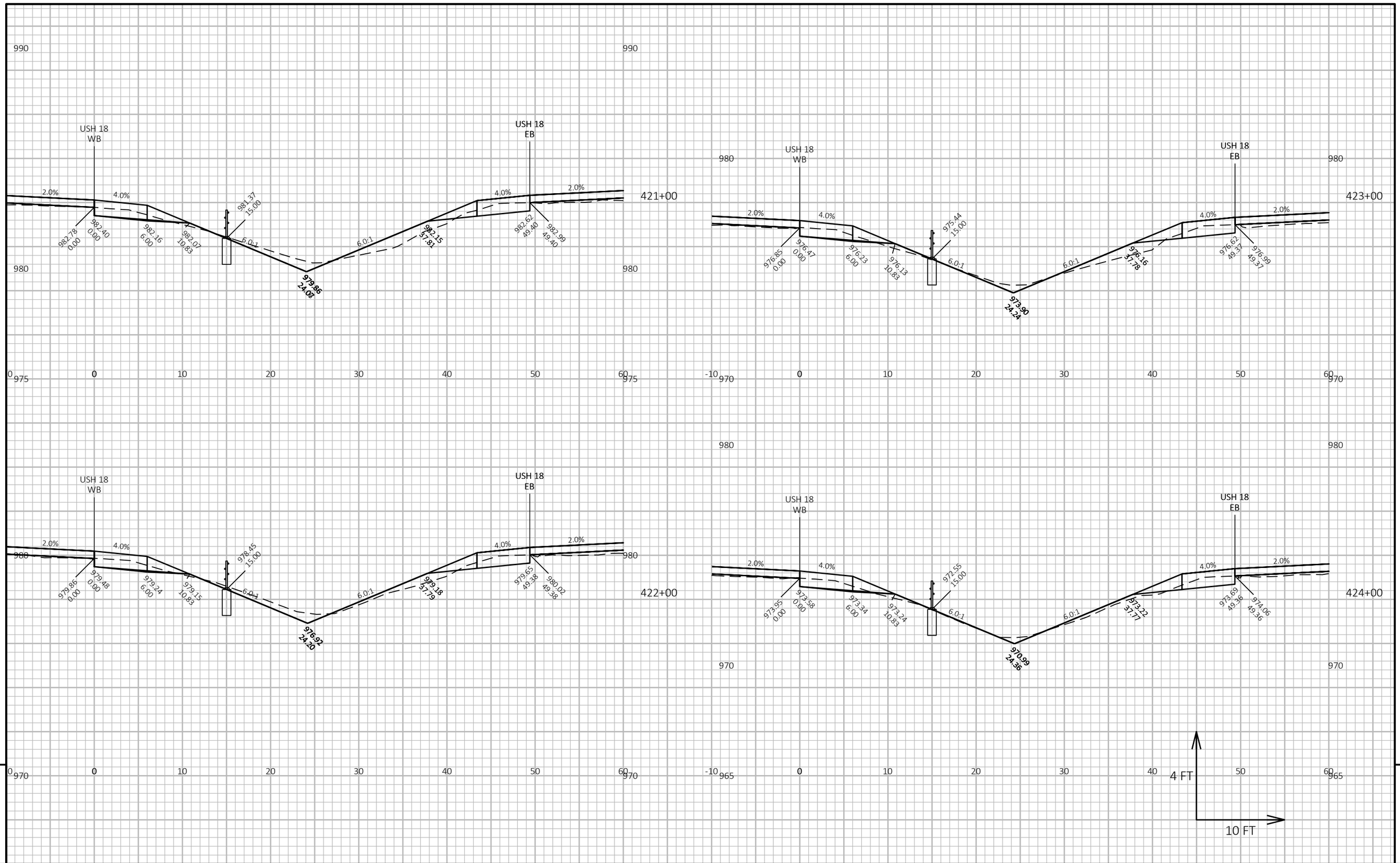

PROJECT NO: 1204-08-65	HWY: USH 18/151	COUNTY: DANE	CROSS SECTIONS: USH 18 WB	SHEET 772	E

FILE NAME : G:\WDOTSW\20007-000 USH 18\CIVIL 3D\SHEETSPLAN\CROSS SECTIONS\090202-XS_USH 18 WB.DWG
LAYOUT NAME - 18WB-4-3

PLOT DATE : 7/18/2022 6:53 PM PLOT BY : KL ENGINEERING PLOT NAME : PLOT SCALE : 1 IN:10 FT HORZ. / 1 IN:4 FT VERT.

WISDOT/CADDS SHEET 49

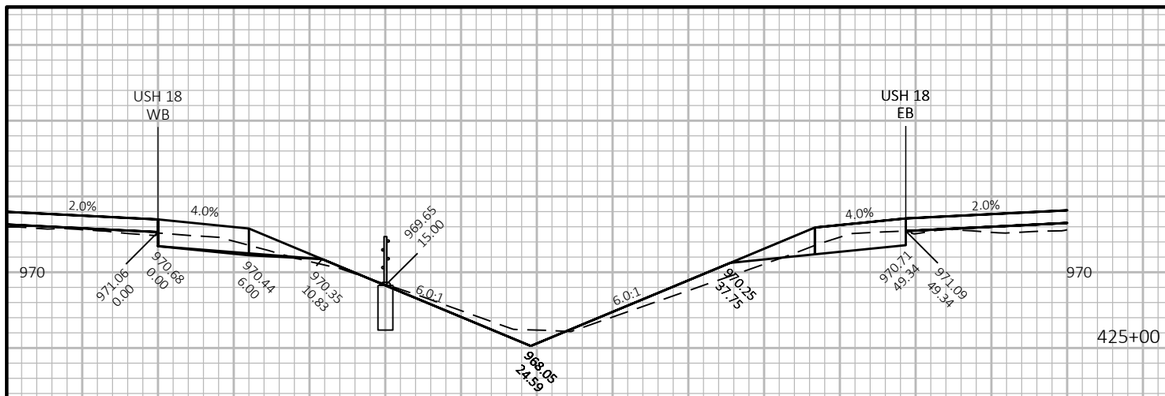

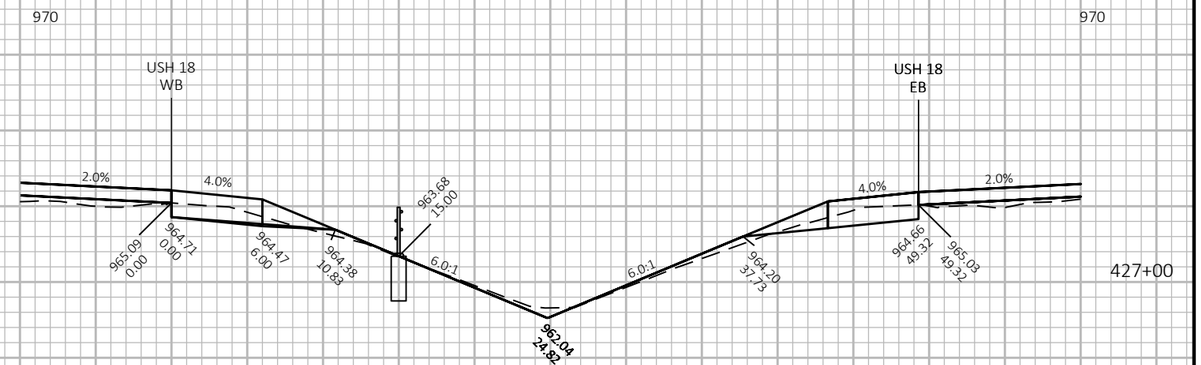

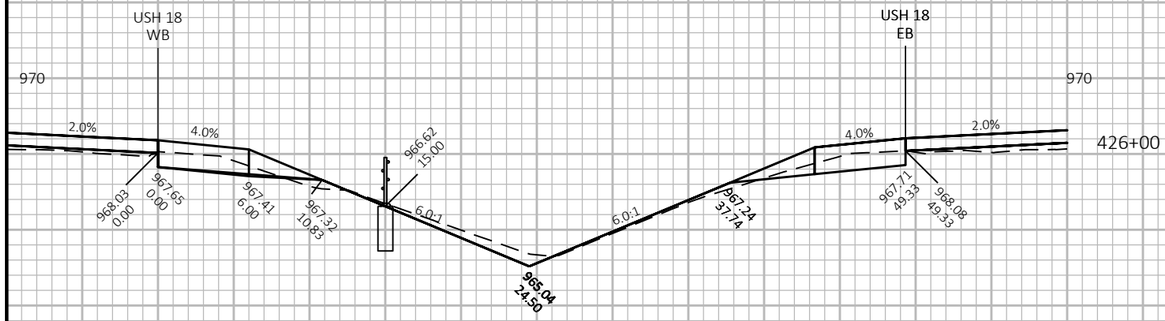

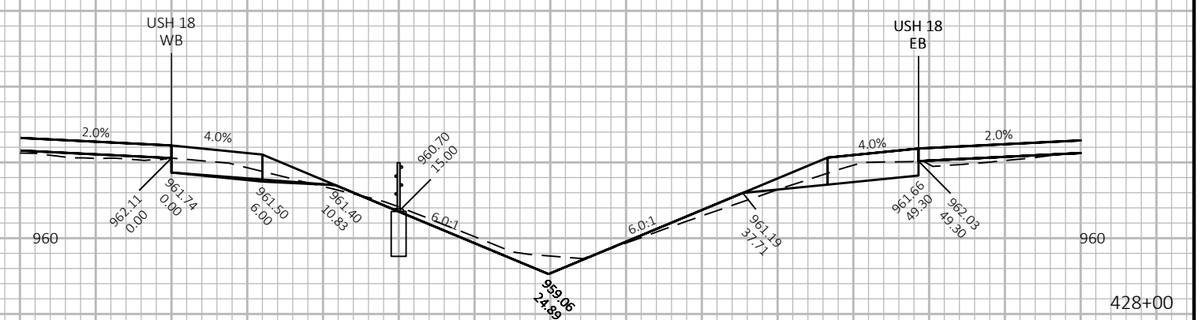

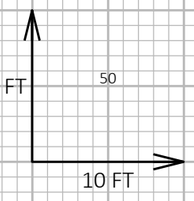

9

9

PROJECT NO: 1204-08-65	HWY: USH 18/151	COUNTY: DANE	CROSS SECTIONS: USH 18 WB	SHEET 773	E

FILE NAME : G:\WDOTSW\20007-000 USH 18\CIVIL 3D\SHEETSPLAN\CROSS SECTIONS\090202-XS_USH 18 WB.DWG
LAYOUT NAME - 18WB-4-4

PLOT DATE : 7/20/2022 2:34 PM PLOT BY : KL ENGINEERING PLOT NAME : PLOT SCALE : 1 IN:10 FT HORZ. / 1 IN:4 FT VERT.

WISDOT/CADDS SHEET 49

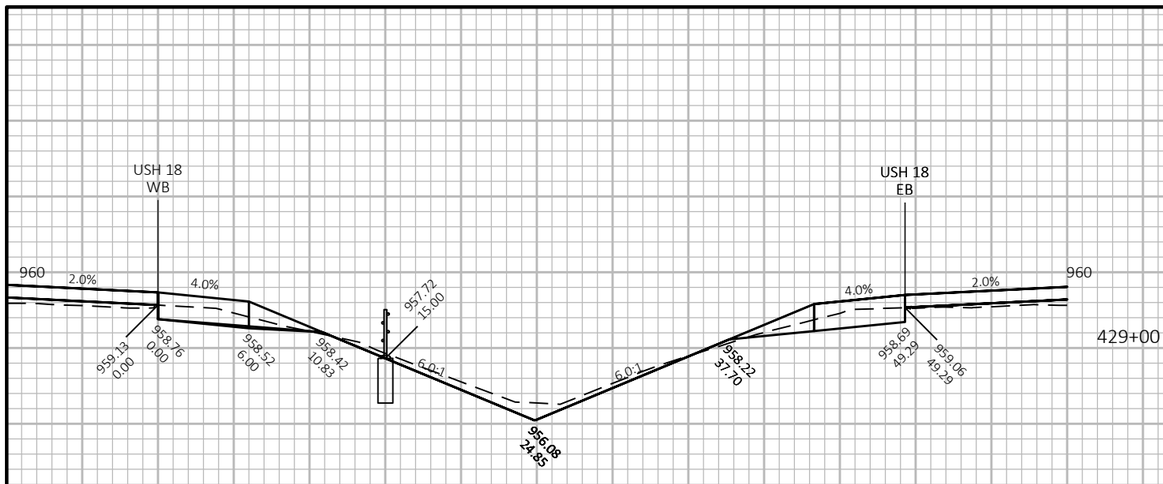

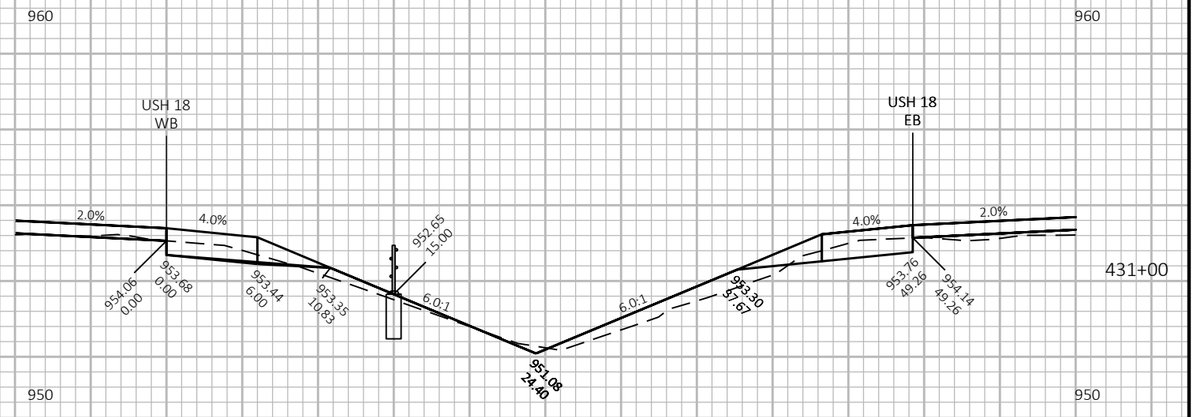

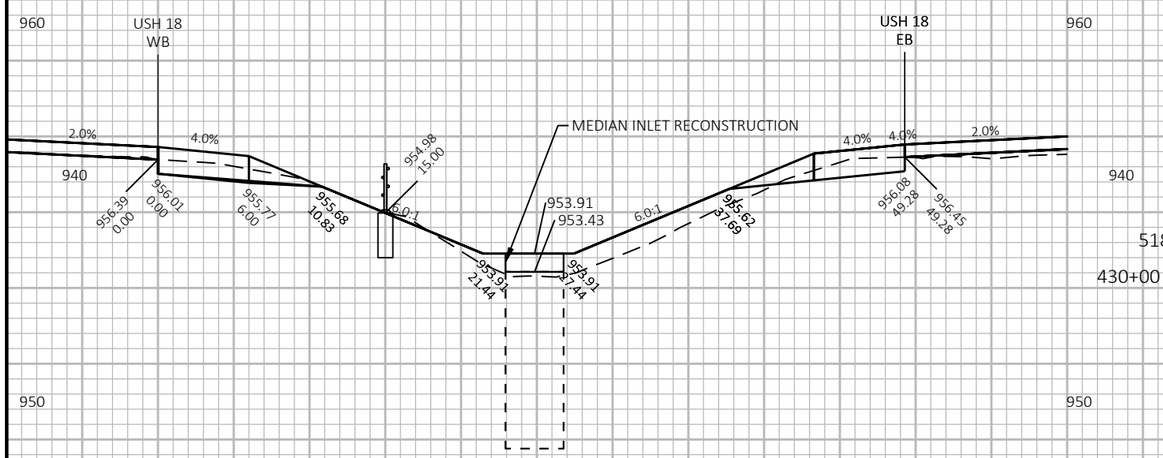

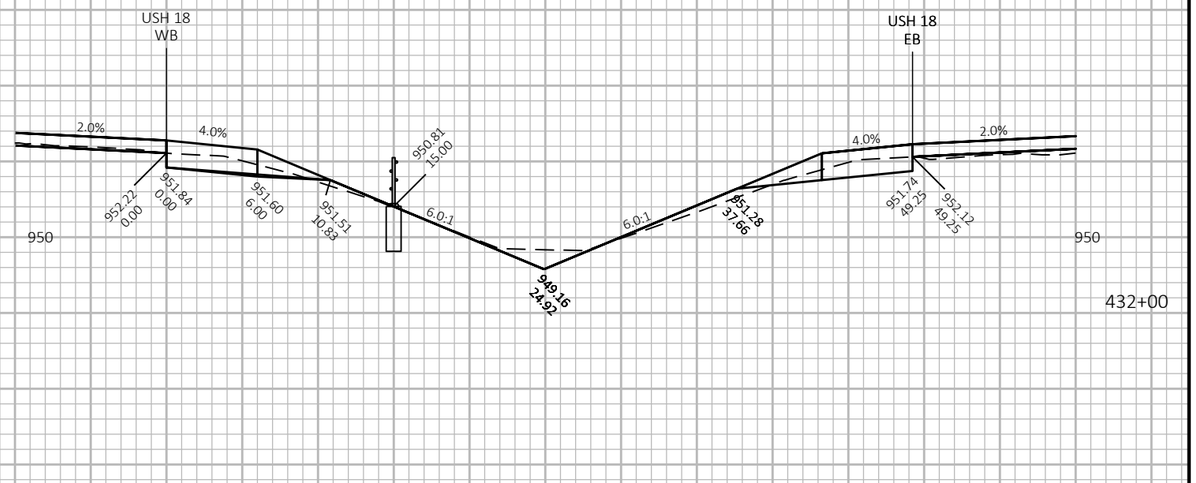

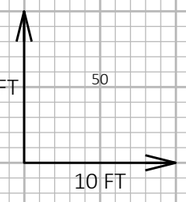

PROJECT NO: 1204-08-65	HWY: USH 18/151	COUNTY: DANE	CROSS SECTIONS: USH 18 WB	SHEET 774	E

FILE NAME : G:\WDOTSW\20007-000 USH 18\CIVIL 3D\SHEETSPLAN\CROSS SECTIONS\090202-XS_USH 18 WB.DWG
LAYOUT NAME - 18WB-4-5

PLOT DATE : 7/20/2022 4:54 PM PLOT BY : KL ENGINEERING PLOT NAME : PLOT SCALE : 1 IN:10 FT HORZ. / 1 IN:4 FT VERT.

WISDOT/CADDS SHEET 49

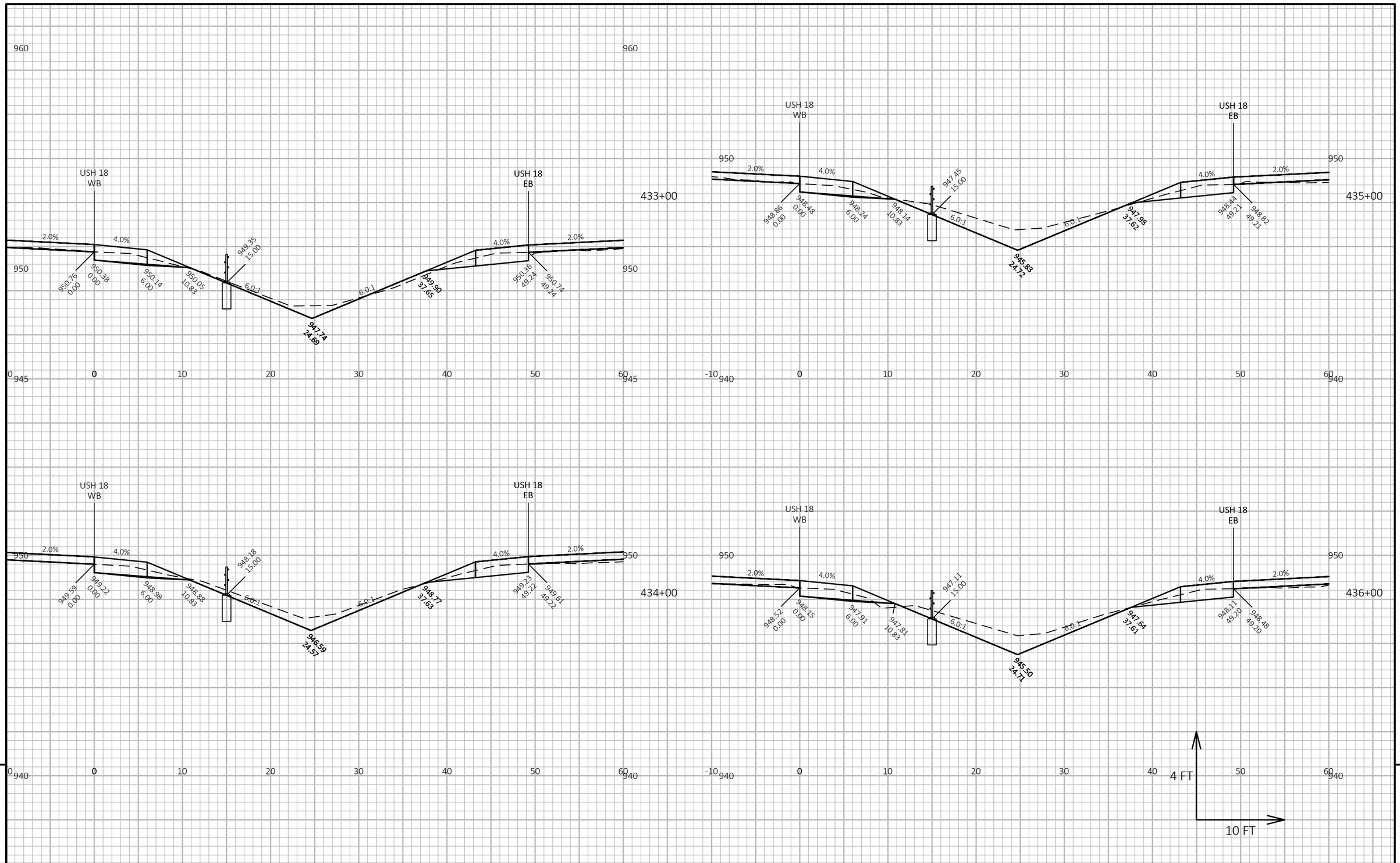

9

PROJECT NO: 1204-08-65	HWY: USH 18/151	COUNTY: DANE	CROSS SECTIONS: USH 18 WB	SHEET 775	E

FILE NAME : G:\WDOTSW\20007-000 USH 18\CIVIL 3D\SHEETSPLAN\CROSS SECTIONS\090202-XS_USH 18 WB.DWG
LAYOUT NAME - 18WB-4-6

PLOT DATE : 7/18/2022 6:58 PM PLOT BY : KL ENGINEERING PLOT NAME : PLOT SCALE : 1 IN:10 FT HORZ. / 1 IN:4 FT VERT.

WISDOT/CADDS SHEET 49

9

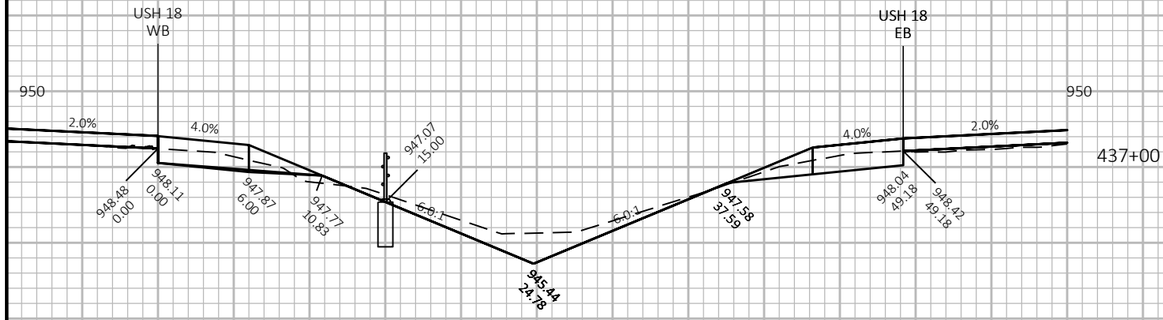

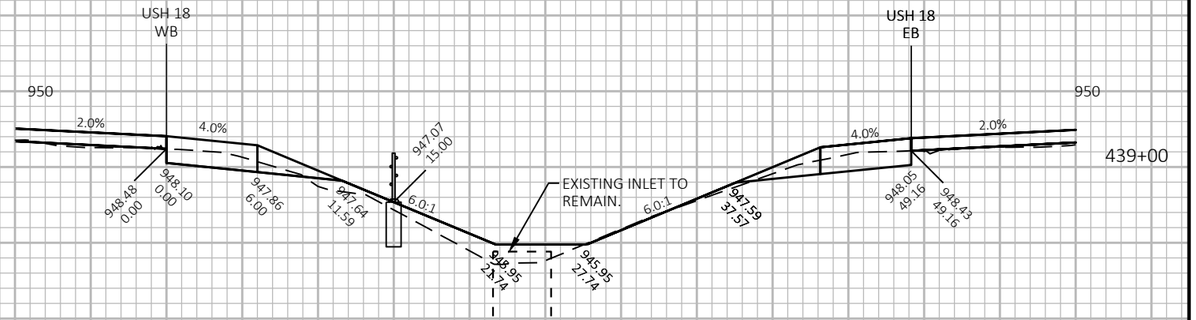

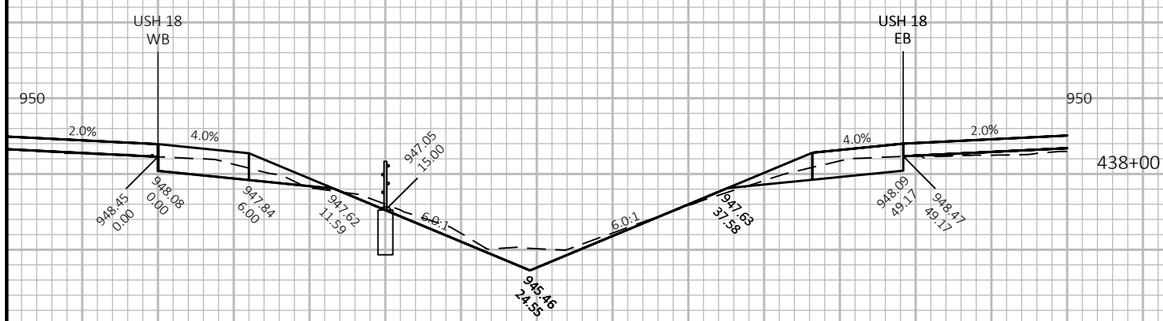

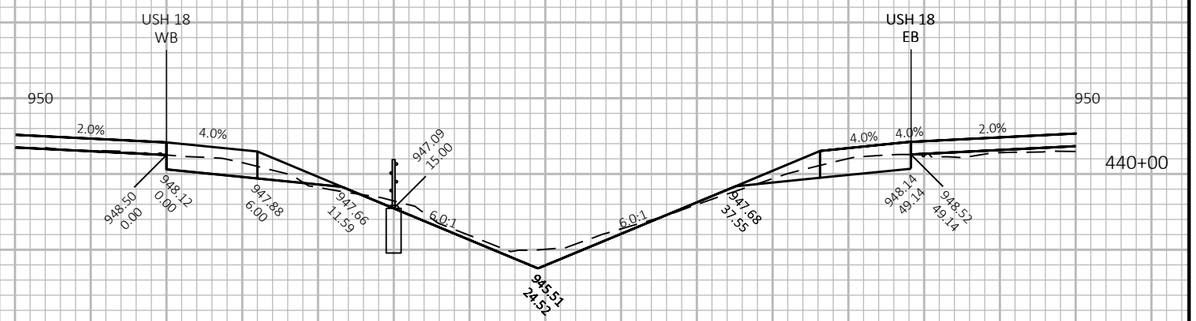

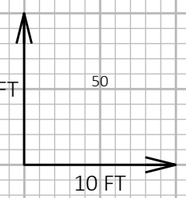

9

9

PROJECT NO: 1204-08-65	HWY: USH 18/151	COUNTY: DANE	CROSS SECTIONS: USH 18 WB	SHEET 776	E

FILE NAME : G:\WDOTSW\20007-000 USH 18\CIVIL 3D\SHEETSPLAN\CROSS SECTIONS\090202-XS_USH 18 WB.DWG
LAYOUT NAME - 18WB-4-7

PLOT DATE : 7/18/2022 6:59 PM

PLOT BY : KL ENGINEERING

PLOT NAME :

PLOT SCALE : 1 IN:10 FT HORZ. / 1 IN:4 FT VERT.

WISDOT/CADDS SHEET 49

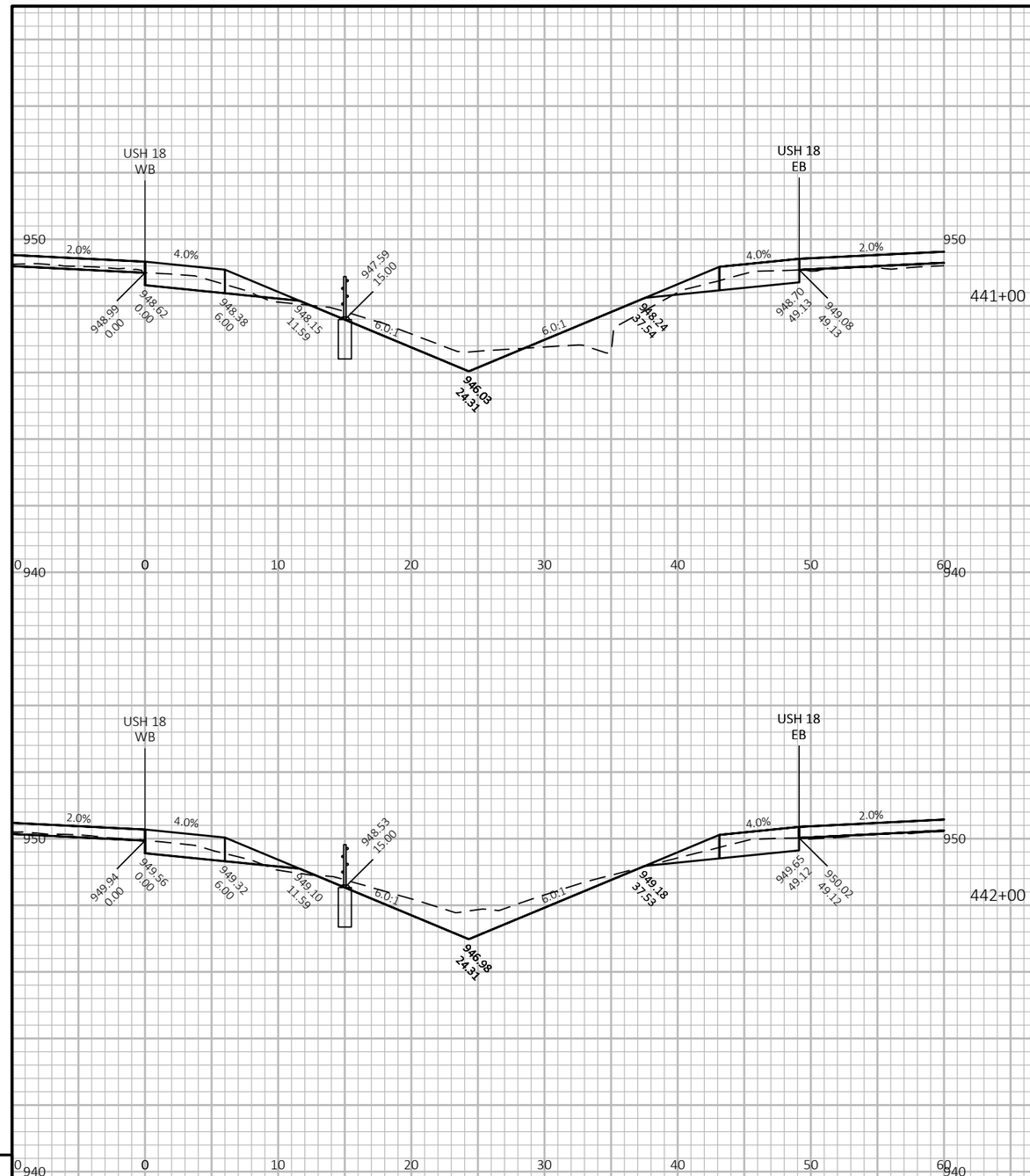

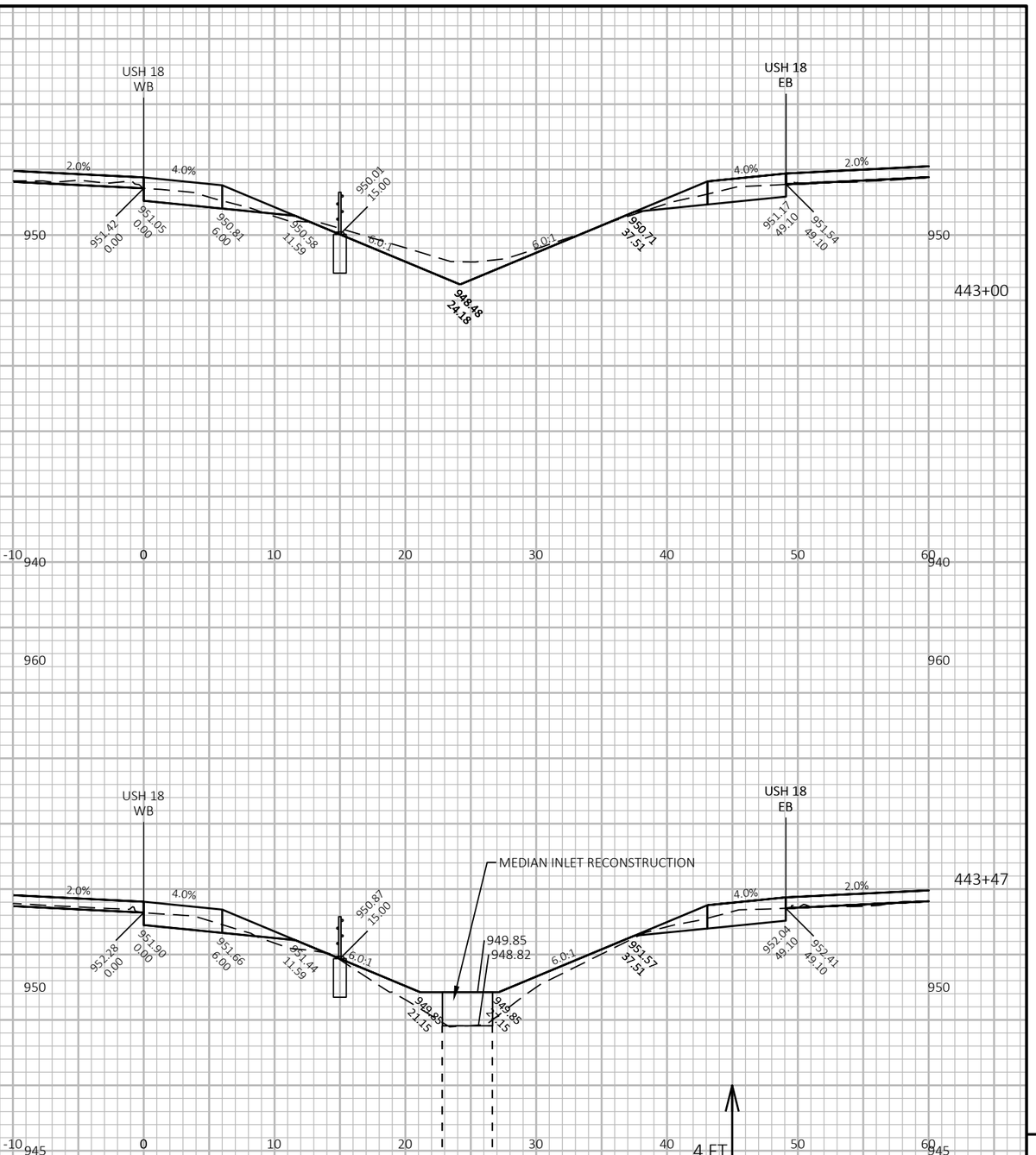

9

9

PROJECT NO: 1204-08-65	HWY: USH 18/151	COUNTY: DANE	CROSS SECTIONS: USH 18 WB	SHEET 777	E

FILE NAME : G:\WDOTSW\20007-000 USH 18\CIVIL 3D\SHEETSPLAN\CROSS SECTIONS\090202-XS_USH 18 WB.DWG
LAYOUT NAME - 18WB-4-8

PLOT DATE : 7/18/2022 7:01 PM

PLOT BY : KL ENGINEERING

PLOT NAME :

PLOT SCALE : 1 IN:10 FT HORZ. / 1 IN:4 FT VERT.

WISDOT/CADDS SHEET 49

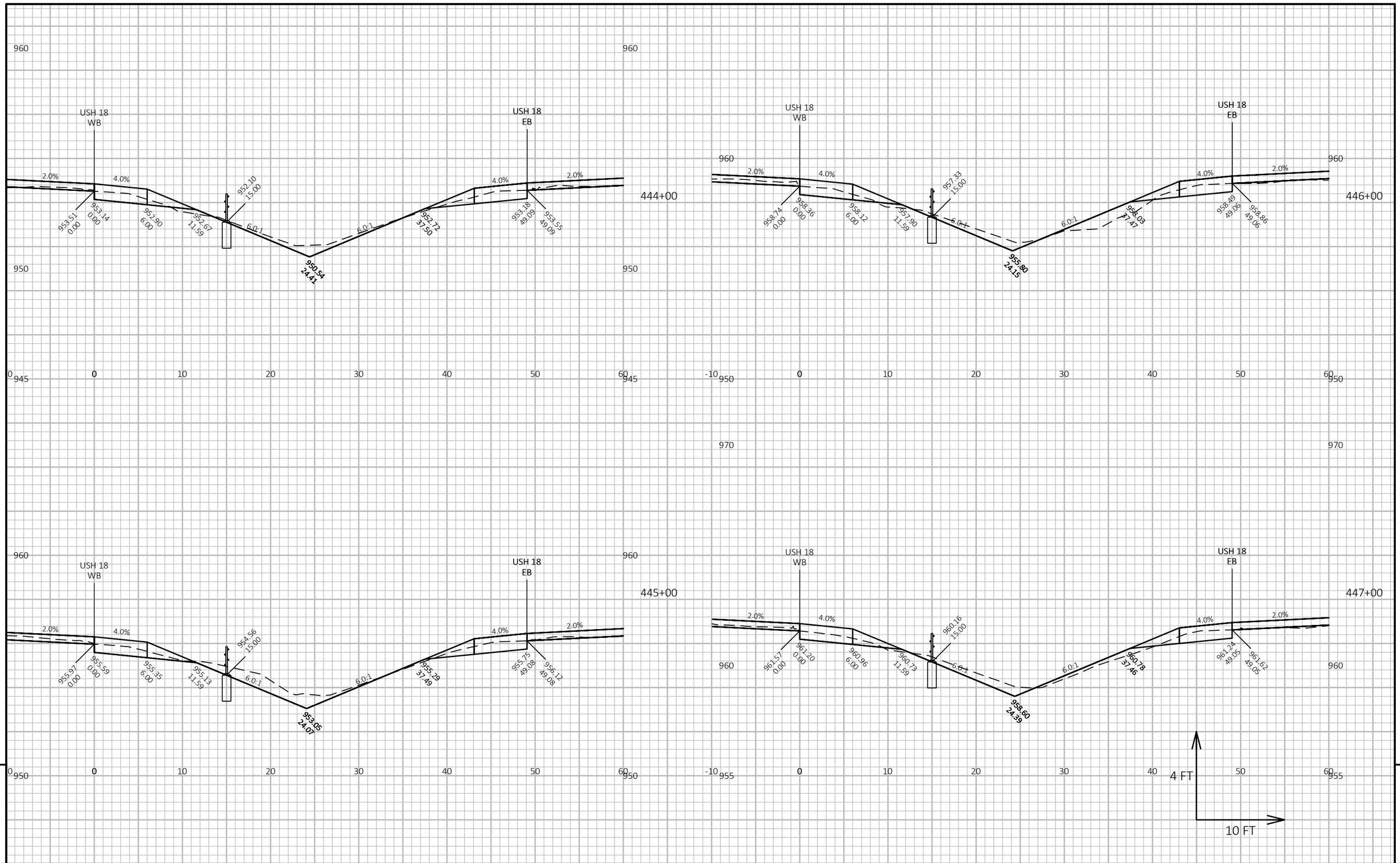

PROJECT NO: 1204-08-65	HWY: USH 18/151	COUNTY: DANE	CROSS SECTIONS: USH 18 WB	SHEET 778 E

FILE NAME : G:\WDOTSW\20007-000 USH 18\CIVIL 3D\SHEETSPLAN\CROSS SECTIONS\090202-XS_USH 18 WB.DWG
LAYOUT NAME - 18WB-4-9

PLOT DATE : 7/18/2022 7:03 PM PLOT BY : KL ENGINEERING PLOT NAME : PLOT SCALE : 1 IN:10 FT HORZ. / 1 IN:4 FT VERT.

WISDOT/CADDS SHEET 49

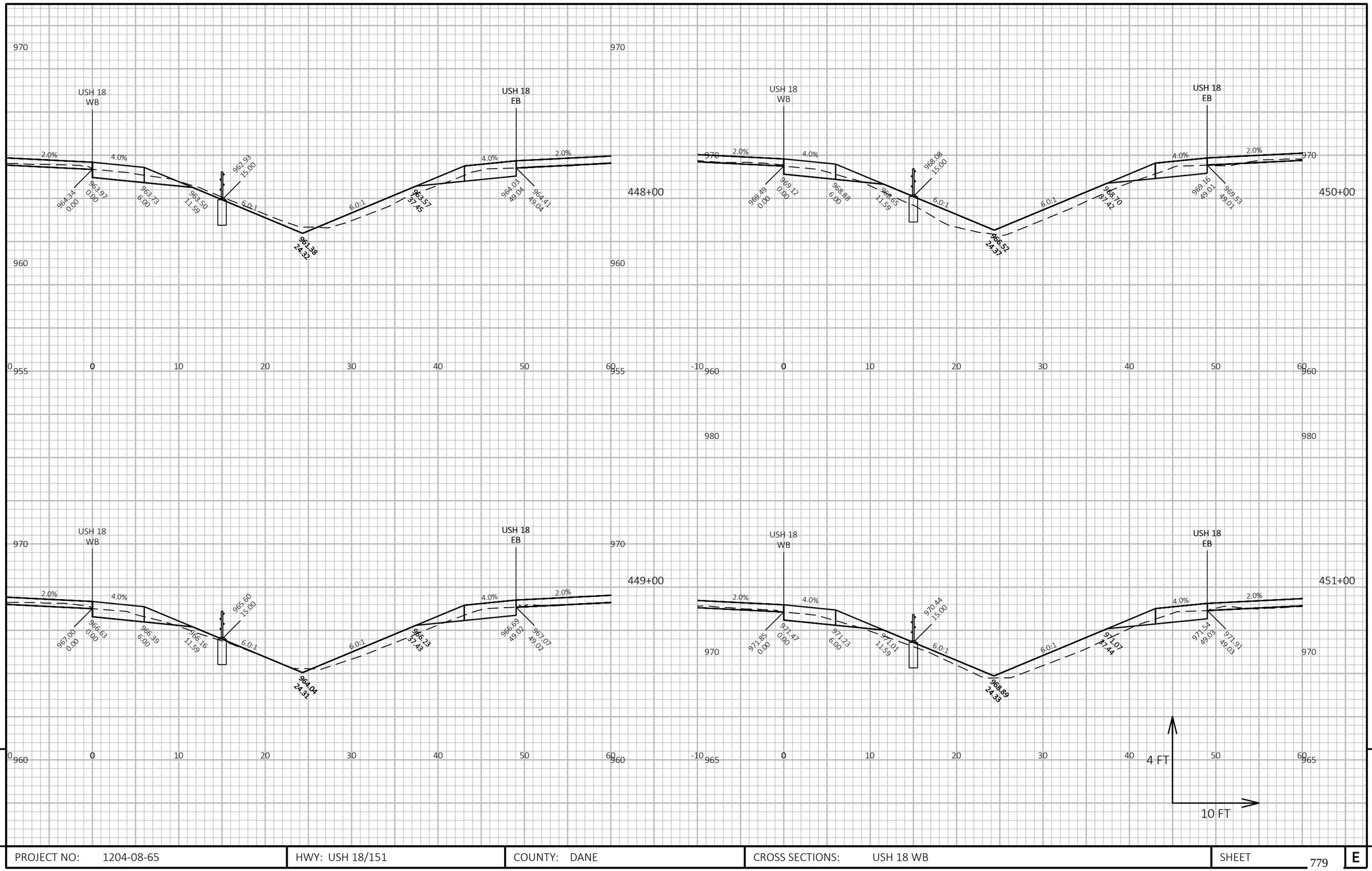

PROJECT NO: 1204-08-65	HWY: USH 18/151	COUNTY: DANE	CROSS SECTIONS: USH 18 WB	SHEET 779 E

FILE NAME : G:\WDOTSW\20007-000 USH 18\CIVIL 3D\SHEETSPLAN\CROSS SECTIONS\090202-XS_USH 18 WB.DWG
LAYOUT NAME - 18WB-4-10

PLOT DATE : 7/18/2022 7:04 PM PLOT BY : KL ENGINEERING PLOT NAME : PLOT SCALE : 1 IN:10 FT HORZ. / 1 IN:4 FT VERT.

WISDOT/CADDS SHEET 49

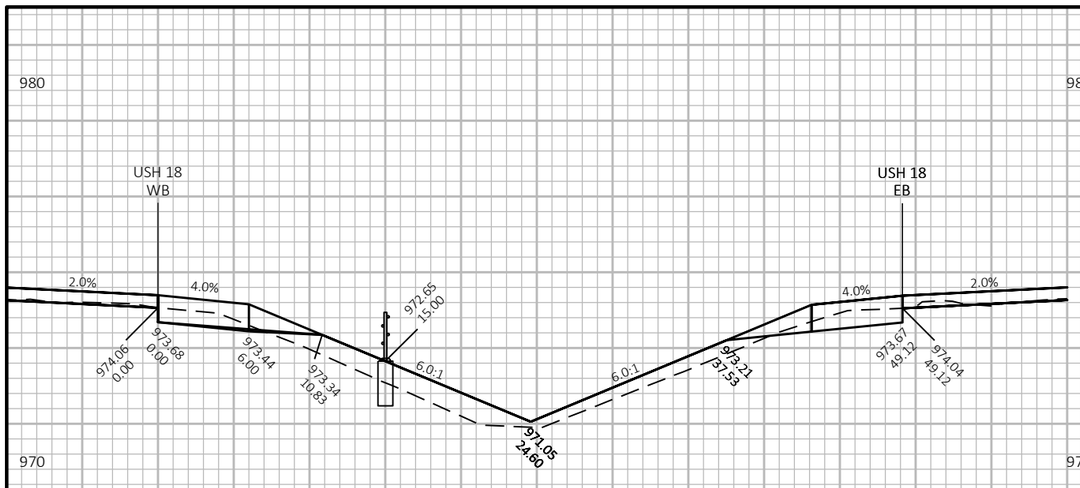

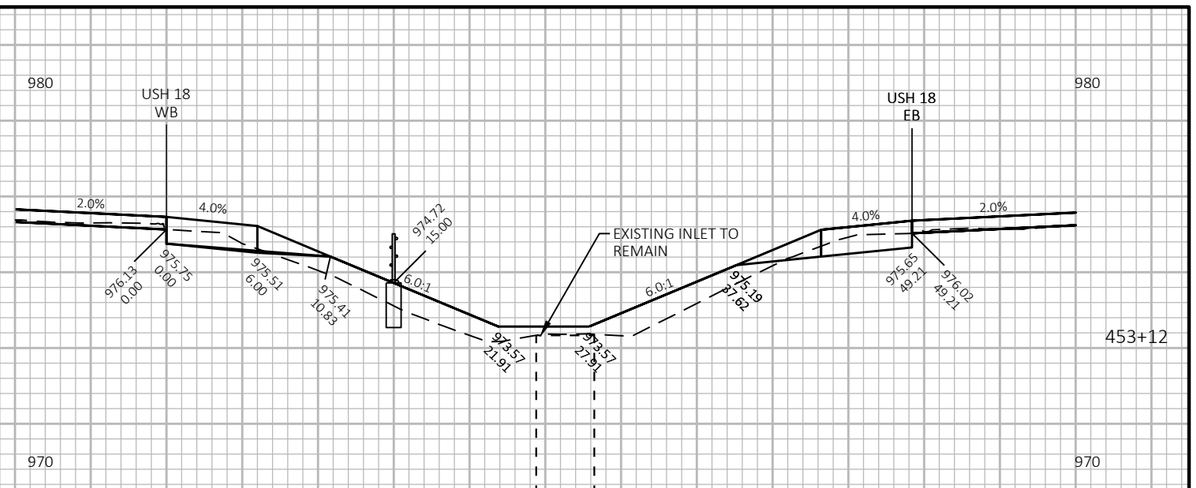

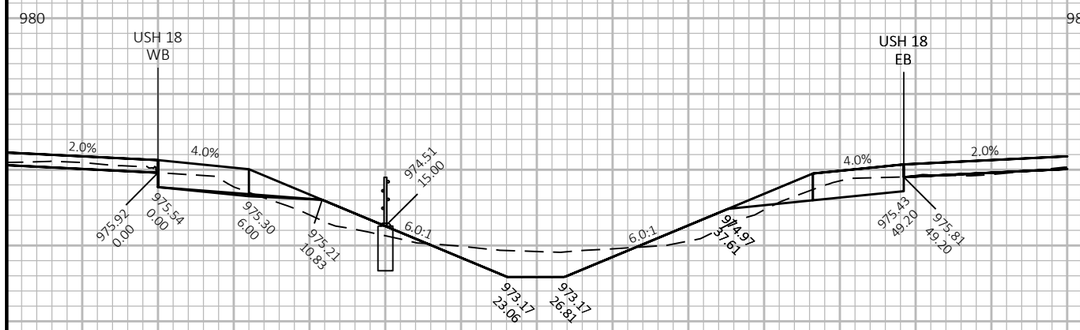

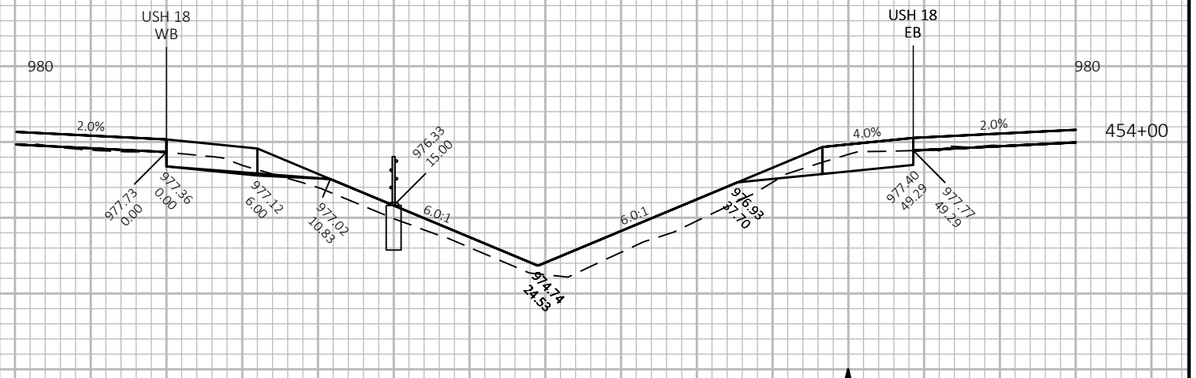

9

9

PROJECT NO: 1204-08-65	HWY: USH 18/151	COUNTY: DANE	CROSS SECTIONS: USH 18 WB	SHEET 780	E

FILE NAME : G:\WDOTSW\20007-000 USH 18\CIVIL 3D\SHEETSPLAN\CROSS SECTIONS\090202-XS_USH 18 WB.DWG
LAYOUT NAME - 18WB-4-11

PLOT DATE : 7/18/2022 7:06 PM PLOT BY : KL ENGINEERING PLOT NAME : PLOT SCALE : 1 IN:10 FT HORZ. / 1 IN:4 FT VERT.

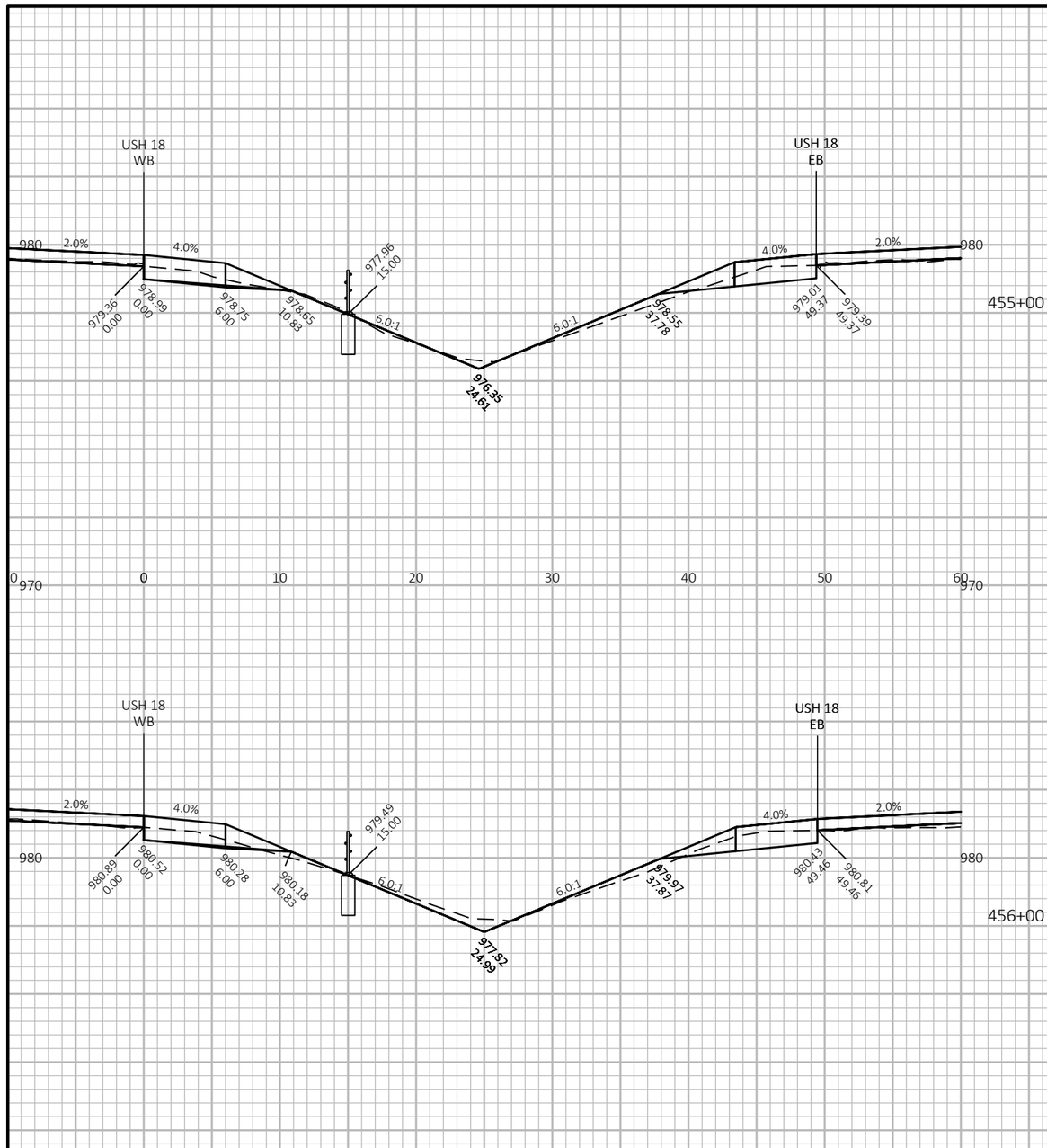

PROJECT NO: 1204-08-65	HWY: USH 18/151	COUNTY: DANE	CROSS SECTIONS: USH 18 WB	SHEET 781 E

FILE NAME : G:\WDOTSW\20007-000 USH 18\CIVIL 3D\SHEETSPLAN\CROSS SECTIONS\090202-XS_USH 18 WB.DWG
LAYOUT NAME - 18WB-4-12

PLOT DATE : 7/18/2022 7:08 PM PLOT BY : KL ENGINEERING PLOT NAME : PLOT SCALE : 1 IN:10 FT HORZ. / 1 IN:4 FT VERT.

WISDOT/CADDS SHEET 49

9 9

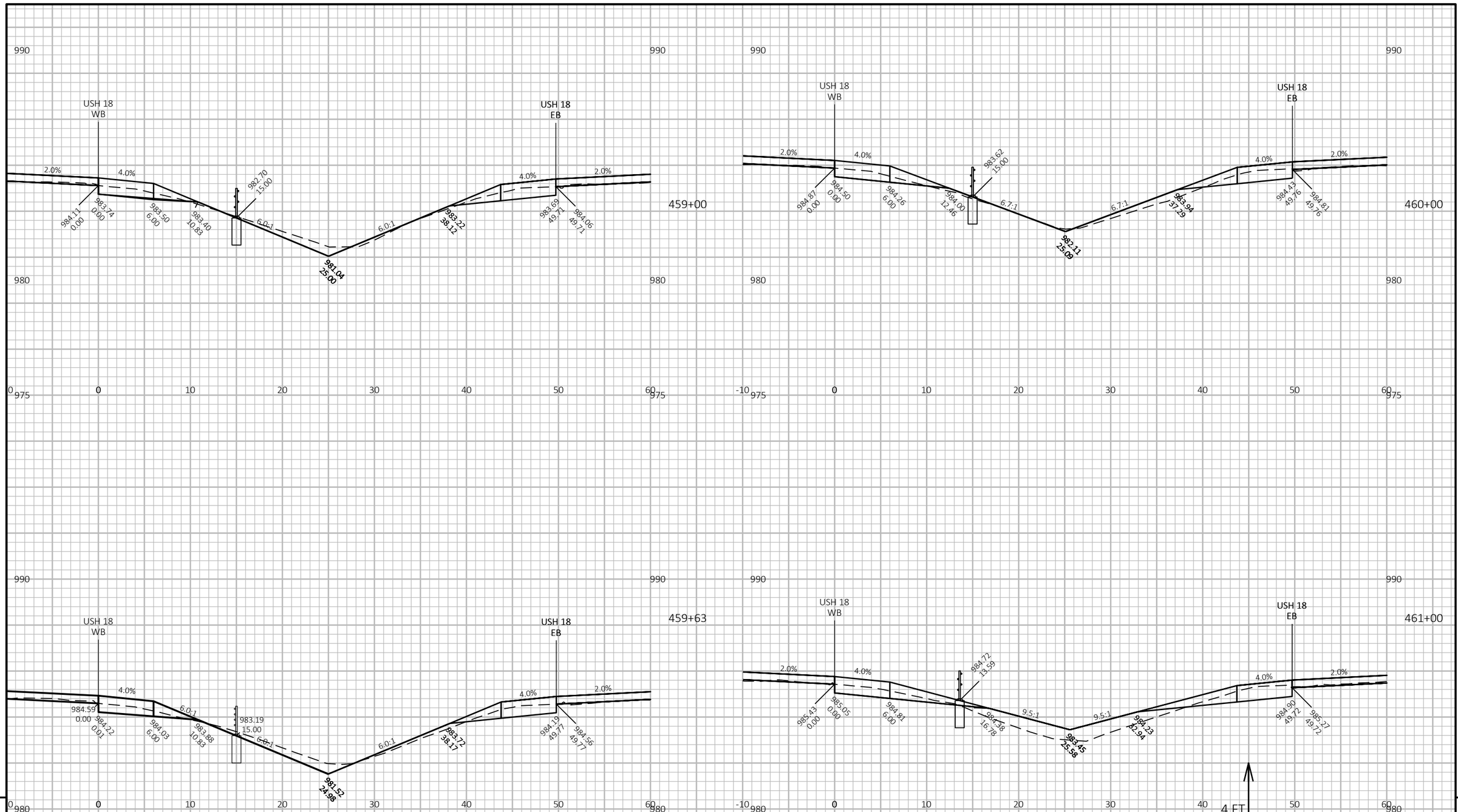

9

9

PROJECT NO: 1204-08-65	HWY: USH 18/151	COUNTY: DANE	CROSS SECTIONS: USH 18 WB	SHEET 782	E

FILE NAME : G:\WDOTSW\20007-000 USH 18\CIVIL 3D\SHEETSPLAN\CROSS SECTIONS\090202-XS_USH 18 WB.DWG
LAYOUT NAME - 18WB-4-13

PLOT DATE : 7/18/2022 7:09 PM

PLOT BY : KL ENGINEERING

PLOT NAME :

PLOT SCALE : 1 IN:10 FT HORZ. / 1 IN:4 FT VERT.

WISDOT/CADDS SHEET 49

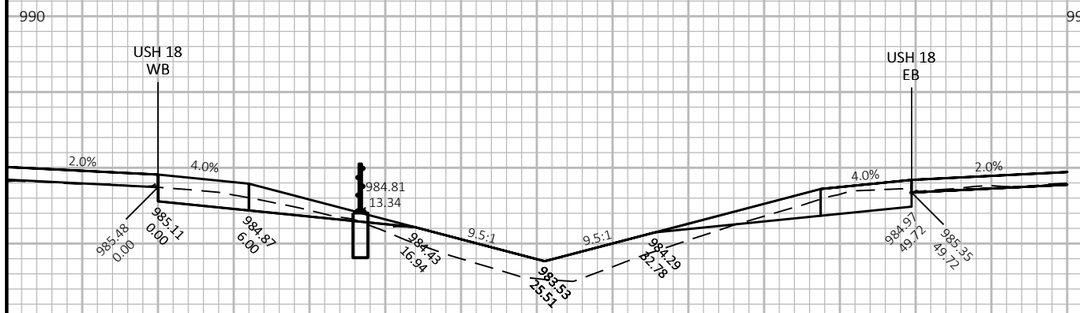

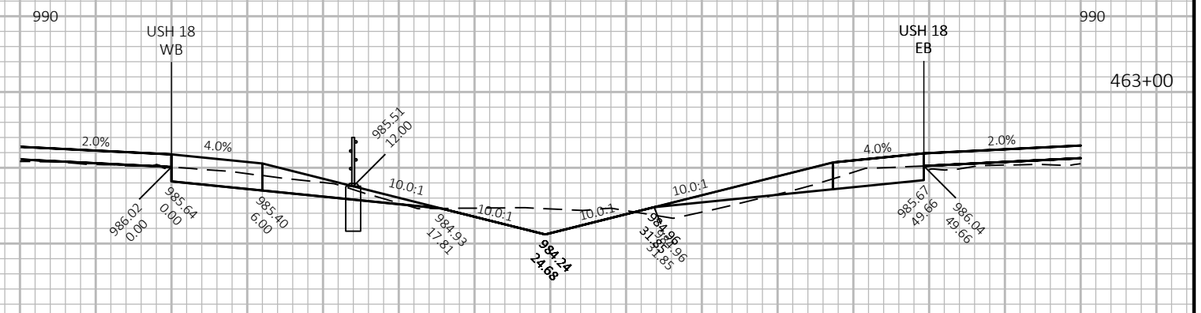

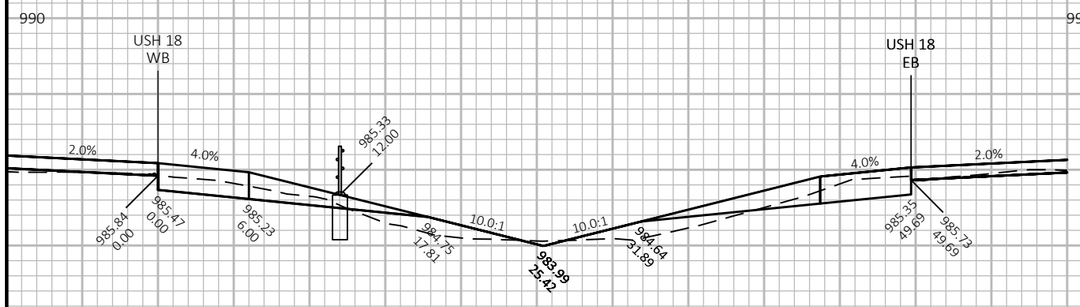

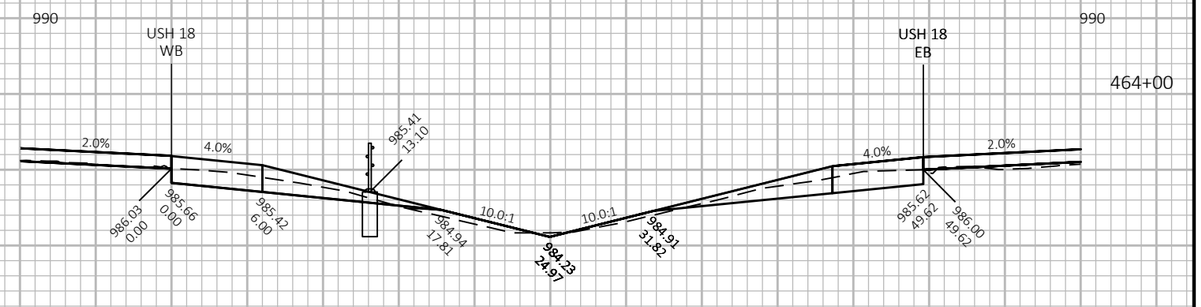

9

9

PROJECT NO: 1204-08-65	HWY: USH 18/151	COUNTY: DANE	CROSS SECTIONS: USH 18 WB	SHEET 783	E

FILE NAME : G:\WDOTSW\20007-000 USH 18\CIVIL 3D\SHEETSPLAN\CROSS SECTIONS\090202-XS_USH 18 WB.DWG
LAYOUT NAME - 18WB-4-14

PLOT DATE : 7/18/2022 7:11 PM

PLOT BY : KL ENGINEERING

PLOT NAME :

PLOT SCALE : 1 IN:10 FT HORZ. / 1 IN:4 FT VERT.

WISDOT/CADDS SHEET 49

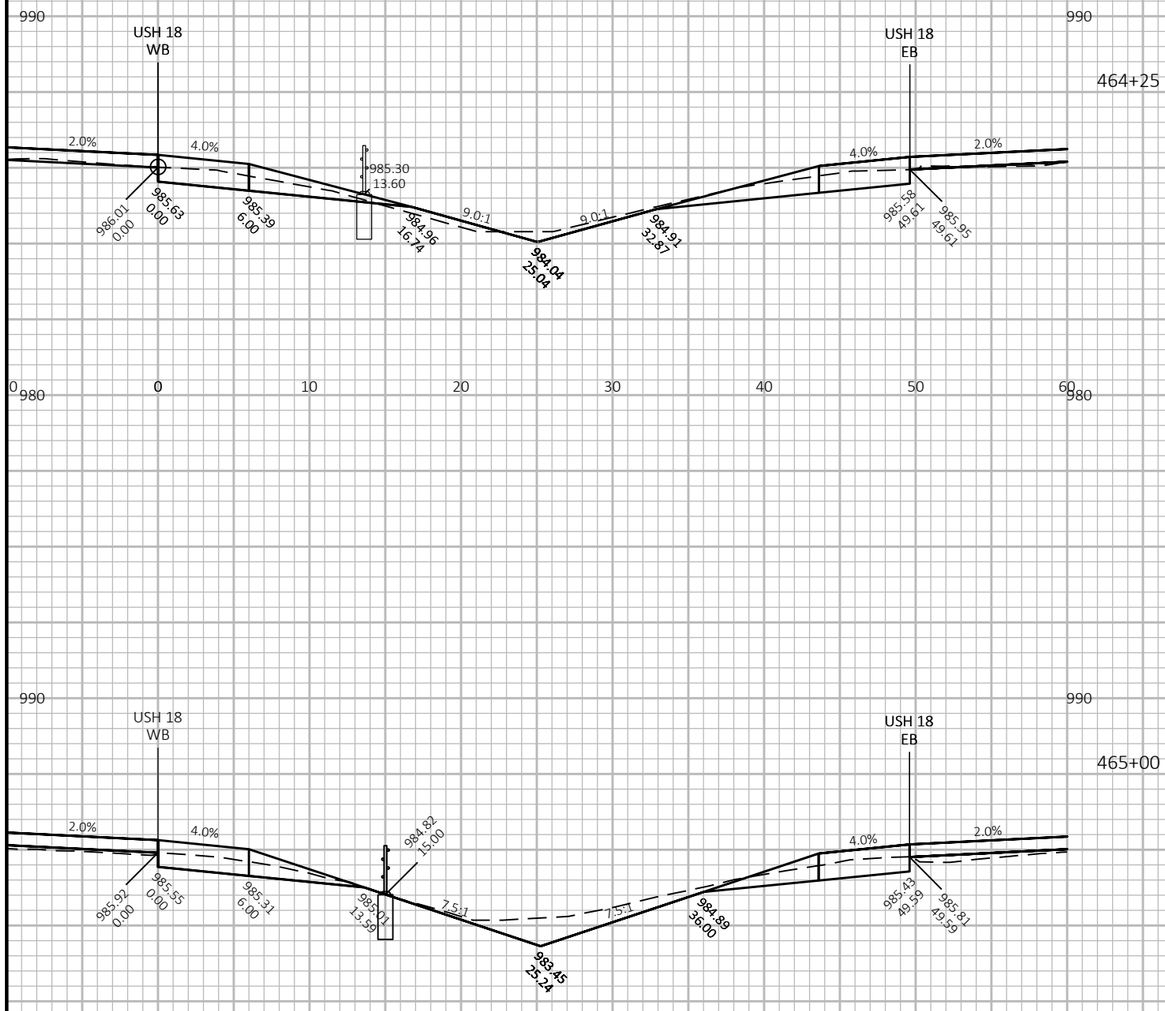

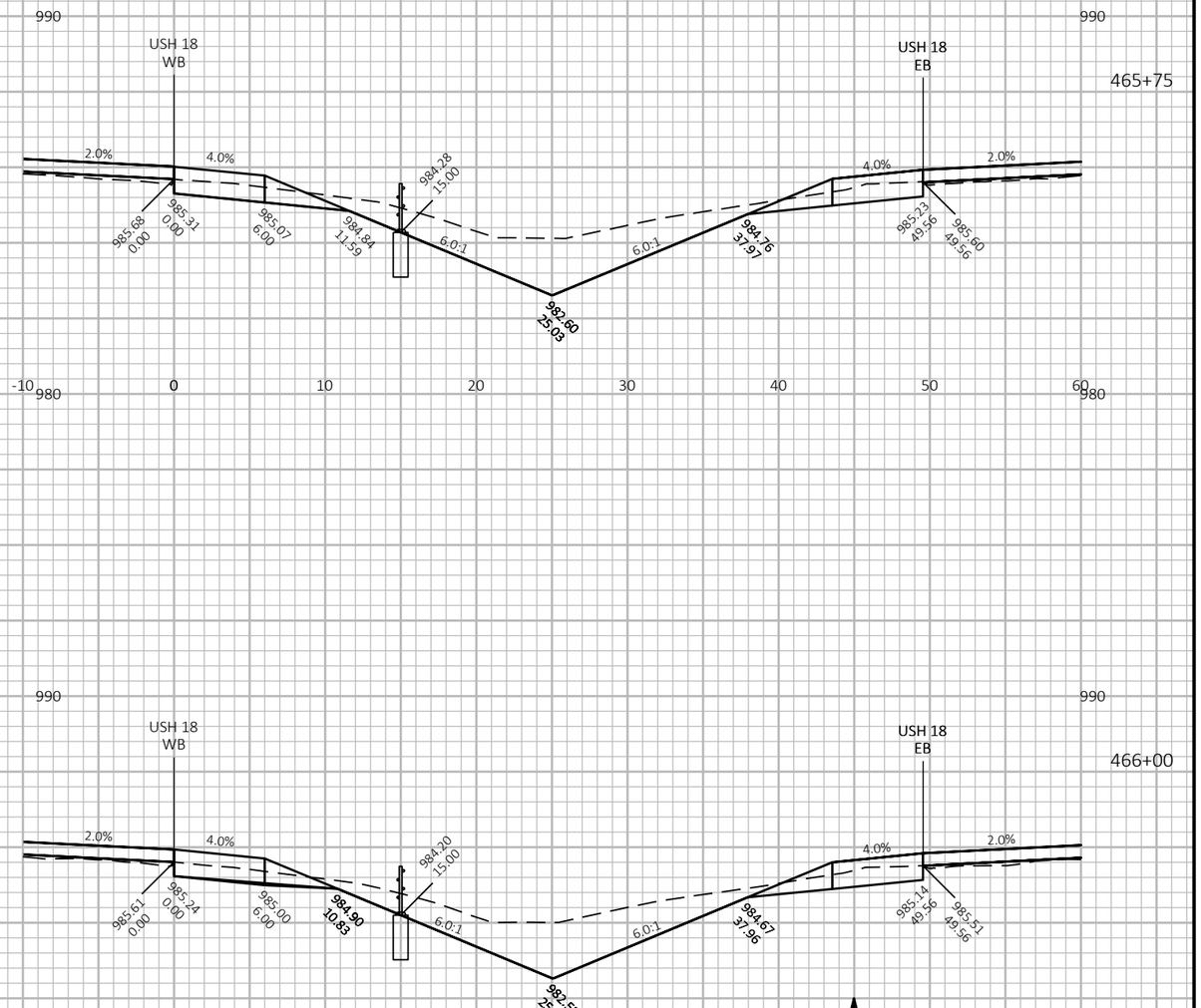

9

9

PROJECT NO: 1204-08-65	HWY: USH 18/151	COUNTY: DANE	CROSS SECTIONS: USH 18 WB	SHEET 784	E

FILE NAME : G:\WDOTSW\20007-000 USH 18\CIVIL 3D\SHEETSPLAN\CROSS SECTIONS\090202-XS_USH 18 WB.DWG
LAYOUT NAME - 18WB-4-15

PLOT DATE : 7/18/2022 7:13 PM

PLOT BY : KL ENGINEERING

PLOT NAME :

PLOT SCALE : 1 IN:10 FT HORZ. / 1 IN:4 FT VERT.

WISDOT/CADDS SHEET 49

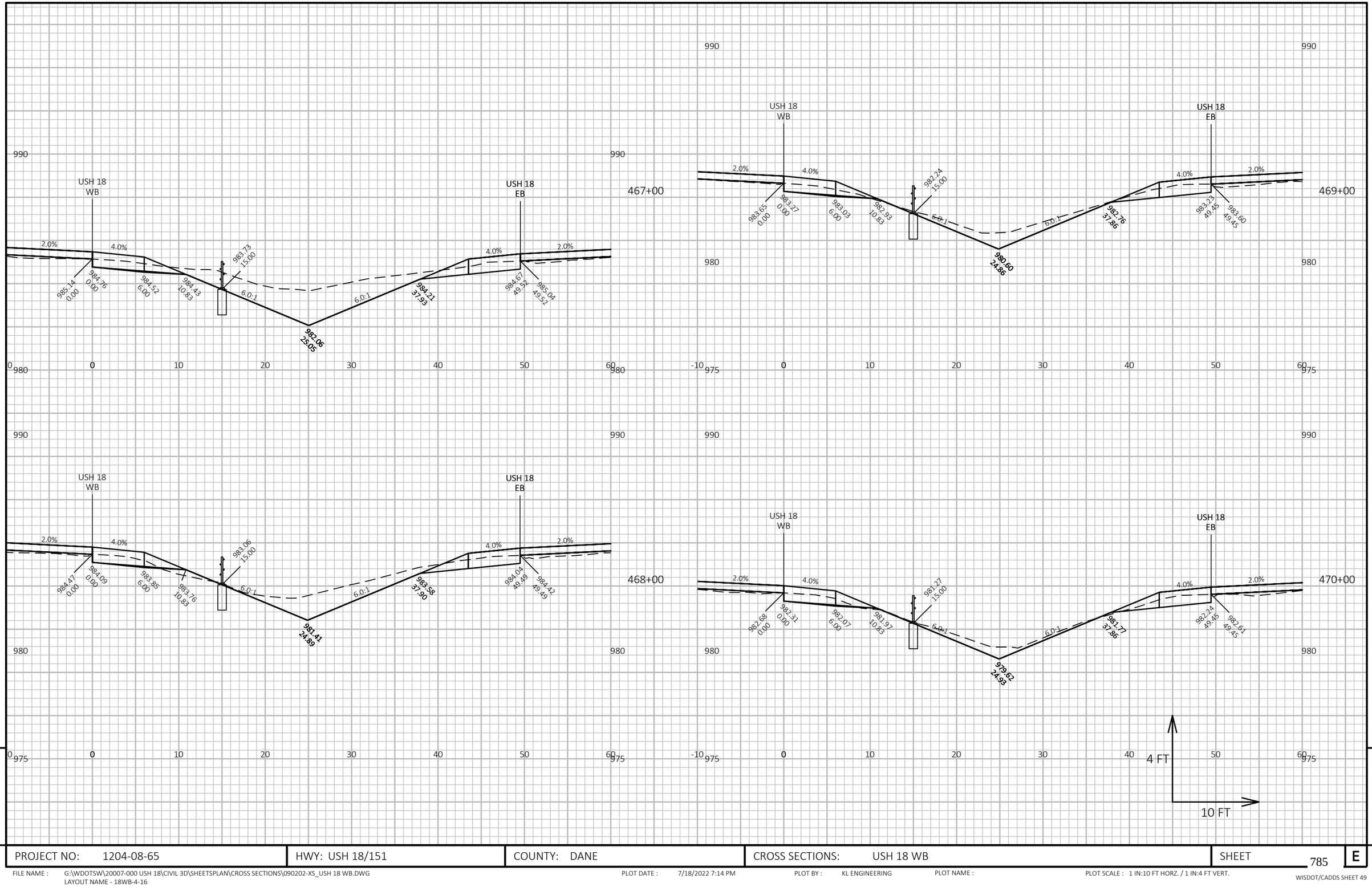

9

9

PROJECT NO: 1204-08-65	HWY: USH 18/151	COUNTY: DANE	CROSS SECTIONS: USH 18 WB	SHEET 785	E

FILE NAME : G:\WDOTSW\20007-000 USH 18\CIVIL 3D\SHEETSPLAN\CROSS SECTIONS\090202-XS_USH 18 WB.DWG
LAYOUT NAME - 18WB-4-16

PLOT DATE : 7/18/2022 7:14 PM

PLOT BY : KL ENGINEERING

PLOT NAME :

PLOT SCALE : 1 IN:10 FT HORZ. / 1 IN:4 FT VERT.

WISDOT/CADDS SHEET 49

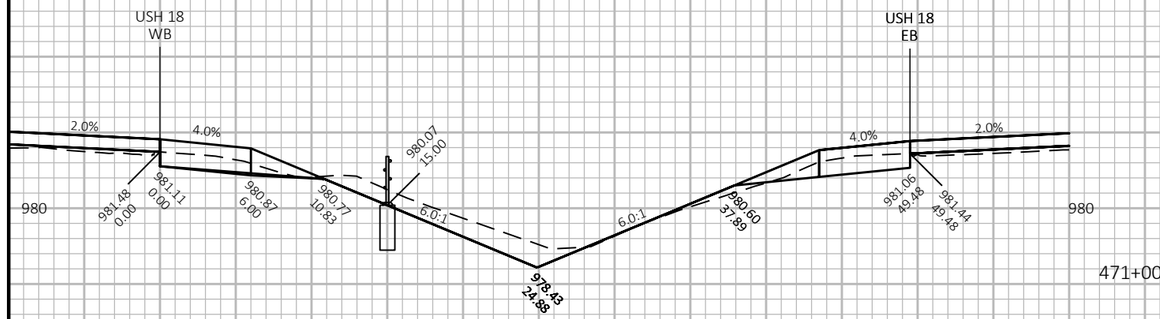

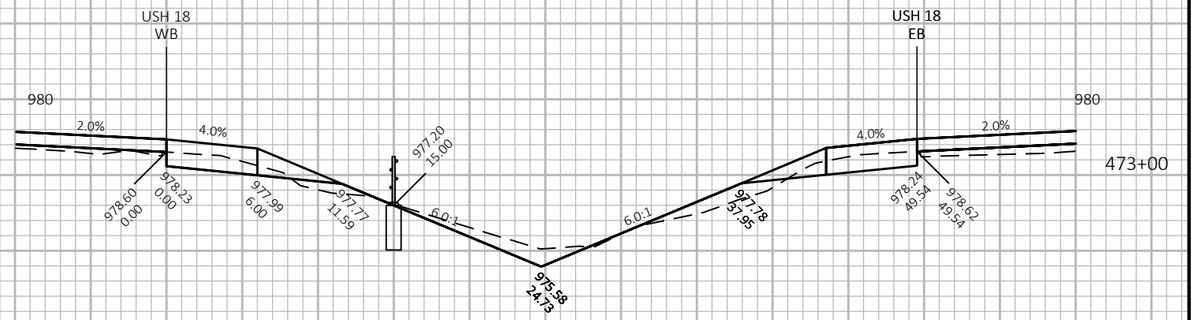

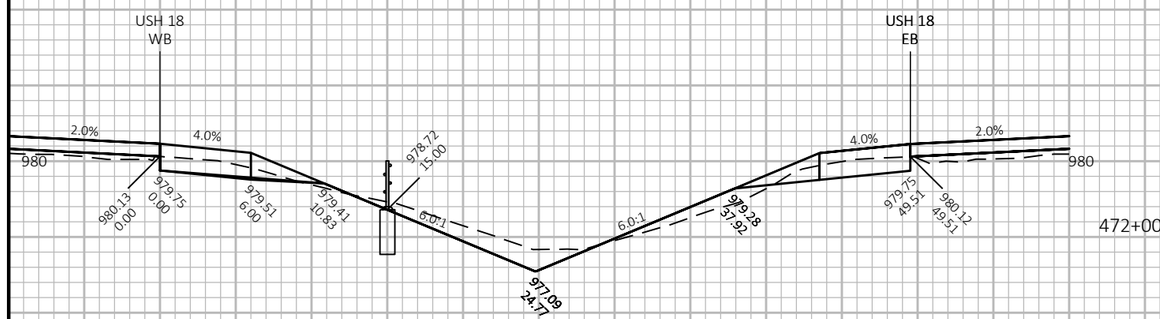

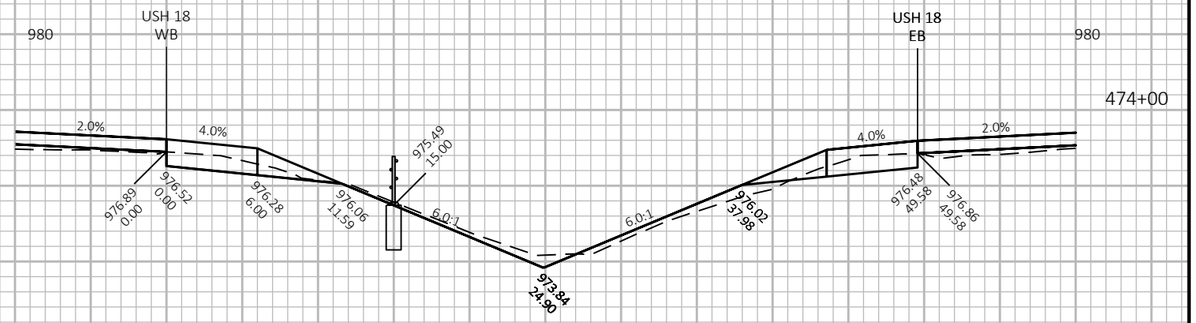

9

9

PROJECT NO: 1204-08-65	HWY: USH 18/151	COUNTY: DANE	CROSS SECTIONS: USH 18 WB	SHEET 786	E

FILE NAME : G:\WDOTSW\20007-000 USH 18\CIVIL 3D\SHEETSPLAN\CROSS SECTIONS\090202-XS_USH 18 WB.DWG
LAYOUT NAME - 18WB-4-17

PLOT DATE : 7/18/2022 7:16 PM

PLOT BY : KL ENGINEERING

PLOT NAME :

PLOT SCALE : 1 IN:10 FT HORZ. / 1 IN:4 FT VERT.

WISDOT/CADDS SHEET 49

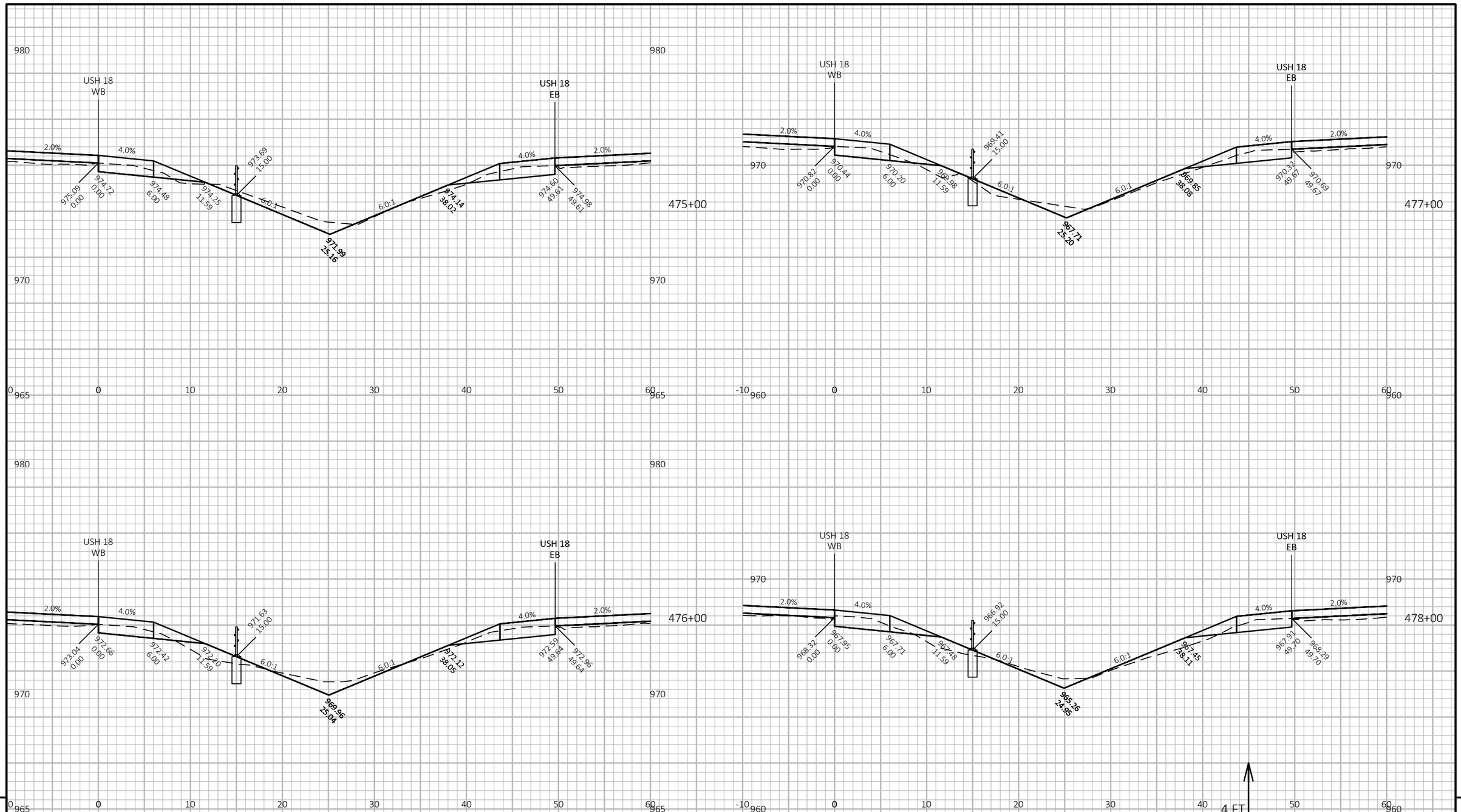

9

9

PROJECT NO: 1204-08-65	HWY: USH 18/151	COUNTY: DANE	CROSS SECTIONS: USH 18 WB	SHEET 787	E

FILE NAME : G:\WDOTSW\20007-000 USH 18\CIVIL 3D\SHEETSPLAN\CROSS SECTIONS\090202-XS_USH 18 WB.DWG
LAYOUT NAME - 18WB-4-18

PLOT DATE : 7/18/2022 7:18 PM PLOT BY : KL ENGINEERING PLOT NAME : PLOT SCALE : 1 IN:10 FT HORZ. / 1 IN:4 FT VERT.

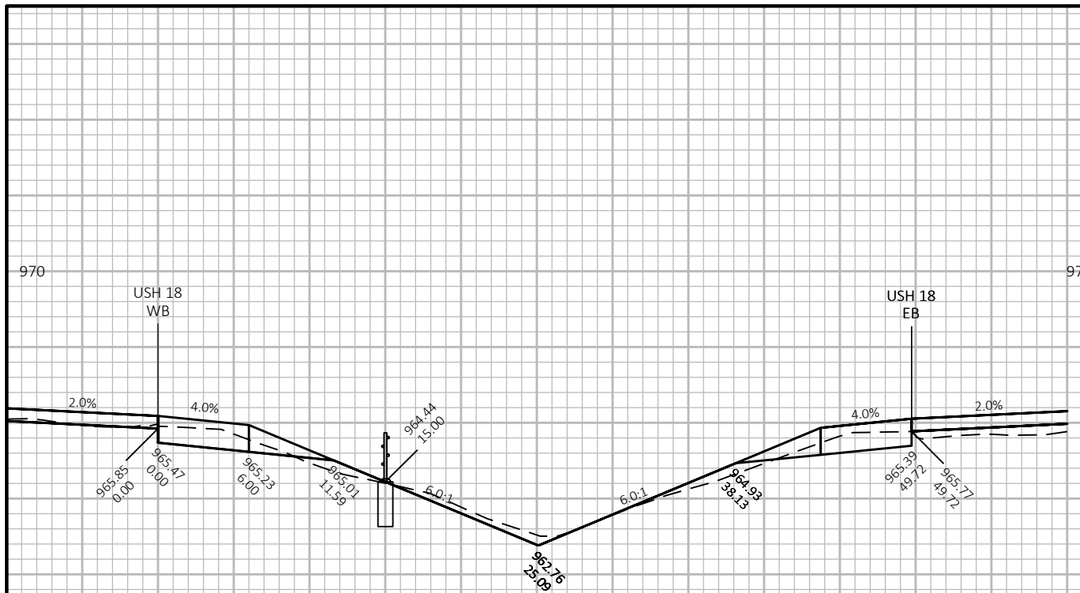

479+00

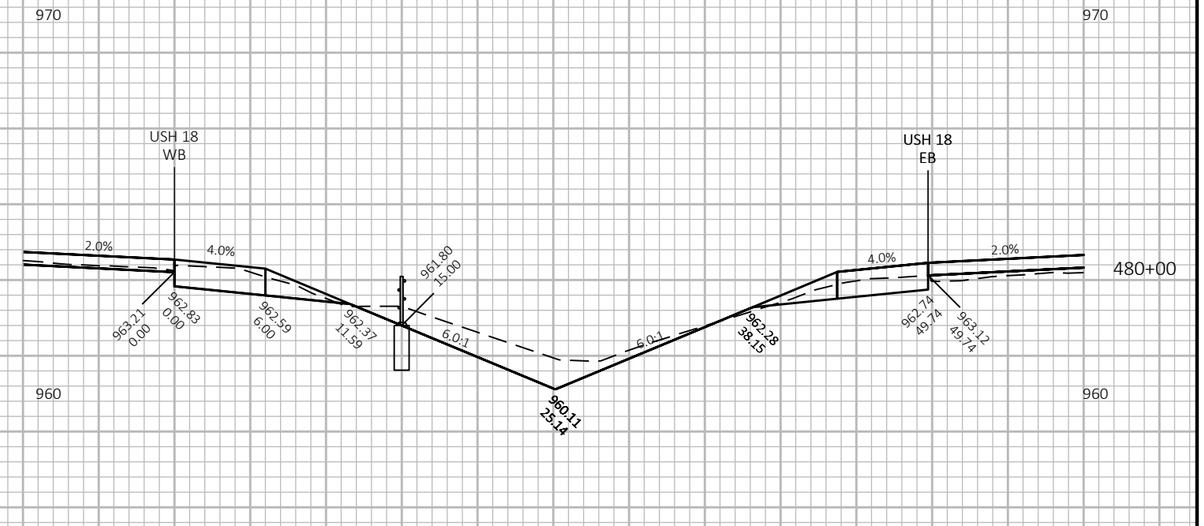

480+00

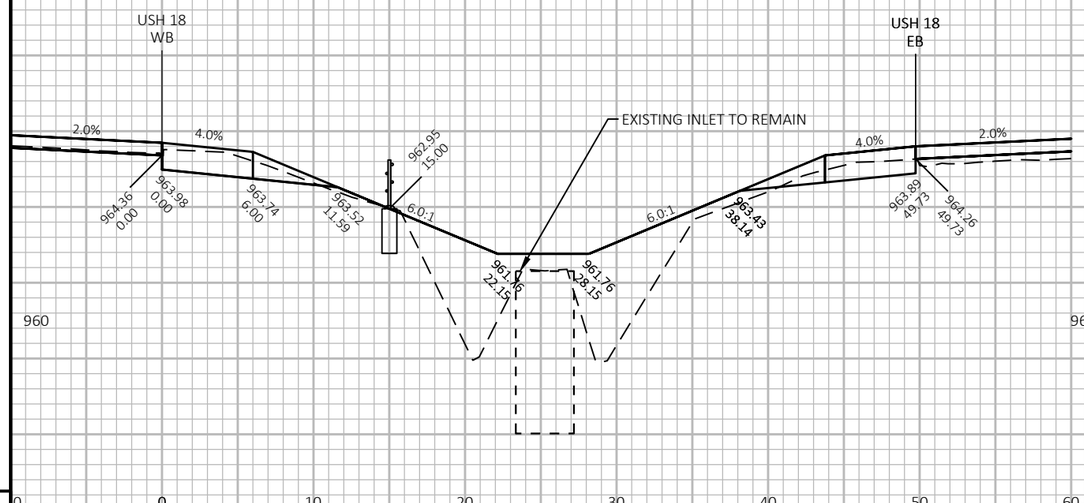

479+57

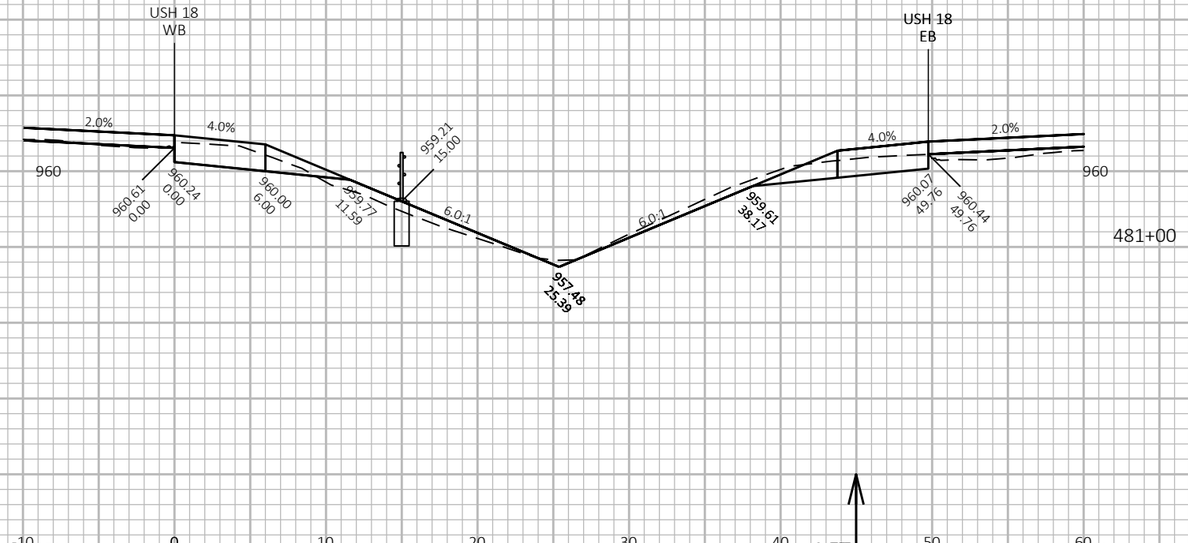

481+00

4 FT

10 FT

9

9

PROJECT NO: 1204-08-65	HWY: USH 18/151	COUNTY: DANE	CROSS SECTIONS: USH 18 WB	SHEET 788	E

FILE NAME : G:\WDOTSW\20007-000 USH 18\CIVIL 3D\SHEETSPLAN\CROSS SECTIONS\090202-XS_USH 18 WB.DWG
LAYOUT NAME - 18WB-4-19

PLOT DATE : 7/18/2022 7:19 PM PLOT BY : KL ENGINEERING PLOT NAME : PLOT SCALE : 1 IN:10 FT HORZ. / 1 IN:4 FT VERT.

WISDOT/CADDS SHEET 49

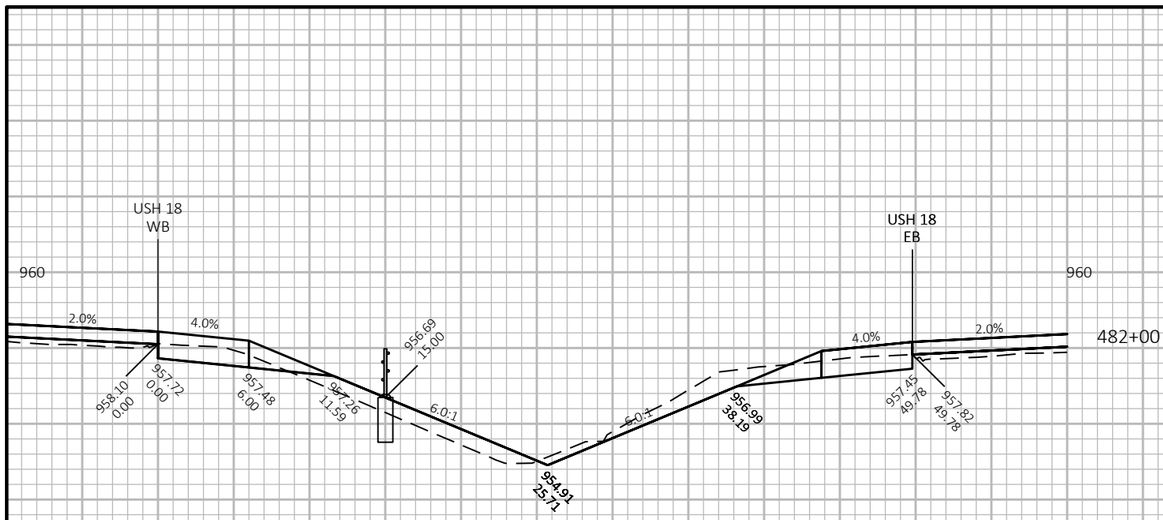

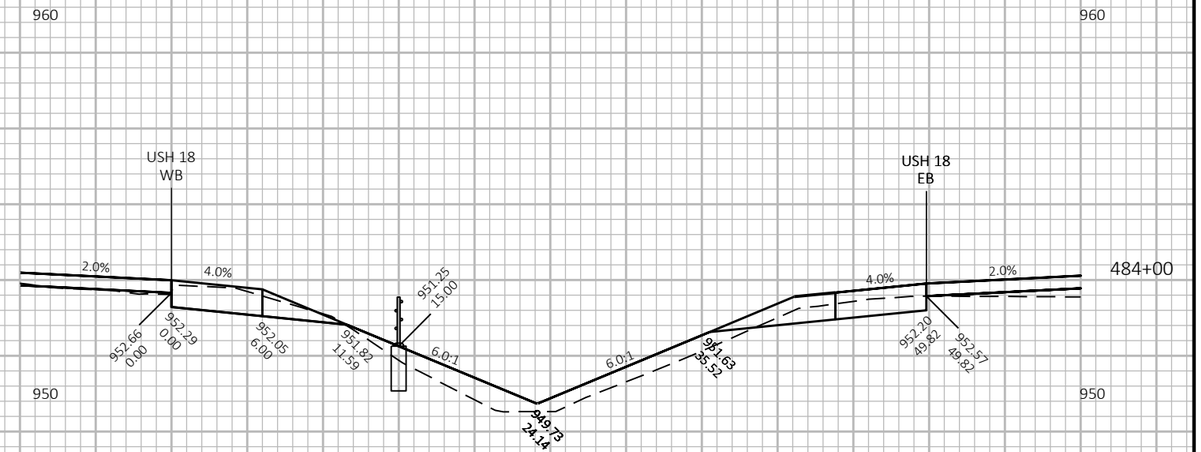

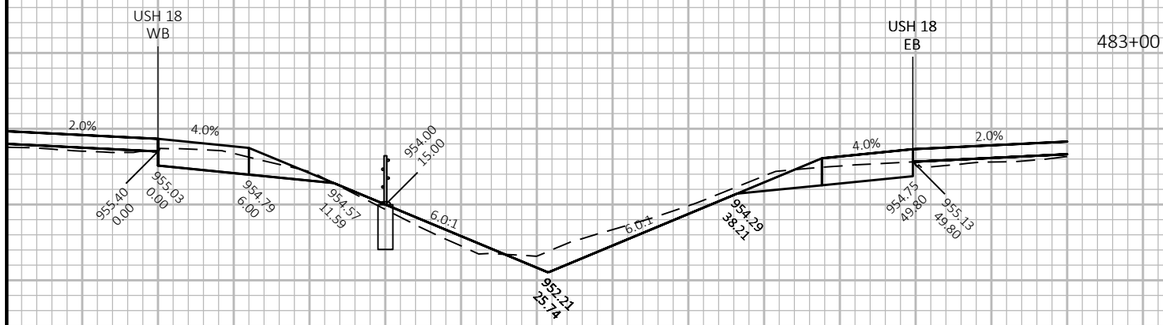

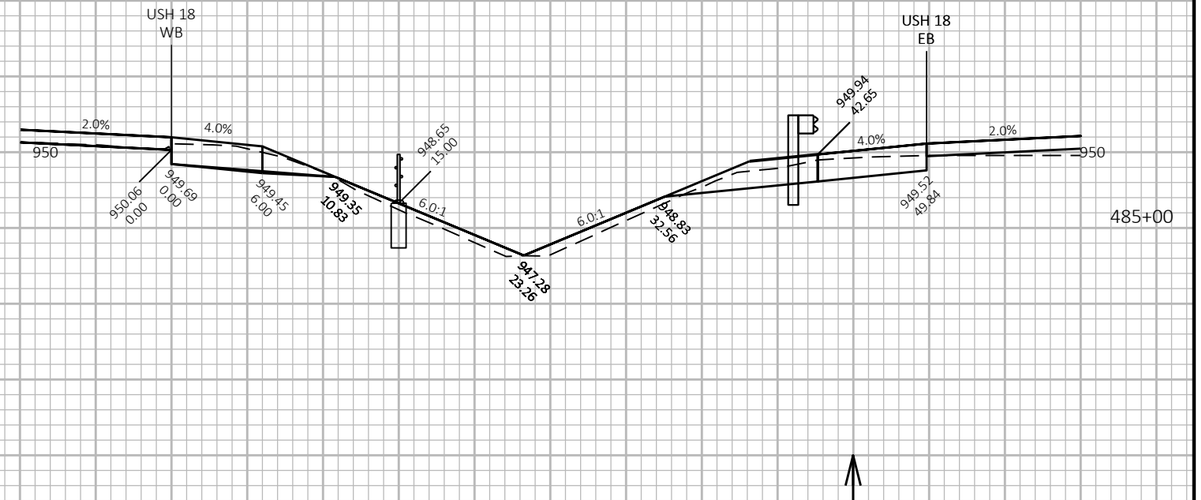

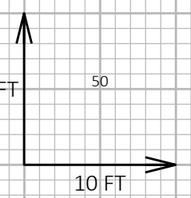

9

9

PROJECT NO: 1204-08-65	HWY: USH 18/151	COUNTY: DANE	CROSS SECTIONS: USH 18 WB	SHEET 789	E

FILE NAME : G:\WDOTSW\20007-000 USH 18\CIVIL 3D\SHEETSPLAN\CROSS SECTIONS\090202-XS_USH 18 WB.DWG
LAYOUT NAME - 18WB-4-20

PLOT DATE : 7/18/2022 7:21 PM PLOT BY : KL ENGINEERING PLOT NAME : PLOT SCALE : 1 IN:10 FT HORZ. / 1 IN:4 FT VERT.

WISDOT/CADDS SHEET 49

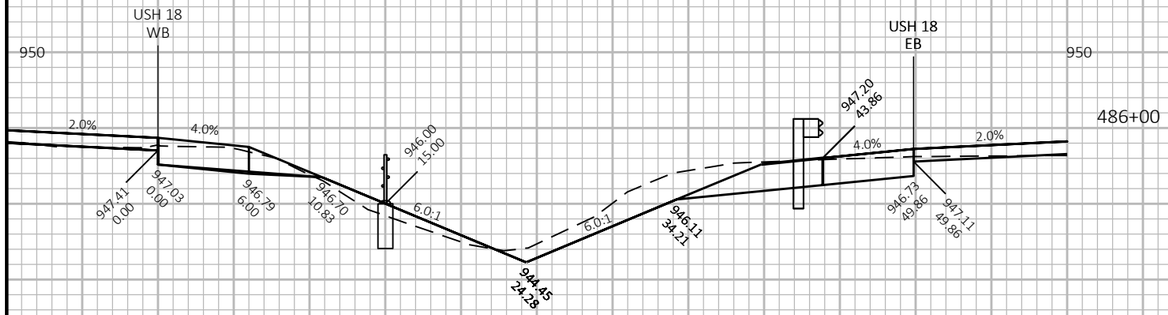

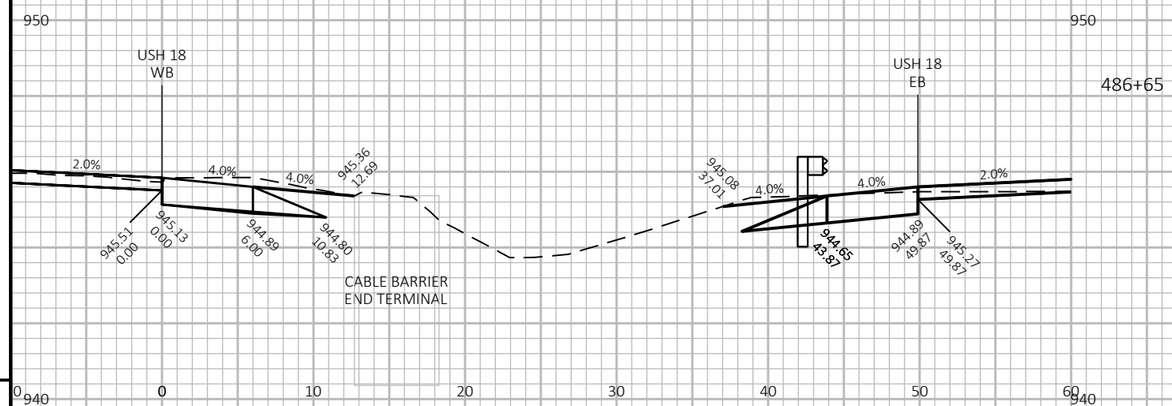

END CABLE GUARD SECTIONS 412+50 TO 486+65

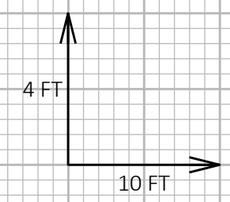

9

9

PROJECT NO: 1204-08-65	HWY: USH 18/151	COUNTY: DANE	CROSS SECTIONS: USH 18 WB	SHEET 790	E

FILE NAME : G:\WDOTSW\20007-000 USH 18\CIVIL 3D\SHEETSPLAN\CROSS SECTIONS\090202-XS_USH 18 WB.DWG
LAYOUT NAME - 18WB-4-21

PLOT DATE : 7/20/2022 3:13 PM PLOT BY : KL ENGINEERING PLOT NAME : PLOT SCALE : 1 IN:10 FT HORZ. / 1 IN:4 FT VERT.

WISDOT/CADDS SHEET 49

START BEAM GUARD SECTIONS 489+65 TO 495+31

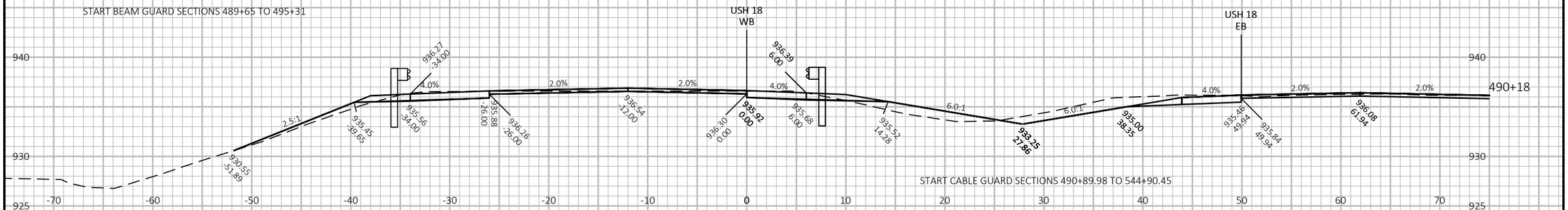

START CABLE GUARD SECTIONS 490+89.98 TO 544+90.45

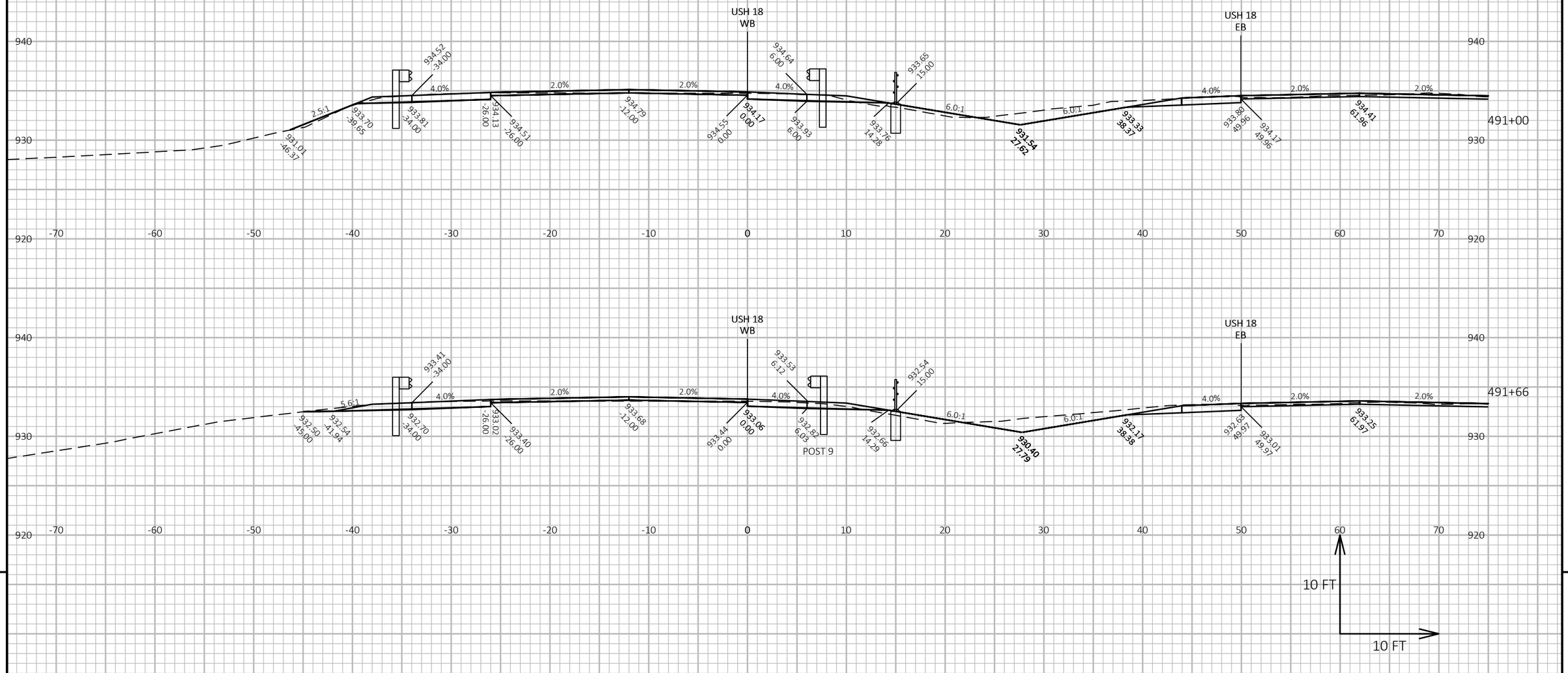

9

9

PROJECT NO: 1204-08-65	HWY: USH 18/151	COUNTY: DANE	CROSS SECTIONS: USH 18 WB	SHEET 791	E

FILE NAME : G:\WDOTSW\20007-000 USH 18\CIVIL 3D\SHEETSPLAN\CROSS SECTIONS\090202-XS_USH 18 WB.DWG
LAYOUT NAME - 18WB-5-1

PLOT DATE : 7/18/2022 7:24 PM

PLOT BY : KL ENGINEERING

PLOT NAME :

PLOT SCALE : 1 IN:10 FT HORZ. / 1 IN:10 FT VERT.

WISDOT/CADDS SHEET 49

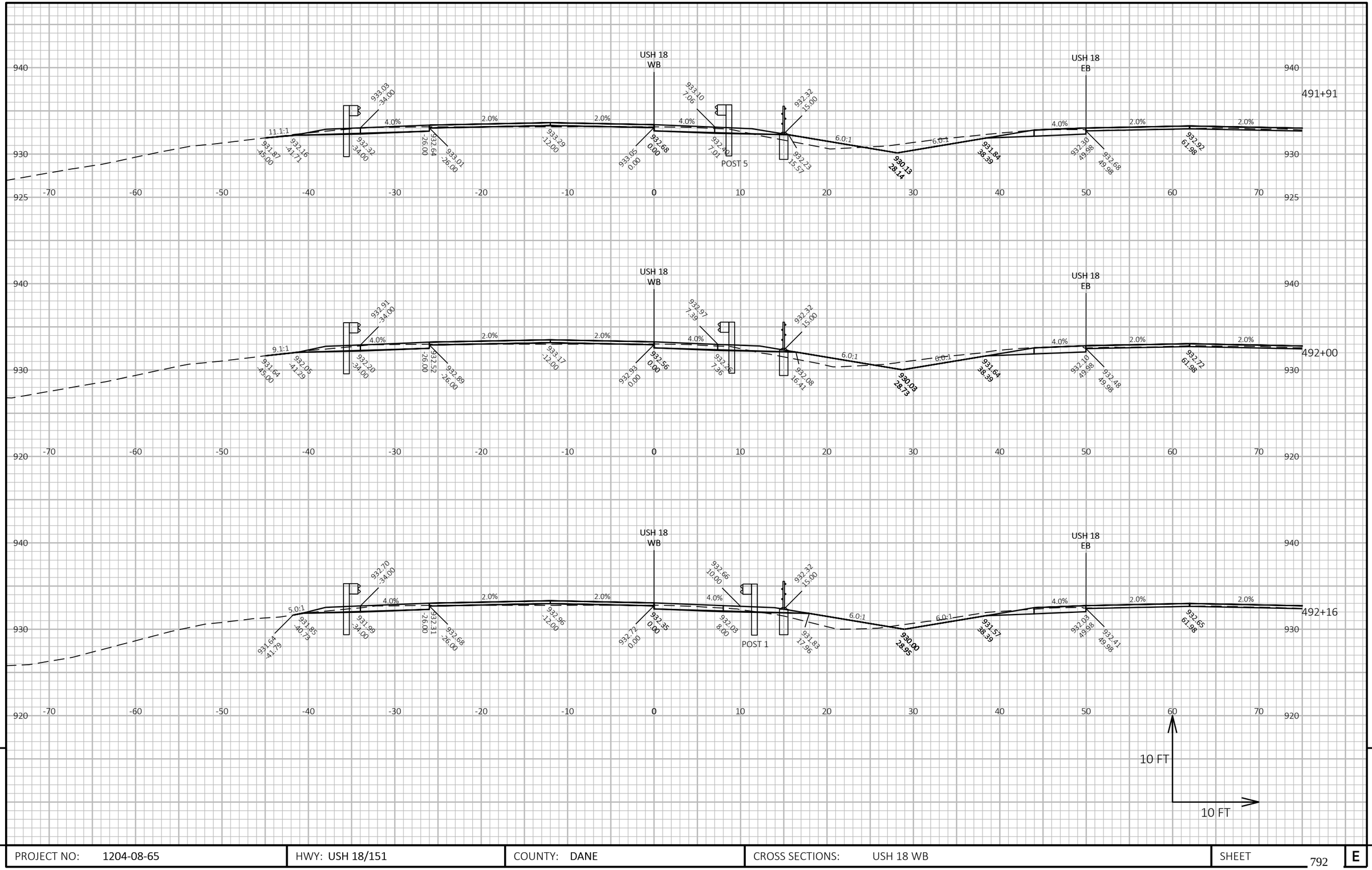

PROJECT NO: 1204-08-65	HWY: USH 18/151	COUNTY: DANE	CROSS SECTIONS: USH 18 WB	SHEET 792 E

FILE NAME : G:\WDOTSW\20007-000 USH 18\CIVIL 3D\SHEETSPLAN\CROSS SECTIONS\090202-XS_USH 18 WB.DWG
LAYOUT NAME - 18WB-5-2

PLOT DATE : 7/20/2022 3:17 PM PLOT BY : KL ENGINEERING PLOT NAME : PLOT SCALE : 1 IN:10 FT HORZ. / 1 IN:10 FT VERT.

WISDOT/CADDS SHEET 49

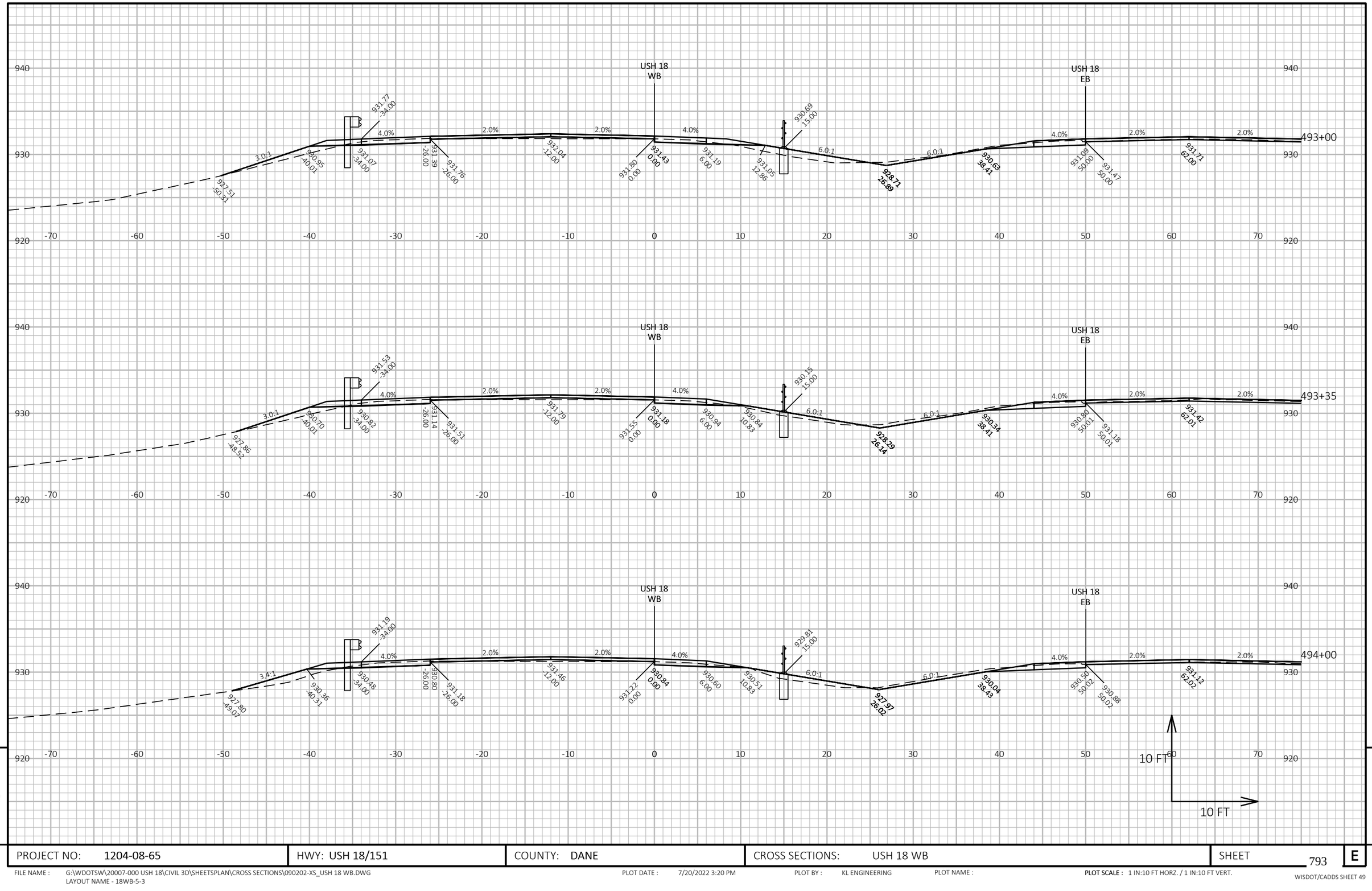

PROJECT NO: 1204-08-65	HWY: USH 18/151	COUNTY: DANE	CROSS SECTIONS: USH 18 WB	SHEET 793	E

FILE NAME : G:\WDOTSW\20007-000 USH 18\CIVIL 3D\SHEETSPLAN\CROSS SECTIONS\090202-XS_USH 18 WB.DWG
LAYOUT NAME - 18WB-5-3

PLOT DATE : 7/20/2022 3:20 PM PLOT BY : KL ENGINEERING PLOT NAME : **PLOT SCALE :** 1 IN:10 FT HORZ. / 1 IN:10 FT VERT.

WISDOT/CADDS SHEET 49

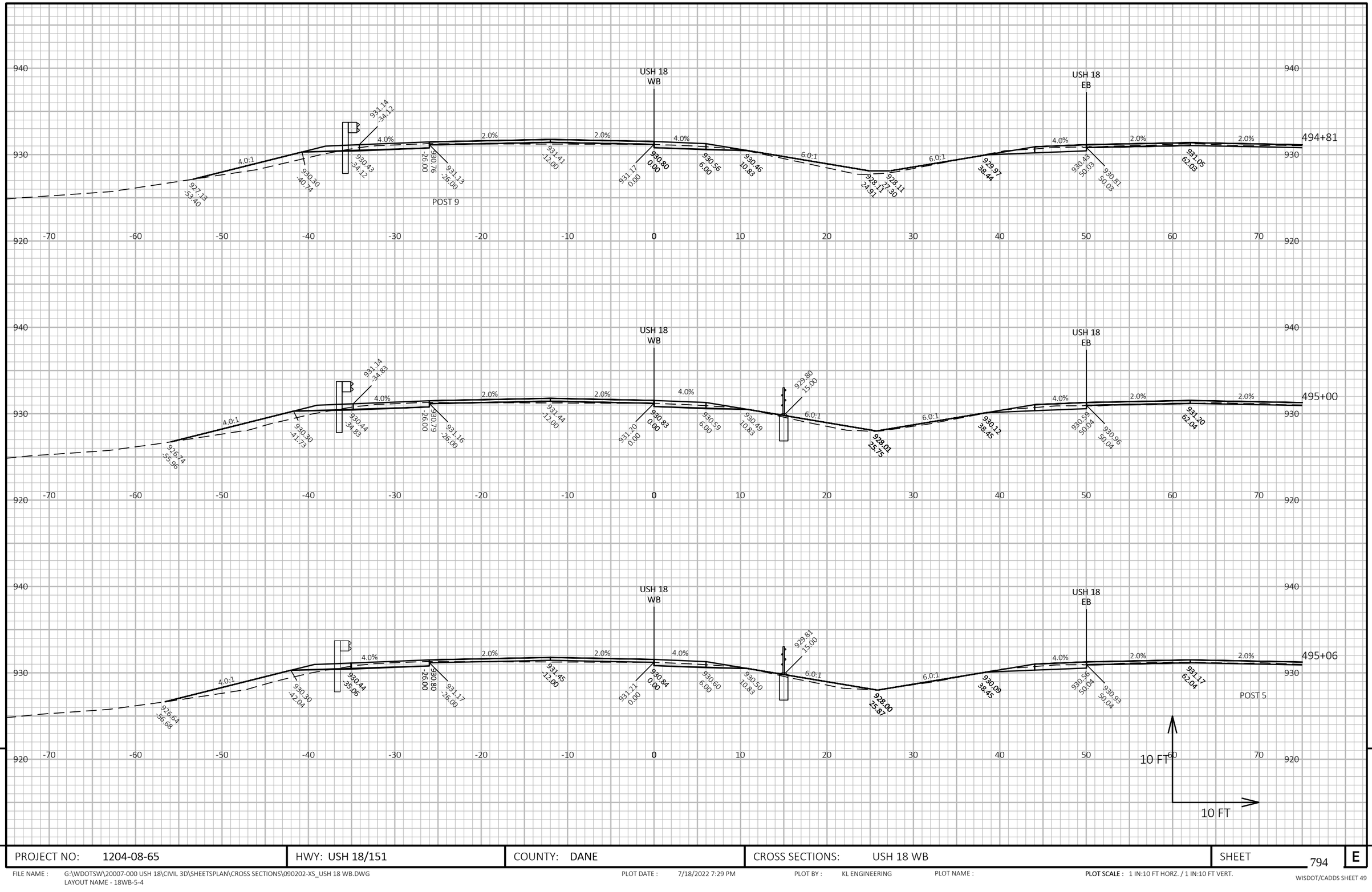

PROJECT NO: 1204-08-65	HWY: USH 18/151	COUNTY: DANE	CROSS SECTIONS: USH 18 WB	SHEET 794 E

FILE NAME : G:\WDOTSW\20007-000 USH 18\CIVIL 3D\SHEETSPLAN\CROSS SECTIONS\090202-XS_USH 18 WB.DWG
LAYOUT NAME - 18WB-5-4

PLOT DATE : 7/18/2022 7:29 PM PLOT BY : KL ENGINEERING PLOT NAME : **PLOT SCALE :** 1 IN:10 FT HORZ. / 1 IN:10 FT VERT.

WISDOT/CADDS SHEET 49

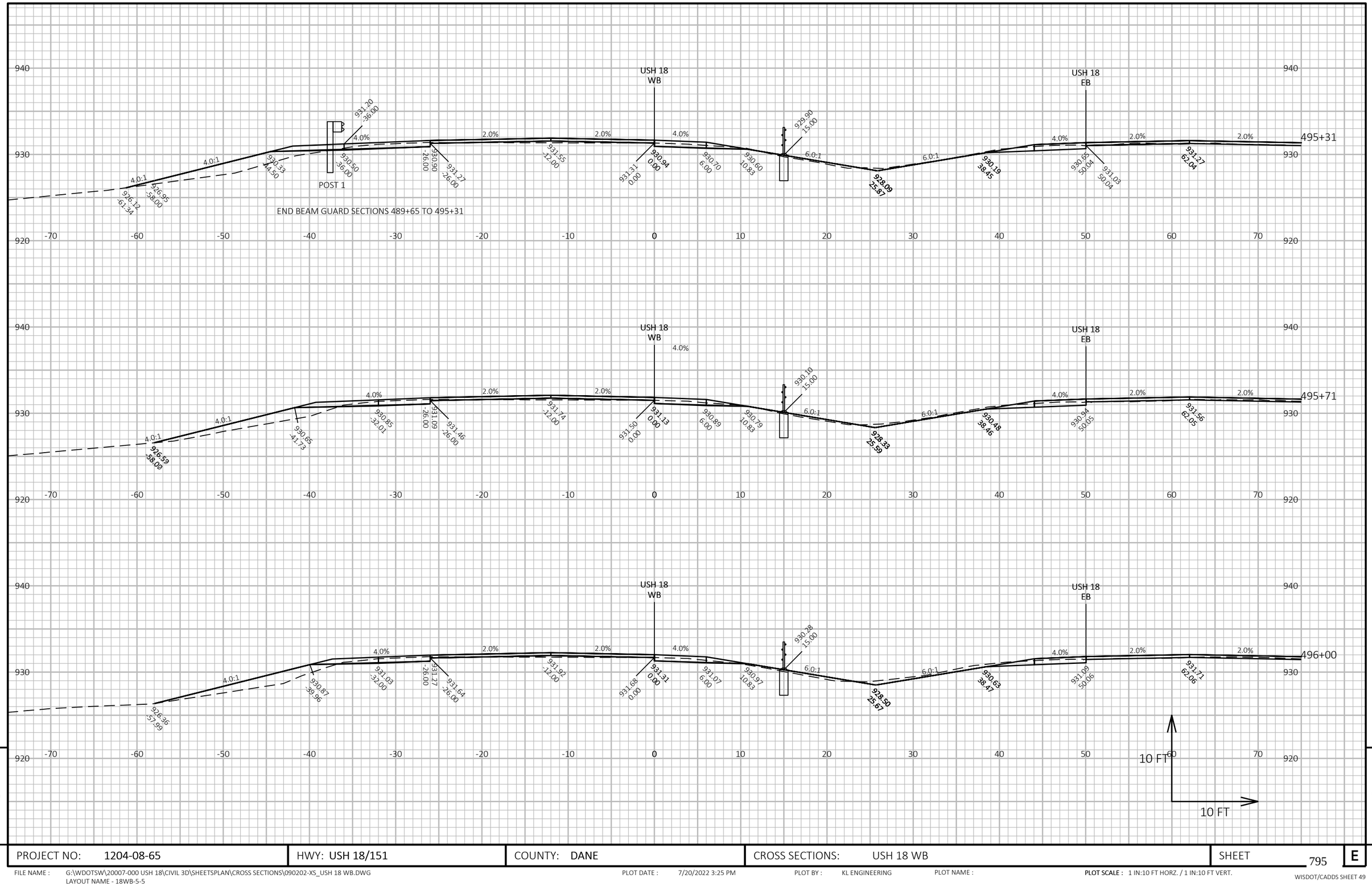

9

9

PROJECT NO: 1204-08-65	HWY: USH 18/151	COUNTY: DANE	CROSS SECTIONS: USH 18 WB	SHEET 795	E

FILE NAME : G:\WDOTSW\20007-000 USH 18\CIVIL 3D\SHEETSPLAN\CROSS SECTIONS\090202-XS_USH 18 WB.DWG
LAYOUT NAME - 18WB-5-5

PLOT DATE : 7/20/2022 3:25 PM PLOT BY : KL ENGINEERING PLOT NAME : **PLOT SCALE :** 1 IN:10 FT HORZ. / 1 IN:10 FT VERT.

WISDOT/CADDS SHEET 49

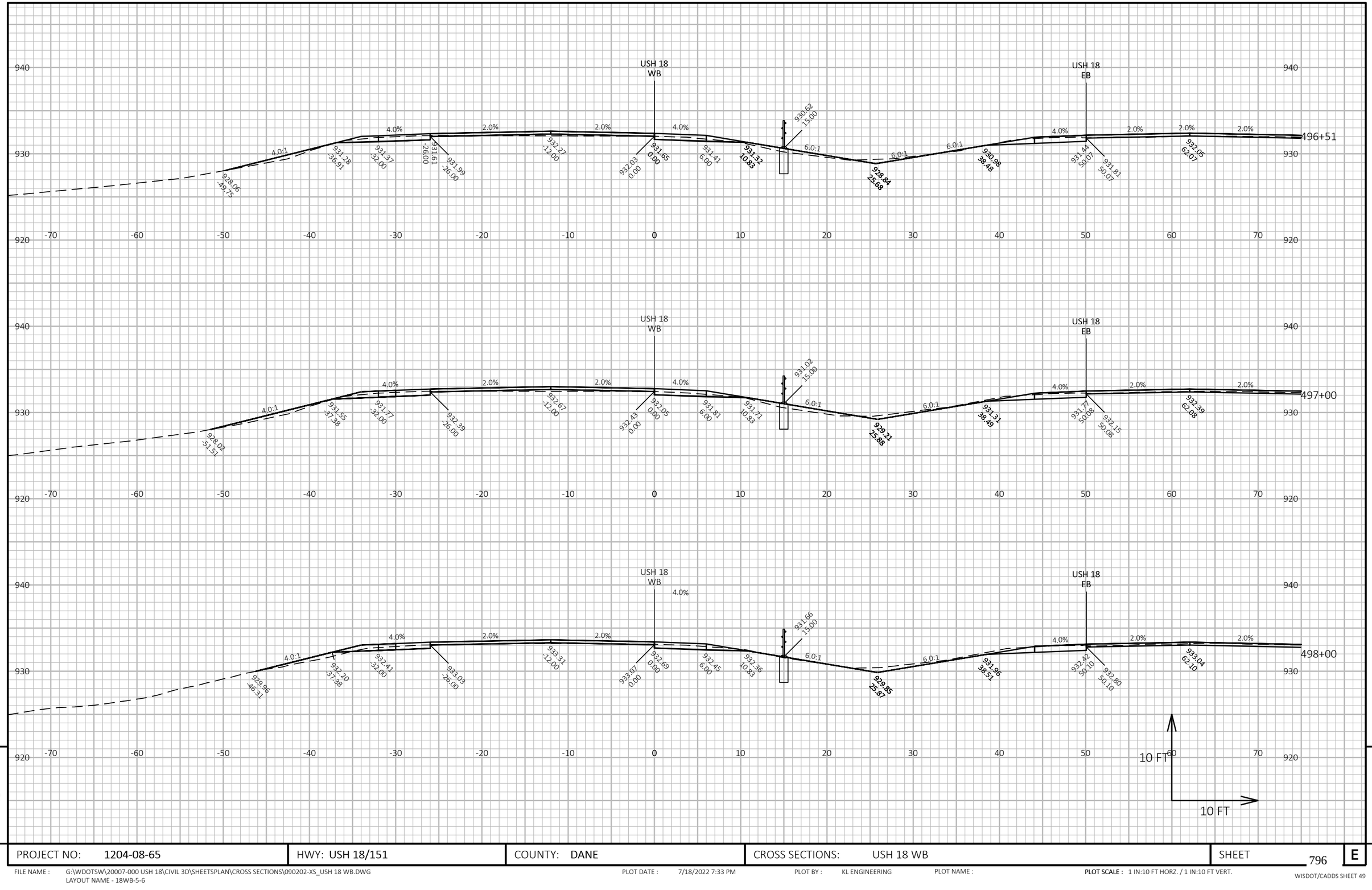

9

9

PROJECT NO: 1204-08-65	HWY: USH 18/151	COUNTY: DANE	CROSS SECTIONS: USH 18 WB	SHEET 796	E

FILE NAME : G:\WDOTSW\20007-000 USH 18\CIVIL 3D\SHEETSPLAN\CROSS SECTIONS\090202-XS_USH 18 WB.DWG
LAYOUT NAME - 18WB-5-6

PLOT DATE : 7/18/2022 7:33 PM PLOT BY : KL ENGINEERING PLOT NAME : **PLOT SCALE :** 1 IN:10 FT HORZ. / 1 IN:10 FT VERT.

WISDOT/CADDS SHEET 49

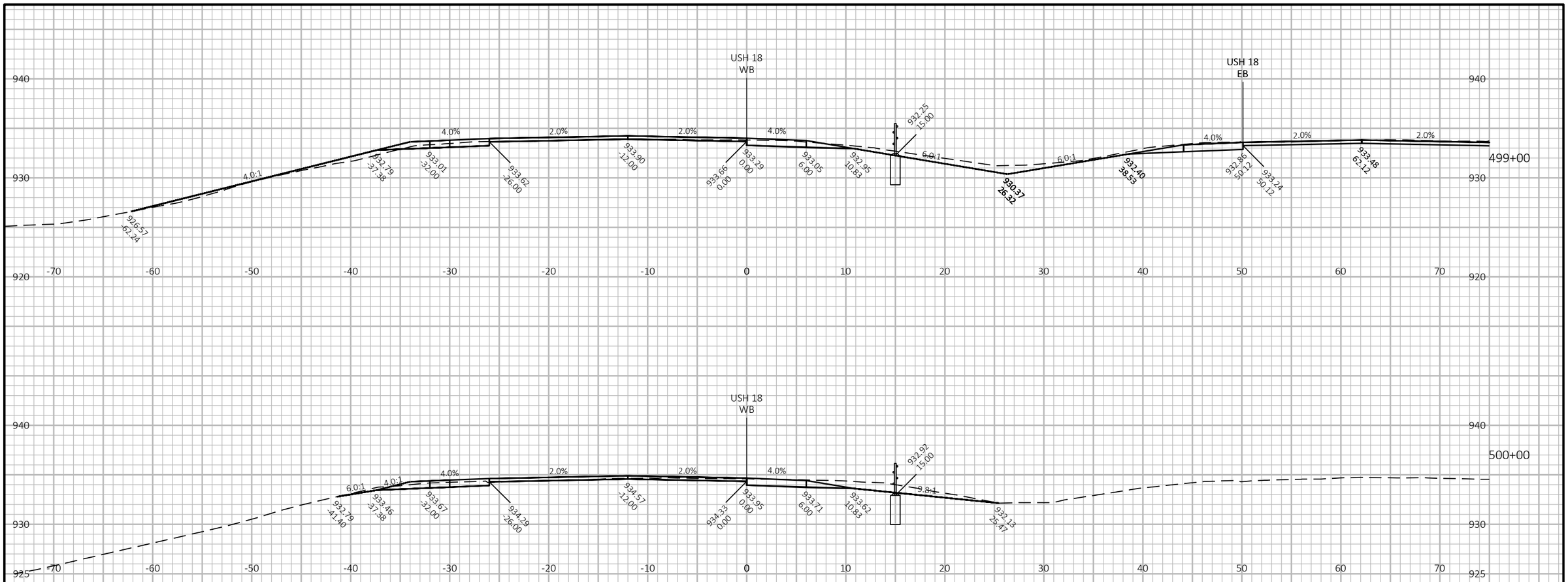

9

9

PROJECT NO: 1204-08-65	HWY: USH 18/151	COUNTY: DANE	CROSS SECTIONS: USH 18 WB	SHEET 797	E

FILE NAME : G:\WDOTSW\20007-000 USH 18\CIVIL 3D\SHEETSPLAN\CROSS SECTIONS\090202-XS_USH 18 WB.DWG
LAYOUT NAME - 18WB-5-7

PLOT DATE : 7/21/2022 9:15 AM PLOT BY : KL ENGINEERING PLOT NAME : **PLOT SCALE :** 1 IN:10 FT HORZ. / 1 IN:10 FT VERT.

WISDOT/CADDS SHEET 49

START CABLE GUARD SECTIONS 505+37 TO 544+38

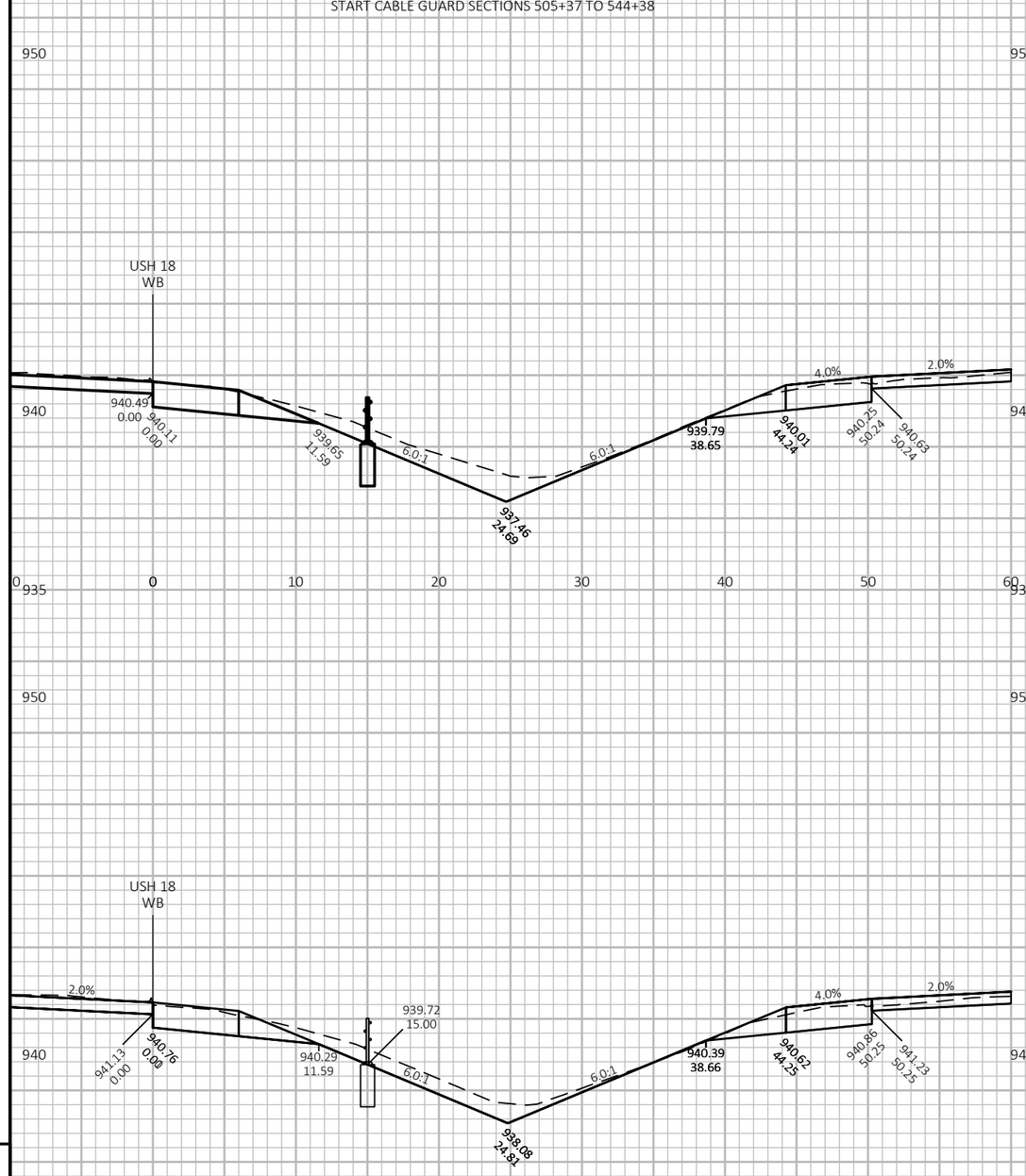

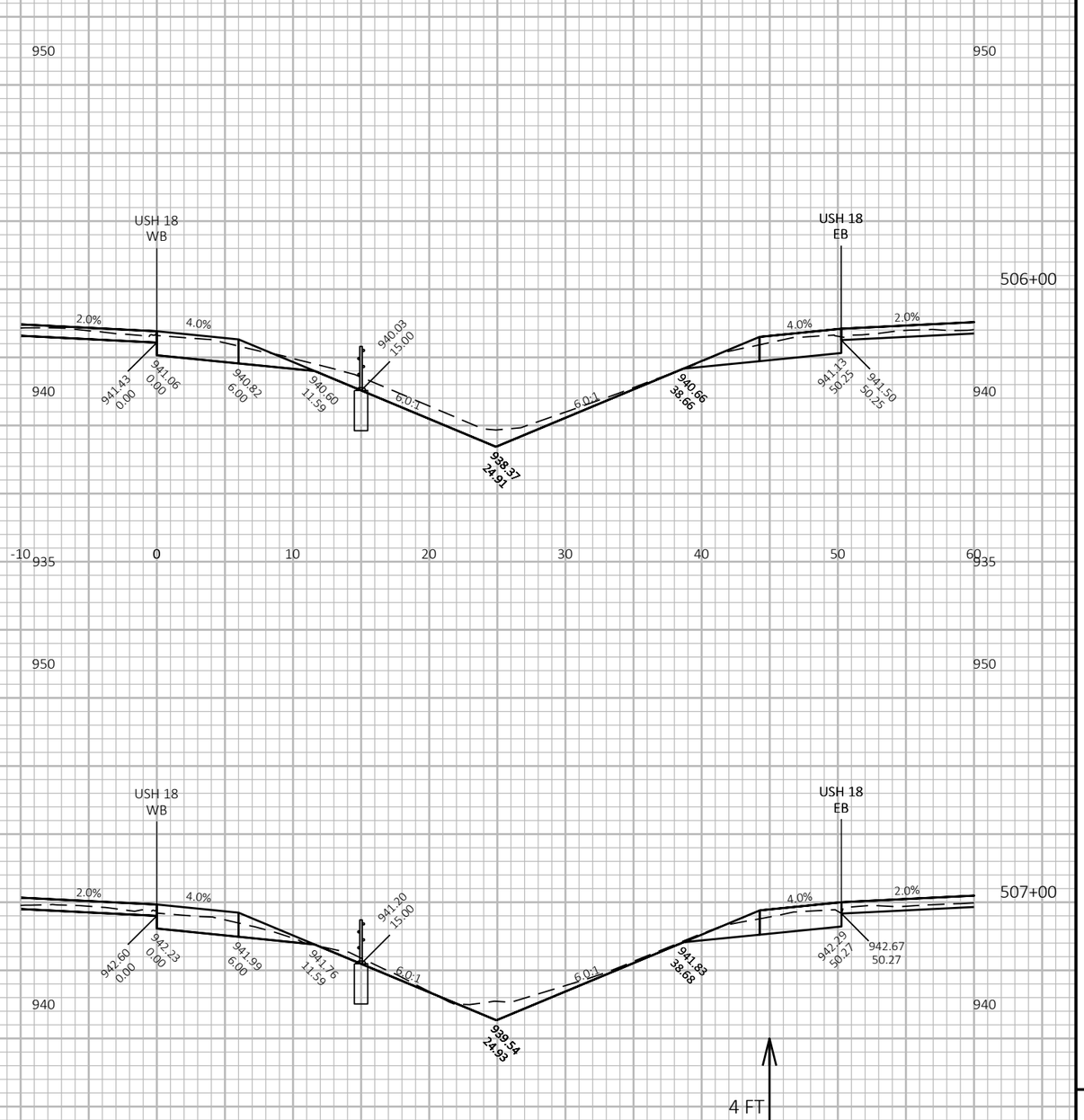

PROJECT NO: 1204-08-65	HWY: USH 18/151	COUNTY: DANE	CROSS SECTIONS: USH 18 WB	SHEET 798 E

FILE NAME : G:\WDOTSW\20007-000 USH 18\CIVIL 3D\SHEETSPLAN\CROSS SECTIONS\090202-XS_USH 18 WB.DWG
LAYOUT NAME - 18WB-6-1

PLOT DATE : 7/20/2022 3:31 PM PLOT BY : KL ENGINEERING PLOT NAME : PLOT SCALE : 1 IN:10 FT HORZ. / 1 IN:4 FT VERT.

WISDOT/CADDS SHEET 49

9 9

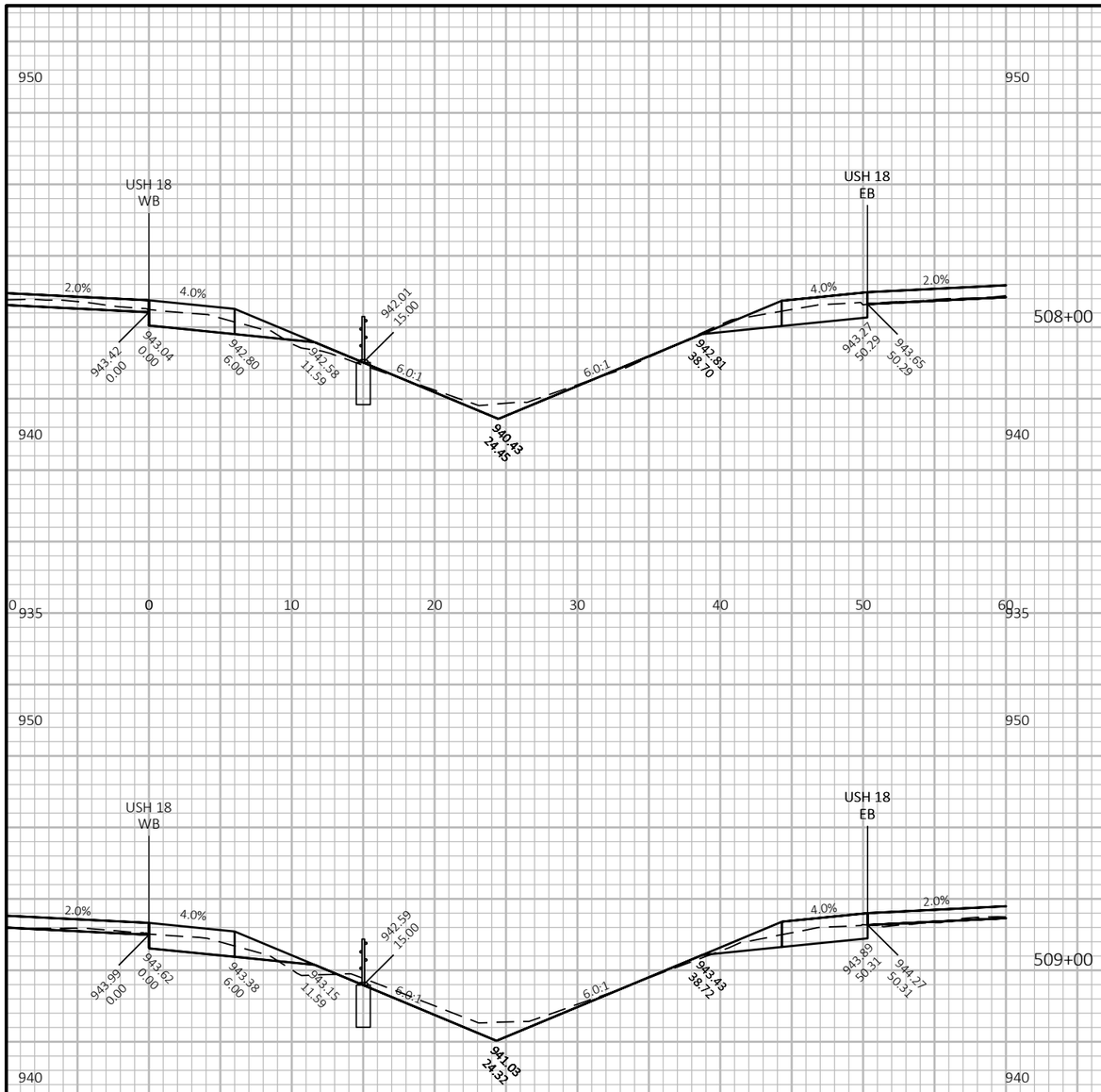

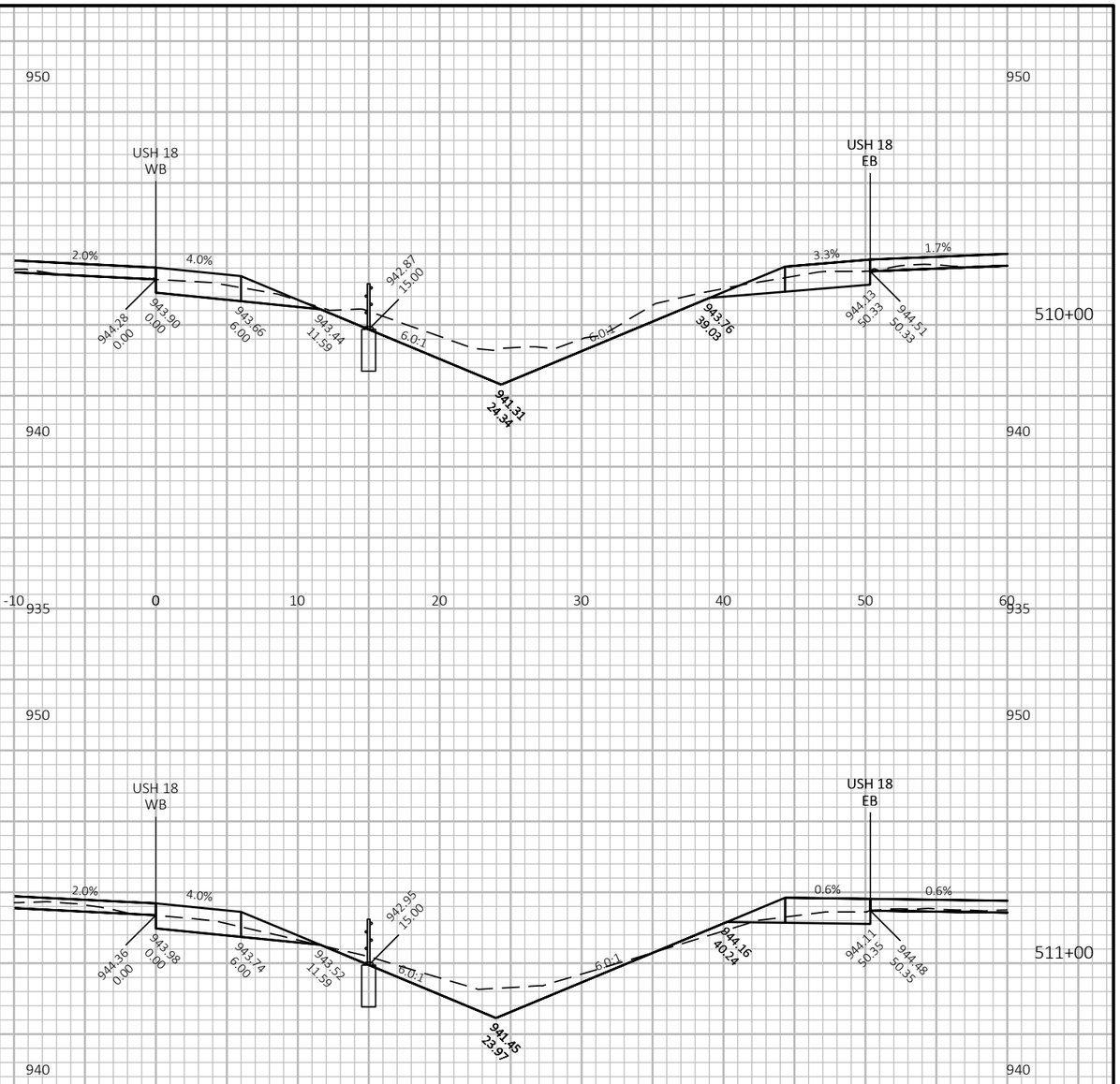

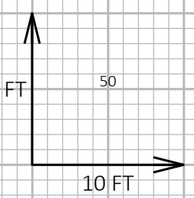

9

9

PROJECT NO: 1204-08-65	HWY: USH 18/151	COUNTY: DANE	CROSS SECTIONS: USH 18 WB	SHEET 799	E

FILE NAME : G:\WDOTSW\20007-000 USH 18\CIVIL 3D\SHEETSPLAN\CROSS SECTIONS\090202-XS_USH 18 WB.DWG
LAYOUT NAME - 18WB-6-2

PLOT DATE : 7/18/2022 7:38 PM PLOT BY : KL ENGINEERING PLOT NAME : PLOT SCALE : 1 IN:10 FT HORZ. / 1 IN:4 FT VERT.

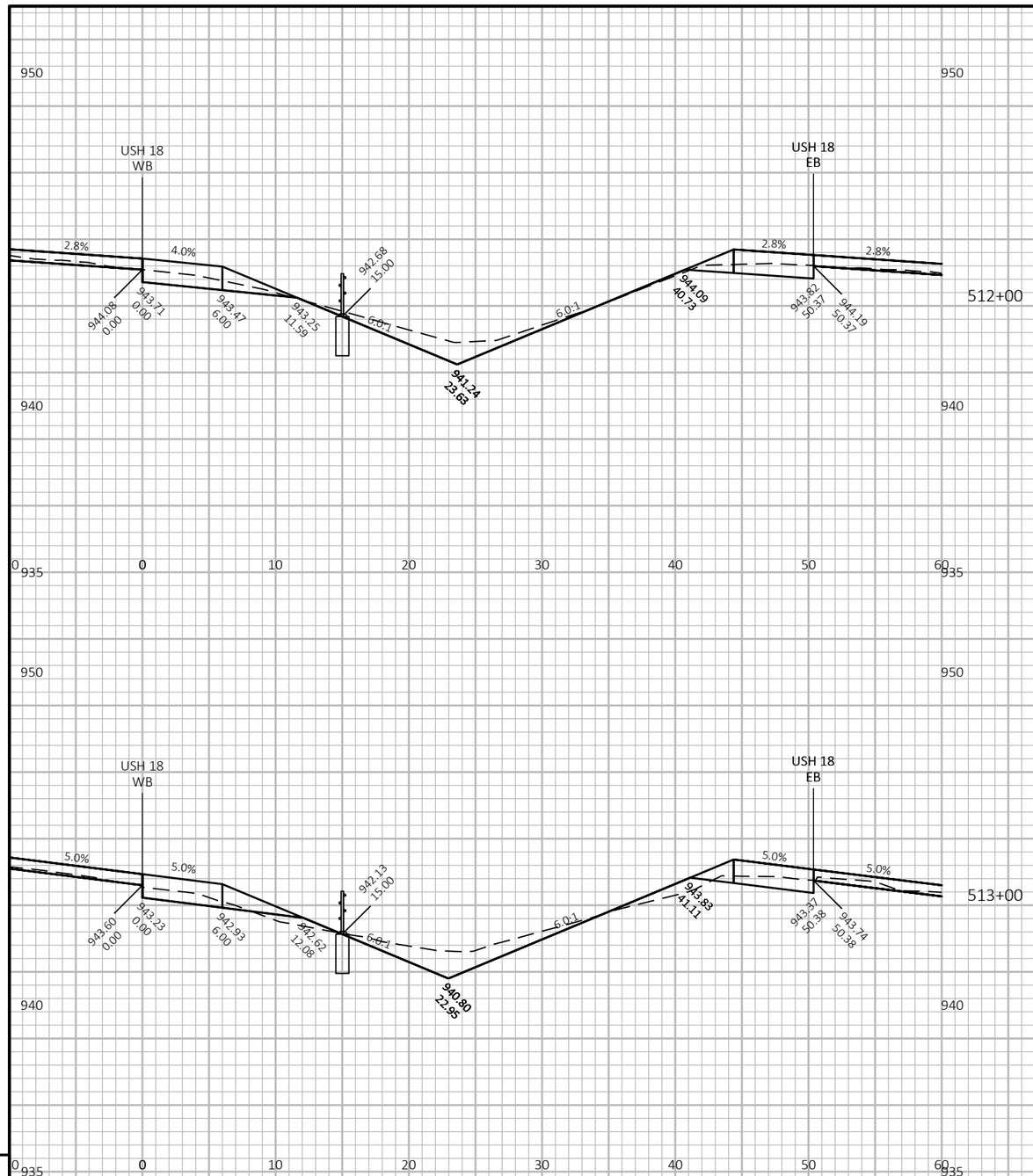

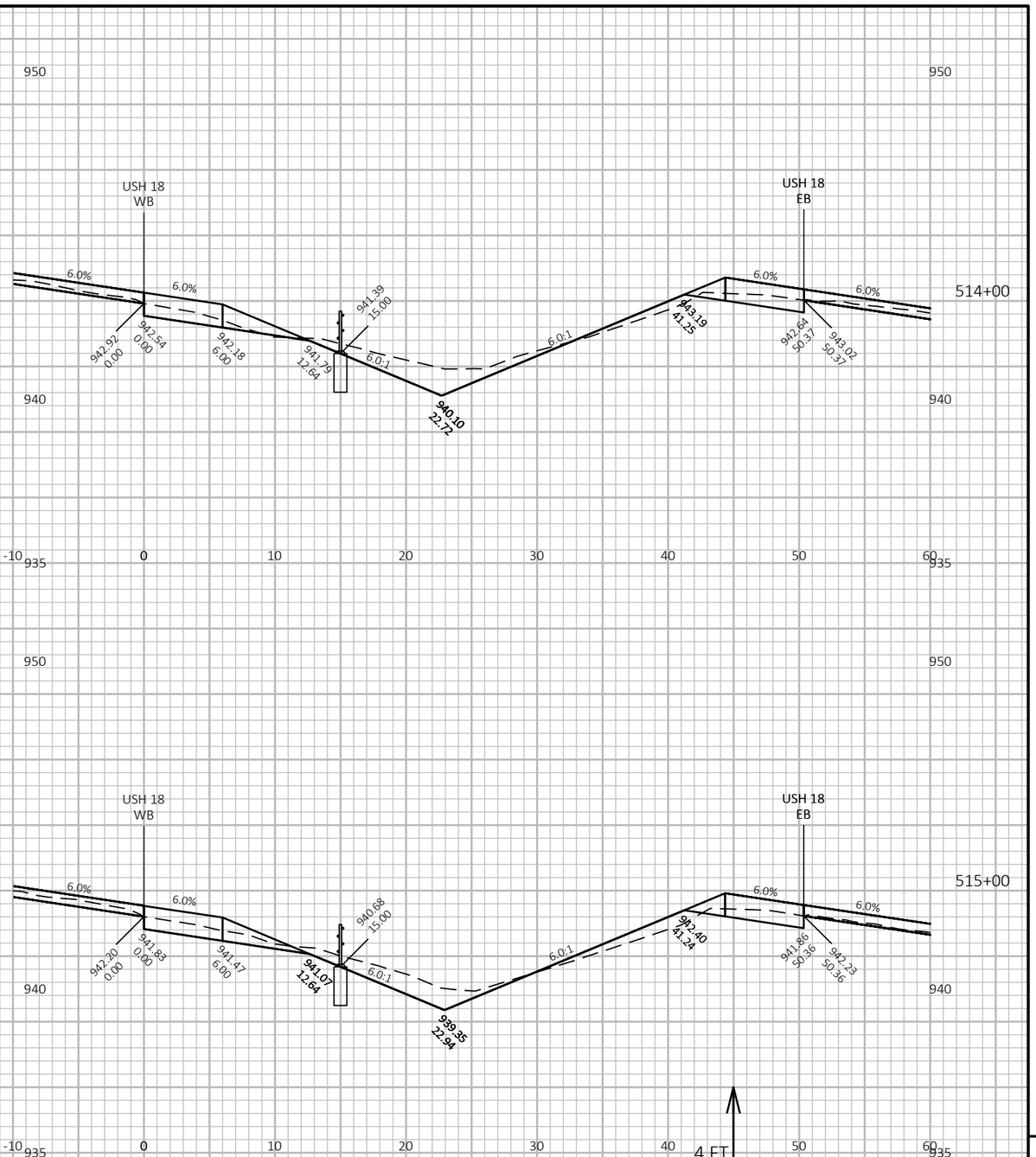

9

9

PROJECT NO: 1204-08-65	HWY: USH 18/151	COUNTY: DANE	CROSS SECTIONS: USH 18 WB	SHEET 800	E

FILE NAME : G:\WDOTSW\20007-000 USH 18\CIVIL 3D\SHEETSPLAN\CROSS SECTIONS\090202-XS_USH 18 WB.DWG
LAYOUT NAME - 18WB-6-3

PLOT DATE : 7/18/2022 7:39 PM

PLOT BY : KL ENGINEERING

PLOT NAME :

PLOT SCALE : 1 IN:10 FT HORZ. / 1 IN:4 FT VERT.

WISDOT/CADDS SHEET 49

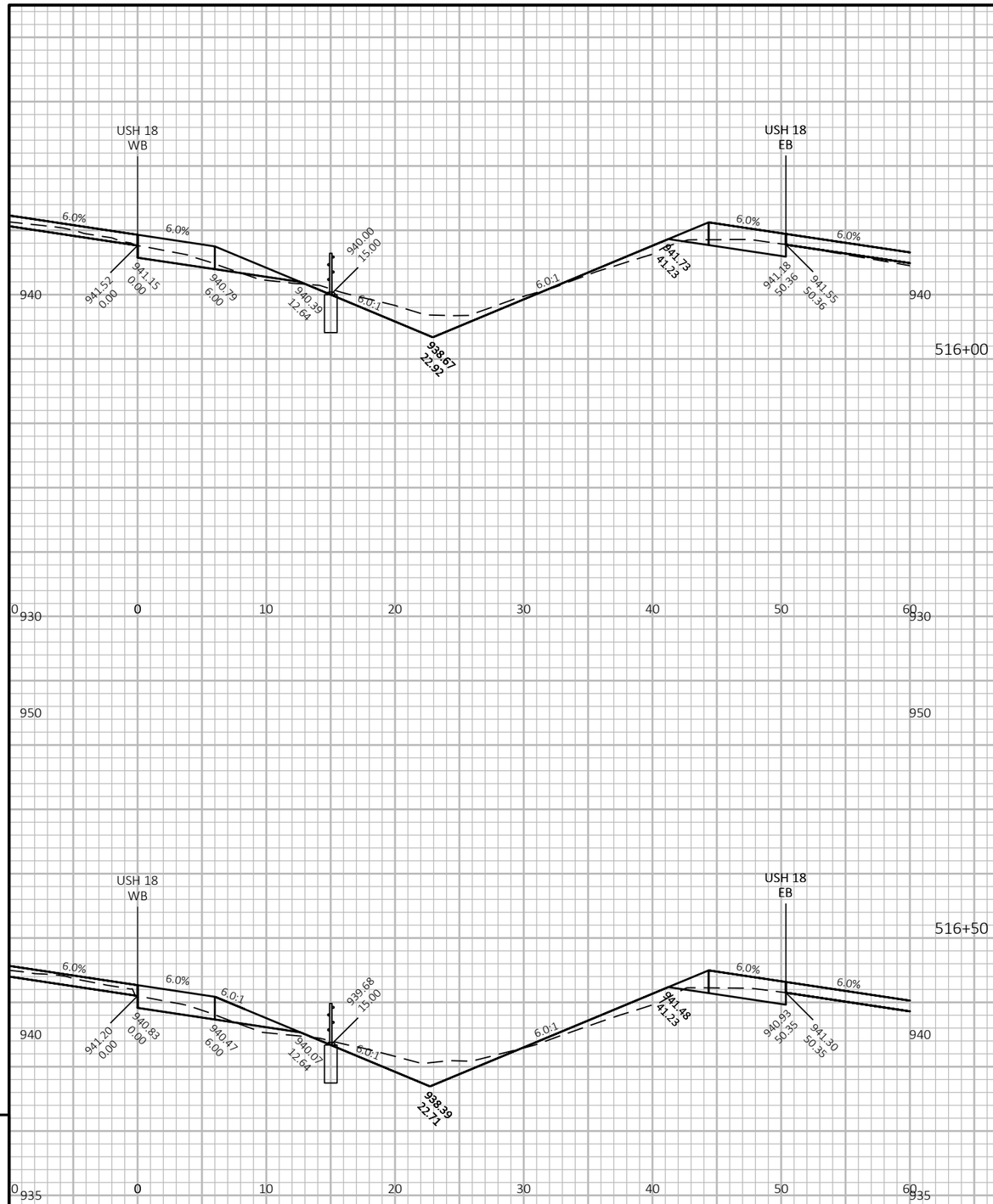

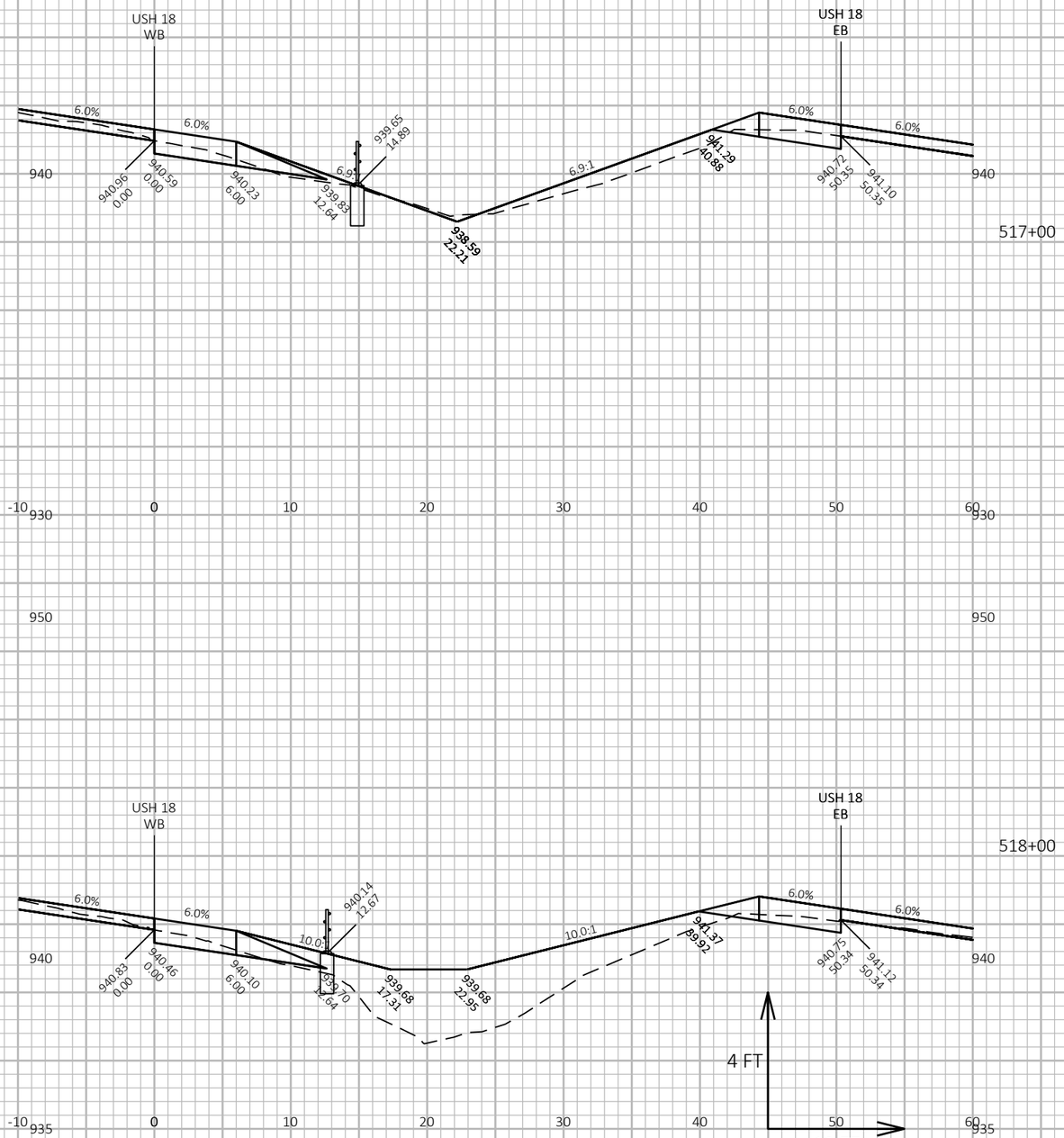

9

9

PROJECT NO: 1204-08-65	HWY: USH 18/151	COUNTY: DANE	CROSS SECTIONS: USH 18 WB	SHEET 801	E

FILE NAME : G:\WDOTSW\20007-000 USH 18\CIVIL 3D\SHEETSPLAN\CROSS SECTIONS\090202-XS_USH 18 WB.DWG
LAYOUT NAME - 18WB-6-4

PLOT DATE : 7/20/2022 4:31 PM

PLOT BY : KL ENGINEERING

PLOT NAME :

PLOT SCALE : 1 IN:10 FT HORZ. / 1 IN:4 FT VERT.

WISDOT/CADDS SHEET 49

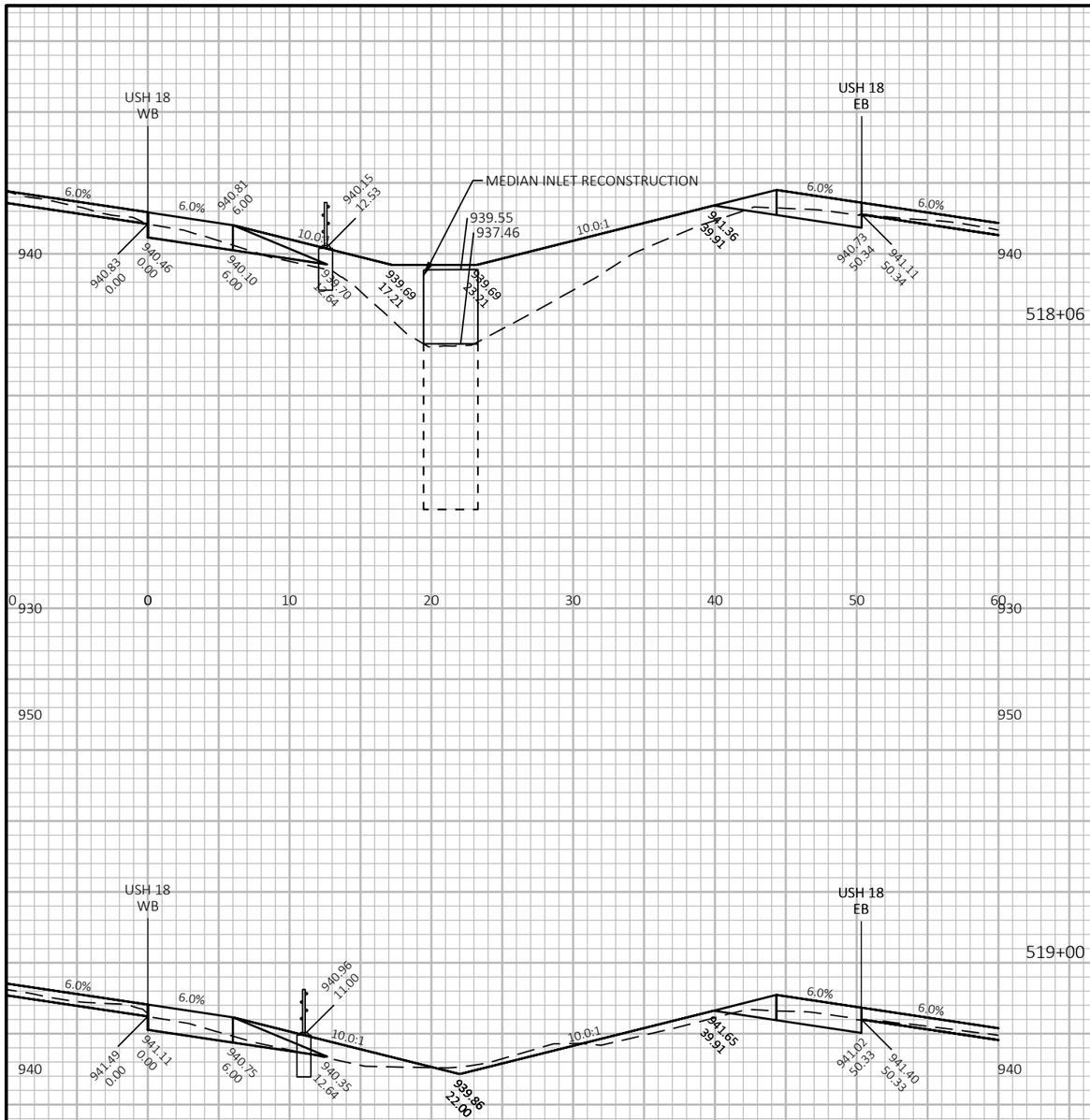

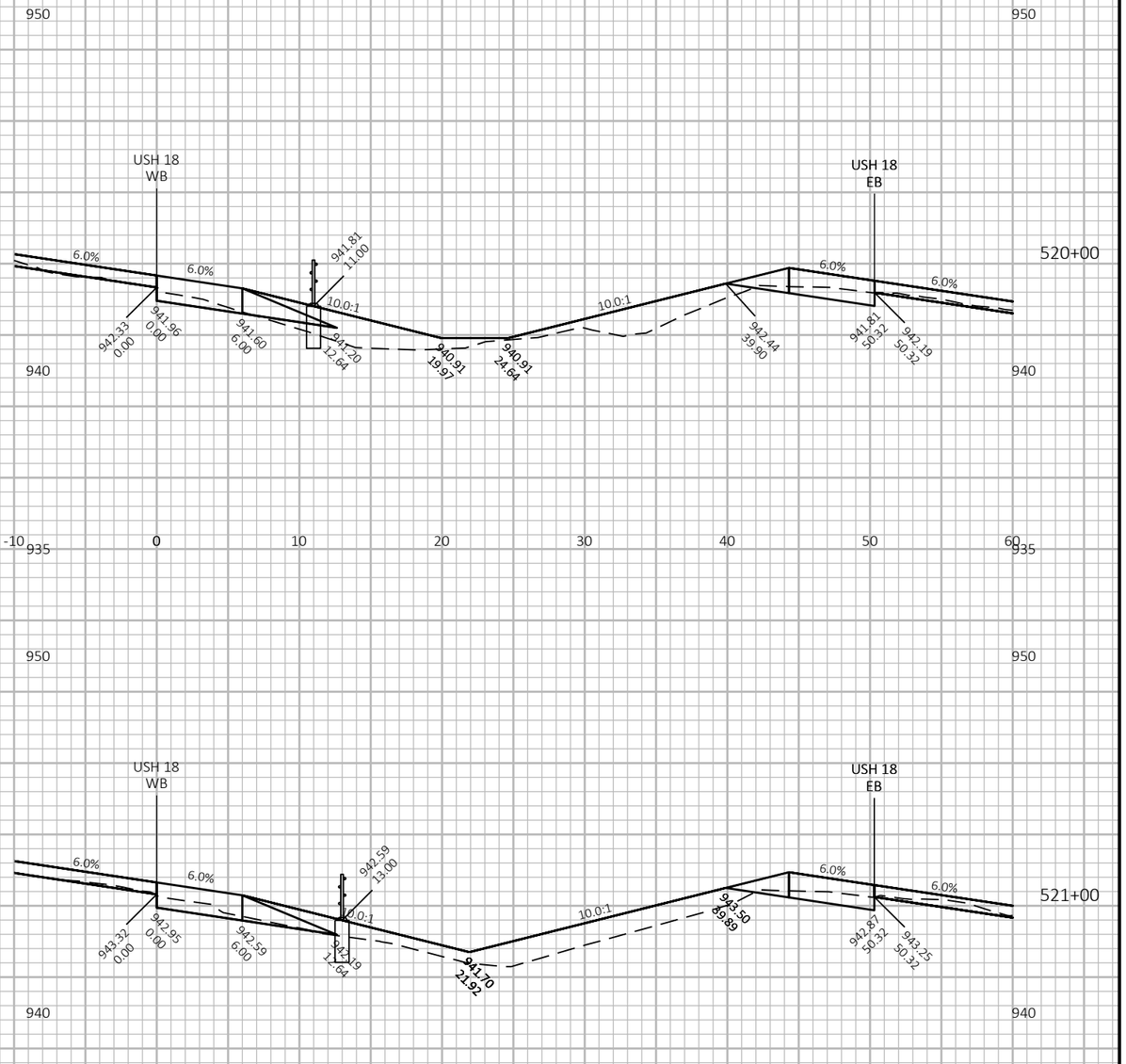

9

9

PROJECT NO: 1204-08-65	HWY: USH 18/151	COUNTY: DANE	CROSS SECTIONS: USH 18 WB	SHEET 802	E

FILE NAME : G:\WDOTSW\20007-000 USH 18\CIVIL 3D\SHEETSPLAN\CROSS SECTIONS\090202-XS_USH 18 WB.DWG
LAYOUT NAME - 18WB-6-5

PLOT DATE : 7/20/2022 4:58 PM PLOT BY : KL ENGINEERING PLOT NAME : PLOT SCALE : 1 IN:10 FT HORZ. / 1 IN:4 FT VERT.

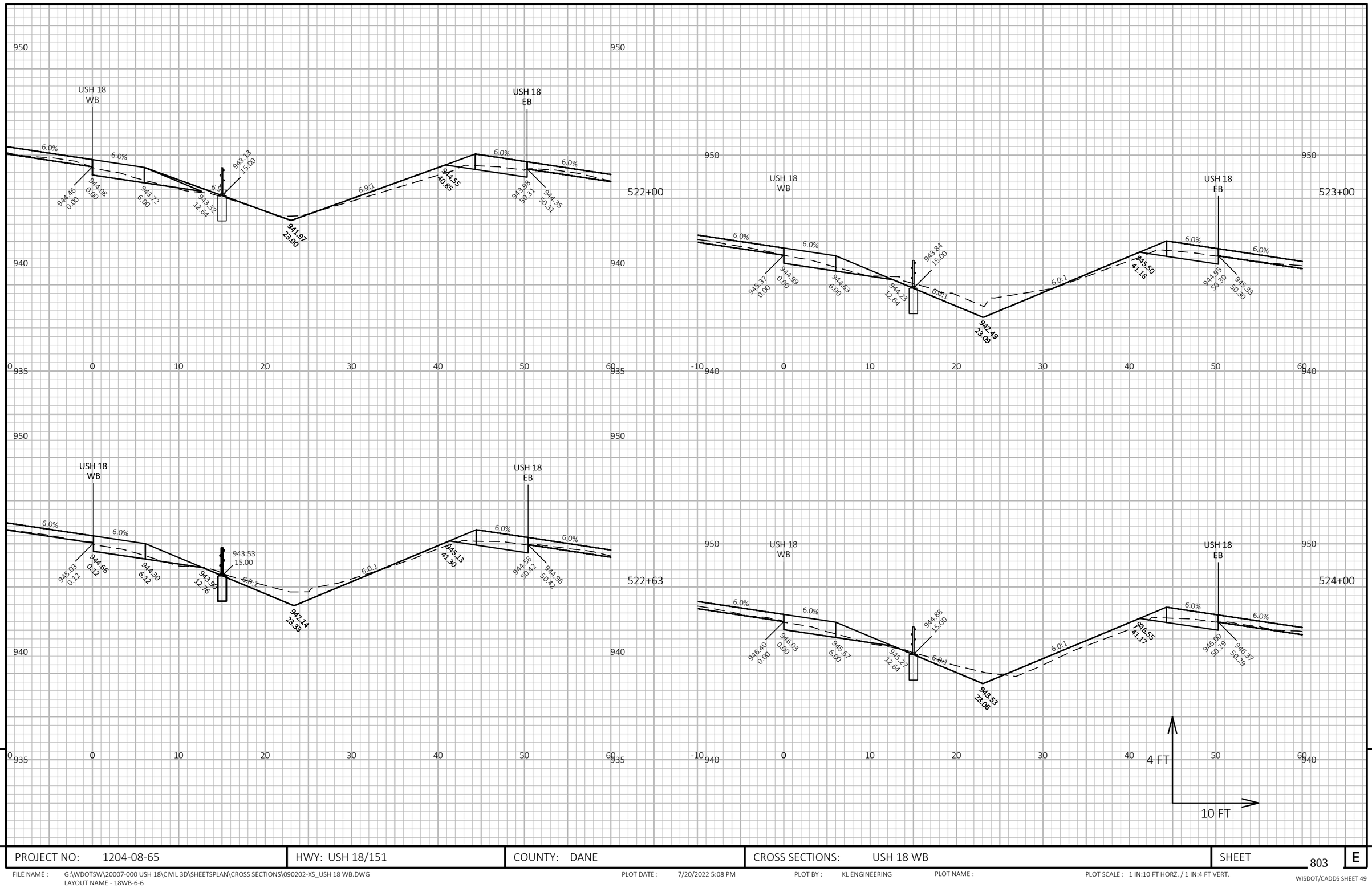

9

9

PROJECT NO: 1204-08-65	HWY: USH 18/151	COUNTY: DANE	CROSS SECTIONS: USH 18 WB	SHEET 803	E

FILE NAME : G:\WDOTSW\20007-000 USH 18\CIVIL 3D\SHEETSPLAN\CROSS SECTIONS\090202-XS_USH 18 WB.DWG
LAYOUT NAME - 18WB-6-6

PLOT DATE : 7/20/2022 5:08 PM PLOT BY : KL ENGINEERING PLOT NAME : PLOT SCALE : 1 IN:10 FT HORZ. / 1 IN:4 FT VERT.

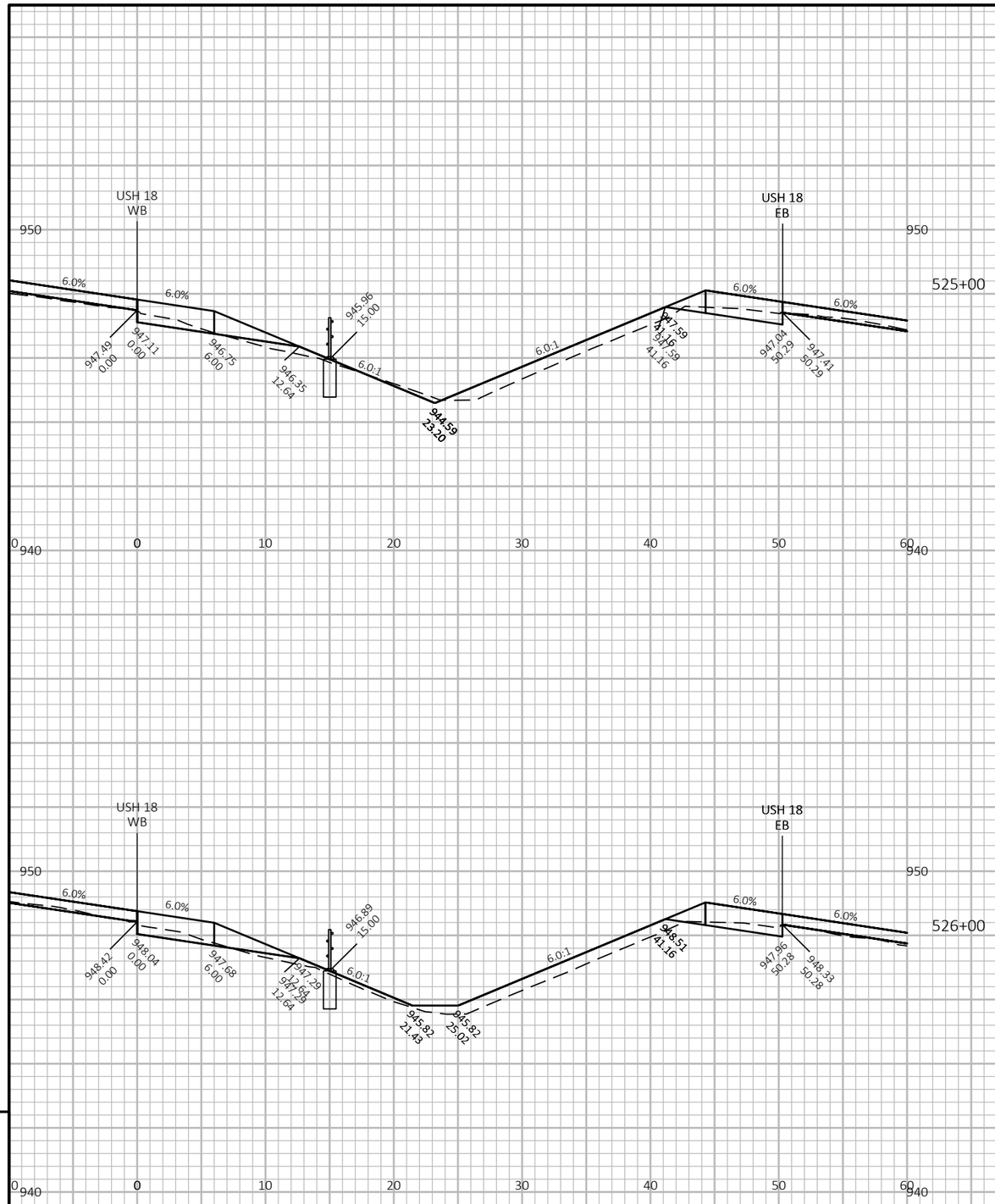

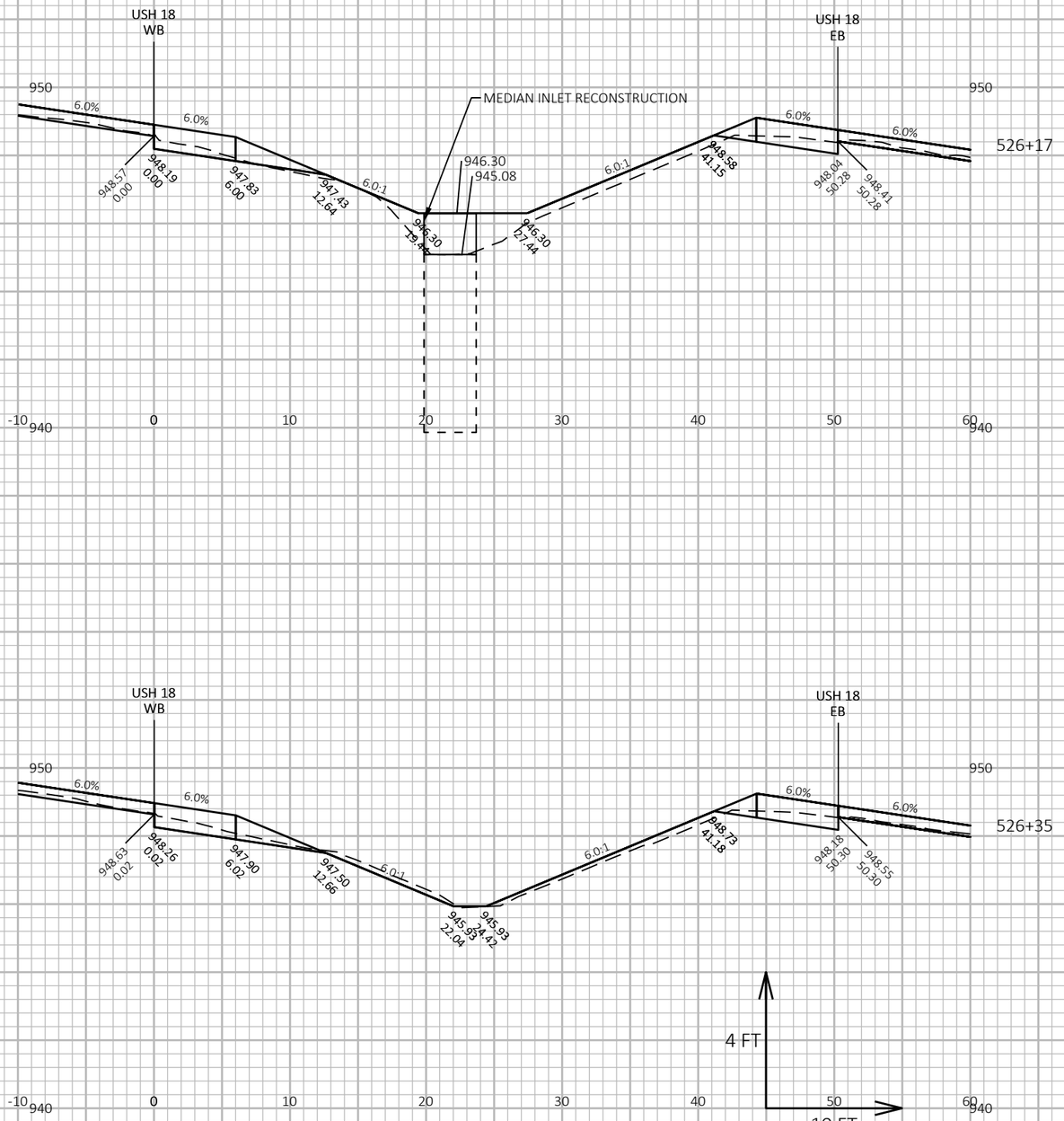

PROJECT NO: 1204-08-65	HWY: USH 18/151	COUNTY: DANE	CROSS SECTIONS: USH 18 WB	SHEET 804 E

FILE NAME : G:\WDOTSW\20007-000 USH 18\CIVIL 3D\SHEETSPLAN\CROSS SECTIONS\090202-XS_USH 18 WB.DWG
LAYOUT NAME - 18WB-6-7

PLOT DATE : 7/18/2022 7:46 PM PLOT BY : KL ENGINEERING PLOT NAME : PLOT SCALE : 1 IN:10 FT HORZ. / 1 IN:4 FT VERT.

WISDOT/CADDS SHEET 49

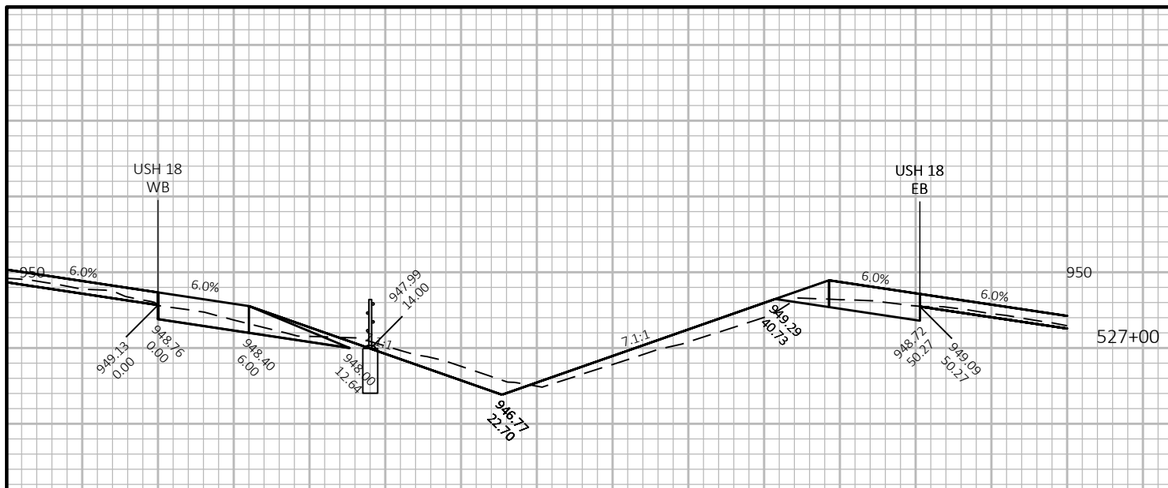

527+00

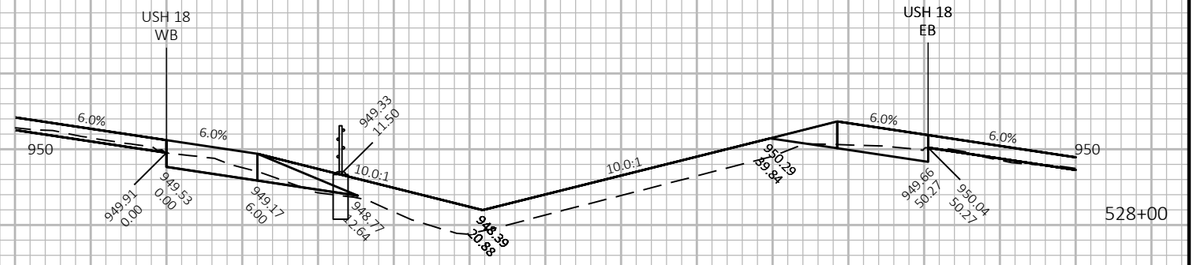

528+00

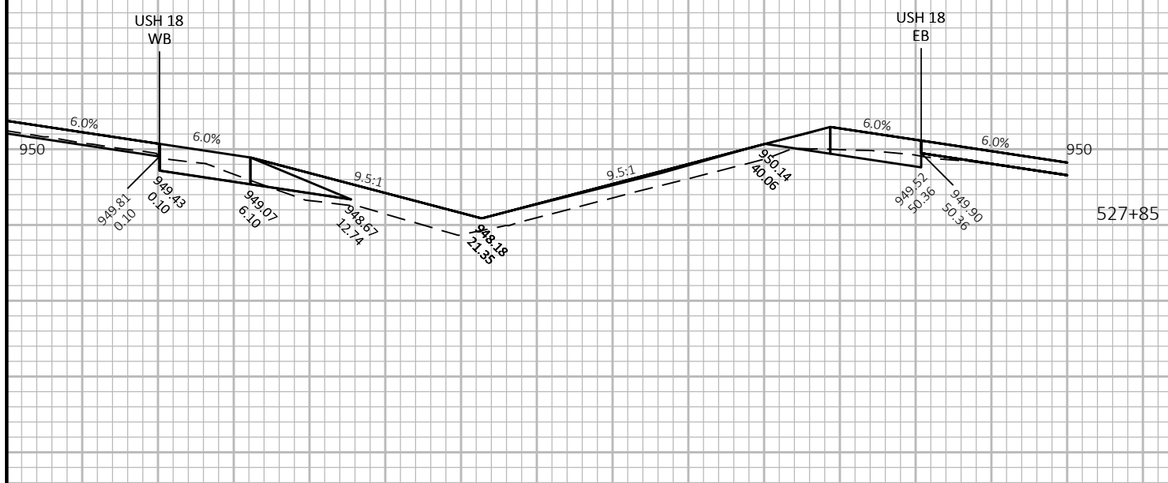

527+85

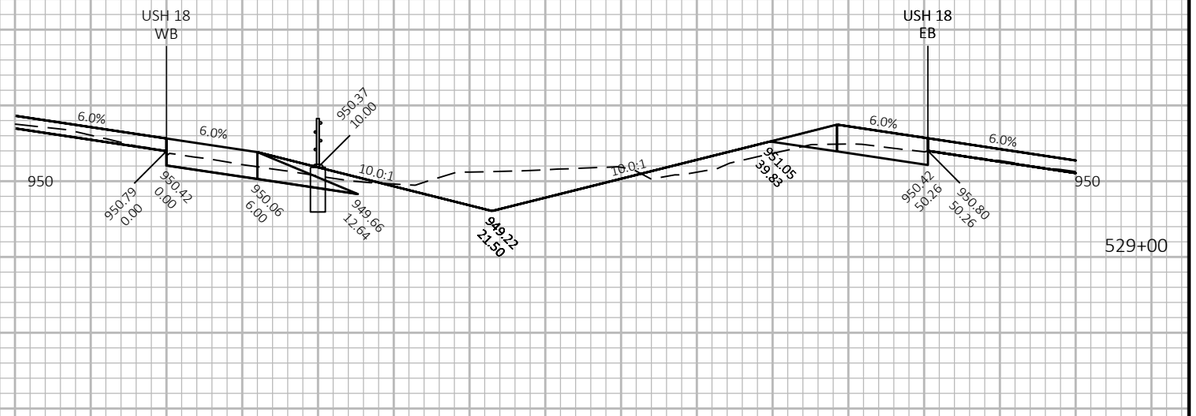

529+00

9

9

PROJECT NO: 1204-08-65	HWY: USH 18/151	COUNTY: DANE	CROSS SECTIONS: USH 18 WB	SHEET 805	E

FILE NAME : G:\WDOTSW\20007-000 USH 18\CIVIL 3D\SHEETSPLAN\CROSS SECTIONS\090202-XS_USH 18 WB.DWG
LAYOUT NAME - 18WB-6-8

PLOT DATE : 7/18/2022 7:47 PM PLOT BY : KL ENGINEERING PLOT NAME : PLOT SCALE : 1 IN:10 FT HORZ. / 1 IN:4 FT VERT.

WISDOT/CADDS SHEET 49

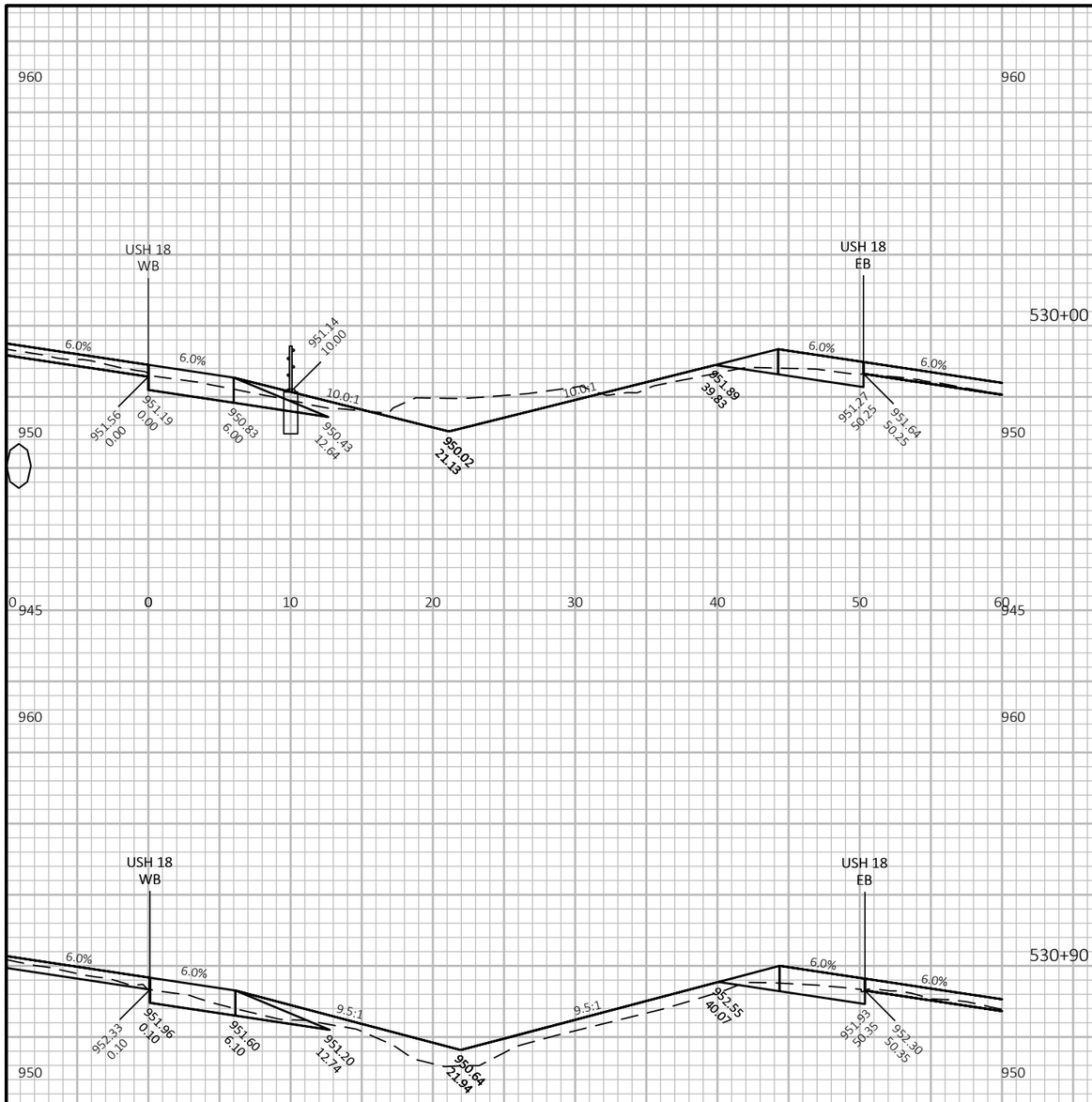

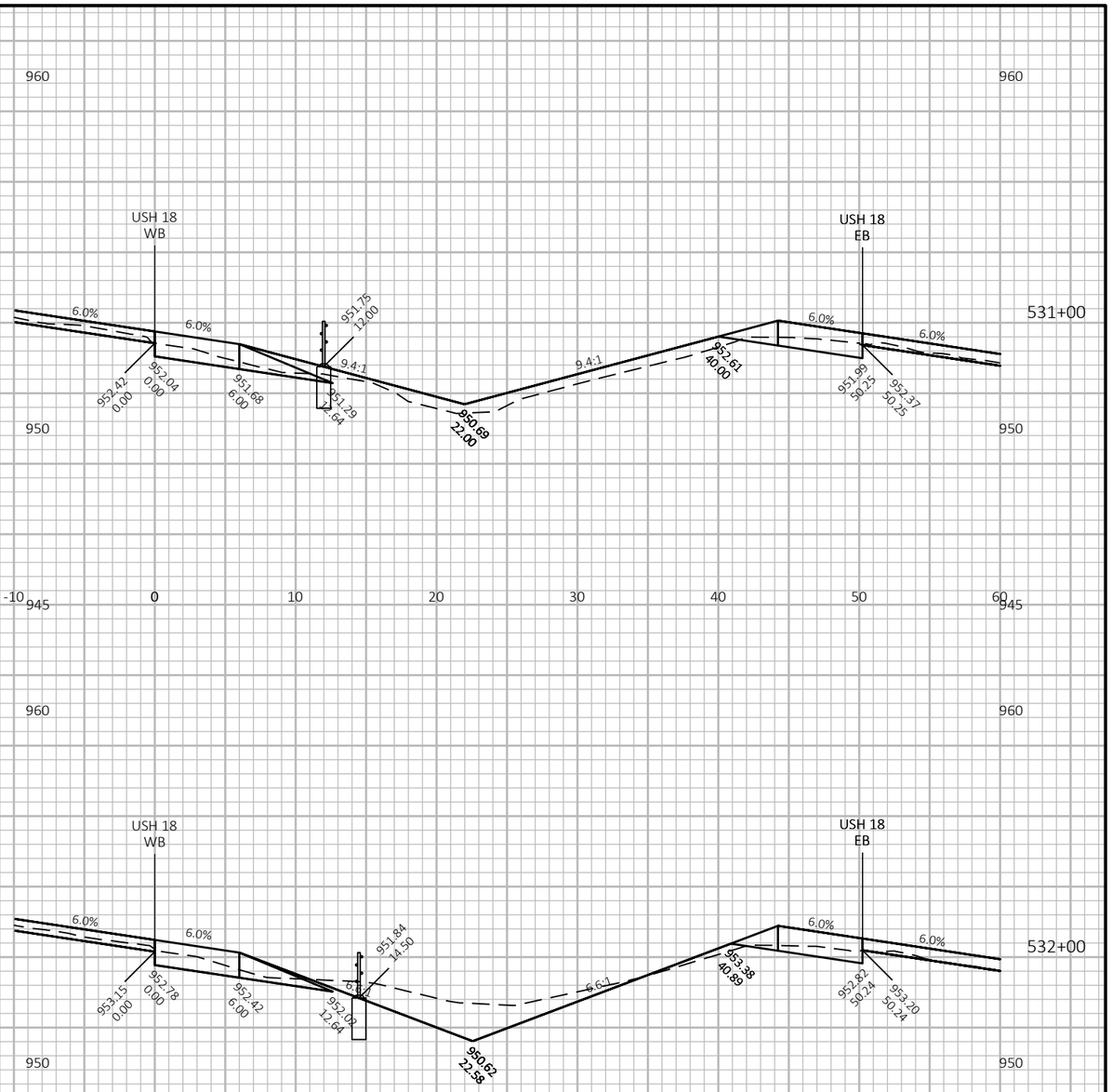

9

9

PROJECT NO: 1204-08-65	HWY: USH 18/151	COUNTY: DANE	CROSS SECTIONS: USH 18 WB	SHEET 806	E

FILE NAME : G:\WDOTSW\20007-000 USH 18\CIVIL 3D\SHEETSPLAN\CROSS SECTIONS\090202-XS_USH 18 WB.DWG
LAYOUT NAME - 18WB-6-9

PLOT DATE : 7/18/2022 7:49 PM PLOT BY : KL ENGINEERING PLOT NAME : PLOT SCALE : 1 IN:10 FT HORZ. / 1 IN:4 FT VERT.

WISDOT/CADDS SHEET 49

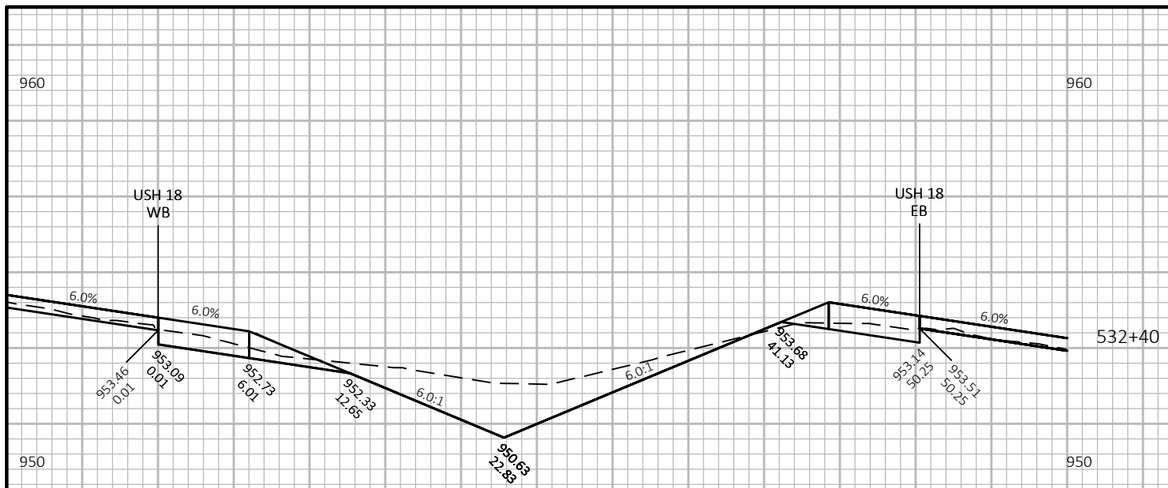

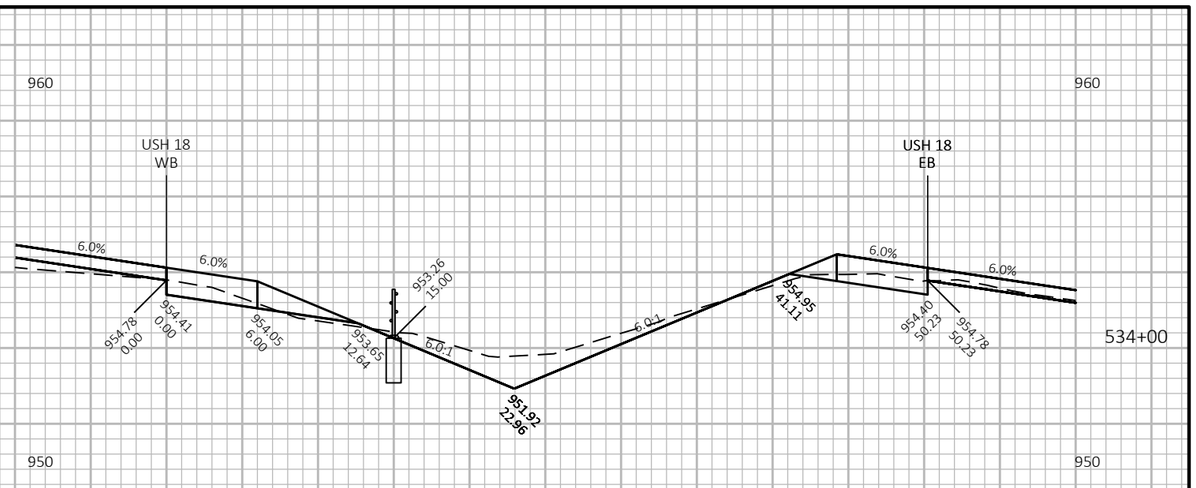

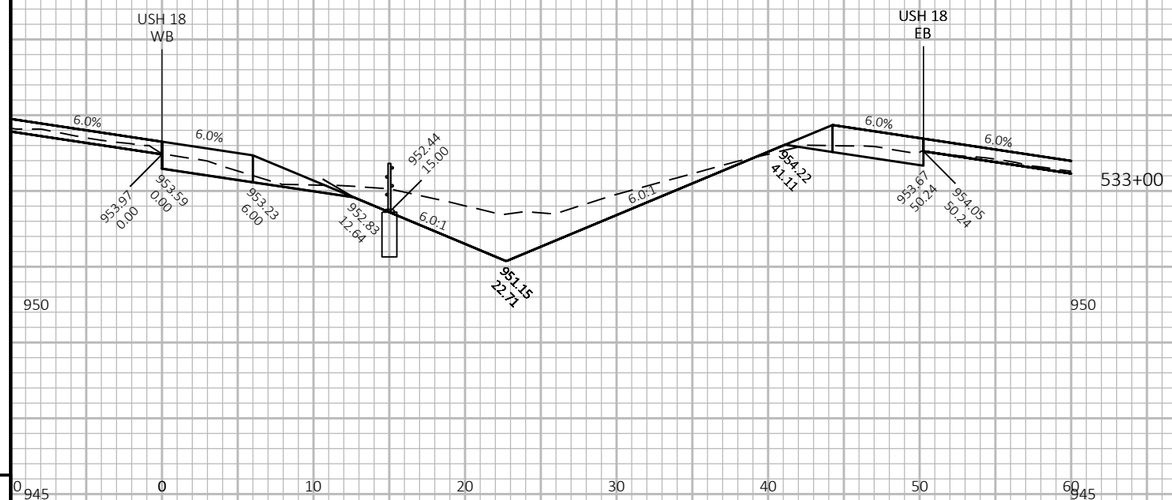

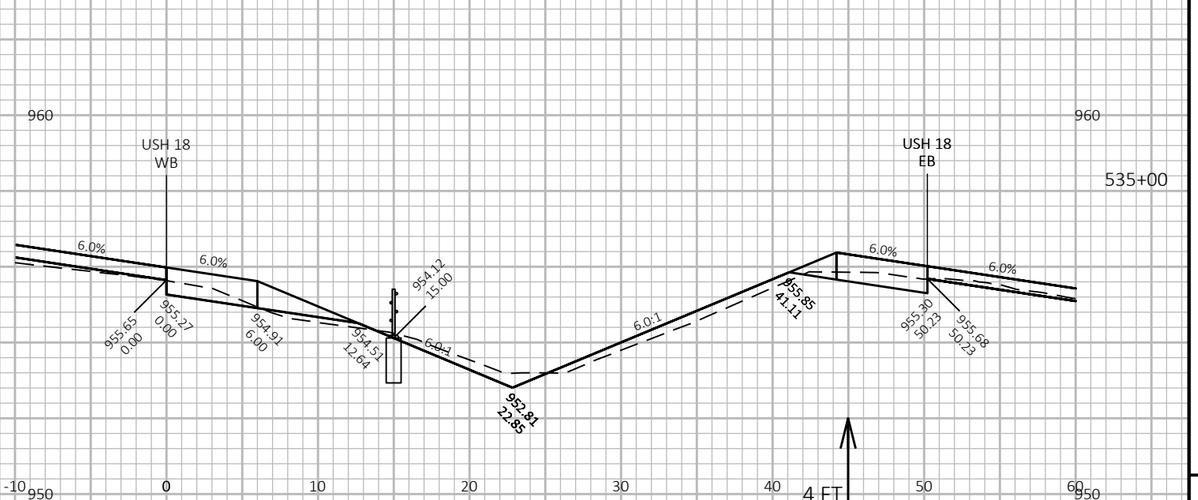

9

9

PROJECT NO: 1204-08-65	HWY: USH 18/151	COUNTY: DANE	CROSS SECTIONS: USH 18 WB	SHEET 807	E

FILE NAME : G:\WDOTSW\20007-000 USH 18\CIVIL 3D\SHEETSPLAN\CROSS SECTIONS\090202-XS_USH 18 WB.DWG
LAYOUT NAME - 18WB-6-10

PLOT DATE : 7/18/2022 7:51 PM PLOT BY : KL ENGINEERING PLOT NAME : PLOT SCALE : 1 IN:10 FT HORZ. / 1 IN:4 FT VERT.

WISDOT/CADDS SHEET 49

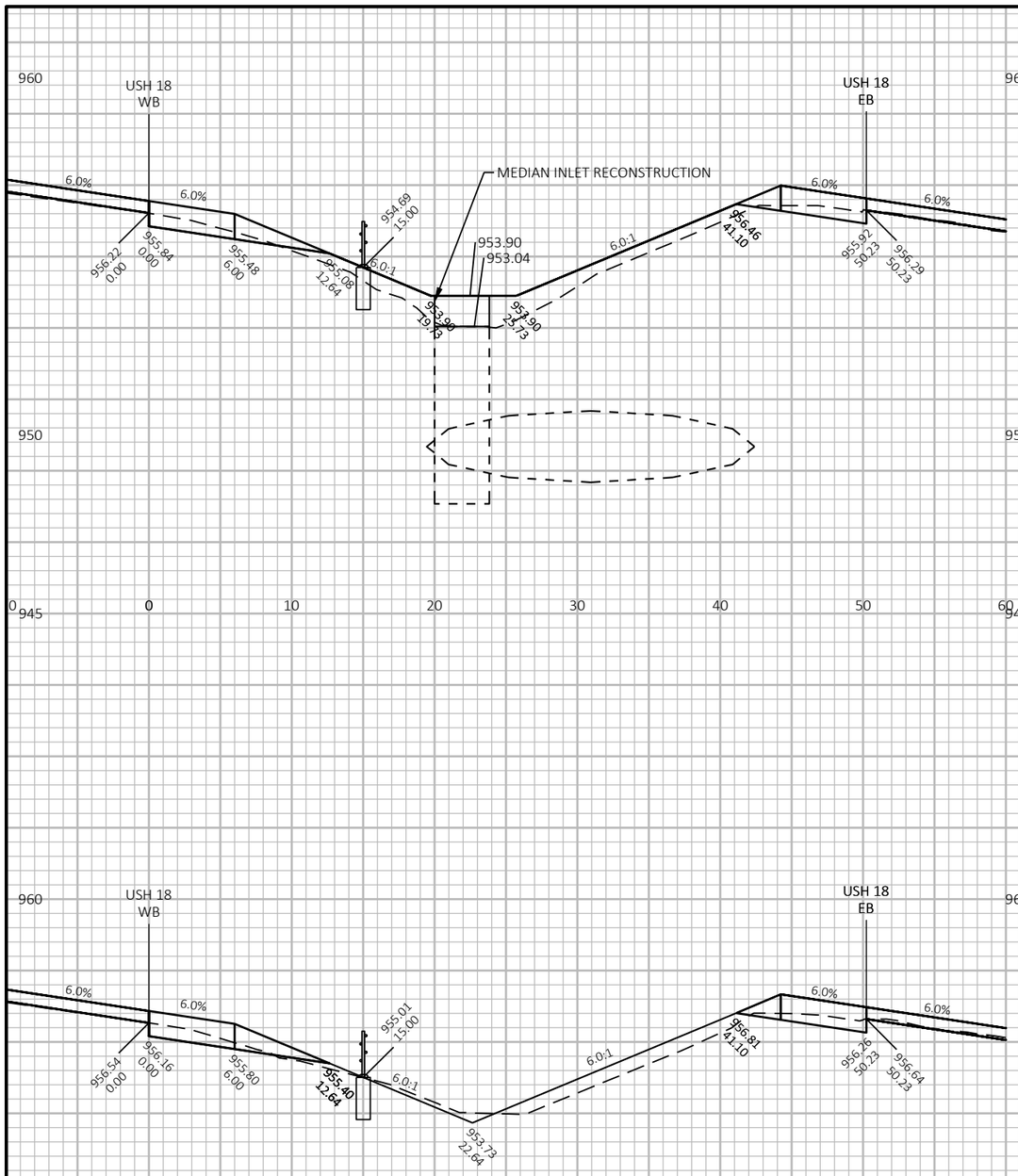

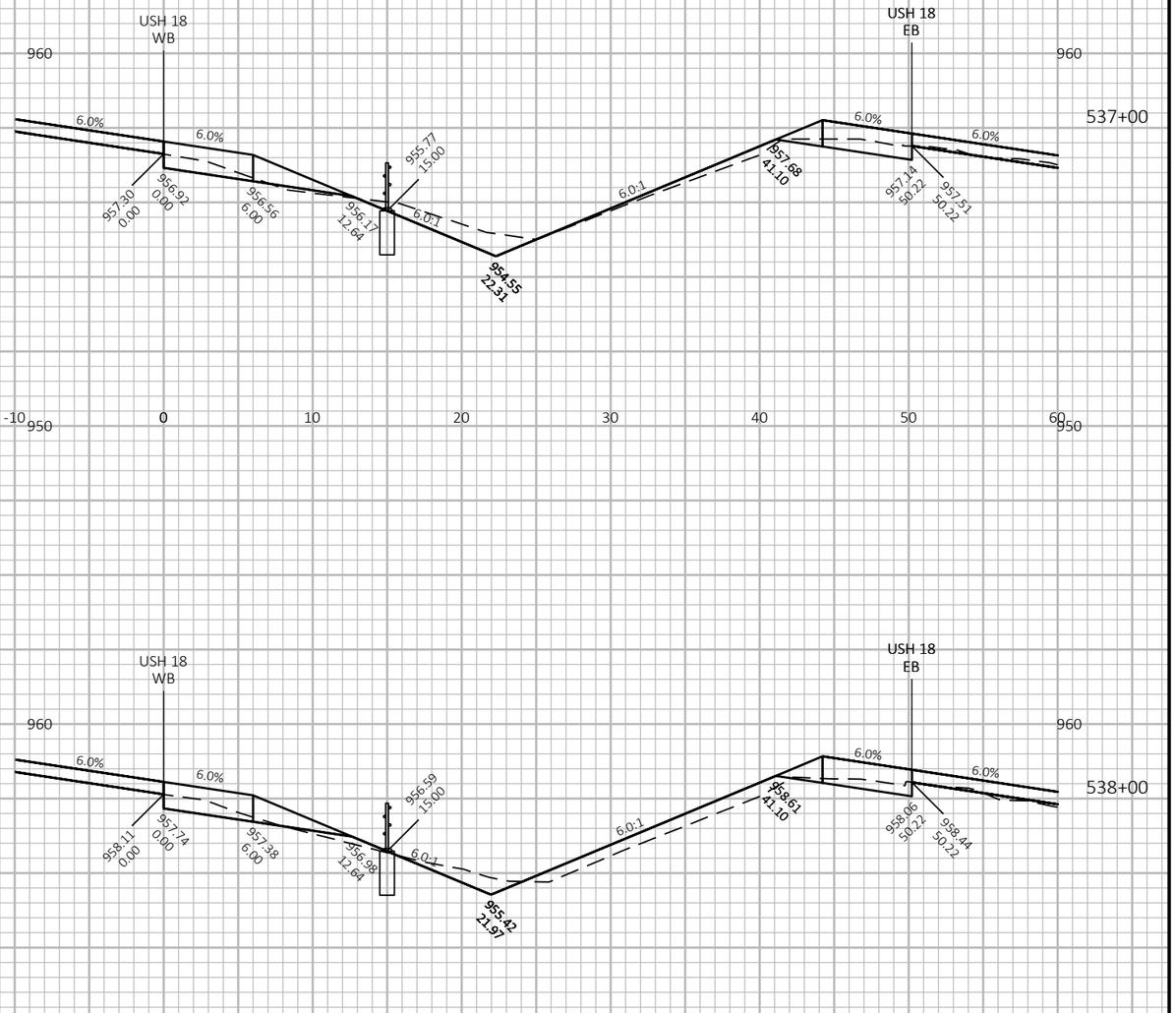

9

9

PROJECT NO: 1204-08-65	HWY: USH 18/151	COUNTY: DANE	CROSS SECTIONS: USH 18 WB	SHEET 808	E

FILE NAME : G:\WDOTSW\20007-000 USH 18\CIVIL 3D\SHEETSPLAN\CROSS SECTIONS\090202-XS_USH 18 WB.DWG
LAYOUT NAME - 18WB-6-11

PLOT DATE : 7/18/2022 7:52 PM PLOT BY : KL ENGINEERING PLOT NAME : PLOT SCALE : 1 IN:10 FT HORZ. / 1 IN:4 FT VERT.

WISDOT/CADDS SHEET 49

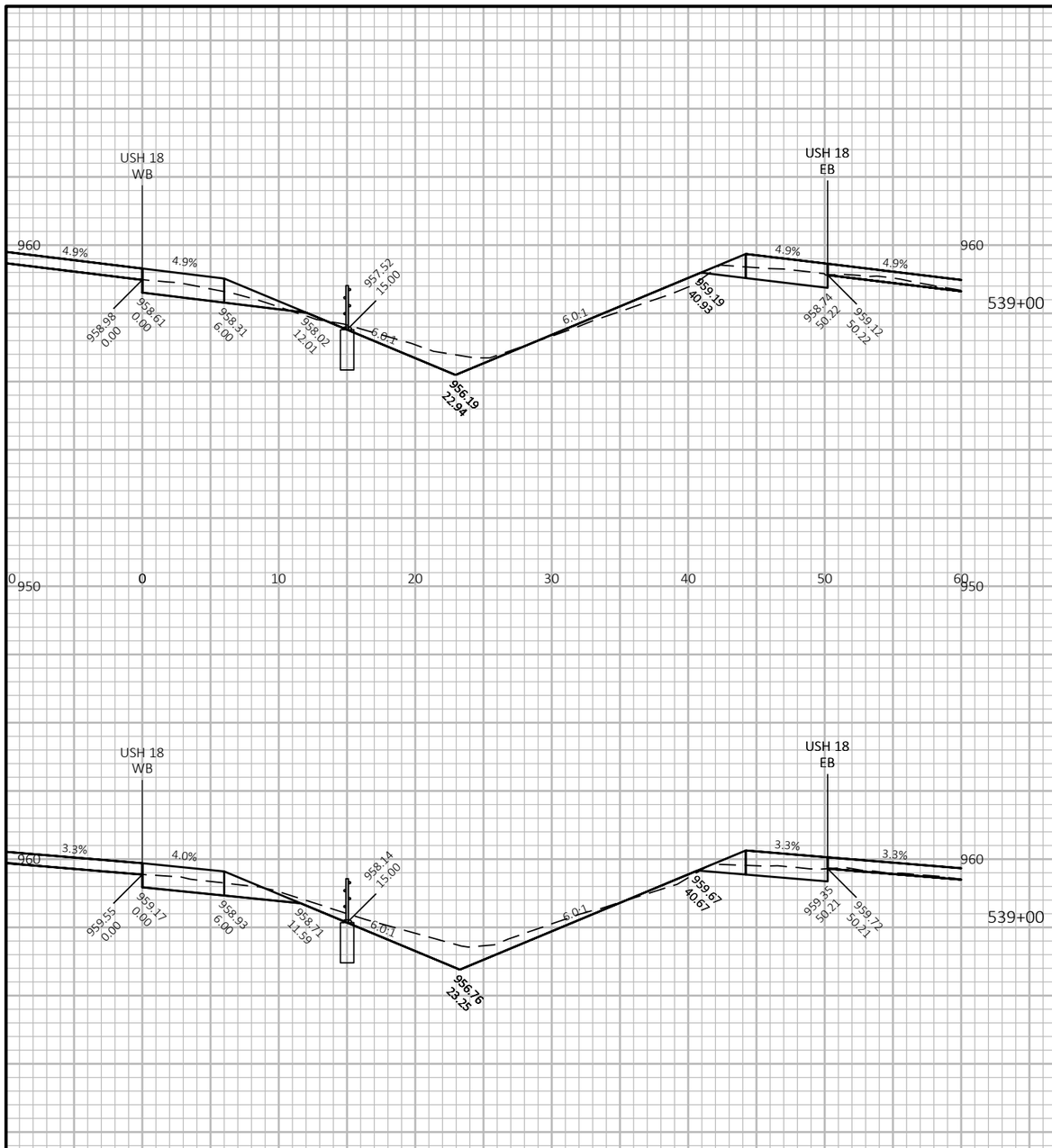

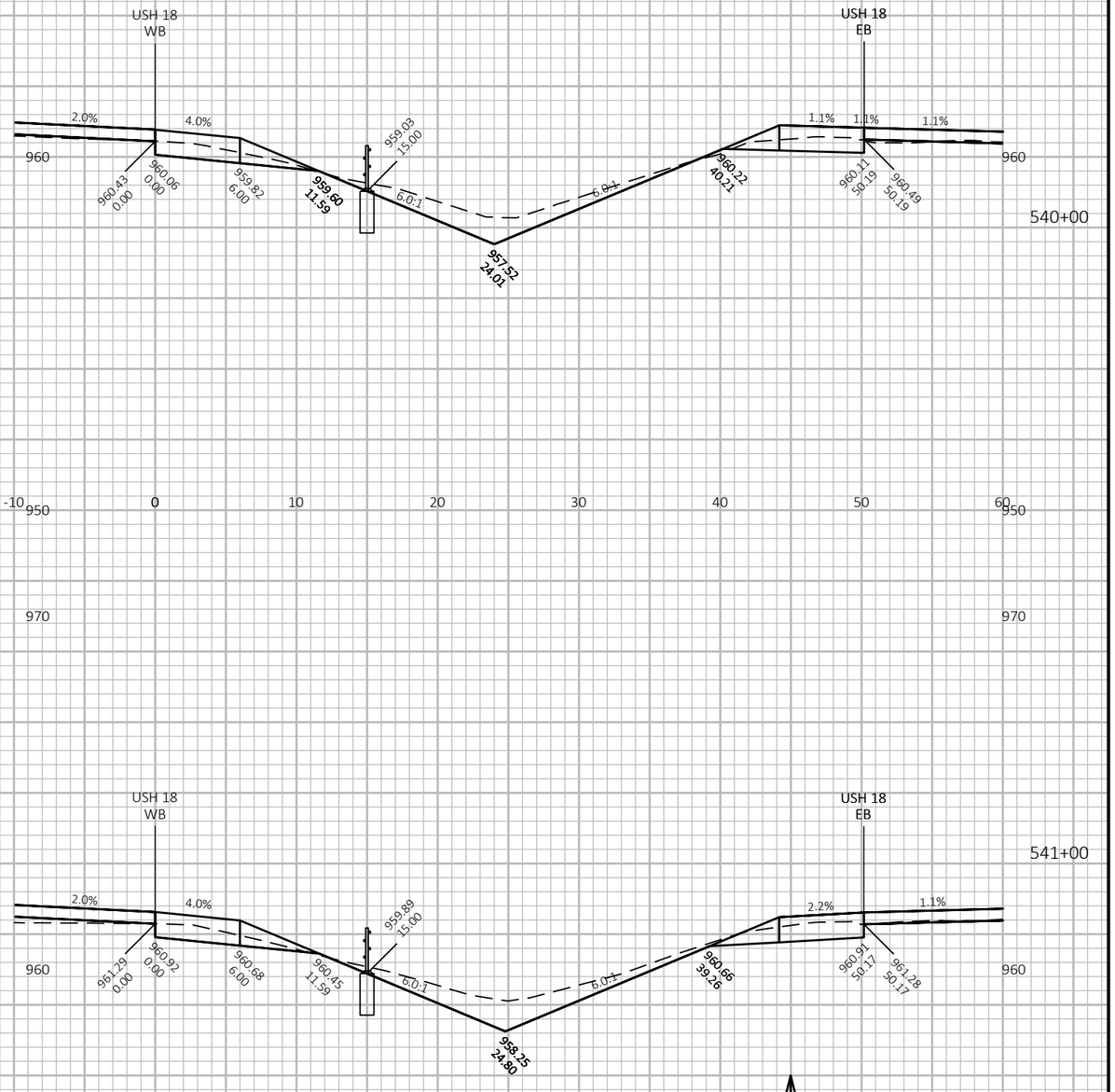

9

9

PROJECT NO: 1204-08-65	HWY: USH 18/151	COUNTY: DANE	CROSS SECTIONS: USH 18 WB	SHEET 809	E

FILE NAME : G:\WDOTSW\20007-000 USH 18\CIVIL 3D\SHEETSPLAN\CROSS SECTIONS\090202-XS_USH 18 WB.DWG
LAYOUT NAME - 18WB-6-12

PLOT DATE : 7/18/2022 7:54 PM PLOT BY : KL ENGINEERING PLOT NAME : PLOT SCALE : 1 IN:10 FT HORZ. / 1 IN:4 FT VERT.

WISDOT/CADDS SHEET 49

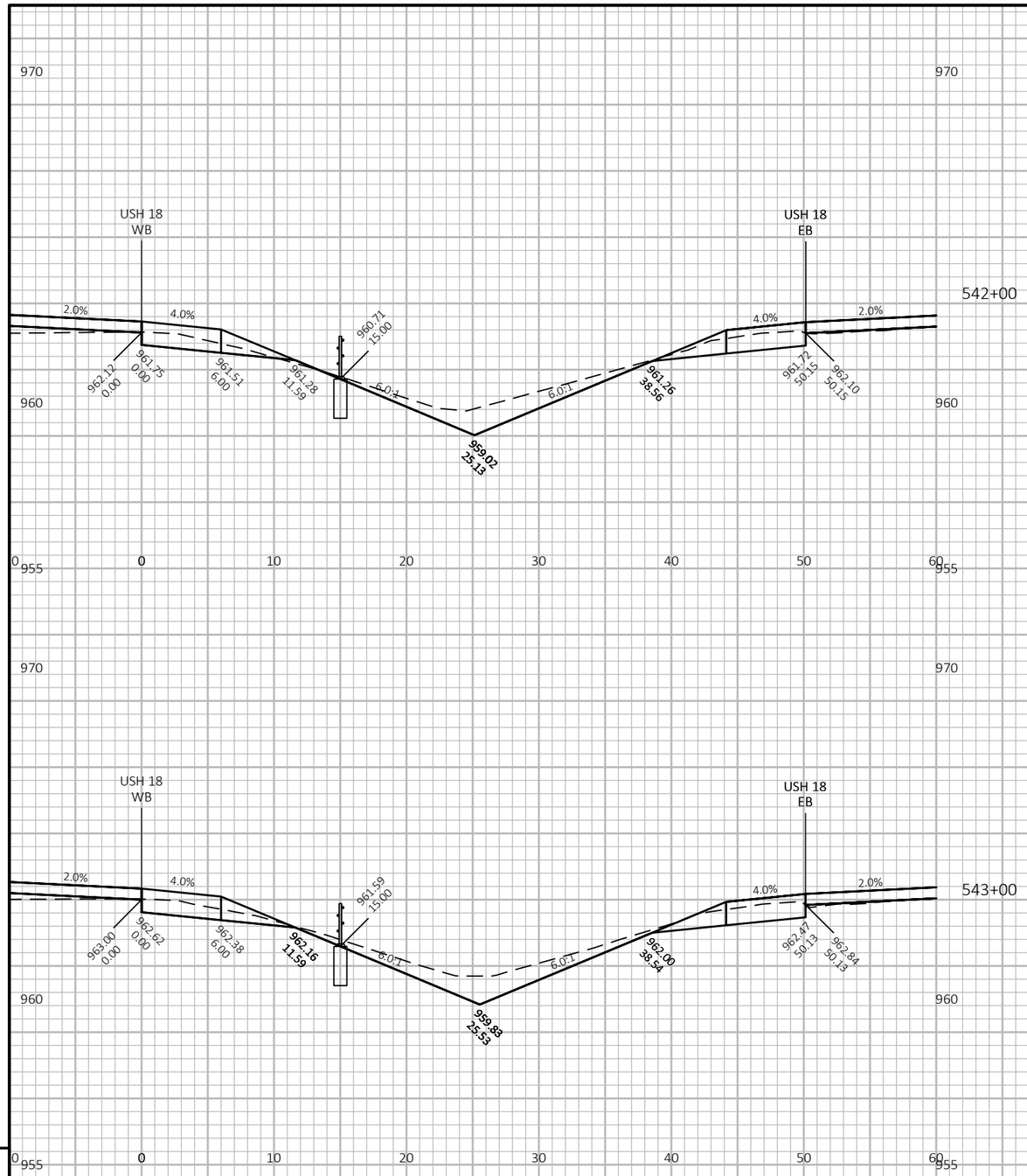

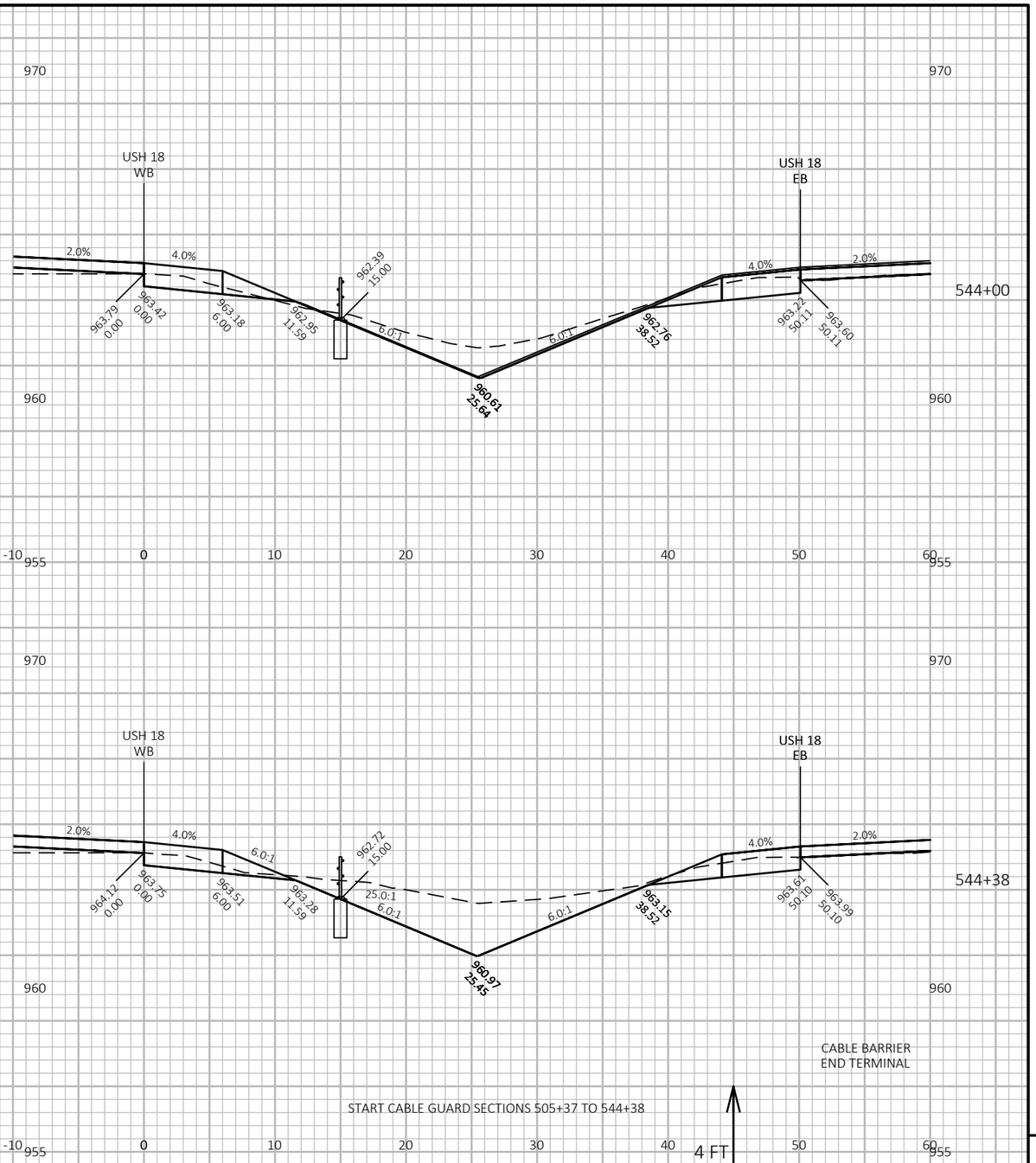

PROJECT NO: 1204-08-65	HWY: USH 18/151	COUNTY: DANE	CROSS SECTIONS: USH 18 WB	SHEET 810	E

FILE NAME : G:\WDOTSW\20007-000 USH 18\CIVIL 3D\SHEETSPLAN\CROSS SECTIONS\090202-XS_USH 18 WB.DWG
LAYOUT NAME - 18WB-6-13

PLOT DATE : 7/21/2022 9:12 AM PLOT BY : KL ENGINEERING PLOT NAME : PLOT SCALE : 1 IN:10 FT HORZ. / 1 IN:4 FT VERT.

WISDOT/CADDS SHEET 49

START BEAM GUARD SECTIONS 586+85.12 TO 589+90.33

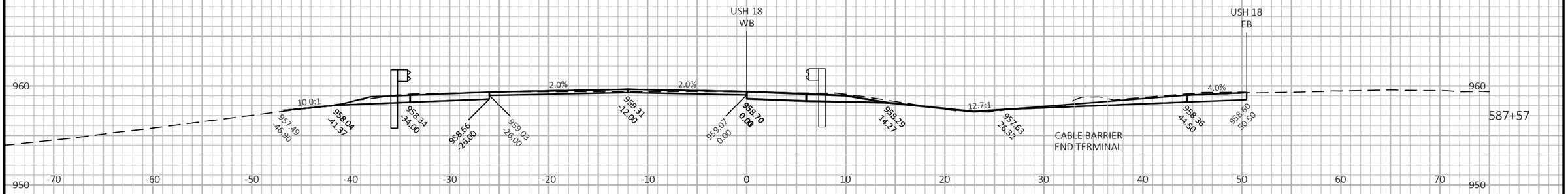

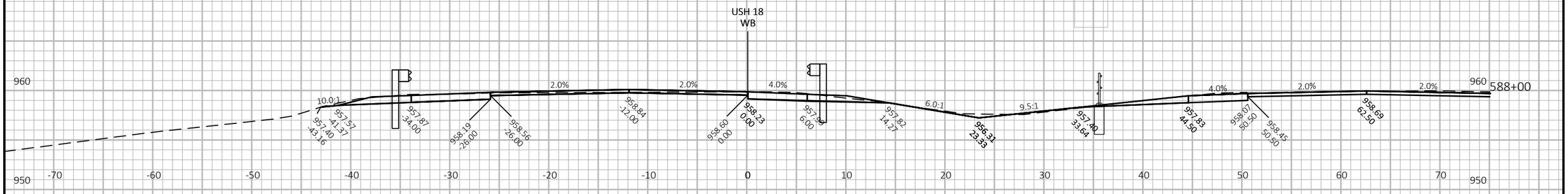

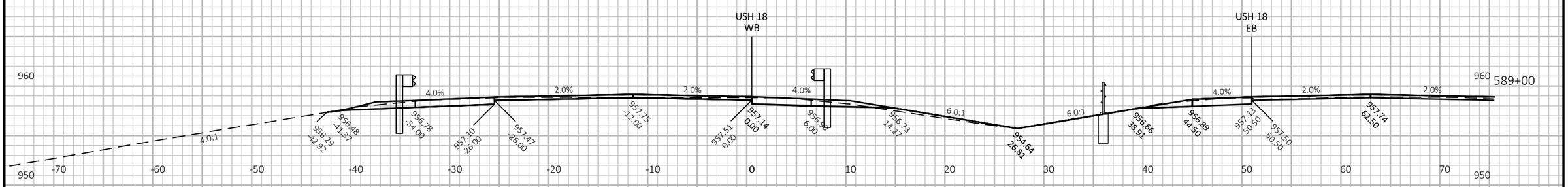

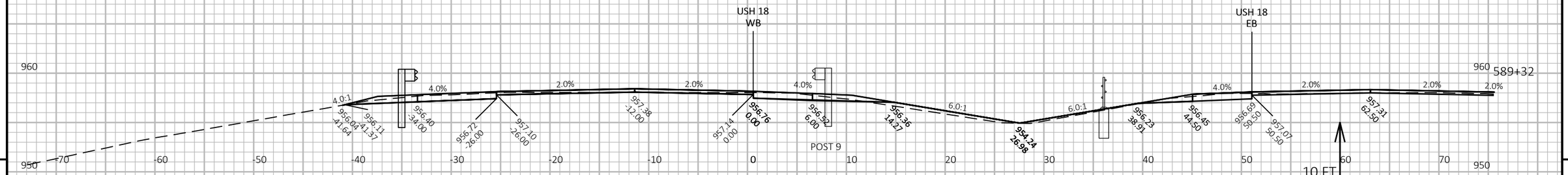

9

9

PROJECT NO: 1204-08-65	HWY: USH 18/151	COUNTY: DANE	CROSS SECTIONS: USH 18 WB	SHEET 811	E

FILE NAME : G:\WDOTSW\20007-000 USH 18\CIVIL 3D\SHEETSPLAN\CROSS SECTIONS\090203-XS_USH 18 WB.DWG
LAYOUT NAME - 18WB-7-1

PLOT DATE : 7/20/2022 1:09 PM

PLOT BY : KL ENGINEERING

PLOT NAME :

PLOT SCALE : 1 IN:10 FT HORZ. / 1 IN:10 FT VERT.

WISDOT/CADDS SHEET 49

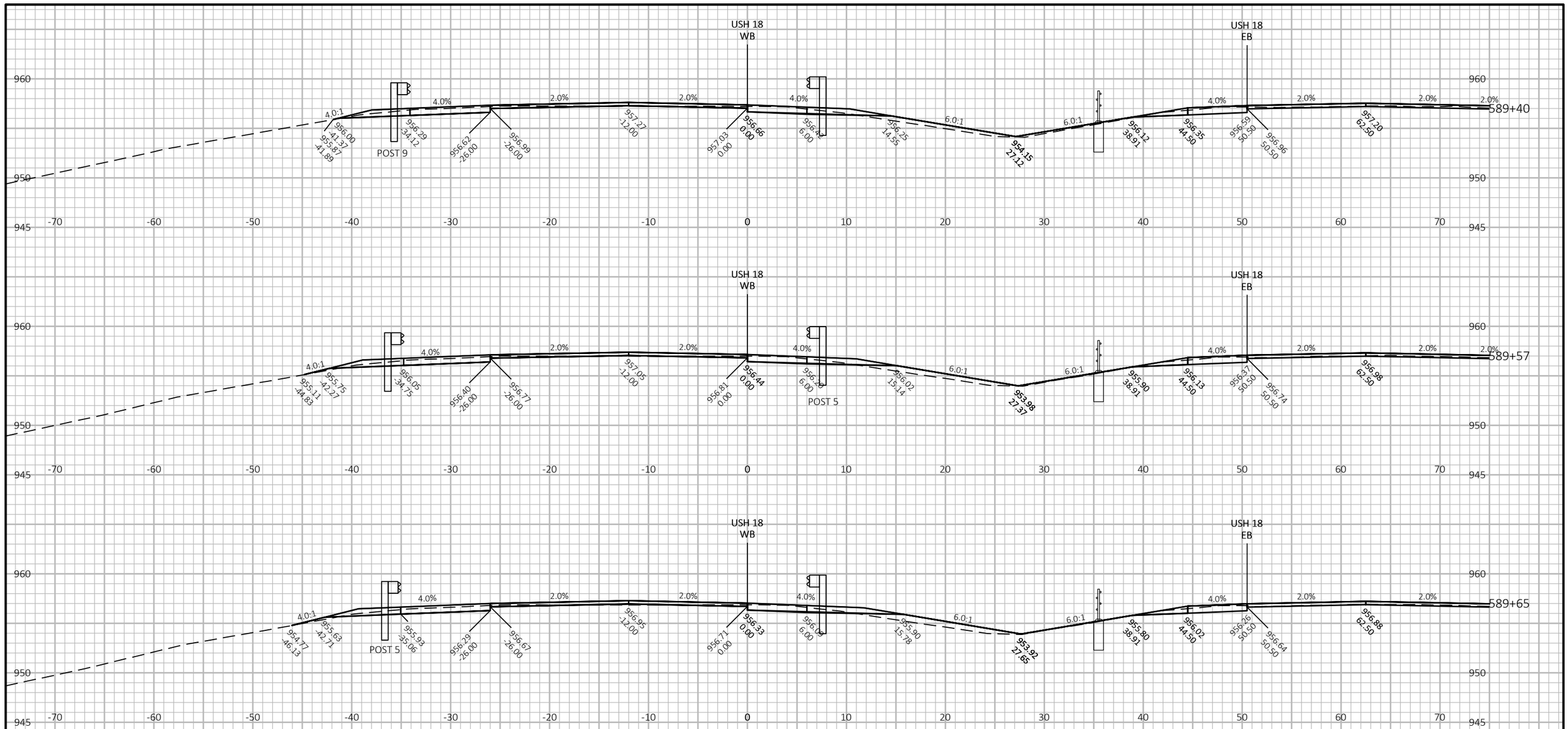

9

9

PROJECT NO: 1204-08-65	HWY: USH 18/151	COUNTY: DANE	CROSS SECTIONS: USH 18 WB	SHEET 812	E

FILE NAME : G:\WDOTSW\20007-000 USH 18\CIVIL 3D\SHEETSPLAN\CROSS SECTIONS\090203-XS_USH 18 WB.DWG
LAYOUT NAME - 18WB-7-2

PLOT DATE : 7/20/2022 1:12 PM PLOT BY : KL ENGINEERING PLOT NAME : **PLOT SCALE :** 1 IN:10 FT HORZ. / 1 IN:10 FT VERT.

WISDOT/CADDS SHEET 49

END BEAM GUARD SECTIONS 586+85.12 TO 589+90.33

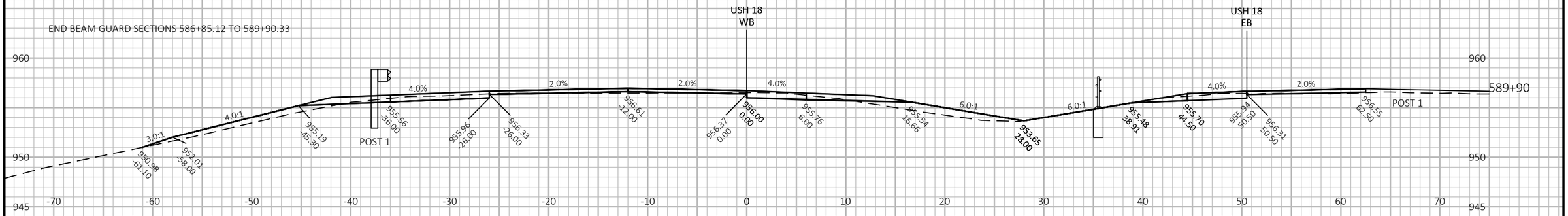

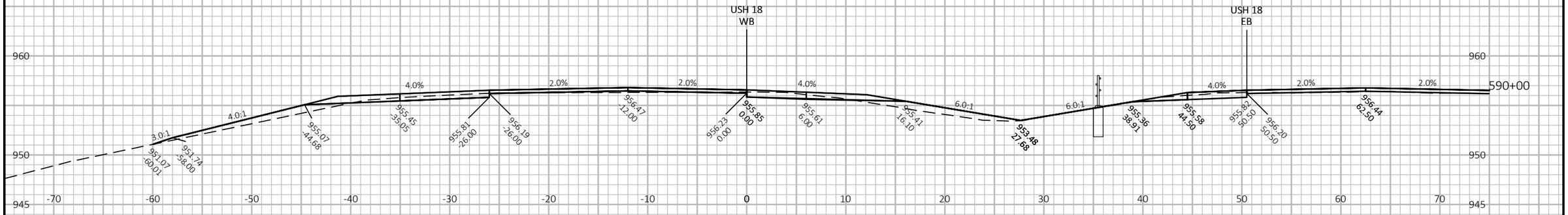

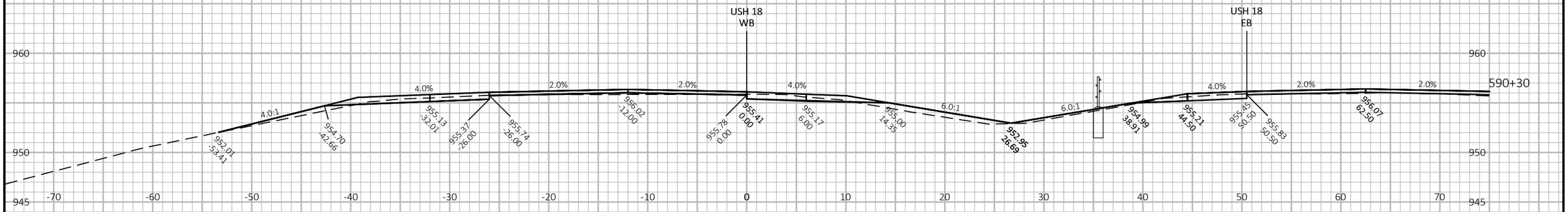

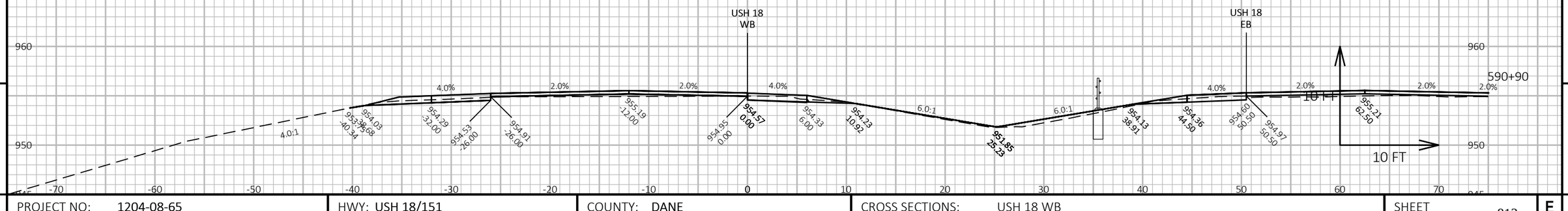

PROJECT NO: 1204-08-65	HWY: USH 18/151	COUNTY: DANE	CROSS SECTIONS: USH 18 WB	SHEET 813	E

FILE NAME : G:\WDOTSW\20007-000 USH 18\CIVIL 3D\SHEETSPLAN\CROSS SECTIONS\090203-XS_USH 18 WB.DWG
LAYOUT NAME - 18WB-7-3

PLOT DATE : 7/20/2022 1:15 PM PLOT BY : KL ENGINEERING PLOT NAME : PLOT SCALE : 1 IN:10 FT HORZ. / 1 IN:10 FT VERT.

WISDOT/CADDS SHEET 49

START BEAM GUARD SECTIONS 674+00 TO 675+60

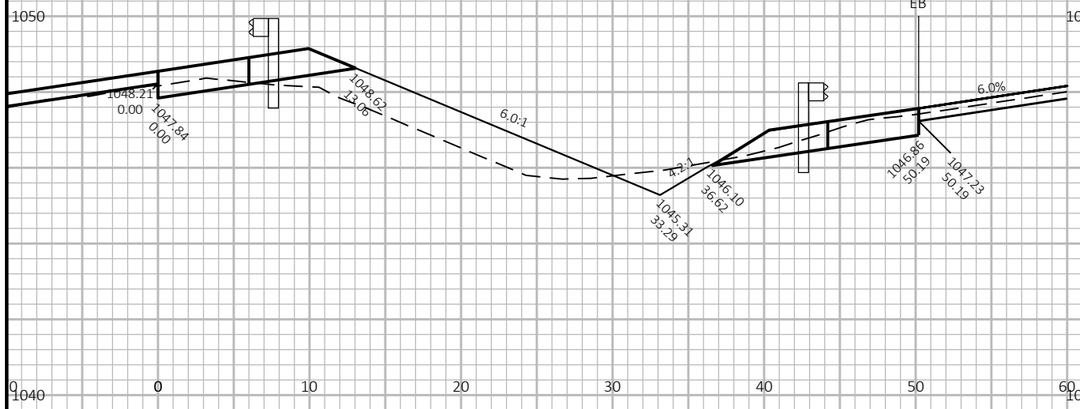

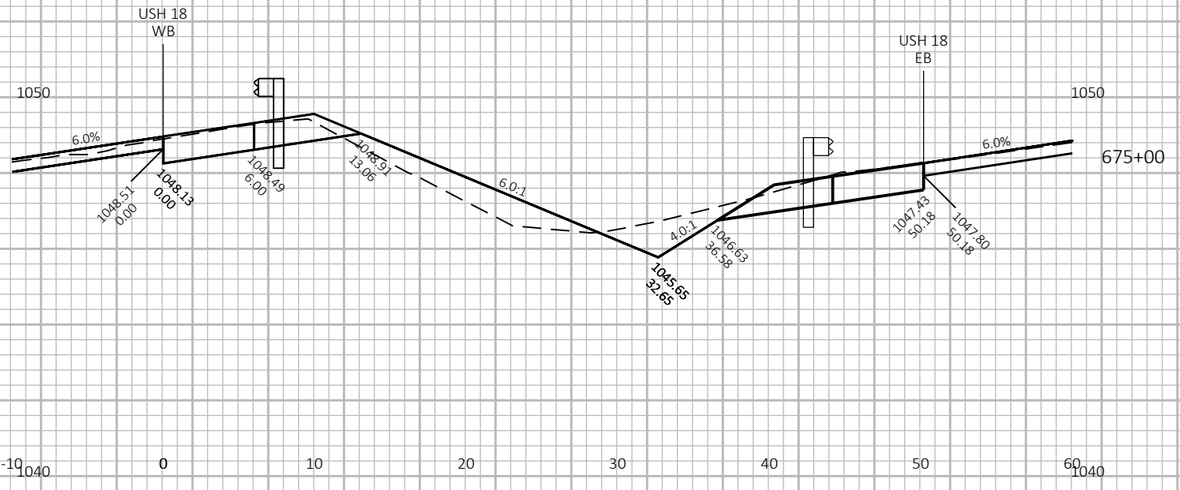

END BEAM GUARD SECTIONS 674+00 TO 675+60

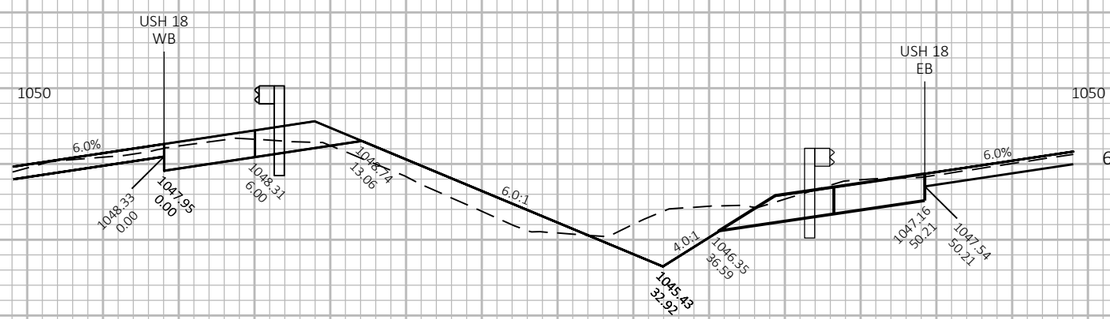

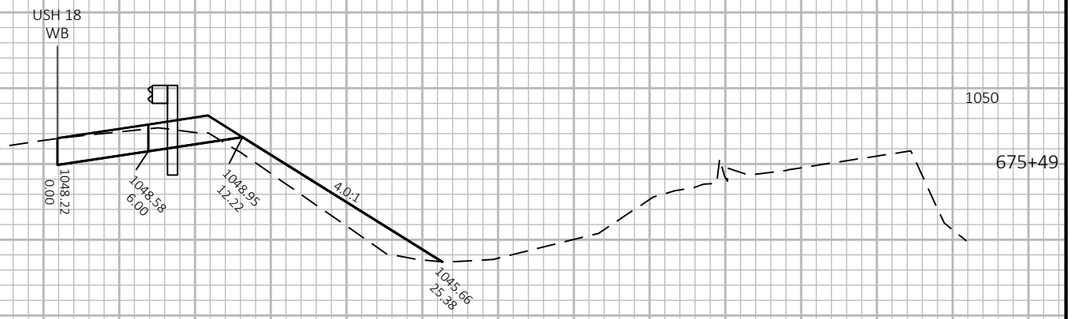

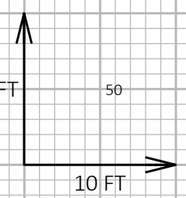

9

9

PROJECT NO: 1204-08-65	HWY: USH 18/151	COUNTY: DANE	CROSS SECTIONS: USH 18 WB	SHEET 814	E

FILE NAME : G:\WDOTSW\20007-000 USH 18\CIVIL 3D\SHEETSPLAN\CROSS SECTIONS\090203-XS_USH 18 WB.DWG
LAYOUT NAME - 18WB-8-1

PLOT DATE : 7/18/2022 3:06 PM PLOT BY : KL ENGINEERING PLOT NAME : PLOT SCALE : 1 IN:10 FT HORZ. / 1 IN:4 FT VERT.

WISDOT/CADDS SHEET 49

START BEAM GUARD SECTIONS 683+58.40 TO 689+90

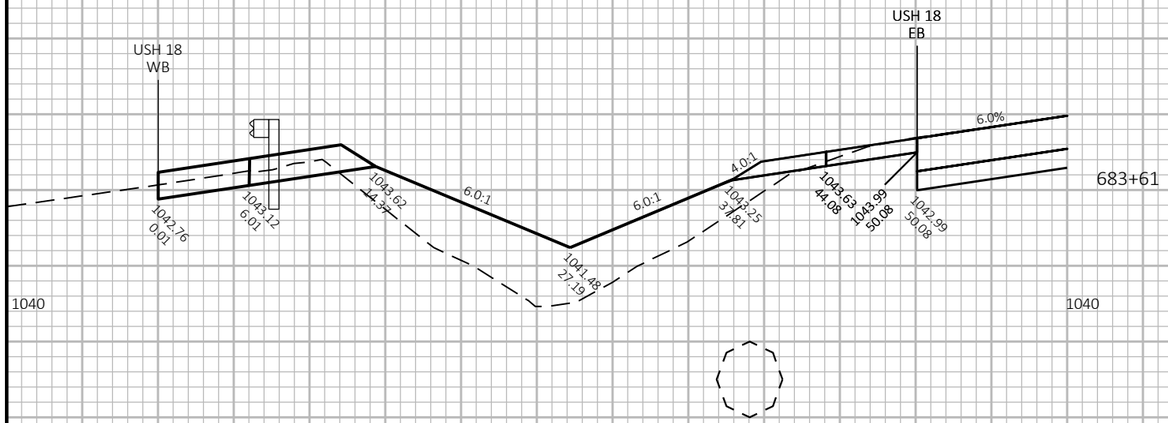

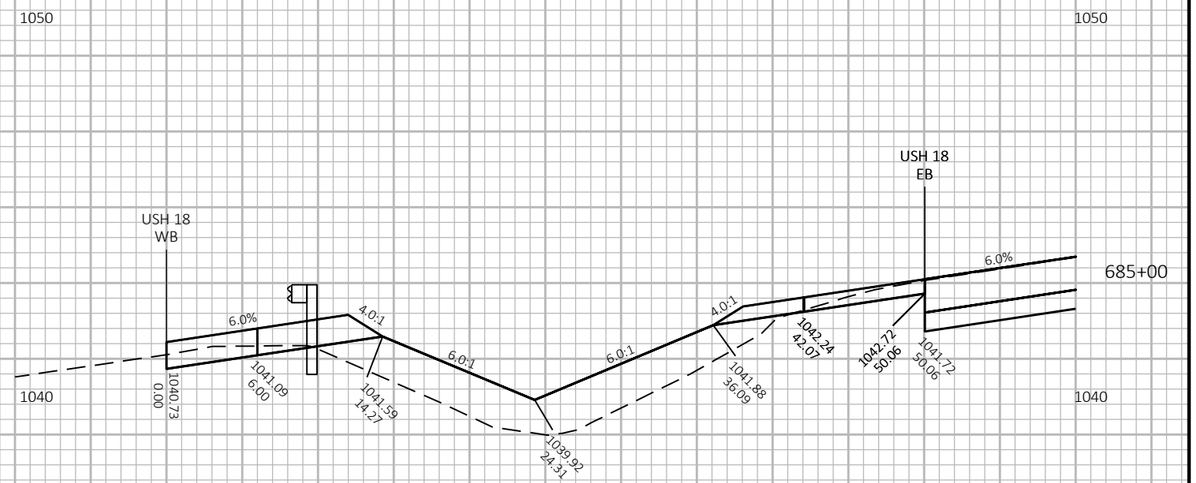

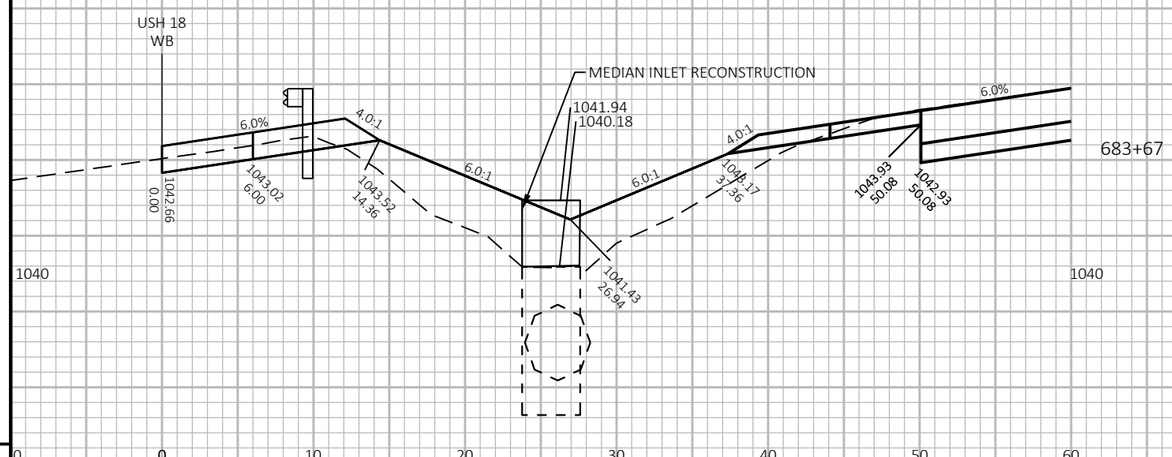

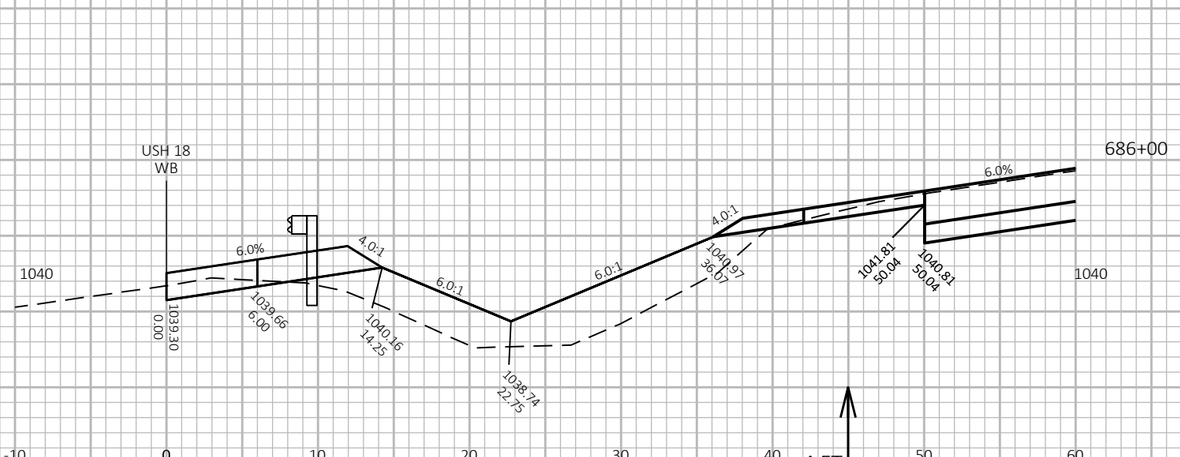

9

9

PROJECT NO: 1204-08-65	HWY: USH 18/151	COUNTY: DANE	CROSS SECTIONS: USH 18 WB	SHEET 815	E

FILE NAME : G:\WDOTSW\20007-000 USH 18\CIVIL 3D\SHEETSPLAN\CROSS SECTIONS\090203-XS_USH 18 WB.DWG
LAYOUT NAME - 18WB-9-1

PLOT DATE : 7/18/2022 3:08 PM

PLOT BY : KL ENGINEERING

PLOT NAME :

PLOT SCALE : 1 IN:10 FT HORZ. / 1 IN:4 FT VERT.

WISDOT/CADDS SHEET 49

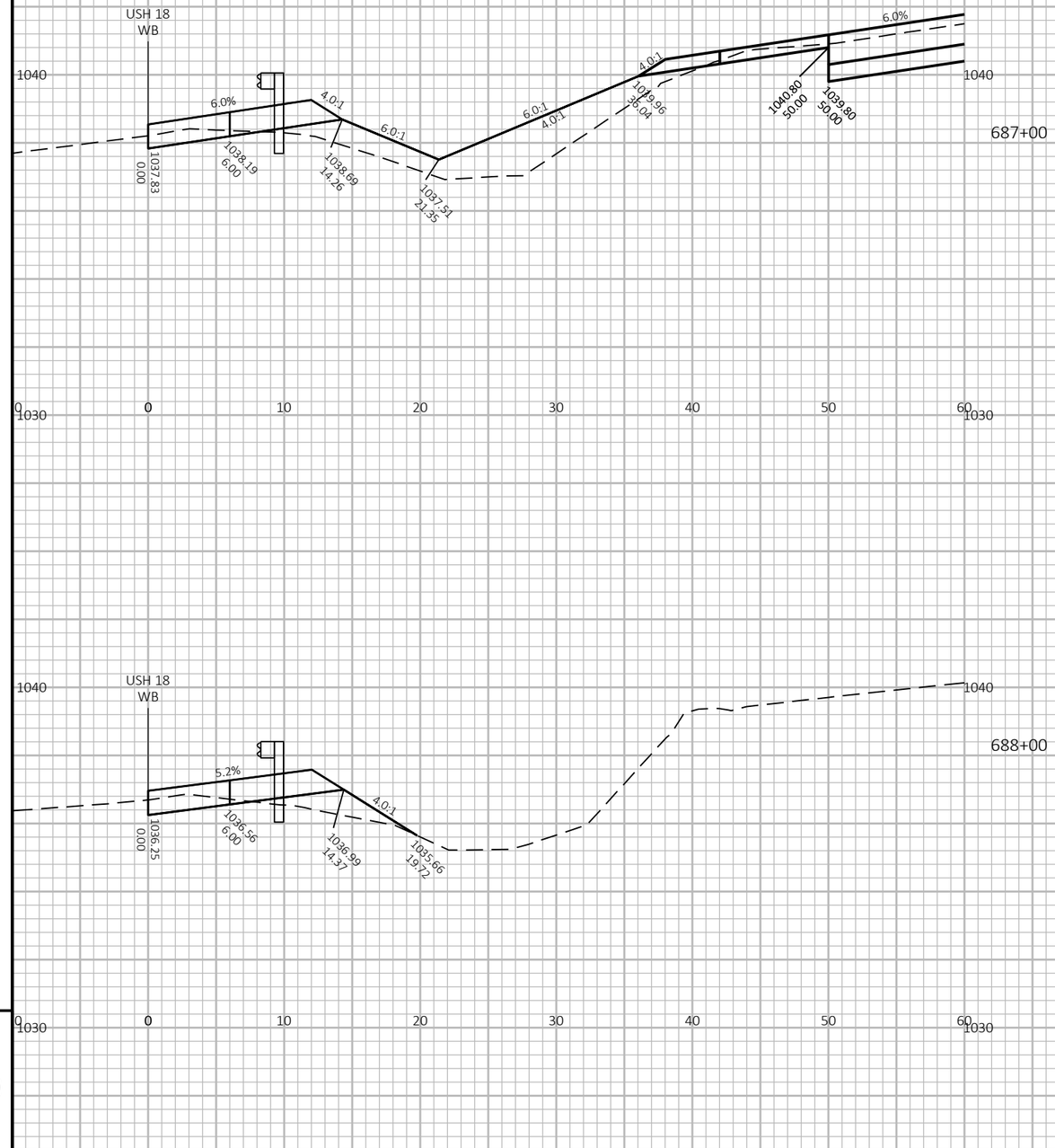

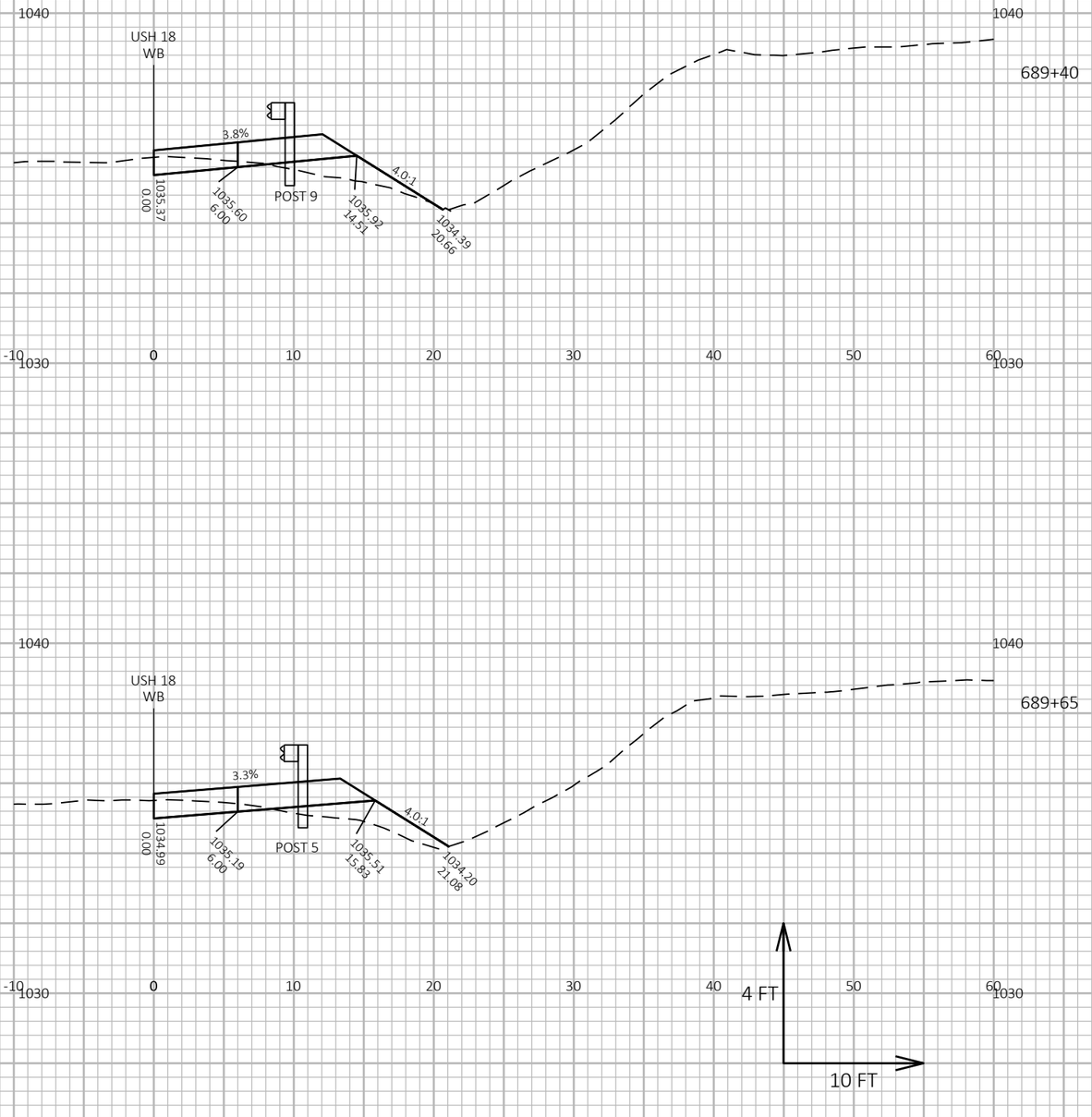

9

9

PROJECT NO: 1204-08-65	HWY: USH 18/151	COUNTY: DANE	CROSS SECTIONS: USH 18 WB	SHEET 816 E

FILE NAME : G:\WDOTSW\20007-000 USH 18\CIVIL 3D\SHEETSPLAN\CROSS SECTIONS\090203-XS_USH 18 WB.DWG
LAYOUT NAME - 18WB-9-2

PLOT DATE : 7/18/2022 3:09 PM

PLOT BY : KL ENGINEERING

PLOT NAME :

PLOT SCALE : 1 IN:10 FT HORZ. / 1 IN:4 FT VERT.

WISDOT/CADDS SHEET 49

START BEAM GUARD SECTIONS 683+58.40 TO 689+90

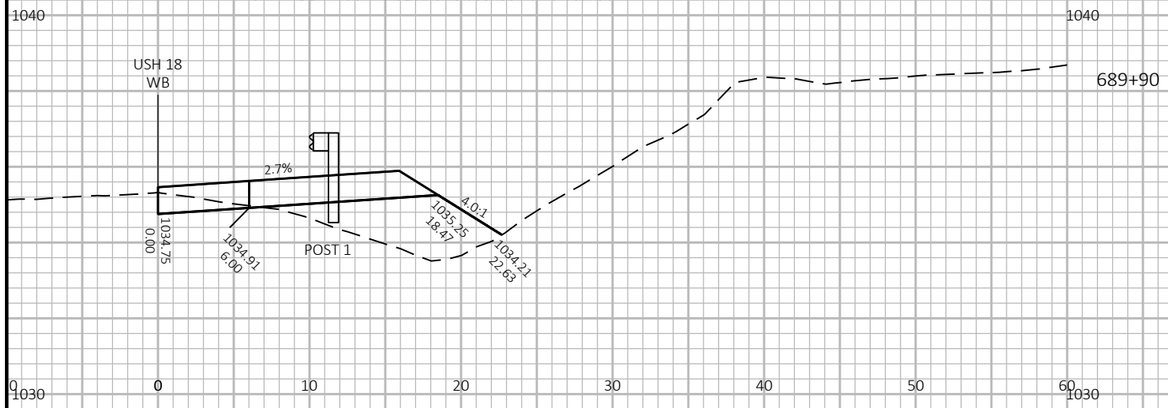

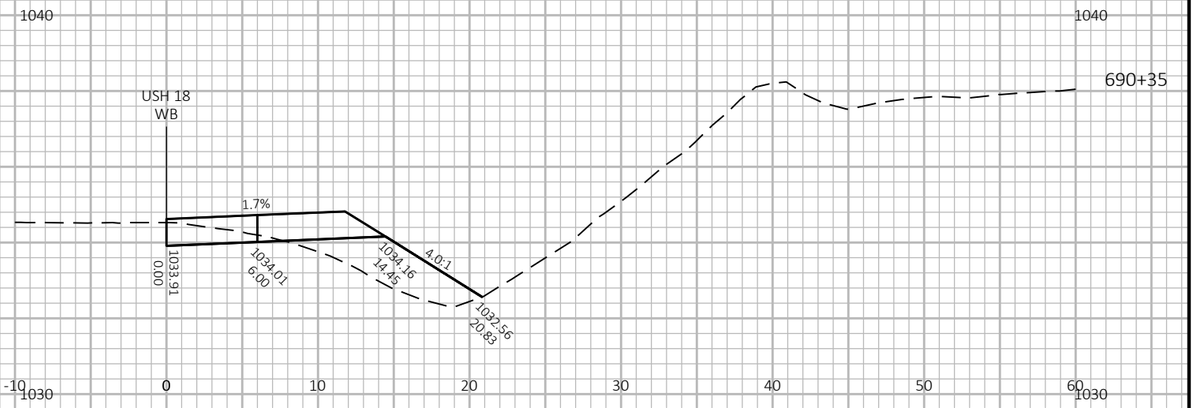

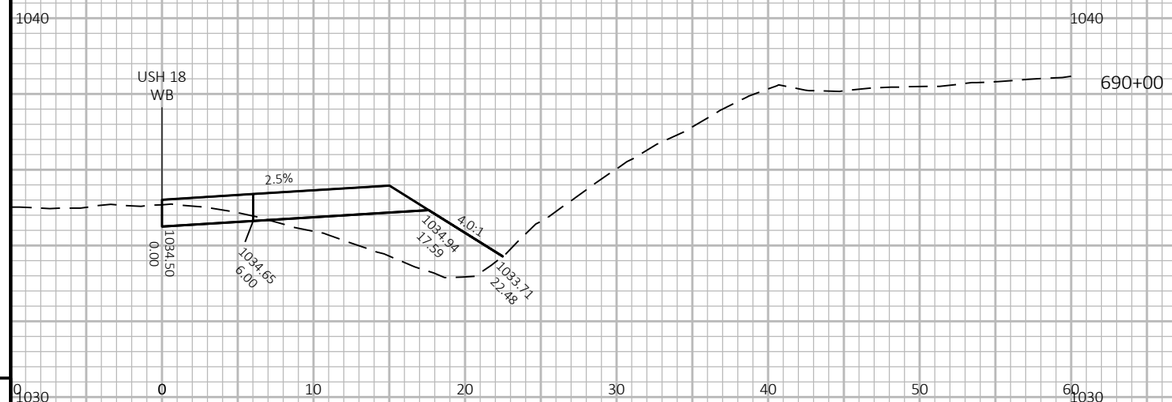

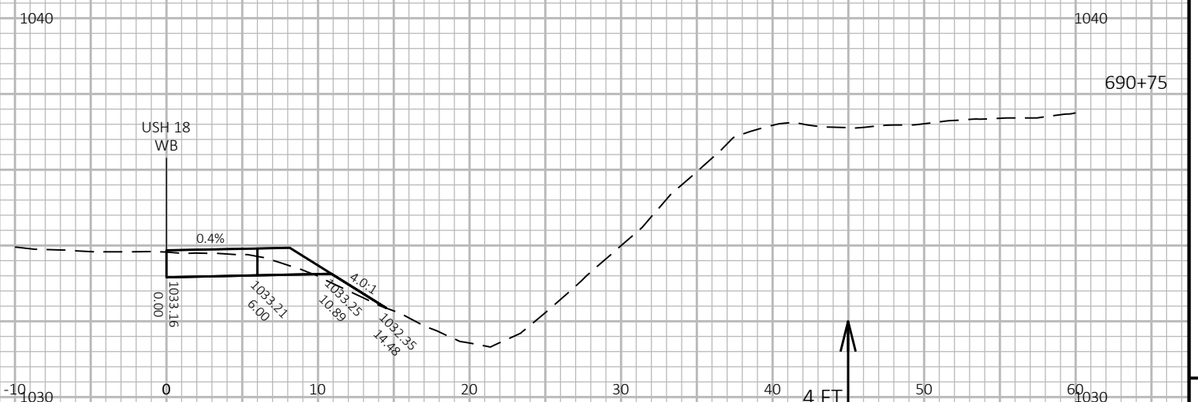

9

9

PROJECT NO: 1204-08-65	HWY: USH 18/151	COUNTY: DANE	CROSS SECTIONS: USH 18 WB	SHEET 817	E

FILE NAME : G:\WDOTSW\20007-000 USH 18\CIVIL 3D\SHEETSPLAN\CROSS SECTIONS\090203-XS_USH 18 WB.DWG
LAYOUT NAME - 18WB-9-3

PLOT DATE : 7/18/2022 3:11 PM

PLOT BY : KL ENGINEERING

PLOT NAME :

PLOT SCALE : 1 IN:10 FT HORZ. / 1 IN:4 FT VERT.

WISDOT/CADDS SHEET 49

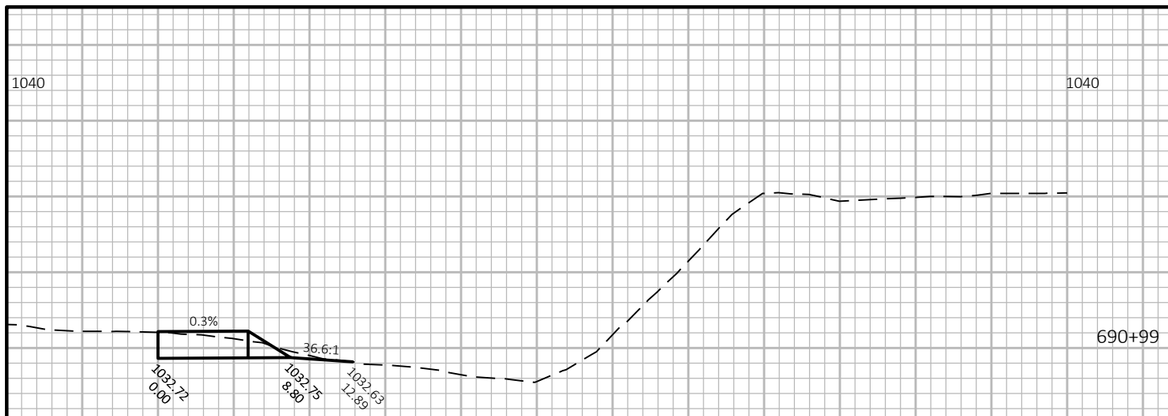

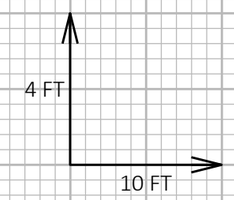

9

9

PROJECT NO: 1204-08-65	HWY: USH 18/151	COUNTY: DANE	CROSS SECTIONS: USH 18 WB	SHEET 818	E

FILE NAME : G:\WDOTSW\20007-000 USH 18\CIVIL 3D\SHEETSPLAN\CROSS SECTIONS\090203-XS_USH 18 WB.DWG
LAYOUT NAME - 18WB-9-4

PLOT DATE : 7/18/2022 3:12 PM PLOT BY : KL ENGINEERING PLOT NAME : PLOT SCALE : 1 IN:10 FT HORZ. / 1 IN:4 FT VERT.

START BEAM GUARD SECTIONS 692+80 TO 695+85

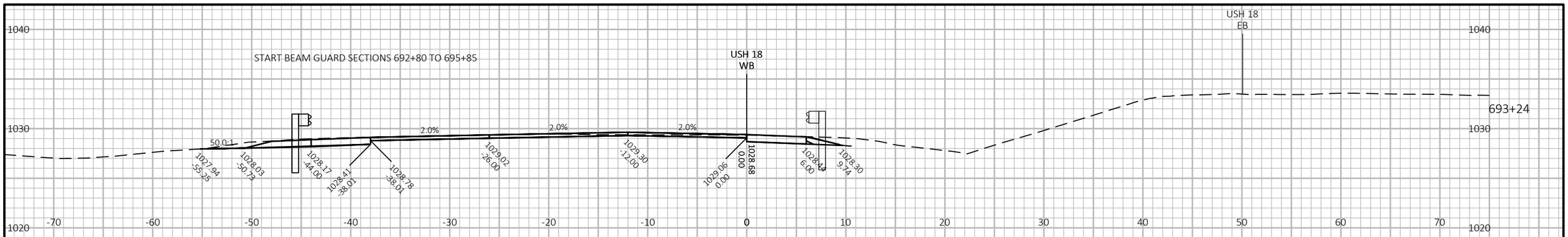

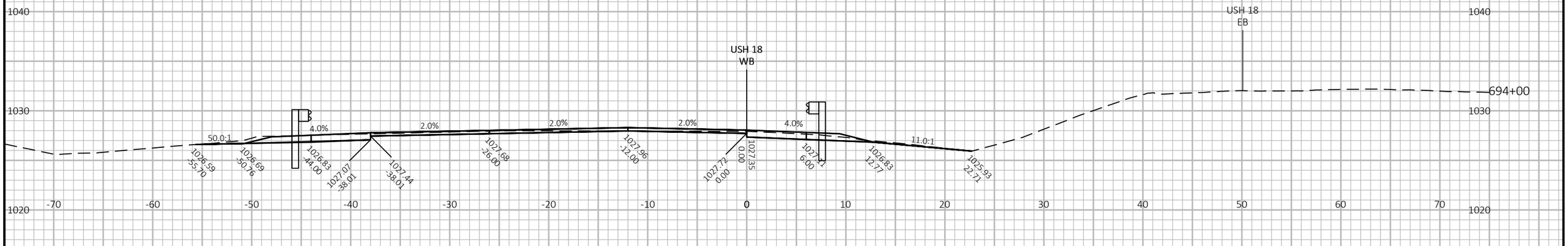

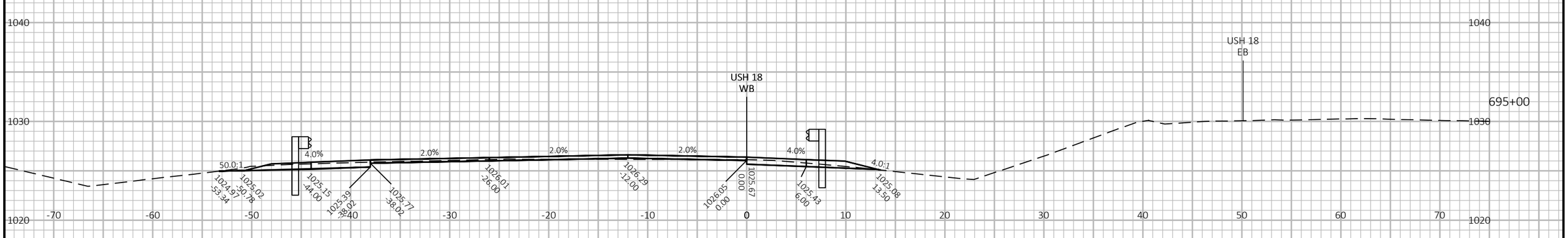

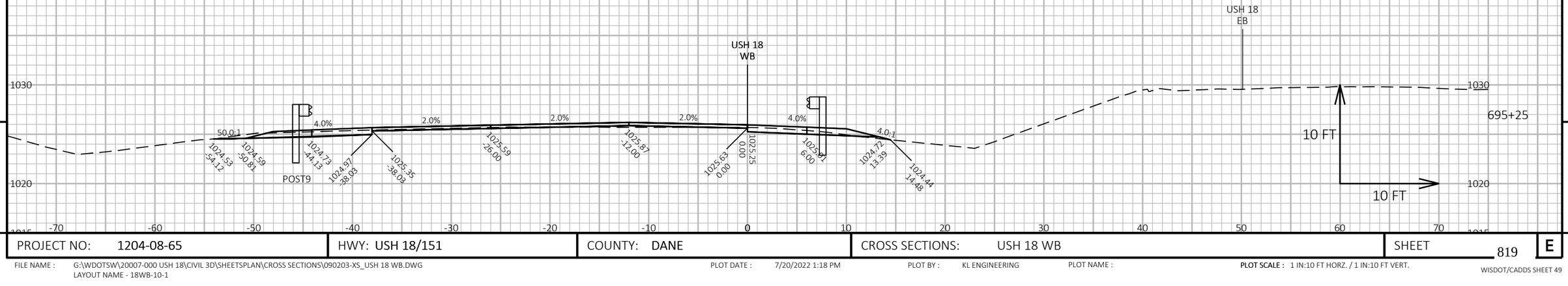

9 9

PROJECT NO: 1204-08-65	HWY: USH 18/151	COUNTY: DANE	CROSS SECTIONS: USH 18 WB	SHEET 819	E

FILE NAME : G:\WDOTSW\20007-000 USH 18\CIVIL 3D\SHEETSPLAN\CROSS SECTIONS\090203-XS_USH 18 WB.DWG
LAYOUT NAME - 18WB-10-1

PLOT DATE : 7/20/2022 1:18 PM PLOT BY : KL ENGINEERING PLOT NAME : **PLOT SCALE :** 1 IN:10 FT HORZ. / 1 IN:10 FT VERT.

PROJECT NO: 1204-08-65	HWY: USH 18/151	COUNTY: DANE	CROSS SECTIONS: USH 18 WB	SHEET 820 E

FILE NAME : G:\WDOTSW\20007-000 USH 18\CIVIL 3D\SHEETSPLAN\CROSS SECTIONS\090203-XS_USH 18 WB.DWG
LAYOUT NAME - 18WB-10-2

PLOT DATE : 7/18/2022 3:15 PM PLOT BY : KL ENGINEERING PLOT NAME : PLOT SCALE : 1 IN:10 FT HORZ. / 1 IN:10 FT VERT.

WISDOT/CADDS SHEET 49

START BEAM GUARD SECTIONS 692+80 TO 695+85

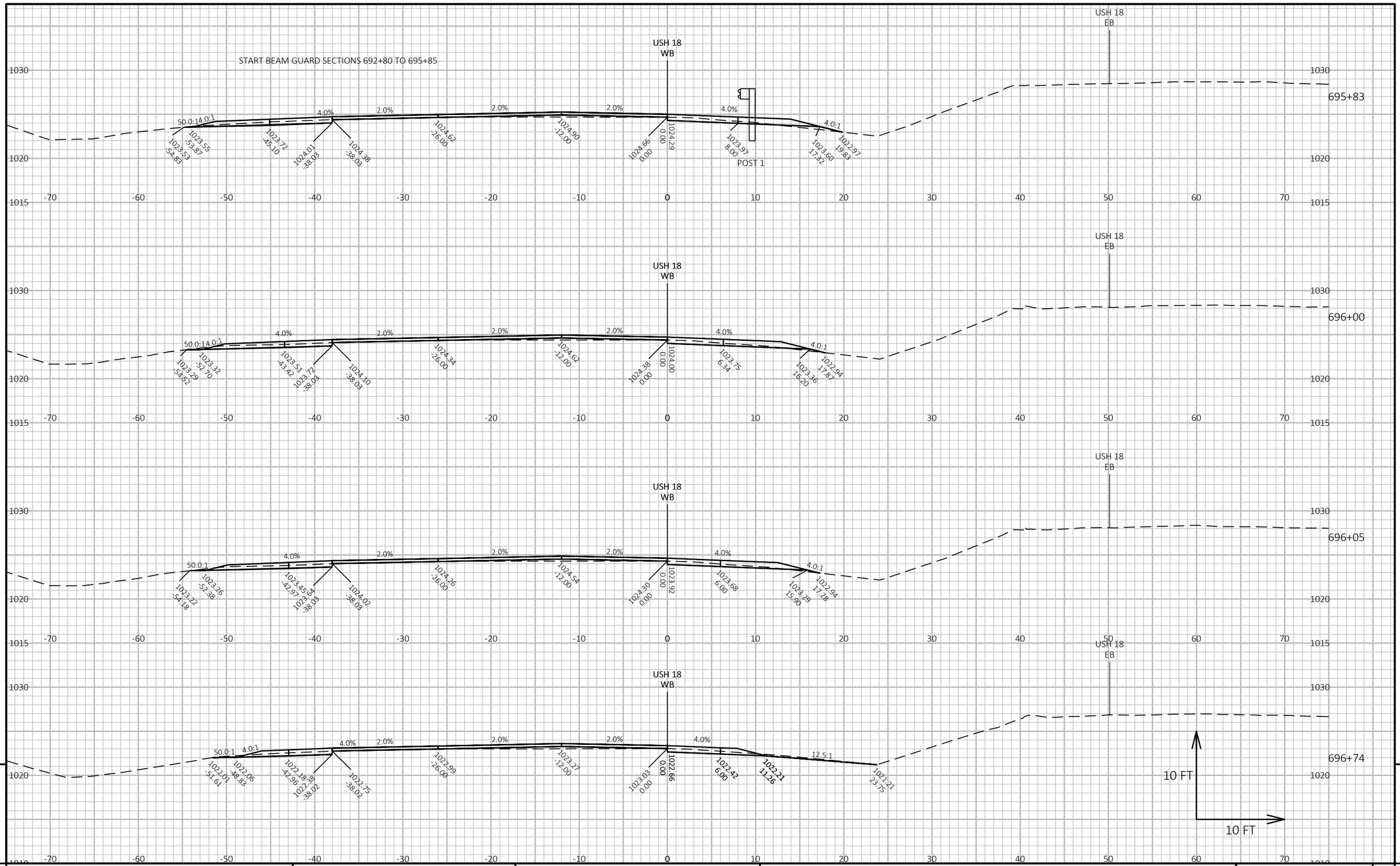

PROJECT NO: 1204-08-65	HWY: USH 18/151	COUNTY: DANE	CROSS SECTIONS: USH 18 WB	SHEET 821	E

FILE NAME : G:\WDOTSW\20007-000 USH 18\CIVIL 3D\SHEETSPLAN\CROSS SECTIONS\090203-XS_USH 18 WB.DWG
LAYOUT NAME - 18WB-10-3

PLOT DATE : 7/18/2022 3:17 PM PLOT BY : KL ENGINEERING PLOT NAME : **PLOT SCALE :** 1 IN:10 FT HORZ. / 1 IN:10 FT VERT.

WISDOT/CADDS SHEET 49

START BEAM GUARD SECTIONS 719+31 TO 723+11

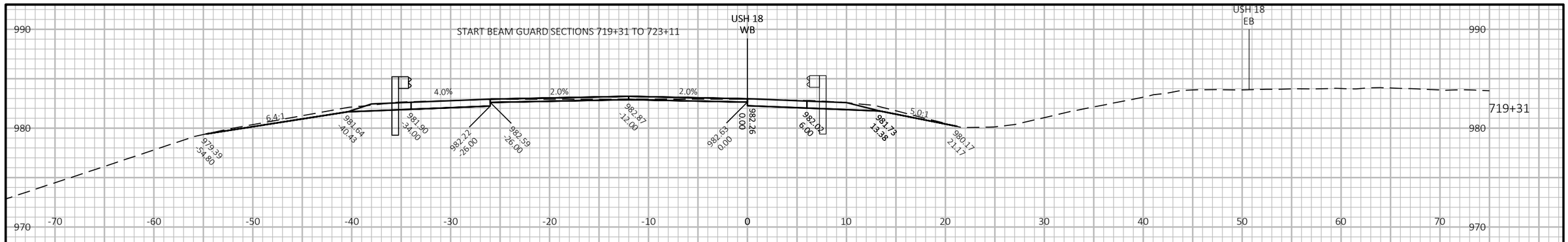

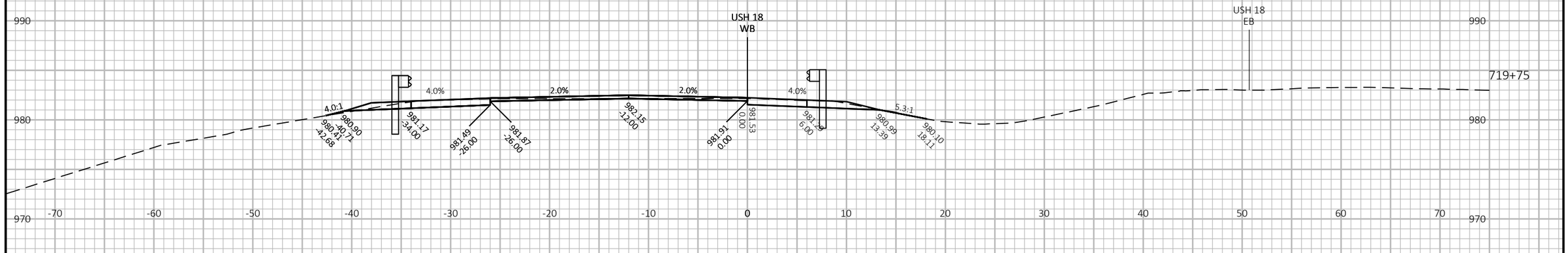

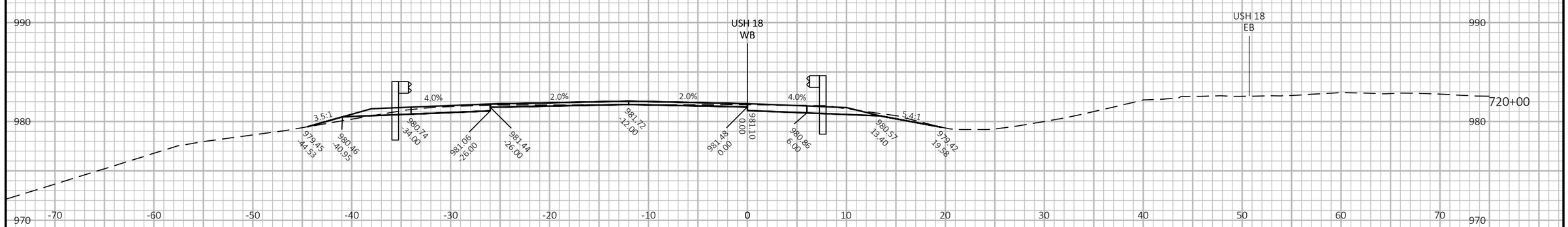

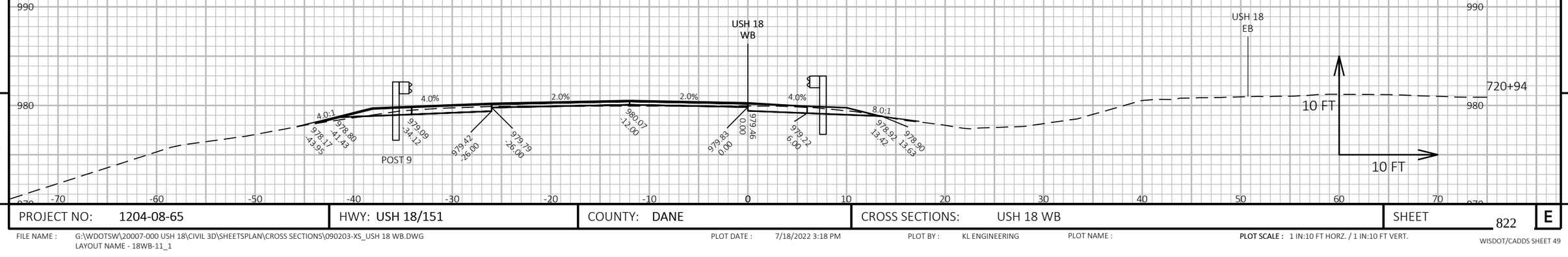

9 9

PROJECT NO: 1204-08-65	HWY: USH 18/151	COUNTY: DANE	CROSS SECTIONS: USH 18 WB	SHEET 822	E

FILE NAME : G:\WDOTSW\20007-000 USH 18\CIVIL 3D\SHEETSPLAN\CROSS SECTIONS\090203-XS_USH 18 WB.DWG
LAYOUT NAME - 18WB-11_1

PLOT DATE : 7/18/2022 3:18 PM PLOT BY : KL ENGINEERING PLOT NAME : **PLOT SCALE :** 1 IN:10 FT HORZ. / 1 IN:10 FT VERT.

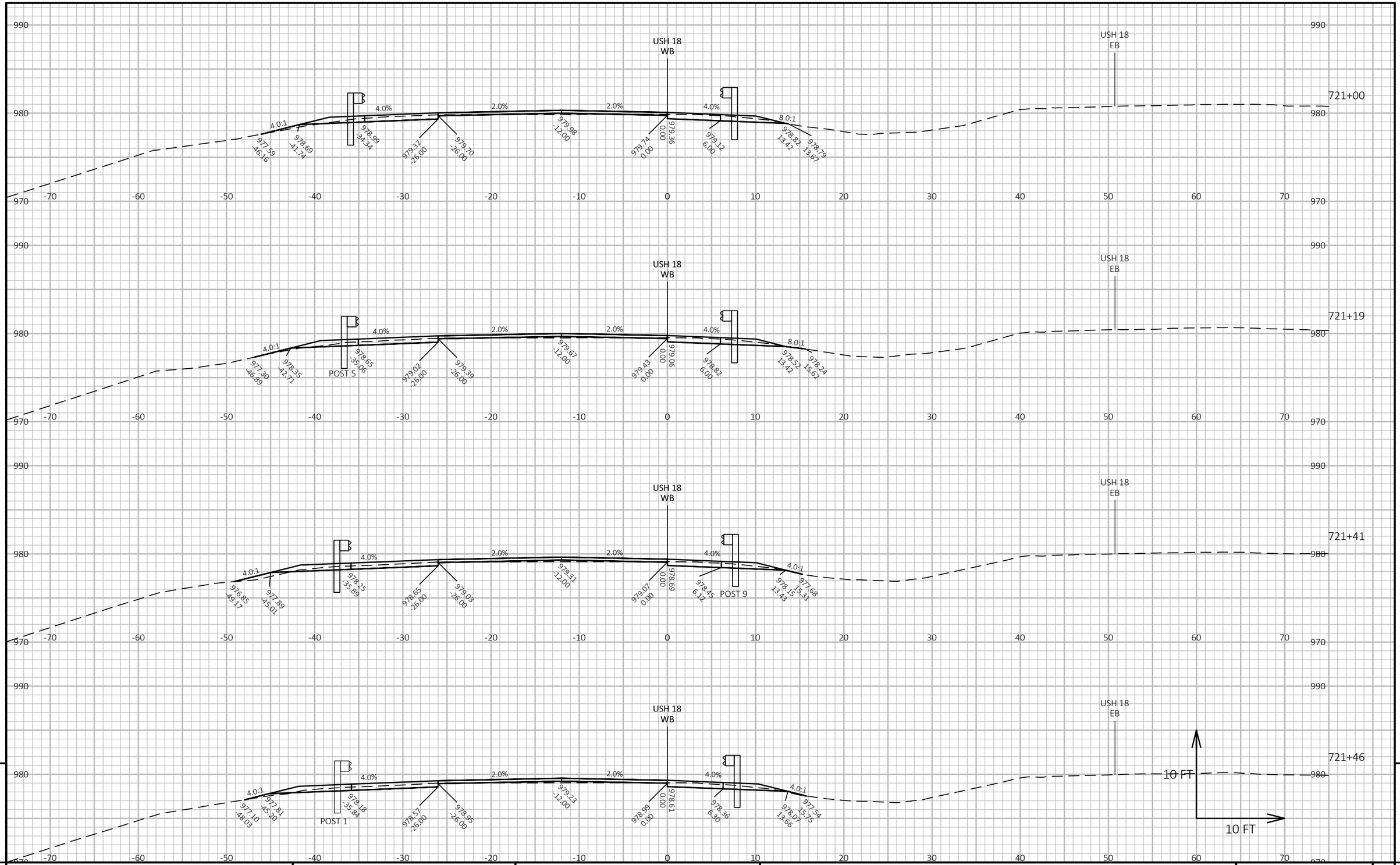

PROJECT NO: 1204-08-65	HWY: USH 18/151	COUNTY: DANE	CROSS SECTIONS: USH 18 WB	SHEET 823	E

FILE NAME : G:\WDOTSW\20007-000 USH 18\CIVIL 3D\SHEETSPLAN\CROSS SECTIONS\090203-XS_USH 18 WB.DWG
LAYOUT NAME - 18WB-11_2

PLOT DATE : 7/18/2022 3:20 PM PLOT BY : KL ENGINEERING PLOT NAME : **PLOT SCALE :** 1 IN:10 FT HORZ. / 1 IN:10 FT VERT.

WISDOT/CADDS SHEET 49

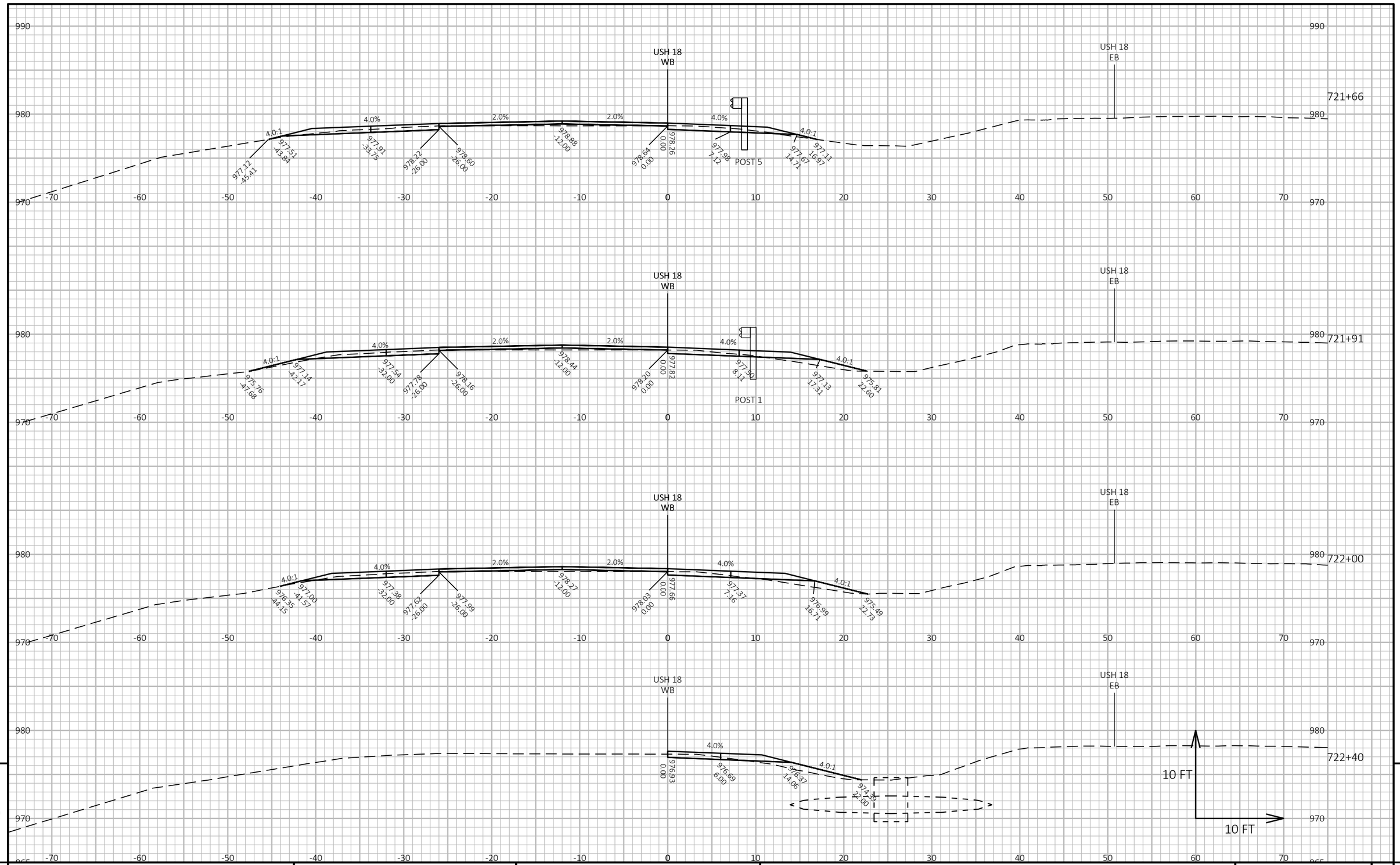

9

9

PROJECT NO: 1204-08-65	HWY: USH 18/151	COUNTY: DANE	CROSS SECTIONS: USH 18 WB	SHEET 824	E

FILE NAME : G:\WDOTSW\20007-000 USH 18\CIVIL 3D\SHEETSPLAN\CROSS SECTIONS\090203-XS_USH 18 WB.DWG
LAYOUT NAME - 18WB-11_3

PLOT DATE : 7/20/2022 1:21 PM

PLOT BY : KL ENGINEERING

PLOT NAME :

PLOT SCALE : 1 IN:10 FT HORZ. / 1 IN:10 FT VERT.

WISDOT/CADDS SHEET 49

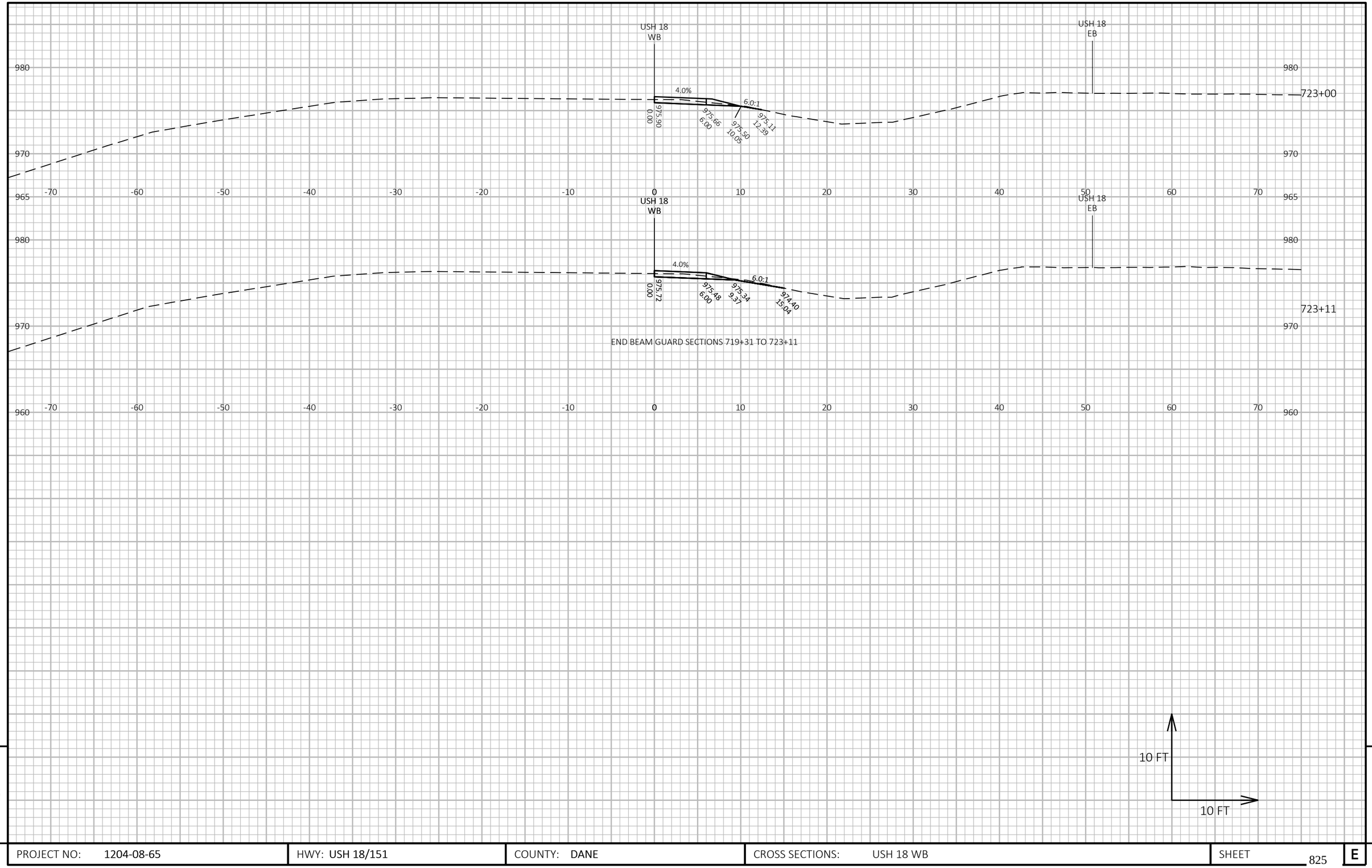

9

9

PROJECT NO: 1204-08-65	HWY: USH 18/151	COUNTY: DANE	CROSS SECTIONS: USH 18 WB	SHEET 825	E

FILE NAME : G:\WDOTSW\20007-000 USH 18\CIVIL 3D\SHEETSPLAN\CROSS SECTIONS\090203-XS_USH 18 WB.DWG
LAYOUT NAME - 18WB-11_4

PLOT DATE : 7/20/2022 1:23 PM PLOT BY : KL ENGINEERING PLOT NAME : **PLOT SCALE :** 1 IN:10 FT HORZ. / 1 IN:10 FT VERT.

START BEAM GUARD SECTION 743+42 TO 744+25

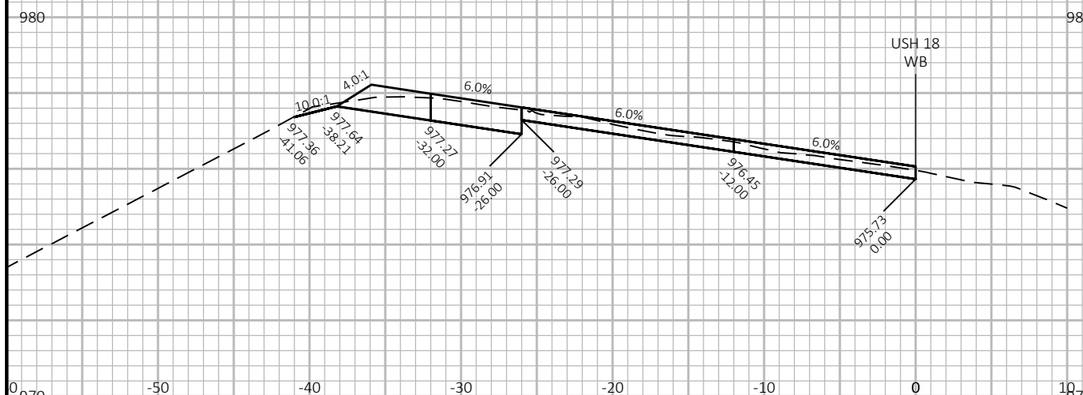

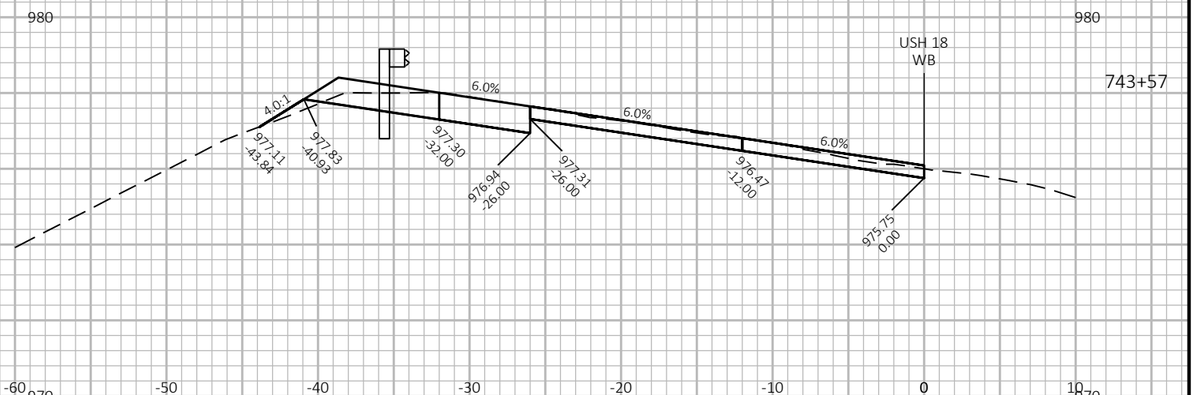

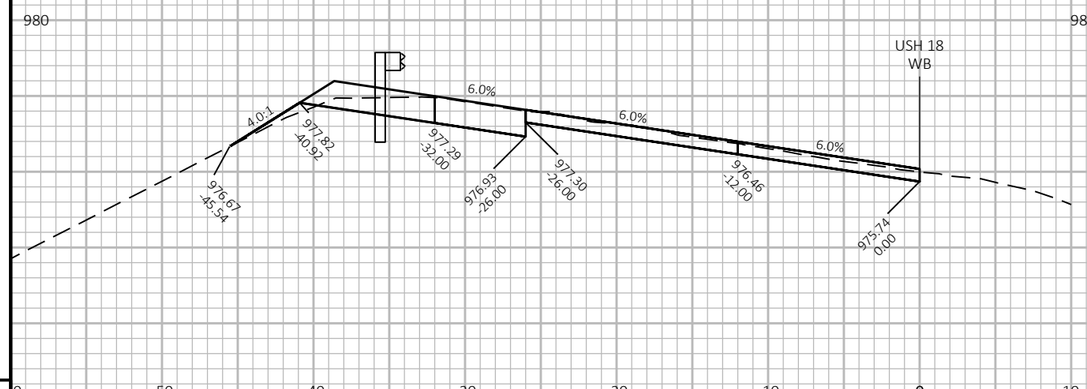

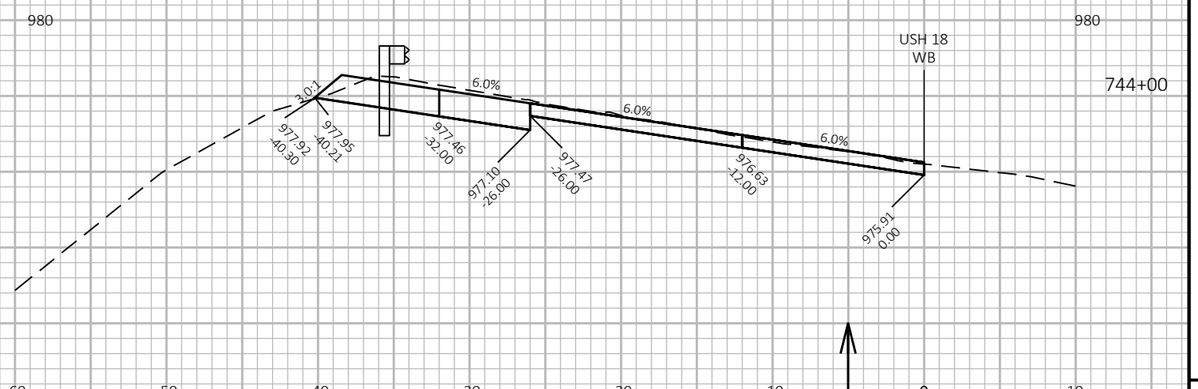

9

9

PROJECT NO: 1204-08-65	HWY: USH 18/151	COUNTY: DANE	CROSS SECTIONS: USH 18 WB	SHEET 826	E

FILE NAME : G:\WDOTSW\20007-000 USH 18\CIVIL 3D\SHEETSPLAN\CROSS SECTIONS\090203-XS_USH 18 WB.DWG
LAYOUT NAME - 18WB-12_1

PLOT DATE : 7/20/2022 1:26 PM PLOT BY : KL ENGINEERING PLOT NAME : PLOT SCALE : 1 IN:10 FT HORZ. / 1 IN:4 FT VERT.

WISDOT/CADDS SHEET 49

END BEAM GUARD SECTION 743+41.60 TO 744+25

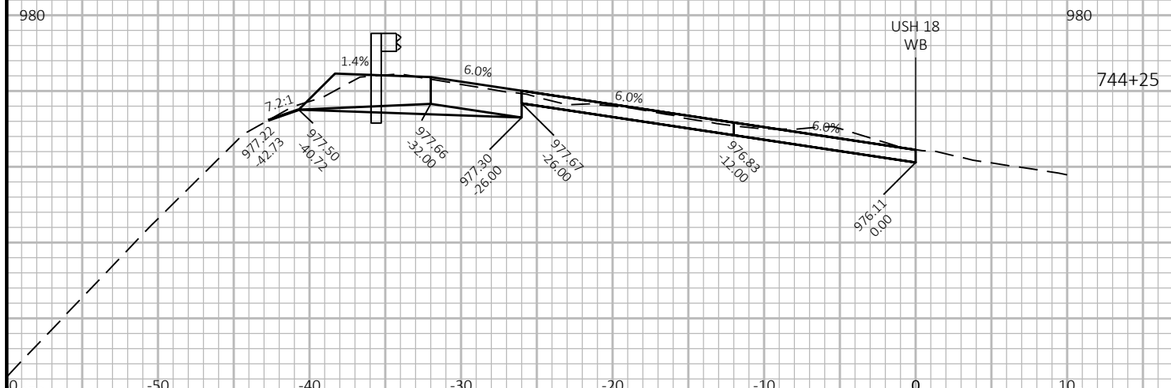

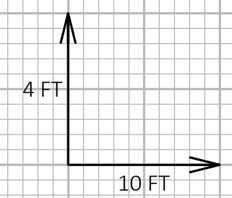

PROJECT NO: 1204-08-65	HWY: USH 18/151	COUNTY: DANE	CROSS SECTIONS: USH 18 WB	SHEET 827 E

FILE NAME : G:\WDOTSW\20007-000 USH 18\CIVIL 3D\SHEETSPLAN\CROSS SECTIONS\090203-XS_USH 18 WB.DWG
LAYOUT NAME - 18WB-12_2

PLOT DATE : 7/20/2022 1:28 PM PLOT BY : KL ENGINEERING PLOT NAME : PLOT SCALE : 1 IN:10 FT HORZ. / 1 IN:4 FT VERT.

WISDOT/CADDS SHEET 49

START BEAM GUARD SECTION STA 746+34 TO 752+31

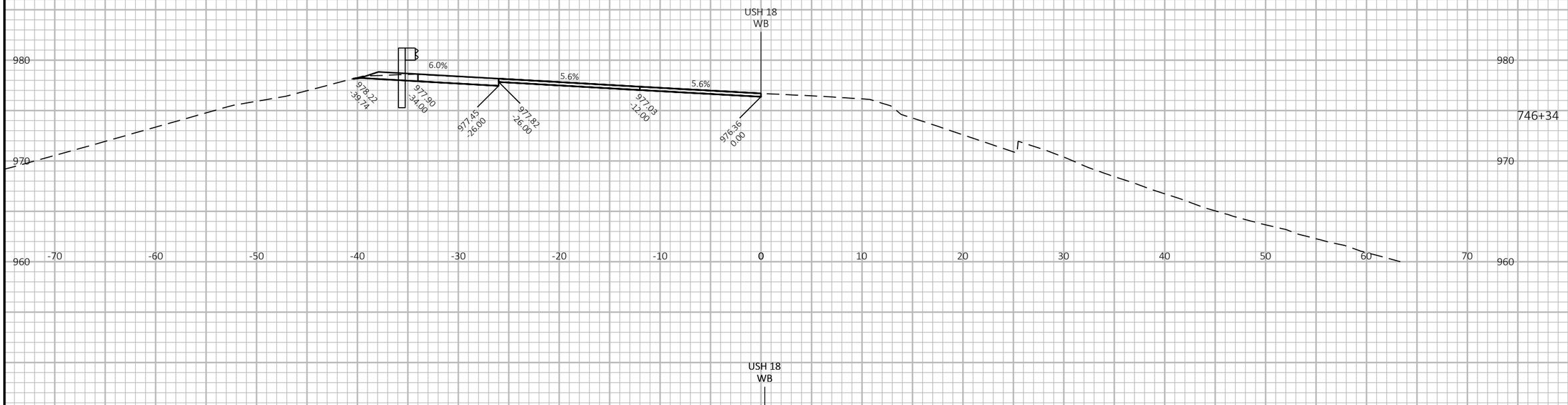

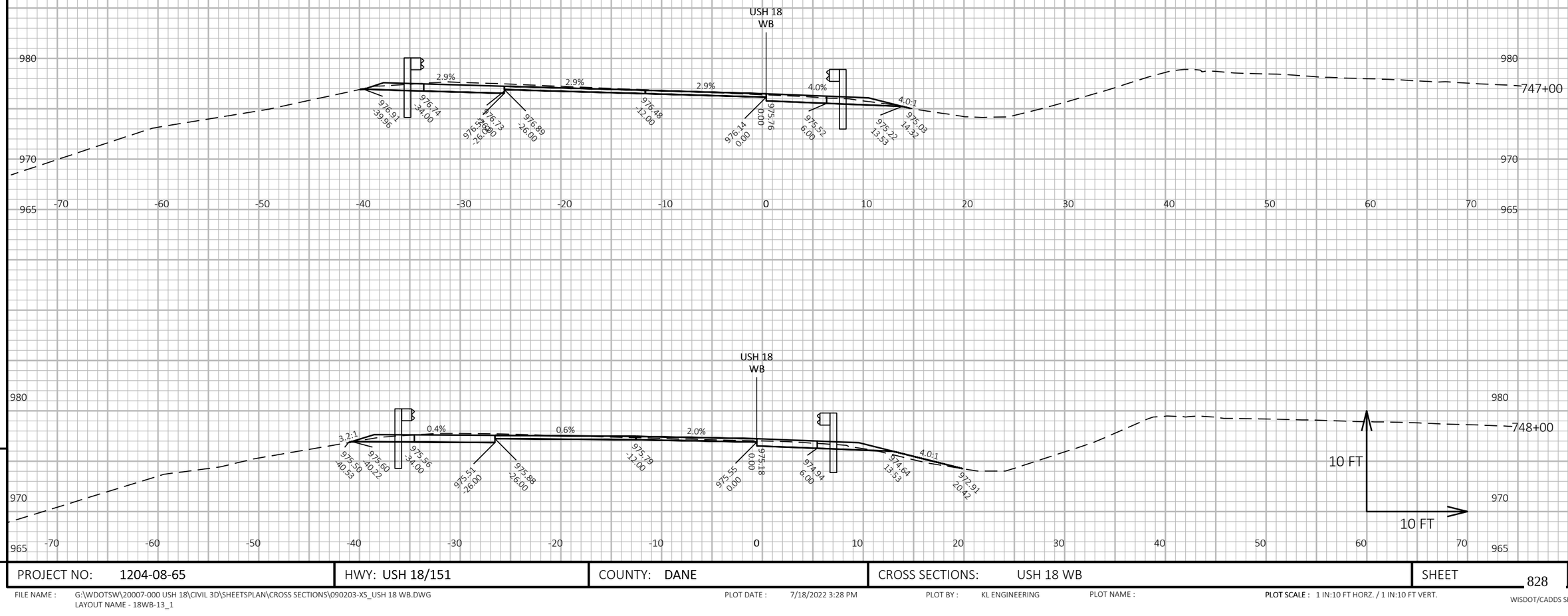

9

9

PROJECT NO: 1204-08-65	HWY: USH 18/151	COUNTY: DANE	CROSS SECTIONS: USH 18 WB	SHEET 828	E

FILE NAME : G:\WDOTSW\20007-000 USH 18\CIVIL 3D\SHEETSPLAN\CROSS SECTIONS\090203-XS_USH 18 WB.DWG
LAYOUT NAME - 18WB-13_1

PLOT DATE : 7/18/2022 3:28 PM

PLOT BY : KL ENGINEERING

PLOT NAME :

PLOT SCALE : 1 IN:10 FT HORZ. / 1 IN:10 FT VERT.

WISDOT/CADDS SHEET 49

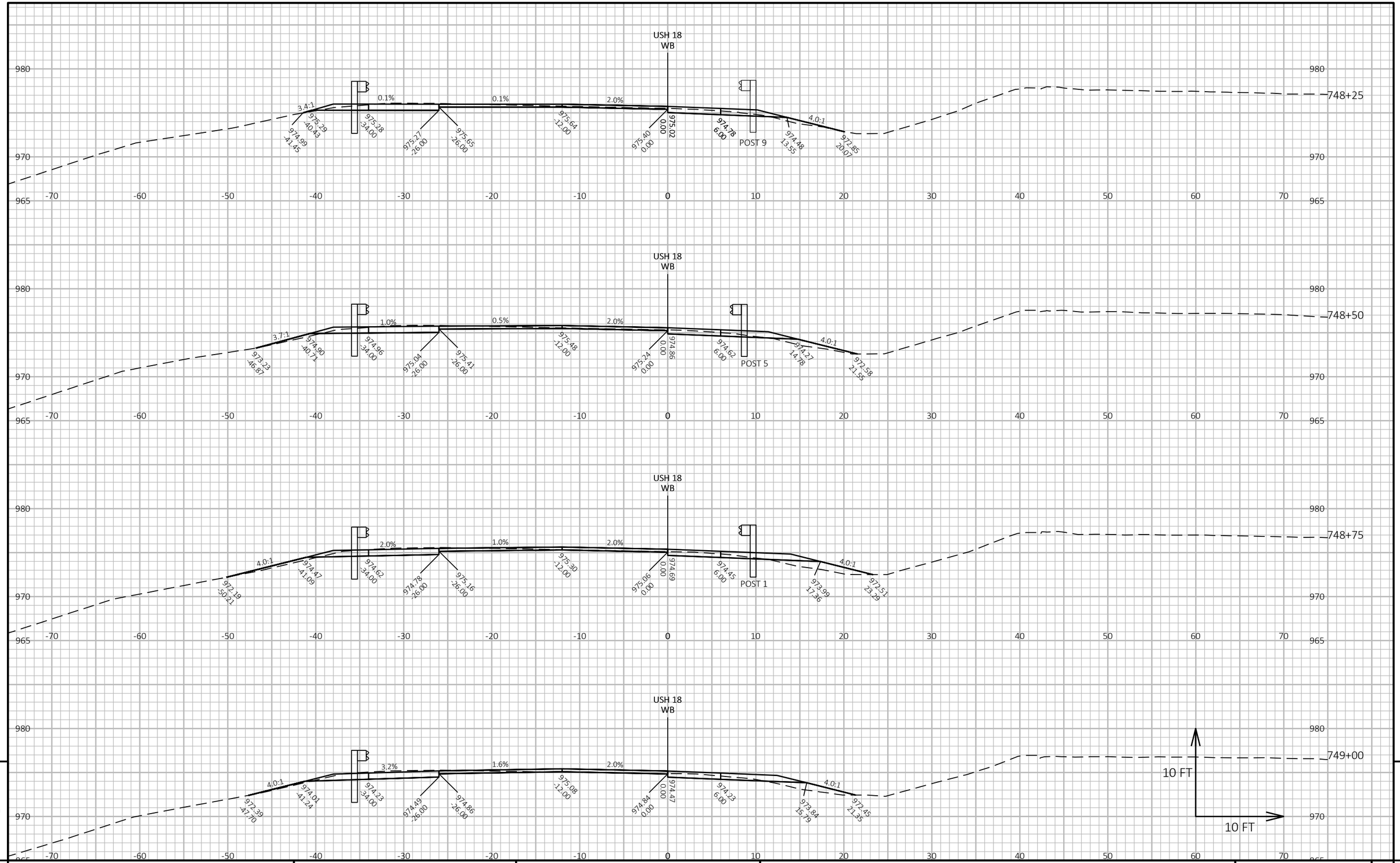

9

9

PROJECT NO: 1204-08-65	HWY: USH 18/151	COUNTY: DANE	CROSS SECTIONS: USH 18 WB	SHEET 829	E

FILE NAME : G:\WDOTSW\20007-000 USH 18\CIVIL 3D\SHEETSPLAN\CROSS SECTIONS\090203-XS_USH 18 WB.DWG
LAYOUT NAME - 18WB-13_2

PLOT DATE : 7/18/2022 3:29 PM PLOT BY : KL ENGINEERING PLOT NAME : **PLOT SCALE :** 1 IN:10 FT HORZ. / 1 IN:10 FT VERT.

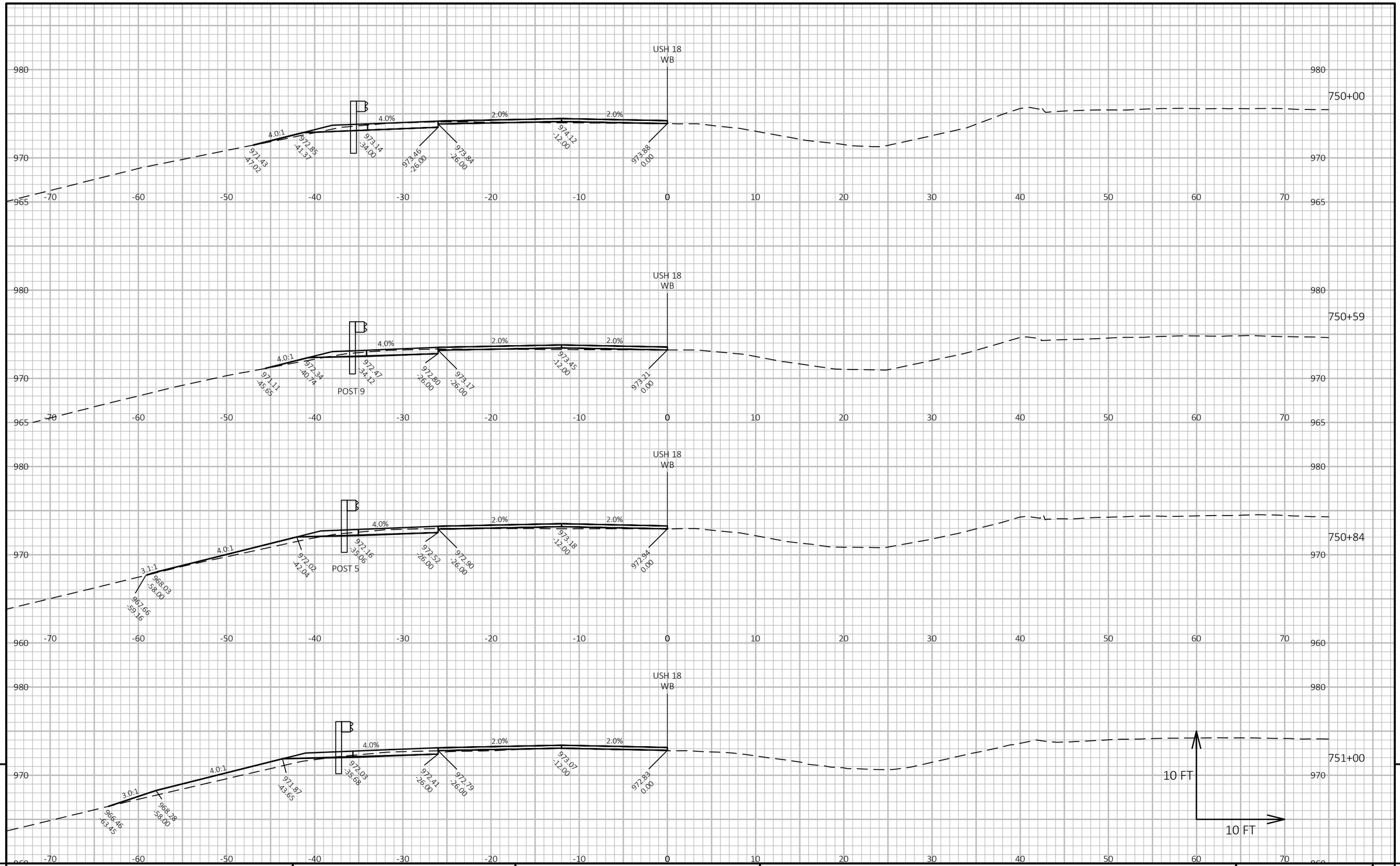

9

9

PROJECT NO: 1204-08-65	HWY: USH 18/151	COUNTY: DANE	CROSS SECTIONS: USH 18 WB	SHEET 830	E

FILE NAME : G:\WDOTSW\20007-000 USH 18\CIVIL 3D\SHEETSPLAN\CROSS SECTIONS\090203-XS_USH 18 WB.DWG
LAYOUT NAME - 18WB-13_3

PLOT DATE : 7/18/2022 3:31 PM

PLOT BY : KL ENGINEERING

PLOT NAME :

PLOT SCALE : 1 IN:10 FT HORZ. / 1 IN:10 FT VERT.

WISDOT/CADDS SHEET 49

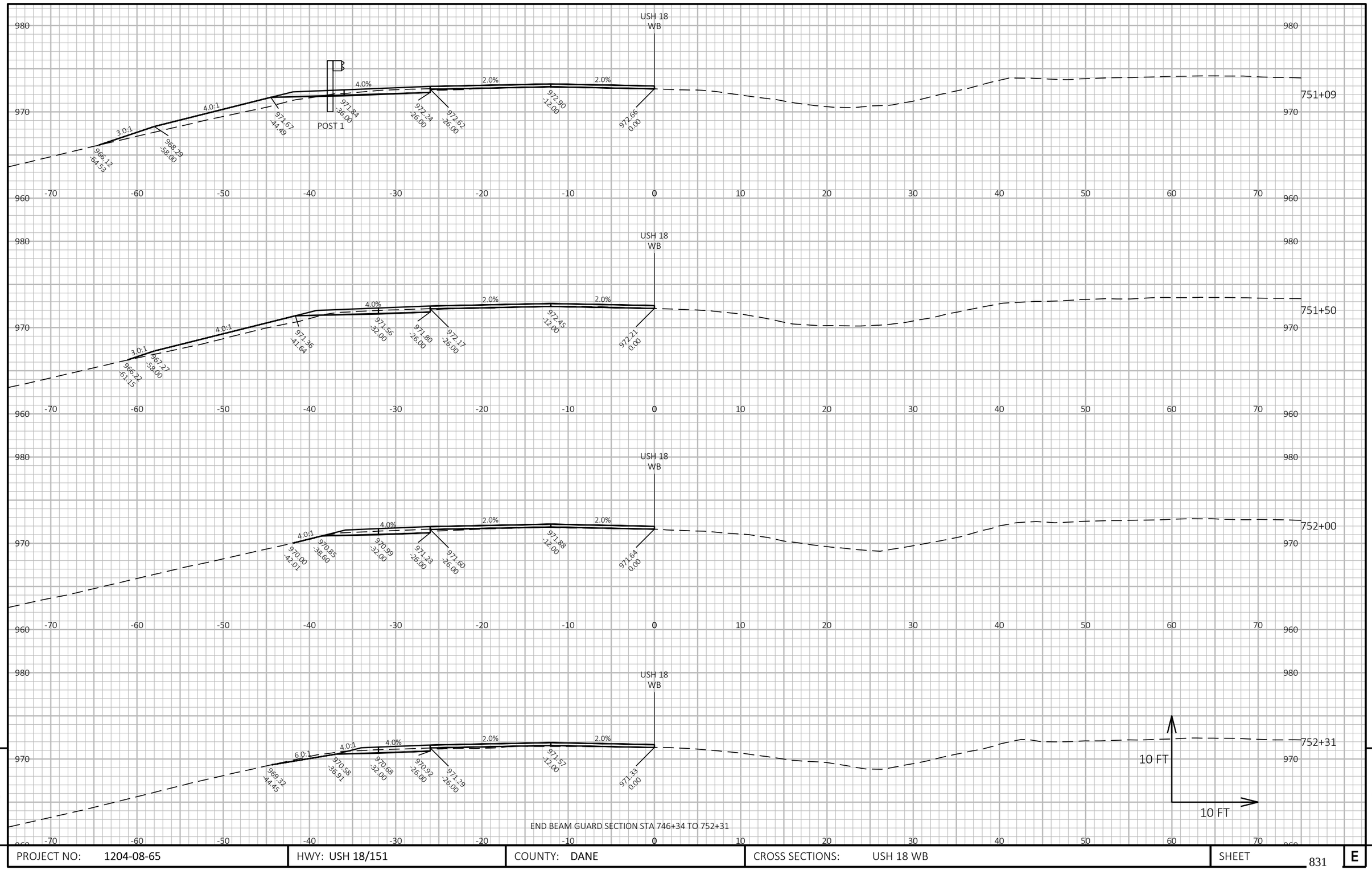

END BEAM GUARD SECTION STA 746+34 TO 752+31

PROJECT NO: 1204-08-65	HWY: USH 18/151	COUNTY: DANE	CROSS SECTIONS: USH 18 WB	SHEET 831	E

FILE NAME : G:\WDOTSW\20007-000 USH 18\CIVIL 3D\SHEETSPLAN\CROSS SECTIONS\090203-XS_USH 18 WB.DWG
LAYOUT NAME - 18WB-13_4

PLOT DATE : 7/21/2022 10:18 AM PLOT BY : KL ENGINEERING PLOT NAME : **PLOT SCALE :** 1 IN:10 FT HORZ. / 1 IN:10 FT VERT.

WISDOT/CADDS SHEET 49

START BEAM GUARD 823+45 TO 825+29

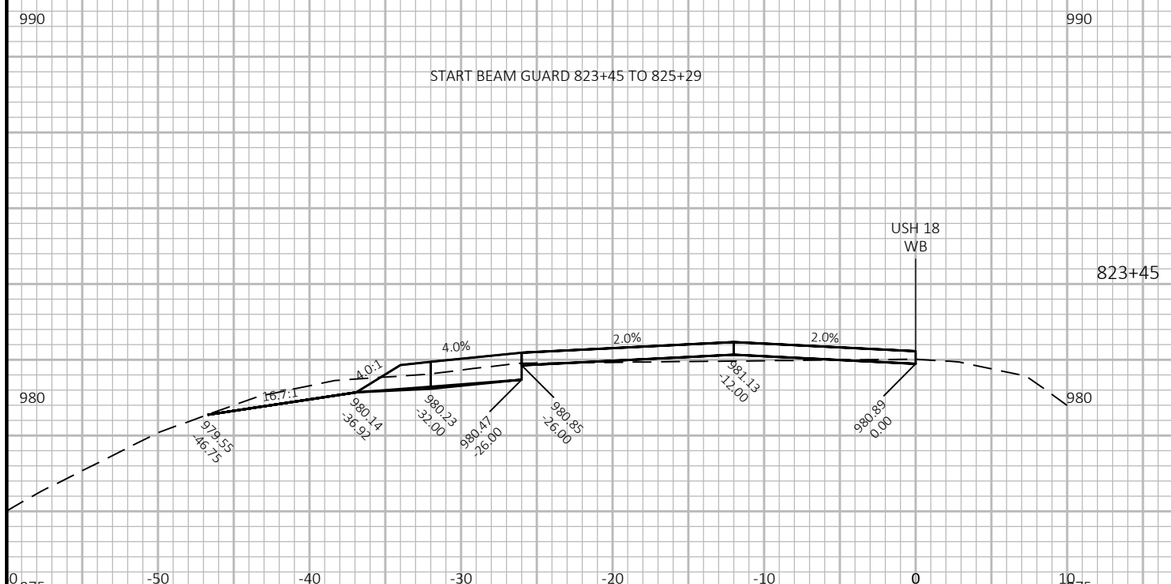



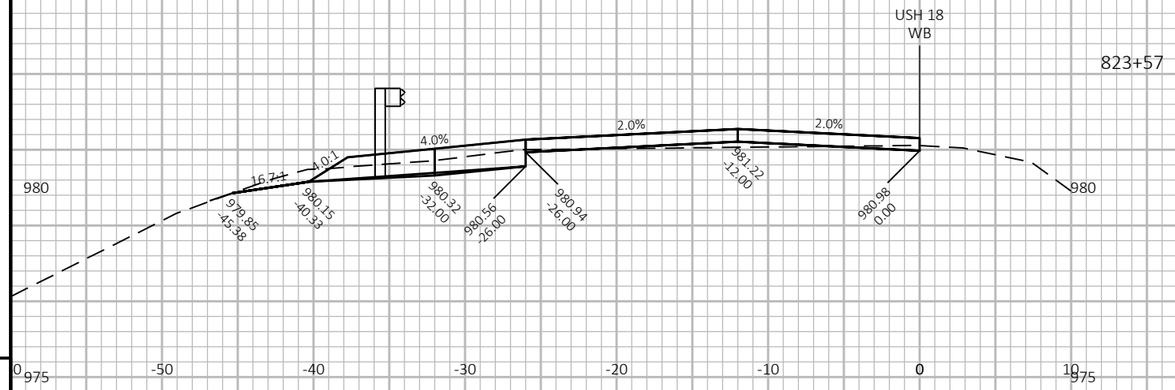

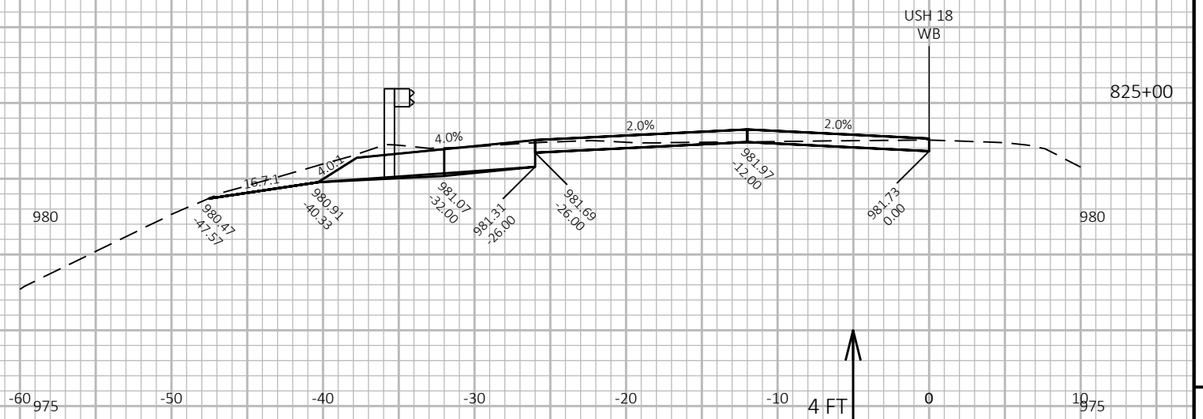

9

9

PROJECT NO: 1204-08-65	HWY: USH 18/151	COUNTY: DANE	CROSS SECTIONS: USH 18 WB	SHEET 832	E

FILE NAME : G:\WDOTSW\20007-000 USH 18\CIVIL 3D\SHEETSPLAN\CROSS SECTIONS\090203-XS_USH 18 WB.DWG
LAYOUT NAME - 18WB-14_1

PLOT DATE : 7/18/2022 3:34 PM PLOT BY : KL ENGINEERING PLOT NAME : PLOT SCALE : 1 IN:10 FT HORZ. / 1 IN:4 FT VERT.

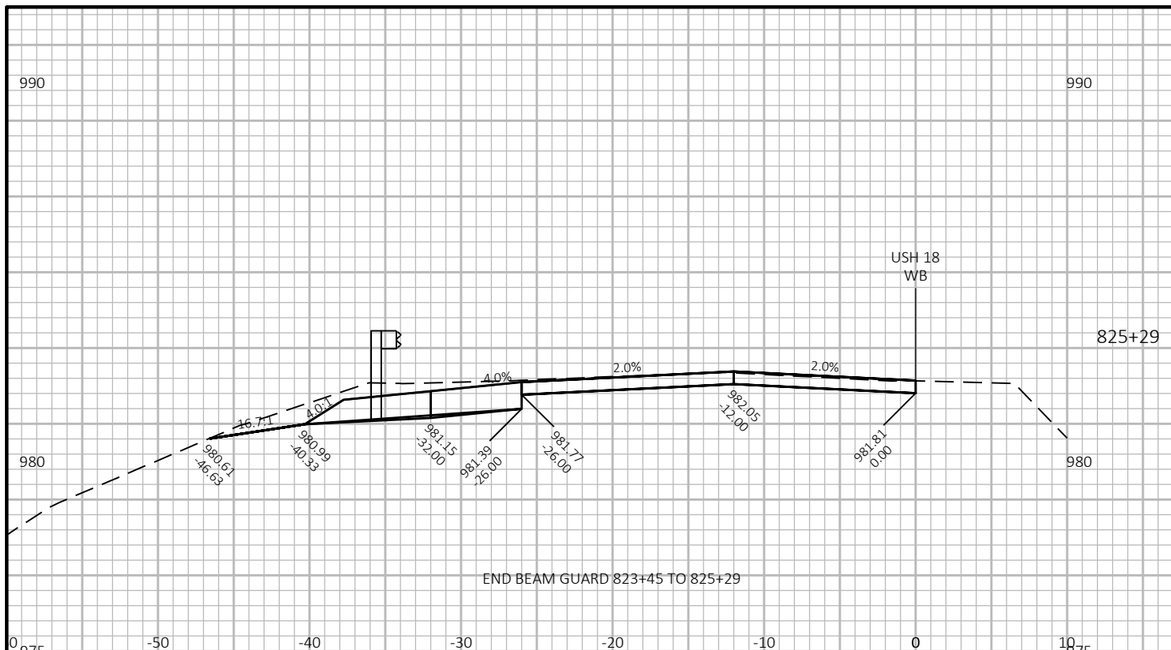

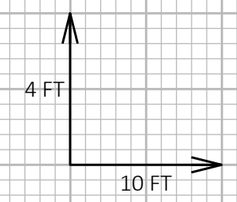

9

9

PROJECT NO: 1204-08-65	HWY: USH 18/151	COUNTY: DANE	CROSS SECTIONS: USH 18 WB	SHEET 833	E

FILE NAME : G:\WDOTSW\20007-000 USH 18\CIVIL 3D\SHEETSPLAN\CROSS SECTIONS\090203-XS_USH 18 WB.DWG
LAYOUT NAME - 18WB-14_2

PLOT DATE : 7/18/2022 3:36 PM PLOT BY : KL ENGINEERING PLOT NAME : PLOT SCALE : 1 IN:10 FT HORZ. / 1 IN:4 FT VERT.

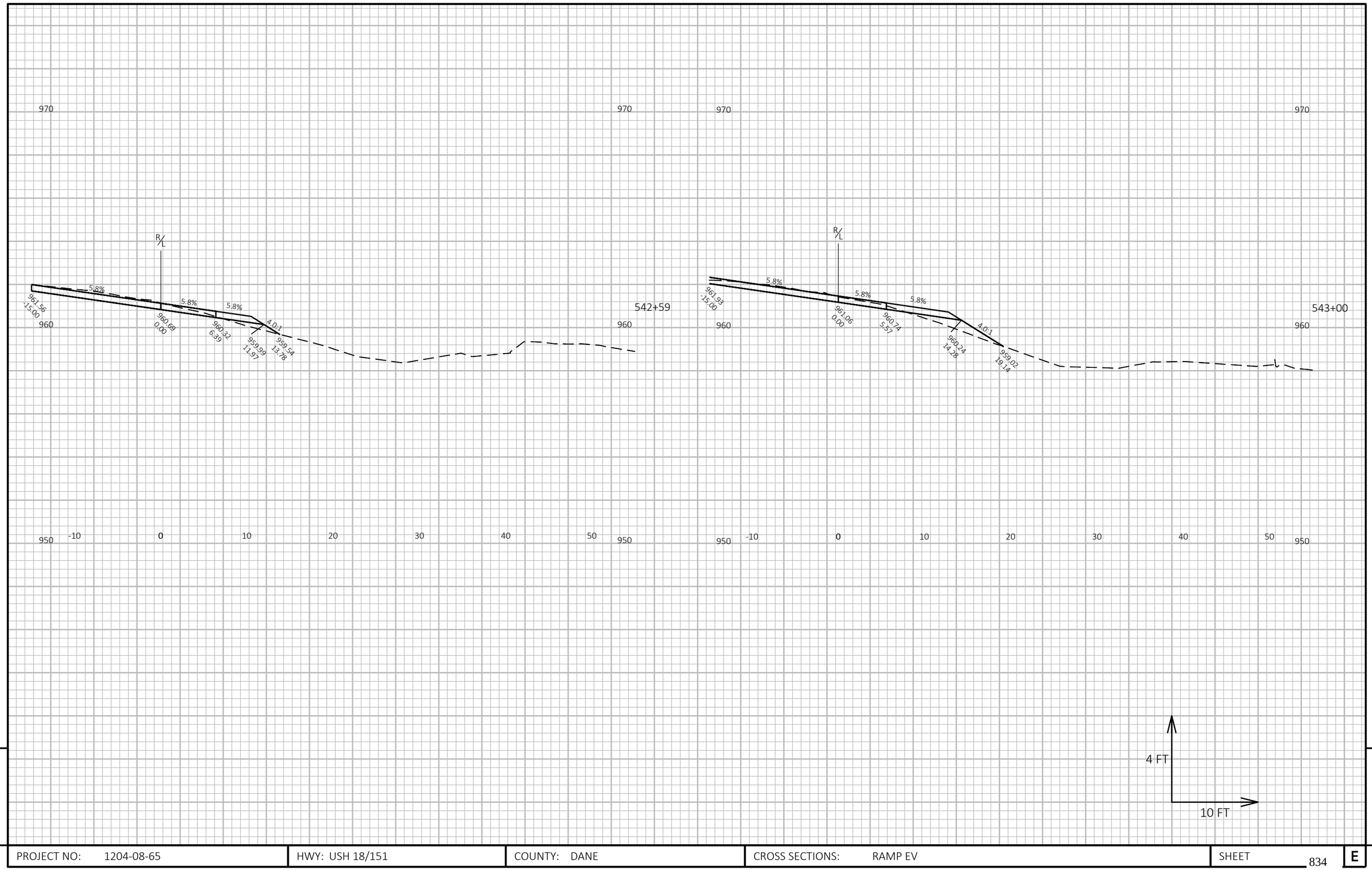

9

9

PROJECT NO: 1204-08-65	HWY: USH 18/151	COUNTY: DANE	CROSS SECTIONS: RAMP EV	SHEET 834	E

FILE NAME : G:\WDOTSW\20007-000 USH 18\CIVIL 3D\SHEETSPLAN\CROSS SECTIONS\090401-XS_RAMPS.DWG
LAYOUT NAME - Ramp-EV_1

PLOT DATE : 7/21/2022 12:06 AM PLOT BY : ERIC ANDRITSCH PLOT NAME : PLOT SCALE : 1 IN:10 FT HORZ. / 1 IN:4 FT VERT.

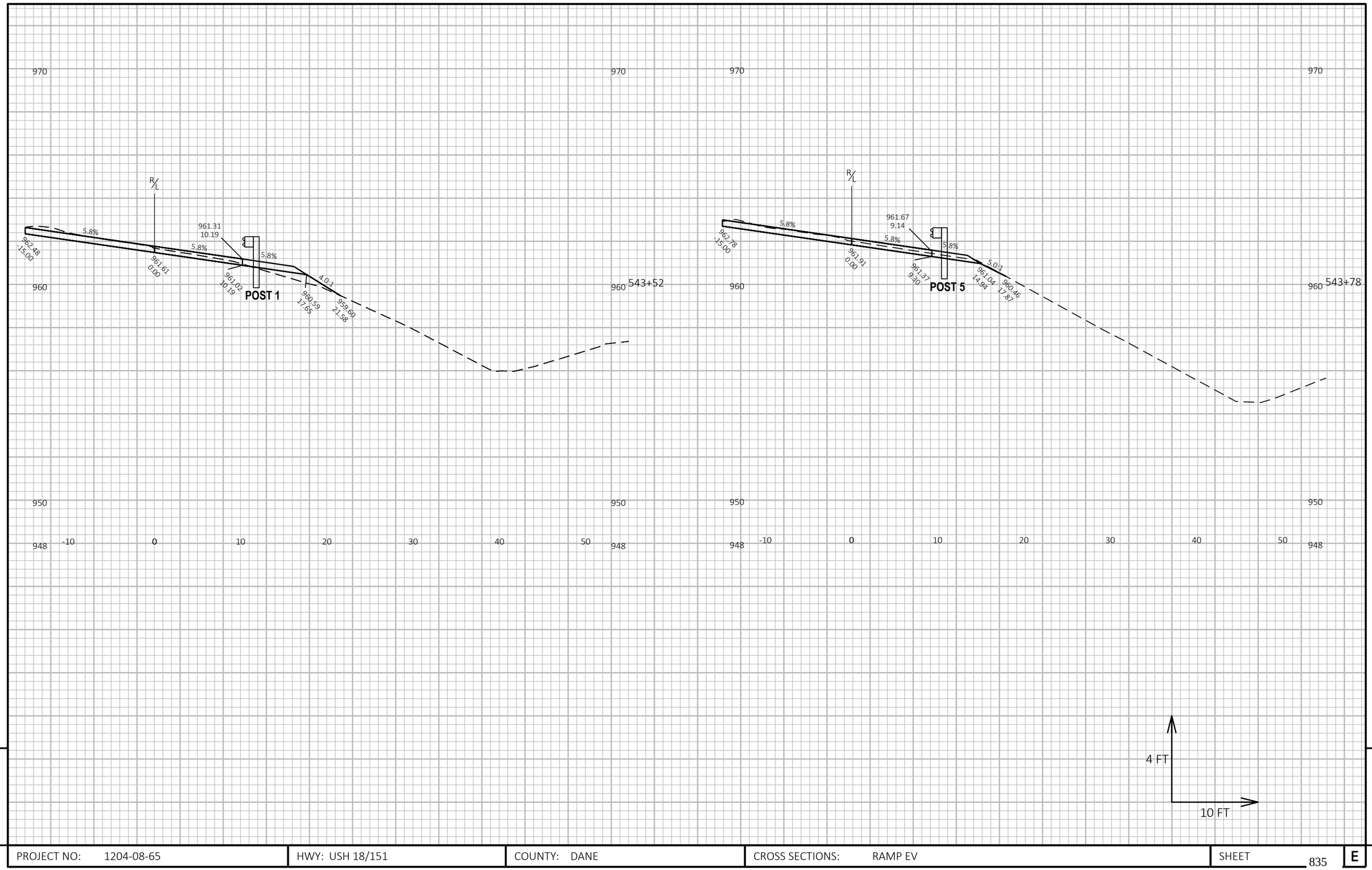

9

PROJECT NO: 1204-08-65	HWY: USH 18/151	COUNTY: DANE	CROSS SECTIONS: RAMP EV	SHEET 835	E

FILE NAME : G:\WDOTSW\20007-000 USH 18\CIVIL 3D\SHEETSPLAN\CROSS SECTIONS\090401-XS_RAMPS.DWG
LAYOUT NAME - Ramp-EV_2

PLOT DATE : 7/21/2022 12:06 AM PLOT BY : ERIC ANDRITSCH PLOT NAME : PLOT SCALE : 1 IN:10 FT HORZ. / 1 IN:4 FT VERT.

WISDOT/CADDS SHEET 49

9

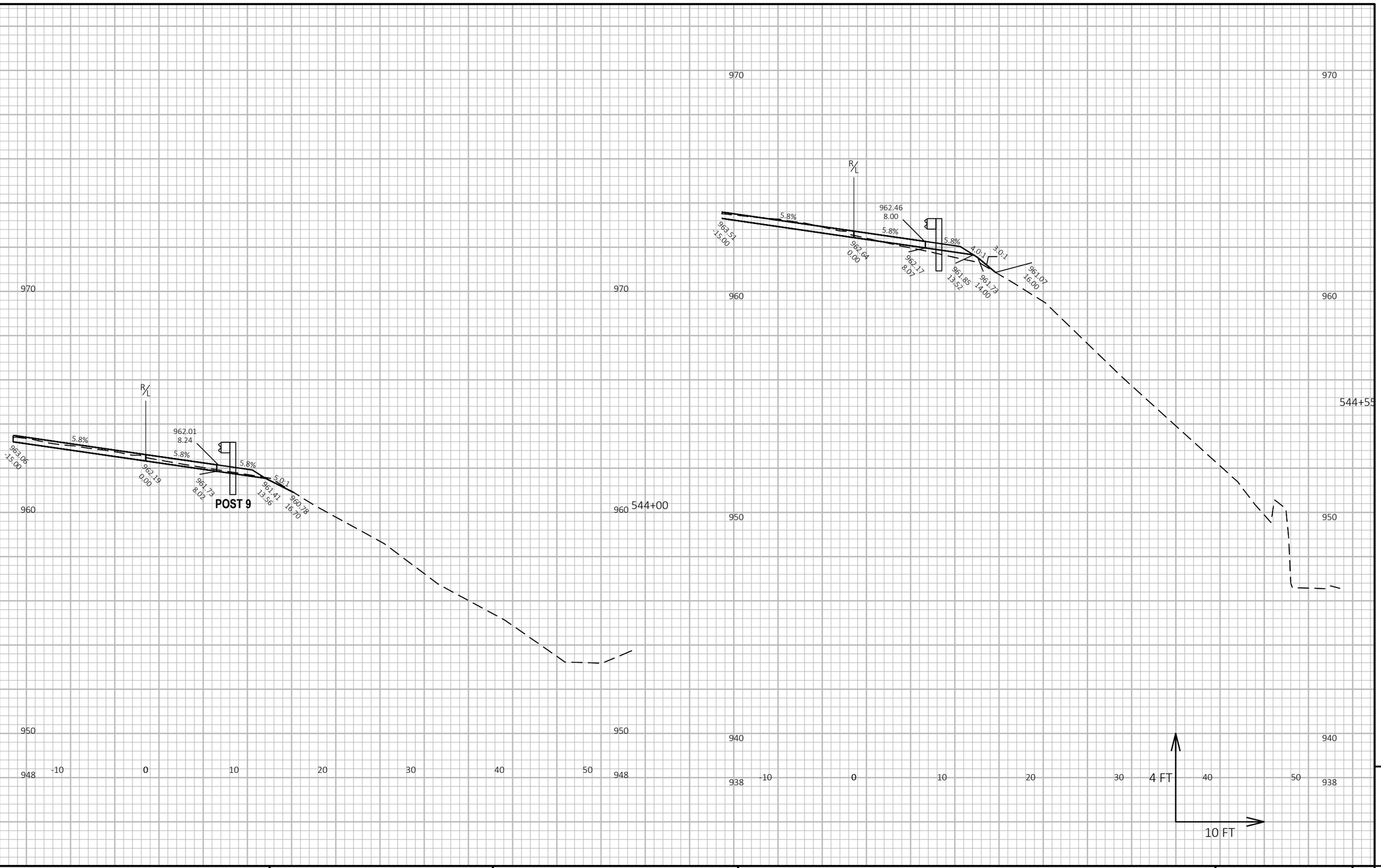

9

9

PROJECT NO: 1204-08-65	HWY: USH 18/151	COUNTY: DANE	CROSS SECTIONS: RAMP EV	SHEET 836	E

FILE NAME : G:\WDOTSW\20007-000 USH 18\CIVIL 3D\SHEETSPLAN\CROSS SECTIONS\090401-XS_RAMPS.DWG
LAYOUT NAME - Ramp-EV_3

PLOT DATE : 7/21/2022 12:06 AM PLOT BY : ERIC ANDRITSCH PLOT NAME : PLOT SCALE : 1 IN:10 FT HORZ. / 1 IN:4 FT VERT.

WISDOT/CADDS SHEET 49

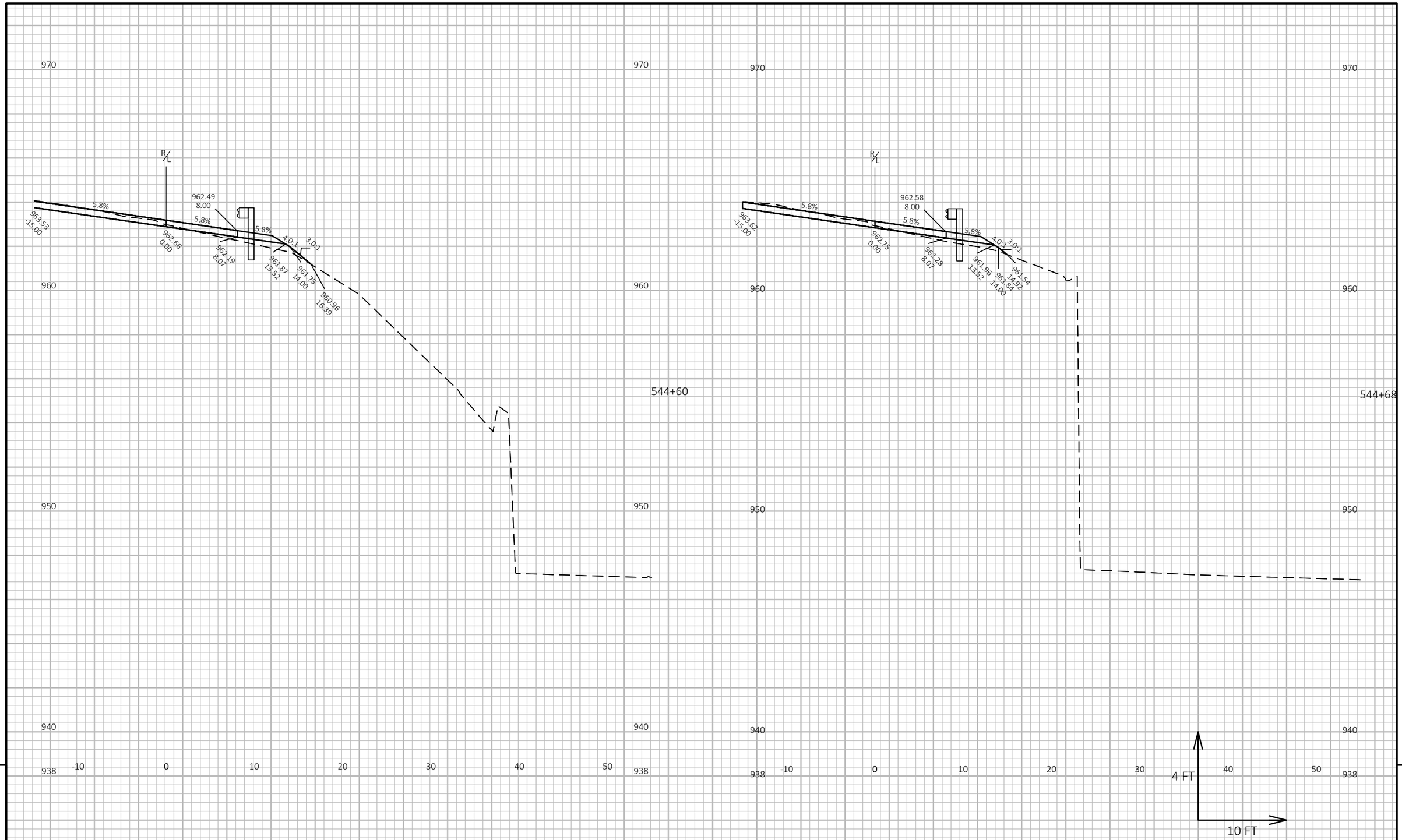

9

PROJECT NO: 1204-08-65	HWY: USH 18/151	COUNTY: DANE	CROSS SECTIONS: RAMP EV	SHEET 837	E

9

FILE NAME : G:\WDOTSW\20007-000 USH 18\CIVIL 3D\SHEETSPLAN\CROSS SECTIONS\090401-XS_RAMPS.DWG
LAYOUT NAME - Ramp-EV_4

PLOT DATE : 7/21/2022 12:06 AM PLOT BY : ERIC ANDRITSCH PLOT NAME : PLOT SCALE : 1 IN:10 FT HORZ. / 1 IN:4 FT VERT.

WISDOT/CADDS SHEET 49

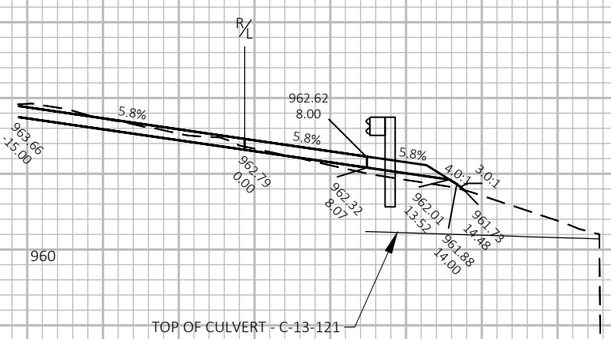

544+71

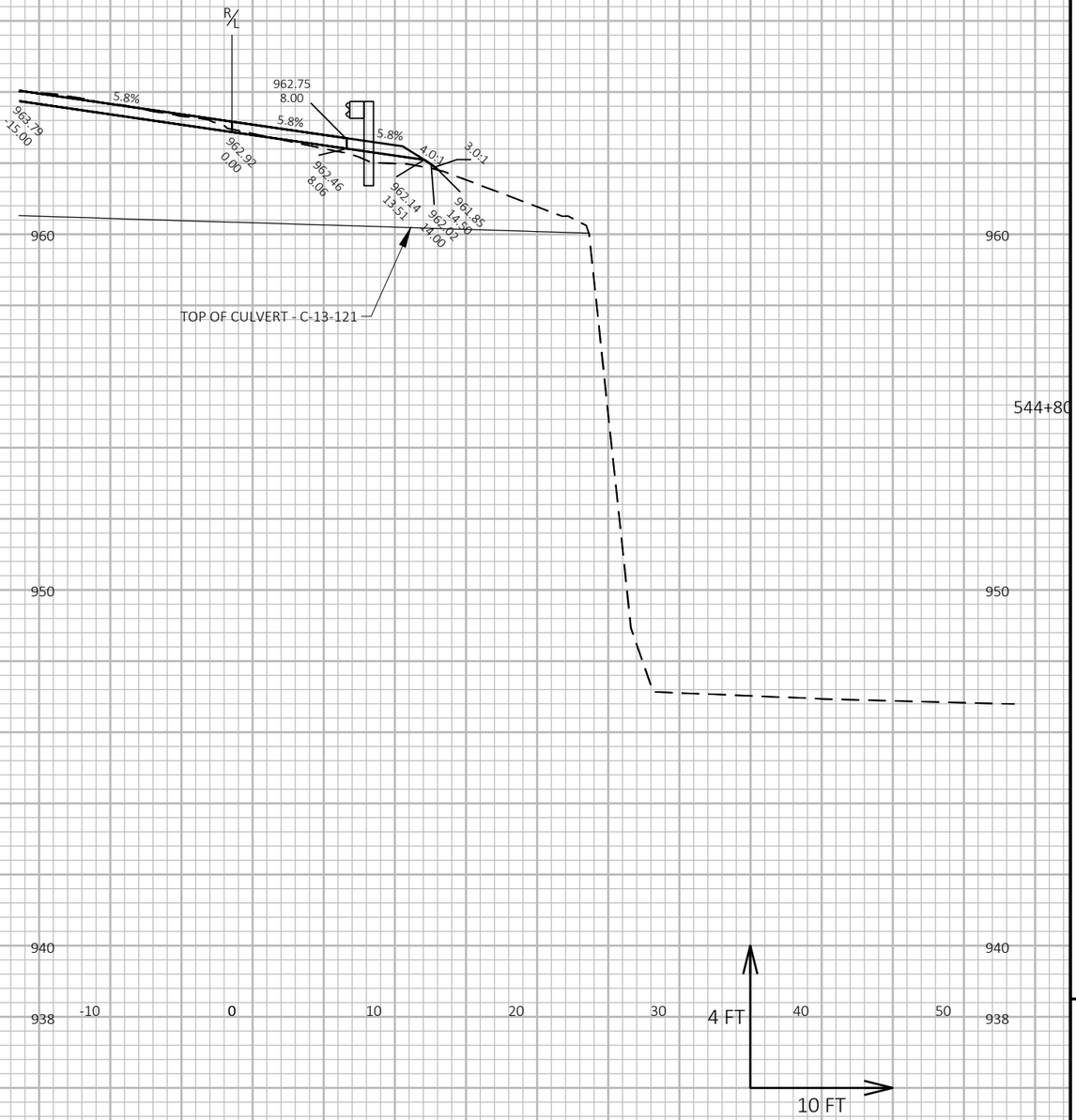

544+80

9

9

PROJECT NO: 1204-08-65	HWY: USH 18/151	COUNTY: DANE	CROSS SECTIONS: RAMP EV	SHEET 838	E

FILE NAME : G:\WDOTSW\20007-000 USH 18\CIVIL 3D\SHEETSPLAN\CROSS SECTIONS\090401-XS_RAMPS.DWG
LAYOUT NAME - Ramp-EV_5

PLOT DATE : 7/21/2022 12:06 AM PLOT BY : ERIC ANDRITSCH PLOT NAME : PLOT SCALE : 1 IN:10 FT HORZ. / 1 IN:4 FT VERT.

WISDOT/CADDS SHEET 49

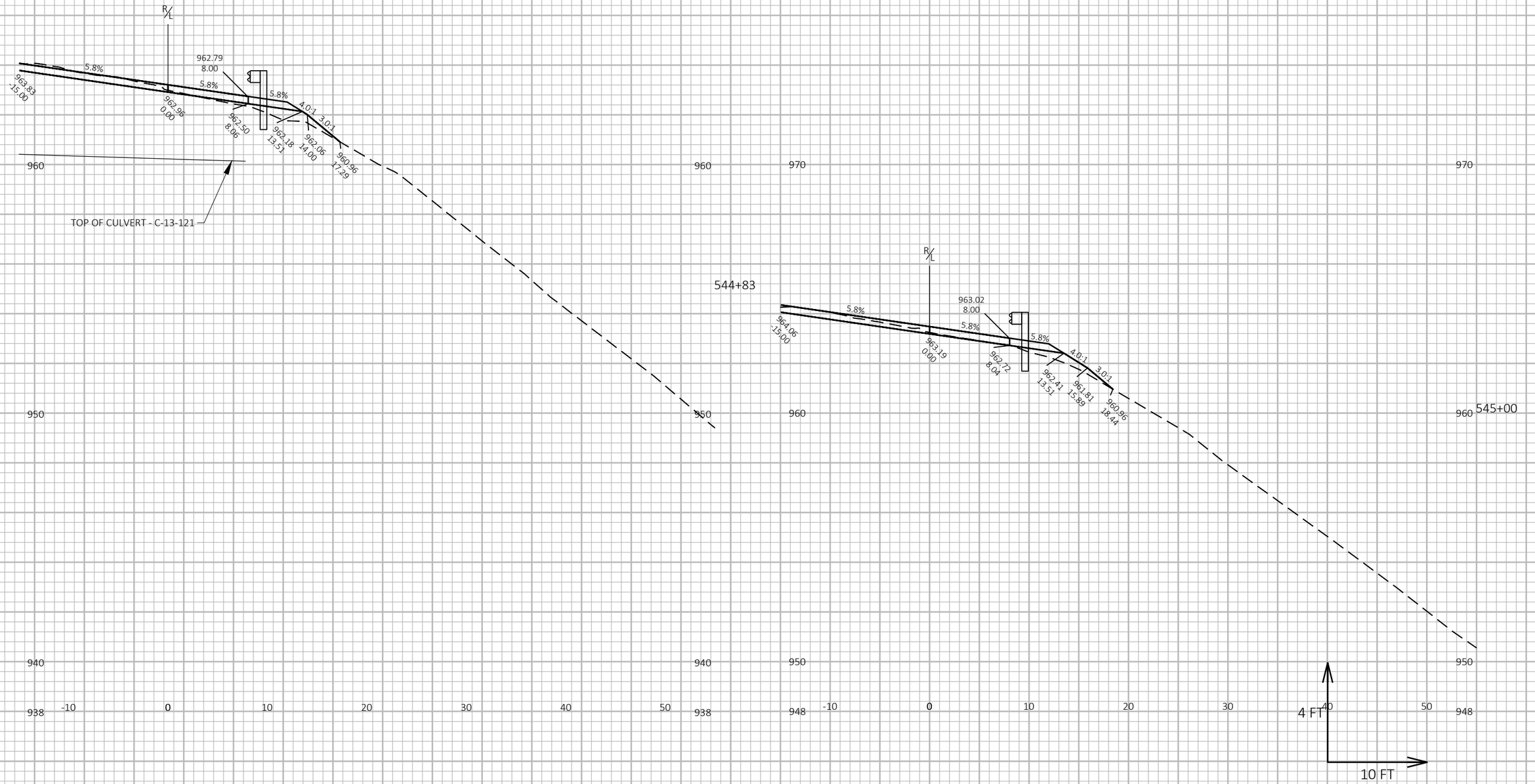

PROJECT NO: 1204-08-65	HWY: USH 18/151	COUNTY: DANE	CROSS SECTIONS: RAMP EV	SHEET 839	E

FILE NAME : G:\WDOTSW\20007-000 USH 18\CIVIL 3D\SHEETSPLAN\CROSS SECTIONS\090401-XS_RAMPS.DWG
LAYOUT NAME - Ramp-EV_6

PLOT DATE : 7/21/2022 12:06 AM PLOT BY : ERIC ANDRITSCH PLOT NAME : PLOT SCALE : 1 IN:10 FT HORZ. / 1 IN:4 FT VERT.

WISDOT/CADDS SHEET 49

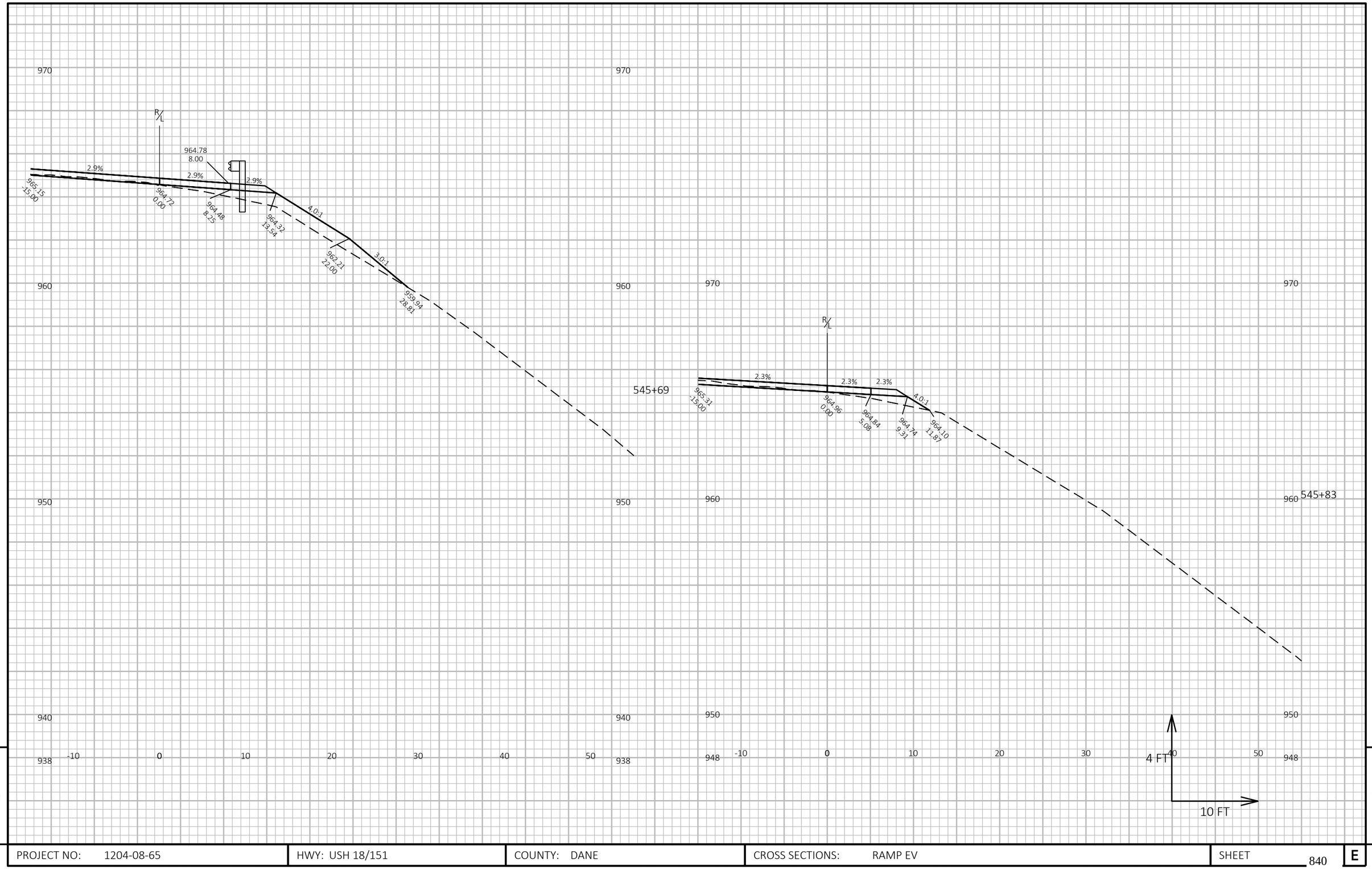

PROJECT NO: 1204-08-65	HWY: USH 18/151	COUNTY: DANE	CROSS SECTIONS: RAMP EV	SHEET 840	E

FILE NAME : G:\WDOTSW\20007-000 USH 18\CIVIL 3D\SHEETSPLAN\CROSS SECTIONS\090401-XS_RAMPS.DWG
LAYOUT NAME - Ramp-EV_7

PLOT DATE : 7/21/2022 12:06 AM PLOT BY : ERIC ANDRITSCH PLOT NAME : PLOT SCALE : 1 IN:10 FT HORZ. / 1 IN:4 FT VERT.

WISDOT/CADDS SHEET 49

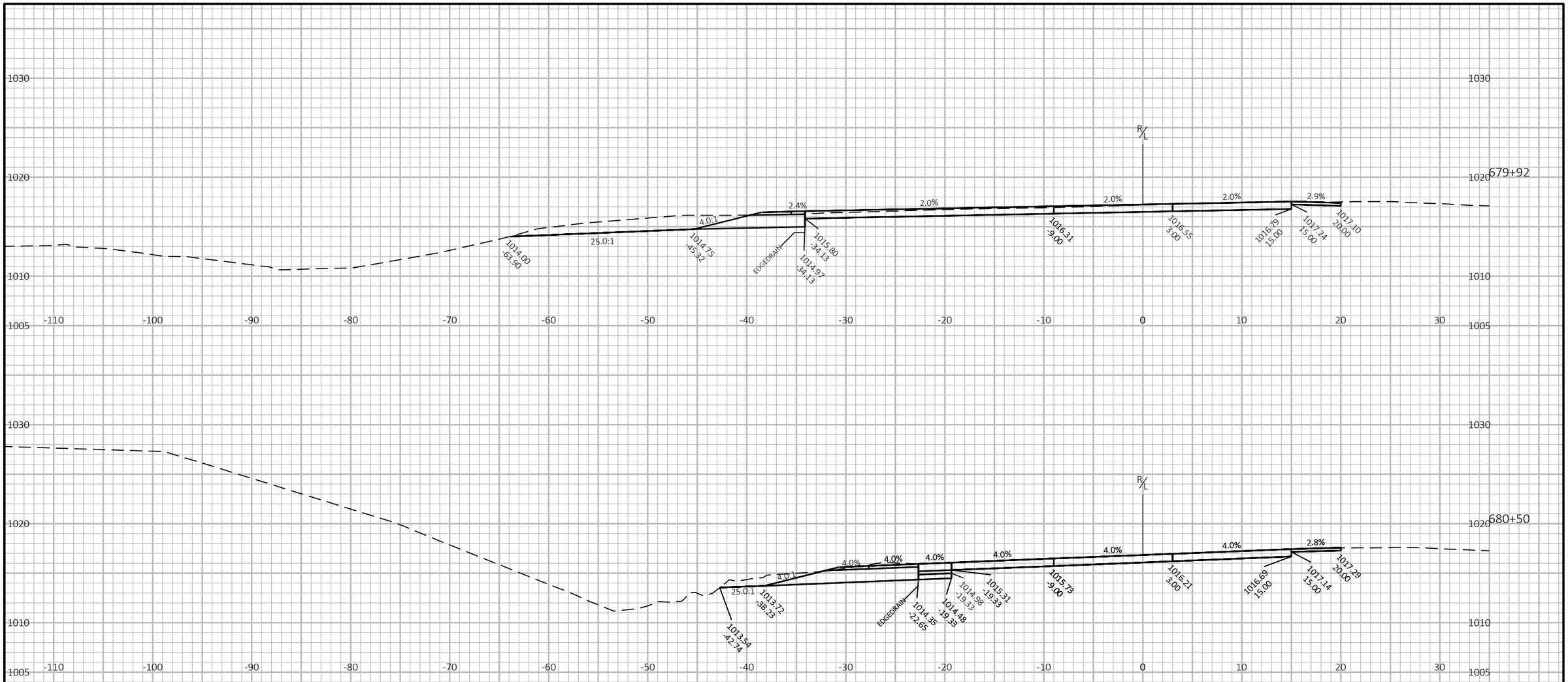

PROJECT NO: 1204-08-65	HWY: USH 18/151	COUNTY: DANE	CROSS SECTIONS: RAMP PA	SHEET 841	E

FILE NAME : G:\WDOTSW\20007-000 USH 18\CIVIL 3D\SHEETSPLAN\CROSS SECTIONS\090401-XS_RAMPS.DWG
LAYOUT NAME - PA_1

PLOT DATE : 7/21/2022 12:06 AM PLOT BY : ERIC ANDRITSCH PLOT NAME : PLOT SCALE : 1 IN:10 FT HORZ. / 1 IN:4 FT VERT.

WISDOT/CADDS SHEET 49

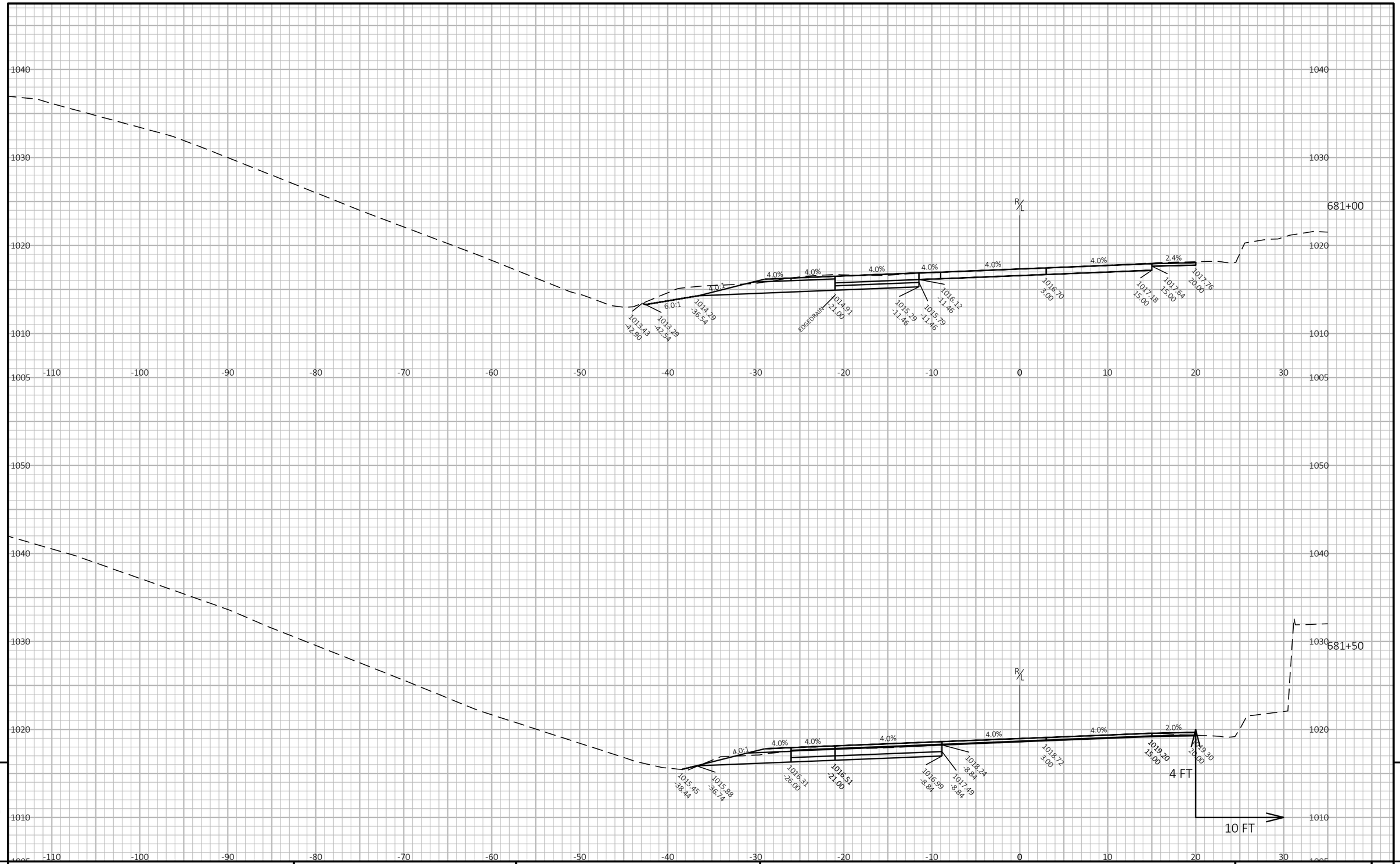

PROJECT NO: 1204-08-65	HWY: USH 18/151	COUNTY: DANE	CROSS SECTIONS: RAMP PA	SHEET 842	E

FILE NAME : G:\WDOTSW\20007-000 USH 18\CIVIL 3D\SHEETSPLAN\CROSS SECTIONS\090401-XS_RAMPS.DWG
LAYOUT NAME - PA_2

PLOT DATE : 7/21/2022 12:06 AM PLOT BY : ERIC ANDRITSCH PLOT NAME : PLOT SCALE : 1 IN:10 FT HORZ. / 1 IN:4 FT VERT.

WISDOT/CADDS SHEET 49

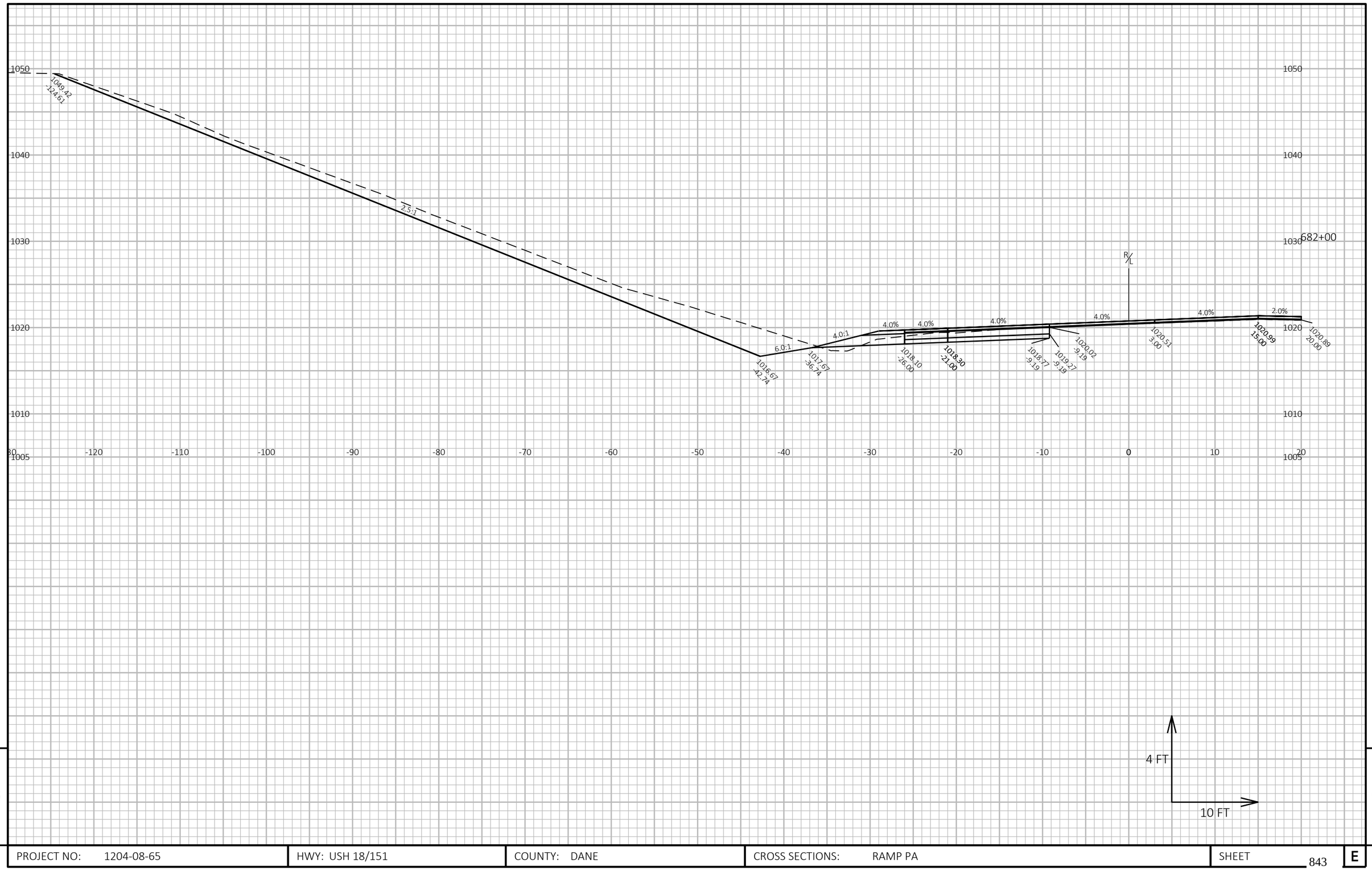

9

9

PROJECT NO: 1204-08-65	HWY: USH 18/151	COUNTY: DANE	CROSS SECTIONS: RAMP PA	SHEET 843	E

FILE NAME : G:\WDOTSW\20007-000 USH 18\CIVIL 3D\SHEETSPLAN\CROSS SECTIONS\090401-XS_RAMPS.DWG
LAYOUT NAME - PA_3

PLOT DATE : 7/21/2022 12:06 AM PLOT BY : ERIC ANDRITSCH PLOT NAME : PLOT SCALE : 1 IN:10 FT HORZ. / 1 IN:4 FT VERT.

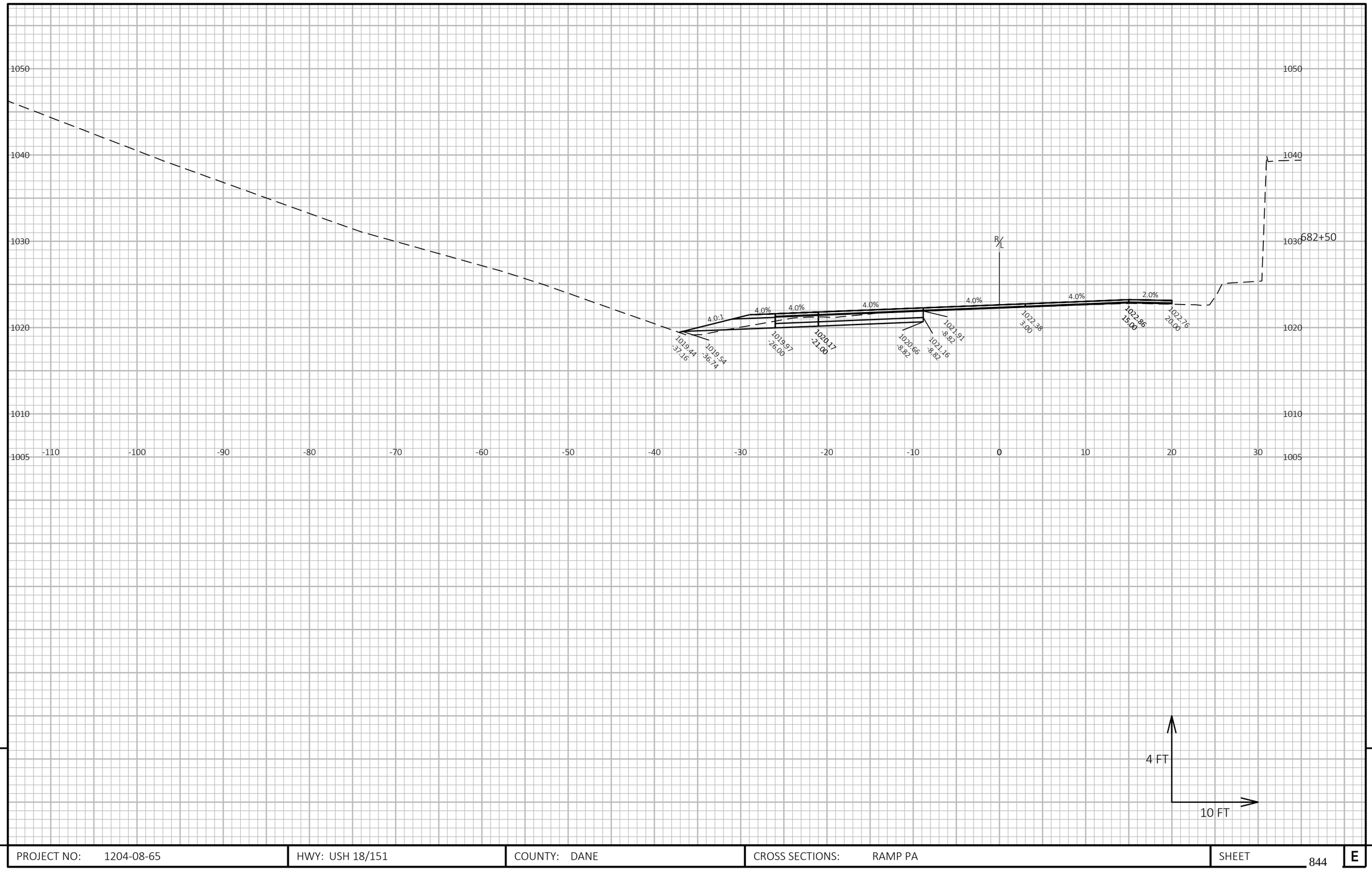

9

9

PROJECT NO: 1204-08-65	HWY: USH 18/151	COUNTY: DANE	CROSS SECTIONS: RAMP PA	SHEET 844	E

FILE NAME : G:\WDOTSW\20007-000 USH 18\CIVIL 3D\SHEETSPLAN\CROSS SECTIONS\090401-XS_RAMPS.DWG
LAYOUT NAME - PA_4

PLOT DATE : 7/21/2022 12:06 AM PLOT BY : ERIC ANDRITSCH PLOT NAME : PLOT SCALE : 1 IN:10 FT HORZ. / 1 IN:4 FT VERT.

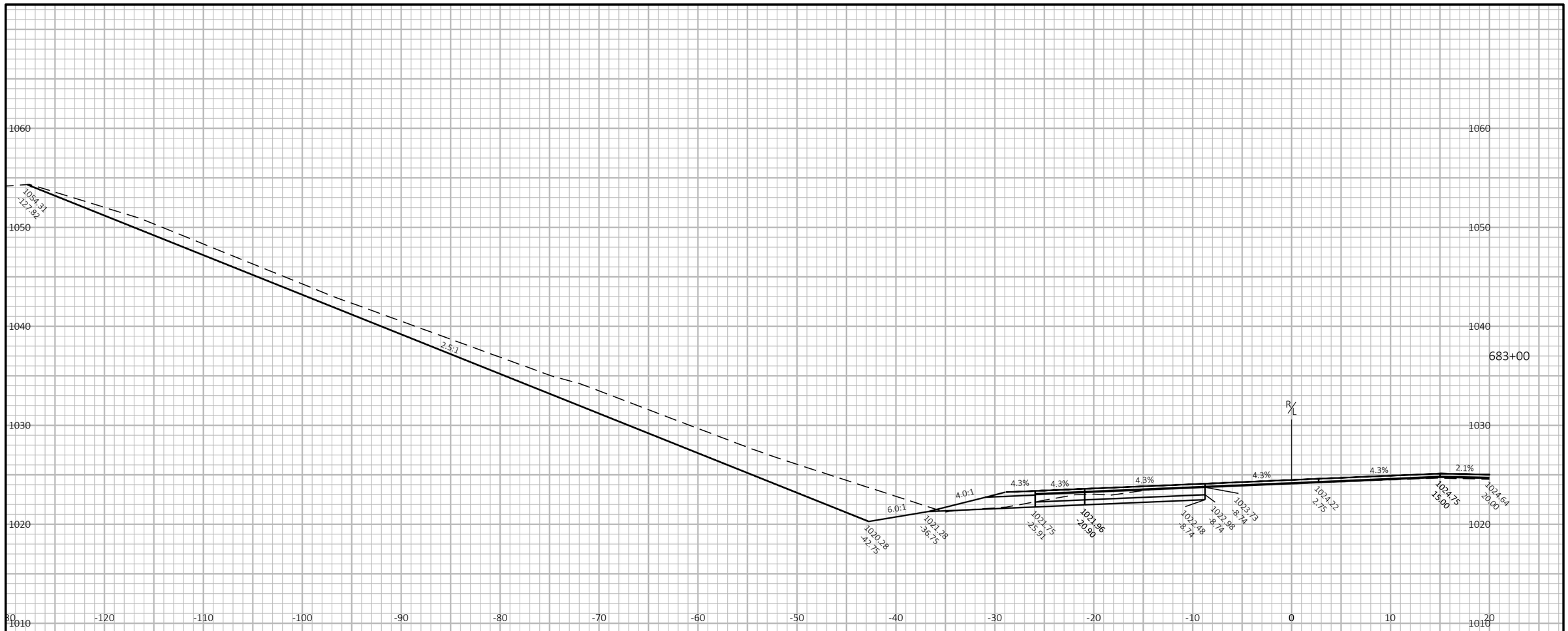

9

9

PROJECT NO: 1204-08-65	HWY: USH 18/151	COUNTY: DANE	CROSS SECTIONS: RAMP PA	SHEET 845	E

FILE NAME : G:\WDOTSW\20007-000 USH 18\CIVIL 3D\SHEETSPLAN\CROSS SECTIONS\090401-XS_RAMPS.DWG
LAYOUT NAME - PA_5

PLOT DATE : 7/21/2022 12:06 AM PLOT BY : ERIC ANDRITSCH PLOT NAME : PLOT SCALE : 1 IN:10 FT HORZ. / 1 IN:4 FT VERT.

WISDOT/CADDS SHEET 49

683+50

1055.60
-128.31

2.5:1

1021.64
-43.99

5.4:1

1022.87
-36.70

4.0:1

4.6%

1024.38
-25.73

4.6%

1023.61
-20.73

4.6%

1024.16
-8.75

4.6%

1024.66
-8.75

1025.41
-8.75

4.6%

R/L

1025.82
0.32

4.6%

3.0%

1026.50
15.00

1026.35
20.00

4 FT

10 FT

PROJECT NO: 1204-08-65	HWY: USH 18/151	COUNTY: DANE	CROSS SECTIONS: RAMP PA	SHEET 846	E

FILE NAME : G:\WDOTSW\20007-000 USH 18\CIVIL 3D\SHEETSPLAN\CROSS SECTIONS\090401-XS_RAMPS.DWG
LAYOUT NAME - PA_6

PLOT DATE : 7/21/2022 12:06 AM PLOT BY : ERIC ANDRITSCH PLOT NAME : PLOT SCALE : 1 IN:10 FT HORZ. / 1 IN:4 FT VERT.

WISDOT/CADDS SHEET 49

683+75

1054.22
-122.95

2.5:1

1022.37
-43.32

6.0:1

1023.67
-36.42

3.9:1

4.6%

1024.17
-25.45

4.6%

1024.40
-20.45

4.6%

1024.94
-8.76

4.6%

1026.19
-8.76

R/L

1026.59
0.01

4.6%

3.2%

1027.28
15.00

1027.12
20.00

4 FT

10 FT

PROJECT NO: 1204-08-65	HWY: USH 18/151	COUNTY: DANE	CROSS SECTIONS: RAMP PA	SHEET 847 E

FILE NAME : G:\WDOTSW\20007-000 USH 18\CIVIL 3D\SHEETSPLAN\CROSS SECTIONS\090401-XS_RAMPS.DWG
LAYOUT NAME - PA_7

PLOT DATE : 7/21/2022 12:06 AM PLOT BY : ERIC ANDRITSCH PLOT NAME : PLOT SCALE : 1 IN:10 FT HORZ. / 1 IN:4 FT VERT.

WISDOT/CADDS SHEET 49

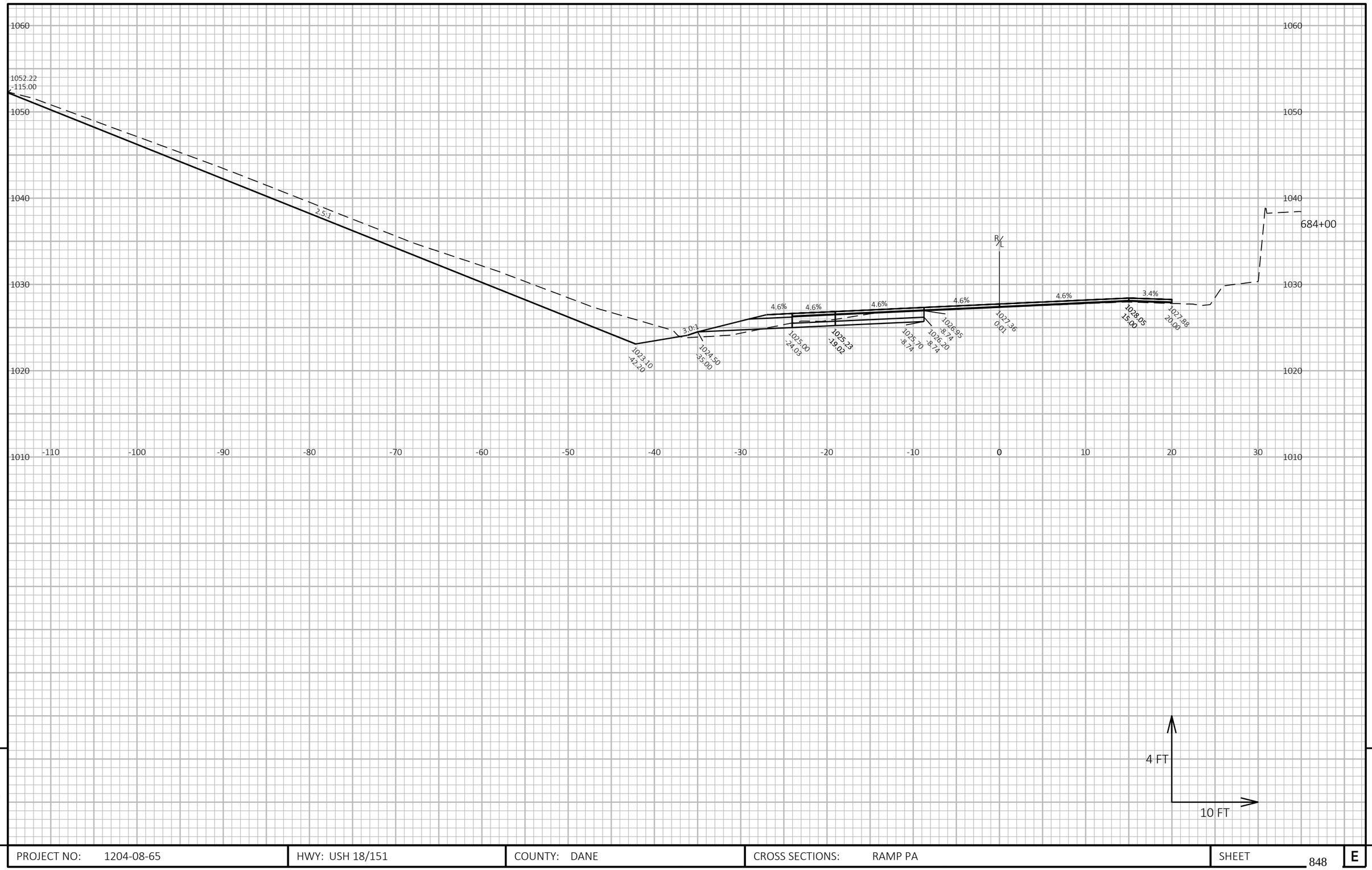

9

9

PROJECT NO: 1204-08-65	HWY: USH 18/151	COUNTY: DANE	CROSS SECTIONS: RAMP PA	SHEET 848	E

FILE NAME : G:\WDOTSW\20007-000 USH 18\CIVIL 3D\SHEETSPLAN\CROSS SECTIONS\090401-XS_RAMPS.DWG
LAYOUT NAME - PA_8

PLOT DATE : 7/21/2022 12:06 AM PLOT BY : ERIC ANDRITSCH PLOT NAME : PLOT SCALE : 1 IN:10 FT HORZ. / 1 IN:4 FT VERT.

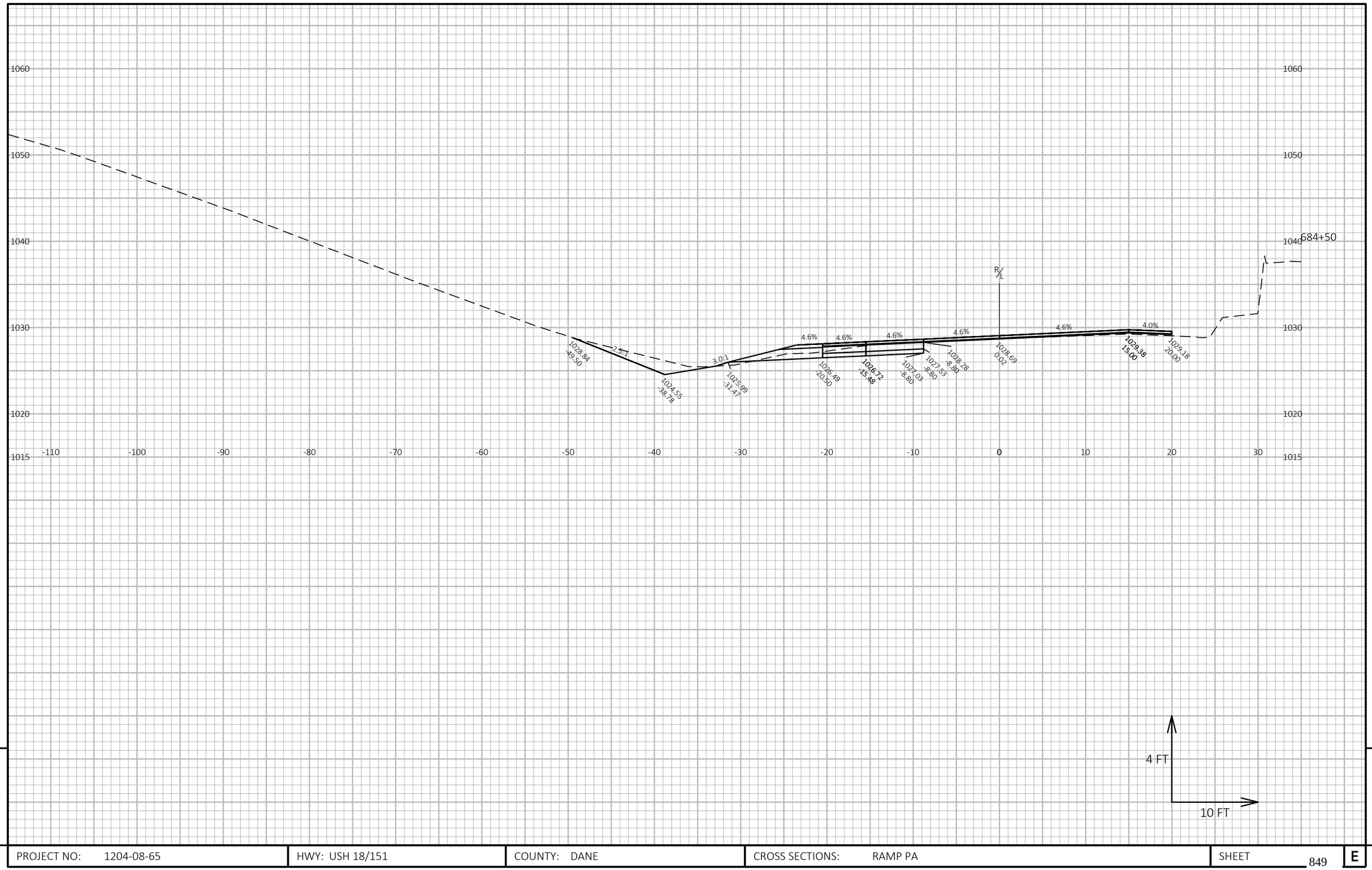

9

9

PROJECT NO: 1204-08-65	HWY: USH 18/151	COUNTY: DANE	CROSS SECTIONS: RAMP PA	SHEET 849	E

FILE NAME : G:\WDOTSW\20007-000 USH 18\CIVIL 3D\SHEETSPLAN\CROSS SECTIONS\090401-XS_RAMPS.DWG
LAYOUT NAME - PA_9

PLOT DATE : 7/21/2022 12:07 AM PLOT BY : ERIC ANDRITSCH PLOT NAME : PLOT SCALE : 1 IN:10 FT HORZ. / 1 IN:4 FT VERT.

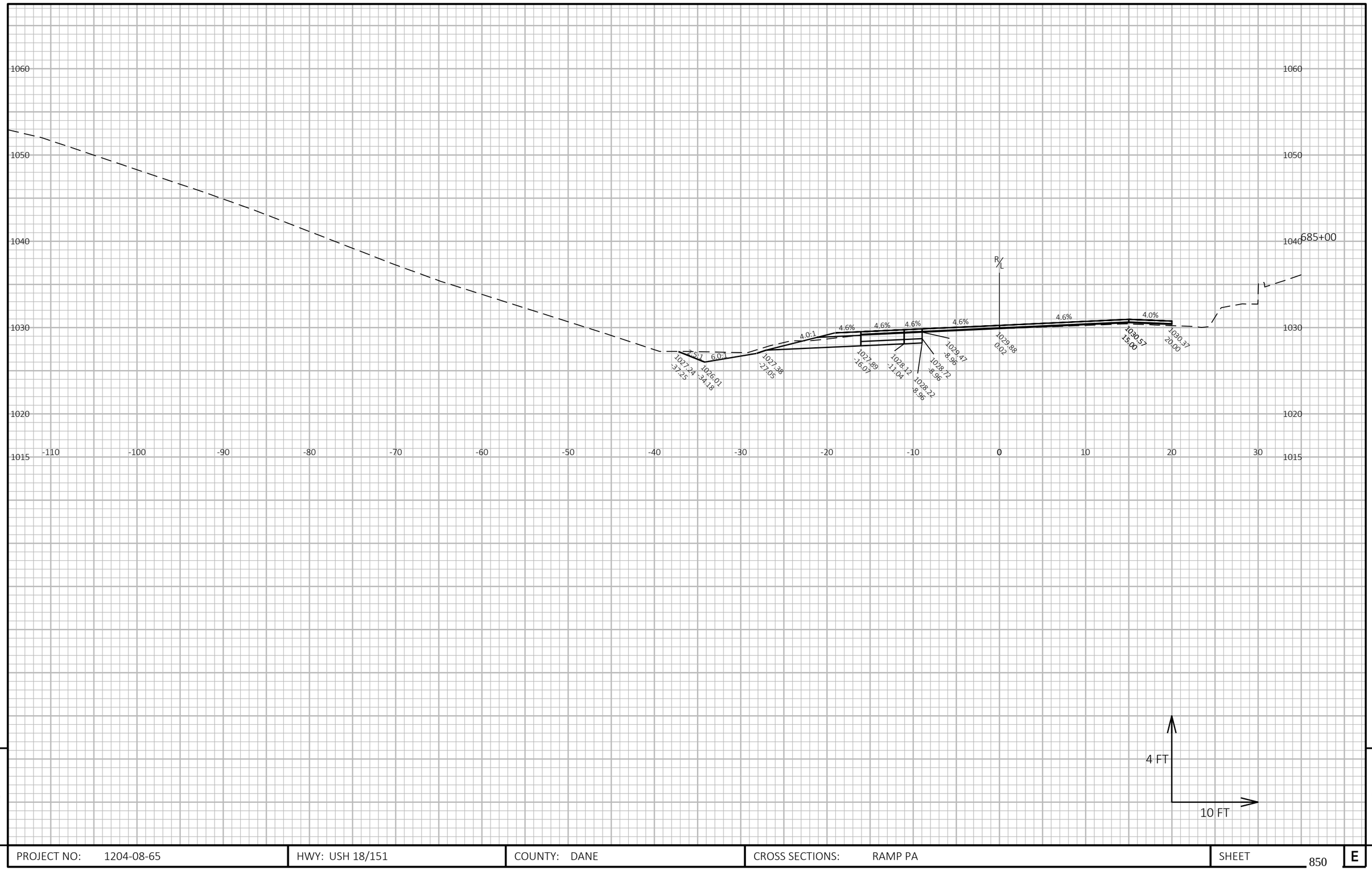

9

9

PROJECT NO: 1204-08-65	HWY: USH 18/151	COUNTY: DANE	CROSS SECTIONS: RAMP PA	SHEET 850	E

FILE NAME : G:\WDOTSW\20007-000 USH 18\CIVIL 3D\SHEETSPLAN\CROSS SECTIONS\090401-XS_RAMPS.DWG
LAYOUT NAME - PA_10

PLOT DATE : 7/21/2022 12:07 AM PLOT BY : ERIC ANDRITSCH PLOT NAME : PLOT SCALE : 1 IN:10 FT HORZ. / 1 IN:4 FT VERT.

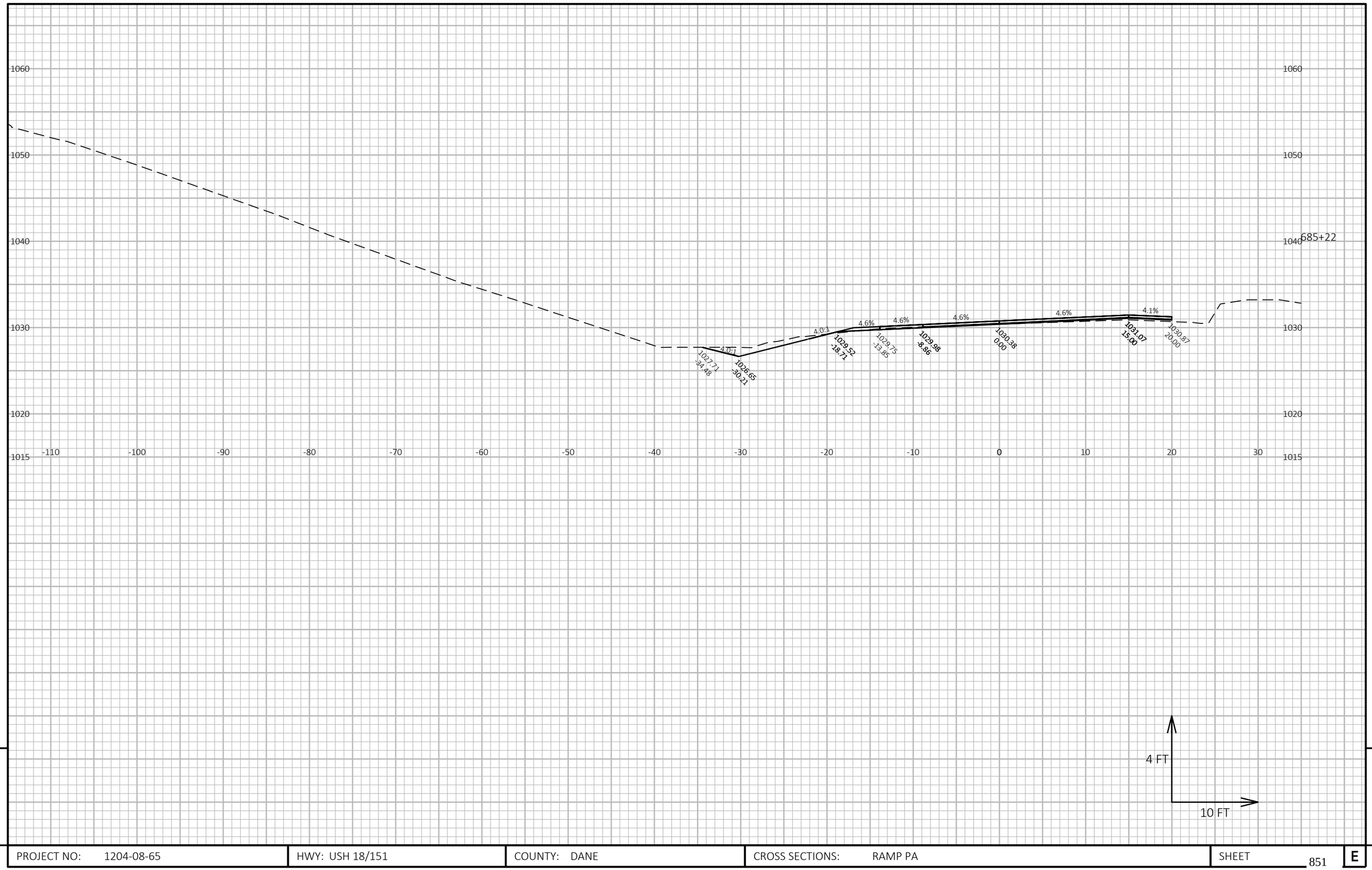

9

9

PROJECT NO: 1204-08-65	HWY: USH 18/151	COUNTY: DANE	CROSS SECTIONS: RAMP PA	SHEET 851	E

FILE NAME : G:\WDOTSW\20007-000 USH 18\CIVIL 3D\SHEETSPLAN\CROSS SECTIONS\090401-XS_RAMPS.DWG
LAYOUT NAME - PA_11

PLOT DATE : 7/21/2022 12:07 AM PLOT BY : ERIC ANDRITSCH PLOT NAME : PLOT SCALE : 1 IN:10 FT HORZ. / 1 IN:4 FT VERT.

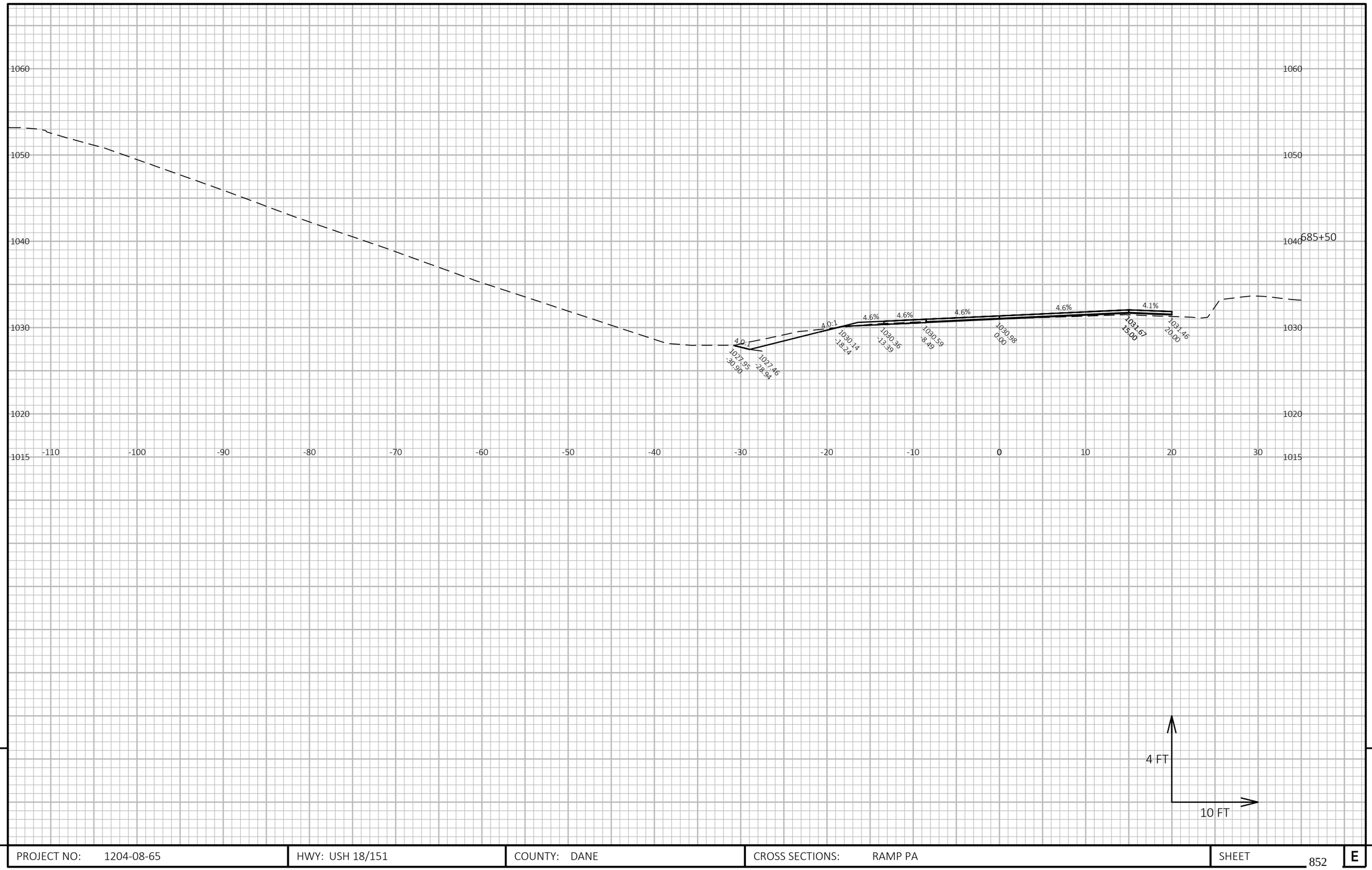

9

9

PROJECT NO: 1204-08-65	HWY: USH 18/151	COUNTY: DANE	CROSS SECTIONS: RAMP PA	SHEET 852	E

FILE NAME : G:\WDOTSW\20007-000 USH 18\CIVIL 3D\SHEETSPLAN\CROSS SECTIONS\090401-XS_RAMPS.DWG
LAYOUT NAME - PA_12

PLOT DATE : 7/21/2022 12:07 AM PLOT BY : ERIC ANDRITSCH PLOT NAME : PLOT SCALE : 1 IN:10 FT HORZ. / 1 IN:4 FT VERT.

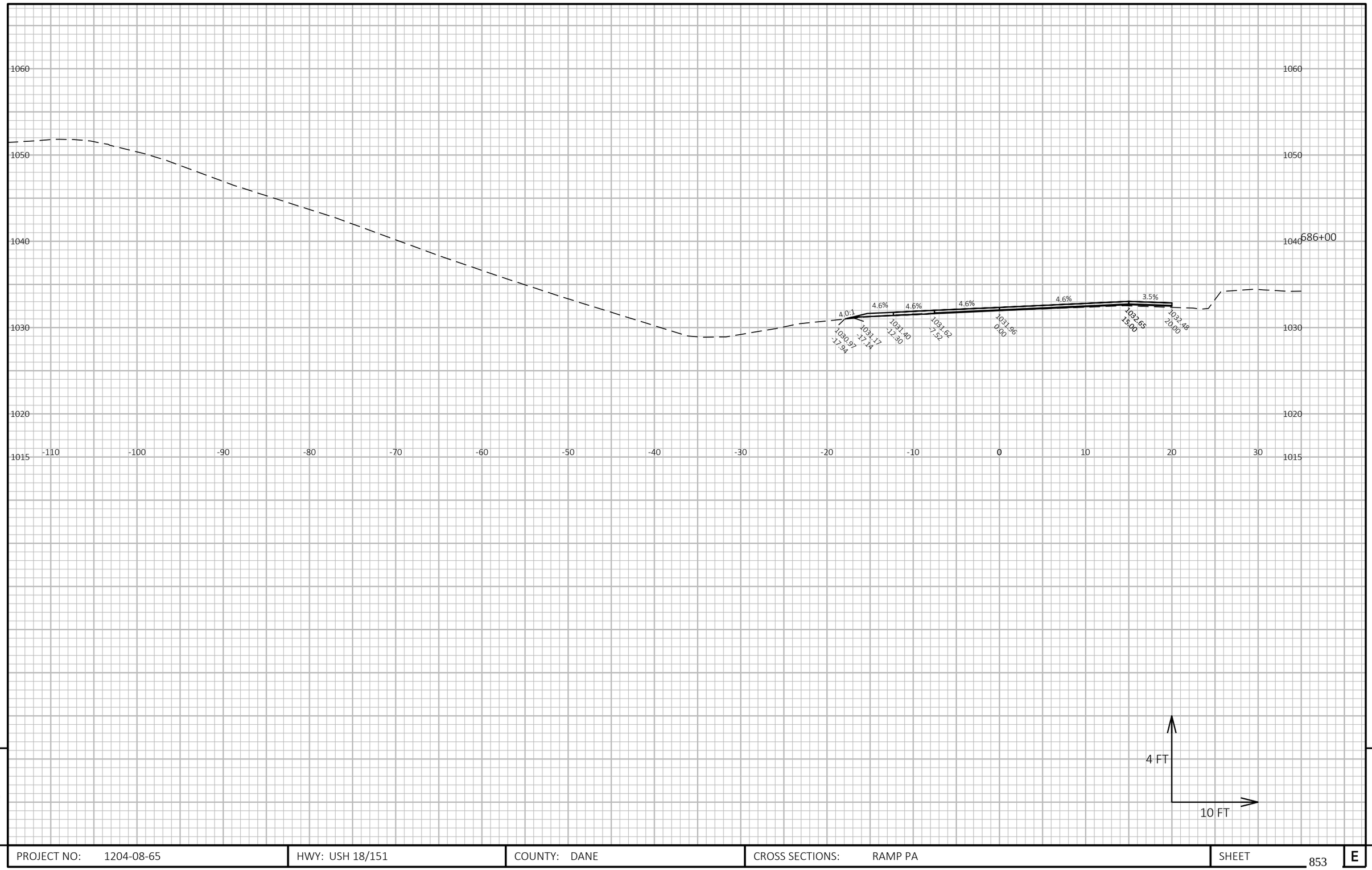

9

9

PROJECT NO: 1204-08-65	HWY: USH 18/151	COUNTY: DANE	CROSS SECTIONS: RAMP PA	SHEET 853	E

FILE NAME : G:\WDOTSW\20007-000 USH 18\CIVIL 3D\SHEETSPLAN\CROSS SECTIONS\090401-XS_RAMPS.DWG
LAYOUT NAME - PA_13

PLOT DATE : 7/21/2022 12:07 AM PLOT BY : ERIC ANDRITSCH PLOT NAME : PLOT SCALE : 1 IN:10 FT HORZ. / 1 IN:4 FT VERT.

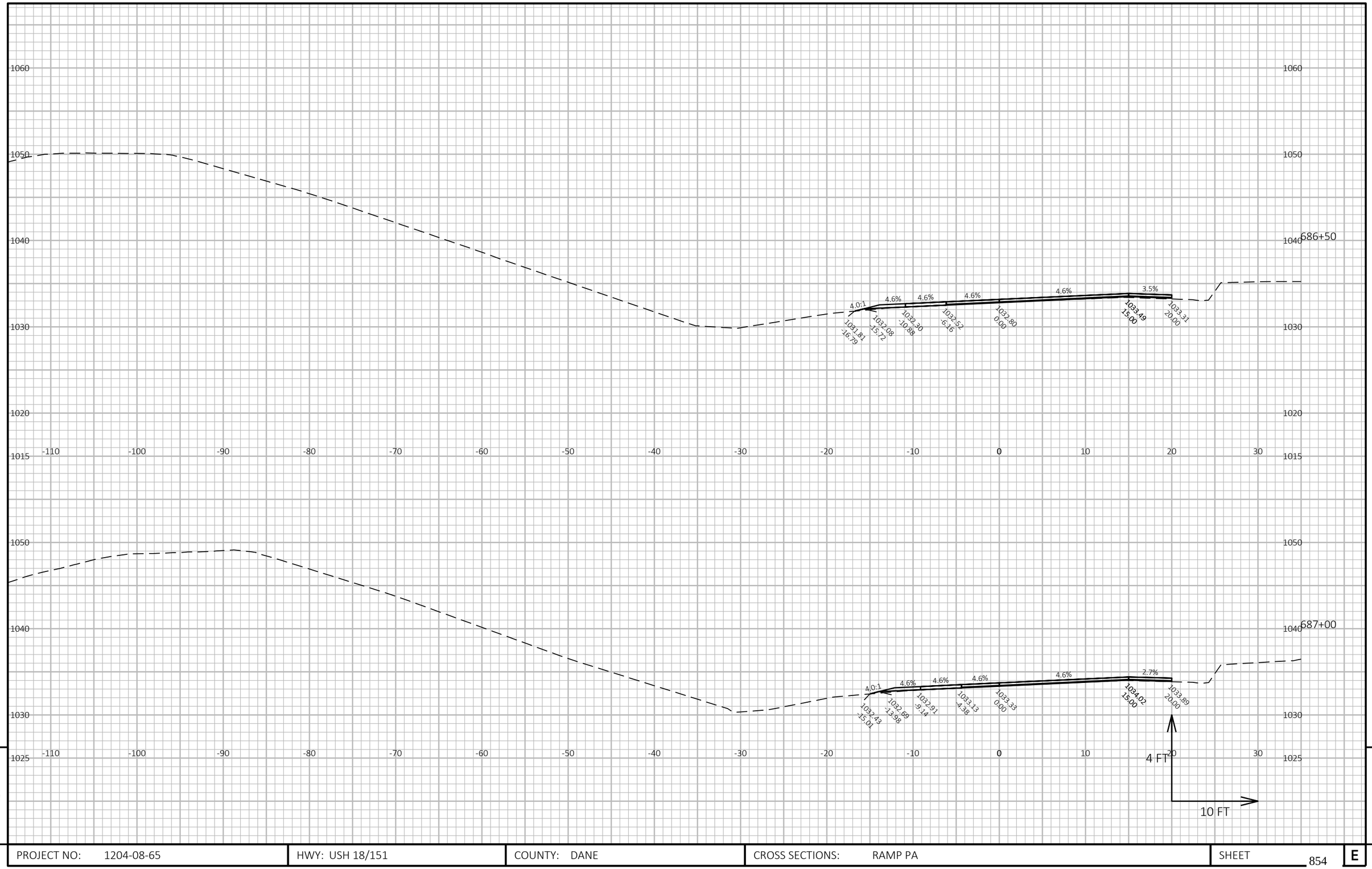

PROJECT NO: 1204-08-65	HWY: USH 18/151	COUNTY: DANE	CROSS SECTIONS: RAMP PA	SHEET 854	E

FILE NAME : G:\WDOTSW\20007-000 USH 18\CIVIL 3D\SHEETSPLAN\CROSS SECTIONS\090401-XS_RAMPS.DWG
LAYOUT NAME - PA_14

PLOT DATE : 7/21/2022 12:07 AM PLOT BY : ERIC ANDRITSCH PLOT NAME : PLOT SCALE : 1 IN:10 FT HORZ. / 1 IN:4 FT VERT.

WISDOT/CADDS SHEET 49

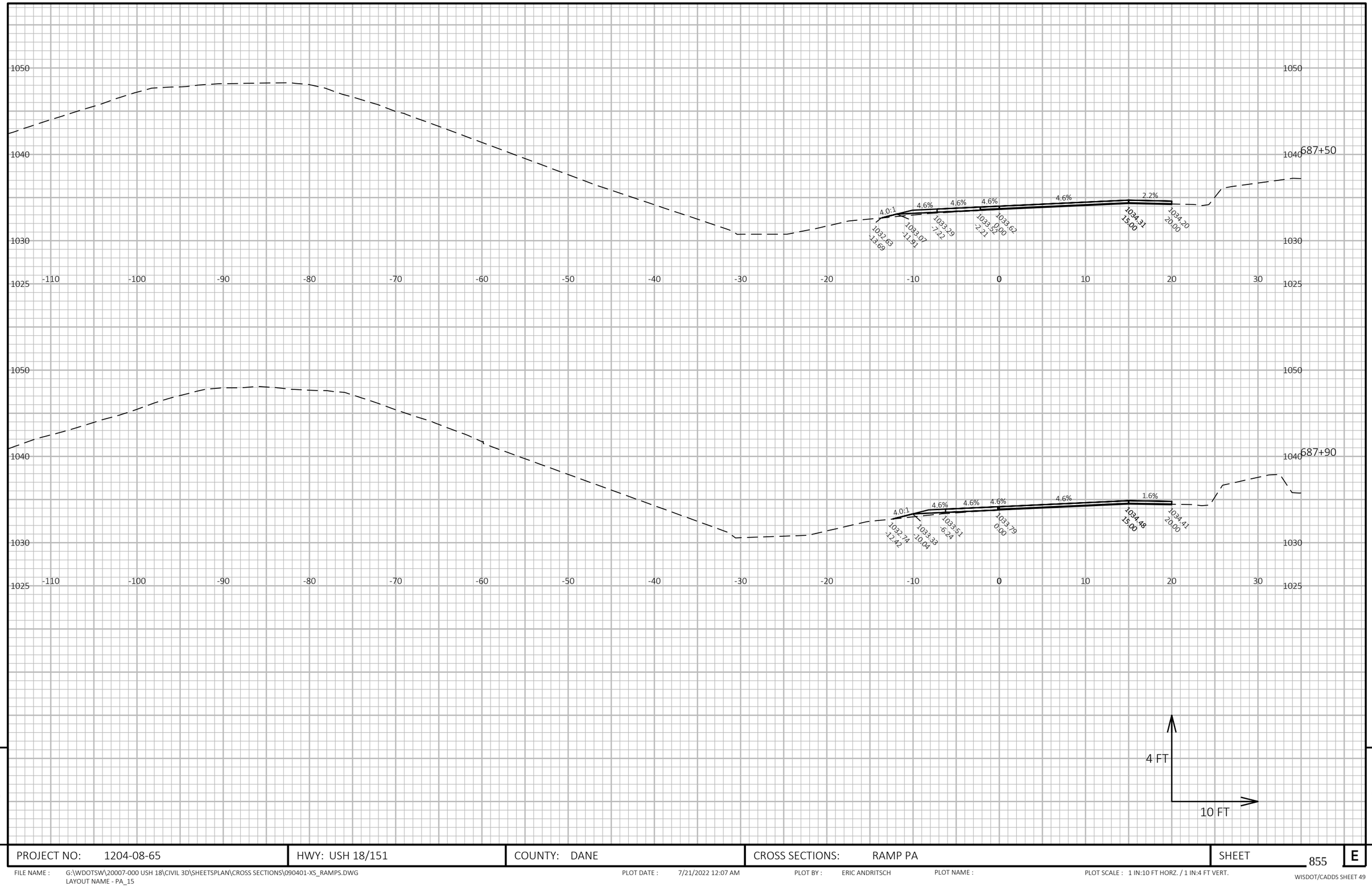

PROJECT NO: 1204-08-65	HWY: USH 18/151	COUNTY: DANE	CROSS SECTIONS: RAMP PA	SHEET 855 E

FILE NAME : G:\WDOTSW\20007-000 USH 18\CIVIL 3D\SHEETSPLAN\CROSS SECTIONS\090401-XS_RAMPS.DWG
LAYOUT NAME - PA_15

PLOT DATE : 7/21/2022 12:07 AM PLOT BY : ERIC ANDRITSCH PLOT NAME : PLOT SCALE : 1 IN:10 FT HORZ. / 1 IN:4 FT VERT.

WISDOT/CADDS SHEET 49

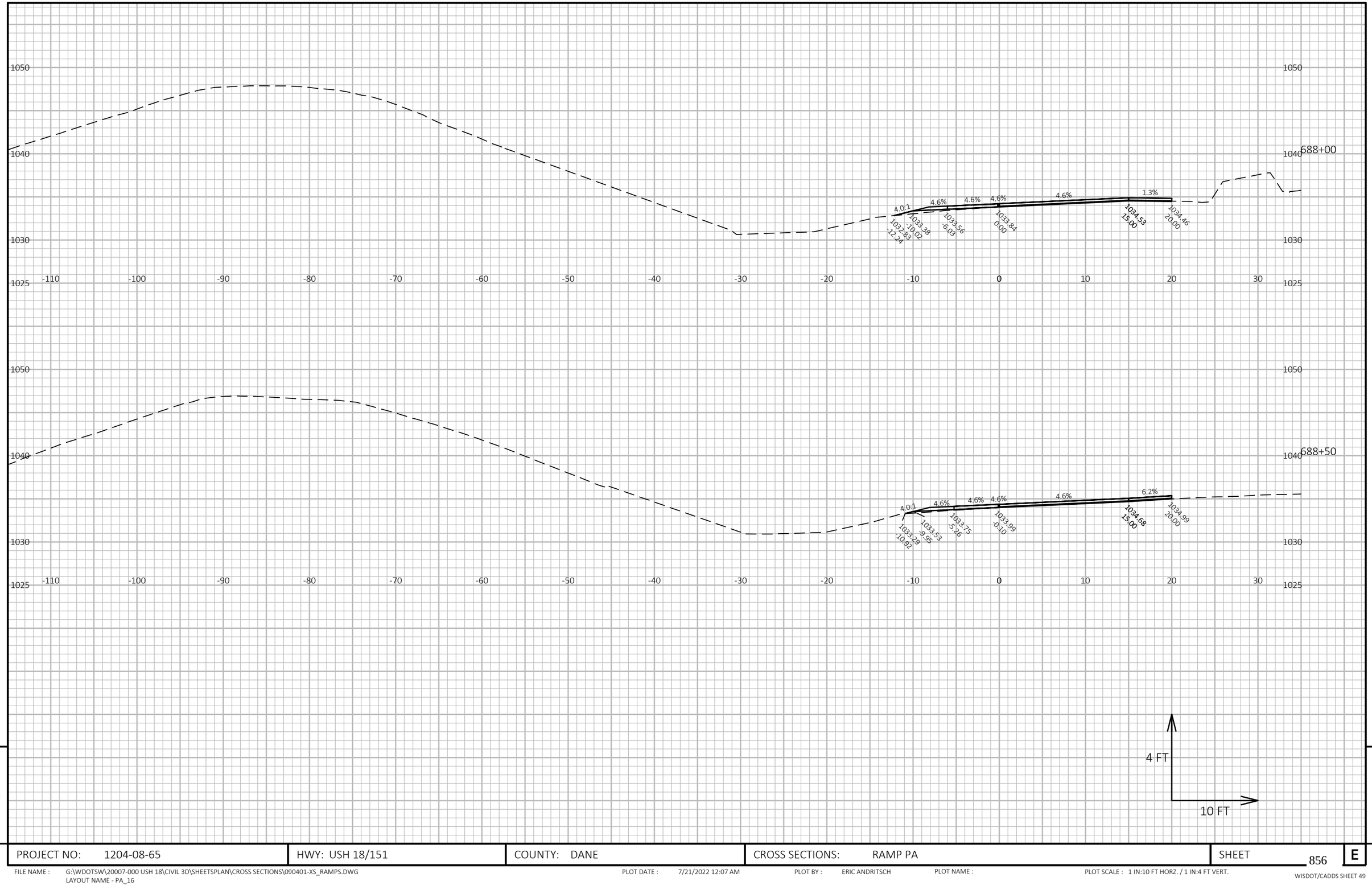

9

9

PROJECT NO: 1204-08-65	HWY: USH 18/151	COUNTY: DANE	CROSS SECTIONS: RAMP PA	SHEET 856	E

FILE NAME : G:\WDOTSW\20007-000 USH 18\CIVIL 3D\SHEETSPLAN\CROSS SECTIONS\090401-XS_RAMPS.DWG
LAYOUT NAME - PA_16

PLOT DATE : 7/21/2022 12:07 AM PLOT BY : ERIC ANDRITSCH PLOT NAME : PLOT SCALE : 1 IN:10 FT HORZ. / 1 IN:4 FT VERT.

WISDOT/CADDS SHEET 49

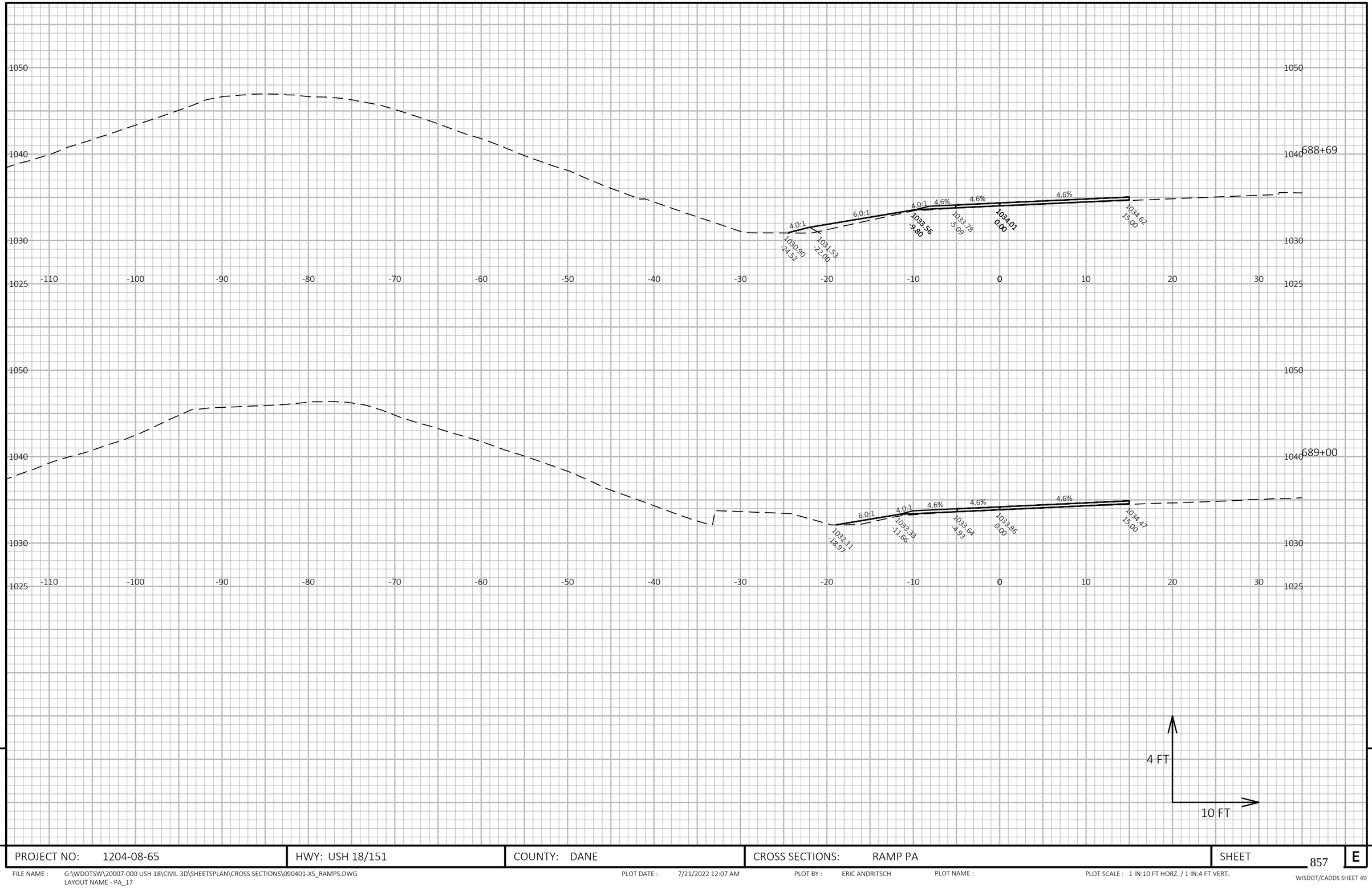

9

9

PROJECT NO: 1204-08-65	HWY: USH 18/151	COUNTY: DANE	CROSS SECTIONS: RAMP PA	SHEET 857	E

FILE NAME : G:\WDOTSW\20007-000 USH 18\CIVIL 3D\SHEETSPLAN\CROSS SECTIONS\090401-XS_RAMPS.DWG
LAYOUT NAME - PA_17

PLOT DATE : 7/21/2022 12:07 AM PLOT BY : ERIC ANDRITSCH PLOT NAME : PLOT SCALE : 1 IN:10 FT HORZ. / 1 IN:4 FT VERT.

WISDOT/CADDS SHEET 49

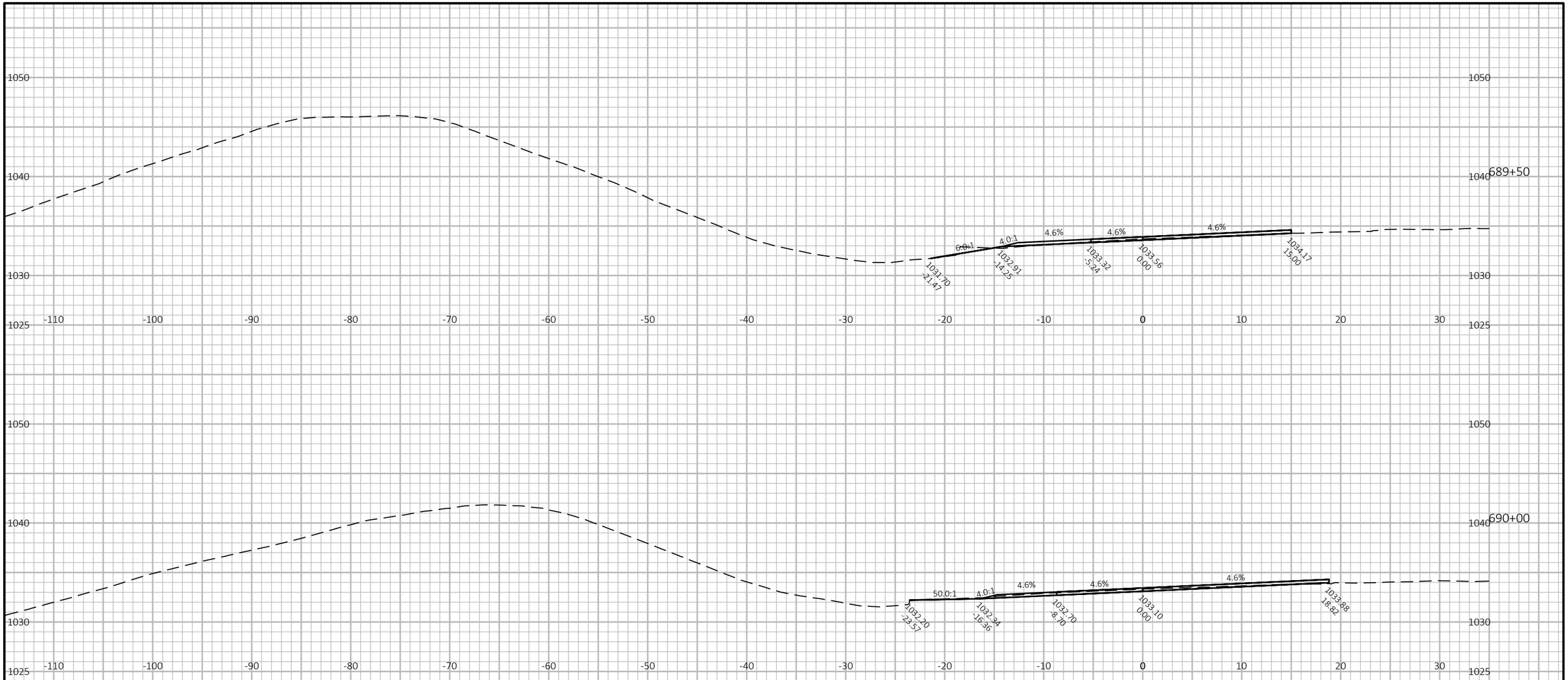

9

9

PROJECT NO: 1204-08-65	HWY: USH 18/151	COUNTY: DANE	CROSS SECTIONS: RAMP PA	SHEET 858	E

FILE NAME : G:\WDOTSW\20007-000 USH 18\CIVIL 3D\SHEETSPLAN\CROSS SECTIONS\090401-XS_RAMPS.DWG
LAYOUT NAME - PA_18

PLOT DATE : 7/21/2022 12:07 AM PLOT BY : ERIC ANDRITSCH PLOT NAME : PLOT SCALE : 1 IN:10 FT HORZ. / 1 IN:4 FT VERT.

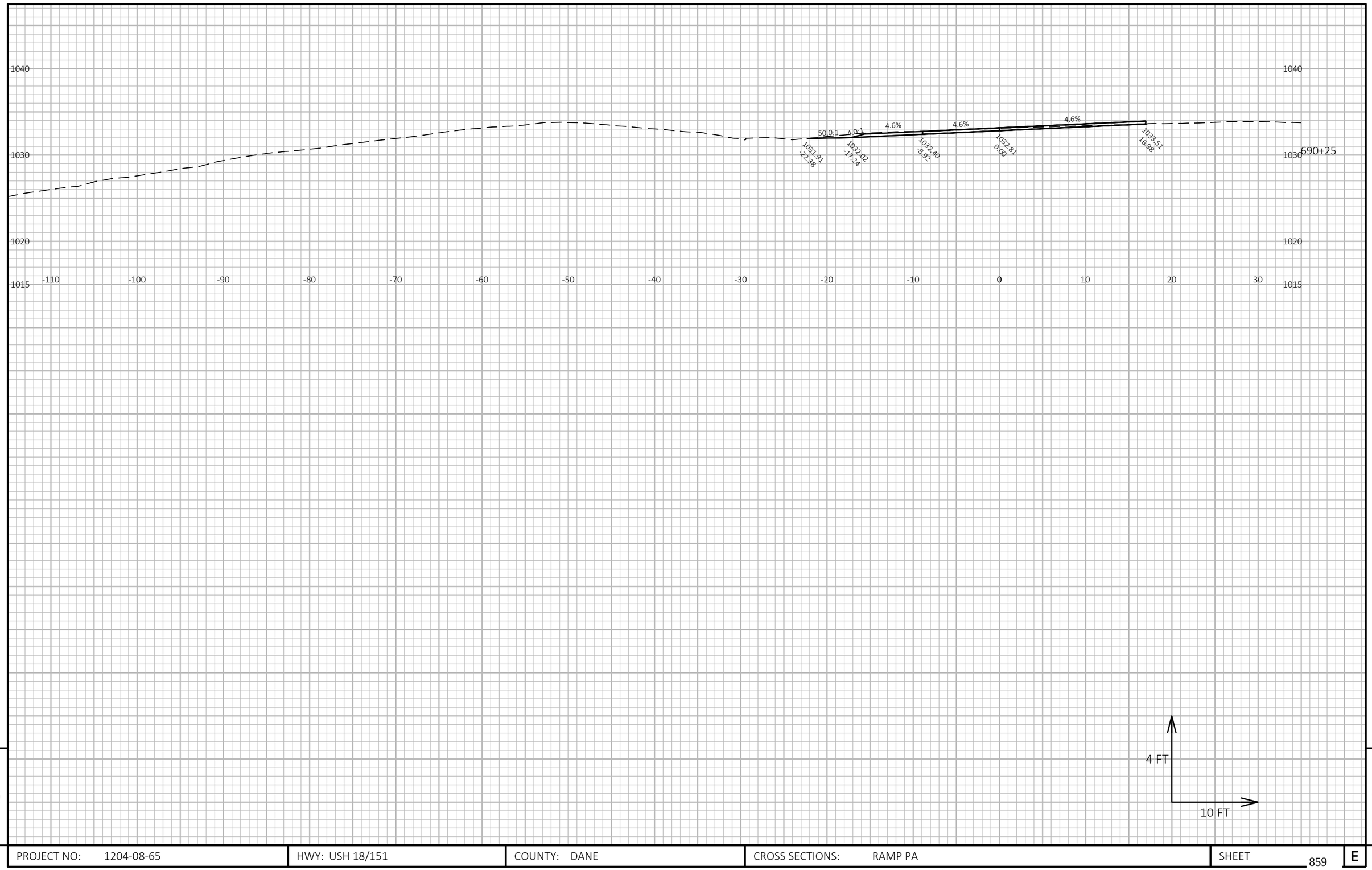

9

PROJECT NO: 1204-08-65	HWY: USH 18/151	COUNTY: DANE	CROSS SECTIONS: RAMP PA	SHEET 859	E

FILE NAME : G:\WDOTSW\20007-000 USH 18\CIVIL 3D\SHEETSPLAN\CROSS SECTIONS\090401-XS_RAMPS.DWG
LAYOUT NAME - PA_19

PLOT DATE : 7/21/2022 12:07 AM PLOT BY : ERIC ANDRITSCH PLOT NAME : PLOT SCALE : 1 IN:10 FT HORZ. / 1 IN:4 FT VERT.

WISDOT/CADDS SHEET 49

9

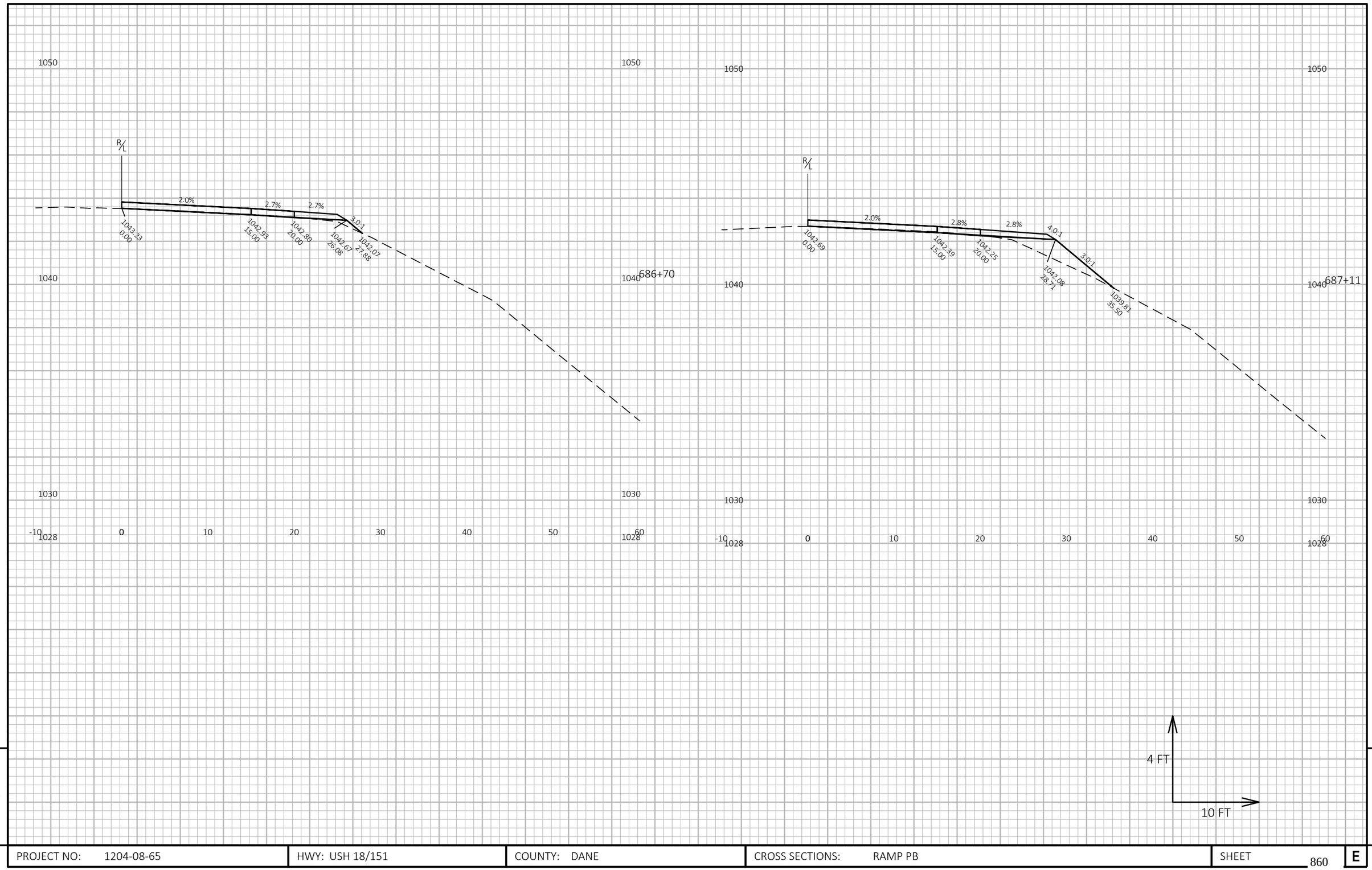

9

PROJECT NO: 1204-08-65	HWY: USH 18/151	COUNTY: DANE	CROSS SECTIONS: RAMP PB	SHEET 860	E

FILE NAME : G:\WDOTSW\20007-000 USH 18\CIVIL 3D\SHEETSPLAN\CROSS SECTIONS\090401-XS_RAMPS.DWG
LAYOUT NAME - Ramp-PB_1

PLOT DATE : 7/21/2022 12:07 AM PLOT BY : ERIC ANDRITSCH PLOT NAME : PLOT SCALE : 1 IN:10 FT HORZ. / 1 IN:4 FT VERT.

WISDOT/CADDS SHEET 49

9

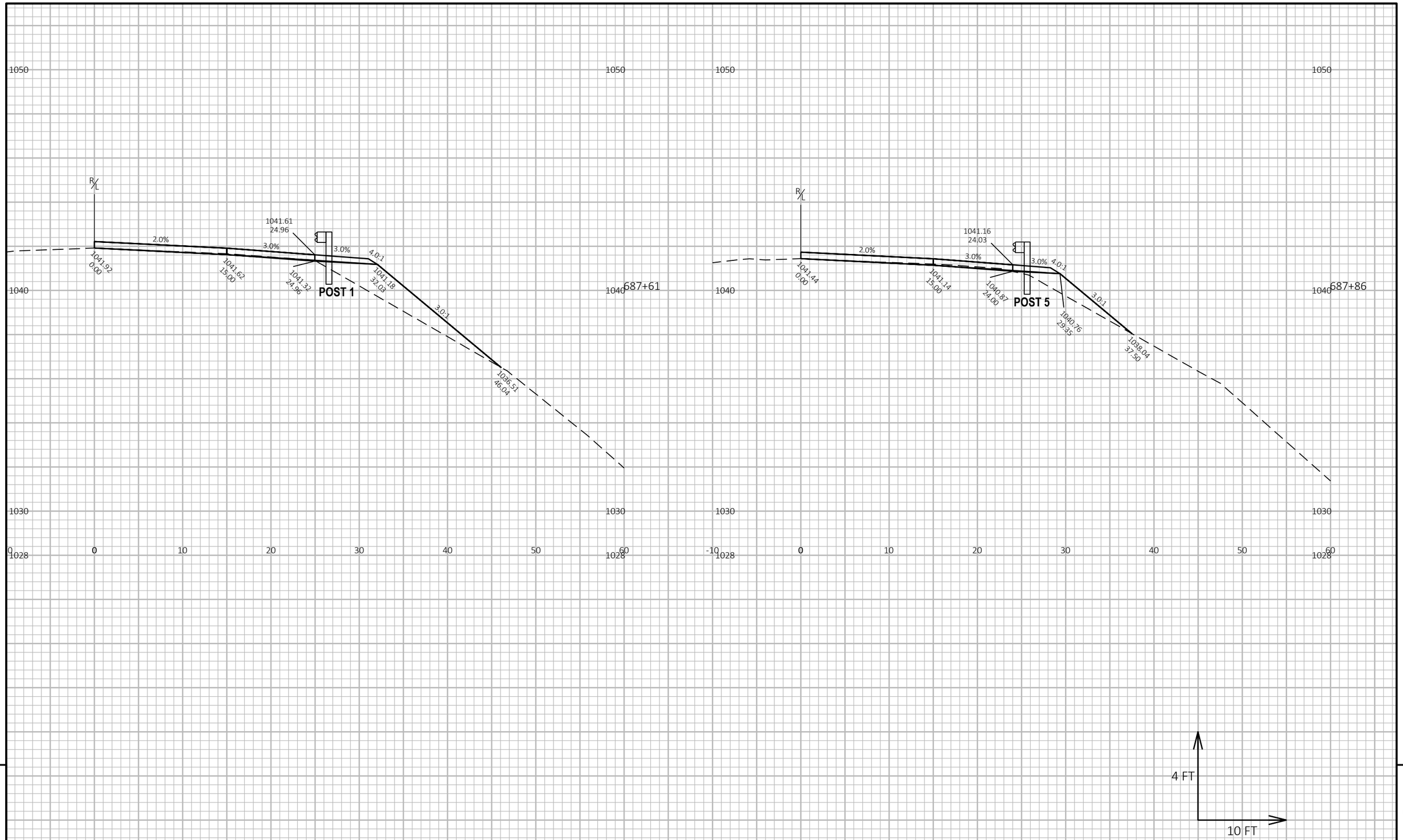

9

PROJECT NO: 1204-08-65	HWY: USH 18/151	COUNTY: DANE	CROSS SECTIONS: RAMP PB	SHEET 861	E

FILE NAME : G:\WDOTSW\20007-000 USH 18\CIVIL 3D\SHEETSPLAN\CROSS SECTIONS\090401-XS_RAMPS.DWG
LAYOUT NAME - Ramp-PB_2

PLOT DATE : 7/21/2022 12:07 AM PLOT BY : ERIC ANDRITSCH PLOT NAME : PLOT SCALE : 1 IN:10 FT HORZ. / 1 IN:4 FT VERT.

WISDOT/CADDS SHEET 49

9

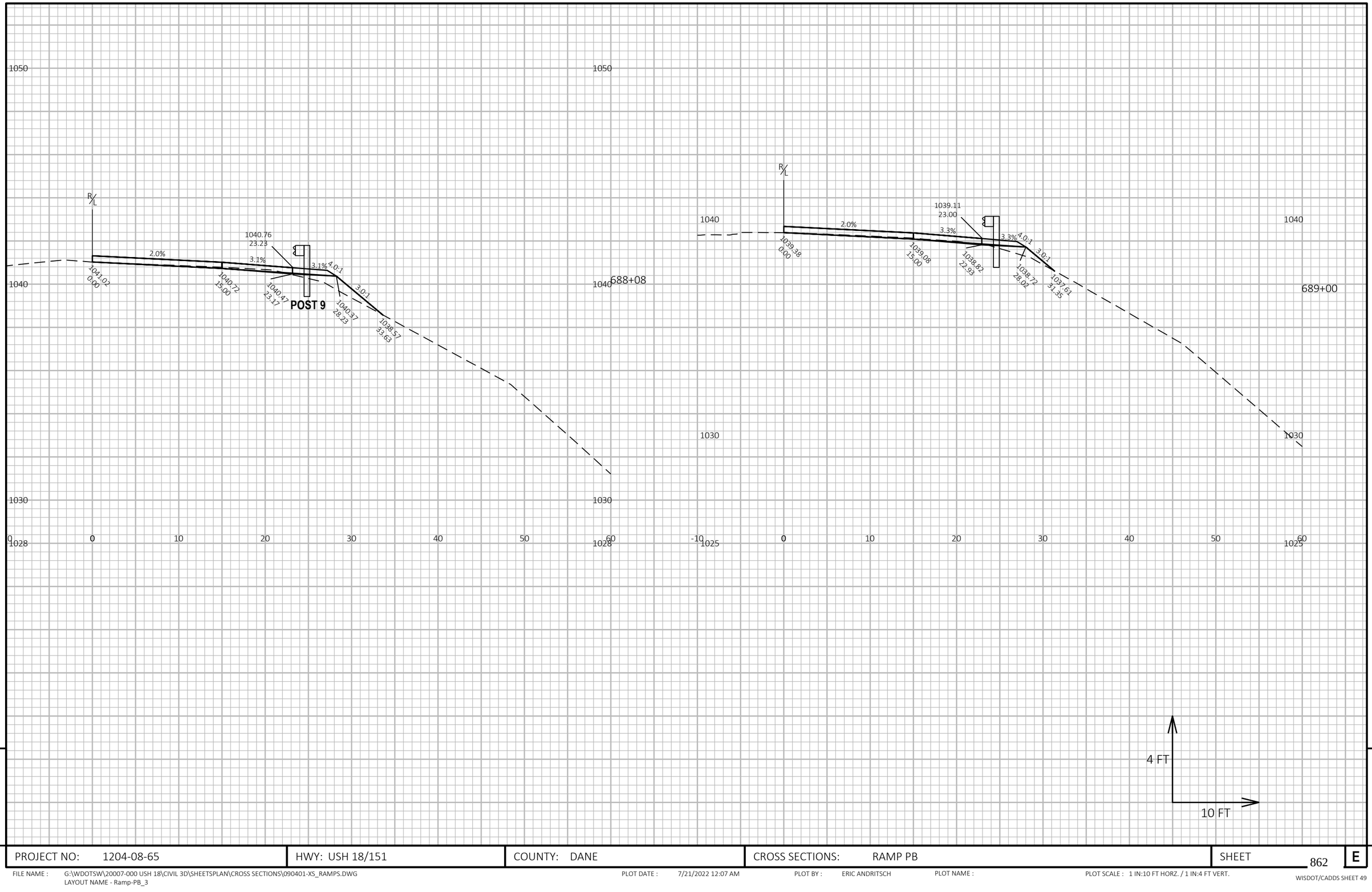

9

PROJECT NO: 1204-08-65	HWY: USH 18/151	COUNTY: DANE	CROSS SECTIONS: RAMP PB	SHEET 862	E

FILE NAME : G:\WDOTSW\20007-000 USH 18\CIVIL 3D\SHEETSPLAN\CROSS SECTIONS\090401-XS_RAMPS.DWG
LAYOUT NAME - Ramp-PB_3

PLOT DATE : 7/21/2022 12:07 AM PLOT BY : ERIC ANDRITSCH PLOT NAME : PLOT SCALE : 1 IN:10 FT HORZ. / 1 IN:4 FT VERT.

WISDOT/CADDS SHEET 49

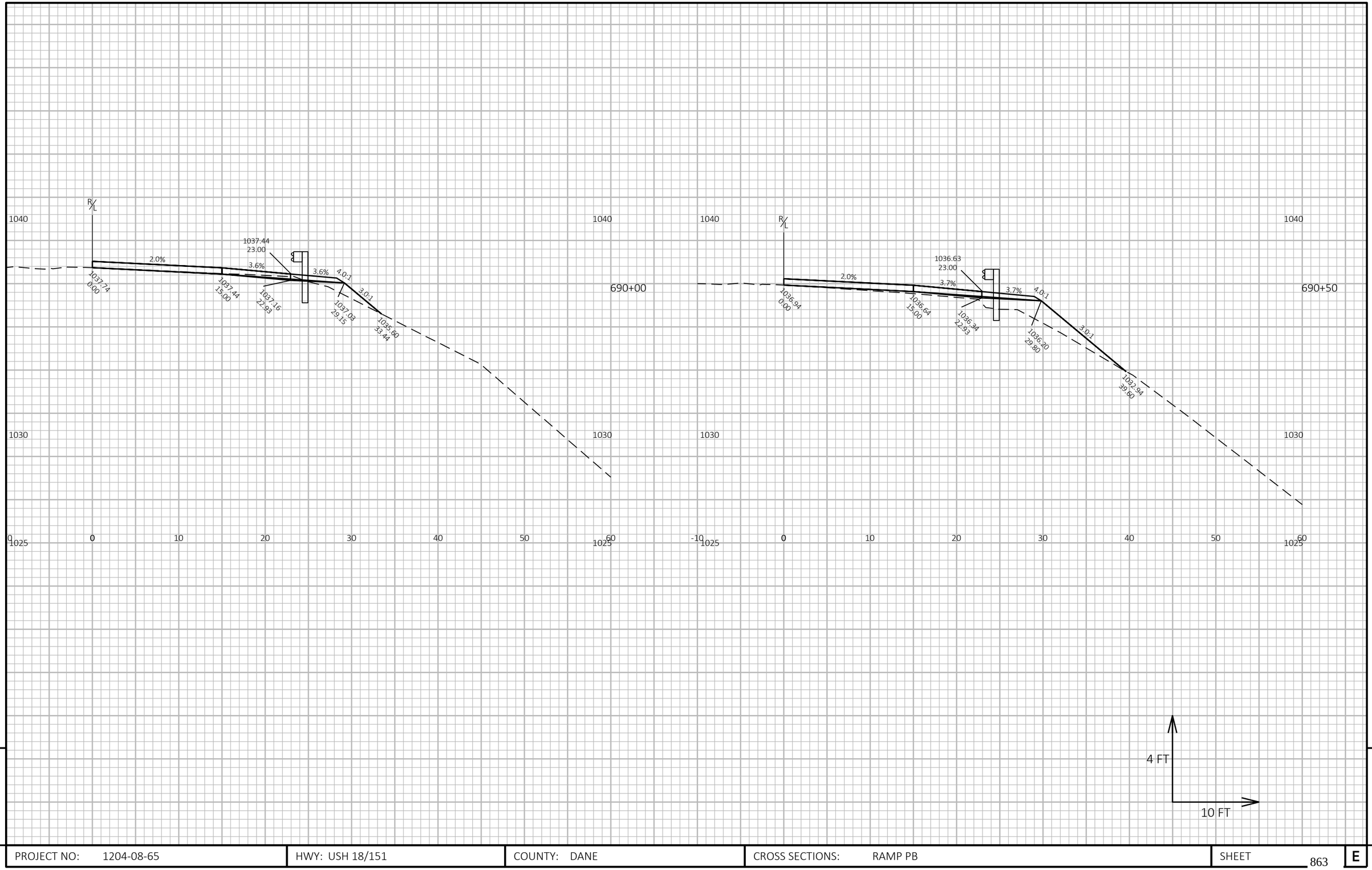

9

9

PROJECT NO: 1204-08-65	HWY: USH 18/151	COUNTY: DANE	CROSS SECTIONS: RAMP PB	SHEET 863	E

FILE NAME : G:\WDOTSW\20007-000 USH 18\CIVIL 3D\SHEETSPLAN\CROSS SECTIONS\090401-XS_RAMPS.DWG
LAYOUT NAME - Ramp-PB_4

PLOT DATE : 7/21/2022 12:07 AM PLOT BY : ERIC ANDRITSCH PLOT NAME : PLOT SCALE : 1 IN:10 FT HORZ. / 1 IN:4 FT VERT.

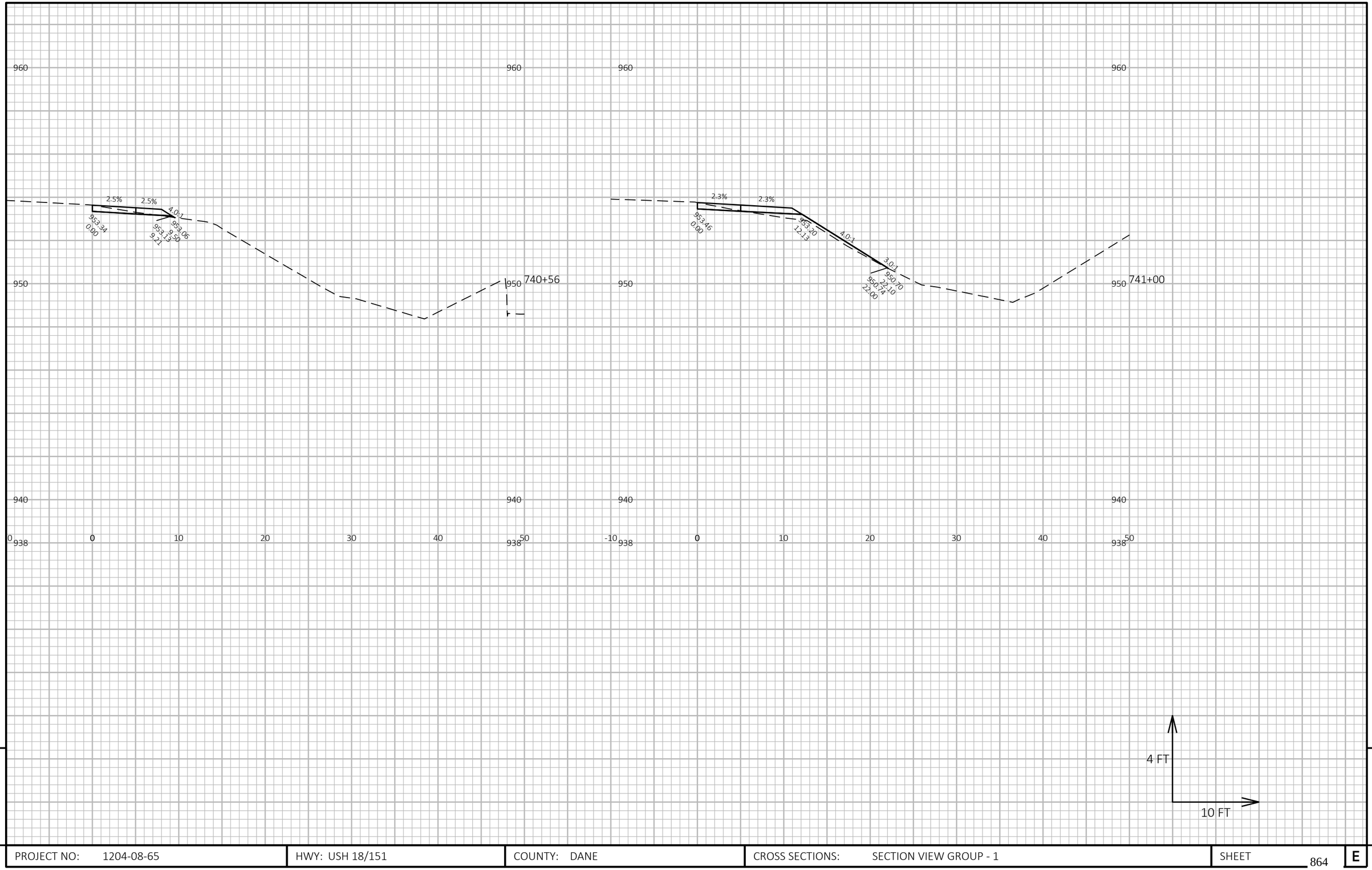

9

9

PROJECT NO: 1204-08-65	HWY: USH 18/151	COUNTY: DANE	CROSS SECTIONS: SECTION VIEW GROUP - 1	SHEET 864	E

FILE NAME : G:\WDOTSW\20007-000 USH 18\CIVIL 3D\SHEETSPLAN\CROSS SECTIONS\090401-XS_RAMPS.DWG
LAYOUT NAME - EE_b1

PLOT DATE : 7/21/2022 12:07 AM PLOT BY : ERIC ANDRITSCH PLOT NAME : PLOT SCALE : 1 IN:10 FT HORZ. / 1 IN:4 FT VERT.

WISDOT/CADDS SHEET 49

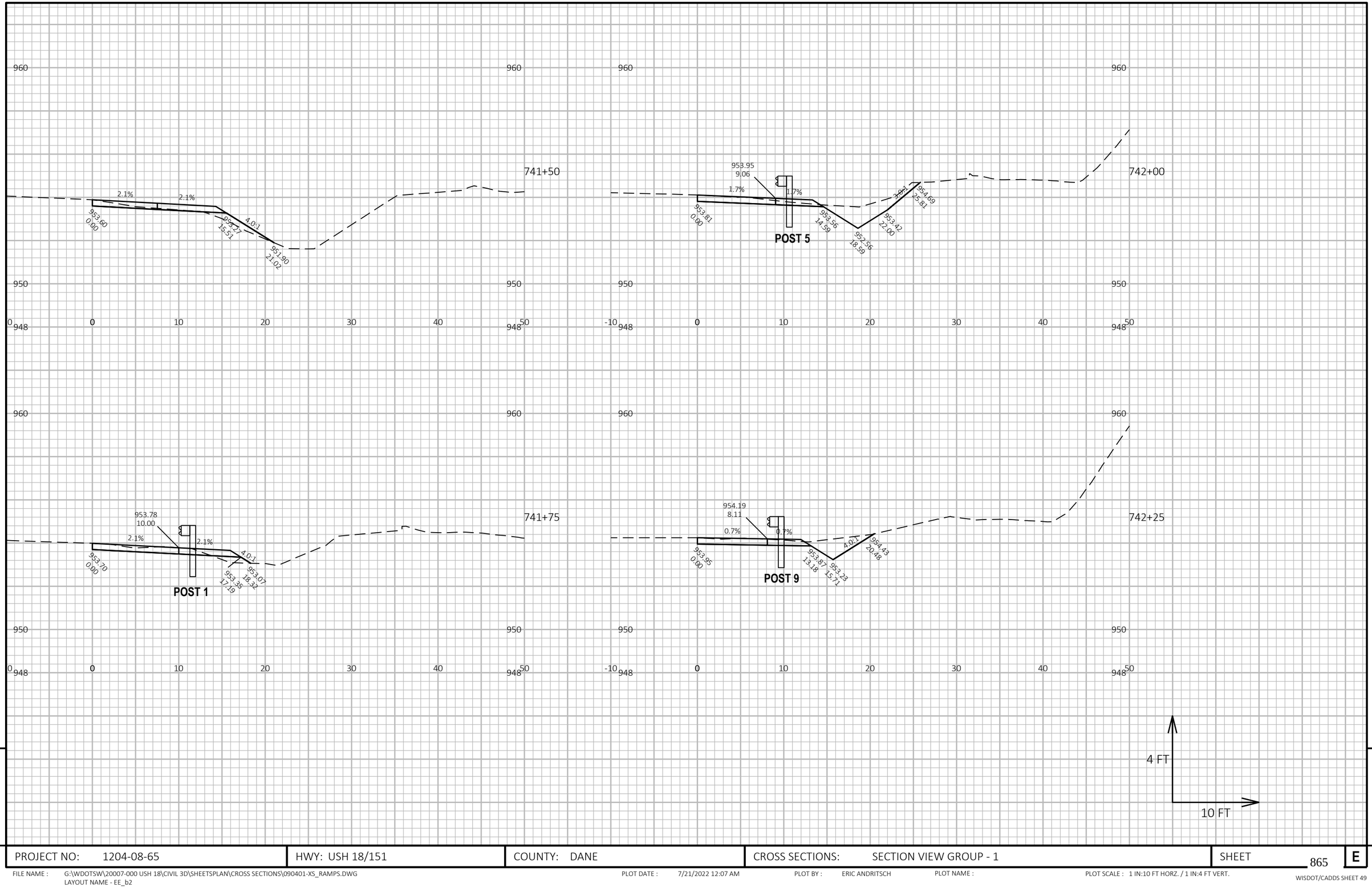

9

9

PROJECT NO: 1204-08-65	HWY: USH 18/151	COUNTY: DANE	CROSS SECTIONS: SECTION VIEW GROUP - 1	SHEET 865	E

FILE NAME : G:\WDOTSW\20007-000 USH 18\CIVIL 3D\SHEETSPLAN\CROSS SECTIONS\090401-XS_RAMPS.DWG
LAYOUT NAME - EE_b2

PLOT DATE : 7/21/2022 12:07 AM PLOT BY : ERIC ANDRITSCH PLOT NAME : PLOT SCALE : 1 IN:10 FT HORZ. / 1 IN:4 FT VERT.

WISDOT/CADDS SHEET 49

960

950

948

0 10 20 30 40 50

742+50

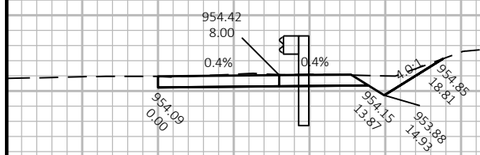

4 FT

10 FT

9

9

PROJECT NO: 1204-08-65	HWY: USH 18/151	COUNTY: DANE	CROSS SECTIONS: SECTION VIEW GROUP - 1	SHEET 866	E

FILE NAME : G:\WDOTSW\20007-000 USH 18\CIVIL 3D\SHEETSPLAN\CROSS SECTIONS\090401-XS_RAMPS.DWG
LAYOUT NAME - EE_b3

PLOT DATE : 7/21/2022 12:07 AM PLOT BY : ERIC ANDRITSCH PLOT NAME : PLOT SCALE : 1 IN:10 FT HORZ. / 1 IN:4 FT VERT.

WISDOT/CADDS SHEET 49

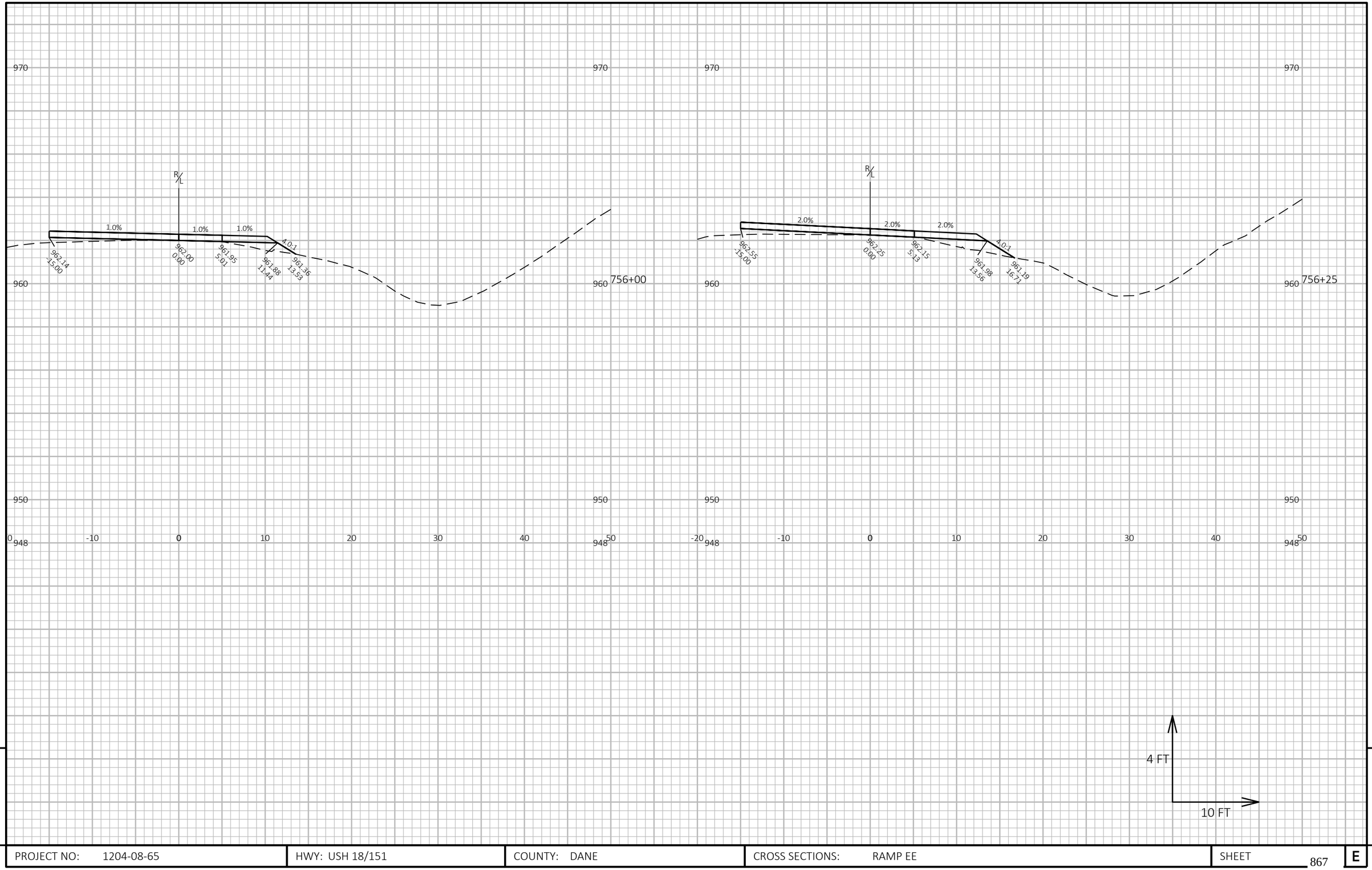

9

PROJECT NO: 1204-08-65	HWY: USH 18/151	COUNTY: DANE	CROSS SECTIONS: RAMP EE	SHEET 867	E

9

FILE NAME : G:\WDOTSW\20007-000 USH 18\CIVIL 3D\SHEETSPLAN\CROSS SECTIONS\090401-XS_RAMPS.DWG
LAYOUT NAME - Ramp-EE_1

PLOT DATE : 7/21/2022 12:07 AM PLOT BY : ERIC ANDRITSCH PLOT NAME : PLOT SCALE : 1 IN:10 FT HORZ. / 1 IN:4 FT VERT.

WISDOT/CADDS SHEET 49

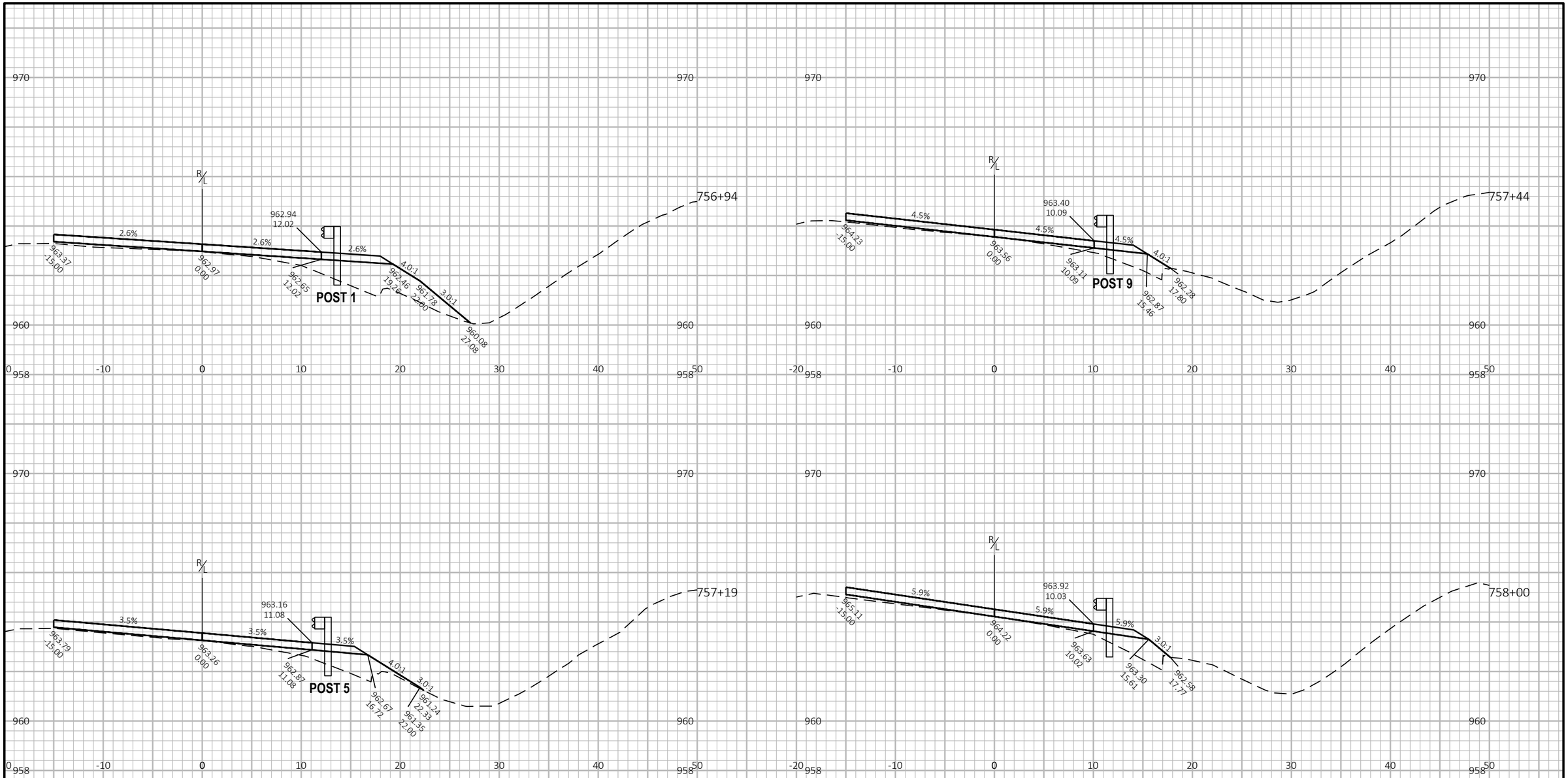

9

9

PROJECT NO: 1204-08-65	HWY: USH 18/151	COUNTY: DANE	CROSS SECTIONS: RAMP EE	SHEET 868	E

FILE NAME : G:\WDOTSW\20007-000 USH 18\CIVIL 3D\SHEETSPLAN\CROSS SECTIONS\090401-XS_RAMPS.DWG
LAYOUT NAME - Ramp-EE_2

PLOT DATE : 7/21/2022 12:08 AM PLOT BY : ERIC ANDRITSCH PLOT NAME : PLOT SCALE : 1 IN:10 FT HORZ. / 1 IN:4 FT VERT.

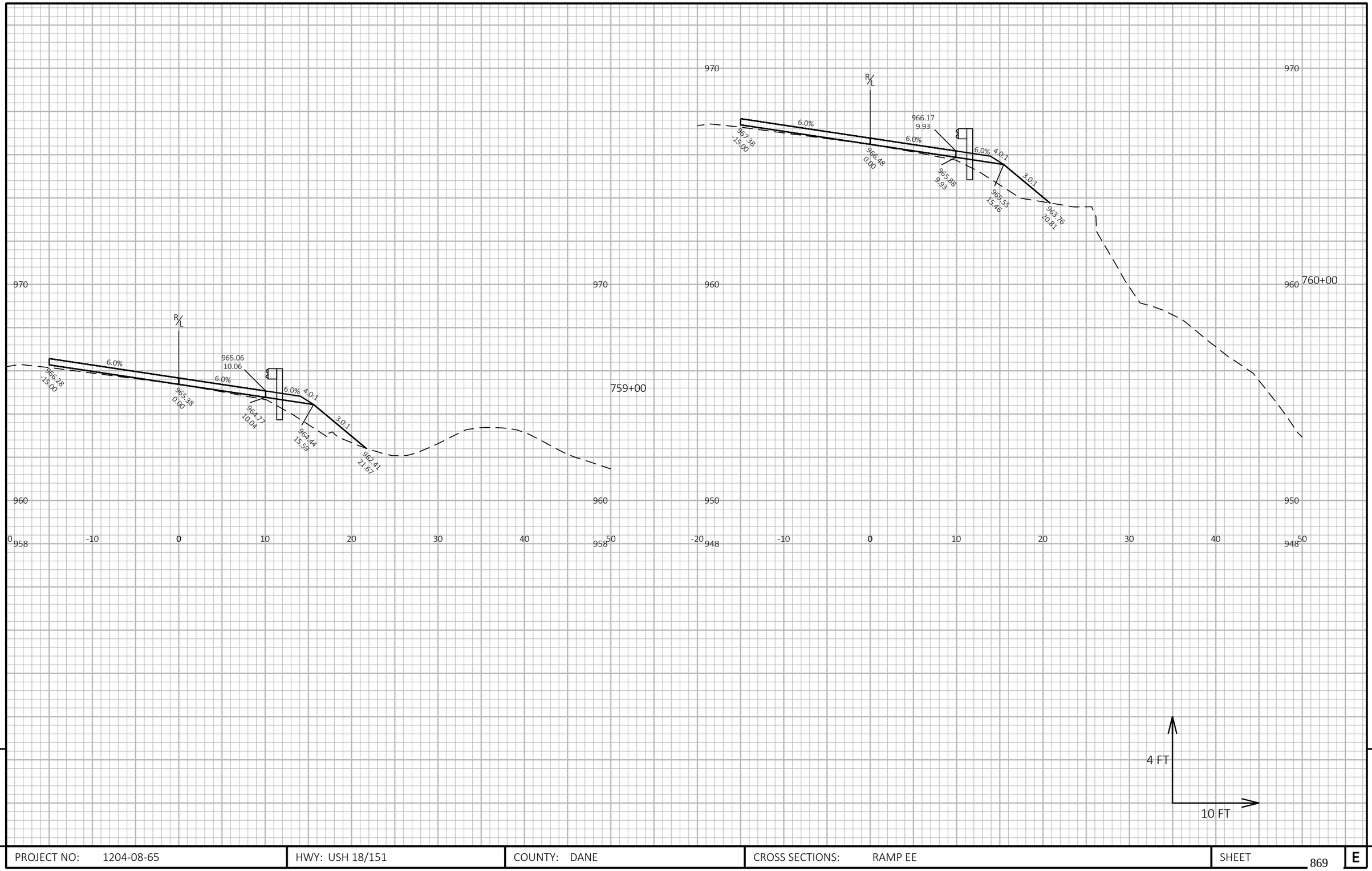

9

9

PROJECT NO: 1204-08-65	HWY: USH 18/151	COUNTY: DANE	CROSS SECTIONS: RAMP EE	SHEET 869	E

FILE NAME : G:\WDOTSW\20007-000 USH 18\CIVIL 3D\SHEETSPLAN\CROSS SECTIONS\090401-XS_RAMPS.DWG
LAYOUT NAME - Ramp-EE_3

PLOT DATE : 7/21/2022 12:08 AM PLOT BY : ERIC ANDRITSCH PLOT NAME : PLOT SCALE : 1 IN:10 FT HORZ. / 1 IN:4 FT VERT.

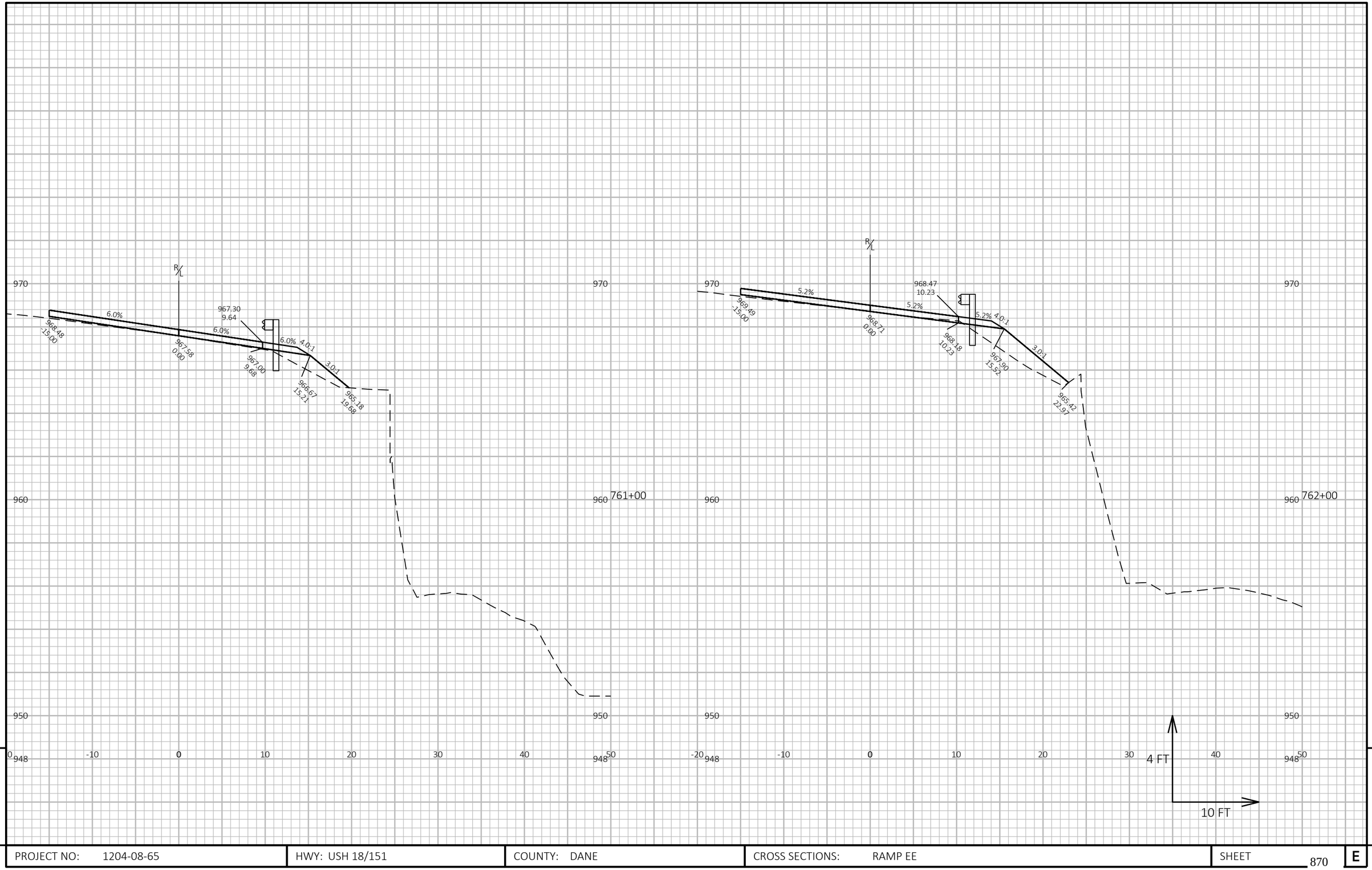

9

9

PROJECT NO: 1204-08-65	HWY: USH 18/151	COUNTY: DANE	CROSS SECTIONS: RAMP EE	SHEET 870	E

FILE NAME : G:\WDOTSW\20007-000 USH 18\CIVIL 3D\SHEETSPLAN\CROSS SECTIONS\090401-XS_RAMPS.DWG
LAYOUT NAME - Ramp-EE_4

PLOT DATE : 7/21/2022 12:08 AM PLOT BY : ERIC ANDRITSCH PLOT NAME : PLOT SCALE : 1 IN:10 FT HORZ. / 1 IN:4 FT VERT.

WISDOT/CADDS SHEET 49

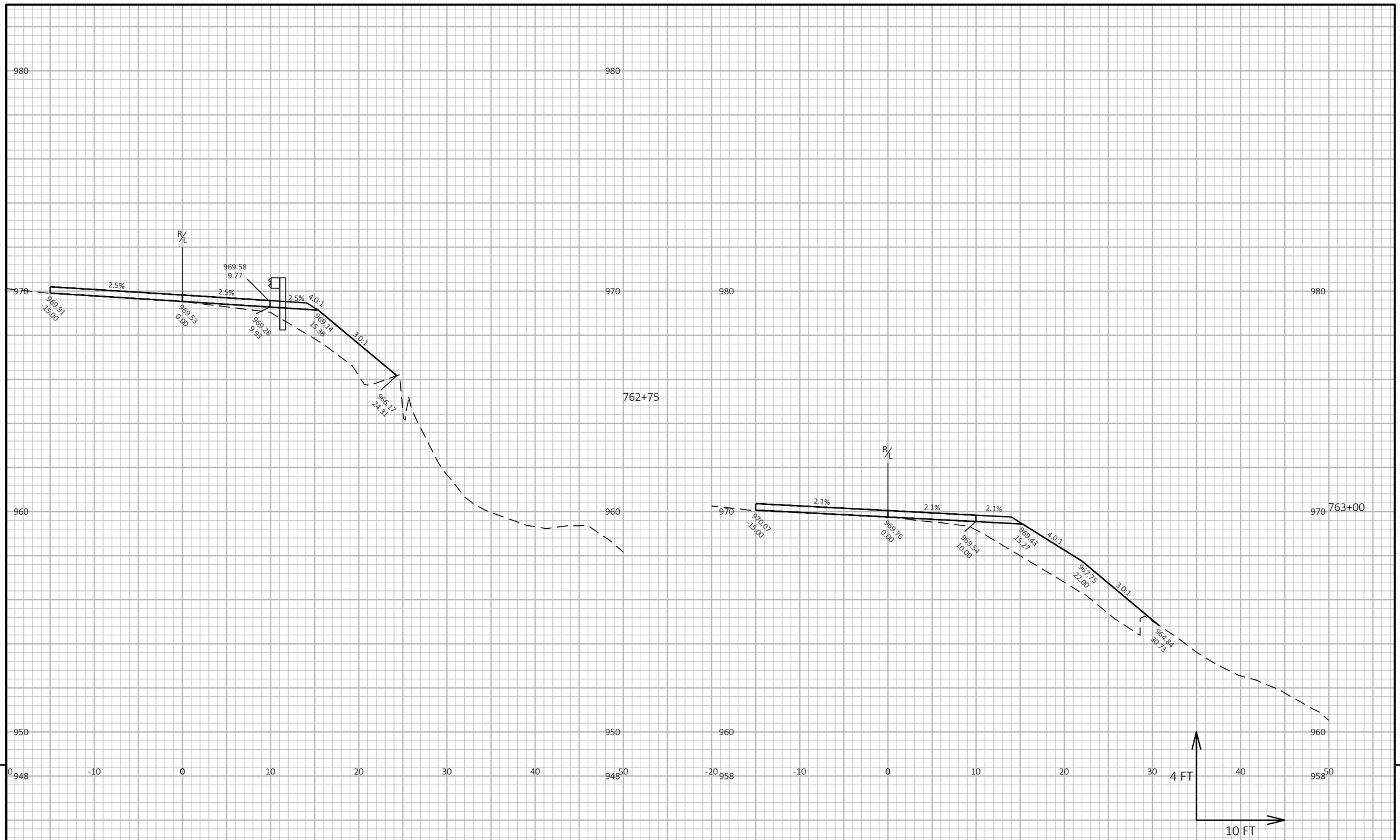

PROJECT NO: 1204-08-65	HWY: USH 18/151	COUNTY: DANE	CROSS SECTIONS: RAMP EE	SHEET 871 E

FILE NAME : G:\WDOTSW\20007-000 USH 18\CIVIL 3D\SHEETSPLAN\CROSS SECTIONS\090401-XS_RAMPS.DWG
LAYOUT NAME - Ramp-EE_5

PLOT DATE : 7/21/2022 12:08 AM PLOT BY : ERIC ANDRITSCH PLOT NAME : PLOT SCALE : 1 IN:10 FT HORZ. / 1 IN:4 FT VERT.

WISDOT/CADDS SHEET 49

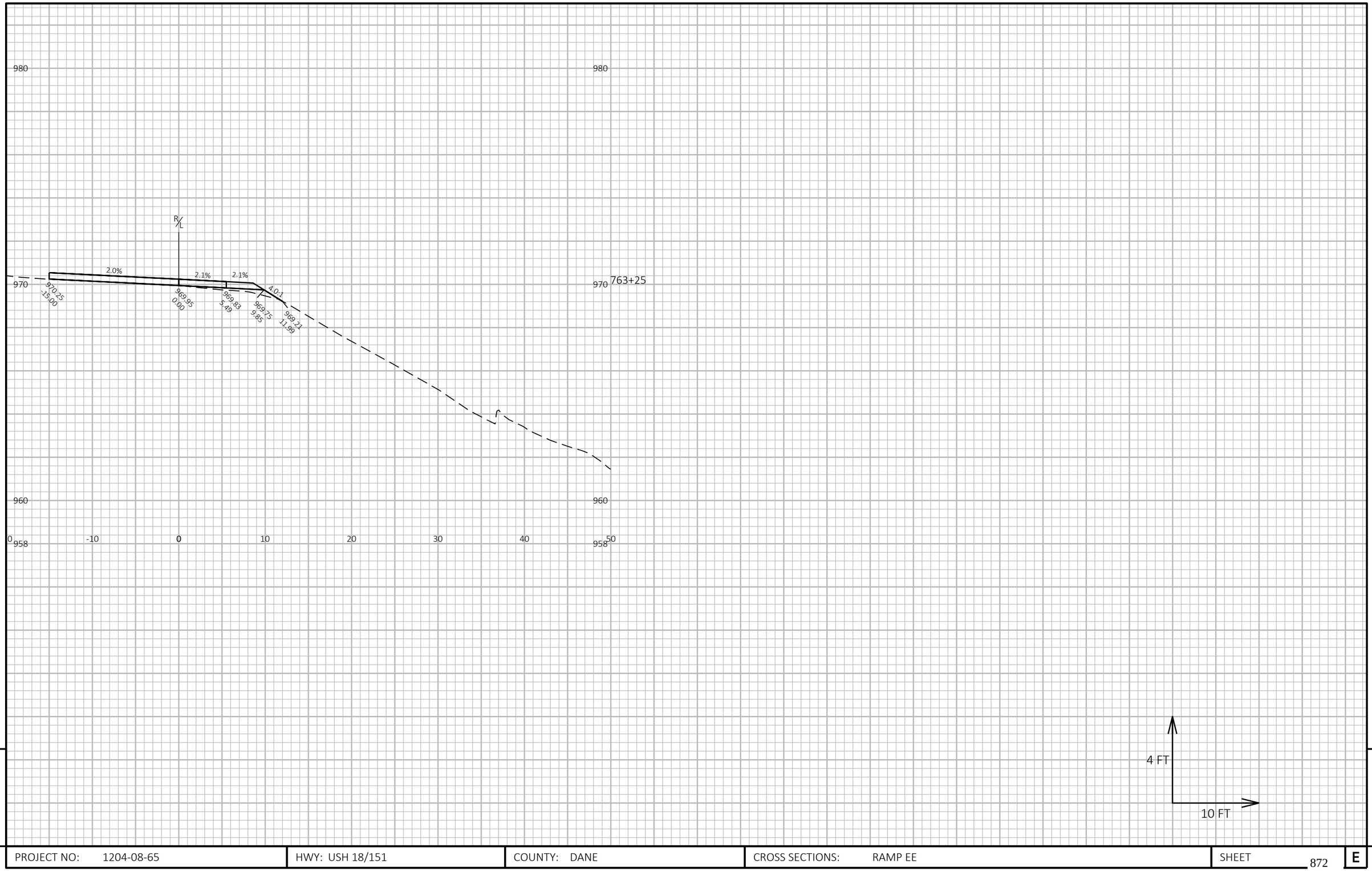

PROJECT NO: 1204-08-65	HWY: USH 18/151	COUNTY: DANE	CROSS SECTIONS: RAMP EE	SHEET 872	E

FILE NAME : G:\WDOTSW\20007-000 USH 18\CIVIL 3D\SHEETSPLAN\CROSS SECTIONS\090401-XS_RAMPS.DWG
LAYOUT NAME - Ramp-EE_6

PLOT DATE : 7/21/2022 12:08 AM PLOT BY : ERIC ANDRITSCH PLOT NAME : PLOT SCALE : 1 IN:10 FT HORZ. / 1 IN:4 FT VERT.

WISDOT/CADDS SHEET 49

Notes

Wisconsin Department of Transportation

Dedicated people creating transportation solutions
through innovation and exceptional service.

http://www.dot.wisconsin.gov