MAD | OCT 2024

PROJECT ID: 1066-03-75
WITH: N/A

COUNTY: DANE & JEFFERSON

ORDER OF SHEETS

TOTAL SHEETS = 306

STATE PROJECT	FEDERAL PROJECT	
	PROJECT	CONTRACT
1066-03-75	WISC 2025001	1

STATE OF WISCONSIN
DEPARTMENT OF TRANSPORTATION

PLAN OF PROPOSED IMPROVEMENT

MADISON - LAKE MILLS

CTH N TO AIRPORT ROAD

IH 94

DANE & JEFFERSON COUNTIES

STATE PROJECT NUMBER
1066-03-75

N

DESIGN DESIGNATION

A.A.D.T.	2027	=	49,800
A.A.D.T.	2047	=	59,800
D.H.V.		=	6,700
D.D.		=	58/42
T.		=	10.1%
DESIGN SPEED		=	70 MPH
ESALS		=	13,000,000

CONVENTIONAL SYMBOLS

PLAN
- CORPORATE LIMITS
- PROPERTY LINE
- LOT LINE
- LIMITED HIGHWAY EASEMENT
- EXISTING RIGHT OF WAY
- PROPOSED OR NEW R/W LINE
- SLOPE INTERCEPT
- REFERENCE LINE (300'EB')
- EXISTING CULVERT
- PROPOSED CULVERT (Box or Pipe)
- COMBUSTIBLE FLUIDS (CAUTION)
- MARSH AREA
- WOODED OR SHRUB AREA

PROFILE
- GRADE LINE
- ORIGINAL GROUND
- MARSH OR ROCK PROFILE (To be noted as such) (ROCK)
- SPECIAL DITCH (LABEL)
- GRADE ELEVATION (95.36)
- CULVERT (Profile View)

UTILITIES
- ELECTRIC (E)
- FIBER OPTIC (FO)
- GAS (G)
- SANITARY SEWER (SAN)
- STORM SEWER (SS)
- TELEPHONE (T)
- WATER (W)
- UTILITY PEDESTAL
- POWER POLE
- TELEPHONE POLE

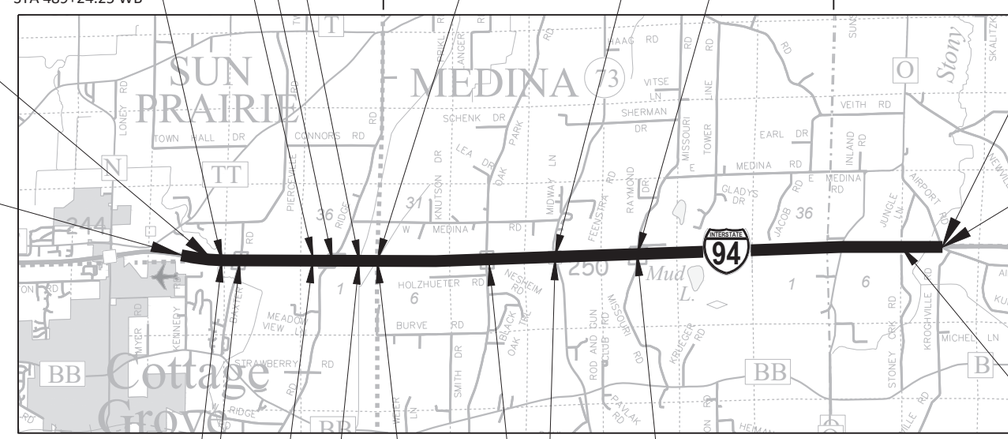

LAYOUT

SCALE 0 — 2 MI

TOTAL NET LENGTH OF CENTERLINE = 9.654 MILES

HORIZONTAL POSITIONS SHOWN ON THIS PLAN ARE WISCONSIN COORDINATE REFERENCE SYSTEM (WISCRS), DANE COUNTY, NAD83 (2011), IN U.S. SURVEY FEET. POSITIONS SHOWN ARE GRID COORDINATES, GRID BEARINGS, AND GRID DISTANCES. GRID DISTANCES ARE THE SAME AS GROUND DISTANCES. ELEVATIONS ARE REFERENCED TO NAVD 88 (2012). GPS DERIVED ELEVATIONS ARE BASED ON GEOID 18.

ORIGINAL PLANS PREPARED BY:

ONEIDA Engineering Solutions

WISCONSIN PROFESSIONAL ENGINEER
CHAD R. EVEN
E-40861
GREENVILLE
WISCONSIN

DATE: 4/7/23 (Signature)

STATE OF WISCONSIN
DEPARTMENT OF TRANSPORTATION

PREPARED BY

Surveyor	OES
Designer	OES
Project Manager	DELLA KOENIG
Regional Examiner	SW REGION
Regional Supervisor	KYLE HEMP

APPROVED FOR THE DEPARTMENT

DATE: Digitally signed by Kyle Hemp DN: C=US, E=kyle.hemp@dot.wi.gov, O=WisDOT, OU=DTSD SW Region, CN=Kyle Hemp Date: 2023.04.13 08:43:37-05'00' (Signature)

E

UTILITIES

AT&T LEGACY - COMMUNICATIONS
KENNETH NINE
110 N MAIN STREET
CULVERT, IN 46511
PHONE: (574) 842-8830
EMAIL: KNINE@JMCEAINC.COM

ATC MANAGEMENT, INC - ELECTRICITY/TRANSMISSION
CHRIS DAILEY
PO BOX 47
WAUKESHA, WI 53045
PHONE: (262) 506-6884
EMAIL: CDAILEY@ATCLLC.COM

ENBRIDGE ENERGY - GAS
CRAIG GUTTENBERG
803 HIGHLAND AVE
FORT ATKINSON, WI 53538
PHONE: (920) 691-6827
EMAIL: CRAIG.GUTTENBERG@ENBRIDGE.COM

EVERSTREAM - COMMUNICATIONS
SHAD GARCIA
324 E WISCONSIN AVE, SUITE 730
MILWAUKEE, WI 53202
PHONE: (414) 522-6685
EMAIL: SGARCIA@EVERSTREAM.NET

FLINT HILLS RESOURCES, LLC - GAS
ELIZABETH BARTLEY
13775 CLARK ROAD
ROSEMOUNT, MN 55068
PHONE: (612) 244-9950
EMAIL: ELIZABETH.BARTLEY@FHR.COM

FRONTIER COMMUNICATIONS OF WI LLC - COMMUNICATIONS
TYLER COFFMAN
330 BLACKBURN ST
RIPON, WI 54971
PHONE: (217) 491-7186
EMAIL: TYLER.COFFMAN@JSITEL.COM

WE ENERGIES - ELECTRICITY
ERIC KICKHAVER
500 S 116TH STREET
WEST ALLIS, WI 53214
PHONE: (414) 588-7472
EMAIL: ERIC.KICKHAVER@WE-ENERGIES.COM

DIGGERS HOTLINE
Dial 811 or (800)242-8511
www.DiggersHotline.com

DESIGN CONSULTANT

LISA DREIFUERST
ONEIDA ENGINEERING SOLUTIONS, LLC (OES)
5100 EASTPARK BLVD, SUITE 300
MADISON, WI 53718
PHONE: (608) 243-6478
EMAIL: LDREIFUERST@OESCGROUP.COM

WISDOT PROJECT MANAGER

DELLA KOENIG
WISDOT SW REGION PROJECT MANAGER
2101 WRIGHT ST
MADISON, WI 53704
PHONE: 608) 246-7963
EMAIL: DELLA.KOENIG@DOT.WI.GOV

WDNR LIAISON

ERIC HEGGELUND
DNR SOUTH CENTRAL REGION HEADQUARTERS
3911 FISH HATCHERY ROAD
FITCHBURG, WI 53711
PHONE: (608) 228-7927
EMAIL: ERIC.HEGGELUND@WISCONSIN.GOV

WDNR LIAISON

SHELLEY NELSON
DNR SOUTH CENTRAL REGION HEADQUARTERS
3911 FISH HATCHERY ROAD
FITCHBURG, WI 53711
PHONE: (608) 444-2835
EMAIL: SHELLEY.NELSON@WISCONSIN.GOV

DESIGN CONTACT

WISCONSIN DEPT OF TRANS - COMMUNICATIONS
JEFF MADSON
433 W ST PAUL AVENUE, SUITE 300
MILWAUKEE, WI 53203
PHONE: (414) 225-3723
EMAIL: JEFFREY.MADSON@DOT.WI.GOV

GENERAL NOTES

1. THE LOCATIONS OF EXISTING AND PROPOSED UTILITY INSTALLATIONS AS SHOWN ON THE PLANS ARE APPROXIMATE. THERE MAY BE OTHER UTILITY INSTALLATIONS WITHIN THE PROJECT AREA THAT ARE NOT SHOWN.
2. THE CONTRACTOR SHALL COORDINATE THEIR CONSTRUCTION ACTIVITIES WITH A CALL TO DIGGERS HOTLINE AND/OR A DIRECT CALL TO THE UTILITIES THAT HAVE FACILITIES IN THE AREA. NOT ALL UTILITIES ARE MEMBERS OF DIGGERS HOTLINE.
3. TEMPORARY STORAGE OF ANY EQUIPMENT OR EXCAVATED MATERIAL WILL NOT BE PERMITTED IN WETLANDS, FLOODWAY OR FLOODPLAIN OF ANY WETLANDS, UNLESS APPROVED BY THE ENGINEER.
4. PLACE EROSION CONTROL DEVICES IN SEQUENCE WITH CONSTRUCTION OPERATIONS OR AS DETERMINED BY THE ENGINEER. EROSION CONTROL FEATURES ARE SHOWN IN APPROXIMATE LOCATIONS WITH EXACT LOCATIONS TO BE DETERMINED BY THE ENGINEER.
5. DO NOT USE FERTILIZER WITHIN 20 FEET OF NAVIGABLE WATERWAY OR WETLANDS.
6. NO TREES OR SHRUBS SHALL BE REMOVED WITHOUT APPROVAL OF THE ENGINEER.
7. COVER ALL SIGNS IN CONFLICT WITH TRAFFIC CONTROL "IN USE" AS SHOWN IN THE PLANS OR DIRECTED BY THE ENGINEER.
8. APPLY TACK COAT AT A RATE OF 0.07 GAL/SY TO MILLED/EXISTING PAVEMENT SURFACES AND 0.05 GAL/SY BETWEEN LAYERS OF NEW HMA PAVEMENT.
9. HMA PAVEMENT WEIGHT CALCULATIONS ARE BASED ON 112 LB/SY/IN.
10. ASPHALTIC PAVEMENT SHALL BE CONSTRUCTED WITH THE FOLLOWING LAYERS AND GRADATIONS:

ORDER OF SECTION 2 SHEETS

ABBREVIATIONS

AADT	ANNUAL AVERAGE DAILY TRAFFIC
ASPH	ASPHALT
BAD	BASE AGGREGATE DENSE
BLDG	BUILDING
BM	BENCH MARCK
CC	CENTER OF CURVATURE
CE	COMMERCIAL ENTRANCE
C&G	CURB AND GUTTER
C/L	CENTER/CONSTRUCTION LINE
CONC	CONCRETE
CY	CUBIC YARD
D	DEGREE OF CURVE
DHV	DESIGN HOUR VOLUME
DD	DIRECTIONAL DISTRUBUTION
Δ	DELTA
E	EXTERNAL DISTANCE FROM MIDPOINT OF CIRCULAR CURVE FROM ANGLE INTERSECTION
ELEV	ELEVATION
ESALS	EQUIVALENT SINGLE AXLE LOADS
FE	FIELD ENTRANCE
HMA	HOT MIX ASPHALT
IP	IRON PIPE/PIN
L	LENGTH OF CURVE
LF	LINEAR FOOT
LS	LUMP SUM
LT	LEFT
MAX.	MAXIMUM
MIN.	MINIMUM
M/L	MATCHLINE
NC	NORMAL CROWN
PAVT	PAVEMENT
PC	POINT OF CURVE
PCC	POINT OF COMPOUND CURVE
PE	PRIVATE ENTRANCE
PI	POINT OF INTERSECTION
PL	PROPERTY LINE
PT	POINT OF TANGENT
R	RADIUS OF CURVE
R/L	REFERENCE LINE
REQD	REQUIRED
RO	RUN OFF LENGTH
RT	RIGHT
SALV	SALVAGED
SDD	STANDARD DETAIL DRAWING
SE	SUPER ELEVATION
SEG	SEGMENT
SF	SQUARE FOOT
SI	SLOPE INTERCEPT
STA	STATION
STH	STATE TRUNK HIGHWAY
SY	SQUARE YARD
T	TANGENT LENGTH
TYP	TYPICAL
V	VELOCITY OR DESIGN SPEED

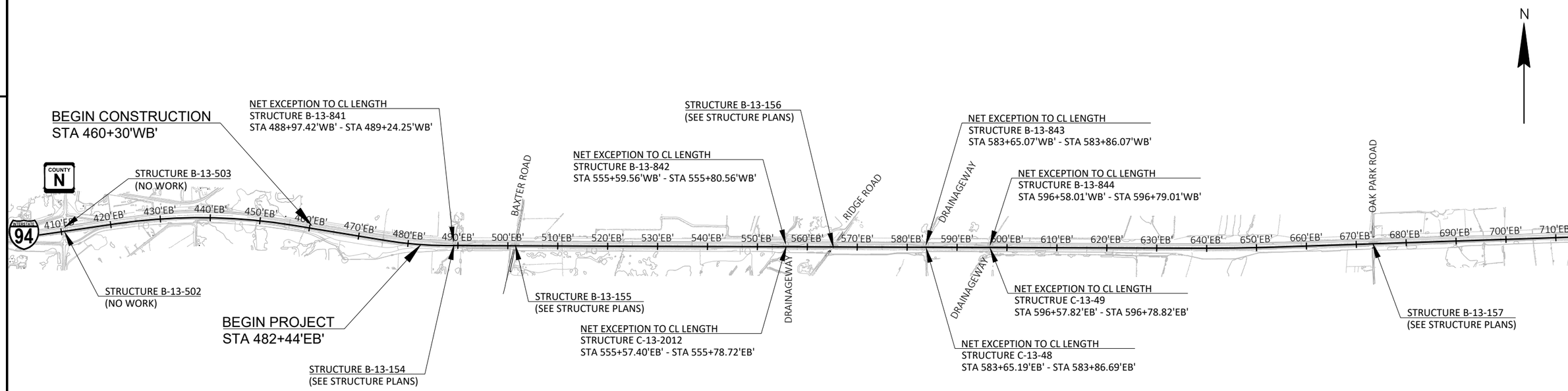

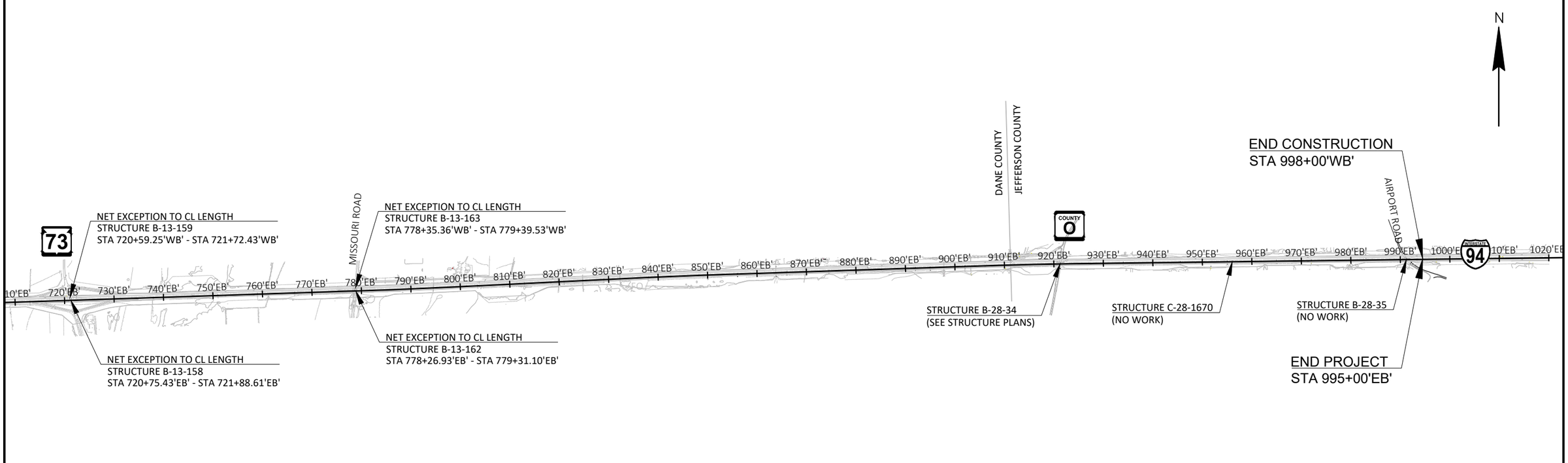

PROJECT NO: 1066-03-75	HWY: IH 94	COUNTY: DANE AND JEFFERSON	PROJECT OVERVIEW	SHEET 3	E

2

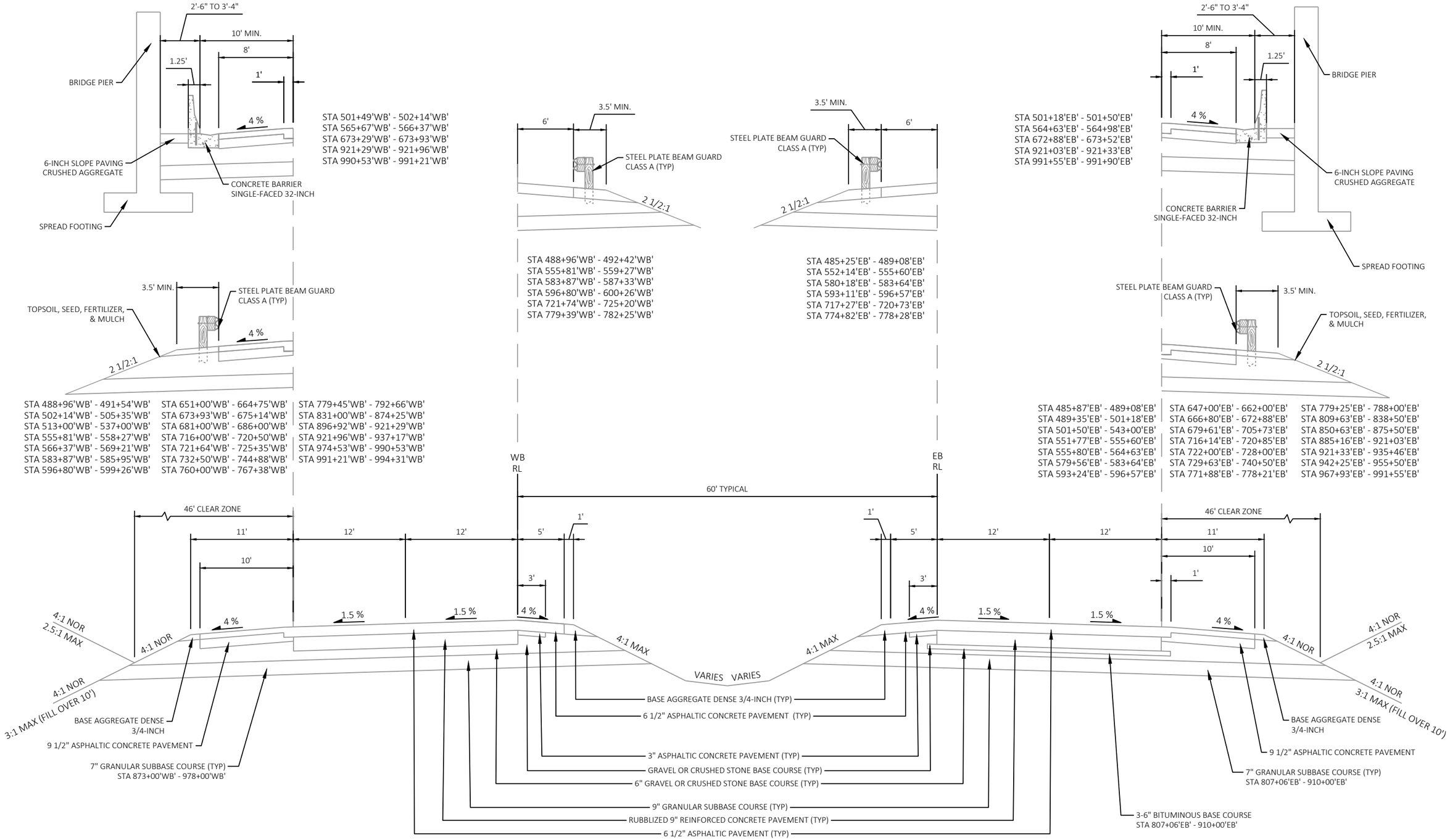

EXISTING TYPICAL SECTION

STA 482+44'EB' - 995+00'EB'
STA 460+30 'WB' - 998+00'WB'

PROJECT NO: 1066-03-75	HWY: IH 94	COUNTY: DANE AND JEFFERSON	TYPICAL SECTIONS - EXISTING	SHEET 4	E

FILE NAME : P:\2020 PROJECTS\5020028 - WISDOT SWR IH 94\CIVIL3D\10660375\SHEETSPLAN\020301_TS.DWG
LAYOUT NAME - 01
PLOT DATE : 2/8/2023 12:31 PM PLOT BY : KYLE CORNELIUS PLOT NAME : PLOT SCALE : 1 IN:10 FT

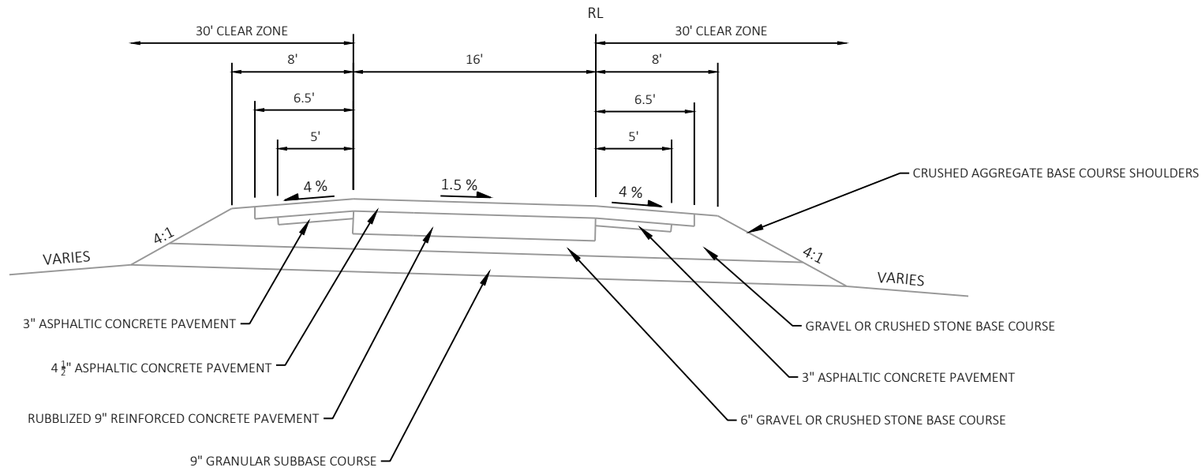

EXISTING TYPICAL SECTION

STH 73 RAMPS ('W', 'X', 'Y', 'Z')

STA 712+90 'W' - 721+27 'W'
STA 712+79 'X' - 720+18 'X'
STA 722+41 'Y' - 731+30 'Y'
STA 722+15 'Z' - 732+39 'Z'

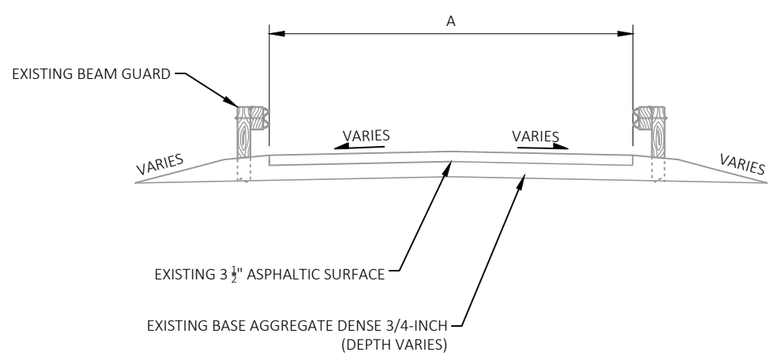

SIDE ROAD	A
BAXTER ROAD	26'
RIDGE ROAD	26'
OAK PARK ROAD	26'
CTH O	28'
AIRPORT ROAD	26'

EXISTING TYPICAL SECTION

SIDE ROADS

2

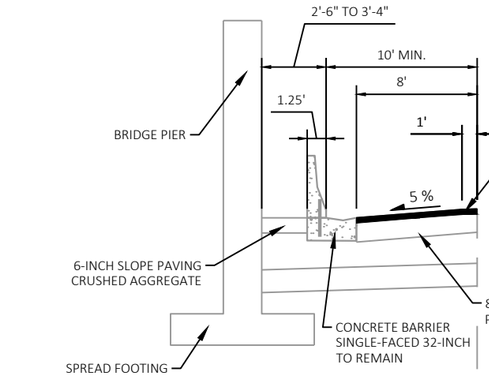

STA 501+49'WB' - 502+14'WB'
STA 565+67'WB' - 566+37'WB'
STA 673+29'WB' - 673+93'WB'
STA 921+29'WB' - 921+96'WB'
STA 990+53'WB' - 991+21'WB'

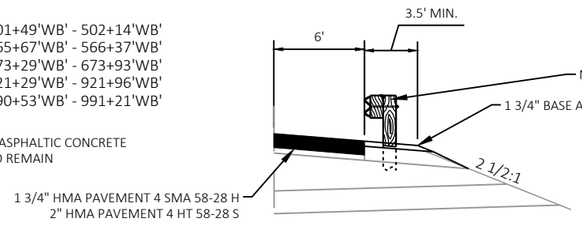

STA 488+96'WB' - 492+42'WB'
STA 555+81'WB' - 559+27'WB'
STA 583+87'WB' - 587+33'WB'
STA 596+80'WB' - 600+26'WB'
STA 721+74'WB' - 725+20'WB'
STA 779+39'WB' - 782+25'WB'

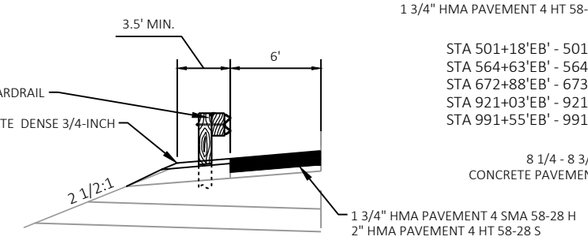

STA 485+25'EB' - 489+08'EB'
STA 552+14'EB' - 555+60'EB'
STA 580+18'EB' - 583+64'EB'
STA 593+11'EB' - 596+57'EB'
STA 717+27'EB' - 720+73'EB'
STA 774+82'EB' - 778+28'EB'

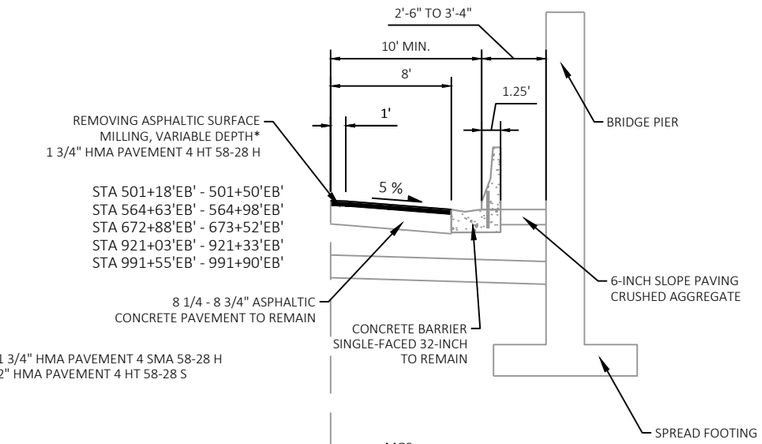

STA 501+18'EB' - 501+50'EB'
STA 564+63'EB' - 564+98'EB'
STA 672+88'EB' - 673+52'EB'
STA 921+03'EB' - 921+33'EB'
STA 991+55'EB' - 991+90'EB'

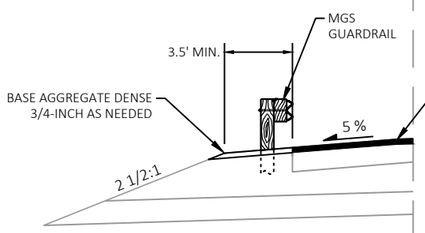

STA 488+96'WB' - 491+54'WB'
STA 502+14'WB' - 505+35'WB'
STA 513+00'WB' - 537+00'WB'
STA 555+81'WB' - 558+27'WB'
STA 566+37'WB' - 569+21'WB'
STA 583+87'WB' - 585+95'WB'
STA 596+80'WB' - 599+26'WB'

STA 651+00'WB' - 664+75'WB'
STA 673+93'WB' - 675+14'WB'
STA 681+00'WB' - 686+00'WB'
STA 716+00'WB' - 720+50'WB'
STA 721+64'WB' - 725+35'WB'
STA 732+50'WB' - 744+88'WB'
STA 760+00'WB' - 767+38'WB'

STA 779+45'WB' - 792+66'WB'
STA 831+00'WB' - 874+25'WB'
STA 896+92'WB' - 921+29'WB'
STA 921+96'WB' - 937+17'WB'
STA 974+53'WB' - 990+53'WB'
STA 991+21'WB' - 994+31'WB'

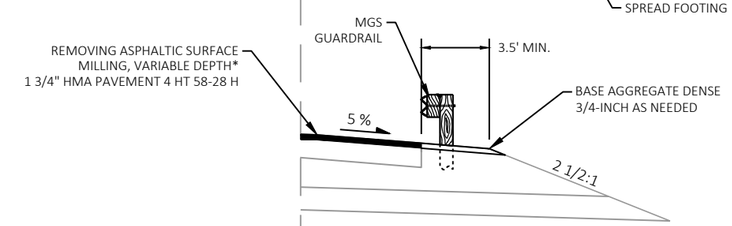

STA 485+87'EB' - 489+08'EB'
STA 489+35'EB' - 501+18'EB'
STA 501+50'EB' - 543+00'EB'
STA 551+77'EB' - 555+60'EB'
STA 555+80'EB' - 564+63'EB'
STA 579+56'EB' - 583+64'EB'
STA 593+24'EB' - 596+57'EB'

STA 647+00'EB' - 662+00'EB'
STA 666+80'EB' - 672+88'EB'
STA 679+61'EB' - 705+73'EB'
STA 716+14'EB' - 720+85'EB'
STA 722+00'EB' - 728+00'EB'
STA 729+63'EB' - 740+50'EB'
STA 771+88'EB' - 778+21'EB'

STA 779+25'EB' - 788+00'EB'
STA 809+63'EB' - 838+50'EB'
STA 850+63'EB' - 875+50'EB'
STA 885+16'EB' - 921+03'EB'
STA 921+33'EB' - 935+46'EB'
STA 942+25'EB' - 955+50'EB'
STA 967+93'EB' - 991+55'EB'

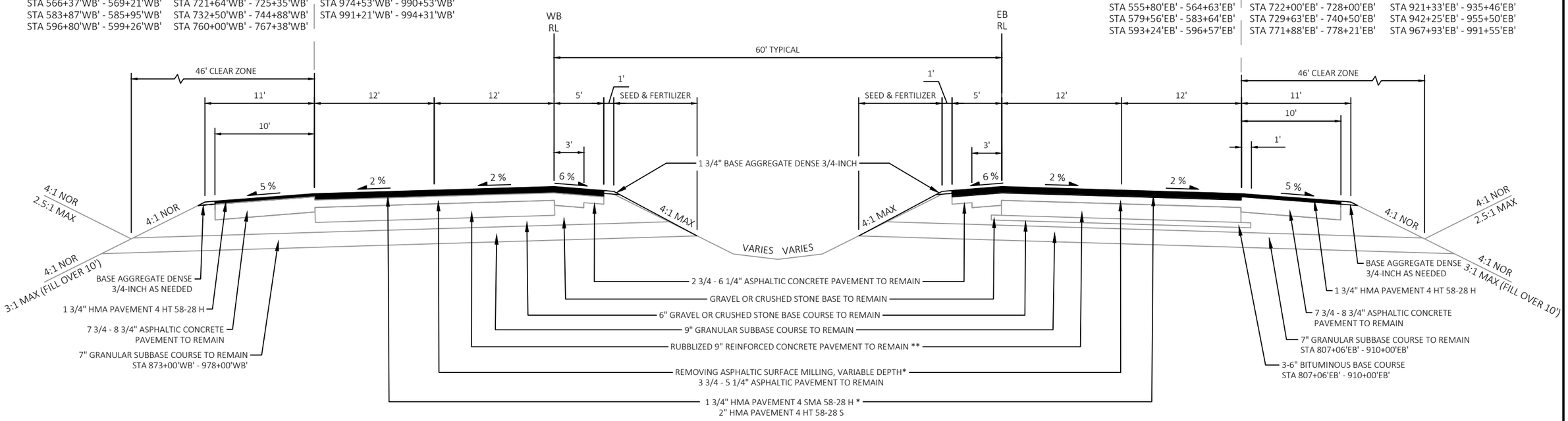

FINISHED TYPICAL SECTION

STA 482+44'EB' - 995+00'EB'
STA 460+30 'WB' - 998+00'WB'

* SEE CONSTRUCTION DETAIL

** BASE PATCHING CONCRETE SHES. LOCATIONS TO BE DETERMINED BY FIELD ENGINEER.

PROJECT NO: 1066-03-75	HWY: IH 94	COUNTY: DANE AND JEFFERSON	TYPICAL SECTIONS - FINISHED	SHEET 6	E

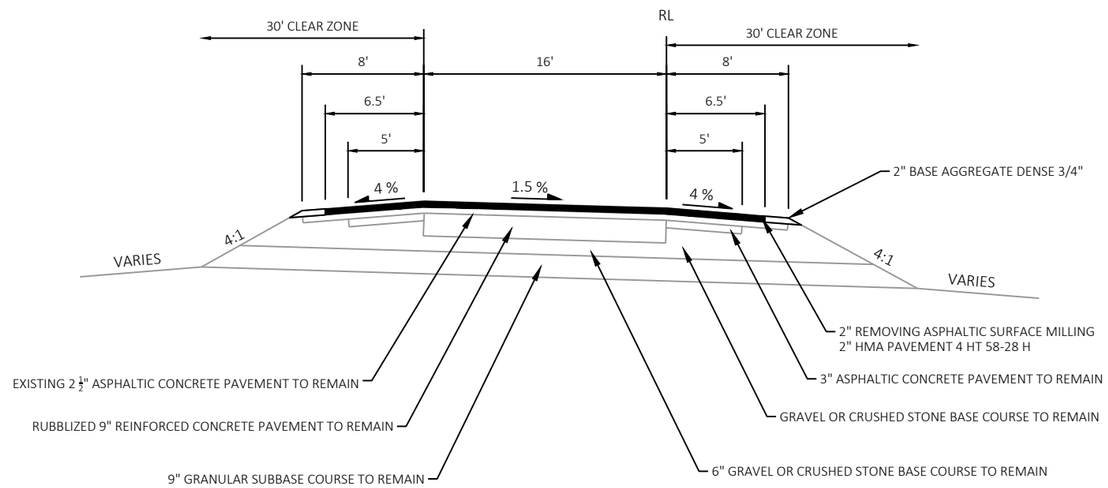

FINISHED TYPICAL SECTION

STH 73 RAMPS ('W', 'X', 'Y', 'Z')

STA 712+90 'W' - 721+27 'W'
STA 712+79 'X' - 720+18 'X'
STA 722+41 'Y' - 731+30 'Y'
STA 722+15 'Z' - 732+39 'Z'

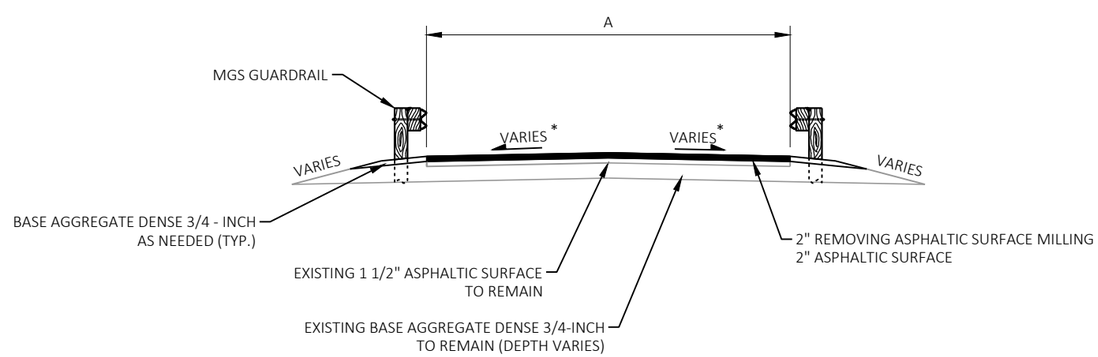

SIDE ROAD	A
BAXTER ROAD	26'
RIDGE ROAD	26'
OAK PARK ROAD	26'
CTH O	28'
AIRPORT ROAD	26'

FINISHED TYPICAL SECTION

SIDE ROADS

* 6.0% SUPERELEVATION TO THE RIGHT
THROUGH THE CURVE FOR AIRPORT ROAD

2

RUNOFF COEFFICIENT TABLE

	HYDROLOGIC SOIL GROUP											
	A			B			C			D		
	SLOPE RANGE (PERCENT)			SLOPE RANGE (PERCENT)			SLOPE RANGE (PERCENT)			SLOPE RANGE (PERCENT)		
LAND USE:	0-2	2-6	6 & OVER	0-2	2-6	6 & OVER	0-2	2-6	6 & OVER	0-2	2-6	6 & OVER
ROW CROPS	.08 .22	.16 .30	.22 .38	.12 .26	.20 .34	.27 .44	.15 .30	.24 .37	.33 .50	.19 .34	.28 .41	.38 .56
MEDIAN STRIP- TURF	.19 .24	.20 .26	.24 .30	.19 .25	.22 .28	.26 .33	.20 .26	.23 .30	.30 .37	.20 .27	.25 .32	.30 .40
SIDE SLOPE- TURF			.25 .32			.27 .34			.28 .36			.30 .38
PAVEMENT:												
ASPHALT	.70 - .95											
CONCRETE	.80 - .95											
BRICK	.70 - .80											
DRIVES, WALKS	.75 - .85											
ROOFS	.75 - .95											
GRAVEL ROADS, SHOULDERS	.40 - .60											

TOTAL PROJECT AREA = ___164___ ACRES
TOTAL AREA EXPECTED TO BE DISTURBED BY CONSTRUCTION ACTIVITIES = ___2.5___ACRES

2

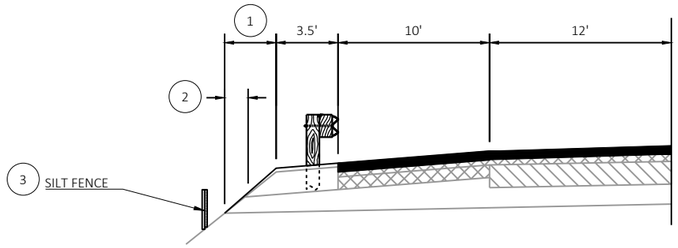

TYPICAL EROSION CONTROL SECTION

IH 94 - GUARDRAIL SECTIONS

NOTES

1	SEED & FERTILIZER
2	SALVAGED TOPSOIL & EROSION MAT CLASS I TYPE B
3	PLACE SILT FENCE WITHIN 3-FEET OF SLOPE INTERCEPT

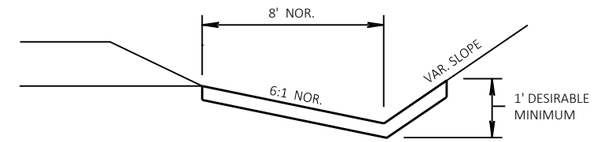

EROSION MAT DETAIL FOR DITCHES

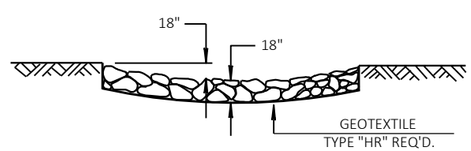

SECTION A-A

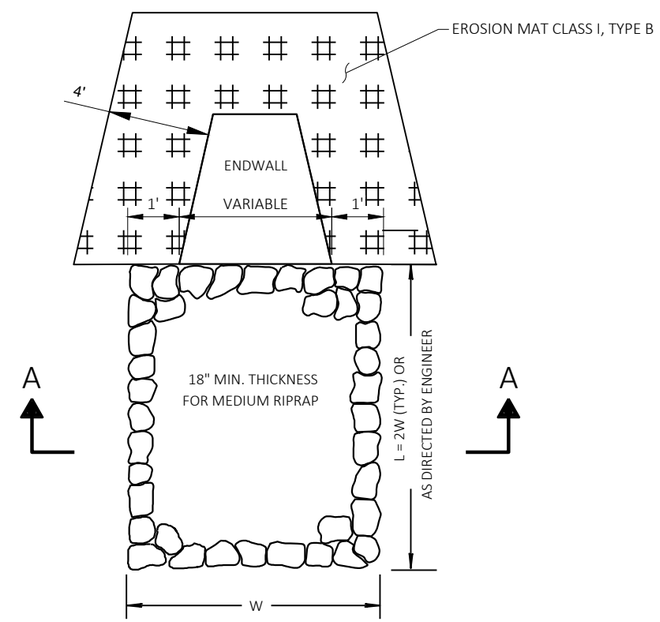

RIPRAP TREATMENT AT CULVERTS

FLUMES AT STRUCTURES SHALL BE CONSTRUCTED ACCORDING TO STANDARD DETAIL DRAWING 8D02 - CONCRETE SURFACE DRAINS, FLUME TYPE AT STRUCTURES EXCEPT AS NOTED IN CONSTRUCTION DETAIL.

MAX LENGTH OF FLUME SHALL BE 5' UNLESS ENGINEER STATES OTHERWISE.

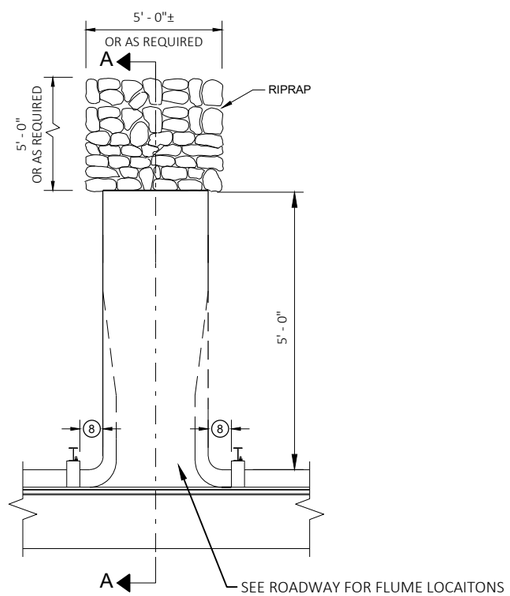

PLAN VIEW
PERPENDICULAR FLUME

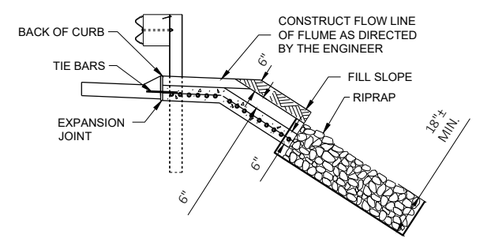

SECTION A - A

CONCRETE SURFACE DRAIN FLUMES AT STRUCTURES

IH 94
BAXTER RD
RIDGE RD
OAK PARK RD
CTH O
AIRPORT RD

PROJECT NO: 1066-03-75	HWY: IH 94	COUNTY: DANE AND JEFFERSON	CONSTRUCTION DETAILS	SHEET 10	E

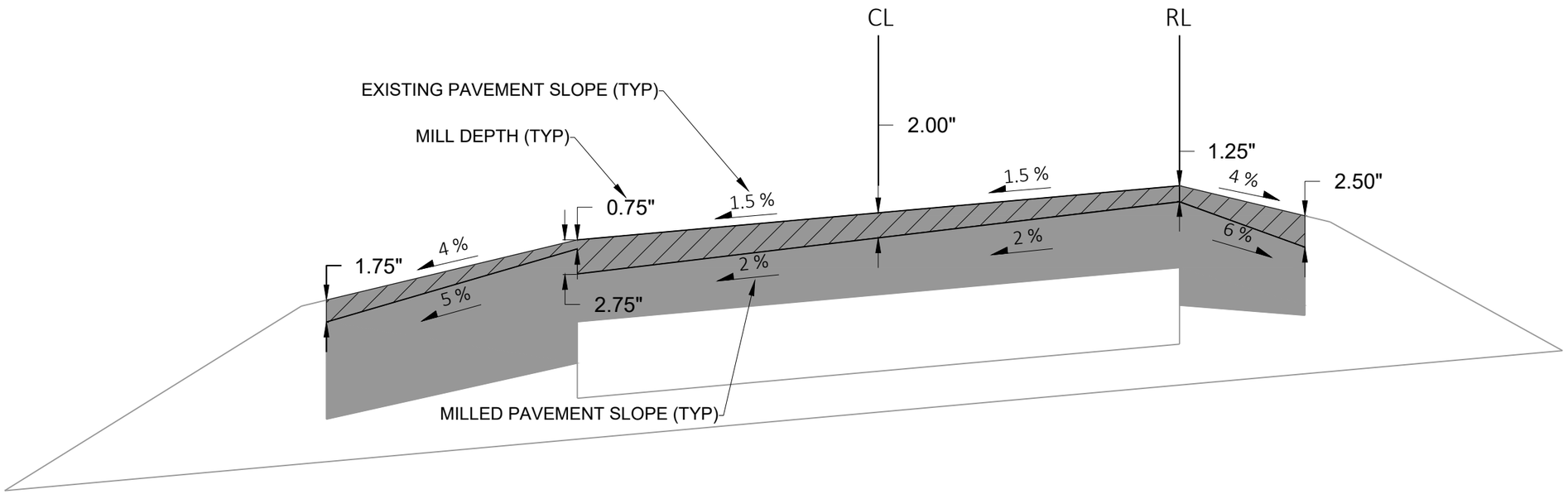

EXISTING PAVEMENT

VARIABLE DEPTH MILLING

1 3/4" HMA PAVEMENT 4 SMA 58-28 H

2" HMA PAVEMENT 4HT 58-28 S

BASE AGGREGATE 3/4-INCH

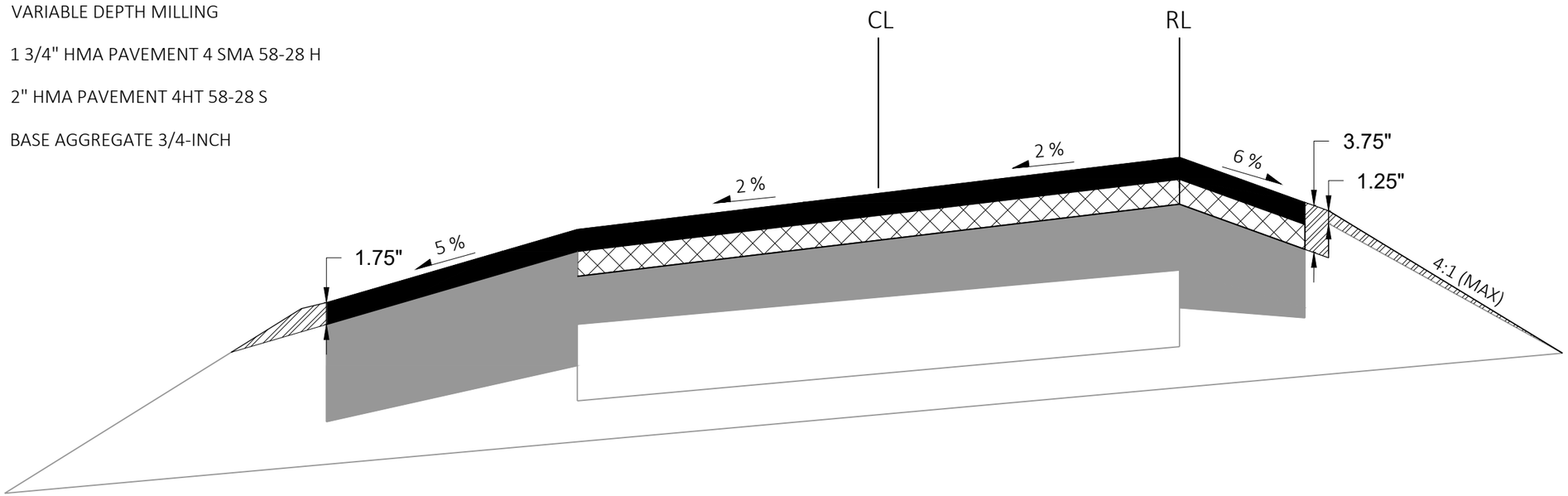

MILLING AND PAVING OPERATION DETAIL

PROJECT NO: 1066-03-75	HWY: IH 94	COUNTY: DANE AND JEFFERSON	CONSTRUCTION DETAILS	SHEET 11	E

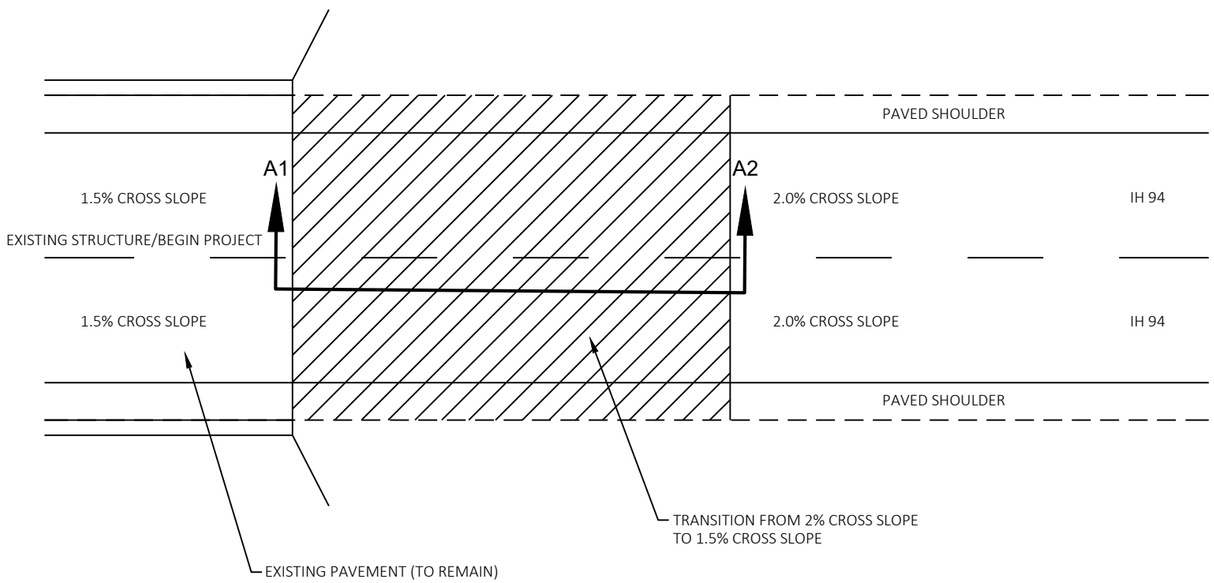

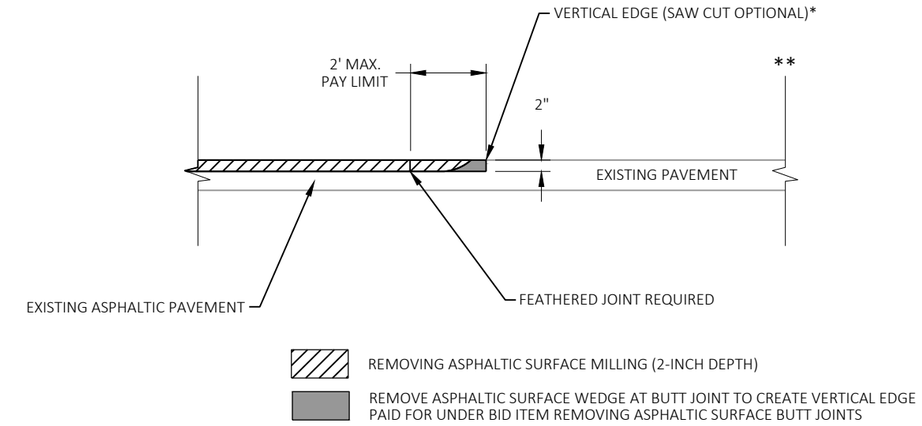

REMOVING ASPHALTIC SURFACE BUTT JOINTS - STH 73 RAMP TERMINALS

W, X, Y, & Z RAMPS

* NOT PAID FOR SEPARATELY

** TRANSITION PAVEMENT CROSS SLOPE TO MATCH EXISTING CROSS SLOPE.

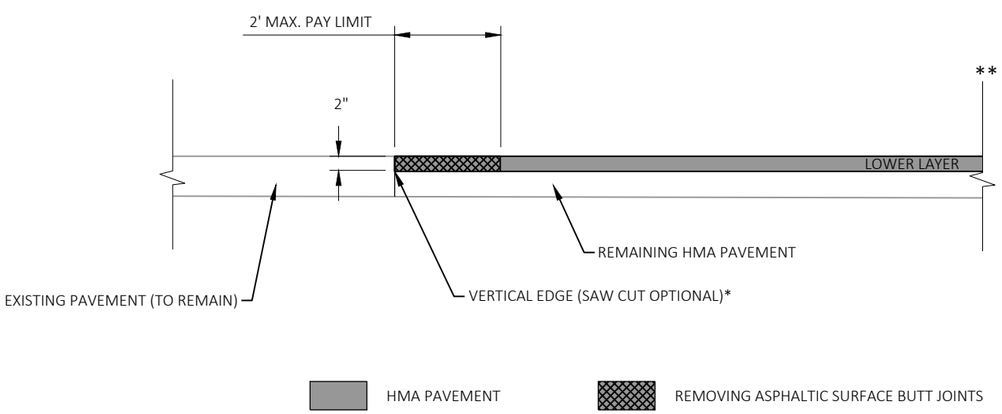

LOWER PAVEMENT LAYER

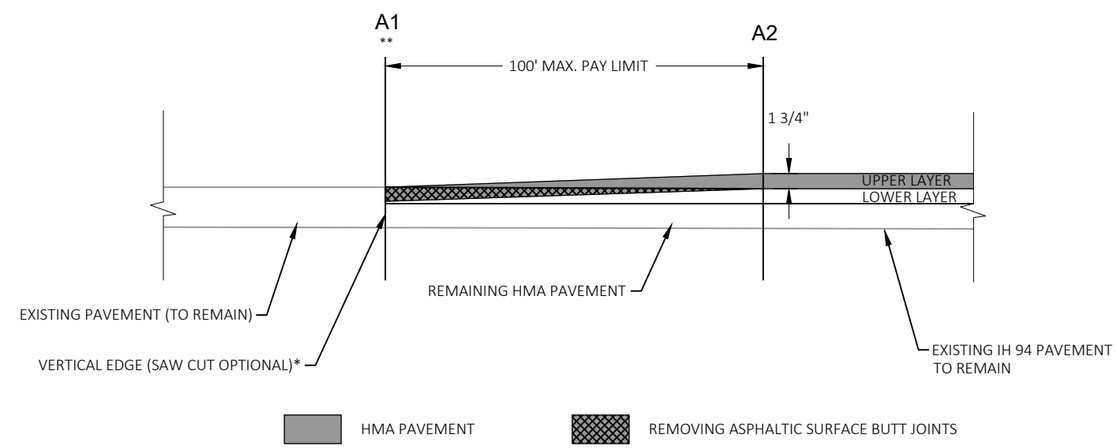

UPPER PAVEMENT LAYER

REMOVING ASHALTIC SURFACE BUTT JOINTS - IH 94 BEGIN/END PROJECT LIMITS AND STRUCTURE APPROACHES

* NOT PAID FOR SEPARATELY

** TRANSITION PAVEMENT CROSS SLOPE TO MATCH EXISTING CROSS SLOPE.

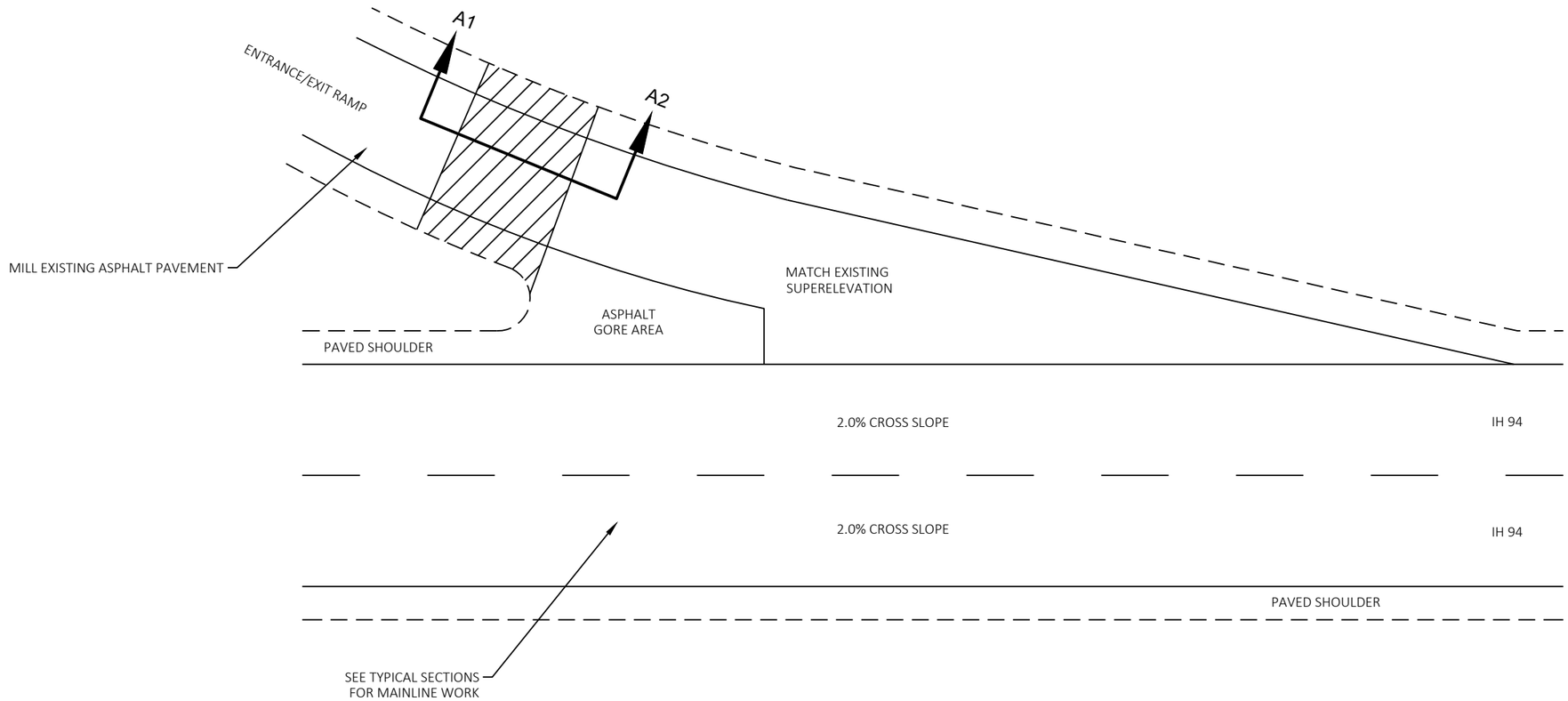

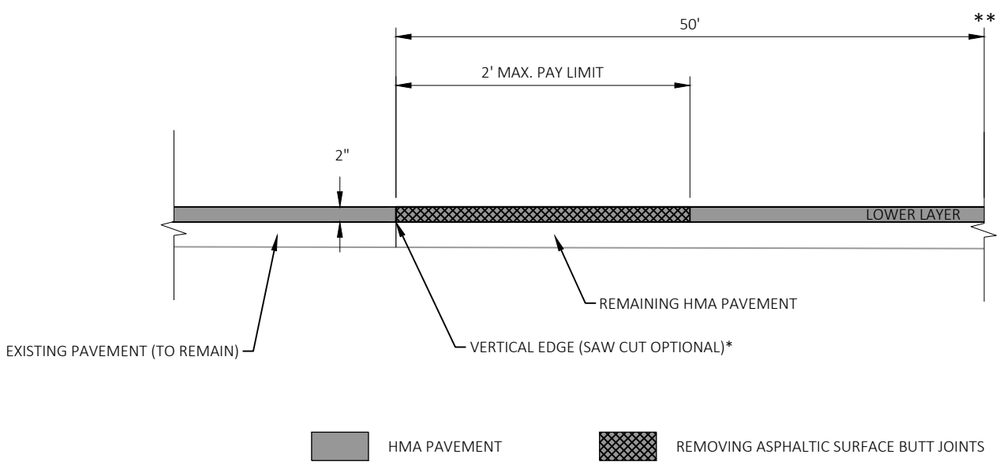

LOWER PAVEMENT LAYER

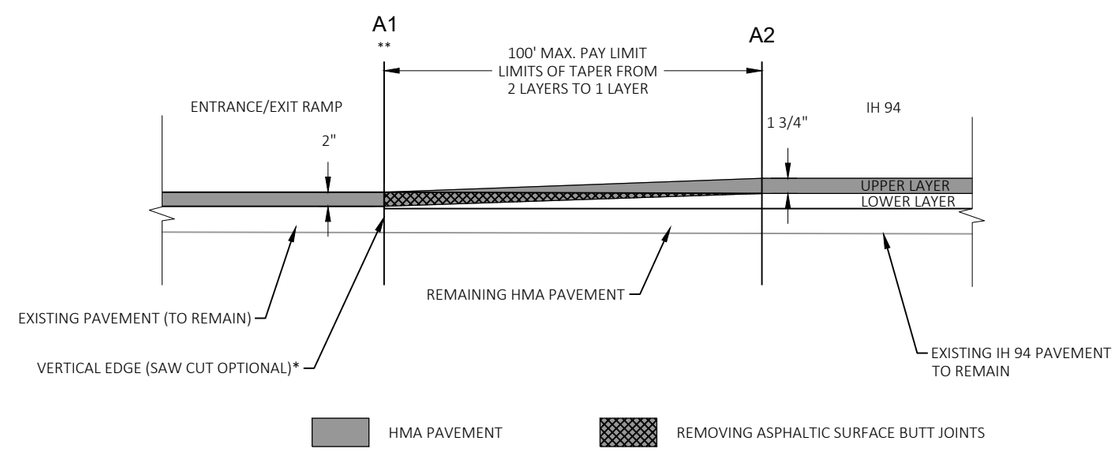

UPPER PAVEMENT LAYER

DETAIL FOR MILLING AND PAVING -
IH 94 RAMPS AT STH 73

* NOT PAID FOR SEPARATELY

** TRANSITION PAVEMENT CROSS SLOPE TO MATCH EXISTING CROSS SLOPE.

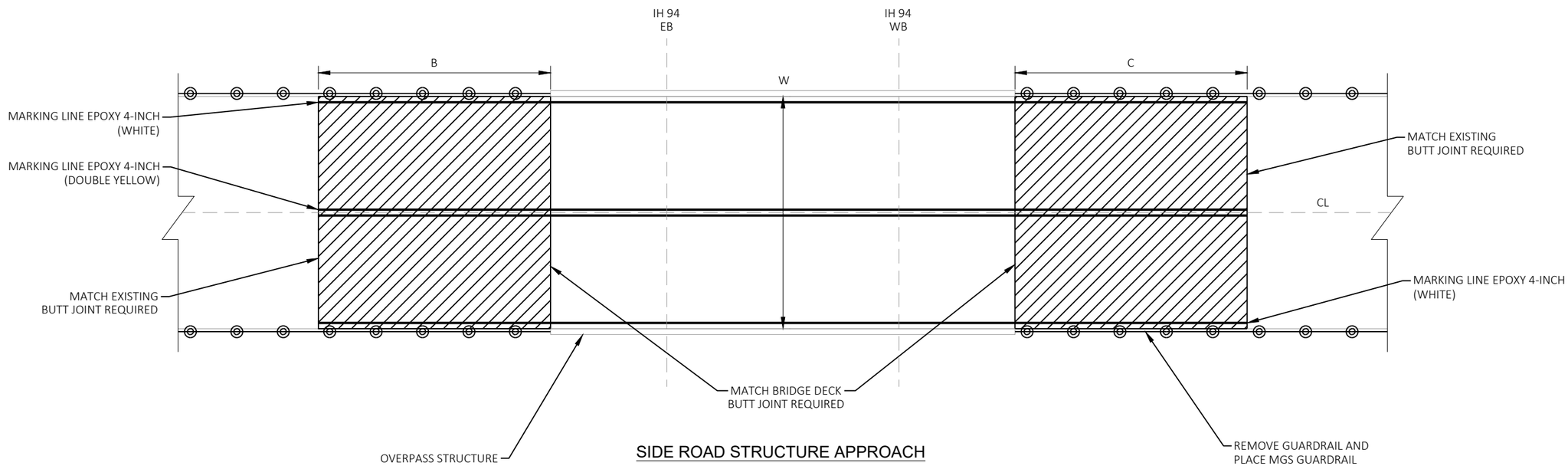

SIDE ROAD STRUCTURE APPROACH

MILL AND OVERLAY

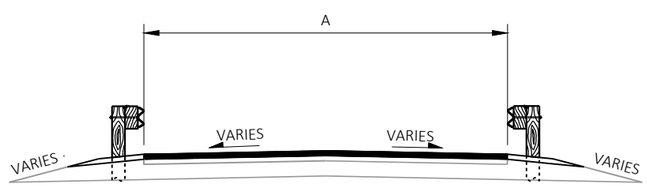

SIDE ROAD	A	B	C
BAXTER ROAD	26'	50'	50'
RIDGE ROAD	26'	50'	50'
OAK PARK ROAD	26'	50'	50'
CTH O	28'	50'	50'
AIRPORT ROAD	26'	50'	50'

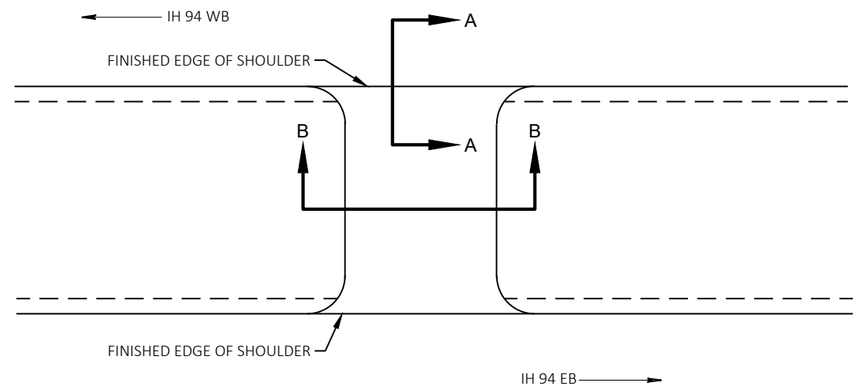

PLAN VIEW

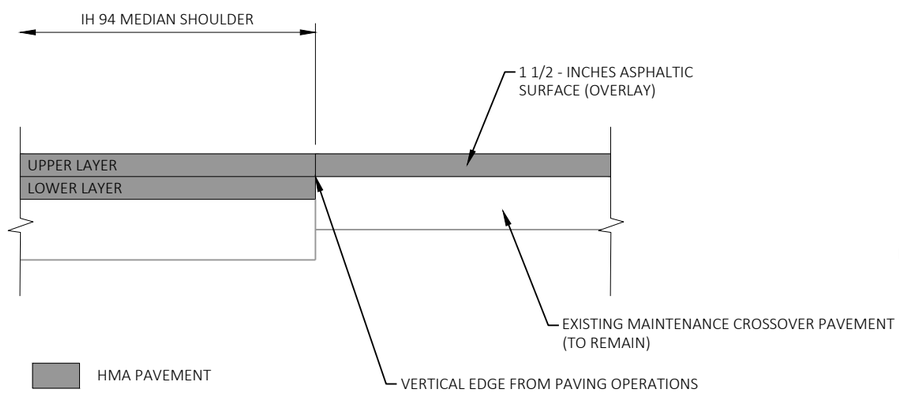

SECTION A-A

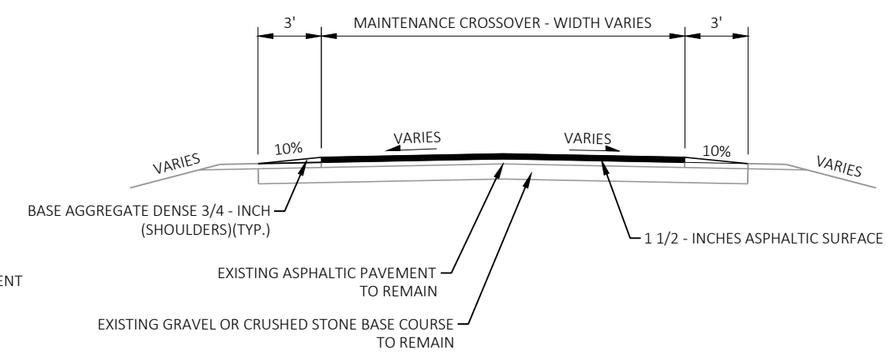

SECTION B-B

HMA OVERLAY AT MAINTENANCE CROSSOVER

STA 495+23'EB'
STA 575+12'EB'
STA 701+04'EB'
STA 745+97'EB'
STA 882+65'EB'
STA 911+72'EB'

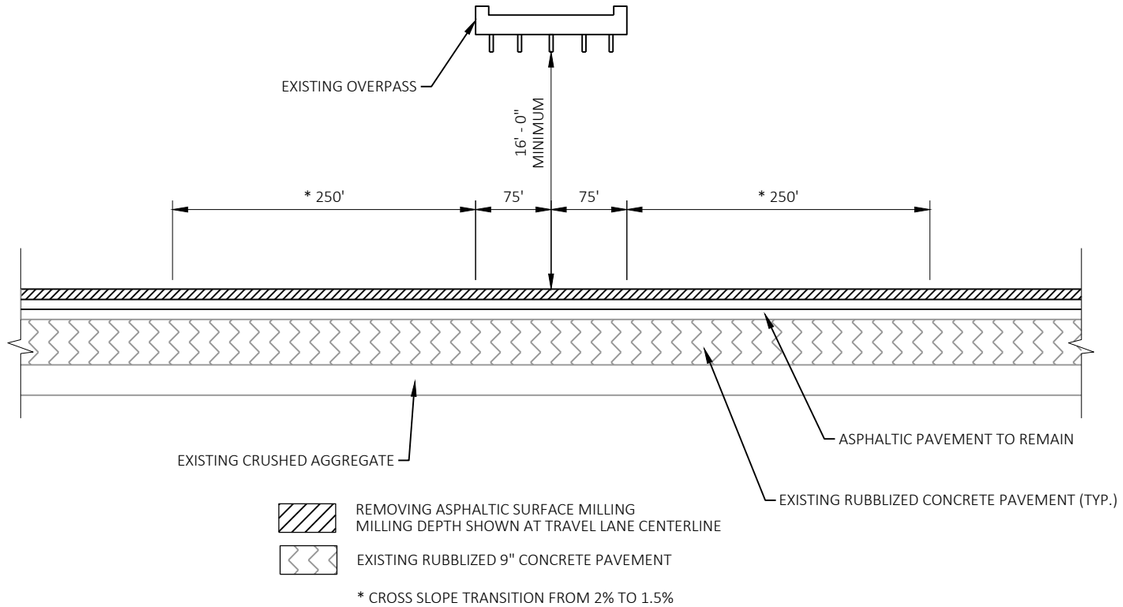

NOTE:
MUST MAINTAIN VERTICAL CLEARANCE OF AT LEAST 16'

EXISTING VERTICAL BRIDGE CLEARANCE DATA					
ROADWAY	BRIDGE	OVERPASS	EXISTING CLEARANCE	PROPOSED CLEARANCE	CENTERLINE MILL DEPTH
I 94 EB	B-13-155	BAXTER ROAD	16.05'	16.05'	2.5"
I 94 WB	B-13-155	BAXTER ROAD	16.29'	16.08'	2.0"
I 94 EB	B-13-156	RIDGE ROAD	16.58'	16.37'	2.0"
I 94 WB	B-13-156	RIDGE ROAD	16.15'	16.15'	2.5"
I 94 EB	B-13-157	OAK PARK ROAD	15.99'	15.99'	2.5"
I 94 WB	B-13-157	OAK PARK ROAD	16.49'	16.28'	2.0"
I 94 EB	B-28-34	CTH O	16.40'	16.19'	2.0"
I 94 WB	B-28-34	CTH O	16.10'	16.10'	2.5"
I 94 EB	B-28-35	AIRPORT ROAD	16.42'	16.21'	2.0"
I 94 WB	B-28-35	AIRPORT ROAD	16.34'	16.13'	2.0"

SPECIAL MILLING AND PAVING UNDER BRIDGES

EB IH 94 AT BAXTER ROAD
WB IH 94 AT RIDGE ROAD
EB IH 94 AT OAK PARK ROAD
WB IH 94 AT CTH O

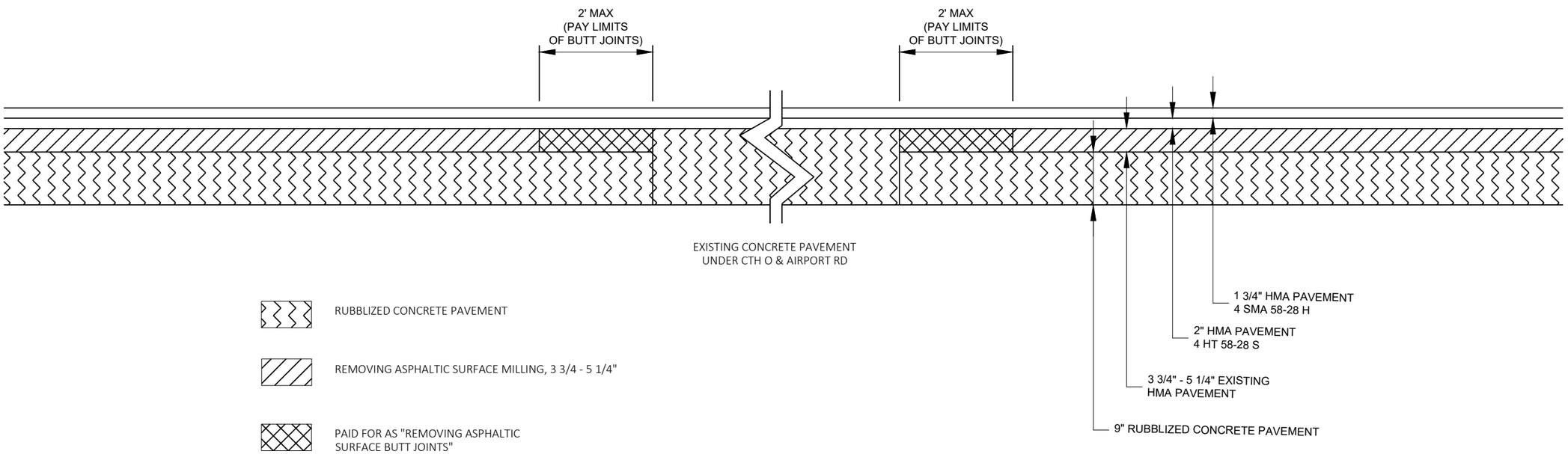

DETAIL FOR SPECIAL MILLING AND PAVING UNDER BRIDGES

EB & WB IH 94 UNDER CTH O
EB & WB IH 94 UNDER AIRPORT ROAD

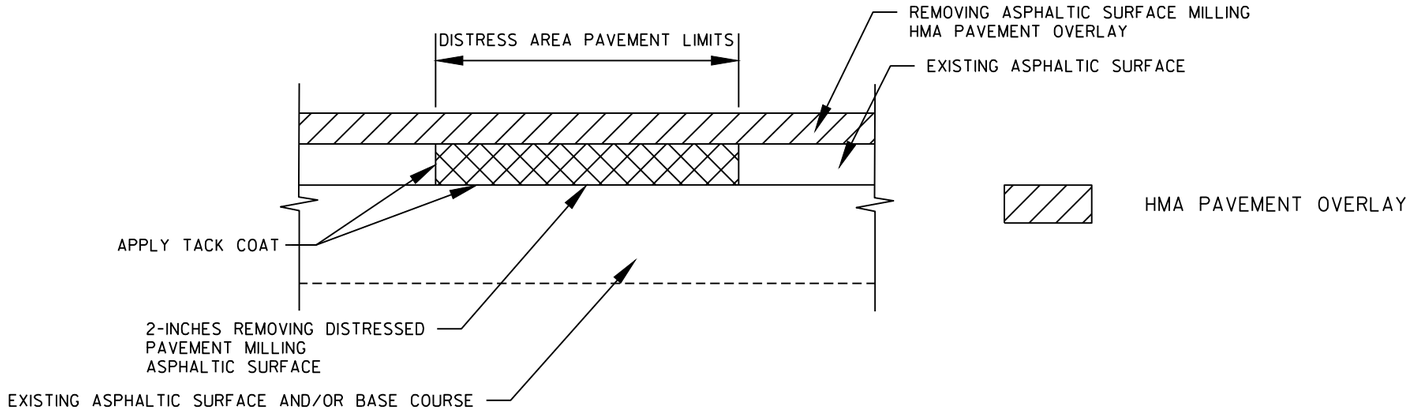

REMOVING DISTRESS PAVEMENT MILLING
SECTION A-A

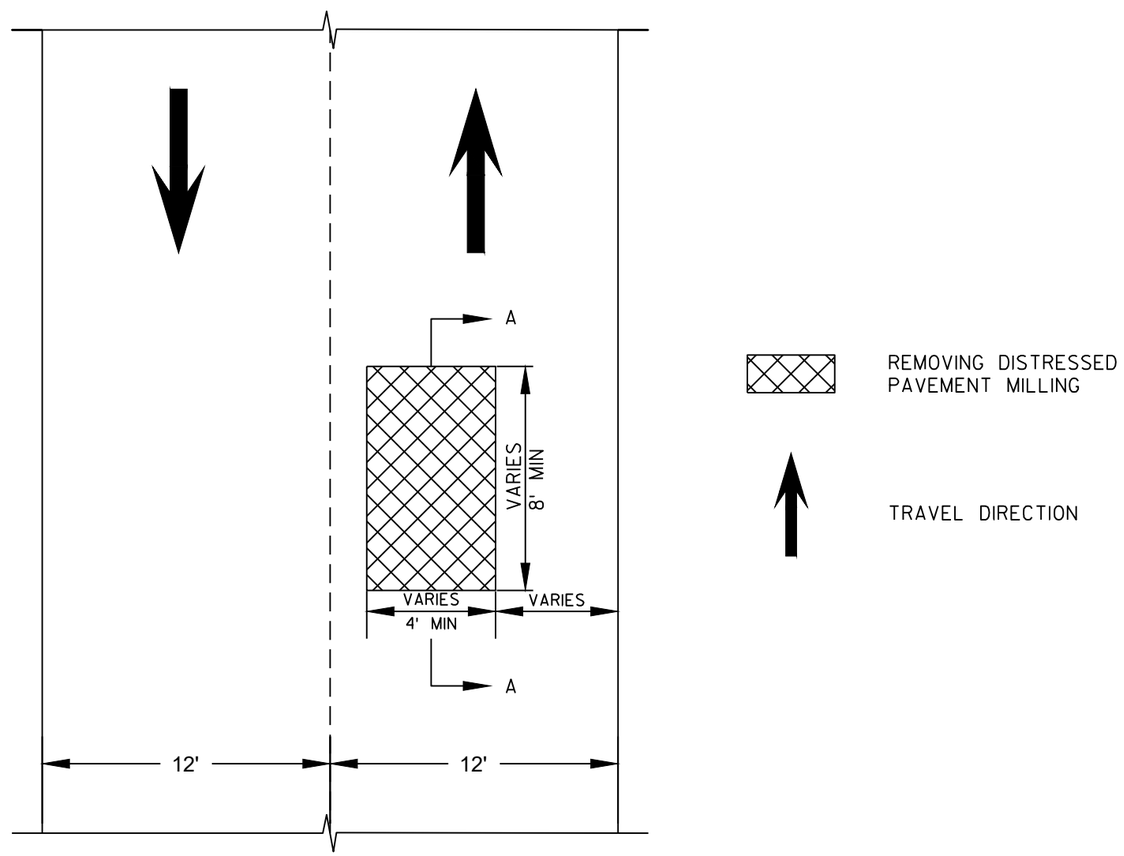

PLAN VIEW

EXACT LOCATION AND LIMITS OF REMOVING DISTRESSED PAVEMENT MILLING TO BE DETERMINED BY THE ENGINEER IN THE FIELD

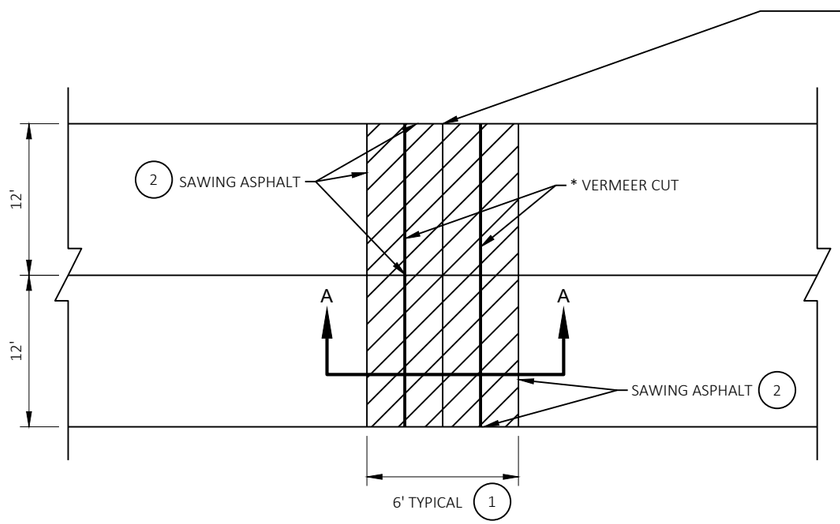

PLAN VIEW

(DOUBLE LANE CONCRETE JOINT REPAIR)

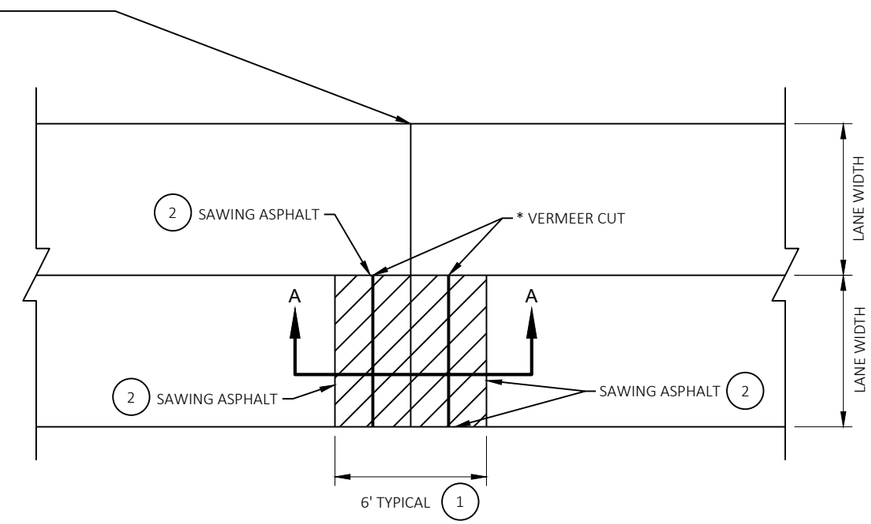

PLAN VIEW

(SINGLE LANE CONCRETE JOINT REPAIR)

BOUNDARY OF BASE PATCHING CONCRETE SHES

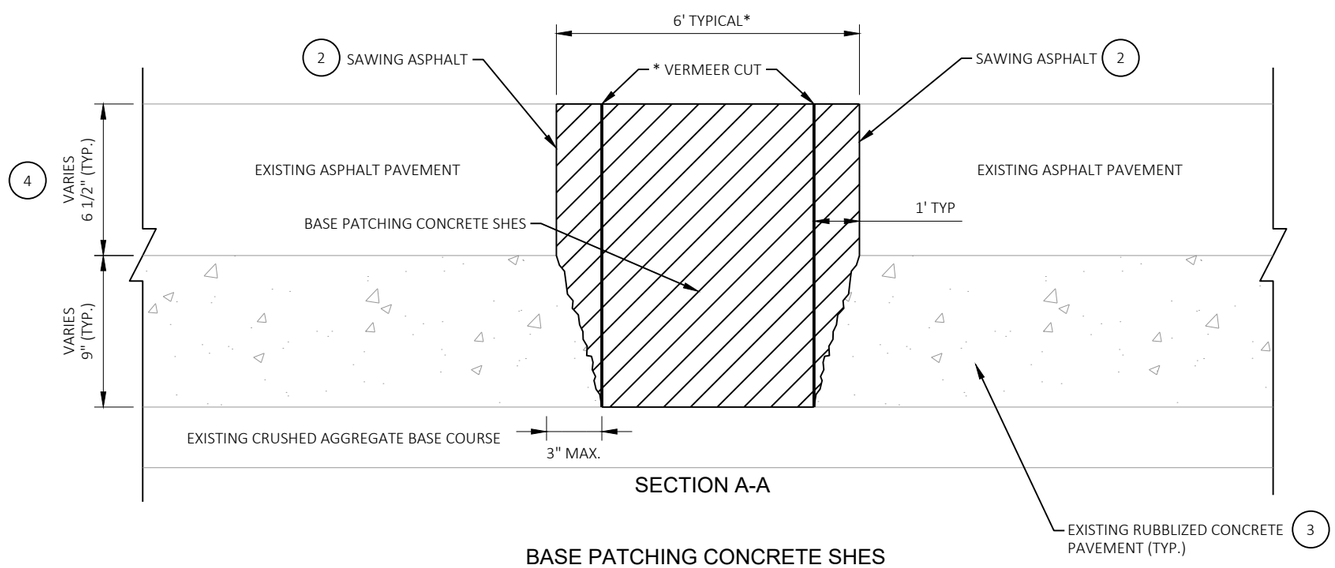

SECTION A-A

BASE PATCHING CONCRETE SHES

LOCATIONS TO BE DETERMINED BY THE ENGINEER

NOTES:

1. OR AS DIRECTED BY THE ENGINEER IN THE FIELD
2. SAWING ASPHALT REQUIRED THROUGH THE EXISTING 6 1/2 - INCHES OF ASPHALT. SAWING CONCRETE IS NOT REQUIRED THROUGH RUBBLIZED CONCRETE, HOWEVER, THE ADJACENT ASPHALT PAVEMENT CAN NOT BE UNDERMINED WHEN THE CONCRETE IS REMOVED. USE OF A VERMEER-WHEEL AND/OR A ROCK STYLE SAW ARE NOT ALLOWED. SAWING ASPHALT AND SAWING CONCRETE ARE INCIDENTAL TO THE ITEM BASE PATCHING CONCRETE SHES.
3. THE EXISTING CONCRETE PAVEMENT IS REINFORCED WITH DOWEL BARS AND WIRE MESH. ALL CUTTING, BENDING, AND ETC. OF WIRE MESH REQUIRED TO NOT INTERFERE WITH PLACEMENT OF THE BASE PATCHING CONCRETE SHES AND HMA PLACEMENT IS INCIDENTAL TO THE ITEM BASE PATCHING CONCRETE SHES.
4. THE EXISTING PAVEMENT THICKNESSES VARY BUT ARE TYPICALLY 6.5 INCHES (ASPHALT) AND 9 INCHES (CONCRETE). COMPENSATION FOR BASE PATCHING CONCRETE SHES WILL NOT BE ADJUSTED IF THE ACTUAL PAVEMENT THICKNESS IS MORE OR LESS THAN THE TYPICAL PAVEMENT DEPTHS.

* VERMEER CUT WILL BE ALLOWED 1' INSIDE FULL DEPTH ASPHALT SAWCUT TO ASSIST WITH REMOVALS PROVIDED THE CONTRACTOR IS ABLE TO MEET THE INTENT OF THE CONSTRUCTION DETAIL (SUBJECT TO THE ENGINEER'S APPROVAL IN THE FIELD).

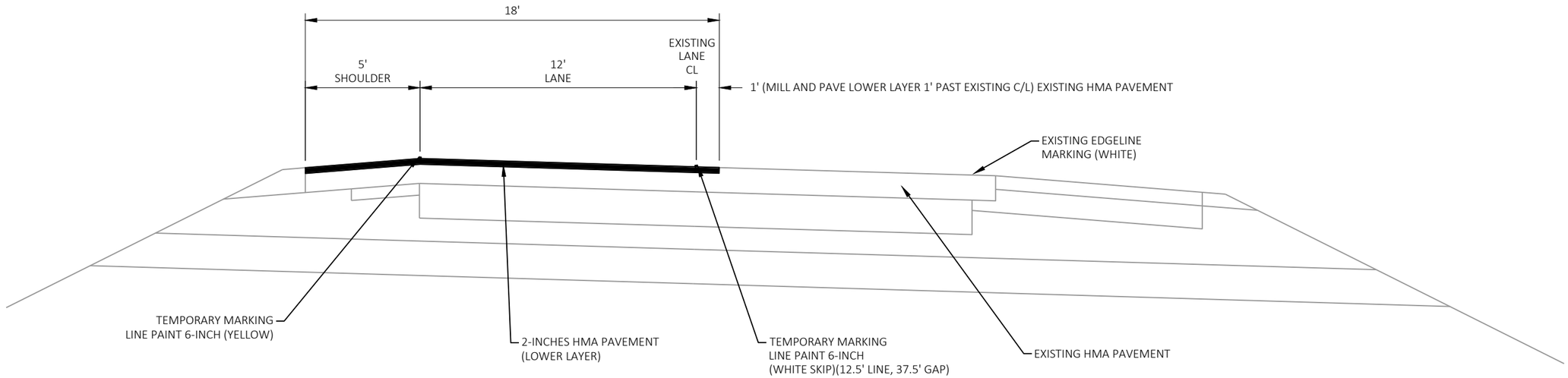

STAGE 2A

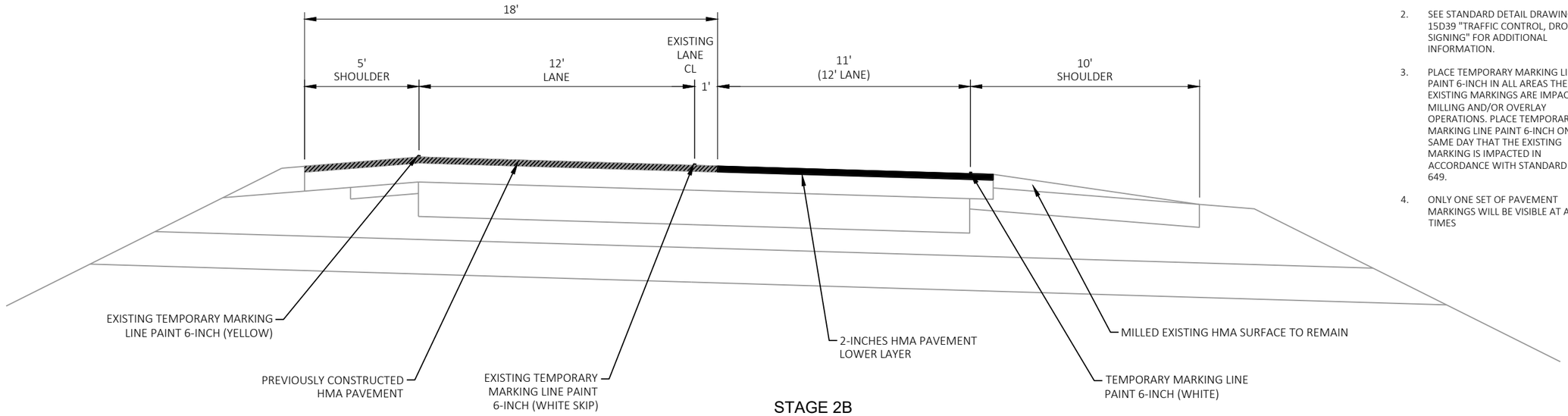

STAGE 2B

NOTES:

1. SEE STANDARD DETAIL DRAWING 15C08 "PERMANENT LONGITUDINAL PAVEMENT MARKING", 15C31-06A "PAVEMENT MARKING EXIT RAMP AND PARALLEL EXIT RAMP", AND 15C31-06C "PAVEMENT MARKING ENTRANCE RAMP AND PARALLEL ENTRANCE RAMP" FOR ADDITIONAL INFORMATION.
2. SEE STANDARD DETAIL DRAWING 15D39 "TRAFFIC CONTROL, DROP-OFF SIGNING" FOR ADDITIONAL INFORMATION.
3. PLACE TEMPORARY MARKING LINE PAINT 6-INCH IN ALL AREAS THE EXISTING MARKINGS ARE IMPACTED BY MILLING AND/OR OVERLAY OPERATIONS. PLACE TEMPORARY MARKING LINE PAINT 6-INCH ON THE SAME DAY THAT THE EXISTING MARKING IS IMPACTED IN ACCORDANCE WITH STANDARD SPEC 649.
4. ONLY ONE SET OF PAVEMENT MARKINGS WILL BE VISIBLE AT ALL TIMES

MARKING LINE SEQUENCE DETAILS

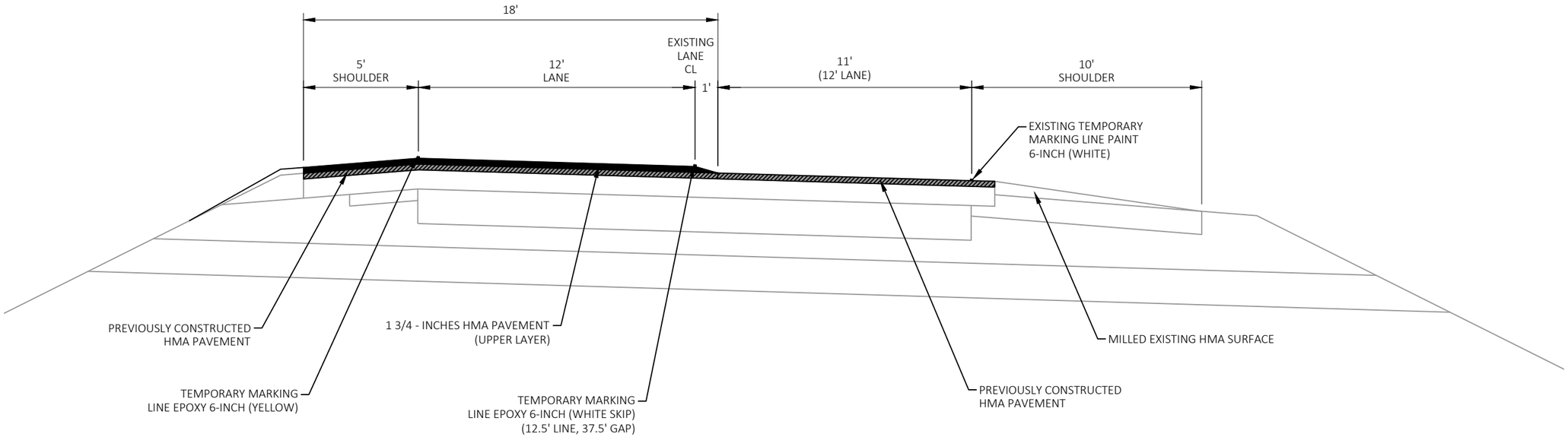

STAGE 3A

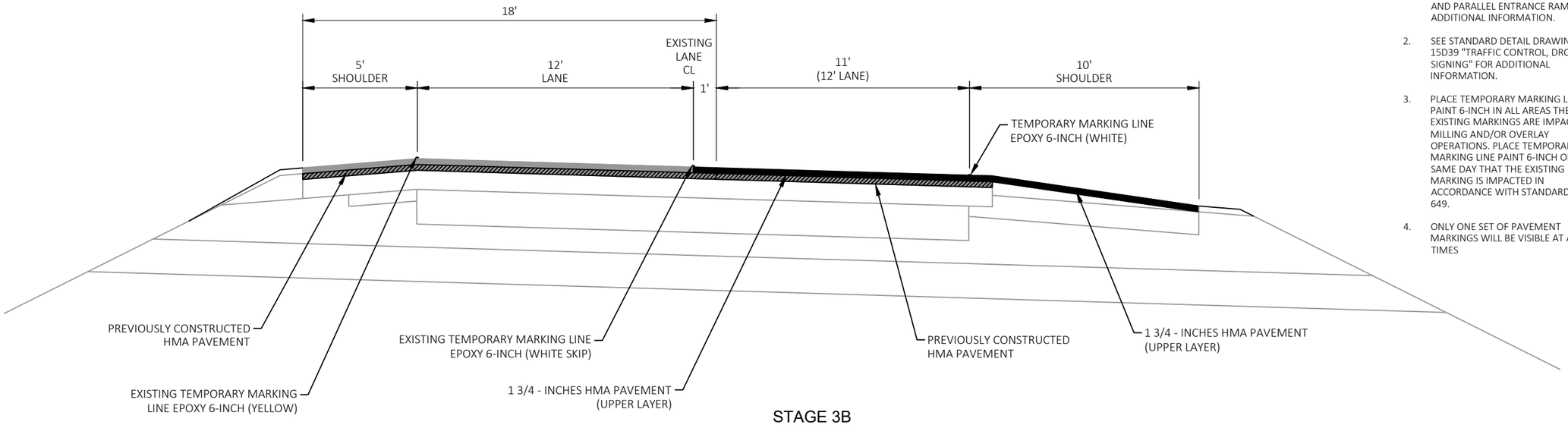

STAGE 3B

NOTES:

1. SEE STANDARD DETAIL DRAWING 15C08 "PERMANENT LONGITUDINAL PAVEMENT MARKING", 15C31-06A "PAVEMENT MARKING EXIT RAMP AND PARALLEL EXIT RAMP", AND 15C31-06C "PAVEMENT MARKING ENTRANCE RAMP AND PARALLEL ENTRANCE RAMP" FOR ADDITIONAL INFORMATION.
2. SEE STANDARD DETAIL DRAWING 15D39 "TRAFFIC CONTROL, DROP-OFF SIGNING" FOR ADDITIONAL INFORMATION.
3. PLACE TEMPORARY MARKING LINE PAINT 6-INCH IN ALL AREAS THE EXISTING MARKINGS ARE IMPACTED BY MILLING AND/OR OVERLAY OPERATIONS. PLACE TEMPORARY MARKING LINE PAINT 6-INCH ON THE SAME DAY THAT THE EXISTING MARKING IS IMPACTED IN ACCORDANCE WITH STANDARD SPEC 649.
4. ONLY ONE SET OF PAVEMENT MARKINGS WILL BE VISIBLE AT ALL TIMES

MARKING LINE SEQUENCE DETAILS

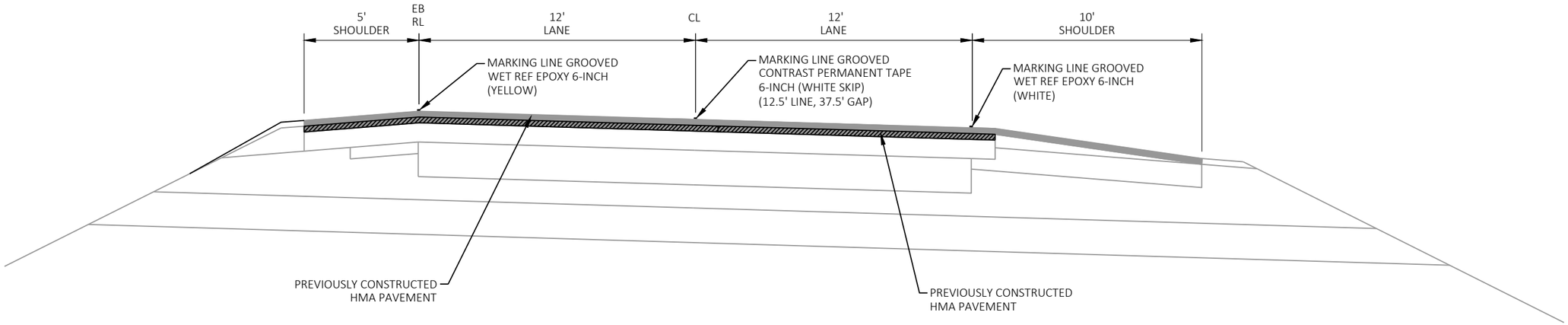

EB IH 94 FINAL MARKING LINES

NOTES:

1. SEE STANDARD DETAIL DRAWING 15C08 "PERMANENT LONGITUDINAL PAVEMENT MARKING", 15C31-06A "PAVEMENT MARKING EXIT RAMP AND PARALLEL EXIT RAMP", AND 15C31-06C "PAVEMENT MARKING ENTRANCE RAMP AND PARALLEL ENTRANCE RAMP" FOR ADDITIONAL INFORMATION.
2. SEE STANDARD DETAIL DRAWING 15D39 "TRAFFIC CONTROL, DROP-OFF SIGNING" FOR ADDITIONAL INFORMATION.

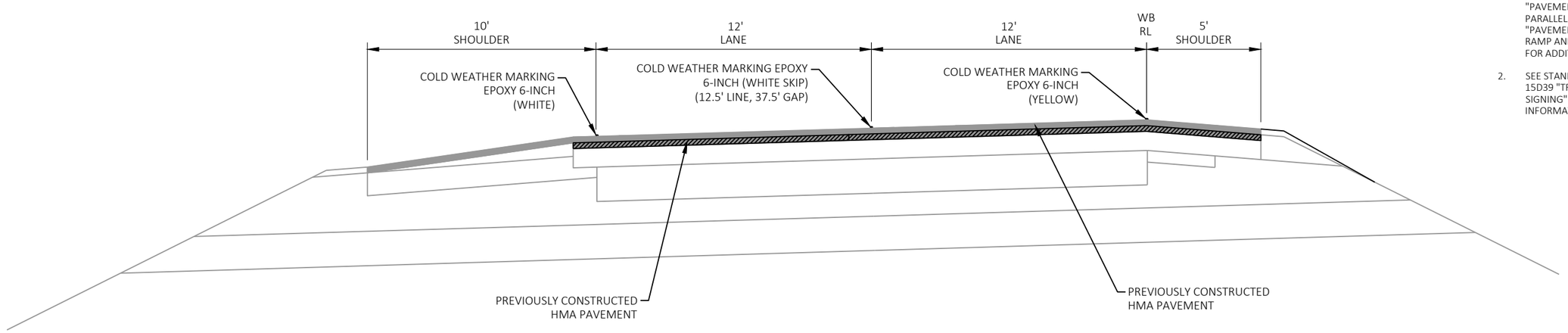

WB IH 94 FINAL MARKING LINES

MARKING LINE SEQUENCE DETAILS

2

GENERAL NOTES FOR CONSTRUCTION STAGING AND TRAFFIC CONTROL:

1. TRAFFIC CONTROL DRUMS IN TAPERS SHALL BE EQUIPPED WITH WARNING LIGHTS, TYPE "C", ONE WAY LIGHTS, UNLESS OTHERWISE SHOWN.
2. SIGN LOCATIONS ARE APPROXIMATE. THE ACTUAL LOCATION AND SPACING MAY BE ADJUSTED AS DIRECTED BY THE ENGINEER TO MEET FIELD CONDITIONS.
3. PLACE ADVANCED WARNING SIGNS ON EACH SIDE OF EASTBOUND AND WESTBOUND ROADWAYS.
4. "WO" SIGNS ARE THE SAME AS "W" SIGNS EXCEPT THE BACKGROUND IS REFLECTIVE ORANGE.
5. SIGNS IN CONFLICT WITH TRAFFIC CONTROL "IN USE" SHALL BE COVERED. THE COVERING OF TYPE II SIGNS IS INCLUDED UNDER THE BID ITEM TRAFFIC CONTROL COVERING SIGNS TYPE II. IN LIEU OF COVERING TYPE II SIGNS, THE CONTRACTOR MAY ELECT TO REMOVE AND REINSTALL THEM, PAID UNDER THE BID ITEM TRAFFIC CONTROL COVERING SIGNS TYPE II.
6. ALL TRAFFIC CONTROL SIGNS SHALL BE 48"X48" UNLESS OTHERWISE NOTED IN THE PLANS.
7. CONTRACTOR SHALL INSTALL PERMANENT PAVEMENT MARKING WHEN APPROPRIATE DURING CONSTRUCTION STAGING AS SHOWN IN THE PLANS OR AS DIRECTED BY THE ENGINEER.
8. BARRICADE STRIPES SHALL POINT DOWNWARD IN THE DIRECTION OF TRAFFIC FLOW.
9. TEMPORARY PAVEMENT MARKING PAINT SHALL BE USED ON LOWER HMA LAYERS THAT ARE TO BE OVERLAID IN SUBSEQUENT STAGES.
10. WORK UNDER THIS PROJECT ID ALONG THE EB AND WB DIRECTIONS MAY PROCEED CONCURRENTLY,
    I.E. STAGE 1A CONCURRENT WITH STAGE 2A IN THE SAME DIRECTION, ETC. A MINIMUM 3-MILE SEPARATION FROM THE WORK ZONES IN THE SAME DIRECTION IS REQUIRED.
11. PLACE SIGN W08-15 ALONG OUTSIDE SHOULDER IN STAGE 2B WHEN MILLED SHOULDER WILL BE LEFT IN PLACE. SEE STANDARD DETAIL DRAWING 15D44 'TRAFFIC CONTROL, SIGNING ON ROADWAYS WITH MILLED SURFACES' FOR ADDITIONAL DETAILS.
12. SEE STANDARD DETAIL DRAWING 15D39 'TRAFFIC CONTROL, DROP-OFF SIGNING' DURING STAGES 1A, 1B, 2A, 2B, AND 3A.

LEGEND

- WORK ZONE
- TRAFFIC FLOW
- TRAFFIC CONTROL DRUM
- TRAFFIC CONTROL DRUM WITH TYPE C STEADY BURN LIGHT
- TRAFFIC CONTROL ARROW BOARD
- TRAFFIC CONTROL SIGN MOUNTED ON TEMPORARY SUPPORT
- POST MOUNTED TRAFFIC CONTROL SIGNS
- TRAFFIC CONTROL BARRICADE TYPE III WITH TWO TYPE A WARNING LIGHTS WITH/WITHOUT SIGN
- PCMS — TRAFFIC CONTROL SIGNS PCMS

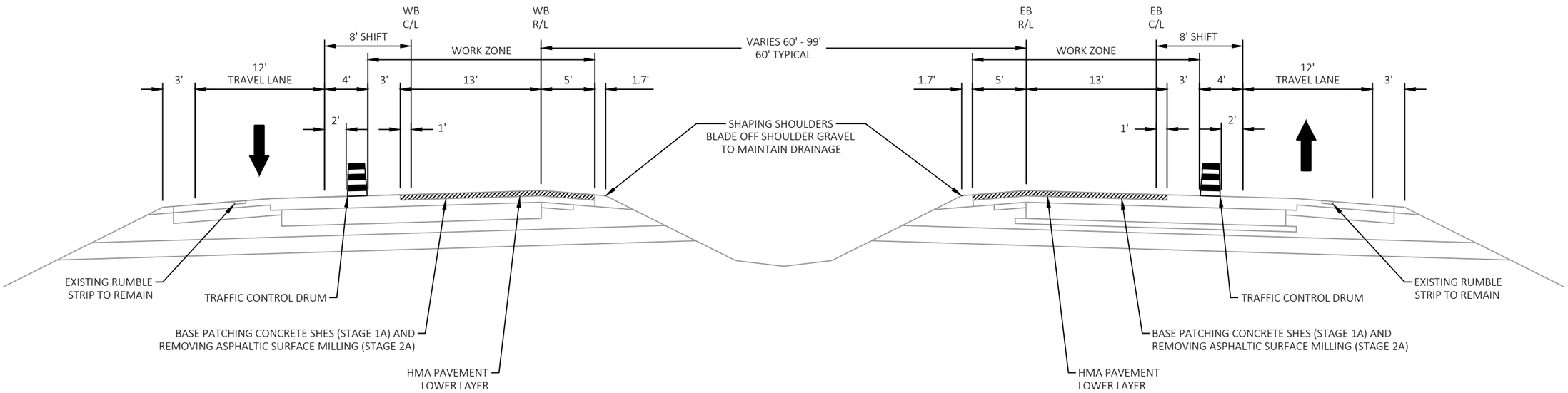

STAGE 1A AND 2A NIGHTTIME
IH 94

STAGE 1A AND 2A NIGHTTIME
IH 94

NOTES:

1. SEE MARKING LINE SEQUENCE DETAILS FOR PAVEMENT MARKINGS TO BE INSTALLED PRIOR TO OPENING TRAVEL LANES AT THE END OF EACH NIGHT.

2. LOCATE A DRUM ADJACENT TO AND UPSTREAM OF BASE PATCH LOCATIONS.

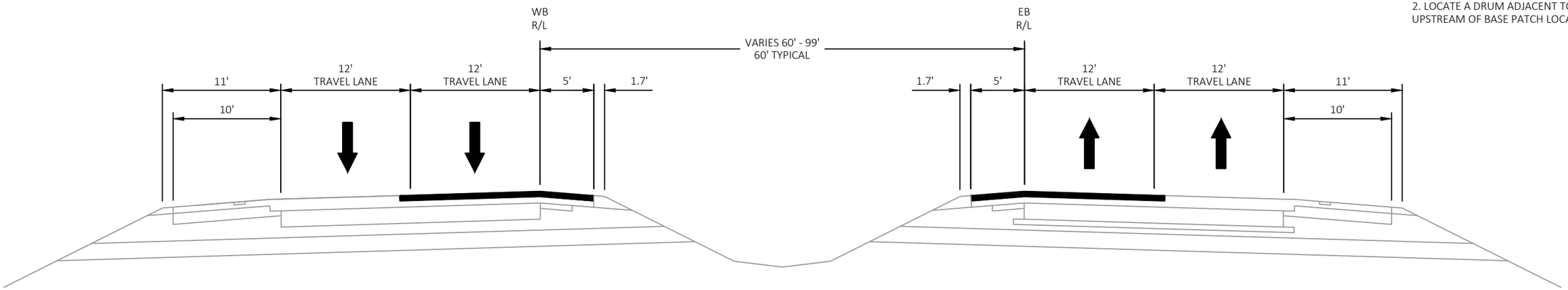

STAGE 1A AND 2A DAYTIME
IH 94

STAGE 1A AND 2A DAYTIME
IH 94

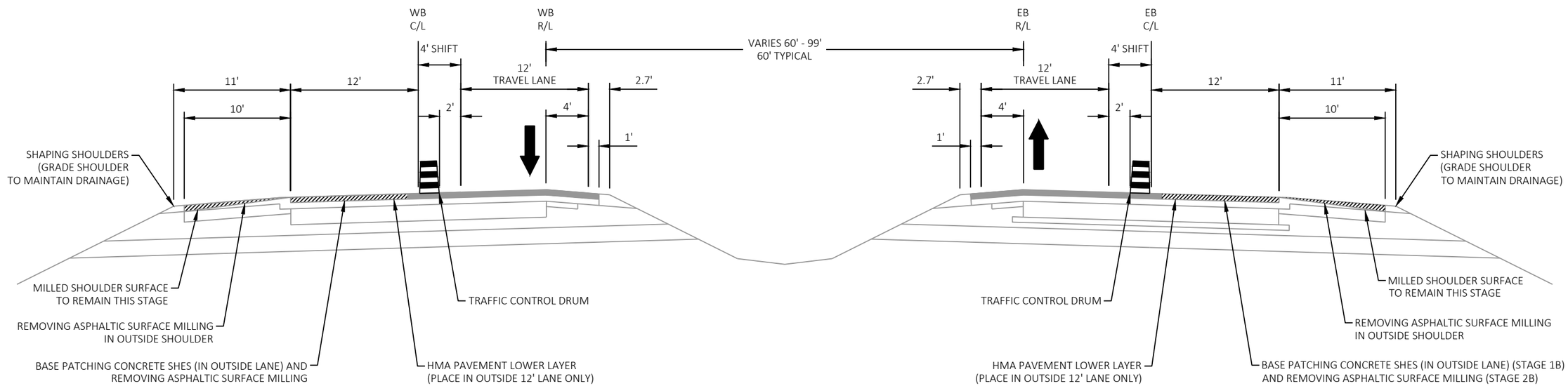

STAGE 1B AND 2B NIGHTTIME
IH 94

STAGE 1B AND 2B NIGHTTIME
IH 94

NOTES:

1. SEE MARKING LINE SEQUENCE DETAILS FOR PAVEMENT MARKINGS TO BE INSTALLED PRIOR TO OPENING TRAVEL LANES AT THE END OF EACH NIGHT.

2. LOCATE A DRUM ADJACENT TO AND UPSTREAM OF BASE PATCH LOCATIONS.

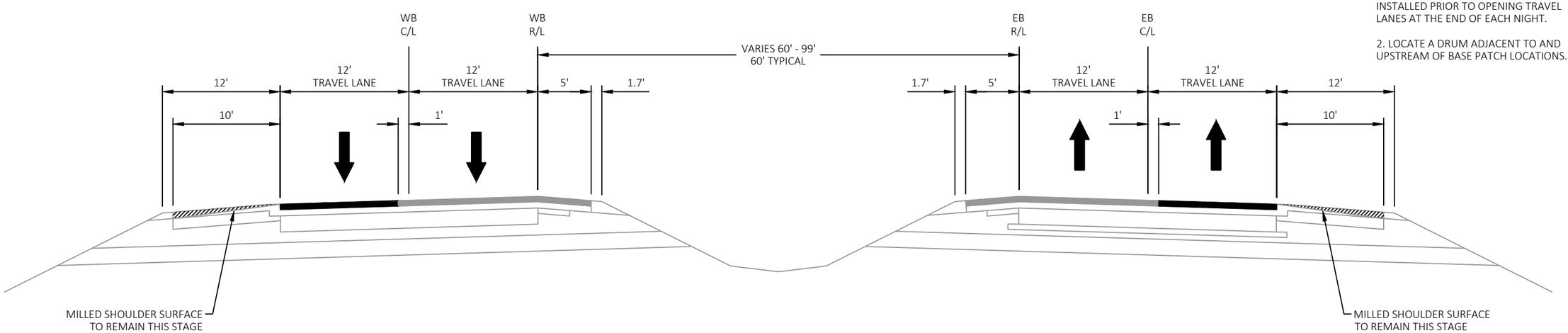

STAGE 1B AND 2B DAYTIME
IH 94

STAGE 1B AND 2B DAYTIME
IH 94

PROJECT NO: 1066-03-75	HWY: IH 94	COUNTY: DANE AND JEFFERSON	CONSTRUCTION STAGING TYPICALS	SHEET 25	E

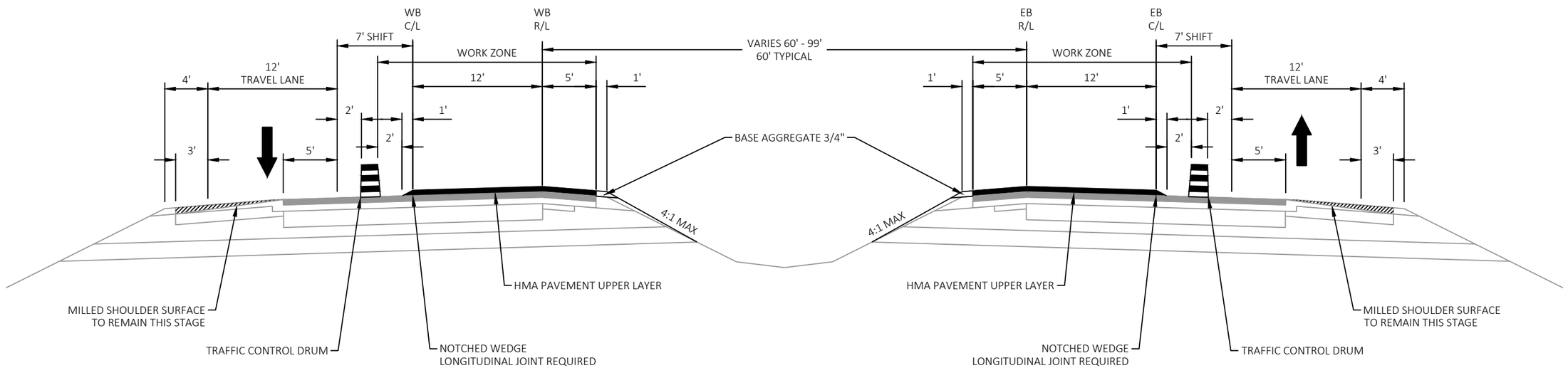

STAGE 3A NIGHTTIME
IH 94

STAGE 3A NIGHTTIME
IH 94

NOTES:

1. SEE MARKING LINE SEQUENCE DETAILS FOR PAVEMENT MARKINGS TO BE INSTALLED PRIOR TO OPENING TRAVEL LANES AT THE END OF EACH NIGHT.

2. LOCATE A DRUM ADJACENT TO AND UPSTREAM OF BASE PATCH LOCATIONS.

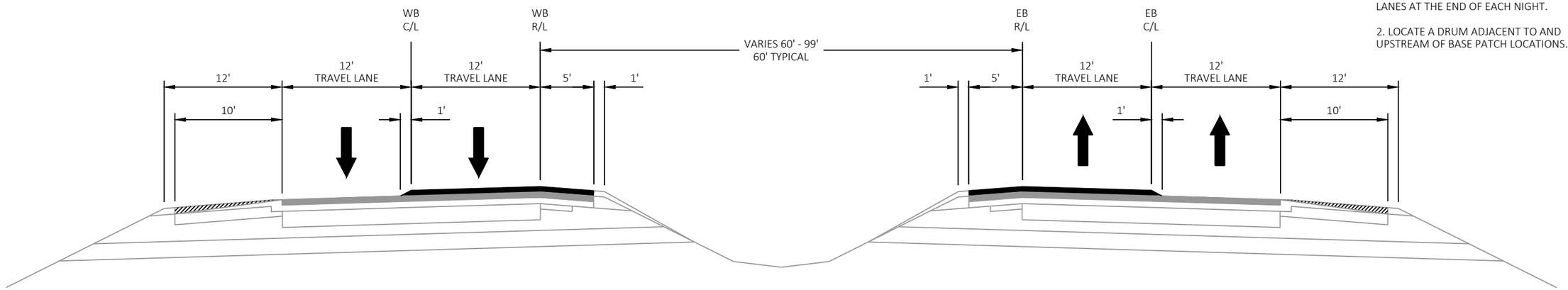

STAGE 3A DAYTIME
IH 94

STAGE 3A DAYTIME
IH 94

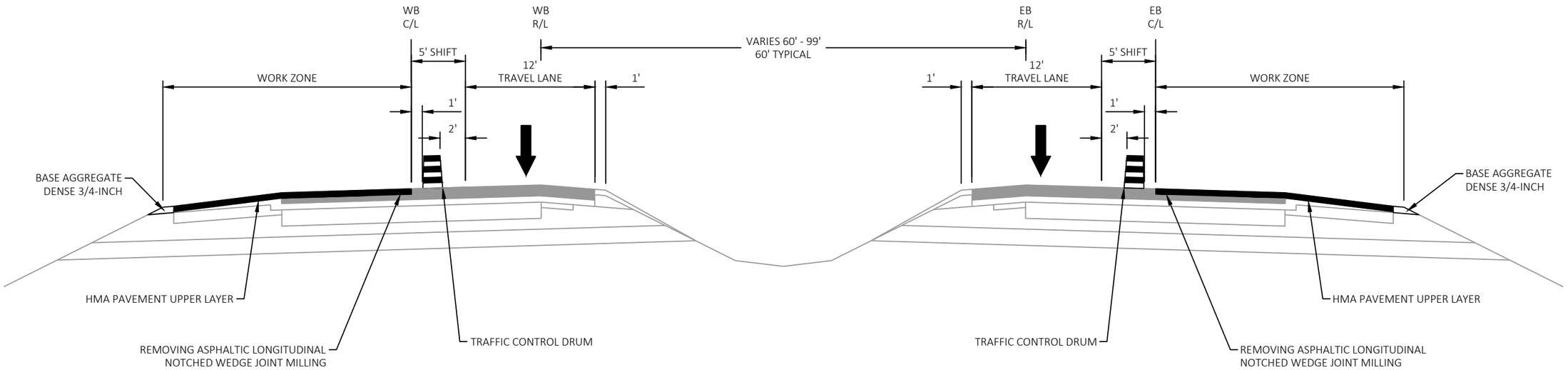

STAGE 3B NIGHTTIME
IH 94

STAGE 3B NIGHTTIME
IH 94

NOTES:

1. SEE MARKING LINE SEQUENCE DETAILS FOR PAVEMENT MARKINGS TO BE INSTALLED PRIOR TO OPENING TRAVEL LANES AT THE END OF EACH NIGHT.

2. LOCATE A DRUM ADJACENT TO AND UPSTREAM OF BASE PATCH LOCATIONS.

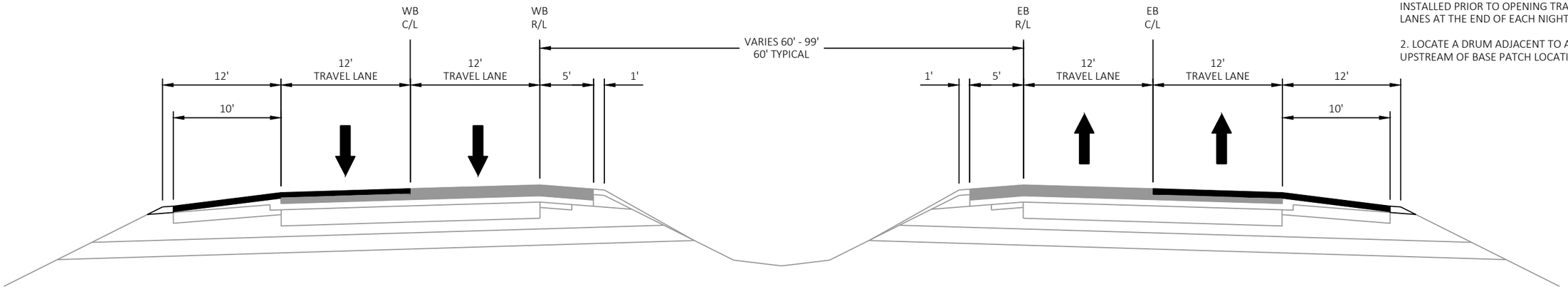

STAGE 3B DAYTIME
IH 94

STAGE 3B DAYTIME
IH 94

PROJECT NO: 1066-03-75	HWY: IH 94	COUNTY: DANE AND JEFFERSON	CONSTRUCTION STAGING TYPICALS	SHEET 27	E

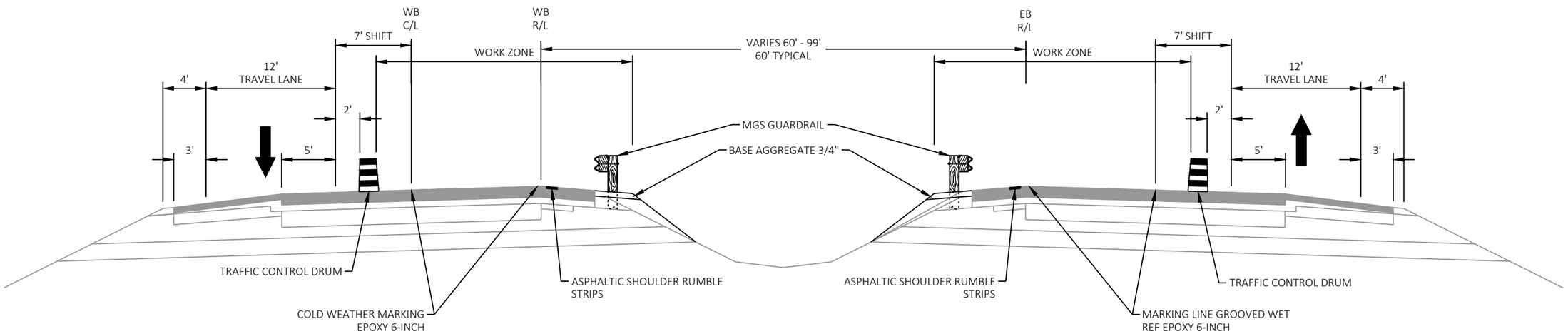

STAGE 4A NIGHTTIME
IH 94

STAGE 4A NIGHTTIME
IH 94

NOTES:

1. SEE MARKING LINE SEQUENCE DETAILS FOR PAVEMENT MARKINGS TO BE INSTALLED PRIOR TO OPENING TRAVEL LANES AT THE END OF EACH NIGHT.

2. LOCATE A DRUM ADJACENT TO AND UPSTREAM OF BASE PATCH LOCATIONS.

3. DAYTIME LANE CLOSURES ARE ALLOWED AFTER LABOR DAY FOR BEAM GUARD WORK.

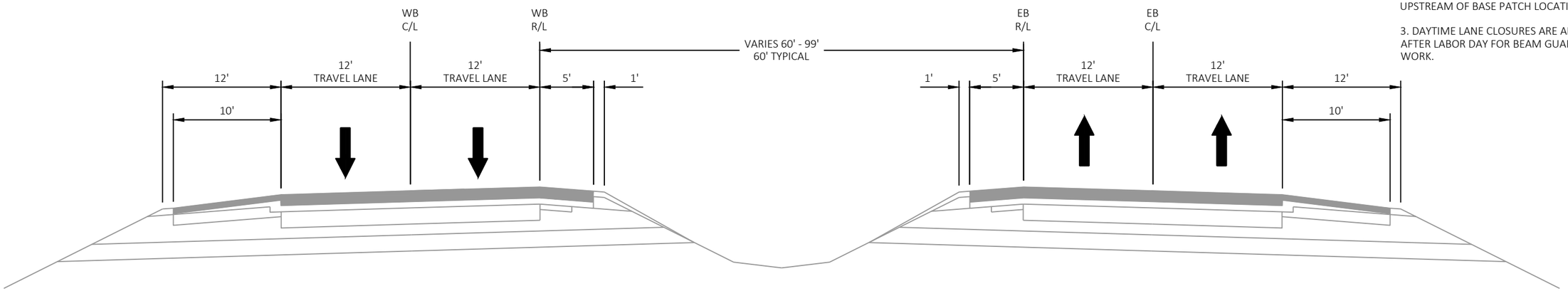

STAGE 4A DAYTIME
IH 94

STAGE 4A DAYTIME
IH 94

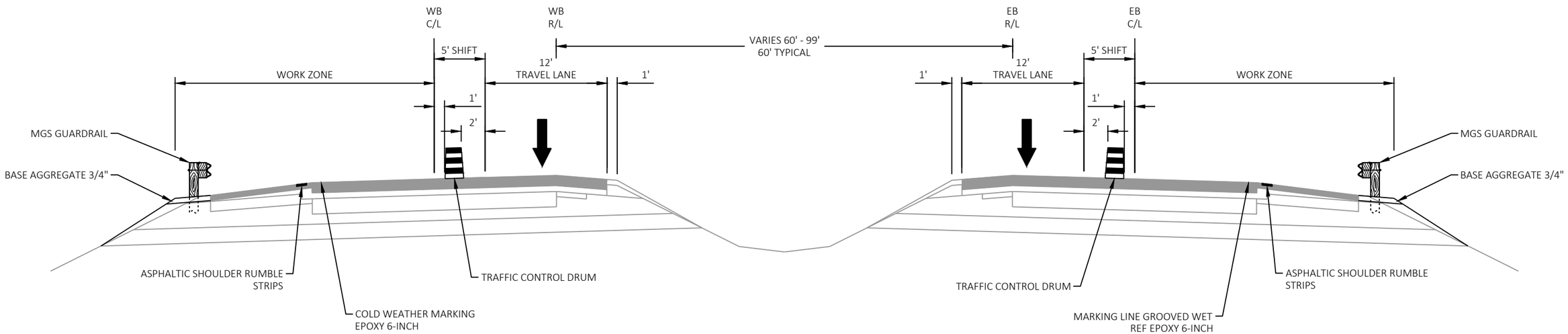

STAGE 4B NIGHTTIME
IH 94

STAGE 4B NIGHTTIME
IH 94

NOTES:

1. SEE MARKING LINE SEQUENCE DETAILS FOR PAVEMENT MARKINGS TO BE INSTALLED PRIOR TO OPENING TRAVEL LANES AT THE END OF EACH NIGHT.

2. LOCATE A DRUM ADJACENT TO AND UPSTREAM OF BASE PATCH LOCATIONS.

3. DAYTIME LANE CLOSURES ARE ALLOWED AFTER LABOR DAY FOR BEAM GUARD WORK.

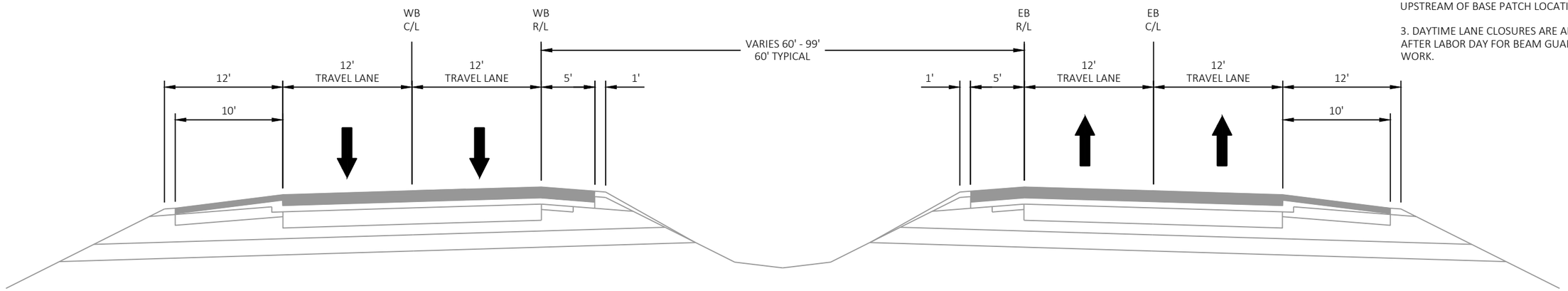

STAGE 4B DAYTIME
IH 94

STAGE 4B DAYTIME
IH 94

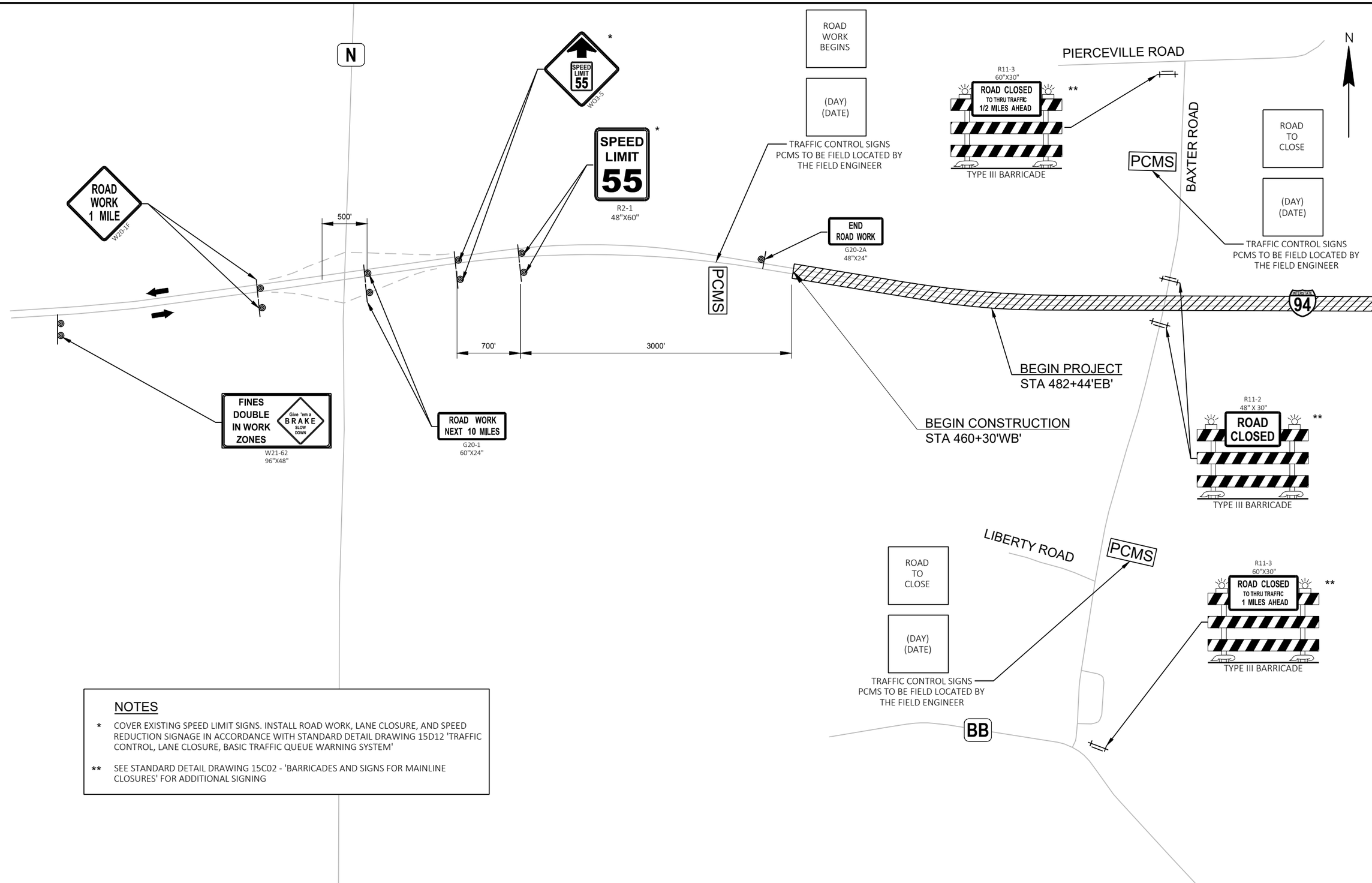

NOTES

* COVER EXISTING SPEED LIMIT SIGNS. INSTALL ROAD WORK, LANE CLOSURE, AND SPEED REDUCTION SIGNAGE IN ACCORDANCE WITH STANDARD DETAIL DRAWING 15D12 'TRAFFIC CONTROL, LANE CLOSURE, BASIC TRAFFIC QUEUE WARNING SYSTEM'

** SEE STANDARD DETAIL DRAWING 15C02 - 'BARRICADES AND SIGNS FOR MAINLINE CLOSURES' FOR ADDITIONAL SIGNING

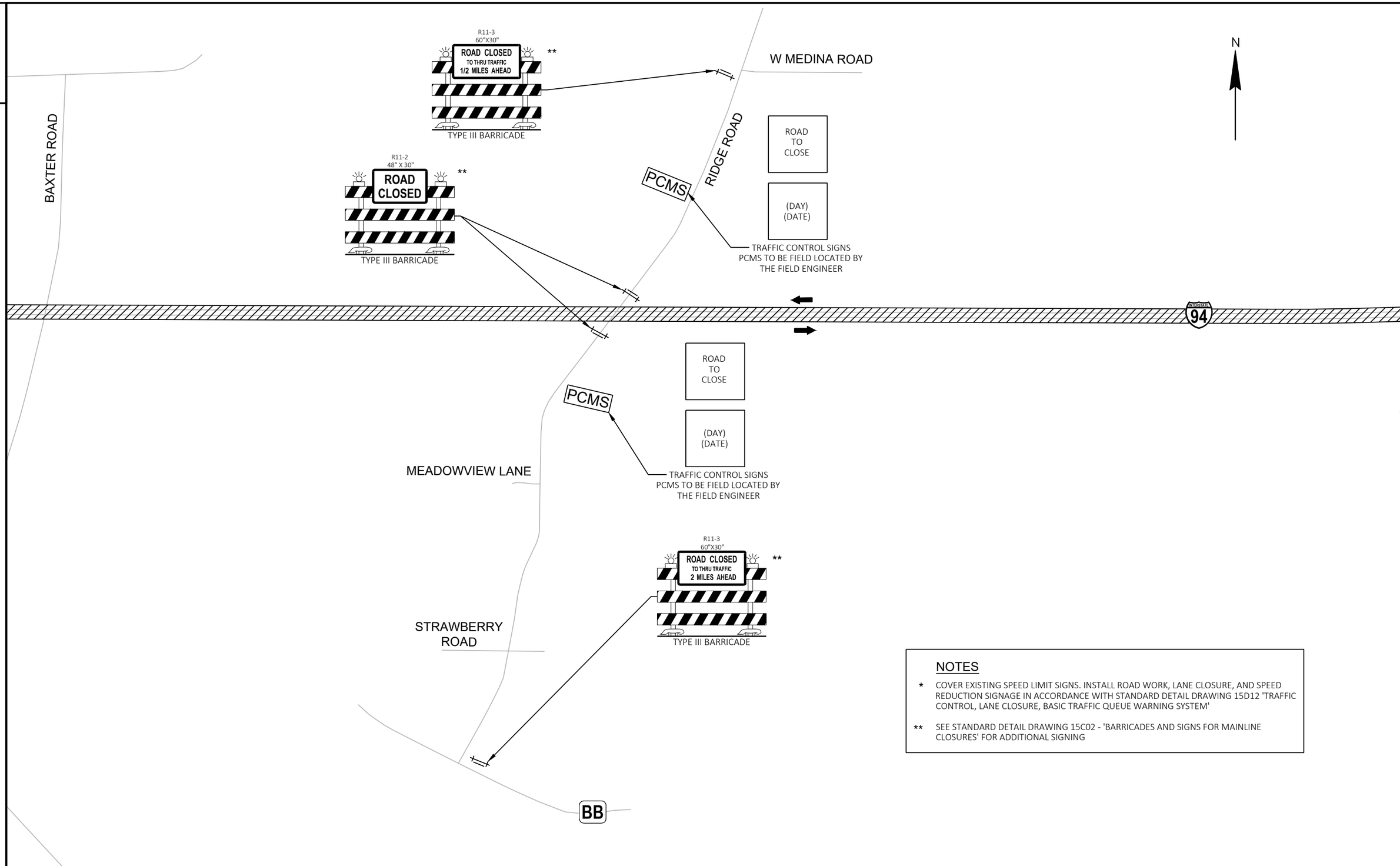

NOTES

* COVER EXISTING SPEED LIMIT SIGNS. INSTALL ROAD WORK, LANE CLOSURE, AND SPEED REDUCTION SIGNAGE IN ACCORDANCE WITH STANDARD DETAIL DRAWING 15D12 'TRAFFIC CONTROL, LANE CLOSURE, BASIC TRAFFIC QUEUE WARNING SYSTEM'

** SEE STANDARD DETAIL DRAWING 15C02 - 'BARRICADES AND SIGNS FOR MAINLINE CLOSURES' FOR ADDITIONAL SIGNING

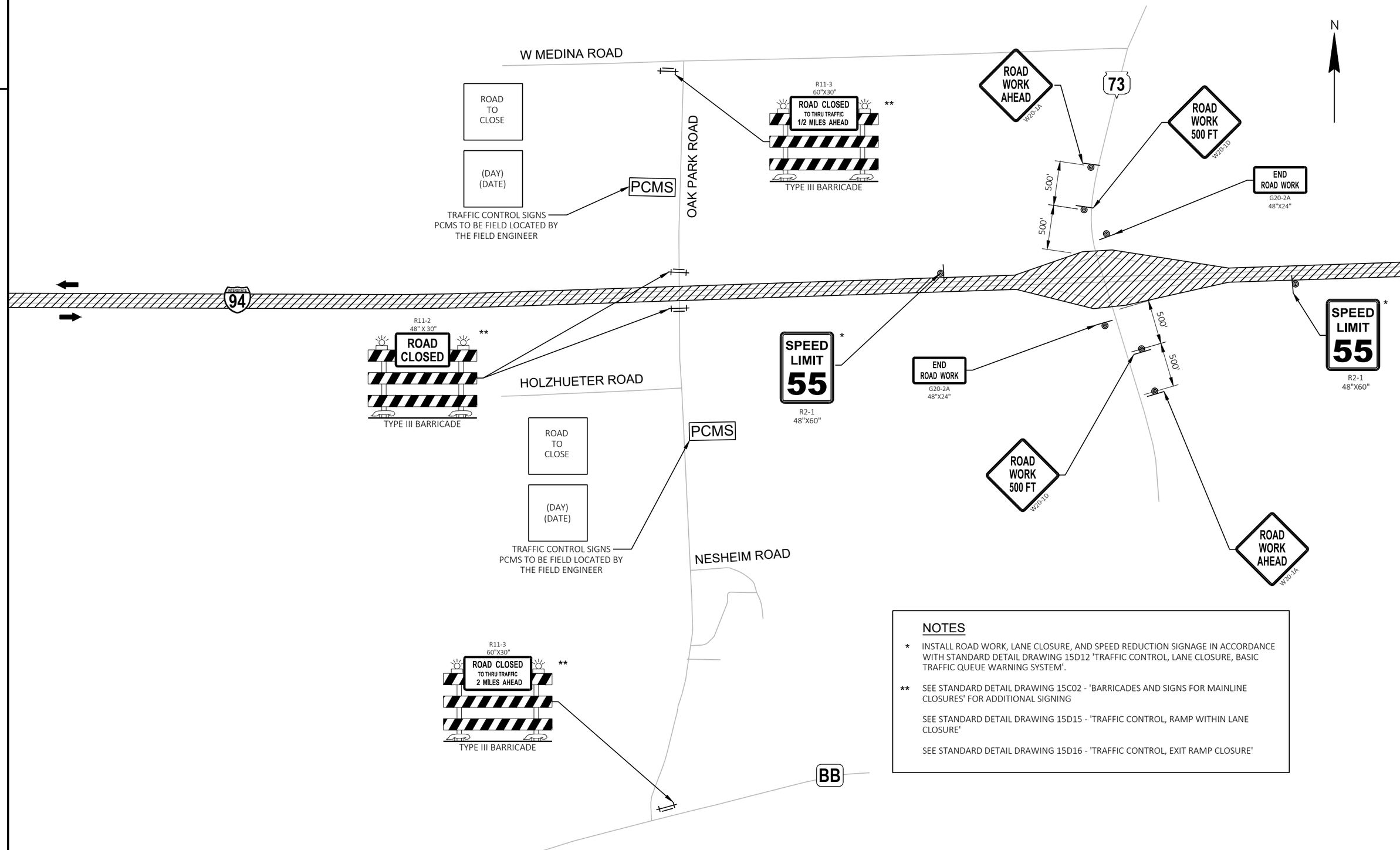

NOTES

* INSTALL ROAD WORK, LANE CLOSURE, AND SPEED REDUCTION SIGNAGE IN ACCORDANCE WITH STANDARD DETAIL DRAWING 15D12 'TRAFFIC CONTROL, LANE CLOSURE, BASIC TRAFFIC QUEUE WARNING SYSTEM'.

** SEE STANDARD DETAIL DRAWING 15C02 - 'BARRICADES AND SIGNS FOR MAINLINE CLOSURES' FOR ADDITIONAL SIGNING

SEE STANDARD DETAIL DRAWING 15D15 - 'TRAFFIC CONTROL, RAMP WITHIN LANE CLOSURE'

SEE STANDARD DETAIL DRAWING 15D16 - 'TRAFFIC CONTROL, EXIT RAMP CLOSURE'

PROJECT NO: 1066-03-75	HWY: IH 94	COUNTY: DANE AND JEFFERSON	ADVANCED WARNING	SHEET 32	E

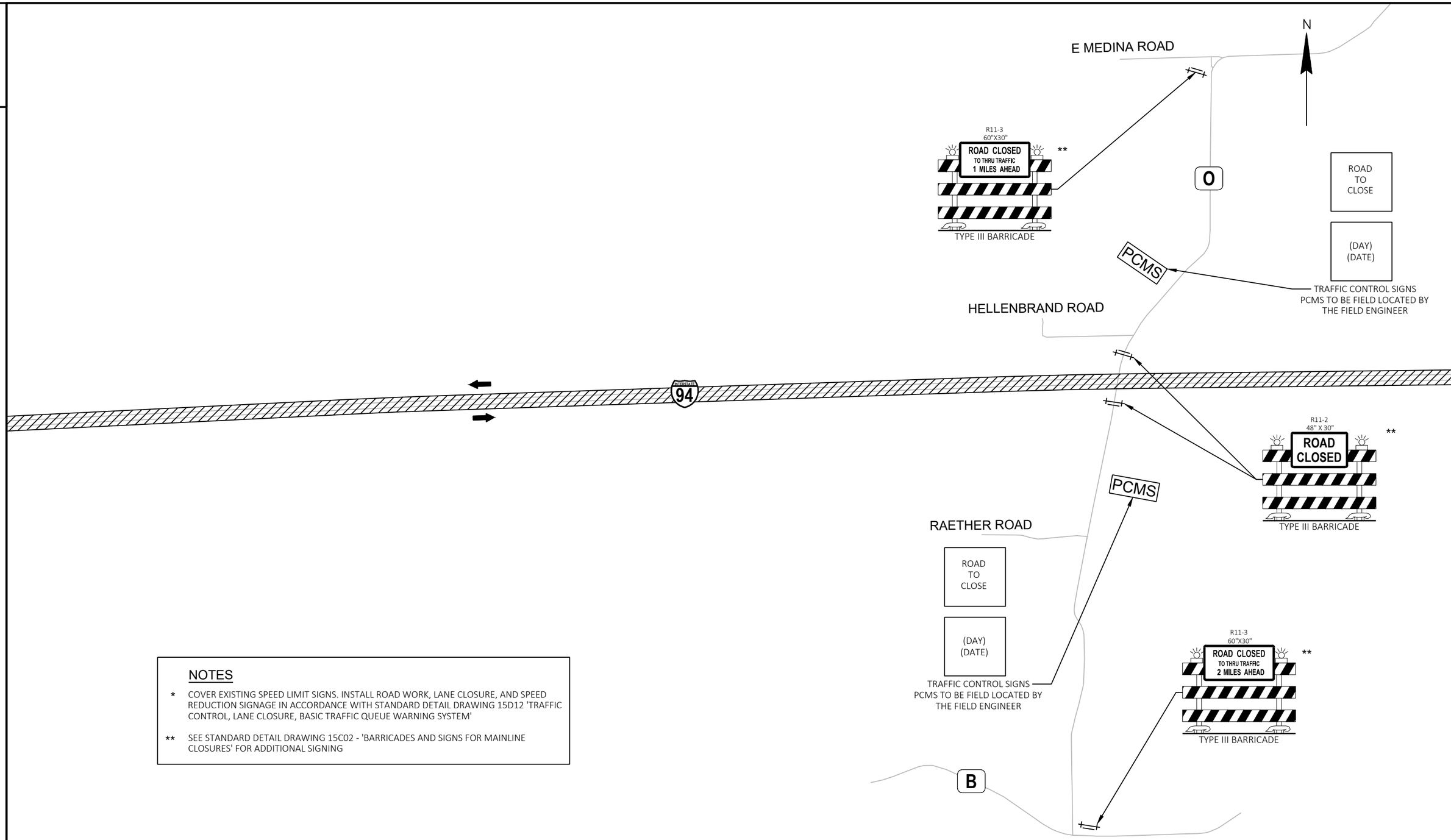

NOTES

* COVER EXISTING SPEED LIMIT SIGNS. INSTALL ROAD WORK, LANE CLOSURE, AND SPEED REDUCTION SIGNAGE IN ACCORDANCE WITH STANDARD DETAIL DRAWING 15D12 'TRAFFIC CONTROL, LANE CLOSURE, BASIC TRAFFIC QUEUE WARNING SYSTEM'

** SEE STANDARD DETAIL DRAWING 15C02 - 'BARRICADES AND SIGNS FOR MAINLINE CLOSURES' FOR ADDITIONAL SIGNING

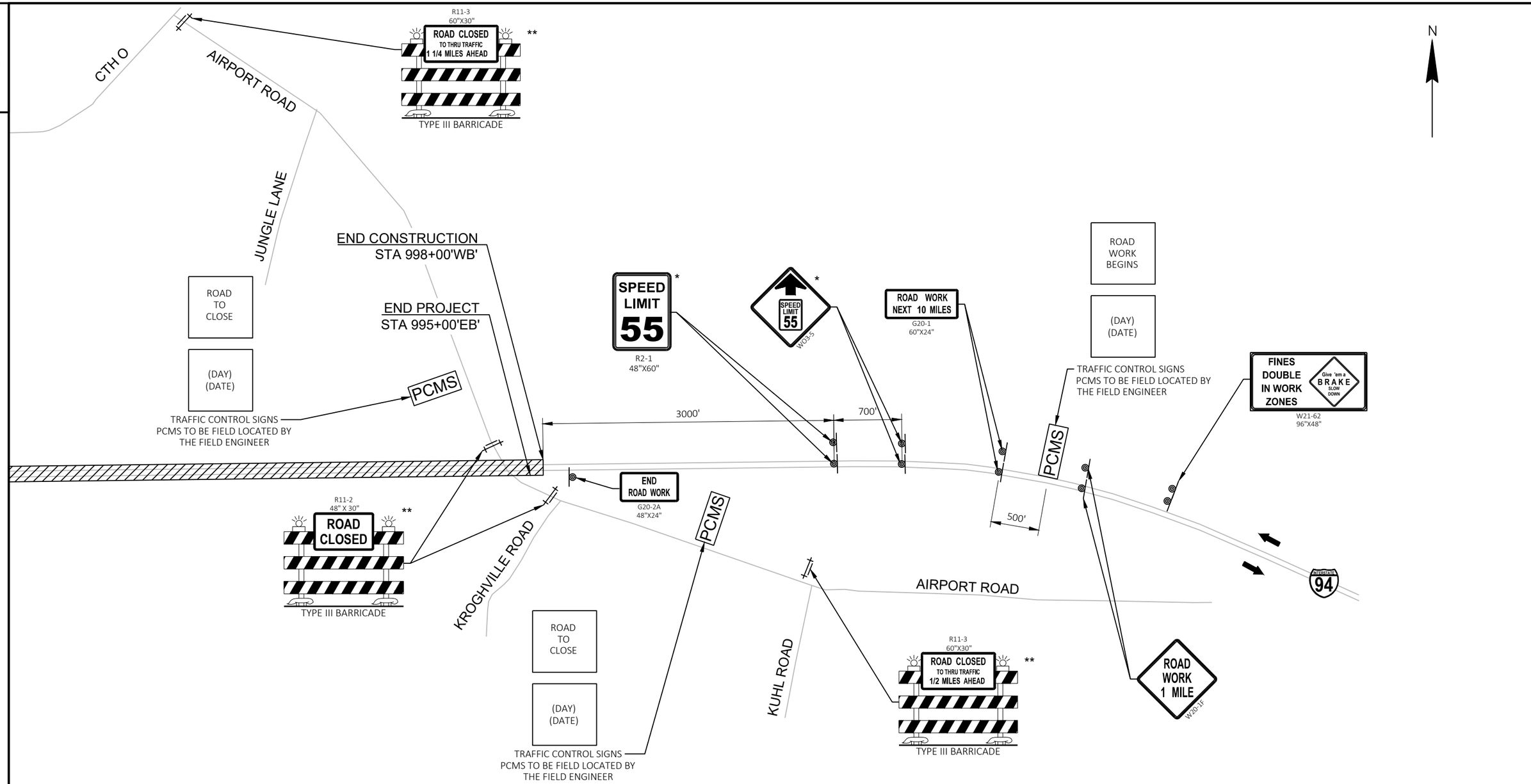

NOTES

* COVER EXISTING SPEED LIMIT SIGNS. INSTALL ROAD WORK, LANE CLOSURE, AND SPEED REDUCTION SIGNAGE IN ACCORDANCE WITH STANDARD DETAIL DRAWING 15D12 'TRAFFIC CONTROL, LANE CLOSURE, BASIC TRAFFIC QUEUE WARNING SYSTEM'

** SEE STANDARD DETAIL DRAWING 15C02 - 'BARRICADES AND SIGNS FOR MAINLINE CLOSURES' FOR ADDITIONAL SIGNING

PROJECT NO: 1066-03-75	HWY: IH 94	COUNTY: DANE AND JEFFERSON	ADVANCED WARNING	SHEET 34	E

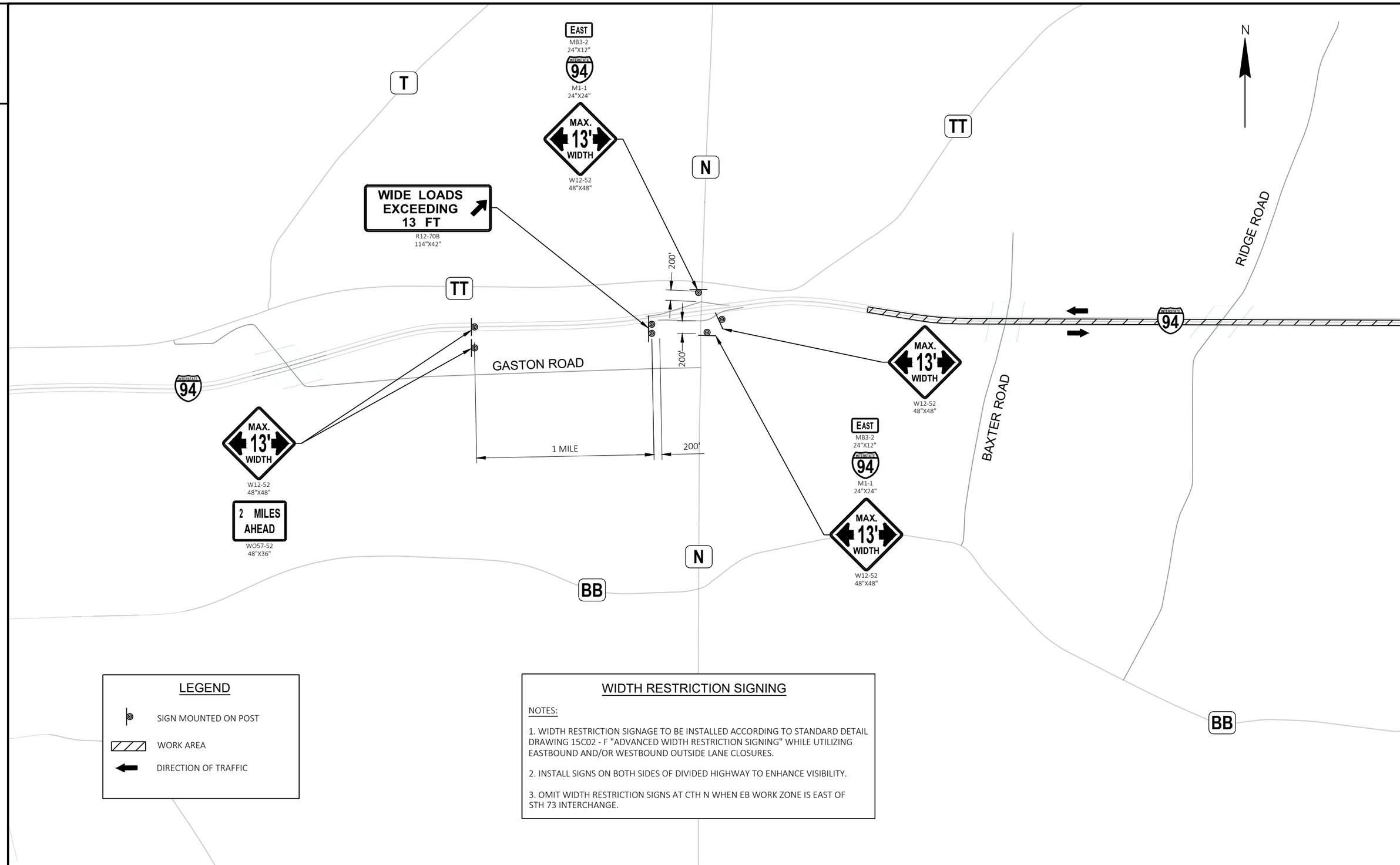

LEGEND

- SIGN MOUNTED ON POST
- WORK AREA
- DIRECTION OF TRAFFIC

WIDTH RESTRICTION SIGNING

NOTES:

1. WIDTH RESTRICTION SIGNAGE TO BE INSTALLED ACCORDING TO STANDARD DETAIL DRAWING 15C02 - F "ADVANCED WIDTH RESTRICTION SIGNING" WHILE UTILIZING EASTBOUND AND/OR WESTBOUND OUTSIDE LANE CLOSURES.

2. INSTALL SIGNS ON BOTH SIDES OF DIVIDED HIGHWAY TO ENHANCE VISIBILITY.

3. OMIT WIDTH RESTRICTION SIGNS AT CTH N WHEN EB WORK ZONE IS EAST OF STH 73 INTERCHANGE.

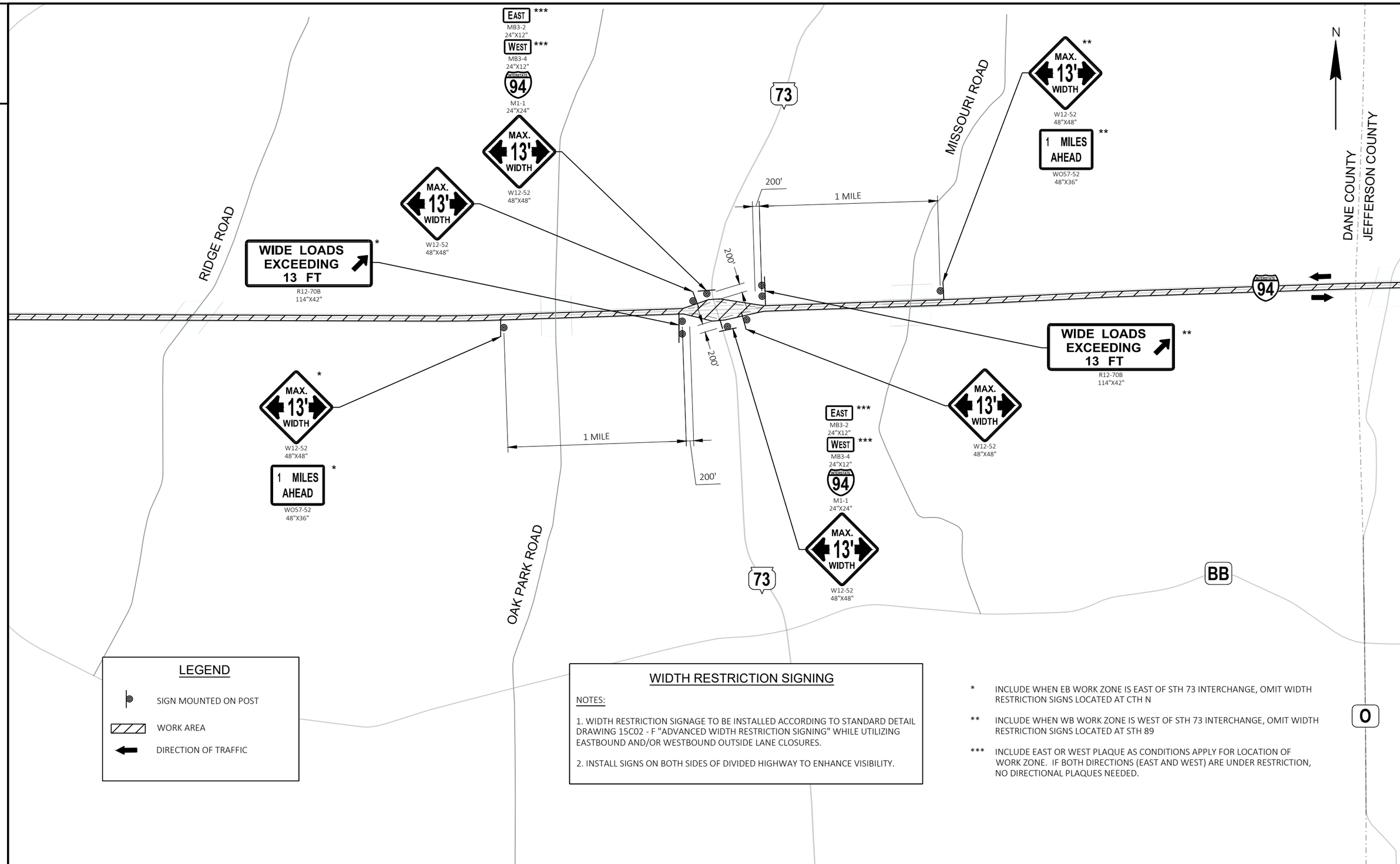

LEGEND

- SIGN MOUNTED ON POST
- WORK AREA
- DIRECTION OF TRAFFIC

WIDTH RESTRICTION SIGNING

NOTES:

1. WIDTH RESTRICTION SIGNAGE TO BE INSTALLED ACCORDING TO STANDARD DETAIL DRAWING 15C02 - F "ADVANCED WIDTH RESTRICTION SIGNING" WHILE UTILIZING EASTBOUND AND/OR WESTBOUND OUTSIDE LANE CLOSURES.

2. INSTALL SIGNS ON BOTH SIDES OF DIVIDED HIGHWAY TO ENHANCE VISIBILITY.

* INCLUDE WHEN EB WORK ZONE IS EAST OF STH 73 INTERCHANGE, OMIT WIDTH RESTRICTION SIGNS LOCATED AT CTH N

** INCLUDE WHEN WB WORK ZONE IS WEST OF STH 73 INTERCHANGE, OMIT WIDTH RESTRICTION SIGNS LOCATED AT STH 89

*** INCLUDE EAST OR WEST PLAQUE AS CONDITIONS APPLY FOR LOCATION OF WORK ZONE. IF BOTH DIRECTIONS (EAST AND WEST) ARE UNDER RESTRICTION, NO DIRECTIONAL PLAQUES NEEDED.

PROJECT NO: 1066-03-75	HWY: IH 94	COUNTY: DANE AND JEFFERSON	ADVANCED WARNING	SHEET 36	E

FILE NAME : P:\2020 PROJECTS\5020028 - WISDOT SWR IH 94\CIVIL3D\10660375\SHEETSPLAN\025001_AW.DWG
LAYOUT NAME - 02
PLOT DATE : 2/8/2023 12:43 PM PLOT BY : KYLE CORNELIUS PLOT NAME : PLOT SCALE : 1 IN:0.5 MI

WISDOT/CADDS SHEET 42

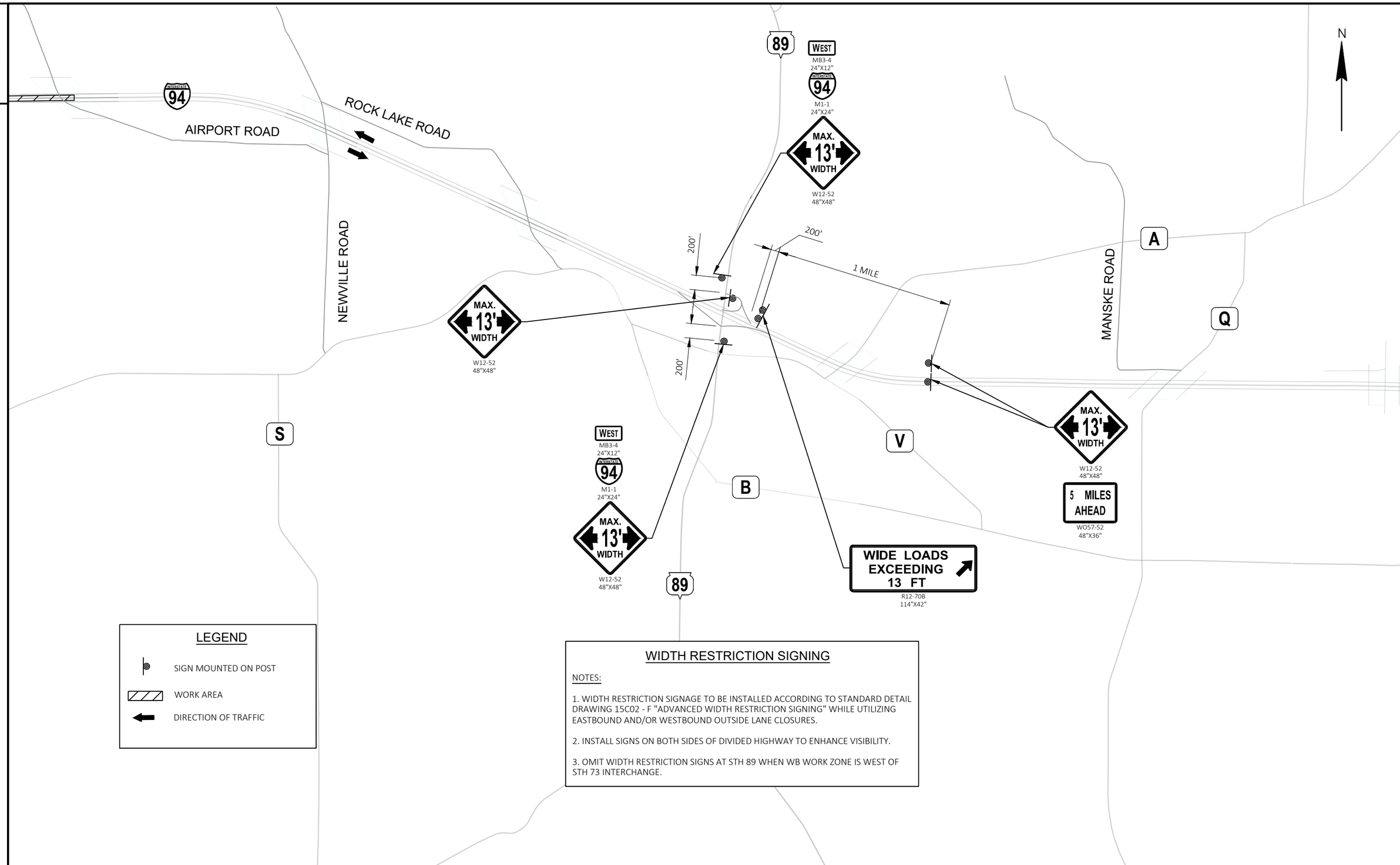

LEGEND

- SIGN MOUNTED ON POST
- WORK AREA
- DIRECTION OF TRAFFIC

WIDTH RESTRICTION SIGNING

NOTES:

1. WIDTH RESTRICTION SIGNAGE TO BE INSTALLED ACCORDING TO STANDARD DETAIL DRAWING 15C02 - F "ADVANCED WIDTH RESTRICTION SIGNING" WHILE UTILIZING EASTBOUND AND/OR WESTBOUND OUTSIDE LANE CLOSURES.

2. INSTALL SIGNS ON BOTH SIDES OF DIVIDED HIGHWAY TO ENHANCE VISIBILITY.

3. OMIT WIDTH RESTRICTION SIGNS AT STH 89 WHEN WB WORK ZONE IS WEST OF STH 73 INTERCHANGE.

PROJECT NO: 1066-03-75	HWY: IH 94	COUNTY: DANE AND JEFFERSON	ADVANCED WARNING	SHEET 37	E

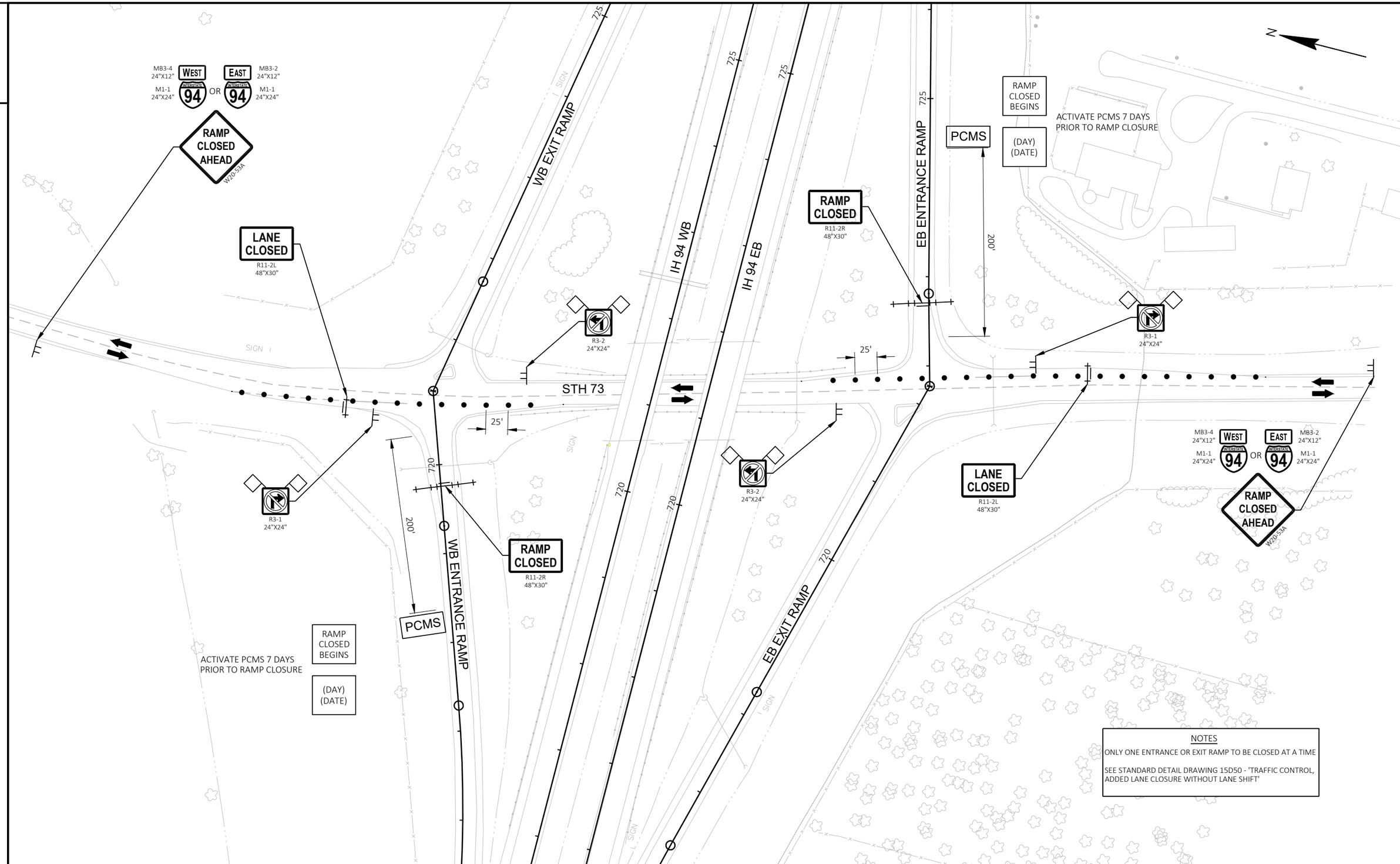

NOTES

ONLY ONE ENTRANCE OR EXIT RAMP TO BE CLOSED AT A TIME

SEE STANDARD DETAIL DRAWING 15D50 - 'TRAFFIC CONTROL, ADDED LANE CLOSURE WITHOUT LANE SHIFT'

PROJECT NO: 1066-03-75	HWY: IH 94	COUNTY: DANE AND JEFFERSON	ADVANCED WARNING	SHEET 38	E

FILE NAME : P:\2020 PROJECTS\5020028 - WISDOT SWR IH 94\CIVIL3D\10660375\SHEETSPLAN\025101_TC.DWG
LAYOUT NAME - 01
PLOT DATE : 2/8/2023 12:45 PM PLOT BY : KYLE CORNELIUS PLOT NAME : PLOT SCALE : 1 IN:100 FT

Estimate Of Quantities

1066-03-75

Line	Item	Item Description	Unit	Total	Qty
0002	201.0120	Clearing	ID	8.000	8.000
0004	201.0220	Grubbing	ID	8.000	8.000
0006	204.0109.S	Removing Concrete Surface Partial Depth	SF	195,300.000	195,300.000
0008	204.0115	Removing Asphaltic Surface Butt Joints	SY	378.000	378.000
0010	204.0120	Removing Asphaltic Surface Milling	SY	447,820.000	447,820.000
0012	204.0126.S	Removing Asphaltic Longitudinal Notched Wedge Joint Milling	LF	104,140.000	104,140.000
0014	204.0165	Removing Guardrail	LF	57,030.000	57,030.000
0016	204.0175	Removing Concrete Slope Paving	SY	52.000	52.000
0018	204.0180	Removing Delineators and Markers	EACH	10.000	10.000
0020	204.0190	Removing Surface Drains	EACH	13.000	13.000
0022	204.0220	Removing Inlets	EACH	2.000	2.000
0024	204.0245	Removing Storm Sewer (size) 01. 12-Inch	LF	80.000	80.000
0026	204.9060.S	Removing (item description) 01. Apron Endwalls	EACH	8.000	8.000
0028	211.0101	Prepare Foundation for Asphaltic Paving (project) 01. 1066-03-75	EACH	1.000	1.000
0030	213.0100	Finishing Roadway (project) 01. 1066-03-75	EACH	1.000	1.000
0032	305.0110	Base Aggregate Dense 3/4-Inch	TON	8,520.000	8,520.000
0034	455.0605	Tack Coat	GAL	48,520.000	48,520.000
0036	460.0105.S	HMA Percent Within Limits (PWL) Test Strip Volumetrics	EACH	1.000	1.000
0038	460.0110.S	HMA Percent Within Limits (PWL) Test Strip Density	EACH	1.000	1.000
0040	460.0115.S	HMA Pavement Test Strip Volumetrics	EACH	1.000	1.000
0042	460.0120.S	HMA Pavement Test Strip Density	EACH	1.000	1.000
0044	460.2005	Incentive Density PWL HMA Pavement	DOL	58,680.000	58,680.000
0046	460.2007	Incentive Density HMA Pavement Longitudinal Joints	DOL	20,950.000	20,950.000
0048	460.2010	Incentive Air Voids HMA Pavement	DOL	71,560.000	71,560.000
0050	460.7224	HMA Pavement 4 HT 58-28 S	TON	37,740.000	37,740.000
0052	460.7424	HMA Pavement 4 HT 58-28 H	TON	12,840.000	12,840.000
0054	460.8424	HMA Pavement 4 SMA 58-28 H	TON	33,100.000	33,100.000
0056	460.9000.S	Material Transfer Vehicle	EACH	1.000	1.000
0058	465.0105	Asphaltic Surface	TON	672.000	672.000
0060	465.0110	Asphaltic Surface Patching	TON	300.000	300.000
0062	465.0510	Asphaltic Rumble Strips, Shoulder Divided Roadway	LF	204,820.000	204,820.000
0064	502.3101	Expansion Device	LF	26.000	26.000
0066	502.4205	Adhesive Anchors No. 5 Bar	EACH	26.000	26.000
0068	505.0400	Bar Steel Reinforcement HS Structures	LB	980.000	980.000
0070	509.0301	Preparation Decks Type 1	SY	423.000	423.000
0072	509.0302	Preparation Decks Type 2	SY	365.000	365.000
0074	509.0310.S	Sawing Pavement Deck Preparation Areas	LF	3,594.000	3,594.000
0076	509.1000	Joint Repair	SY	11.000	11.000
0078	509.1200	Curb Repair	LF	320.000	320.000
0080	509.1500	Concrete Surface Repair	SF	569.000	569.000
0082	509.2000	Full-Depth Deck Repair	SY	8.000	8.000
0084	509.2100.S	Concrete Masonry Deck Repair	CY	52.000	52.000
0086	509.3500.S	HMA Overlay Polymer-Modified	TON	20.000	20.000
0088	509.9010.S	Removing Asphaltic Concrete Deck Overlay (structure) 01. B-13-154	SY	118.000	118.000
0090	509.9020.S	Epoxy Crack Sealing	LF	32.000	32.000
0092	520.8700	Cleaning Culvert Pipes	EACH	22.000	22.000
0094	520.9700.S	Culvert Pipe Liners (size) 01. 18-INCH	LF	221.000	221.000
0096	520.9700.S	Culvert Pipe Liners (size) 02. 24-INCH	LF	77.000	77.000
0098	520.9750.S	Cleaning Culvert Pipes for Liner Verification	EACH	4.000	4.000

Estimate Of Quantities

1066-03-75

Line	Item	Item Description	Unit	Total	Qty
0100	521.1012	Apron Endwalls for Culvert Pipe Steel 12-Inch	EACH	2.000	2.000
0102	522.1018	Apron Endwalls for Culvert Pipe Reinforced Concrete 18-Inch	EACH	19.000	19.000
0104	522.1024	Apron Endwalls for Culvert Pipe Reinforced Concrete 24-Inch	EACH	6.000	6.000
0106	522.1030	Apron Endwalls for Culvert Pipe Reinforced Concrete 30-Inch	EACH	1.000	1.000
0108	522.1036	Apron Endwalls for Culvert Pipe Reinforced Concrete 36-Inch	EACH	3.000	3.000
0110	530.0112	Culvert Pipe Corrugated Polyethylene 12-Inch	LF	80.000	80.000
0112	601.0588	Concrete Curb & Gutter 4-Inch Sloped 36-Inch Type TBT	LF	1,053.000	1,053.000
0114	602.3010	Concrete Surface Drains	CY	8.400	8.400
0116	604.0400	Slope Paving Concrete	SY	52.000	52.000
0118	604.9010.S	Slope Paving Repair Crushed Aggregate	CY	4.000	4.000
0120	604.9015.S	Reseal Crushed Aggregate Slope Paving	SY	914.000	914.000
0122	606.0200	Riprap Medium	CY	57.000	57.000
0124	611.0654	Inlet Covers Type V	EACH	2.000	2.000
0126	611.3220	Inlets 2x2-FT	EACH	2.000	2.000
0128	614.0010	Barrier System Grading Shaping Finishing	EACH	61.000	61.000
0130	614.0200	Steel Thrie Beam Structure Approach	LF	20.600	20.600
0132	614.0220	Steel Thrie Beam Bullnose Terminal	EACH	10.000	10.000
0134	614.0230	Steel Thrie Beam	LF	557.000	557.000
0136	614.0370	Steel Plate Beam Guard Energy Absorbing Terminal	EACH	1.000	1.000
0138	614.2300	MGS Guardrail 3	LF	52,150.000	52,150.000
0140	614.2500	MGS Thrie Beam Transition	LF	2,394.300	2,394.300
0142	614.2610	MGS Guardrail Terminal EAT	EACH	55.000	55.000
0144	614.2620	MGS Guardrail Terminal Type 2	EACH	17.000	17.000
0146	618.0100	Maintenance and Repair of Haul Roads (project) 01. 1066-03-75	EACH	1.000	1.000
0148	619.1000	Mobilization	EACH	1.000	1.000
0150	624.0100	Water	MGAL	84.900	84.900
0152	628.1504	Silt Fence	LF	8,294.000	8,294.000
0154	628.1520	Silt Fence Maintenance	LF	8,294.000	8,294.000
0156	628.1905	Mobilizations Erosion Control	EACH	10.000	10.000
0158	628.1910	Mobilizations Emergency Erosion Control	EACH	8.000	8.000
0160	628.7005	Inlet Protection Type A	EACH	17.000	17.000
0162	628.7504	Temporary Ditch Checks	LF	300.000	300.000
0164	628.7555	Culvert Pipe Checks	EACH	158.000	158.000
0166	629.0210	Fertilizer Type B	CWT	73.000	73.000
0168	630.0120	Seeding Mixture No. 20	LB	3,140.000	3,140.000
0170	630.0500	Seed Water	MGAL	653.000	653.000
0172	633.0100	Delineator Posts Steel	EACH	10.000	10.000
0174	633.0500	Delineator Reflectors	EACH	10.000	10.000
0176	633.5200	Markers Culvert End	EACH	74.000	74.000
0178	642.5201	Field Office Type C	EACH	1.000	1.000
0180	643.0300	Traffic Control Drums	DAY	128,939.000	128,939.000
0182	643.0420	Traffic Control Barricades Type III	DAY	6,320.000	6,320.000
0184	643.0705	Traffic Control Warning Lights Type A	DAY	12,640.000	12,640.000
0186	643.0715	Traffic Control Warning Lights Type C	DAY	3,600.000	3,600.000
0188	643.0800	Traffic Control Arrow Boards	DAY	360.000	360.000
0190	643.0900	Traffic Control Signs	DAY	18,104.000	18,104.000
0192	643.0920	Traffic Control Covering Signs Type II	EACH	270.000	270.000
0194	643.1050	Traffic Control Signs PCMS	DAY	242.000	242.000
0196	643.1070	Traffic Control Cones 42-Inch	DAY	71,680.000	71,680.000

Estimate Of Quantities

1066-03-75

Line	Item	Item Description	Unit	Total	Qty
0198	643.1205.S	Basic Traffic Queue Warning System	DAY	180.000	180.000
0200	643.3165	Temporary Marking Line Paint 6-Inch	LF	316,710.000	316,710.000
0202	643.3170	Temporary Marking Line Epoxy 6-Inch	LF	712,590.000	712,590.000
0204	643.4100	Traffic Control Interim Lane Closure	EACH	180.000	180.000
0206	643.5000	Traffic Control	EACH	1.000	1.000
0208	645.0120	Geotextile Type HR	SY	264.000	264.000
0210	646.1020	Marking Line Epoxy 4-Inch	LF	1,400.000	1,400.000
0212	646.2020	Marking Line Epoxy 6-Inch	LF	800.000	800.000
0214	646.2025	Marking Line Grooved Black Epoxy 6-Inch	LF	25,915.000	25,915.000
0216	646.2040	Marking Line Grooved Wet Ref Epoxy 6-Inch	LF	217,740.000	217,740.000
0218	646.2050	Marking Line Grooved Permanent Tape 6-Inch	LF	26,065.000	26,065.000
0220	646.4050	Marking Line Grooved Permanent Tape 10-Inch	LF	3,460.000	3,460.000
0222	646.5420	Marking Aerial Enforcement Bar Epoxy	EACH	20.000	20.000
0224	646.6466	Cold Weather Marking Epoxy 6-Inch	LF	123,535.000	123,535.000
0226	646.7220	Marking Chevron Epoxy 24-Inch	LF	200.000	200.000
0228	650.4000	Construction Staking Storm Sewer	EACH	2.000	2.000
0230	650.5500	Construction Staking Curb Gutter and Curb & Gutter	LF	1,053.000	1,053.000
0232	650.6000	Construction Staking Pipe Culverts	EACH	30.000	30.000
0234	650.8000	Construction Staking Resurfacing Reference	LF	109,064.000	109,064.000
0236	650.9911	Construction Staking Supplemental Control (project) 01. 1066-03-75	EACH	1.000	1.000
0238	740.0440	Incentive IRI Ride	DOL	163,500.000	163,500.000
0240	999.2000.S	Installing and Maintaining Bird Deterrent System (station) 01. 501+45 'EB'	EACH	1.000	1.000
0242	999.2000.S	Installing and Maintaining Bird Deterrent System (station) 02. 565+05 'EB'	EACH	1.000	1.000
0244	999.2000.S	Installing and Maintaining Bird Deterrent System (station) 03. 673+35 'EB'	EACH	1.000	1.000
0246	999.2000.S	Installing and Maintaining Bird Deterrent System (station) 04. 921+20 'EB'	EACH	1.000	1.000
0248	ASP.1T0A	On-the-Job Training Apprentice at $5.00/HR	HRS	2,100.000	2,100.000
0250	ASP.1T0G	On-the-Job Training Graduate at $5.00/HR	HRS	1,475.000	1,475.000
0252	SPV.0035	Special 01. Rapid Set Deck Repair	CY	2.000	2.000
0254	SPV.0060	Special 01. Grading, Shaping, Finishing Culvert Pipe, Apron Endwalls, and Flumes	EACH	47.000	47.000
0256	SPV.0060	Special 02. Landmark Reference Monuments	EACH	10.000	10.000
0258	SPV.0090	Special 01. Salvage and Reinstall Guardrail	LF	1,320.000	1,320.000
0260	SPV.0165	Special 01. Prestressed Girder Surface Repair	SF	72.000	72.000
0262	SPV.0180	Special 01. Base Patching Concrete SHES	SY	21,700.000	21,700.000
0264	SPV.0180	Special 02. Removing Distressed Pavement Milling	SY	2,500.000	2,500.000
0266	SPV.0180	Special 03. Abutment Seat Cleaning and Sealing	SY	14.000	14.000

CATEGORY 0010 UNLESS OTHERWISE NOTED

3

MILLING

STATION	TO	STATION	204.0109.S REMOVING CONCRETE SURFACE PARTIAL DEPTH SF	204.0120 REMOVING ASPHALTIC SURFACE MILLING SY	* 204.0126.S REMOVING ASPHALTIC LONGITUDINAL NOTCHED WEDGE JOINT MILLING LF
IH 94 WESTBOUND					
460+30'WB'	-	488+97'WB'	1,980	12,200	2,870
489+24'WB'	-	510+00'WB'	5,130	8,430	2,080
510+00'WB'	-	540+00'WB'	6,480	12,280	3,000
540+00'WB'	-	555+60'WB'	5,490	6,150	1,560
555+81'WB'	-	583+65'WB'	4,230	11,590	2,790
583+86'WB'	-	596+58'WB'	5,580	4,890	1,280
596+79'WB'	-	662+00'WB'	5,310	27,670	6,530
662+00'WB'	-	693+00'WB'	4,140	12,970	3,100
693+00'WB'	-	720+59'WB'	6,390	11,250	2,760
721+72'WB'	-	754+00'WB'	7,020	13,210	3,230
754+00'WB'	-	778+35'WB'	9,270	9,520	2,440
779+40'WB'		815+00'WB'	6,120	14,750	3,560
815+00'WB'	-	845+00'WB'	4,140	12,540	3,000
845+00'WB'	-	875+00'WB'	3,870	12,570	3,000
875+00'WB'	-	906+00'WB'	3,690	13,020	3,100
906+00'WB'	-	936+00'WB'	6,930	12,230	3,000
936+00'WB'	-	967+00'WB'	6,210	12,740	3,100
967+00'WB'	-	994+32'WB'	3,780	11,420	2,740
IH 94 EASTBOUND					
482+44'EB'	-	489+07'EB'	4,770	2,340	670
489+33'EB'	-	540+00'EB'	6,570	21,230	5,070
540+00'EB'	-	555+57'EB'	4,500	6,250	1,560
555+79'EB'	-	583+65'EB'	4,770	11,540	2,790
583+87'EB'	-	596+58'EB'	2,610	5,220	1,280
596+79'EB'	-	662+00'EB'	2,700	27,960	6,530
662+00'EB'	-	693+00'EB'	4,140	12,970	3,100
693+00'EB'	-	720+75'EB'	5,490	11,420	2,780
721+89'EB'	-	754+00'EB'	4,140	13,450	3,220
754+00'EB'	-	778+27'EB'	6,210	9,830	2,430
779+31'EB'	-	815+00'EB'	2,700	15,170	3,570
815+00'EB'		845+00'EB'	3,420	12,620	3,000
845+00'EB'	-	875+00'EB'	3,510	12,610	3,000
875+00'EB'	-	906+00'EB'	3,690	13,020	3,100
906+00'EB'	-	936+00'EB'	7,650	12,150	3,000
936+00'EB'	-	967+00'EB'	3,330	13,060	3,100
967+00'EB'	-	995+00'EB'	3,960	11,690	2,800
STH 73 RAMPS					
713+43 'W'	-	721+27 'W'	4,230	1,990	--
712+79 'X'	-	720+18 'X'	2,880	3,760	--
722+41 'Y'	-	731+30 'Y'	4,500	4,500	--
722+15 'Z'	-	732+39 'Z'	4,770	4,330	--
BAXTER ROAD					
49+16'B'	-	49+66'B'	--	130	--
50+95'B'	-	51+45'B'	--	130	--
RIDGE ROAD					
49+07'R'	-	49+57'R'	--	130	--
51+17'R'	-	51+67'R'	--	130	--
OAK PARK ROAD					
49+16'OP'	-	49+66'OP'	--	120	--
50+93'OP'	-	51+43'OP'	--	120	--
CTH O					
49+15'O'	-	49+65'O'	--	130	--
50+94'O'	-	51+44'O'	--	130	--
AIRPORT ROAD					
49+02'A'	-	49+53'A'	--	140	--
51+16'A'	-	51+66'A'	--	120	--
PROJECT 1066-03-75			9,000	--	--
		TOTAL 0010	195,300	447,820	104,140

*FOR SMA LAYER ONLY

BUTT JOINTS

STATION	LOCATION	204.0115 REMOVING ASPHALTIC SURFACE BUTT JOINTS SY
	IH 94 WESTBOUND	
460+30'WB'	BEGIN CONSTRUCTION	9
488+97'WB'	STRUCT B-13-841	9
489+24'WB'	STRUCT B-13-841	9
555+60'WB'	STRUCT B-13-842	9
555+81'WB'	STRUCT B-13-842	9
583+65'WB'	STRUCT B-13-843	9
583+86'WB'	STRUCT B-13-843	9
596+58'WB'	STRUCT B-13-844	9
596+79'WB'	STRUCT B-13-844	9
720+59'WB'	STRUCT B-13-159	9
721+72'WB'	STRUCT B-13-159	9
778+35'WB'	STRUCT B-13-163	9
779+40'WB'	STRUCT B-13-163	9
910+42'WB'	CTH O	4
911+88'WB'	CTH O	3
922+40'WB'	CTH O	4
923+00'WB'	CTH O	3
989+93'WB'	AIRPORT ROAD	7
998+00'WB'	END CONSTRUCTION	9
	IH 94 EASTBOUND	
482+44'EB'	BEGIN PROJECT	9
489+07'EB'	STRUCT B-13-154	9
489+33'EB'	STRUCT B-13-154	9
555+57'EB'	STRUCT C-13-2012	9
555+79'EB'	STRUCT C-13-2012	9
583+65'EB'	STRUCT C-13-48	9
583+87'EB'	STRUCT C-13-48	9
596+58'EB'	STRUCT C-13-49	9
596+79'EB'	STRUCT C-13-49	9
720+75'EB'	STRUCT B-13-158	9
721+89'EB'	STRUCT B-13-158	9
778+27'EB'	STRUCT B-13-162	9
779+31'EB'	STRUCT B-13-162	9
920+05'EB'	CTH O	7
922+30'EB'	CTH O	7
990+27'EB'	AIRPORT ROAD	7
995+00'EB'	END PROJECT	9
	STH 73 RAMPS	
721+27'W'	RAMP TERMINAL	6
720+18 'X'	RAMP TERMINAL	6
722+41 'Y'	RAMP TERMINAL	6
721+15 'Z'	RAMP TERMINAL	6
	BAXTER ROAD	
49+20'B'	STRUCT B-13-155	6
51+36'B'	STRUCT B-13-155	6
	RIDGE ROAD	
49+06'R'	STRUCT B-13-156	6
51+69'R'	STRUCT B-13-156	6
	OAK PARK ROAD	
49+25'OP'	STRUCT B-13-157	6
51+34'OP'	STRUCT B-13-157	6
	CTH O	
49+25'O'	STRUCT B-28-34	6
52+85'O'	STRUCT B-28-34	6
	AIRPORT ROAD	
48+91'A'	STRUCT B-28-35	6
51+66'A'	STRUCT B-28-35	6
	TOTAL 0010	378

CLEARING AND GRUBBING

STATION	O/S	201.0120 CLEARING ID	201.0220 GRUBBING ID
856+00'EB'	RT	8	8
	TOTAL 0010	8	8

REMOVING SURFACE DRAINS

STATION	TO	STATION	O/S	LOCATION	204.0190 REMOVING SURFACE DRAINS EACH
778+04'EB'	-	778+10'EB'	RT	IH 94	1
778+10'EB'	-	778+16'EB'	LT	IH 94	1
778+22'WB'	-	778+28'WB'	LT	IH 94	1
48+74'R'	-	48+80'R'	LT	RIDGE RD	1
48+93'R'	-	48+97'R'	RT	RIDGE RD	1
51+43'OP'	-	51+47'OP'	RT	OAK PARK RD	1
51+52'OP'	-	51+58'OP'	LT	OAK PARK RD	1
48+99'O'	-	49+04'O'	LT	CTH O	1
49+05'O'	-	49+10'O'	RT	CTH O	1
51+49'O'	-	51+58'O'	RT	CTH O	1
51+53'O'	-	51+58'O'	LT	CTH O	1
48+60'A'	-	48+57'A'	RT	AIRPORT RD	1
51+78'A'	-	51+83'A'	RT	AIRPORT RD	1
				TOTAL 0010	13

3

3

CATEGORY 0070

REMOVING GUARDRAIL

STATION	TO	STATION	O/S	204.0165 REMOVING GUARDRAIL LF	REMARKS
IH 94 WESTBOUND					
501+76'WB'	-	505+33'WB'	LT	360	
512+97'WB'	-	536+98'WB'	LT	2,400	
566+00'WB'	-	577+84'WB'	LT	1,180	
650+92'WB'	-	664+72'WB'	LT	1,380	
673+55'WB'	-	675+14'WB'	LT	160	
716+00'WB'	-	720+46'WB'	LT	450	
721+63'WB'	-	725+31'WB'	LT	370	
721+74'WB'	-	725+17'WB'	RT	340	
732+97'WB'	-	744+90'WB'	LT	1,190	
760+95'WB'	-	767+36'WB'	LT	640	
779+38'WB'	-	782+82'WB'	RT	340	
779+45'WB'	-	792+64'WB'	LT	1,320	
831+98'WB'	-	844+78'WB'	LT	1,280	
853+03'WB'	-	874+40'WB'	LT	2,140	
897+74'WB'	-	921+29'WB'	LT	2,360	
921+57'WB'	-	936+86'WB'	LT	1,530	
974+96'WB'	-	990+50'WB'	LT	1,550	
990+81'WB'	-	996+88'WB'	LT	610	
IH 94 EASTBOUND					
485+70'EB'	-	489+08'EB'	LT	340	
485+84'EB'	-	489+08'EB'	RT	320	
489+42'EB'	-	501+22'EB'	RT	1,180	
500+68'EB'	-	502+29'EB'	LT	160	BULLNOSE
501+49'EB'	-	543+09'EB'	RT	4,160	
551+90'EB'	-	555+60'EB'	RT	370	
552+15'EB'	-	555+59'EB'	LT	340	
555+80'EB'	-	564+68'EB'	RT	890	
564+53'EB'	-	566+15'EB'	LT	160	BULLNOSE
579+46'EB'	-	583+65'EB'	RT	420	
580+21'EB'	-	583+65'EB'	LT	340	
593+14'EB'	-	596+58'EB'	LT	340	
593+14'EB'	-	596+58'EB'	RT	340	
646+90'EB'	-	662+06'EB'	RT	1,520	
666+67'EB'	-	673+26'EB'	RT	660	
672+60'EB'	-	674+21'EB'	LT	160	BULLNOSE
679+61'EB'	-	705+96'EB'	RT	2,640	
716+16'EB'	-	720+85'EB'	RT	470	
717+29'EB'	-	720+74'EB'	LT	350	

REMOVING GUARDRAIL (CONTINUED)

STATION	TO	STATION	O/S	204.0165 REMOVING GUARDRAIL LF	REMARKS
IH 94 EASTBOUND					
721+98'EB'	-	727+96'EB'	RT	600	
729+61'EB'	-	740+12'EB'	RT	1,050	
771+53'EB'	-	778+22'EB'	RT	670	
775+21'EB'	-	778+28'EB'	LT	310	
779+26'EB'	-	787+87'EB'	RT	860	
809+59'EB'	-	838+05'EB'	RT	2,850	
850+61'EB'	-	874+90'EB'	RT	2,430	
885+14'EB'	-	921+03'EB'	RT	3,590	
920+49'EB'	-	922+11'EB'	LT	160	BULLNOSE
921+32'EB'	-	935+29'EB'	RT	1,400	
942+07'EB'	-	955+52'EB'	RT	1,350	
967+88'EB'	-	991+52'EB'	RT	2,360	
990+35'EB'	-	991+96'EB'	LT	160	BULLNOSE
BAXTER ROAD					
44+92'B'	-	49+25'B'	RT	430	
45+49'B'	-	49+20'B'	LT	370	
51+35'B'	-	54+18'B'	LT	280	
51+40'B'	-	54+11'B'	RT	270	
RIDGE ROAD					
47+80'R'	-	48+89'R'	LT	110	
48+35'R'	-	49+07'R'	RT	70	
51+68'R'	-	53+40'R'	LT	170	
51+87'R'		53+32'R'	RT	150	
OAK PARK ROAD					
47+06'OP'	-	49+18'OP'	RT	210	
47+31'OP'	-	49+18'OP'	LT	190	
51+40'OP'	-	53+38'OP'	LT	200	
51+40'OP'	-	52+88'OP'	RT	150	
CTH O					
44+71'O'	-	49+29'O'	RT	460	
45+66'O'	-	49+24'O'	LT	360	
51+44'O'	-	53+03'O'	LT	160	
51+46'O'	-	54+86'O'	RT	340	
AIRPORT ROAD					
46+96'A'	-	48+75'A'	RT	180	
47+84'A'	-	49+02'A'	LT	120	
51+63'A'	-	52+71'A'	RT	110	
51+76'A'	-	53+22'A'	LT	150	
			TOTAL 0070	57,030	

CATEGORY 0010

REMOVING STORM SEWER

STATION	LOCATION	O/S	204.0245.01 REMOVING STORM SEWER (SIZE) (01. 12-INCH) LF
720+45'WB'	IH 94	LT	40
720+80'EB'	IH 94	RT	40
	TOTAL 0010		80

CATEGORY 0010

REMOVING INLETS

STATION	LOCATION	O/S	204.0220 REMOVING INLETS EACH
720+45'WB'	IH 94	LT	1
720+80'EB'	IH 94	RT	1
	TOTAL 0010		2

CATEGORY 0010

PREPARE FOUNDATION

STATION	TO	STATION	211.0101.01 PREPARE FOUNDATION FOR ASPHALTIC PAVING (PROJECT) (1066-03-75) EACH
482+44 'EB'	-	995+00 'EB'	1
		TOTAL 0010	1

CATEGORY 0010

BASE AGGREGATE

STATION	TO	STATION	305.0110 BASE AGGREGATE DENSE 3/4-INCH TON	624.0100 WATER MGAL
IH 94 WESTBOUND				
460+30'WB'	-	479+00'WB'	150	1.5
479+00'WB'	-	510+00'WB'	240	2.4
510+00'WB'	-	540+00'WB'	230	2.3
540+00'WB'	-	570+00'WB'	230	2.3
570+00'WB'	-	601+00'WB'	240	2.4
601+00'WB'	-	631+00'WB'	230	2.3
631+00'WB'	-	662+00'WB'	240	2.4
662+00'WB'	-	693+00'WB'	240	2.4
693+00'WB'	-	723+00'WB'	230	2.3
723+00'WB'	-	754+00'WB'	240	2.4
754+00'WB'	-	784+00'WB'	230	2.3
784+00'WB'		815+00'WB'	240	2.4
815+00'WB'	-	845+00'WB'	230	2.3
845+00'WB'	-	875+00'WB'	230	2.3
875+00'WB'	-	906+00'WB'	240	2.4
906+00'WB'	-	936+00'WB'	230	2.3
936+00'WB'	-	967+00'WB'	240	2.4
967+00'WB'	-	994+32'WB'	210	2.1
IH 94 EASTBOUND				
482+44'EB'	-	510+00'EB'	220	2.2
510+00'EB'	-	540+00'EB'	230	2.3
540+00'EB'	-	570+00'EB'	230	2.3
570+00'EB'	-	601+00'EB'	240	2.4
601+00'EB'	-	631+00'EB'	230	2.3
631+00'EB'	-	662+00'EB'	240	2.4
662+00'EB'	-	693+00'EB'	240	2.4
693+00'EB'	-	723+00'EB'	230	2.3
723+00'EB'	-	754+00'EB'	240	2.4
754+00'EB'	-	784+00'EB'	230	2.3
784+00'EB'	-	815+00'EB'	240	2.4
815+00'EB'		845+00'EB'	230	2.3
845+00'EB'	-	875+00'EB'	230	2.3
875+00'EB'	-	906+00'EB'	240	2.4
906+00'EB'	-	936+00'EB'	230	2.3
936+00'EB'	-	967+00'EB'	240	2.4
967+00'EB'	-	995+00'EB'	220	2.2

BASE AGGREGATE (CONTINUED)

STATION	TO	STATION	305.0110 BASE AGGREGATE DENSE 3/4-INCH TON	624.0100 WATER MGAL
MAINTENANCE CROSSOVERS				
494+82 'EB'	-	494+55 'EB'	5	--
574+69 'EB'	-	575+44 'EB'	5	--
700+66 'EB'	-	701+03 'EB'	5	--
745+72 'EB'	-	746+21 'EB'	5	--
882+11 'EB'	-	883+29 'EB'	5	--
911+32 'EB'	-	912+08 'EB'	5	--
STH 73 RAMPS				
713+43'W'	-	721+27'W'	20	0.2
712+79'X'	-	720+18'X'	20	0.2
721+77'Y'	-	731+30'Y'	20	0.2
720+37'Z'	-	732+39'Z'	30	0.3
BAXTER ROAD				
44+30'B'	-	49+25'B'	50	0.5
51+38'B'	-	55+37'B'	40	0.4
RIDGE ROAD				
46+57'R'	-	49+17'R'	20	0.2
51+76'R'	-	52+51'R'	20	0.2
OAK PARK ROAD				
45+84'OP'	-	49+24'OP'	30	0.3
51+33'OP'	-	54+58'OP'	30	0.3
CTH O				
43+52'O'	-	49+26'O'	50	0.5
51+39'O'	-	56+08'O'	30	0.3
AIRPORT ROAD				
45+76'A'	-	48+86'A'	30	0.3
51+68'A'	-	54+41'A'	20	0.2
		TOTAL 0010	8,520	84.9

3

CATEGORY 0010 UNLESS OTHERWISE NOTED

3

ASPHALT PAVEMENT

STATION	TO	STATION	* 455.0605 TACK COAT GAL	460.7224 HMA PAVEMENT 4 HT 58-28 S TON	460.7424 HMA PAVEMENT 4 HT 58-28 H TON	460.8424 HMA PAVEMENT 4 SMA 58-28 H TON	* 465.0105 ASPHALTIC SURFACE TON	465.0110 ASPHALTIC SURFACE PATCHING TON
IH 94 WESTBOUND								
460+30'WB'	-	479+00'WB'	850	670	200	590	--	--
479+00'WB'	-	510+00'WB'	1,410	1,120	340	980	--	--
510+00'WB'	-	540+00'WB'	1,360	1,080	330	950	--	--
540+00'WB'	-	570+00'WB'	1,360	1,080	330	950	--	--
570+00'WB'	-	601+00'WB'	1,410	1,120	340	980	--	--
601+00'WB'	-	631+00'WB'	1,360	1,080	330	950	--	--
631+00'WB'	-	662+00'WB'	1,410	1,120	340	980	--	--
662+00'WB'	-	693+00'WB'	1,410	1,120	340	980	--	--
693+00'WB'	-	723+00'WB'	1,360	1,080	330	950	--	--
723+00'WB'	-	754+00'WB'	1,410	1,120	340	980	--	--
754+00'WB'	-	784+00'WB'	1,360	1,080	330	950	--	--
784+00'WB'		815+00'WB'	1,410	1,120	340	980	--	--
815+00'WB'	-	845+00'WB'	1,360	1,080	330	950	--	--
845+00'WB'	-	875+00'WB'	1,360	1,080	330	950	--	--
875+00'WB'	-	906+00'WB'	1,410	1,120	340	980	--	--
906+00'WB'	-	936+00'WB'	1,360	1,080	330	950	--	--
936+00'WB'	-	967+00'WB'	1,410	1,120	340	980	--	--
967+00'WB'	-	994+32'WB'	1,240	990	300	860	--	--
IH 94 EASTBOUND								
482+44'EB'	-	510+00'EB'	1,250	990	300	870	--	--
510+00'EB'	-	540+00'EB'	1,360	1,080	330	950	--	--
540+00'EB'	-	570+00'EB'	1,360	1,080	330	950	--	--
570+00'EB'	-	601+00'EB'	1,410	1,120	340	980	--	--
601+00'EB'	-	631+00'EB'	1,360	1,080	330	950	--	--
631+00'EB'	-	662+00'EB'	1,410	1,120	340	980	--	--
662+00'EB'	-	693+00'EB'	1,410	1,120	340	980	--	--
693+00'EB'	-	723+00'EB'	1,360	1,080	330	950	--	--
723+00'EB'	-	754+00'EB'	1,410	1,120	340	980	--	--
754+00'EB'	-	784+00'EB'	1,360	1,080	330	950	--	--
784+00'EB'	-	815+00'EB'	1,410	1,120	340	980	--	--
815+00'EB'		845+00'EB'	1,360	1,080	330	950	--	--
845+00'EB'	-	875+00'EB'	1,360	1,080	330	950	--	--
875+00'EB'	-	906+00'EB'	1,410	1,120	340	980	--	--
906+00'EB'	-	936+00'EB'	1,360	1,080	330	950	--	--
936+00'EB'	-	967+00'EB'	1,410	1,120	340	980	--	--
967+00'EB'	-	995+00'EB'	1,270	1,010	300	880	--	--
STH 73 RAMPS								
713+43'W'	-	721+27'W'	190	--	300	--	--	--
712+79'X'	-	720+18'X'	180	--	290	--	--	--
722+41'Y'	-	731+30'Y'	210	--	340	--	--	--
721+15'Z'	-	732+39'Z'	270	--	430	--	--	--
MAINTENANCE CROSSOVERS								
494+82'EB'	-	494+55'EB'	--	--	--	--	20	--
574+69'EB'	-	575+44'EB'	--	--	--	--	20	--
700+66'EB'	-	701+36'EB'	--	--	--	--	20	--
745+72'EB'	-	746+21'EB'	--	--	--	--	20	--
882+11'EB'	-	883+29'EB'	--	--	--	--	30	--
911+32'EB'	-	912+08'EB'	--	--	--	--	30	--
BAXTER ROAD								
49+16'B'	-	49+66'B'	--	--	--	--	20	--
50+95'B'	-	51+45'B'	--	--	--	--	20	--
RIDGE ROAD								
49+07'R'	-	49+57'R'	--	--	--	--	20	--
51+17'R'	-	51+67'R'	--	--	--	--	20	--
OAK PARK ROAD								
49+16'OP'	-	49+66'OP'	--	--	--	--	20	--
50+93'OP'	-	51+43'OP'	--	--	--	--	20	--
CTH O								
49+15'O'	-	49+65'O'	--	--	--	--	20	--
50+94'O'	-	51+44'O'	--	--	--	--	20	--
AIRPORT ROAD								
49+02'A'	-	49+53'A'	--	--	--	--	20	--
51+16'A'	-	51+66'A'	--	--	--	--	20	--
PROJECT 1066-03-75			--	--	--	--	300	300
		TOTAL 0010	48,370	37,740	12,840	33,100	640	300

* ADDITIONAL QUANTITIES LISTED ELSEWHERE

3

RUMBLE STRIPS

STATION	TO	STATION	465.0510 ASPHALTIC RUMBLE STRIPS, SHOULDER DIVIDED ROADWAY LF
IH 94 WESTBOUND			
460+30'WB'	-	479+00'WB'	3,740
479+00'WB'	-	510+00'WB'	6,150
510+00'WB'	-	540+00'WB'	6,000
540+00'WB'	-	570+00'WB'	5,960
570+00'WB'	-	601+00'WB'	6,110
601+00'WB'	-	631+00'WB'	6,000
631+00'WB'	-	662+00'WB'	6,200
662+00'WB'	-	693+00'WB'	6,200
693+00'WB'	-	723+00'WB'	4,870
723+00'WB'	-	754+00'WB'	5,590
754+00'WB'	-	784+00'WB'	5,790
784+00'WB'	-	815+00'WB'	6,200
815+00'WB'	-	845+00'WB'	6,000
845+00'WB'	-	875+00'WB'	6,000
875+00'WB'	-	906+00'WB'	6,200
906+00'WB'	-	936+00'WB'	6,000
936+00'WB'	-	967+00'WB'	6,200
967+00'WB'	-	994+32'WB'	5,460
IH 94 EASTBOUND			
482+44'EB'	-	510+00'EB'	5,460
510+00'EB'	-	540+00'EB'	6,000
540+00'EB'	-	570+00'EB'	5,960
570+00'EB'	-	601+00'EB'	6,110
601+00'EB'	-	631+00'EB'	6,000
631+00'EB'	-	662+00'EB'	6,200
662+00'EB'	-	693+00'EB'	6,200
693+00'EB'	-	723+00'EB'	4,860
723+00'EB'	-	754+00'EB'	5,370
754+00'EB'	-	784+00'EB'	5,790
784+00'EB'	-	815+00'EB'	6,200
815+00'EB'	-	845+00'EB'	6,000
845+00'EB'	-	875+00'EB'	6,000
875+00'EB'	-	906+00'EB'	6,200
906+00'EB'	-	936+00'EB'	6,000
936+00'EB'	-	967+00'EB'	6,200
967+00'EB'	-	995+00'EB'	5,600
		TOTAL 0010	204,820

CATEGORY 0010 UNLESS OTHERWISE NOTED

3

PWL MIXTURE USE TABLE

LOCATION	STATION	MIXTURE USE	UNDERLYING SURFACE	BID ITEM	TONS	THICKNESS	QUALITY MANAGEMENT PROGRAM TO BE USED FOR: MIXTURE ACCEPTANCE	DENSITY ACCEPTANCE
12' INSIDE DRIVING LANE	482'EB'+44 - 995'EB'+00	UPPER LAYER	4 HT 58-28 S	4 SMA 58-28 H	6,880	1.75"	PWL INCENTIVE AIR VOIDS HMA PAVEMENT 460.2010	INCENTIVE DENSITY PWL HMA PAVEMENT 460.2005
12' INSIDE DRIVING LANE	482'EB'+44 - 995'EB'+01	LOWER LAYER	MILLED EXISTING HMA SURFACE	4 HT 58-28 S	7,860	2"	PWL INCENTIVE AIR VOIDS HMA PAVEMENT 460.2010	INCENTIVE DENSITY PWL HMA PAVEMENT 460.2005
12' OUTSIDE DRIVING LANE	482'EB'+44 - 995'EB'+02	UPPER LAYER	4 HT 58-28 S	4 SMA 58-28 H	6,880	1.75"	PWL INCENTIVE AIR VOIDS HMA PAVEMENT 460.2010	INCENTIVE DENSITY PWL HMA PAVEMENT 460.2005
12' OUTSIDE DRIVING LANE	482'EB'+44 - 995'EB'+03	LOWER LAYER	MILLED EXISTING HMA SURFACE	4 HT 58-28 S	7,860	2"	PWL INCENTIVE AIR VOIDS HMA PAVEMENT 460.2010	INCENTIVE DENSITY PWL HMA PAVEMENT 460.2005
12' INSIDE DRIVING LANE	460'WB'+30 - 994'WB'+31	UPPER LAYER	4 HT 58-28 S	4 SMA 58-28 H	7,160	1.75"	PWL INCENTIVE AIR VOIDS HMA PAVEMENT 460.2010	INCENTIVE DENSITY PWL HMA PAVEMENT 460.2005
12' INSIDE DRIVING LANE	460'WB'+30 - 994'WB'+32	LOWER LAYER	MILLED EXISTING HMA SURFACE	4 HT 58-28 S	8,190	2"	PWL INCENTIVE AIR VOIDS HMA PAVEMENT 460.2010	INCENTIVE DENSITY PWL HMA PAVEMENT 460.2005
12' OUTSIDE DRIVING LANE	460'WB'+30 - 994'WB'+33	UPPER LAYER	4 HT 58-28 S	4 SMA 58-28 H	7,160	1.75"	PWL INCENTIVE AIR VOIDS HMA PAVEMENT 460.2010	INCENTIVE DENSITY PWL HMA PAVEMENT 460.2005
12' OUTSIDE DRIVING LANE	460'WB'+30 - 994'WB'+34	LOWER LAYER	MILLED EXISTING HMA SURFACE	4 HT 58-28 S	8,190	2"	PWL INCENTIVE AIR VOIDS HMA PAVEMENT 460.2010	INCENTIVE DENSITY PWL HMA PAVEMENT 460.2005
5' INSIDE SHOULDER	482'EB'+44 - 995'EB'+00	UPPER LAYER	4 HT 58-28 S	4 SMA 58-28 H	2,870	1.75"	PWL INCENTIVE AIR VOIDS HMA PAVEMENT 460.2010	ACCEPTANCE TESTING BY THE DEPARTMENT, NOT ELIGIBLE FOR INCENTIVE
5' INSIDE SHOULDER	482'EB'+44 - 995'EB'+01	LOWER LAYER	MILLED EXISTING HMA SURFACE	4 HT 58-28 S	3,270	2"	PWL INCENTIVE AIR VOIDS HMA PAVEMENT 460.2010	ACCEPTANCE TESTING BY THE DEPARTMENT, NOT ELIGIBLE FOR INCENTIVE
5' INSIDE SHOULDER	460'WB'+30 - 994'WB'+31	UPPER LAYER	4 HT 58-28 S	4 SMA 58-28 H	2,990	1.75"	PWL INCENTIVE AIR VOIDS HMA PAVEMENT 460.2010	ACCEPTANCE TESTING BY THE DEPARTMENT, NOT ELIGIBLE FOR INCENTIVE
5' INSIDE SHOULDER	460'WB'+30 - 994'WB'+32	LOWER LAYER	MILLED EXISTING HMA SURFACE	4 HT 58-28 S	3,410	2"	PWL INCENTIVE AIR VOIDS HMA PAVEMENT 460.2010	ACCEPTANCE TESTING BY THE DEPARTMENT, NOT ELIGIBLE FOR INCENTIVE
10' OUTSIDE SHOULDER	482'EB'+44 - 995'EB'+00	UPPER LAYER	MILLED EXISTING HMA SURFACE	4 HT 58-28 H	5,730	1.75"	PWL INCENTIVE AIR VOIDS HMA PAVEMENT 460.2010	ACCEPTANCE TESTING BY THE DEPARTMENT, NOT ELIGIBLE FOR INCENTIVE
10' OUTSIDE SHOULDER	460'WB'+30 - 994'WB'+31	UPPER LAYER	MILLED EXISTING HMA SURFACE	4 HT 58-28 H	5,970	1.75"	PWL INCENTIVE AIR VOIDS HMA PAVEMENT 460.2010	ACCEPTANCE TESTING BY THE DEPARTMENT, NOT ELIGIBLE FOR INCENTIVE
16' RAMP LANE (W)	713+43'W' - 718+29'W'	UPPER LAYER	MILLED EXISTING HMA SURFACE	4 HT 58-28 H	99	2"	PWL INCENTIVE AIR VOIDS HMA PAVEMENT 460.2010	INCENTIVE DENSITY PWL HMA PAVEMENT 460.2005
8' OUTSIDE RAMP SHOULDER (W)	713+43'W' - 718+29'W'	UPPER LAYER	MILLED EXISTING HMA SURFACE	4 HT 58-28 H	50	2"	PWL INCENTIVE AIR VOIDS HMA PAVEMENT 460.2010	ACCEPTANCE TESTING BY THE DEPARTMENT, NOT ELIGIBLE FOR INCENTIVE
8' INSIDE RAMP SHOULDER (W)	713+43'W' - 718+29'W'	UPPER LAYER	MILLED EXISTING HMA SURFACE	4 HT 58-28 H	50	2"	PWL INCENTIVE AIR VOIDS HMA PAVEMENT 460.2010	ACCEPTANCE TESTING BY THE DEPARTMENT, NOT ELIGIBLE FOR INCENTIVE
16' RAMP LANE (X)	712+79'X' - 720+18'X'	UPPER LAYER	MILLED EXISTING HMA SURFACE	4 HT 58-28 H	151	2"	PWL INCENTIVE AIR VOIDS HMA PAVEMENT 460.2010	INCENTIVE DENSITY PWL HMA PAVEMENT 460.2005
8' OUTSIDE RAMP SHOULDER (X)	712+79'X' - 720+18'X'	UPPER LAYER	MILLED EXISTING HMA SURFACE	4 HT 58-28 H	70	2"	PWL INCENTIVE AIR VOIDS HMA PAVEMENT 460.2010	ACCEPTANCE TESTING BY THE DEPARTMENT, NOT ELIGIBLE FOR INCENTIVE
8' INSIDE RAMP SHOULDER (X)	712+79'X' - 720+18'X'	UPPER LAYER	MILLED EXISTING HMA SURFACE	4 HT 58-28 H	70	2"	PWL INCENTIVE AIR VOIDS HMA PAVEMENT 460.2010	ACCEPTANCE TESTING BY THE DEPARTMENT, NOT ELIGIBLE FOR INCENTIVE
16' RAMP LANE (Y)	722+41'Y' - 731+30'Y'	UPPER LAYER	MILLED EXISTING HMA SURFACE	4 HT 58-28 H	182	2"	PWL INCENTIVE AIR VOIDS HMA PAVEMENT 460.2010	INCENTIVE DENSITY PWL HMA PAVEMENT 460.2005
8' OUTSIDE RAMP SHOULDER (Y)	722+41'Y' - 731+30'Y'	UPPER LAYER	MILLED EXISTING HMA SURFACE	4 HT 58-28 H	90	2"	PWL INCENTIVE AIR VOIDS HMA PAVEMENT 460.2010	ACCEPTANCE TESTING BY THE DEPARTMENT, NOT ELIGIBLE FOR INCENTIVE
8' INSIDE RAMP SHOULDER (Y)	722+41'Y' - 731+30'Y'	UPPER LAYER	MILLED EXISTING HMA SURFACE	4 HT 58-28 H	90	2"	PWL INCENTIVE AIR VOIDS HMA PAVEMENT 460.2010	ACCEPTANCE TESTING BY THE DEPARTMENT, NOT ELIGIBLE FOR INCENTIVE
16' RAMP LANE (Z)	721+15'Z' - 732+39'Z'	UPPER LAYER	MILLED EXISTING HMA SURFACE	4 HT 58-28 H	230	2"	PWL INCENTIVE AIR VOIDS HMA PAVEMENT 460.2010	INCENTIVE DENSITY PWL HMA PAVEMENT 460.2005
8' OUTSIDE RAMP SHOULDER (Z)	721+15'Z' - 732+39'Z'	UPPER LAYER	MILLED EXISTING HMA SURFACE	4 HT 58-28 H	110	2"	PWL INCENTIVE AIR VOIDS HMA PAVEMENT 460.2010	ACCEPTANCE TESTING BY THE DEPARTMENT, NOT ELIGIBLE FOR INCENTIVE
8' INSIDE RAMP SHOULDER (Z)	721+15'Z' - 732+39'Z'	UPPER LAYER	MILLED EXISTING HMA SURFACE	4 HT 58-28 H	110	2"	PWL INCENTIVE AIR VOIDS HMA PAVEMENT 460.2010	ACCEPTANCE TESTING BY THE DEPARTMENT, NOT ELIGIBLE FOR INCENTIVE

CATEGORY 0010 UNLESS OTHERWISE NOTED

3

HMA TEST STRIPS

PROJECT	460.0105.S HMA PERCENT WITHIN LIMITS (PWL) TEST STRIP VOLUMETRICS EACH	460.0110.S HMA PERCENT WITHIN LIMITS (PWL) TEST STRIP DENSITY EACH	460.0115.S HMA PAVEMENT TEST STRIPS VOLUMETRICS EACH	460.0120.S HMA PAVEMENT TEST STRIPS DENSITY EACH
1066-03-75	1	1	1	1
TOTAL 0010	1	1	1	1

MATERIAL TRANSFER VEHICLE

LOCATION	460.9000.S MATERIAL TRANSFER VEHICLE EACH
PROJECT 1066-03-75	1
TOTAL 0010	1

3

CULVERT ITEMS

STATION	204.9060.S.01 REMOVING (ITEM DESCRIPTION) (APRON ENDWALLS) EACH	520.8700 CLEANING CULVERT PIPES EACH	520.9700.S.01 CULVERT PIPE LINERS (SIZE) (18-INCH) LF	520.9700.S.02 CULVERT PIPE LINERS (SIZE) (24-INCH) LF	520.9750.S CLEANING CULVERT PIPES FOR LINER VERIFICATION EACH	522.1018 APRON ENDWALLS FOR CULVERT PIPE REINFORCED CONCRETE 18-INCH EACH	522.1024 APRON ENDWALLS FOR CULVERT PIPE REINFORCED CONCRETE 24-INCH EACH	522.1030 APRON ENDWALLS FOR CULVERT PIPE REINFORCED CONCRETE 30-INCH EACH	522.1036 APRON ENDWALLS FOR CULVERT PIPE REINFORCED CONCRETE 36-INCH EACH	* SPV.0060.01 SPECIAL (GRADING, SHAPING, FINISHING CULVERT PIPE, APRON ENDWALLS, AND FLUMES) EACH	EXISTING PIPE INFORMATION MATERIAL	EXISTING PIPE INFORMATION SLOPE (%)	** SALVAGED TOPSOIL SY	** FERTILIZER TYPE B CWT	** SEEDING MIXTURE NO. 30 LB	** SEED WATER MGAL	** EROSION MAT CLASS I TYPE A SY	REMARKS
455+90'EB'	--	1	--	--	--	--	1	--	--	1	--	--	50	0.032	1	1	50	REGRADE DITCH TO DRAIN
464+94'EB'	--	1	--	--	--	--	1	--	--	1	--	--	50	0.032	1	1	50	REGRADE DITCH TO DRAIN
494+95'EB'	--	1	73	--	1	2	--	--	--	2	RCP	0.62%	60	0.038	1	1	60	REGRADE DITCH TO DRAIN
500+50'EB'	--	1	63	--	1	2	--	--	--	2	RCP	0.57%	60	0.038	1	1	60	REGRADE DITCH TO DRAIN
510+85'EB'	1	1	--	--	--	--	--	1	--	1	--	--	50	0.032	1	1	50	DITCH NEEDS GRADING, REPLACE SOUTH ENDWALL
536+90'WB'	--	1	--	--	--	1	--	--	--	1	--	--	50	0.032	1	1	50	REGRADE DITCH TO DRAIN
546+95'EB'	--	1	--	--	--	1	--	--	--	1	--	--	50	0.032	1	1	50	REGRADE DITCH TO DRAIN
553+00'EB'	1	--	--	--	--	1	--	--	--	1	--	--	10	0.006	1	1	10	ENDWALL TO BE REPLACED
582+90'EB'	--	1	--	--	--	1	--	--	--	1	--	--	50	0.032	1	1	50	REGRADE DITCH TO DRAIN
589+00'EB'	1	1	--	--	--	1	--	--	--	1	--	--	50	0.032	1	1	50	DITCH NEEDS GRADING, REPLACE ENDWALL
608+75'WB'	--	--	--	77	1	--	--	--	--	--	RCP	1.56%	--	--	--	--	--	LINE 24" RCCP CULVERT PIPE
615+95'EB'	--	1	--	--	--	1	--	--	--	1	--	--	50	0.032	1	1	50	REGRADE DITCH TO DRAIN
625+95'EB'	--	1	--	--	--	1	--	--	--	1	--	--	50	0.032	1	1	50	REGRADE DITCH TO DRAIN
637+00'EB'	--	1	--	--	--	1	--	--	--	1	--	--	50	0.032	1	1	50	REGRADE DITCH TO DRAIN
649+95'WB'	1	--	--	--	--	1	--	--	--	--	--	--	10	0.006	1	1	10	REPLACE MEDIAN ENDWALL
713+00'EB'	1	1	--	--	--	1	--	--	--	1	--	--	50	0.032	1	1	50	REGRADE DITCH TO DRAIN, REPLACE MEDIAN ENDWALL
737+75'EB'	1	--	--	--	--	--	--	--	1	--	--	--	10	0.006	1	1	10	REPLACE ENDWALL
738+00'EB'	--	1	--	--	--	1	--	--	--	1	--	--	50	0.032	1	1	50	REGRADE DITCH TO DRAIN
761+20'EB'	--	--	--	--	--	--	--	--	2	--	--	--	20	0.013	1	1	20	REPLACE ENDWALL
813+00'EB'	--	--	85	--	1	2	--	--	--	2	RCP	1.64%	20	0.013	1	1	20	LINE 18" CSCP CULVERT PIPE
821+00'EB'	--	1	--	--	--	1	--	--	--	1	--	--	50	0.032	1	1	50	REGRADE DITCH TO DRAIN
829+00'EB'	--	1	--	--	--	1	--	--	--	1	--	--	50	0.032	1	1	50	REGRADE DITCH TO DRAIN
832+25'WB'	1	1	--	--	--	--	1	--	--	1	--	--	50	0.032	1	1	50	REGRADE DITCH TO DRAIN, REPLACE ENDWALL
863+80'EB'	1	1	--	--	--	--	1	--	--	--	--	--	10	0.006	1	1	10	REPLACE ENDWALL
865+95'EB'	--	1	--	--	--	--	1	--	--	1	--	--	50	0.032	1	1	50	REGRADE DITCH TO DRAIN
869+75'EB'	--	1	--	--	--	--	--	--	--	--	--	--	--	--	--	--	--	
892+00'EB'	--	1	--	--	--	--	--	--	--	--	--	--	--	--	--	--	--	
894+90'EB'	--	1	--	--	--	--	1	--	--	1	--	--	10	0.006	1	1	10	REGRADE DITCH TO DRAIN
TOTAL 0010	8	22	221	77	4	19	6	1	3	24			1,010	1.000	25	25	1,010	

* ADDITIONAL QUANTITIES LISTED ELSEWHERE

**FOR INFORMATION ONLY. INCIDENTAL TO GRADING SHAPING FINISHING CULVERT PIPE AND APRON ENDWALLS BID ITEM.

CATEGORY 0070 UNLESS OTHERWISE NOTED

3

STATION	TO	STATION	LOCATION	O/S	521.1012 APRON ENDWALLS FOR CULVERT PIPE STEEL 12-INCH EACH	530.0112 CULVERT PIPE CORRUGATED POLYETHYLENE 12-INCH LF	601.0588 CONCRETE CURB & GUTTER 4-INCH SLOPED 36-INCH TYPE TBT LF	602.3010 CONCRETE SURFACE DRAINS CY	CONCRETE SURFACE DRAINS * 606.0200 RIPRAP MEDIUM CY	611.0654 INLET COVERS TYPE V EACH	611.3220 INLETS 2X2-FT EACH	* 645.0120 GEOTEXTILE TYPE HR SY	650.4000 CONSTRUCTION STAKING STORM SEWER EACH	650.5500 CONSTRUCTION STAKING CURB GUTTER AND CURB & GUTTER LF	* SPV.0060.01 SPECIAL (GRADING, SHAPING, FINISHING CULVERT PIPE, APRON ENDWALLS, AND FLUMES) EACH	** SALVAGED TOPSOIL SY	** FERTILIZER TYPE B CWT	** SEEDING MIXTURE NO. 30 LB	** SEED WATER MGAL	** EROSION MAT CLASS I TYPE A SY
IH 94 WESTBOUND																				
719+96'WB'	-	720+50'WB'	IH 94	LT	1	40	54	--	2	1	1	9	1	54	1	10	0.006	1	1	10
777+92'WB'	-	777+98'WB'	IH 94	LT	--	--	45	0.4	1	--	--	5	--	45	1	10	0.006	1	1	10
IH 94 EASTBOUND																				
720+30'EB'	-	720+84'EB'	IH 94	RT	1	40	54	--	2	1	1	9	1	54	1	10	0.006	1	1	10
777+74'EB'	-	777+80'EB'	IH 94	RT	--	--	45	0.4	1	--	--	5	--	45	1	10	0.006	1	1	10
777+80'EB'	-	777+86'EB'	IH 94	LT	--	--	45	0.4	1	--	--	5	--	45	1	10	0.006	1	1	10
BAXTER ROAD																				
48+80'B'	-	49+25'B'	BAXTER RD	RT	--	--	45	0.4	1	--	--	5	--	45	1	10	0.006	1	1	10
48+75'B'	-	49+20'B'	BAXTER RD	LT	--	--	45	0.4	1	--	--	5	--	45	1	10	0.006	1	1	10
50+95'B'	-	51+40'B'	BAXTER RD	RT	--	--	45	0.4	1	--	--	5	--	45	1	10	0.006	1	1	10
50+90'B'	-	51+35'B'	BAXTER RD	LT	--	--	45	0.4	1	--	--	5	--	45	1	10	0.006	1	1	10
RIDGE ROAD																				
48+72'R'	-	49+17'R'	RIDGE RD	RT	--	--	45	0.4	1	--	--	5	--	45	1	10	0.006	1	1	10
48+52'R'	-	48+97'R'	RIDGE RD	LT	--	--	45	0.4	1	--	--	5	--	45	1	10	0.006	1	1	10
51+39'R'	-	51+84'R'	RIDGE RD	RT	--	--	45	0.4	1	--	--	5	--	45	1	10	0.006	1	1	10
51+22'R'	-	51+67'R'	RIDGE RD	LT	--	--	45	0.4	1	--	--	5	--	45	1	10	0.006	1	1	10
OAK PARK ROAD																				
48+79'OP'	-	49+24'OP'	OAK PARK RD	RT	--	--	45	0.4	1	--	--	5	--	45	1	10	0.006	1	1	10
48+79'OP'	-	49+24'OP'	OAK PARK RD	LT	--	--	45	0.4	1	--	--	5	--	45	1	10	0.006	1	1	10
50+88'OP'	-	51+33'OP'	OAK PARK RD	RT	--	--	45	0.4	1	--	--	5	--	45	1	10	0.006	1	1	10
50+88'OP'	-	51+33'OP'	OAK PARK RD	LT	--	--	45	0.4	1	--	--	5	--	45	1	10	0.006	1	1	10
CTH O																				
48+84'O'	-	49+29'O'	CTH O	RT	--	--	45	0.4	1	--	--	5	--	45	1	10	0.006	1	1	10
48+79'O'	-	49+24'O'	CTH O	LT	--	--	45	0.4	1	--	--	5	--	45	1	10	0.006	1	1	10
50+97'O'	-	51+42'O'	CTH O	RT	--	--	45	0.4	1	--	--	5	--	45	1	10	0.006	1	1	10
50+92'O'	-	51+37'O'	CTH O	LT	--	--	45	0.4	1	--	--	5	--	45	1	10	0.006	1	1	10
AIRPORT ROAD																				
48+28'A'	-	48+73'A'	AIRPORT RD	RT	--	--	45	0.4	1	--	--	5	--	45	1	10	0.006	1	1	10
51+18'A'	-	51+63'A'	AIRPORT RD	RT	--	--	45	0.4	1	--	--	5	--	45	1	10	0.006	1	1	10
				TOTAL 0010	2	80	1,053	8.4	25	2	2	123	2	1,053	--	--	--	--	--	--
				TOTAL 0070											23	230	0.140	23	13	230

* ADDITIONAL QUANTITIES LISTED ELSEWHERE

**FOR INFORMATION ONLY. INCIDENTAL TO GRADING SHAPING FINISHING CULVERT PIPE AND APRON ENDWALLS BID ITEM.

SALVAGE AND REINSTALL GUARDRAIL

STATION	TO	STATION	LOCATION	O/S	SPV.0090.01 SALVAGE AND REINSTALL GUARDRAIL LF
IH 94 WESTBOUND					
719+96'WB'	-	720+50'WB'	IH 94	LT	60
IH 94 EASTBOUND					
720+30'EB'	-	720+84'EB'	IH 94	RT	60
777+74'EB'	-	777+80'EB'	IH 94	RT	60
777+80'EB'	-	777+86'EB'	IH 94	LT	60
BAXTER ROAD					
48+80'B'	-	49+25'B'	BAXTER RD	RT	60
48+75'B'	-	49+20'B'	BAXTER RD	LT	60
50+95'B'	-	51+40'B'	BAXTER RD	RT	60
50+90'B'	-	51+35'B'	BAXTER RD	LT	60
RIDGE ROAD					
48+72'R'	-	49+17'R'	RIDGE RD	RT	60
48+52'R'	-	48+97'R'	RIDGE RD	LT	60
51+39'R'	-	51+84'R'	RIDGE RD	RT	60
51+22'R'	-	51+67'R'	RIDGE RD	LT	60

SALVAGE AND REINSTALL GUARDRAIL

STATION	TO	STATION	LOCATION	O/S	614.0920 SALVAGE AND REINSTALL GUARDRAIL LF
OAK PARK ROAD					
48+79'OP'	-	49+24'OP'	OAK PARK RD	RT	60
48+79'OP'	-	49+24'OP'	OAK PARK RD	LT	60
50+88'OP'	-	51+33'OP'	OAK PARK RD	RT	60
50+88'OP'	-	51+33'OP'	OAK PARK RD	LT	60
CTH O					
48+84'O'	-	49+29'O'	CTH O	RT	60
48+79'O'	-	49+24'O'	CTH O	LT	60
50+97'O'	-	51+42'O'	CTH O	RT	60
50+92'O'	-	51+37'O'	CTH O	LT	60
AIRPORT ROAD					
48+28'A'	-	48+73'A'	AIRPORT RD	RT	60
51+18'A'	-	51+63'A'	AIRPORT RD	RT	60
					1,320

CATEGORY 0070 UNLESS OTHERWISE NOTED

3

MGS GUARDRAIL

STATION	TO	STATION	O/S	614.0010 BARRIER SYSTEM GRADING SHAPING FINISHING EACH	614.0200 STEEL THRIE BEAM STRUCTURE APPROACH LF	614.0220 STEEL THRIE BEAM BULLNOSE TERMINAL EACH	614.0230 STEEL THRIE BEAM LF	614.0370 STEEL PLATE BEAM GUARD ENERGY ABSORBING TERMINAL EACH	614.2300 MGS GUARDRAIL 3 LF	614.2500 MGS THRIE BEAM TRANSITION LF	614.2610 MGS GUARDRAIL TERMINAL EAT EACH	614.2620 MGS GUARDRAIL TERMINAL TYPE 2 EACH	** EXCAVATION COMMON CY	** BORROW CY	** TOPSOIL SY	** FERTILIZER TYPE B CWT	** SEEDING MIXTURE NO. 30 LB	** SEED WATER MGAL	** EROSION MAT CLASS I TYPE B SY
IH 94 WESTBOUND																			
501+76'WB'	-	505+34'WB'	LT	1	--	--	--	--	275.0	39.4	1	--	0.2	1.3	110	0.069	2	1	110
513+00'WB'	-	537+00'WB'	LT	1	--	--	--	--	2,350.0	--	1	1	0.2	45.4	370	0.233	7	2	370
566+00'WB'	-	577+83'WB'	LT	1	--	--	--	--	1,100.0	39.4	1	--	0.2	10.6	190	0.120	3	1	190
651+00'WB'	-	664+75'WB'	LT	1	--	--	--	--	1,325.0	--	1	1	0.5	2.0	120	0.076	2	1	120
673+93'WB'	-	675+23'WB'	LT	1	--	--	--	--	37.5	39.4	1	--	2.5	4.6	160	0.101	3	1	160
716+00'WB'	-	720+45'WB'	LT	--	--	--	--	--	412.5	39.4	--	--	--	--	--	--	--	--	--
721+63'WB'	-	725+35'WB'	LT	1	--	--	--	--	287.5	39.4	1	--	0.2	38.0	120	0.076	2	1	120
721+74'WB'	-	725+66'WB'	RT	1	--	--	--	--	300.0	39.4	1	--	4.2	0.1	350	0.221	6	2	350
732+52'WB'	-	744+88'WB'	LT	1	--	--	--	--	1,187.5	--	1	--	0.9	5.5	180	0.113	3	1	180
760+00'WB'	-	767+38'WB'	LT	1	--	--	--	--	687.5	--	1	1	0.3	10.2	190	0.120	3	1	190
779+38'WB'	-	782+85'WB'	RT	1	--	--	--	--	262.5	39.4	1	--	1.7	1.1	130	0.082	2	1	130
779+45'WB'	-	792+66'WB'	LT	1	--	--	--	--	1,237.5	39.4	1	--	1.1	0.3	90	0.057	2	1	90
830+99'WB'	-	844+75'WB'	LT	1	--	--	--	--	1,325.0	--	1	1	0.6	18.3	250	0.158	5	1	250
853+50'WB'	-	874+38'WB'	LT	1	--	--	--	--	2,037.5	--	1	1	1.5	1.0	100	0.063	2	1	100
896+92'WB'	-	921+20'WB'	LT	--	--	--	--	--	2,400.0	39.4	--	1	--	--	--	--	--	--	--
921+60'WB'	-	937+18'WB'	LT	1	--	--	--	--	1,475.0	39.4	1	--	0.9	0.5	40	0.025	1	1	40
974+50'WB'	-	990+50'WB'	LT	--	--	--	--	--	1,562.5	39.4	--	1	--	--	--	--	--	--	--
990+85'WB'	-	996+81'WB'	LT	1	--	--	--	--	512.5	39.4	1	--	0.6	16.0	190	0.120	3	1	190
IH 94 EASTBOUND																			
485+25'EB'	-	489+08'EB'	LT	1	--	--	--	--	300.0	39.4	1	--	0.4	12.7	160	0.101	3	1	160
485+86'EB'	-	489+08'EB'	RT	1	--	--	--	--	237.5	39.4	1	--	0.4	0.5	90	0.057	2	1	90
489+35'EB'	-	501+18'EB'	RT	--	--	--	--	--	1,112.5	78.8	--	--	--	--	--	--	--	--	--
501+49'EB'	-	543+00'EB'	RT	--	--	--	--	--	4,112.5	39.4	--	1	--	--	--	--	--	--	--
500+68'EB'	-	502+29'EB'	LT	1	--	2	109	--	--	53.3	--	--	--	--	--	--	--	--	--
551+77'EB'	-	555+59'EB'	RT	1	--	--	--	--	300.0	39.4	1	--	2.4	0.9	130	0.082	2	1	130
552+14'EB'	-	555+59'EB'	LT	1	--	--	--	--	262.5	39.4	1	--	10.2	--	20	0.013	1	1	20
555+80'EB'	-	564+63'EB'	RT	--	--	--	--	--	812.5	78.8	--	--	--	--	--	--	--	--	--
564+53'EB'	-	566+14'EB'	LT	1	--	2	109	--	--	53.3	--	--	--	--	--	--	--	--	--
579+56'EB'	-	583+65'EB'	RT	1	--	--	--	--	325.0	39.4	1	--	0.2	10.1	190	0.120	3	1	190
580+18'EB'	-	583+65'EB'	LT	1	--	--	--	--	262.5	39.4	1	--	0.1	21.9	220	0.139	4	1	220
593+11'EB'	-	596+57'EB'	LT	1	--	--	--	--	262.5	39.4	1	--	6.2	--	160	0.101	3	1	160
593+24'EB'	-	596+57'EB'	RT	1	--	--	--	--	250.0	39.4	1	--	0.1	23.2	280	0.176	5	2	280
647+00'EB'	-	662+00'EB'	RT	1	--	--	--	--	1,450.0	--	1	1	0.1	4.3	120	0.076	2	1	120
666+80'EB'	-	673+26'EB'	RT	1	--	--	--	--	562.5	39.4	1	--	--	16.4	220	0.139	4	1	220
672+60'EB'	-	674+20'EB'	LT	1	--	2	107	--	--	53.3	--	--	--	--	--	--	--	--	--
679+61'EB'	-	705+96'EB'	RT	1	--	--	--	--	2,587.5	--	1	1	--	15.3	110	0.069	2	1	110
716+14'EB'	-	720+85'EB'	RT	1	--	--	--	--	387.5	39.4	1	--	0.4	5.6	140	0.088	3	1	140
716+81'EB'	-	720+72'EB'	LT	1	--	--	--	--	300.0	39.4	1	--	11.0	--	170	0.107	3	1	170
721+98'EB'	-	727+96'EB'	RT	--	--	--	--	--	562.5	39.4	--	1	--	--	--	--	--	--	--
729+71'EB'	-	740+51'EB'	RT	1	--	--	--	--	1,037.5	--	1	1	0.4	17.5	270	0.170	5	2	270
771+88'EB'	-	778+20'EB'	RT	1	--	--	--	--	550.0	39.4	1	--	0.2	20.7	170	0.107	3	1	170
774+82'EB'	-	778+27'EB'	LT	1	--	--	--	--	262.5	39.4	1	--	5.0	0.5	100	0.063	2	1	100
779+26'EB'	-	788+00'EB'	RT	--	--	--	--	--	837.5	39.4	--	1	--	--	--	--	--	--	--
809+63'EB'	-	838+50'EB'	RT	1	--	--	--	--	2,837.5	--	1	1	0.2	2.3	120	0.076	2	1	120
850+63'EB'	-	875+50'EB'	RT	1	--	--	--	--	2,437.5	--	1	1	0.1	9.8	240	0.151	4	1	240
885+16'EB'	-	921+03'EB'	RT	1	--	--	--	--	3,500.0	39.4	1	--	0.1	14.8	260	0.164	5	1	260
921+46'EB'	-	935+45'EB'	RT	--	--	--	--	--	1,362.5	39.4	--	1	--	--	--	--	--	--	--
920+48'EB'	-	922+11'EB'	LT	1	--	2	113	--	--	53.3	--	--	--	--	--	--	--	--	--
942+25'EB'	-	955+52'EB'	RT	1	--	--	--	--	1,275.0	--	1	1	0.2	4.2	130	0.082	2	1	130
967+93'EB'	-	991+50'EB'	RT	1	--	--	--	--	2,275.0	39.4	1	--	0.2	4.3	140	0.088	3	1	140
990+33'EB'	-	992+00'EB'	LT	1	--	2	121	--	125.0	53.3	--	--	--	--	--	--	--	--	--
		SUBTOTAL 0070		41	0	10	557	0	49,362.5	1,645.7	36	17	53.5	339.9	6,030	3.799	109	36	6,030

**FOR INFORMATION ONLY. INCIDENTAL TO BARRIER SYSTEM GRADING SHAPING FINISHING BID ITEM.

3

CONTINUE TO NEXT SHEET

CATEGORY 0070 UNLESS OTHERWISE NOTED

CONTINUED FROM PREVIOUS SHEET

3

MGS GUARDRAIL (CONTINUED)

STATION	TO	STATION	O/S	614.0010 BARRIER SYSTEM GRADING SHAPING FINISHING EACH	614.0200 STEEL THRIE BEAM STRUCTURE APPROACH LF	614.0220 STEEL THRIE BEAM BULLNOSE TERMINAL EACH	614.0230 STEEL THRIE BEAM LF	614.0370 STEEL PLATE BEAM GUARD ENERGY ABSORBING TERMINAL EACH	614.2300 MGS GUARDRAIL 3 LF	614.2500 MGS THRIE BEAM TRANSITION LF	614.2610 MGS GUARDRAIL TERMINAL EAT EACH	614.2620 MGS GUARDRAIL TERMINAL TYPE 2 EACH	** EXCAVATION COMMON CY	** BORROW CY	** TOPSOIL SY	** FERTILIZER TYPE B CWT	** SEEDING MIXTURE NO. 30 LB	** SEED WATER LB	** EROSION MAT CLASS I TYPE B SY
BAXTER ROAD																			
44+92'B'	-	49+25'B'	RT	1	--	--	--	--	350.0	39.4	1	--	1.3	0.9	10	0.006	1	1	10
45+49'B'	-	49+20'B'	LT	1	--	--	--	--	287.5	39.4	1	--	4.5	5.5	110	0.069	2	1	110
51+35'B'	-	54+18'B'	LT	1	--	--	--	--	200.0	39.4	1	--	2.1	5.7	60	0.038	1	1	60
51+40'B'	-	54+11'B'	RT	1	--	--	--	--	187.5	39.4	1	--	1.0	15.1	100	0.063	2	1	100
RIDGE ROAD																			
47+78'R'	-	48+97'R'	LT	1	--	--	--	--	37.5	39.4	1	--	1.1	14.3	90	0.057	2	1	90
48+43'R'	-	49+17'R'	RT	1	20.6	--	--	1	25.0	--	--	--	0.7	1.0	10	0.006	1	1	10
51+67'R'	-	53+40'R'	LT	1	--	--	--	--	87.5	39.4	1	--	1.2	5.4	50	0.032	1	1	50
51+84'R'	-	53+33'R'	RT	1	--	--	--	--	62.5	39.4	1	--	1.3	18.9	100	0.063	2	1	100
OAK PARK ROAD																			
47+07'OP'	-	49+18'OP'	RT	1	--	--	--	--	125.0	39.4	1	--	2.6	22.2	130	0.082	2	1	130
47+32'OP'	-	49+18'OP'	LT	1	--	--	--	--	100.0	39.4	1	--	2.7	12.3	80	0.050	1	1	80
51+40'OP'	-	53+39'OP'	LT	1	--	--	--	--	112.5	39.4	1	--	1.3	15.5	160	0.101	3	1	160
51+40'OP'	-	52+90'OP'	RT	1	--	--	--	--	62.5	39.4	1	--	0.9	26.7	140	0.088	3	1	140
CTH O																			
44+63'O'	-	49+18'O'	RT	1	--	--	--	--	362.5	39.4	1	--	1.3	99.3	430	0.271	8	2	430
45+83'O'	-	49+12'O'	LT	1	--	--	--	--	237.5	39.4	1	--	0.8	22.8	80	0.050	1	1	80
51+43'O'	-	53+03'O'	LT	1	--	--	--	--	75.0	39.4	1	--	0.1	1.5	10	0.006	1	1	10
51+47'O'	-	54+86'O'	RT	1	--	--	--	--	250.0	39.4	1	--	0.1	30.7	190	0.120	3	1	190
AIRPORT ROAD																			
46+96'A'	-	48+77'A'	RT	1	--	--	--	--	100.0	39.4	1	--	1.7	19.7	90	0.057	2	1	90
47+84'A'	-	49+02'A'	LT	1	--	--	--	--	37.5	39.4	1	--	0.2	6.0	30	0.019	1	1	30
51+63'A'	-	52+71'A'	RT	1	--	--	--	--	25.0	39.4	1	--	0.2	12.7	80	0.050	1	1	80
51+76'A'	-	53+22'A'	LT	1	--	--	--	--	62.5	39.4	1	--	0.1	27.7	90	0.057	2	1	90
			TOTAL 0070	61	20.6	10	557	1	52,150.0	2,394.3	55	17	78.7	703.8	8,070	5.084	149	54	8,070

**FOR INFORMATION ONLY. INCIDENTAL TO BARRIER SYSTEM GRADING SHAPING FINISHING BID ITEM.

CATEGORY 0010 UNLESS OTHERWISE NOTED

3

RIPRAP

STATION	* 606.0200 RIPRAP MEDIUM CY	* 645.0120 GEOTEXTILE TYPE HR SY
455+90'EB'	1	5
464+94'EB'	1	5
494+95'EB'	1	5
500+50'EB'	1	5
510+85'EB'	2	7
536+90'WB'	1	5
546+95'EB'	1	5
553+00'EB'	1	5
582+90'EB'	1	5
589+00'EB'	1	5
615+95'EB'	1	5
625+95'EB'	1	5
637+00'EB'	1	5
649+95'WB'	1	5
713+00'EB'	1	5
737+75'EB'	3	8
738+00'EB'	1	5
761+20'EB'	3	8
813+00'EB'	1	5
821+00'EB'	1	5
829+00'EB'	1	5
832+25'WB'	1	5
863+80'EB'	1	5
865+95'EB'	1	5
894+90'EB'	1	5
TOTAL 0010	28	134

* ADDITIONAL QUANTITIES LISTED ELSEWHERE

SILT FENCE ITEMS

STATION	TO	STATION	628.1504 SILT FENCE LF	628.1520 SILT FENCE MAINTENANCE LF
IH 94 WESTBOUND				
504+81'WB'	-	506+53'WB'	172	172
536+47'WB'	-	538+19'WB'	172	172
577+30'WB'	-	579+02'WB'	172	172
664+22'WB'	-	665+94'WB'	172	172
674+73'WB'	-	676+39'WB'	166	166
724+82'WB'	-	726+54'WB'	172	172
744+35'WB'	-	746+07'WB'	172	172
766+85'WB'	-	768+57'WB'	172	172
792+13'WB'	-	793+86'WB'	172	172
844+21'WB'	-	845+93'WB'	172	172
873+85'WB'	-	875+57'WB'	172	172
936+65'WB'	-	938+37'WB'	172	172
996+28'WB'	-	998+00'WB'	172	172
IH 94 EASTBOUND				
484+68'EB'	-	486+39'EB'	171	171
550+58'EB'	-	552+30'EB'	172	172
578+37'EB'	-	580+09'EB'	172	172
592+05'EB'	-	593+77'EB'	172	172
645+81'EB'	-	647+53'EB'	172	172
665+61'EB'	-	667+33'EB'	172	172
687+17'EB'	-	688+89'EB'	172	172
715+18'EB'	-	716+67'EB'	149	149
770+69'EB'	-	772+41'EB'	172	172
808+44'EB'	-	810+16'EB'	172	172
849+44'EB'	-	851+16'EB'	172	172
883+97'EB'	-	885+69'EB'	172	172
941+05'EB'	-	942+78'EB'	172	172
966+74'EB'	-	968+46'EB'	172	172
BAXTER ROAD				
44+30'B'	-	45+99'B'	238	238
53+61'B'	-	55+37'B'	344	344
RIDGE ROAD				
46+57'R'	-	48+93'R'	232	232
52+83'R'	-	52+51'R'	235	235
OAK PARK ROAD				
45+84'OP'	-	47+78'OP'	344	344
52+40'OP'	-	54+58'OP'	260	260
CTH O				
43+52'O'	-	46+16'O'	344	344
52+45'O'	-	56+08'O'	241	241
AIRPORT ROAD				
45+76'A'	-	48+36'A'	344	344
51+68'A'	-	54+41'A'	344	344
PROJECT 1066-03-75			754	754
TOTAL 0010			8,294	8,294

EROSION CONTROL ITEMS

STATION	LOCATION	628.7555 CULVERT PIPE CHECKS EACH	628.7005 INLET PROTECTION TYPE A EACH	628.7504 TEMPORARY DITCH CHECKS LF
455+90'EB'	IH 94 EB	3	--	--
464+94'EB'	IH 94 EB	3	--	--
474+88'EB'	IH 94 EB	--	1	--
486+50'EB'	IH 94 EB	--	1	--
494+85'EB'	IH 94 EB	3	--	--
500+05'EB'	IH 94 EB	3	--	--
506+95'EB'	IH 94 EB	--	1	--
510+85'EB'	IH 94 EB	3	1	--
524+95'WB'	IH 94 WB	--	1	--
536+90'WB'	IH 94 WB	--	1	--
546+95'EB'	IH 94 EB	--	1	--
553+00'EB'	IH 94 EB	3	--	--
557+85'EB'	IH 94 EB	--	1	--
558+25'EB'	IH 94 EB	--	1	--
562+36'EB'	IH 94 EB	--	1	--
574+70'EB'	IH 94 EB	3	--	--
582+90'EB'	IH 94 EB	3	--	--
589+00'EB'	IH 94 EB	3	--	--
597+90'EB'	IH 94 EB	--	1	--
599+85'EB'	IH 94 EB	--	1	--
600+50'EB'	IH 94 EB	--	1	--
601+05'EB'	IH 94 EB	--	1	--
608+75'WB'	IH 94 WB	--	1	--
615+95'EB'	IH 94 EB	3	--	--
625+95'EB'	IH 94 EB	3	--	--
637+00'EB'	IH 94 EB	3	--	--
649+95'WB'	IH 94 WB	3	--	--
658+95'WB'	IH 94 WB	3	--	--
672+50'EB'	IH 94 EB	3	--	--
689+95'EB'	IH 94 EB	3	--	--
698+95'EB'	IH 94 EB	3	--	--
713+00'EB'	IH 94 EB	3	--	--
722+43'WB'	IH 94 WB	3	--	--
737+75'EB'	IH 94 EB	3	--	--
738+00'EB'	IH 94 EB	3	--	--
750+95'EB'	IH 94 EB	3	--	--
758+95'EB'	IH 94 EB	3	--	--
761+20'EB'	IH 94 EB	3	--	--
766+45'EB'	IH 94 EB	3	--	--
779+95'EB'	IH 94 EB	3	--	--
803+45'EB'	IH 94 EB	3	--	--
813+00'EB'	IH 94 EB	3	--	--
821+00'EB'	IH 94 EB	3	--	--
829+00'EB'	IH 94 EB	3	--	--
832+25'WB'	IH 94 WB	3	--	--
837+95'EB'	IH 94 EB	3	--	--
856+00'EB'	IH 94 EB	3	--	--
863+80'EB'	IH 94 EB	3	--	--
865+95'EB'	IH 94 EB	3	--	--
869+75'EB'	IH 94 EB	3	--	--
874+45'EB'	IH 94 EB	3	--	--
882+35'WB'	IH 94 WB	3	--	--
892+00'EB'	IH 94 EB	3	--	--
894+90'EB'	IH 94 EB	3	--	--
901+95'EB'	IH 94 EB	3	--	--
933+95'EB'	IH 94 EB	3	--	--
945+45'EB'	IH 94 EB	3	--	--
955+00'EB'	IH 94 EB	3	--	--
965+00'EB'	IH 94 EB	3	--	--
972+00'EB'	IH 94 EB	3	--	--
983+00'WB'	IH 94 WB	3	--	--
997+23'WB'	IH 94 WB	3	--	--
PROJECT 1066-03-75		14	2	300
TOTAL 0010		158	17	300

RESTORATION

STATION	TO	STATION	629.0210 FERTILIZER TYPE B CWT	630.0120 SEEDING MIXTURE NO. 20 LB	630.0500 SEED WATER MGAL
IH 94 WESTBOUND					
460+30'WB'	-	479+00'WB'	1	45	9
479+00'WB'	-	510+00'WB'	2	74	15
510+00'WB'	-	540+00'WB'	2	72	15
540+00'WB'	-	570+00'WB'	2	72	15
570+00'WB'	-	601+00'WB'	2	74	15
601+00'WB'	-	631+00'WB'	2	72	15
631+00'WB'	-	662+00'WB'	2	74	15
662+00'WB'	-	693+00'WB'	2	74	15
693+00'WB'	-	723+00'WB'	2	72	15
723+00'WB'	-	754+00'WB'	2	74	15
754+00'WB'	-	784+00'WB'	2	72	15
784+00'WB'	-	815+00'WB'	2	74	15
815+00'WB'	-	845+00'WB'	2	72	15
845+00'WB'	-	875+00'WB'	2	72	15
875+00'WB'	-	906+00'WB'	2	74	15
906+00'WB'	-	936+00'WB'	2	72	15
936+00'WB'	-	967+00'WB'	2	74	15
967+00'WB'	-	994+32'WB'	2	66	14
IH 94 EASTBOUND					
482+44'EB'	-	510+00'EB'	2	66	14
510+00'EB'	-	540+00'EB'	2	72	15
540+00'EB'	-	570+00'EB'	2	72	15
570+00'EB'	-	601+00'EB'	2	74	15
601+00'EB'	-	631+00'EB'	2	72	15
631+00'EB'	-	662+00'EB'	2	74	15
662+00'EB'	-	693+00'EB'	2	74	15
693+00'EB'	-	723+00'EB'	2	72	15
723+00'EB'	-	754+00'EB'	2	74	15
754+00'EB'	-	784+00'EB'	2	72	15
784+00'EB'	-	815+00'EB'	2	74	15
815+00'EB'	-	845+00'EB'	2	72	15
845+00'EB'	-	875+00'EB'	2	72	15
875+00'EB'	-	906+00'EB'	2	74	15
906+00'EB'	-	936+00'EB'	2	72	15
936+00'EB'	-	967+00'EB'	2	74	15
967+00'EB'	-	995+00'EB'	2	67	14
PROJECT 1066-03-75			15	628	131
TOTAL 0010			73	3,140	653

3

CATEGORY 0010 UNLESS OTHERWISE NOTED

3

DELINEATORS

PROJECT	204.0180 REMOVING DELINEATORS AND MARKERS EACH	633.0100 DELINEATOR POSTS STEEL EACH	633.0500 DELINEATOR REFLECTORS EACH
1066-03-75	10	10	10
TOTAL 0010	10	10	10

CULVERT MARKERS

STATION	633.5200 MARKERS CULVERT END EACH	REMARKS
455+90'EB'	1	MARKER AT OUTLET
464+95'EB'	2	MARKER IN MEDIAN AND AT OUTLET
474+90'EB'	1	MARKER IN MEDIAN
494+85'EB'	2	MARKER IN MEDIAN AND AT OUTLET
500+05'EB'	1	MARKER IN MEDIAN
500+50'EB'	1	MARKER AT OUTLET
510+85'EB'	1	MARKER AT OUTLET
523+10'WB'	1	MARKER AT NORTH END
536+90'WB'	2	MARKER AT OUTLET
546+95'EB'	1	MARKER AT OUTLET
553+00'EB'	1	MARKER AT OUTLET
557+85'EB'	1	MARKER AT OUTLET
574+90'EB'	1	MARKER IN MEDIAN
582+90'EB'	1	MARKER AT OUTLET
589+00'EB'	2	MARKER IN MEDIAN AND AT OUTLET
608+75'WB'	1	MARKER AT OUTLET
615+95'EB'	2	MARKER IN MEDIAN AND AT OUTLET
625+95'EB'	2	MARKER IN MEDIAN AND AT OUTLET
637+00'EB'	2	MARKER IN MEDIAN AND AT OUTLET
649+95'WB'	1	MARKER IN MEDIAN
658+95'WB'	1	MARKER IN MEDIAN
672+50'EB'	1	MARKER IN MEDIAN
689+95'EB'	1	MARKER IN MEDIAN
695+50'WB'	1	MARKER AT INLET
698+95'EB'	1	MARKER IN MEDIAN
722+43'WB'	1	MARKER IN MEDIAN
737+75'EB'	1	MARKER AT OUTLET
738+00'EB'	2	MARKER IN MEDIAN AND AT OUTLET
750+95'EB'	1	MARKER IN MEDIAN
758+95'EB'	1	MARKER IN MEDIAN
761+20'EB'	2	MARKER AT INLET AND OUTLET
766+45'EB'	1	MARKER IN MEDIAN
779+95'EB'	1	MARKER IN MEDIAN
803+50'EB'	1	MARKER IN MEDIAN
813+00'EB'	2	MARKER IN MEDIAN AND AT OUTLET
821+00'EB'	2	MARKER IN MEDIAN AND AT OUTLET
829+00'EB'	2	MARKER IN MEDIAN AND AT OUTLET
832+25'WB'	2	MARKER AT INLET AND OUTLET
837+95'EB'	1	MARKER IN MEDIAN
856+00'EB'	2	MARKER IN MEDIAN AND AT OUTLET
863+80'EB'	2	MARKER IN MEDIAN AND AT OUTLET
865+95'EB'	2	MARKER IN MEDIAN AND AT OUTLET
874+50'EB'	2	MARKER IN MEDIAN AND AT OUTLET
882+25'WB'	2	MARKER IN MEDIAN AND AT OUTLET
894+90'EB'	2	MARKER IN MEDIAN AND AT OUTLET
897+80'EB'	1	MARKER AT OUTLET
902+00'EB'	2	MARKER IN MEDIAN AND AT OUTLET
903+20'EB'	1	MARKER AT OUTLET
945+45'EB'	1	MARKER IN MEDIAN
955+00'EB'	1	MARKER IN MEDIAN
965+00'EB'	1	MARKER IN MEDIAN
972+00'EB'	1	MARKER IN MEDIAN
983+00'WB'	1	MARKER IN MEDIAN
997+23'WB'	1	MARKER IN MEDIAN
TOTAL 0010	74	

3

CATEGORY 0010 UNLESS OTHERWISE NOTED

3

TRAFFIC CONTROL ITEMS

STATION	DURATION CALENDAR DAYS	643.0300 TRAFFIC CONTROL DRUMS EACH	643.0300 TRAFFIC CONTROL DRUMS DAY	643.0420 TRAFFIC CONTROL BARRICADES TYPE III EACH	643.0420 TRAFFIC CONTROL BARRICADES TYPE III DAY	643.0705 TRAFFIC CONTROL WARNING LIGHTS TYPE A EACH	643.0705 TRAFFIC CONTROL WARNING LIGHTS TYPE A DAY	643.0715 TRAFFIC CONTROL WARNING LIGHTS TYPE C EACH	643.0715 TRAFFIC CONTROL WARNING LIGHTS TYPE C DAY	643.0800 TRAFFIC CONTROL ARROW BOARDS EACH	643.0800 TRAFFIC CONTROL ARROW BOARDS DAY	643.0900 TRAFFIC CONTROL SIGNS EACH	643.0900 TRAFFIC CONTROL SIGNS DAY	643.0920 TRAFFIC CONTROL COVERING SIGNS TYPE II # SIGNS	643.0920 TRAFFIC CONTROL COVERING SIGNS TYPE II # CYCLES	643.0920 TRAFFIC CONTROL COVERING SIGNS TYPE II EACH	643.1050 TRAFFIC CONTROL SIGNS PCMS EACH	643.1050 TRAFFIC CONTROL SIGNS PCMS DAY	643.1070 TRAFFIC CONTROL CONES 42-INCH EACH	643.1070 TRAFFIC CONTROL CONES 42-INCH DAY	643.1205.S BASIC TRAFFIC QUEUE WARNING SYSTEM EACH	643.1205.S BASIC TRAFFIC QUEUE WARNING SYSTEM DAY	643.4100 TRAFFIC CONTROL INTERIM LANE CLOSURE EACH	643.4100 TRAFFIC CONTROL INTERIM LANE CLOSURE EACH
STAGE 1A/1B																								
IH 94 EB ADVANCED SIGNING	45	55	2,475	1	45	2	90	20	900	2	90	16	720	2	45	90	1	14	--	--	1	45	1	45
IH 94 WB ADVANCED SIGNING	45	55	2,475	1	45	2	90	20	900	2	90	16	720	1	45	45	1	14	--	--	1	45	1	45
IH 94 EB WORK ZONE	45	513	23,065	20	900	40	1,800	--	--	--	--	26	1,170	--	--	--	--	--	320	14,400	--	--	--	--
IH 94 WB WORK ZONE	52	538	27,954	20	1,040	40	2,080	--	--	--	--	26	1,352	--	--	--	--	--	320	16,640	--	--	--	--
STH 73 EXIT RAMP CLOSURES	2	85	170	8	16	16	32	--	--	--	--	16	32	--	--	--	1	6	--	--	--	--	--	--
STH 73 ENTRANCE RAMP CLOSURES	2	40	80	8	16	16	32	--	--	--	--	10	20	--	--	--	1	6	--	--	--	--	--	--
LANE WIDTH RESTRICTIONS	90	--	--	--	--	--	--	--	--	--	--	48	4,320	--	--	--	--	--	--	--	--	--	--	--
OVERPASS ROAD CLOSURES	25	50	350	60	1,500	120	3,000	--	--	--	--	20	500	--	--	--	10	70	--	--	--	--	--	--
SUB-TOTALS STAGE 1A/1B			56,569		3,562		7,124		1,800		180		8,834			135		110		31,040		90		90
STAGE 2A/2B																								
IH 94 EB ADVANCED SIGNING	10	55	550	1	10	2	20	20	200	2	20	16	160	2	10	20	1	14	--	--	1	10	1	10
IH 94 WB ADVANCED SIGNING	10	55	550	1	10	2	20	20	200	2	20	16	160	1	10	10	1	14	--	--	1	10	1	10
IH 94 EB WORK ZONE	10	513	5,126	20	200	40	400	--	--	--	--	26	260	--	--	--	--	--	320	3,200	--	--	--	--
IH 94 WB WORK ZONE	10	538	5,376	20	200	40	400	--	--	--	--	26	260	--	--	--	--	--	320	3,200	--	--	--	--
STH 73 EXIT RAMP CLOSURES	2	85	170	8	16	16	32	--	--	--	--	16	32	--	--	--	1	6	--	--	--	--	--	--
STH 73 ENTRANCE RAMP CLOSURES	2	40	80	8	16	16	32	--	--	--	--	10	20	--	--	--	1	6	--	--	--	--	--	--
LANE WIDTH RESTRICTIONS	20	--	0	--	--	--	--	--	--	--	--	48	960	--	--	--	--	--	--	--	--	--	--	--
SUB-TOTALS STAGE 2A/2B			11,851		452		904		400		40		1,852			30		40		6,400		20		20
STAGE 3A/3B																								
IH 94 EB ADVANCED SIGNING	10	55	550	1	10	2	20	20	200	2	20	16	160	2	10	20	1	14	--	--	1	10	1	10
IH 94 WB ADVANCED SIGNING	10	55	550	1	10	2	20	20	200	2	20	16	160	1	10	10	1	14	--	--	1	10	1	10
IH 94 EB WORK ZONE	10	513	5,126	20	200	40	400	--	--	--	--	26	260	--	--	--	--	--	320	3,200	--	--	--	--
IH 94 WB WORK ZONE	10	538	5,376	20	200	40	400	--	--	--	--	26	260	--	--	--	--	--	320	3,200	--	--	--	--
STH 73 EXIT RAMP CLOSURES	2	85	170	8	16	16	32	--	--	--	--	16	32	--	--	--	1	6	--	--	--	--	--	--
STH 73 ENTRANCE RAMP CLOSURES	2	40	80	8	16	16	32	--	--	--	--	10	20	--	--	--	1	6	--	--	--	--	--	--
LANE WIDTH RESTRICTIONS	20	--	--	--	--	--	--	--	--	--	--	48	960	--	--	--	--	--	--	--	--	--	--	--
SUB-TOTALS STAGE 3A/3B			11,851		452		904		400		40		1,852			30		40		6,400		20		20
STAGE 4A/4B																								
IH 94 EB ADVANCED SIGNING	25	55	1,375	1	25	2	50	20	500	2	50	16	400	2	25	50	1	14	--	--	1	25	1	25
IH 94 WB ADVANCED SIGNING	25	55	1,375	1	25	2	50	20	500	2	50	16	400	1	25	25	1	14	--	--	1	25	1	25
IH 94 EB WORK ZONE	54	513	27,678	20	1,080	40	2,160	--	--	--	--	26	1,404	--	--	--	--	--	320	17,280	--	--	--	--
IH 94 WB WORK ZONE	33	538	17,740	20	660	40	1,320	--	--	--	--	26	858	--	--	--	--	--	320	10,560	--	--	--	--
STH 73 EXIT RAMP CLOSURES	4	85	340	8	32	16	64	--	--	--	--	16	64	--	--	--	1	12	--	--	--	--	--	--
STH 73 ENTRANCE RAMP CLOSURES	4	40	160	8	32	16	64	--	--	--	--	10	40	--	--	--	1	12	--	--	--	--	--	--
LANE WIDTH RESTRICTIONS	50	--	--	--	--	--	--	--	--	--	--	48	2,400	--	--	--	--	--	--	--	--	--	--	--
SUB-TOTALS STAGE 4A/4B			48,668		1,854		3,708		1,000		100		5,566			75		52		27,840		50		50
TOTAL 0010			128,939		6,320		12,640		3,600		360		18,104			270		242		71,680		180		180

CATEGORY 0010 UNLESS OTHERWISE NOTED

3

PERMANENT PAVEMENT MARKINGS

STATION	TO	STATION	LOCATION	646.1020 MARKING LINE EPOXY 4-INCH YELLOW LF	646.1020 MARKING LINE EPOXY 4-INCH YELLOW LF	646.2020 MARKING LINE EPOXY 6-INCH YELLOW LF	646.2020 MARKING LINE EPOXY 6-INCH WHITE LF	646.2025 MARKING LINE GROOVED BLACK EPOXY 6-INCH LF	646.2040 MARKING LINE GROOVED WET REF EPOXY 6-INCH YELLOW LF	646.2040 MARKING LINE GROOVED WET REF EPOXY 6-INCH WHITE LF	646.2040 MARKING LINE GROOVED WET REF EPOXY 6-INCH 3 FT LINE 9 FT SKIP LF	646.2050 MARKING LINE GROOVED PERMANENT TAPE 6-INCH LF	646.4050 MARKING LINE GROOVED PERMANENT TAPE 10-INCH WHITE LF	646.4050 MARKING LINE GROOVED PERMANENT TAPE 10-INCH 3 FT LINE 9 FT SKIP LF	646.6466 COLD WEATHER MARKING EPOXY 6-INCH YELLOW LF	646.6466 COLD WEATHER MARKING EPOXY 6-INCH WHITE LF	646.6466 COLD WEATHER MARKING EPOXY 6-INCH 12.5 FT LINE 37.5 FT SKIP LF	646.7220 MARKING CHEVRON EPOXY 24-INCH LF
IH 94 WESTBOUND																		
460+30'WB'	-	994+32'WB'	CENTERLINE	--	--	--	--	13,200	--	150	--	13,350	--	--	--	150	13,200	--
460+30'WB'	-	994+32'WB'	LEFT	--	--	--	--	--	53,400	--	--	--	--	--	53,400	--	--	--
460+30'WB'	-	700+55'WB'	RIGHT	--	--	--	--	--	--	24,025	--	--	--	--	--	24,025	--	--
700+55'WB'	-	720+43'WB'	STH 73 ENTRANCE RAMP	--	--	--	--	--	535	2,070	--	--	1,240	60	535	2,070	--	--
720+66'WB'	-	738+09'WB'	STH 73 EXIT RAMP	--	--	--	--	--	965	1,940	90	--	450	--	965	1,940	--	100
715+46'WB'	-	730+16'WB'	RIGHT	--	--	--	--	--	--	1,470	--	--	--	--	--	1,475	--	--
738+09'WB'	-	994+32'WB'	RIGHT	--	--	--	--	--	--	25,625	--	--	--	--	--	25,625	--	--
IH 94 EASTBOUND																		
482+44'EB'	-	995+00'EB'	CENTERLINE	--	--	--	100	12,715	--	--	--	12,715	--	--	--	--	--	--
482+44'EB'	-	706+09'EB'	RIGHT	--	--	--	350	--	--	22,365	--	--	--	--	--	--	--	--
482+44'EB'	-	995+00'EB'	LEFT	--	--	350	--	--	51,255	--	--	--	--	--	--	--	--	--
706+09'EB'	-	721+77'EB'	STH 73 EXIT RAMP	--	--	--	--	--	1,570	1,570	150	--	450	--	--	--	--	100
722+02'EB'	-	741+50'EB'	STH 73 ENTRANCE RAMP	--	--	--	--	--	1,950	1,950	--	--	1,200	60	--	--	--	--
715+68'EB'	-	728+77'EB'	RIGHT	--	--	--	--	--	--	1,310	--	--	--	--	--	--	--	--
741+50'EB'	-	995+00'EB'	RIGHT	--	--	--	--	--	--	25,350	--	--	--	--	--	--	--	--
BAXTER ROAD																		
49+16'EB'	-	51+45'EB'	CENTERLINE	200		--	--	--	--	--	--	--	--	--	--	--	--	--
RIDGE ROAD																		
49+07'EB'	-	51+67'EB'	CENTERLINE	200		--	--	--	--	--	--	--	--	--	--	--	--	--
OAK PARK ROAD																		
49+16'EB'	-	51+43'EB'	EDGE AND CENTERLINE	200	200	--	--	--	--	--	--	--	--	--	--	--	--	--
CTH O																		
49+15'EB'	-	51+44'EB'	EDGE AND CENTERLINE	200	200	--	--	--	--	--	--	--	--	--	--	--	--	--
AIRPORT ROAD																		
49+02'EB'	-	51+66'EB'	CENTERLINE	200		--	--	--	--	--	--	--	--	--	--	--	--	--
			SUBTOTALS	1,000	400	350	450	25,915	109,675	107,825	240	26,065	3,340	120	55,050	55,285	13,200	200
			TOTAL 0010	1,400		800		25,915		217,740		26,065	3,460			123,535		200

TEMPORARY PAVEMENT MARKINGS

STATION	TO	STATION	LOCATION	643.3165 TEMPORARY MARKING LINE PAINT 6-INCH LF	643.3170 TEMPORARY MARKING LINE EPOXY 6-INCH YELLOW LF	643.3170 TEMPORARY MARKING LINE EPOXY 6-INCH WHITE LF	643.3170 TEMPORARY MARKING LINE EPOXY 6-INCH 12.5 FT LINE 50 FT SKIP LF
IH 94 WESTBOUND							
460+30'WB'	-	994+32'WB'	CENTERLINE	53,400	53,400	53,400	13,350
460+30'WB'	-	994+32'WB'	LEFT	53,400	53,400	53,400	13,350
460+30'WB'	-	700+55'WB'	RIGHT	24,025	24,025	24,025	6,005
700+55'WB'	-	720+43'WB'	STH 73 ENTRANCE RAMP	1,990	1,990	1,990	495
720+66'WB'	-	738+09'WB'	STH 73 EXIT RAMP	1,745	1,745	1,745	435
715+46'WB'	-	730+16'WB'	RIGHT	1,470	1,470	1,470	370
738+09'WB'	-	994+32'WB'	RIGHT	25,625	25,625	25,625	6,405
IH 94 EASTBOUND							
482+44'EB'	-	995+00'EB'	CENTERLINE	51,255	51,255	51,255	12,815
482+44'EB'	-	706+09'EB'	RIGHT	22,365	22,365	22,365	5,590
482+44'EB'	-	995+00'EB'	LEFT	51,255	51,255	51,255	12,815
706+09'EB'	-	721+77'EB'	STH 73 EXIT RAMP	1,570	1,570	1,570	390
722+02'EB'	-	741+50'EB'	STH 73 ENTRANCE RAMP	1,950	1,950	1,950	485
715+68'EB'	-	728+77'EB'	RIGHT	1,310	1,310	1,310	325
741+50'EB'	-	995+00'EB'	RIGHT	25,350	25,350	25,350	6,340
			SUBTOTALS		316,710	316,710	79,170
			TOTAL 0010	316,710		712,590	

AERIAL ENFORCEMENT BARS

STATION	646.5420 MARKING AERIAL ENFORCEMENT BAR EPOXY EACH
664+30 'EB'	2
670+90 'EB'	2
677+50 'EB'	2
684+10 'EB'	2
690+70 'EB'	2
752+00'WB'	2
758+60'WB'	2
765+20'WB'	2
771+80'WB'	2
778+40'WB'	2
TOTAL	20

CATEGORY 0010 UNLESS OTHERWISE NOTED

3

CONSTRUCTION STAKING

STATION TO STATION	650.6000 CONSTRUCTION STAKING PIPE CULVERTS EACH	650.8000 CONSTRUCTION STAKING RESURFACING REFERENCE LF	650.9911.01 CONSTRUCTION STAKING SUPPLEMENTAL CONTROL (PROJECT) (1066-03-75) EACH
IH 94 WESTBOUND			
536+90'WB'	1	--	--
608+75'WB'	1	--	--
649+95'WB'	1	--	--
832+25'WB'	1	--	--
460+30'WB' - 998+00'WB'	--	53,770	--
IH 94 EASTBOUND			
454+95'EB'	1	--	--
455+90'EB'	1	--	--
464+94'EB'	1	--	--
494+95'EB'	1	--	--
500+50'EB'	1	--	--
510+85'EB'	1	--	--
546+95'EB'	1	--	--
553+00'EB'	1	--	--
582+90'EB'	1	--	--
589+00'EB'	1	--	--
615+95'EB'	1	--	--
625+95'EB'	1	--	--
637+00'EB'	1	--	--
713+00'EB'	1	--	--
737+75'EB'	1	--	--
738+00'EB'	1	--	--
761+20'EB'	1	--	--
813+00'EB'	1	--	--
821+00'EB'	1	--	--
829+00'EB'	1	--	--
856+00'EB'	1	--	--
863+80'EB'	1	--	--
865+95'EB'	1	--	--
869+75'EB'	1	--	--
892+00'EB'	1	--	--
894+90'EB'	1	--	--
894+90'EB'	--	--	--
482+44'EB' - 998+00'EB'	--	51,556	--
STH 73 RAMPS			
713+43'W' - 718+29'W'	--	486	--
712+79'X' - 720+18'X'	--	739	--
722+41'Y' - 731+30'Y'	--	889	--
721+15'Z' - 732+39'Z'	--	1,124	--
BAXTER ROAD			
49+16'B' - 49+66'B'	--	50	--
50+95'B' - 51+45'B'	--	50	--
RIDGE ROAD			
49+07'R' - 49+57'R'	--	50	--
51+17'R' - 51+67'R'	--	50	--
OAK PARK ROAD			
49+16'OP' - 49+66'OP'	--	50	--
50+93'OP' - 51+43'OP'	--	50	--
CTH O			
49+15'O' - 49+65'O'	--	50	--
50+94'O' - 51+44'O'	--	50	--
AIRPORT ROAD			
49+02'A' - 49+53'A'	--	50	--
51+16'A' - 51+66'A'	--	50	--
PROJECT 1066-03-75			1
TOTAL 0010	30	109,064	1

BIRD DETERRENT SYSTEM

STATION	999.2000.S.01 INSTALLING AND MAINTAINING BIRD DETERRENT SYSTEM (STATION) (501+45 'EB') EACH	999.2000.S.02 INSTALLING AND MAINTAINING BIRD DETERRENT SYSTEM (STATION) (565+05 'EB') EACH	999.2000.S.03 INSTALLING AND MAINTAINING BIRD DETERRENT SYSTEM (STATION) (673+35 'EB') EACH	999.2000.S.04 INSTALLING AND MAINTAINING BIRD DETERRENT SYSTEM (STATION) (921+20 'EB') EACH
501+45 'EB'	1	--	--	--
565+05 'EB'	--	1	--	--
673+35 'EB'	--	--	1	--
921+20 'EB'	--	--	--	1
TOTAL 0010	1	1	1	1

3

LANDMARK REFERENCE MONUMENTS

LOCATION	SPV.0060.02 SPECIAL (LANDMARK REFERENCE MONUMENTS) EACH
490+57'EB'	1
490+93'EB'	1
517+18'WB'	1
517+46'WB'	1
570+41'WB'	1
570+54'WB'	1
646+59 'EB'	1
805+48 'EB'	1
949+65 'EB'	1
950+41 'EB'	1
TOTAL 0010	10

CATEGORY 0010 UNLESS OTHERWISE NOTED

3

BASE PATCHING

STATION	TO	STATION	SPV.0180.01 SPECIAL (BASE PATCHING CONCRETE SHES) SY
IH 94 WESTBOUND			
460+30'WB'	-	479+00'WB'	220
479+00'WB'	-	510+00'WB'	570
510+00'WB'	-	540+00'WB'	720
540+00'WB'	-	570+00'WB'	610
570+00'WB'	-	601+00'WB'	470
601+00'WB'	-	631+00'WB'	620
631+00'WB'	-	662+00'WB'	590
662+00'WB'	-	693+00'WB'	460
693+00'WB'	-	723+00'WB'	710
723+00'WB'	-	754+00'WB'	780
754+00'WB'	-	784+00'WB'	1,030
784+00'WB'		815+00'WB'	680
815+00'WB'	-	845+00'WB'	460
845+00'WB'	-	875+00'WB'	430
875+00'WB'	-	906+00'WB'	410
906+00'WB'	-	936+00'WB'	770
936+00'WB'	-	967+00'WB'	690
967+00'WB'	-	994+32'WB'	420
IH 94 EASTBOUND			
482+44'EB'	-	510+00'EB'	530
510+00'EB'	-	540+00'EB'	730
540+00'EB'	-	570+00'EB'	500
570+00'EB'	-	601+00'EB'	530
601+00'EB'	-	631+00'EB'	290
631+00'EB'	-	662+00'EB'	300
662+00'EB'	-	693+00'EB'	460
693+00'EB'	-	723+00'EB'	610
723+00'EB'	-	754+00'EB'	460
754+00'EB'	-	784+00'EB'	690
784+00'EB'	-	815+00'EB'	300
815+00'EB'		845+00'EB'	380
845+00'EB'	-	875+00'EB'	390
875+00'EB'	-	906+00'EB'	410
906+00'EB'	-	936+00'EB'	850
936+00'EB'	-	967+00'EB'	370
967+00'EB'	-	995+00'EB'	440
STH 73 RAMPS			
712+90'W'	-	721+27'W'	470
712+79'X'	-	720+18'X'	320
722+41'Y'	-	731+30'Y'	500
722+15'Z'	-	732+39'Z'	530
PROJECT 1066-03-75			1,000
		TOTAL 0010	21,700

REMOVING DISTRESSED PAVEMENT MILLING

PROJECT	* 455.0605 TACK COAT GAL	* 465.0105 ASPHALTIC SURFACE TON	SPV.0180.02 SPECIAL (REMOVING DISTRESSED PAVEMENT MILLING) SY
1066-03-75	150	32	2,500
TOTAL 0010	150	32	2,500

* ADDITIONAL QUANTITIES LISTED ELSEWHERE

3

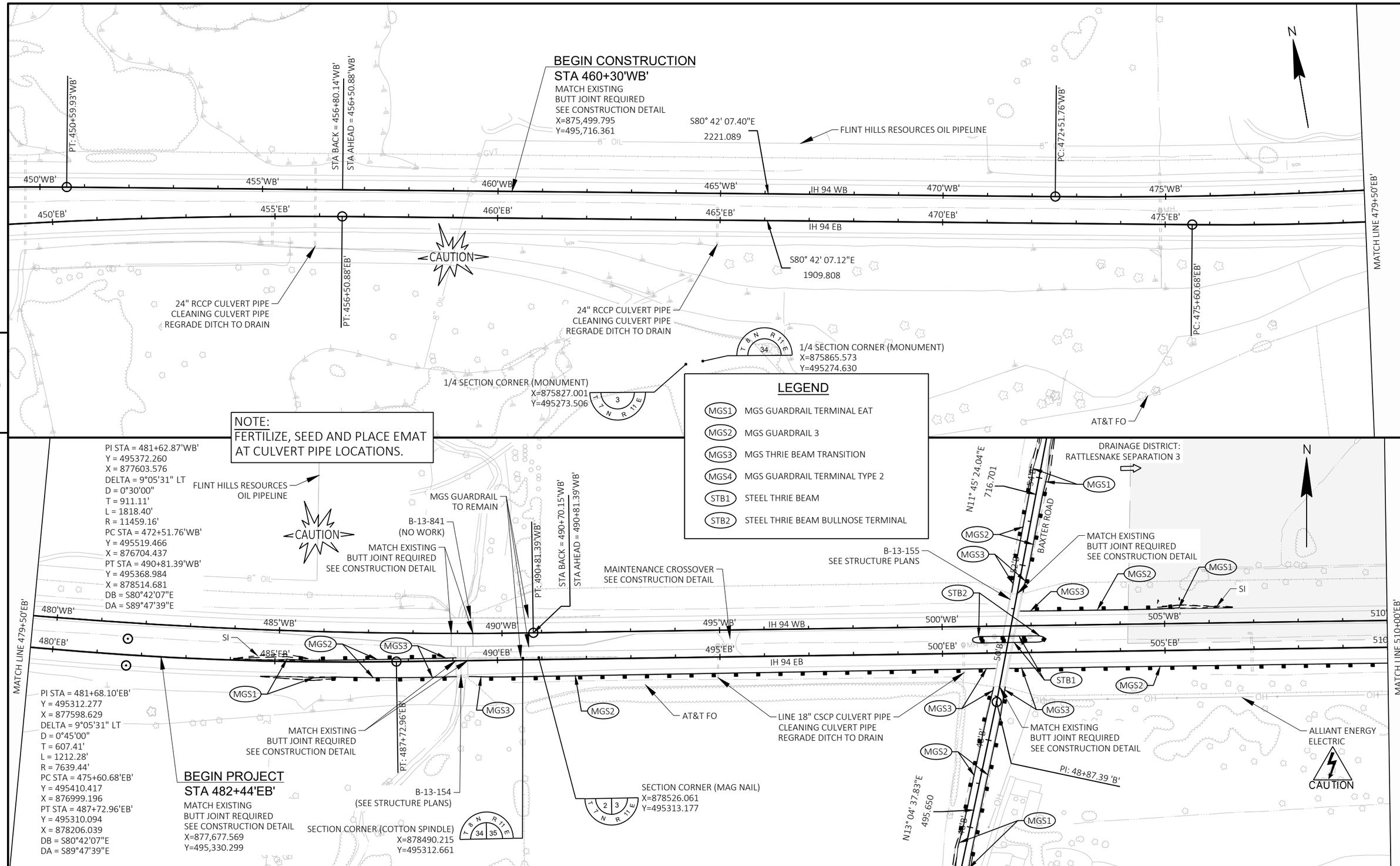

PROJECT NO: 1066-03-75	HWY: IH 94	COUNTY: DANE AND JEFFERSON	PLAN SHEETS	SHEET 56	E

FILE NAME : P:\2020 PROJECTS\5020028 - WISDOT SWR IH 94\CIVIL3D\10660375\SHEETSPLAN\050201_PN.DWG
LAYOUT NAME - 01
PLOT DATE : 3/1/2023 12:17 PM
PLOT BY : KYLE CORNELIUS
PLOT NAME :
PLOT SCALE : 1 IN:200 FT
WISDOT/CADDS SHEET 44

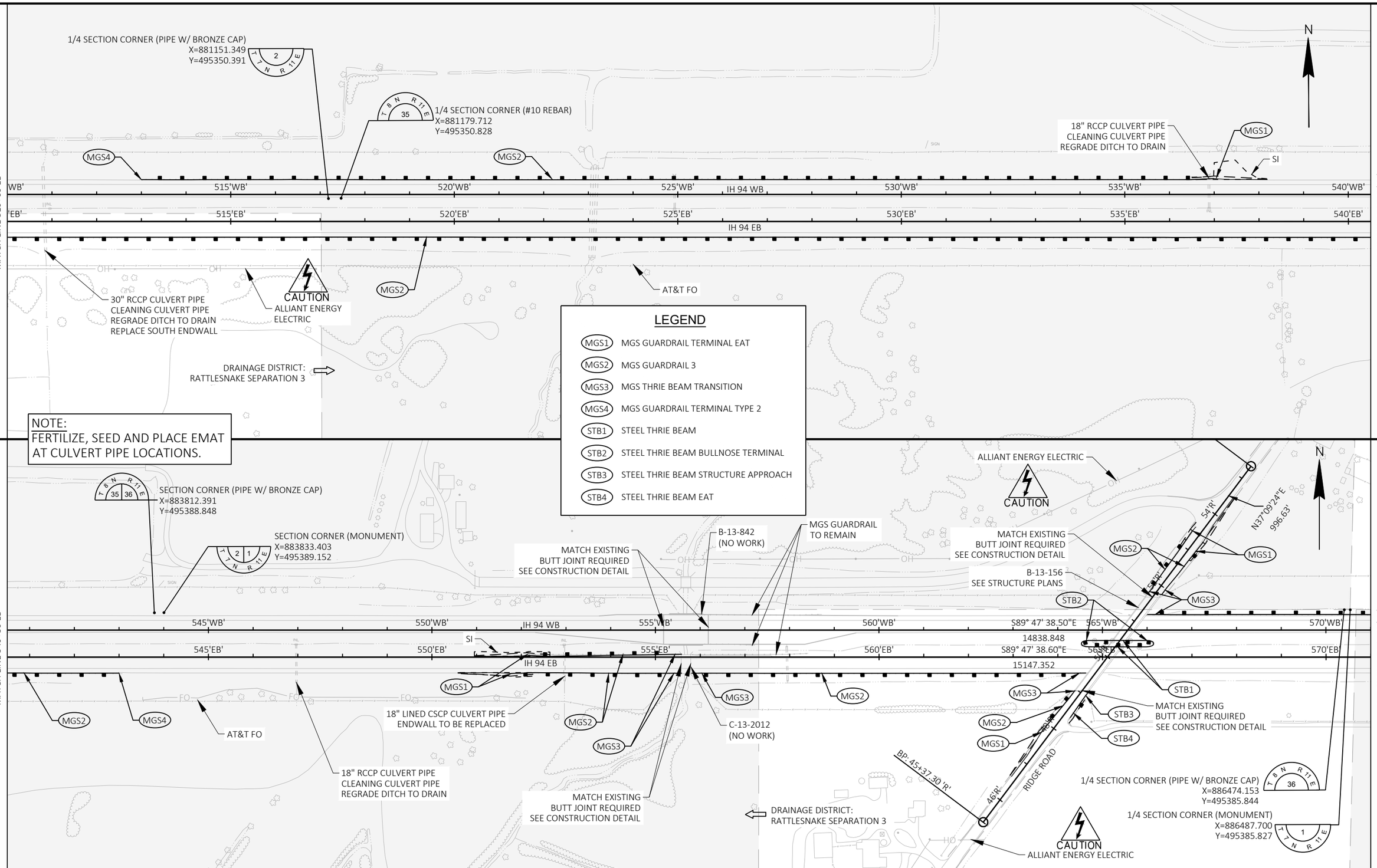

PROJECT NO: 1066-03-75	HWY: IH 94	COUNTY: DANE AND JEFFERSON	PLAN SHEETS	SHEET 57	E

FILE NAME : P:\2020 PROJECTS\5020028 - WISDOT SWR IH 94\CIVIL3D\10660375\SHEETSPLAN\050201_PN.DWG
LAYOUT NAME - 02
PLOT DATE : 3/1/2023 12:19 PM
PLOT BY : KYLE CORNELIUS
PLOT NAME :
PLOT SCALE : 1 IN:200 FT
WISDOT/CADDS SHEET 44

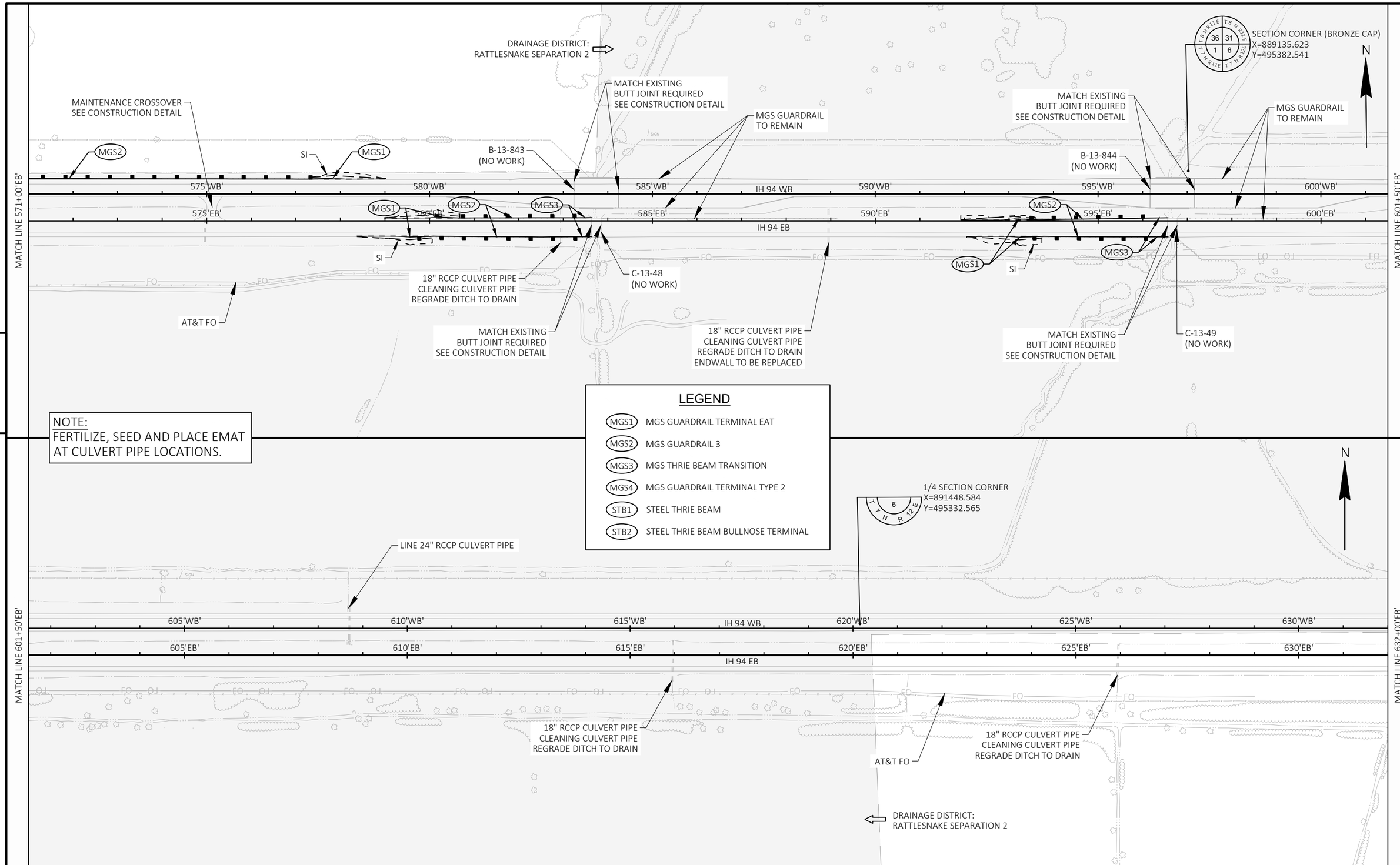

PROJECT NO: 1066-03-75	HWY: IH 94	COUNTY: DANE AND JEFFERSON	PLAN SHEETS	SHEET 58	E

FILE NAME : P:\2020 PROJECTS\5020028 - WISDOT SWR IH 94\CIVIL3D\10660375\SHEETSPLAN\050201_PN.DWG
LAYOUT NAME - 03
PLOT DATE : 3/1/2023 12:21 PM PLOT BY : KYLE CORNELIUS PLOT NAME : PLOT SCALE : 1 IN:200 FT
WISDOT/CADDS SHEET 44

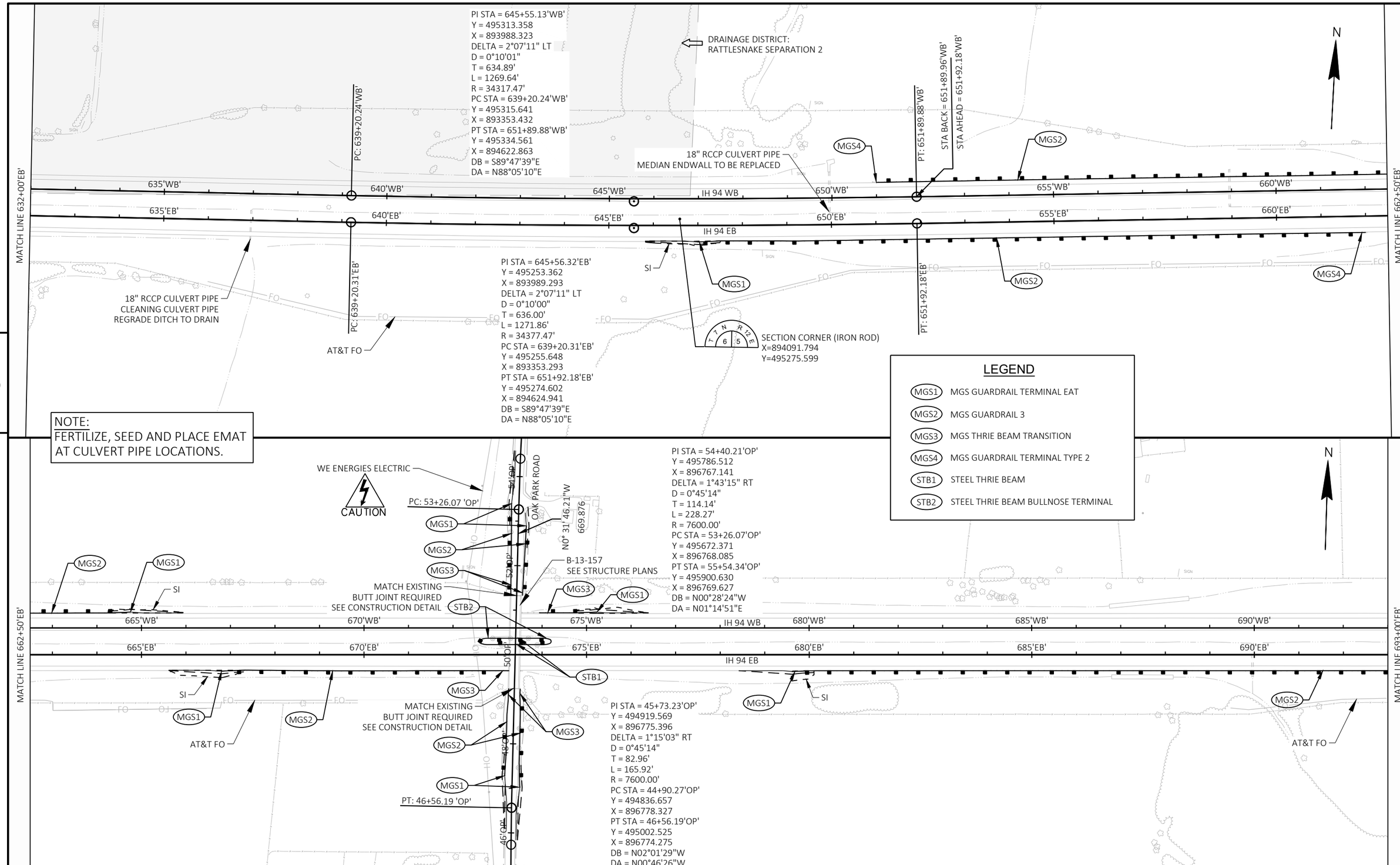

PROJECT NO: 1066-03-75	HWY: IH 94	COUNTY: DANE AND JEFFERSON	PLAN SHEETS	SHEET 59	E

FILE NAME : P:\2020 PROJECTS\5020028 - WISDOT SWR IH 94\CIVIL3D\10660375\SHEETSPLAN\050201_PN.DWG
LAYOUT NAME - 04
PLOT DATE : 3/1/2023 12:23 PM
PLOT BY : KYLE CORNELIUS
PLOT NAME :
PLOT SCALE : 1 IN:200 FT

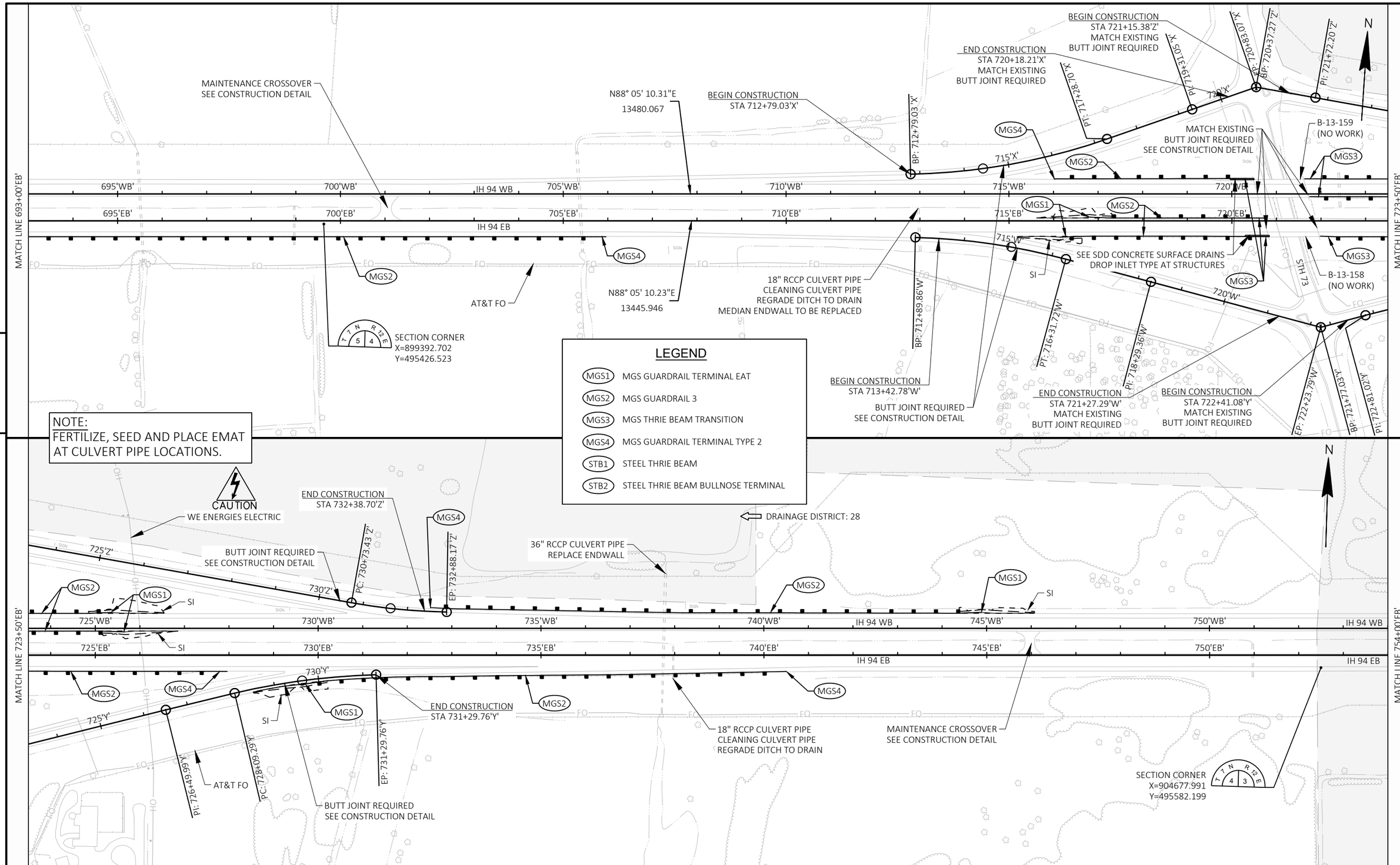

PROJECT NO: 1066-03-75	HWY: IH 94	COUNTY: DANE AND JEFFERSON	PLAN SHEETS	SHEET 60	E

FILE NAME : P:\2020 PROJECTS\5020028 - WISDOT SWR IH 94\CIVIL3D\10660375\SHEETSPLAN\050201_PN.DWG
LAYOUT NAME - 05
PLOT DATE : 3/1/2023 12:25 PM
PLOT BY : KYLE CORNELIUS
PLOT NAME :
PLOT SCALE : 1 IN:200 FT
WISDOT/CADDS SHEET 44

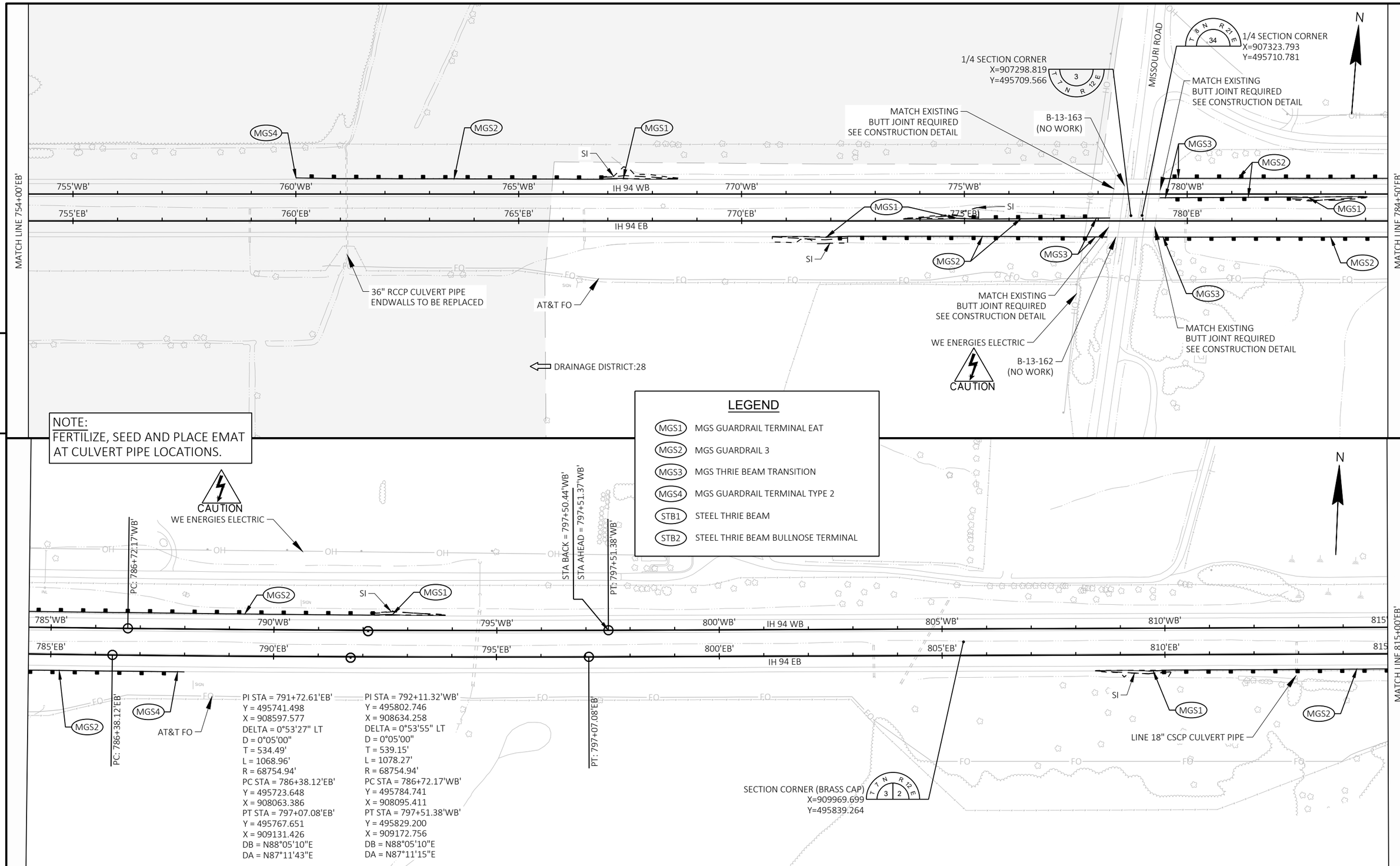

PROJECT NO: 1066-03-75	HWY: IH 94	COUNTY: DANE AND JEFFERSON	PLAN SHEETS	SHEET 61	E

FILE NAME : P:\2020 PROJECTS\5020028 - WISDOT SWR IH 94\CIVIL3D\10660375\SHEETSPLAN\050201_PN.DWG
LAYOUT NAME - 06
PLOT DATE : 3/1/2023 1:17 PM PLOT BY : KYLE CORNELIUS PLOT NAME : PLOT SCALE : 1 IN:200 FT
WISDOT/CADDS SHEET 44

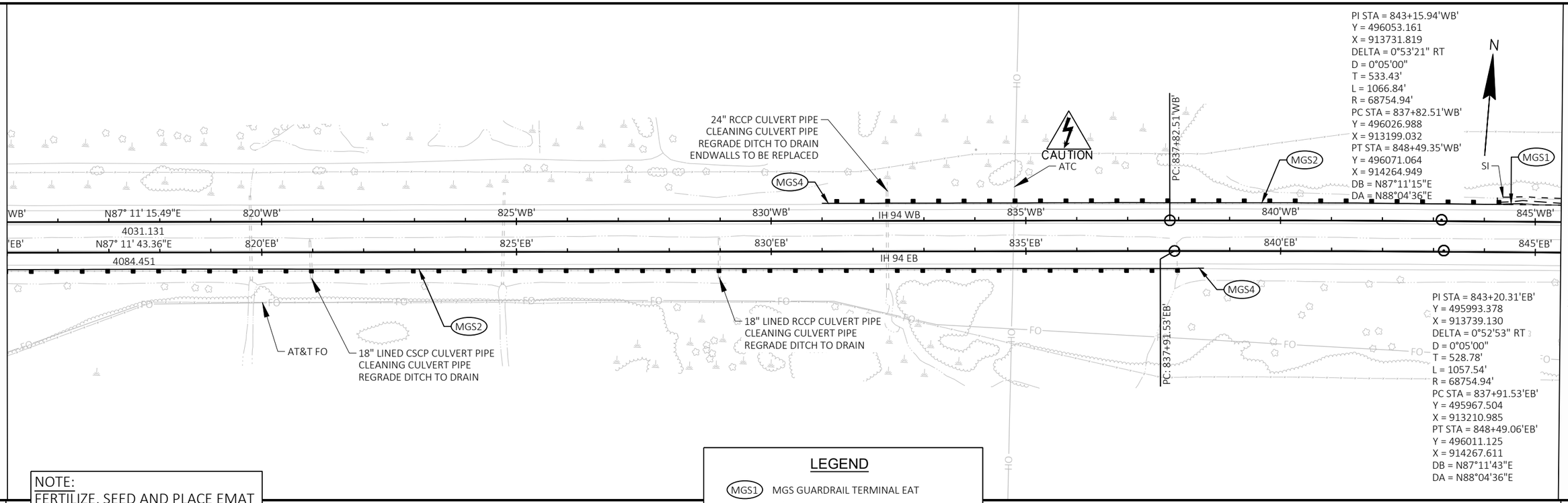

PROJECT NO: 1066-03-75	HWY: IH 94	COUNTY: DANE AND JEFFERSON	PLAN SHEETS	SHEET 62	E

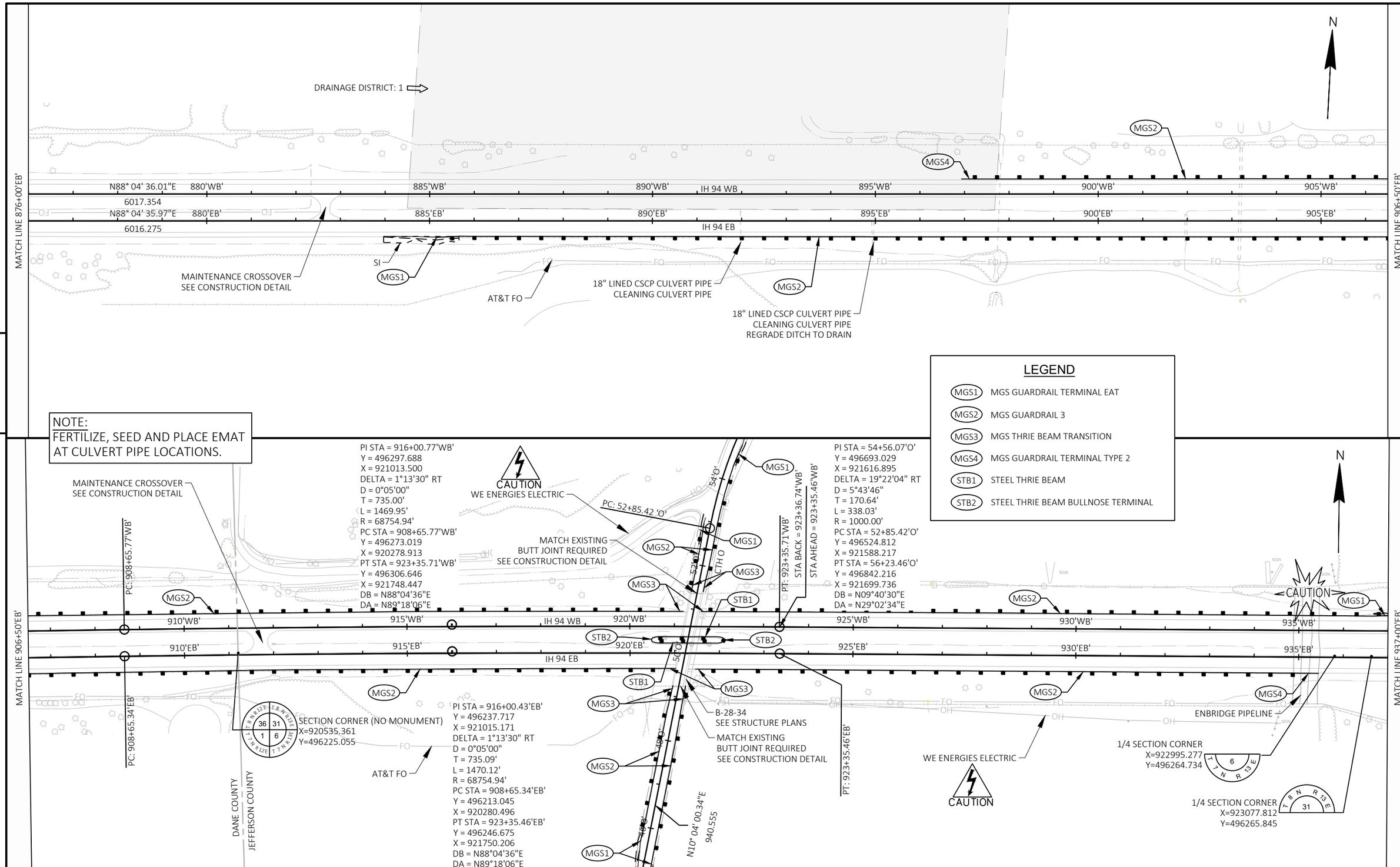

PROJECT NO: 1066-03-75	HWY: IH 94	COUNTY: DANE AND JEFFERSON	PLAN SHEETS	SHEET 63	E

FILE NAME : P:\2020 PROJECTS\5020028 - WISDOT SWR IH 94\CIVIL3D\10660375\SHEETSPLAN\050201_PN.DWG
LAYOUT NAME - 08
PLOT DATE : 3/1/2023 12:30 PM
PLOT BY : KYLE CORNELIUS
PLOT NAME :
PLOT SCALE : 1 IN:200 FT
WISDOT/CADDS SHEET 44

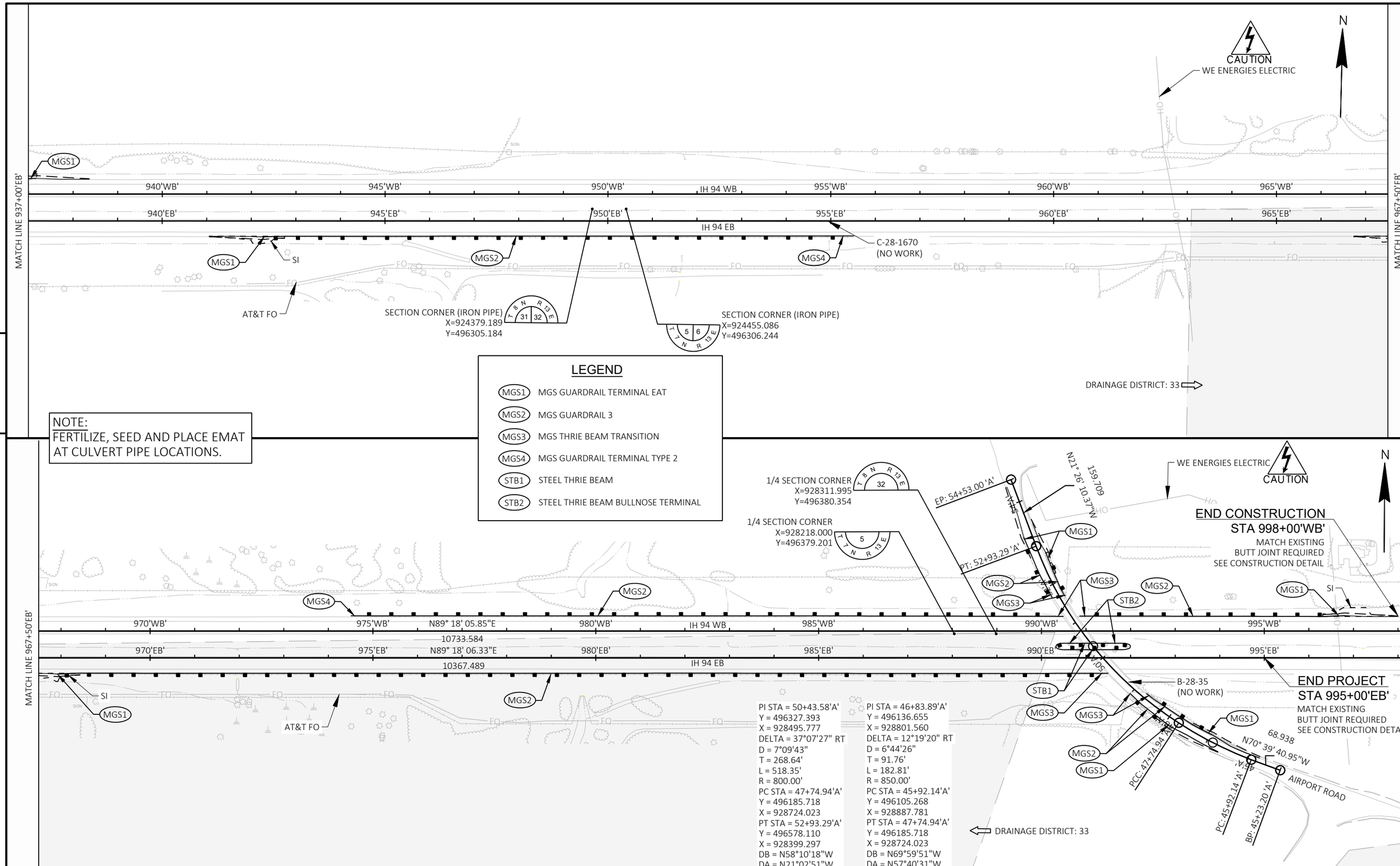

PROJECT NO: 1066-03-75	HWY: IH 94	COUNTY: DANE AND JEFFERSON	PLAN SHEETS	SHEET 64	E

FILE NAME : P:\2020 PROJECTS\5020028 - WISDOT SWR IH 94\CIVIL3D\10660375\SHEETSPLAN\050201_PN.DWG
LAYOUT NAME - 09
PLOT DATE : 3/1/2023 12:32 PM PLOT BY : KYLE CORNELIUS PLOT NAME : PLOT SCALE : 1 IN:200 FT
WISDOT/CADDS SHEET 44

Standard Detail Drawing List

08A05-20C	INLET COVERS TYPE F, HM, HM-S, S, T, V, HM-GJ, & HM-GJ-S
08C07-02	INLETS 2X2-FT, 2X2.5-FT, 2X3-FT AND 2.5X3-FT
08D01-23A	CONCRETE CURB & GUTTER
08D01-23B	CONCRETE CURB, TIES AND CURB AND GUTTER APPLICATIONS
08D02-08A	CONCRETE SURFACE DRAINS FLUME TYPE AT STRUCTURES
08D02-08B	CONCRETE SURFACE DRAINS FLUME TYPE AT STRUCTURES
08D02-08C	CONCRETE SURFACE DRAINS FLUME TYPE AT STRUCTURES
08D03-09A	CONCRETE SURFACE DRAINS DROP INLET TYPE AT STRUCTURES
08D03-09B	CONCRETE SURFACE DRAINS DROP INLET TYPE AT STRUCTURES
08E08-03	TYPICAL INSTALLATIONS OF EROSION BALES / TEMPORARY DITCH CHECKS
08E09-06	SILT FENCE
08E10-02	INLET PROTECTION TYPE A, B, C AND D
08E15-01	CULVERT PIPE CHECK
08F01-11	APRON ENDWALLS FOR CULVERT PIPE
08F04-08	JOINT TIES FOR CONCRETE PIPE AND CONCRETE COLLAR DETAIL
11A01-06	MAINTENANCE CROSSOVER FOR FREEWAYS
13A05-06A	SHOULDER RUMBLE STRIPS, DIVIDED ROADWAY
13A05-06B	SHOULDER RUMBLE STRIPS, DIVIDED ROADWAY
13C19-03	HMA LONGITUDINAL JOINTS
14B20-12A	STEEL THRIE BEAM STRUCTURE APPROACH
14B20-12B	STEEL THRIE BEAM STRUCTURE APPROACH, CONNECTION TO SQUARE END PARAPETS
14B20-12C	STEEL THRIE BEAM STRUCTURE APPROACH, CONNECTION TO VERTICAL FACED PARAPETS
14B20-12D	STEEL THRIE BEAM STRUCTURE APPROACH, CONNECTION TO SLOPED END PARAPETS
14B24-09A	STEEL PLATE BEAM GUARD ENERGY ABSORBING TERMINAL
14B24-09B	STEEL PLATE BEAM GUARD ENERGY ABSORBING TERMINAL
14B24-09C	STEEL PLATE BEAM GUARD ENERGY ABSORBING TERMINAL
14B26-05A	STEEL THRIE BEAM BULLNOSE TERMINAL
14B26-05B	STEEL THRIE BEAM BULLNOSE TERMINAL
14B26-05C	STEEL THRIE BEAM BULLNOSE TERMINAL
14B26-05D	STEEL THRIE BEAM BULLNOSE TERMINAL
14B26-05E	STEEL THRIE BEAM BULLNOSE TERMINAL
14B26-05F	STEEL THRIE BEAM BULLNOSE TERMINAL
14B26-05G	STEEL THRIE BEAM BULLNOSE TERMINAL
14B26-05H	STEEL THRIE BEAM BULLNOSE TERMINAL
14B29-01	SAFETY EDGE
14B42-07A	MIDWEST GUARDRAIL SYSTEM (MGS) GUARDRAIL
14B42-07B	MIDWEST GUARDRAIL SYSTEM (MGS) GUARDRAIL
14B42-07C	MIDWEST GUARDRAIL SYSTEM (MGS) GUARDRAIL
14B42-07D	MIDWEST GUARDRAIL SYSTEM (MGS) GUARDRAIL
14B44-04A	MIDWEST GUARDRAIL SYSTEM ENERGY ABSORBING TERMINAL (MGS)
14B44-04B	MIDWEST GUARDRAIL SYSTEM ENERGY ABSORBING TERMINAL (MGS)
14B44-04C	MIDWEST GUARDRAIL SYSTEM ENERGY ABSORBING TERMINAL (MGS)
14B45-05A	MIDWEST GUARDRAIL SYSTEM THRIE BEAM TRANSITION (MGS)
14B45-05B	MIDWEST GUARDRAIL SYSTEM THRIE BEAM TRANSITION (MGS)
14B45-05C	MIDWEST GUARDRAIL SYSTEM THRIE BEAM TRANSITION (MGS)
14B45-05D	MIDWEST GUARDRAIL SYSTEM THRIE BEAM TRANSITION (MGS)
14B45-05E	MIDWEST GUARDRAIL SYSTEM THRIE BEAM TRANSITION (MGS)
14B45-05F	MIDWEST GUARDRAIL SYSTEM THRIE BEAM TRANSITION (MGS)
14B47-05A	MIDWEST GUARDRAIL SYSTEM (MGS) TYPE 2 TERMINAL
14B47-05B	MIDWEST GUARDRAIL SYSTEM (MGS) TYPE 2 TERMINAL
14B47-05C	MIDWEST GUARDRAIL SYSTEM (MGS) TYPE 2 TERMINAL
14B47-05D	MIDWEST GUARDRAIL SYSTEM (MGS) TYPE 2 TERMINAL
14B47-05E	MIDWEST GUARDRAIL SYSTEM (MGS) TYPE 2 TERMINAL
14B47-05F	MIDWEST GUARDRAIL SYSTEM (MGS) TYPE 2 TERMINAL
14B47-05G	MIDWEST GUARDRAIL SYSTEM (MGS) TYPE 2 TERMINAL
15A03-02A	FLEXIBLE MARKER POST FOR CULVERT END
15A03-02B	FLEXIBLE MARKER POST FOR CULVERT END
15A04-07E	DELINEATOR POST WITH REFLECTIVE SHEETING
15C02-09A	BARRICADES AND SIGNS FOR MAINLINE CLOSURES
15C02-09B	BARRICADES AND SIGNS FOR VARIOUS CLOSURES
15C02-09D	ON RAMP LANE CLOSURE
15C02-09E	OFF RAMP LANE CLOSURE
15C02-09F	ADVANCED WIDTH RESTRICTION SIGNING
15C02-09G	TRAFFIC CONTROL FOR ENTRANCE RAMP CLOSURE
15C08-23A	PERMANENT LONGITUDINAL PAVEMENT MARKINGS
15C11-10B	CHANNELIZING DEVICES DRUMS, CONES, BARRICADES AND VERTICAL PANELS
15C14-04	AERIAL ENFORCEMENT BARS PAVEMENT MARKING DETAILS

6

Standard Detail Drawing List

15C31-06A	PAVEMENT MARKING EXIT RAMP AND PARALLEL EXIT RAMP
15C31-06C	PAVEMENT MARKING ENTRANCE RAMP AND PARALLEL ENTRANCE RAMP
15D12-12D	TRAFFIC CONTROL, PARALLEL ENTRANCE RAMP WITHIN LANE CLOSURE
15D15-07B	TRAFFIC CONTROL, ENTRANCE RAMP WITHIN LANE CLOSURE
15D16-06	TRAFFIC CONTROL, EXIT RAMP CLOSURE
15D39-02	TRAFFIC CONTROL, DROP-OFF SIGNING
15D44-02	TRAFFIC CONTROL, SIGNING ON ROADWAYS WITH MILLED SURFACES
15D50-03A	TRAFFIC CONTROL, ADDED LANE CLOSURE WITHOUT LANE SHIFT

6

6

GENERAL NOTES

DETAILS OF CONSTRUCTION, MATERIALS AND WORKMANSHIP NOT SHOWN ON THIS DRAWING SHALL CONFORM TO THE PERTINENT REQUIREMENTS OF THE STANDARD SPECIFICATIONS AND THE APPLICABLE SPECIAL PROVISIONS.

DETAIL DRAWINGS FOR PROPOSED ALTERNATE DESIGNS FOR INLET COVERS SHALL BE SUBMITTED TO THE ENGINEER FOR APPROVAL PROVIDING THAT SUCH ALTERNATE DESIGNS MAKE PROVISION FOR EQUIVALENT CAPACITY AND STRENGTH.

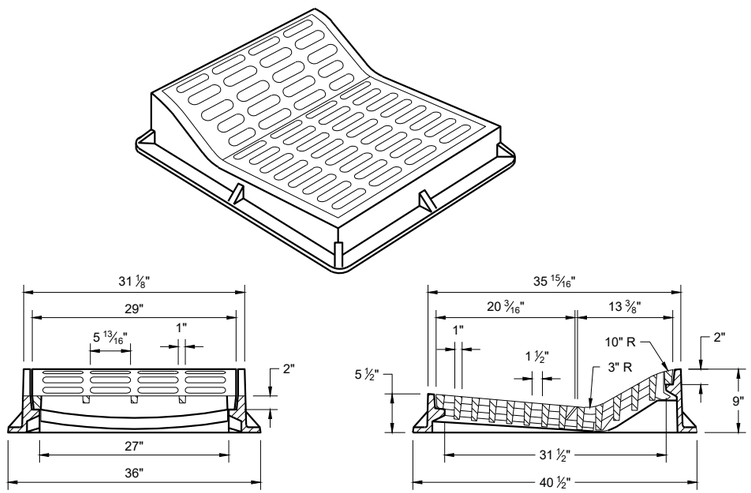

TYPE "F"

USE WITH TYPES "A" AND "D" CONCRETE CURB AND GUTTER, 36"

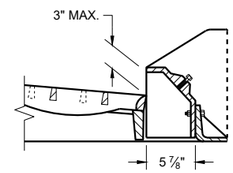

ALTERNATIVE CURB BOX FOR TYPE "HM" COVER

USE WITH TYPES "G" AND "J" CONCRETE CURB AND GUTTER, 30 INCH
NOTED AS TYP "HM-GJ" ON DRAINAGE TABLE

NOTE:
SPECIAL GRATE FOR THE TYPE "H" COVER MAY ALSO BE USED FOR THE TYPE "HM-GJ" COVER.

NOTED AS TYPE HM-GJ-S ON THE DRAINAGE TABLE.

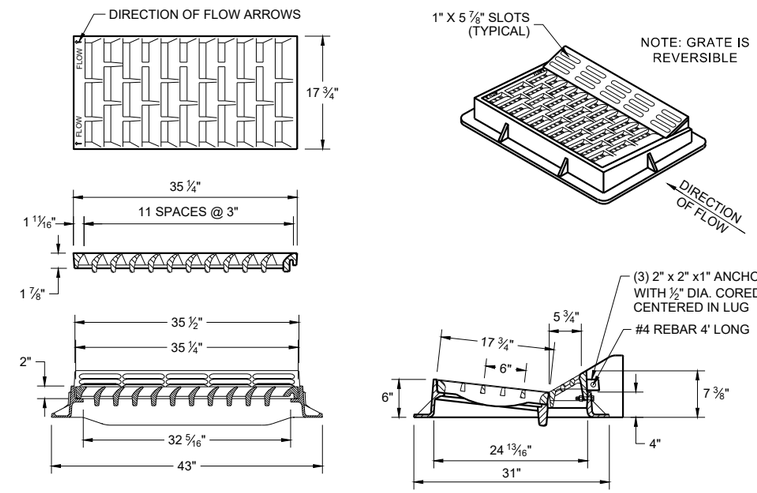

TYPE "HM"

USE WITH TYPES "A" AND "D" CONCRETE CURB AND GUTTER, 36"

NOTE:
SPECIAL GRATE FOR THE TYPE "H" COVER MAY ALSO BE USED FOR THE TYPE "HM-GJ" COVER.

NOTED AS TYPE HM-GJ-S ON THE DRAINAGE TABLE.

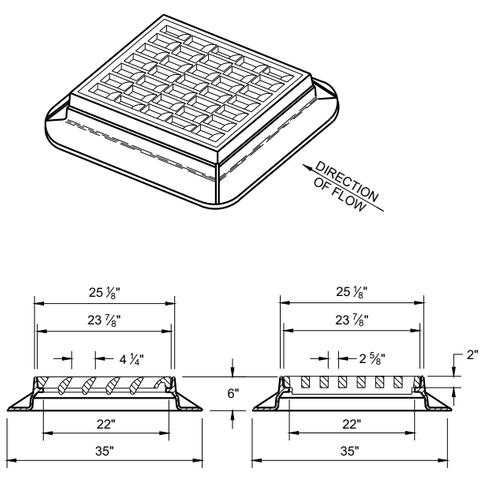

TYPE "S"

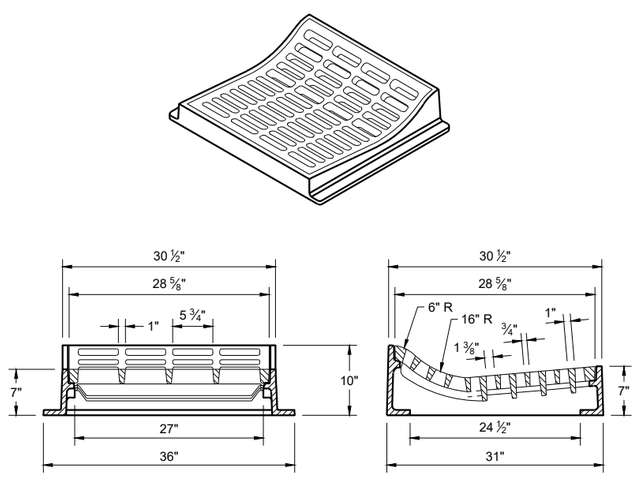

TYPE "T"

USE WITH TYPES "R" AND "T" CONCRETE CURB AND GUTTER, 36"

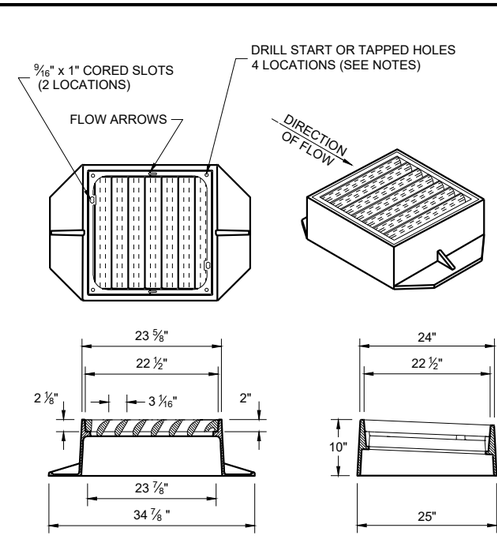

TYPE "V"

NOTES: ALL HARDWARE TO BE SUPPLIED BY CASTING MANUFACTURER ALL DRILLING AND TAPPING GRATES AND FRAMES BY CASTING MANUFACTURER

TYPE V
FRAME - CAST GRAY IRON ASTM A48 CLASS 40A
3/8" DIA. X 7/16" DRILL START IN 4 LOCATIONS
GRATE - CAST GRAY IRON ASTM A-48, CLASS 35B

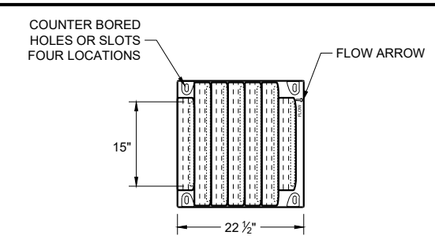

BOLT DOWN GRATE FOR TYPE "V" COVER

NOTES: ALL HARDWARE TO BE SUPPLIED BY CASTING MANUFACTURER NOTED AS TYPE "V-B" ON DRAINAGE TABLE

TAP 1/2" -13 HOLES IN FOUR LOCATIONS IN FRAME TO BOLT GRATE
FRAME - CAST GRAY IRON ASTM A48 CLASS 40A

GRATE - CAST DUCTILE IRON ASTM A536, 55+KSI YIELD
BOLTS - 1/2" -13 STAINLESS STEEL BOLTS WITH WASHERS
TORQUE BOLTS TO MANUFACTURER SPECIFICATION DO NOT OVERTIGHTEN.

INLET COVERS
TYPES F, HM, HM-S, S, T, V, HM-GJ AND HM-GJ-S

STATE OF WISCONSIN
DEPARTMENT OF TRANSPORTATION

APPROVED
July 2023 — DATE
/S/ Rodney Taylor — ROADWAY STANDARDS DEVELOPMENT UNIT SUPERVISOR
FHWA

6

SDD 08A05-20c

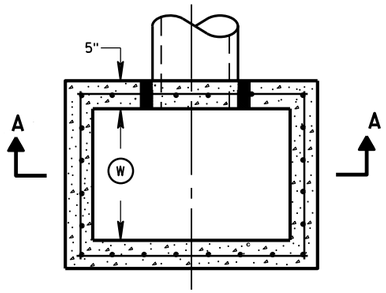

PLAN VIEW

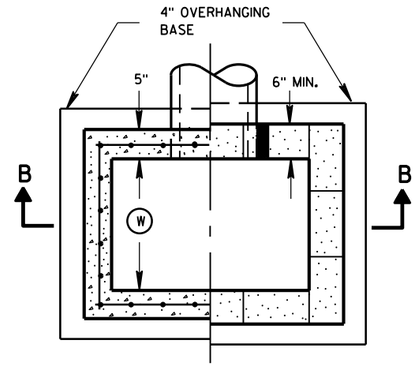

PLAN VIEW

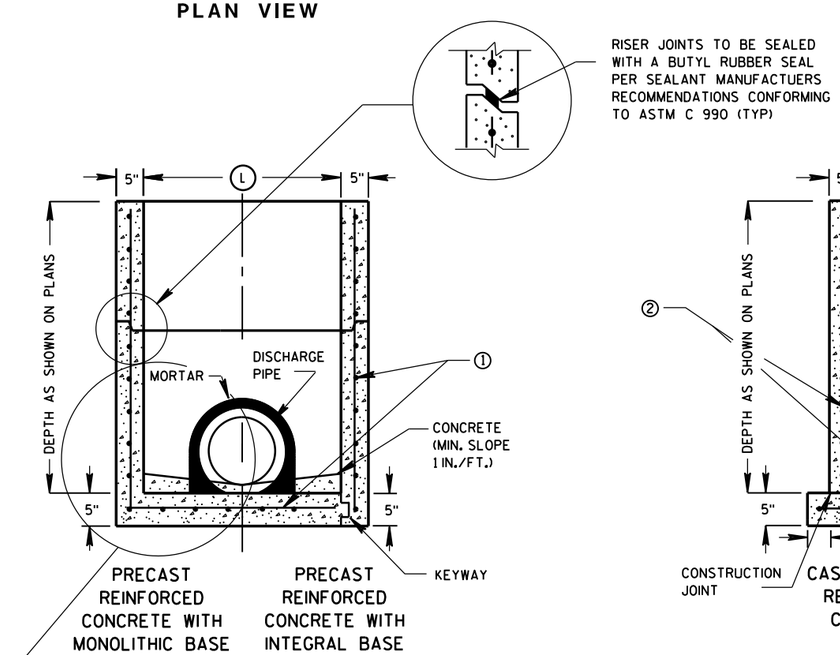

SECTION A-A

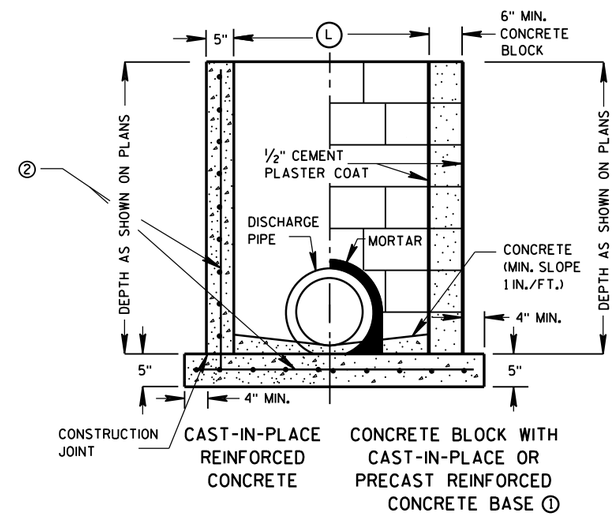

SECTION B-B

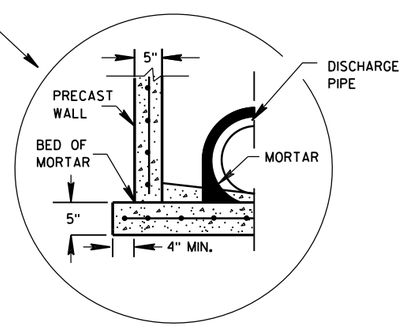

SEPARATE PRECAST REINFORCED CONCRETE BASE OPTION

GENERAL NOTES

DETAILS OF CONSTRUCTION, MATERIALS AND WORKMANSHIP NOT SHOWN ON THIS DRAWING SHALL CONFORM TO THE PERTINENT REQUIREMENTS OF THE STANDARD SPECIFICATIONS AND THE APPLICABLE SPECIAL PROVISIONS.

UNLESS OTHERWISE AUTHORIZED IN WRITING BY THE ENGINEER, THE CONTRACTOR SHALL NOT ORDER AND DELIVER PRECAST INLET UNITS REQUIRED FOR THE PROJECT UNTIL A LIST OF SIZES IS FURNISHED BY THE ENGINEER.

DETAILED DRAWINGS FOR PROPOSED ALTERNATE DESIGNS FOR UNDERGROUND DRAINAGE STRUCTURES SHALL BE SUBMITTED TO THE ENGINEER FOR APPROVAL PROVIDING THAT SUCH ALTERNATE DESIGNS MAKE PROVISION FOR EQUIVALENT CAPACITY AND STRENGTH.

ALL PRECAST INLET UNITS SHALL CONFORM TO THE PERTINENT REQUIREMENTS OF ASTM C 913.

ALL DRAINAGE STRUCTURES ARE DESIGNATED ON THE PLANS AS "MANHOLES 3X3-L", "CATCH BASINS 4-B", "INLETS 2X3-H", ETC. THE FIRST NUMBERS DESIGNATES THE SIZE OF THE STRUCTURE, AND THE FOLLOWING LETTER DESIGNATES THE TYPE OF COVER TO BE USED TO COMPRISE THE COMPLETE UNIT.

BASES SHALL BE PLACED ON A BED OF MATERIAL AT LEAST 6 INCHES IN DEPTH, WHICH MEETS THE REQUIREMENTS OF FOUNDATION BACKFILL. THIS BEDDING SHALL BE COMPACTED AND PROVIDE UNIFORM SUPPORT FOR THE ENTIRE AREA OF THE BASE.

ALL BAR STEEL REINFORCEMENT SHALL BE EMBEDDED 2 INCHES CLEAR UNLESS OTHERWISE SHOWN OR NOTED.

PRECAST REINFORCED RISERS SHALL HAVE A TONGUE AND GROOVE JOINT WITH TONGUE UP OR DOWN.

4" OVERHANGING BASES ARE REQUIRED FOR CAST-IN-PLACE REINFORCED CONCRETE AND CONCRETE BLOCK INSTALLATIONS.
4" OVERHANG IS REQUIRED WHEN SEPARATE PRECAST BASE IS PROVIDED.
OVERHANG IS NOT REQUIRED ON PRECAST STRUCTURES WITH AN INTEGRAL OR MONOLITHIC BASE.

MAXIMUM INSIDE PIPE DIAMETER DETERMINED BY 3 INCH CLEARANCE ON EACH SIDE OF THE OUTSIDE WALL OF THE PIPE. SEE DETAIL "A". ASSUMES PIPE ENTERS PERPENDICULAR TO THE STRUCTURE.

① FOR PRECAST INLETS PROVIDE REINFORCING STEEL IN ACCORDANCE TO ASTM C 913.

② CONTRACTOR TO PROVIDE DRAWING(S) STAMPED BY A PROFESSIONAL ENGINEER FOR STEEL REINFORCING DESIGN FOR CAST-IN-PLACE STRUCTURES.

INLET COVER MATRIX

INLET SIZE		INLET COVER TYPE	ALL A'S	ALL B'S	BW	F	ALL H'S	S	T	V	WM
	WIDTH Ⓦ (FT)	LENGTH Ⓛ (FT)									
2X2-FT	2	2	X	X				X		X	
2X2.5-FT	2	2.5			X			X	X	X	X
2X3-FT	2	3					X				
2.5X3-FT	2.5	3				X					

PIPE MATRIX

INLET SIZE	MAXIMUM INSIDE PIPE DIAMETER	
	WIDTH (IN)	LENGTH (IN)
2X2-FT	12	12
2X2.5-FT	12	18
2X3-FT	12	24
2.5X3-FT	18	24

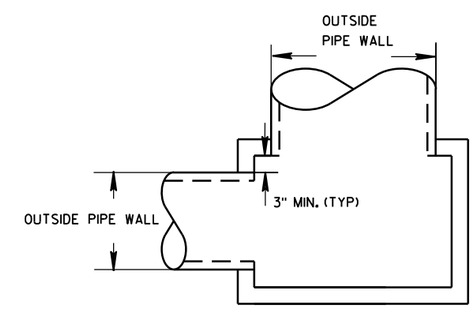

DETAIL "A"

INLETS 2X2-FT, 2X2.5-FT, 2X3-FT AND 2.5X3-FT

INLETS 2X2-FT, 2X2.5-FT, 2X3-FT AND 2.5X3-FT

STATE OF WISCONSIN
DEPARTMENT OF TRANSPORTATION

APPROVED
Sept., 2016 — DATE
/S/ Rodney Taylor
ROADWAY STANDARDS D IT
UNIT SUPERVIS
FHWA

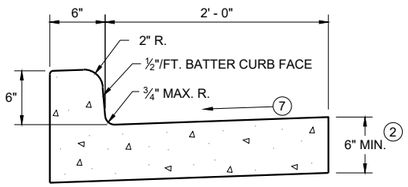

TYPES A (1) & D

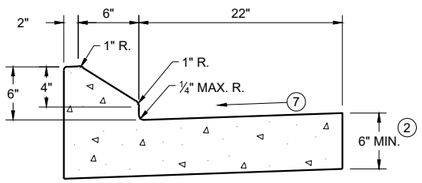

6" SLOPED CURB TYPES G (1) & J

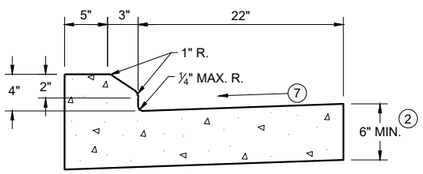

4" SLOPED CURB TYPES G (1) & J

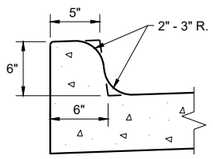

TYPES K (1) & L
(OPTIONAL CURB SHAPE)

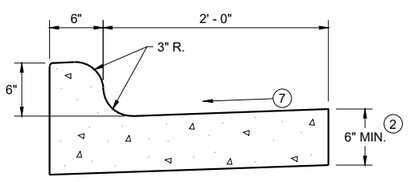

TYPES K (1) & L

CONCRETE CURB AND GUTTER 30"

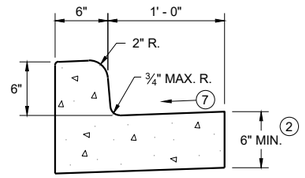

TYPES A (1) & D

CONCRETE CURB AND GUTTER 18"

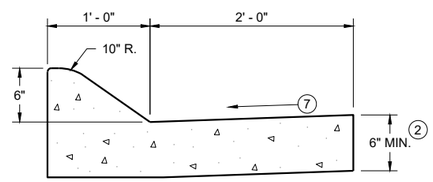

6" SLOPED CURB TYPES A (1) & D

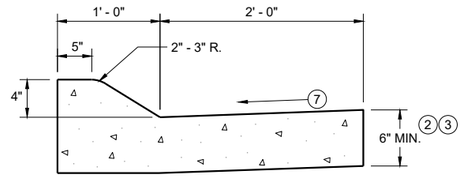

4" SLOPED CURB TYPES A (1) & D

CONCRETE CURB AND GUTTER 36"

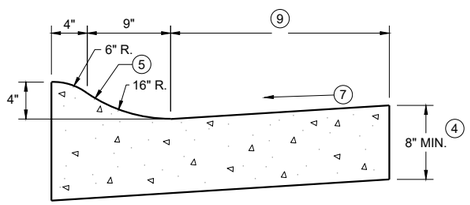

4" SLOPED CURB TYPES R (1) & T

TBT & TBTT	X
30"	22"
36"	28"

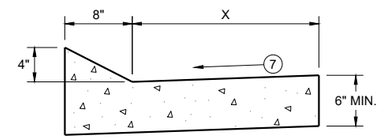

TYPES TBT & TBTT (1)

CONCRETE CURB AND GUTTER

PAVEMENT THICKNESS AND MAXIMUM CONCRETE PANEL WIDTH TABLE

PAVEMENT THICKNESS	MAXIMUM PANEL WIDTH
LESS THAN 10"	12'
10" & ABOVE	15'

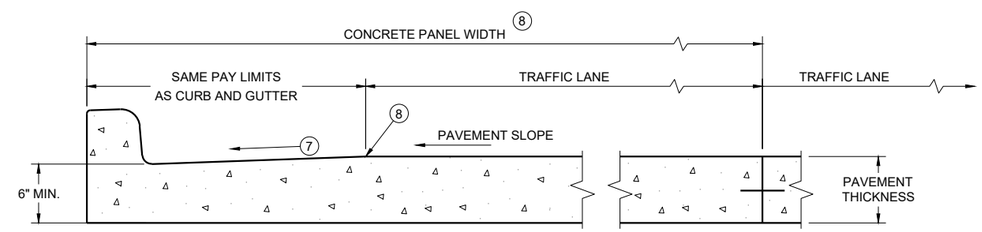

PARTIAL SECTION OF PAVEMENT * WITH INTEGRAL CURB AND GUTTER

* BIKE LANE IS NOT SHOWN

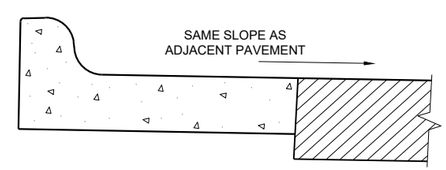

REVERSE SLOPE GUTTER (6)
(TYPICAL FOR ALL CURB & GUTTER TYPES)

GENERAL NOTES

DETAILS OF CONSTRUCTION AND WORKMANSHIP NOT SHOWN ON THIS DRAWING SHALL CONFORM TO THE PERTINENT REQUIREMENTS OF THE CONTRACT.

PAVEMENT TIES AND TIE BARS SHALL BE EPOXY COATED IN CONFORMANCE WITH SUBSECTION 505.2.6.2 OF THE STANDARD SPECIFICATIONS.

INTEGRAL CURB AND GUTTER SHALL CONFORM TO THE DETAILS SHOWN FOR CONCRETE CURB AND GUTTER INCLUDING THE TRANSVERSE GUTTER SLOPE.

UNLESS OTHERWISE SHOWN ON THE TYPICAL CROSS SECTIONS, THE BASE AGGREGATE AND COMMON EXCAVATION LIMITS ARE 2' - 0" BEHIND THE BACK OF CURBS.

(1) TIE BARS ARE REQUIRED FOR CURB AND GUTTERS TYPES A, G, K, R, AND TBTT.

(2) THE BOTTOM OF CURB AND GUTTER MAY BE CONSTRUCTED EITHER LEVEL OR PARALLEL TO THE SLOPE OF THE SUBGRADE OR BASE AGGREGATE PROVIDED A 6" MINIMUM GUTTER THICKNESS IS MAINTAINED.

(3) USE 8" MINIMUM GUTTER THICKNESS WHEN USED WITH AN ADJACENT CONCRETE TRUCK APRON PLACED BEHIND BACK OF CURB.

(4) THE BOTTOM OF CURB AND GUTTER MAY BE CONSTRUCTED EITHER LEVEL OR PARALLEL TO THE SLOPE OF THE SUBGRADE OR BASE AGGREGATE PROVIDED A 8" MINIMUM GUTTER THICKNESS IS MAINTAINED.

(5) UNLESS OTHERWISE NOTED, FOR STAKING PURPOSES THE FACE OF CURB IS 6" FROM THE BACK OF CURB.

(6) WHEN REVERSE SLOPE GUTTER IS REQUIRED, THE LOCATION(S) WILL BE SHOWN ELSEWHERE IN THE PLAN.

(7) USE 4% GUTTER CROSS SLOPE UNLESS OTHERWISE NOTED IN THE PLANS.

(8) INCLUDE LONGITUDINAL JOINT AND TIE BARS ALONG LANE EDGE WHEN CONCRETE PANEL WIDTH EXCEEDS THE MAXIMUM WIDTH PER TABLE BELOW. LONGITUDINAL JOINT(S) ARE NOT ALLOWED WITHIN TRAFFIC LANES AND BIKE LANES. LONGITUDINAL JOINT MAY BE SAWED.

(9) CONCRETE CURB AND GUTTER 4-INCH SLOPED 30-INCH TYPE "R" AND "T" = 17 INCHES
CONCRETE CURB AND GUTTER 4-INCH SLOPED 36-INCH TYPE "R" AND "T" = 23 INCHES

CONCRETE CURB AND GUTTER

STATE OF WISCONSIN
DEPARTMENT OF TRANSPORTATION

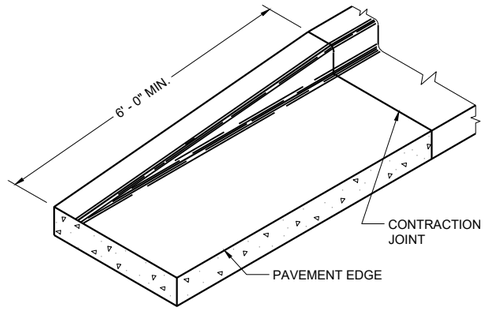

END SECTION CURB AND GUTTER

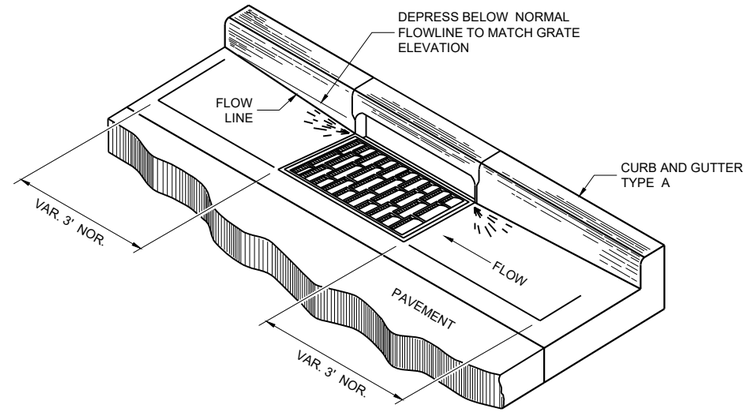

DETAIL OF CURB AND GUTTER AT INLETS

(TYPICAL H INLET COVER SHOWN)

GENERAL NOTES

DETAILS OF CONSTRUCTION AND WORKMANSHIP NOT SHOWN ON THIS DRAWING SHALL CONFORM TO THE PERTINENT REQUIREMENTS OF THE CONTRACT.

PAVEMENT TIES AND TIE BARS SHALL BE EPOXY COATED IN CONFORMANCE WITH SUBSECTION 505.2.6.2 OF THE STANDARD SPECIFICATIONS.

UNLESS OTHERWISE SHOWN ON THE TYPICAL CROSS SECTIONS, THE BASE AGGREGATE AND COMMON EXCAVATION LIMITS ARE 2' - 0" BEHIND THE BACK OF CURBS.

(1) TIE BARS ARE REQUIRED FOR CURB AND GUTTERS TYPES A, G, K, R, AND TBTT.

(2) THE BOTTOM OF CURB AND GUTTER MAY BE CONSTRUCTED EITHER LEVEL OR PARALLEL TO THE SLOPE OF THE SUBGRADE OR BASE AGGREGATE PROVIDED A 6" MINIMUM GUTTER THICKNESS IS MAINTAINED.

(10) REFER TO SDD 08D18 AND 08D19 FOR ADDITIONAL DRIVEWAY ENTRANCE CURB DETAILS.

(11) PLACE 1" THICK EXPANSION JOINT MATERIAL BETWEEN VERTICAL FACE CURB TYPES EXTENDING FROM THE TOP OF CURB TO 1 INCH BELOW THE ADJOINING CONCRETE SURFACE. RIGID CONCRETE STRUCTURES INCLUDE RAISED CONCRETE MEDIANS, CONCRETE SAFETY ISLANDS, SPLITTER ISLANDS, OR LOCATIONS IDENTIFIED ON THE PLANS.

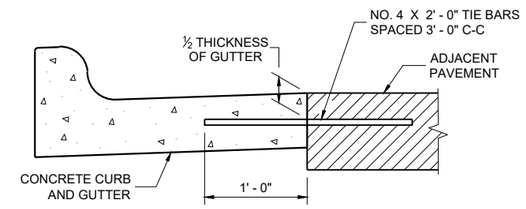

TYPICAL TIE BAR LOCATION (1)

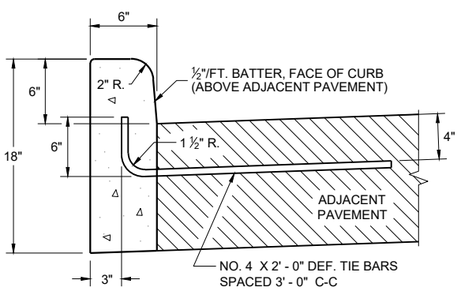

TYPES A (1) & D

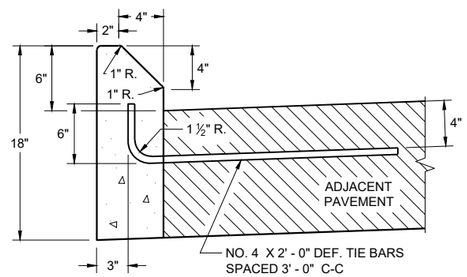

TYPES G (1) & J

CONCRETE CURB

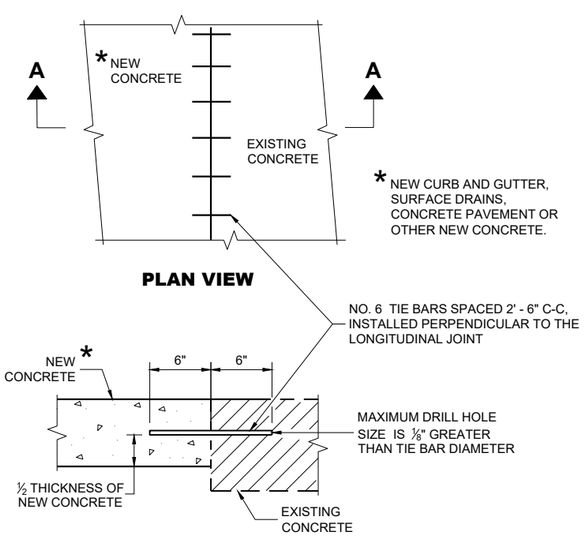

PLAN VIEW

SECTION A - A

TIE BARS DRILLED INTO EXISTING PAVEMENT

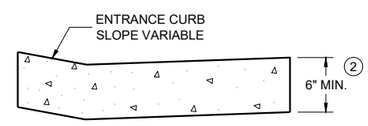

DRIVEWAY ENTRANCE CURB (10)

(WHEN DIRECTED BY THE ENGINEER)

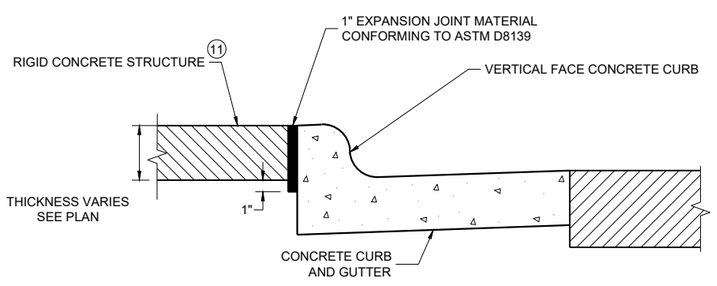

EXPANSION JOINT DETAIL FOR VERTICAL CURB ABUTTING A RIGID STRUCTURE (11)

CONCRETE CURB, TIES AND CURB AND GUTTER APPLICATIONS

STATE OF WISCONSIN
DEPARTMENT OF TRANSPORTATION

APPROVED
May 2023 — DATE
/S/ Rodnery Taylor — ROADWAY STANDARDS DEVELOPMENT UNIT SUPERVISOR

FHWA

6
SDD 08D01-23b

GENERAL NOTES

DETAILS OF CONSTRUCTION, MATERIALS AND WORKMANSHIP NOT SHOWN ON THIS DRAWING SHALL CONFORM TO THE PERTINENT REQUIREMENTS OF THE STANDARD SPECIFICATIONS AND THE APPLICABLE SPECIAL PROVISIONS.

ALL STEEL REINFORCEMENT SHALL BE EMBEDDED 2 INCHES CLEAR UNLESS OTHERWISE SHOWN OR NOTED.

1. USE A JOINT SEALANT CONFORMING TO STANDARD SPECIFICATION 415.2.6.
2. NO. 4 X 2' - 0" TIE BARS SPACED AT 12" C-C TO BE PLACED BY BRIDGE CONTRACTOR OR DRILLED TIE BARS PLACED AS DIRECTED BY THE ENGINEER.
3. PAVED CONCRETE SHOULDER (SDD 13A03) OR CONCRETE DRAINAGE SLAB.
4. CONCRETE PAVEMENT APPROACH SLAB (SHOWN) OR STRUCTURE APPROACH SLAB AND CONCRETE PAVEMENT APPROACH SLAB. SEE SDD 13B02.
5. PAVED CONCRETE SHOULDER (SDD 13A03) OR ASPHALT SHOULDER.
6. CONCRETE CURB AND GUTTER 4-INCH SLOPED 36-INCH TYPE TBT OR TBTT. USE TYPE TBTT CURB WITH NO. 4 X 2' -0" TIE BARS SPACED AT 3' - 0" C-C ONLY WHEN ADJACENT TO CONCRETE PAVEMENTS.
7. PLACE FLUME BEFORE MSG THRIE BEAM TRANSITION POST 1 (SEE SDD 14B45)
8. CENTER FLUME BETWEEN POSTS. 6-INCH MINIMUM SEPARATION FROM OUTSIDE EDGE OF FLUME TO POSTS.
9. MINIMUM REINFORCEMENT SHALL BE 4" X 4" - W3.0 X W3.0 OR NO. 3 BARS LONGITUDINAL AND TRANSVERSE SPACING 12" C -C.
10. SEE ROADWAY PLANS FOR FLUME LOCATION.
11. START CURB AND GUTTER TRANSITION OR END SECTION.
12. DEPRESS FLOW LINE (SEE DETAIL)

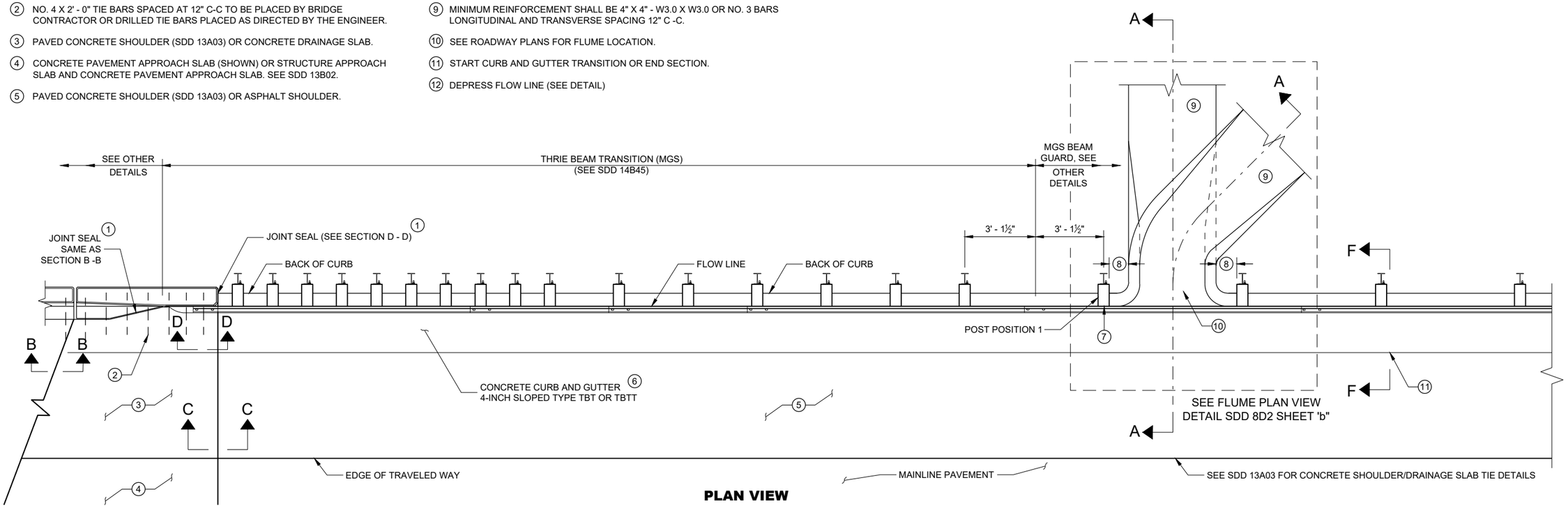

PLAN VIEW

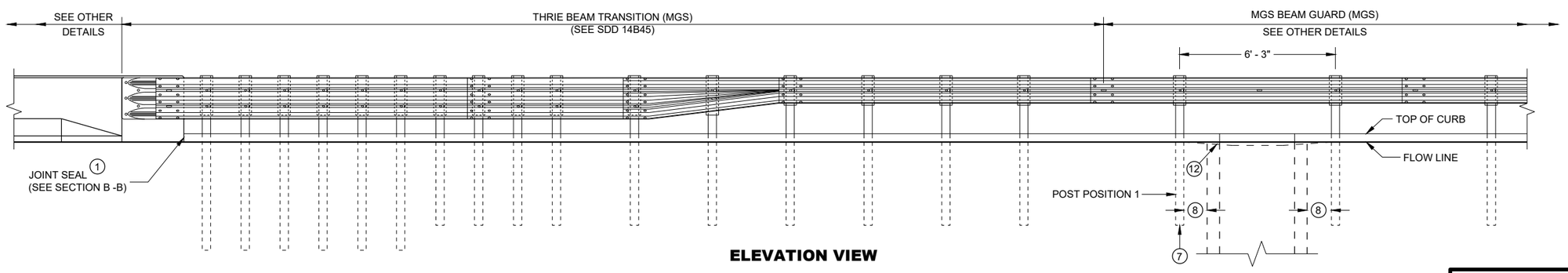

ELEVATION VIEW

CONCRETE SURFACE DRAINS FLUME TYPE AT STRUCTURES

STATE OF WISCONSIN
DEPARTMENT OF TRANSPORTAT

6

SDD 08D02 - 08a

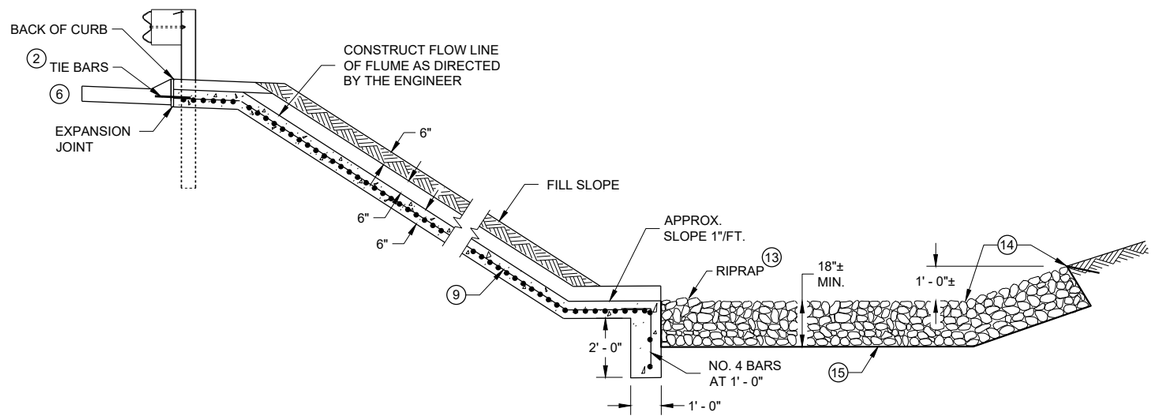

SECTION A - A

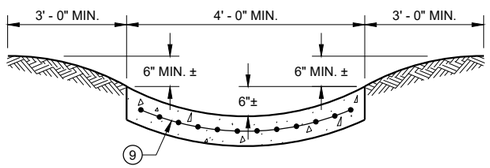

SECTION G - G

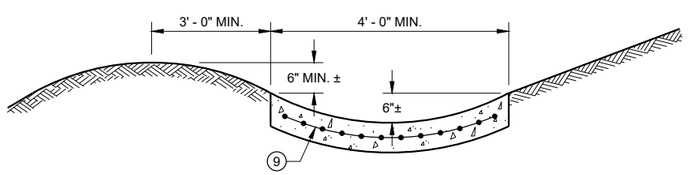

SECTION H - H

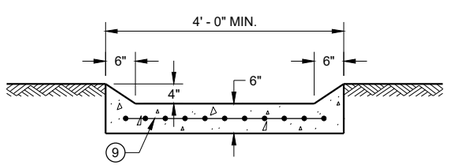

SECTION I - I

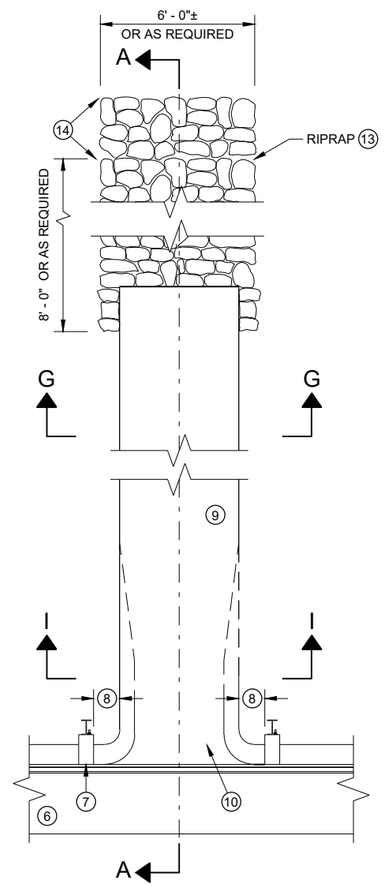

PLAN VIEW PERPENDICULAR FLUME

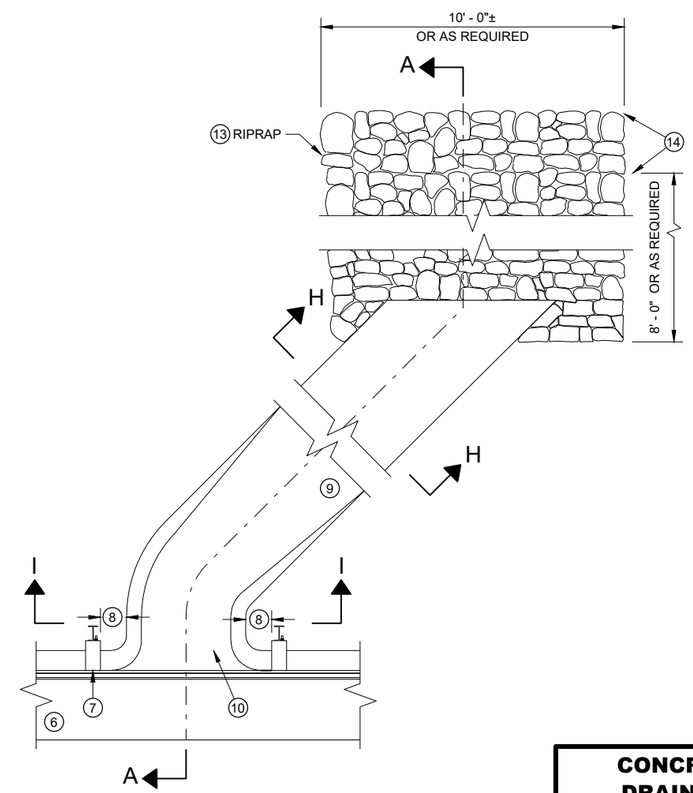

PLAN VIEW SKEWED FLUME

GENERAL NOTES

DETAILS OF CONSTRUCTION, MATERIALS AND WORKMANSHIP NOT SHOWN ON THIS DRAWING SHALL CONFORM TO THE PERTINENT REQUIREMENTS OF THE STANDARD SPECIFICATIONS AND THE APPLICABLE SPECIAL PROVISIONS.

ALL STEEL REINFORCEMENT SHALL BE EMBEDDED 2 INCHES CLEAR UNLESS OTHERWISE SHOWN OR NOTED.

1. USE A JOINT SEALANT CONFORMING TO STANDARD SPECIFICATION 415.2.6.
2. NO. 4 X 2' - 0" TIE BARS SPACED AT 12" C-C TO BE PLACED BY BRIDGE CONTRACTOR OR DRILLED TIE BARS PLACED AS DIRECTED BY THE ENGINEER.
3. PAVED CONCRETE SHOULDER (SDD 13A03) OR CONCRETE DRAINAGE SLAB.
4. CONCRETE PAVEMENT APPROACH SLAB (SHOWN) OR STRUCTURE APPROACH SLAB AND CONCRETE PAVEMENT APPROACH SLAB. SEE SDD 13B02 AND STRUCTURE PLANS.
5. PAVED CONCRETE SHOULDER (SDD 13A03) OR ASPHALT SHOULDER.
6. CONCRETE CURB AND GUTTER 4-INCH SLOPED 36-INCH TYPE TBT OR TBTT. USE TYPE TBTT CURB WITH NO. 4 X 2' -0" TIE BARS SPACED AT 3' - 0" C-C ONLY WHEN ADJACENT TO CONCRETE PAVEMENTS.
7. PLACE FLUME BEFORE MSG THRIE BEAM TRANSITION POST 1 (SEE SDD 14B45)
8. CENTER FLUME BETWEEN POSTS. 6-INCH MINIMUM SEPARATION FROM OUTSIDE EDGE OF FLUME TO POSTS.
9. MINIMUM REINFORCEMENT SHALL BE 4" X 4" - W3.0 X W3.0 OR NO. 3 BARS LONGITUDINAL AND TRANSVERSE SPACING 12" C -C.
10. SEE ROADWAY PLANS FOR FLUME LOCATION.
11. START CURB AND GUTTER TRANSITION OR END SECTION.
12. DEPRESS FLOW LINE (SEE DETAIL)
13. MEDIUM RIPRAP UNLESS OTHERWISE SPECIFIED.
14. LIMITS OF ADDITIONAL RIPRAP WHEN SPECIAL DITCH AS REQUIRED.
15. GEOTEXTILE TYPE HR.

CONCRETE SURFACE DRAINS FLUME TYPE AT STRUCTURES

STATE OF WISCONSIN
DEPARTMENT OF TRANSPORTAT

6

SDD 08D02 - 08b

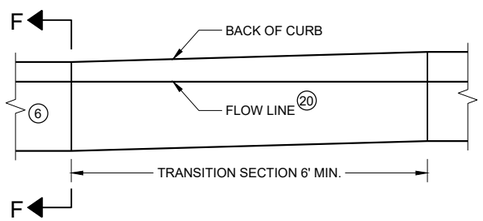

CURB AND GUTTER TRANSITION SECTION
CONCRETE CURB AND GUTTER 4-INCH SLOPED
36 INCH TYPE TBT OR TBTT

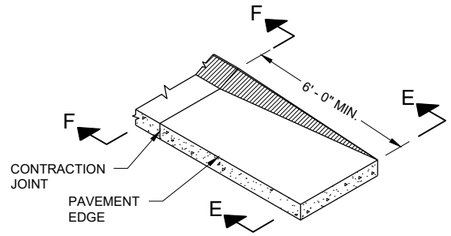

CURB AND GUTTER END SECTION
CONCRETE CURB AND GUTTER 4-INCH SLOPED
36 INCH TYPE TBT OR TBTT

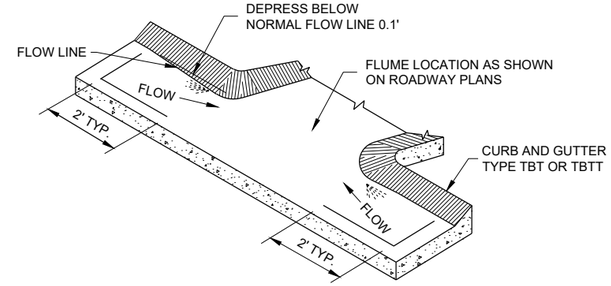

CURB AND GUTTER FLOW LINE DEPRESSION
AT FLUMES CONCRETE CURB AND GUTTER
4-INCH SLOPED 36 INCH TYPE TBT OR TBTT

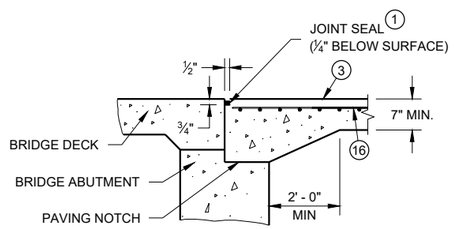

SECTION B-B 4

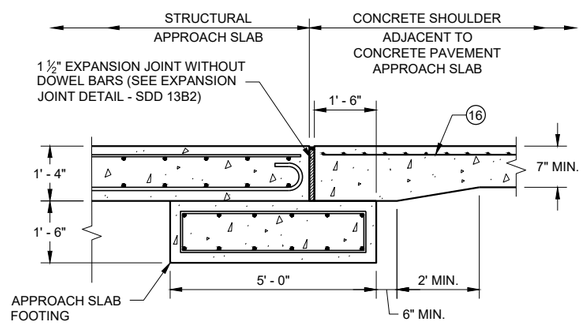

SECTION C - C
JOINT DETAIL FOR BRIDGE WITH STRUCTURAL
APPROACH SLAB AND CONCRETE APPROACH SLAB

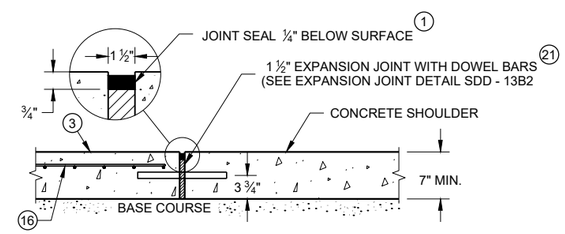

SECTION C - C
JOINT DETAIL FOR BRIDGE APPROACH
WITH CONCRETE SHOULDERS

GENERAL NOTES

DETAILS OF CONSTRUCTION, MATERIALS AND WORKMANSHIP NOT SHOWN ON THIS DRAWING SHALL CONFORM TO THE PERTINENT REQUIREMENTS OF THE STANDARD SPECIFICATIONS AND THE APPLICABLE SPECIAL PROVISIONS.

ALL STEEL REINFORCEMENT SHALL BE EMBEDDED 2 INCHES CLEAR UNLESS OTHERWISE SHOWN OR NOTED.

1. USE A JOINT SEALANT CONFORMING TO STANDARD SPECIFICATION 415.2.6.
2. NO. 4 X 2' - 0" TIE BARS SPACED AT 12" C-C TO BE PLACED BY BRIDGE CONTRACTOR OR DRILLED TIE BARS PLACED AS DIRECTED BY THE ENGINEER.
3. PAVED CONCRETE SHOULDER (SDD 13A03) OR CONCRETE DRAINAGE SLAB.
4. CONCRETE PAVEMENT APPROACH SLAB (SHOWN) OR STRUCTURE APPROACH SLAB AND CONCRETE PAVEMENT APPROACH SLAB. SEE SDD 13B02 AND STRUCTURE PLANS.
5. PAVED CONCRETE SHOULDER (SDD 13A03) OR ASPHALT SHOULDER.
6. CONCRETE CURB AND GUTTER 4-INCH SLOPED 36-INCH TYPE TBT OR TBTT. USE TYPE TBTT CURB WITH NO. 4 X 2' -0" TIE BARS SPACED AT 3' - 0" C-C ONLY WHEN ADJACENT TO CONCRETE PAVEMENTS.
7. PLACE FLUME BEFORE MSG THRIE BEAM TRANSITION POST 1 (SEE SDD 14B45)
8. CENTER FLUME BETWEEN POSTS. 6-INCH MINIMUM SEPARATION FROM OUTSIDE EDGE OF FLUME TO POSTS.
9. MINIMUM REINFORCEMENT SHALL BE 4" X 4" - W3.0 X W3.0 OR NO. 3 BARS LONGITUDINAL AND TRANSVERSE SPACING 12" C -C.
10. SEE ROADWAY PLANS FOR FLUME LOCATION.
11. START CURB AND GUTTER TRANSITION OR END SECTION.
12. DEPRESS FLOW LINE (SEE DETAIL)
13. MEDIUM RIPRAP UNLESS OTHERWISE SPECIFIED.
14. LIMITS OF ADDITIONAL RIPRAP WHEN SPECIAL DITCH IS REQUIRED.
15. GEOTEXTILE TYPE HR.
16. MINIMUM REINFORCEMENT SHALL BE 6" X 6" - W4.0 X W4.0 OR NO. 3 BARS LONGITUDINAL AND TRANSVERSE SPACING 12" C - C.
17. MSG THRIE BEAM TRANSITION POST 1. SEE SDD 14B45 FOR ADDITIONAL CONSTRUCTION DETAILS AND ACCEPTABLE MATERIALS.
18. MAINTAIN WIDTH, THICKNESS AND CROSS SLOPE OF ADJACENT TYPE TBT OR TBTT CURB. SEE NOTE 6 FOR TIE BAR SPACING.
19. ALIGN FACE OF POST BLOCK WITH FLOW LINE.
20. MAINTAIN FLOW LINE AT EDGE OF PAVEMENT/FACE OF BEAM GUARD AS APPLICABLE.
21. DO NOT CONSTRUCT AN EXPANSION JOINT OR INSTALL DOWEL BARS WHEN ABUTTING HMA PAVEMENTS.

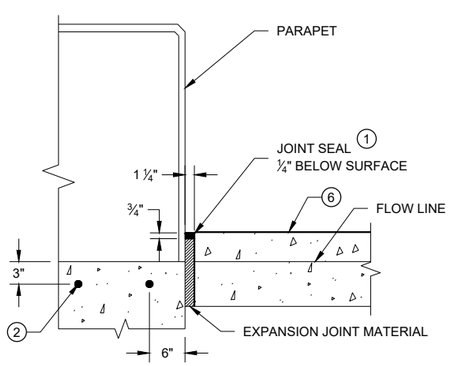

SECTION D - D

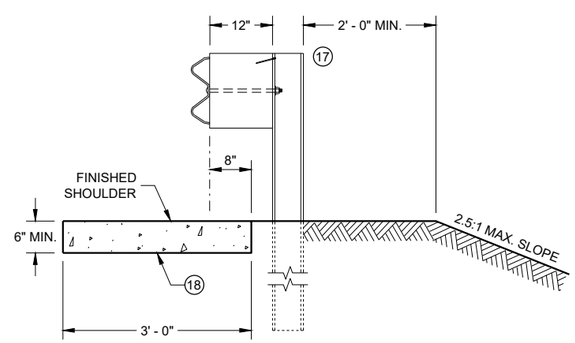

SECTION E - E

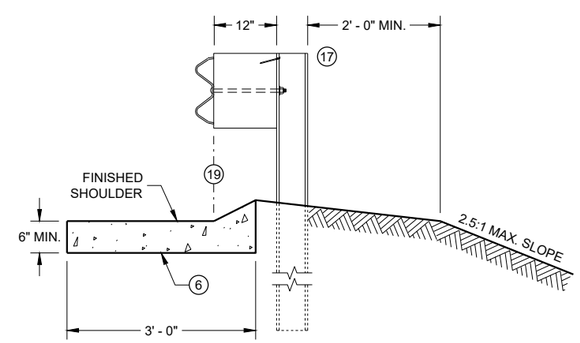

SECTION F - F

CONCRETE SURFACE DRAINS FLUME TYPE AT STRUCTURES

STATE OF WISCONSIN
DEPARTMENT OF TRANSPORTATION

APPROVED
May 2023 — DATE
/S/ Rodney Taylor — ROADWAY STANDARDS DEVE ENGINEER

FHWA

6

SDD 08D02 - 08c

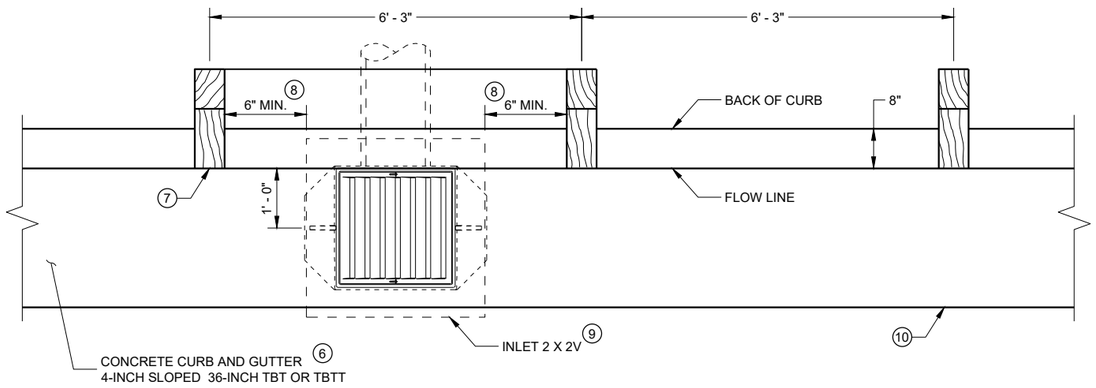

INLET PLAN VIEW

(NOTE: RAIL NOT SHOWN FOR CLARITY)

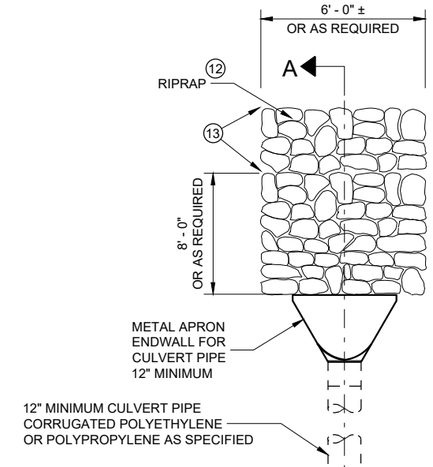

GENERAL NOTES

DETAILS OF CONSTRUCTION, MATERIALS AND WORKMANSHIP NOT SHOWN ON THIS DRAWING SHALL CONFORM TO THE PERTINENT REQUIREMENTS OF THE STANDARD SPECIFICATIONS AND THE APPLICABLE SPECIAL PROVISIONS.

ALL STEEL REINFORCEMENT SHALL BE EMBEDDED 2 INCHES CLEAR UNLESS OTHERWISE SHOWN OR NOTED.

1. USE A JOINT SEALANT CONFORMING TO STANDARD SPECIFICATION 415.2.6.
2. NO. 4 X 2' - 0" TIE BARS SPACED AT 12" C-C TO BE PLACED BY BRIDGE CONTRACTOR OR DRILLED TIE BARS PLACED AS DIRECTED BY THE ENGINEER.
3. PAVED CONCRETE SHOULDER (SDD 13A03) OR CONCRETE DRAINAGE SLAB.
4. CONCRETE PAVEMENT APPROACH SLAB (SHOWN) OR STRUCTURE APPROACH SLAB AND CONCRETE PAVEMENT APPROACH SLAB. SEE SDD 13B02.
5. PAVED CONCRETE SHOULDER (SDD 13A03) OR ASPHALT SHOULDER.
6. CONCRETE CURB AND GUTTER 4-INCH SLOPED 36-INCH TYPE TBT OR TBTT. USE TYPE TBTT CURB WITH NO. 4 X 2' -0" TIE BARS SPACED AT 3' - 0" C-C ONLY WHEN ADJACENT TO CONCRETE PAVEMENTS.
7. PLACE DRAINAGE STRUCTURE BEFORE MSG THRIE BEAM TRANSITION POST 1 (SEE SDD 14B45)
8. CENTER DRAINAGE STRUCTURE BETWEEN POSTS. 6-INCH MINIMUM SEPARATION FROM OUTSIDE WALL OF DRAINAGE STRUCTURE TO POSTS.
9. SEE SDD 08A05 AND 08C07 FOR DETAILS. SEE ROADWAY PLANS FOR LOCATION.
10. START CURB AND GUTTER TRANSITION OR END SECTION.
11. DEPRESS FLOW LINE (SEE DETAIL)
12. MEDIUM RIPRAP UNLESS OTHERWISE SPECIFIED.
13. LIMITS OF ADDITIONAL RIPRAP WHEN SPECIAL DITCH IS REQUIRED.

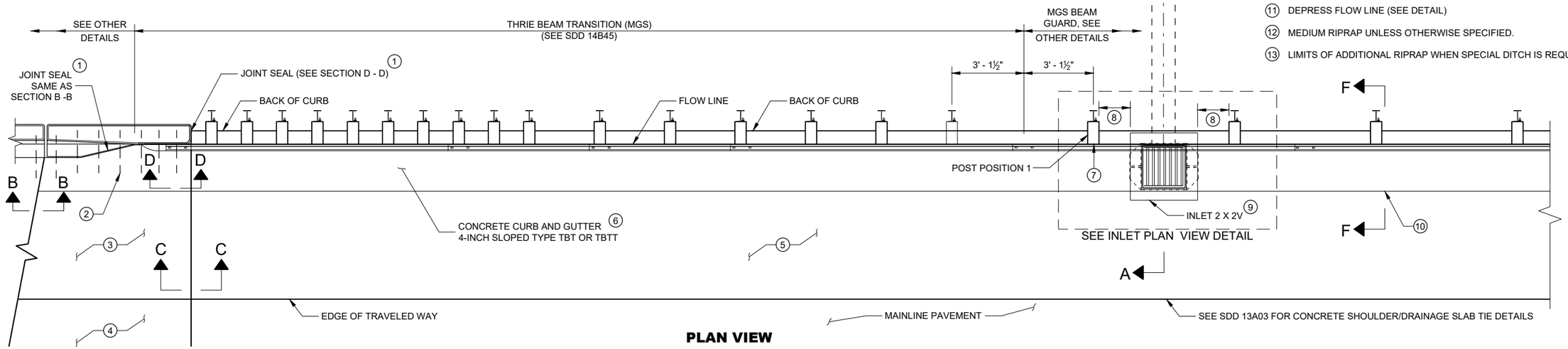

PLAN VIEW

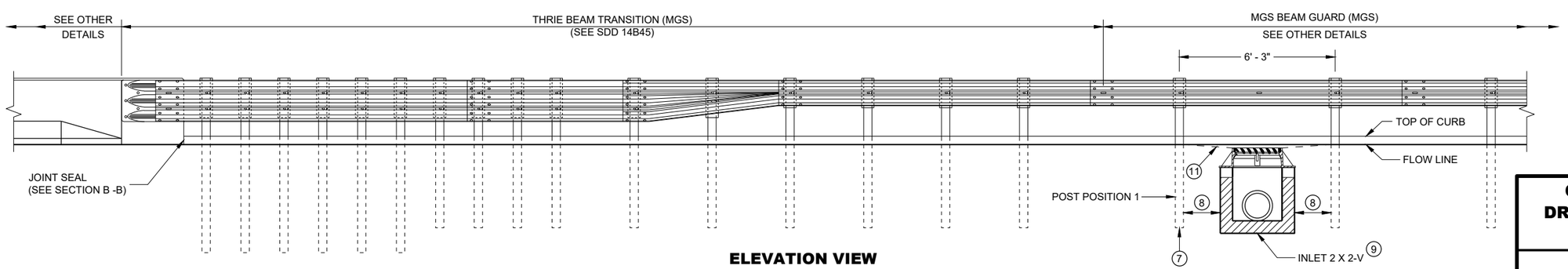

ELEVATION VIEW

CONCRETE SURFACE DRAINS DROP INLET TYPE AT STRUCTURES

STATE OF WISCONSIN
DEPARTMENT OF TRANSPORTA

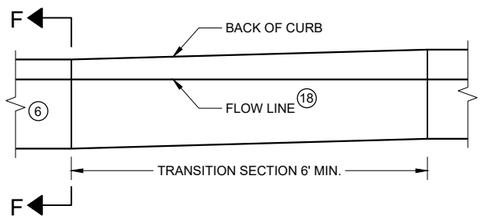

CURB AND GUTTER TRANSITION SECTION CONCRETE CURB AND GUTTER 4-INCH SLOPED 36 INCH TYPE TBT OR TBTT

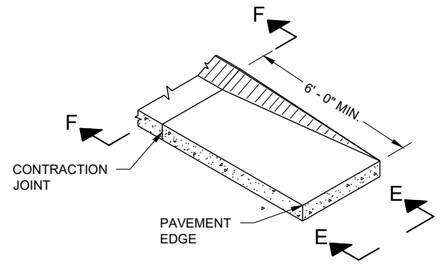

CURB AND GUTTER END SECTION CONCRETE CURB AND GUTTER 4-INCH SLOPED 36 INCH TYPE TBT OR TBTT

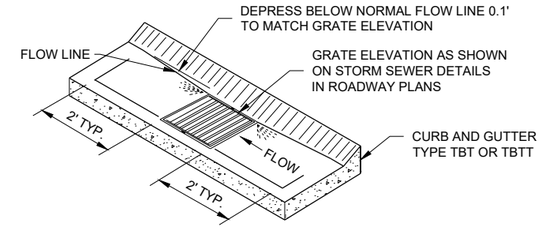

CURB AND GUTTER FLOW LINE DEPRESSION AT INLETS CONCRETE CURB AND GUTTER 4-INCH SLOPED 36 INCH TYPE TBT OR TBTT

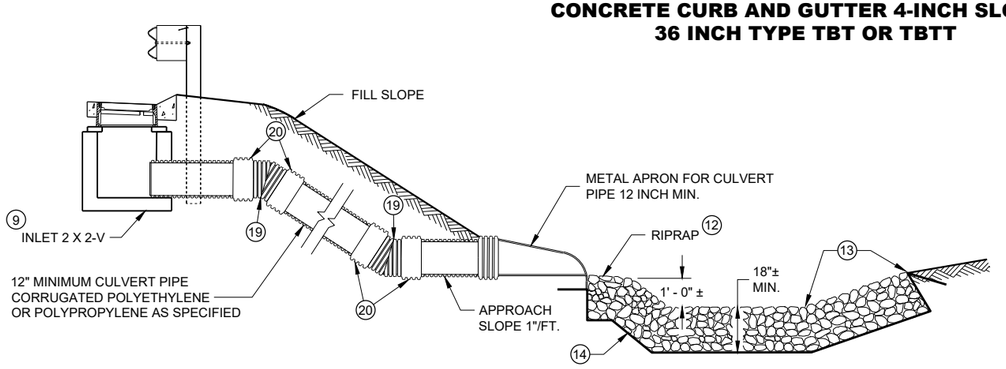

SECTION A - A

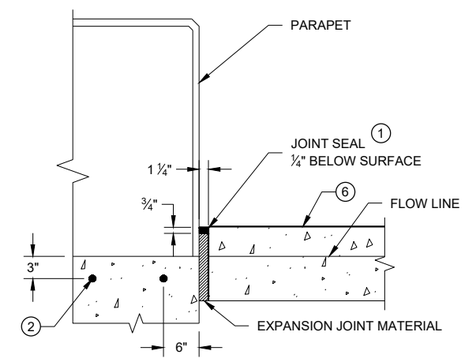

SECTION D - D

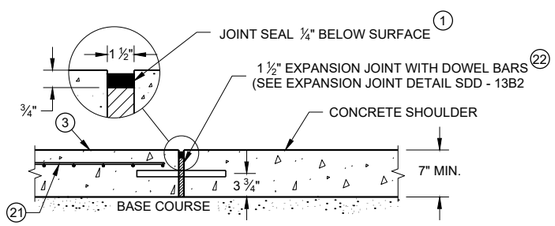

SECTION C - C

JOINT DETAIL FOR BRIDGE APPROACH WITH CONCRETE SHOULDERS

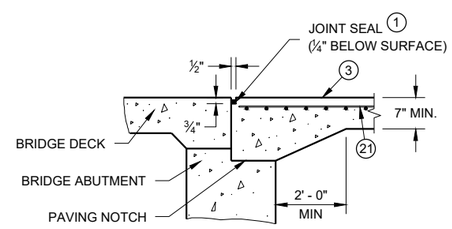

SECTION B-B 4

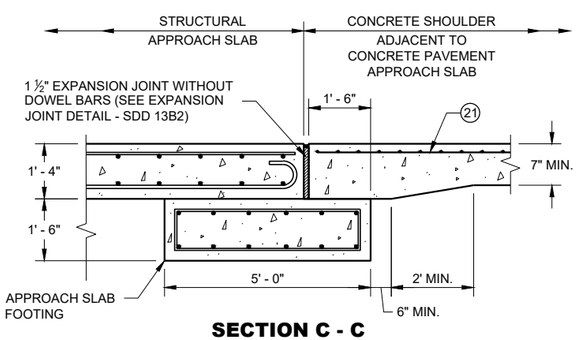

SECTION C - C

JOINT DETAIL FOR BRIDGE WITH STRUCTURAL APPROACH SLAB AND CONCRETE APPROACH SLAB

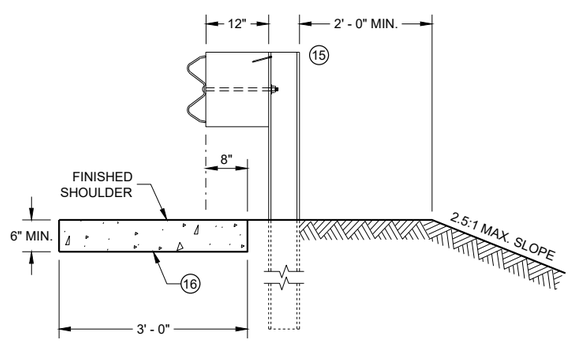

SECTION E - E

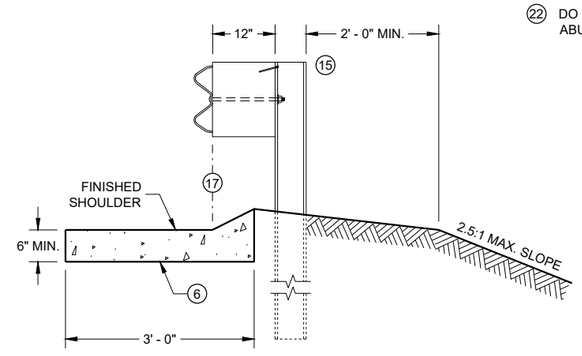

SECTION F - F

GENERAL NOTES

DETAILS OF CONSTRUCTION, MATERIALS AND WORKMANSHIP NOT SHOWN ON THIS DRAWING SHALL CONFORM TO THE PERTINENT REQUIREMENTS OF THE STANDARD SPECIFICATIONS AND THE APPLICABLE SPECIAL PROVISIONS.

ALL STEEL REINFORCEMENT SHALL BE EMBEDDED 2 INCHES CLEAR UNLESS OTHERWISE SHOWN OR NOTED.

1. USE A JOINT SEALANT CONFORMING TO STANDARD SPECIFICATION 415.2.6.
2. NO. 4 X 2' - 0" TIE BARS SPACED AT 12" C-C TO BE PLACED BY BRIDGE CONTRACTOR OR DRILLED TIE BARS PLACED AS DIRECTED BY THE ENGINEER.
3. PAVED CONCRETE SHOULDER (SDD 13A03) OR CONCRETE DRAINAGE SLAB.
4. CONCRETE PAVEMENT APPROACH SLAB (SHOWN) OR STRUCTURE APPROACH SLAB AND CONCRETE PAVEMENT APPROACH SLAB. SEE SDD 13B02 AND STRUCTURE PLANS.
5. PAVED CONCRETE SHOULDER (SDD 13A03) OR ASPHALT SHOULDER.
6. CONCRETE CURB AND GUTTER 4-INCH SLOPED 36-INCH TYPE TBT OR TBTT. USE TYPE TBTT CURB WITH NO. 4 X 2' -0" TIE BARS SPACED AT 3' - 0" C-C ONLY WHEN ADJACENT TO CONCRETE PAVEMENTS.
7. PLACE DRAINAGE STRUCTURE BEFORE MSG THRIE BEAM TRANSITION POST 1 (SEE SDD 14B45)
8. CENTER DRAINAGE STRUCTURE BETWEEN POSTS. 6-INCH MINIMUM SEPARATION FROM OUTSIDE WALL OF DRAINAGE STRUCTURE TO POSTS.
9. SEE SDD 08A05 AND 08C07 FOR DETAILS. SEE ROADWAY PLANS FOR LOCATION.
10. START CURB AND GUTTER TRANSITION OR END SECTION.
11. DEPRESS FLOW LINE (SEE DETAIL)
12. MEDIUM RIPRAP UNLESS OTHERWISE SPECIFIED.
13. LIMITS OF ADDITIONAL RIPRAP WHEN SPECIAL DITCH IS REQUIRED.
14. GEOTEXTILE TYPE HR.
15. MSG THRIE BEAM TRANSITION POST 1. SEE SDD 14B45 FOR ADDITIONAL CONSTRUCTION DETAILS AND ACCEPTABLE MATERIALS.
16. MAINTAIN WIDTH, THICKNESS AND CROSS SLOPE OF ADJACENT TYPE TBT OR TBTT CURB. SEE NOTE 6 FOR TIE BAR SPACING.
17. ALIGN FACE OF POST BLOCK WITH FLOW LINE.
18. MAINTAIN FLOW LINE AT EDGE OF PAVEMENT/FACE OF BEAM GUARD AS APPLICABLE.
19. MANUFACTURER SUPPLIED BEND.
20. MANUFACTURER SUPPLIED EXTERNAL MECHANICAL COUPLING OR A MANUFACTURER RECOMMENDED COUPLING WITH A MASTIC IMPREGNATED GEOTEXTILE WRAP AND MECHANICAL FASTENING BANDS.
21. MINIMUM REINFORCEMENT SHALL BE 6" X 6" - W4.0 X W4.0 OR NO. 3 BARS LONGITUDINAL AND TRANSVERSE SPACING 12" C - C.
22. DO NOT CONSTRUCT AN EXPANSION JOINT OR INSTALL DOWEL BARS WHEN ABUTTING HMA PAVEMENTS.

CONCRETE SURFACE DRAINS DROP INLET TYPE AT STRUCTURES

STATE OF WISCONSIN
DEPARTMENT OF TRANSPORTATION

APPROVED
May 2023 — DATE
/S/ Rodney Taylor — ROADWAY STANDARDS DEVE ENGINEER

FHWA

6

SDD 08D03 - 09b

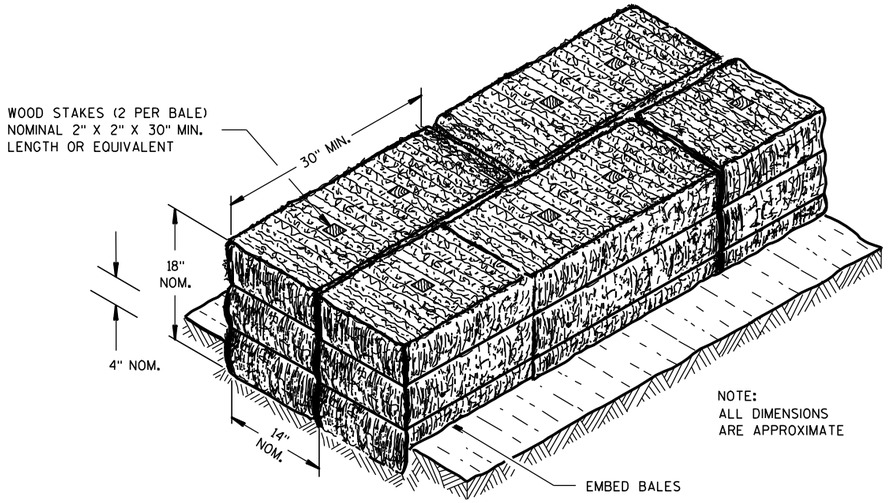

SECTION A-A

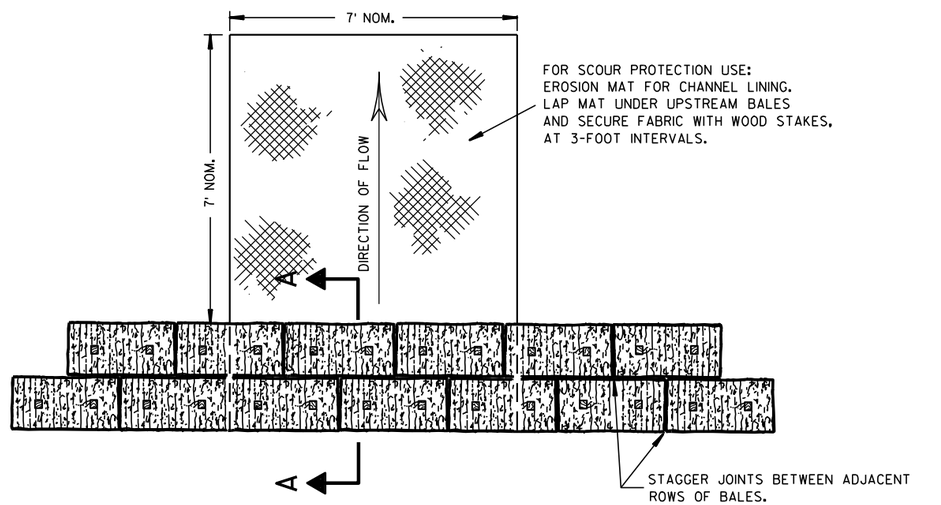

PLAN VIEW

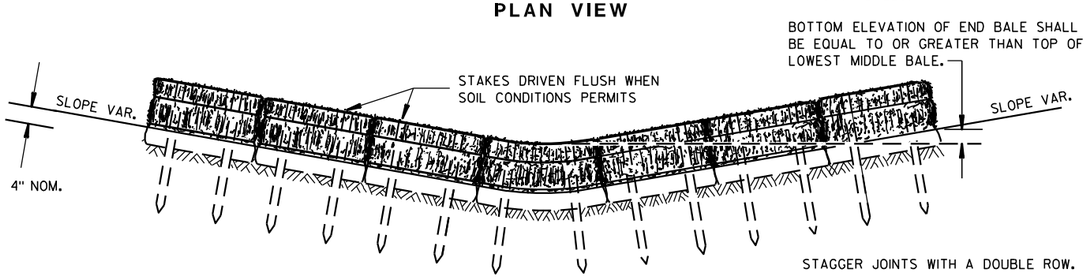

FRONT ELEVATION

TEMPORARY DITCH CHECK USING EROSION BALES ①

GENERAL NOTES

DETAILS OF CONSTRUCTION, MATERIALS AND WORKMANSHIP NOT SHOWN ON THIS DRAWING SHALL CONFORM TO THE PERTINENT REQUIREMENTS OF THE STANDARD SPECIFICATIONS AND THE APPLICABLE SPECIAL PROVISIONS.

① TEMPORARY DITCH CHECKS EITHER EROSION BALES OR MANUFACTURED SHALL BE PAID FOR UNDER THE BID ITEM OF TEMPORARY DITCH CHECK. THE DEPARTMENT WILL NOT PAY FOR TEMPORARY DITCH CHECKS CONSTRUCTED OF A SINGLE ROW OF EROSION BALES.

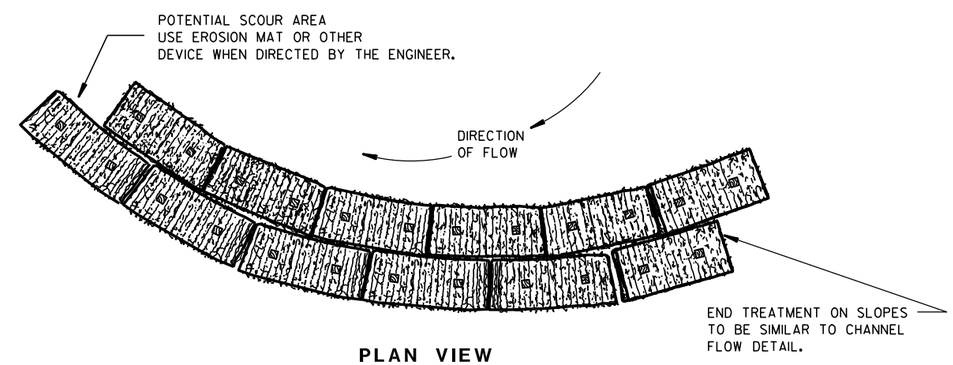

PLAN VIEW

WHEN ALTERING THE DIRECTION OF FLOW

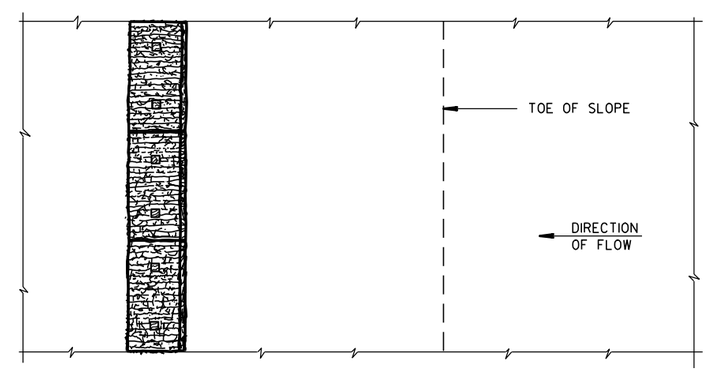

PLAN VIEW

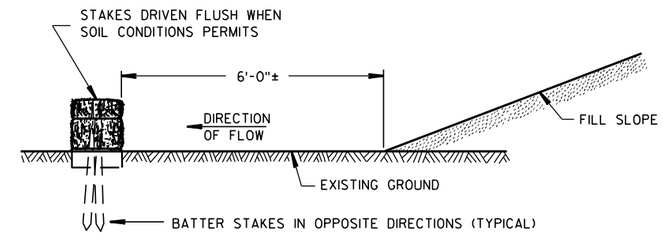

FRONT ELEVATION

WHEN EXISTING GROUND SLOPES AWAY FROM FILL SLOPE

EROSION BALES FOR SHEET FLOW

TYPICAL INSTALLATIONS OF EROSION BALES / TEMPORARY DITCH CHECKS

STATE OF WISCONSIN
DEPARTMENT OF TRANSPORTATION

APPROVED
6/04/02 — DATE
/S/ Beth Cann — CHIEF ROADWAY DEVELOPMENT ENGINEER
FHWA

6

6

S.D.D. 8 E 8-3

S.D.D. 8 E 8-3

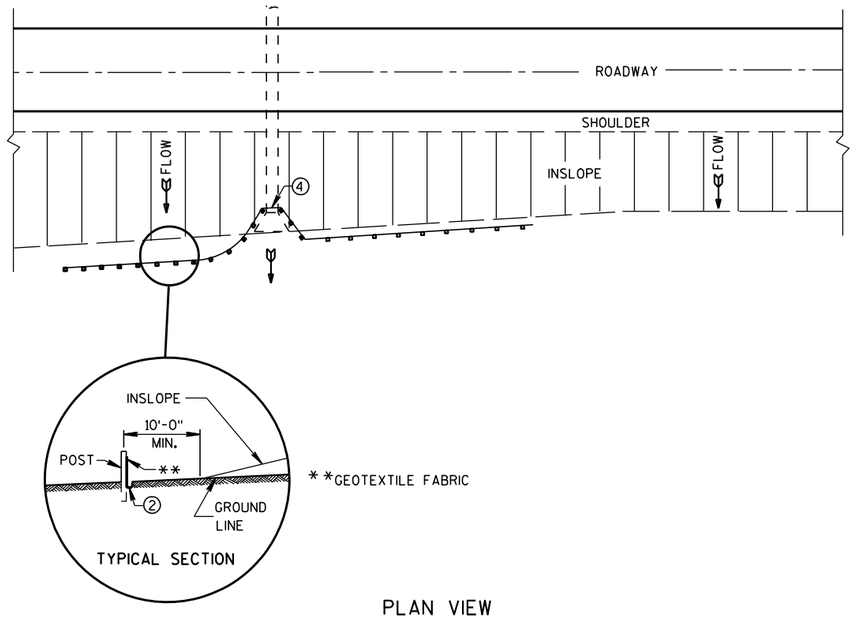

PLAN VIEW

TYPICAL APPLICATION OF SILT FENCE

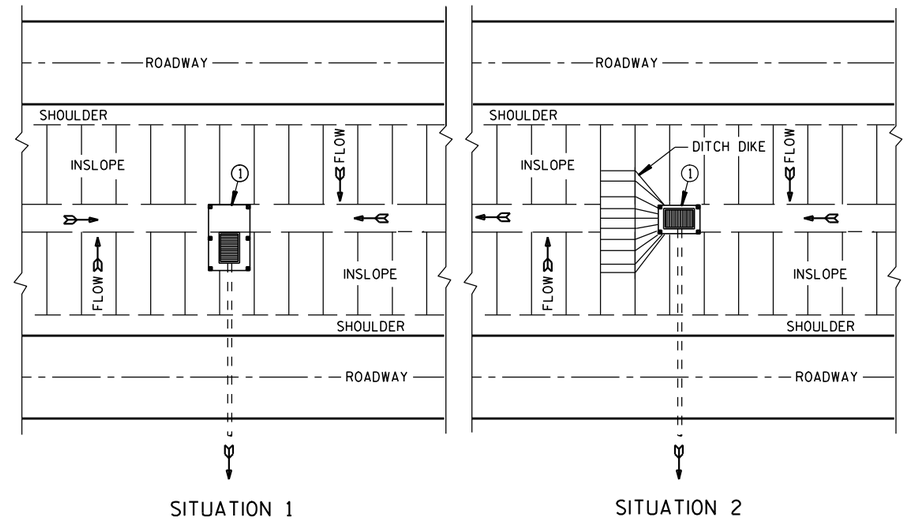

PLAN VIEW

SILT FENCE AT MEDIAN SURFACE DRAINS

GENERAL NOTES

DETAILS OF CONSTRUCTION NOT SHOWN ON THIS DRAWING SHALL CONFORM TO THE PERTINENT REQUIREMENTS OF THE STANDARD SPECIFICATIONS AND APPLICABLE SPECIAL PROVISIONS.

① HORIZONTAL BRACE REQUIRED WITH 2" X 4" WOODEN FRAME OR EQUIVALENT AT TOP OF POSTS.

② FOR MANUAL INSTALLATIONS THE TRENCH SHALL BE A MINIMUM OF 4" WIDE & 6" DEEP TO BURY AND ANCHOR THE GEOTEXTILE FABRIC. FOLD MATERIAL TO FIT TRENCH AND BACKFILL & COMPACT TRENCH WITH EXCAVATED SOIL.

③ WOOD POSTS SHALL BE A MINIMUM SIZE OF 1⅛" X 1⅛" OF OAK OR HICKORY.

④ SILT FENCE TO EXTEND ACROSS THE TOP OF THE PIPE.

⑤ CONSTRUCT SILT FENCE FROM A CONTINUOUS ROLL IF POSSIBLE BY CUTTING LENGTHS TO AVOID JOINTS. IF A JOINT IS NECESSARY USE ONE OF THE FOLLOWING TWO METHODS; A) OVERLAP THE END POSTS AND TWIST, OR ROTATE, AT LEAST 180 DEGREES. B) HOOK THE END OF EACH SILT FENCE LENGTH.

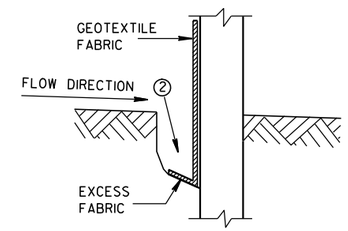

TRENCH DETAIL

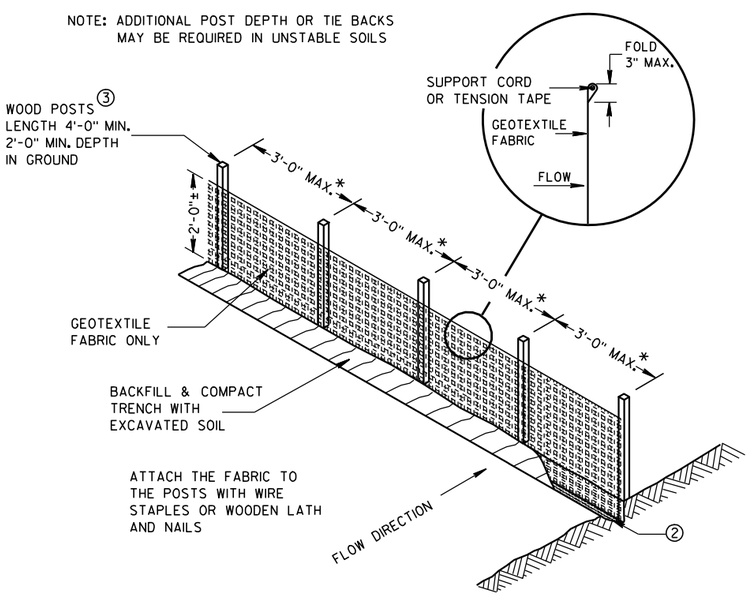

*NOTE: 8'-0" POST SPACING ALLOWED IF A WOVEN GEOTEXTILE FABRIC IS USED.

SILT FENCE

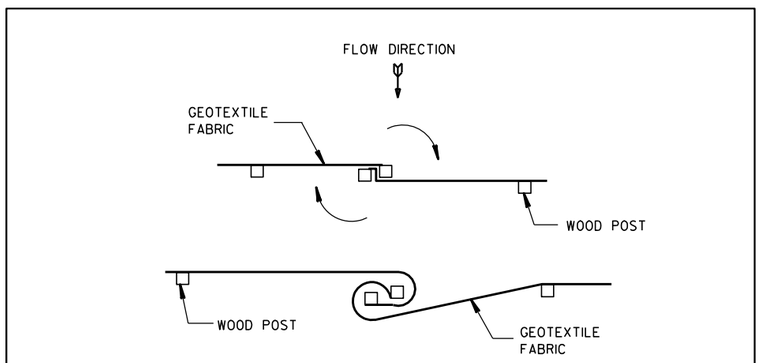

TWIST METHOD

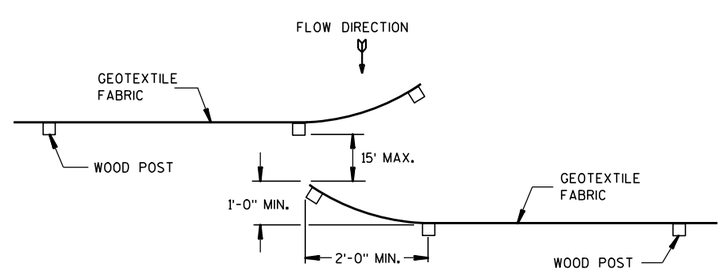

HOOK METHOD

JOINING TWO LENGTHS OF SILT FENCE ⑤

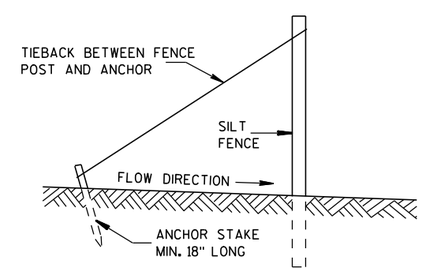

SILT FENCE TIE BACK

(WHEN REQUIRED BY THE ENGINEER)

SILT FENCE

STATE OF WISCONSIN
DEPARTMENT OF TRANSPORTATION

APPROVED
4-29-05 /S/ Beth Cann-
DATE CHIEF ROADWAY DEVELOP ENGINEER
FHWA

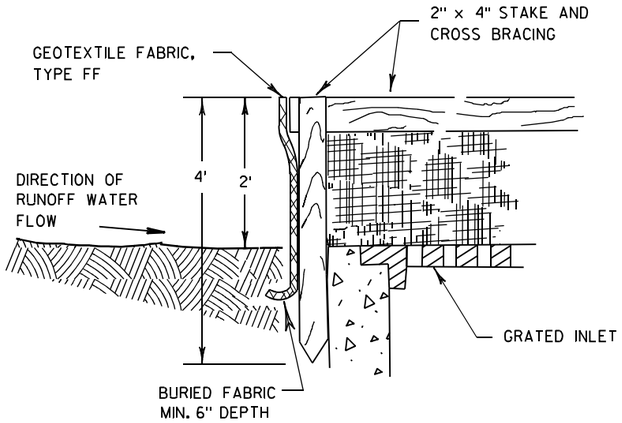

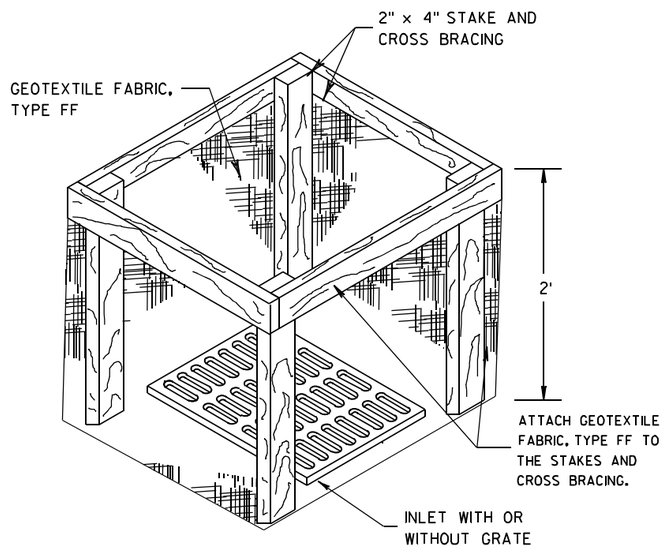

INLET PROTECTION, TYPE A

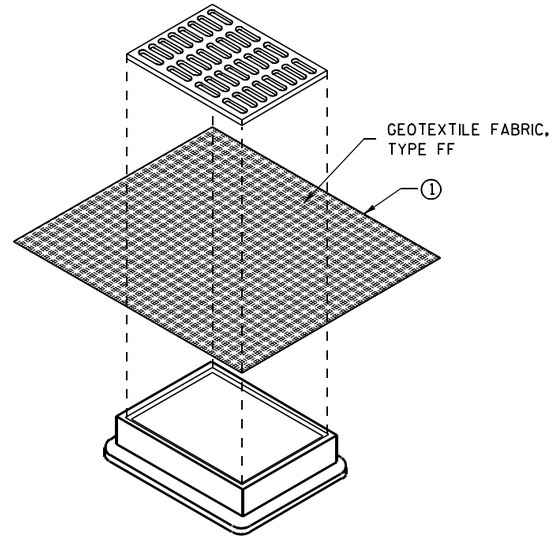

INLET PROTECTION, TYPE B
(WITHOUT CURB BOX)

(CAN BE INSTALLED IN ANY INLET WITHOUT A CURB BOX)

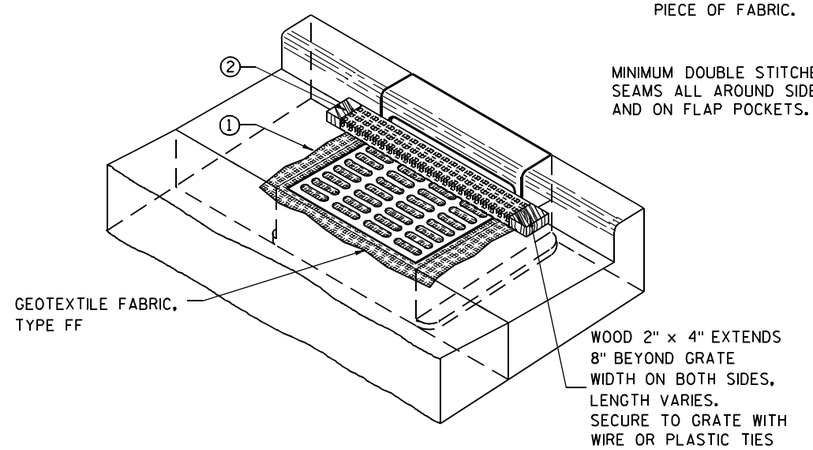

INLET PROTECTION, TYPE C (WITH CURB BOX)

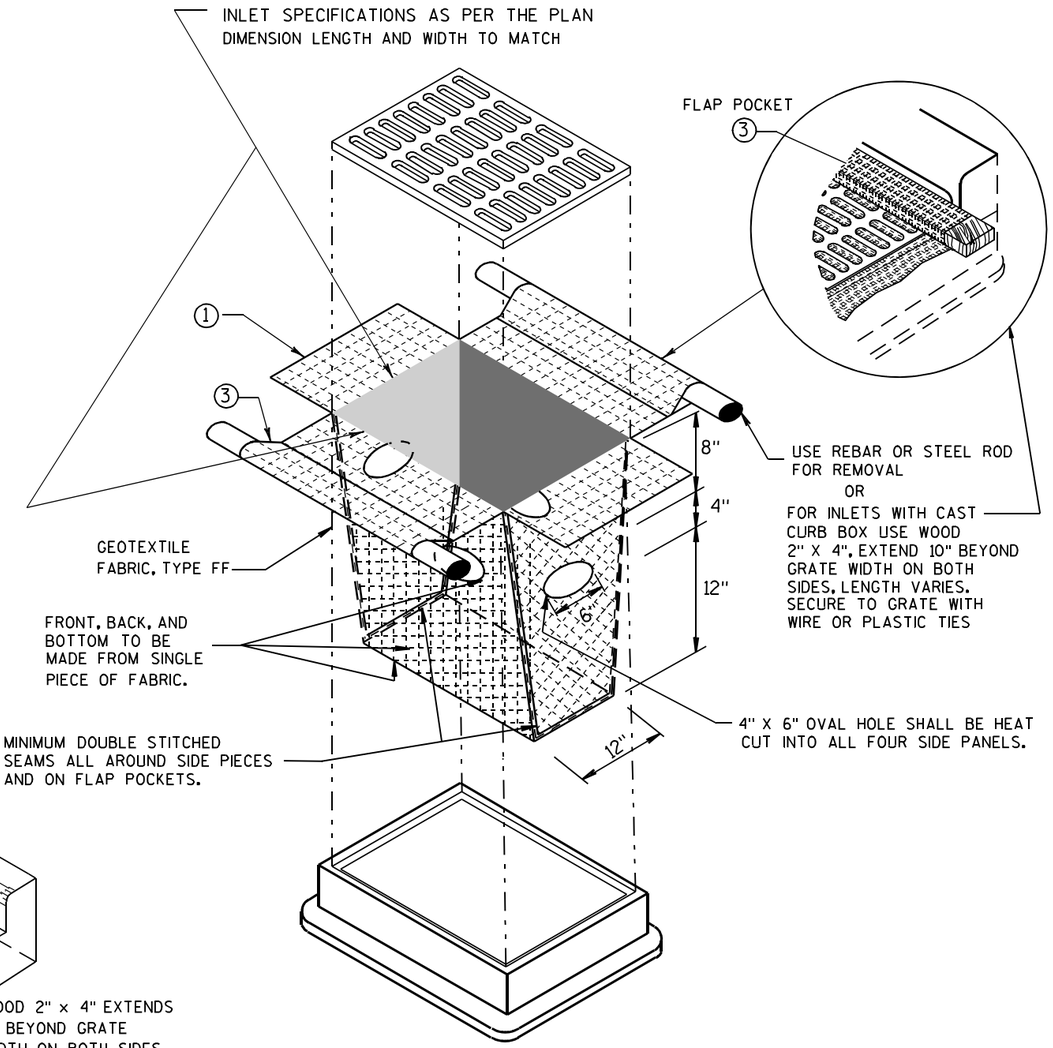

INLET PROTECTION, TYPE D

(CAN BE INSTALLED IN ANY INLET TYPE WITH
OR WITHOUT A CURB BOX AS PER NOTE ②)

GENERAL NOTES

INLET PROTECTION DEVICES SHALL BE MAINTAINED OR REPLACED AT THE DIRECTION OF THE ENGINEER.

MANUFACTURED ALTERNATIVES APPROVED AND LISTED ON THE DEPARTMENT'S EROSION CONTROL PRODUCT ACCEPTABILITY LIST MAY BE SUBSTITUTED.

WHEN REMOVING OR MAINTAINING INLET PROTECTION, CARE SHALL BE TAKEN SO THAT THE SEDIMENT TRAPPED ON THE GEOTEXTILE FABRIC DOES NOT FALL INTO THE INLET. ANY MATERIAL FALLING INTO THE INLET SHALL BE REMOVED IMMEDIATELY.

① FINISHED SIZE, INCLUDING FLAP POCKETS WHERE REQUIRED, SHALL EXTEND A MINIMUM OF 10" AROUND THE PERIMETER TO FACILITATE MAINTENANCE OR REMOVAL.

② FOR INLET PROTECTION, TYPE C (WITH CURB BOX), AN ADDITIONAL 18" OF FABRIC IS WRAPPED AROUND THE WOOD AND SECURED WITH STAPLES. THE WOOD SHALL NOT BLOCK THE ENTIRE HEIGHT OF THE CURB BOX OPENING.

③ FLAP POCKETS SHALL BE LARGE ENOUGH TO ACCEPT WOOD 2X4.

INSTALLATION NOTES

TYPE B & C

TRIM EXCESS FABRIC IN THE FLOW LINE TO WITHIN 3" OF THE GRATE.

THE CONTRACTOR SHALL DEMONSTRATE A METHOD OF MAINTENANCE, USING A SEWN FLAP, HAND HOLDS OR OTHER METHOD TO PREVENT ACCUMULATED SEDIMENT FROM ENTERING THE INLET.

TYPE D

DO NOT INSTALL INLET PROTECTION TYPE D IN INLETS SHALLOWER THAN 30", MEASURED FROM THE BOTTOM OF THE INLET TO THE TOP OF THE GRATE.

TRIM EXCESS FABRIC IN THE FLOW LINE TO WITHIN 3" OF THE GRATE.

THE INSTALLED BAG SHALL HAVE A MINIMUM SIDE CLEARANCE, BETWEEN THE INLET WALLS AND THE BAG, MEASURED AT THE BOTTOM OF THE OVERFLOW HOLES, OF 3". WHERE NECESSARY THE CONTRACTOR SHALL CINCH THE BAG, USING PLASTIC ZIP TIES, TO ACHIEVE THE 3" CLEARANCE. THE TIES SHALL BE PLACED AT A MAXIMUM OF 4" FROM THE BOTTOM OF THE BAG.

INLET PROTECTION
TYPE A, B, C, AND D

STATE OF WISCONSIN
DEPARTMENT OF TRANSPORTATION

APPROVED
10/16/02 — DATE
/S/ Beth Cannestra
CHIEF ROADWAY DEVELOPMENT ENGINEER
FHWA

6

S.D.D. 8 E 10-2

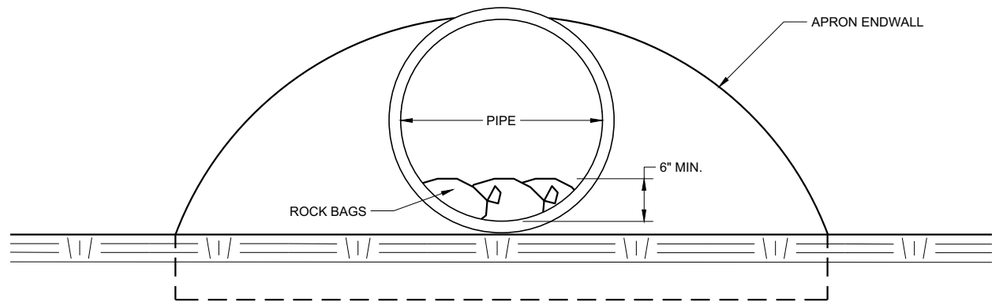

END VIEW

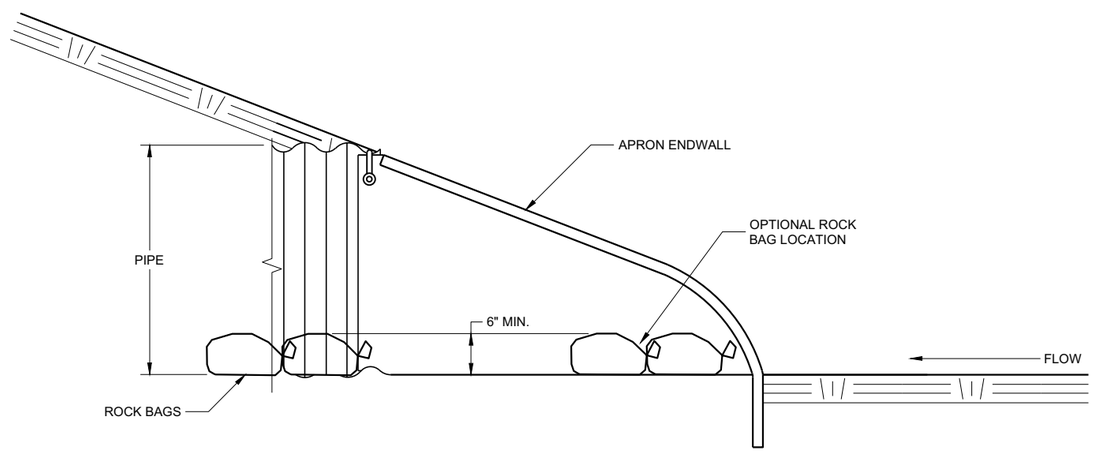

SIDE VIEW

CULVERT PIPE CHECK

(INSTALL ON INLET END ONLY)

CULVERT PIPE CHECK
STATE OF WISCONSIN DEPARTMENT OF TRANSPORTATION
APPROVED May 2019 — DATE /S/ Daniel Schave — EROSION CONTROL ENGI FHWA

6

6

SDD 08E15 - 01

SDD 08E15 - 01

METAL APRON ENDWALLS

PIPE DIA. (IN.)	MIN. THICK. (Inches) STEEL	MIN. THICK. (Inches) ALUM.	DIMENSIONS (Inches) A (±1")	B (MAX.)	H (±1")	L (±1 1/2")	L1 ①	L2 ①	W (±2")	APPROX. SLOPE	BODY
12	.064	.060	6	6	6	21	12	17 1/2	24	2 1/2 to 1	1 Pc.
15	.064	.060	7	8	6	26	14	21 3/4	30	2 1/2 to 1	1 Pc.
18	.064	.060	8	10	6	31	15	28 1/4	36	2 1/2 to 1	1 Pc.
21	.064	.060	9	12	6	36	18	29 5/8	42	2 1/2 to 1	1 Pc.
24	.064	.075	10	13	6	41	18	37 1/4	48	2 1/2 to 1	1 Pc.
30	.079	.075	12	16	8	51	18	52 1/4	60	2 1/2 to 1	1 Pc.
36	.079	.105	14	19	9	60	24	59 3/4	72	2 1/2 to 1	2 Pc.
42	.109	.105	16	22	11	69	24	75 5/8	84	2 1/2 to 1	2 Pc.
48	.109	.105	18	27	12	78	24	81	90	2 1/4 to 1	3 Pc.
54	.109	.105	18	30	12	84	30	85 1/2	102	2 1/4 to 1	3 Pc.
60	.109×	.105×	18	33	12	87	—	—	114	2 to 1	3 Pc.
66	.109×	.105×	18	36	12	87	—	—	120	2 to 1	3 Pc.
72	.109×	.105×	18	39	12	87	—	—	126	2 to 1	3 Pc.
78	.109×	.105×	18	42	12	87	—	—	132	1 1/2 to 1	3 Pc.
84	.109×	.105×	18	45	12	87	—	—	138	1 1/2 to 1	3 Pc.
90	.109×	.105×	18	37	12	87	—	—	144	1 1/2 to 1	3 Pc.
96	.109×	.105×	18	35	12	87	—	—	150	1 1/2 to 1	3 Pc.

× EXCEPT CENTER PANEL
SEE GENERAL NOTES

REINFORCED CONCRETE APRON ENDWALLS

PIPE DIA. (IN.)	DIMENSIONS (Inches) T	A	B	C	D	E	G	APPROX. SLOPE
12	2	4	24	48 7/8	72 7/8	24	2	3 to 1
15	2 1/4	6	27	46	73	30	2 1/4	3 to 1
18	2 1/2	9	27	46	73	36	2 1/2	3 to 1
21	2 3/4	9	36	37 1/2	73 1/2	42	2 3/4	3 to 1
24	3	9 1/2	43 1/2	30	73 1/2	48	3	3 to 1
27	3 1/4	10 1/2	49 1/2	24	73 1/2	54	3 1/4	3 to 1
30	3 1/2	12	54	19 3/4	73 1/2	60	3 1/2	3 to 1
36	4	15	63	34 3/4	97 3/4	72	4	3 to 1
42	4 1/2	21	63	35	98	78	4 1/2	3 to 1
48	5	24	72	26	98	84	5	3 to 1
54	5 1/2	27	65	*33 1/4-**35	*98 1/4-**100	90	5 1/2	2 2/5 to 1
60	6	*30-**35	60	39	99	96	5	2 to 1
66	6 1/2	*24-**30	*72-**78	*21-**27	99	102	5 1/2	2 to 1
72	7	*24-**36	78	21	99	108	6	2 to 1
78	7 1/2	*24-**36	78	21	99	114	6 1/2	2 to 1
84	8	36	90 1/2	21	111 1/2	120	6 1/2	1 1/2 to 1
90	8 1/2	41	87 1/2	24	111 1/2	132	6 1/2	1 1/2 to 1

*MINIMUM
**MAXIMUM

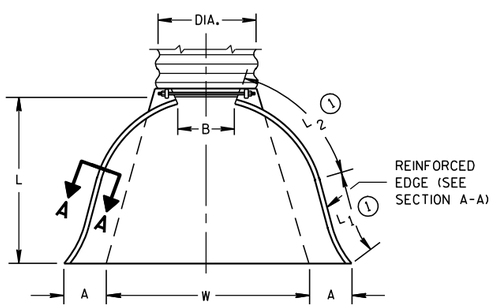

PLAN VIEW

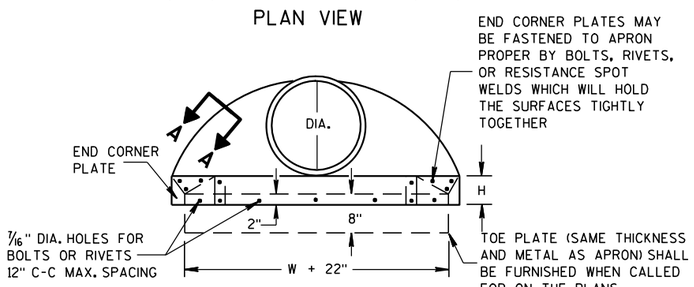

END VIEW

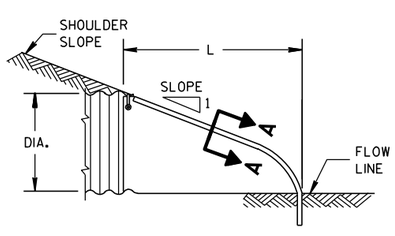

SIDE ELEVATION

METAL ENDWALLS

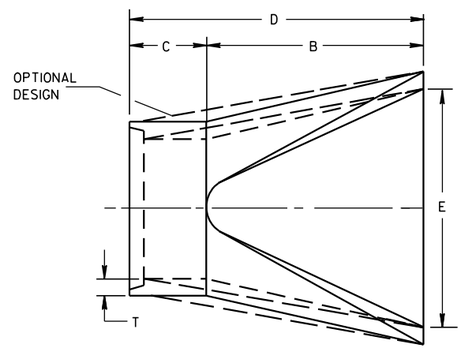

PLAN

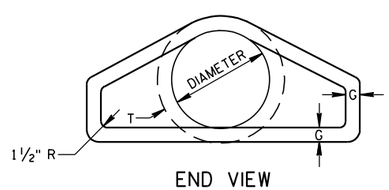

END VIEW

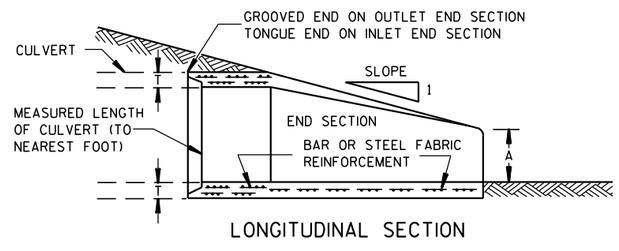

LONGITUDINAL SECTION

CONCRETE ENDWALLS

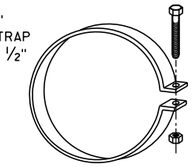

ALTERNATE FOR TYPE 1 CONNECTION

END SECTION CONNECTOR STRAP

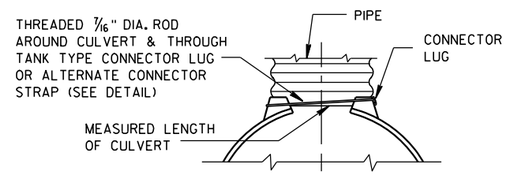

TYPE 1
FOR 12" THRU 24" CORR. PIPE

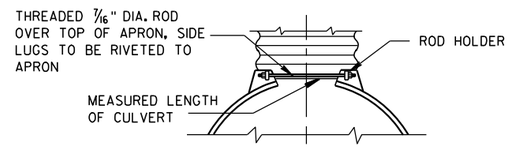

TYPE 2
FOR 30" THRU 96" CORR. PIPE

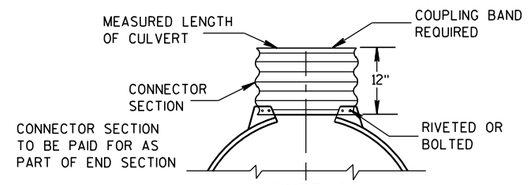

TYPE 3
FOR 42" THRU 96" CORR. PIPE

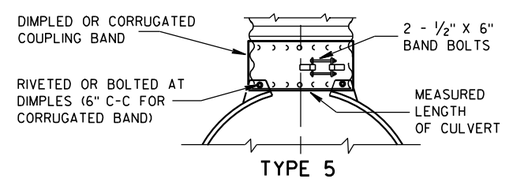

TYPE 5
ALTERNATE FOR:
ALL SIZES CORRUGATED CIRCULAR PIPE

NOTE: DIMPLED BAND FITS OVER OUTSIDE OF ENDWALL, AND CORRUGATED BAND FITS INSIDE ENDWALL. DIMPLED BAND MAY BE USED WITH HELICALLY CORRUGATED PIPE.

FOR CIRCUMFERENTIALLY CORRUGATED PIPE USE ENDWALL CONNECTION DETAILS 1, 2, 3 OR 5 AS APPLICABLE.

FOR HELICALLY CORRUGATED PIPE USE ENDWALL CONNECTION DETAILS 1, 2 OR 5.

FOR HELICALLY CORRUGATED PIPES WITH TWO CIRCUMFERENTIAL CORRUGATIONS AT EACH END USE ENDWALL CONNECTION DETAILS 1, 2 OR 3.

CONNECTION DETAILS

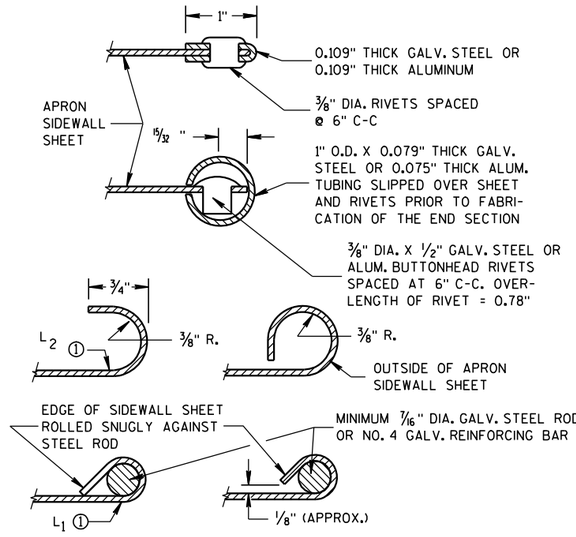

SECTION A-A

GENERAL NOTES

DETAILS OF CONSTRUCTION, MATERIALS AND WORKMANSHIP NOT SHOWN ON THIS DRAWING SHALL CONFORM TO THE PERTINENT REQUIREMENTS OF THE STANDARD SPECIFICATIONS AND THE APPLICABLE SPECIAL PROVISIONS.

CONCRETE CULVERT ENDWALLS MAY NOT BE USED WITH GALVANIZED STEEL OR ALUMINUM CULVERT PIPE OR VISE VERSA. GALVANIZED STEEL OR ALUMINUM ENDWALLS SHALL NORMALLY BE INSTALLED ON CULVERT PIPE OF THE SAME METAL.

ALL THREE PIECE STEEL APRON ENDWALLS FOR 60" DIAMETER PIPE AND LARGER SHALL HAVE 0.109" SIDES AND 0.138" CENTER PANELS. ALL THREE PIECE ALUMINUM APRON ENDWALLS FOR 60" DIAMETER PIPE AND LARGER SHALL HAVE 0.105" SIDES AND 0.134" CENTER PANELS. THE WIDTH OF CENTER PANELS SHALL BE GREATER THAN 20 PERCENT OF THE PIPE PERIMETER.

LAP SEAMS SHALL BE TIGHTLY JOINED BY GALVANIZED RIVETS OR BOLTS FOR STEEL UNITS AND ALUMINUM RIVETS AND BOLTS FOR ALUMINUM UNITS. FOR THE 60" THROUGH 96" DIAMETER APRON ENDWALL SIZES, THE REINFORCED EDGES AND CENTER PANEL SEAMS SHALL BE FURTHER REINFORCED WITH GALVANIZED STEEL OR ALUMINUM STIFFENER ANGLES. THE ANGLES SHALL BE ATTACHED BY GALVANIZED NUTS AND BOLTS FOR STEEL UNITS AND ALUMINUM NUTS AND BOLTS FOR ALUMINUM UNITS.

WHERE TWO OR MORE PIPES WITH APRON ENDWALLS ARE LAID ADJACENT TO EACH OTHER, THEY SHALL BE SEPARATED BY A DISTANCE SUFFICIENT TO PROVIDE A MINIMUM CLEARANCE OF 6 INCHES BETWEEN APRON ENDWALLS.

① FOR PIPE SIZES UP TO 60" DIAMETER, A 180° ROLLED EDGE MAY BE USED INSTEAD OF STEEL ROD REINFORCEMENT. SEE SECTION A-A.

APRON ENDWALLS FOR CULVERT PIPE

STATE OF WISCONSIN
DEPARTMENT OF TRANSPORTATION

APPROVED
11/30/94 — DATE
/S/ Rory L. Rhinesmith — CHIEF ROADWAY DEVELOPMENT ENGINEER
FHWA

6
S.D.D. 8 F 1-11

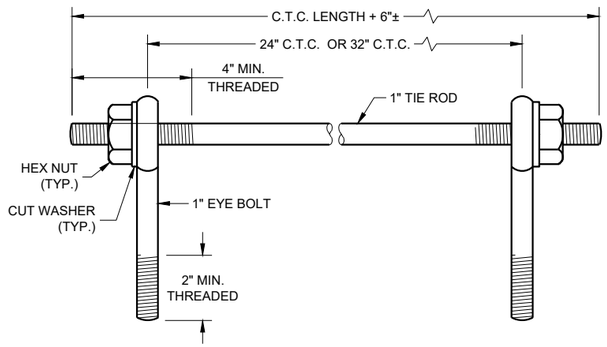

EYE BOLTS AND TIE ROD

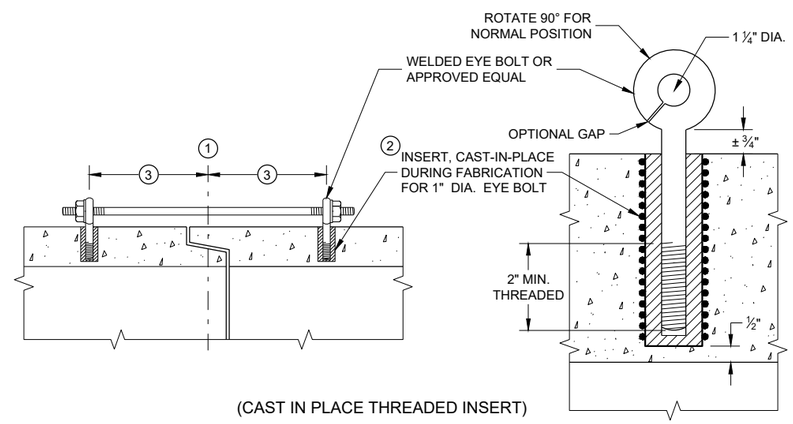

(CAST IN PLACE THREADED INSERT)

LONGITUDINAL SECTIONS

EYE BOLT AND TIE ROD ASSEMBLY (ALTERNATE NO. 1)

GENERAL NOTES

DETAILS OF CONSTRUCTION, MATERIALS, AND WORKMANSHIP NOT SHOWN ON THIS DRAWING SHALL CONFORM TO THE PERTINENT REQUIREMENTS OF THE STANDARD SPECIFICATIONS AND APPLICABLE SPECIAL PROVISIONS.

CONCRETE CULVERT AND STORM SEWER PIPE SHALL BE TIED TOGETHER IN THE MANNER ILLUSTRATED BY THIS DETAIL AT LOCATIONS DESIGNATED IN THE STANDARD SPECIFICATIONS AND THE PLAN. THE CONTRACTOR MAY USE EITHER ALTERNATE 1, 2 OR 3 FOR DRAINAGE STRUCTURES. ONLY ALTERNATE 1 AND 3 MAY BE USED FOR CATTLE PASSES, UNLESS OTHERWISE STATED IN THE CONTRACT. THE MATERIALS, FABRICATION AND WORK NECESSARY TO TIE THE PIPE BY THIS DETAIL WILL BE CONSIDERED INCIDENTAL TO THE PIPE AND APRON ENDWALLS IF REQUIRED.

DETAILED DRAWINGS FOR PROPOSED ALTERNATE DESIGNS FOR JOINT TIES SHALL BE SUBMITTED TO THE ENGINEER FOR APPROVAL.

JOINT TIES TO BE HOT-DIP GALVANIZED PER ASTM A 153.

1. CENTER LINE OF TONGUE AND GROOVE OR BELL AND SPIGOT JOINTS.
2. THE INSIDE OF THE THREADED INSERTS SHALL BE CLEAN TO ALLOW THE INSERTION OF THREADED EYE BOLTS.
3. HOLES SHALL BE CAST-IN-PLACE OR DRILLED PER THE APPLICABLE DETAIL, AND EQUAL DISTANCE FROM THE CENTERLINE OF THE JOINT.
4. BOLT PROJECTION INSIDE OF PIPE SHALL NOT EXCEED 2 INCHES.
5. OPENING TO BE ROD DIAMETER PLUS 1 INCH.
6. LENGTH ADEQUATE TO EXTEND TO WITHIN ½ INCH OF THE INNER SURFACE OF THE PIPE.
7. EYE BOLT LENGTH DETERMINED BY WALL THICKNESS, BELL THICKNESS AND BOLT PROJECTION INSIDE PIPE.

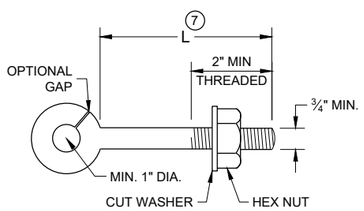

EYE BOLT 7

NOTE: TWO EYE BOLTS MAY BE USED WITH A 30" OR 38" LONG THREADED ROD IN LIEU OF THE 90° BENT TIE ROD.

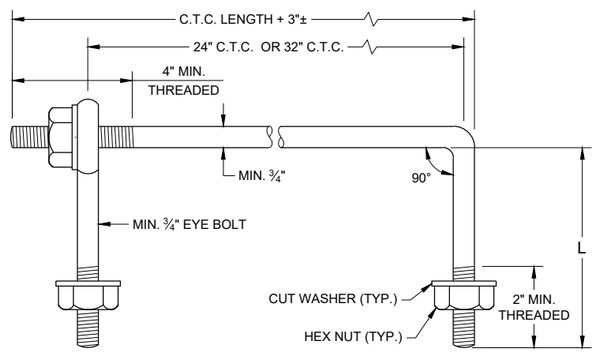

EYE BOLT AND TIE ROD

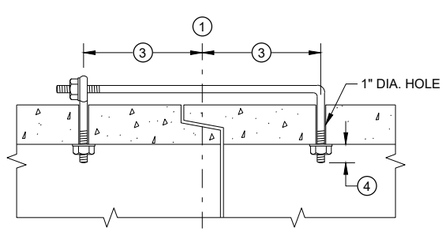

(TONGUE AND GROOVE PIPE)

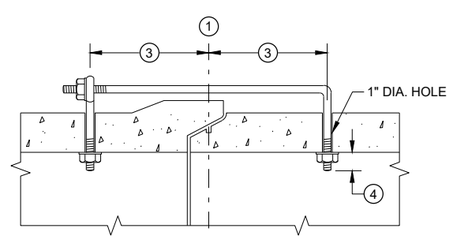

(MODIFIED BELL PIPE)

LONGITUDINAL SECTION

(JOINT TIES FOR 18" TO 66" DIA. CONCRETE PIPE)

EYE BOLT AND TIE ROD ASSEMBLY (ALTERNATE NO. 2)

ADJUSTABLE TIE ROD TABLE

PIPE DIAMETER	TIE ROD DIAMETER	D	L_1	N
12 - 60	⅝	⅝	5	½
66 - 84	¾	¾	5	½
90 - 144	1	1	7	1 7/16

DIMENSIONS SHOWN ARE IN INCHES

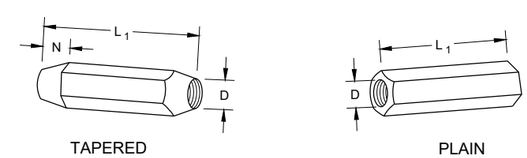

TAPERED PLAIN

RIGHT AND LEFT THREADS

SLEEVE NUTS

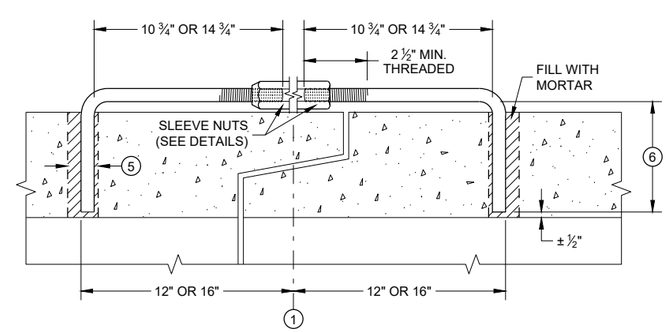

LONGITUDINAL SECTION

ADJUSTABLE TIE ROD (ALTERNATE NO. 3)

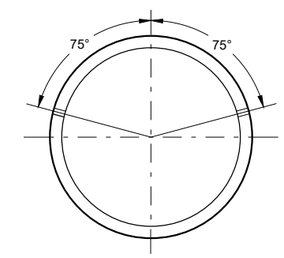

PLACEMENT OF (2) CAST-IN-PLACE INSERTS OR HOLES DURING FABRICATION FOR PIPE SECTIONS REQUIRING TIE RODS

TRANSVERSE SECTION

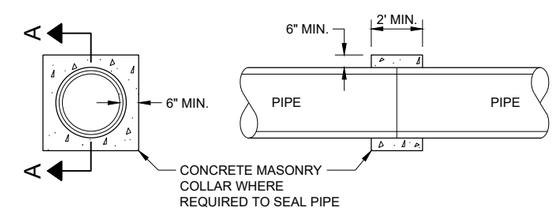

SECTION A - A

CONCRETE COLLAR DETAIL

JOINT TIES FOR CONCRETE PIPE AND CONCRETE COLLAR DETAIL

STATE OF WISCONSIN
DEPARTMENT OF TRANSPORTATION

APPROVED
November 2021 — DATE
/S/ Rodney Taylor — ROADWAY STANDARDS DEVE ENGINEER
FHWA

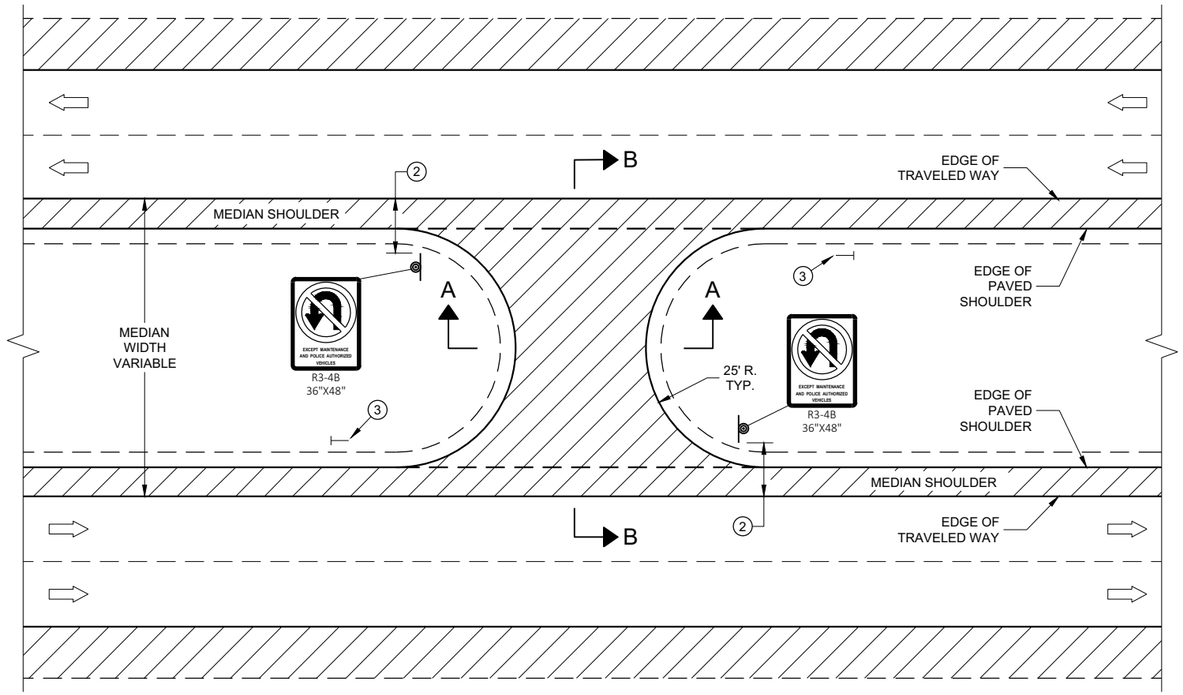

PLAN VIEW

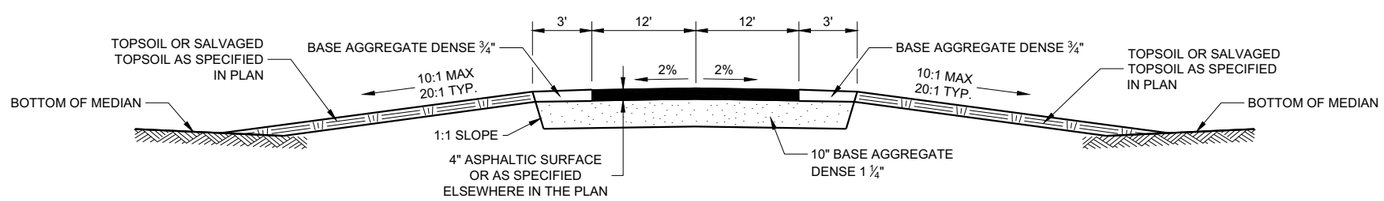

SECTION A-A

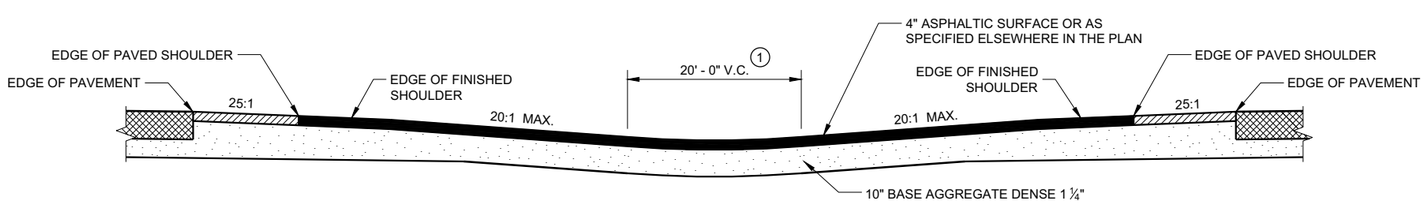

SECTION B-B

GENERAL NOTES

1. ADJUST VERTICAL CURVE LOCATION LATERALLY TO MAINTAIN 20:1 MAX.
2. SIGNING DETAILS AND SPECIFICATIONS ARE PROVIDED ELSEWHERE IN THE CONTRACT.
3. INSTALL DELINEATOR. SEE STANDARD DETAIL DRAWING 15A4.

LEGEND

- SIGN ON PERMANENT SUPPORT
- DELINEATOR
- DIRECTION OF TRAFFIC

MAINTENANCE CROSSOVER FOR FREEWAYS

STATE OF WISCONSIN
DEPARTMENT OF TRANSPORTATION

APPROVED
November 2019 — DATE
/S/ Rodney Taylor — ROADWAY STANDARDS DEVE ENGINEER
FHWA

6

SDD 11A01 - 06

GENERAL NOTES

SDD 13A5, SHEET "b" SHOWS THE LOCATION OF THE RUMBLE STRIPS AT RAMP AND GORE LOCATIONS.

RUMBLE STRIPS ON EXPRESSWAYS:
DO NOT INSTALL SHOULDER RUMBLE STRIPS ACROSS SIDE ROAD INTERSECTIONS, COMMERCIAL AND PRIVATE DRIVEWAYS, ADJACENT TO RIGHT TURN LANES, LEFT TURN LANES, TURN LANE TAPERS, 25' IN ADVANCE OF BRIDGE DECKS, 25' IN ADVANCE OF BRIDGE APPROACHES, OR 100 FEET IN ADVANCE OF RAILROAD CROSSINGS.

(1) CONCRETE PAVEMENT - RUMBLE STRIPS SHALL BE A MINIMUM OF 6 INCHES AWAY FROM TRANSVERSE JOINTS.

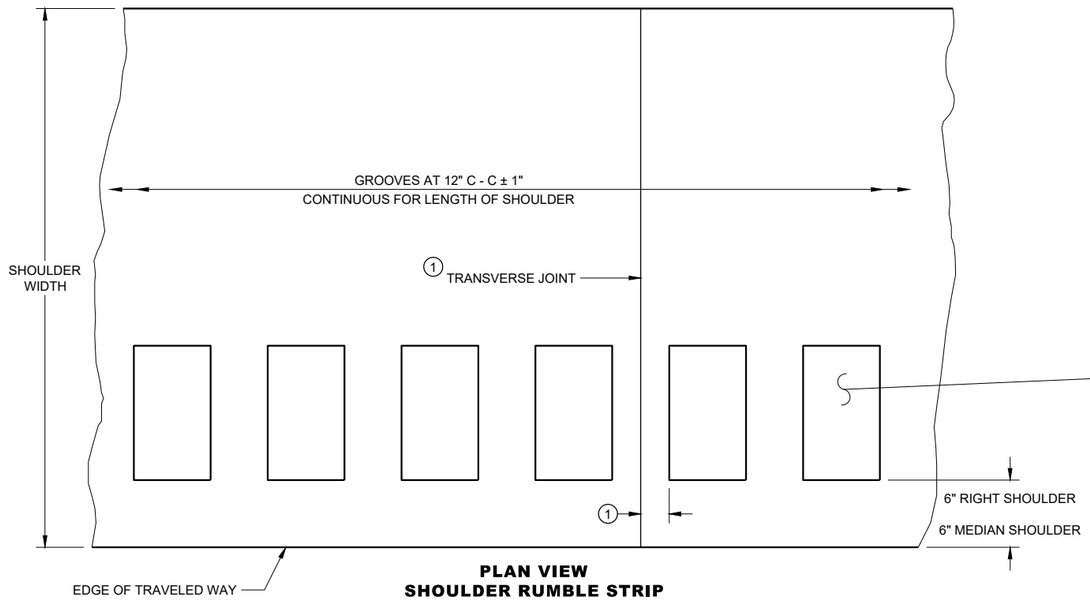

PLAN VIEW
SHOULDER RUMBLE STRIP

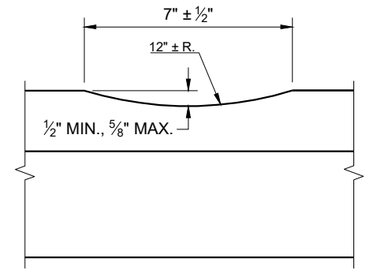

SECTION A - A

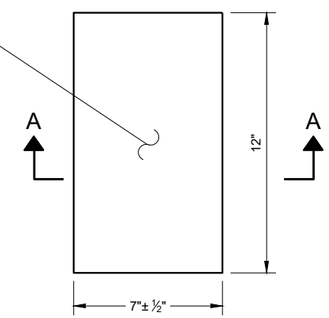

PLAN VIEW
(SINGLE GROOVE)

PLACEMENT DETAIL FOR RUMBLE STRIP

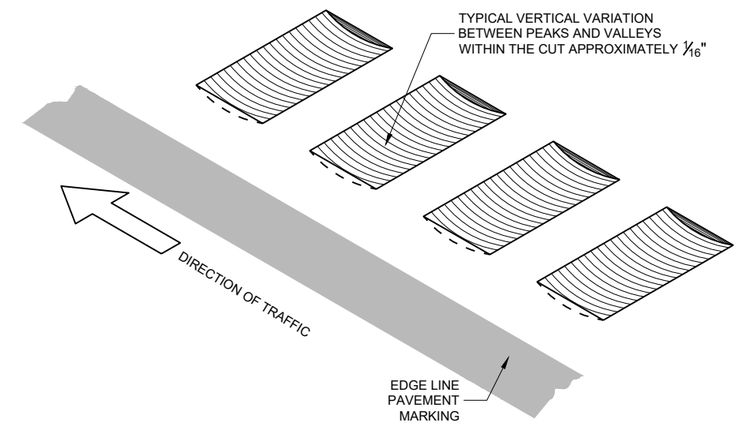

ISOMETRIC

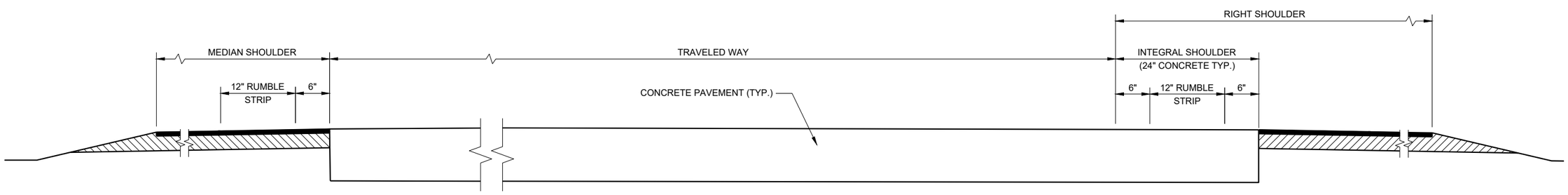

SECTION VIEW

TYPICAL SHOULDER RUMBLE STRIPS
(ONE ROADWAY IS SHOWN)

SHOULDER RUMBLE STRIPS, DIVIDED ROADWAY

STATE OF WISCONSIN
DEPARTMENT OF TRANSPORTATION

6
SDD 13A05-06a

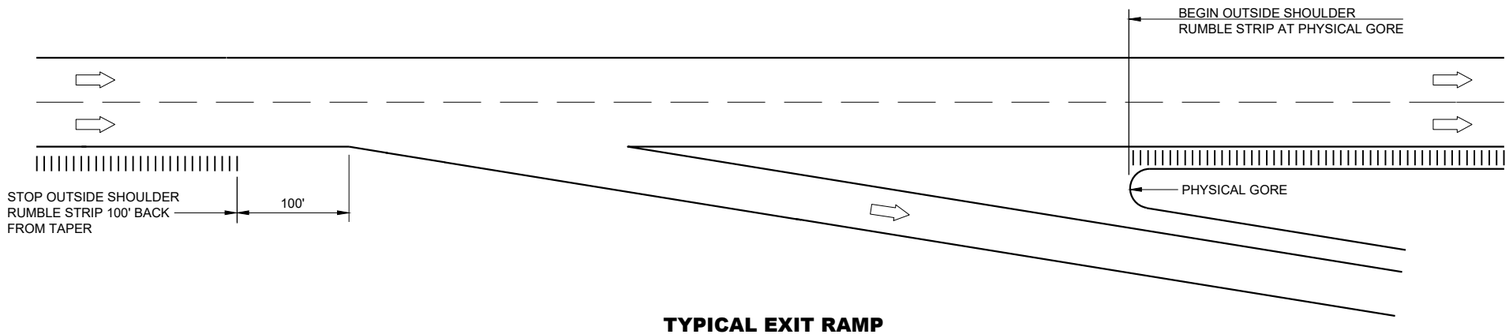

TYPICAL EXIT RAMP

GENERAL NOTES

NO RUMBLE STRIP ON EXIT, DIRECTIONAL OR ENTRANCE RAMPS, EXCEPT NEAR THE ENTRANCE TAPER END AND ALONG THE PARALLEL RAMP AREA AS SHOWN.

RUMBLE STRIPS ON EXPRESSWAYS:
DO NOT INSTALL SHOULDER RUMBLE STRIPS ACROSS SIDE ROAD INTERSECTIONS, COMMERCIALAND PRIVATE DRIVEWAYS, ADJACENT TO RIGHT TURN LANES, LEFT TURN LANES, TURN LANE TAPERS, 25' IN ADVANCE OF BRIDGE DECKS, 25' IN ADVANCE OF BRIDGE APPROACHES, OR 100 FEET IN ADVANCE OF RAILROAD CROSSINGS.

LEGEND

DIRECTION OF TRAFFIC

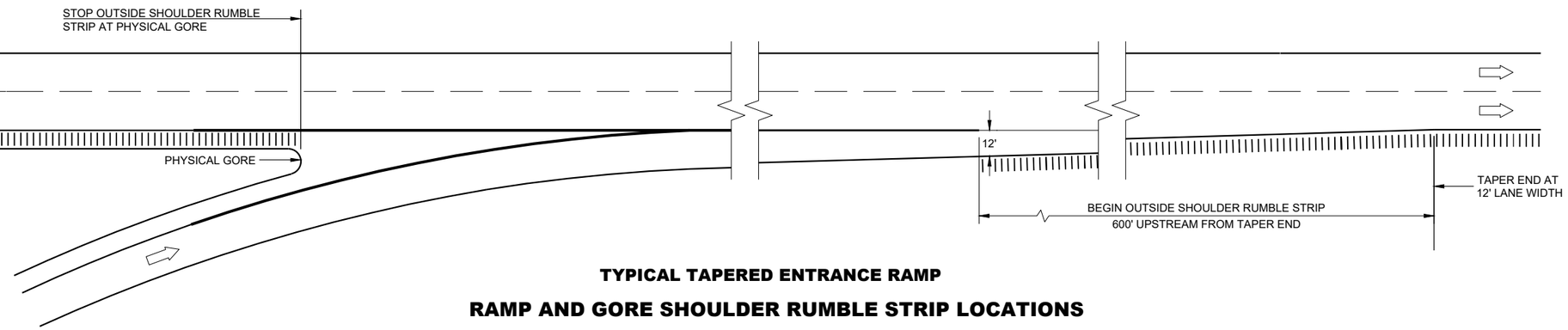

TYPICAL TAPERED ENTRANCE RAMP

RAMP AND GORE SHOULDER RUMBLE STRIP LOCATIONS

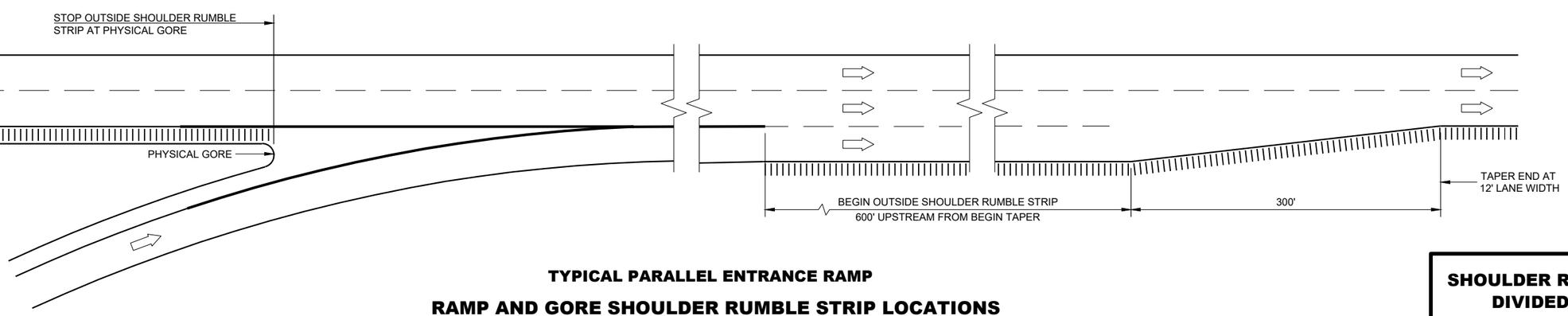

TYPICAL PARALLEL ENTRANCE RAMP

RAMP AND GORE SHOULDER RUMBLE STRIP LOCATIONS

SHOULDER RUMBLE STRIPS, DIVIDED ROADWAY

STATE OF WISCONSIN
DEPARTMENT OF TRANSPORTATION

APPROVED
May 2023 — DATE
/S/ Rodney Taylor — ROADWAY DESIGN STANDARDS UNIT SUPERVISOR
FHWA

6
SDD 13A05-06b

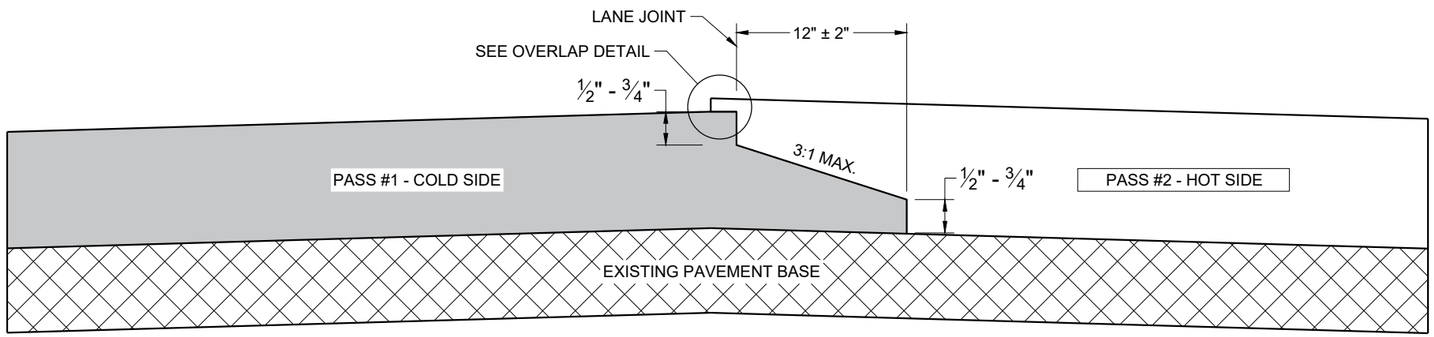

TYPICAL PAVEMENT CROSS SECTION
NOTCHED WEDGE JOINT

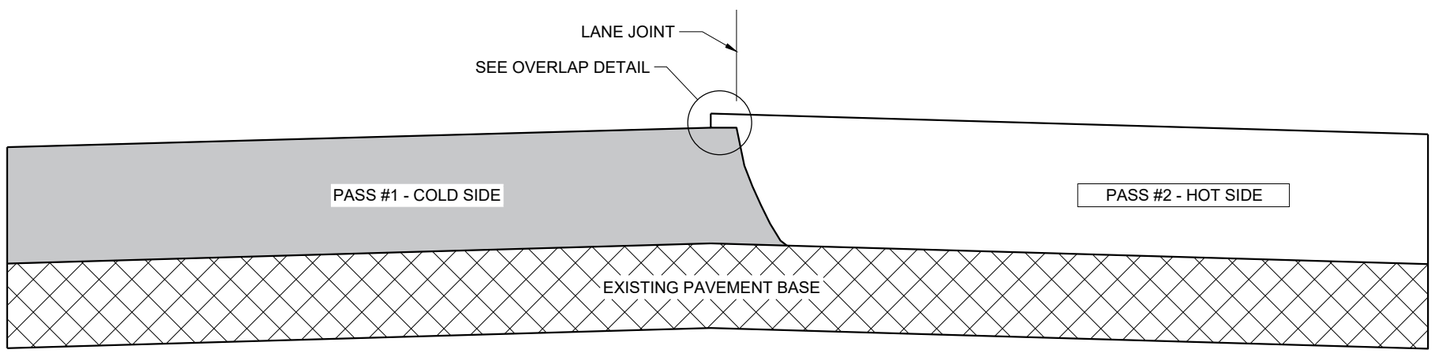

TYPICAL PAVEMENT CROSS SECTION
VERTICAL JOINT

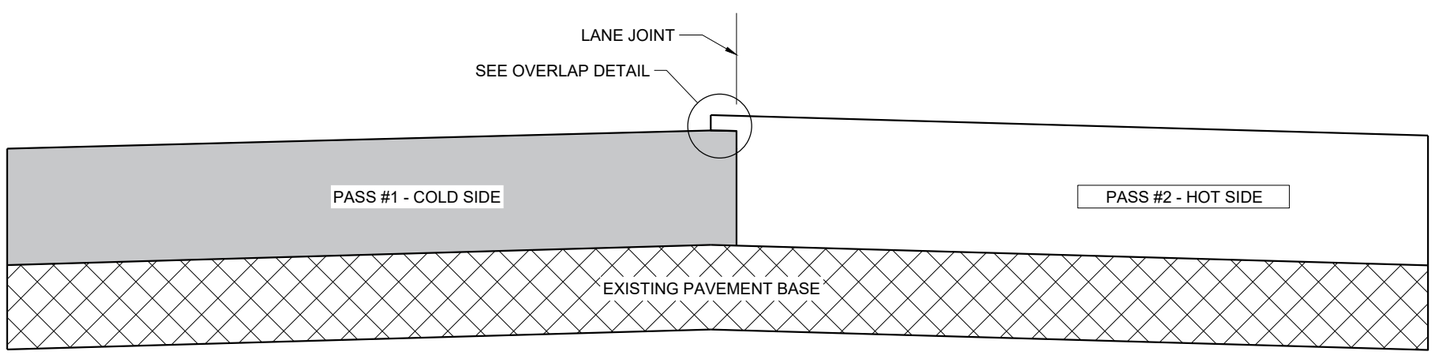

TYPICAL PAVEMENT CROSS SECTION
VERTICAL JOINT (MILLED)

GENERAL NOTES

IN ADDITION TO THE DETAILS PROVIDED IN THIS DRAWING, CONFORM TO STANDARD SPECIFICATION 450.3.2.8 FOR WHEN A NOTCHED WEDGE JOINT IS REQUIRED AND FOR GENERAL JOINT CONSTRUCTION REQUIREMENTS.

FOR ALL LONGITUDINAL JOINTS, ENSURE THE PAVER SCREED OVERLAPS THE PREVIOUSLY PLACED PAVEMENT BY 1" ± 0.5" AND THE HOT SIDE OF THE JOINT REMAINS HIGHER THAN THE COLD SIDE BY APPROXIMATELY 0.1" AFTER FINAL COMPACTION. (IT WILL BE FLUSH WHEN PAVING IN ECHELON.)

ONLY REMOVE THE LONGITUDINAL NOTCHED WEDGE JOINT FOR SMA PAVEMENT OR AS DIRECTED BY THE ENGINEER TO ADDRESS SPECIFIC LENGTHS OF JOINT DAMAGED BY TRAFFIC.

WHEN MILLING BACK OR REMOVING ANY LONGITUDINAL JOINT, LIMIT THE MATERIAL REMOVED TO 2" FROM THE TOP NOTCH OR FROM THE VERTICAL JOINT EDGE ON THE COLD SIDE OF THE JOINT.

USE LONGITUDINAL MILLED JOINT AS PLANS SHOW OR THE AS THE ENGINEER DIRECTS.

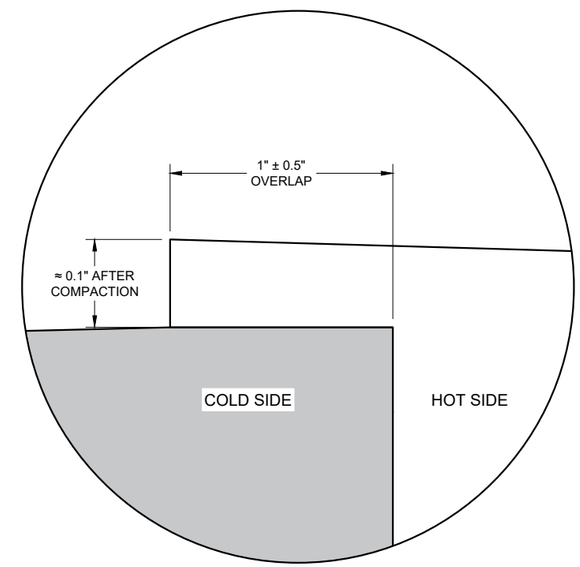

OVERLAP DETAIL (TYPICAL)

6

6

SDD 13C19 - 03

SDD 13C19 - 03

HMA LONGITUDINAL JOINTS

STATE OF WISCONSIN
DEPARTMENT OF TRANSPORTATION

APPROVED
November 2020 /S/ Steven Hefel
DATE HMA PAVEMENT ENGIN

FHWA

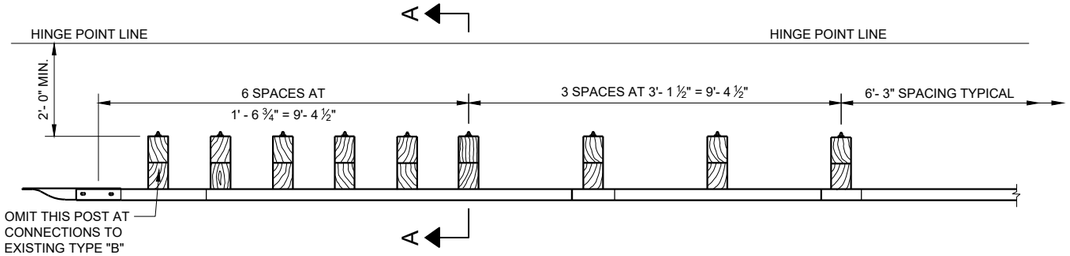

PLAN VIEW

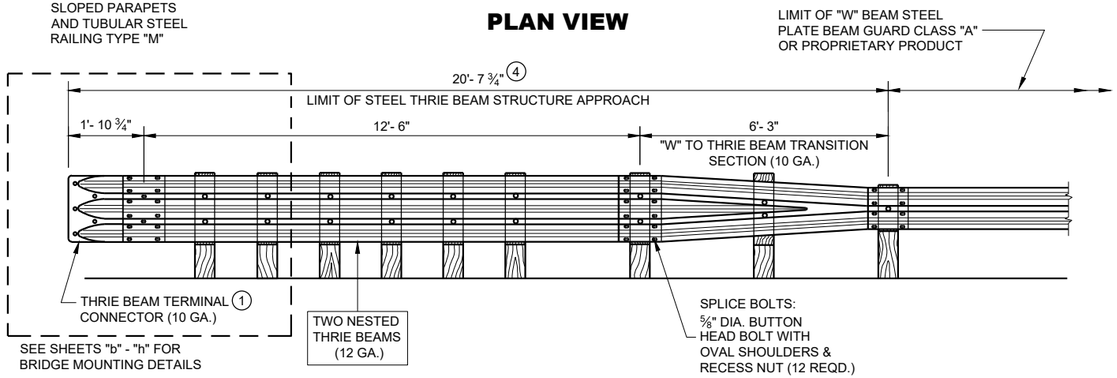

FRONT VIEW

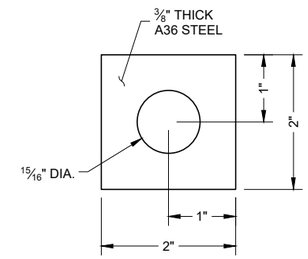

PLATE WASHER DETAIL

GENERAL NOTES

BOLT THE THRIE BEAM TO ALL POSTS AND BLOCKOUTS. DRILL OR PUNCH BOLT HOLES IN THE BEAM IF THE POST SPACING IS LESS THAN 6'-3".

DO NOT USE STEEL POSTS AND NOTCHED PLASTIC BLOCKOUTS IN THE STEEL THRIE BEAM STRUCTURAL APPROACH AND THE TRANSITION SECTION OF STEEL PLATE BEAM GUARD, CLASS "A" INSTALLATIONS.

IF ROCK IS ENCOUNTERED, REMOVE ROCK TO FULL DEPTH OF POST PLUS 2 ½", AND 12" DIAMETER AROUND POST. SEE 14B15 FOR MORE DETAILS.

1. BRIDGE RAILING TYPE "W" DOES NOT REQUIRE A TERMINAL CONNECTOR.
2. MINIMUM EMBEDMENT SHALL BE 4'- 0".
3. POST BOLTS ARE ⅝" DIAMETER ASTM A307 BUTTON HEAD BOLT. A POST BOLT REQUIRES A ⅝" DIAMETER A563A DOUBLE RECESSED (DR) HEAVY HEX AND A ⅝" DIAMETER F844 FLAT WASHER. LENGTH OF POST BOLT MAY VARY.
4. ALL WOOD POSTS MUST BE 6" X 8" AND AT LEAST 7'-0" LONG.

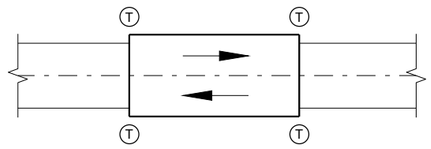

TWO WAY TRAFFIC

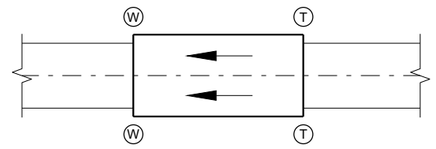

ONE WAY TRAFFIC

(T) THRIE BEAM CONNECTION

(W) W-BEAM CONNECTION WHEN REQUIRED

TYPICAL LOCATIONS OF THRIE BEAM AND W-BEAM CONNECTIONS TO BRIDGE

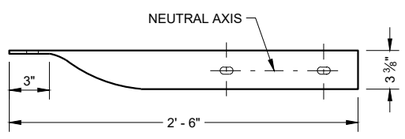

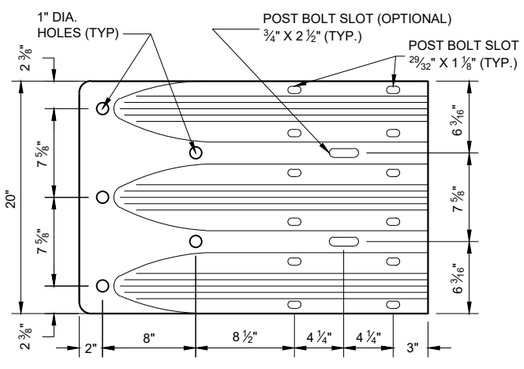

THRIE BEAM TERMINAL CONNECTOR

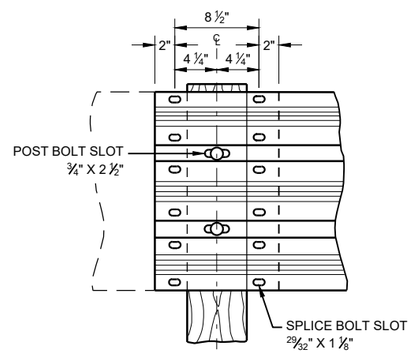

THRIE BEAM SPLICE

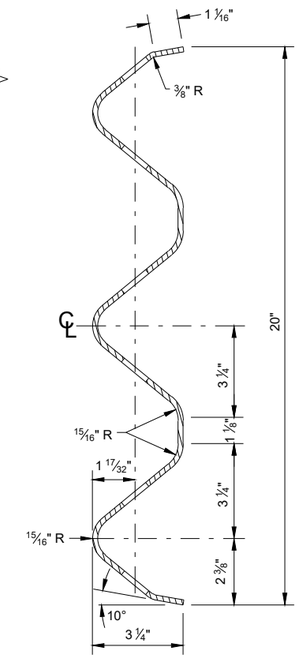

SECTION THRU BEAM RAIL ELEMENT

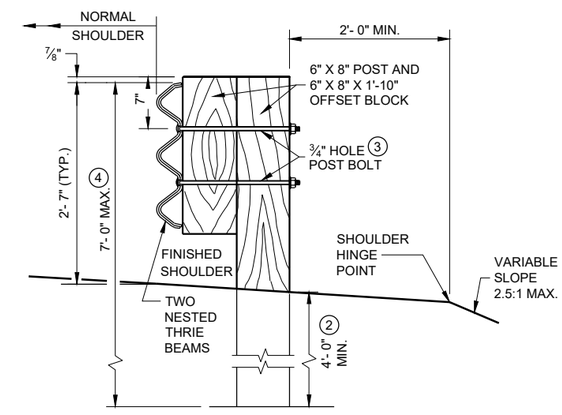

SECTION A-A

STEEL THRIE BEAM STRUCTURE APPROACH

STATE OF WISCONSIN
DEPARTMENT OF TRANSPORTATION

APPROVED
November 2022 — DATE
/S/ Rodney Taylor — ROADWAY STANDARDS DEVE ENGINEER
FHWA

6

SDD 14B20 - 12a

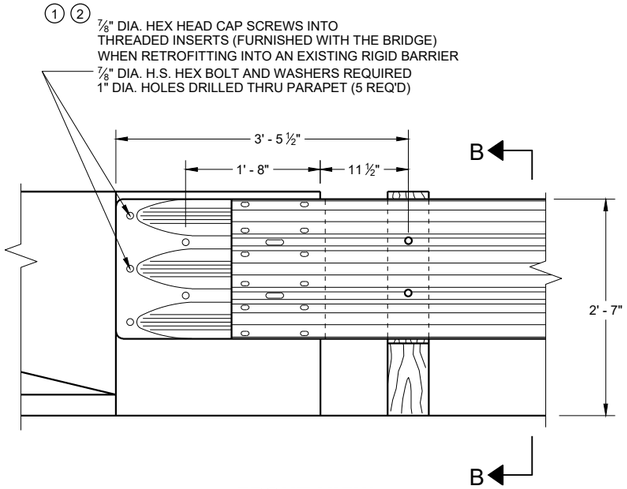

FRONT VIEW

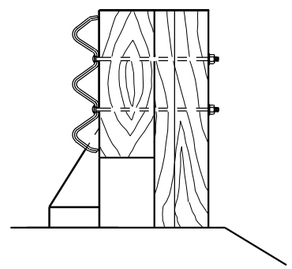

SECTION B - B

THRIE BEAM CONNECTION TO BRIDGE PARAPET WITH SQUARE ENDS

GENERAL NOTES

THESE ARE TYPICAL CONNECTION DETAILS. ADJUST THE POSITION OF CONNECTIONS TO EXISTING BRIDGES TO FIT THE ACTUAL BRIDGE AND SITE DIMENSIONS.

BOLTS, NUTS AND WASHERS SHALL CONFORM TO ASTM A325, A449 AND GALVANIZED PER STANDARD SPECIFICATIONS 614.

① DRILLING BOLT HOLES THROUGH THE PARAPET, BOLTS, NUTS, WASHERS AND REPAIRING DAMAGED CONCRETE ARE INCIDENTAL TO THE CONTRACT.

② BOLTS MAY BE A325 BOLTS OR A449 BOLTS. BOLT LENGTH AND THREADING LENGTH ARE TO ALLOW FOR A TIGHT CONNECTION BETWEEN RIGID BARRIER AND THRIE BEAM CONNECTION PLATE. CONTRACTOR IS TO FIELD VERIFY BOLT LENGTH AND THREAD LENGTH. ONE ROUND WASHER REQUIRED BETWEEN BOLT HEAD AND THRIE BEAM TERMINAL CONNECTOR. BOLTS THAT EXTEND THROUGH THE PARAPET AND OUT THE BACK FACE REQUIRE A HARDENED ROUND STEEL WASHER THAT IS 2" O.D. X 5/8" THICK AND ONE PLATE WASHER. REPAIR ANY DAMAGED CONCRETE FROM BOLT INSTALLATION.

③ THE RECESS FOR A W-BEAM CONNECTION, WHICH EXISTS ON SOME PARAPETS OF THIS TYPE, SHALL BE FILLED WITH A TREATED TIMBER BLOCKOUT. BLOCKOUT SIZE IS 1'-6" X 2'-0" X 3 ½".

④ W6 X 9 OR W6 X 8.5 STEEL POSTS AND NOTCHED PLASTIC BLOCKOUTS ARE ACCEPTABLE ALTERNATIVES FOR 6" X 8" WOOD POST WITH WOOD OR PLASTIC BLOCKOUTS. USE APPROVED NOTCHED PLASTIC BLOCKOUTS WITH STEEL POSTS.

DO NOT USE STEEL POSTS AND NOTCHED PLASTIC BLOCKOUTS IN THE STEEL THRIE BEAM STRUCTURAL APPROACH AND THE TRANSITION SECTION OF STEEL PLATE BEAM GUARD, CLASS "A" INSTALLATIONS.

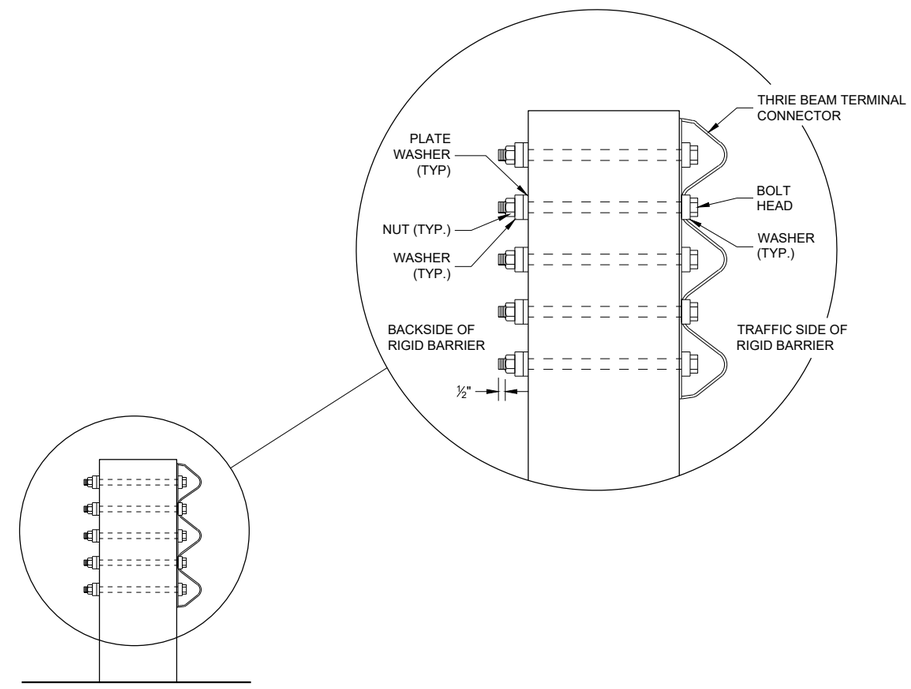

SECTION C - C

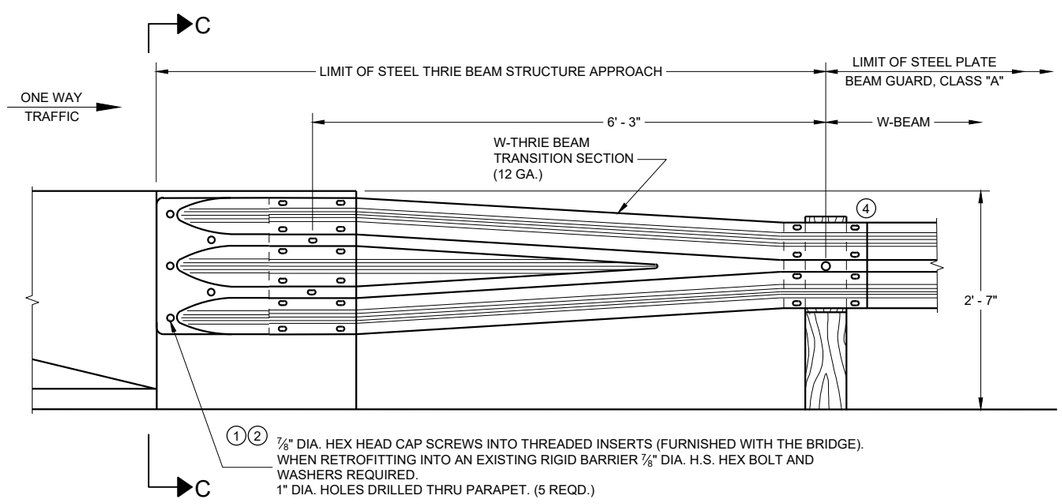

FRONT VIEW

W BEAM TRANSITION AND CONNECTION TO BRIDGE PARAPETS WITH SQUARE ENDS

(USE ONLY ON THE TRAFFIC EXIT END OF ONE WAY BRIDGE)

STEEL THRIE BEAM STRUCTURE APPROACH, CONNECTION TO SQUARE END PARAPETS

STATE OF WISCONSIN
DEPARTMENT OF TRANSPORTATION

APPROVED
November 2022 — DATE
/S/ Rodney Taylor — ROADWAY STANDARDS DEVE ENGINEER
FHWA

6

SDD 14B20 - 12b

GENERAL NOTES

THESE ARE TYPICAL CONNECTION DETAILS. ADJUST THE POSITION OF CONNECTIONS TO EXISTING BRIDGES TO FIT THE ACTUAL BRIDGE AND SITE DIMENSIONS.

BOLTS, NUTS AND WASHERS SHALL CONFORM TO ASTM A325, A449 AND GALVANIZED PER STANDARD SPECIFICATIONS 614.

(1) DRILLING BOLT HOLES THROUGH THE PARAPET, BOLTS, NUTS, WASHERS AND REPAIRING DAMAGED CONCRETE ARE INCIDENTAL TO THE CONTRACT.

(2) BOLTS MAY BE A325 BOLTS OR A449 BOLTS. BOLT LENGTH AND THREADING LENGTH ARE TO ALLOW FOR A TIGHT CONNECTION BETWEEN RIGID BARRIER AND THRIE BEAM CONNECTION PLATE. CONTRACTOR IS TO FIELD VERIFY BOLT LENGTH AND THREAD LENGTH. ONE ROUND WASHER REQUIRED BETWEEN BOLT HEAD AND THRIE BEAM TERMINAL CONNECTOR. BOLTS THAT EXTEND THROUGH THE PARAPET AND OUT THE BACK FACE REQUIRE A HARDENED ROUND STEEL WASHER THAT IS 2" O.D. X 5/8" THICK AND ONE PLATE WASHER. REPAIR ANY DAMAGED CONCRETE FROM BOLT INSTALLATION.

(3) THE RECESS FOR A W-BEAM CONNECTION, WHICH EXISTS ON SOME PARAPETS OF THIS TYPE, SHALL BE FILLED WITH A TREATED TIMBER BLOCKOUT. BLOCKOUT SIZE IS 1'-6" X 2'-0" X 3 ½".

(4) W6 X 9 OR W6 X 8.5 STEEL POSTS AND NOTCHED PLASTIC BLOCKOUTS ARE ACCEPTABLE ALTERNATIVES FOR 6" X 8" WOOD POST WITH WOOD OR PLASTIC BLOCKOUTS. USE APPROVED NOTCHED PLASTIC BLOCKOUTS WITH STEEL POSTS.

(5) BOLT, NUT AND WASHERS NO REQUIRED FOR THIS LOCATION WHEN RETROFITTING AN EXISTING PARAPET AND THE HOLE IS EITHER ABOVE PARAPET OR WITHIN 4 INCHES OF THE THE EDGE OF PARAPET.

DO NOT USE STEEL POSTS AND NOTCHED PLASTIC BLOCKOUTS IN THE STEEL THRIE BEAM STRUCTURAL APPROACH AND THE TRANSITION SECTION OF STEEL PLATE BEAM GUARD, CLASS "A" INSTALLATIONS.

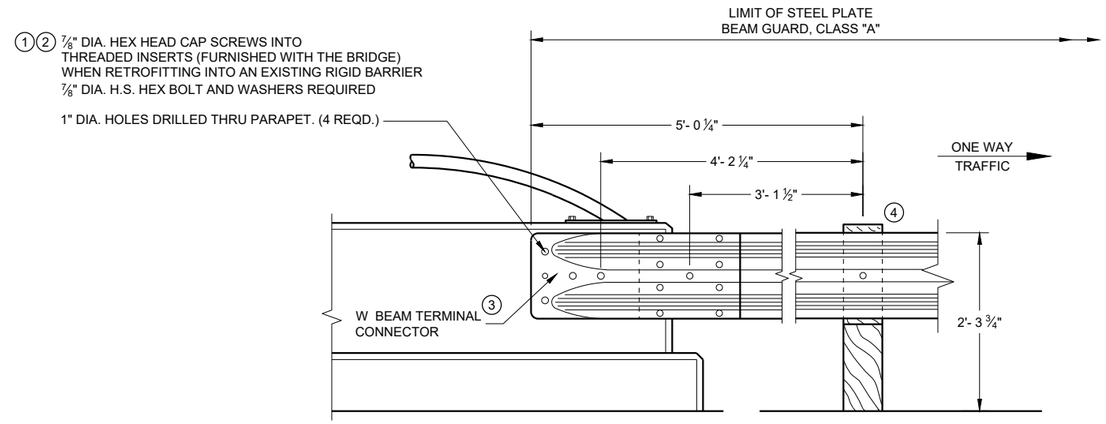

FRONT VIEW

W BEAM CONNECTION TO VERTICAL FACE PARAPET
(USE ONLY ON THE TRAFFIC EXIT END OF ONE WAY BRIDGES)

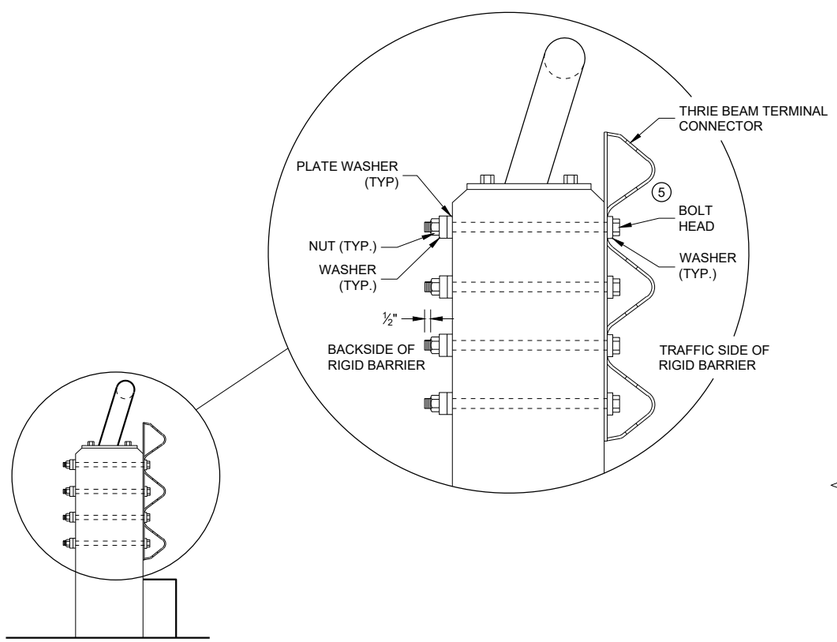

SECTION E - E

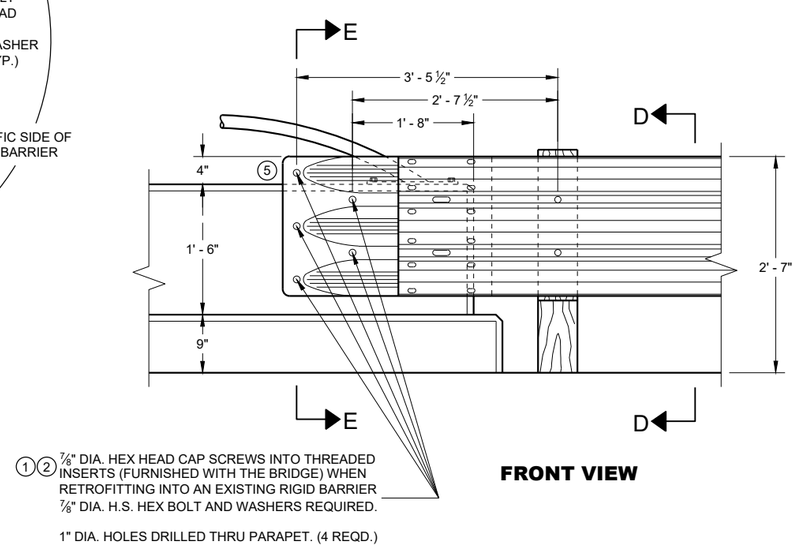

FRONT VIEW

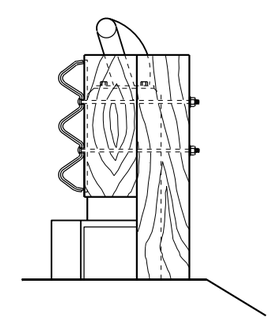

SECTION D - D

THRIE BEAM CONNECTION TO VERTICAL FACED PARAPETS

STEEL THRIE BEAM STRUCTURE APPROACH, CONNECTION TO VERTICAL FACED PARAPETS

STATE OF WISCONSIN
DEPARTMENT OF TRANSPORTATION

APPROVED
November 2022 — DATE
/S/ Rodney Taylor — ROADWAY STANDARDS DEVE ENGINEER
FHWA

6

SDD 14B20 - 12c

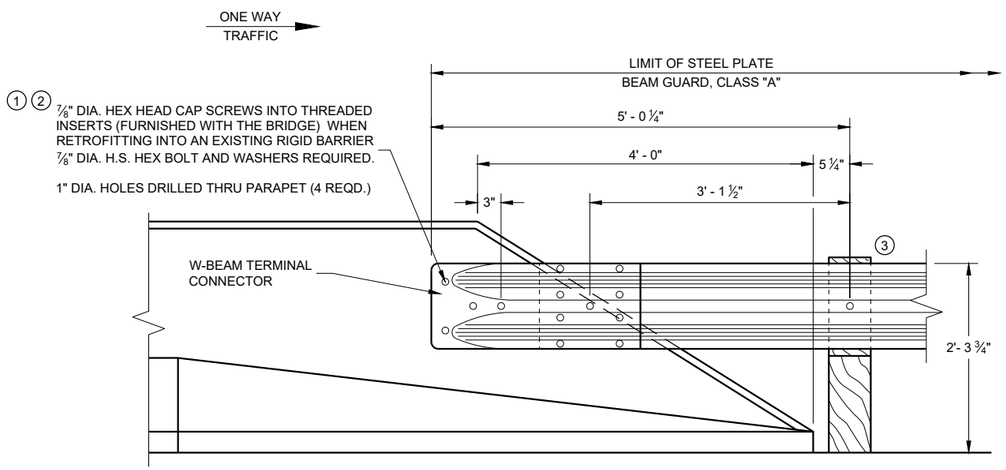

FRONT VIEW

W BEAM CONNECTION TO BRIDGE PARAPETS WITH SLOPED ENDS

(USE ONLY ON THE TRAFFIC EXIT END OF ONE WAY BRIDGES)

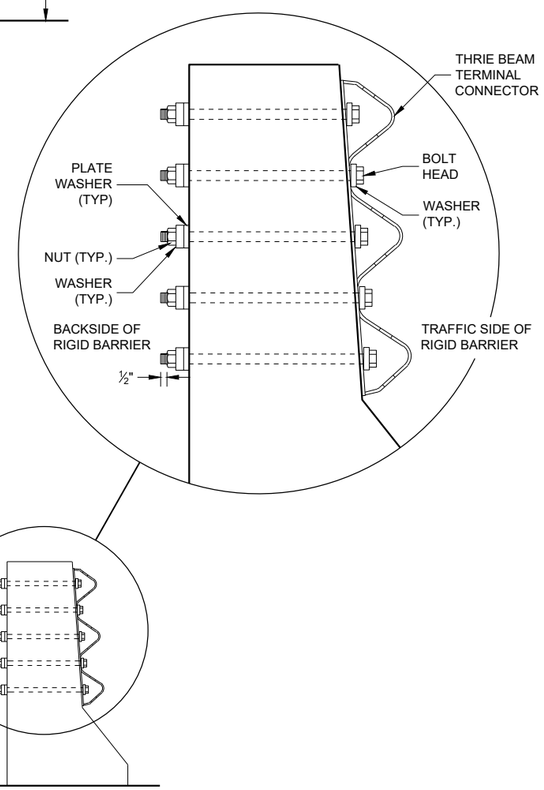

SECTION E - E

GENERAL NOTES

THESE ARE TYPICAL CONNECTION DETAILS. ADJUST THE POSITION OF CONNECTIONS TO EXISTING BRIDGES TO FIT THE ACTUAL BRIDGE AND SITE DIMENSIONS.

BOLTS, NUTS AND WASHERS SHALL CONFORM TO ASTM A325, A449 AND GALVANIZED PER STANDARD SPECIFICATIONS 614.

1 DRILLING BOLT HOLES THROUGH THE PARAPET, BOLTS, NUTS, WASHERS AND REPAIRING DAMAGED CONCRETE ARE INCIDENTAL TO THE CONTRACT.

2 BOLTS MAY BE A325 BOLTS OR A449 BOLTS. BOLT LENGTH AND THREADING LENGTH ARE TO ALLOW FOR A TIGHT CONNECTION BETWEEN RIGID BARRIER AND THRIE BEAM CONNECTION PLATE. CONTRACTOR IS TO FIELD VERIFY BOLT LENGTH AND THREAD LENGTH. ONE ROUND WASHER REQUIRED BETWEEN BOLT HEAD AND THRIE BEAM TERMINAL CONNECTOR. BOLTS THAT EXTEND THROUGH THE PARAPET AND OUT THE BACK FACE REQUIRE A HARDENED ROUND STEEL WASHER THAT IS 2" O.D. X 5/8" THICK AND ONE PLATE WASHER. REPAIR ANY DAMAGED CONCRETE FROM BOLT INSTALLATION.

3 W6 X 9 OR W6 X 8.5 STEEL POSTS AND NOTCHED PLASTIC BLOCKOUTS ARE ACCEPTABLE ALTERNATIVES FOR 6" X 8" WOOD POST WITH WOOD OR PLASTIC BLOCKOUTS. USE APPROVED NOTCHED PLASTIC BLOCKOUTS WITH STEEL POSTS.

DO NOT USE STEEL POSTS AND NOTCHED PLASTIC BLOCKOUTS IN THE STEEL THRIE BEAM STRUCTURAL APPROACH AND THE TRANSITION SECTION OF STEEL PLATE BEAM GUARD, CLASS "A" INSTALLATIONS.

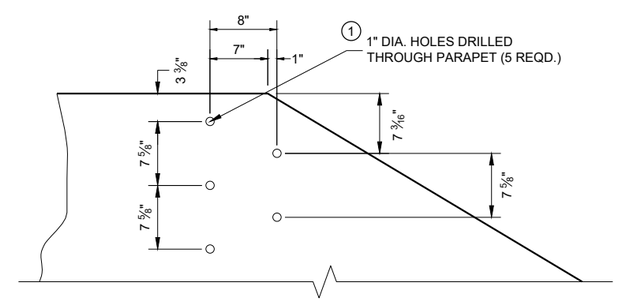

DRILL HOLE LOCATION AND PATTERN FOR THRIE BEAM CONNECTION

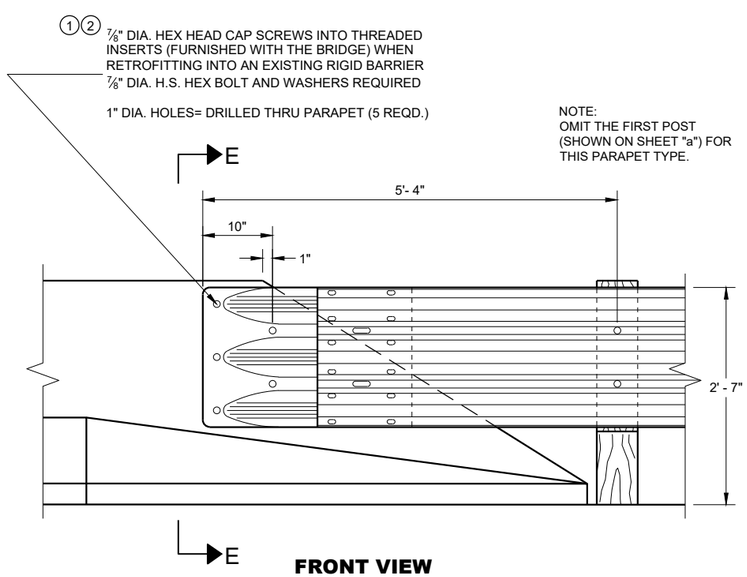

FRONT VIEW

THRIE BEAM CONNECTION TO BRIDGE PARAPETS WITH SLOPED ENDS

STEEL THRIE BEAM STRUCTURE APPROACH, CONNECTION TO SLOPED END PARAPETS

STATE OF WISCONSIN
DEPARTMENT OF TRANSPORTATION

APPROVED
November 2022 — DATE
/S/ Rodney Taylor — ROADWAY STANDARDS DEVE ENGINEER
FHWA

BILL OF MATERIALS

NOTE NO.	DESCRIPTION
1	WOOD BREAKAWAY TERMINAL POST: 5½" X 7½" X 3'-9"
2	STEEL TUBE TS 8" X 6" X 0.188", 6'-0"
4	WOOD BREAKAWAY CRT POST: 6" X 8" X 6'-0"
5	WOOD OFFSET BLOCKS: 6' X 8" X 1'-2"
6	PIPE SLEEVE: 2" X 5 ½" STANDARD PIPE
7	BEARING PLATE
8	BCT CABLE ASSEMBLY
9	CABLE ANCHOR BOX
10	STRUT & YOKE
11	STEEL PLATE BEAM, END PANEL 12 GA.
12	STEEL PLATE BEAM: 12 GA. 13'-6½"
13	IMPACT HEAD
14	0.040" ALUMINUM SHEET WITH REFLECTIVE SHEETING TYPE F PER SECTION 637 OF THE STANDARD SPECIFICATIONS

GENERAL NOTES

FOLLOW MANUFACTURE'S BOLTING RECOMMENDATIONS.

(A) THE SLOPE IN THE AREA BOUNDED BY THE GRADELINE, THE HINGE POINT LINE (HPL), AND THE CLEAR ZONE LIMITS (CZL) SHALL BE 4:1 OR FLATTER.

(B) AFTER FINAL ASSEMBLY, RECHECK CABLE TO BE SURE IT IS TAUT AND HAS NOT RELAXED.

(D) THE TOP OF THE STEEL TUBE ON POSTS 1 AND 2 SHALL NOT BE MORE THAN 3" ABOVE THE FINISH GROUND ELEVATION.

(E) THE CENTER OF THE UPPER 3½" DIAMETER HOLE ON POST 3 THROUGH 8 SHALL BE ¾" ABOVE THE FINISHED GROUND LINE.

(F) ATTACH ALUMINUM SHEET TO E.A.T. HEAD USING 4 STAINLESS STEEL SELF-TAPPING SCREWS. ONE SCREW PER CORNER.

STEEL POSTS SHALL NOT BE ALLOWED FOR USE WITH ENERGY ABSORBING TERMINALS.

DO NOT INSTALL REFLECTORS ON THE FIRST 50 FEET OF THE APPROACH END OF THE ENERGY ABSORBING TERMINAL.

* DO NOT ATTACH BLOCKOUTS TO POSTS 1 AND 2.

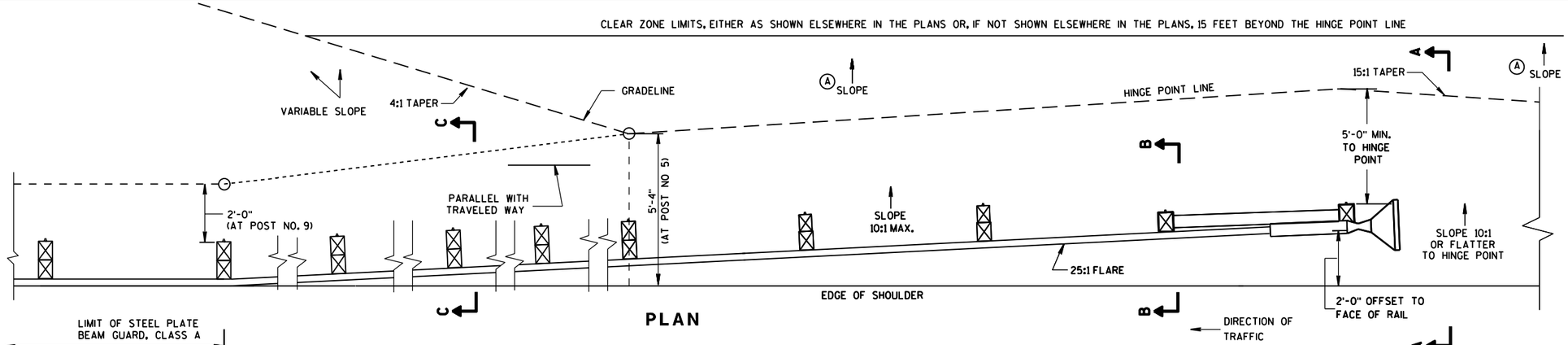

PLAN

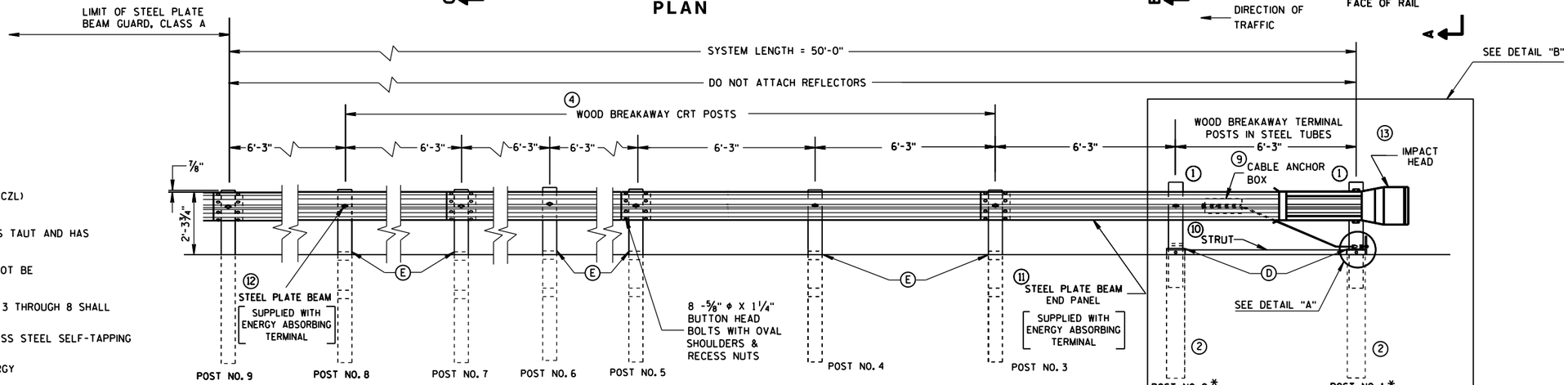

ELEVATION

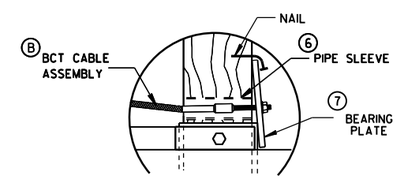

DETAIL "A"

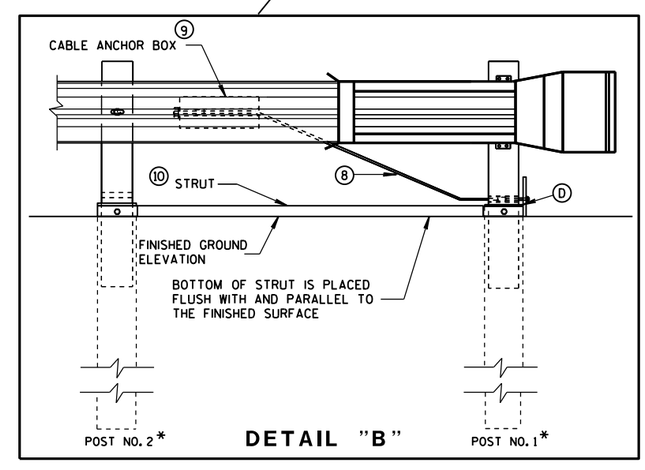

DETAIL "B"

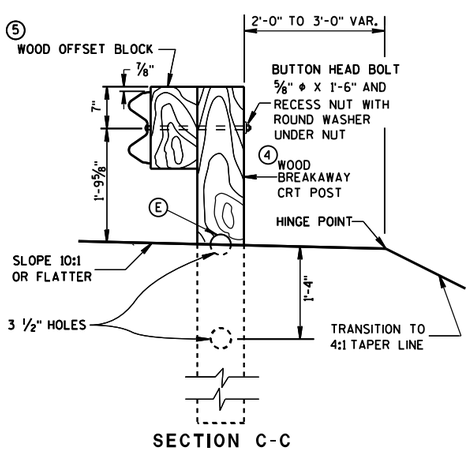

SECTION C-C
TYPICAL AT POST NOS. 6, 8

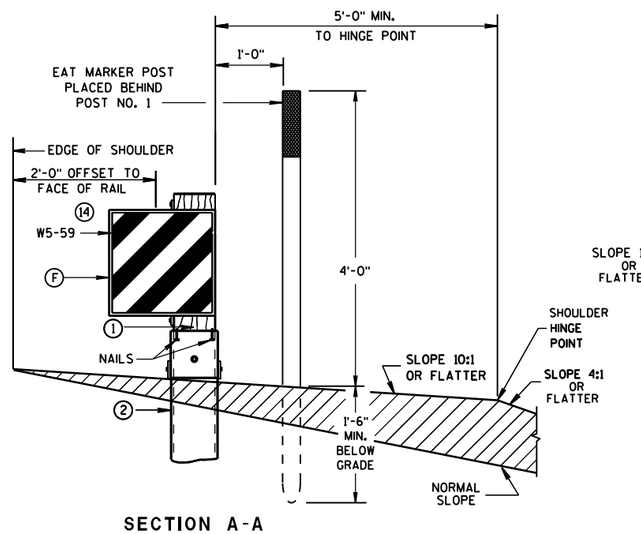

SECTION A-A
TYPICAL AT POST NO. 1*

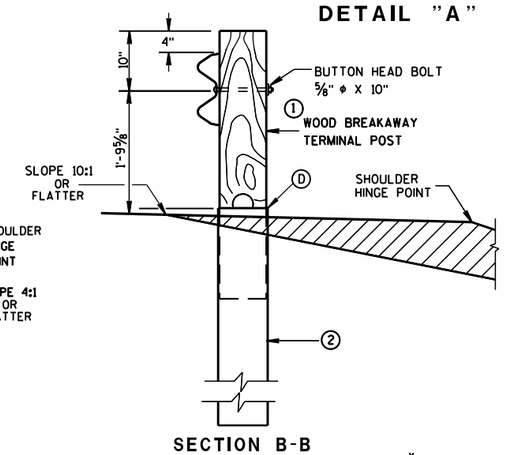

SECTION B-B
TYPICAL AT POST NO. 2*

STEEL PLATE BEAM GUARD
ENERGY ABSORBING TERMINAL

STATE OF WISCONSIN
DEPARTMENT OF TRANSPORTATION

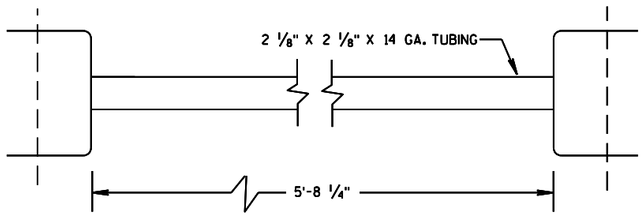

⑩ STRUT DETAIL

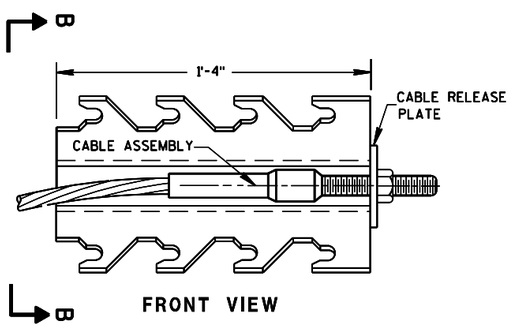

FRONT VIEW

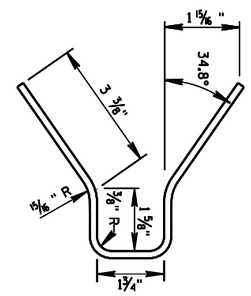

SECTION B-B

⑨ CABLE ANCHOR BOX

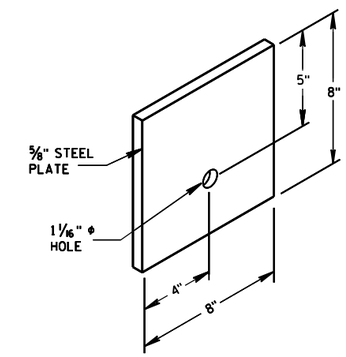

⑦ STEEL BEARING PLATE

6

6

S.D.D. 14 B 24-9b

S.D.D. 14 B 24-9b

STEEL PLATE BEAM GUARD
ENERGY ABSORBING TERMINAL

STATE OF WISCONSIN
DEPARTMENT OF TRANSPOI

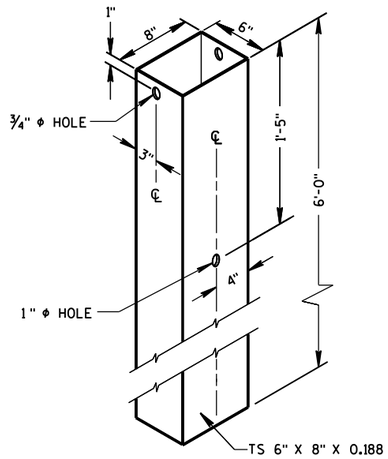

② 72" STEEL TUBE
(POSTS NO. 1-2

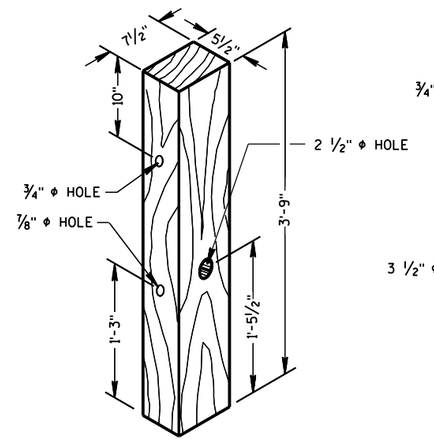

① TERMINAL POST

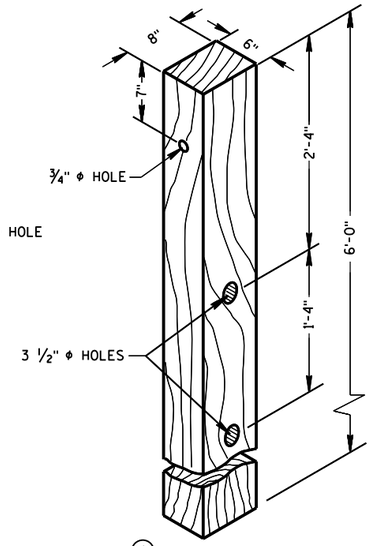

④ CRT POST
(POSTS NO'S 5-8

WOOD BREAKAWAY POSTS

GENERAL NOTES

WHEN ROCK IS ENCOUNTERED DURING EXCAVATION, A 12 INCH DIA. POST HOLE EXTENDING 20 INCHES DEEP INTO THE ROCK MAY BE USED IF APPROVED BY THE ENGINEER. GRANULAR MATERIAL SHALL BE PLACED IN THE BOTTOM OF THE HOLE APPROXIMATELY 2 ½" INCHES DEEP TO PROVIDE DRAINAGE. THE SOIL TUBES SHALL BE FIELD CUT TO LENGTH, PLACED IN THE HOLE AND BACKFILLED WITH ADEQUATELY COMPACTED MATERIAL EXCAVATED FROM THE HOLE.

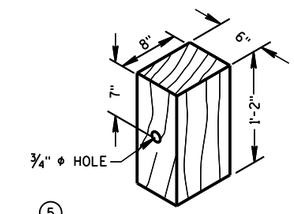

⑤ WOOD OFFSET BLOCK
REQ'D. AT ALL POSTS EXCEPT POST NO'S 1 & 2

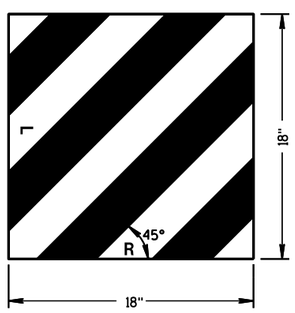

⑭ REFLECTIVE SHEETING DETAILS

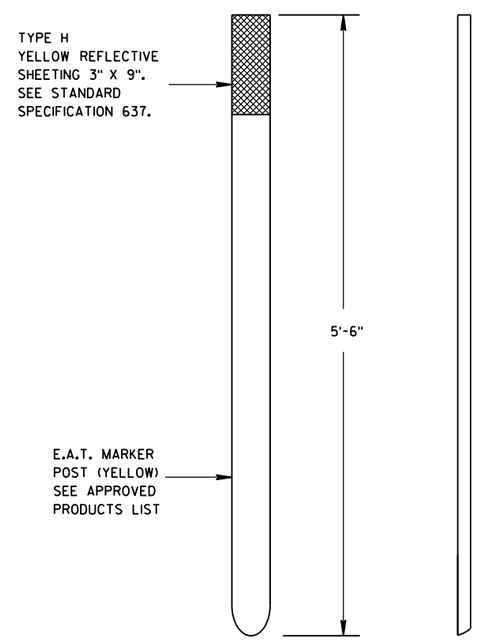

E.A.T. MARKER POST

6

6

S.D.D. 14 B 24-9c

S.D.D. 14 B 24-9c

STEEL PLATE BEAM GUARD
ENERGY ABSORBING TERMINAL

STATE OF WISCONSIN
DEPARTMENT OF TRANSPORTATION

APPROVED
June 2017
DATE
FHWA

/S/ Rodney Taylor
ROADWAY STANDARDS
UNIT SUPERV.

ENT

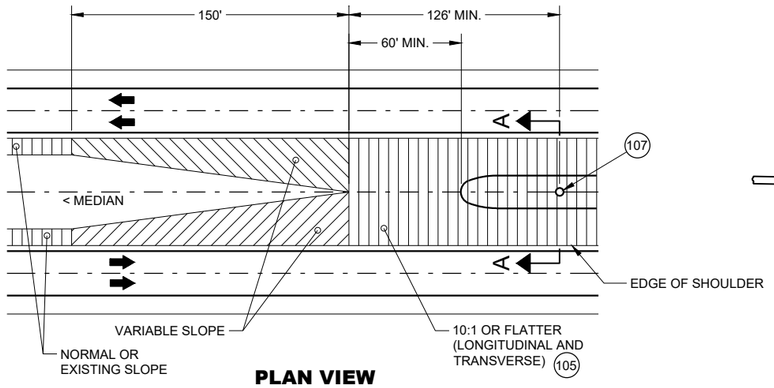

PLAN VIEW
GRADING AT BULLNOSE
(ALL INSTALLATIONS)

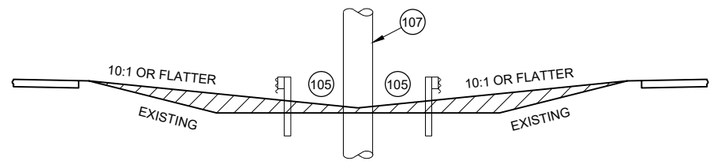

SECTION A -A
MEDIAN GRADING
(ALL INSTALLATIONS)

GENERAL NOTES

THRIE BEAM RAILS MAY NEED TO BE FIELD BENT TO FIT THE LOCATION.

SEE STANDARD DETAIL DRAWINGS 14B26 SHEETS a-h.

IF ROCK IS ENCOUNTERED, REMOVE ROCK TO FULL DEPTH OF POST PLUS 2 ½". MINIMUM DIAMETER OF THE ROCK REMOVAL IS 12" DIAMETER

- E1 UNBENT STANDARD THRIE BEAM RAIL B1 (POST 8 TO POST 10 AND POST 10 TO POST 12)
- E2 SLOTTED THRIE BEAM RAIL E1 (POST 1 TO POST 1)
- E3 SLOTTED THRIE BEAM RAIL B3 (POST 5 TO POST 8)
- E4 SLOTTED THRIE BEAM RAIL E4 (POST 1 TO POST 5)
- 5 BEYOND POST 12: CONSTRUCT STEEL THRIE BEAM - USE UNBENT STANDARD THRIE BEAM RAIL NO. 5.
- 100 DIMENSIONS ARE FROM BACK OF RAIL TO BACK OF RAIL WHERE RAIL IS BOLTED TO POST OR BLOCK.
- 101 U-BOLT CABLE CLIPS (3 PER CABLE) SPACED OUT ON NOSE, TO HOLD CABLE TO BACKSIDE OF THE RAIL.
- 102 NOSE CABLE WITH SWAGGED END BUTTONS.
- 103 NOSE CABLE ANCHOR PLATE (BACKSIDE OF SPLICE).
- 104 THE SLACK IN THE NOSE CABLES SHALL BE EVENLY DISTRIBUTED BETWEEN THE CABLE CLIP FASTENERS AND POST NO. 1 ON EITHER SIDE OF THE NOSE.
- 105 MINIMUM WORKING WIDTH 4' - 2".
- 106 MAX. WIDTH OF SYSTEM IS 14' - 2 ½" MEASURED FROM THE BACK OF RAIL TO BACK OF RAIL WHERE RAIL IS BOLTED TO A POST OR BLOCK.
- 107 FIXED OBJECT OR OTHER HAZARD.
- 108 PLAN IS TO PROVIDE STATION OFFSET TO CENTER OF POST 5 IN PLANS.

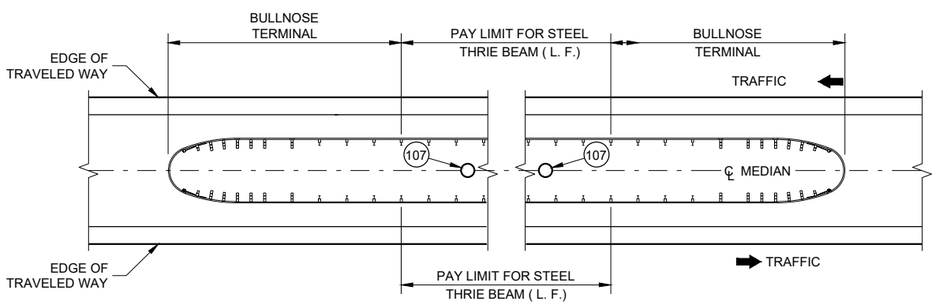

MEDIAN HAZARD PROTECTION PAY LIMITS

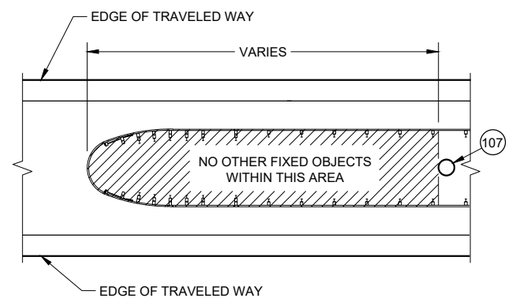

HAZARD FREE AREA
INSIDE BULLNOSE

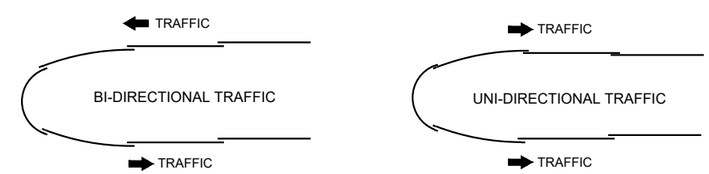

LAPPING DETAIL

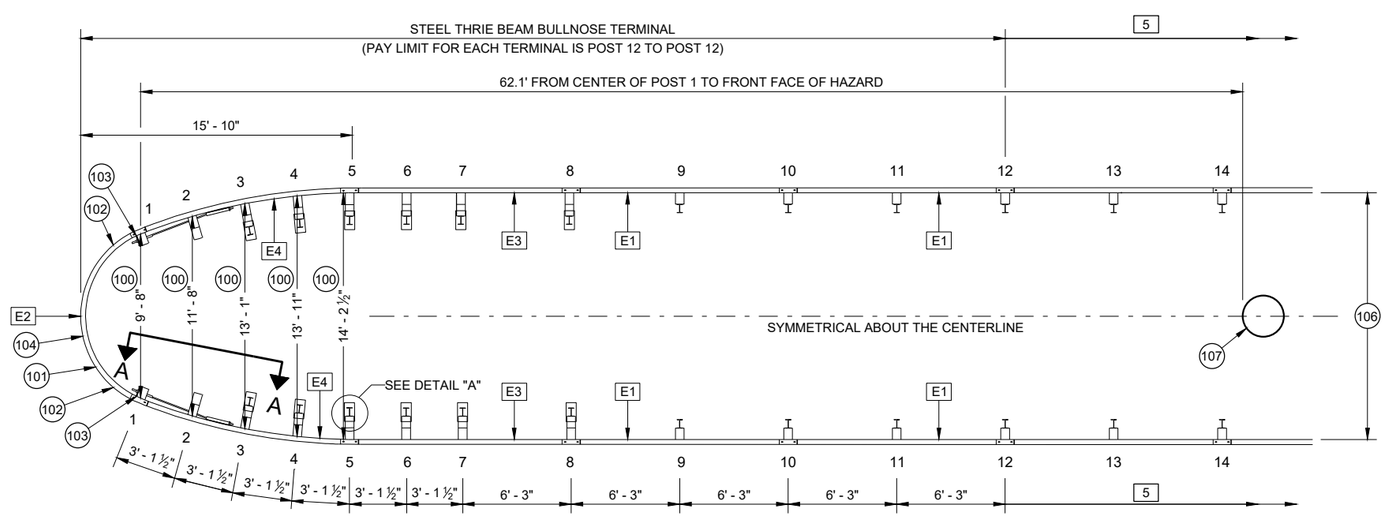

PLAN VIEW
TYPICAL BULLNOSE LAYOUT

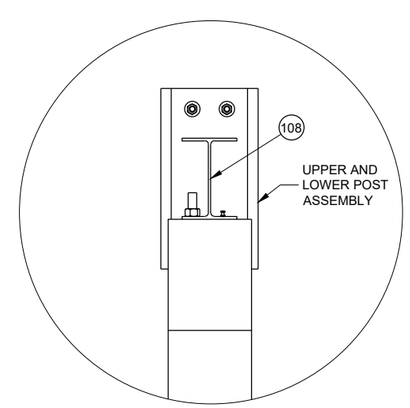

DETAIL "A"

STEEL THRIE BEAM BULLNOSE TERMINAL

STATE OF WISCONSIN
DEPARTMENT OF TRANSPORTATION

6

6

SDD 14B26 - 05a

SDD 14B26 - 05a

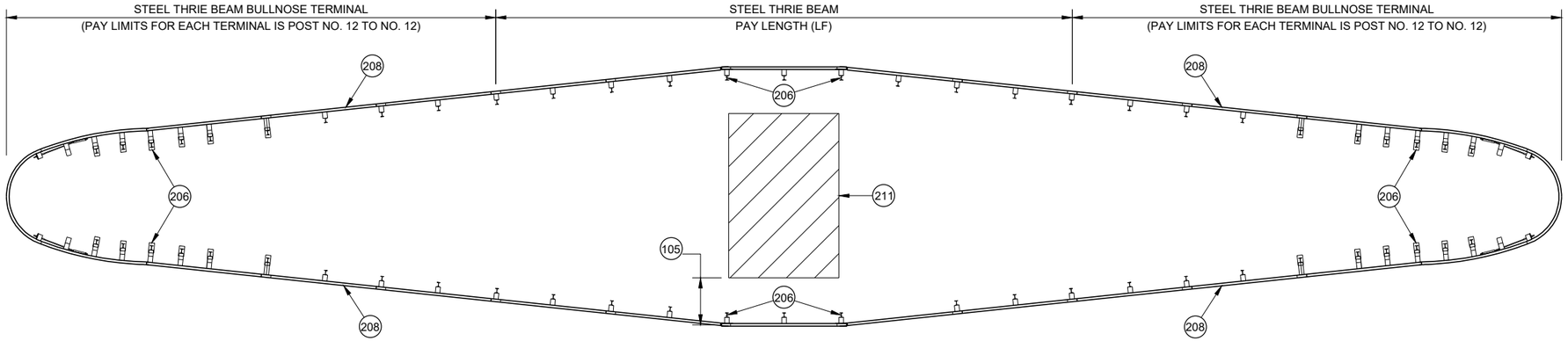

VARIABLE WIDTH BULLNOSE

GENERAL NOTES

200 6' - 3" ASYMMETRICAL 10-GAUGE W-BEAM TO THRIE BEAM GUARD TRANSITION. SEE SDD 14B45 FOR MORE INFORMATION.

201 W-BEAM RAIL. SEE SDD 14B42 FOR MORE INFORMATION.

202 SEE POST NO. 9 AND ALL STEEL THRIE BEAM POST BEYOND DETAIL.

203 SEE SDD 14B42 FOR INSTALLATION INFORMATION.

204 SEE SDD 14B45 FOR INSTALLATION DETAILS. REPLACE ASYMMETRICAL W-BEAM TO THRIE BEAM TRANSITION AND W-BEAM RAIL WITH E1. PAY FOR MODIFIED THRIE BEAM TRANSITION.

205 CONCRETE BARRIER OR BRIDGE RAIL.

206 SEE PLAN FOR STATION AND OFFSET TO CENTER OF POST.

207 SEE PLAN FOR STATION AND OFFSET TO CENTER OF SPLICE.

208 SEE PLAN FOR FLARE RATE.

209 A MINIMUM OF 25 FT OF THRIE BEAM TANGENT BEFORE TRANSITIONING TO BEAM GUARD OR THRIE BEAM TRANSITION.

210 NOT ALL BULLNOSE HARDWARE SHOWN. SEE OTHER SHEETS IN 14B26.

211 WIDER HAZARD TO BE SHIELDED.

212 TRANSITION RAIL HEIGHT TO 31" OVER THE LENGTH OF A 12' - 6" BEAM SECTION.

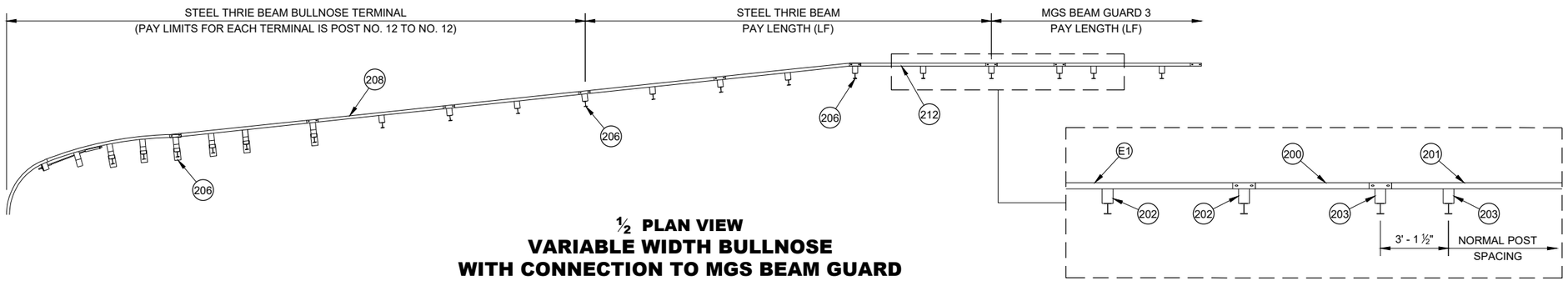

½ PLAN VIEW
VARIABLE WIDTH BULLNOSE
WITH CONNECTION TO MGS BEAM GUARD

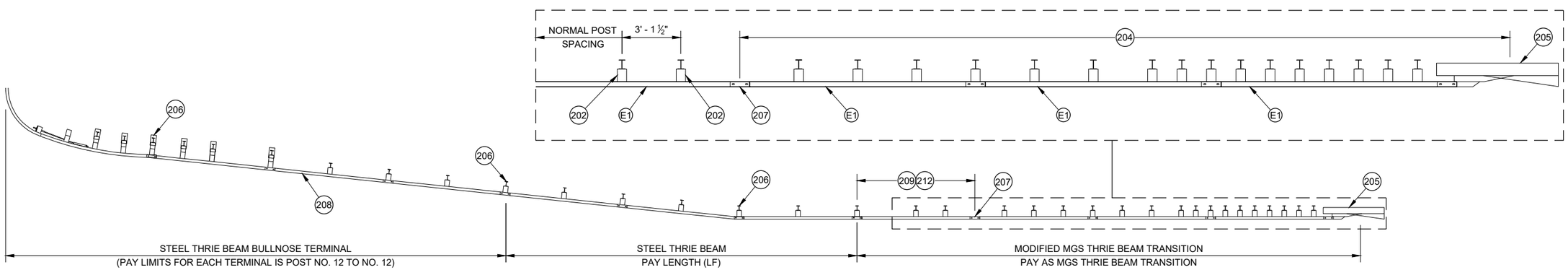

½ PLAN VIEW
VARIABLE WIDTH BULLNOSE
WITH CONNECTION TO RIGID BARRIER

STEEL THRIE BEAM BULLNOSE TERMINAL

STATE OF WISCONSIN
DEPARTMENT OF TRANSPORTAT

6

SDD 14B26 - 05b

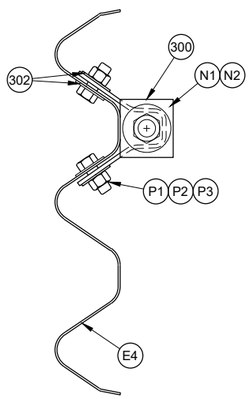

PROFILE VIEW

CABLE ANCHOR ASSEMBLY CONNECTION

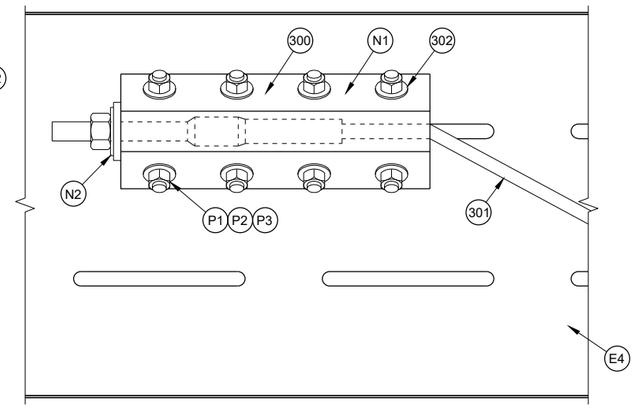

CABLE ANCHOR ASSEMBLY

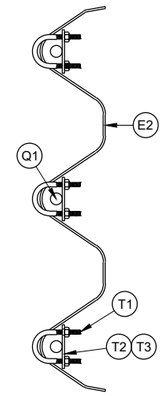

NOSE CABLE RETAINING CLIP

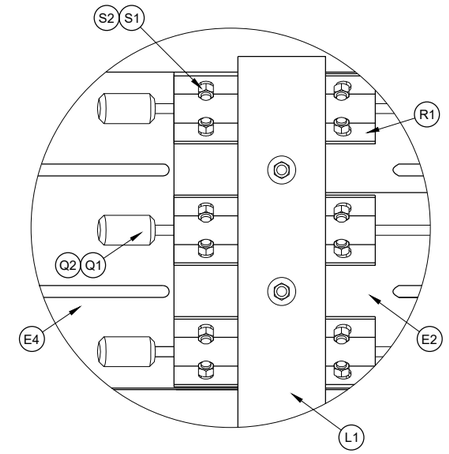

DETAIL "A"

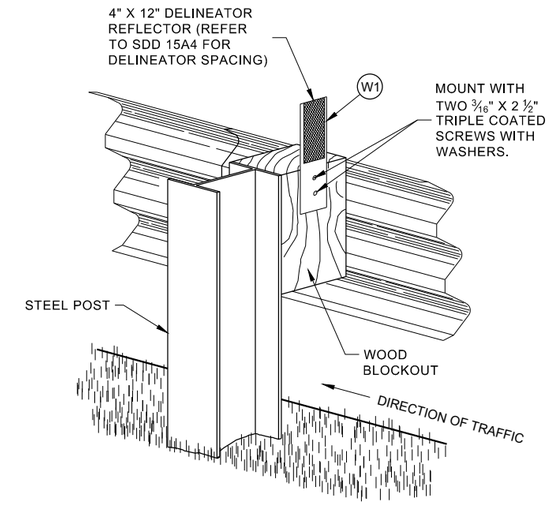

ONE SIDED REFLECTOR DETAIL AND TYPICAL INSTALLATION

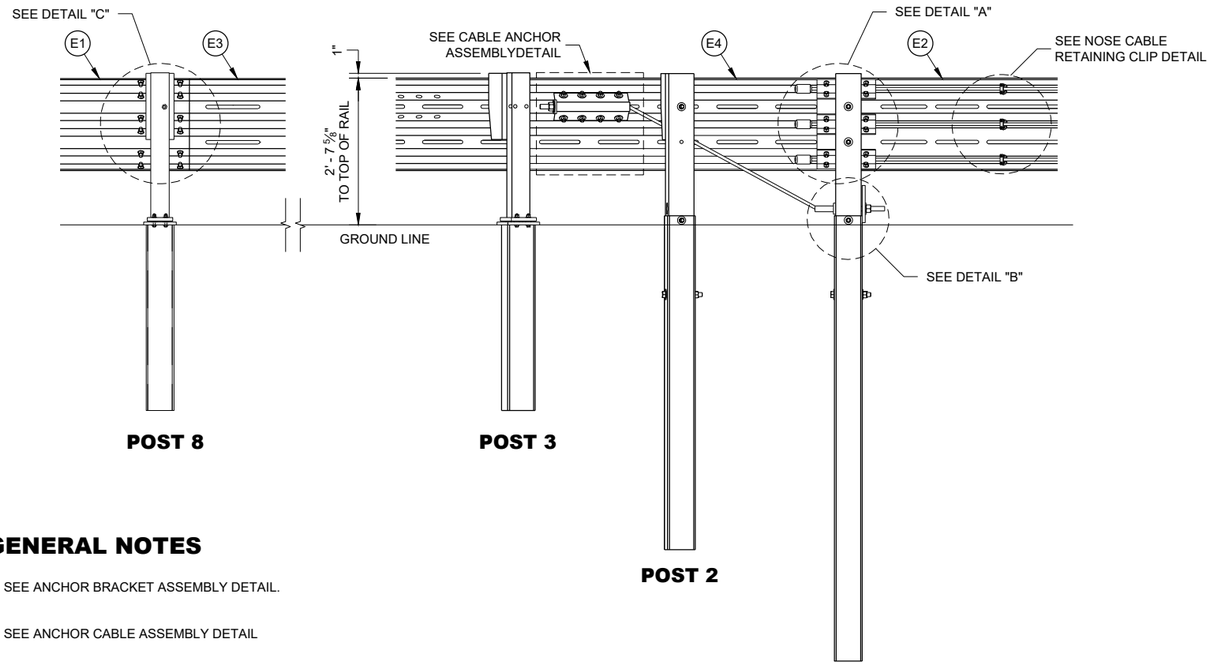

POST 8

POST 3

POST 2

POST 1

CROSS SECTION A - A

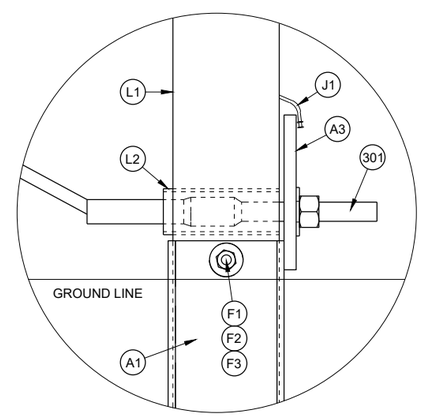

DETAIL "B"

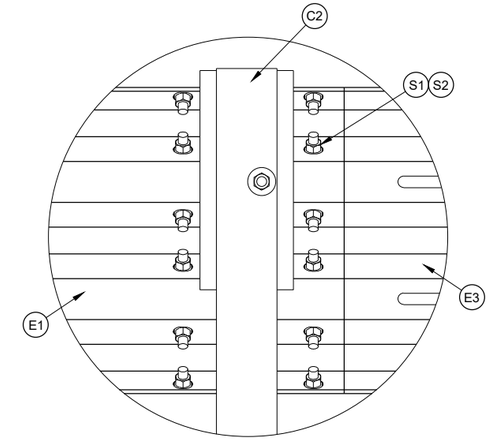

DETAIL "C" THRIE BEAM SPLICE

GENERAL NOTES

300 SEE ANCHOR BRACKET ASSEMBLY DETAIL.

301 SEE ANCHOR CABLE ASSEMBLY DETAIL

302 ONE WASHER BETWEEN BOLT HEAD AND RAIL AND BETWEEN NUT AND ANCHOR BRACKET ASSEMBLY.

303 ONE WASHER BETWEEN BOLD HEAD AND FOUNDATION TUBE AND BETWEEN NUT AND FOUNDATION TUBE.

STEEL THRIE BEAM BULLNOSE TERMINAL

STATE OF WISCONSIN
DEPARTMENT OF TRANSPORTAT

6

SDD 14B26 - 05c

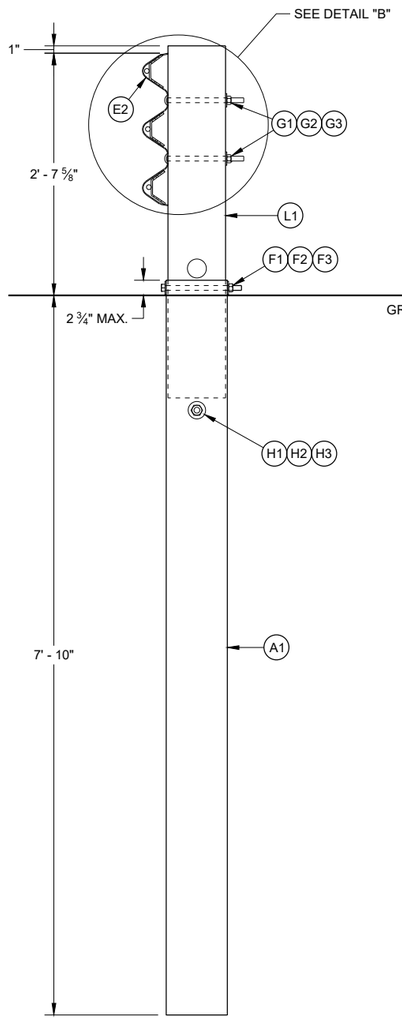

POST NO. 1

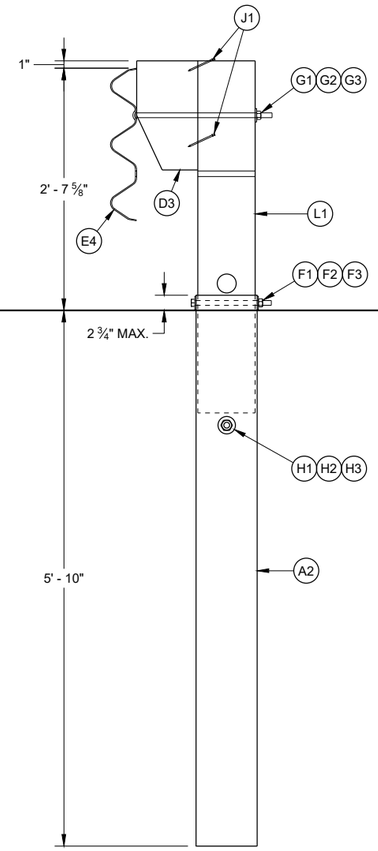

POST NO. 2

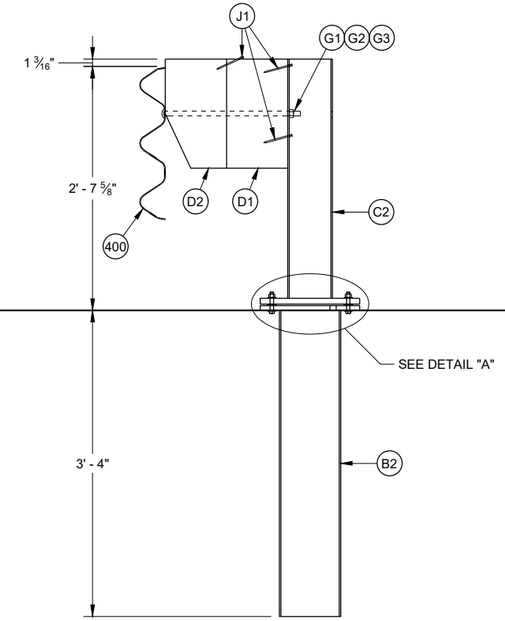

POST NOS. 3-8

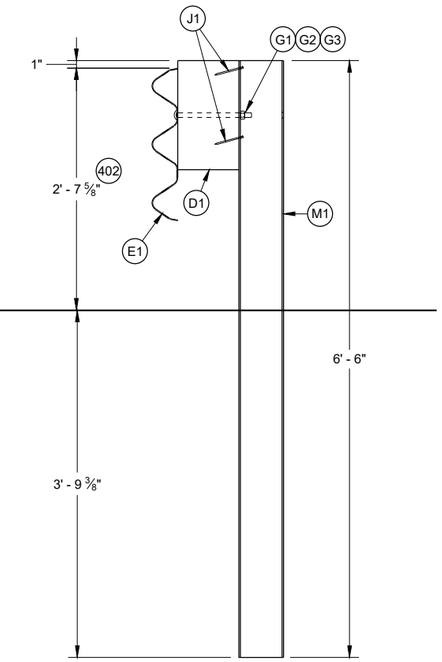

POST NOS. 9 AND ALL STEEL THRIE BEAM POSTS BEYOND

GENERAL NOTES

400 RAIL CAN BE E3 OR E4 DEPENDING ON POST LOCATION.

401 TORQUE BOLD BETWEEN 60-75 FT-LB

402 HEIGHT WILL VARY WITHIN HEIGHT TRANSITION TO OTHER HARDWARE. SEE NOTE 213, SHEET "b".

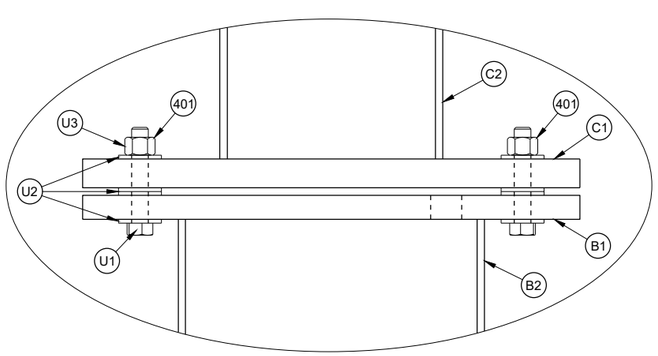

DETAIL "A"

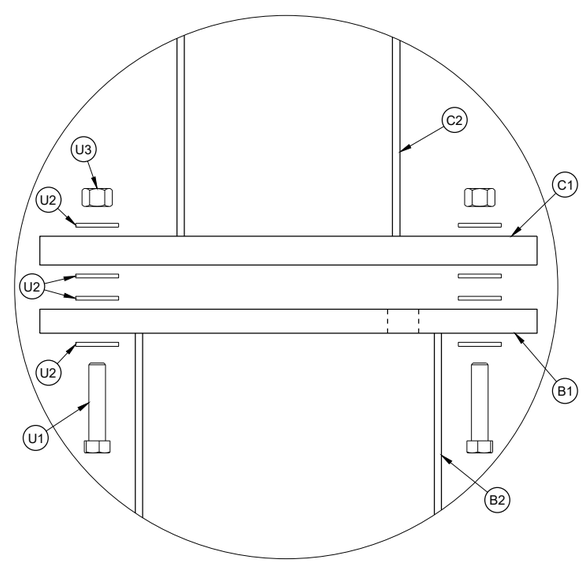

EXPLODED VIEW
DETAIL "A"

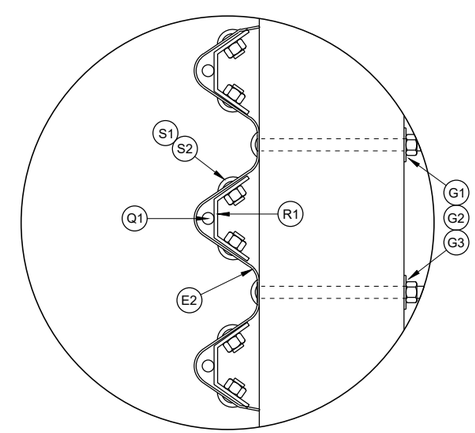

DETAIL "B"

STEEL THRIE BEAM BULLNOSE TERMINAL

STATE OF WISCONSIN
DEPARTMENT OF TRANSPORTATION

6

6

SDD 14B26 - 05d

SDD 14B26 - 05d

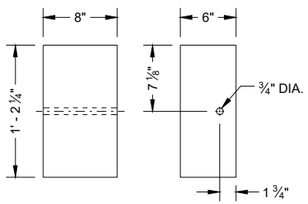

ELEVATION PROFILE
BLOCKOUT (D1)

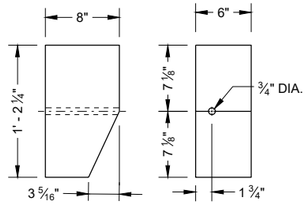

ELEVATION PROFILE
BLOCKOUT (D2)

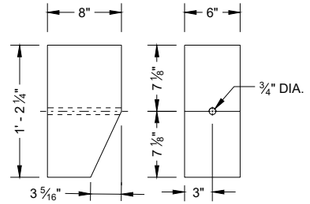

ELEVATION PROFILE
BLOCKOUT (D3)

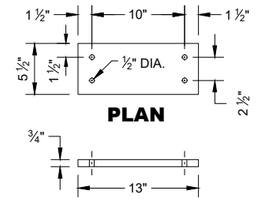

PLAN

PROFILE
UPPER SHEAR PLATE (C1)

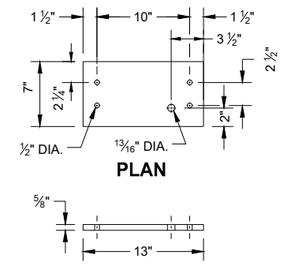

PLAN

PROFILE
LOWER SHEAR PLATE (B1)

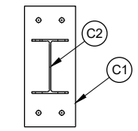

PLAN

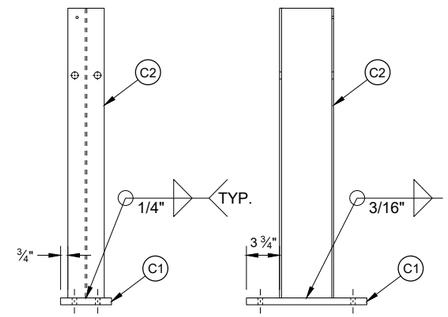

ELEVATION PROFILE
UPPER POST ASSEMBLY

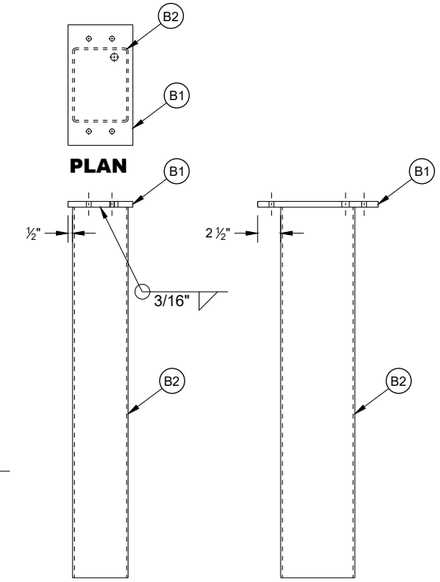

PLAN

ELEVATION PROFILE
LOWER POST ASSEMBLY

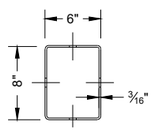

PLAN

PART	LENGTH "X"
A1	8' - 0"
A2	6' - 0"
B2	3' - 4"

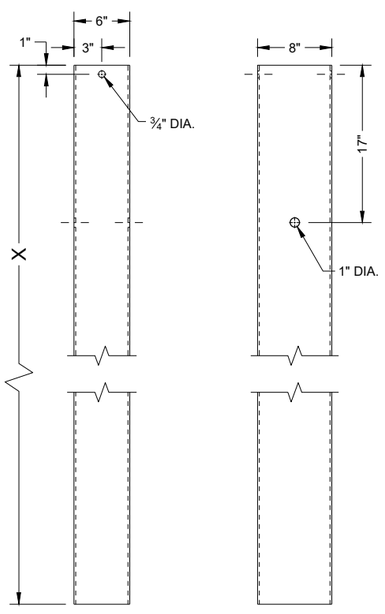

ELEVATION PROFILE
FOUNDATION TUBE

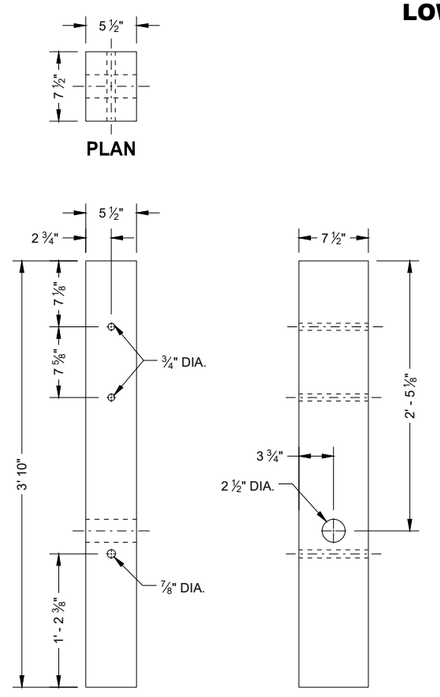

ELEVATION PROFILE
BCT POST (L1)

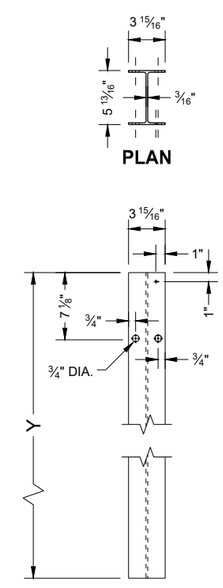

PLAN

ELEVATION
POST

PART	LENGTH "Y"
M1	6' - 6"
M2	5' - 8 5/8"
C2	2' - 7 5/8"

STEEL THRIE BEAM BULLNOSE TERMINAL

STATE OF WISCONSIN
DEPARTMENT OF TRANSPORTAT

6

SDD 14B26 - 05e

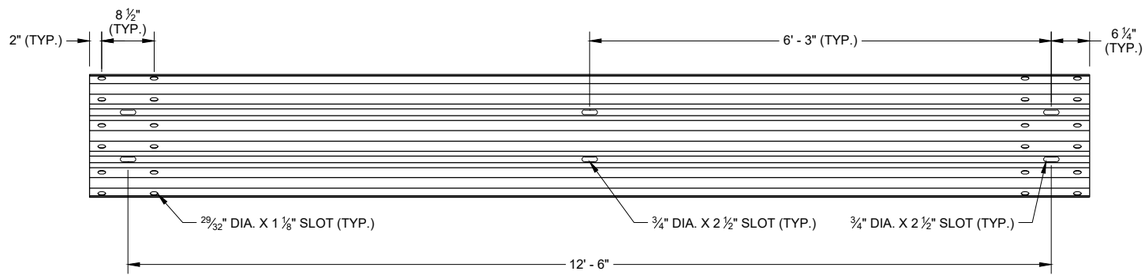

SLOTTED THRIE BEAM RAIL E1

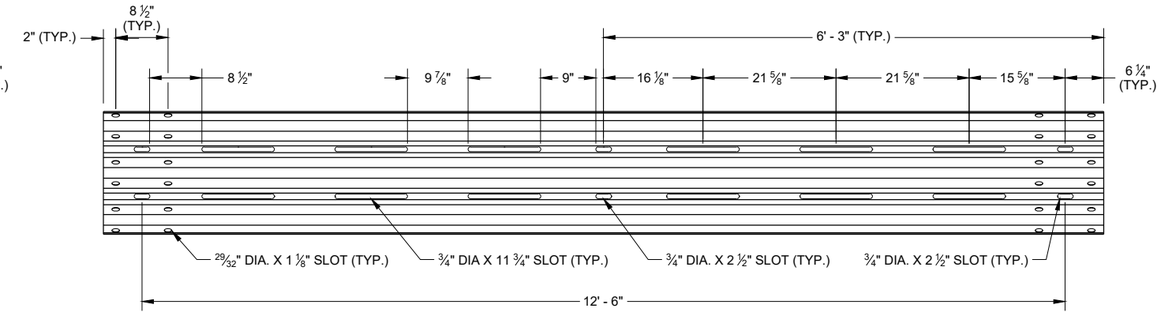

SLOTTED THRIE BEAM RAIL E3

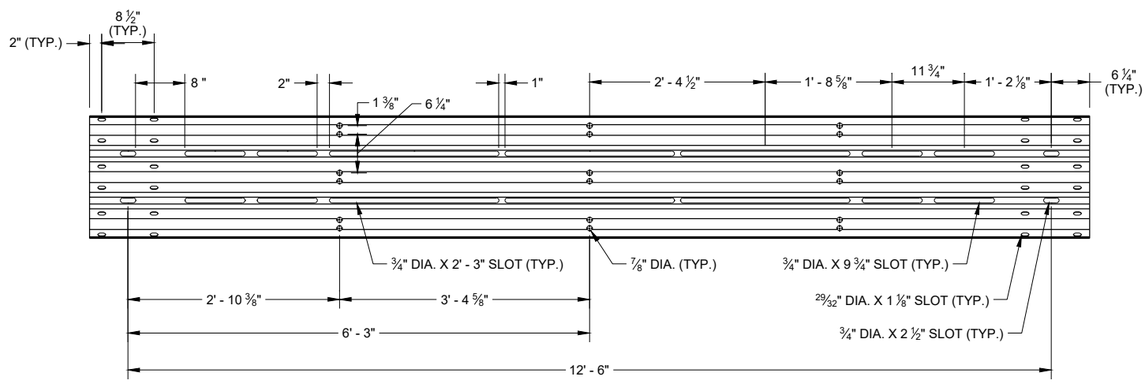

ELEVATION VIEW NON - RADIUSED
SLOTTED THRIE BEAM RAIL E2

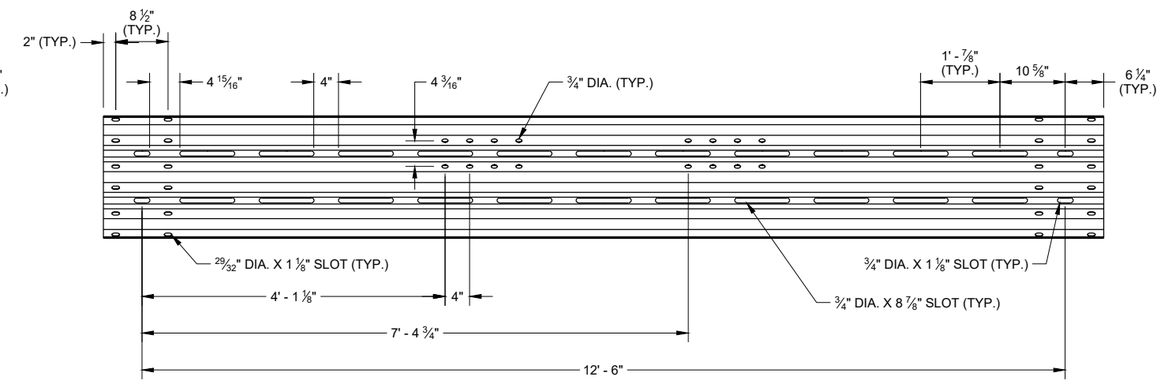

ELEVATION VIEW NON - RADIUSED
SLOTTED THRIE BEAM RAIL E4

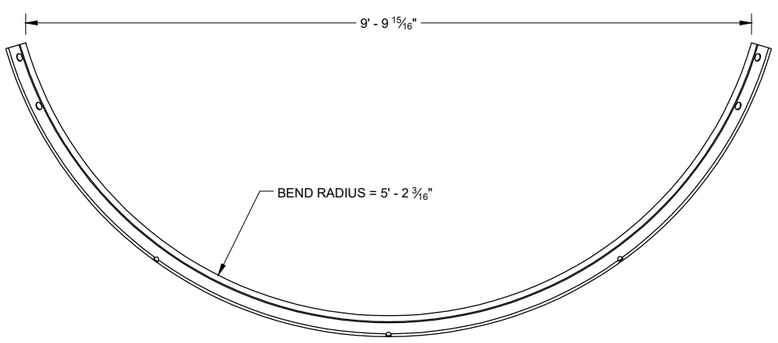

PLAN VIEW
SLOTTED THRIE BEAM RAIL E2

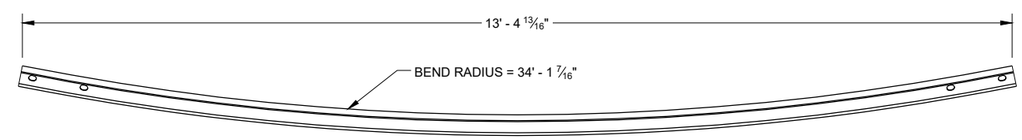

PLAN VIEW
SLOTTED THRIE BEAM RAIL E4

STEEL THRIE BEAM BULLNOSE TERMINAL

STATE OF WISCONSIN
DEPARTMENT OF TRANSPORTA

6

SDD 14B26 - 05f

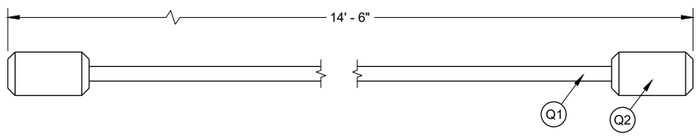

NOSE CABLE AND SWAGE BUTTON

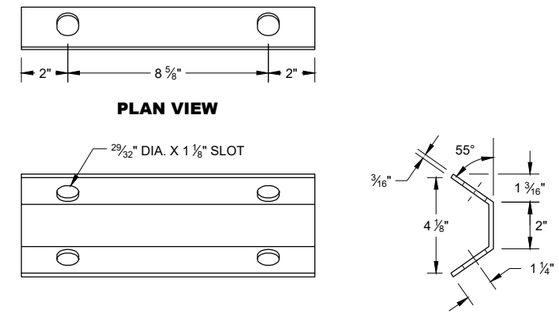

NOSE CABLE ANCHOR (R1)

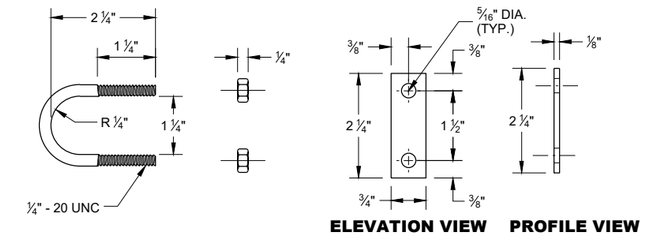

U - BOLT (T1) **U - BOLT NUT (T3)** **U - BOLT PLATE WASHER (T2)**

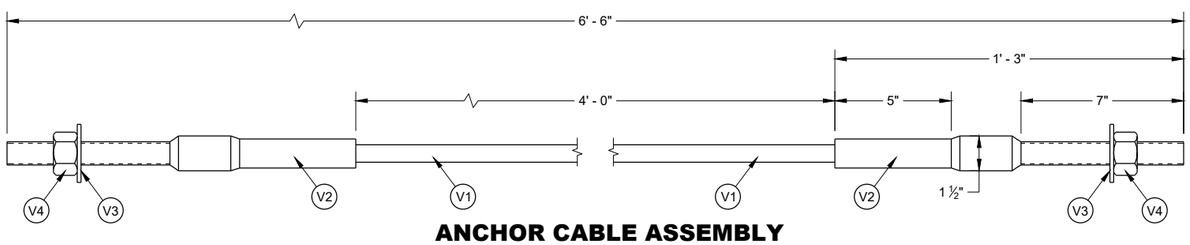

ANCHOR CABLE ASSEMBLY

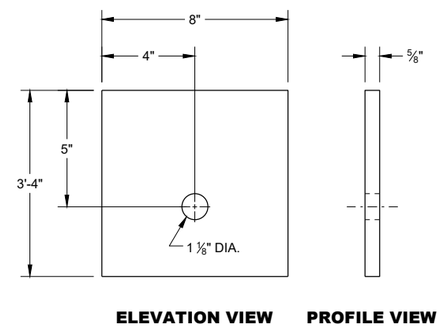

BCT BEARING PLATE (A3)

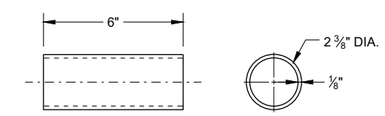

BCT POST SLEEVE (L2)

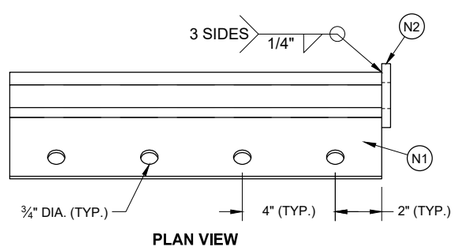

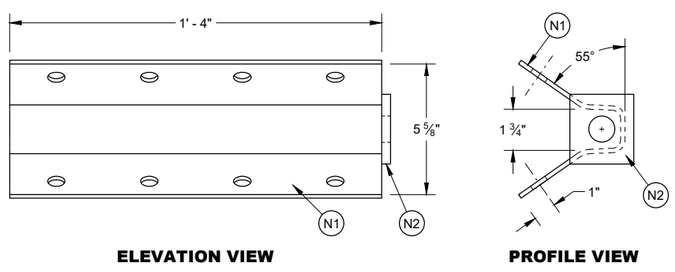

ANCHOR BRACKET ASSEMBLY (N1)

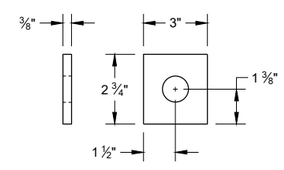

ANCHOR BRACKET END PLATE (N2)

STEEL THRIE BEAM BULLNOSE TERMINAL

STATE OF WISCONSIN
DEPARTMENT OF TRANSPORTATION

6
SDD 14B26 - 05g

BILL OF MATERIALS LIST

PART NUMBER	DESCRIPTION	MATERIAL SPECIFICATION
A1	LONG FOUNDATION TUBE	AASHTO M111/ASTM A123 ASTM A500 GRADE B OR ASTM A-501
A2	FOUNDATION TUBE	AASHTO M111/ASTM A123 ASTM A500 GRADE B OR ASTM A-501
A3	BEARING PLATE AT POST	AASHTO M111/ASTM A123 ASTM A36 MIN STRENGTH 36 KSI, OR ASTM A529 MAX. STRENGTH 50 KSI, OR ASTM A572 MAX. STRENGTH 50 KSI, OR ASTM A709 MAX. STRENGTH 50 KSI, OR ASTM A992 MAX. STRENGTH 50 KSI
B1	LOWER SLIP POST ASSEMBLY - PLATE	AASHTO M111/ASTM A123 ASTM A36 MIN STRENGTH 36 KSI, OR ASTM A529 MAX. STRENGTH 50 KSI, OR ASTM A572 MAX. STRENGTH 50 KSI, OR ASTM A709 MAX. STRENGTH 50 KSI, OR ASTM A992 MAX. STRENGTH 50 KSI
B2	LOWER SLIP POST ASSEMBLY - TUBE	AASHTO M111/ASTM A123 ASTM A500 GRADE B OR ASTM A-501
C1	UPPER SLIP POST ASSEMBLY - PLATE	AASHTO M111/ASTM A123 ASTM A36 MIN STRENGTH 36 KSI, OR ASTM A529 MAX. STRENGTH 50 KSI, OR ASTM A572 MAX. STRENGTH 50 KSI, OR ASTM A709 MAX. STRENGTH 50 KSI, OR ASTM A992 MAX. STRENGTH 50 KSI
C2	UPPER SLIP POST ASSEMBLY - POST	AASHTO M111/ASTM A123 ASTM A6 W6X9 OR W6X8.5 ASTM A36 MIN STRENGTH 36 KSI, OR ASTM A529 MAX. STRENGTH 50 KSI, OR ASTM A572 MAX. STRENGTH 50 KSI, OR ASTM A709 MAX. STRENGTH 50 KSI, OR ASTM A992 MAX. STRENGTH 50 KSI
D1	BLOCK FOR STEEL POST - WOOD	WISDOT SPEC. 614
D2	TAPERED BLOCK FOR STEEL POST - WOOD	WISDOT SPEC. 614
D3	TAPERED BLOCK FOR BCT POST - WOOD	WISDOT SPEC. 614
E1	THRIE BEAM RAIL	AASHTO M180 CLASS A TYPE 2 APPROVED PRODUCER
E2	THRIE BEAM RAIL - SHOP BENT AND PUNCHED	AASHTO M180 CLASS A TYPE 2 APPROVED PRODUCER. INDICATE RADIUS BEAM GUARD IS BENT TO ON THE BACKSIDE OF RAIL. FOLLOW AASHTO M180. MARK RADIUS.
E3	THRIE BEAM RAIL - PUNCHED	AASHTO M180 CLASS A TYPE 2 APPROVED PRODUCER
E4	THRIE BEAM RAIL - SHOP BENT AND PUNCHED	AASHTO M180 CLASS A TYPE 2 APPROVED PRODUCER. INDICATE RADIUS BEAM GUARD IS BENT TO ON THE BACKSIDE OF RAIL. FOLLOW AASHTO M180. MARK RADIUS.
F1	5/8" DIA. HEX HEAD GROUND STRUT AND YOKE BOLT	HOT DIP AASHTO M232 CLASS / ASTM A153 CLASS C / ASTM F2329 C OR MECHANICAL GAL. TO AASHTO M298 CLASS 50 TYPE 1/ ASTM B695 CLASS 50 TYPE 1 UNC HEAVY HEX HEAD ASTM A307 GRADE B OR SAE J429 GRADE 2 OR ASTM F1554 GRADE 36
F2	5/8" DIA. GROUND STRUT AND YOKE BOLT - WASHER	HOT DIP AASHTO M232 CLASS / ASTM A153 CLASS C / ASTM F2329 C OR MECHANICAL GAL. TO AASHTO M298 CLASS 50 TYPE 1/ ASTM B695 CLASS 50 TYPE 1 F436 TYPE 1 (HARDEN WASHER ONLY)
F3	GROUND STRUT AND YOKE BOLT - NUT	HOT DIP AASHTO M232 CLASS / ASTM A153 CLASS C / ASTM F2329 C OR MECHANICAL GAL. TO AASHTO M298 CLASS 50 TYPE 1/ ASTM B695 CLASS 50 TYPE 1 UNC OVER TAP NUTS AS SPECIFIED IN AASHTO 291/ASTM A 563 HEAVY HEX HEAD ASTM A563DH OR SAE J995 GRADE 5
G1	5/8 " DIA. POST BOLT	HOT DIP AASHTO M232 CLASS / ASTM A153 CLASS C / ASTM F2329 C OR MECHANICAL GAL. TO AASHTO M298 CLASS 50 TYPE 1/ ASTM B695 CLASS 50 TYPE 1 F436 TYPE 1 (HARDEN WASHER TYPICALLY USED WITH STEEL POSTS) OR ASTM F844 (UNHARDENED WASHER TYPICALLY USED WITH WOOD)
G2	POST BOLT - WASHER	HOT DIP AASHTO M232 CLASS / ASTM A153 CLASS C / ASTM F2329 C OR MECHANICAL GAL. TO AASHTO M298 CLASS 50 TYPE 1/ ASTM B695 CLASS 50 TYPE 1 F436 TYPE 1 (HARDEN WASHER TYPICALLY USED WITH STEEL POSTS) OR ASTM F844 (UNHARDENED WASHER TYPICALLY USED WITH WOOD)
G3	POST BOLT - NUT	HOT DIP AASHTO M232 CLASS / ASTM A153 CLASS C / ASTM F2329 C OR MECHANICAL GAL. TO AASHTO M298 CLASS 50 TYPE 1/ ASTM B695 CLASS 50 TYPE 1 UNC OVER TAP NUTS AS SPECIFIED IN AASHTO 291/ASTM A 563 AASHTO M180 RECESSED HEAVY HEX HEAD ASTM A563DH OR SAE J995 GRADE 5
H1	7/8" DIA. SOIL TUBE BOLT	HOT DIP AASHTO M232 CLASS / ASTM A153 CLASS C / ASTM F2329 C OR MECHANICAL GAL. TO AASHTO M298 CLASS 50 TYPE 1/ ASTM B695 CLASS 50 TYPE 1 UNC OVER TAP NUTS AS SPECIFIED IN AASHTO 291/ASTM A 563 HEAVY HEX HEAD 7/8" ASTM A563DH OR SAE J995 GRADE 5
H2	SOIL TUBE BOLT - WASHER	HOT DIP AASHTO M232 CLASS / ASTM A153 CLASS C / ASTM F2329 C OR MECHANICAL GAL. TO AASHTO M298 CLASS 50 TYPE 1/ ASTM B695 CLASS 50 TYPE 1 7/8" ASTM F844 TYPE 1 (HARDEN WASHER ONLY)
H3	SOIL TUBE BOLT - NUT	HOT DIP AASHTO M232 CLASS / ASTM A153 CLASS C / ASTM F2329 C OR MECHANICAL GAL. TO AASHTO M298 CLASS 50 TYPE 1/ ASTM B695 CLASS 50 TYPE 1 UNC OVER TAP NUTS AS SPECIFIED IN AASHTO 291/ASTM A 563 HEAVY HEX HEAD 7/8" ASTM A563DH OR SAE J995 GRADE 5
J1	16D DOUBLE HEAD NAIL	ASTM A153 HOT DIPPED CLASS D DOUBLE HEAD ASTM F1667 TYPE 1 STYLE 12 (16 DOUBLE HEADED)
L1	BCT TIMBER POST	WISDOT SPEC. 614 S4S FINISH ON 4 SIDE
L2	BCT POST SLEEVE	AASHTO M111/ASTM A123 2 3/8" OD ASTM 53 GRADE B
M1	W6X8.5 OR W6X9 STEEL POST	AASHTO M111/ASTM A123 ASTM A6 W6X9 OR W6X8.5 ASTM A36 MIN. STRENGTH 36 KSI, OR ASTM A529 MAX. STRENGTH 50 KSI, OR ASTM A572 MAX. STRENGTH 50 KSI, OR ASTM A709 MAX. STRENGTH 50 KSI, OR ASTM A992 MAX. STRENGTH 50 KSI
M2	W6X8.5 OR W6X9 STEEL POST	AASHTO M111/ASTM A123 ASTM A6 W6X9 OR W6X8.5 ASTM A36 MIN. STRENGTH 36 KSI, OR ASTM A529 MAX. STRENGTH 50 KSI, OR ASTM A572 MAX. STRENGTH 50 KSI, OR ASTM A709 MAX. STRENGTH 50 KSI, OR ASTM A992 MAX. STRENGTH 50 KSI
N1	ANCHOR BRACKET	AASHTO M111/ASTM A123 ASTM A36 MIN. STRENGTH 36 KSI, OR ASTM A529 MAX. STRENGTH 50 KSI, OR ASTM A572 MAX. STRENGTH 50 KSI, OR ASTM A709 MAX. STRENGTH 50 KSI, OR ASTM A992 MAX. STRENGTH 50 KSI
N2	ANCHOR BRACKET - BEARING PLATE	AASHTO M111/ASTM A123 ASTM A36 MIN. STRENGTH 36 KSI, OR ASTM A529 MAX. STRENGTH 50 KSI, OR ASTM A572 MAX. STRENGTH 50 KSI, OR ASTM A709 MAX. STRENGTH 50 KSI, OR ASTM A992 MAX. STRENGTH 50 KSI

PART NUMBER	DESCRIPTION	MATERIAL SPECIFICATION
P1	5/8" DIA. ANCHOR BRACKET BOLT	HOT DIP AASHTO M232 CLASS / ASTM A153 CLASS C / ASTM F2329 C OR MECHANICAL GAL. TO AASHTO M298 CLASS 50 TYPE 1/ ASTM B695 CLASS 50 TYPE 1 UNC HEAVY HEX HEAD 5/8" ASTM A307 GRADE B OR SAE J429 GRADE 2 OR ASTM F1554 GRADE 36
P2	ANCHOR BRACKET BOLT - WASHER	HOT DIP AASHTO M232 CLASS / ASTM A153 CLASS C / ASTM F2329 C OR MECHANICAL GAL. TO AASHTO M298 CLASS 50 TYPE 1/ ASTM B695 CLASS 50 TYPE 1 F436 TYPE 1 (HARDEN WASHER ONLY)
P3	SOIL TUBE BOLT - NUT	HOT DIP AASHTO M232 CLASS / ASTM A153 CLASS C / ASTM F2329 C OR MECHANICAL GAL. TO AASHTO M298 CLASS 50 TYPE 1/ ASTM B695 CLASS 50 TYPE 1 UNC OVER TAP NUTS AS SPECIFIED IN AASHTO 291/ASTM A 563 HEAVY HEX HEAD ASTM A563DH OR SAE J995 GRADE 5
Q1	5/8" DIA. NOSE CABLE	6X19 AASTHO M30 / ASTM A741 XIPS INDEPENDENT WIRE CORE (IWRC) PR 6X25 XIPS, IWRC NOMINAL BREAKING STRENGTH OF 41.2 KIPS.
Q2	NOSE CABLE-SWAGE BUTTON	COLD TUFF BUTTON, S-409 SIZE NO. 12 STOCK NUMBER 1040395 OR ANY OTHER SIMILAR SIZED WAGED-GRIP-BUTTON FERRULES. ASTM A576 GRADE 1035 SWAGE FITTING ARE TO BE FIELD SWAGED PER MANUFACTURERS RECOMMENDATION. NOMINAL BREAKING STRENGTH OF 41.2 KIPS.
R1	NOSE CABLE ANCHOR BRACKET	AASHTO M111/ASTM A123 ASTM A36 MIN. STRENGTH 36 KSI, OR ASTM A529 MAX. STRENGTH 50 KSI, OR ASTM A572 MAX. STRENGTH 50 KSI, OR ASTM A709 MAX. STRENGTH 50 KSI, OR ASTM A992 MAX. STRENGTH 50 KSI
S1	5/8" DIA. SPLICE BOLT - BOLT	HOT DIP AASHTO M232 CLASS / ASTM A153 CLASS C / ASTM F2329 C OR MECHANICAL GAL. TO AASHTO M298 CLASS 50 TYPE 1 / ASTM B695 CLASS 50 TYPE 1 UNC AASHTO M180 HEAD ASTM A307 GRADE B OR SAE J429 GRADE 2 OR ASTM F1554 GRADE 36
S2	SPLICE - BOLT NUT	HOT DIP AASHTO M232 CLASS / ASTM A153 CLASS C / ASTM F2329 C OR MECHANICAL GAL. TO AASHTO M298 CLASS 50 TYPE 1 / ASTM B695 CLASS 50 TYPE 1 UNC OVER TAP NUTS AS SPECIFIED IN AASHTO 291/ASTM A 563 AASHTO M180 RECESSED HEAVY HEX HEAD 5/8" ASTM A563DH OR SAE J995 GRADE 5
T1	1/4" DIA. NOSE CABLE - U BOLT	HOT DIP AASHTO M232 CLASS / ASTM A153 CLASS C / ASTM F2329 C OR MECHANICAL GAL. TO AASHTO M298 CLASS 50 TYPE 1 / ASTM B695 CLASS 50 TYPE 1 UNC HEAVY HEX HEAD ASTM A307 GRADE B OR SAE J429 GRADE 2 OR ASTM F1554 GRADE 36
T2	U-BOLT - PLATE WASHER	HOT DIP AASHTO M232 CLASS / ASTM A153 CLASS C / ASTM F2329 C OR MECHANICAL GAL. TO AASHTO M298 CLASS 50 TYPE 1 / ASTM B695 CLASS 50 TYPE 1 F436 TYPE 1 (HARDEN WASHER ONLY)
T3	U-BOLT NUT	HOT DIP AASHTO M232 CLASS / ASTM A153 CLASS C / ASTM F2329 C OR MECHANICAL GAL. TO AASHTO M298 CLASS 50 TYPE 1/ ASTM B695 CLASS 50 TYPE 1 UNC OVER TAP NUTS AS SPECIFIED IN AASHTO 291 / ASTM A 563 HEAVY HEX HEAD ASTM A563DH OR SAE J995 GRADE 5
U1	7/16" DIA. SLIP POST ASSEMBLY - BREAKAWAY BOLT	ASTM A153 OR B695 CLASS 55 OR F2329 UNC FULLY THREADED HEX HEAD TAP BOLT ASTM A449 OR SAE J429 GRADE 5
U2	7/16" DIA. SLIP POST ASSEBLY - BREAKAWAY BOLT - WASHER	ASTM F436 TYPE I (HARDEN TYPICALLY USED WITH STEEL) GALV. AASHTO M111/ASTM A 123 OR GALV. HOT DIP. TO POST BOLT CLASS C / ASTM F2329 OR GALV. MECHANICALLY TO AASHTO M232 CLASS C / ASTM A153 CLASS C / ASTM AASHTO M298 CLASS 50, TYPE 1 / ASTM B695 CLASS 55, F2329
U3	SLIP POST ASSEBLY - BREAKAWAY BOLT - NUT	HOT DIP AASHTO M232 CLASS / ASTM A153 CLASS C / ASTM F2329 C OR MECHANICAL GAL. TO AASHTO M298 CLASS 50 TYPE 1 / STM B695 CLASS 50 TYPE 1 UNC OVER TAP NUTS AS SPECIFIED IN AASHTO 291/ASTM A 563 HEAVY HEX HEAD ASTM A563DH OR SAE J995 GRADE 5
V1	¾" DIA. BCT CABLE	AASHTO M30 / ASTM A741 6X19 INDEPENDENT WIRE CORE (IWRC) IMPROVED PLOW STEEL (IPS), 6X19 INDEPENDENT WIRE CORE (IWRC) IMPROVED PLOW STEEL (IPS) TYPE II OR IIC, CLASS C ZINC COATED MIN BREAKING STRENGTH OF 42.7 KIPS
V2	ANCHOR CABLE-SWAGE FITTING	UNC ASTM A576 GRADE 1035 SWAGE FITTING ARE TO BE FACTORY SWAGED. MIN. BREAKING STRENGTH OF 42.7 KIPS. ASME B30.26 "FORGED, CAST, OR DIE STAMPED WITH THE FOLLOWING IN TO CONNECTION: NAME OF MANUFACTURE OR TRADEMARK OF CONNECTION'S MANUFACTURER, SIZE OR RATED LOAD, GRADE FOR ALLOY EYEBOLTS."
V3	1" DIA. ANCHOR CABLE-WASHER	HOT DIP AASHTO M232 CLASS / ASTM A153 CLASS C / ASTM F2329 C OR MECHANICAL GAL. TO AASHTO M298 CLASS 50 TYPE 1 / ASTM B695 CLASS 50 TYPE 1 F436 TYPE 1 (HARDEN WASHER ONLY)
V4	1" DIA. ANCHOR CABLE-NUT	HOT DIP AASHTO M232 CLASS / ASTM A153 CLASS C / ASTM F2329 C OR MECHANICAL GAL. TO AASHTO M298 CLASS 50 TYPE 1/ ASTM B695 CLASS 50 TYPE 1 UNC OVER TAP NUTS AS SPECIFIED IN AASHTO 291 / ASTM A 563 HEAVY HEX HEAD ASTM A563DH OR SAE J995 GRADE 5
W1	REFLECTOR	SEE SDD 15A4

6

6

STEEL THRIE BEAM BULLNOSE TERMINAL

STATE OF WISCONSIN
DEPARTMENT OF TRANSPORTATION

APPROVED
November 2022 — DATE
/S/ Rodney Taylor — ROADWAY STANDARDS DEVE ENGINEER
FHWA

SDD 14B26 - 05h

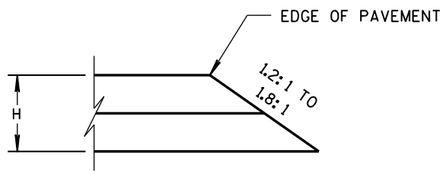

CONSTRUCTED WITH FINAL TWO LAYERS

FOR H 5" OR LESS

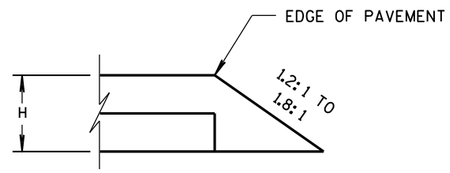

CONSTRUCTED WITH FINAL LAYER

FOR H 5" OR LESS

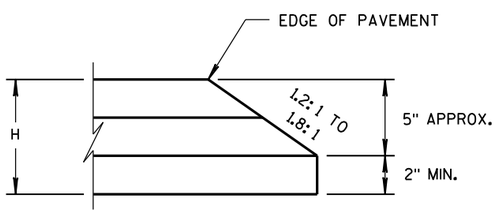

CONSTRUCTED WITH FINAL TWO LAYERS

FOR H GREATER THAN 5"

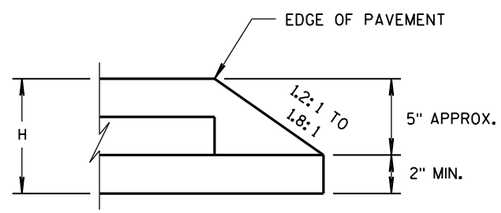

CONSTRUCTED WITH FINAL LAYER

FOR H GREATER THAN 5"

HMA PAVEMENT AND HMA OVERLAYS

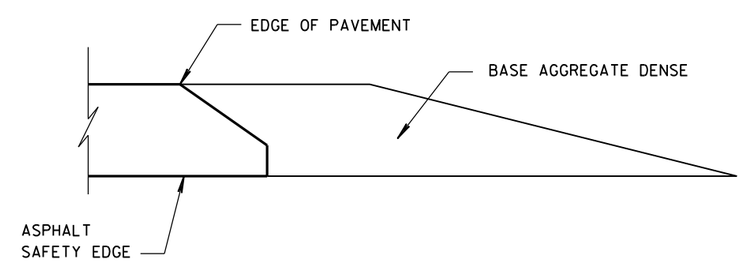

FINISHED SHOULDER AGGREGATE PLACEMENT

6

6

S.D.D. 14 B 29-1

S.D.D. 14 B 29-1

SAFETY EDGE SM

STATE OF WISCONSIN
DEPARTMENT OF TRANSPORTATION

APPROVED

11/30/2012
DATE

/S/ Jerry H. Zogg
ROADWAY STANDARDS DEVELOPMENT ENGINEER

FHWA

1. WOOD OR STEEL POSTS (w6X9 OR w6X8.5) MAY BE USED. DO NOT INTERMIX WOOD AND STEEL POSTS. INSTALL STEEL POSTS WITH HOLES ON APPROACHING TRAFFIC SIDE.
2. USE WOOD OR APPROVED PLASTIC BLOCKOUTS. WOOD BLOCKOUTS MAY BE CONSTRUCTED OUT OF TWO OR MORE WOOD BLOCKOUTS. SEE ALTERNATE WOOD BLOCKOUT DETAIL. DIMENSIONS OF APPROVED PLASTIC BLOCKOUTS MAY VARY.
3. IF ROCK IS ENCOUNTERED DURING EXCAVATION, PROVIDE A HOLE 12 INCHES IN DIAMETER EXTENDING 20 INCHES DEEP INTO THE ROCK. PLACE APPROXIMATELY 2 1/2" INCHES OF GRANULAR MATERIAL IN THE BOTTOM OF THE HOLE. CUT THE POSTS THE TO LENGTH AMD INSTALL. BACKFILL WITH EXCAVATED MATERIAL AND COMPACT. BACKFILL IS TO BE FREE OF LARGE ROCKS.
4. WHEN THE DISTANCE FROM BACK OF POST TO SHOULDER HINGE POINT IS LESS THAN 2 FEET INSTALL LONGER POST AT HALF POST SPACING (K).
5. FOR NEW MGS INSTALLATION TOP OF W-BEAM RAIL TOLERANCE IS ±1". FOR EXISTING MGS INSTALLATION TOP OF W-BEAM IS BETWEEN 27 ¾" TO 32".
6. WHEN USING STEEL POST AND WOOD BLOCKOUTS INSTALL FOUR 16D GALVANIZED NAILS. INSTALL NAILS AT THE BACK CORNERS OF THE BLOCK AND BEND THE NAILS OVER THE FLANGE OF THE STEEL POST.
7. TOTAL POST LENGTH FOR TYPE K IS 7' - 0". TOTAL POST LENGTH FOR OTHER MGS TYPES IS 6' - 0".

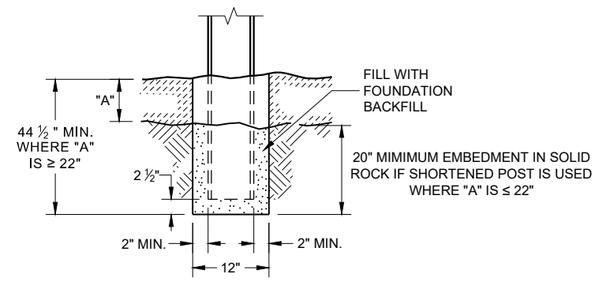

END VIEW
SETTING STEEL OR WOOD POST IN ROCK (3)

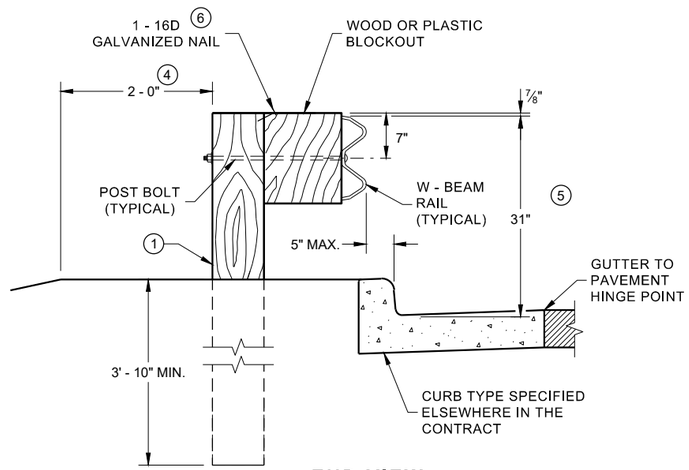

END VIEW
LOCATED ALONG A CURBED ROADWAY

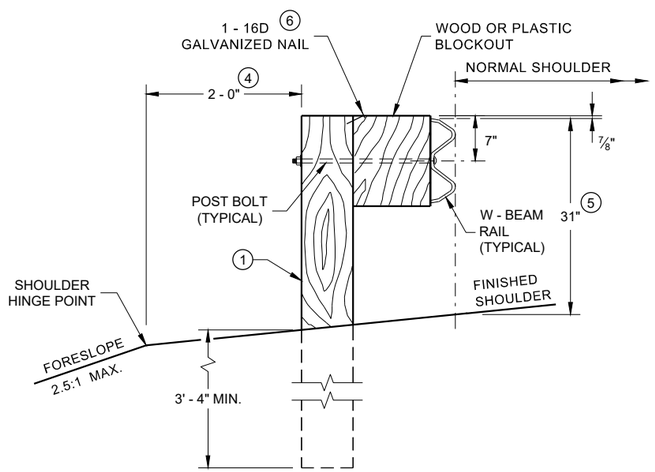

END VIEW
LOCATED ALONG A ROADWAY SHOULDER STANDARD INSTALLATION

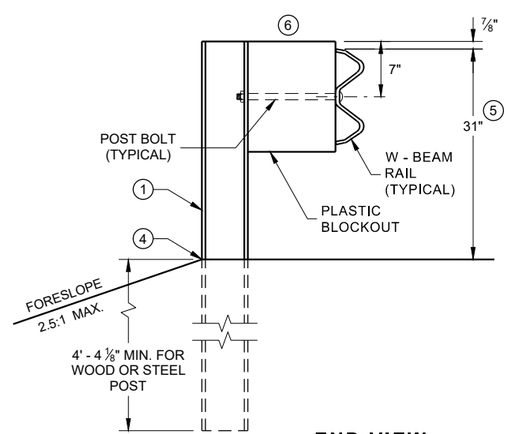

END VIEW
MGS LONGER POST AT HALFPOST SPACING W BEAM (K)

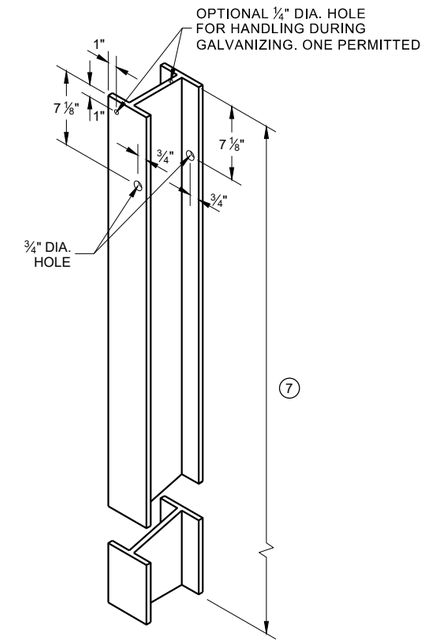

STEEL POST & HOLE PUNCHING DETAIL (W 6 X 9) (1)

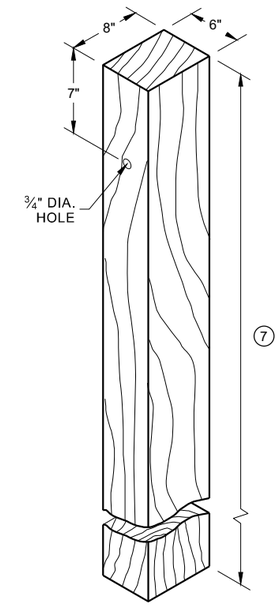

WOOD POST (6" X 8") NOMINAL (1)

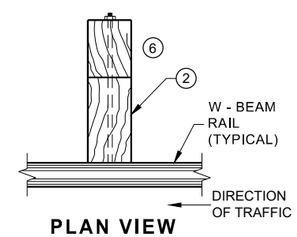

PLAN VIEW WOOD POST, BLOCKOUT & BEAM

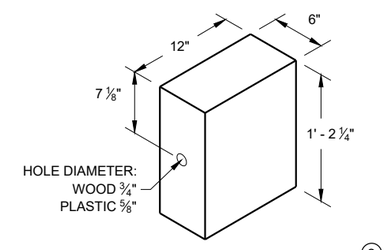

WOOD OR PLASTIC BLOCKOUT (2)

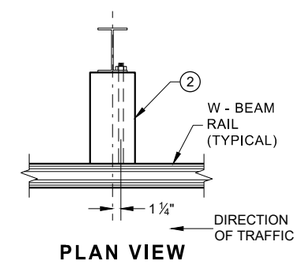

PLAN VIEW STEEL POST, PLASTIC BLOCKOUT & BEAM

MIDWEST GUARDRAIL SYSTEM (MGS) GUARDRAIL

STATE OF WISCONSIN
DEPARTMENT OF TRANSPORTA

6

SDD 14B42 - 07a

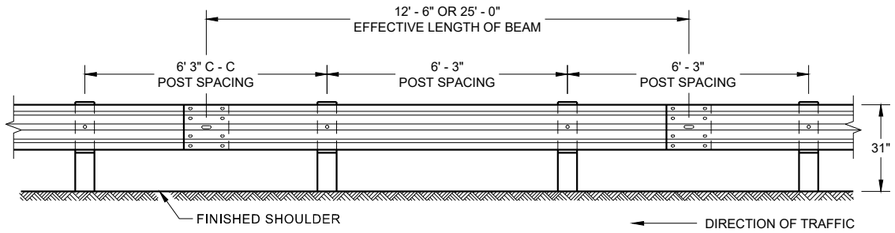

FRONT VIEW
POST SPACING STANDARD INSTALLATION

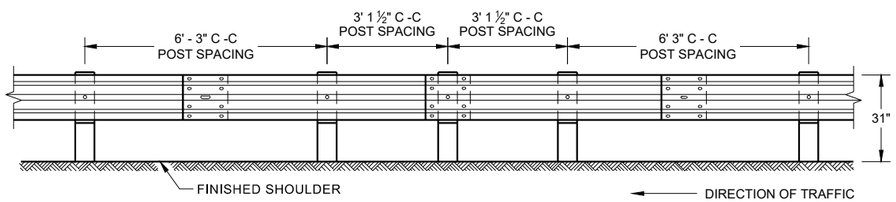

FRONT VIEW
HALF POST SPACING (HS) AND HALF POST SPACING WITH LONGER POSTS (K)

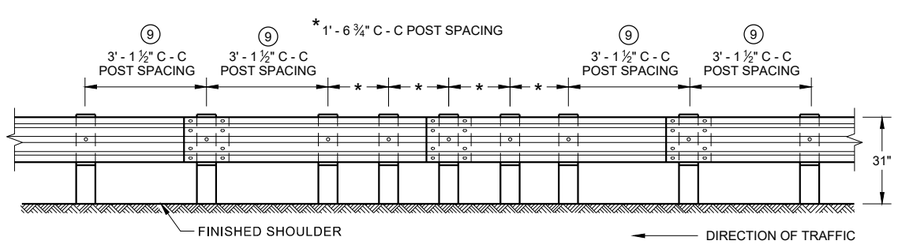

FRONT VIEW
QUARTER POST SPACING (QS)

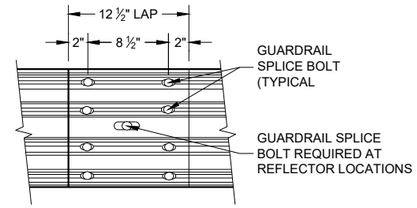

FRONT VIEW
MID-SPAN BEAM SPLICE

GENERAL NOTES

(8) DO NOT INSTALL REFLECTORS ON THE FIRST 50 FEET OF THE APPROACH END OF THE ENERGY ABSORBING TERMINAL.

(9) 25 FEET OF HALF POST SPACING IS REQUIRED ON APPROACH AND DEPARTURE ENDS OF QUARTER POST SPACING.

POST BOLTS ARE A ⅝" DIAMETER ASTM A307 GUARDRAIL BOLT. A POST BOLT REQUIRES ⅝" DIAMETER A563A DOUBLE RECESSED (DR) HEAVY HEX NUT AND ⅝" DIAMETER F844 FLAT WASHER. POST BOLTS MAY BE LONGER IF MULTIPLE BLOCKOUTS ARE BEING USED.

GUARD RAIL SPLICE BOLTS ARE A ⅝" DIAMETER ASTM A307 GUARDRAIL HEAD BOLT. A GUARDRAIL SPLICE BOLT REQUIRES ⅝" DIAMETER A563A DOUBLE RECESSED (DR) HEAVY HEX NUT.

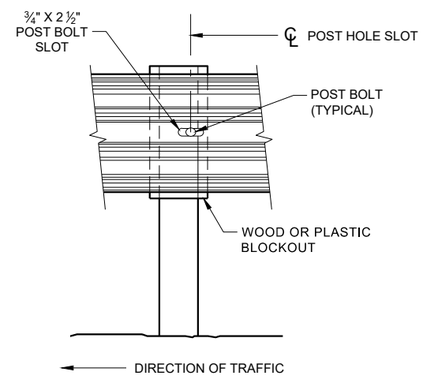

FRONT VIEW AT STEEL POST

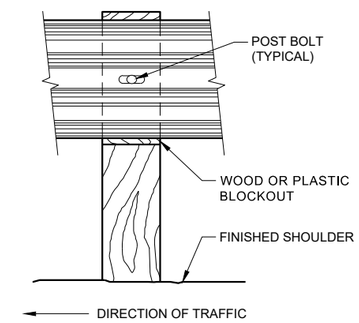

FRONT VIEW AT WOOD POST

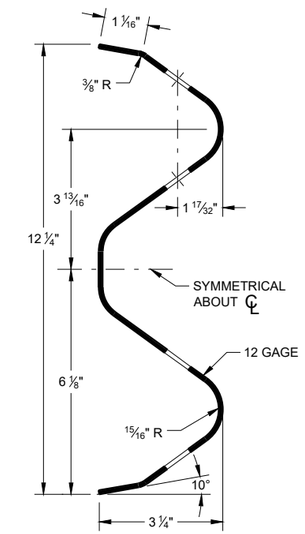

SECTION THRU W-BEAM RAIL

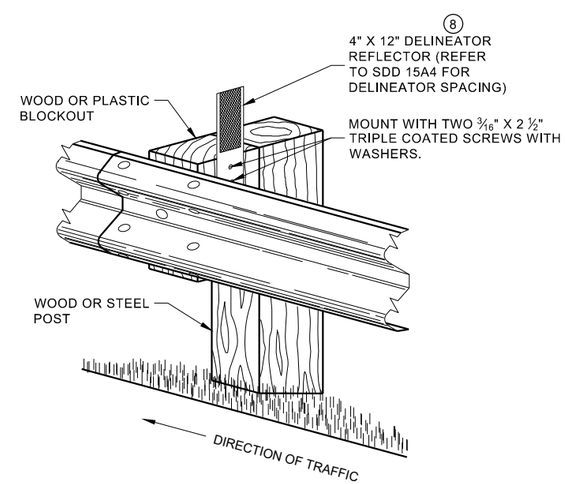

ONE SIDED REFLECTOR DETAIL AND TYPICAL INSTALLATION

MIDWEST GUARDRAIL SYSTEM (MGS) GUARDRAIL

STATE OF WISCONSIN
DEPARTMENT OF TRANSPORTA

6

SDD 14B42 - 07b

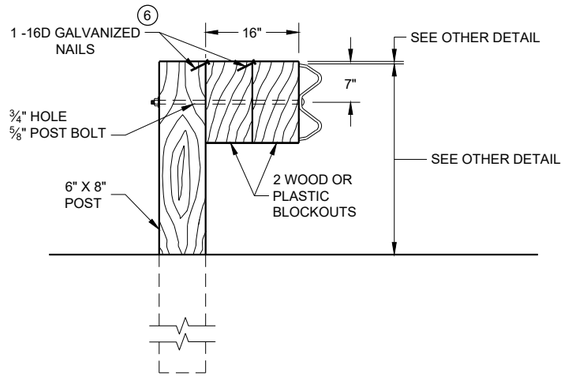

DETAIL FOR 16" BLOCKOUT DEPTH

IT IS ACCEPTABLE TO USE BLOCKOUTS UP TO 16" DEEP TO INCREASE THE POST OFFSET TO AVOID UNDERGROUND OBSTACLES. THERE IS NO LIMIT TO THE NUMBER OF POSTS THAT CAN HAVE ADDITIONAL BLOCKOUTS UP TO 16" DEEP.

NOTE:

1. ALL FILLETS SHALL HAVE A MINIMUM RADIUS OF 3/16".
2. IF THE BOLT EXTENDS MORE THAN ¼" FROM THE NUT THE BOLT SHOULD BE TRIMMED BACK.

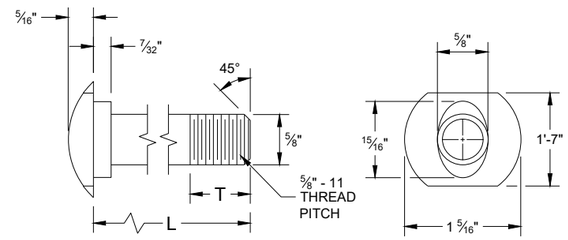

POST BOLT TABLE

L	T (MIN.)
1 ¼"	1 ⅛"
2"	1 ¾"
10"	4"
14"	4 1/16"
18"	4"
21"	4 1/16"
25"	4"

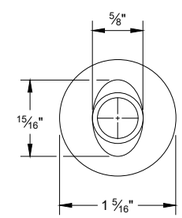

ALTERNATE BOLT HEAD

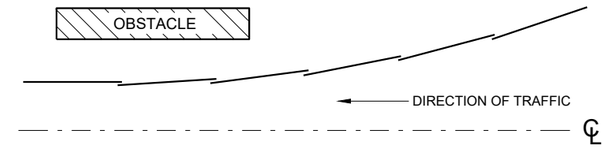

PLAN VIEW
BEAM LAPPING DETAIL

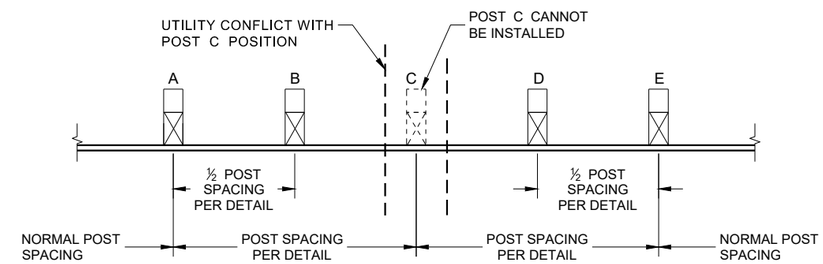

POST DRIVING FOR CONTINUOUS UNDERGROUND OBSTRUCTION

6

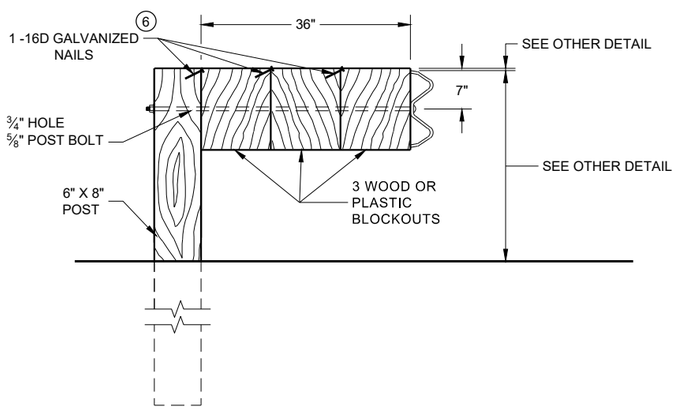

DETAIL FOR 36" BLOCKOUT DEPTH

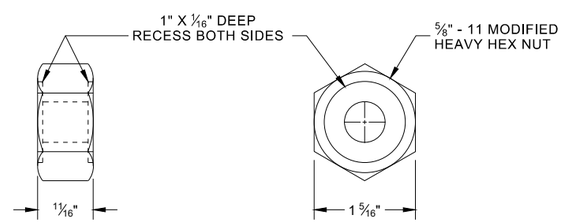

POST BOLT, SPLICE BOLT AND RECESS NUT

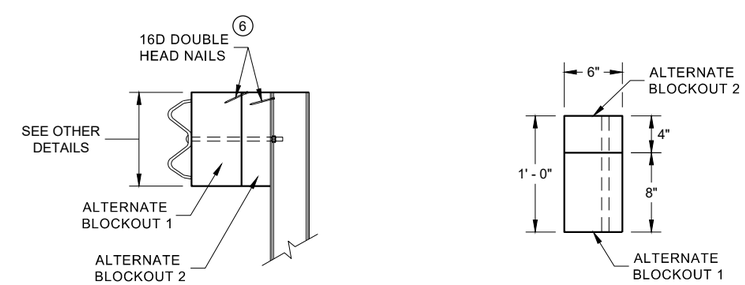

SIDE VIEW

PLAN VIEW

ALTERNATE WOOD BLOCKOUT DETAIL

NOTES: UNDER SPECIAL CIRCUMSTANCES, SUCH AS AVOIDING OBSTACLES THAT ARE NOT RELOCATED, IT IS ACCEPTABLE TO INSTALL ADDITIONAL BLOCKOUTS TO OBTAIN UP TO 36" DEPTH FOR ONE OR TWO POSTS IN A SECTION OF GUARDRAIL.

DO NOT USE 16" OR 36" BLOCKOUTS IF IT CAUSES THE POST TO BE DRIVEN BEYOND SHOULDER HINGE POINT OR CAUSES A FIXED OBJECT TO BE WITHIN THE DEFLECTION DISTANCE OF THE BARRIER.

(6) WHEN USING STEEL POST AD WOOD BLOCKOUTS, INSTALL FOUR 16D GALVANIZED NAILS. INSTALL NAILS AT THE BACK CORNERS OF THE BLOCK AND BEND THE NAILS OVER THE FLANGE OF THE STEEL POST.

MIDWEST GUARDRAIL SYSTEM (MGS) GUARDRAIL

STATE OF WISCONSIN
DEPARTMENT OF TRANSPORTA

SDD 14B42 - 07c

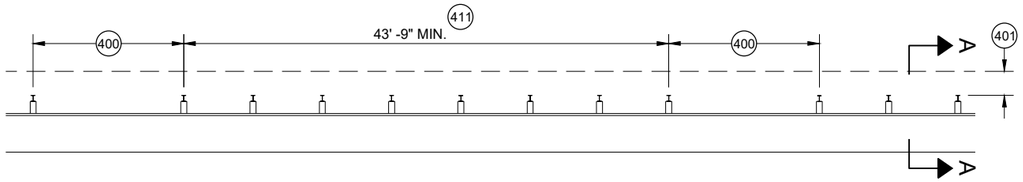

MISSING POST IN MGS GUARDRAIL

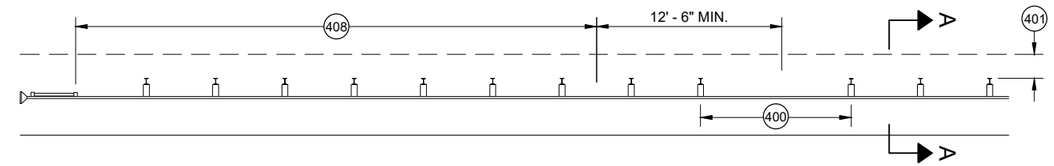

MISSING POST IN MGS GUARDRAIL NEAR EAT

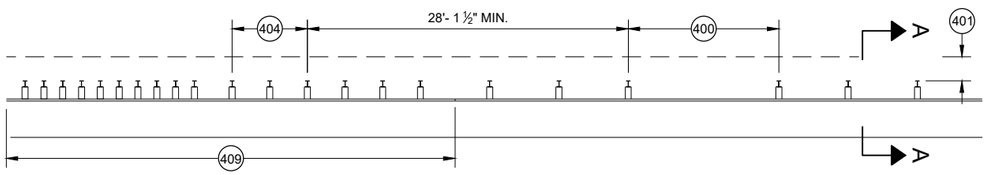

MISSING POST IN MGS GUARDRAIL NEAR AN APPROACH TRANSITION

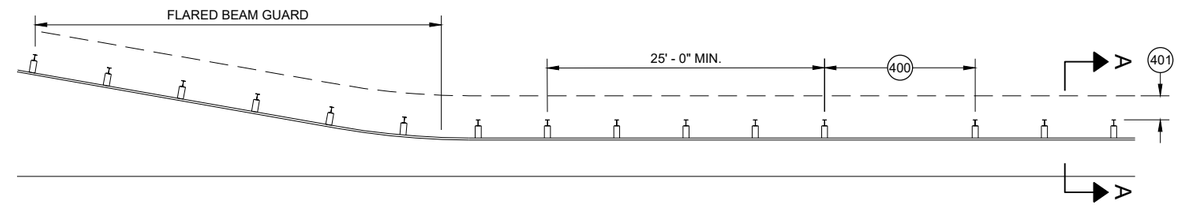

MISSING POST IN MGS GUARDRAIL NEAR FLARED BEAM GUARD

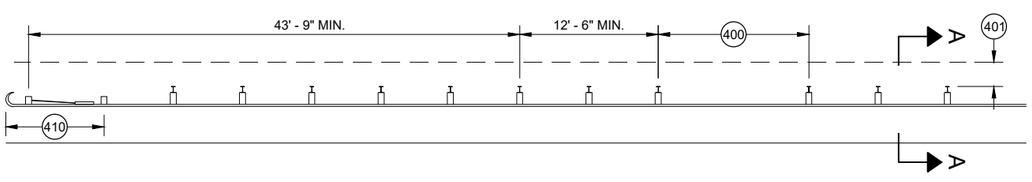

MISSING POST IN MGS GUARDRAIL NEAR A TYPE 2 END TERMINAL

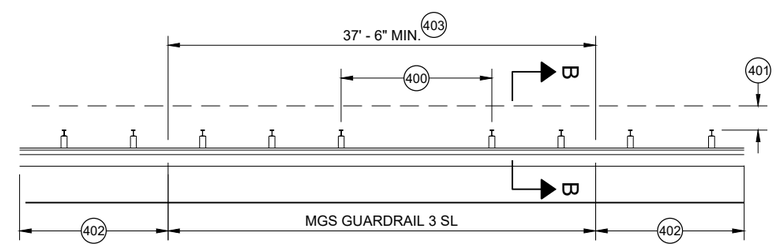

MISSING POST IN SHORT SPAN MGS GUARDRAIL NEAR CURB (SL) 407

400 MAX SPAN 12' - 6"
401 2' MIN.
402 MGS GUARDRAIL 3
403 NESTING BEAM GUARD
404 ASYMMETRIC TRANSITION
405 SOIL WELL DRAINED AND COMPACTED
406 SEE OTHER DRAWINGS IN THIS SDD
407 SEE OTHER DRAWINGS FOR MIN. SPACING BETWEEN SPANS
408 SEE SDD 14B44
409 SEE SDD 14B45
410 SEE SDD 14B47
411 MINIMUM DISTANCE BETWEEN MISSING POST SPANS.

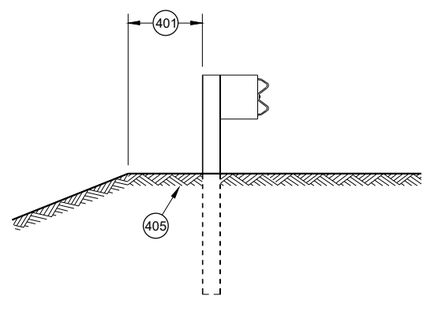

SECTION A - A 406

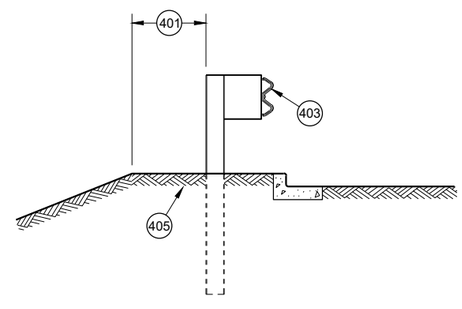

SECTION B - B 406

MIDWEST GUARDRAIL SYSTEM (MGS) GUARDRAIL

STATE OF WISCONSIN
DEPARTMENT OF TRANSPORTATION

APPROVED
May 2021 — DATE
/S/ Rodney Taylor — ROADWAY STANDARDS DEVE UNIT SUPERVISOR
FHWA

6

SDD 14B42 - 07d

GENERAL NOTES

(A) THE SLOPE IN THE AREA BOUNDED BY THE GRADELINE, THE HINGE POINT LINE (HPL) AND THE CLEAR ZONE LIMITS (CZL) SHALL BE 4:1 OR FLATTER.

(B) AFTER FINAL ASSEMBLY, RECHECK CABLE TO BE SURE IT IS TAUT AND HAS NOT RELAXED

(C) DIFFERENT MANUFACTURERS REQUIRE DIFFERENT PERFORATED W - BEAM RAIL END PANELS. SEE MANUFACTURER'S INFORMATION.

(D) ATTACH ALUMINUM SHEET TO E.A.T. HEAD USING 4 STAINLESS STEEL SELF - TAPPING SCREWS. ONE SCREW PER CORNER.

(E) HARDWARE MAY VARY BETWEEN MANUFACTURER. SEE MANUFACTURER'S DRAWING FOR INFORMATION.

DIMENSIONS MAY VARY, MANUFACTURER'S INFORMATION.

SEE SDD 14B42 FOR MORE INFORMATION.

* DO NOT ATTACH BLOCKOUTS TO POST 1 AND 2.

DO NOT INSTALL REFLECTORS ON THE FIRST 50 FEET OF THE APPROACH END OF THE ENERGY ABSORBING TERMINAL.

SEE MANUFACTURER'S DRAWING FOR SPLICE LOCATION, HARDWARE DIMENSIONS AND INSTALLATION INSTRUCTIONS.

THE CENTER OF THE UPPER 3 ½" DIAMETER HOLE ON POST NUMBER 3 THROUGH POST 9 IS TO BE FLUSH WITH THE GROUND LINE UP TO A MAXIMUM OF 2" ABOVE GROUND LINE. WOOD BLOCKS ON POSTS NUMBERED 3 THROUGH 9 MAY BE ADJUSTED UP TO 3" ABOVE THE TOP OF POST.

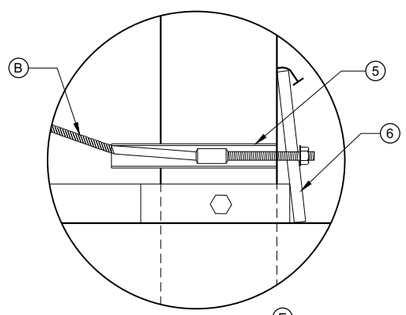

DETAIL "A" (E)

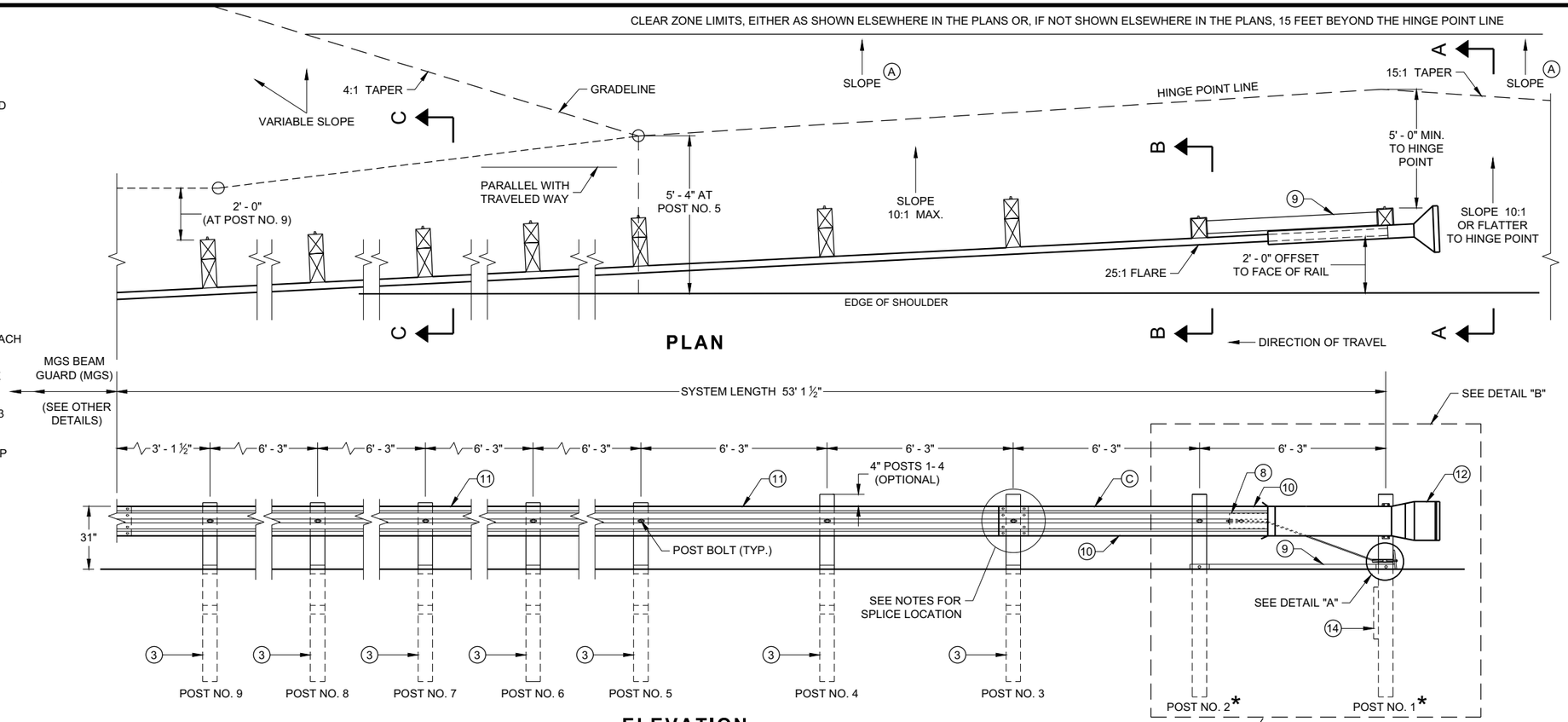

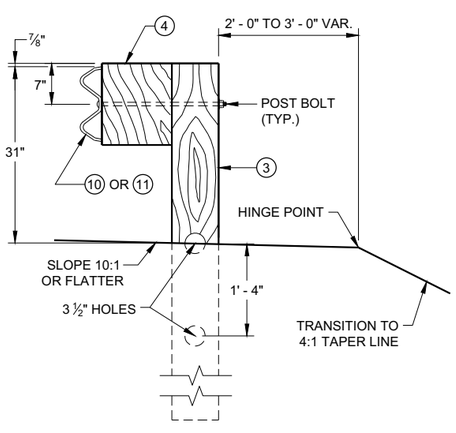

SECTION C - C
TYPICAL AT POST NOS. 3 - 9

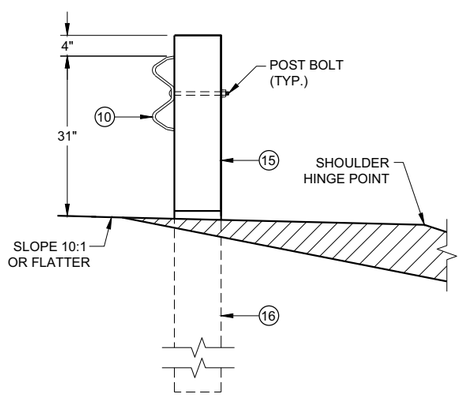

SECTION B - B
TYPICAL AT POST NO. 2*

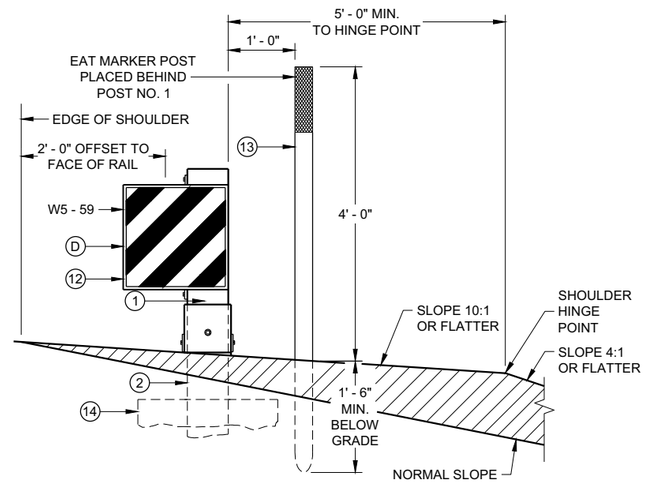

SECTION A - A
TYPICAL AT POST NO. 1*

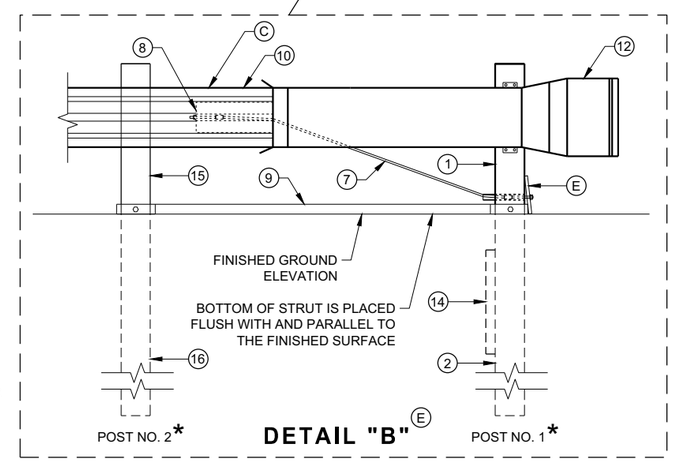

DETAIL "B" (E)

MIDWEST GUARDRAIL SYSTEM ENERGY ABSORBING TERMINAL (MGS)

STATE OF WISCONSIN
DEPARTMENT OF TRANSPORTATION

6

6

SDD 14B44 - 04a

SDD 14B44 - 04a

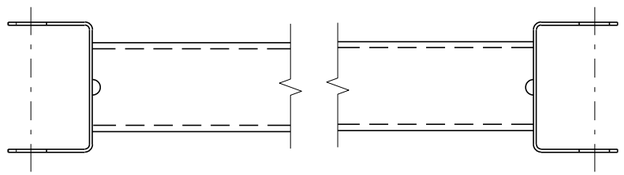

GENERIC GROUND STRUT 9 E

BILL OF MATERIALS

PART NO.	DESCRIPTION MATERIALS PROVIDED BY MGS EAT MANUFACTURER. SEE MANUGACTURER'S DETAILS FOR MORE INFORMATION.
1	UPPER POST NO. 1 6" X 6" TUBE
2	LOWER POST NO. 1
3	WOOD CRT
4	WOOD BLOCKOUT
5	PIPE SLEEVE
6	BEARING PLATE
7	BCT CABLE ASSEMBLY
8	ANCHOR CABLE BOX
9	GROUND STRUT
10	PERFORATED W-BEAM RAIL END PANEL, 12'-6" LONG.
11	STANDARD W-BEAM RAIL. MULTIPLE SECTIONS REQUIRED. SECTIONS VARY IN LENGTH.
12	IMPACT HEAD
13	EAT MARKER POST - YELLOW (SEE APPROVED PRODUCTS LIST)
14	SOIL PLATE
15	UPPER POST NO. 2
16	LOWER POST NO. 2

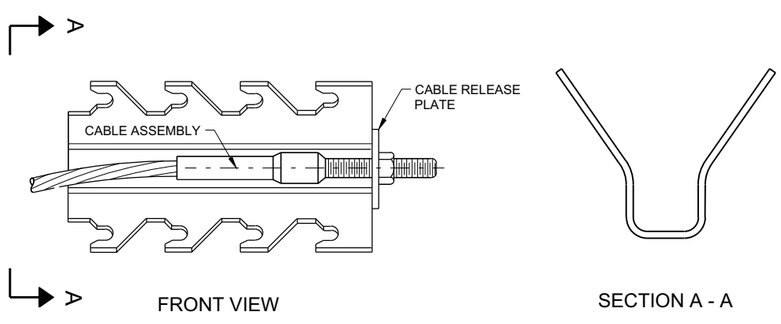

GENERIC ANCHOR CABLE BOX 9 E

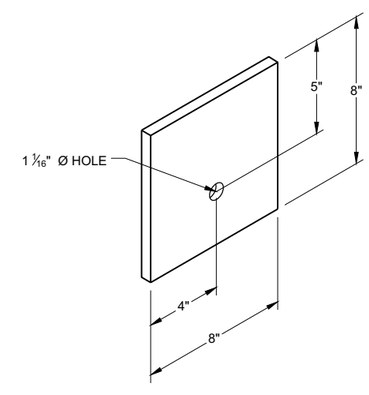

BEARING PLATE 6 E

6

6

SDD 14B44 - 04b

SDD 14B44 - 04b

MIDWEST GUARDRAIL SYSTEM ENERGY ABSORBING TERMINAL (MGS)

STATE OF WISCONSIN
DEPARTMENT OF TRANSPORTAT

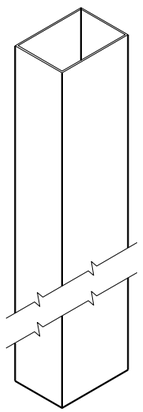

UPPER POST NO. 1 (1) (E)

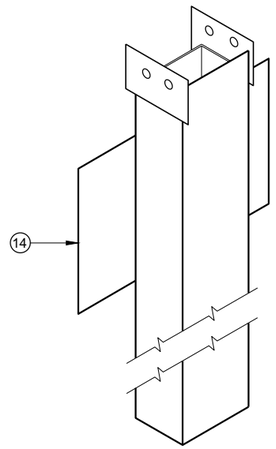

LOWER POST NO. 1 (2) (E)

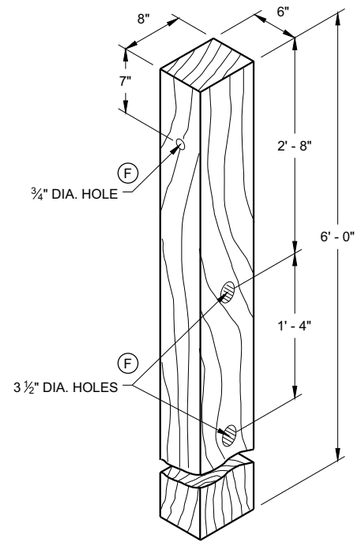

WOOD CRT POST (3) (E)
POSTS NUMBER 3-9

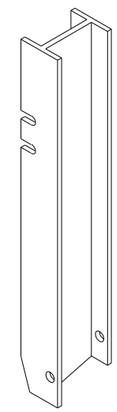

UPPER POST NO. 2 (15) (E)

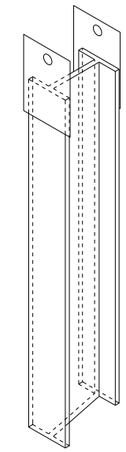

LOWER POST NO. 2 (16) (E)

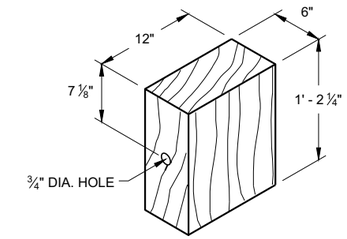

WOOD BLOCKOUT (4)
REQ'D. AT ALL POSTS EXCEPT POST NO'S 1 & 2

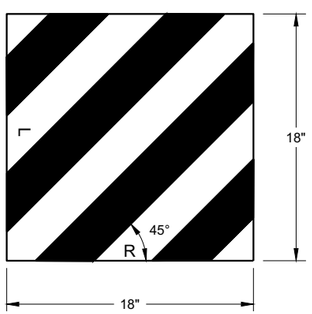

W5 - 59

REFLECTIVE SHEETING DETAIL (E)

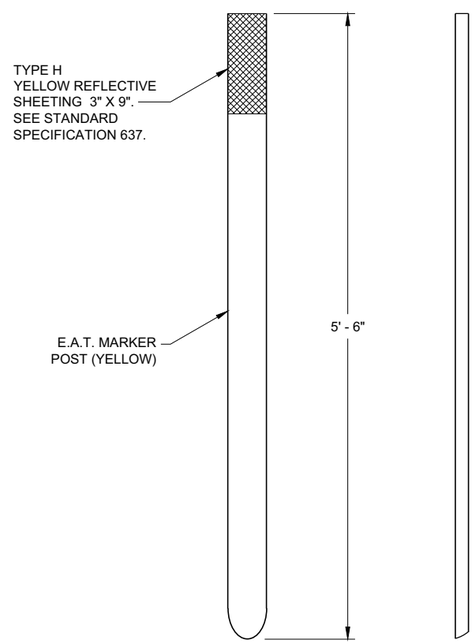

FRONT VIEW SIDE VIEW

E.A.T. MARKER POST (13)

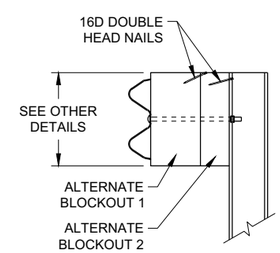

SIDE VIEW

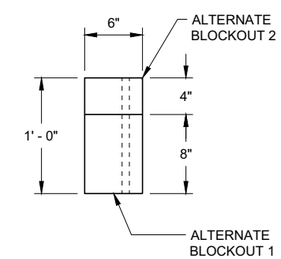

TOP VIEW

ALTERNATE WOOD BLOCKOUT DETAIL

MIDWEST GUARDRAIL SYSTEM ENERGY ABSORBING TERMINAL (MGS)

STATE OF WISCONSIN
DEPARTMENT OF TRANSPORTATION

APPROVED
7/2018 — DATE
/S/ Rodney Taylor — ROADWAY STANDARDS DEVE UNIT SUPERVISOR
FHWA

6

6

SDD 14B44 - 04c

SDD 14B44 - 04c

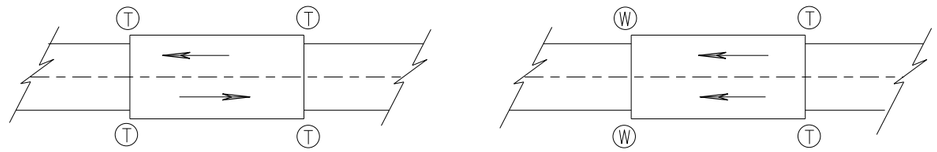

TWO WAY TRAFFIC **ONE WAY TRAFFIC**

(T) THRIE BEAM CONNECTION

(W) W-BEAM CONNECTION WHEN REQUIRED

TYPICAL LOCATIONS OF THRIE BEAM AND W-BEAM CONNECTIONS TO BRIDGE

GENERAL NOTES

IF ROCK IS ENCOUNTERED, REMOVE ROCK TO FULL DEPTH OF POST PLUS 2½", AND 12" DIAMETER AROUND POST. SEE 14B42 FOR MORE DETAILS.

TRANSITION USES STEEL POSTS ONLY.

SEE STANDARD DETAIL DRAWING 14 B 42 FOR MORE INFORMATION.

POST 2 THROUGH 17 USES STEEL POST ONLY

(1) BRIDGE RAILING TYPE "W" DOES NOT REQUIRE A TERMINAL CONNECTOR.

(2) OPTIONAL CURB AND GUTTER OR DRAINAGE FEATURE SEE PLAN FOR INFORMATION.

(13) STEEL OR WOOD POST IS ACCEPTABLE AT POST 1. SEE SDD14B42

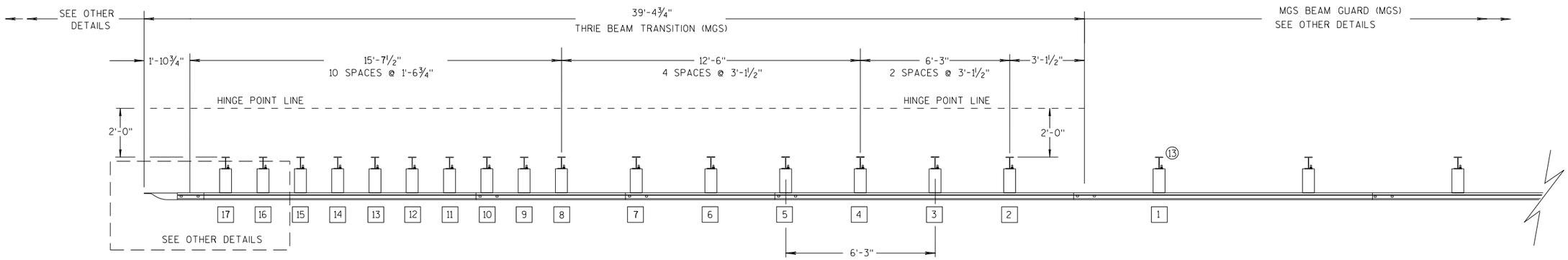

PLAN VIEW

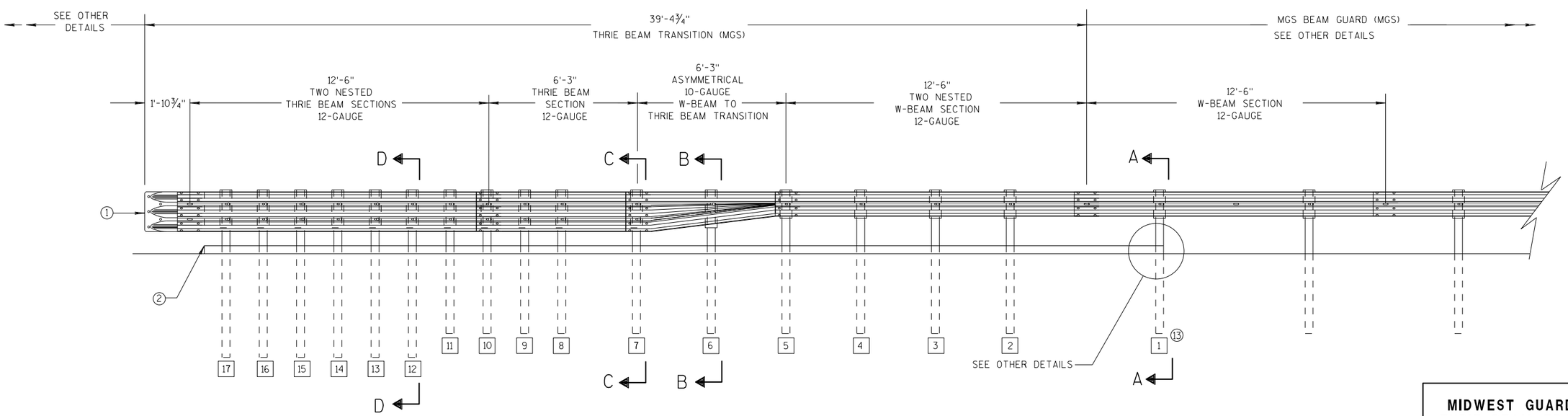

ELEVATION VIEW

MIDWEST GUARDRAIL SYSTEM THRIE BEAM TRANSITION

MIDWEST GUARDRAIL SYSTEM THRIE BEAM TRANSITION (MGS)

STATE OF WISCONSIN
DEPARTMENT OF TRANSPOR

6

S.D.D. 14 B 45-5a

GENERAL NOTES

(2) OPTIONAL CURB AND GUTTER OR DRAINAGE FEATURE SEE PLAN FOR INFORMATION.

(3) WHEN USING STEEL POSTS AND WOOD BLOCKOUTS INSTALL FOUR 10D GALVANIZED NAILS. INSTALL NAILS AT THE BACK CORNERS OF THE BLOCK AND BEND THE NAILS OVER THE FLANGE OF THE STEEL POST.

(4) TOLERANCE FOR TOP OF W-BEAM RAIL IS ± 1".

(13) STEEL OR WOOD POST IS ACCEPTABLE AT POST 1. SEE SDD 14B42

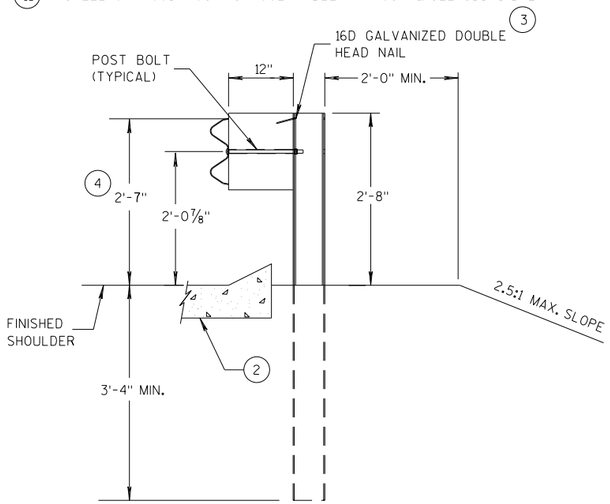

SECTION A-A (13)

POSTS 1-5

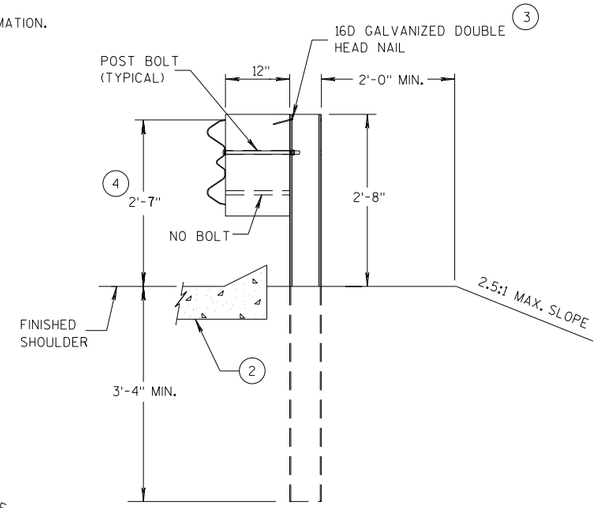

SECTION B-B

POST 6

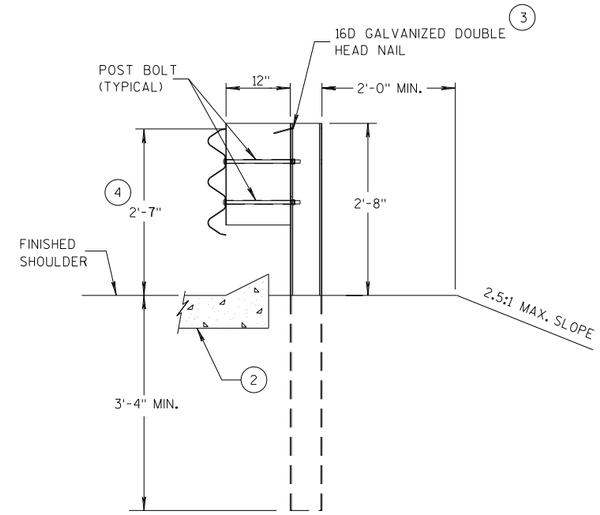

SECTION C-C

POSTS 7-11

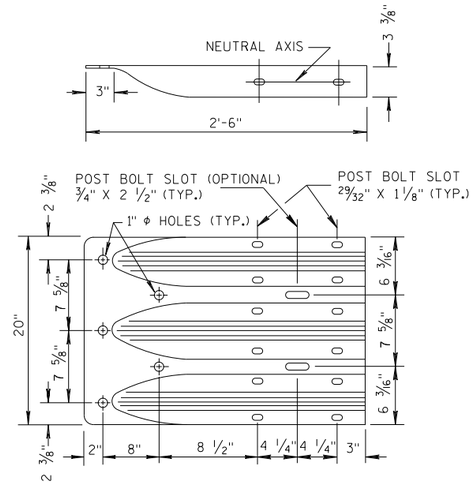

THRIE BEAM TERMINAL CONNECTOR

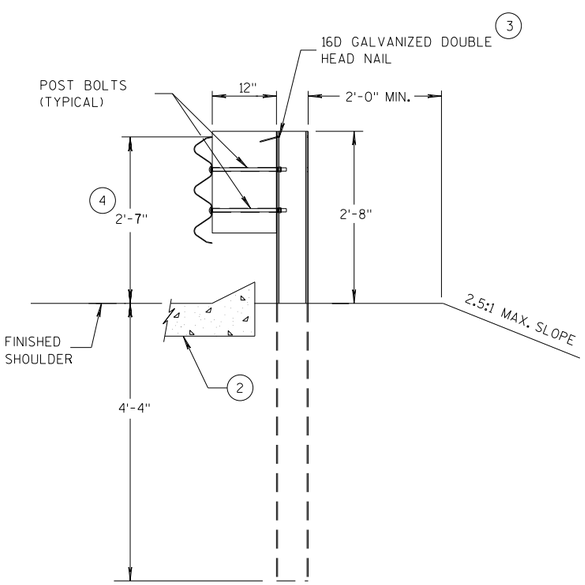

SECTION D-D

POSTS 12-17

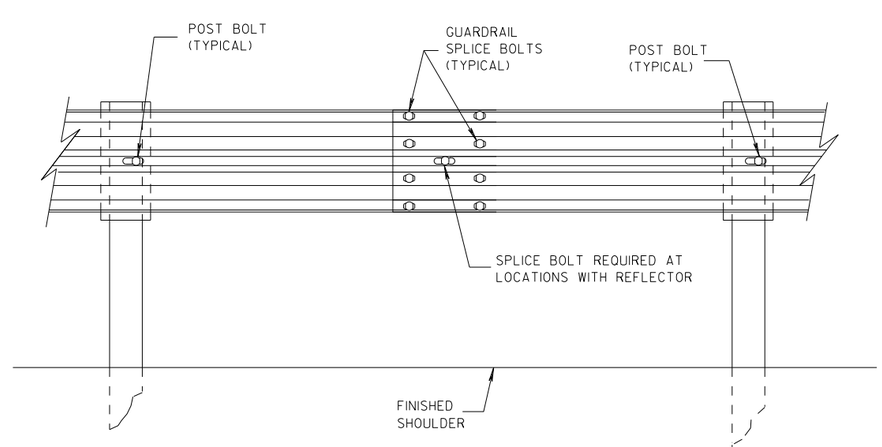

SPLICE DETAIL

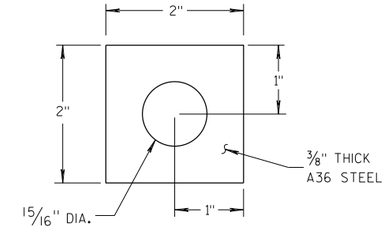

PLATE WASHER DETAIL

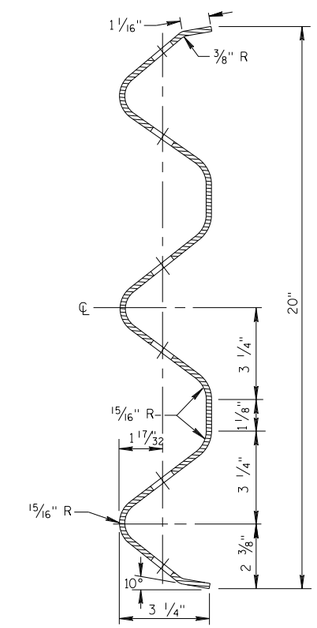

SECTION THRU THRIE BEAM RAIL ELEMENT

MIDWEST GUARDRAIL SYSTEM
THRIE BEAM TRANSITION (MGS)

STATE OF WISCONSIN
DEPARTMENT OF TRANSPOR

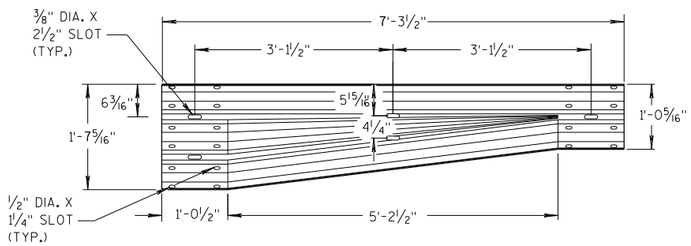

W-BEAM TO THRIE BEAM TRANSITION SECTION

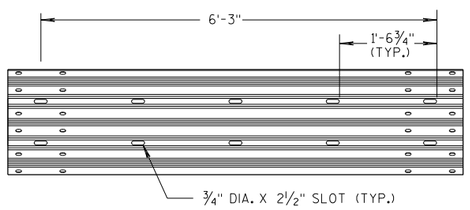

6'-3" THRIE BEAM SECTION

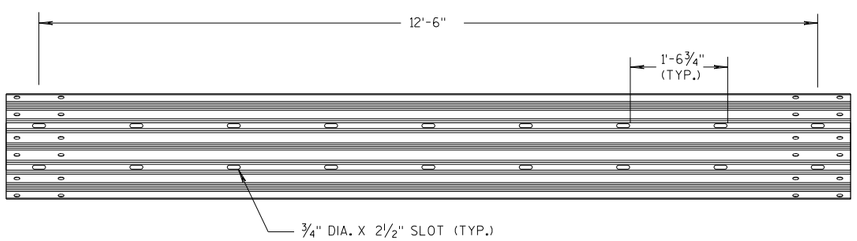

12'-6" THRIE BEAM SECTION

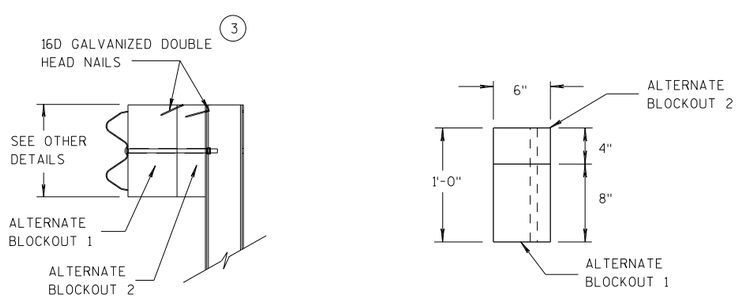

SIDE VIEW TOP VIEW

ALTERNATE WOOD BLOCKOUT DETAIL

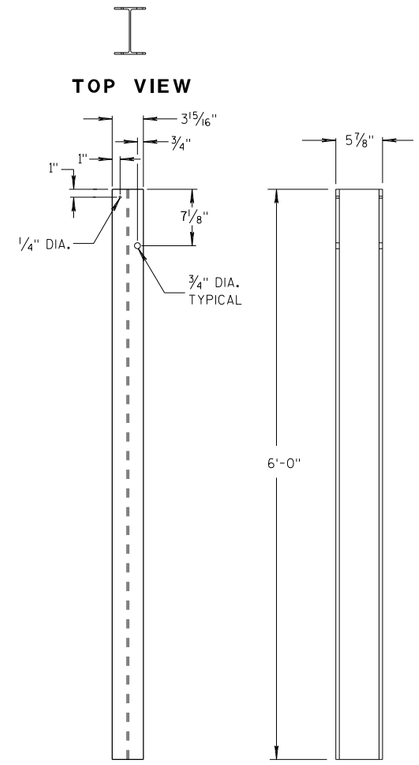

STEEL POSTS 1-5 (13)

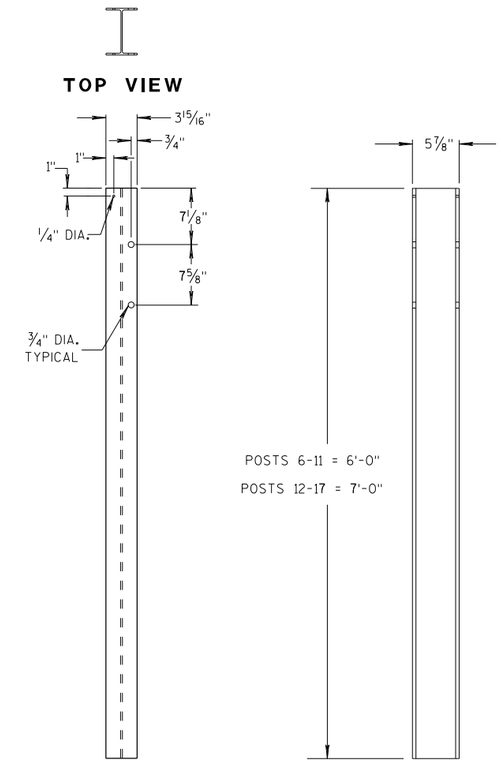

STEEL POSTS 6-17

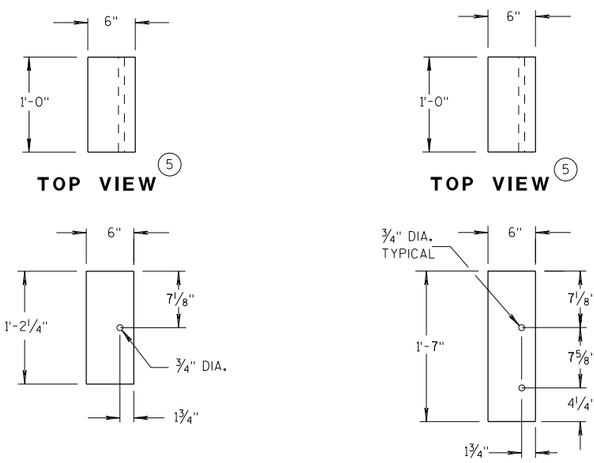

BLOCKOUT POSTS 1-5

BLOCKOUT POSTS 6-17

GENERAL NOTES

STEEL POSTS ARE W6X9 OR W6X8.5.

BOLT HOLES FOR POST ARE ON FRONT AND OF SIDE OF POST.

(3) WHEN USING STEEL POSTS AND WOOD BLOCKOUTS INSTALL FOUR 16D GALVANIZED NAILS. INSTALL NAILS AT THE BACK CORNERS OF THE BLOCK AND BEND THE NAILS OVER THE FLANGE OF THE STEEL POST.

(5) WOOD BLOCKS MAY BE CONSTRUCTED OUT OF 2 WOOD BLOCKS. SEE ALTERNATE WOOD BLOCK DETAIL.

(13) STEEL OR WOOD POST IS ACCEPTABLE AT POST 1. SEE SDD 14B42.

MIDWEST GUARDRAIL SYSTEM THRIE BEAM TRANSITION (MGS)

STATE OF WISCONSIN
DEPARTMENT OF TRANSPOR

6

S.D.D. 14 B 45-5c

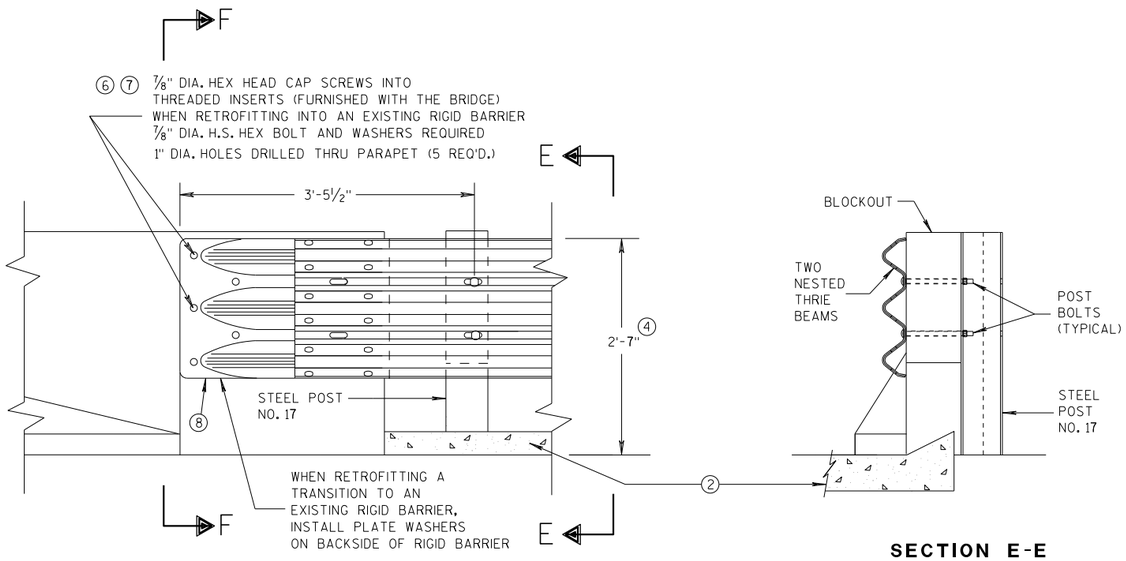

FRONT VIEW

SECTION E-E

THRIE BEAM CONNECTION TO BRIDGE PARAPET WITH SQUARE ENDS

GENERAL NOTES

THESE ARE TYPICAL CONNECTION DETAILS. ADJUST THE POSTION OF CONNECTIONS TO EXISTING BRIDGES TO FIT THE ACTUAL BRIDGE AND SITE DIMENSIONS.

② OPTIONAL CURB AND GUTTER OR DRAINAGE FEATURE SEE PLAN FOR INFORMATION.

④ TOLERANCE FOR TOP OF BEAM IS ± 1".

⑥ DRILLING BOLT HOLES THROUGH THE PARAPET, BOLTS, NUTS, WASHERS AND REPAIRING DAMAGED CONCRETE ARE INCIDENTAL TO THE CONTRACT.

⑦ BOLTS MAY BE A325 BOLTS OR A449 BOLTS. BOLT LENGTH AND THREADING LENGTH ARE TO ALLOW FOR A TIGHT CONNECTION BETWEEN RIGID BARRIER AND THRIE BEAM CONNECTION PLATE. CONTRACTOR IS TO FIELD VERIFY BOLT LENGTH AND THREAD LENGTH. ONE ROUND WASHER REQUIRED BETWEEN BOLT HEAD AND THRIE BEAM CONNECTOR PLATE. BOLTS THAT EXTEND THROUGH THE PARAPET AND OUT THE BACK FACE REQUIRE A HARDENED ROUND STEEL WASHER THAT IS 2" O.D. X 5/32" THICK AND ONE PLATE WASHER. REPAIR ANY DAMAGED CONCRETE FROM BOLT INSTALLATION.

⑧ THE RECESS FOR A W-BEAM CONNECTION, WHICH EXISTS ON SOME PARAPETS OF THIS TYPE, SHALL BE FILLED WITH A TREATED TIMBER BLOCKOUT. BLOCKOUT SIZE IS 1'-6" X 2'-0" X 3 1/2".

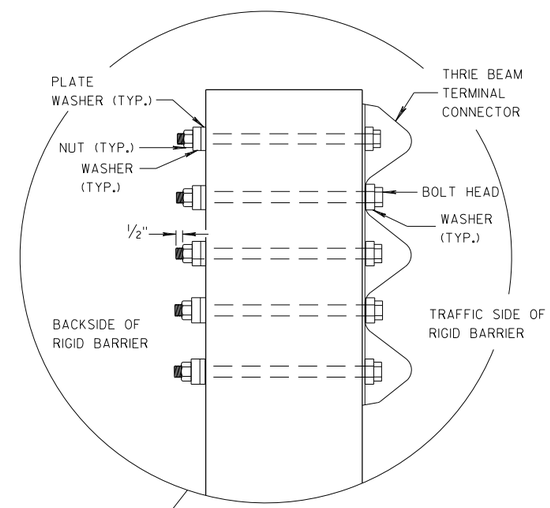

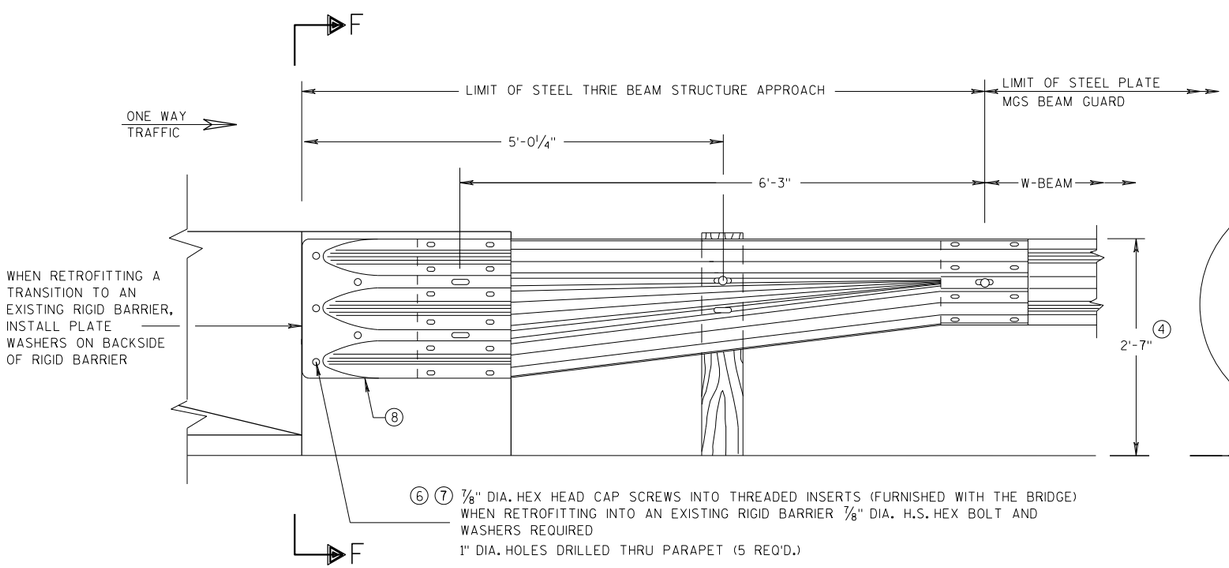

FRONT VIEW

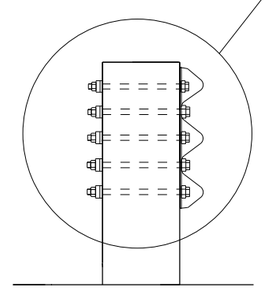

SECTION F-F

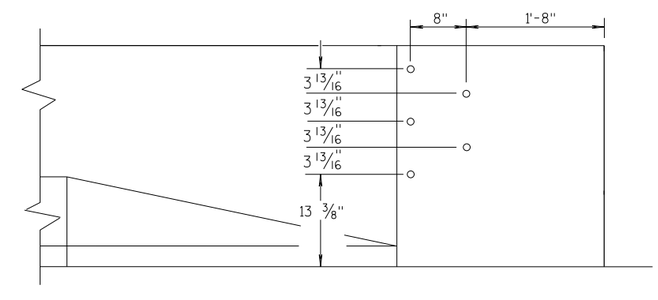

DRILL HOLE LOCATION

W BEAM TRANSITION AND CONNECTION TO BRIDGE PARAPETS WITH SQUARE ENDS

(USE ONLY ON THE TRAFFIC EXIT END OF ONE WAY BRIDGES)

MIDWEST GUARDRAIL SYSTEM THRIE BEAM TRANSITION (MGS)

STATE OF WISCONSIN
DEPARTMENT OF TRANSPORTATION

APPROVED
07/2018 — DATE
/S/ Rodney Taylor — ROADWAY STANDARDS D[illegible] UNIT SUPERVI[illegible]
FHWA

6

S.D.D. 14 B 45-5d

GENERAL NOTES

THESE ARE TYPICAL CONNECTION DETAILS. ADJUST THE POSTION OF CONNECTIONS TO EXISTING BRIDGES TO FIT THE ACTUAL BRIDGE AND SITE DIMENSIONS.

(2) OPTIONAL CURB AND GUTTER OR DRAINAGE FEATURE SEE PLAN FOR INFORMATION.

(4) TOLERANCE FOR TOP OF BEAM IS ± 1".

(6) DRILLING BOLT HOLES THROUGH THE PARAPET, BOLTS, NUTS, WASHERS AND REPAIRING DAMAGED CONCRETE ARE INCIDENTAL TO THE CONTRACT.

(7) BOLTS MAY BE A325 BOLTS OR A449 BOLTS. BOLT LENGTH AND THREADING LENGTH ARE TO ALLOW FOR A TIGHT CONNECTION BETWEEN RIGID BARRIER AND THRIE BEAM CONNECTION PLATE. CONTRACTOR IS TO FIELD VERIFY BOLT LENGTH AND THREAD LENGTH. ONE ROUND WASHER REQUIRED BETWEEN BOLT HEAD AND THRIE BEAM CONNECTOR PLATE. BOLTS THAT EXTEND THROUGH THE PARAPET AND OUT THE BACK FACE REQUIRE A HARDENED ROUND STEEL WASHER THAT IS 2" O.D. X 5/32" THICK AND ONE PLATE WASHER. REPAIR ANY DAMAGED CONCRETE FROM BOLT INSTALLATION.

(8) THE RECESS FOR A W-BEAM CONNECTION, WHICH EXISTS ON SOME PARAPETS OF THIS TYPE, SHALL BE FILLED WITH A TREATED TIMBER BLOCKOUT. BLOCKOUT SIZE IS 1'-6" X 2'-0" X 3 1/2".

(9) BOLT, NUT AND WASHERS NOT REQUIRED FOR THIS LOCATION WHEN RETROFITTING AN EXISTING PAPAPET AND THE HOLE IS EITHER ABOVE PARAPET OR WITHIN 4 INCHES OF THE EDGE OF PARAPET.

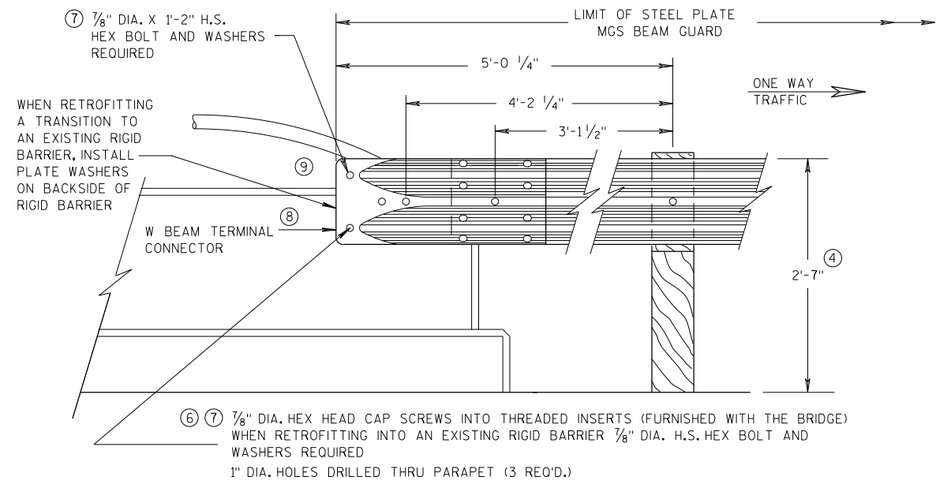

FRONT VIEW

W BEAM CONNECTION TO VERTICAL FACE PARAPET

(USE ONLY ON THE TRAFFIC EXIT END OF ONE WAY BRIDGES)

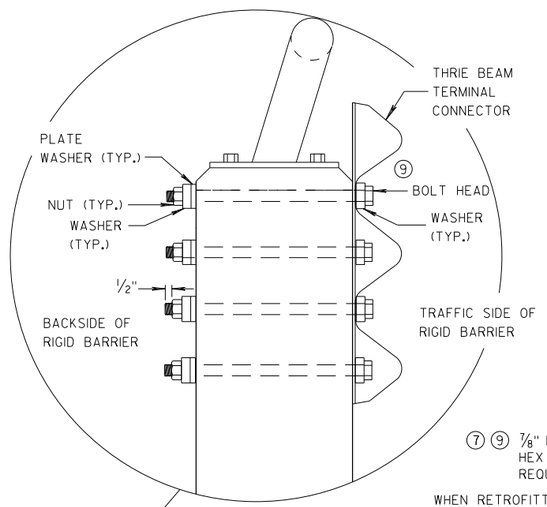

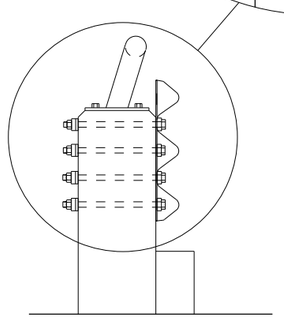

SECTION G-G

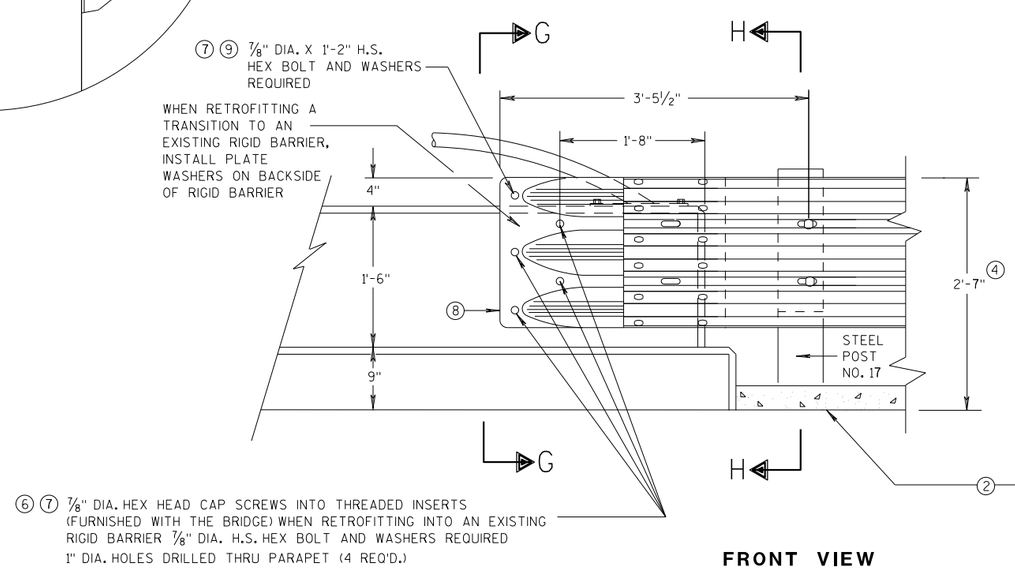

FRONT VIEW

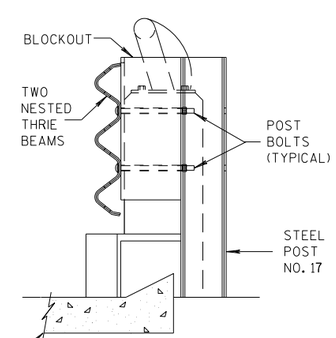

SECTION H-H

THRIE BEAM CONNECTION TO VERTICAL FACED PARAPETS

MIDWEST GUARDRAIL SYSTEM
THRIE BEAM TRANSITION (MGS)

STATE OF WISCONSIN
DEPARTMENT OF TRANSPORTATION

APPROVED
07/2018 — DATE
/S/ Rodney Taylor
ROADWAY STANDARDS D UNIT SUPERVIS
FHWA

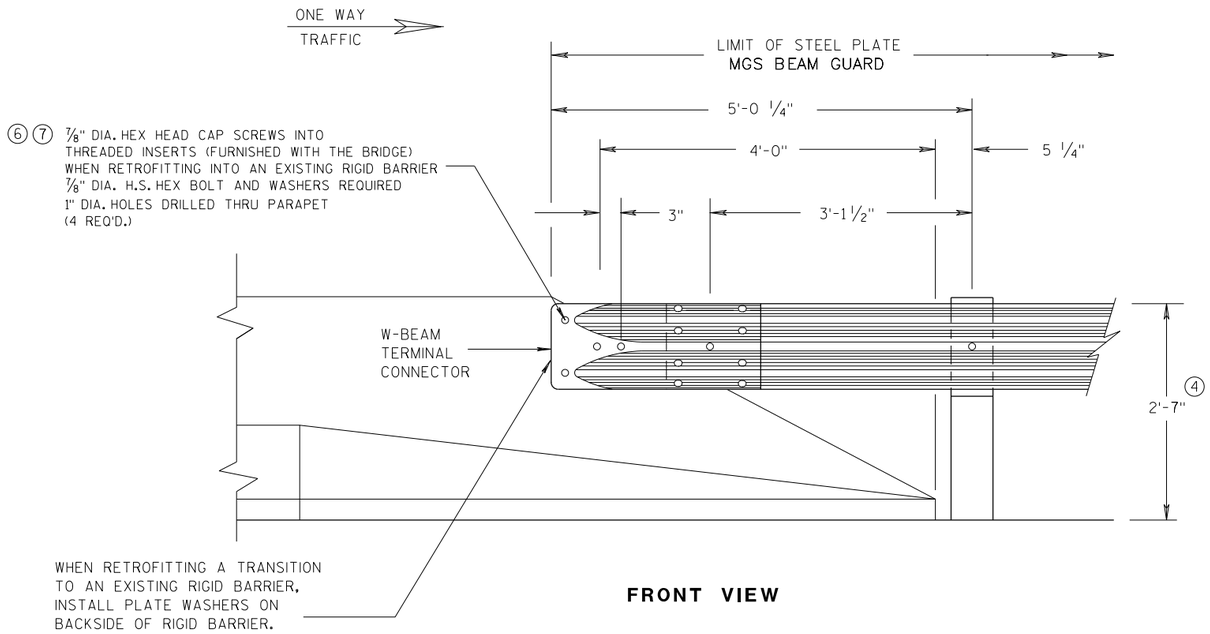

FRONT VIEW

W BEAM CONNECTION TO PARAPETS WITH SLOPED ENDS

(USE ONLY AT TRAFFIC EXIT END OF ONE WAY BRIDGE)

GENERAL NOTES

② OPTIONAL CURB AND GUTTER OR DRAINAGE FEATURE SEE PLAN FOR INFORMATION.

④ TOLERANCE FOR TOP OF BEAM IS ± 1".

⑥ DRILLING BOLT HOLES THROUGH THE PARAPET, BOLTS, NUTS, WASHERS AND REPAIRING DAMAGED CONCRETE ARE INCIDENTAL TO THE CONTRACT.

⑦ BOLTS MAY BE A325 BOLTS OR A449 BOLTS. BOLT LENGTH AND THREADING LENGTH ARE TO ALLOW FOR A TIGHT CONNECTION BETWEEN RIGID BARRIER AND THRIE BEAM CONNECTION PLATE. CONTRACTOR IS TO FIELD VERIFY BOLT LENGTH AND THREAD LENGTH. ONE ROUND WASHER REQUIRED BETWEEN BOLT HEAD AND THRIE BEAM CONNECTOR PLATE. BOLTS THAT EXTEND THROUGH THE PARAPET AND OUT THE BACK FACE REQUIRE A HARDENED ROUND STEEL WASHER THAT IS 2" O.D. X 5/32" THICK AND ONE PLATE WASHER. REPAIR ANY DAMAGED CONCRETE FROM BOLT INSTALLATION.

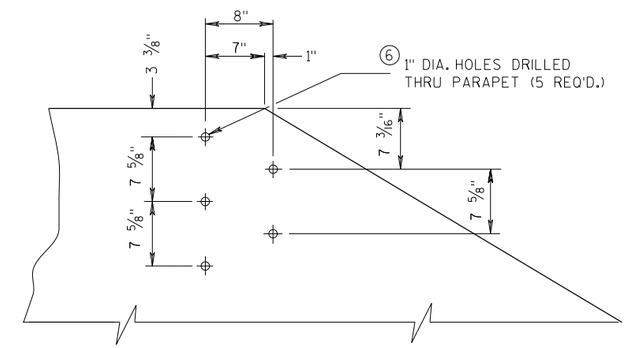

DRILL HOLE LOCATION AND PATTERN FOR THRIE BEAM CONNECTION

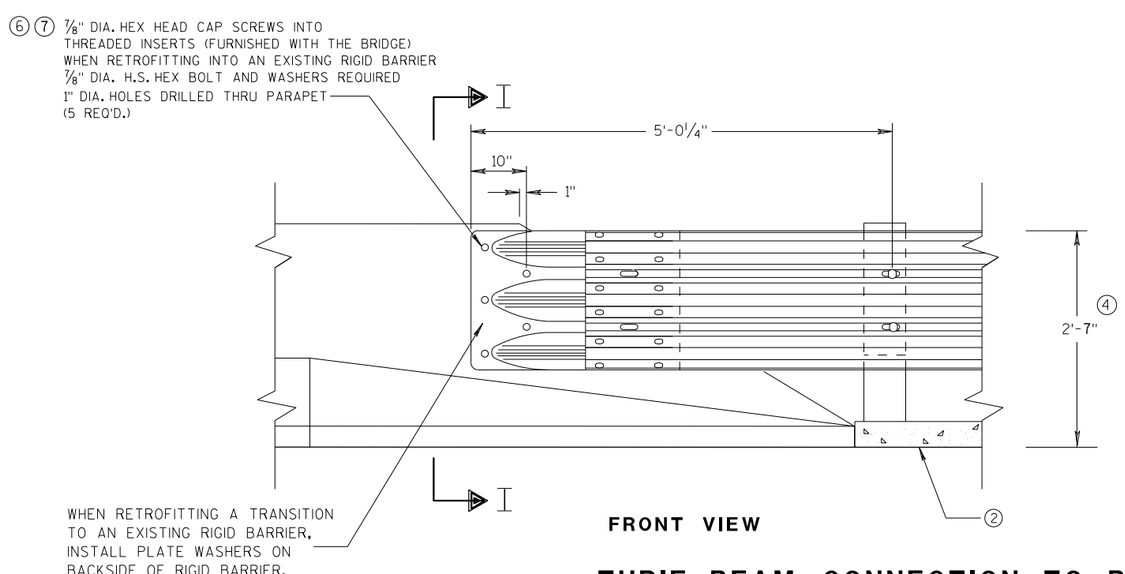

FRONT VIEW

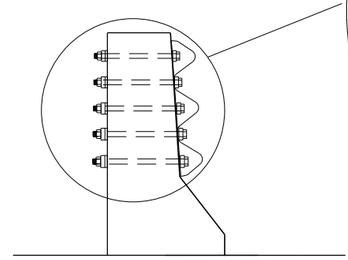

SECTION I-I

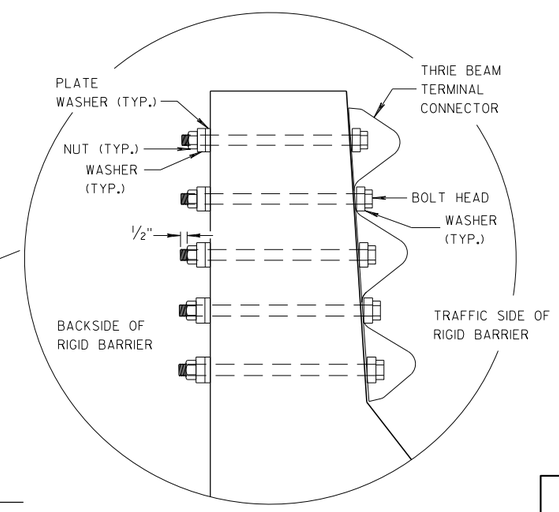

THRIE BEAM CONNECTION TO BRIDGE PARAPETS WITH SLOPED ENDS

MIDWEST GUARDRAIL SYSTEM THRIE BEAM TRANSITION (MGS)

STATE OF WISCONSIN
DEPARTMENT OF TRANSPORTATION

APPROVED
07/2018 /S/ Rodney Taylor
DATE ROADWAY STANDARDS DEVELOPMENT UNIT SUPERVISOR
FHWA

6

S.D.D. 14 B 45-5f

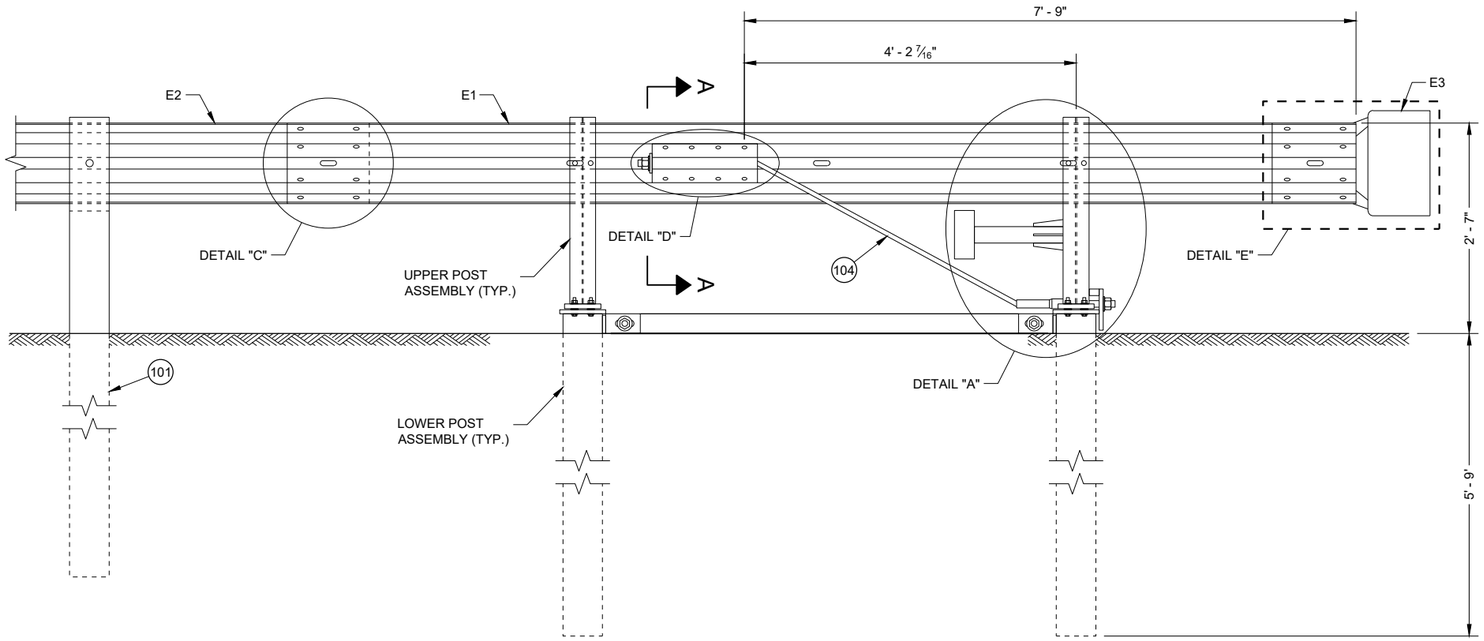

BACK VIEW
TYPE 2 TERMINAL

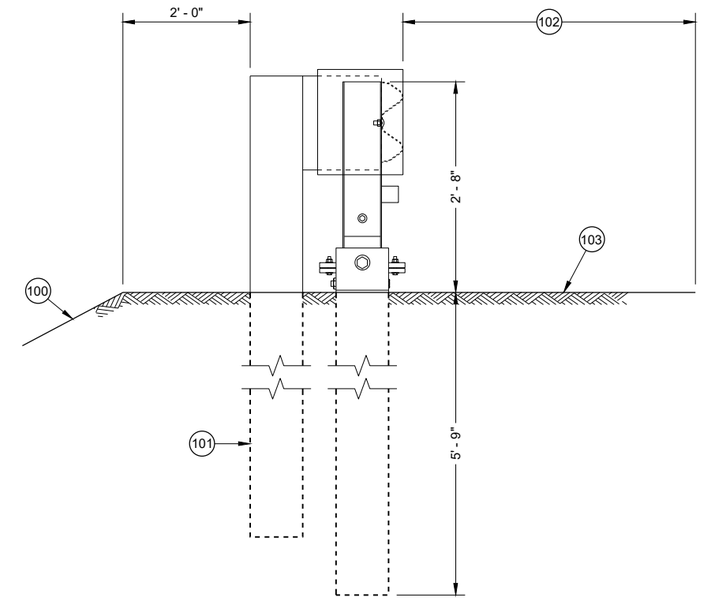

SIDE VIEW
TYPE 2 TERMINAL

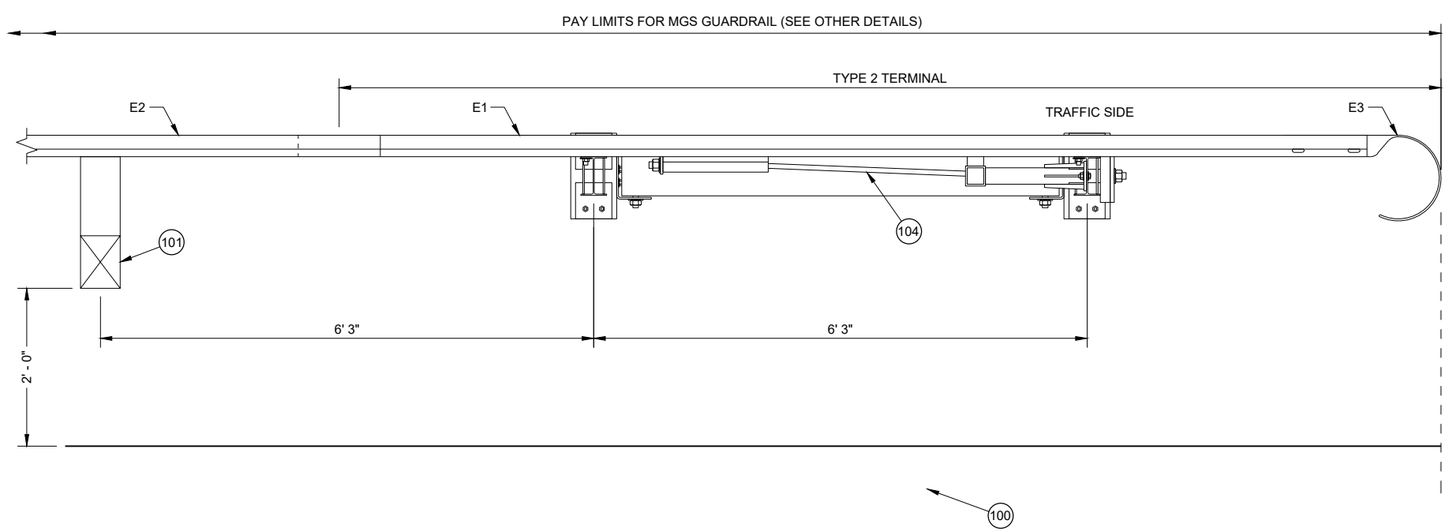

TOP VIEW
TYPE 2 TERMINAL

GENERAL NOTES

100 MAXIMUM SLOPE IS 2.5:1.

101 SEE SDD 14B42 FOR MORE INFORMATION.

102 SHOULDER

103 MAXIMUM SLOPE IS 10:1.

104 AFTER ASSEMBLY, CABLE IS TO BE TIGHTENED WITHOUT TWISTING THE CABLE.

MIDWEST GUARDRAIL SYSTEM (MGS) TYPE 2 TERMINAL

STATE OF WISCONSIN
DEPARTMENT OF TRANSPORTAT

6

SDD 14B47 - 05a

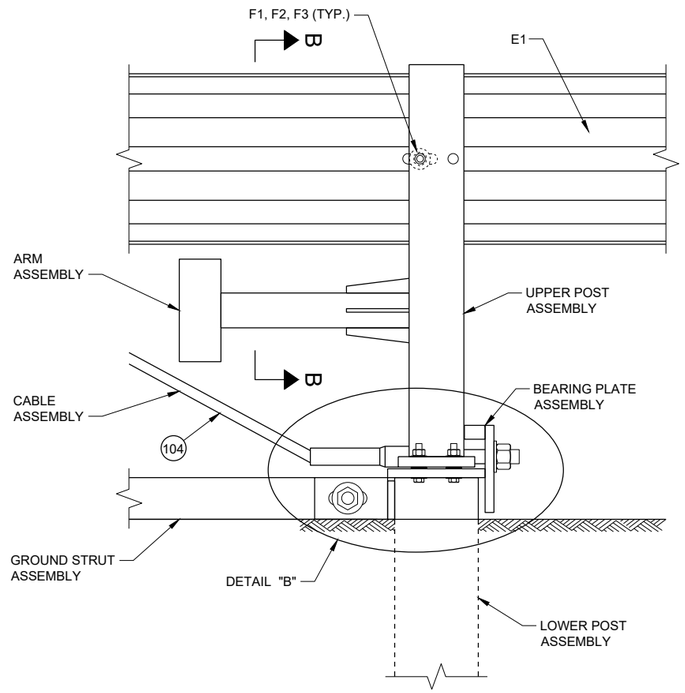

DETAIL "A"

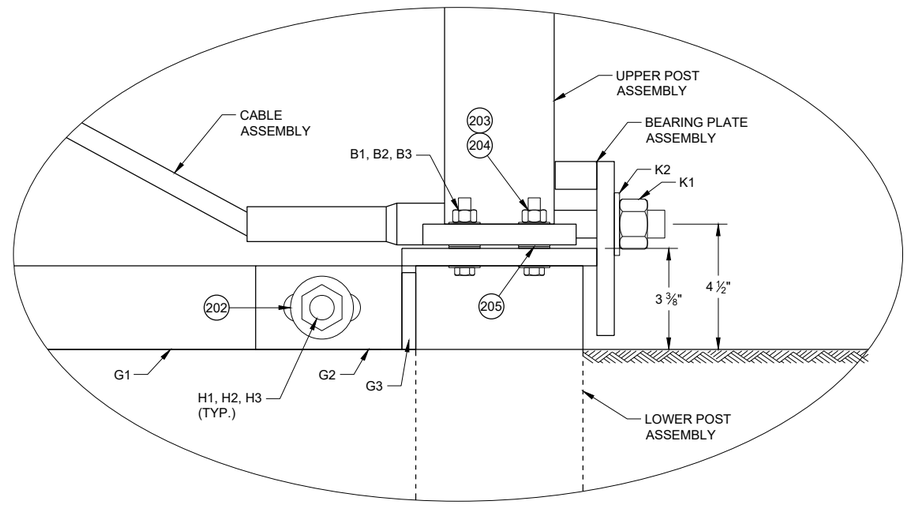

DETAIL "B"

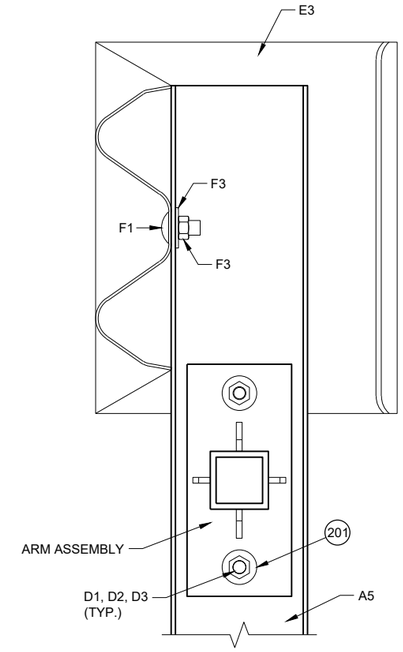

SECTION B - B

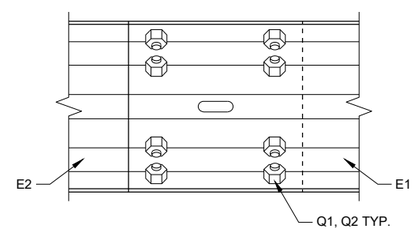

DETAIL "C"

GENERAL NOTES

200 INSTALL ONE WASHER UNDER BOLT HEAD AND RAIL AND ON WASHER BETWEEN NUT AND ANCHOR BRACKET ASSEMBLY.

201 INSTALL ONE WASHER UNDER BOLT HEAD AND UPPER POST ASSEMBLY AND ONE WASHER BETWEEN NUT AND ARM PLATE.

202 INSTALL ONE WASHER UNDER BOLT HEAD AND GROUND STRUT CONNECTOR AND ONE WASHER BETWEEN NUT AND GROUND STRUT CONNECTOR.

203 INSTALL ONE WASHER UNDER BOLT HEAD AND LOWER POST ASSEMBLY AND ONE WASHER BETWEEN NUT AND UPPER POST ASSEMBLY.

204 TORQUE VALUE IS BETWEEN 60 - 75 FT-LB.

205 TWO WASHERS BETWEEN UPPER AND LOWER POST ASSEMBLY.

206 INSTALL ONE WASHER BETWEEN NUT AND ANCHOR BRACKET ASSEMBLY.

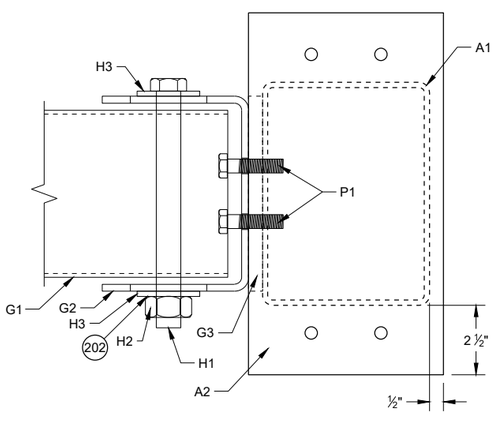

TOP VIEW

GROUND STRUT CONNECTION DETAIL

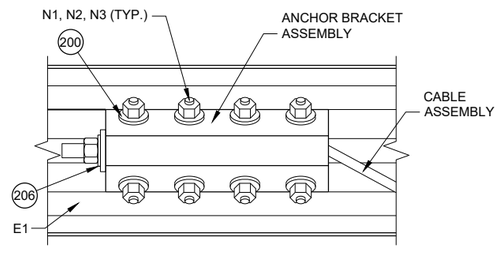

DETAIL "D"

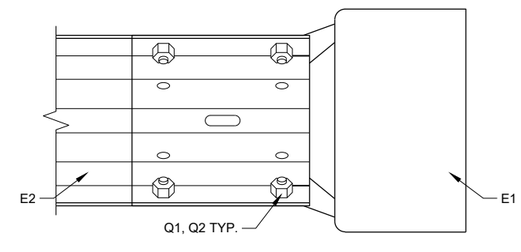

DETAIL "E"

MIDWEST GUARDRAIL SYSTEM (MGS) TYPE 2 TERMINAL

STATE OF WISCONSIN
DEPARTMENT OF TRANSPORTAT

6

SDD 14B47 - 05b

GENERAL NOTES

(300) TAP FOR 1/2" AFTER GALVANIZATION

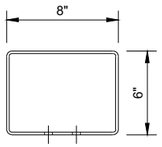

TOP VIEW

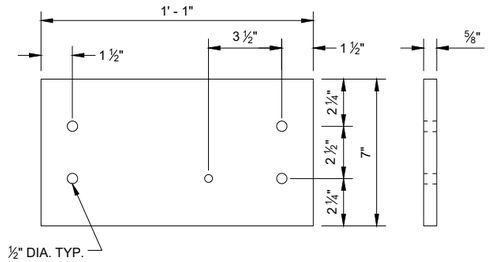

LOWER PLATE (A2)

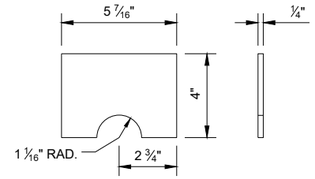

POST GUSSET (A3)

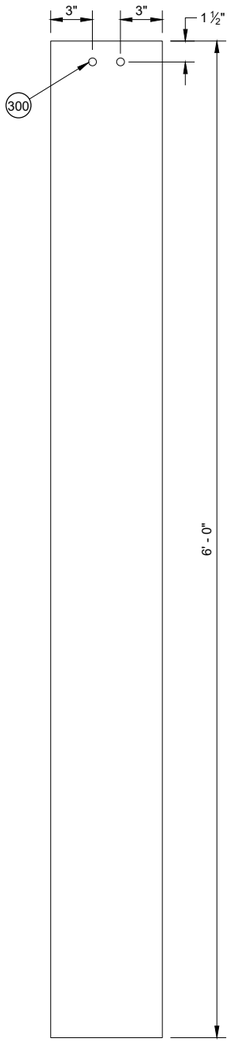

SIDE VIEW

FOUNDATION TUBE (A1)

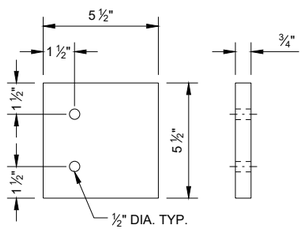

UPPER PLATE (A4)

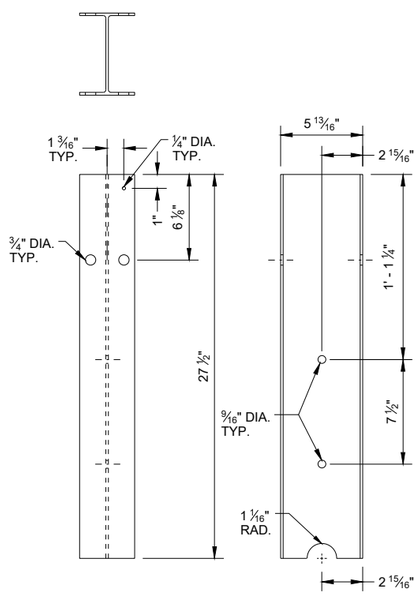

FRONT VIEW SIDE VIEW

TYPE 2 POST (A5)

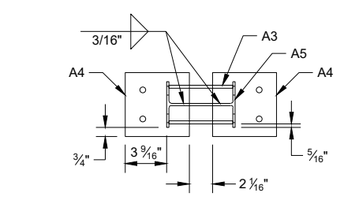

PLAN VIEW

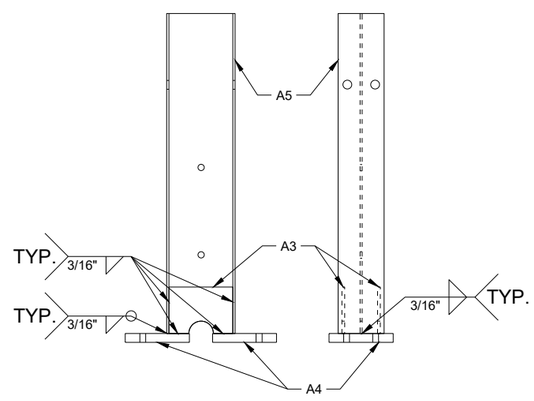

SIDE VIEW FRONT VIEW

UPPER POST ASSEMBLY

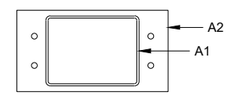

PLAN VIEW

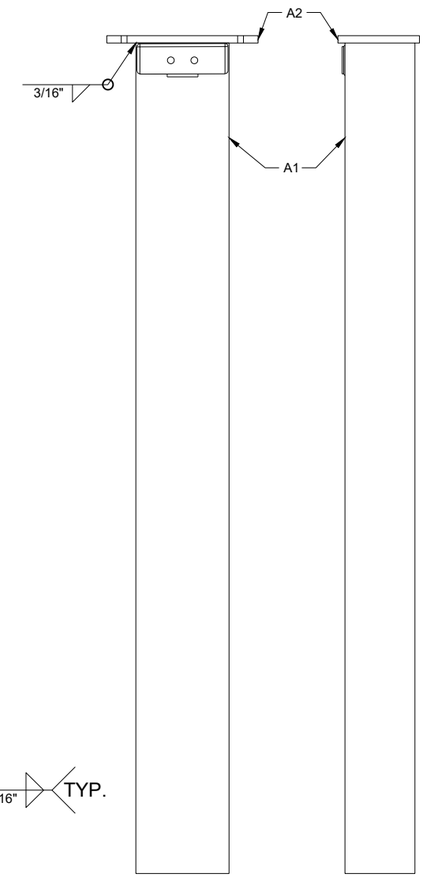

FRONT VIEW SIDE VIEW

LOWER POST ASSEMBLY

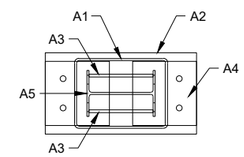

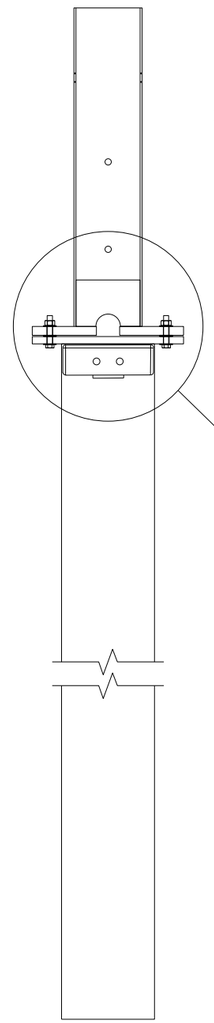

ASSEMBLED POST

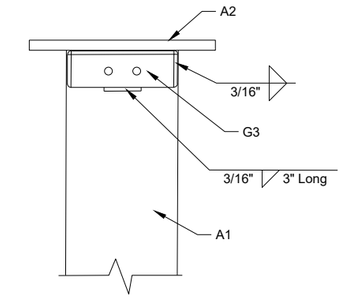

WELDING DETAIL G3 AND A1

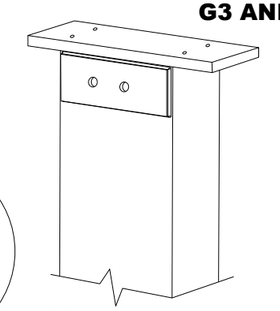

ASSEMBLY DETAIL ISOMETRIC

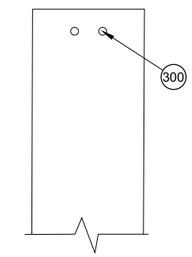

A1

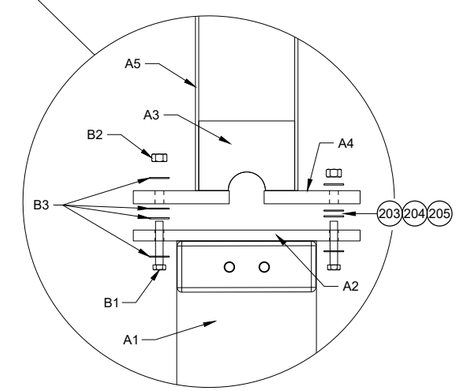

POST CONNECTION DETAIL

MIDWEST GUARDRAIL SYSTEM (MGS) TYPE 2 TERMINAL

STATE OF WISCONSIN
DEPARTMENT OF TRANSPORTAT

6

SDD 14B47 - 05c

6

SDD 14B47 - 05c

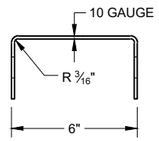

SIDE VIEW

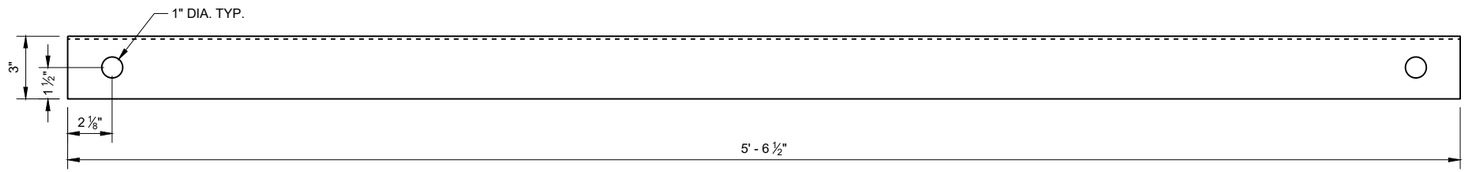

FRONT VIEW

GROUND STRUT CHANNEL (G1)

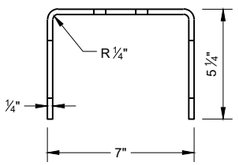

TOP VIEW

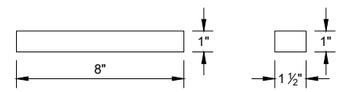

BEARING PLATE FLANGE (L2)

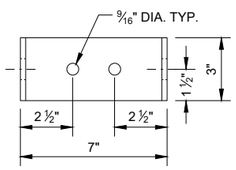

FRONT VIEW

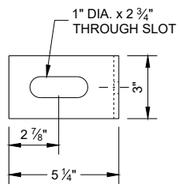

SIDE VIEW

GROUND STRUT CONNECTOR (G2)

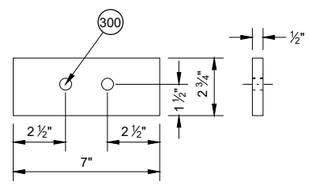

GROUND STRUT PLATE (G3)

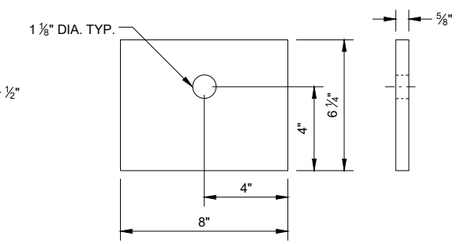

BEARING PLATE (L1)

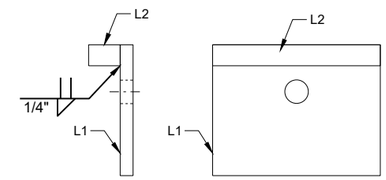

SIDE VIEW FRONT VIEW

BEARING PLATE ASSEMBLY

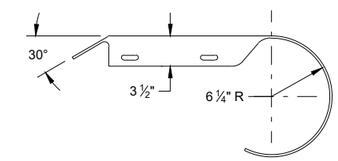

PLAN VIEW

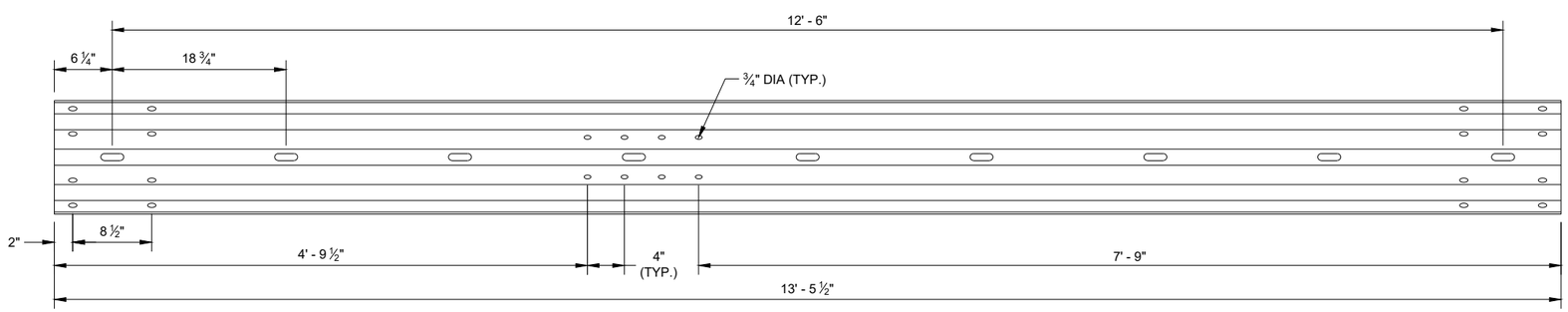

TYPE 2 GUARDRAIL (E1)

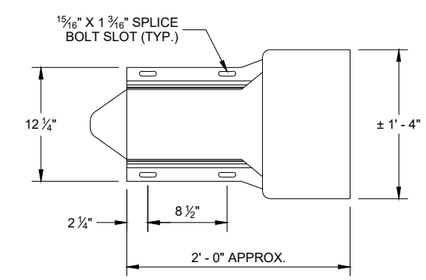

ELEVATION VIEW

ROUNDED BUFFER END (E3)

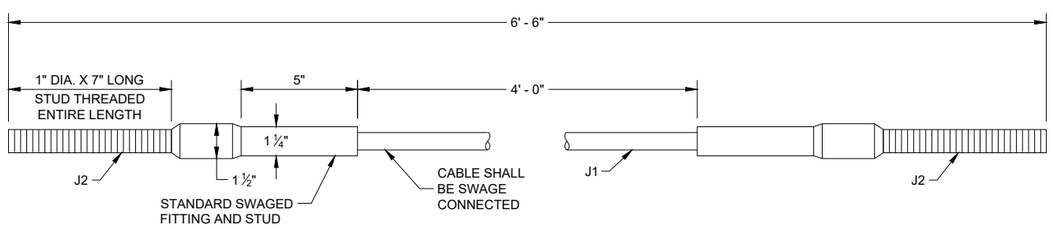

CABLE ASSEMBLY

MIDWEST GUARDRAIL SYSTEM (MGS) TYPE 2 TERMINAL

STATE OF WISCONSIN
DEPARTMENT OF TRANSPORTAT

6

SDD 14B47 - 05d

6

SDD 14B47 - 05d

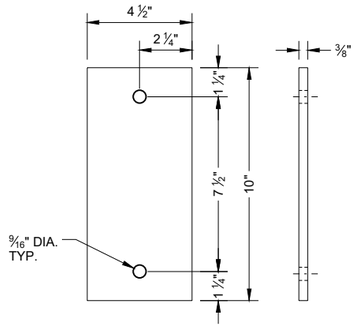

ARM PLATE (C1)

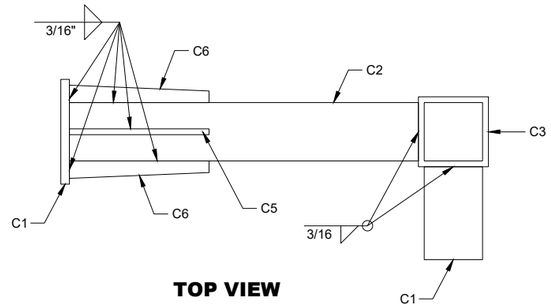

TOP VIEW
ARM ASSEMBLY

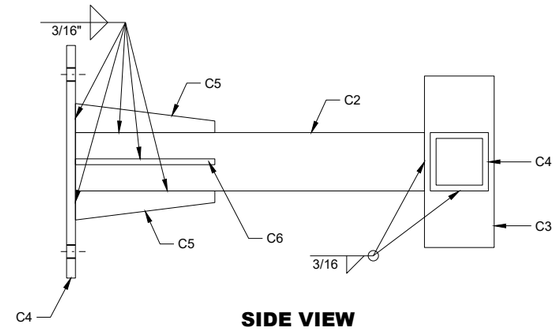

SIDE VIEW
ARM ASSEMBLY

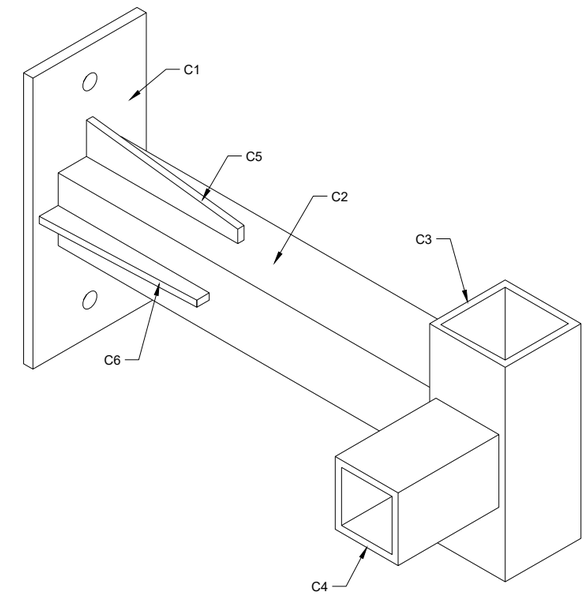

ISOMETRIC VIEW
ARM ASSEMBLY

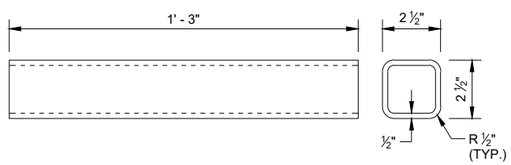

ARM TUBE 1 (C2)

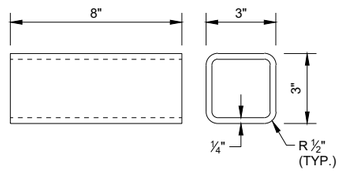

ARM TUBE 2 (C3)

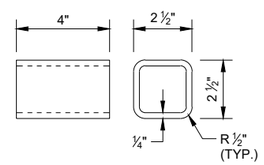

ARM TUBE 3 (C4)

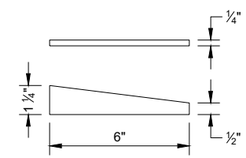

ARM GUSSET PLATE 1 (C5)

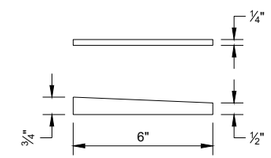

ARM GUSSET PLATE 2 (C6)

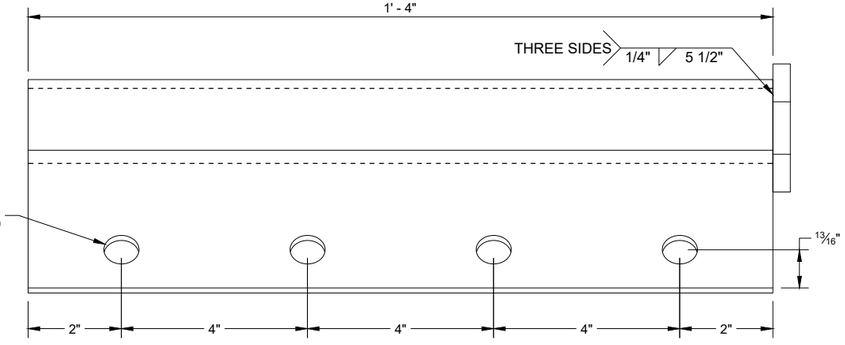

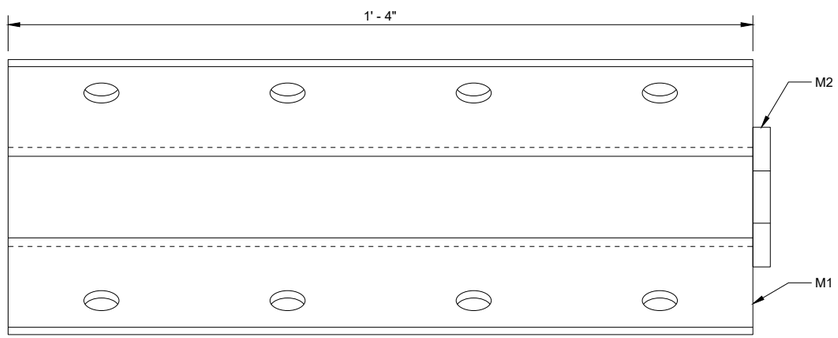

ANCHOR BRACKET (M1, M2)

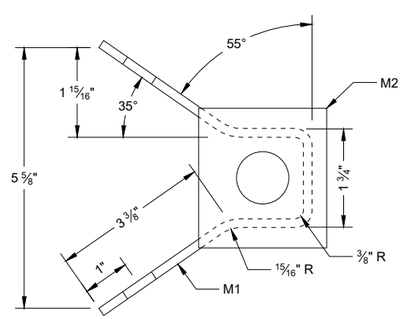

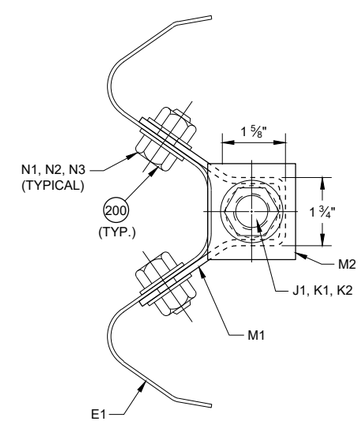

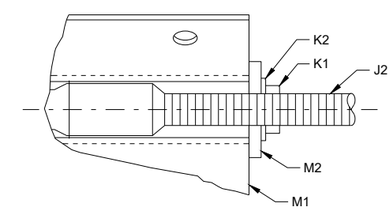

SECTION A - A

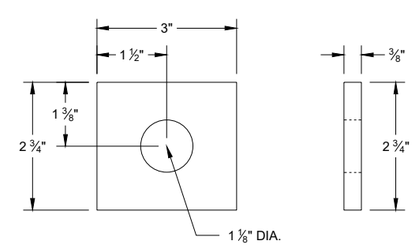

ANCHOR BRACKET BEARING PLATE (M2)

MIDWEST GUARDRAIL SYSTEM (MGS) TYPE 2 TERMINAL

STATE OF WISCONSIN
DEPARTMENT OF TRANSPORTA

6

6

SDD 14B47 - 05e

SDD 14B47 - 05e

BILL OF MATERIALS - TYPE 2 TERMINAL (MGS)

PART	DESCRIPTION	MATERIALS SPECIFICATIONS	NOTES
A1	TYPE 2 FOUNDATION TUBE	AASHTO M111 / ASTM A123 ASTM A500 GRADE B OR ASTM A-501	TS 8" x 6" x 3/16"
A2	LOWER PLATE	AASHTO M111 / ASTM A123 ASTM A36 MIN. STRENGTH 36 KSI, OR ASTM A529 MAX. STRENGTH 50 KSI, OR ASTM A572 MAX STRENGTH 50 KSI, OR ASTM A709 MAX STRENGTH 50 KSI, OR ASTM A992 MAX STRENGTH 50 KSI	5/8" THICKNESS
A3	POST GUSSET	AASHTO M111 / ASTM A123 ASTM A36 MIN. STRENGTH 36 KSI, OR ASTM A529 MAX. STRENGTH 50 KSI, OR ASTM A572 MAX STRENGTH 50 KSI, OR ASTM A709 MAX STRENGTH 50 KSI, OR ASTM A992 MAX STRENGTH 50 KSI	1/4" THICKNESS
A4	UPPER PLATE	AASHTO M111 / ASTM A123 ASTM A36 MIN. STRENGTH 36 KSI, OR ASTM A529 MAX. STRENGTH 50 KSI, OR ASTM A572 MAX STRENGTH 50 KSI, OR ASTM A709 MAX STRENGTH 50 KSI, OR ASTM A992 MAX STRENGTH 50 KSI	3/4" THICKNESS
A5	TYPE 2 POST	AASHTO M111 / ASTM A123 ASTM A36 MIN. STRENGTH 36 KSI, OR ASTM A529 MAX. STRENGTH 50 KSI, OR ASTM A572 MAX STRENGTH 50 KSI, OR ASTM A709 MAX STRENGTH 50 KSI, OR ASTM A992 MAX STRENGTH 50 KSI, w6x9 or w6x8.5	
B1	BREAKAWAY BOLT	HOT DIP AASHTO M232 CLASS / ASTM A153 CLASS C / ASTM F2329 C OR MECHANICAL GAL. TO AASHTO M298 CLASS 50 TYPE 1 / ASTM B695 CLASS 50 TYPE 1 UNC HEAVY HEX HEAD ASTM F3125 GRADE A325 TYPE 1 HEAVY HEX HEAD OR SAE J429 GRADE 5 HEAVY HEX HEAD / ASTM A449 TYPE 1 HEAVY HEX HEAD. BOLTS MAY BE FULLY THREADED . PROVIDE ENOUGH THREADING FOR PROPER TIGHTENING OF BOLT.	7/16" DIA.
B2	BREAKAWAY BOLT WASHER	HOT DIP AASHTO M232 CLASS / ASTM A153 CLASS C / ASTM F2329 C OR MECHANICAL GAL. TO AASHTO M298 CLASS 50 TYPE 1 / ASTM B695 CLASS 50 TYPE 1 F436 TYPE 1 (HARDEN WASHER ONLY)	7/16" DIA.
B3	BREAKAWAY BOLT NUT	HOT DIP AASHTO M232 CLASS / ASTM A153 CLASS C / ASTM F2329 C OR MECHANICAL GAL. TO AASHTO M298 CLASS 50 TYPE 1 / ASTM B695 CLASS 50 TYPE 1 UNC OVER TAP NUTS AS SPECIFIED IN AASHTO 291/ASTM A 563 HEAVY HEX HEAD ASTM A563DH OR SAE J995 GRADE 5	
C1	ARM ASSEMBLY PLATE	AASHTO M111 / ASTM A123 ASTM A36 MIN. STRENGTH 36 KSI, OR ASTM A529 MAX. STRENGTH 50 KSI, OR ASTM A572 MAX STRENGTH 50 KSI, OR ASTM A709 MAX STRENGTH 50 KSI, OR ASTM A992 MAX STRENGTH 50 KSI	3/8" THICKNESS
C2	ARM ASSEMBLY TUBE 1	AASHTO M111 / ASTM A123 ASTM A500 GRADE B OR ASTM A-501	TS 8" x 6" x 3/16"
C3	ARM ASSEMBLY TUBE 2	AASHTO M111 / ASTM A123 ASTM A500 GRADE B OR ASTM A-501	TS 3" x 3" x 1/4"
C4	ARM ASSEMBLY TUBE 3	AASHTO M111 / ASTM A123 ASTM A500 GRADE B OR ASTM A-501	TS 2 1/2" x 2 1/2" X 1/4"
C5	ARM ASSEMBLY GUSSET PLATE 1	AASHTO M111 / ASTM A123 ASTM A36 MIN. STRENGTH 36 KSI, OR ASTM A529 MAX. STRENGTH 50 KSI, OR ASTM A572 MAX STRENGTH 50 KSI, OR ASTM A709 MAX STRENGTH 50 KSI, OR ASTM A992 MAX STRENGTH 50 KSI	1/4" THICKNESS
C6	ARM ASSEMBLY GUSSET PLATE 2	AASHTO M111 / ASTM A123 ASTM A36 MIN. STRENGTH 36 KSI, OR ASTM A529 MAX. STRENGTH 50 KSI, OR ASTM A572 MAX STRENGTH 50 KSI, OR ASTM A709 MAX STRENGTH 50 KSI, OR ASTM A992 MAX STRENGTH 50 KSI	1/4" THICKNESS
D1	ARM ASSEMBLY BOLT	HOT DIP AASHTO M232 CLASS / ASTM A153 CLASS C / ASTM F2329 C OR MECHANICAL GAL. TO AASHTO M298 CLASS 50 TYPE 1 / ASTM B695 CLASS 50 TYPE 1 UNC HEAVY HEX HEAD ASTM A307 GRADE B OR SAE J429 GRADE 2 OR ASTM F1554 GRADE 36	1/2" DIA.
D2	ARM ASSEMBLY WASHER	HOT DIP AASHTO M232 CLASS / ASTM A153 CLASS C / ASTM F2329 C OR MECHANICAL GAL. TO AASHTO M298 CLASS 50 TYPE 1 / ASTM B695 CLASS 50 TYPE 1 F436 TYPE 1 (HARDEN WASHER ONLY)	1/2" DIA.
D3	ARM ASSEMBLY NUT	HOT DIP AASHTO M232 CLASS / ASTM A153 CLASS C / ASTM F2329 C OR MECHANICAL GAL. TO AASHTO M298 CLASS 50 TYPE 1 / ASTM B695 CLASS 50 TYPE 1 UNC OVER TAP NUTS AS SPECIFIED IN AASHTO 291 / ASTM A 563 HEAVY HEX HEAD ASTM A563DH OR SAE J995 GRADE 5	1/2" DIA.
E1	TYPE 2 GUARD RAIL	AASHTO M180 CLASS A TYPE 2 12 GAUGE APPROVED PRODUCER	
E2	BEAM GUARD RAIL	AASHTO M180 CLASS A TYPE 2 12 GAUGE APPROVED PRODUCER	
E3	BEAM GUARD ROUNDED BUFFER END	AASHTO M180 CLASS A TYPE 2 12 GAUGE APPROVED PRODUCER	
F1	POST BOLT	HOT DIP AASHTO M232 CLASS / ASTM A153 CLASS C / ASTM F2329 C OR MECHANICAL GAL. TO AASHTO M298 CLASS 50 TYPE 1 / ASTM B695 CLASS 50 TYPE 1 UNC UNC HEAVY HEX HEAD ASTM A307 GRADE B OR SAE J429 GRADE 2 OR ASTM F1554 GRADE 36	5/8" DIA.
F2	POST BOLT WASHER	HOT DIP AASHTO M232 CLASS / ASTM A153 CLASS C / ASTM F2329 C OR MECHANICAL GAL. TO AASHTO M298 CLASS 50 TYPE 1 / ASTM B695 CLASS 50 TYPE 1 F436 TYPE 1 (HARDEN WASHER ONLY)	5/8" DIA.
F3	POST BOLT NUT	HOT DIP AASHTO M232 CLASS / ASTM A153 CLASS C / ASTM F2329 C OR MECHANICAL GAL. TO AASHTO M298 CLASS 50 TYPE 1 / ASTM B695 CLASS 50 TYPE 1 UNC OVER TAP NUTS AS SPECIFIED IN AASHTO 291/ASTM A 563 AASHTO M180 RECESSED HEAVY HEX HEAD ASTM A563DH OR SAE J995 GRADE 5	
G1	GROUND STRUT CHANNEL	AASHTO M111 / ASTM A123 ASTM A36 MIN. STRENGTH 36 KSI, OR ASTM A529 MAX. STRENGTH 50 KSI, OR ASTM A572 MAX STRENGTH 50 KSI, OR ASTM A709 MAX STRENGTH 50 KSI, OR ASTM A992 MAX STRENGTH 50 KSI	1/2" x 11 3/4" x 10 GAUGE
G2	GROUND STRUT CONNECTOR	AASHTO M111 / ASTM A123 ASTM A36 MIN. STRENGTH 36 KSI, OR ASTM A529 MAX. STRENGTH 50 KSI, OR ASTM A572 MAX STRENGTH 50 KSI, OR ASTM A709 MAX STRENGTH 50 KSI, OR ASTM A992 MAX STRENGTH 50 KSI	1/4" THICKNESS
G3	GROUND STRUT PLATE	AASHTO M111 / ASTM A123 ASTM A36 MIN. STRENGTH 36 KSI, OR ASTM A529 MAX. STRENGTH 50 KSI, OR ASTM A572 MAX STRENGTH 50 KSI, OR ASTM A709 MAX STRENGTH 50 KSI, OR ASTM A992 MAX STRENGTH 50 KSI	1/2" THICKNESS

6

SDD 14B47 - 05f

MIDWEST GUARDRAIL SYSTEM (MGS) TYPE 2 TERMINAL

STATE OF WISCONSIN
DEPARTMENT OF TRANSPORTATION

6

SDD 14B47 - 05f

BILL OF MATERIALS - TYPE 2 TERMINAL (MGS)

PART	DESCRIPTION	MATERIALS SPECIFICATIONS	NOTES
H1	GROUND STRUT BOLT	HOT DIP AASHTO M232 CLASS / ASTM A153 CLASS C / ASTM F2329 C OR MECHANICAL GAL. TO AASHTO M298 CLASS 50 TYPE 1 / ASTM B695 CLASS 50 TYPE 1 UNC HEAVY HEX HEAD ASTM A307 GRADE B OR SAE J429 GRADE 2 OR ASTM F1554 GRADE 36	7/8" DIA.
H2	GROUND STRUT BOLT WASHER	HOT DIP AASHTO M232 CLASS / ASTM A153 CLASS C / ASTM F2329 C OR MECHANICAL GAL. TO AASHTO M298 CLASS 50 TYPE 1/ ASTM B695 CLASS 50 TYPE 1 F436 TYPE 1 (HARDEN WASHER ONLY)	7/8" DIA.
H3	GROUND STRUT BOLT NUT	HOT DIP AASHTO M232 CLASS / ASTM A153 CLASS C / ASTM F2329 C OR MECHANICAL GAL. TO AASHTO M298 CLASS 50 TYPE 1 / ASTM B695 CLASS 50 TYPE 1 UNC HEAVY HEX HEAD 5/8" ASTM A307 GRADE B OR SAE J429 GRADE 2 OR ASTM F1554 GRADE 36	
J1	BCT CABLE	AASHTO M30 / ASTM A741 6 x 19 INDEPENDENT WIRE CORE (IWRC) IMPROVED PLOW STEEL (IPS), 6 x 19 INDEPENDENT WIRE CORE (IWRC) IMPROVED PLOW STEEL (IPS) TYPE II OR IIC, CLASS C ZINC COATED MIN. BREAKING STRENGTH OF 42.7 KIPS	3/4" DIA.
J2	BCT CABLE	UNC 1" ASTM A576 GRADE 1035 SWAGE FITTINGS ARE TO BE FACTORY SWEDGED. MIN BREAKING STRENGTH OF 42.7 KIPS ASME B30.26 "FORGED, CAST, OR DIE STAMPED WITH THE FOLLOWING IN TO CONNECTION: NAME OF MANUFACTURE OR TRADEMARK OF CONNECTION'S MANUFACTURER, SIZE OR RATED LOAD, GRADE FOR ALLOY EYEBOLTS."	
K1	CABLE ASSEMBLY NUT	HOT DIP AASHTO M232 CLASS / ASTM A153 CLASS C / ASTM F2329 C OR MECHANICAL GAL. TO AASHTO M298 CLASS 50 TYPE 1 / ASTM B695 CLASS 50 TYPE 1 UNC OVER TAP NUTS AS SPECIFIED IN AASHTO 291 / ASTM A 563 HEAVY HEX HEAD ASTM A563DH OR SAE J995 GRADE 5	1" DIA.
K2	CABLE ASSEMBLY WASHER	HOT DIP AASHTO M232 CLASS / ASTM A153 CLASS C / ASTM F2329 C OR MECHANICAL GAL. TO AASHTO M298 CLASS 50 TYPE 1	1" DIA.
L1	BEARING PLATE	AASHTO M111 / ASTM A123 ASTM A36 MIN. STRENGTH 36 KSI, OR ASTM A529 MAX. STRENGTH 50 KSI, OR ASTM A572 MAX STRENGTH 50 KSI, OR ASTM A709 MAX STRENGTH 50 KSI, OR ASTM A992 MAX STRENGTH 50 KSI	5/8" THICKNESS
L2	BEARING PLATE FLANGE	AASHTO M111 / ASTM A123 ASTM A36 MIN. STRENGTH 36 KSI, OR ASTM A529 MAX. STRENGTH 50 KSI, OR ASTM A572 MAX STRENGTH 50 KSI, OR ASTM A709 MAX STRENGTH 50 KSI, OR ASTM A992 MAX STRENGTH 50 KSI	1" THICKNESS
M1	BEAM GUARD ANCHOR BRACKET	AASHTO M111 / ASTM A123 ASTM A36 MIN. STRENGTH 36 KSI, OR ASTM A529 MAX. STRENGTH 50 KSI, OR ASTM A572 MAX STRENGTH 50 KSI, OR ASTM A709 MAX STRENGTH 50 KSI, OR ASTM A992 MAX STRENGTH 50 KSI	
M2	BEAM GUARD ANCHOR END PLATE	AASHTO M111 / ASTM A123 ASTM A36 MIN. STRENGTH 36 KSI, OR ASTM A529 MAX. STRENGTH 50 KSI, OR ASTM A572 MAX STRENGTH 50 KSI, OR ASTM A709 MAX STRENGTH 50 KSI, OR ASTM A992 MAX STRENGTH 50 KSI	3/8" THICKNESS
N1	ANCHOR BRACKET BOLT	HOT DIP AASHTO M232 CLASS / ASTM A153 CLASS C / ASTM F2329 C OR MECHANICAL GAL. TO AASHTO M298 CLASS 50 TYPE 1 / ASTM B695 CLASS 50 TYPE 1 UNC AASHTO M180 HEAD ASTM A307 GRADE B OR SAE J429 GRADE 2 OR ASTM F1554 GRADE 36	5/8" DIA.
N2	ANCHOR BRACKET BOLT WASHER	HOT DIP AASHTO M232 CLASS / ASTM A153 CLASS C / ASTM F2329 C OR MECHANICAL GAL. TO AASHTO M298 CLASS 50 TYPE 1/ ASTM B695 CLASS 50 TYPE 1 F436 TYPE 1 (HARDEN WASHER ONLY)	5/8" DIA.
N3	ANCHOR BRACKET BOLT NUT	HOT DIP AASHTO M232 CLASS / ASTM A153 CLASS C / ASTM F2329 C OR MECHANICAL GAL. TO AASHTO M298 CLASS 50 TYPE 1 / ASTM B695 CLASS 50 TYPE 1 UNC OVER TAP NUTS AS SPECIFIED IN AASHTO 291 /ASTM A 563 HEAVY HEX HEAD ASTM A563DH OR SAE J995 GRADE 5	
P1	FOUNDATION TUBE BOLT	HOT DIP AASHTO M232 CLASS / ASTM A153 CLASS C / ASTM F2329 C OR MECHANICAL GAL. TO AASHTO M298 CLASS 50 TYPE 1/ ASTM B695 CLASS 50 TYPE 1 UNC OVER TAP NUTS AS SPECIFIED IN AASHTO 291 / ASTM A 563 HEAVY HEX HEAD ASTM A563DH OR SAE J995 GRADE 5	1/2" DIA.
Q1	SPLICE BOLT	HOT DIP AASHTO M232 CLASS / ASTM A153 CLASS C / ASTM F2329 C OR MECHANICAL GAL. TO AASHTO M298 CLASS 50 TYPE 1 / ASTM B695 CLASS 50 TYPE 1 UNC AASHTO M180 HEAD ASTM A307 GRADE B OR SAE J429 GRADE 2 OR ASTM F1554 GRADE 36	
Q2	SPLICE NUT	HOT DIP AASHTO M232 CLASS / ASTM A153 CLASS C / ASTM F2329 C OR MECHANICAL GAL. TO AASHTO M298 CLASS 50 TYPE 1 / ASTM B695 CLASS 50 TYPE 1 UNC OVER TAP NUTS AS SPECIFIED IN AASHTO 291 / ASTM A 563 AASHTO M180 RECESSED HEAVY HEX HEAD ASTM A563DH OR SAE J995 GRADE 5	5/8" DIA.

MIDWEST GUARDRAIL SYSTEM (MGS) TYPE 2 TERMINAL

STATE OF WISCONSIN
DEPARTMENT OF TRANSPORTATION

APPROVED
May 2023 — DATE
/S/ Rodney Taylor — ROADWAY STANDARDS DEVE ENGINEER
FHWA

6

SDD 14B47 - 05g

GENERAL NOTES

DETAILS OF CONSTRUCTION, MATERIALS AND WORKMANSHIP NOT SHOWN ON THIS DRAWING SHALL CONFORM TO THE PERTINENT REQUIREMENTS OF THE STANDARD SPECIFICATIONS AND THE APPLICABLE SPECIAL PROVISIONS.

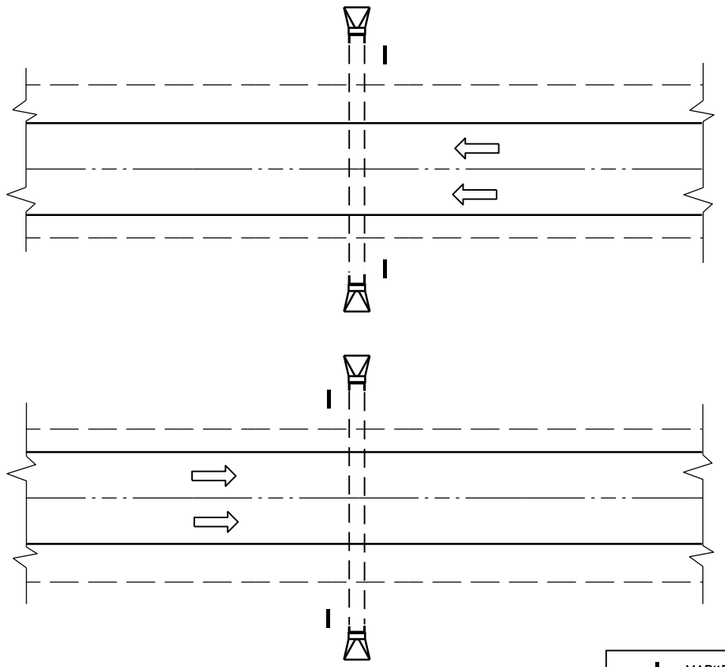

PLAN VIEW

DIVIDED HIGHWAY

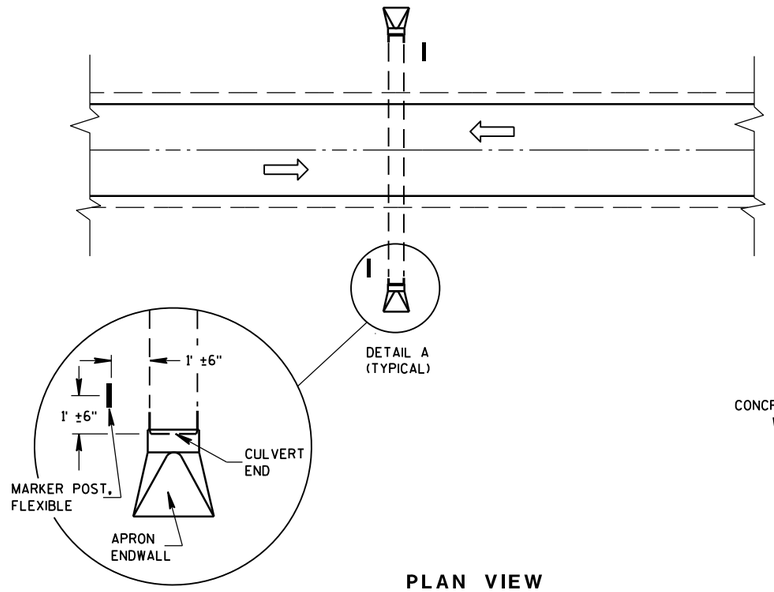

DETAIL A
(TYPICAL)

PLAN VIEW

UNDIVIDED HIGHWAY

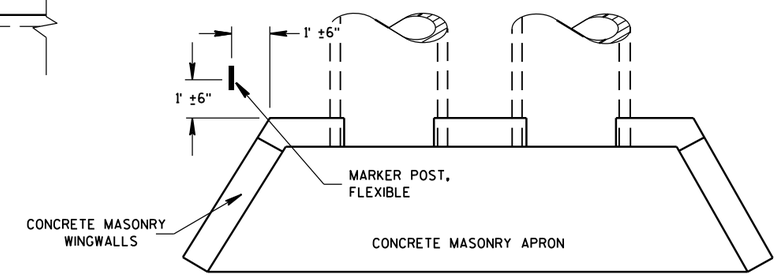

PLAN VIEW

CONCRETE MASONRY ENDWALLS FOR CULVERT PIPE AND PIPE ARCH

I MARKER POST, FLEXIBLE

DIRECTION OF TRAFFIC FLOW

FLEXIBLE MARKER POST LOCATION

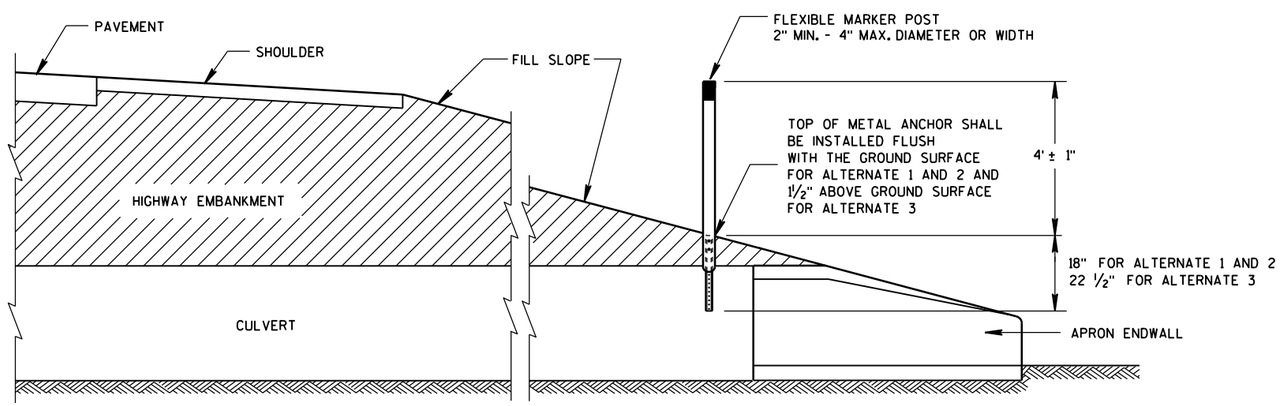

CROSS SECTION

FLEXIBLE MARKER POST

FLEXIBLE MARKER POST FOR CULVERT END

STATE OF WISCONSIN
DEPARTMENT OF TRANSPOR

6

6

S.D.D. 15 A 3-2a

S.D.D. 15 A 3-2a

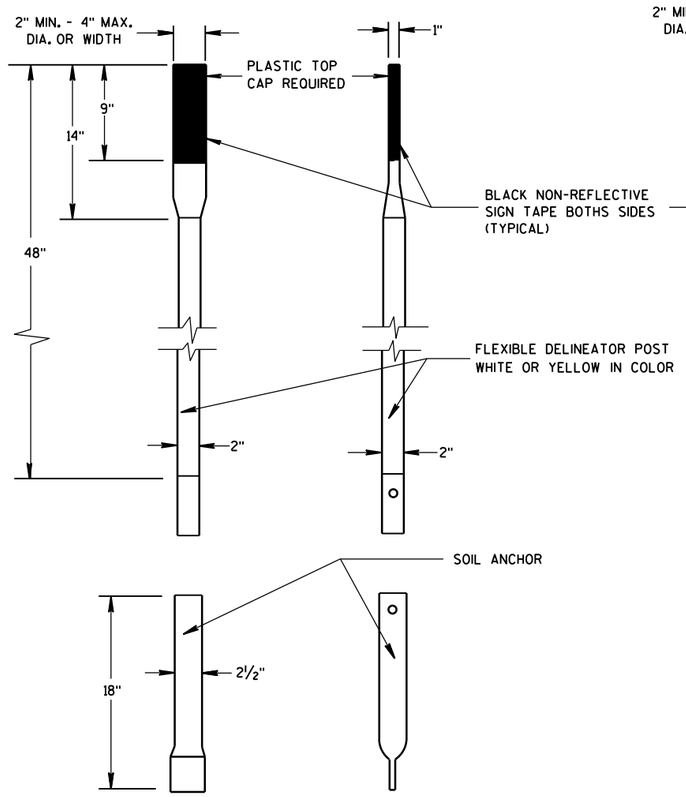

FRONT VIEW SIDE VIEW

ALTERNATE 1

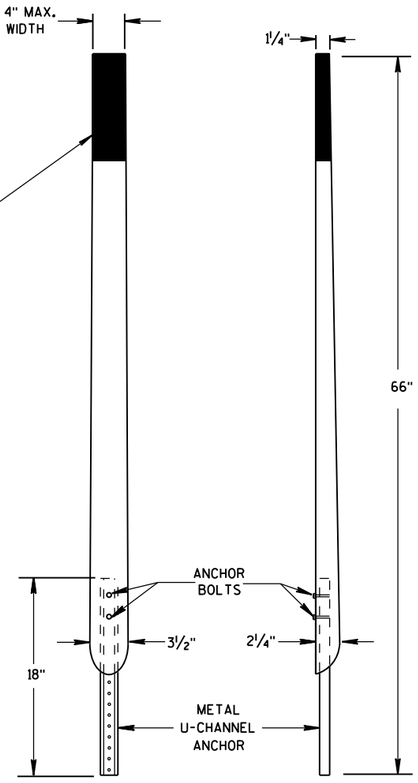

FRONT VIEW SIDE VIEW

ALTERNATE 2

FLEXIBLE MARKER POSTS

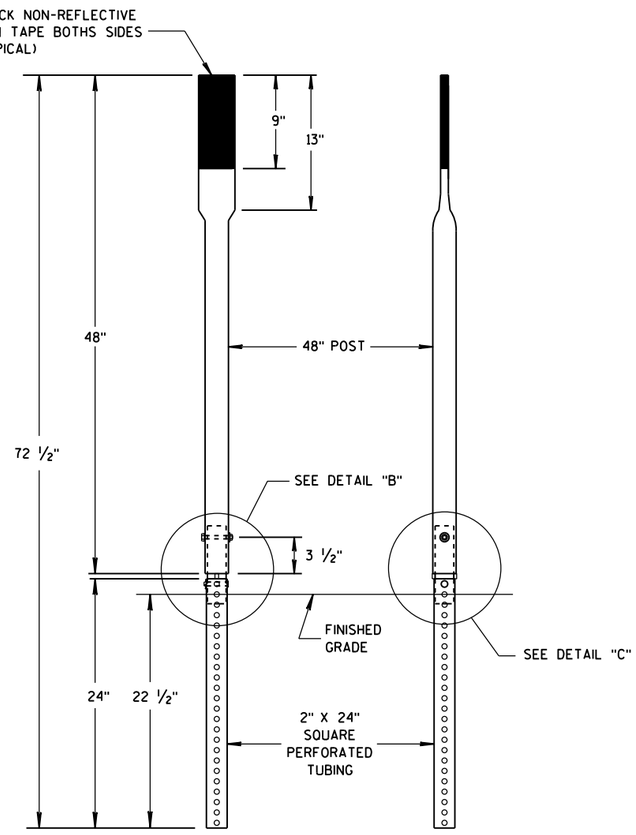

FRONT VIEW SIDE VIEW

ALTERNATE 3

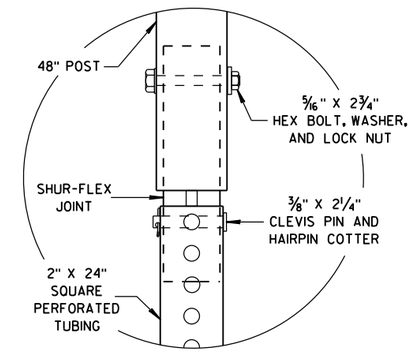

DETAIL B

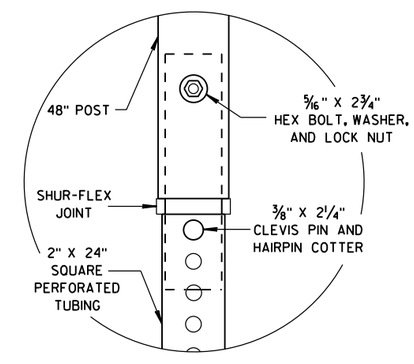

DETAIL C

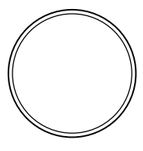

SECTION A-A

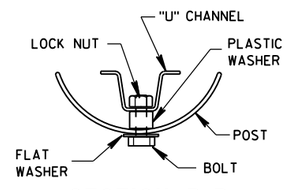

SECTION B-B

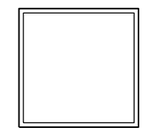

SECTION C-C

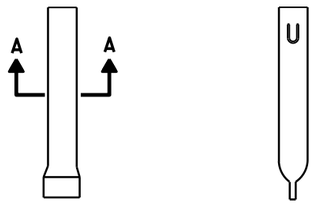

FRONT VIEW SIDE VIEW

ALTERNATE 1

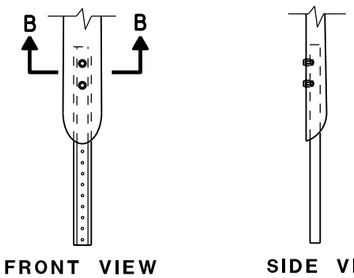

FRONT VIEW SIDE VIEW

ALTERNATE 2

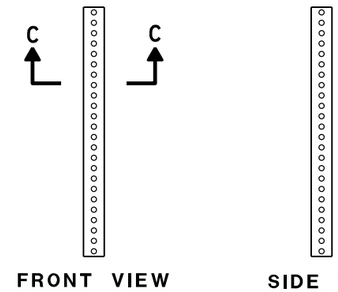

FRONT VIEW SIDE VIEW

ALTERNATE 3

FLEXIBLE MARKER POST ANCHORS

FLEXIBLE MARKER POST
FOR CULVERT END

STATE OF WISCONSIN
DEPARTMENT OF TRANSPORTATION

APPROVED
10/1/2012 /S/ Travis Feltes
DATE STATE TRAFFIC ENGINEER
FHWA

6

6

S.D.D. 15 A 3-2b

S.D.D. 15 A 3-2b

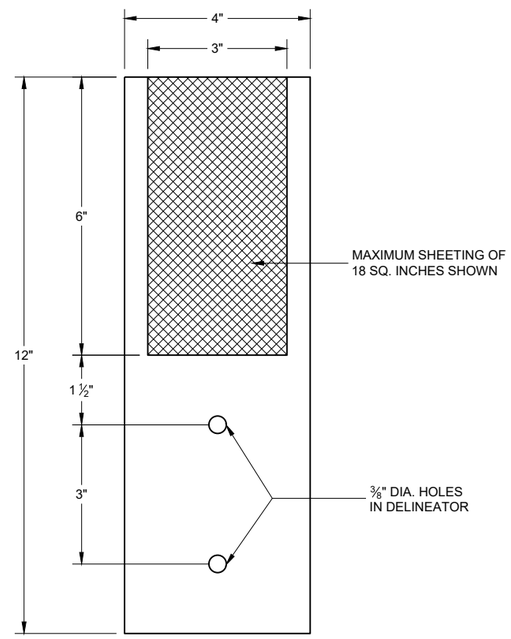

4" x 12" DELINEATOR
WITH REFLECTIVE SHEETING

6

6

SDD 15A04 - 07e

SDD 15A04 - 07e

DELINEATOR
WITH REFLECTIVE SHEETING

STATE OF WISCONSIN
DEPARTMENT OF TRANSPORTATION

APPROVED
November 2021 — DATE
/S/ Matthew Rauch — STATE SIGNING AND MAR ENGINEER
FHWA

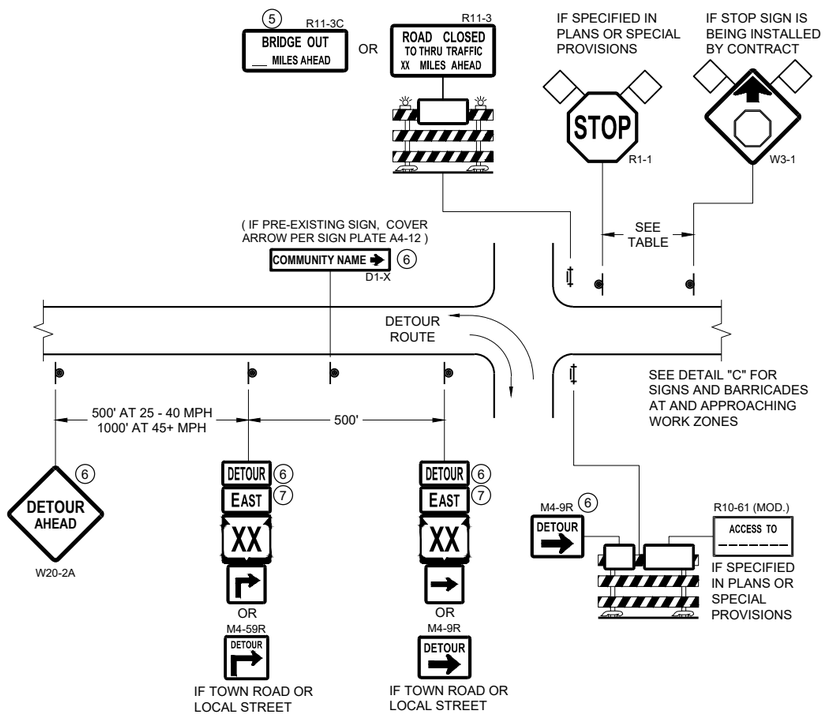

DETAIL A
MAINLINE CLOSURE WITH POSTED DETOUR

WORK ZONE GREATER THAN OR EQUAL TO ½ MILE FROM DETOUR ROUTE (1000 FEET IF URBAN)

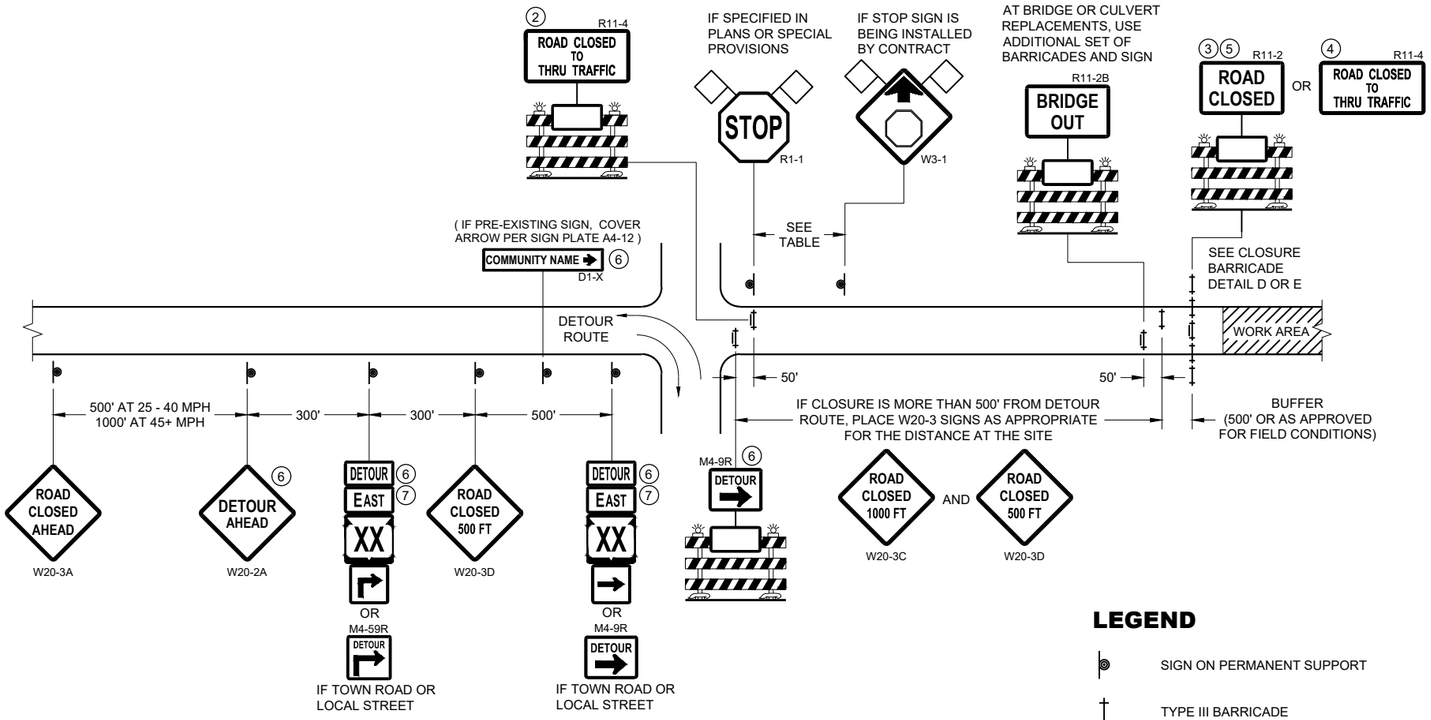

DETAIL B
MAINLINE CLOSURE WITH POSTED DETOUR

WORK ZONE LESS THAN ½ MILE FROM DETOUR ROUTE (1000 FEET IF URBAN)

LEGEND

- SIGN ON PERMANENT SUPPORT
- TYPE III BARRICADE
- TYPE III BARRICADE WITH ATTACHED SIGN
- TYPE "A" WARNING LIGHT (FLASHING)
- WORK AREA
- FLAGS, 16" X 16" MIN. (ORANGE)
- DETOUR — M4 - 8
- EAST — M3 - X
- XX (M1 - 4) OR XX (M1 - 6) OR COUNTY X (M1 - 5A)
- M05 - 1 OR M06 - 1

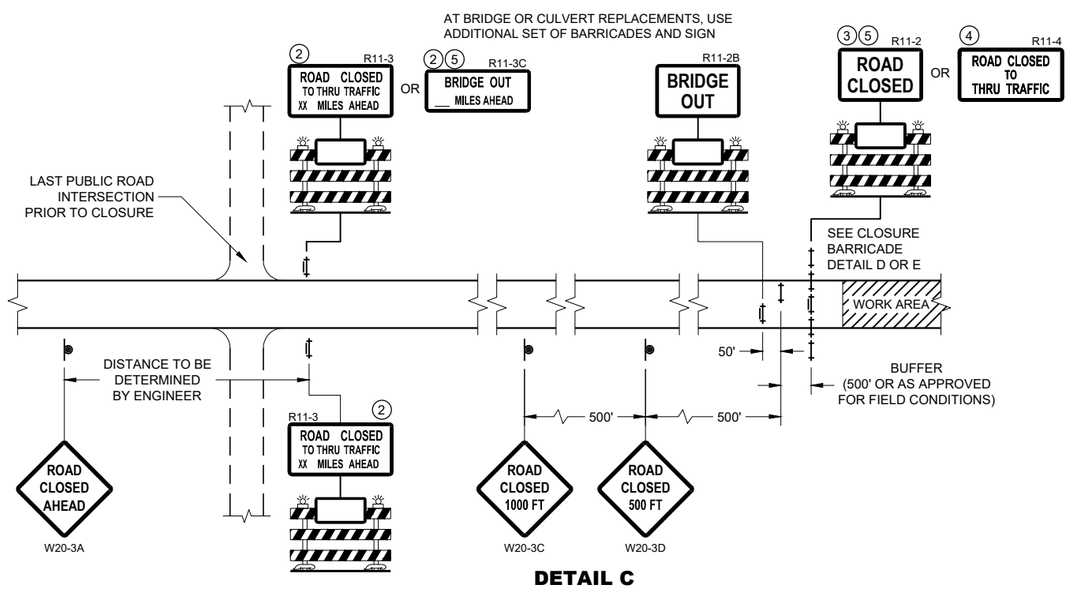

DETAIL C
MAINLINE CLOSURE, NO POSTED DETOUR

SPEED LIMIT (MPH)	"STOP AHEAD" ADVANCE WARNING DISTANCE (FT)
25	200
30	200
35	350
40	350
45	500
50	550
55	750

SEE SDD 15C2-SHEET "b" FOR GENERAL NOTES AND FOOTNOTES 1 THROUGH 7

BARRICADES AND SIGNS FOR MAINLINE CLOSURES

STATE OF WISCONSIN
DEPARTMENT OF TRANSPORTATION

APPROVED
May 2023 — DATE
/S/ Andrew Heidtke — WORK ZONE ENGINEER

FHWA

6

SDD 15C02 - 09a

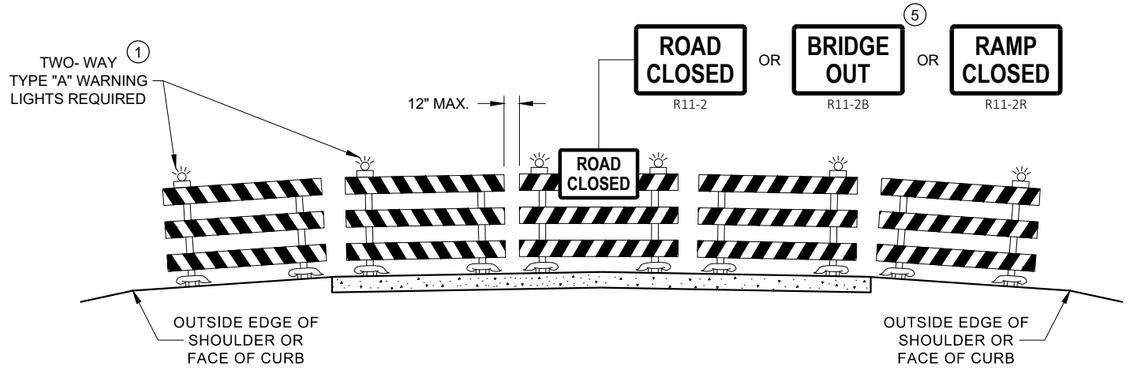

DETAIL D
ROAD CLOSURE BARRICADE DETAIL
APPROACH VIEW

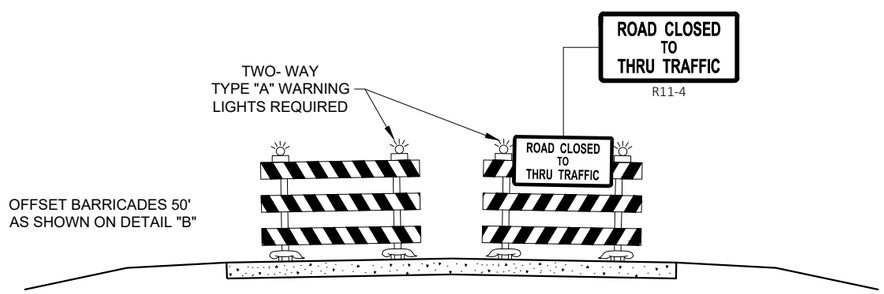

DETAIL E
LANE CLOSURE BARRICADE DETAIL
APPROACH VIEW

SEE SDD 15C2 - SHEET "a" FOR LEGEND

GENERAL NOTES

THE EXACT NUMBER, LOCATION, AND SPACING OF ALL SIGNS AND BARRICADES SHALL BE ADJUSTED TO FIT FIELD CONDITIONS AS APPROVED BY THE ENGINEER.

ANY SIGNS TEMPORARY OR EXISTING, WHICH CONFLICT WITH TRAFFIC CONTROL "IN USE", SHALL BE REMOVED OR COVERED AS NEEDED AND AS APPROVED BY THE ENGINEER.

THE SPACING BETWEEN TRAFFIC CONTROL SIGNS SHOULD BE ADJUSTED TO NOT CONFLICT WITH AND SHOULD PROVIDE A DESIRABLE MINIMUM OF 200 FEET CLEARANCE TO EXISTING SIGNS THAT WILL REMAIN IN PLACE.

BARRICADES THAT MUST BE MOVED FOR A WORK OPERATION SHALL BE IMMEDIATELY RE-ESTABLISHED UPON COMPLETION OF THE OPERATION, OR FOR CONTINUING OPERATIONS, AT THE END OF EACH WORKING DAY.

SIGNS THAT WILL BE IN PLACE LESS THAN 7 CONTINUOUS DAYS AND NIGHTS MAY BE MOUNTED ON PORTABLE SUPPORTS.

ALL TYPE III BARRICADES SHALL HAVE RAILS REFLECTORIZED ON BOTH FACES. STRIPES SHALL BE PROPERLY SLOPED DOWN TOWARD THE TRAFFIC SIDE OR AS SHOWN IN THE ROAD CLOSURE BARRICADE DETAIL "D" FOR FULL ROAD CLOSURES.

TYPE "A" LOW - INTENSITY FLASHING WARNING LIGHTS SHALL BE VISIBLE ON BOTH SIDES OF THE BARRICADE.

THE R11 - 2, R11 - 3, M4 - 9, R11 - 4, AND R10 - 61 SIGNS PLACED ON THE BARRICADES SHALL COVER NO MORE THAN THE TOP RAIL. THE SIGNS SHALL NOT COVER ANY PORTION OF THE MIDDLE RAIL OR BOTTOM RAILS.

"WO" AND "MO" SIGNS ARE THE SAME AS "W" AND "M" SIGNS EXCEPT THE BACKGROUND IS ORANGE.

ALL SIGNS SHALL BE 48" X 48" UNLESS OTHERWISE NOTED BELOW:
- R11 - 2 SHALL BE 48" X 30"
- R11 - 3 SHALL, R11 - 4 AND R10 - 61 SHALL BE 60 " X 30"
- M4 - 9 SHALL BE 30" X 24"
- M3 - X SHALL BE 24" X 12" (36" X 18" IF NEEDED TO MATCH EXISTING SIGNS)
- M4 - 8 SHALL BE 24" X 12" (36" X 18" IF NEEDED TO MATCH EXISTING SIGNS)
- M1 - 4, M1 - 5A AND M1 - 6 SHALL BE 24" X 24" (36" X 36" IF NEEDED TO MATCH EXISTING SIGNS)
- MO5 - 1 AND MO6 - 1 SHALL BE 21" X 21" (30" X 30" IF NEEDED TO MATCH EXISTING SIGNS)
- D1 - X SHALL BE AS SHOWN ON SPECIFIC PROJECT SIGNING DETAIL SHEETS.
- R1 - 1 SHALL BE 36" X 36"

1. TWO WARNING LIGHTS SHALL BE PROVIDED ON THE CENTER BARRICADE AND A MINIMUM OF ONE WARNING LIGHT SHALL BE PROVIDED ON EACH OF THE OTHER BARRICADES WITHIN THE ROADWAY LIMITS. SPACING OF THE WARNING LIGHTS SHALL BE UNIFORM TO THE EDGE OF ROADWAY AS SHOWN (APPROX. 8 FOOT LIGHT SPACING.
2. THESE SIGNS AND BARRICADES ARE NOT REQUIRED IF ROAD CLOSURE BEGINS AT AN INTERSECTION.
3. FOR ROAD CLOSURE WITHOUT LOCAL ACCESS TO PROJECT, SEE ROAD CLOSURE BARRICADE DETAIL "D".
4. FOR ROAD CLOSURE WITH LOCAL ACCESS TO PROJECT, SEE ROAD CLOSURE BARRICADE DETAIL "E".
5. FOR BRIDGE OR CULVERT REPLACEMENTS, SUBSTITUTE "BRIDGE OUT" INSTEAD OF "ROAD CLOSED" ON R11 - 2 AND R11 - 3 SIGNS.
6. INSTALL DETOUR AND COMMUNITY GUIDE SIGNS AND ARROWS ONLY IF SPECIFIED IN THE CONTRACT. IF THERE ARE EXISTING ROUTE MARKER ASSEMBLIES THAT WILL REMAIN IN PLACE, ADJUST THE LOCATION OF THE DETOUR ROUTE SIGNS TO CORRESPOND WITH THE EXISTING ASSEMBLIES. MODIFY EXISTING SIGNS WHERE POSSIBLE. SEE SPECIFIC PROJECT DETOUR SIGNING DETAIL SHEETS. IF DETOUR SIGNS ARE BEING INSTALLED BY OTHERS, PLACE THE CONTRACTED TRAFFIC CONTROL SIGNS TO ALLOW FOR PLACEMENT OF ALL WARNING, DETOUR AND GUIDE SIGNS AS SHOWN.
7. "EAST" CARDINAL DIRECTION MARKERS AND RIGHT TURN ARROWS ARE SHOWN. USE OTHER CARDINAL DIRECTIONS AND ARROWS AS APPROPRIATE.

BARRICADES AND SIGNS FOR VARIOUS CLOSURES

STATE OF WISCONSIN
DEPARTMENT OF TRANSPORTATION

APPROVED
May 2023 — DATE
/S/ Andrew Heidtke — WORK ZONE ENGINEE
FHWA

THIS DRAWING PROVIDES GENERAL GUIDANCE ON TYPICAL TO SIGN LAYOUT AND SPACING. SEE PROJECT TO SIGNING SHEETS FOR SPECIFIC DETAILS FOR EACH PROJECT.

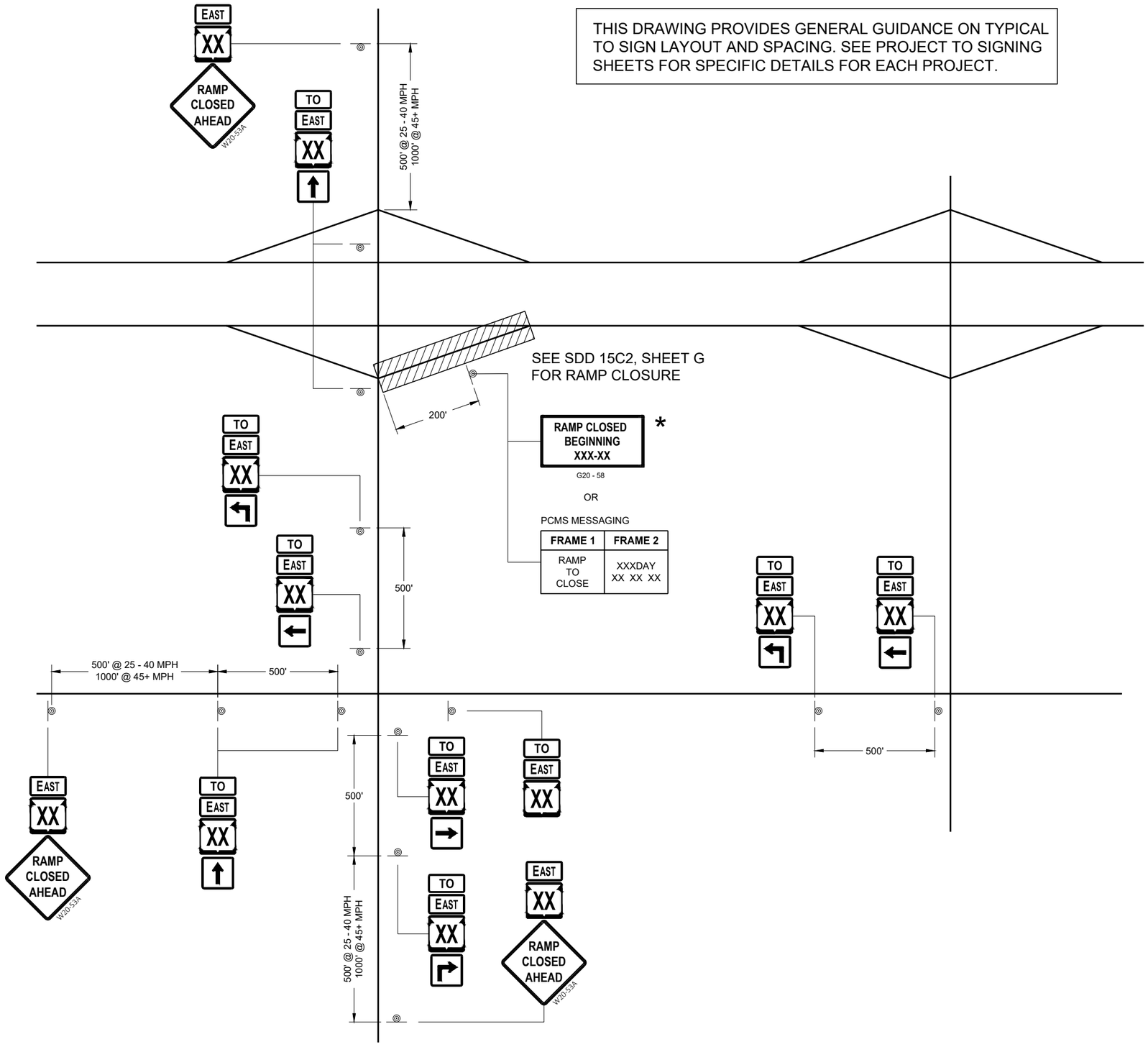

LEGEND

SIGN ON PERMANENT SUPPORT

TO / EAST — MO4 - 5, M3 - X

XX M1 - 6 OR XX M1 - 4 OR INTERSTATE XX M1 - 1

M05 - 1 OR M06 - 1 OR M06 - 1

GENERAL NOTES

THE EXACT NUMBER, LOCATION AND SPACING OF ALL SIGNS SHALL BE ADJUSTED TO FIT FIELD CONDITIONS AS APPROVED BY THE ENGINEER.

IF THERE ARE ANY ROUTE MARKER ASSEMBLIES THAT WILL REMAIN IN PLACE, ADJUST THE LOCATION OF THE TO ROUTE SIGNS TO CORRESPOND WITH THE EXISTING ASSEMBLIES. SEE SPECIFIC PROJECT TO SIGNING DETAIL SHEETS. MODIFY EXISTING SIGNS WHERE POSSIBLE.

THE SPACING BETWEEN TRAFFIC CONTROL AND TO SIGNS SHOULD BE ADJUSTED TO NOT CONFLICT WITH AND TO PROVIDE A DESIRABLE MINIMUM OF 200 FEET CLEARANCE TO EXISTING SIGNS THAT WILL REMAIN IN PLACE.

ANY SIGNS TEMPORARY OR EXISTING, WHICH CONFLICT WITH TRAFFIC CONTROL " IN USE" SHALL BE REMOVED OR COVERED AS NEEDED AND AS APPROVED BY THE ENGINEER.

SIGNS THAT SHALL BE IN PLACE LESS THAN 7 CONTINUOUS DAYS AND NIGHTS MAY BE MOUNTED ON PORTABLE SUPPORTS.

"MO" SIGNS ARE THE SAME AS "M" SIGNS EXCEPT THE BACKGROUND IS ORANGE.

SIGN SIZES SHALL BE AS FOLLOW:
- M3 - X SHALL BE 24" X 12". (36" X 18" IF NEEDED TO MATCH EXISTING SIGNS).
- MO4 - 5 SHALL BE 24" X 12". (36" X 18" IF NEEDED TO MATCH EXISTING SIGNS).
- M1 - 1, M1 - 4, AND M1 - 6 SHALL BE 24" X 24" (36" X 36" IF NEEDED TO MATCH EXISTING SIGNS).
- MO5 - 1, MO5 - 2, AND MO6 - 1, SHALL BE 21" X 21". (30" X 30" IF NEEDED TO MATCH EXISTING SIGNS).
- W20 - 53A SHALL BE 48" X 48"

* PLACE "RAMP CLOSED BEGINNING" SIGN 7 CALENDAR DAYS PRIOR TO CLOSURE OR AS DIRECTED BY THE ENGINEER. SEE WISCONSIN STANDARD SIGN PLATES FOR LAYOUT.

ON RAMP LANE CLOSURE

STATE OF WISCONSIN
DEPARTMENT OF TRANSPORTATION

APPROVED
May 2023 — DATE
/S/ Andrew Heidtke — WORK ZONE ENGINEE
FHWA

THIS DRAWING PROVIDES GENERAL GUIDANCE ON TYPICAL "TO" MO-4 SIGN LAYOUT AND SPACING. SEE PROJECT TO SIGNING SHEETS FOR SPECIFIC DETAILS FOR EACH PROJECT.

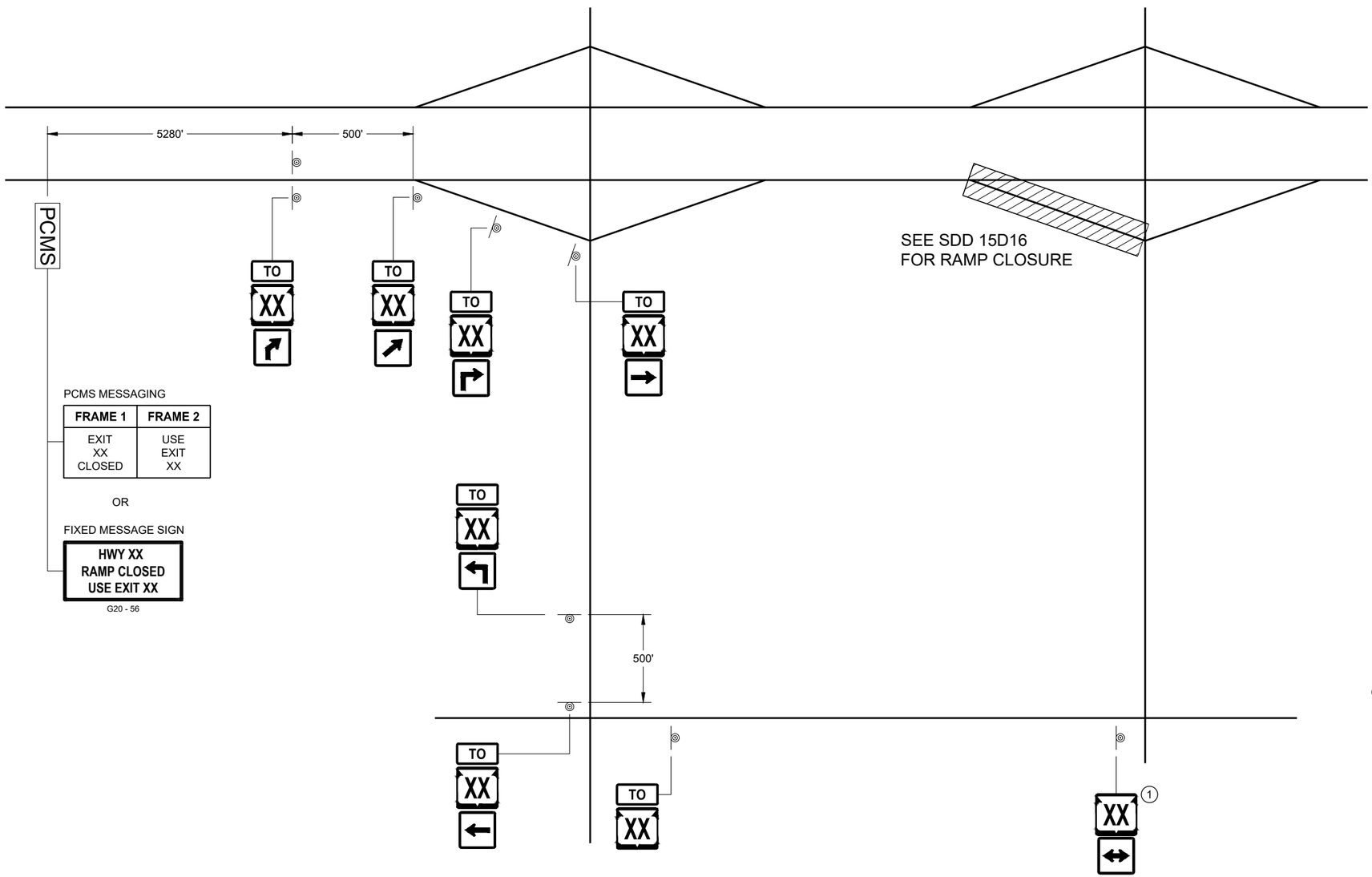

PCMS MESSAGING

FRAME 1	FRAME 2
EXIT XX CLOSED	USE EXIT XX

OR

FIXED MESSAGE SIGN

HWY XX
RAMP CLOSED
USE EXIT XX

G20 - 56

LEGEND

SIGN ON PERMANENT SUPPORT

PCMS — PORTABLE CHANGEABLE MESSAGE SIGN

TO — MO4 - 5

XX — M1 - 4 OR XX — M1 - 6 OR COUNTY X — M1 - 5A

M05 - 1 OR M05 - 2 OR M06 - 1 OR M06 - 2 OR M06 - 4

GENERAL NOTES

SEE SDD 15D16 "TRAFFIC CONTROL, EXIT RAMP CLOSURE" DETAIL FOR TRAFFIC CONTROL AT EXIT RAMP CLOSURE.

THE EXACT NUMBER, LOCATION AND SPACING OF ALL SIGNS SHALL BE ADJUSTED TO FIT FIELD CONDITIONS AS APPROVED BY THE ENGINEER.

IF THERE ARE ANY ROUTE MARKER ASSEMBLIES THAT WILL REMAIN IN PLACE, ADJUST THE LOCATION OF THE "TO" MO-4 ROUTE SIGNS TO CORRESPOND WITH THE EXISTING ASSEMBLIES. SEE SPECIFIC PROJECT TO SIGNING DETAIL SHEETS. MODIFY EXISTING SIGNS WHERE POSSIBLE.

THE SPACING BETWEEN TRAFFIC CONTROL AND "TO" MO-4 SIGNS SHOULD BE ADJUSTED TO NOT CONFLICT WITH AND TO PROVIDE A DESIRABLE MINIMUM OF 200 FEET CLEARANCE TO EXISTING SIGNS THAT WILL REMAIN IN PLACE.

ANY SIGNS TEMPORARY OR EXISTING, WHICH CONFLICT WITH TRAFFIC CONTROL " IN USE" SHALL BE REMOVED OR COVERED AS NEEDED AND AS APPROVED BY THE ENGINEER.

SIGNS THAT SHALL BE IN PLACE LESS THAN 7 CONTINUOUS DAYS AND NIGHTS MAY BE MOUNTED ON PORTABLE SUPPORTS.

"MO" SIGNS ARE THE SAME AS "M" SIGNS EXCEPT THE BACKGROUND IS ORANGE.

SIGN SIZES SHALL BE AS FOLLOW:
- MO4 - 5 SHALL BE 24" X 12". (36" X 18" IF NEEDED TO MATCH EXISTING SIGNS).
- M1 - 4, M1 - 5A, AND M1 - 6 SHALL BE 24" X 24" (36" X 36" IF NEEDED TO MATCH EXISTING SIGNS).
- MO5 - 1, MO5 - 2, AND MO6 - 1, SHALL BE 21" X 21". (30" X 30" IF NEEDED TO MATCH EXISTING SIGNS).

(1) ONLY ADD IF THERE ARE NO EXISTING ROUTE MARKERS FOR THE INTERSECTING ROADWAY.

OFF RAMP
LANE CLOSURE

STATE OF WISCONSIN
DEPARTMENT OF TRANSPORTATION

APPROVED
May 2023 — DATE
/S/ Andrew Heidtke — WORK ZONE ENGINEE
FHWA

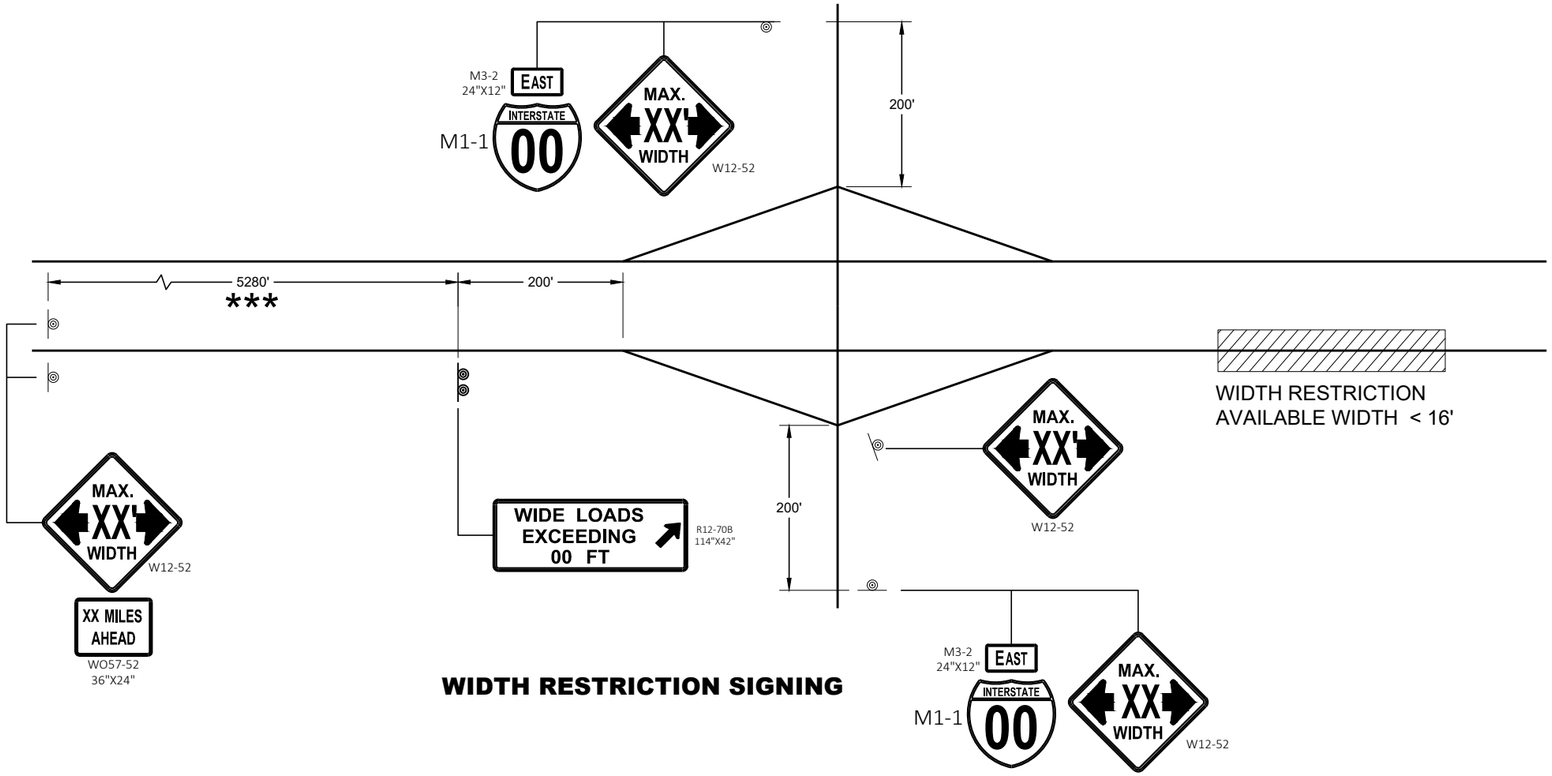

WIDTH RESTRICTION SIGNING

LEGEND

◎ SIGN ON PERMANENT SUPPORT

GENERAL NOTES

THE EXACT NUMBER, LOCATION AND SPACING OF ALL SIGNS SHALL BE ADJUSTED TO FIT FIELD CONDITIONS AS APPROVED BY THE ENGINEER.

THE SPACING BETWEEN SIGNS SHOULD BE ADJUSTED TO NOT CONFLICT WITH AND TO PROVIDE A DESIRABLE MINIMUM OF 200 FEET CLEARANCE TO EXISTING SIGNS THAT WILL REMAIN IN PLACE.

ANY SIGNS TEMPORARY OR EXISTING, WHICH CONFLICT WITH TRAFFIC CONTROL " IN USE" SHALL BE REMOVED OR COVERED AS NEEDED AND AS APPROVED BY THE ENGINEER.

ALL SIGNS ARE 48" X 48" UNLESS OTHERWISE NOTED.

"WO" SIGNS ARE THE SAME AS "W" SIGNS EXCEPT THE BACKGROUND IS ORANGE.

WIDTH ON SIGN TO BE APPROXIMATELY ONE FOOT LESS THAN AVAILABLE WIDTH.

* PLACE 500 FEET AFTER THE W20 - 1A AND 500 FEET BEFORE ADDITIONAL SIGNS FOR ROADWAYS WITH A PRE - CONSTRUCTION SPEED LIMIT OF 45 MPH OR MORE. FOR 35-40 MPH, USE 350 FOOT TYPICAL SPACING. FOR 25-30 MPH, USE 200 FOOT TYPICAL SPACING.

** SIGN SHALL BE VISIBLE FROM ROADWAY.

*** ADDITIONAL SIGNS NEEDED IF THERE IS AN ON RAMP BETWEEN SIGNS.

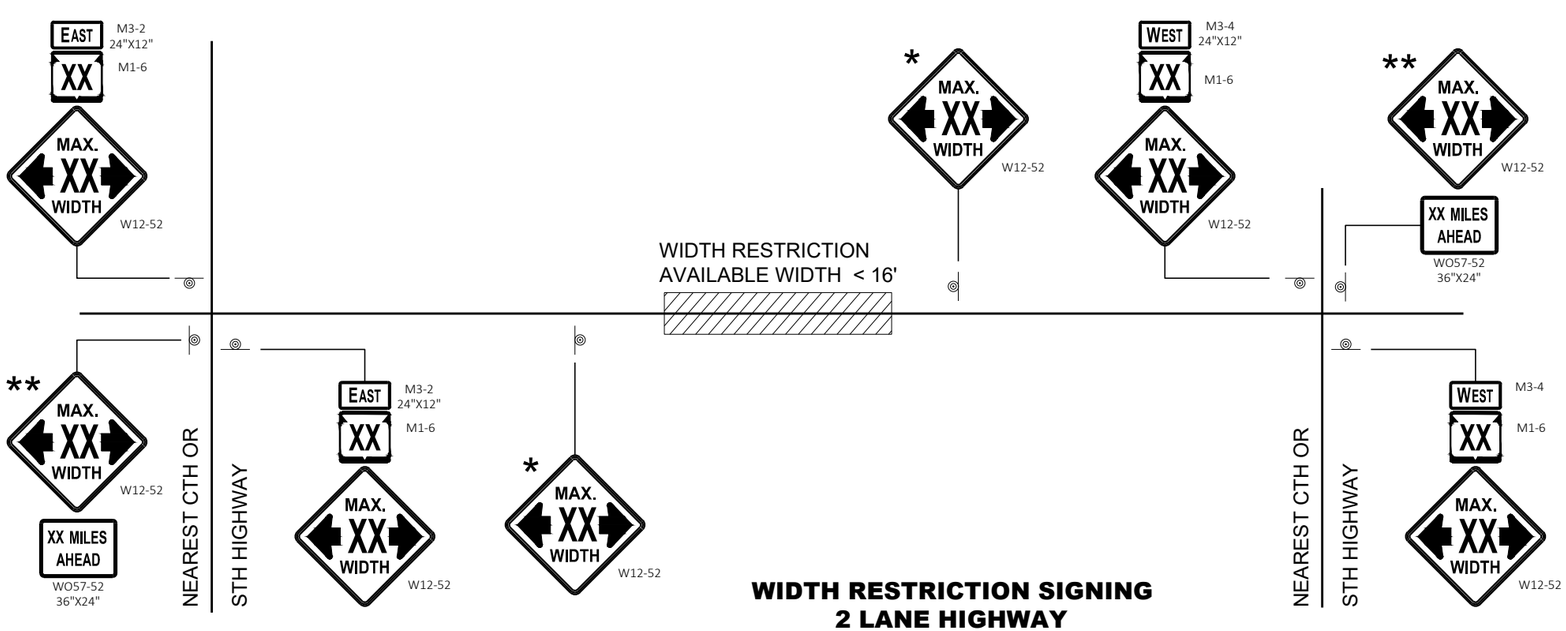

WIDTH RESTRICTION SIGNING
2 LANE HIGHWAY

WIDTH ON SIGN TO BE APPROX. 1 - FOOT LESS THAN AVAILABLE WIDTH

ADVANCED WIDTH RESTRICTION SIGNING

STATE OF WISCONSIN
DEPARTMENT OF TRANSPORTATION

APPROVED
May 2023 — DATE
/S/ Andrew Heidtke — WORK ZONE ENGINEER
FHWA

6
SDD 15C02 - 09f

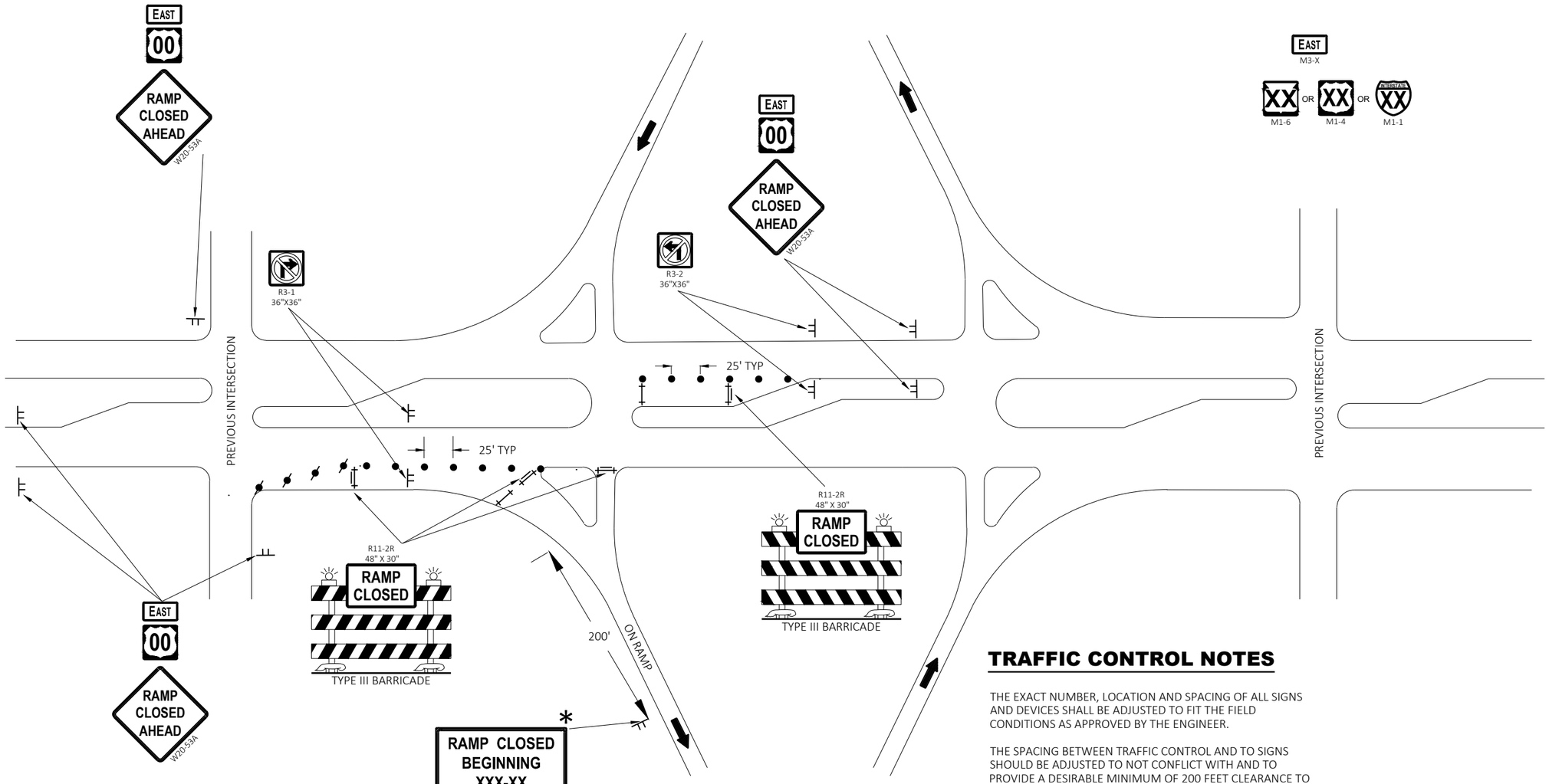

LEGEND

- TRAFFIC CONTROL DRUM
- TRAFFIC CONTROL DRUM WITH TYPE "C" STEADY BURN LIGHT
- TYPE III BARRICADE
- TYPE III BARRICADE WITH ATTACHED SIGN
- SIGN ON PERMANENT SUPPORT
- SIGN ON TEMPORARY SUPPORT
- DIRECTION OF TRAFFIC

TRAFFIC CONTROL NOTES

THE EXACT NUMBER, LOCATION AND SPACING OF ALL SIGNS AND DEVICES SHALL BE ADJUSTED TO FIT THE FIELD CONDITIONS AS APPROVED BY THE ENGINEER.

THE SPACING BETWEEN TRAFFIC CONTROL AND TO SIGNS SHOULD BE ADJUSTED TO NOT CONFLICT WITH AND TO PROVIDE A DESIRABLE MINIMUM OF 200 FEET CLEARANCE TO EXISTING SIGNS THAT WILL REMAIN IN PLACE.

ANY SIGNS TEMPORARY OR EXISTING, WHICH CONFLICT WITH THE TRAFFIC CONTROL "IN USE" SHALL BE REMOVED OR COVERED AS NEEDED AND AS APPROVED BY THE ENGINEER.

SIGNS THAT SHALL BE IN PLACE LESS THAN 7 CONTINUOUS DAYS AND NIGHTS MAY BE MOUNTED ON PORTABLE SUPPORTS.

SIGN SIZES SHALL BE AS FOLLOWS:

- M3-X SHALL BE 24"x24" (36" x18" IF NEEDED TO MATCH EXISTING SIGNS)
- M1-1, M1-4, AND M1-6 SHALL BE 24"x24" (36"x36" IF NEEDED TO MATCH EXISTING SIGNS)
- W20-53A SHALL BE 48"X48"

* PLACE "RAMP CLOSED BEGINNING" SIGN 7 CALENDAR DAYS PRIOR TO CLOSURE OR AS DIRECTED BY THE ENGINEER. SEE WISCONSIN STANDARD SIGN PLATES FOR LAYOUT.

TRAFFIC CONTROL FOR ENTRANCE RAMP CLOSURE

TRAFFIC CONTROL FOR ENTRANCE RAMP CLOSURE

STATE OF WISCONSIN
DEPARTMENT OF TRANSPORTATION

APPROVED
May 2023 — DATE
/S/ Andrew Heidtke — WORK ZONE ENGINEE
FHWA

6

SDD 15C02-09g

*CONFIRM MARKING LINE WIDTH WITH THE MISCELLANEOUS QUANTITIES

GENERAL NOTES

DETAILS OF CONSTRUCTION NOT SHOWN ON THIS DRAWING SHALL CONFORM TO STANDARD SPECIFICATIONS AND SPECIAL PROVISIONS.

1. LOCATE THE NO PASSING ZONE W14-3 SIGN WITHIN 50 FEET OF THE "T" MARKING
2. MEASURE FROM EDGE OF MARKING TO JOINT LINE. THIS DOES NOT INCLUDE SPACE NEEDED FOR GROOVING OPERATIONS.

LEGEND

"T" MARKING

SIGN ON PERMANENT SUPPORT

DIRECTION OF TRAFFIC

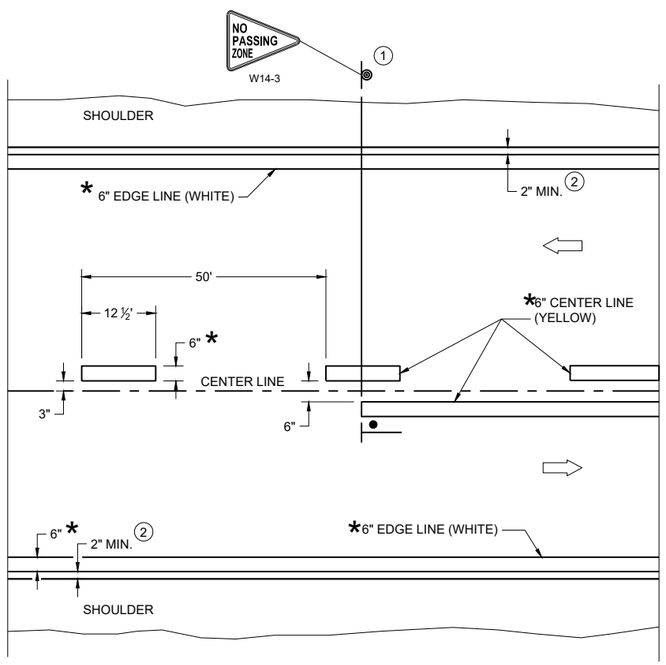

TWO WAY TRAFFIC

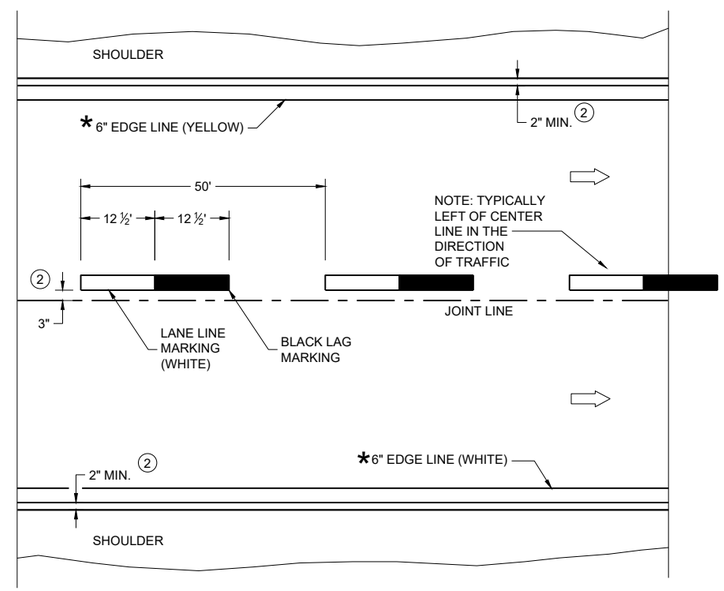

ONE WAY TRAFFIC

PERMANENT PAVEMENT MARKING

6

SDD 15C08-23a

PERMANENT LONGITUDINAL PAVEMENT MARKINGS

STATE OF WISCONSIN
DEPARTMENT OF TRANSPORTATION

APPROVED

May 2023 — DATE

/S/ Jeannie Silver — Statewide Pavement Marking Engineer

FHWA

6

SDD 15C08-23a

GENERAL NOTES

1. REFLECTIVE SHEETING SHALL FOLLOW THE REQUIREMENTS IN THE APPROVED PRODUCTS LISTING FOR SIGN SHEETING.
2. LOCATION OF WARNING LIGHTS WHEN SHOWN ON THE PLAN.

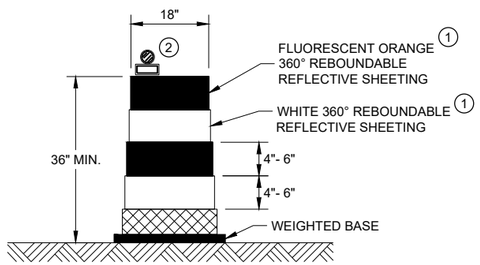

DRUM

BALLAST WIDTHS
RANGE FROM 24"-36"

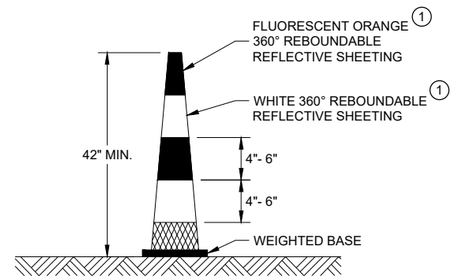

42" CONE

DO NOT USE IN TAPERS
½ SPACING OF DRUMS

BALLAST WIDTHS
RANGE FROM 14"-20"

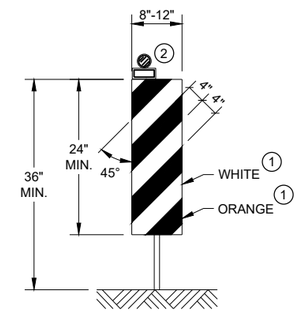

VERTICAL PANEL

THE STRIPES SHALL SLOPE DOWNWARD TO
THE TRAFFIC SIDE FOR CHANNELIZATION.

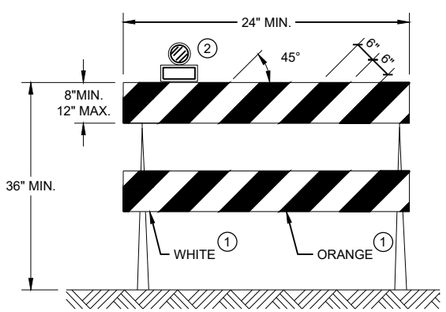

TYPE II BARRICADE

FOR RAILS LESS THAN 36" LONG, 4" WIDE STRIPES
MAY BE USED. ALL STRIPES SHALL SLOPE DOWNWARD
TO THE TRAFFIC SIDE FOR CHANNELIZATION.

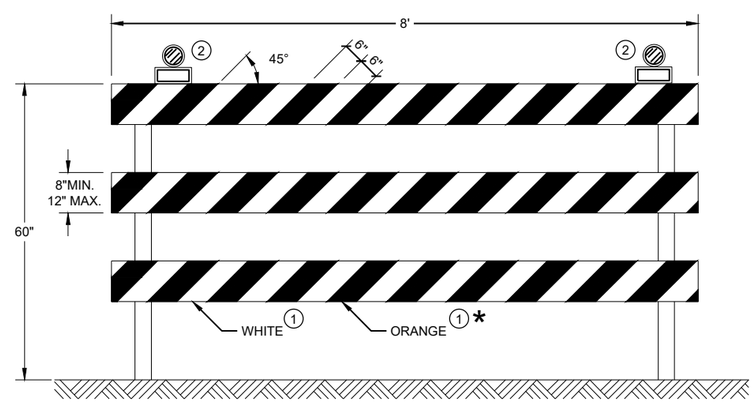

TYPE III BARRICADE

IF SIGN MOUNTED, DO NOT COVER MORE THAN 50% OF THE TOP
TWO RAILS OR 33% OF THE TOTAL AREA OF THE THREE RAILS.

* IF USED FOR A PERMANENT APPLICATION USE RED SHEETING.

CHANNELIZING DEVICES
DRUMS, CONES, BARRICADES
AND VERTICAL PANELS

STATE OF WISCONSIN
DEPARTMENT OF TRANSPORTATION

APPROVED
November 2022 /S/ Andrew Heidtke
DATE WORK ZONE ENGINEE
FHWA

6

6

SDD 15C11 - 10b

SDD 15C11 - 10b

GENERAL NOTES

(1) PLACE TWO TO FIVE AERIAL OR VASCAR BARS AT 660 FOOT SPACING.

A CAR CAN BE PROVIDED BY THE WISCONSIN STATE PATROL FOR TRAFFIC CONTROL.

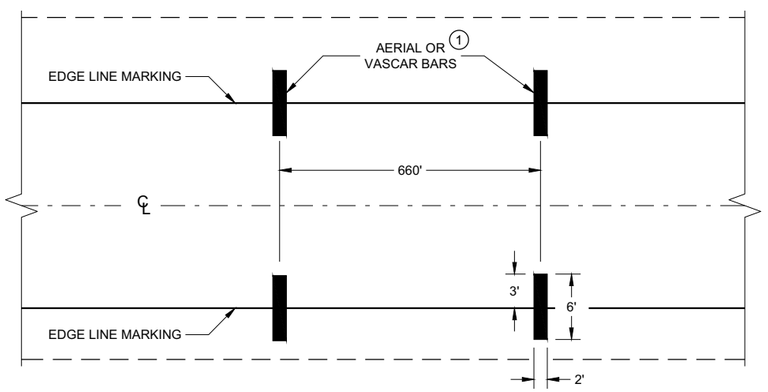

TYPICAL FOR TWO WAY OR ONE WAY TRAFFIC

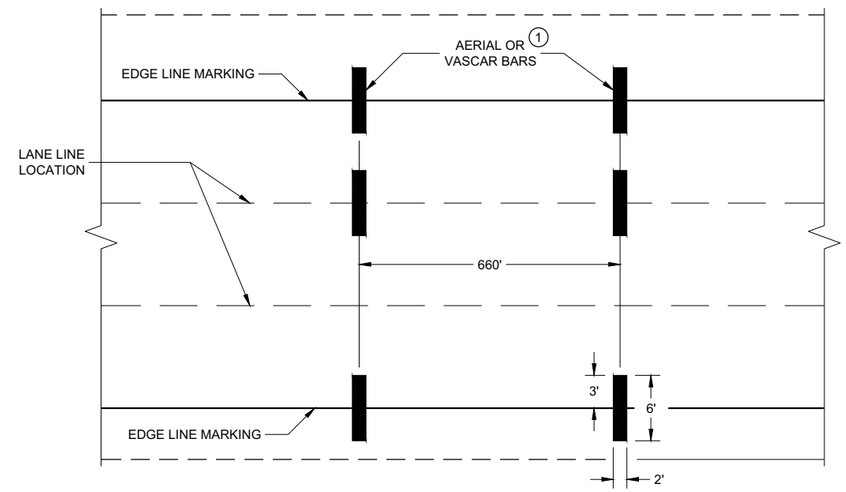

TYPICAL FOR MULTILANE TRAFFIC

SPEED ENFORCEMENT ZONE WITH AERIAL OR VASCAR BARS

6

SDD 15C14 - 04

AERIAL ENFORCEMENT BARS PAVEMENT MARKING DETAILS

STATE OF WISCONSIN
DEPARTMENT OF TRANSPORTATION

APPROVED
February 2021 — DATE
/S/ Matthew R. Rauch — STATE SIGNING AND MAR ENGINEER
FHWA

6

SDD 15C14 - 04

GENERAL NOTES

PLACE GROOVE 3 INCHES LEFT OF JOINT.

LEGEND

SIGN ON PERMANENT SUPPORT

DIRECTION OF TRAVEL

* CONFIRM MARKING LINE WIDTH WITH THE MISCELLANEOUS QUANTITIES

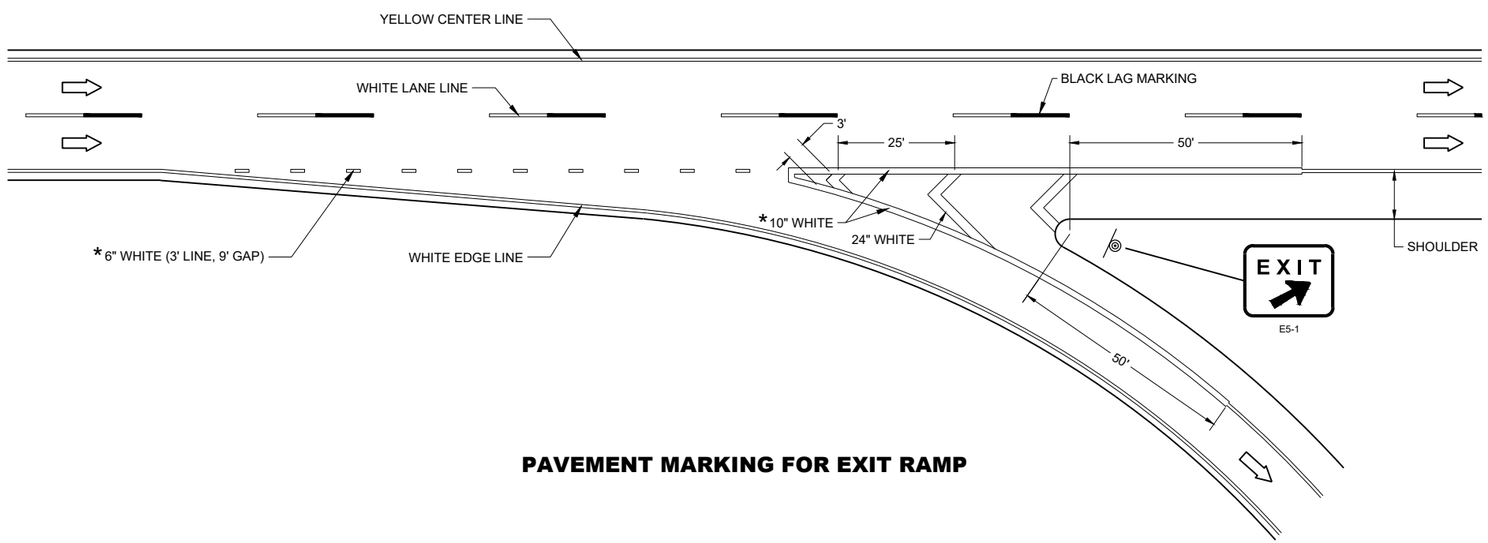

PAVEMENT MARKING FOR EXIT RAMP

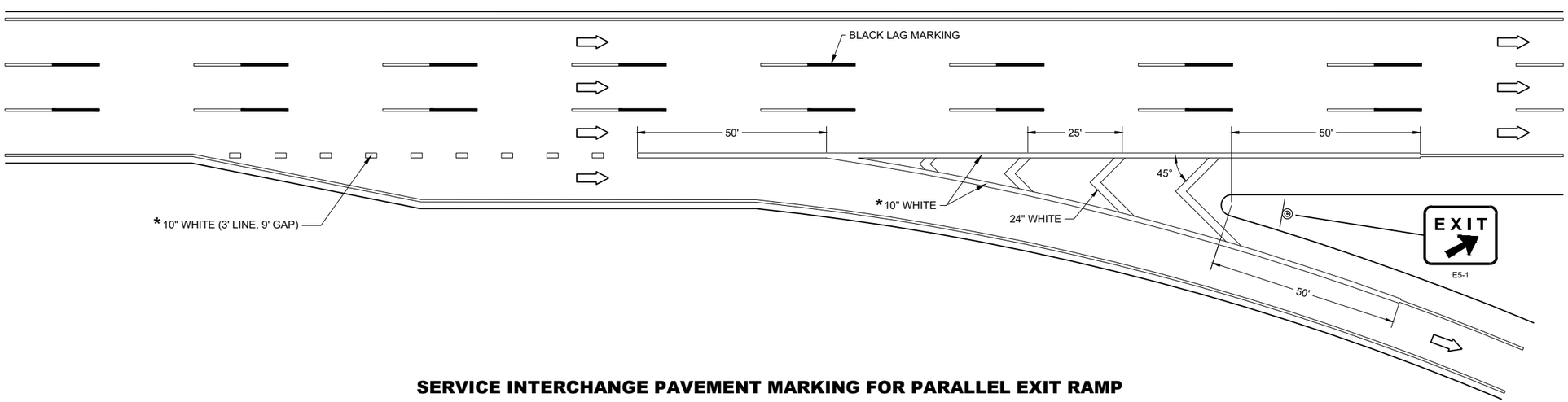

SERVICE INTERCHANGE PAVEMENT MARKING FOR PARALLEL EXIT RAMP

PAVEMENT MARKING, EXIT RAMP AND PARALLEL EXIT RAMP

STATE OF WISCONSIN
DEPARTMENT OF TRANSPORTATION

6

SDD 15C31-06a

6

SDD 15C31-06a

GENERAL NOTES

PLACE GROOVE 3 INCHES LEFT OF JOINT.

(1) ½ LENGTH OF FULL WIDTH ACCELERATION LANE.

LEGEND

DIRECTION OF TRAVEL

* CONFIRM MARKING LINE WIDTH WITH THE MISCELLANEOUS QUANTITIES

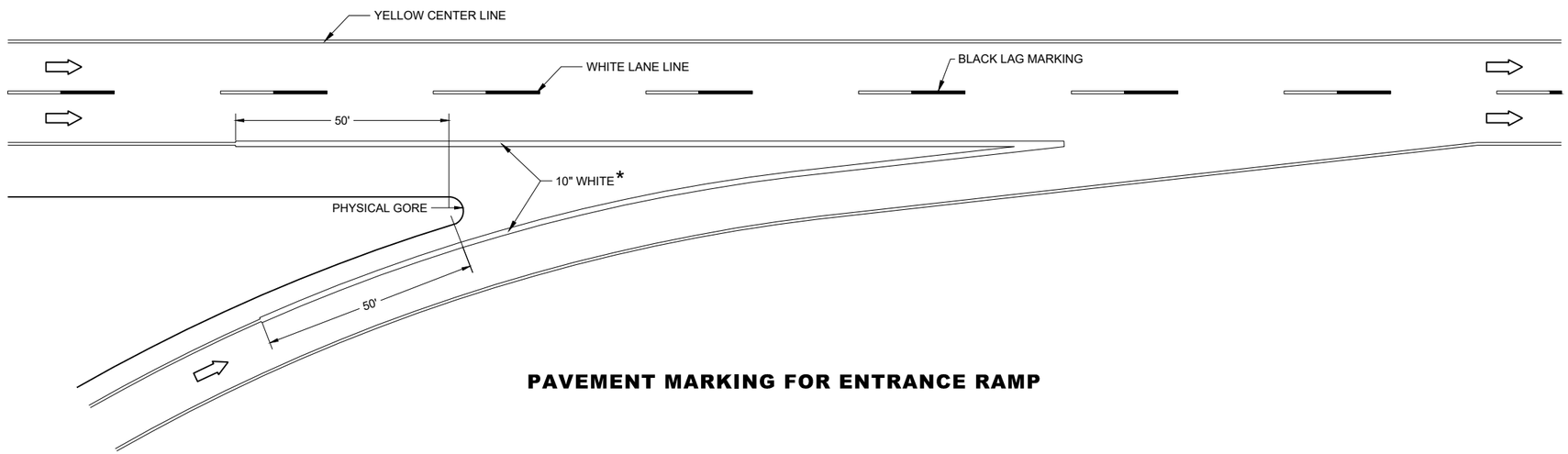

PAVEMENT MARKING FOR ENTRANCE RAMP

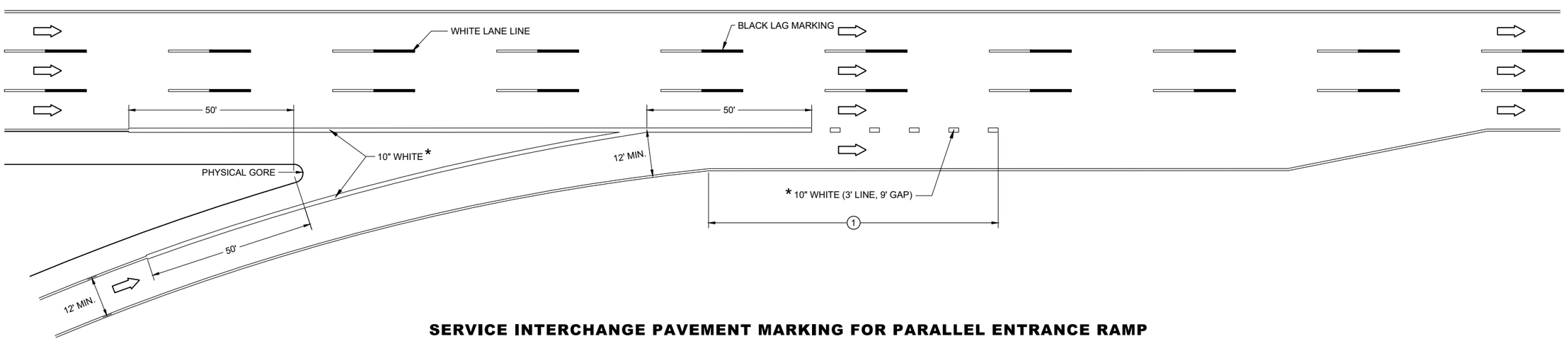

SERVICE INTERCHANGE PAVEMENT MARKING FOR PARALLEL ENTRANCE RAMP

6

6

SDD 15C31-06c

SDD 15C31-06c

PAVEMENT MARKING, ENTRANCE RAMP AND PARALLEL ENTRANCE RAMP

STATE OF WISCONSIN
DEPARTMENT OF TRANSPORTATION

LEGEND

- SIGN ON PERMANENT SUPPORT
- TRAFFIC CONTROL DRUM
- TRAFFIC CONTROL DRUM WITH TYPE "C" STEADY BURN LIGHT
- TYPE III BARRICADE WITH ATTACHED SIGN
- TYPE "A" WARNING LIGHT (FLASHING)
- REMOVING PAVEMENT MARKINGS
- DIRECTION OF TRAFFIC
- WORK AREA
- FLASHING ARROW BOARD
- S — PORTABLE TRAFFIC SENSOR (PTS)
- FBS — FLASHING BEACON SIGN

GENERAL NOTES

THE EXACT NUMBER, LOCATION, AND SPACING OF ALL SIGNS, INCLUDING FBS AND DEVICES SHALL BE ADJUSTED TO FIT FIELD CONDITIONS AS APPROVED BY THE ENGINEER.

THE SPACING BETWEEN SIGNS SHOULD BE ADJUSTED TO NOT CONFLICT WITH AND TO PROVIDE A MINIMUM OF 200 FEET (500 FEET DESIRABLE) CLEARANCE TO EXISTING SIGNS.

THIS LANE CLOSURE IS TYPICAL FOR CLOSING RIGHT LANE - REVERSE FOR CLOSING LEFT LANE.

ALL SIGNS ARE 48" x 48" UNLESS OTHERWISE NOTED.

"WO" SIGNS ARE THE SAME AS "W" SIGNS EXCEPT THE BACKGROUND IS ORANGE.

ANY SIGNS TEMPORARY OR EXISTING, WHICH CONFLICT WITH TRAFFIC CONTROL "IN USE" SHALL BE REMOVED OR COVERED AS NEEDED OR AS APPROVED BY THE ENGINEER. NO WARNING LIGHTS SHALL BE WORKING ON "COVERED" OR "DOWNED SIGNS.

FOR A LANE CLOSURE THAT IS IN PLACE LESS THAN 7 CONTINUOUS DAYS AND NIGHTS, THE ADVANCED WARNING SIGNS MAY BE MOUNTED ON PORTABLE SUPPORTS.

REMOVE PAVEMENT MARKINGS AND PLACE TEMPORARY PAVEMENT MARKING LINE IF LANE CLOSURE IS TO BE IN PLACE 4 OR MORE CONTINUOUS DAYS AND NIGHTS. WARNING LIGHTS ARE NOT REQUIRED IF THE LANE CLOSURE IS A DAYTIME ONLY OPERATION.

IF THE HORIZONTAL ALIGNMENT IS SUCH THAT A CURVE MAY REQUIRE ADDITIONAL DELINEATION, THE DEVICE SPACING MAY BE DECREASED TO 50 FEET.

ADJUSTMENTS IN BUFFER SPACE NEED TO BE INCORPORATED WHEN THE LANE CLOSURE OCCURS NEAR AN INTERCHANGE EXIT OR ENTRANCE RAMP OR INTERSECTION. THE LANE CLOSURE MUST TAKE PLACE FAR ENOUGH IN ADVANCE OF AN EXIT OR ENTRANCE RAMP TO STILL ALLOW FOR ADEQUATE BUFFER SPACE. THE MINIMUM LENGTH OF THE BUFFER SPACE BEFORE AN EXIT RAMP SHOULD BE ONE HALF THE LENGTH OF THE TRANSITION AREA. THE ENTRANCE RAMP SHOULD BE FOLLOWED BY THE ORIGINAL BUFFER SPACE LENGTH OF 800 FEET DESIRABLE PRIOR TO ANOTHER TRAFFIC CONTROL CHANGE SUCH AS A CROSSOVER MANEUVER.

CONSIDER ROADWAY GEOMETRICS WHEN LOCATING SIGNS AND ARROW BOARD SO THE DRIVER HAS A CLEAR VIEW OF THE ARROW BOARD AND LANE CLOSURE DRUMS.

PORTABLE TRAFFIC SENSOR (PTS) MAY BE MOUNTED ON THE FBS, ARROW BOARD OR OTHER TRAILER DEVICES.

1. 5 DRUMS SPACED AT 10 FOOT INTERVALS AS NEEDED.
2. IF THERE ARE MORE THAN TWO LANES OR IF SPECIFIED IN THE PLANS, PLACE FBS ON BOTH SIDES OF THE ROADWAY.
3. IF THERE IS AN APPROVED TEMPORARY SPEED DECLARATION, ADD WO-3-5 SIGNS 400 FEET AFTER THE W20-5G SIGNS AND ADD R2-1 SIGNS (48"x60") 700 FEET AFTER THE WO3-5 SIGNS. A SPEED LIMIT SIGN SHALL BE LOCATED 1500 FEET BEYOND THE END OF THE ACCELERATION LANE OF EACH ENTRANCE RAMP. PLACE A SPEED LIMIT SIGN A MINIMUM OF EVERY 3 MILES. INCLUDE A "RESUME SPEED LIMIT" SIGN 200 FEET MINIMUM (800 FEET DESIRABLE) BEYOND THE G30-3A "END ROAD WORK" SIGN.

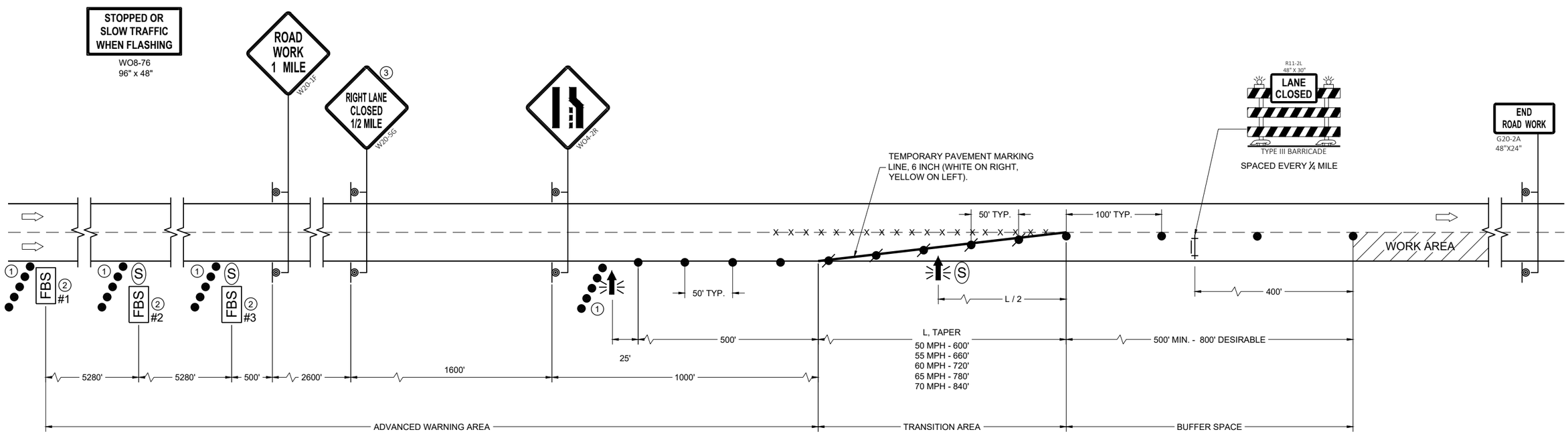

6

SDD 15D12-12d

TRAFFIC CONTROL, LANE CLOSURE, BASIC TRAFFIC QUEUE WARNING SYSTEM

STATE OF WISCONSIN
DEPARTMENT OF TRANSPORTATION

APPROVED
September 2023 — DATE
/S/ Erin Schwark — ROADWAY STANDARDS DEVELOPMENT UNIT SUPERVISOR

FHWA

LEGEND

- SIGN ON PERMANENT SUPPORT
- SIGN ON TEMPORARY SUPPORT
- TRAFFIC CONTROL DRUM
- TRAFFIC CONTROL DRUM WITH TYPE "C" STEADY BURN LIGHT
- REMOVING PAVEMENT MARKING (SEE GENERAL NOTES)
- TYPE III BARRICADE WITH ATTACHED SIGN
- DIRECTION OF TRAFFIC

GENERAL NOTES

THE INSTALLATIONS SHOWN ON THIS SHEET ARE TYPICAL EXAMPLES AND ARE NOT INTENDED TO REPRESENT ANY PARTICULAR RAMP. AT SPECIFIC FIELD LOCATIONS, SIMILAR INSTALLATIONS SHALL BE USED AND ADJUSTED TO THE GEOMETRICS OF THE RAMP AS COORDINATED WITH THE ENGINEER.

THE EXACT NUMBER, LOCATION, AND SPACING OF ALL SIGNS AND DEVICES SHALL BE ADJUSTED TO FIT FIELD CONDITIONS AS APPROVED BY THE ENGINEER.

THE SPACING BETWEEN TRAFFIC CONTROL SIGNS SHOULD BE ADJUSTED TO NOT CONFLICT WITH AND SHOULD PROVIDE A MINIMUM OF 200 FEET (500 FEET DESIRABLE) CLEARANCE TO EXISTING SIGNS THAT WILL REMAIN IN PLACE.

ALL SIGNS ARE 48" X 48" UNLESS OTHERWISE NOTED.

"WO" IS THE SAME AS "W" EXCEPT THE BACKGROUND IS ORANGE.

SEE SEPARATE LANE CLOSURE DETAIL FOR TYPICAL SPACING OF TYPE III BARRICADES AND R11-2L "LANE CLOSED" SIGNS.

SIGNS THAT WILL BE IN PLACE LESS THAN 7 CONSECUTIVE DAYS AND NIGHTS OR THAT WILL BE PLACED IN A CLOSED LANE, MAY BE MOUNTED ON PORTABLE SUPPORTS.

IF INDICATED IN MISCELLANEOUS QUANTITIES, SUBSTITUTE FLEXIBLE TUBULAR MARKERS /OR DRUMS IN THE GORE BETWEEN THE EXIT RAMP AND MAINLINE TRAFFIC.

ANY SIGNS TEMPORARY OR EXISTING, WHICH CONFLICT WITH TRAFFIC CONTROL "IN USE" SHALL BE REMOVED OR COVERED AS NEEDED AND AS APPROVED BY THE ENGINEER.

REMOVE PAVEMENT MARKINGS AND PLACE TEMPORARY PAVEMENT MARKING LINES IF LANE CLOSURE IS TO BE IN PLACE FOR 4 OR MORE CONTINUOUS DAYS AND NIGHTS.

WARNING LIGHTS ARE NOT REQUIRED IF THE LANE CLOSURE IS A DAYTIME ONLY OPERATION.

(1) EXTEND THE LENGTH OF THE MERGE AREA IF THE ENTERING (DESIGN) SPEED OF THE RAMP IS LESS THAN 50 MPH OR IF THE MAINLINE GRADE EXCEEDS ±2.2%.

(2) END TEMPORARY PAVEMENT MARKING LINE AT ½ THE LENGTH OF FULL WIDTH OF THE ACCELERATION LANE.

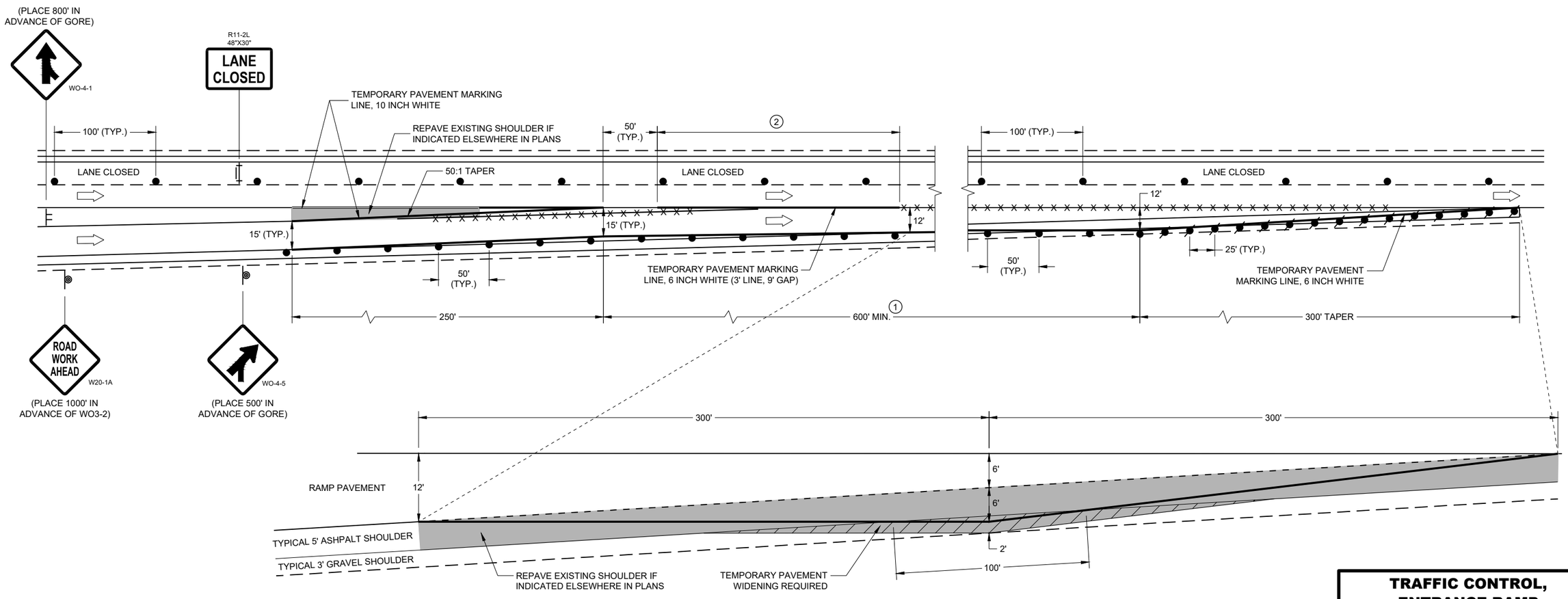

TEMPORARY PAVEMENT DETAIL

(EXISTING RAMP DIMENSIONS MAY VARY, ADJUST TEMPORARY PAVEMENT ACCORDINGLY)

TRAFFIC CONTROL, ENTRANCE RAMP WITHIN LANE CLOSURE

STATE OF WISCONSIN
DEPARTMENT OF TRANSPORTATION

APPROVED
May 2023 — DATE
/S/ Andrew Heidtke — WORK ZONE ENGINEE
FHWA

6

SDD 15D15-07b

LEGEND

- TYPE III BARRICADE
- TYPE III BARRICADE WITH ATTACHED SIGN
- TRAFFIC CONTROL DRUM
- SIGN ON PERMANENT SUPPORT
- TYPE "A" WARNING LIGHT (FLASHING)
- DIRECTION OF TRAFFIC

GENERAL NOTES

THIS RAMP CLOSURE DETAIL IS TYPICAL FOR CLOSING A RIGHT SIDE EXIT RAMP. FOR A LEFT SIDE EXIT RAMP, REVERSE THE TRAFFIC CONTROL.

THE EXACT NUMBER, LOCATION, AND SPACING OF ALL SIGNS AND DEVICES SHALL BE ADJUSTED TO FIT FIELD CONDITIONS AS APPROVED BY THE ENGINEER.

THE SPACING BETWEEN TRAFFIC CONTROL SIGNS SHOULD BE ADJUSTED TO NOT CONFLICT WITH AND SHOULD PROVIDE A MINIMUM OF 200 FEET (500 FEET DESIRABLE) CLEARANCE TO EXISTING SIGNS THAT WILL REMAIN IN PLACE.

ALL SIGNS ARE 48" X 48" UNLESS OTHERWISE NOTED.

SIGNS THAT WILL BE IN PLACE LESS THAN 7 CONTINUOUS DAYS AND NIGHTS MAY BE MOUNTED ON PORTABLE SUPPORTS.

ANY SIGNS, TEMPORARY OR EXISTING, WHICH CONFLICT WITH TRAFFIC CONTROL "IN USE" SHALL BE REMOVED OR COVERED AS NEEDED AND AS APPROVED BY THE ENGINEER.

PLACE TEMPORARY PAVEMENT MARKING LINE IF RAMP CLOSURE IS TO BE IN PLACE 4 OR MORE CONTINUOUS DAYS AND NIGHTS.

WORK AREAS WITH A DROP OFF ALONG THE EDGE OF AN OPEN TRAVEL LANE SHALL BE LEVELED WITH TEMPORARY FILL WHEN THE CONTRACTOR IS NOT WORKING ADJACENT TO THE TRAVEL LANE. DRUMS SHALL BE PLACED ENTIRELY OUTSIDE THE TRAVEL LANE, ALLOWING THE FULL UNOBSTRUCTED LANE WIDTH, WHEN WORK IS NOT IN PROGRESS.

WHERE MEDIAN BARRIER IS IN PLACE, SIGNS SHOWN ON LEFT SIDE OF ROADWAY MAY BE OMITTED FOR RIGHT SIDE RAMP CLOSURES OF LESS THAN 12 - HOUR DURATION.

1. W20 - 1A AND G20 - 2A SIGNS ARE NOT REQUIRED IF THE RAMP CLOSURE IS WITHIN A LARGER WORK ZONE WHERE THESE SIGNS ARE ALREADY PRESENT.
2. PLACE "RAMP CLOSED BEGINNING" SIGN OR PCMS 7 CALENDAR DAYS PRIOR TO CLOSURE OR AS DIRECTED BY THE ENGINEER. SEE WISCONSIN STANDARD SIGN PLATES FOR SIGN LAYOUT.

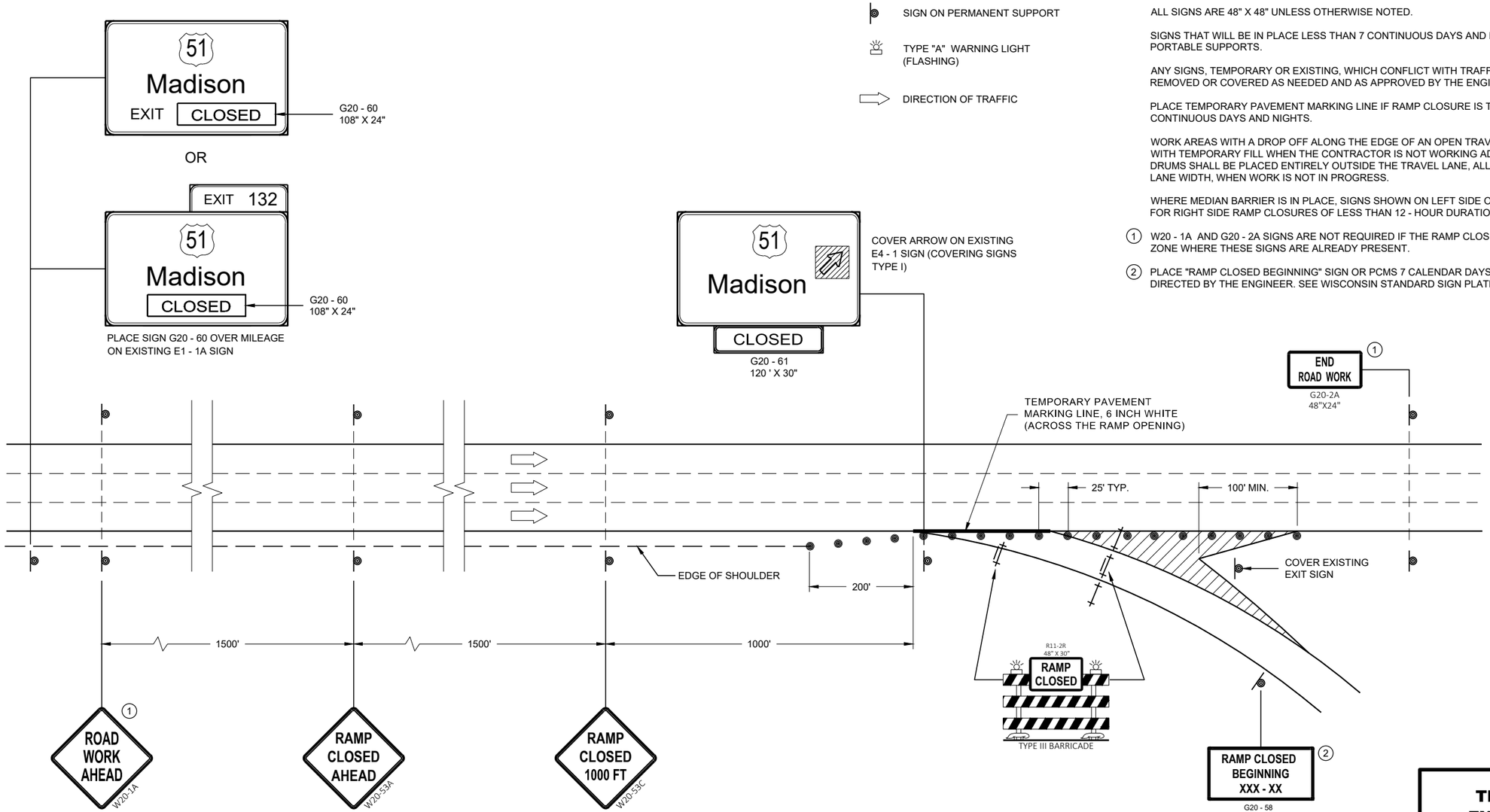

OR

PCMS MESSAGING

FRAME 1	FRAME 2
RAMP TO CLOSE	XXXDAY XX XX XX

TRAFFIC CONTROL, EXIT RAMP CLOSURE

STATE OF WISCONSIN
DEPARTMENT OF TRANSPORTATION

APPROVED
May 2023 — DATE
/S/ Andrew Heidtke — ROADWAY STANDARDS DEVE ENGINEER

FHWA

6
SDD 15D16-06

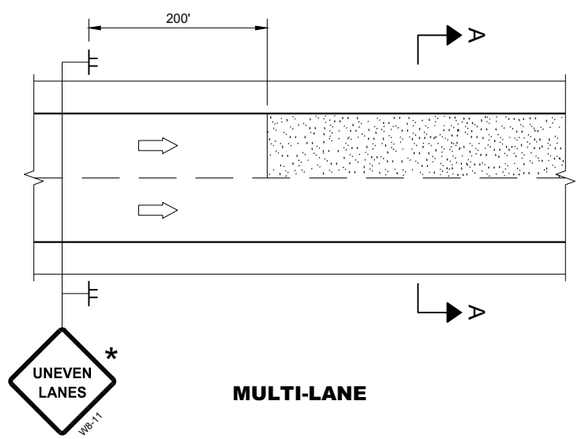

MULTI-LANE

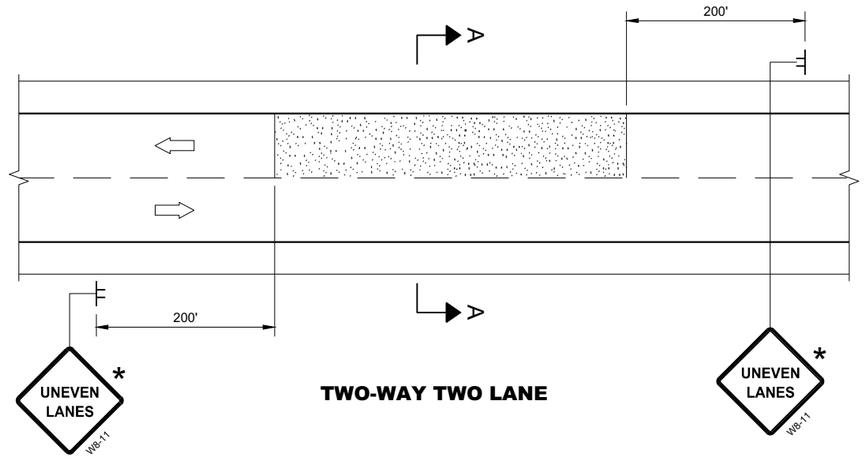

TWO-WAY TWO LANE

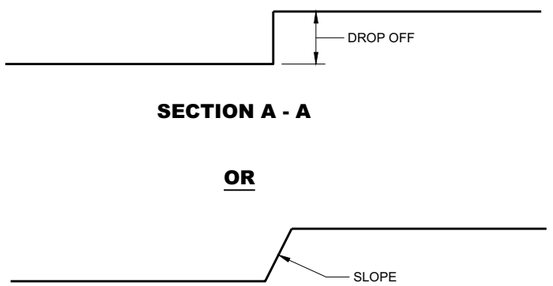

SECTION A - A

OR

SECTION A - A

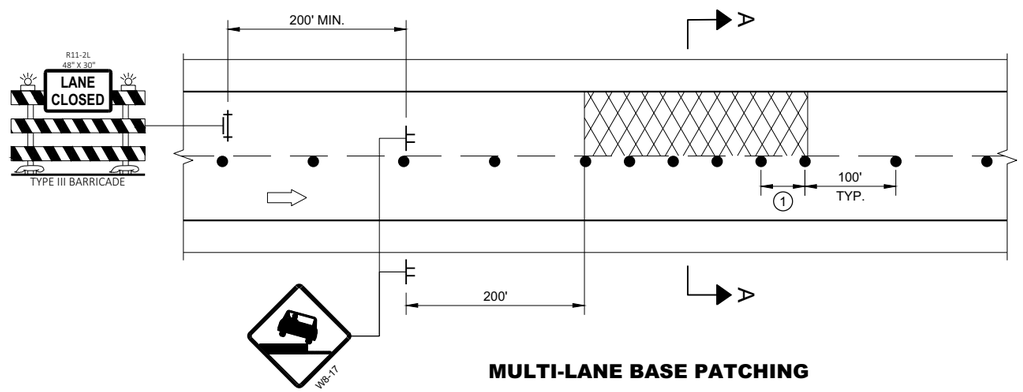

MULTI-LANE BASE PATCHING

ADJACENT LANE DROP-OFFS

GENERAL NOTES

FOR SPOT LOCATIONS USE ENGINEERING JUDGEMENT WHEN PLACING ADDITIONAL SIGNS.

ALL SIGNS ARE 48" X 48" UNLESS OTHERWISE NOTED.

"WO" SIGNS ARE THE SAME AS "W" SIGNS EXCEPT THE BACKGROUND IS ORANGE.

WARNING LIGHTS ARE NOT REQUIRED IF THE LANE CLOSURE IS A DAYTIME ONLY OPERATION.

* IF THE DROP-OFF IS CONTINUOUS ALONG THE PROJECT, PLACE ADDITIONAL SIGNS EVERY 1 MILE AND AFTER EVERY ENTRANCE RAMP.

(1) USE CLOSER SPACING WHEN DELINEATING DROP-OFF.

LEGEND

- SIGN ON TEMPORARY SUPPORT
- TRAFFIC CONTROL DRUM
- TYPE III BARRICADE WITH ATTACHED SIGN
- TYPE "A" WARNING LIGHT (FLASHING)
- DIRECTION OF TRAFFIC
- WORK AREA WITH DROP-OFF
- MILLED SURFACE

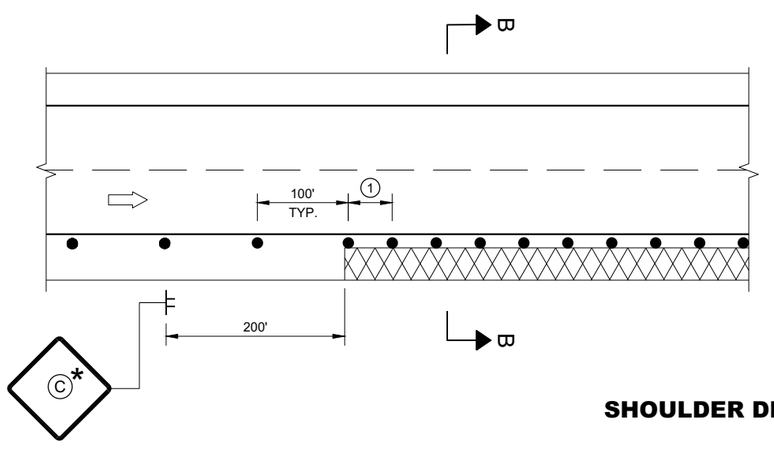

SHOULDER DROP-OFFS

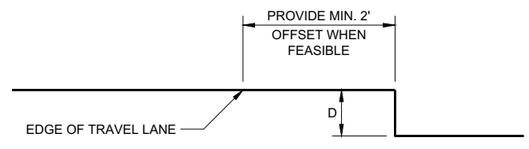

SECTION B - B

D	SIGN (C)
< 2" WITH A SLOPE STEEPER THAN 3:1	LOW SHOULDER WO8-9
2" < 6" WITH A SLOPE STEEPER THAN 3:1	SHOULDER DROP - OFF W8-9A PROVIDE A 3:1 OR FLATTER SLOPE OF MATERIAL ADJACENT TO THE PAVEMENT

TRAFFIC CONTROL, DROP-OFF SIGNING

STATE OF WISCONSIN
DEPARTMENT OF TRANSPORTATION

APPROVED
March 2018 — DATE
/S/ Andrew Heidtke — WORK ZONE ENGINEE
FHWA

6

SDD 15D39 - 02

GENERAL NOTES

DRAWING NOT TO SCALE. ALL SIGNS AND POSTS ON THIS SHEET SHALL BE PAID FOR WITH 'TRAFFIC CONTROL SIGNS' BID ITEM. ALL SIDE ROADS WHICH ARE UNDER CONSTRUCTION OF CURB AND GUTTER AND/OR GRADING SHALL BE ADEQUATELY SIGNED.

ALL SIGNS AND DEVICES SHALL BE IN CONFORMANCE WITH THE WISCONSIN MANUAL OF UNIFORM TRAFFIC CONTROL DEVICES (WMUTCD). SIGN LAYOUTS SHALL BE IN ACCORDANCE WITH THE WISDOT STANDARD SIGN PLATES.

"WO" SIGNS ARE THE SAME AS "W" SIGNS EXCEPT THAT THE BACKGROUND IS ORANGE.

ALL SIGNS ARE 48" X 48" UNLESS OTHERWISE NOTED.

THE EXACT NUMBER, LOCATION AND SPACING OF ALL SIGNS AND DEVICES SHALL BE ADJUSTED TO FIT FIELD CONDITIONS AS DIRECTED BY THE ENGINEER.

ALL SIGNS INAPPROPRIATE TO THE STATUS OF THE CONTROL ZONE, INCLUDING PRE-EXISTING SIGNS IN THE VICINITY, SHALL BE COVERED OR REMOVED AS DIRECTED BY THE ENGINEER.

SEE 15C34 FOR ADDITIONAL TRAFFIC CONTROL SIGNING WHEN CENTERLINE PAVEMENT MAKINGS ARE MISSING. 'DO NOT PASS' SIGNS MUST BE INSTALLED ON THE SAME DAY AS MILLING OPERATIONS.

(1) PLACE SIGNS 350' IN ADVANCE OF MILLED SURFACES AND AT 1 MILE INTERVALS, OR AS DIRECTED BY THE ENGINEER.

(2) PLACE SIGN 200' MIN. FROM INTERSECTION AND 200' MIN. AFTER ADVANCE WARNING SIGN SHOWN IN SDD 15C04.

LEGEND

SIGN ON TEMPORARY SUPPORT

DIRECTION OF TRAFFIC

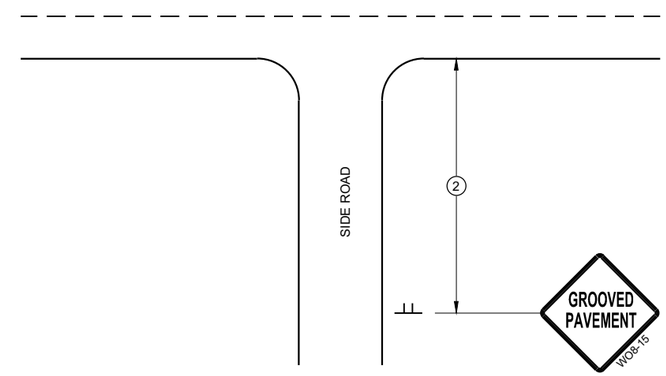

TYPICAL SIDE ROAD APPROACH SIGN DETAIL

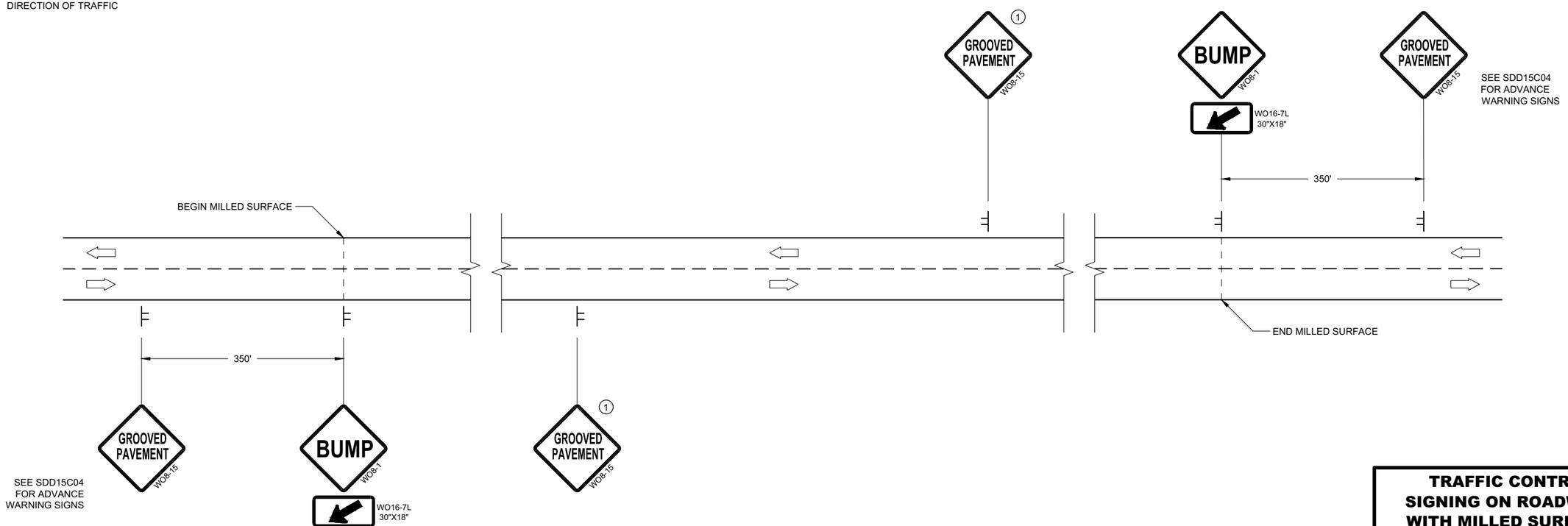

DETAIL FOR SIGNING ON MILLED SURFACES

TRAFFIC CONTROL, SIGNING ON ROADWAYS WITH MILLED SURFACES

STATE OF WISCONSIN
DEPARTMENT OF TRANSPORTATION

APPROVED
February 2020 /S/ Andrew Heidtke
DATE WORK ZONE ENGINEE
FHWA

6

SDD 15D44 - 02

6

SDD 15D44 - 02

LEGEND

- TYPE III BARRICADE WITH ATTACHED SIGN
- SIGN ON PERMANENT SUPPORT
- TRAFFIC CONTROL DRUM
- TRAFFIC CONTROL DRUM WITH TYPE "C" STEADY BURN LIGHT
- TYPE "A" WARNING LIGHT (FLASHING)
- DIRECTION OF TRAFFIC
- WORK AREA

POSTED SPEED LIMIT PRIOR TO WORK STARTING (MPH)	ADVANCE WARNING SIGN SPACING (A) FEET	SHIFTING TAPER L/2 W, LATERAL OFFSET (FT)					
		3	4	5	6	7	8
25	200	10	14	17	21	24	28
30	200	15	20	25	30	35	40
35	350	20	27	34	40	47	54
40	350	26	35	44	53	62	70
45	500	45	59	74	89	104	119
50	500	50	66	83	99	116	132
55	500	54	73	91	109	127	145

GENERAL NOTES

THE EXACT NUMBER, LOCATION, AND SPACING OF ALL SIGNS AND DEVICES SHALL BE ADJUSTED TO FIT FIELD CONDITIONS AS APPROVED BY THE ENGINEER.

ALL SIGNS ARE 48"x48" UNLESS OTHERWISE NOTED. IF NECESSARY DUE TO SPACE CONSTRAINTS IN URBAN AREAS, 36"x36" SIGNS MAY BE USED IF APPROVED BY THE REGIONAL TRAFFIC UNIT.

"WO" IS THE SAME AS "W" EXCEPT THE BACKGROUND IS ORANGE.

ANY SIGNS TEMPORARY OR EXISTING, WHICH CONFLICT WITH TRAFFIC CONTROL "IN USE" SHALL BE REMOVED OR COVERED AS NEEDED AND AS APPROVED BY THE ENGINEER.

CHANNELIZING DEVICES PLACED ADJACENT TO WORK AREA SHALL BE PULLED BACK FROM THE TRAVEL LANE WHEN WORK IS NOT IN PROGRESS.

SIGNS THAT WILL BE IN PLACE LESS THAN 7 CONTINUOUS DAYS AND NIGHTS MAY BE MOUNTED ON PORTABLE SUPPORTS.

W20-1 AND G20-2A SIGNS ARE NOT REQUIRED IF THE WORK AREA IS WITHIN A LARGER WORK ZONE WHERE THESE SIGNS ARE ALREADY PRESENT. G20-2A SIGNS MAY ALSO BE OMITTED IF DURATION WORK IS LESS THAN SEVEN CONTINUOUS DAYS AND NIGHTS.

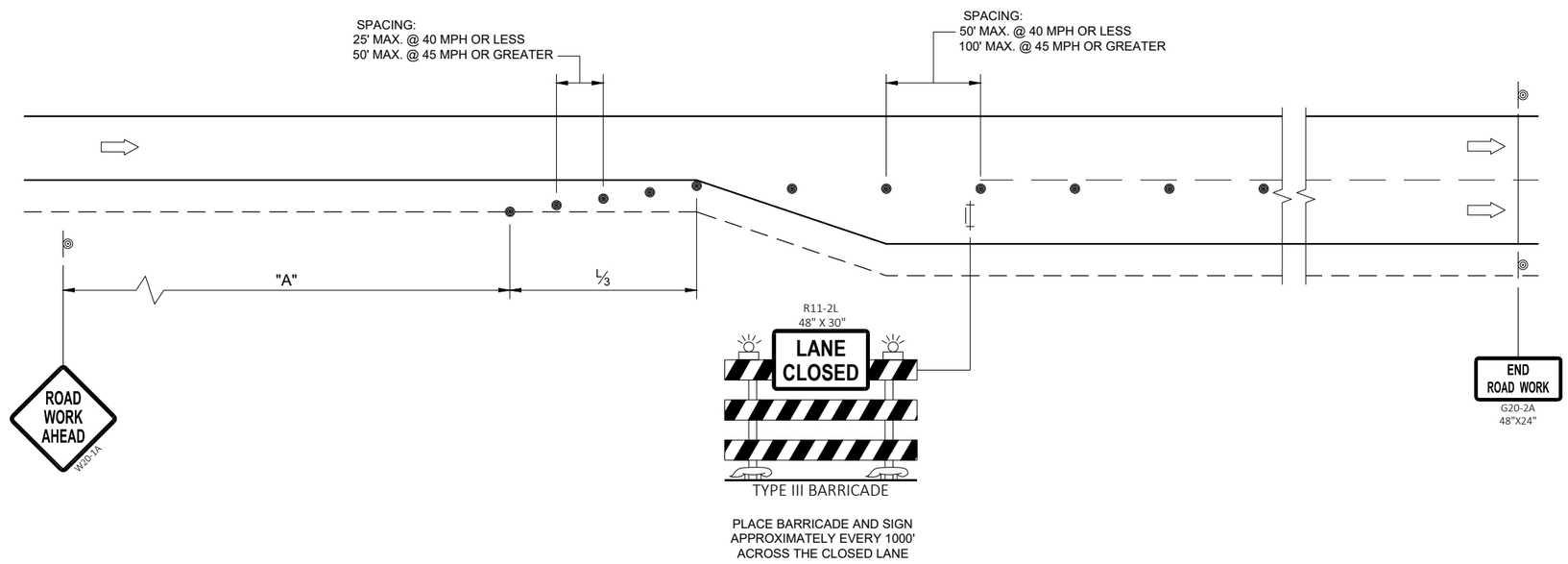

6

6

SDD 15D50-03a

SDD 15D50-03a

TRAFFIC CONTROL
ADDED LANE CLOSURE
WITHOUT LANE SHIFT

STATE OF WISCONSIN
DEPARTMENT OF TRANSPORTATION

APPROVED
May 2023 — DATE
/S/ Andrew Heidtke — WORK ZONE ENGINEE
FHWA

URBAN AREA

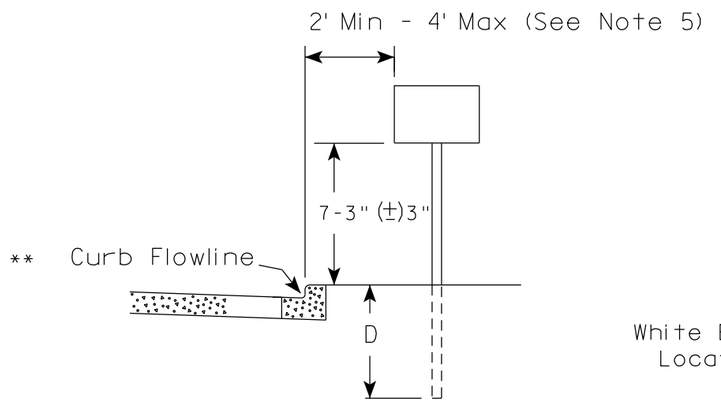

RURAL AREA (See Note 2)

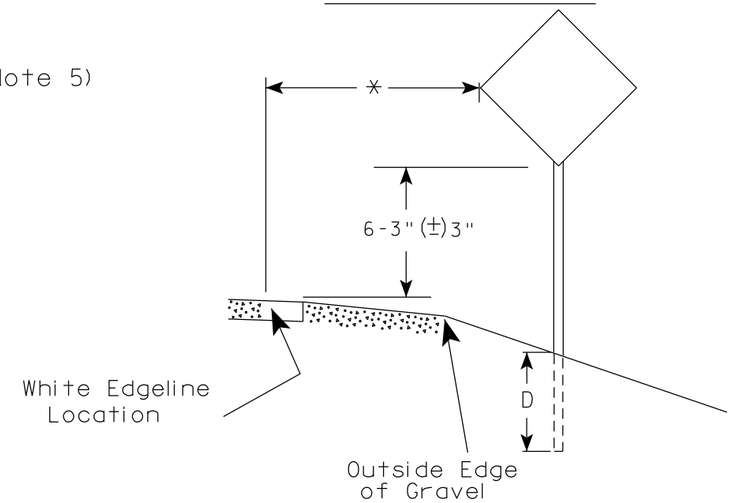

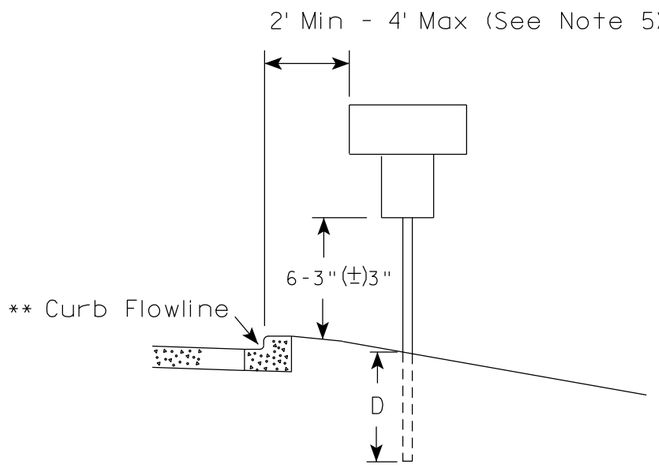

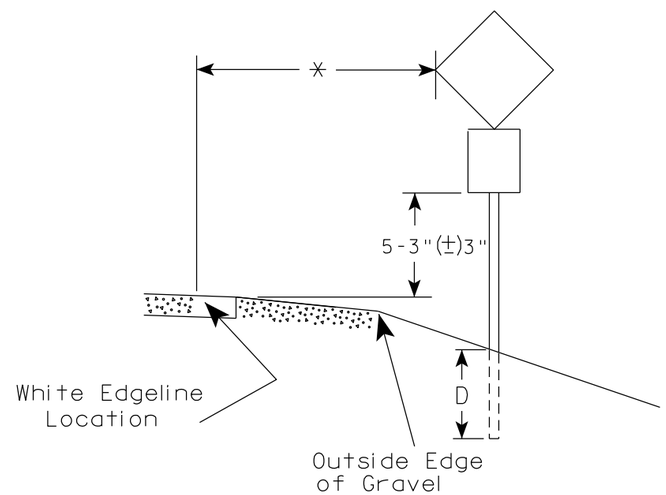

** The existence of curb and gutter does not in itself mandate the vertical clearance illustrated. That height is typically measured where there is sidewalk adjacent to the roadway or parking is permitted. In the absence of sidewalk vertical clearance is measured from the top of the curb. Offset of signs is measured from the flow line.

* 6 feet from edge of a paved shoulder or 12 feet from the edge of pavement (edge line location) or 2 feet from outside edge of gravel, whichever is greater unless directed by project engineer.

GENERAL NOTES

1. Signs wider than 4 feet or 20 sq.ft or larger, shall be mounted on multiple posts. Refer to plate A4-4.
2. If signs are mounted on or behind barrier wall, see A4-10 sign plate.
   The Double Arrow sign (W12-1D) shall be mounted at a height of 2'-3" (±) 3". The Chevron sign (W1-8), Roundabout Chevron panel (R6-4B), Enhanced Reference Markers, Clearance Markers (W5-52), Mile Markers (D10 series), In Road Object Markers (W5-54) & End of Road Markers (W5-56) shall be mounted at a height of 4'-3" (±) 3".
3. For expressways and freeways, mounting height is 7'- 3" (±) 3" or 6'-3" (±) 3" depending upon existence of a sub-sign.
4. Minimum mounting height for signs mounted on traffic signal poles is 5'- 3" (±) 3".
5. Offset distance shall be consistent with existing signs or consistent throughout length of project.
6. Folding signs shall be mounted at a height of 5'-3" (±) 3" or as directd by the Engineer.

POST EMBEDMENT DEPTH

Area of Sign Installation (Sq. Ft.)	D (Min)
20 or Less	4'
Greater than 20	5'

TYPICAL INSTALLATION OF PERMANENT TYPE II SIGNS ON SINGLE POSTS

WISCONSIN DEPT OF TRANSPORTATION

APPROVED Matthew R Rauch
for State Traffic Engineer

DATE 12/6/23 PLATE NO. A4-3.23

7 7

PROJECT NO:	HWY:	COUNTY:		SHEET NO: 142	E

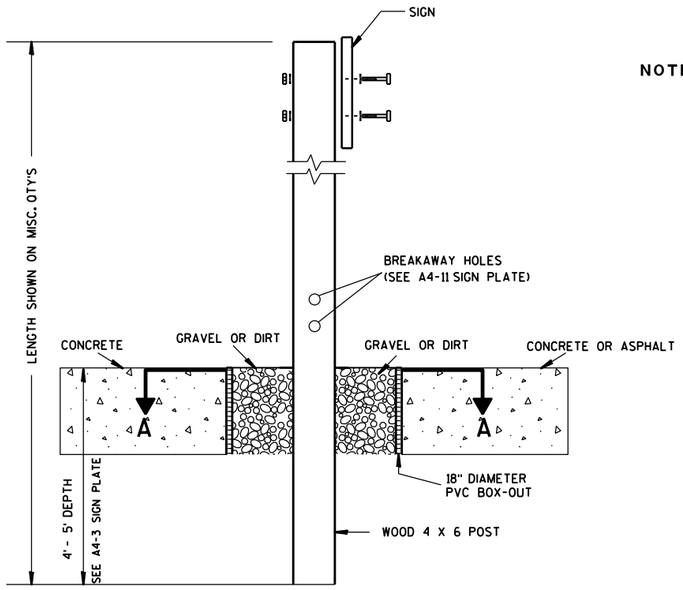

ELEVATION VIEW

DETAIL OF WOOD 4 X 6 SIGN POST IN BOX-OUT

NOTES:
1. ALL MATERIAL TO BE APPROVED BY ENGINEER PRIOR TO INSTALLATION
2. SEE SIGN PLATE A4-8 FOR SIGN HARDWARE REQUIREMENTS
3. 18 INCH X 18 INCH SQUARE BOX-OUTS MAY BE USED FOR INSTALLATIONS IN EXISTING CONCRETE OR ASPHALT LOCATIONS.

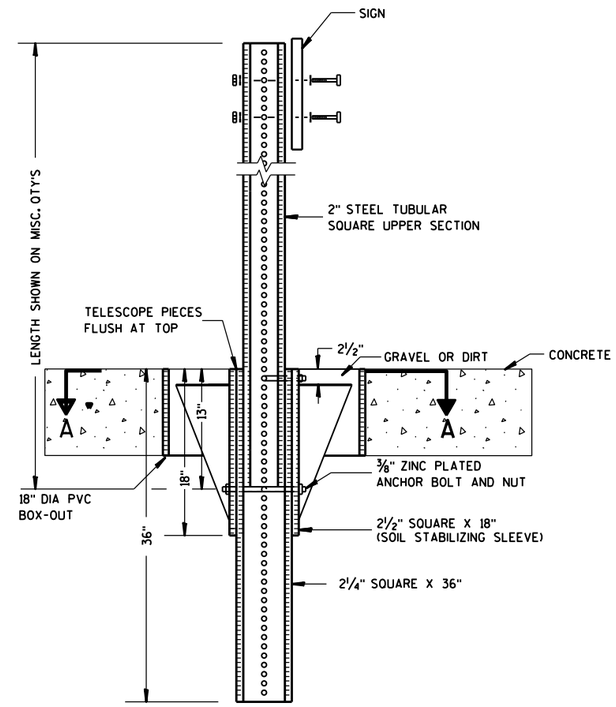

ELEVATION VIEW

DETAIL OF STEEL 2 X 2 SIGN POST IN BOX-OUT

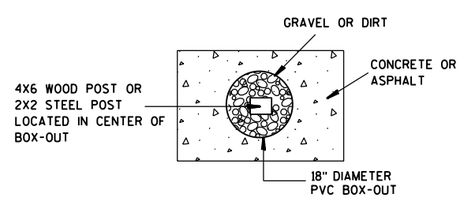

PLAN VIEW

FOR NEW CONCRETE/ASPHALT INSTALLATIONS

SIGN POST
BOX-OUTS
A4-3B

WISCONSIN DEPT OF TRANSPORTATION

APPROVED Matthew R Rauch
for State Traffic Engineer

DATE 1/27/14 PLATE NO. A4-3B.1

PROJECT NO:	HWY:	COUNTY:		SHEET NO:	E

URBAN AREA

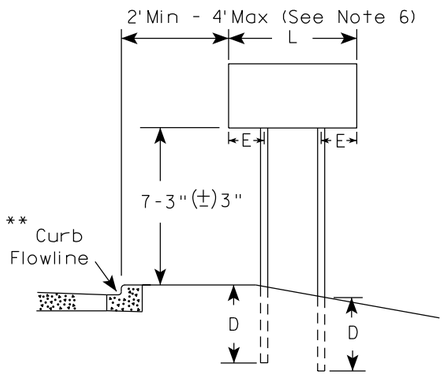

RURAL AREA (See Note 3)

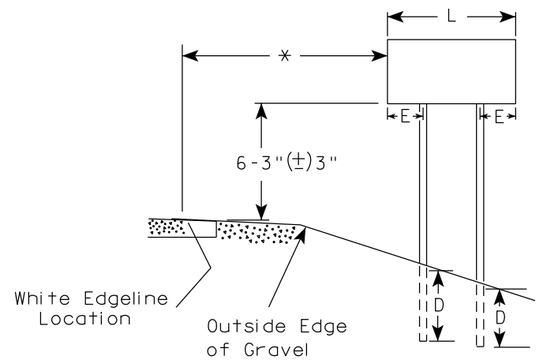

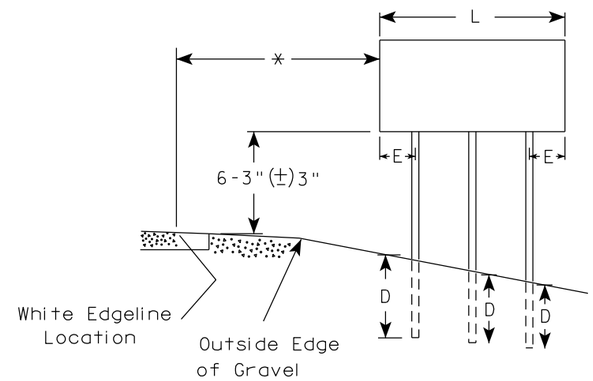

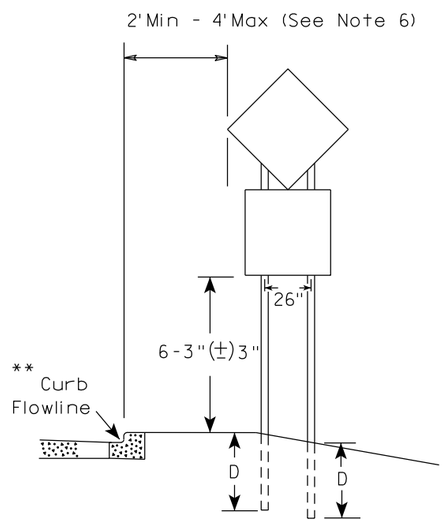

48" DIAMOND WARNING SIGN

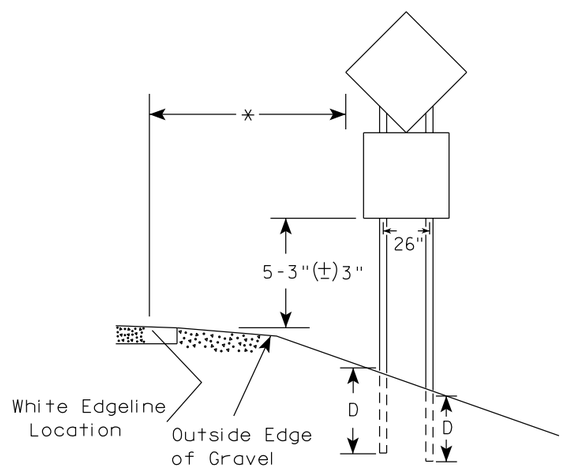

48" DIAMOND WARNING SIGN

GENERAL NOTES

1. For 3 or 4 post installations, individual post spacing shall be greater than 3'-6".
2. See tables below for required number of posts.
3. For expressways and freeways, mounting height is 7'-3" (±) 3" or 6'-3" (±) 3" depending upon existence of sub-sign.
4. The (±) tolerance for mounting height is 3 inches.
5. J-Assemblies are considered to be one sign for mounting height.
6. Offset distance shall be consistent with existing signs or consistent throughout length of project.
7. Folding signs shall be mounted at a height of 5'-3" (±) 3" or as directed by the engineer.
8. The Double Arrow sign (W12-1) shall be mounted at a height of 2'-3" (±) 3". The Chevron sign (W1-8), Roundabout Chevron panel (R6-4B), Clearance Markers (W5-52), Mile Markers (D10 series), In Road Object Markers (W5-54) & End of Road Markers (W5-56) shall be mounted at a height of 4"-3" (±) 3".

* 6 feet from edge of a paved shoulder or 12 feet from the edge of pavement (edge line location) or 2 feet from outside edge of gravel, whichever is greater unless directed by project engineer.

** The existence of curb and gutter does not in itself mandate the vertical clearance illustrated. That height is typically measured where there is sidewalk adjacent to the roadway or parking is permitted. In the absence of sidewalk vertical clearance is measured from the top of the curb. Offset of signs is measured from the flow line.

*** See A4-3 sign plate for signs 4' or less in width and less than 20 S.F. in area.

SIGN SHAPE OTHER THAN DIAMOND (TWO POSTS REQUIRED)	
L	E
*** Greater than 48" Less than 60"	12"
60" to 108"	L/5

SIGN SHAPE OTHER THAN DIAMOND (THREE POSTS REQUIRED)	
L	E
Greater than 108" to 144"	12"

POST EMBEDMENT DEPTH

Area of Sign Installation (Sq. Ft.)	D (Min)
20 or Less	4'
Greater than 20	5'

TYPICAL INSTALLATION OF TYPE II SIGNS ON MULTIPLE POSTS

WISCONSIN DEPT OF TRANSPORTATION

APPROVED Matthew R Rauch
for State Traffic Engineer

DATE 12/6/23 PLATE NO. A4-4.16

PROJECT NO:	HWY:	COUNTY:		SHEET NO: 144	E

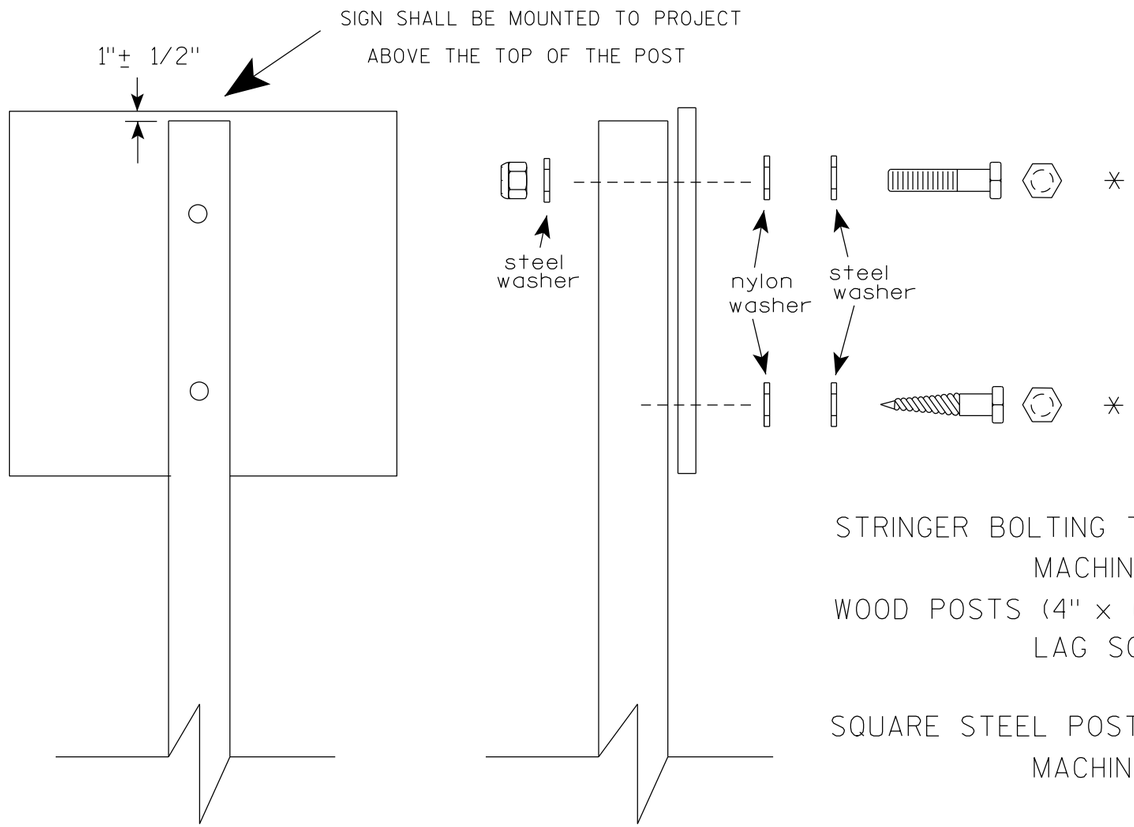

Nuts, bolts and lags used for mounting signs shall have hexagonal heads and shall be either :

a. Hot dip galvanized in accordance with ASTM Designation: A 153, Class D, or SC 3

b. Electro-galvanized in accordance with ASTM Designation : B 633, TYPE III, SC 3.

Threads on bolts and nuts shall be manufactured with sufficient allowance for the cadmium plate or galvanized coating to permit the nuts to run freely on the bolts.

STRINGER BOLTING TO ALUMINUM SIGNS (SEE SIGN PLATE A4-18)

MACHINE BOLTS - 5/16" X 1-3/4" Length w/ lock nuts

WOOD POSTS (4" x 6")

LAG SCREWS - 3/8" X 3" (NO STRINGERS ON BACK OF SIGN)
3/8" X 4" (STRINGERS ON BACK OF SIGN)

SQUARE STEEL POSTS (2" x 2")

MACHINE BOLTS - 3/8" X 3-1/4" Length w/ nuts (NO STRINGER ON BACK OF SIGN)
3/8" X 5" Length w/ nuts (STRINGERS ON BACK OF SIGN)

RIVETS - 9/32 " (6605-9-6) BULB-TITE, TRI-FOLD, ALUMINUM BODY/MANDREL
O.D. FLANGE .720-.765 INCH, GRIP RANGE .042-.375 INCH

WASHERS (ALL POSTS) -

1-1/4" O.D. X 3/8" I.D. X 1/16" STEEL
1-1/4" O.D. X 3/8" I.D. X .080 NYLON

* Two different fastening systems are shown for illustration purposes. On any individual sign, either one or the other system shall be used. Actual number of fasteners per sign varies with the sign area, but normally there are two. For a single post installation, all signs greater than 9 sq. ft. require the use of 3 fasteners.

ATTACHMENT OF SIGNS TO POSTS

WISCONSIN DEPT OF TRANSPORTATION

APPROVED Matthew R Rauch
for State Traffic Engineer

DATE 4/1/2020 PLATE NO. A4-8.9

TELESCOPIC TUBING ANCHORS
TWO PIECE SYSTEM

2 1/4" SQUARE
12 GAUGE
PERFORATED
GALVANIZED FINISH

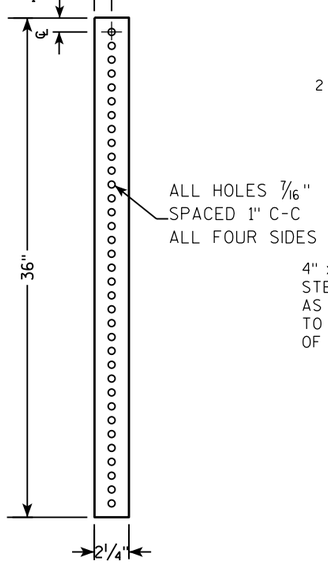

2 1/2" SQUARE
12 GAUGE
OMNI-DIRECTIONAL
PERFORATED
SOIL STABILIZING SLEEVE
GALVANIZED FINISH

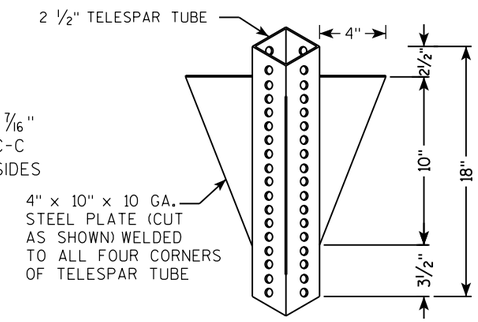

DETAIL OF TUBULAR STEEL SIGN POST
(IN POURED CONCRETE OR ASPHALT)

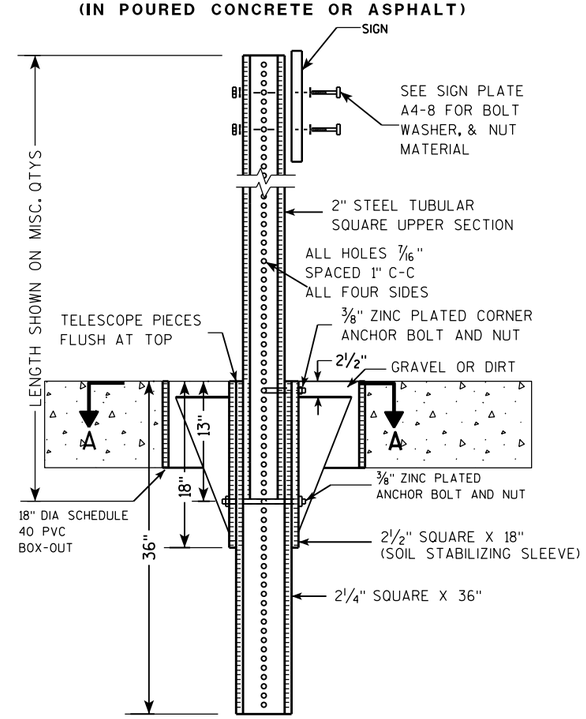

DETAIL OF TUBULAR STEEL SIGN POST
(IN LOCATIONS OTHER THAN POURED CONCRETE OR ASPHALT)

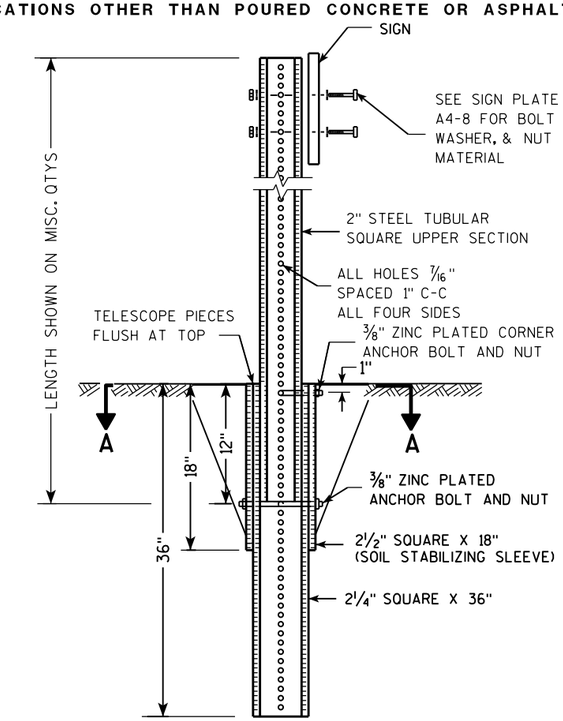

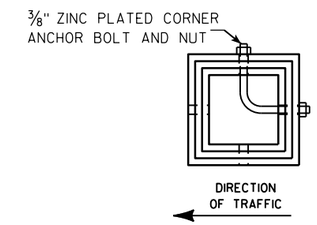

SECTION A-A

Area of Sign Installation (Sq. Ft.)	Number of Required Posts
9 or less	1
Greater than 9 less than or equal to 18	2
Greater than 18 less than or equal to 27	3

Signs wider than 3 feet or larger than 9 sq. ft shall be mounted on multiple posts (see above table).

TUBULAR STEEL
SIGN POST
A4-9

WISCONSIN DEPT OF TRANSPORTATION

APPROVED Matthew R Rauch
for State Traffic Engineer

DATE 2/05/15 PLATE A4-9.9

7 7

PROJECT NO:	HWY:	COUNTY:		SHEET NO:	E

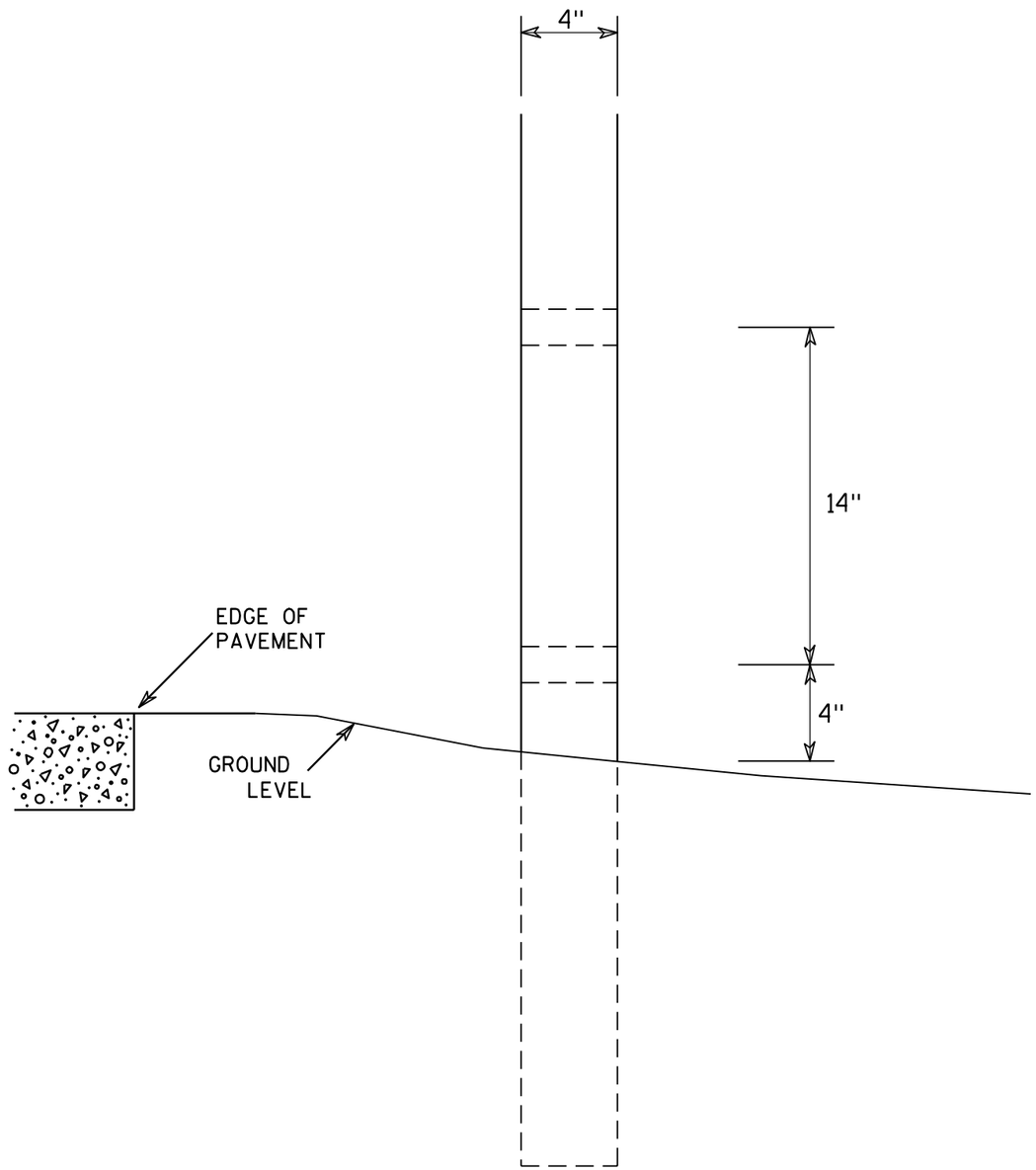

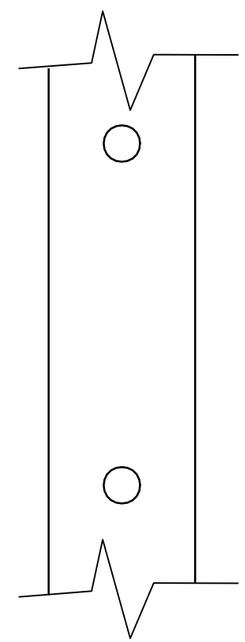

SIDE VIEW

GENERAL NOTES

1. All 4 x 6 Wood Posts shall be modified by having two 1½" diameter holes drilled perpendicular to the roadway centerline.

7

7

4 X 6 WOOD POST MODIFICATIONS

WISCONSIN DEPT OF TRANSPORTATION

APPROVED Chester J Spang for State Traffic Engineer

DATE 3/27/97 PLATE NO. A4-11.2

PROJECT NO:	HWY:	COUNTY:		SHEET NO: 147	E

BANDING

SINGLE SIGN

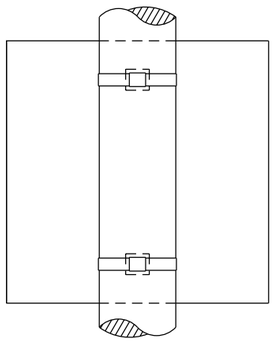

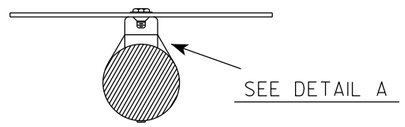

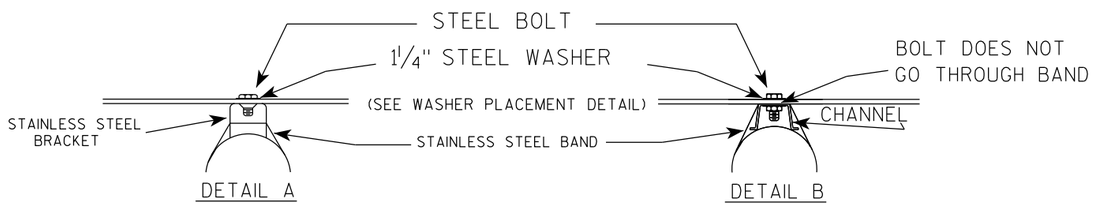

WASHER PLACEMENT

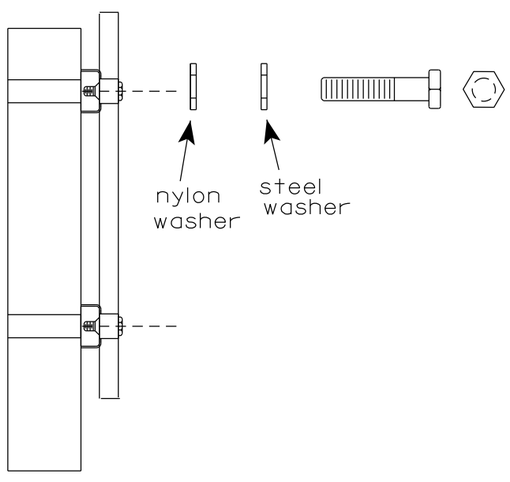

WASHERS (ALL POSTS) -
1-1/4" O.D. X 3/8" I.D. X 1/16" STEEL
1-1/4" O.D. X 3/8" I.D. X .080 NYLON
FOR ALL TYPE H SIGNS

GENERAL NOTES

1. Any sign over 3 feet in width shall use the V-Block banding method. See A5-10 standard plate.
2. Signs 3 feet or greater in height shall have three bracket bands installed. Signs less than 3 feet in height shall have two bracket bands installed.
3. Banding and assembly bracket shall be stainless steel. All bands shall be ¾" in width and 0.025" thickness.
4. ALL SIGN MOUNTING BOLTS AND WASHERS SHALL BE EITHER:
   a. Hot dip or mechanically galvanized in accordance with ASTM Designation: A 153, Class D
   b. Electro-galvanized in accordance with ASTM designation: B 633, Type III, SC 3

"J" ASSEMBLY

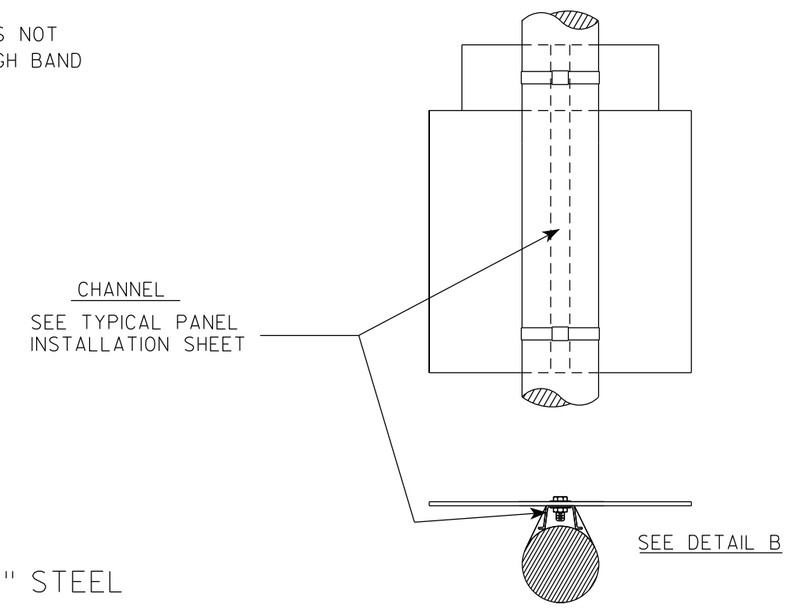

STANDARD SIGN
SIGN BANDING DETAILS

WISCONSIN DEPT OF TRANSPORTATION

APPROVED Matthew R Rauch for State Traffic Engineer

DATE 6/10/19 PLATE NO. A5-9.4

PROJECT NO:	HWY:	COUNTY:		SHEET NO: 148	E

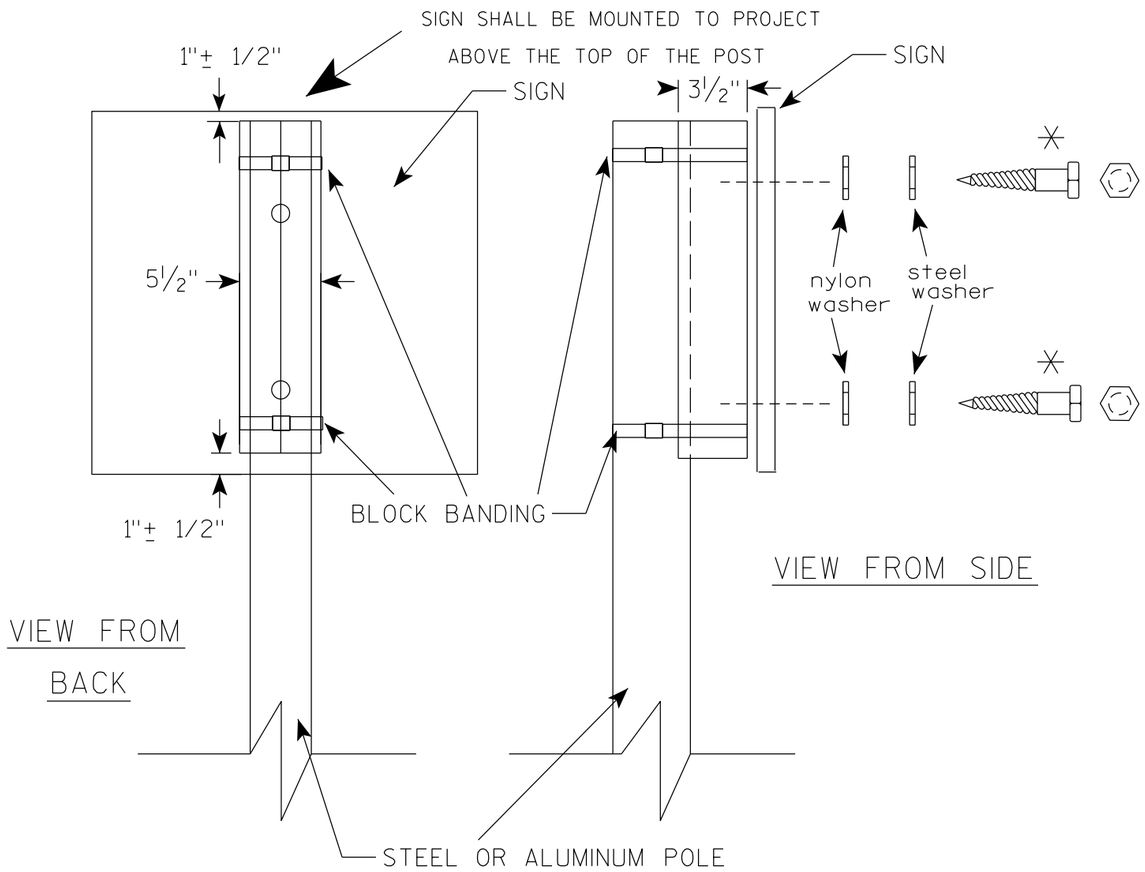

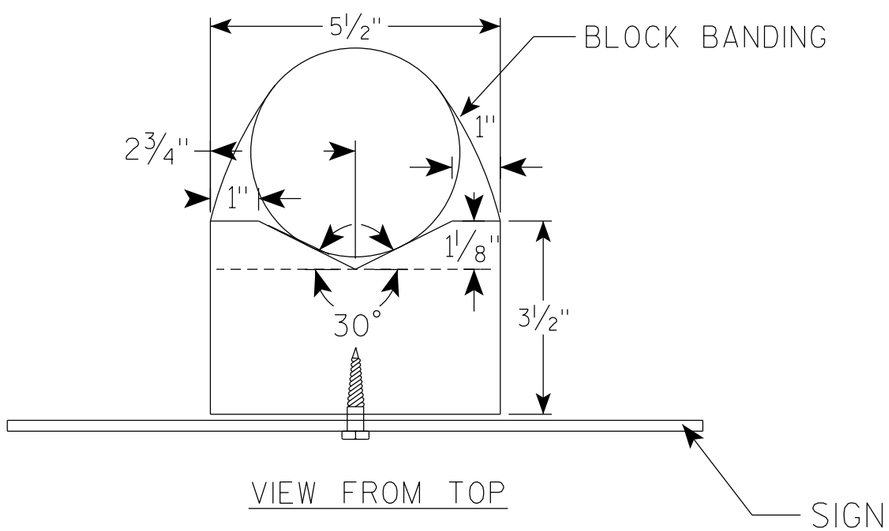

GENERAL NOTES

1. WOOD 4"X6" POST MATERIAL SHALL CONFORM TO 507.2.2 OF THE WisDOT STANDARD SPECIFICATIONS
2. BLOCK BANDING AND CLIPS SHALL BE STAINLESS STEEL, 3/4" WIDTH AND 0.025" THICKNESS
3. SIGNS 3' OR GREATER IN HEIGHT SHALL UTILIZE 3 BLOCK BANDS. SIGNS UNDER 3' IN HEIGHT SHALL UTILIZE 2 BLOCK BANDS
4. ACTUAL NUMBER OF FASTENERS PER SIGN VARIES WITH THE SIGN AREA, BUT NORNALLY THERE ARE TWO. FOR SIGNS GREATER THAN 9 S.F. 3 FASTENERS SHALL BE USED.
5. ALL SIGN MOUNTING BOLTS AND WASHERS SHALL BE EITHER:
   a. Hot dip or mechanically galvanized in accordance with ASTM Designation: A 153, Class D
   b. Electro-galvanized in accordance with ASTM Designation : B 633, TYPE III, SC 3
6. ALL BOLTS SHALL HAVE HEXAGONAL HEADS.
7. STEEL WASHERS SHALL BE 1 1/4" O.D. X 3/8" I.D. X 1/16"
8. NYLON WASHERS SHALL BE 1 1/4" O.D. X 3/8" I.D. X .080 FOR TYPE H OR TYPE F FACE SIGN

✳ LAG BOLTS SHALL BE 3/8" X 2 1/2"

7

7

BLOCK BANDING DETAIL
(V-BLOCK OPTION)

WISCONSIN DEPT OF TRANSPORTATION

APPROVED Matthew R Rauch
for State Traffic Engineer

DATE 4/19/2022 PLATE NO. A5-10.3

PROJECT NO:				SHEET NO: 149	E

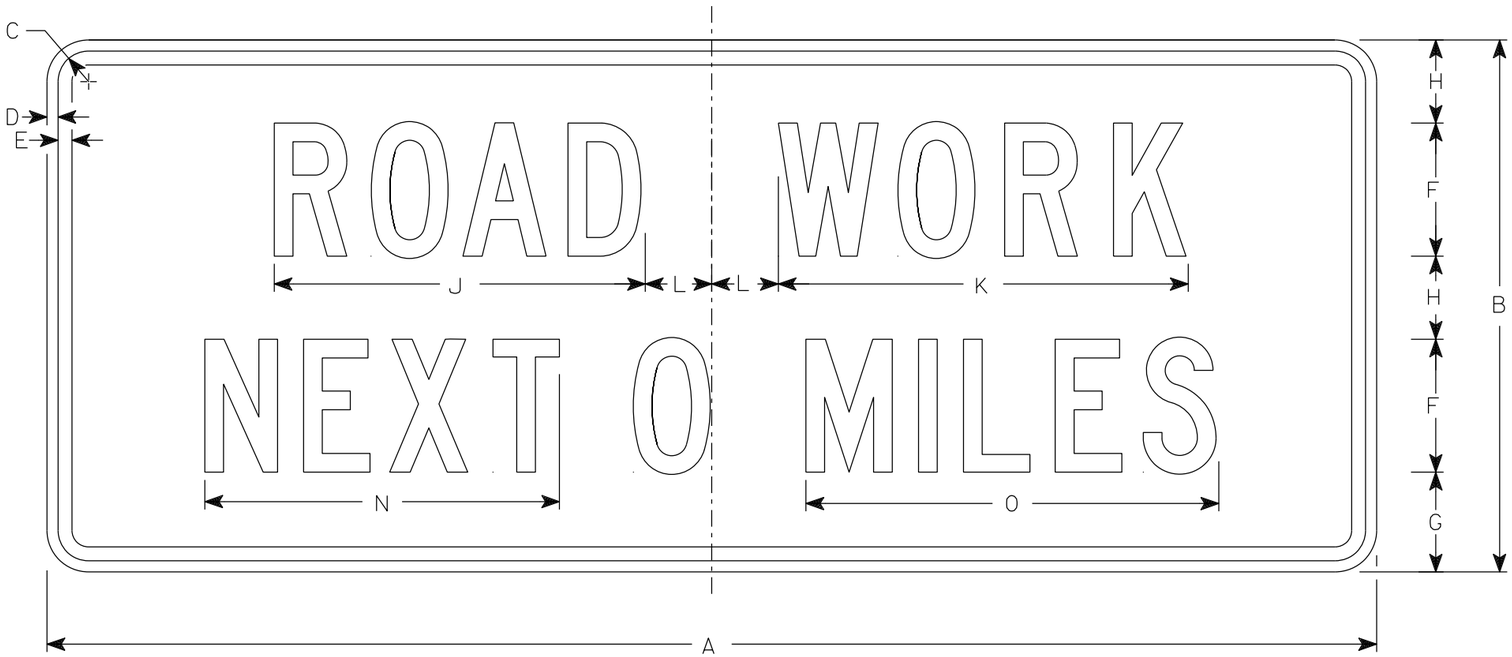

G20-1

NOTES

1. Sign is Type II - Type F Reflective
2. Color:
   Background - Orange
   Message - Black
3. Message Series - C
4. Corners may be square or rounded when base material is plywood but borders shall be rounded as shown. When base material is metal, the corners and borders shall be rounded.
5. Round distance to nearest whole Mile and substitute appropriate numerals and optically adjust spacing to achieve proper balance

SIZE	A	B	C	D	E	F	G	H	I	J	K	L	M	N	O	P	Q	R	S	T	U	V	W	X	Y	Z	Area sq. ft.
1																											
2S	60	24	1 7/8	1/2	5/8	6	4 1/2	3 3/4		16 3/4	18 1/2	3		16	18 5/8												10.0
2M	60	24	1 7/8	1/2	5/8	6	4 1/2	3 3/4		16 3/4	18 1/2	3		16	18 5/8												10.0
3	60	24	1 7/8	1/2	5/8	6	4 1/2	3 3/4		16 3/4	18 1/2	3		16	18 5/8												10.0
4	60	24	1 7/8	1/2	5/8	6	4 1/2	3 3/4		16 3/4	18 1/2	3		16	18 5/8												10.0
5	60	24	1 7/8	1/2	5/8	6	4 1/2	3 3/4		16 3/4	18 1/2	3		16	18 5/8												10.0

STANDARD SIGN
G20-1

WISCONSIN DEPT OF TRANSPORTATION

APPROVED Matthew R Rauch
for State Traffic Engineer
DATE 1/26/2023 PLATE NO. G20-1.9

PROJECT NO: | HWY: | COUNTY: | SHEET NO: 150 | E

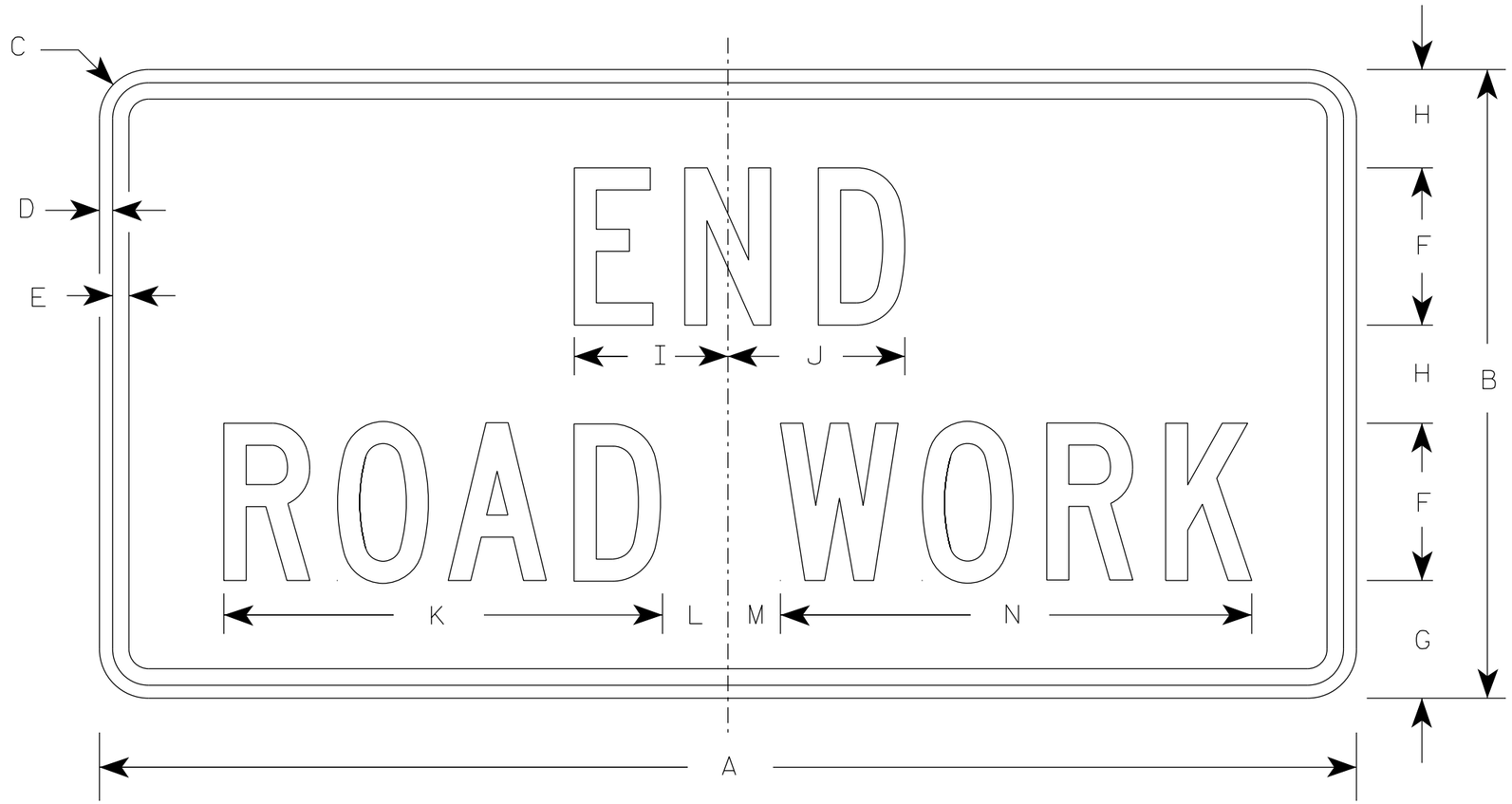

G20-2A

NOTES

1. Sign is Type II - Type F Reflective
2. Color:
   Background - Orange
   Message - Black
3. Message Series - C
4. Corners may be square or rounded when base material is plywood but borders shall be rounded as shown. When base material is metal, the corners and borders shall be rounded.

SIZE	A	B	C	D	E	F	G	H	I	J	K	L	M	N	O	P	Q	R	S	T	U	V	W	X	Y	Z	Area sq. ft.
1	36	18	1 1/2	3/8	1/2	4	3 3/4	2 1/2	4 1/8	4 1/8	11 1/8	2	1	12 1/8													4.5
2	48	24	1 7/8	1/2	5/8	6	4 1/2	3 3/4	5 7/8	6 3/4	16 3/4	2 1/2	1 3/4	18 1/2													8.0
2M	48	24	1 7/8	1/2	5/8	6	4 1/2	3 3/4	5 7/8	6 3/4	16 3/4	2 1/2	1 3/4	18 1/2													8.0
3	48	24	1 7/8	1/2	5/8	6	4 1/2	3 3/4	5 7/8	6 3/4	16 3/4	2 1/2	1 3/4	18 1/2													8.0
4	48	24	1 7/8	1/2	5/8	6	4 1/2	3 3/4	5 7/8	6 3/4	16 3/4	2 1/2	1 3/4	18 1/2													8.0
5	48	24	1 7/8	1/2	5/8	6	4 1/2	3 3/4	5 7/8	6 3/4	16 3/4	2 1/2	1 3/4	18 1/2													8.0

STANDARD SIGN

G20-2A

WISCONSIN DEPT OF TRANSPORTATION

APPROVED Matthew R Rauch
for State Traffic Engineer

DATE 1/26/2023 PLATE NO. G20-2A.10

PROJECT NO: | HWY: | COUNTY: | SHEET NO: 151 | E

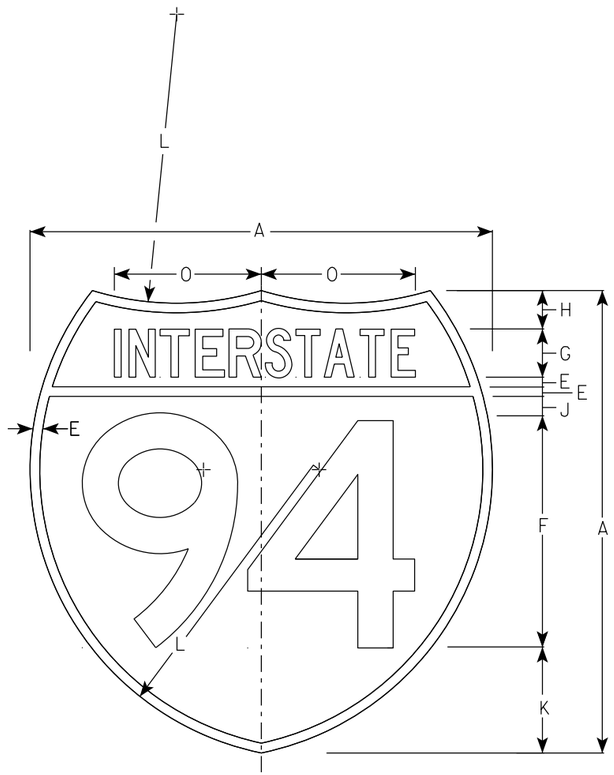

M1-1

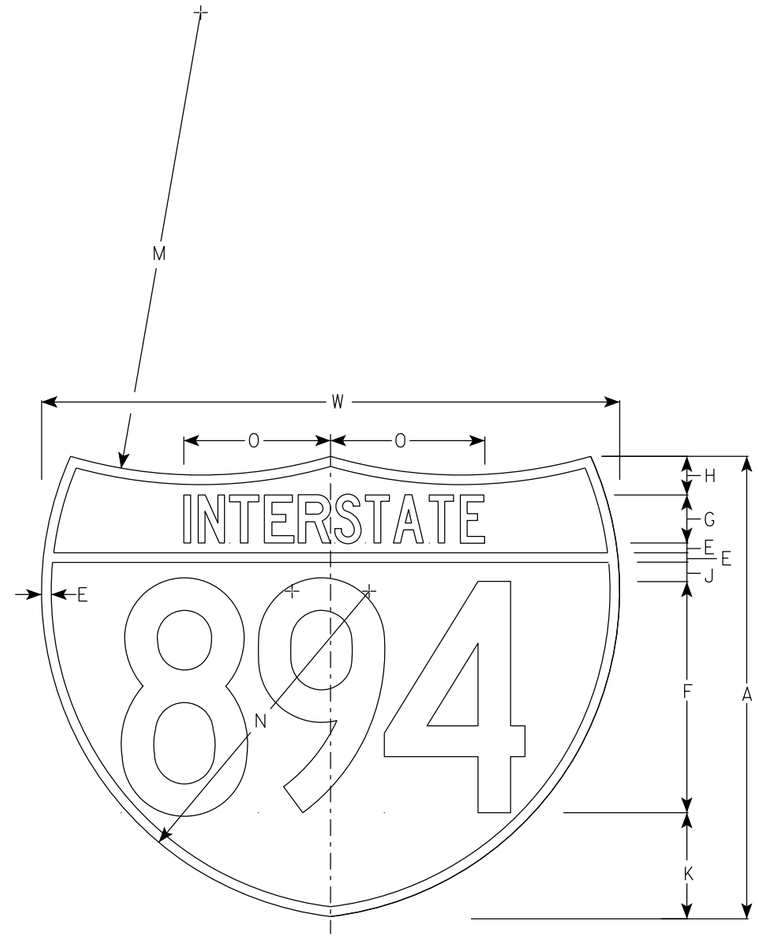

M1-1A

NOTES

1. Sign is Type II - Type H Reflective
2. Color:
   Background - Top Red - Bottom Blue
   Message - White
3. Message Series - See note 5
4. Substitute appropriate numerals & ajust spacing as per plate A10-1.
5. M1-1 - Numerals - D
   Interstate - C
   M1-1A - All copy - C

SIZE	A	B	C	D	E	F	G	H	I	J	K	L	M	N	O	P	Q	R	S	T	U	V	W	X	Y	M1-1 Area sq. ft.	M1-1A Area sq. ft.
1																											
2	24				½	12	2 ½	2		1	5 ½	15	24	17	7 ⅞								30			3.13	3.91
2M	24				½	12	2 ½	2		1	5 ½	15	24	17	7 ⅞								30			3.13	3.91
3	36				¾	18	3 ¾	3		1 ½	8 ¼	22 ½	36	25 ½	11 ¾								45			7.03	8.79
4	36				¾	18	3 ¾	3		1 ½	8 ¼	22 ½	36	25 ½	11 ¾								45			7.03	8.79
5	36				¾	18	3 ¾	3		1 ½	8 ¼	22 ½	36	25 ½	11 ¾								45			7.03	8.79

INTERSTATE ROUTE MARKER
M1-1 FOR ASSEMBLIES

WISCONSIN DEPT OF TRANSPORTATION

APPROVED Matthew R Rauch
for State Traffic Engineer

DATE 11/7/2022 PLATE NO. M1-1.9

PROJECT NO: | HWY: | COUNTY: | SHEET NO: 152 | E

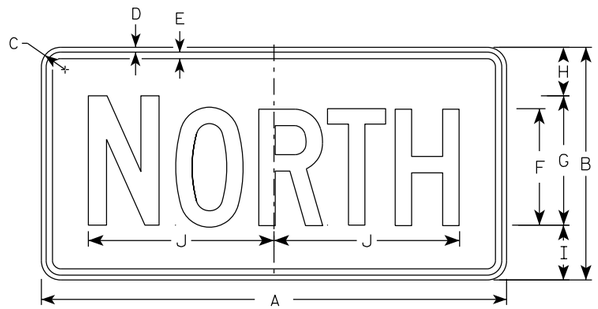

M3-1
MM3-1
MP3-1

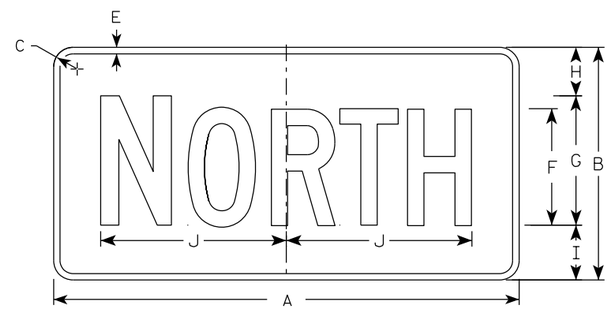

MB3-1
MK3-1
MN3-1

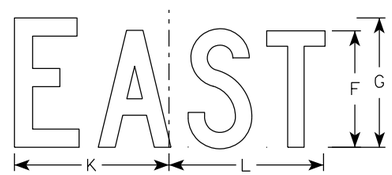

M3-2
MM3-2
MP3-2

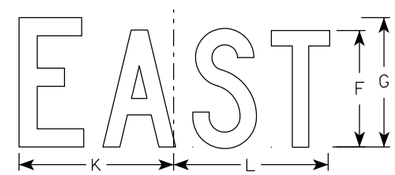

MB3-2
MK3-2
MN3-2

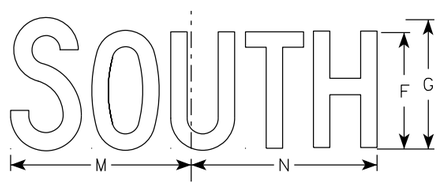

M3-3
MM3-3
MP3-3

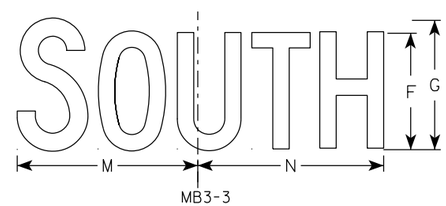

MB3-3
MK3-3
MN3-3

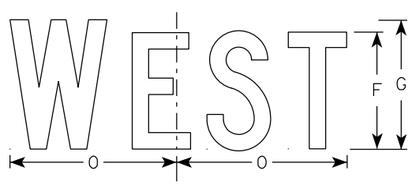

M3-4
MM3-4
MP3-4

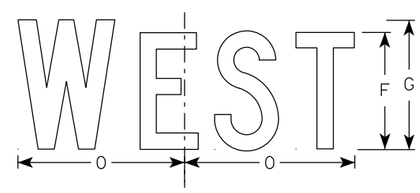

MB3-4
MK3-4
MN3-4

NOTES

1. All Signs Type II - Type H Reflective
2. Color:
   Background - See note 5
   Message - See note 5
3. Message Series - C
4. Corners may be square or rounded when base material is plywood but borders shall be rounded as shown. When base material is metal, the corners and borders shall be rounded.
5. M3-1 thru M3-4 Background - White
   Message - Black
   MB3-1 thru MB3-4 Background - Blue
   Message - White
   MK3-1 thru MK3-4 Background - Green
   Message - White
   MM3-1 thru MM3-4 Background - White
   Message - Green
   MN3-1 thru MN3-4 Background - Brown
   Message - White
   MP3-1 thru MP3-4 Background - White
   Message - Blue
6. Note the first letter of each direction is larger than the remainder of the message.

SIZE	A	B	C	D	E	F	G	H	I	J	K	L	M	N	O	P	Q	R	S	T	U	V	W	X	Y	Z	Area sq. ft.
1																											
2S	24	12	1 1/2	3/8	3/8	6	7	2 1/4	2 3/4	10 1/4	7 7/8	8 3/8	10 1/4	9 3/4	8 3/4												2.00
2M	24	12	1 1/2	3/8	3/8	6	7	2 1/4	2 3/4	10 1/4	7 7/8	8 3/8	10 1/4	9 3/4	8 3/4												2.00
3	36	18	1 1/2	3/8	1/2	9	10	3 3/4	4 1/4	14 3/8	12	12 1/8	14	14 1/8	13												4.5
4	36	18	1 1/2	3/8	1/2	9	10	3 3/4	4 1/4	14 3/8	12	12 1/8	14	14 1/8	13												4.5
5	36	18	1 1/2	3/8	1/2	9	10	3 3/4	4 1/4	14 3/8	12	12 1/8	14	14 1/8	13												4.5

STANDARD SIGNS
M3-1 THRU M3-4
SERIES

WISCONSIN DEPT OF TRANSPORTATION

APPROVED Matthew R Rauch
For State Traffic Engineer

DATE 2/8/2023 PLATE NO. M3-1.15

PROJECT NO: | HWY: | COUNTY: | SHEET NO: 153 | E

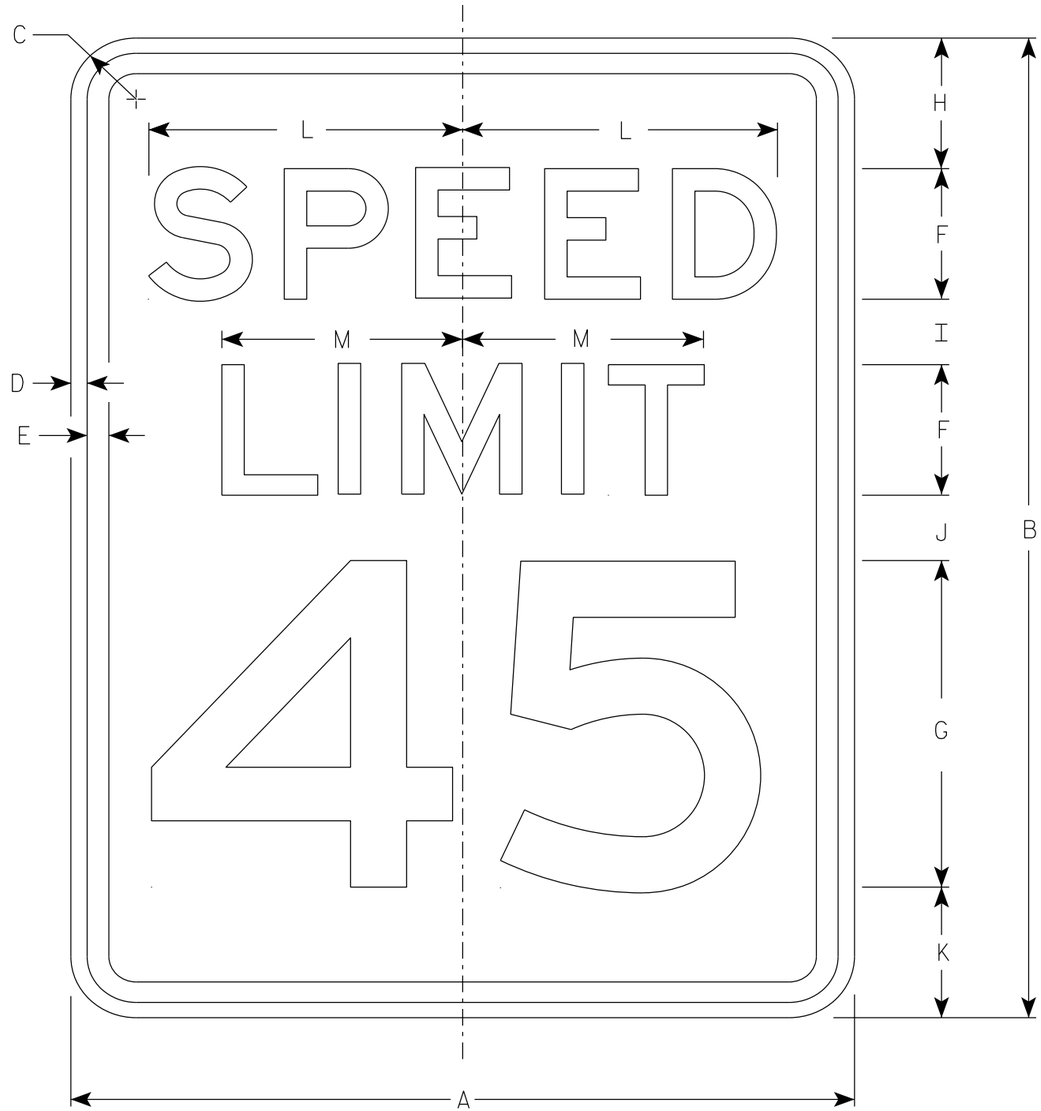

R2-1

NOTES

1. Sign is Type II - Type H Reflective
2. Color:
   Background - White
   Message - Black
3. Message Series - E
4. Substitute appropriate numerals and optically adjust spacing to achieve proper balance.

SIZE	A	B	C	D	E	F	G	H	I	J	K	L	M	N	O	P	Q	R	S	T	U	V	W	X	Y	Z	Area sq. ft.
1	18	24	1 1/2	3/8	1/2	3	8	3	2	2	3	7 1/4	5 1/2														3.0
2S	24	30	1 1/2	3/8	1/2	4	10	3	2 1/4	3 3/8	3 3/8	9 5/8	7 3/8														5.0
2M	30	36	1 7/8	1/2	5/8	5	12	5	2 1/2	2 1/2	4	12	9 1/4														7.5
3	36	48	1 7/8	1/2	5/8	6	14	6	5	5	6	14 3/8	11														12.0
4	36	48	1 7/8	1/2	5/8	6	14	6	5	5	6	14 3/8	11														12.0
5	48	60	3	3/4	1	8	20	6	4 1/2	6 3/4	6 3/4	19 1/4	14 5/8														20.0

STANDARD SIGN
R2-1

WISCONSIN DEPT OF TRANSPORTATION

APPROVED Matthew R Rauch
for State Traffic Engineer

DATE 2/1/23 PLATE NO. R2-1.14

PROJECT NO: | HWY: | COUNTY: | SHEET NO: 154 | E

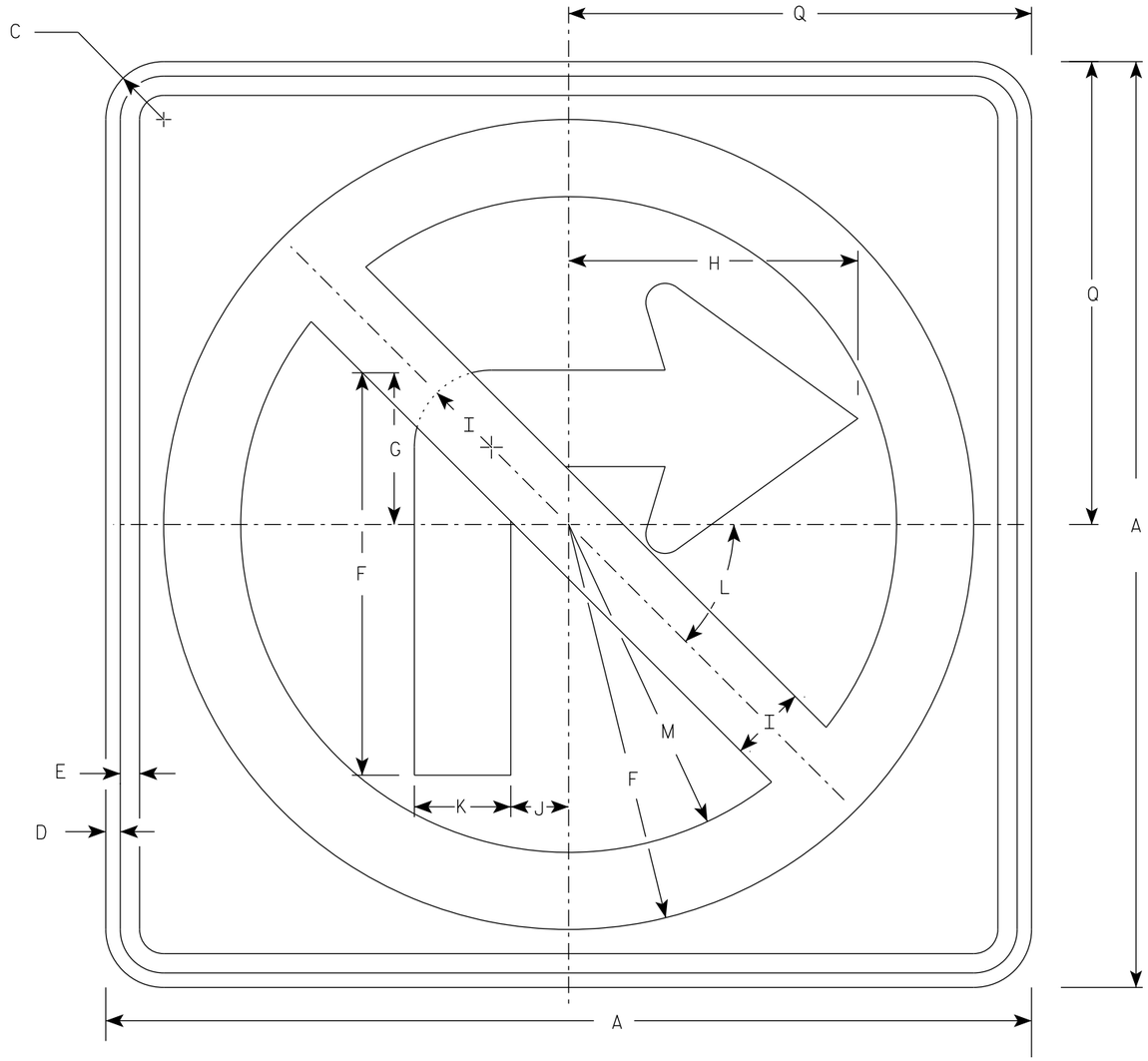

R3-1

NOTES

1. Sign is Type II - Type H Reflective
2. Color:
   Background - White
   Message - See note 3
3. Border & Arrow are non reflective black, the circle with diagonal bar is reflective red.

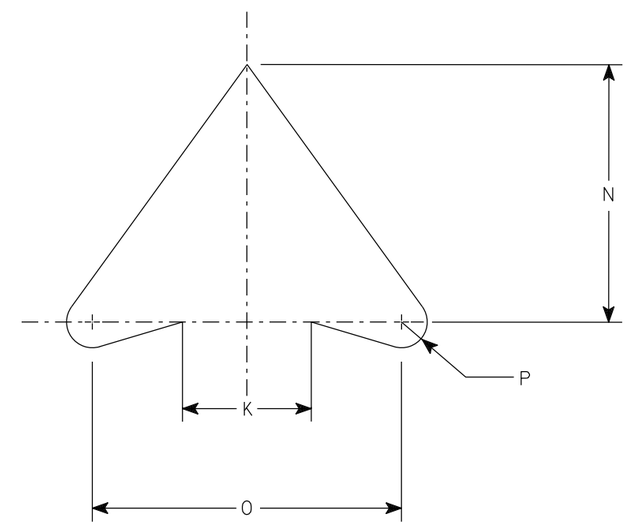

ARROW DETAIL

SIZE	A	B	C	D	E	F	G	H	I	J	K	L	M	N	O	P	Q	R	S	T	U	V	W	X	Y	Z	Area sq. ft.
1	24		1 1/2	3/8	1/2	10 1/2	4	7 1/2	2	1 1/2	2 1/2	45	8 1/2	5	6	1/2	12										4.0
2S	24		1 1/2	3/8	1/2	10 1/2	4	7 1/2	2	1 1/2	2 1/2	45°	8 1/2	5	6	1/2	12										4.0
2M	36		2 1/4	5/8	3/4	15 3/4	6	11 1/4	3	2 1/4	3 3/4	45	12 3/4	7 1/2	9	3/4	18										9.0
3	36		2 1/4	5/8	3/4	15 3/4	6	11 1/4	3	2 1/4	3 3/4	45	12 3/4	7 1/2	9	3/4	18										9.0
4	36		2 1/4	5/8	3/4	15 3/4	6	11 1/4	3	2 1/4	3 3/4	45°	12 3/4	7 1/2	9	3/4	18										9.0
5	48		2 1/4	3/4	1	21	8	15	4	3	5	45°	17	10	12	1	24										16.0

STANDARD SIGN

R3-1

WISCONSIN DEPT OF TRANSPORTATION

APPROVED Matthew R Rauch
for State Traffic Engineer

DATE 2/2/23 PLATE NO. R3-1.6

PROJECT NO: | HWY: | COUNTY: | SHEET NO: 155 | E

NOTES

1. Sign is Type II - Type H Reflective
2. Color:
   Background - White
   Message - See note 3
3. Border & Arrow are non reflective black, the circle with diagonal bar is reflective red.

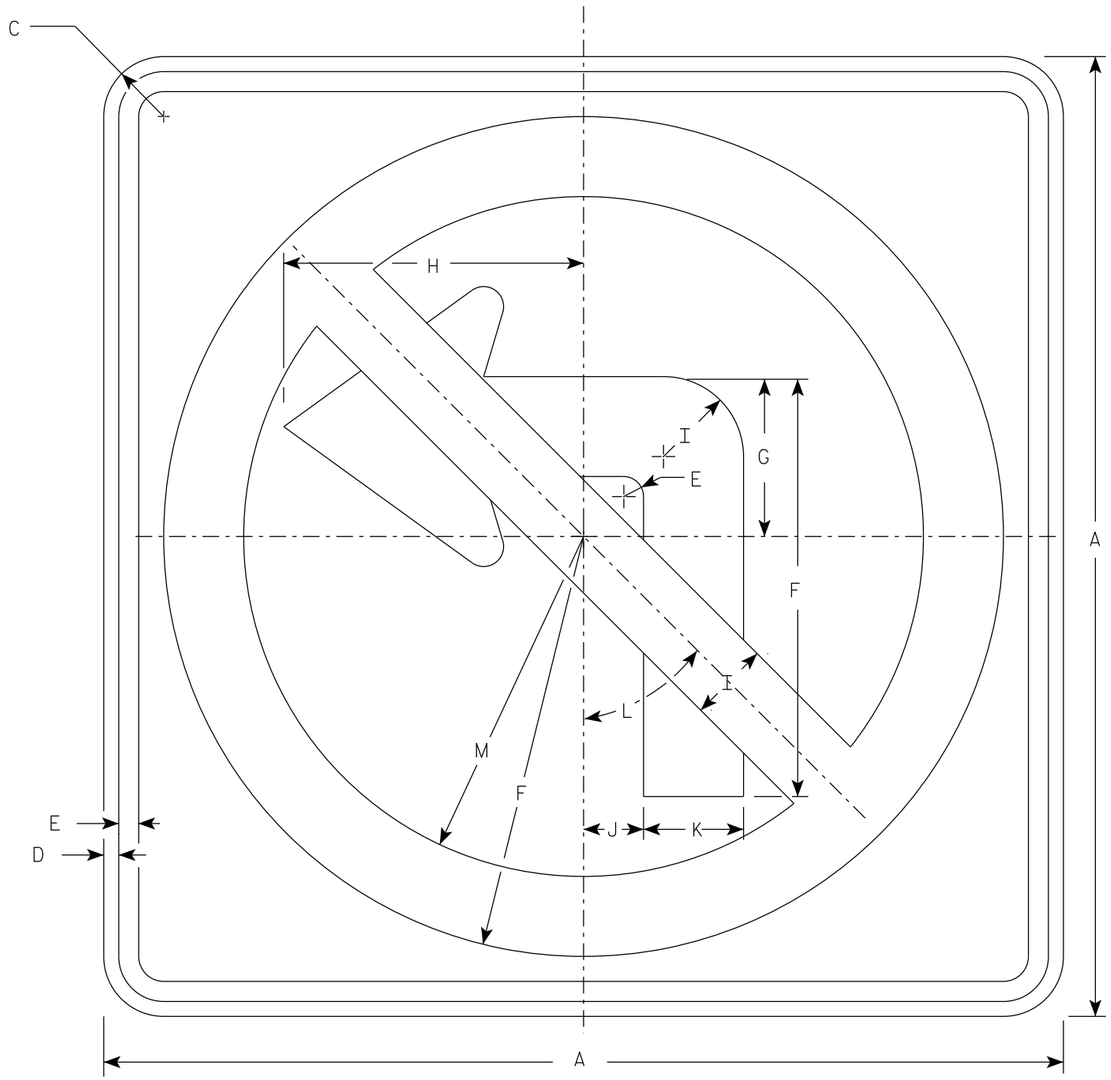

R3-2

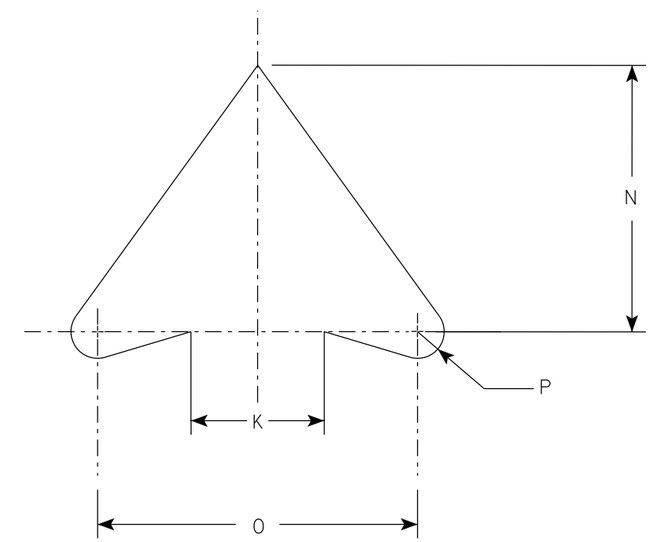

ARROW DETAIL

SIZE	A	B	C	D	E	F	G	H	I	J	K	L	M	N	O	P	Q	R	S	T	U	V	W	X	Y	Z	Area sq. ft.
1	24		1 1/2	3/8	1/2	10 1/2	4	7 1/2	2	1 1/2	2 1/2	45°	8 1/2	5	6	1/2											4.0
2S	24		1 1/2	3/8	1/2	10 1/2	4	7 1/2	2	1 1/2	2 1/2	45°	8 1/2	5	6	1/2											4.0
2M	36		2 1/4	5/8	3/4	15 3/4	6	11 1/4	3	2 1/4	3 3/4	45°	12 3/4	7 1/2	9	3/4											9.0
3	36		2 1/4	5/8	3/4	15 3/4	6	11 1/4	3	2 1/4	3 3/4	45°	12 3/4	7 1/2	9	3/4											9.0
4	36		2 1/4	5/8	3/4	15 3/4	6	11 1/4	3	2 1/4	3 3/4	45°	12 3/4	7 1/2	9	3/4											9.0
5	48		2 1/4	3/4	1	21	8	15	4	3	5	45°	17	10	12	1											16.0

STANDARD SIGN
R3-2

WISCONSIN DEPT OF TRANSPORTATION

APPROVED Matthew R Rauch
For State Traffic Engineer

DATE 2/2/23 PLATE NO. R3-2.11

PROJECT NO: | HWY: | COUNTY: | SHEET NO: 156 | E

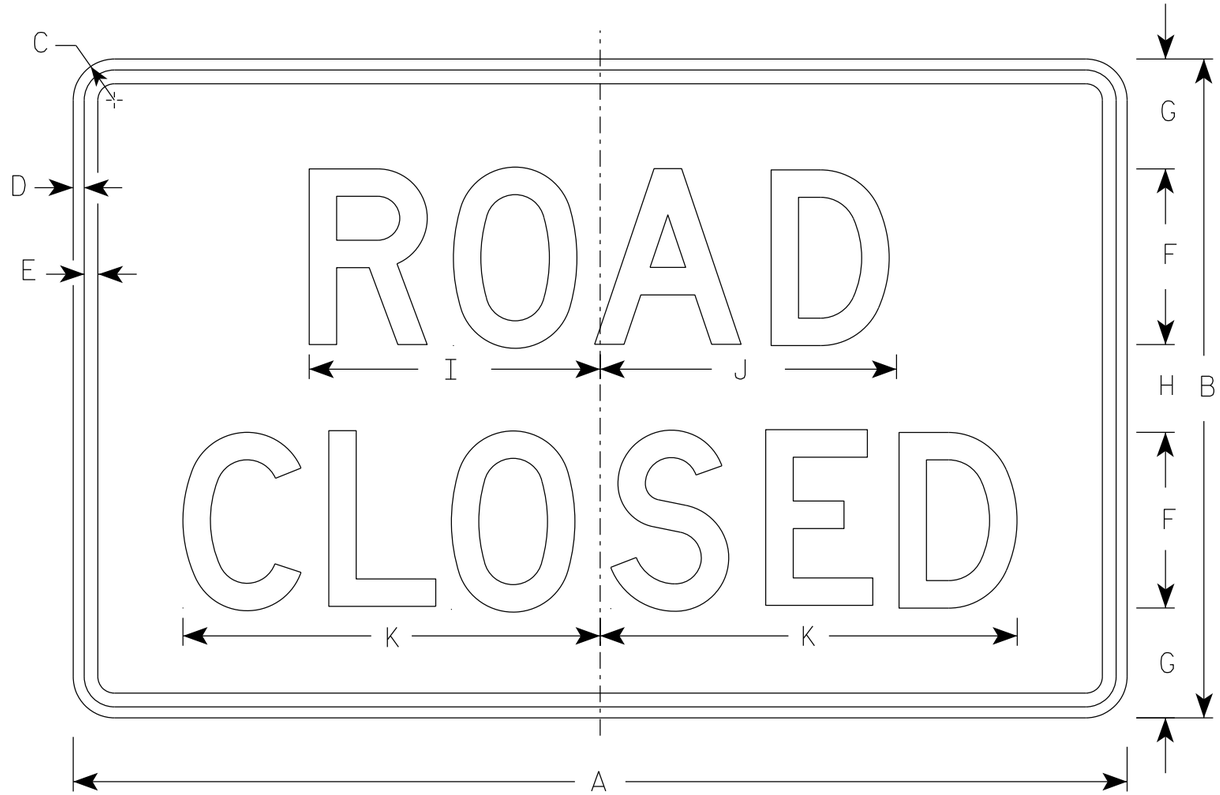

R11-2

NOTES

1. Sign is Type II - Type H Reflective
2. Color:
   Background - White
   Message - Black
3. Message Series - D
4. Corners may be square or rounded when base material is plywood but borders shall be rounded as shown. When base material is metal, the corners and borders shall be rounded.
5. Modify the message as required.

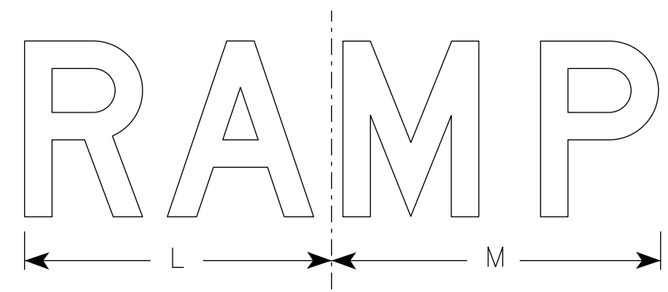

R11-2R

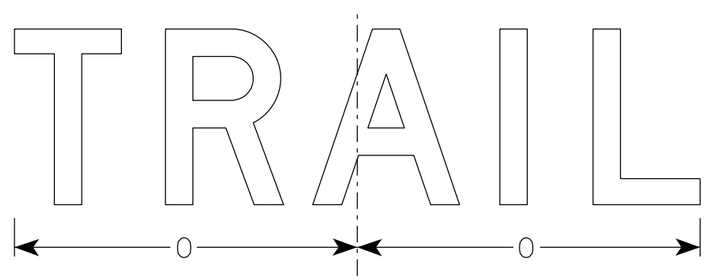

R11-2T

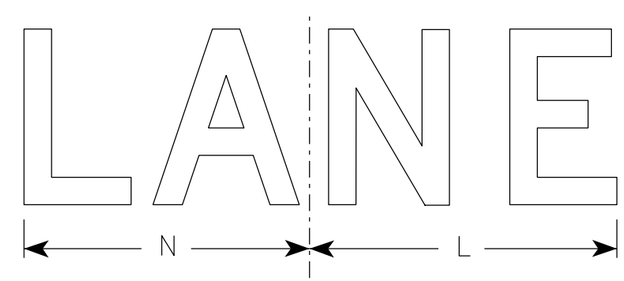

R11-2L

SIZE	A	B	C	D	E	F	G	H	I	J	K	L	M	N	O	P	Q	R	S	T	U	V	W	X	Y	Z	Area sq. ft.
1																											
2S	48	30	1 7/8	1/2	5/8	8	5	4	13 1/4	13 1/2	19	14	15	13	15 5/8												10.0
2M	48	30	1 7/8	1/2	5/8	8	5	4	13 1/4	13 1/2	19	14	15	13	15 5/8												10.0
3	48	30	1 7/8	1/2	5/8	8	5	4	13 1/4	13 1/2	19	14	15	13	15 5/8												10.0
4	48	30	1 7/8	1/2	5/8	8	5	4	13 1/4	13 1/2	19	14	15	13	15 5/8												10.0
5	48	30	1 7/8	1/2	5/8	8	5	4	13 1/4	13 1/2	19	14	15	13	15 5/8												10.0

STANDARD SIGN
R11-2

WISCONSIN DEPT OF TRANSPORTATION

APPROVED Matthew R Rauch
for State Traffic Engineer

DATE 2/5/24 PLATE NO. R11-2.12

PROJECT NO: | HWY: | COUNTY: | SHEET NO: | E

7

NOTES

1. Sign is Type II - Type H Reflective
2. Color:
   Background - White
   Message - Black
3. Message Series - C
4. Corners may be square or rounded when base material is plywood but borders shall be rounded as shown. When base material is metal, the corners and borders shall be rounded.
5. Substitute appropriate numerals to nearest quarter mile and optically adjust spacing to achieve proper balance.

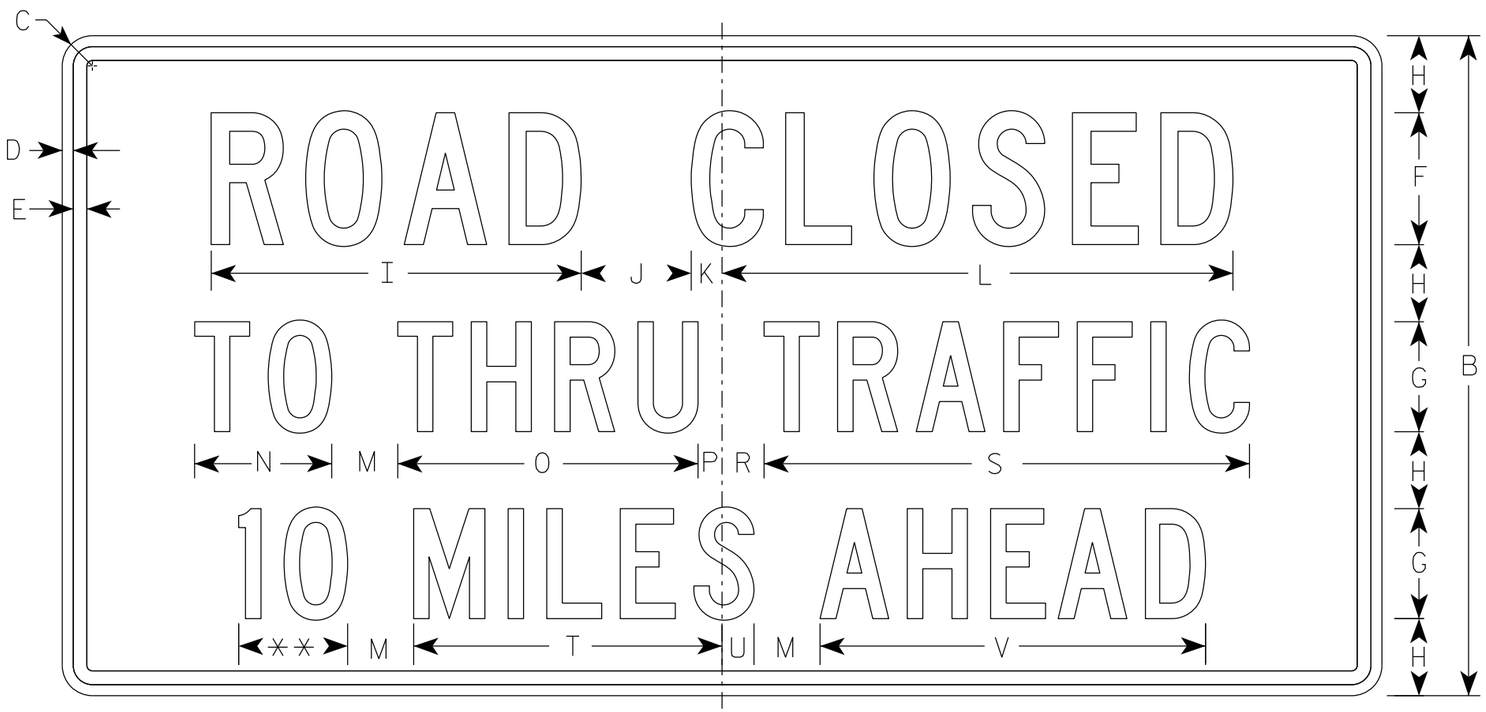

R11-3

** See Note 5

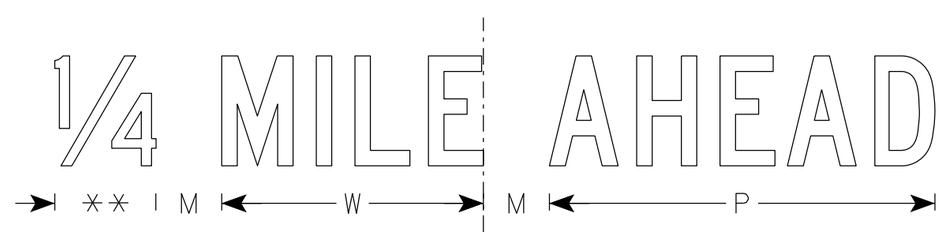

SIZE	A	B	C	D	E	F	G	H	I	J	K	L	M	N	O	P	Q	R	S	T	U	V	W	X	Y	Z	Area sq. ft.
1	36	18	1 1/2	3/8	3/8	4	3	2	11 1/4	3	1 1/8	15 3/8	2	3 3/4	8 1/4	5/8		1 3/8	13 1/4	8 3/8	7/8	10 1/2	7 1/8				4.5
2S	60	30	1 7/8	1/2	5/8	6	5	3 1/2	16 7/8	5	1 3/8	23 1/4	3	6 1/4	13 5/8	1 1/8		1 7/8	22 1/8	14	1 1/2	17 1/2	11 7/8				12.5
2M	60	30	1 7/8	1/2	5/8	6	5	3 1/2	16 7/8	5	1 3/8	23 1/4	3	6 1/4	13 5/8	1 1/8		1 7/8	22 1/8	14	1 1/2	17 1/2	11 7/8				12.5
3																											
4																											
5																											

STANDARD SIGN
R11-3

WISCONSIN DEPT OF TRANSPORTATION

APPROVED Matthew R Rauch
for State Traffic Engineer

DATE 2/5/24 PLATE NO. R11-3.10

PROJECT NO: | HWY: | COUNTY: | SHEET NO: 158 | E

NOTES

1. Sign is Type II - Type H Reflective
2. Color:
   Background - White
   Message - Black
3. Message Series - E except as noted
4. Corners may be square or rounded when base material is plywood but borders shall be rounded as shown. When base material is metal, the corners and borders shall be rounded.

** Substitute appropriate message, optically center message

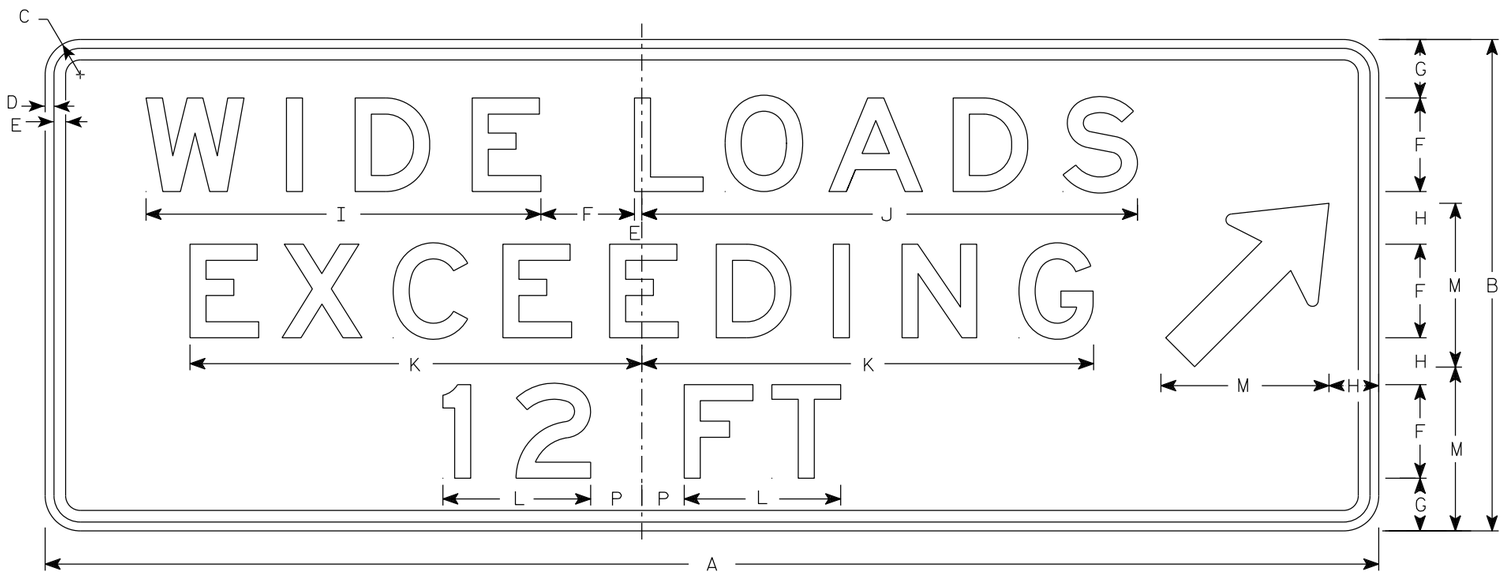

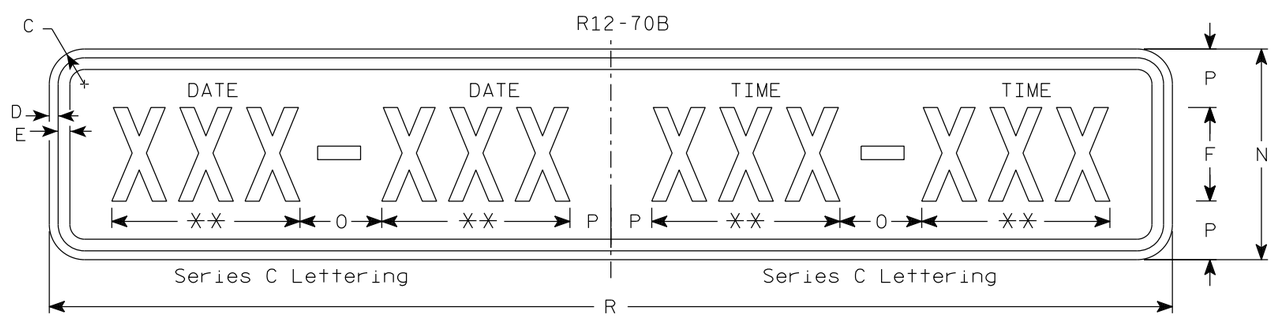

R12-70C

SIZE	A	B	C	D	E	F	G	H	I	J	K	L	M	N	O	P	Q	R	S	T	U	V	W	X	Y	Z	R12-70 Area sq. ft.	R12-70C Area sq. ft.
1																												
2S	90	36	3	1/2	5/8	6	4	5	20 7/8	28 3/8	24 5/8	8 1/8	12	12	6	3		66									22.5	5.5
2M	90	36	3	1/2	5/8	6	4	5	20 7/8	28 3/8	24 5/8	8 1/8	12	12	6	3		66									22.5	5.5
3	90	36	3	1/2	5/8	6	4	5	20 7/8	28 3/8	24 5/8	8 1/8	12	12	6	3		66									22.5	5.5
4	114	42	3	3/4	1	8	5	4	34	42	39	13	14	18	7	3 1/2		96									36.75	12.0
5	114	42	3	3/4	1	8	5	4	34	42	39	13	14	18	7	3 1/2		96									36.75	12.0

TYPICAL SIGN
R12-70B

WISCONSIN DEPT OF TRANSPORTATION

APPROVED Matthew R Rauch
for State Traffic Engineer

DATE 2/9/24 PLATE NO. R12-70B.4

PROJECT NO: | HWY: | COUNTY: | SHEET NO: 159 | E

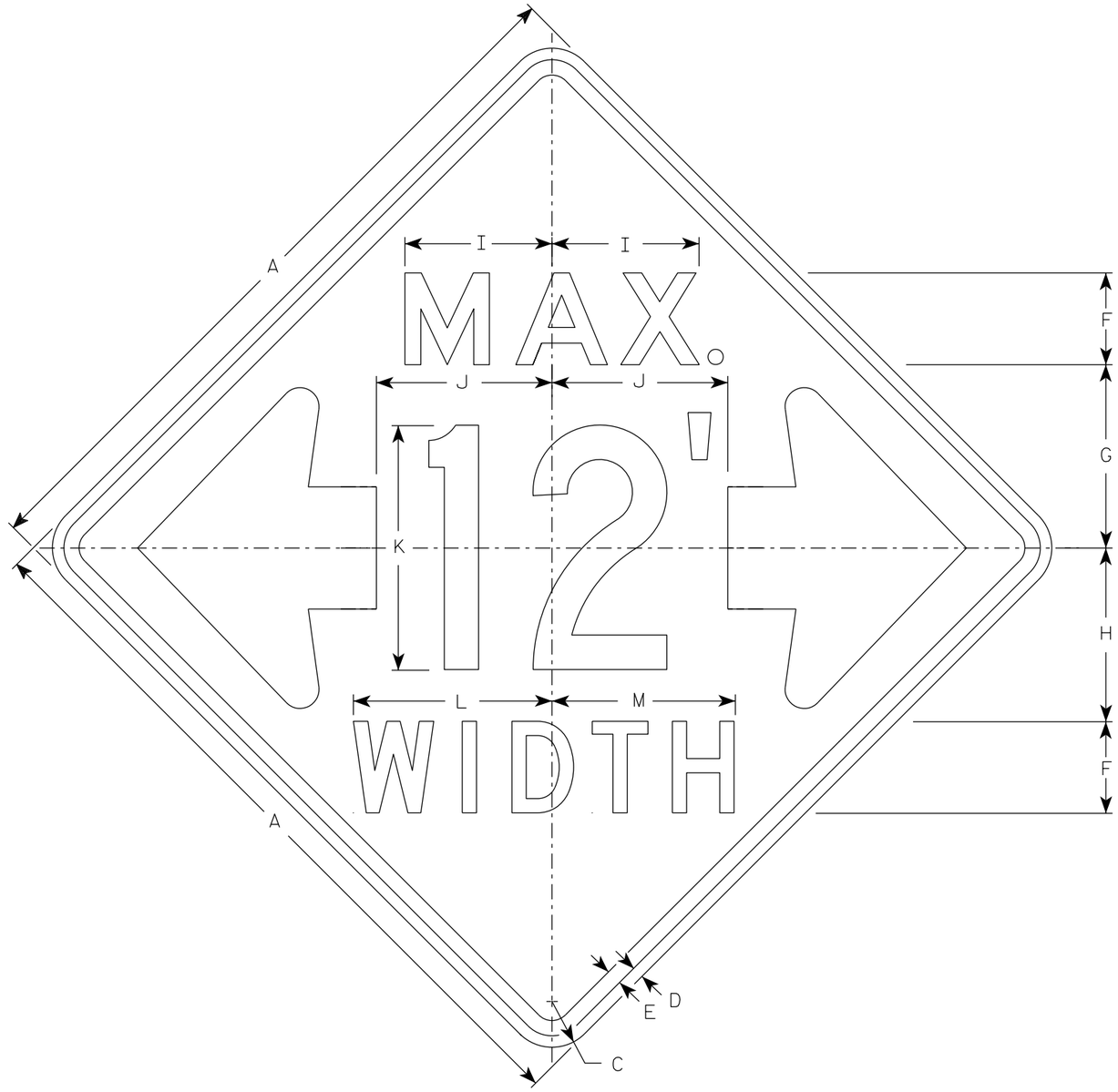

W12-52

NOTES

1. Sign is Type II - Type F Reflective
2. Color:
   Background - Orange
   Message - Black
3. Message Series - See note 5
4. The top line is series E, the numerals are series C, and the bottom line is series D.
5. Substitute appropriate numerals and adjust spacing as required.

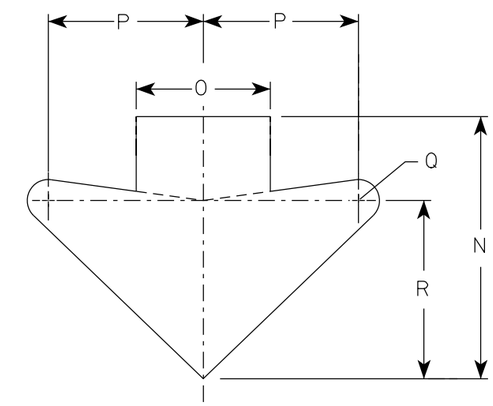

ARROW DETAIL

SIZE	A	B	C	D	E	F	G	H	I	J	K	L	M	N	O	P	Q	R	S	T	U	V	W	X	Y	Z	Area sq. ft.
1																											
2S	48		3	¾	1	6	12	11 ⅜	9 ⅝	11 ½	16	13	12	15 ⅝	8	9 ¼	1 ¼	10 ⅝									16.0
2M	48		3	¾	1	6	12	11 ⅜	9 ⅝	11 ½	16	13	12	15 ⅝	8	9 ¼	1 ¼	10 ⅝									16.0
3																											
4																											
5																											

STANDARD SIGN
W12-52

WISCONSIN DEPT OF TRANSPORTATION

APPROVED Matthew R Rauch
for State Traffic Engineer

DATE 3/10/2024 PLATE NO. W12-52.8

PROJECT NO: | HWY: | COUNTY: | SHEET NO: 160 | E

NOTES

1. Sign is Type II - Type F Reflective
2. Color:
   Background - Orange
   Message - Black
3. Message Series - C
4. Corners may be square or rounded when base material is plywood but borders shall be rounded as shown. When base material is metal, the corners and borders shall be rounded.

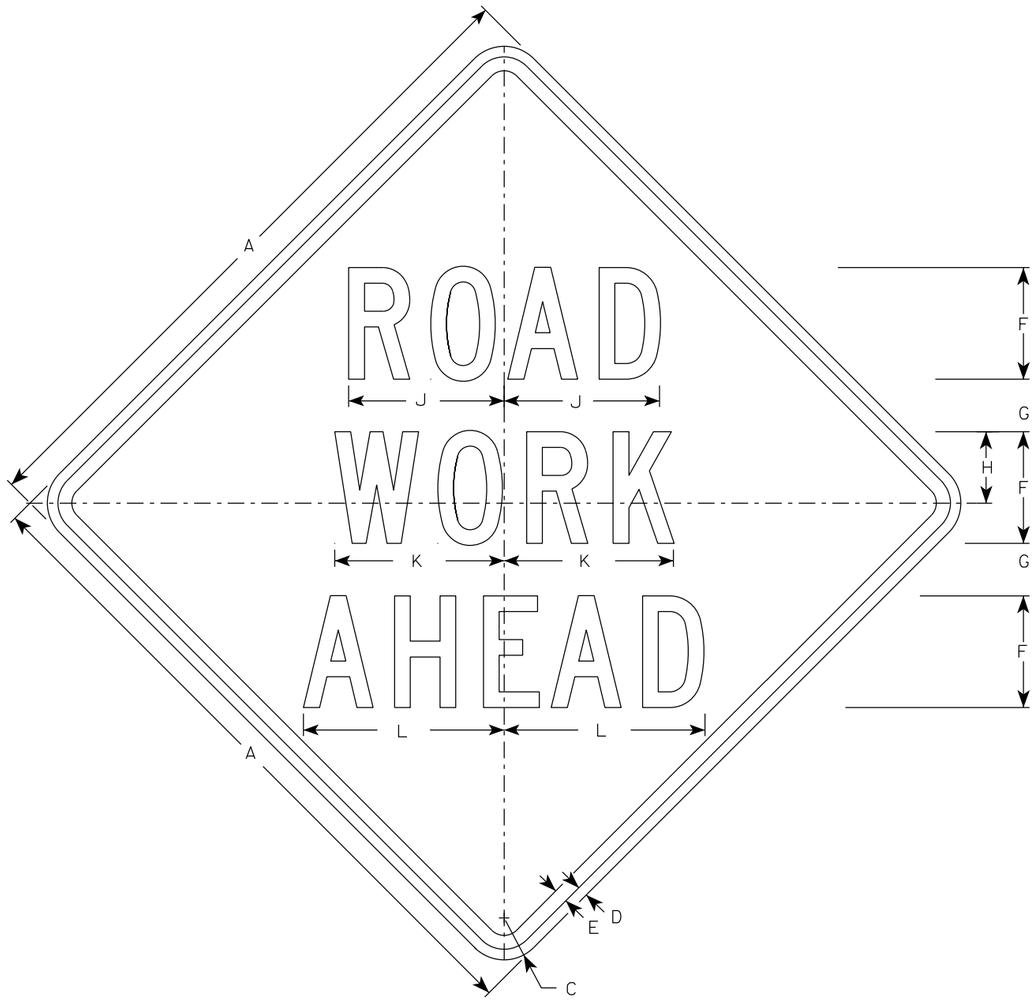

W20-1A

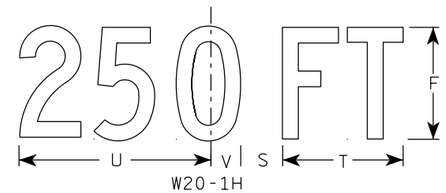

W20-1H

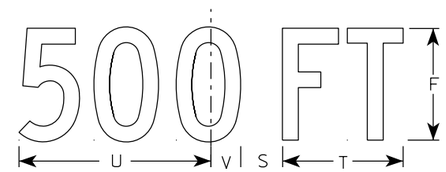

W20-1D

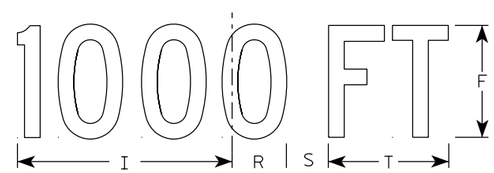

W20-1C

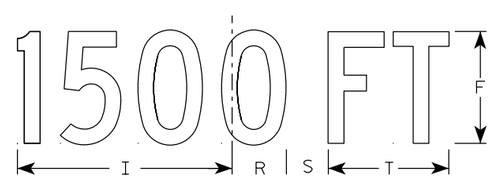

W20-1B

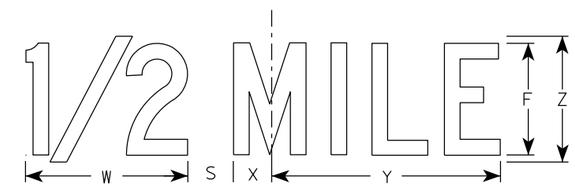

W20-1G

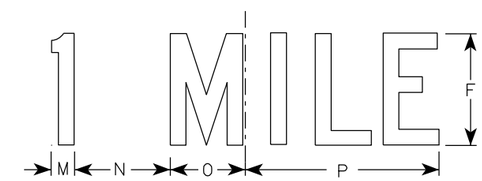

W20-1F

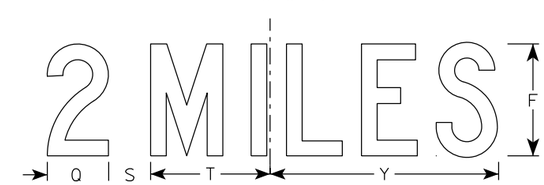

W20-1E

SIZE	A	B	C	D	E	F	G	H	I	J	K	L	M	N	O	P	Q	R	S	T	U	V	W	X	Y	Z	Area sq. ft.
1	36		2 1/4	5/8	3/4	5	2 5/8	3 1/4	10 1/8	7	7 5/8	8 7/8	1 1/8	4 1/2	3 1/2	9	3 1/4	2 1/2	2 1/4	5 5/8	9	1 3/8	8	1 3/4	10 3/4	6	9.0
2S	48		3	3/4	1	8	3 3/4	5 1/8	15 3/8	11 1/8	12 1/8	14 3/8	1 5/8	6 7/8	5 3/8	13 7/8	4 3/8	3 7/8	3	8 5/8	13 3/4	2 1/8	11 7/8	2 3/4	16 3/8	9	16.0
2M	48		3	3/4	1	8	3 3/4	5 1/8	15 3/8	11 1/8	12 1/8	14 3/8	1 5/8	6 7/8	5 3/8	13 7/8	4 3/8	3 7/8	3	8 5/8	13 3/4	2 1/8	11 7/8	2 3/4	16 3/8	9	16.0
3	48		3	3/4	1	8	3 3/4	5 1/8	15 3/8	11 1/8	12 1/8	14 3/8	1 5/8	6 7/8	5 3/8	13 7/8	4 3/8	3 7/8	3	8 5/8	13 3/4	2 1/8	11 7/8	2 3/4	16 3/8	9	16.0
4	48		3	3/4	1	8	3 3/4	5 1/8	15 3/8	11 1/8	12 1/8	14 3/8	1 5/8	6 7/8	5 3/8	13 7/8	4 3/8	3 7/8	3	8 5/8	13 3/4	2 1/8	11 7/8	2 3/4	16 3/8	9	16.0
5	48		3	3/4	1	8	3 3/4	5 1/8	15 3/8	11 1/8	12 1/8	14 3/8	1 5/8	6 7/8	5 3/8	13 7/8	4 3/8	3 7/8	3	8 5/8	13 3/4	2 1/8	11 7/8	2 3/4	16 3/8	9	16.0

STANDARD SIGN
W20-1A, B, C, D, E, F, G & H

WISCONSIN DEPT OF TRANSPORTATION

APPROVED Matthew R Rauch
for State Traffic Engineer

DATE 1/10/2024 PLATE NO. W20-1.12

PROJECT NO:

SHEET NO: 161 E

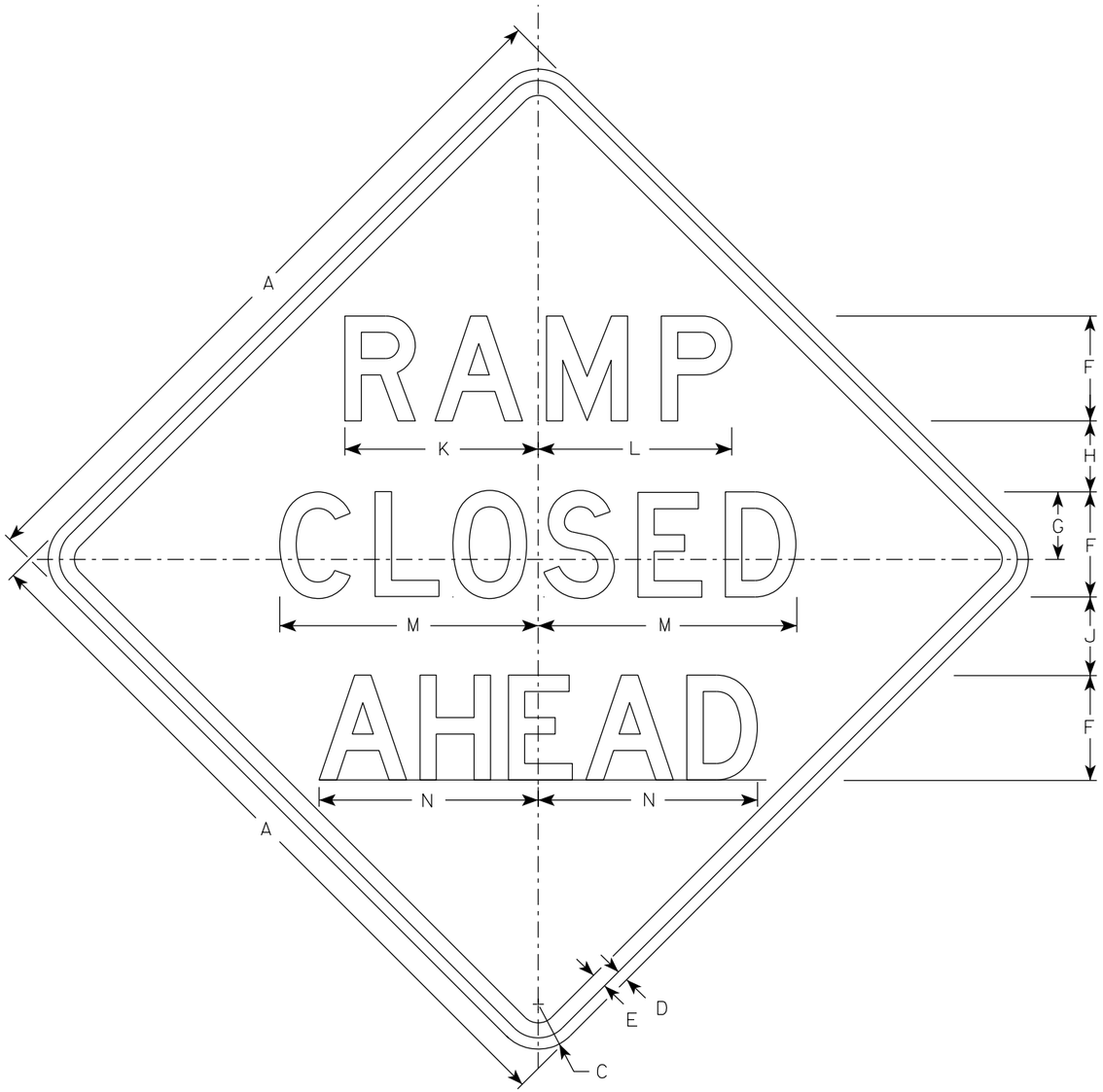

W20-53A

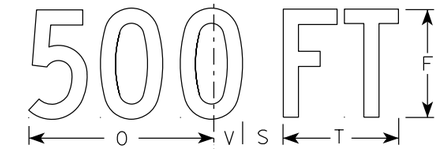

W20-53D

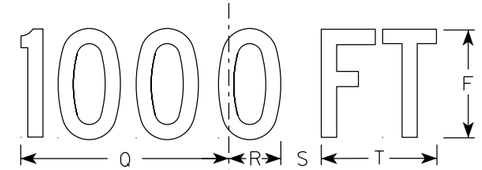

W20-53C

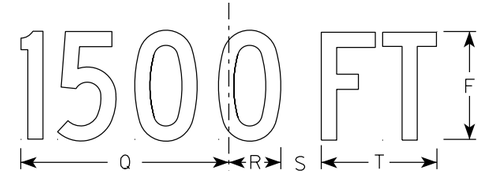

W20-53B

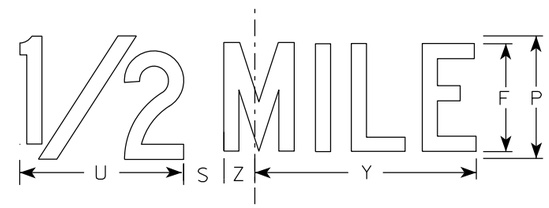

W20-53G

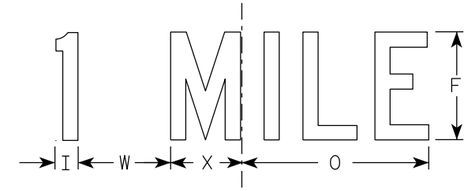

W20-53F

NOTES

1. Sign is Type II - Type F Reflective
2. Color:
   Background - Orange
   Message - Black
3. Message Series - see note 5
4. Corners may be square or rounded when base material is plywood but borders shall be rounded as shown. When base material is metal, the corners and borders shall be rounded.
5. Lines 1 and 2 are Series D.
   Line 3 is Series D for AHEAD and Series C for all other distances.

SIZE	A	B	C	D	E	F	G	H	I	J	K	L	M	N	O	P	Q	R	S	T	U	V	W	X	Y	Z	Area sq. ft.
1	36		2 1/4	5/8	3/4	5	3 3/8	3 1/2	1 1/8	4	9 1/4	9 1/4	12 1/2	11	9	6	10 1/8	2 1/2	1 7/8	5 5/8	8	1 3/8	4 1/2	3 1/2	10 3/4	1 3/4	9.0
2S	48		3	3/4	1	7	4 1/2	4 3/4	1 1/2	5 1/4	12 7/8	12 7/8	17 1/4	14 5/8	12	8	13 1/2	3 3/8	2 5/8	7 1/2	10 5/8	1 7/8	6	4 5/8	14 3/8	2 3/8	16.0
2M	48		3	3/4	1	7	4 1/2	4 3/4	1 1/2	5 1/4	12 7/8	12 7/8	17 1/4	14 5/8	12	8	13 1/2	3 3/8	2 5/8	7 1/2	10 5/8	1 7/8	6	4 5/8	14 3/8	2 3/8	16.0
3	48		3	3/4	1	7	4 1/2	4 3/4	1 1/2	5 1/4	12 7/8	12 7/8	17 1/4	14 5/8	12	8	13 1/2	3 3/8	2 5/8	7 1/2	10 5/8	1 7/8	6	4 5/8	14 3/8	2 3/8	16.0
4	48		3	3/4	1	7	4 1/2	4 3/4	1 1/2	5 1/4	12 7/8	12 7/8	17 1/4	14 5/8	12	8	13 1/2	3 3/8	2 5/8	7 1/2	10 5/8	1 7/8	6	4 5/8	14 3/8	2 3/8	16.0
5	48		3	3/4	1	7	4 1/2	4 3/4	1 1/2	5 1/4	12 7/8	12 7/8	17 1/4	14 5/8	12	8	13 1/2	3 3/8	2 5/8	7 1/2	10 5/8	1 7/8	6	4 5/8	14 3/8	2 3/8	16.0

STANDARD SIGN
W20-53A,B,C,D,F,G

WISCONSIN DEPT OF TRANSPORTATION

APPROVED Matthew R Rauch
for State Traffic Engineer

DATE 1/10/2024 PLATE NO. W20-53.2

7

7

PROJECT NO: | HWY: | COUNTY: | SHEET NO: E

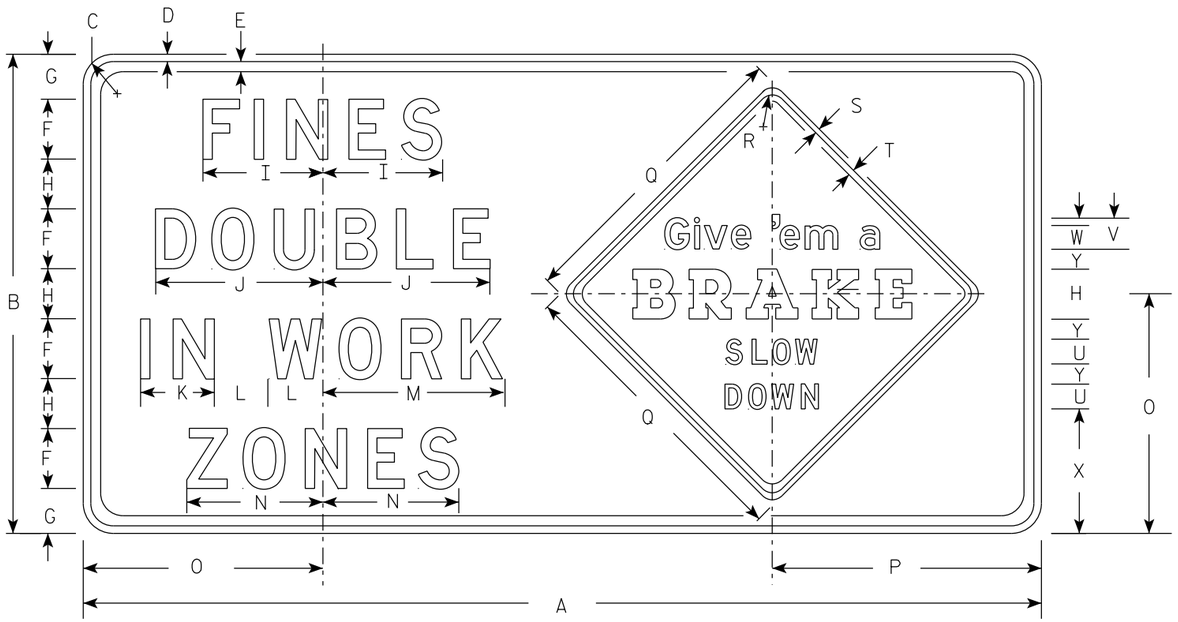

W21-62

NOTES

1. Sign is Type II - Type H Reflective
2. Color:
   Background - White - (See Note 5)
   Message - Black
3. Message Series -
   Fines Double Message - All lines are Series D
   Give 'em a Brake -
   Line one is Series E, line two is a Special Graphic Series and lines three and four are Series D.
4. The base material shall be plywood. Corners may be square or rounded, but borders shall be rounded as shown. The base material for Give 'em a Brake sign can be a seperate sheet of aluminum with the corners and borders rounded as shown. This seperate panel shall then be attached to the plywood with aluminum or stainless steel sheet metal screws.
5. Background for the Give 'em a Brake sign shall be Type F reflective orange.

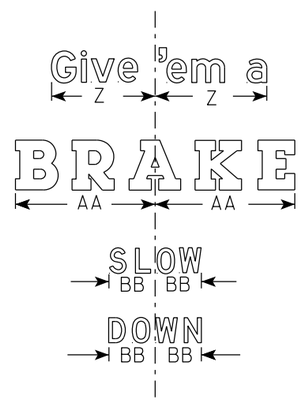

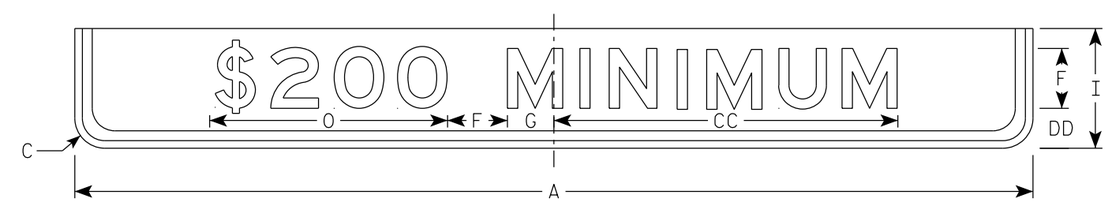

W21-62P

SIZE	A	B	C	D	E	F	G	H	I	J	K	L	M	N	O	P	Q	R	S	T	U	V	W	X	Y	Z	AA	BB	CC	DD	Area sq. ft.
1																															
2S																															
2M																															
3	96	48	3	¾	1	6	4 ½	5	12	16 ¾	7 ⅜	5 ½	18 ¼	13 ⅝	24	27	30	1 ⅜	½	⅝	2 ½	3 ⅛	2 ⅜	12 ½	2	10 ¾	14	4 ⅝	34 ½	4	32.0
4																															
5																															

STANDARD SIGN
W21-62

WISCONSIN DEPT OF TRANSPORTATION

APPROVED Matthew R Rauch
For State Traffic Engineer

DATE 3/12/2024 PLATE NO. W21-62.6

PROJECT NO: | HWY: | COUNTY: | SHEET NO: | E

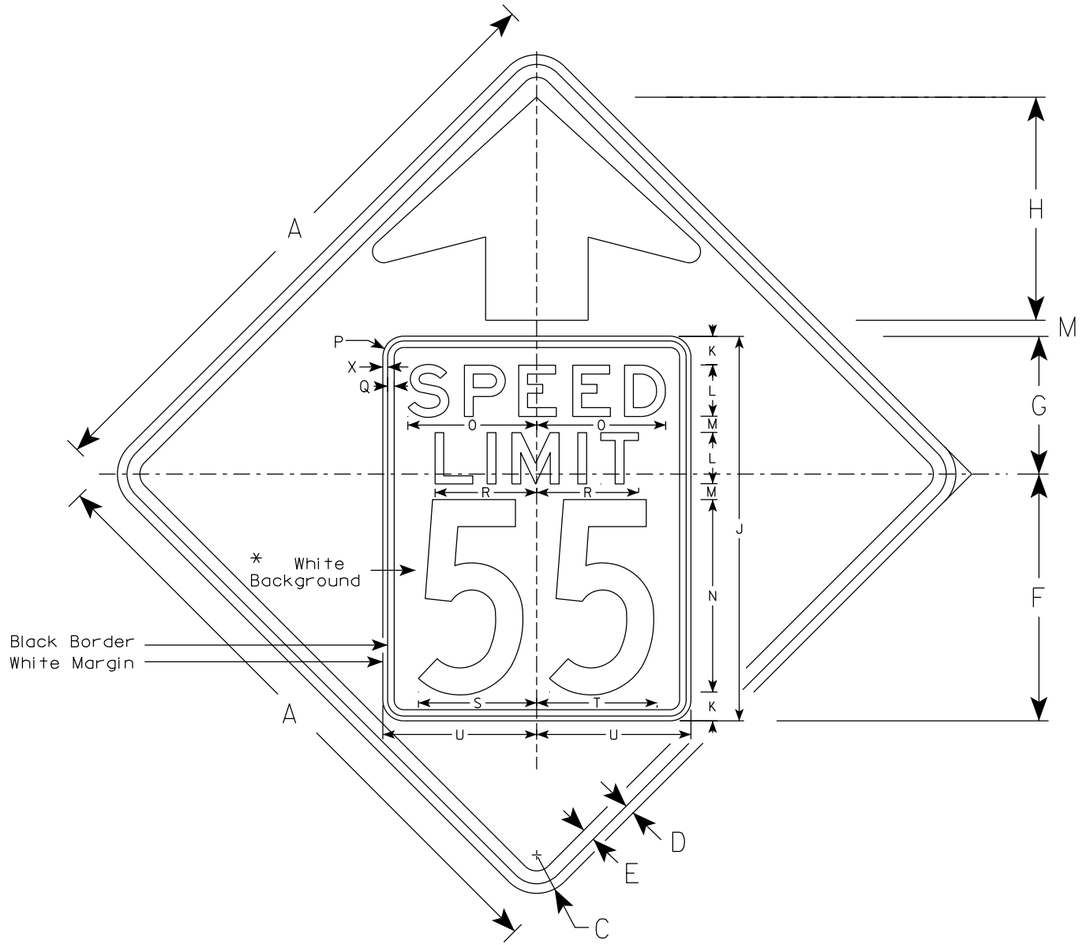

W03-5

NOTES

1. Sign is Type II - Type F Reflective
2. Color: *
   Background - ORANGE*
   Message - BLACK
3. Message Series - C for numbers Series E for wording
4. Substitute appropriate numerals and optically adjust spacing to achieve proper balance

*Speed Limit Sign shall have a White Background

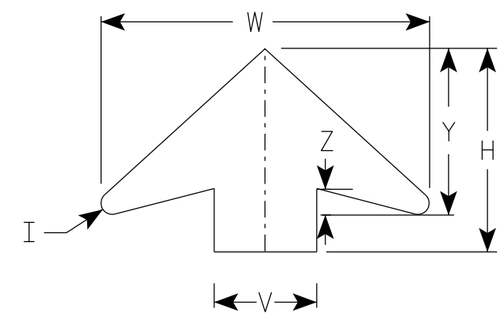

ARROW DETAIL

SIZE	A	B	C	D	E	F	G	H	I	J	K	L	M	N	O	P	Q	R	S	T	U	V	W	X	Y	Z	Area sq. ft.
1	36		2 1/4	5/8	3/4	14 1/2	9 1/2	11 1/2	5/8	24	2	3	1	12	7 1/8	1 1/2	3/8	5 3/4	7 1/4	7 1/8	9	6	19 1/4	3/8	9 3/4	1 5/8	9.0
2S	48		3	3/4	1	19 1/4	10 3/4	17 3/8	7/8	30	2 1/4	4	1 1/4	15	10	1 5/8	1/2	8	9 1/4	9 3/8	12	8	25 5/8	3/8	13	2	16.0
2M	48		3	3/4	1	19 1/4	10 3/4	17 3/8	7/8	30	2 1/4	4	1 1/4	15	10	1 5/8	1/2	8	9 1/4	9 3/8	12	8	25 5/8	3/8	13	2	16.0
3	48		3	3/4	1	19 1/4	10 3/4	17 3/8	7/8	30	2 1/4	4	1 1/4	15	10	1 5/8	1/2	8	9 1/4	9 3/8	12	8	25 5/8	3/8	13	2	16.0
4	48		3	3/4	1	19 1/4	10 3/4	17 3/8	7/8	30	2 1/4	4	1 1/4	15	10	1 5/8	1/2	8	9 1/4	9 3/8	12	8	25 5/8	3/8	13	2	16.0
5	48		3	3/4	1	19 1/4	10 3/4	17 3/8	7/8	30	2 1/4	4	1 1/4	15	10	1 5/8	1/2	8	9 1/4	9 3/8	12	8	25 5/8	3/8	13	2	16.0

STANDARD SIGN
W03-5

WISCONSIN DEPT OF TRANSPORTATION

APPROVED Matthew R Rauch
for State Traffic Engineer

DATE 1/24/2024 PLATE NO. W03-5.2

PROJECT NO: | SHEET NO: E

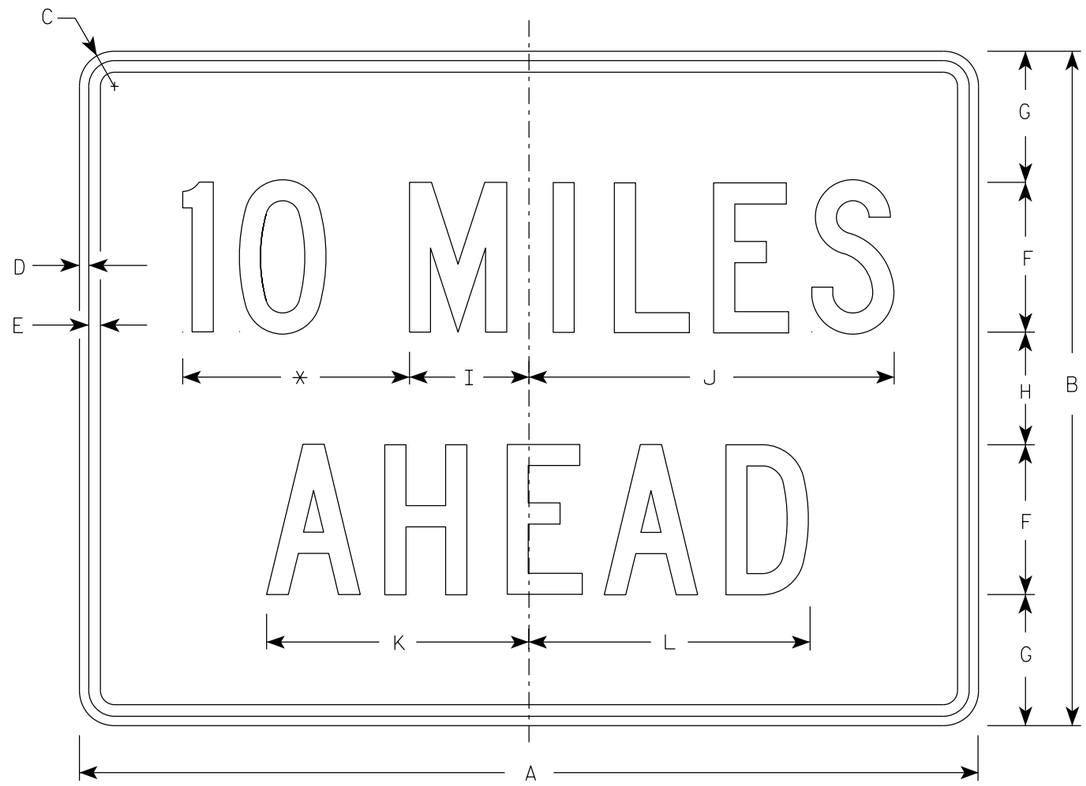

W057-52

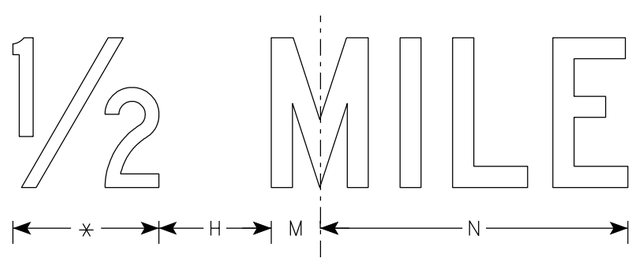

* See note 5

NOTES

1. Sign is Type II - Type F Reflective
2. Color:
   Background - Orange
   Message - Black
3. Message Series - C
4. Corners may be square or rounded when base material is plywood but borders shall be rounded as shown. When base material is metal, the corners and borders shall be rounded.
5. Substitute appropriate numerals to the nearest quarter mile and optically adjust spacing to achieve proper balance.

SIZE	A	B	C	D	E	F	G	H	I	J	K	L	M	N	O	P	Q	R	S	T	U	V	W	X	Y	Z	Area sq. ft.
1	36	24	1 1/2	3/8	1/2	6	4 1/2	3	4 3/4	14 5/8	10 5/8	11 3/8	2	12													6.0
2S	48	36	2 1/4	1/2	5/8	8	7	6	6 3/8	19 1/2	14	15	2 3/4	16 3/8													12.0
2M	48	36	2 1/4	1/2	5/8	8	7	6	6 3/8	19 1/2	14	15	2 3/4	16 3/8													12.0
3	48	36	2 1/4	1/2	5/8	8	7	6	6 3/8	19 1/2	14	15	2 3/4	16 3/8													12.0
4	48	36	2 1/4	1/2	5/8	8	7	6	6 3/8	19 1/2	14	15	2 3/4	16 3/8													12.0
5	48	36	2 1/4	1/2	5/8	8	7	6	6 3/8	19 1/2	14	15	2 3/4	16 3/8													12.0

STANDARD SIGN
W057-52

WISCONSIN DEPT OF TRANSPORTATION

APPROVED Matthew R Rauch
for State Traffic Engineer

DATE 2/1/2024 PLATE NO. W057-52.3

PROJECT NO: | HWY: | COUNTY: | SHEET NO: 165 | E

(X) INDICATES WING NUMBER

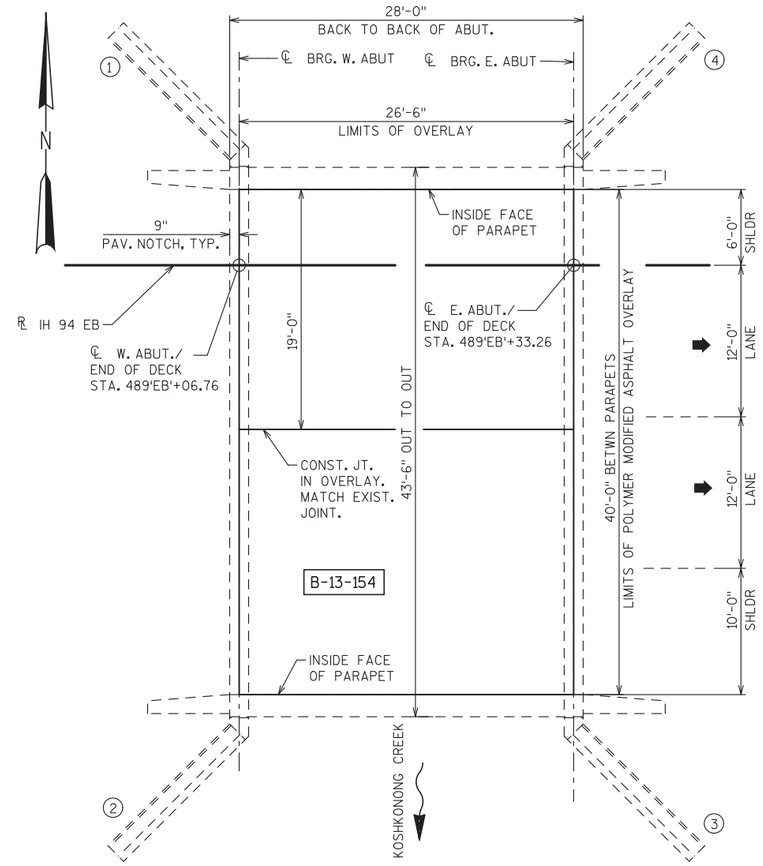

PLAN

(SINGLE SPAN STEEL ROLLED BEAM BRIDGE)

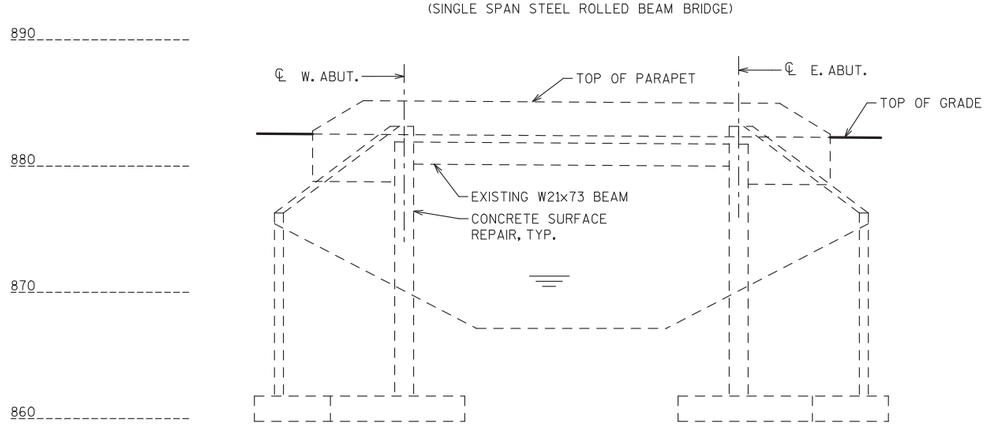

ELEVATION

(LOOKING NORTH)

DESIGN DATA

LIVE LOAD

DESIGN LOAD: HS20
INVENTORY RATING: HS22
OPERATING RATING: HS38
WISCONSIN STANDARD PERMIT VEHICLE LOAD
(WIS-SPV):.....240 KIPS

MATERIAL PROPERTIES

CONCRETE MASONRY
CONCRETE SURFACE REPAIR... f'c = 4,000 psi

TRAFFIC DATA

IH 94

A.D.T. (2021) = 41,400
A.D.T. (2047) = 59,800
DESIGN SPEED = 70 MPH

GENERAL NOTES

DRAWINGS SHALL NOT BE SCALED.

EXISTING POLYMER MODIFIED ASPHALTIC OVERLAY SHALL BE COMPLETELY REMOVED FROM THE BRIDGE DECK UNDER THE BID ITEM "REMOVING ASPHALTIC CONCRETE DECK OVERLAY B-13-154." REMOVAL SHALL INCLUDE A MINIMUM OF 1/4 INCH OF THE EXISTING CONCRETE OVERLAY, EXCEPT FOR A WIDTH OF 4 INCHES ON EITHER SIDE OF THE EXISTING COMPRESSION SEAL AT THE ABUTMENTS.

DIMENSIONS AND ELEVATIONS SHOWN ARE BASED ON THE ORIGINAL STRUCTURE PLANS.

AREAS OF "PREPARATION DECKS TYPE 1" SHALL BE DEFINED BY A 1 INCH DEEP SAWCUT.

ANY EXCAVATION REQUIRED TO COMPLETE THE OVERLAY AT THE ABUTMENTS TO BE CONSIDERED INCIDENTAL TO THE BID ITEM "HMA OVERLAY POLYMER-MODIFIED".

PLANS OF THE EXISTING BRIDGE ARE ON FILE AND ARE AVAILABLE FOR INSPECTION AT THE WISCONSIN DEPARTMENT OF TRANSPORTATION, SOUTH WEST REGION.

PREPARATION DECKS TYPE 1, PREPARATION DECKS TYPE 2, AND CONCRETE SURFACE REPAIR AREAS ARE BASED ON THE PLANS AND AS DETERMINED BY THE ENGINEER. DECK PREPARATION AREAS SHALL BE FILLED WITH "RAPID SET DECK REPAIR".

FOR THE PURPOSE OF PAYMENT, DECK INCLUDES EXISTING DECK AND EXISTING CONCRETE OVERLAY.

THE PLAN QUANTITY FOR THE BID ITEM "HMA OVERLAY POLYMER- MODIFIED" IS BASED ON THE AVERAGE OVERLAY THICKNESS.

PROFILE GRADE LINE SHALL BE DETERMINED IN THE FIELD BASED ON A MINIMUM OVERLAY THICKNESS OF 2 INCHES PLACED ABOVE THE EXISTING CONCRETE OVERLAY. EXPECTED AVERAGE OVERLAY THICKNESS IS 2 1/2 INCHES. IF EXPECTED AVERAGE OVERLAY THICKNESS IS EXCEEDED BY MORE THAN 1/2 INCH, CONTACT THE STRUCTURES DESIGN SECTION.

SEE ASBESTOS INSPECTION REPORTS FOR LOCATIONS OF ASBESTOS CONTAINING MATERIALS ON THE STRUCTURE.

IH 94 EB WILL BE CLOSED TO TRAFFIC DURING CONSTRUCTION ONE LANE AT A TIME DURING NIGHT HOURS. SEE ROADWAY PLANS FOR TRAFFIC CONTROL DETAILS.

LIST OF DRAWINGS

WISCONSIN
BABU D. THENGANAKUNNEL
E-35905
MILWAUKEE, WI
PROFESSIONAL ENGINEER
4-6-2023

STRUCTURE DESIGN CONTACTS

BUREAU OF STRUCTURES CONTACT:
AARON BONK
(608) 261-0261

CONSULTANT CONTACT:
BABU THENGANAKUNNEL
(414) 292-4506

STATE PROJECT NUMBER

1066-03-75

NO.	DATE	REVISION	BY

BLOOM COMPANIES, LLC
Infrastructure Innovation and Ingenuity
10501 W. Research Drive • Milwaukee, WI 53226
Phone: (414) 771-3390 Fax: (414) 771-4490

STATE OF WISCONSIN
DEPARTMENT OF TRANSPORTATION

ACCEPTED SDR 05/01/23
CHIEF STRUCTURES DESIGN ENGINEER DATE

STRUCTURE B-13-154

IH 94 EB OVER KOSHKONONG CREEK

COUNTY	TOWN
DANE	SUN PRAIRIE

DESIGN SPEC. REHABILITATION N/A

DESIGNED BY	DESIGN CK'D.	DRAWN BY	PLANS CK'D.
BDT	DS	TAL	DS

POLYMER MODIFIED ASPHALTIC OVERLAY

SHEET 1 OF 2

166

8

8

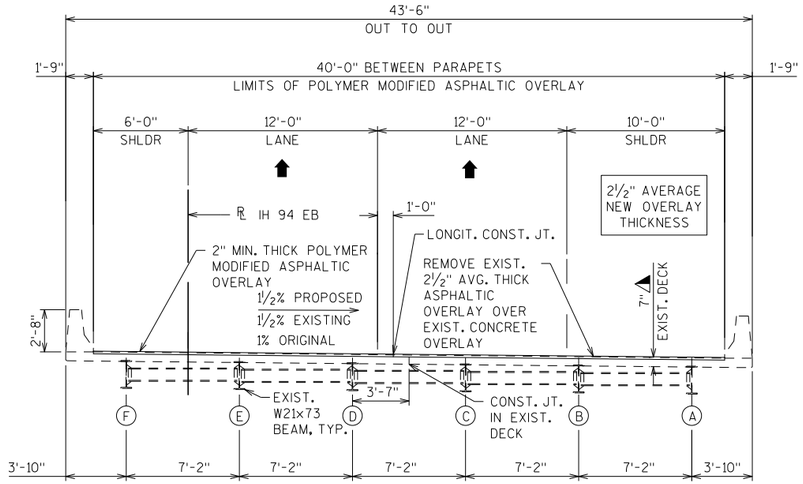

SECTION THRU ROADWAY

(LOOKING EAST)

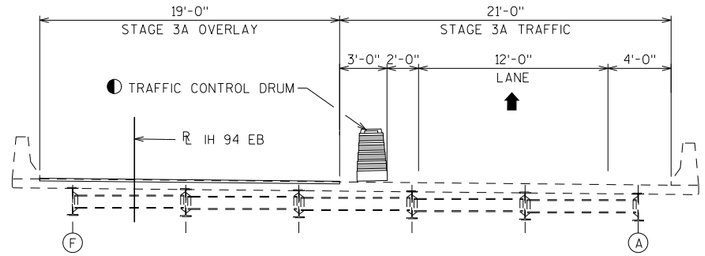

CONSTRUCTION STAGE 3A

(LOOKING EAST)

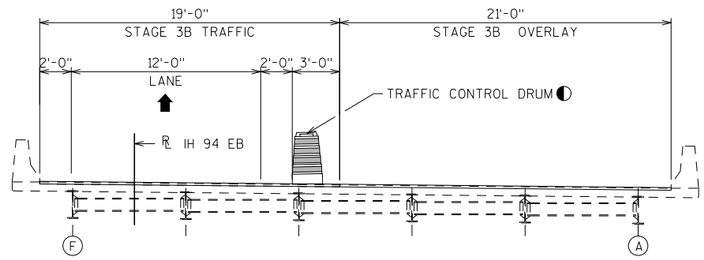

CONSTRUCTION STAGE 3B

(LOOKING EAST)

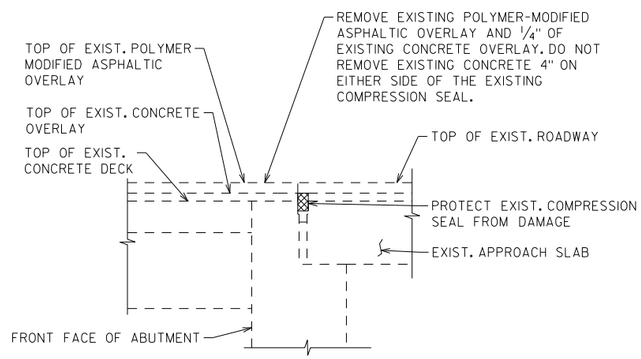

TYPICAL REMOVAL DETAIL

TOTAL ESTIMATED QUANTITIES

ITEM NUMBER	BID ITEMS	UNIT	W. ABUT.	SUPER	E. ABUT.	TOTAL
509.0301	PREPARATION DECKS TYPE 1	SY		6		6
509.0302	PREPARATION DECKS TYPE 2	SY		3		3
509.0310.S	SAWING PAVEMENT DECK PREPARATION AREAS	LF		64		64
509.1500	CONCRETE SURFACE REPAIR	SF	15	10	15	40
509.3500.S	HMA OVERLAY POLYMER-MODIFIED	TON		20		20
509.9010.S	REMOVING ASPHALTIC CONCRETE DECK OVERLAY B-13-154	SY		118		118
SPV.0035.01	RAPID SET DECK REPAIR	CY		2		2

ALL ITEMS ARE CATEGORY 0020

LEGEND

◐ TRAFFIC CONTROL DRUM IS PAID UNDER ROADWAY BID ITEMS.

◭ 7" IS ORIGINAL DECK THICKNESS AND DOES NOT INCLUDE REDUCTION IN DECK THICKNESS DUE TO DECK CLEANING PERFORMED DURING PREVIOUS CONCRETE OVERLAY.

NO.	DATE	REVISION	BY

STATE OF WISCONSIN
DEPARTMENT OF TRANSPORTATION

STRUCTURE B-13-154

DRAWN BY TAL PLANS CK'D. BDT

TYPICAL SECTION

SHEET 2 OF 2

8

8

(X) INDICATES WING NUMBER

STATE PROJECT NUMBER
1066-03-75

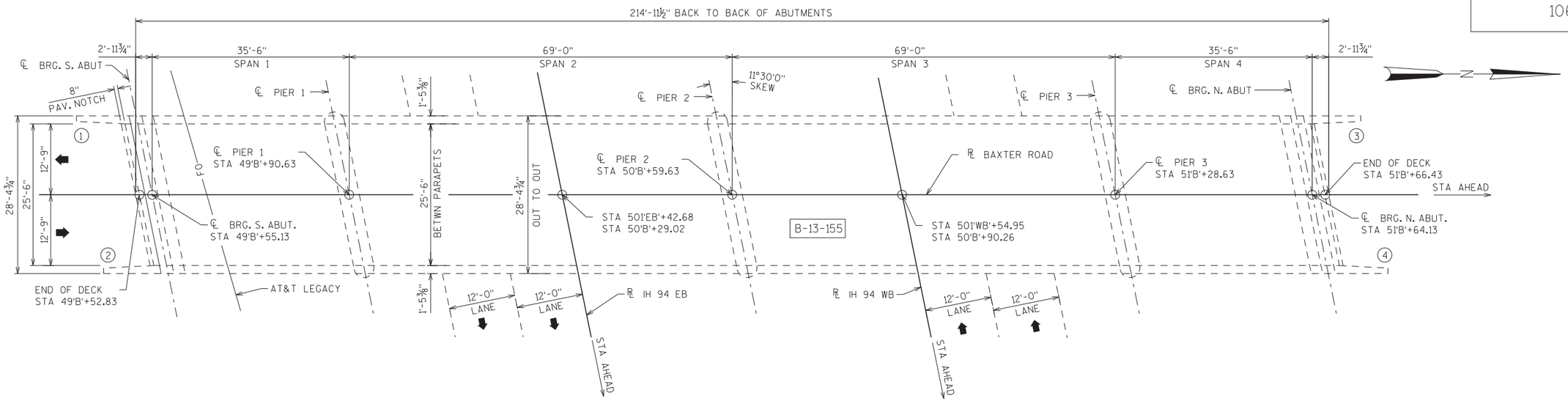

PLAN

(4 SPAN - 36" PRESTRESSED GIRDERS)

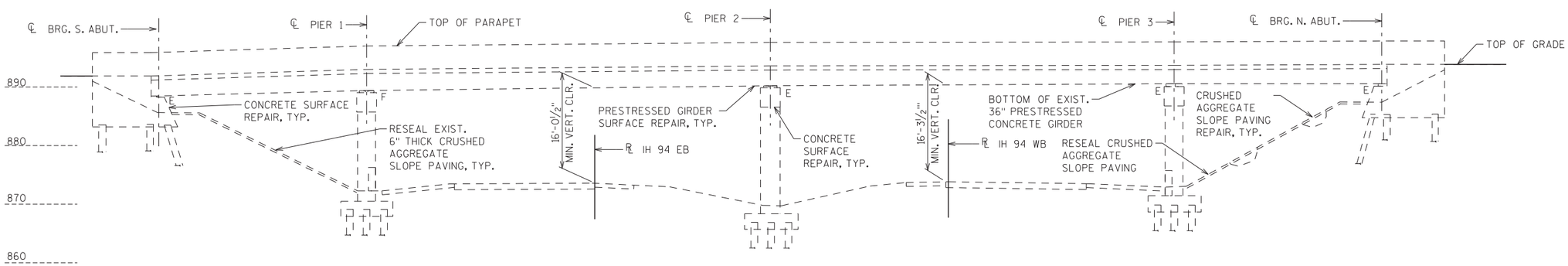

ELEVATION

(LOOKING WEST)

8

DESIGN DATA

LIVE LOAD

DESIGN LOAD: H15*
INVENTORY RATING: HS15*
OPERATIONAL RATING: HS40*
WISCONSIN STANDARD PERMIT VEHICLE LOAD
(WIS-SPV):.....250 KIPS*

* TAKEN FROM HSI 3/21/2022

MATERIAL PROPERTIES

CONCRETE MASONRY
SURFACE REPAIR.....f'c = 4,000 psi

TRAFFIC DATA

BAXTER ROAD

A.D.T. (2010) = <100
A.D.T. (2047) = <100
DESIGN SPEED = 50 MPH

IH 94

A.D.T. (2009) = 38,900
A.D.T. (2047) = 59,800
DESIGN SPEED = 70 MPH

LIST OF DRAWINGS

1. GENERAL PLAN AND ELEVATION
2. TYPICAL SECTION AND GENERAL NOTES

WISCONSIN
BABU D. THENGANAKUNNEL
E-35906
MILWAUKEE, WI
PROFESSIONAL ENGINEER
3-1-2023

STRUCTURE DESIGN CONTACTS

BUREAU OF STRUCTURES CONTACT:
AARON BONK
(608) 261-0261

CONSULTANT CONTACT:
BABU THENGANAKUNNEL
(414) 292-4506

NO.	DATE	REVISION	BY

BLOOM COMPANIES, LLC
Infrastructure Innovation and Ingenuity
10501 W. Research Drive • Milwaukee, WI 53226
Phone: (414) 771-3390 Fax: (414) 771-4490

STATE OF WISCONSIN
DEPARTMENT OF TRANSPORTATION

ACCEPTED SDR 05/01/23
CHIEF STRUCTURES DESIGN ENGINEER DATE

STRUCTURE B-13-155

BAXTER ROAD OVER IH 94

COUNTY	TOWN
DANE	SUN PRAIRIE/ COTTAGE GROVE

DESIGN SPEC. REHABILITATION N/A

DESIGNED BY	DESIGN CK'D.	DRAWN BY	PLANS CK'D.
BDT	DS	TAL	DS

GENERAL PLAN AND ELEVATION

SHEET 1 OF 2

168

8

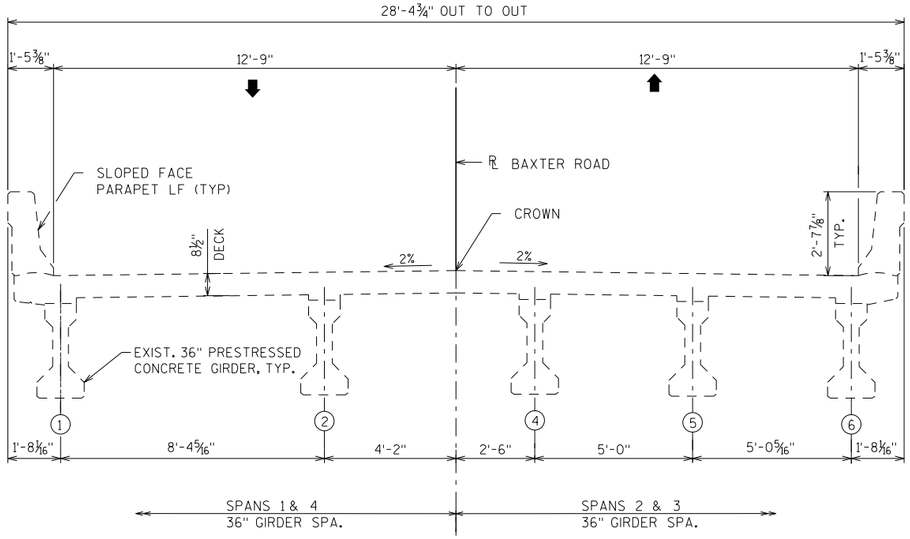

SECTION THRU ROADWAY

(LOOKING NORTH)

GENERAL NOTES

DRAWINGS SHALL NOT BE SCALED.

ALL STATIONS AND ALL ELEVATIONS ARE IN FEET.

ALL DIMENSIONS ARE IN FEET AND INCHES.

DIMENSIONS AND ELEVATIONS SHOWN ARE BASED ON THE ORIGINAL STRUCTURE PLANS, UNLESS SHOWN OTHERWISE.

ALL CONCRETE REMOVAL LIMITS SHALL BE DEFINED BY A ½ INCH DEEP SAWCUT.

PLANS OF THE EXISTING BRIDGE ARE ON FILE AND ARE AVAILABLE FOR INSPECTION AT THE WISCONSIN DEPARTMENT OF TRANSPORTATION, SOUTH WEST REGION.

CONCRETE SURFACE REPAIR, PRESTRESSED GIRDER SURFACE REPAIR, AND SLOPE PAVING REPAIR CRUSHED AGGREGATE REQUIRED IN AREAS DESIGNATED BY THE FIELD ENGINEER. QUANTITIES SHOWN ARE APPROXIMATE AND UNDISTRIBUTED.

PRESTRESSED GIRDER SURFACE REPAIR AREA DOES NOT INCLUDE ANY AREA DIRECTLY ABOVE TRAFFIC LANES.

RESEAL EXISTING CRUSHED AGGREGATE SLOPE PAVING AT BOTH ABUTMENTS.

AREA COVERED BY SLOPE PAVING REPAIR CRUSHED AGGREGATE WILL NOT BE MEASURED FOR RESEALING CRUSHED AGGREGATE SLOPE PAVING.

BAXTER ROAD WILL BE CLOSED TO TRAFFIC DURING CONSTRUCTION. IH 94 WILL BE CLOSED TO TRAFFIC ONE LANE AT A TIME DURING NIGHT HOURS. SEE ROADWAY PLANS FOR TRAFFIC CONTROL DETAILS.

TOTAL ESTIMATED QUANTITIES

ITEM NUMBER	BID ITEMS	UNIT	SOUTH ABUT.	PIER 1	PIER 2	PIER 3	NORTH ABUT.	SUPER	TOTAL
509.1500	CONCRETE SURFACE REPAIR	SF	5	12	60	4	10	5	96
604.9010.S	SLOPE PAVING REPAIR CRUSHED AGGREGATE	CY	-	-	-	-	2	-	2
604.9015.S	RESEAL CRUSHED AGGREGATE SLOPE PAVING	SY	145	-	-	-	142	-	287
SPV.0165.01	PRESTRESSED GIRDER SURFACE REPAIR	SF	-	-	-	-	-	12	12

ALL ITEMS ARE CATEGORY 0030

8

8

NO.	DATE	REVISION	BY

STATE OF WISCONSIN
DEPARTMENT OF TRANSPORTATION

STRUCTURE B-13-155

DRAWN BY TAL | PLANS CK'D. BDT

TYPICAL SECTION AND GENERAL NOTES

SHEET 2 OF 2

(X) INDICATES WING NUMBER

STATE PROJECT NUMBER
1066-03-75

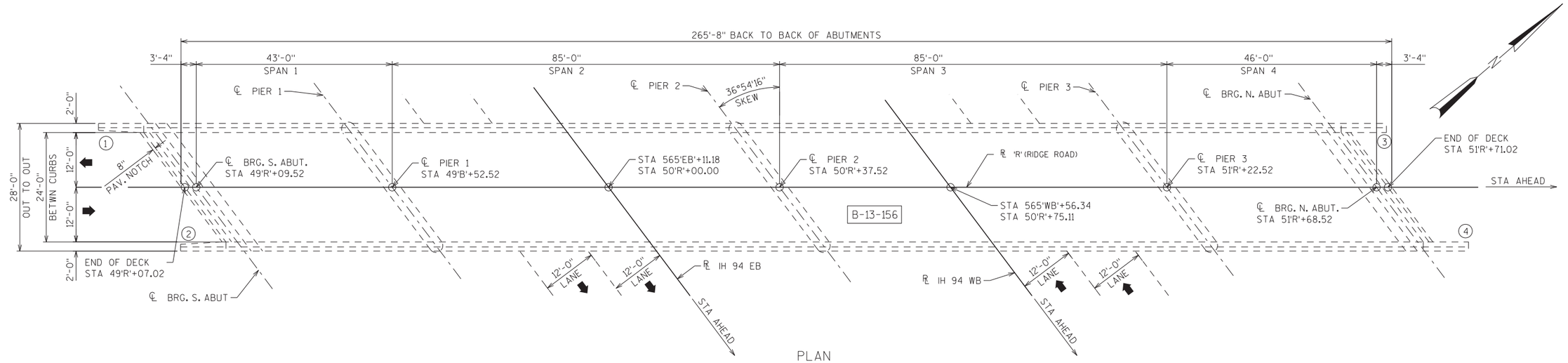

PLAN
(4 SPAN - STEEL GIRDER BRIDGE)

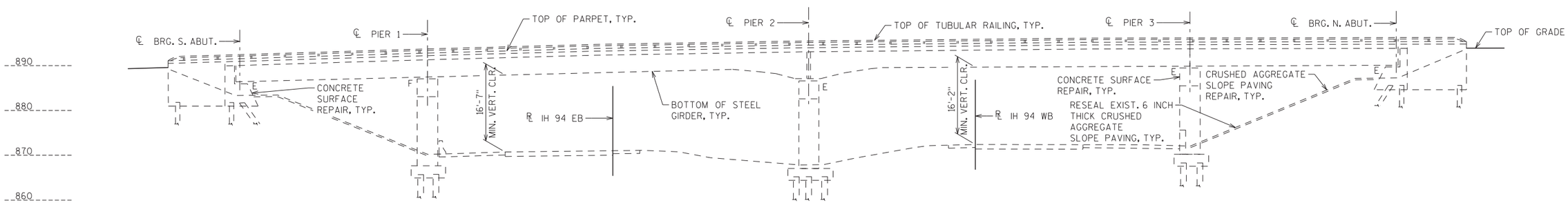

ELEVATION
(LOOKING WEST)

8

DESIGN DATA

LIVE LOAD

DESIGN LOAD: HS15*
INVENTORY RATING: HS17*
OPERATING RATING: HS28*
WISCONSIN STANDARD PERMIT VEHICLE LOAD (WIS-SPV):.....220 KIPS*

* TAKEN FROM HSI 3/22/2022

MATERIAL PROPERTIES

CONCRETE MASONRY
DECK REPAIR.....f'c = 4,000 psi
ALL OTHER..... f'c = 3,500 PSI

TRAFFIC DATA

RIDGE ROAD

A.D.T. (2008) = 500
A.D.T. (2028) = 500
DESIGN SPEED = 45 MPH

IH 94

A.D.T. (2009) = 38,900
A.D.T. (2047) = 59,800
DESIGN SPEED = 70 MPH

LIST OF DRAWINGS

1. GENERAL PLAN AND ELEVATION
2. TYPICAL SECTION AND GENERAL NOTES
3. DECK CONDITION ASSESSMENT SURVEY

WISCONSIN
BABU D. THENGANAKUNNEL
E-35906
MILWAUKEE, WI
PROFESSIONAL ENGINEER
3-1-2023

STRUCTURE DESIGN CONTACTS

BUREAU OF STRUCTURES CONTACT:
AARON BONK
(608) 261-0261

CONSULTANT CONTACT:
BABU THENGANAKUNNEL
(414) 292-4506

NO.	DATE	REVISION	BY

BLOOM COMPANIES, LLC
Infrastructure Innovation and Ingenuity
10501 W. Research Drive • Milwaukee, WI 53226
Phone: (414) 771-3390 Fax: (414) 771-4490

STATE OF WISCONSIN
DEPARTMENT OF TRANSPORTATION

ACCEPTED SDR 05/04/23
CHIEF STRUCTURES DESIGN ENGINEER DATE

STRUCTURE B-13-156

RIDGE ROAD OVER IH 94

COUNTY	TOWN
DANE	SUN PRAIRIE/COTTAGE GROVE

DESIGN SPEC. REHABILITATION N/A

DESIGNED BY	DESIGN CK'D.	DRAWN BY	PLANS CK'D.
BDT	DS	TAL	DS

GENERAL PLAN AND ELEVATION

SHEET 1 OF 3

170

8

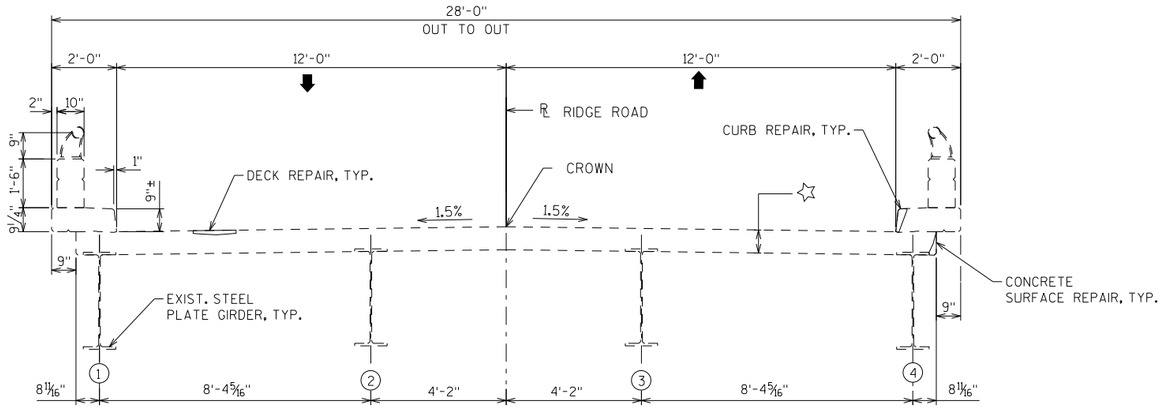

TYPICAL SECTION THRU ROADWAY

(LOOKING NORTH)

☆ EXISTING 7" DECK AND 1½" CONCRETE OVERLAY

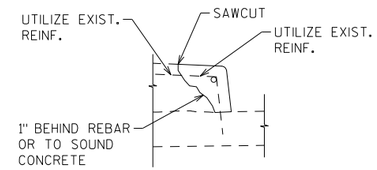

CURB REPAIR DETAIL

GENERAL NOTES

DRAWINGS SHALL NOT BE SCALED.

ALL STATIONS AND ALL ELEVATIONS ARE IN FEET.

ALL DIMENSIONS ARE IN FEET AND INCHES.

BEVEL EXPOSED EDGES OF CONCRETE 3/4 INCH UNLESS OTHERWISE NOTED.

AT CURB REPAIR, REMOVE CONCRETE TO SOUND CONCRETE OR AT LEAST 1" BEHIND EXISTING REINFORCING STEEL.

DIMENSIONS AND ELEVATIONS SHOWN ARE BASED ON THE ORIGINAL STRUCTURE PLANS, UNLESS SHOWN OTHERWISE.

ALL CONCRETE REMOVAL LIMITS SHALL BE DEFINED BY A 1/2 INCH DEEP SAWCUT.

PLANS OF THE EXISTING BRIDGE ARE ON FILE AND ARE AVAILABLE FOR INSPECTION AT THE WISCONSIN DEPARTMENT OF TRANSPORTATION, SOUTH WEST REGION.

PERFORM CRUSHED AGGEGATE SLOPE PAVING REPAIR AND RESEALING OF CRUSHED AGGREGATE SLOPE PAVING AT BOTH ABUTMENTS. LIMITS TO BE DETERMINED BY THE FIELD ENGINEER.

AREA COVERED BY SLOPE PAVING REPAIR CRUSHED AGGREGATE WILL NOT BE MEASURED FOR RESEALING CRUSHED AGGREGATE SLOPE PAVING.

PREPARATION DECKS TYPE 1, PREPARATION DECKS TYPE 2, CURB REPAIR, AND CONCRETE SURFACE REPAIR REQUIRED IN AREAS DESIGNATED BY THE FIELD ENGINEER. QUANTITIES SHOWN ARE APPROXIMATE AND UNDISTRIBUTED.

DECK PREPARATION, AND CURB REPAIR SHALL BE FILLED WITH "CONCRETE MASONRY DECK REPAIR".

FOR THE PURPOSE OF PAYMENT, DECK INCLUDES EXISTING DECK AND CONCRETE OVERALY.

SEE ASBESTOS INSPECTION REPORT FOR LOCATIONS OF ASBESTOS CONTAINING MATERIAL ON THE STRUCTURE.

RIDGE ROAD WILL BE CLOSED TO TRAFFIC DURING CONSTRUCTION. IH 94 WILL BE CLOSED TO TRAFFIC ONE LANE AT A TIME DURING NIGHT HOURS. SEE ROADWAY PLANS FOR TRAFFIC CONTROL DETAILS.

TOTAL ESTIMATED QUANTITIES

ITEM NUMBER	BID ITEMS	UNIT	SOUTH ABUT.	PIER 1	PIER 2	PIER 3	NORTH ABUT.	SUPER	TOTAL
509.0301	PREPARATION DECKS TYPE 1	SY						85	85
509.0302	PREPARATION DECKS TYPE 2	SY						63	63
509.0310.S	SAWING PAVEMENT DECK PREPARATION AREAS	LF						1300	1300
509.1200	CURB REPAIR	LF						235	235
509.1500	CONCRETE SURFACE REPAIR	SF	12	10	18	10	16	81	147
509.2100.S	CONCRETE MASONRY DECK REPAIR	CY						10	10
604.9010.S	SLOPE PAVING REPAIR CRUSHED AGGREGATE	CY	1						1
604.9015.S	RESEAL CRUSHED AGGREGATE SLOPE PAVING	SY	178				177		355

ALL ITEMS ARE CATEGORY 0040

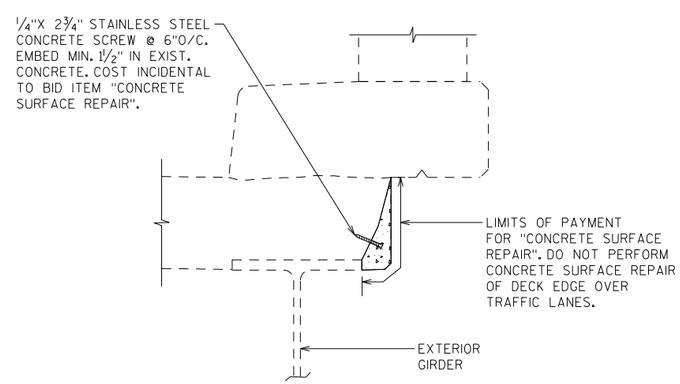

CONCRETE SURFACE REPAIR OF DECK EDGE

NO.	DATE	REVISION	BY

STATE OF WISCONSIN
DEPARTMENT OF TRANSPORTATION

STRUCTURE B-13-156

DRAWN BY TAL | PLANS CK'D. BDT

TYPICAL SECTION AND GENERAL NOTES

8

8

STATE PROJECT NUMBER
1066-03-75

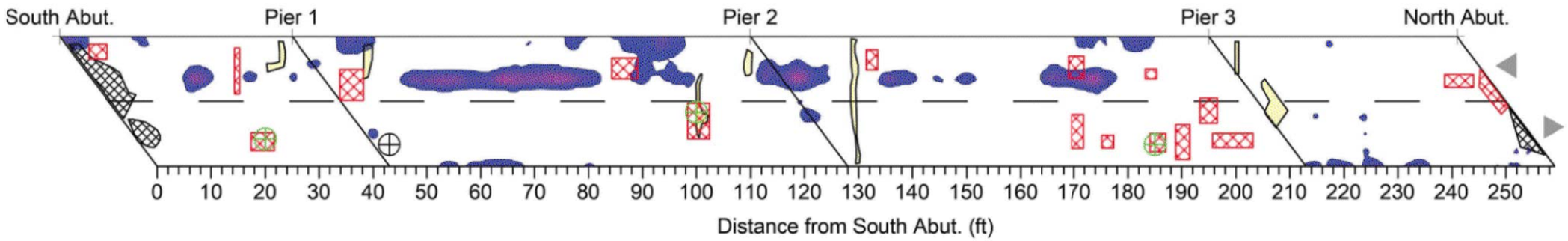

Conditions Legend		Orientation		General Information
Rebar-level deterioration detected by GPR	Delamination detected by IR	N		Bridge ID: B-13-156 Ridge RD over IH 94
Increasing severity -->	Patching/ Spalling			Analyzed by: SB Reviewed by: AC Completed: 10/07/19
IE (delam)	Undetectable Conditions			
IE (no delam)	Potential Full-Depth Area	Direction of traffic		Sheet 1 of 1

INFRASENSE

NO.	DATE	REVISION	BY

STATE OF WISCONSIN
DEPARTMENT OF TRANSPORTATION

STRUCTURE B-13-156

DRAWN BY TAL | PLANS CK'D. BDT

DECK CONDITION ASSESSMENT SURVEY

SHEET 3 OF 3

FILE NAME: X:\BMI-3933 IH 94 Structure rehab\5_Designs\04_Structures_Bridges\current plans\B-13-156\B13156-03_Deck IR report.dgn
DATE: 11/18/2022 3:47:49 PM Plotted by: bthengom PEN TABLE: V8_STRUCTURAL_REV.TBL

8

8

STATE PROJECT NUMBER
1066-03-75

(X) INDICATES WING NUMBER

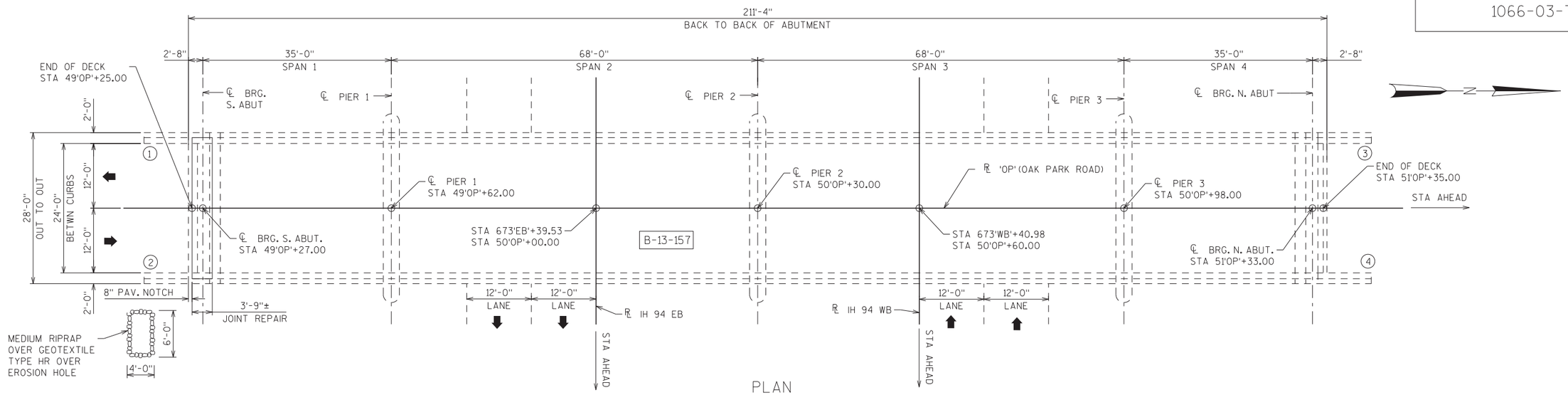

PLAN

(4 SPAN - 36" PRESTRESSED GIRDER BRIDGE)

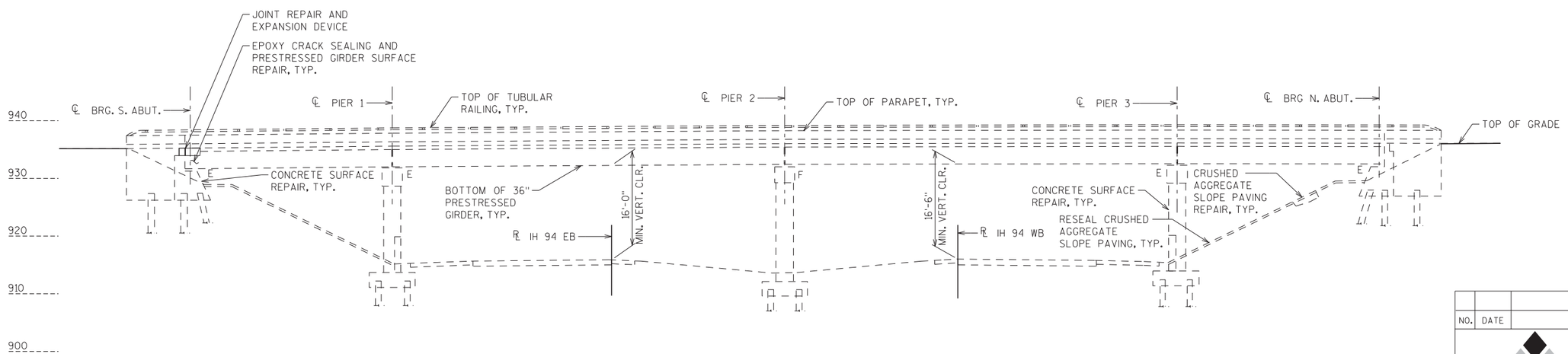

ELEVATION

(LOOKING WEST)

8

DESIGN DATA

LIVE LOAD

DESIGN LOAD: HS20*
INVENTORY RATING: HS11*
OPERATING RATING: HS30*
WISCONSIN STANDARD PERMIT VEHICLE LOAD
(WIS-SPV):.....210 KIPS*

* TAKEN FROM HSI 3/23/2022

MATERIAL PROPERTIES

CONCRETE MASONRY:
DECK REPAIR..... f'c = 4,000 psi
ALL OTHER .....f'c = 4,000 psi
BAR STEEL REINFORCEMENT, GRADE 60 ..... fy = 60,000 psi

TRAFFIC DATA

OAK PARK ROAD

A.D.T. (2010) = 400
A.D.T. (2030) = 486
DESIGN SPEED = 45 MPH

IH 94

A.D.T. (2009) = 38,900
A.D.T. (2047) = 59,800
DESIGN SPEED = 70 MPH

LIST OF DRAWINGS

1. GENERAL PLAN AND ELEVATION
2. TYPICAL SECTION AND GENERAL NOTES
3. JOINT REPAIR
4. EXPANSION DEVICE
5. DECK CONDITION ASSESSMENT SURVEY

WISCONSIN
BABU D. THENGANAKUNNEL
E-35906
MILWAUKEE, WI
PROFESSIONAL ENGINEER
3-1-2023

STRUCTURE DESIGN CONTACTS

BUREAU OF STRUCTURES CONTACT:
AARON BONK
(608) 261-0261

CONSULTANT CONTACT:
BABU THENGANAKUNNEL
(414) 292-4506

NO.	DATE	REVISION	BY

BLOOM COMPANIES, LLC
Infrastructure Innovation and Ingenuity
10501 W. Research Drive • Milwaukee, WI 53226
Phone: (414) 771-3390 Fax: (414) 771-4490

STATE OF WISCONSIN
DEPARTMENT OF TRANSPORTATION

ACCEPTED SDR 05/04/23
CHIEF STRUCTURES DESIGN ENGINEER DATE

STRUCTURE B-13-157

OAK PARK ROAD OVER IH 94

COUNTY	TOWN
DANE	MEDINA/DEERFIELD

DESIGN SPEC. REHABILITATION N/A

DESIGNED BY	DESIGN CK'D.	DRAWN BY	PLANS CK'D.
BDT	DS	TAL	DS

GENERAL PLAN AND ELEVATION

SHEET 1 OF 5

8

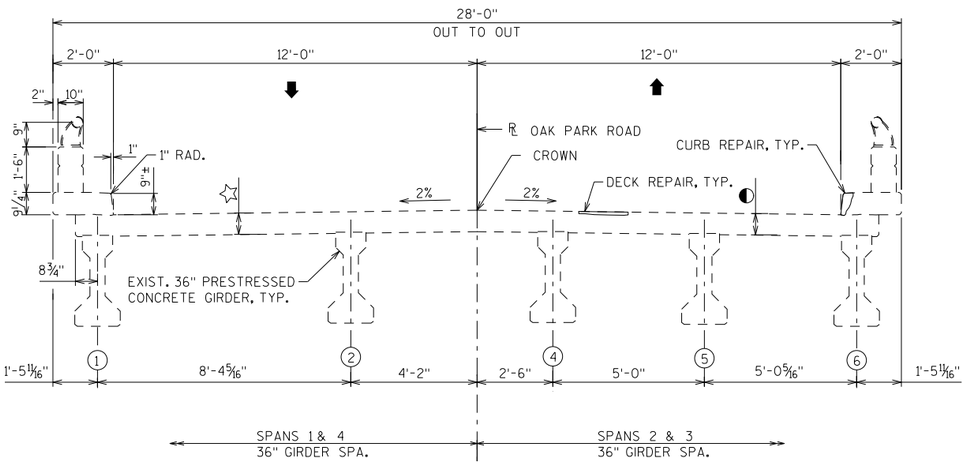

TYPICAL SECTION THRU ROADWAY

(LOOKING NORTH)

☆ EXIST. 7" DECK+ 1½" CONCRETE OVERLAY

◐ EXIST. 6" DECK+ 1½" CONCRETE OVERLAY

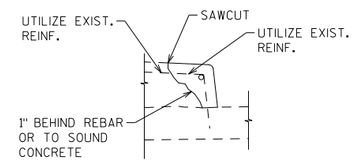

CURB REPAIR DETAIL

GENERAL NOTES

DRAWINGS SHALL NOT BE SCALED.

ALL STATIONS AND ALL ELEVATIONS ARE IN FEET.

ALL DIMENSIONS ARE IN FEET AND INCHES.

BAR STEEL REINFORCEMENT SHALL BE EMBEDDED 2 INCH CLEAR UNLESS OTHERWISE SHOWN OR NOTED.

THE FIRST OR FIRST TWO DIGITS OF THE BAR MARK SIGNIFIES THE BAR SIZE.

BEVEL EXPOSED EDGES OF CONCRETE 3/4 INCH UNLESS OTHERWISE NOTED.

UTILIZE EXISTING BAR STEEL REINFORCEMENT WHERE SHOWN AND EXTEND 24 BAR DIAMETERS INTO NEW WORK. EXISTING BARS SHALL BE CLEANED AND STRAIGHTENED.

AT CURB REPAIR, EXPOSE EXISTING REINFORCEMNT A MINIMUM OF 1 INCH CLEAR.

EXPANSION JOINT ASSEMBLY, INCLUDING HARDWARE SHALL BE PAID FOR AT THE UNIT PRICE BID FOR "EXPANSION DEVICE, L.F.

DIMENSIONS AND ELEVATIONS SHOWN ARE BASED ON THE ORIGINAL STRUCTURE PLANS, UNLESS SHOWN OTHERWISE.

ALL CONCRETE REMOVAL LIMITS SHALL BE DEFINED BY A 1/2 INCH DEEP SAWCUT.

PLANS OF THE EXISTING BRIDGE ARE ON FILE AND ARE AVAILABLE FOR INSPECTION AT THE WISCONSIN DEPARTMENT OF TRANSPORTATION, SOUTH WEST REGION.

ANY EXCAVATION REQUIRED TO COMPLETE THE PAVING BLOCK AT THE ABUTMENTS IS INCIDENTAL TO THE BID ITEM "CONCRETE MASONRY DECK REPAIR".

PERFORM CRUSHED AGGEGATE SLOPE PAVING REPAIR AND RESEALING OF CRUSHED AGGREGATE SLOPE PAVING AT BOTH ABUTMENTS. LIMITS TO BE DETERMINED BY THE FIELD ENGINEER.

PREPARATION DECKS TYPE 1, PREPARATION DECKS TYPE 2, CURB REPAIR, CONCRETE SURFACE REPAIR, PRESTRESSED GIRDER SURFACE REPAIR, AND SLOPE PAVING REPAIR ARE BASED ON THE PLANS AND AS DETERMINED BY THE ENGINEER.

DECK PREPARATION, CURB REPAIR, AND JOINT REPAIR SHALL BE FILLED WITH "CONCRETE MASONRY DECK REPAIR".

APPLY BRIDGE SEAT PROTECTION, PER SECTION 502.3.12 OF THE STANDARD SPECIFICATIONS, TO THE TOP SURFACES OF BOTH ABUTMENTS BELOW EXPANSION DEVICES. POWERWASH AND ADEQUATELY DRY SURFACES BEFORE APPLICATION.

PERFORM PRESTRESSED GIRDER SURFACE REPAIR AND EPOXY CRACK SEALING AT THE ENDS OF EXISTING PRESTRESSED GIRDERS AT BOTH ABUTMENTS.

FOR THE PURPOSE OF PAYMENT, DECK INCLUDES EXISTING DECK AND CONCRETE OVERLAY.

SEE ASBESTOS INSPECTION REPORT FOR LOCATIONS OF ASBESTOS CONTAINING MATERIALS ON THE STRUCTURE.

OAK PARK ROAD WILL BE CLOSED TO TRAFFIC DURING CONSTRUCTION. IH 94 WILL BE CLOSED TO TRAFFIC ONE LINE AT A TIME DURING NIGHT HOURS. SEE ROADWAY PLANS FOR TRAFFIC CONTROL DETAILS.

TOTAL ESTIMATED QUANTITIES

ITEM NUMBER	BID ITEMS	UNIT	SOUTH ABUT.	PIER 1	PIER 2	PIER 3	NORTH ABUT.	SUPER	TOTAL
502.3101	EXPANSION DEVICE	LF						26	26
502.4205	ADHESIVE ANCHORS NO. 5 BAR	EACH						26	26
505.0400	BAR STEEL REINFORCEMENT HS STRUCTURES	LB						980	980
509.0301	PREPARATION DECKS TYPE 1	SY						91	91
509.0302	PREPARATION DECKS TYPE 2	SY						72	72
509.0310.S	SAWING PAVEMENT DECK PREPARATION AREAS	LF						910	910
509.1000	JOINT REPAIR	SY						11	11
509.1200	CURB REPAIR	LF						45	45
509.1500	CONCRETE SURFACE REPAIR	SF	24	12	16	12	16	68	148
509.2100.S	CONCRETE MASONRY DECK REPAIR	CY						14	14
509.9020.S	EPOXY CRACK SEALING	LF						32	32
604.9010.S	SLOPE PAVING REPAIR CRUSHED AGGREGATE	CY					1		1
604.9015.S	RESEAL CRUSHED AGGREGATE SLOPE PAVING	SY	136				136		272
606.0200	RIPRAP MEDIUM	CY	2						2
645.0120	GEOTEXTILE TYPE HR	SY	8						8
SPV.0165.01	PRESTRESSED GIRDER SURFACE REPAIR	SF						60	60
SPV.0180.03	ABUTMENT SEAT CLEANING AND SEALING	SY	7				7		14

ALL ITEMS ARE CATEGORY 0050

8

8

NO.	DATE	REVISION	BY

STATE OF WISCONSIN
DEPARTMENT OF TRANSPORTATION

STRUCTURE B-13-157

DRAWN BY TAL | PLANS CK'D. BDT

TYPICAL SECTION AND GENERAL NOTES

SHEET 2 OF 5

STATE PROJECT NUMBER
1066-03-75

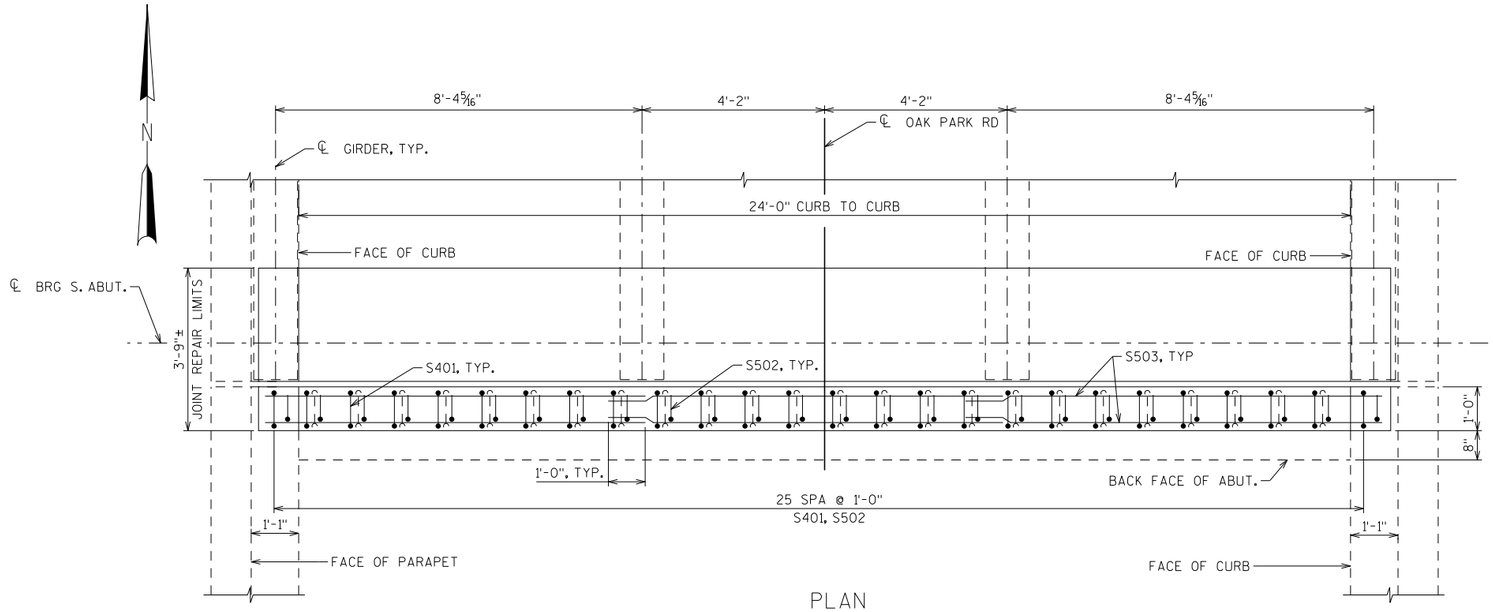

PLAN

(DIAPHRAGM REINF. NOT SHOWN FOR CLARITY)

BILL OF BARS

BAR MARK	COAT	NO.	LENGTH	BENT	BAR SERIES	LOCATION
S401	-	26	3'-2"	X	-	PAVING BLOCK STIRRUPS
S502	-	26	2'-6"	X	-	PAVING BLOCK VERTICAL
S503	-	9	9'-5"	-	-	PAVING BLOCK LONGIT.
S404	-	27	4'-6"	X	-	DIAPHRAGM STIRRUPS
S605	-	36	5'-0"	-	-	DIAPHRAGM BOTOM BARS
S606	-	18	14'-1"	-	-	DECK TRANSVERSE BARS
S407*	-	4	12'-6"	-	-	DECK TRANVERSE ALONG EXP JT.

* SEE SHEET "EXPANSION DEVICE" FOR BAR LOCATION

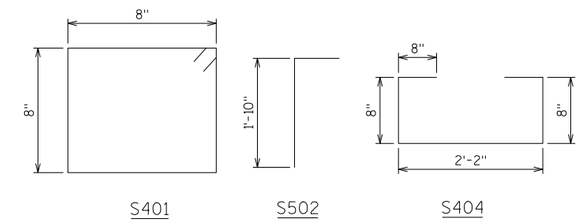

BENDING DIAGRAM

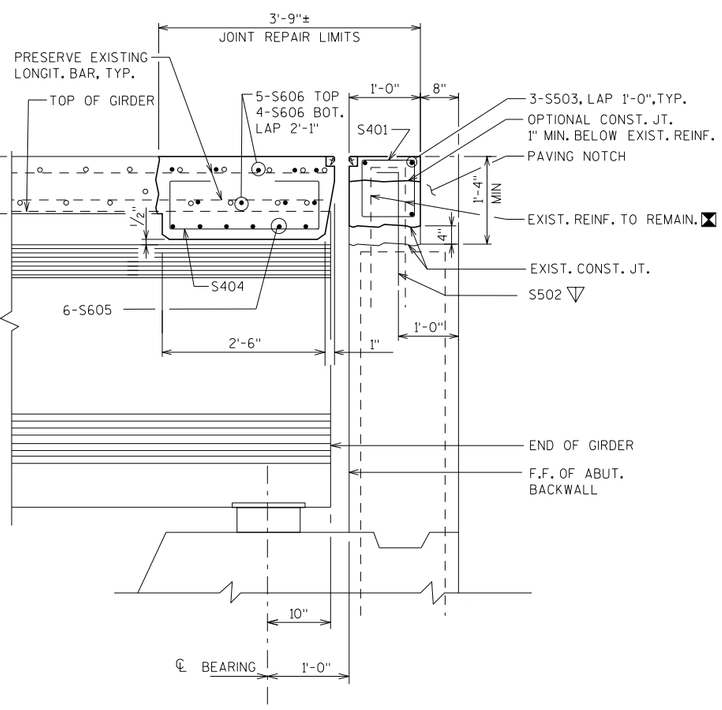

DIAPHRAGM AT ABUTMENT

(NORMAL TO ℄ BEARING)

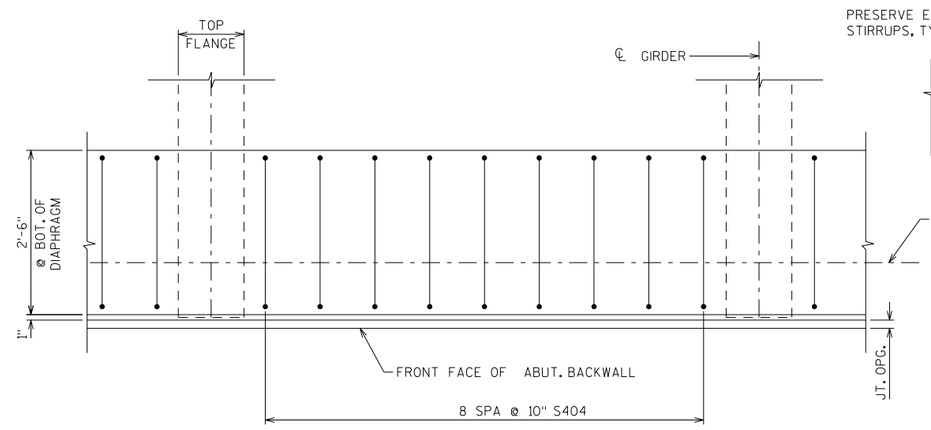

TOP VIEW OF DIAPHRAGM

(SHOWING STIRRUPS)

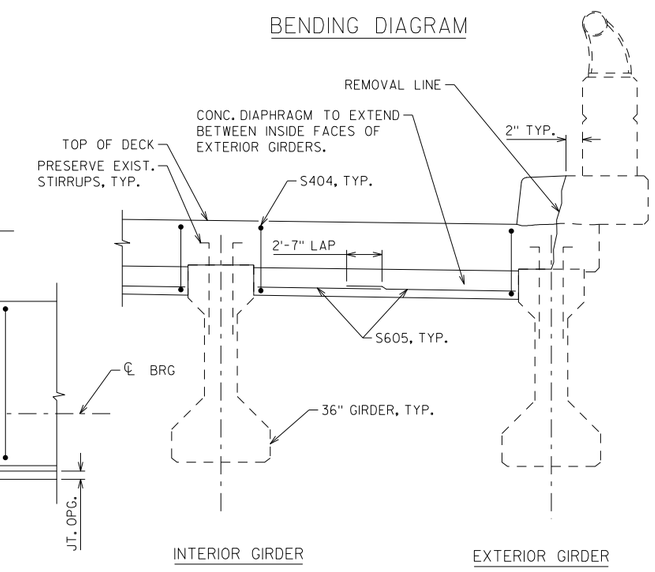

DIAPHRAGM AT ABUTMENT

LEGEND

- EXISTING BARS ARE LIKELY TO BE CORRODED AND/OR DAMAGED DURING CONCRETE REMOVAL. SALVAGE AND INCORPORATE AS MUCH REBAR AS PRACTICAL. SUPPLEMENT WITH BARS INDICATED BY ▽
- ▽ ADHESIVE ANCHOR NO.5 BAR. EMBED 1'-0" IN CONCRETE. SPACE AT 1'-0". TURN 10" LEG AS NECESSARY TO FIT.

NO.	DATE	REVISION	BY

STATE OF WISCONSIN
DEPARTMENT OF TRANSPORTATION

STRUCTURE B-13-157

DRAWN BY TAL | PLANS CK'D. BDT

JOINT REPAIR

SHEET 3 OF 5

8

8

STATE PROJECT NUMBER
1066-03-75

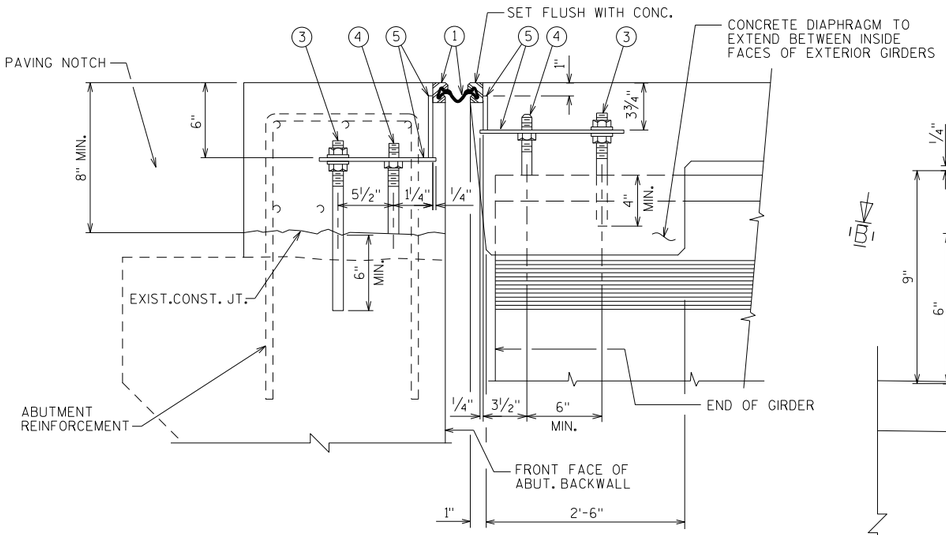

SECTION THRU JOINT AT ABUTMENT

NORMAL TO ℄ SUBSTRUCTURE

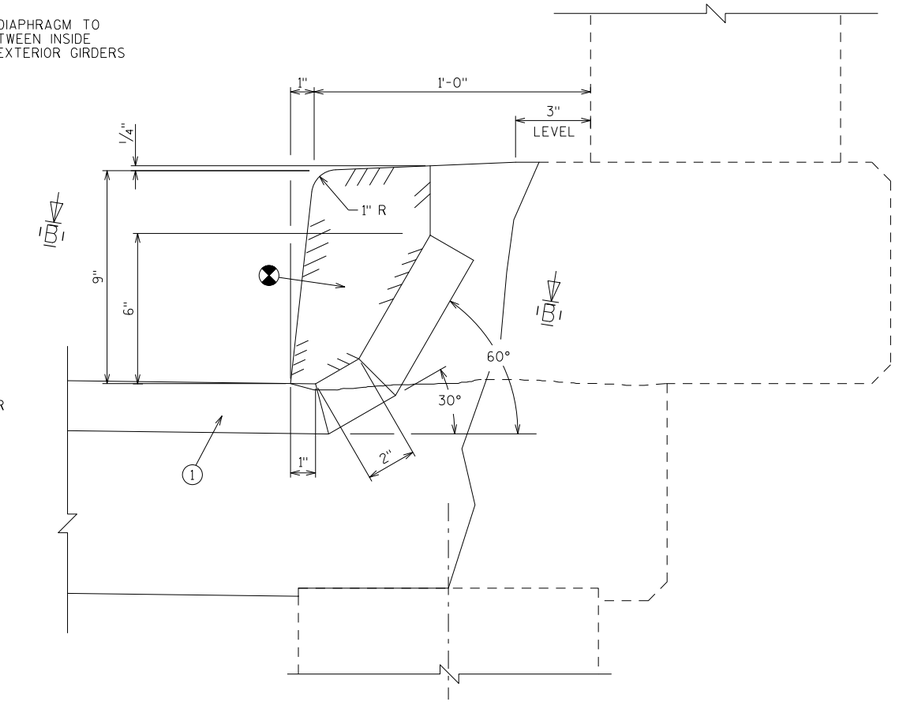

SECTION THRU JOINT AT CURB

NORMAL TO ℄ SUBSTRUCTURE

LEGEND

1. NEOPRENE STRIP SEAL 4-INCH AND STEEL EXTRUSIONS.
2. STUDS ⅝" DIA. X 6⅜" LONG AT 6" ALTERNATE CENTERS. WELD TO EXTRUSIONS AND BEND AS SHOWN AFTER WELDING.

2A. ½" THICK ANCHOR PLATE WITH ⅝" DIA. ROD (OR ALTERNATE STRIP SEAL ANCHOR). WELD ROD TO ANCHOR PLATE. WELD ANCHOR PLATE TO NO. 1 AT 1'-6" CENTERS BETWEEN GIRDERS.

3. ¾" DIA. THREADED ROD WITH 2 NUTS AND PLATE WASHERS. GROUT THREADED ROD INTO FIELD DRILLED HOLES ON ℄ OF GIRDER. ON ABUTMENT SIDE GROUT THREADED ROD INTO FIELD DRILLED HOLES IN ABUTMENT BACKWALL AS SHOWN.
4. ¾" DIA. THREADED ROD WITH NUT. TACK WELD NUT TO NO. 5.
5. FABRICATE SUPPORT FROM 3" X ½" BAR AS SHOWN OR EQUIVALENT, ONE PER GIRDER PER SIDE. SHOP OR FIELD WELD TO NO. 1. IF FIELD WELDED, COVER WELDED AREAS WITH EPOXY-COATING MATERIAL. PROVIDE 1½" DIA. HOLE FOR NO. 3 AND 1" DIA. HOLE FOR NO. 4.

⊗ BLOCK OUT CONCRETE 2" EACH SIDE OF JOINT OPENING

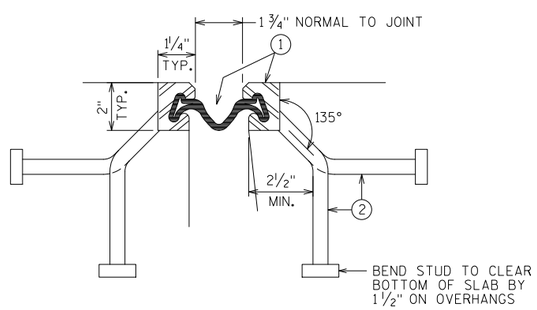

SECTION THRU JOINT

AT CURBS

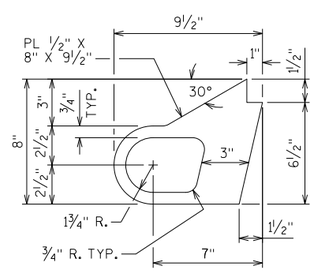

ALTERNATE STRIP SEAL ANCHOR

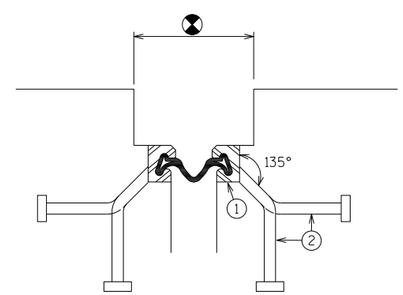

SECTION B-B

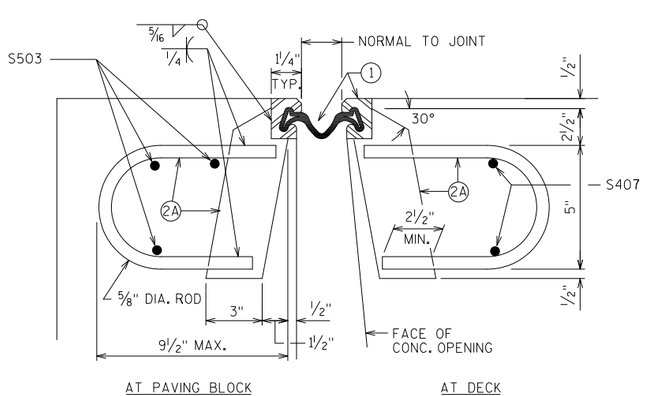

SECTION THRU JOINT

ROADWAY TRAFFIC AREA BETWEEN EXTERIOR GIRDERS.

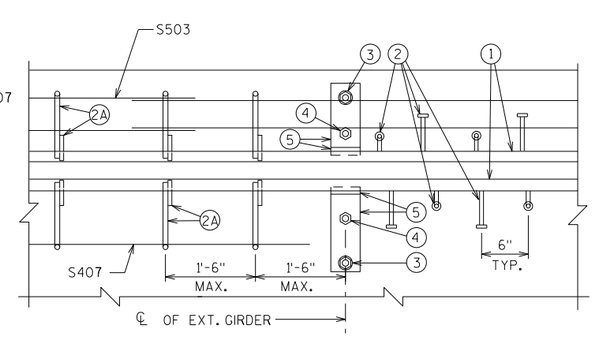

PART PLAN

NOTES

ONE FIELD SPLICE PERMITTED IN STEEL EXTRUSIONS, UNLESS MORE ARE REQUIRED FOR STAGED CONSTRUCTION, HANDLING OR GALVANIZING REQUIREMENTS. IF USED, ANCHOR PLATES SHALL BE PROVIDED 3" FROM EACH SIDE OF THE FIELD SPLICE. DETAILS SHALL BE SUBMITTED FOR APPROVAL. NO SPLICING PERMITTED IN NEOPRENE STRIP SEAL.

AFTER FABRICATION, BUT BEFORE SHIPMENT, STRAIGHTEN STEEL EXTRUSIONS SUCH THAT THEY SHALL BE FREE FROM WARP, TWIST AND SWEEP.

FABRICATOR SHALL PROVIDE MEANS OF KEEPING GALVANIZED EXTRUSIONS CLEAN AND SMOOTH DURING SHIPMENT AND PRIOR TO APPLYING LUBRICANT ADHESIVE FOR NEOPRENE GLAND INSTALLATION.

SANDBLAST PLATES, SUPPORTS AND EXTRUSIONS AFTER FABRICATION IN ACCORDANCE WITH SSPC SP. #6 "COMMERCIAL BLAST CLEANING". AFTER BLAST CLEANING, THE PLATES, SUPPORTS AND EXTRUSIONS SHALL BE HOT DIPPED GALVANIZED.

ALL MATERIAL IN THE EXPANSION JOINT ASSEMBLY, INCLUDING ANCHOR STUDS AND HARDWARE SHALL BE PAID AT THE UNIT PRICE BID FOR "EXPANSION DEVICE, LF.

NO.	DATE	REVISION	BY

STATE OF WISCONSIN
DEPARTMENT OF TRANSPORTATION

STRUCTURE B-13-157

DRAWN BY TAL | PLANS CK'D. BDT

EXPANSION DEVICE

SHEET 4 OF 5

8

8

STATE PROJECT NUMBER
1066-03-75

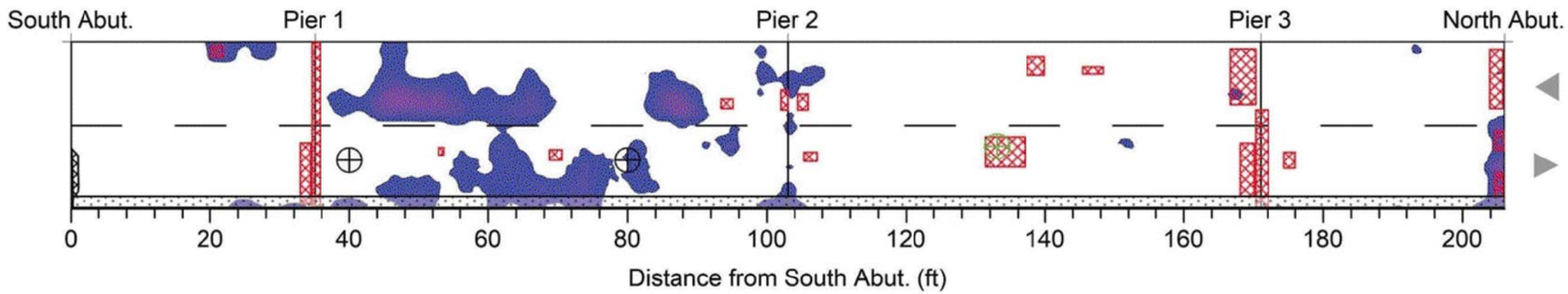

Conditions Legend		Orientation	Quantity Summary	General Information
Rebar-level deterioration detected by GPR Increasing severity --> IE (delam) IE (no delam)	Delamination detected by IR Patching/ Spalling Undetectable Conditions Potential Full-Depth Area	Direction of traffic		Bridge ID: B-13-157 Oak Park RD over IH 94 Analyzed by: SB Reviewed by: AC Completed: 10/07/19 **Sheet 1 of 1**

INFRASENSE

NO.	DATE	REVISION	BY

STATE OF WISCONSIN
DEPARTMENT OF TRANSPORTATION

STRUCTURE B-13-157

DRAWN BY TAL | PLANS CK'D. BDT

DECK CONDITION ASSESSMENT SURVEY

SHEET 5 OF 5

8

8

STATE PROJECT NUMBER
1066-03-75

(X) DENOTES WING NUMBER

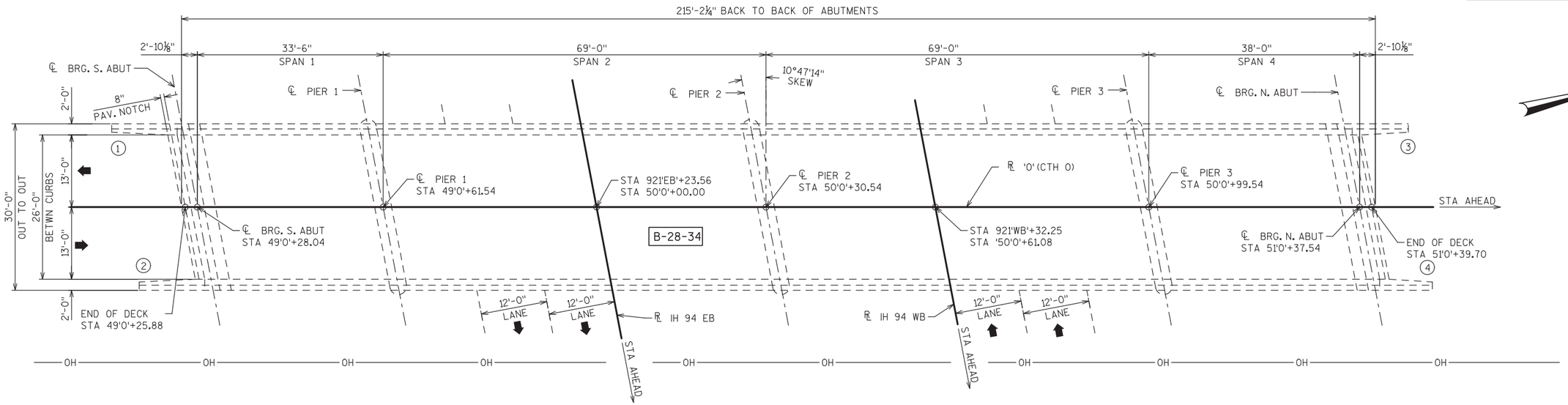

PLAN

(4 SPAN - 36" PRESTRESSED GIRDER BRIDGE)

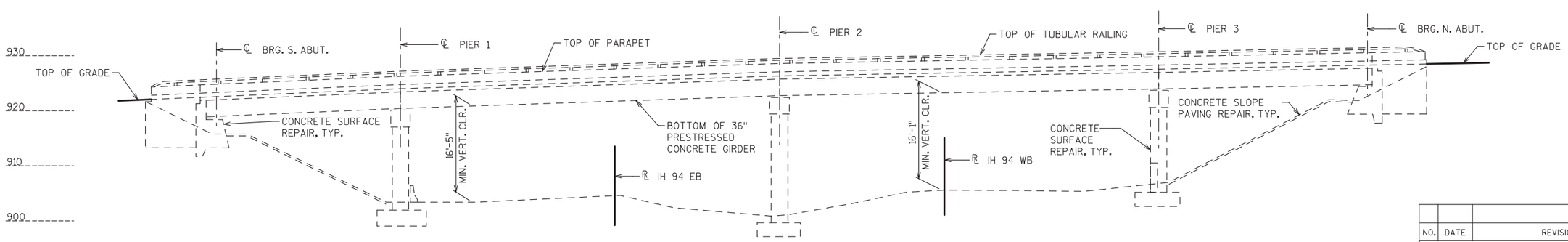

ELEVATION

(LOOKING WEST)

8

DESIGN DATA

LIVE LOAD

DESIGN LOAD: H15*
INVENTORY RATING: HS10*
OPERATING RATING: HS28*
WISCONSIN STANDARD PERMIT VEHICLE LOAD (WIS-SPV):.....200 KIPS*

* TAKEN FROM HSI 3/23/2022

MATERIAL PROPERTIES

CONCRETE MASONRY
DECK REPAIR.....f'c = 4,000 psi
ALL OTHER.....f'c = 4,000 psi

TRAFFIC DATA

CTH 0

A.D.T. (2009) = 610
A.D.T. (2029) = 730
DESIGN SPEED = 40 MPH

IH 94

A.D.T. (2006) = 34,600
A.D.T. (2047) = 59,800
DESIGN SPEED = 70 MPH

LIST OF DRAWINGS

1. GENERAL PLAN AND ELEVATION
2. TYPICAL SECTION AND GENERAL NOTES
3. CONCRETE SLOPE PAVING
4. DECK CONDITION ASSESSMENT SURVEY

WISCONSIN BABU D. THENGANAKUNNEL E-35905 MILWAUKEE, WI PROFESSIONAL ENGINEER
4-28-2023

STRUCTURE DESIGN CONTACTS

BUREAU OF STRUCTURES CONTACT:
AARON BONK
(608) 261-0261

CONSULTANT CONTACT:
BABU THENGANAKUNNEL
(414) 292-4506

NO.	DATE	REVISION	BY

BLOOM COMPANIES, LLC
Infrastructure Innovation and Ingenuity
10501 W. Research Drive • Milwaukee, WI 53226
Phone: (414) 771-3390 Fax: (414) 771-4490

STATE OF WISCONSIN
DEPARTMENT OF TRANSPORTATION

ACCEPTED SDR 08/02/23
CHIEF STRUCTURES DESIGN ENGINEER DATE

8

STRUCTURE B-28-34

CTH 0 OVER IH 94

COUNTY	JEFFERSON	TOWN	WATERLOO

DESIGN SPEC. REHABILITATION N/A

DESIGNED BY	BDT	DESIGN CK'D.	DS	DRAWN BY	TAL	PLANS CK'D.	DS

GENERAL PLAN AND ELEVATION

SHEET 1 OF 4

178

I.D. 1066-03-05 MAR 2023

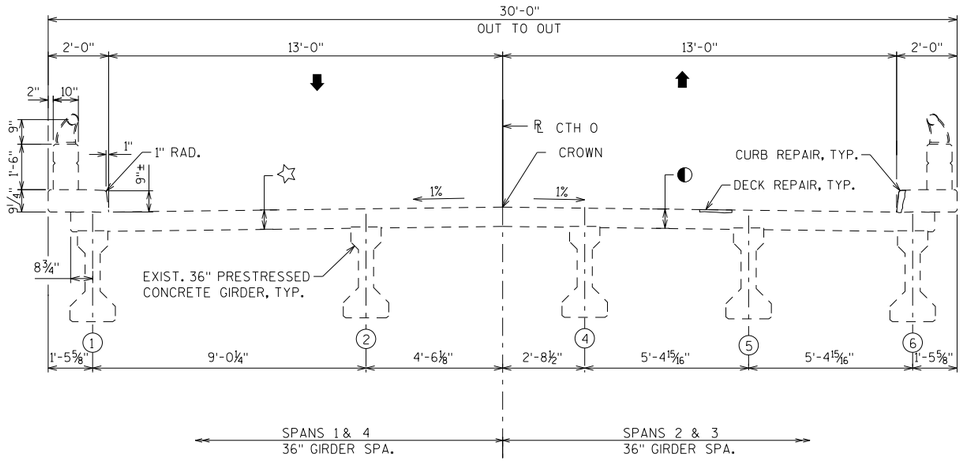

TYPICAL SECTION THRU ROADWAY

(LOOKING NORTH)

☆ EXIST. 7" DECK PLUS 1½" CONCRETE OVERLAY

◐ EXIST. 6" DECK PLUS 1½" CONCRETE OVERLAY

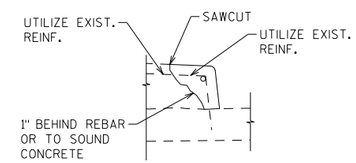

CURB REPAIR DETAIL

GENERAL NOTES

DRAWINGS SHALL NOT BE SCALED.

ALL STATIONS AND ALL ELEVATIONS ARE IN FEET.

ALL DIMENSIONS ARE IN FEET AND INCHES.

BEVEL EXPOSED EDGES OF CONCRETE 3/4 INCH UNLESS OTHERWISE NOTED.

AT CURB REPAIR, EXPOSE EXISTING REINFORCEMNT A MINIMUM OF 1 INCH CLEAR.

DIMENSIONS AND ELEVATIONS SHOWN ARE BASED ON THE ORIGINAL STRUCTURE PLANS, UNLESS SHOWN OTHERWISE.

ALL CONCRETE REMOVAL LIMITS SHALL BE DEFINED BY A 1/2 INCH DEEP SAWCUT.

PLANS OF THE EXISTING BRIDGE ARE ON FILE AND ARE AVAILABLE FOR INSPECTION AT THE WISCONSIN DEPARTMENT OF TRANSPORTATION, SOUTH WEST REGION.

PREPARATION DECKS TYPE 1, PREPARATION DECKS TYPE 2, FULL-DEPTH DECK REPAIR, CURB REPAIR, AND CONCRETE SURFACE REPAIR ARE BASED ON THE PLANS AND AS DETERMINED BY THE ENGINEER.

DECK PREPARATION, FULL DEPTH DECK REPAIR, AND CURB REPAIR SHALL BE FILLED WITH "CONCRETE MASONRY DECK REPAIR".

THE SLOPE OF THE FILL IN FRONT OF THE ABUTMENTS SHALL BE COVERED WITH SLOPE PAVING CONCRETE TO THE EXTENT SHOWN ON "CONCRETE SLOPE PAVING" SHEET.

FOR THE PURPOSE OF PAYMENT, DECK INCLUDES EXISTING DECK AND CONCRETE OVERLAY.

SEE ASBESTOS INSPECTION REPORT FOR LOCATIONS OF ASBESTOS CONTAINING MATERIALS ON THE STRUCTURE.

CTH O WILL BE CLOSED TO TRAFFIC DURING CONSTRUCTION. IH 94 WILL BE CLOSED TO TRAFFIC ONE LANE AT A TIME DURING NIGHT HOURS. SEE ROADWAY PLANS FOR TRAFFIC CONTROL DETAILS.

TOTAL ESTIMATED QUANTITIES

ITEM NUMBER	BID ITEMS	UNIT	SOUTH ABUT.	PIER 1	PIER 2	PIER 3	NORTH ABUT.	SUPER	TOTAL
204.0175	REMOVING CONCRETE SLOPE PAVING	SY	23				29		52
509.0301	PREPARATION DECKS TYPE 1	SY						241	241
509.0302	PREPARATION DECKS TYPE 2	SY						227	227
509.0310.S	SAWING PAVEMENT DECK PREPARATION AREAS	LF						1320	1320
509.1200	CURB REPAIR	LF						40	40
509.1500	CONCRETE SURFACE REPAIR	SF	18	12	16	12	16	64	138
509.2000	FULL-DEPTH DECK REPAIR	SY						8	8
509.2100.S	CONCRETE MASONRY DECK REPAIR	CY						28	28
604.0400	SLOPE PAVING CONCRETE	SY	23				29		52

ALL ITEMS ARE CATEGORY 0060

8

8

NO.	DATE	REVISION	BY

STATE OF WISCONSIN
DEPARTMENT OF TRANSPORTATION

STRUCTURE B-28-34

DRAWN BY TAL | PLANS CK'D. BDT

TYPICAL SECTION AND GENERAL NOTES

SHEET 2 OF 4

STATE PROJECT NUMBER
1066-03-75

(J1) INDICATES SLOPE PAVING LONGITUDINAL JOINT NUMBER

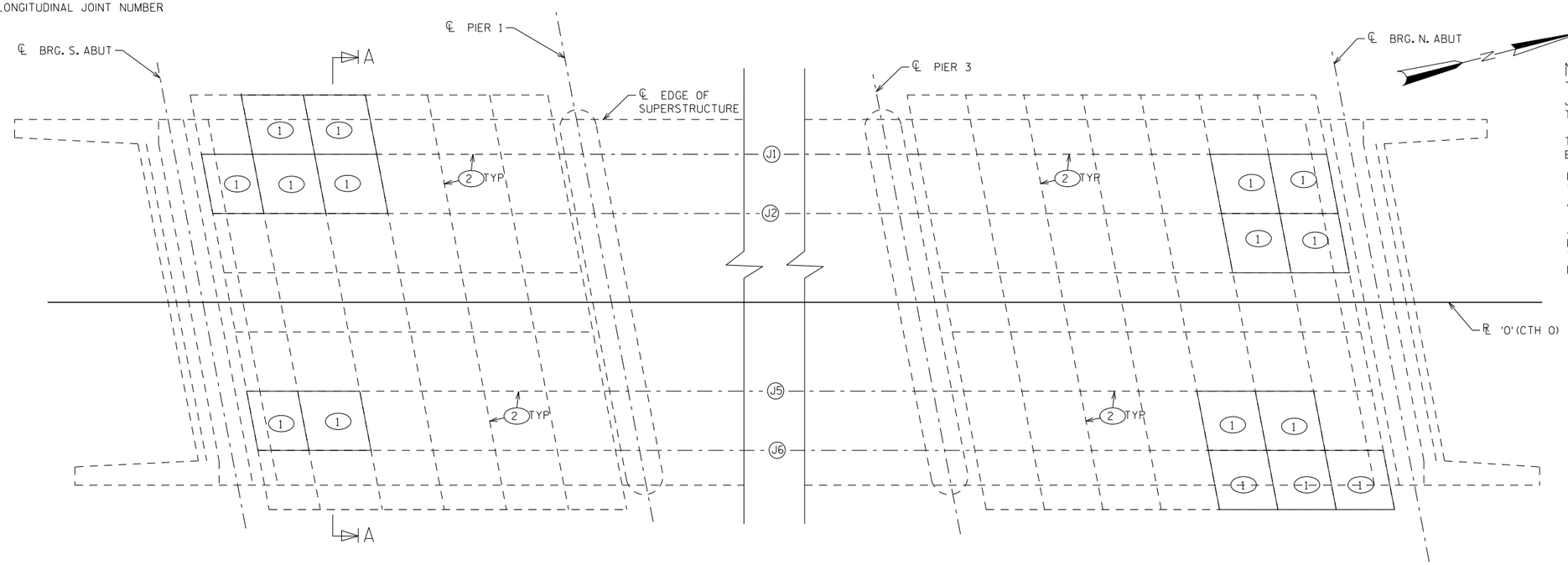

PLAN

NOTES

JOINT PATTERN OF NEW SLOPE PAVING PANELS TO MATCH EXISTING.

TOP ELEVATION OF NEW PANELS TO MATCH TOP ELEVATION OF EXISTING PANELS ALONG THE JOINTS.

FORM PLANES OF WEAKNESS OR FALSE JOINTS IN THE CONCRETE BY PROVIDING 1/2" WIDE X 2" DEEP JOINTS BETWEEN THE NEW PANELS.

ALL EXCAVATION, GRADING, BACKFILL, AND CONCRETE FILL BELOW EXISTING SLOPE PAVING PANELS REQUIRED TO INSTALL THE SLOPE PAVING IS INCIDENTAL TO THE BID ITEM "SLOPE PAVING CONCRETE".

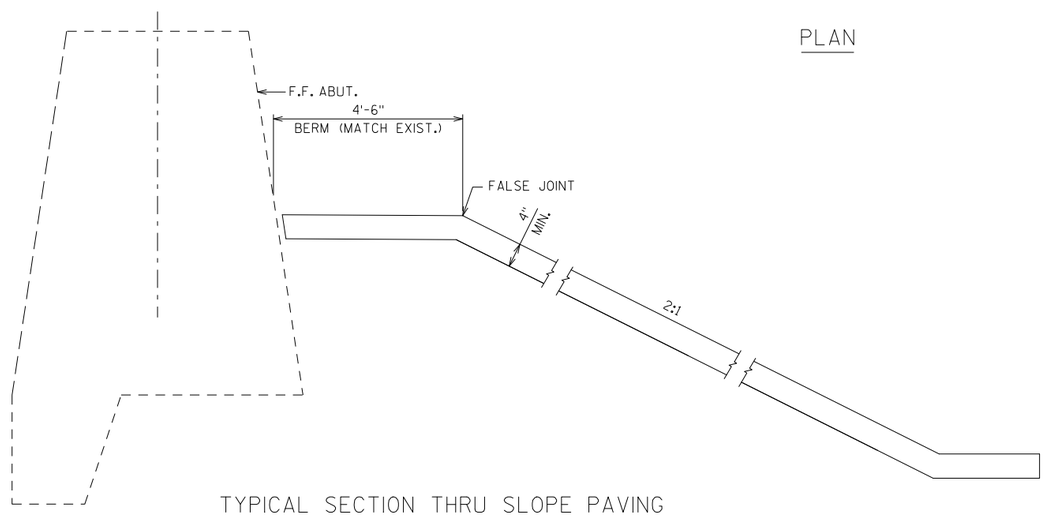

TYPICAL SECTION THRU SLOPE PAVING

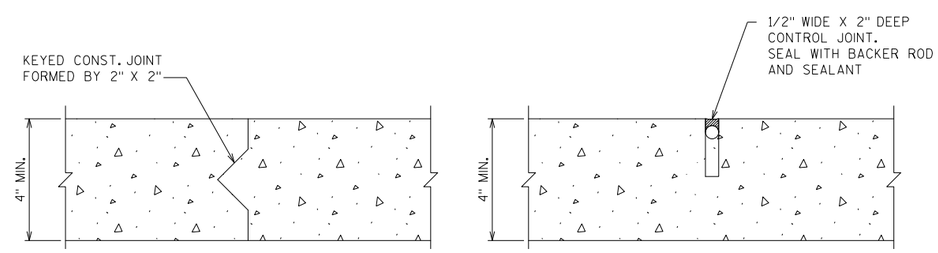

CONSTRUCTION JOINT

CONTROL JOINT

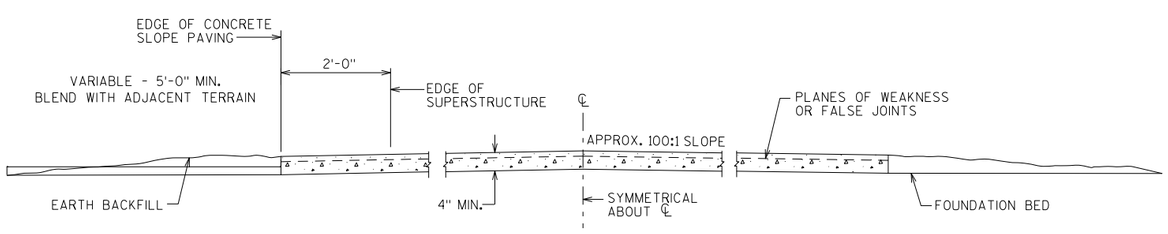

SECTION A-A

LEGEND

(1) REMOVE AND REPLACE EXISTING SLOPE PAVING PANELS WITHIN THE LIMITS SHOWN. FILL THE VOIDS UNDER ABUTTING EXISTING PANELS WITH CONCRETE.

(2) SEAL SLOPE PAVING LONGITUDINAL JOINTS 1,2,5, AND 6 AND ALL TRANSVERSE JOINTS BETWEEN JOINTS 1&2 AND 5&6 WITH A 1/2 INCH DEEP NON-STAINING GRAY NON-BITUMINOUS SEALER. FILL THE JOINT WITH A COMMERCIALLY AVAILABLE CLOSED CELL BACKER ROD OR EXPANDING FOAM BEFORE APPLYING THE SEALER. COST INCIDENTAL TO THE BID ITEM " SLOPE PAVING CONCRETE".

NO.	DATE	REVISION	BY

STATE OF WISCONSIN
DEPARTMENT OF TRANSPORTATION

STRUCTURE B-28-34

DRAWN BY	TAL	PLANS CK'D.	BDT

CONCRETE SLOPE PAVING

SHEET 3 OF 4

8

8

STATE PROJECT NUMBER
1066-03-75

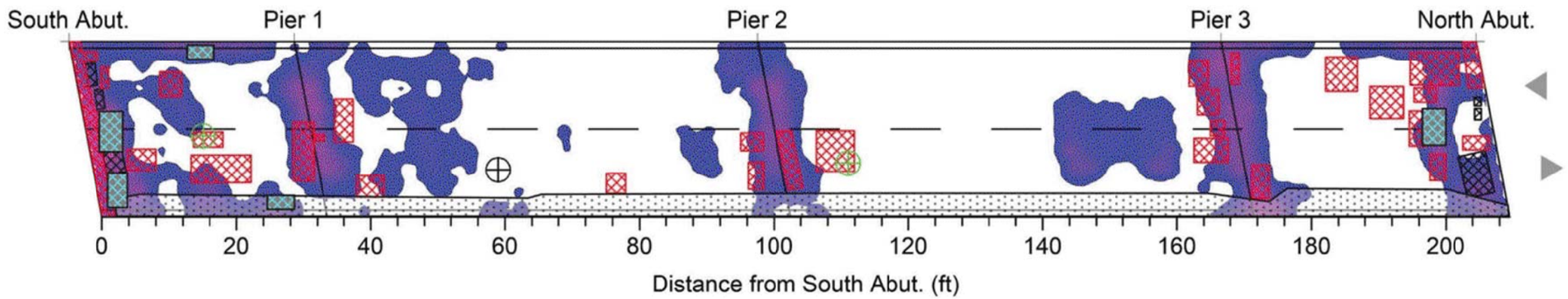

Conditions Legend		Orientation	Quantity Summary			General Information
Rebar-level deterioration detected by GPR Increasing severity --> IE (delam) IE (no delam)	Delamination detected by IR Patching/ Spalling Undetectable Conditions Potential Full-Depth Area	Direction of traffic				Bridge ID: B-28-034 O over IH 94 Analyzed by: SB Reviewed by: AC Completed: 10/15/19 **Sheet 1 of 1**

INFRASENSE

NO.	DATE	REVISION	BY

STATE OF WISCONSIN
DEPARTMENT OF TRANSPORTATION

STRUCTURE B-28-34

DRAWN BY TAL | PLANS CK'D. BDT

DECK CONDITION ASSESSMENT SURVEY

SHEET 4 OF 4

8

8

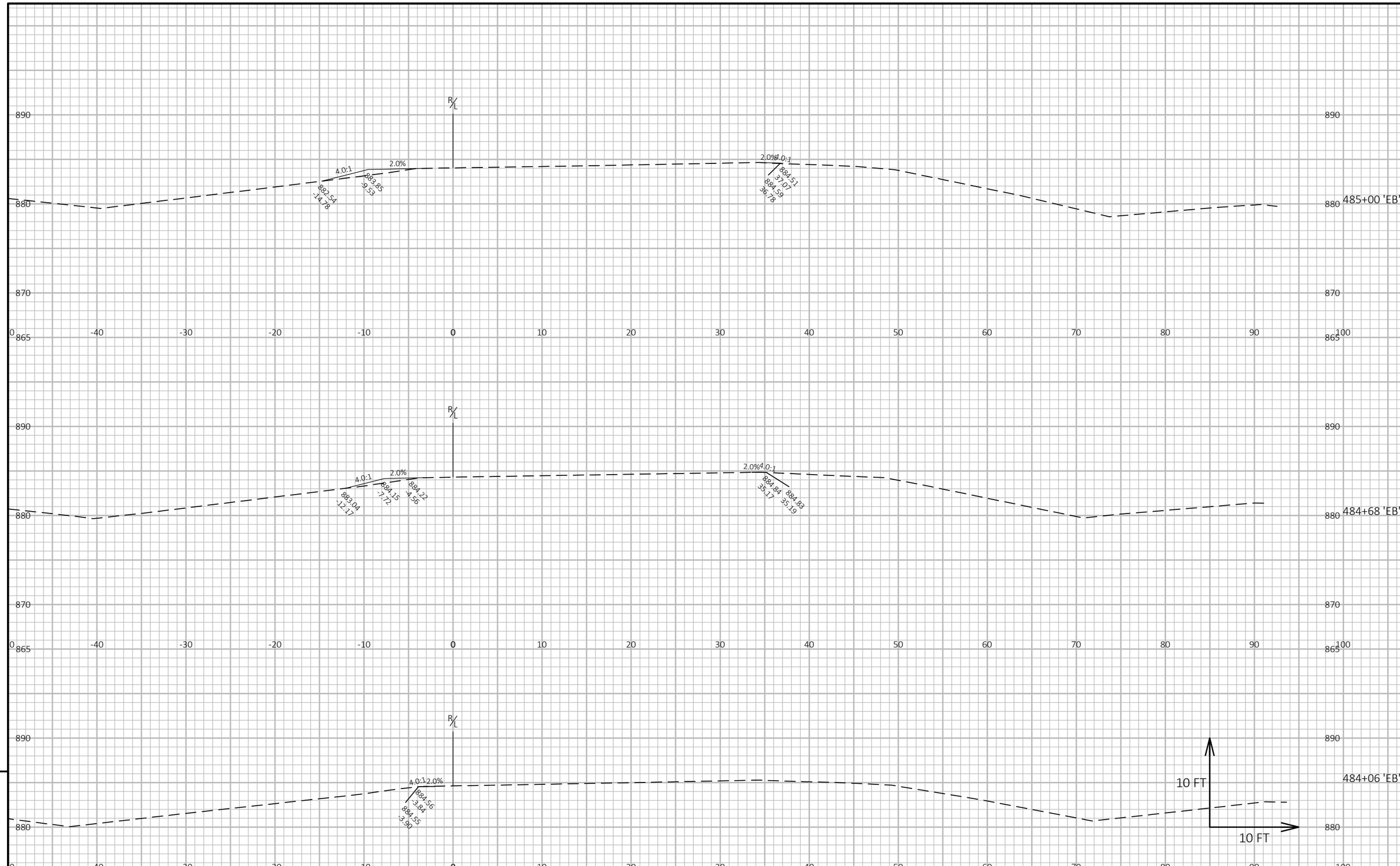

9

9

PROJECT NO: 1066-03-75	HWY: IH 94	COUNTY: DANE AND JEFFERSON	CROSS SECTIONS: IH 94 EB	SHEET 182	E

FILE NAME : P:\2020 PROJECTS\5020028 - WISDOT SWR IH 94\CIVIL3D\10660375\SHEETSPLAN\090101_XS-EB.DWG
LAYOUT NAME - 01
PLOT DATE : 2/6/2023 5:08 PM
PLOT BY : KYLE CORNELIUS
PLOT NAME :
PLOT SCALE : 1 IN:10 FT HORZ. / 1 IN:10 FT VERT.
WISDOT/CADDS SHEET 49

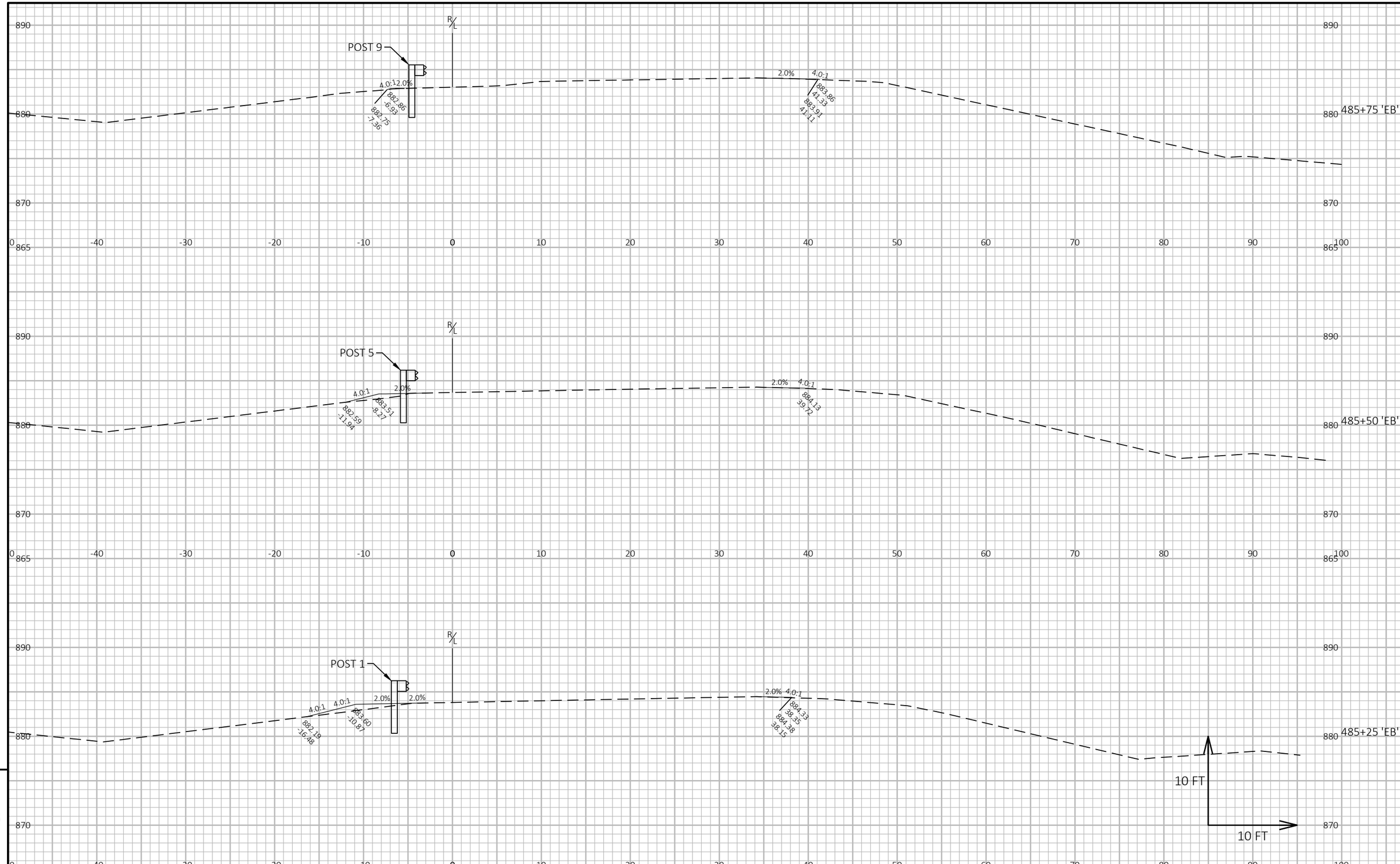

9

9

PROJECT NO: 1066-03-75	HWY: IH 94	COUNTY: DANE AND JEFFERSON	CROSS SECTIONS: IH 94 EB	SHEET 183	E

FILE NAME : P:\2020 PROJECTS\5020028 - WISDOT SWR IH 94\CIVIL3D\10660375\SHEETSPLAN\090101_XS-EB.DWG
LAYOUT NAME - 02
PLOT DATE : 2/6/2023 5:09 PM
PLOT BY : KYLE CORNELIUS
PLOT NAME :
PLOT SCALE : 1 IN:10 FT HORZ. / 1 IN:10 FT VERT.
WISDOT/CADDS SHEET 49

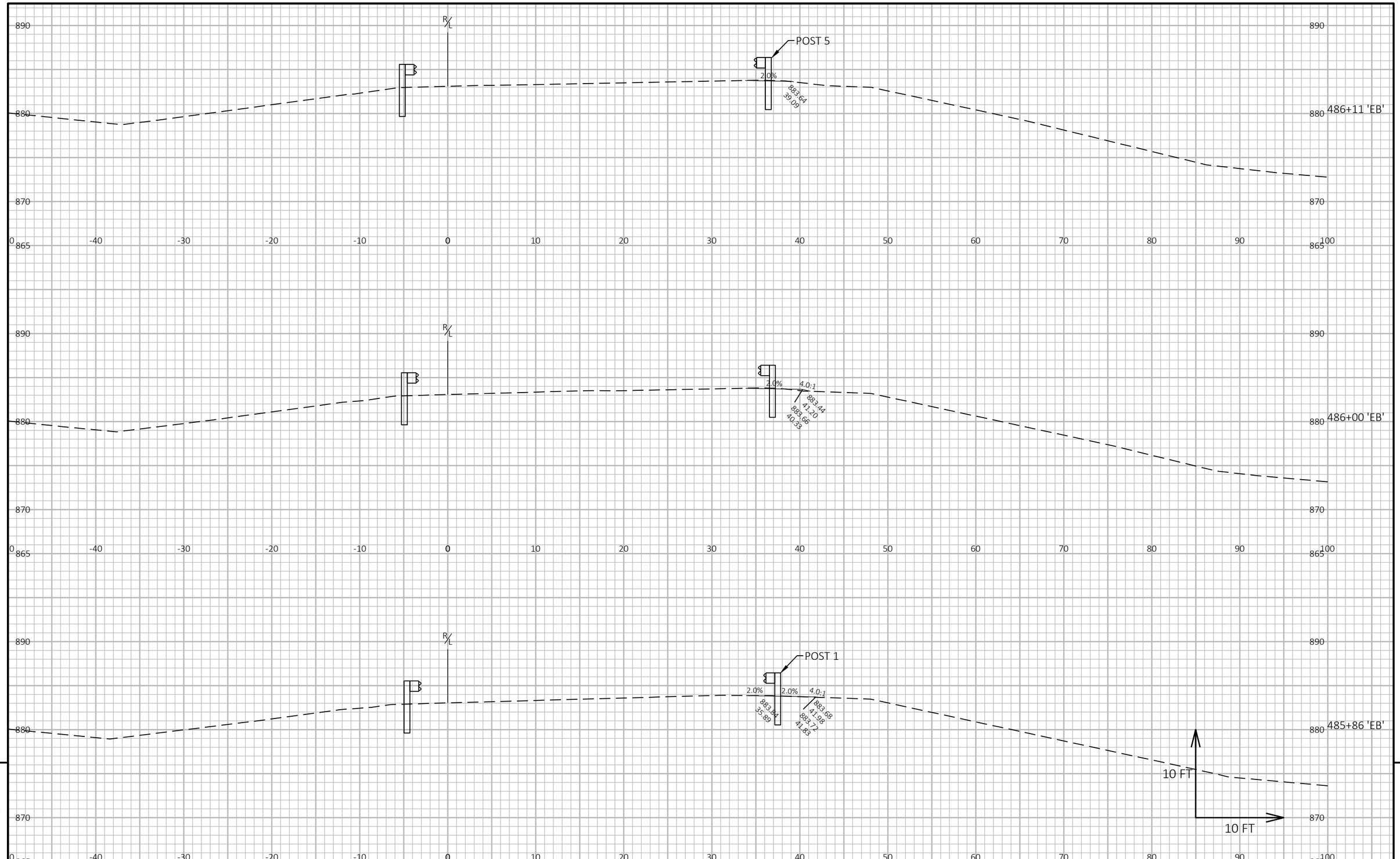

9

9

PROJECT NO: 1066-03-75	HWY: IH 94	COUNTY: DANE AND JEFFERSON	CROSS SECTIONS: IH 94 EB	SHEET 184	E

FILE NAME : P:\2020 PROJECTS\5020028 - WISDOT SWR IH 94\CIVIL3D\10660375\SHEETSPLAN\090101_XS-EB.DWG
LAYOUT NAME - 03

PLOT DATE : 2/6/2023 5:10 PM PLOT BY : KYLE CORNELIUS PLOT NAME : **PLOT SCALE :** 1 IN:10 FT HORZ. / 1 IN:10 FT VERT.

WISDOT/CADDS SHEET 49

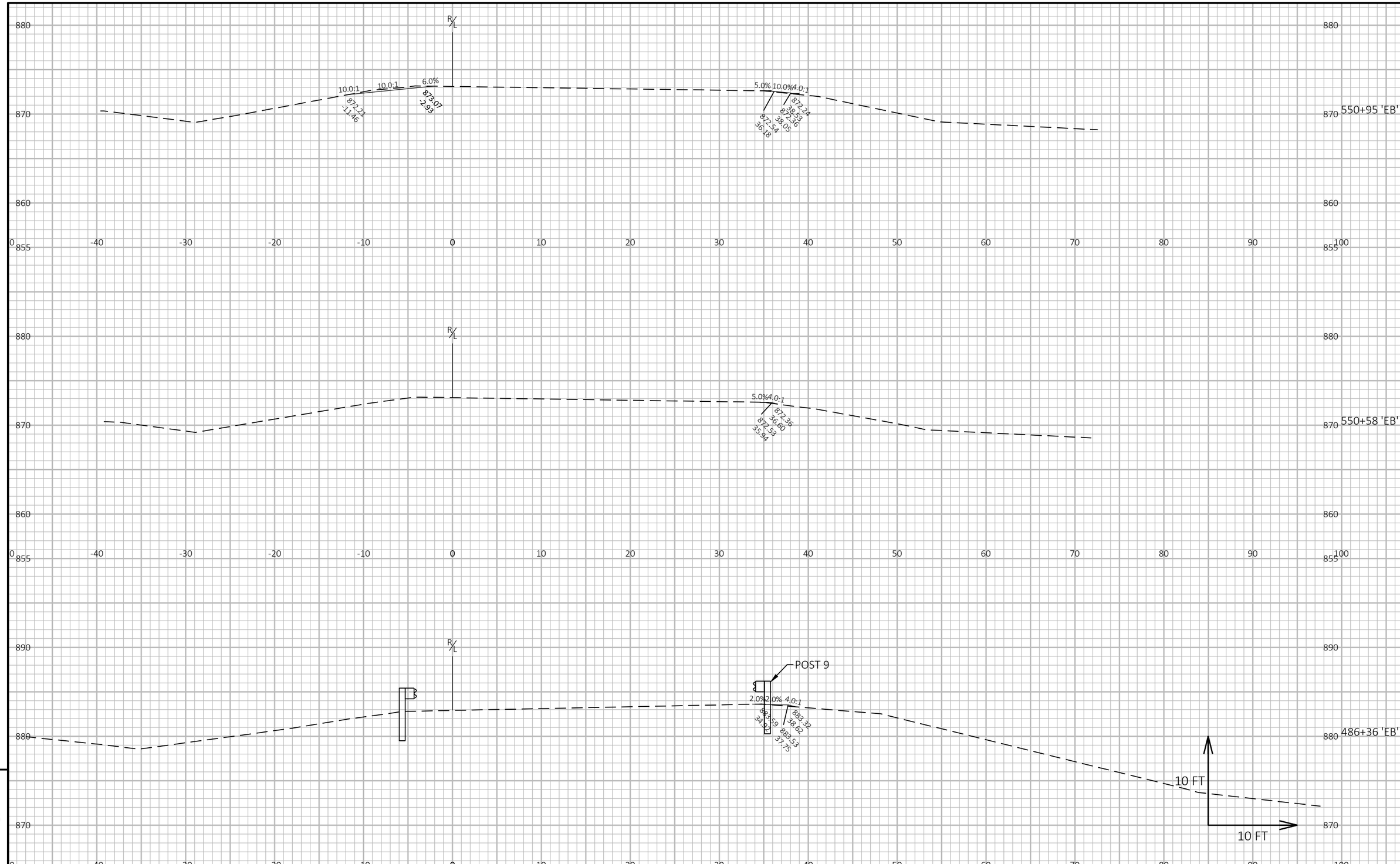

PROJECT NO: 1066-03-75	HWY: IH 94	COUNTY: DANE AND JEFFERSON	CROSS SECTIONS: IH 94 EB	SHEET 185	E

FILE NAME : P:\2020 PROJECTS\5020028 - WISDOT SWR IH 94\CIVIL3D\10660375\SHEETSPLAN\090101_XS-EB.DWG
LAYOUT NAME - 04
PLOT DATE : 2/6/2023 5:11 PM
PLOT BY : KYLE CORNELIUS
PLOT NAME :
PLOT SCALE : 1 IN:10 FT HORZ. / 1 IN:10 FT VERT.
WISDOT/CADDS SHEET 49

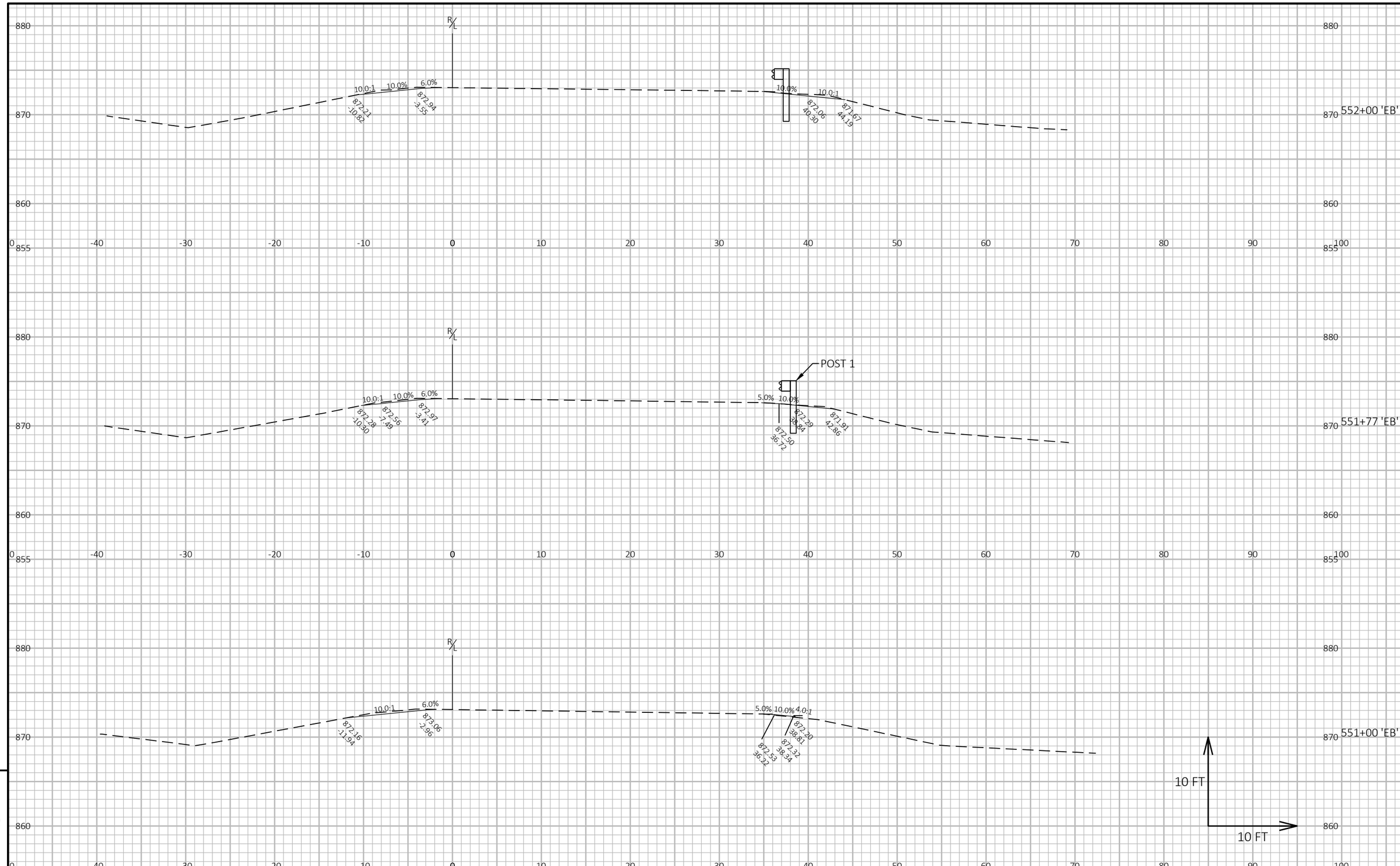

PROJECT NO: 1066-03-75	HWY: IH 94	COUNTY: DANE AND JEFFERSON	CROSS SECTIONS: IH 94 EB	SHEET 186	E

FILE NAME : P:\2020 PROJECTS\5020028 - WISDOT SWR IH 94\CIVIL3D\10660375\SHEETSPLAN\090101_XS-EB.DWG
LAYOUT NAME - 05
PLOT DATE : 2/6/2023 5:12 PM
PLOT BY : KYLE CORNELIUS
PLOT NAME :
PLOT SCALE : 1 IN:10 FT HORZ. / 1 IN:10 FT VERT.
WISDOT/CADDS SHEET 49

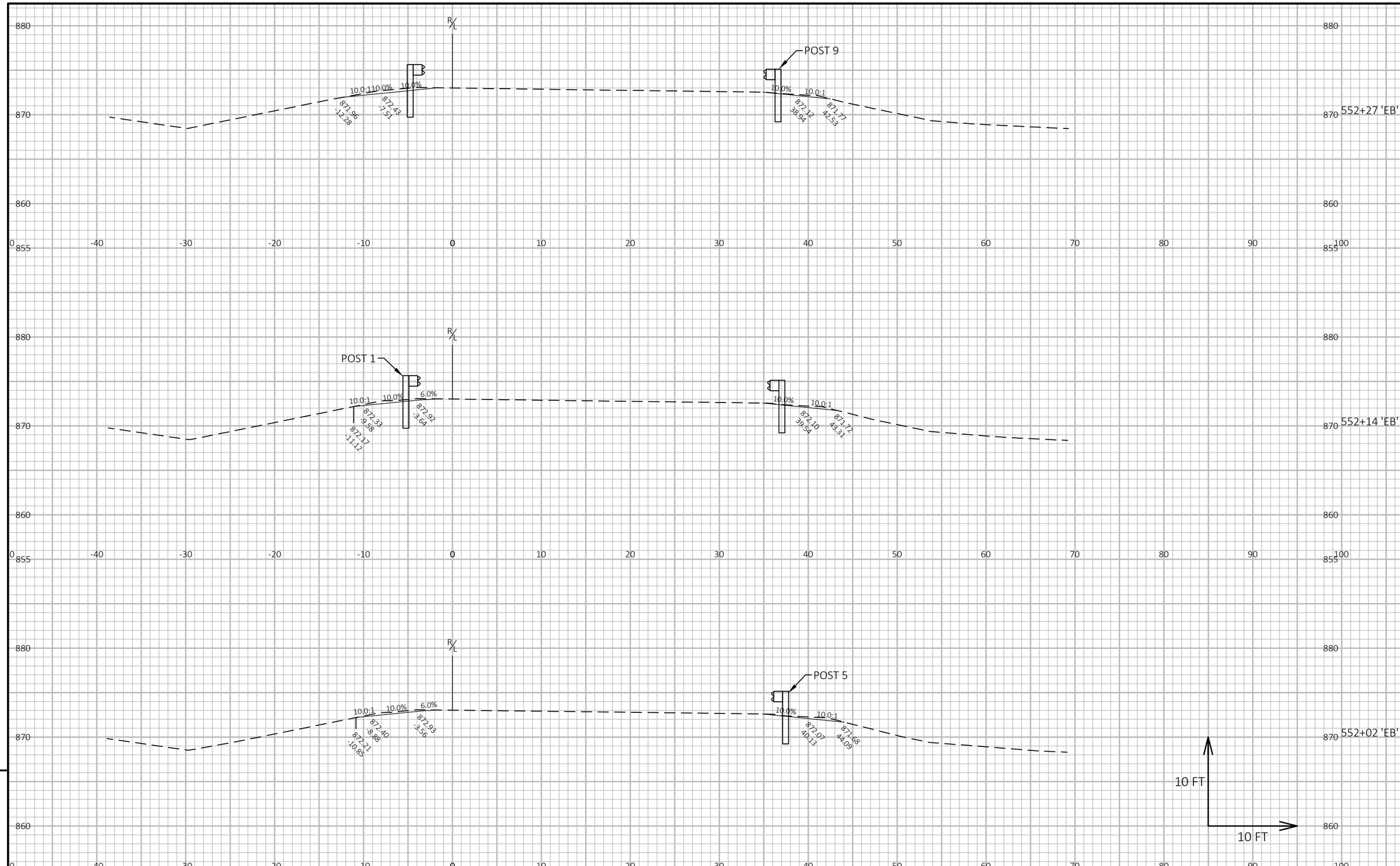

9

9

PROJECT NO: 1066-03-75	HWY: IH 94	COUNTY: DANE AND JEFFERSON	CROSS SECTIONS: IH 94 EB	SHEET 187	E

FILE NAME : P:\2020 PROJECTS\5020028 - WISDOT SWR IH 94\CIVIL3D\10660375\SHEETSPLAN\090101_XS-EB.DWG
LAYOUT NAME - 06
PLOT DATE : 2/6/2023 5:13 PM
PLOT BY : KYLE CORNELIUS
PLOT NAME :
PLOT SCALE : 1 IN:10 FT HORZ. / 1 IN:10 FT VERT.
WISDOT/CADDS SHEET 49

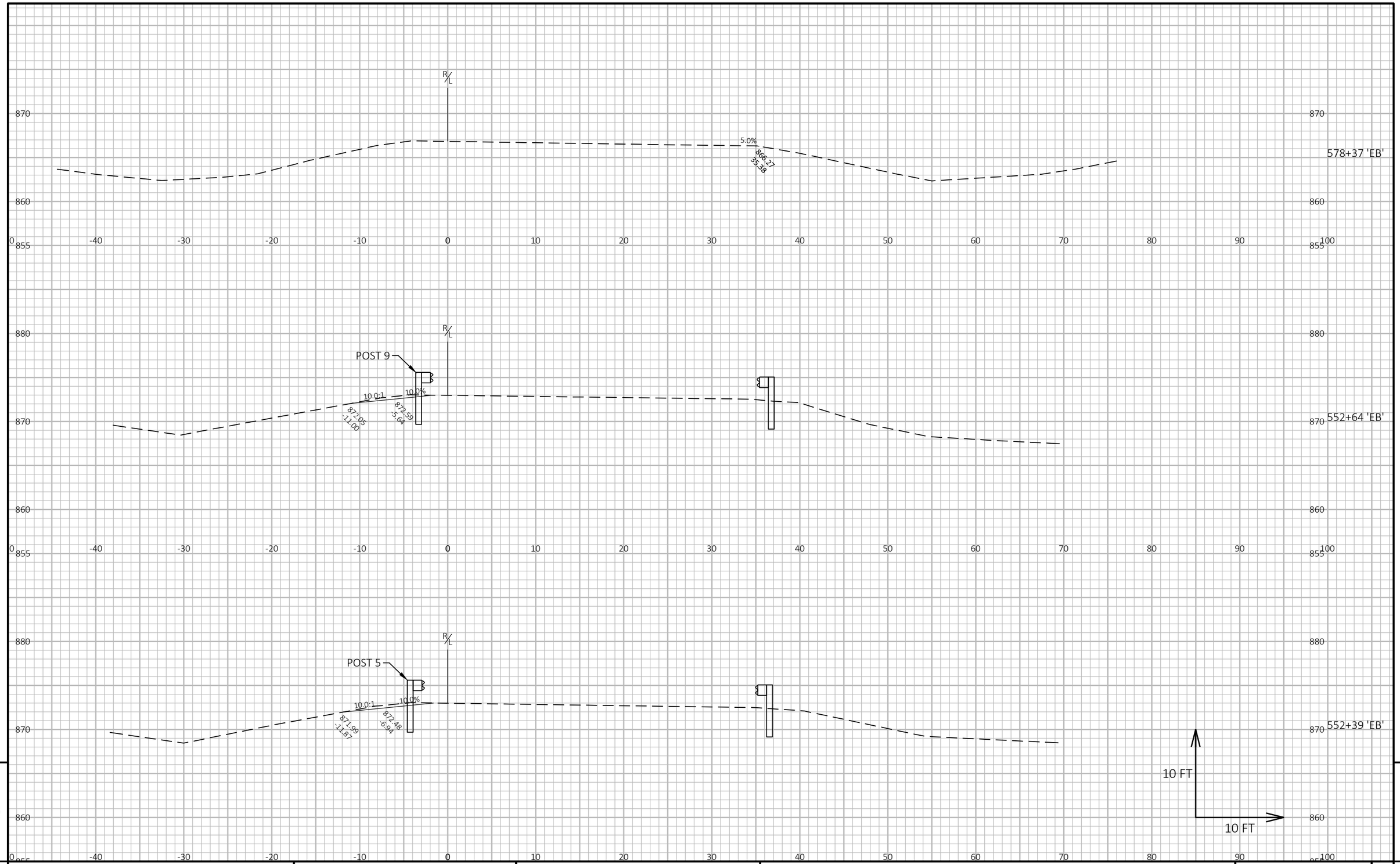

9

9

PROJECT NO: 1066-03-75	HWY: IH 94	COUNTY: DANE AND JEFFERSON	CROSS SECTIONS: IH 94 EB	SHEET 188	E

FILE NAME : P:\2020 PROJECTS\5020028 - WISDOT SWR IH 94\CIVIL3D\10660375\SHEETSPLAN\090101_XS-EB.DWG
LAYOUT NAME - 07

PLOT DATE : 2/6/2023 5:14 PM PLOT BY : KYLE CORNELIUS PLOT NAME : **PLOT SCALE :** 1 IN:10 FT HORZ. / 1 IN:10 FT VERT.

WISDOT/CADDS SHEET 49

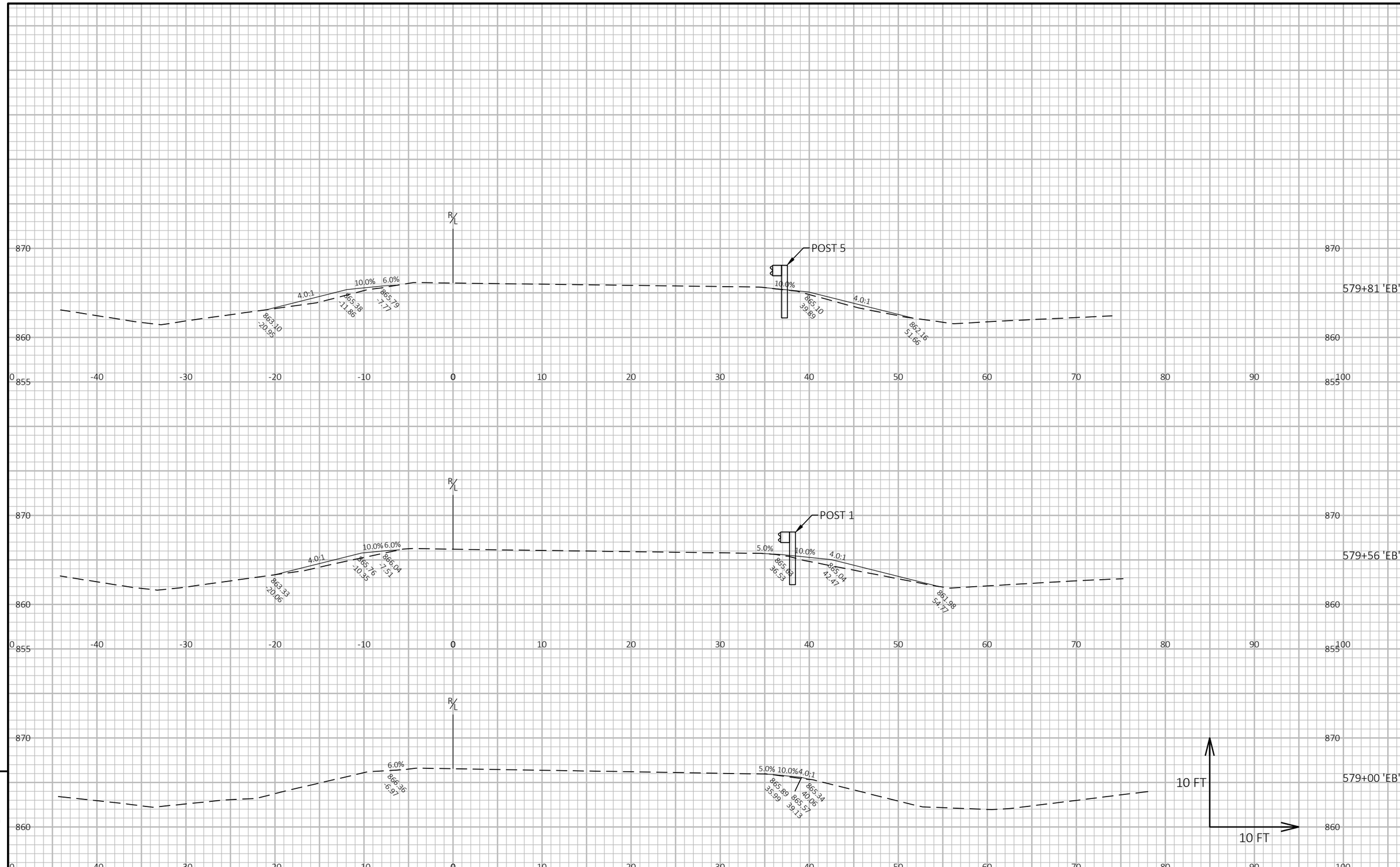

9

9

PROJECT NO: 1066-03-75	HWY: IH 94	COUNTY: DANE AND JEFFERSON	CROSS SECTIONS: IH 94 EB	SHEET 189	E

FILE NAME : P:\2020 PROJECTS\5020028 - WISDOT SWR IH 94\CIVIL3D\10660375\SHEETSPLAN\090101_XS-EB.DWG
LAYOUT NAME - 08
PLOT DATE : 2/6/2023 5:15 PM
PLOT BY : KYLE CORNELIUS
PLOT NAME :
PLOT SCALE : 1 IN:10 FT HORZ. / 1 IN:10 FT VERT.
WISDOT/CADDS SHEET 49

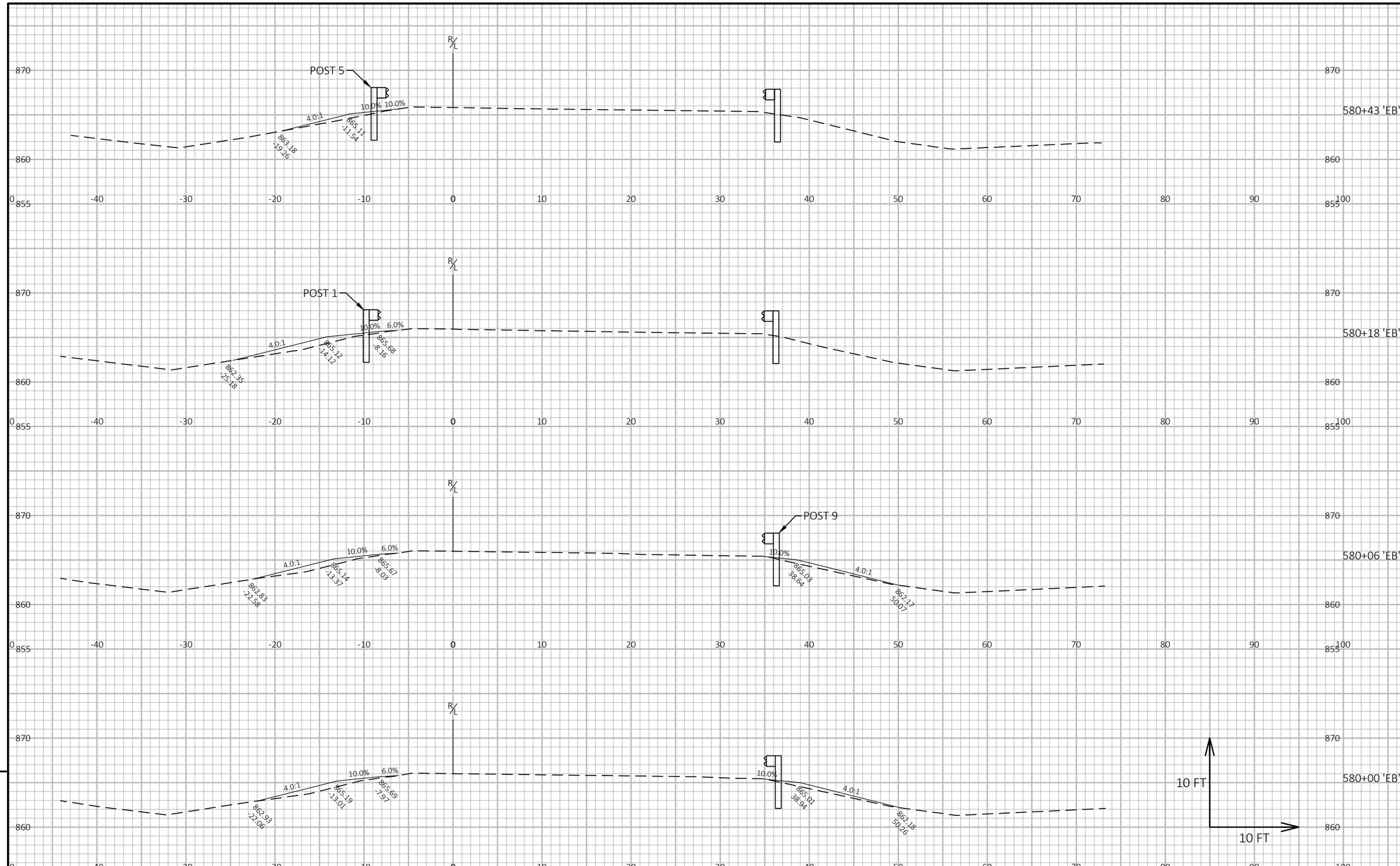

9

9

PROJECT NO: 1066-03-75	HWY: IH 94	COUNTY: DANE AND JEFFERSON	CROSS SECTIONS: IH 94 EB	SHEET 190	E

FILE NAME : P:\2020 PROJECTS\5020028 - WISDOT SWR IH 94\CIVIL3D\10660375\SHEETSPLAN\090101_XS-EB.DWG
LAYOUT NAME - 09
PLOT DATE : 2/6/2023 5:16 PM
PLOT BY : KYLE CORNELIUS
PLOT NAME :
PLOT SCALE : 1 IN:10 FT HORZ. / 1 IN:10 FT VERT.
WISDOT/CADDS SHEET 49

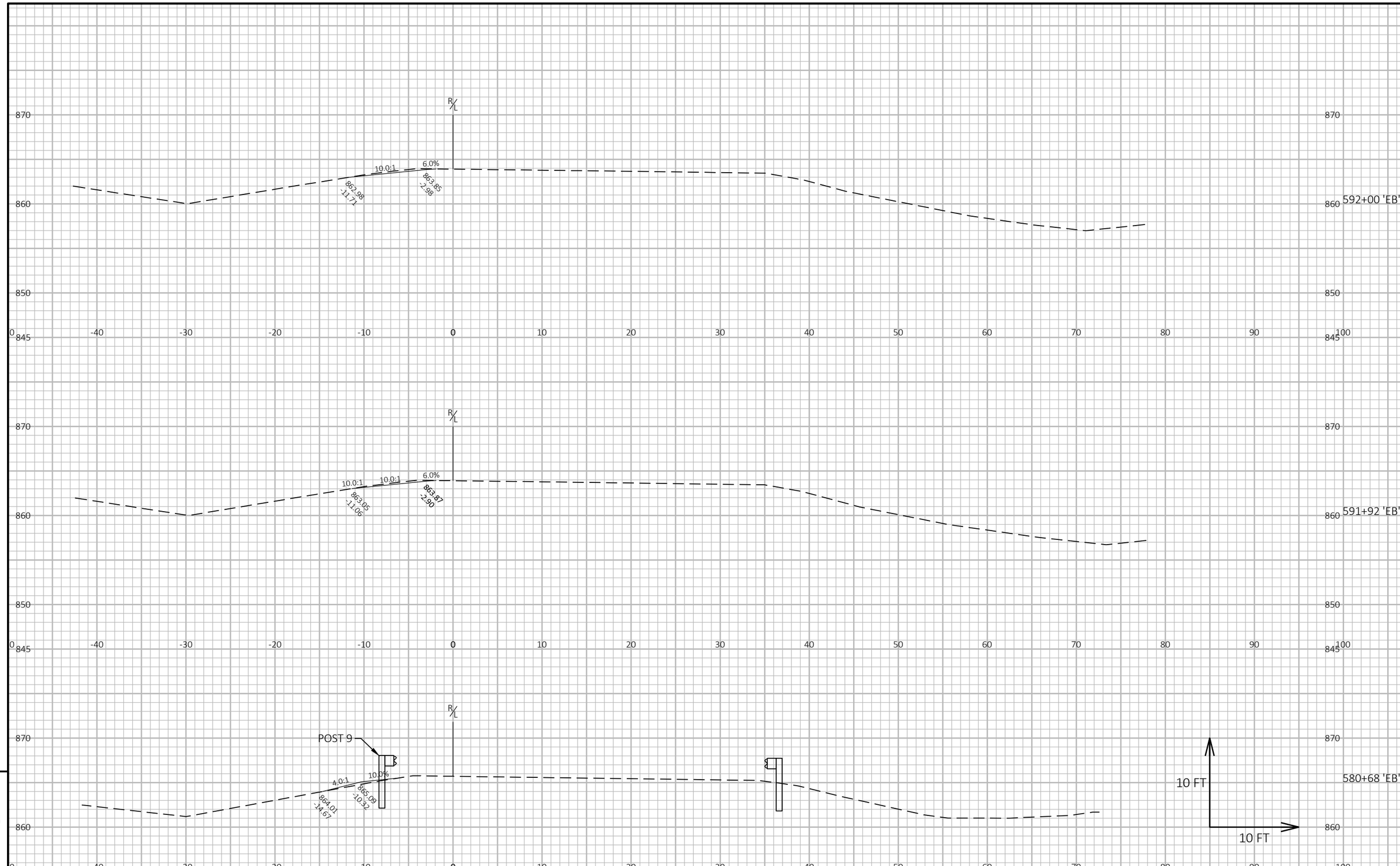

PROJECT NO: 1066-03-75	HWY: IH 94	COUNTY: DANE AND JEFFERSON	CROSS SECTIONS: IH 94 EB	SHEET 191	E

FILE NAME : P:\2020 PROJECTS\5020028 - WISDOT SWR IH 94\CIVIL3D\10660375\SHEETSPLAN\090101_XS-EB.DWG
LAYOUT NAME - 10
PLOT DATE : 2/6/2023 5:17 PM
PLOT BY : KYLE CORNELIUS
PLOT NAME :
PLOT SCALE : 1 IN:10 FT HORZ. / 1 IN:10 FT VERT.
WISDOT/CADDS SHEET 49

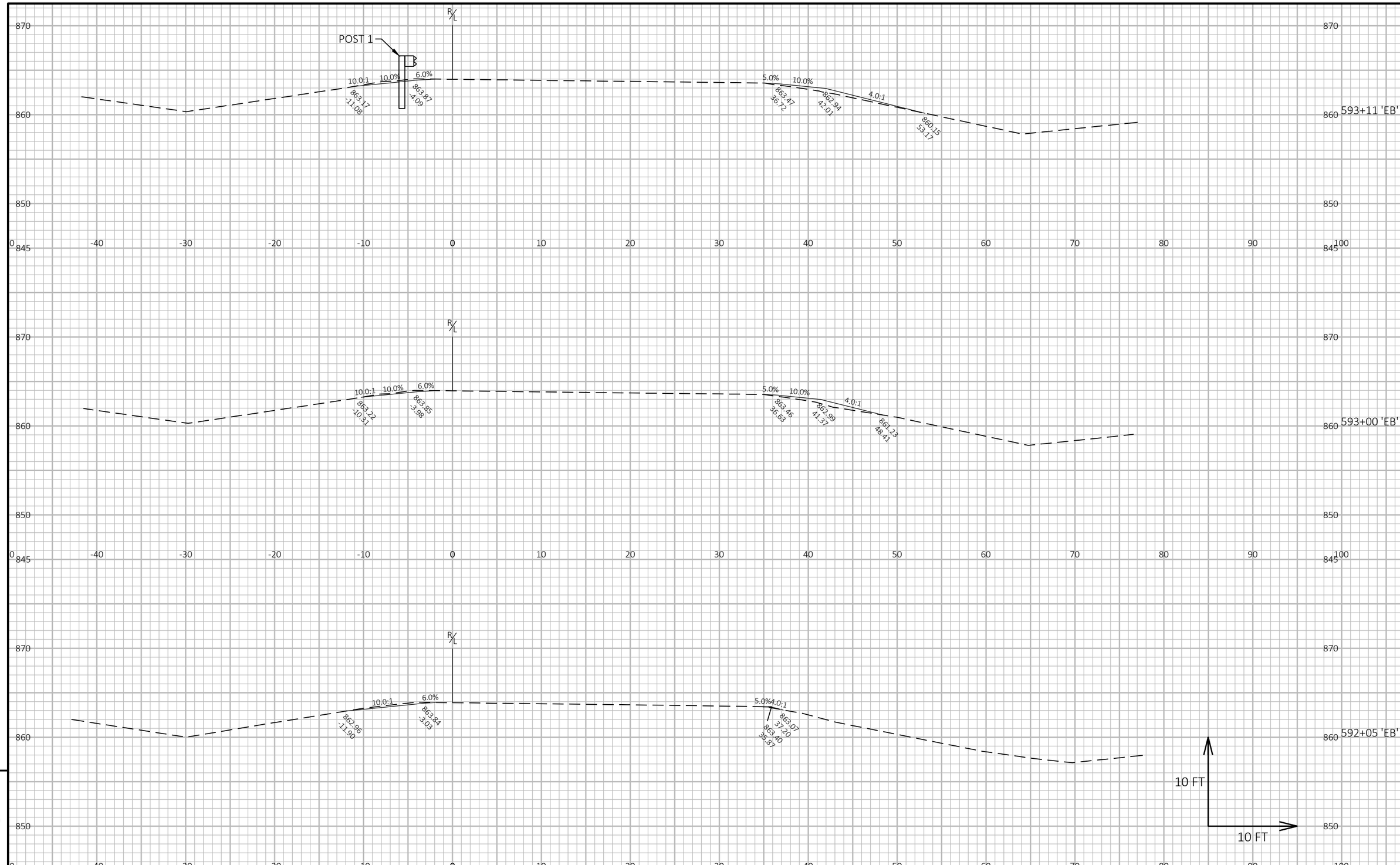

9

9

PROJECT NO: 1066-03-75	HWY: IH 94	COUNTY: DANE AND JEFFERSON	CROSS SECTIONS: IH 94 EB	SHEET 192	E

FILE NAME : P:\2020 PROJECTS\5020028 - WISDOT SWR IH 94\CIVIL3D\10660375\SHEETSPLAN\090101_XS-EB.DWG
LAYOUT NAME - 11

PLOT DATE : 2/6/2023 5:18 PM PLOT BY : KYLE CORNELIUS PLOT NAME : **PLOT SCALE :** 1 IN:10 FT HORZ. / 1 IN:10 FT VERT.

WISDOT/CADDS SHEET 49

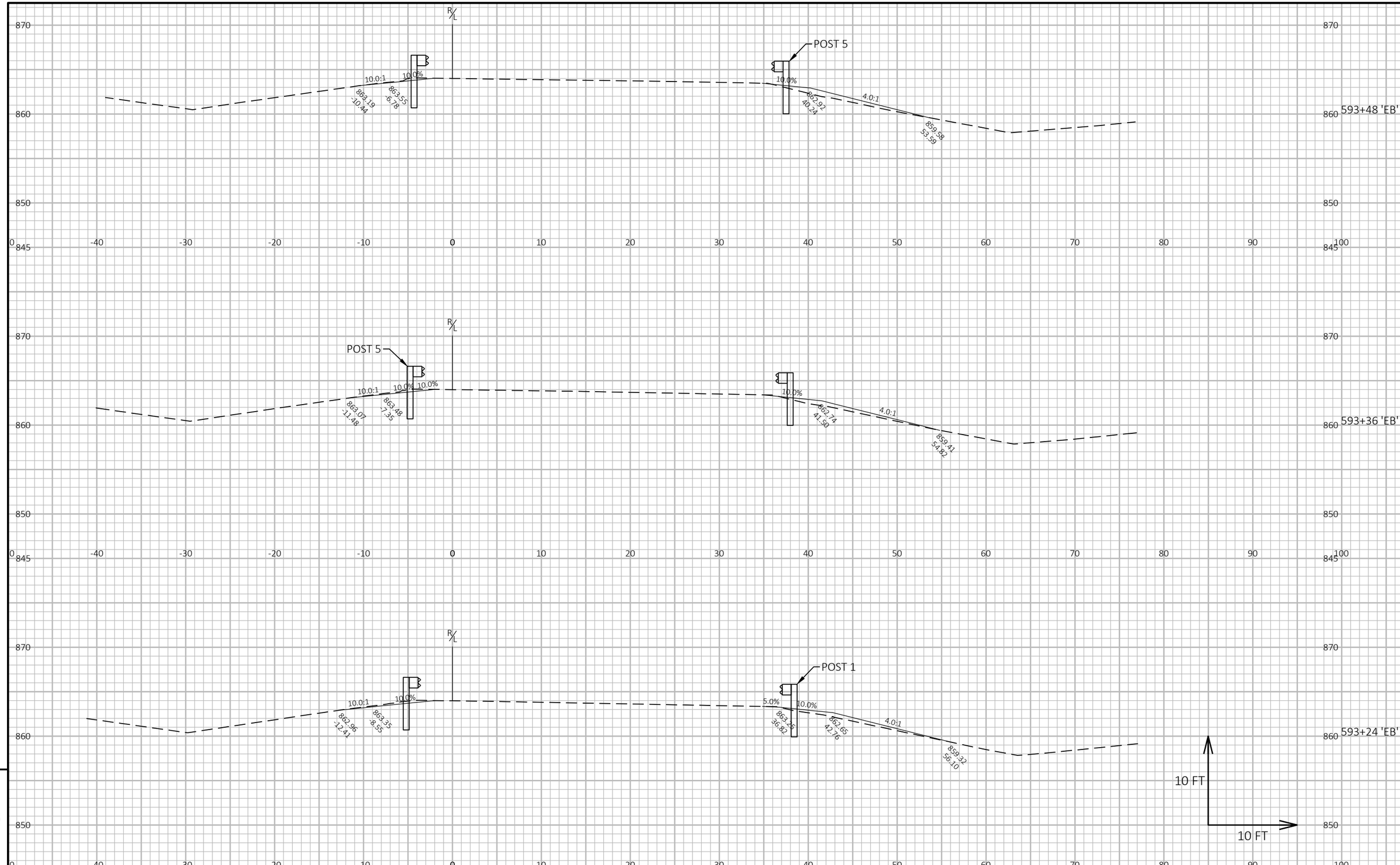

PROJECT NO: 1066-03-75	HWY: IH 94	COUNTY: DANE AND JEFFERSON	CROSS SECTIONS: IH 94 EB	SHEET 193	E

FILE NAME : P:\2020 PROJECTS\5020028 - WISDOT SWR IH 94\CIVIL3D\10660375\SHEETSPLAN\090101_XS-EB.DWG
LAYOUT NAME - 12
PLOT DATE : 2/6/2023 5:19 PM
PLOT BY : KYLE CORNELIUS
PLOT NAME :
PLOT SCALE : 1 IN:10 FT HORZ. / 1 IN:10 FT VERT.
WISDOT/CADDS SHEET 49

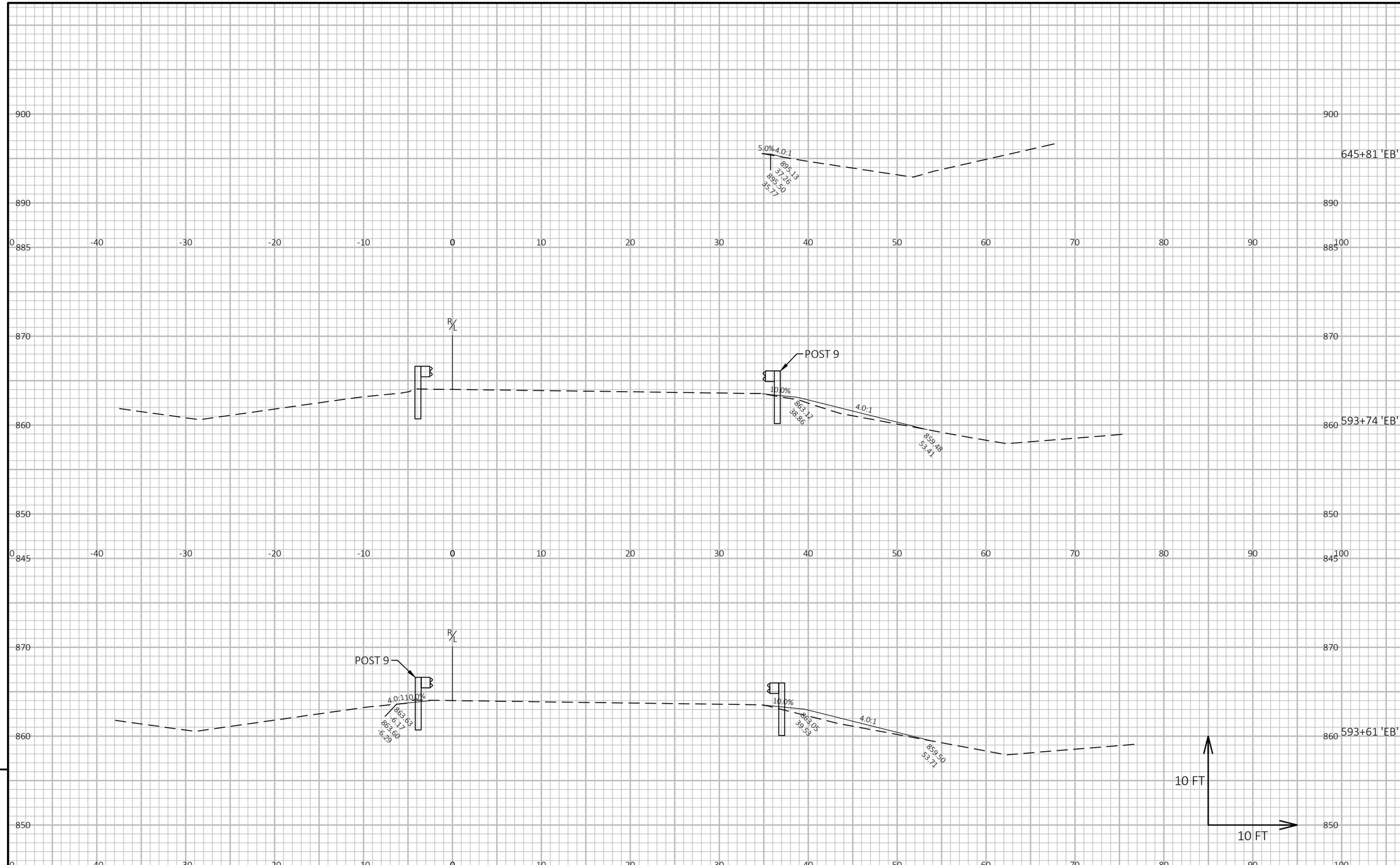

PROJECT NO: 1066-03-75	HWY: IH 94	COUNTY: DANE AND JEFFERSON	CROSS SECTIONS: IH 94 EB	SHEET 194	E

FILE NAME : P:\2020 PROJECTS\5020028 - WISDOT SWR IH 94\CIVIL3D\10660375\SHEETSPLAN\090101_XS-EB.DWG
LAYOUT NAME - 13
PLOT DATE : 2/6/2023 5:20 PM
PLOT BY : KYLE CORNELIUS
PLOT NAME :
PLOT SCALE : 1 IN:10 FT HORZ. / 1 IN:10 FT VERT.
WISDOT/CADDS SHEET 49

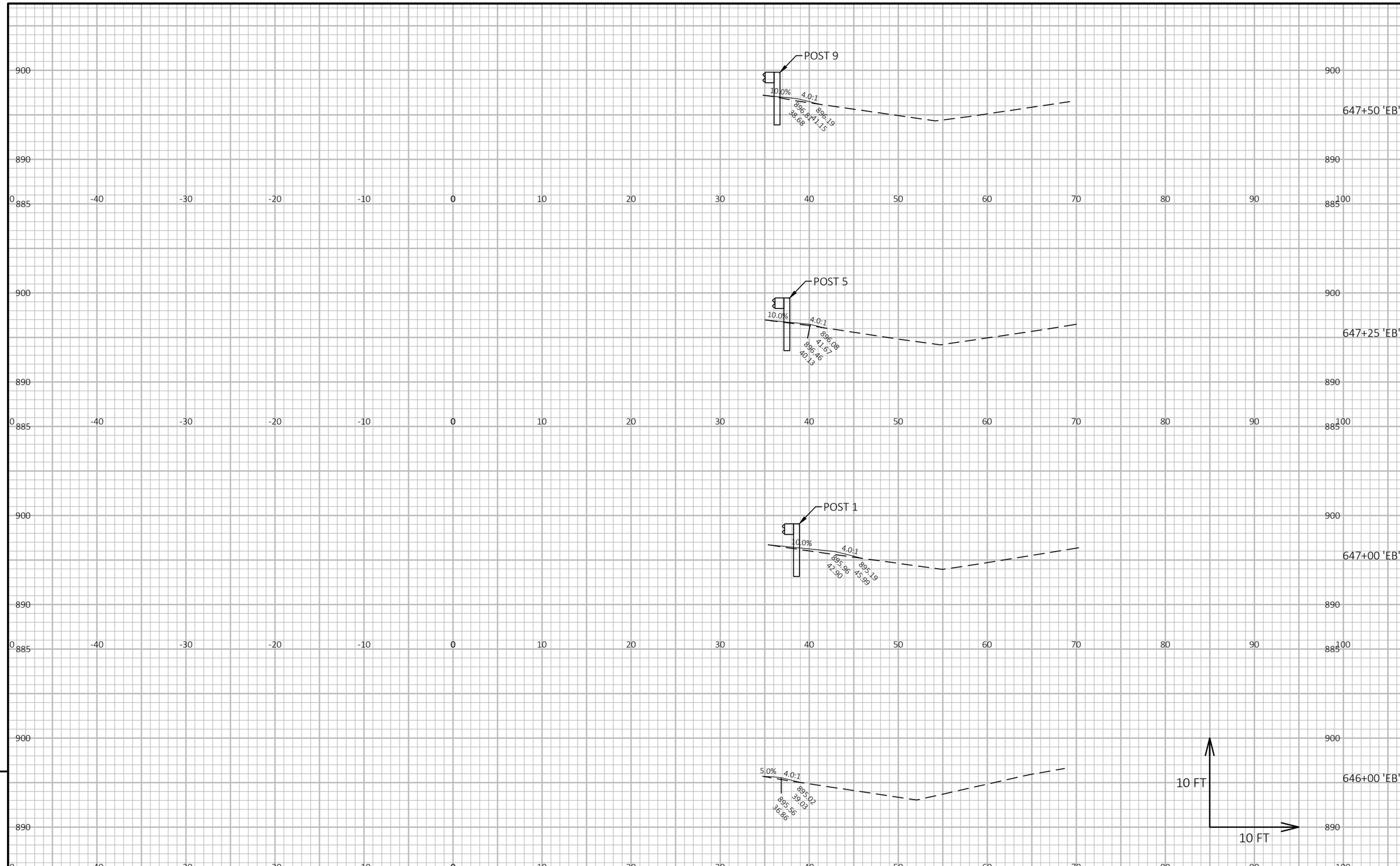

9

9

PROJECT NO: 1066-03-75	HWY: IH 94	COUNTY: DANE AND JEFFERSON	CROSS SECTIONS: IH 94 EB	SHEET 195	E

FILE NAME : P:\2020 PROJECTS\5020028 - WISDOT SWR IH 94\CIVIL3D\10660375\SHEETSPLAN\090101_XS-EB.DWG
LAYOUT NAME - 14

PLOT DATE : 2/6/2023 5:21 PM PLOT BY : KYLE CORNELIUS PLOT NAME : **PLOT SCALE :** 1 IN:10 FT HORZ. / 1 IN:10 FT VERT.

WISDOT/CADDS SHEET 49

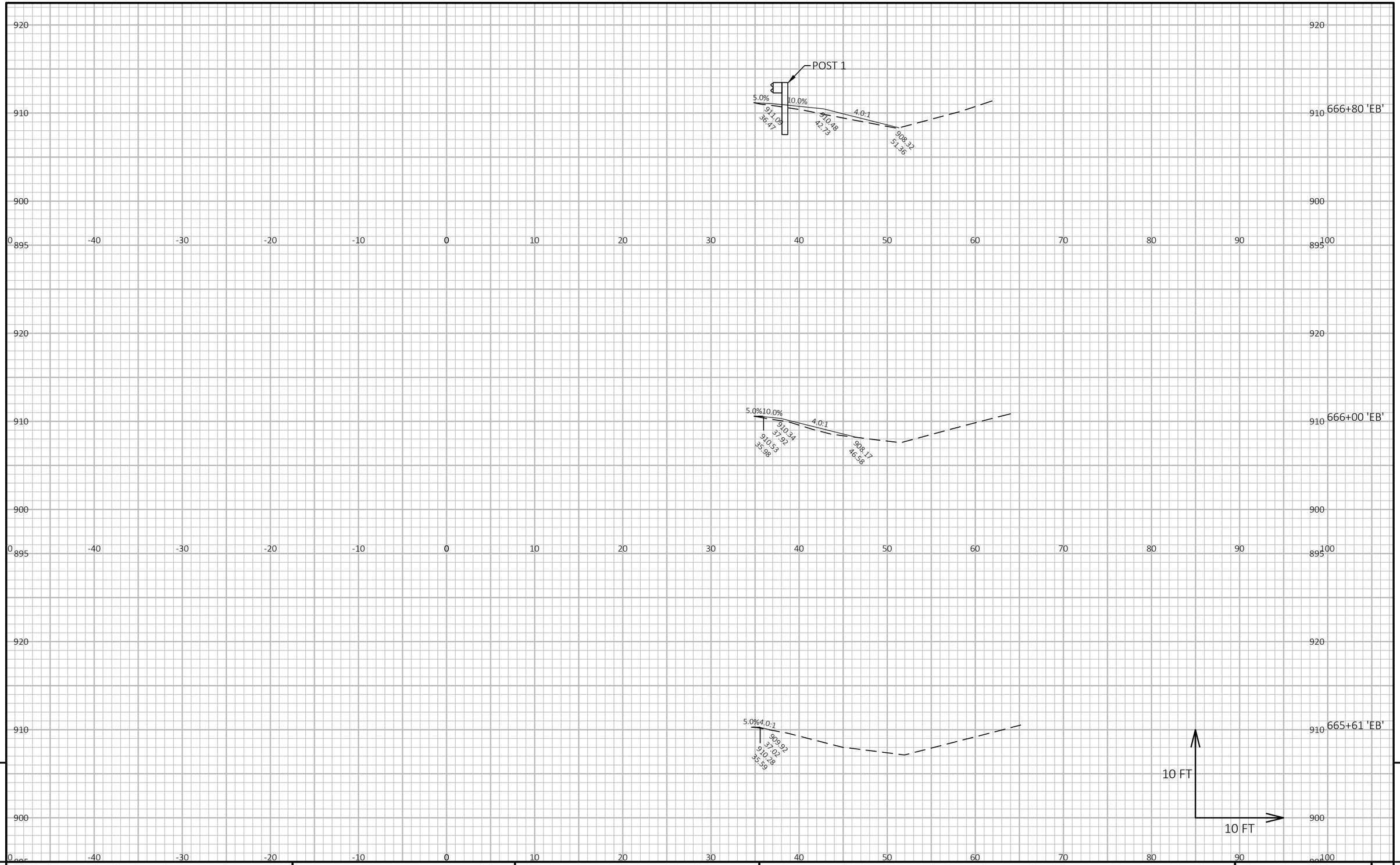

9

9

PROJECT NO: 1066-03-75	HWY: IH 94	COUNTY: DANE AND JEFFERSON	CROSS SECTIONS: IH 94 EB	SHEET 196	E

FILE NAME : P:\2020 PROJECTS\5020028 - WISDOT SWR IH 94\CIVIL3D\10660375\SHEETSPLAN\090101_XS-EB.DWG
LAYOUT NAME - 15

PLOT DATE : 2/6/2023 5:22 PM PLOT BY : KYLE CORNELIUS PLOT NAME : **PLOT SCALE :** 1 IN:10 FT HORZ. / 1 IN:10 FT VERT.

WISDOT/CADDS SHEET 49

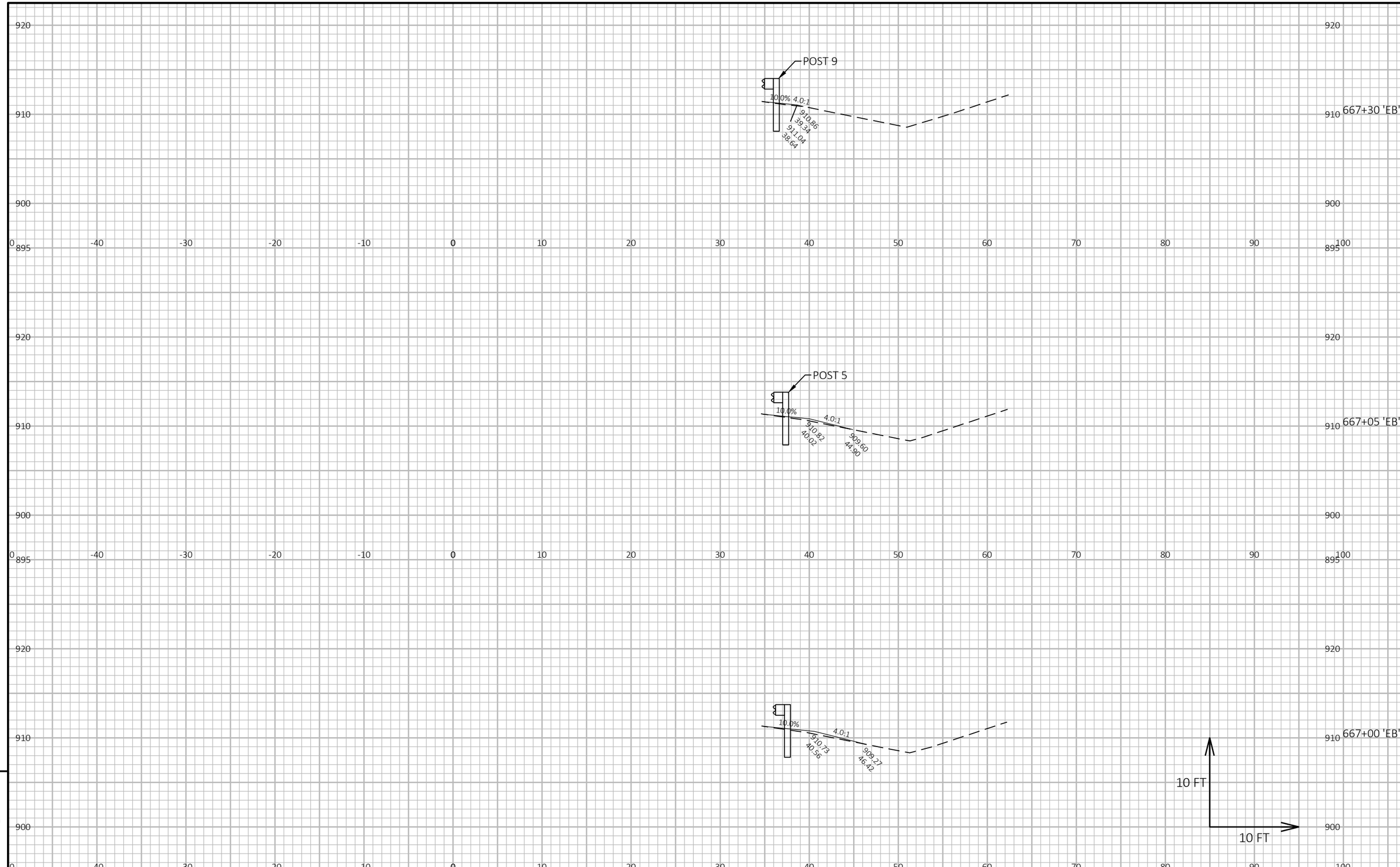

9

9

PROJECT NO: 1066-03-75	HWY: IH 94	COUNTY: DANE AND JEFFERSON	CROSS SECTIONS: IH 94 EB	SHEET 197	E

FILE NAME : P:\2020 PROJECTS\5020028 - WISDOT SWR IH 94\CIVIL3D\10660375\SHEETSPLAN\090101_XS-EB.DWG
LAYOUT NAME - 16

PLOT DATE : 2/6/2023 5:23 PM PLOT BY : KYLE CORNELIUS PLOT NAME : **PLOT SCALE :** 1 IN:10 FT HORZ. / 1 IN:10 FT VERT.

WISDOT/CADDS SHEET 49

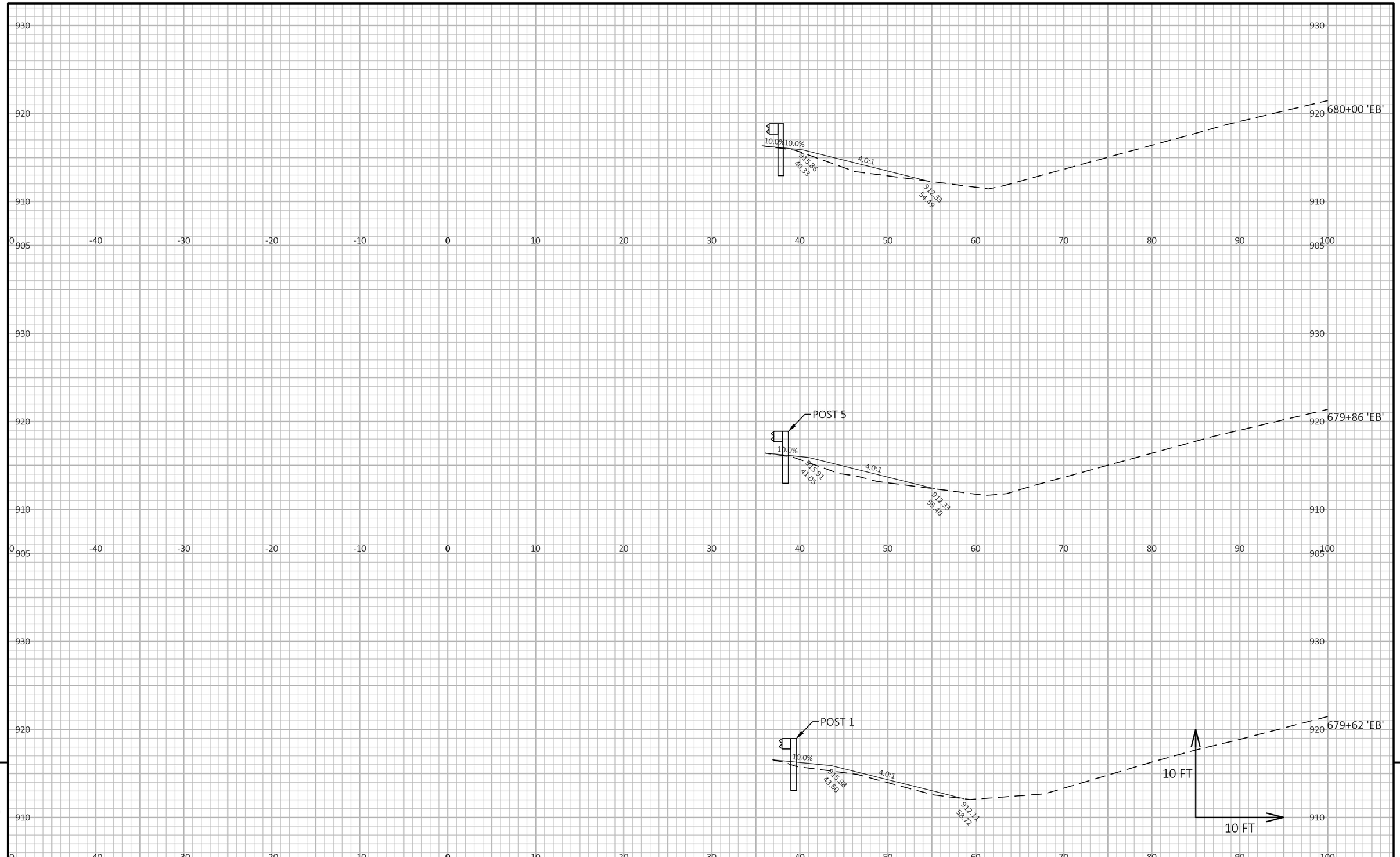

9

9

PROJECT NO: 1066-03-75	HWY: IH 94	COUNTY: DANE AND JEFFERSON	CROSS SECTIONS: IH 94 EB	SHEET 198	E

FILE NAME : P:\2020 PROJECTS\5020028 - WISDOT SWR IH 94\CIVIL3D\10660375\SHEETSPLAN\090101_XS-EB.DWG
LAYOUT NAME - 17

PLOT DATE : 2/6/2023 5:24 PM PLOT BY : KYLE CORNELIUS PLOT NAME : PLOT SCALE : 1 IN:10 FT HORZ. / 1 IN:10 FT VERT.

WISDOT/CADDS SHEET 49

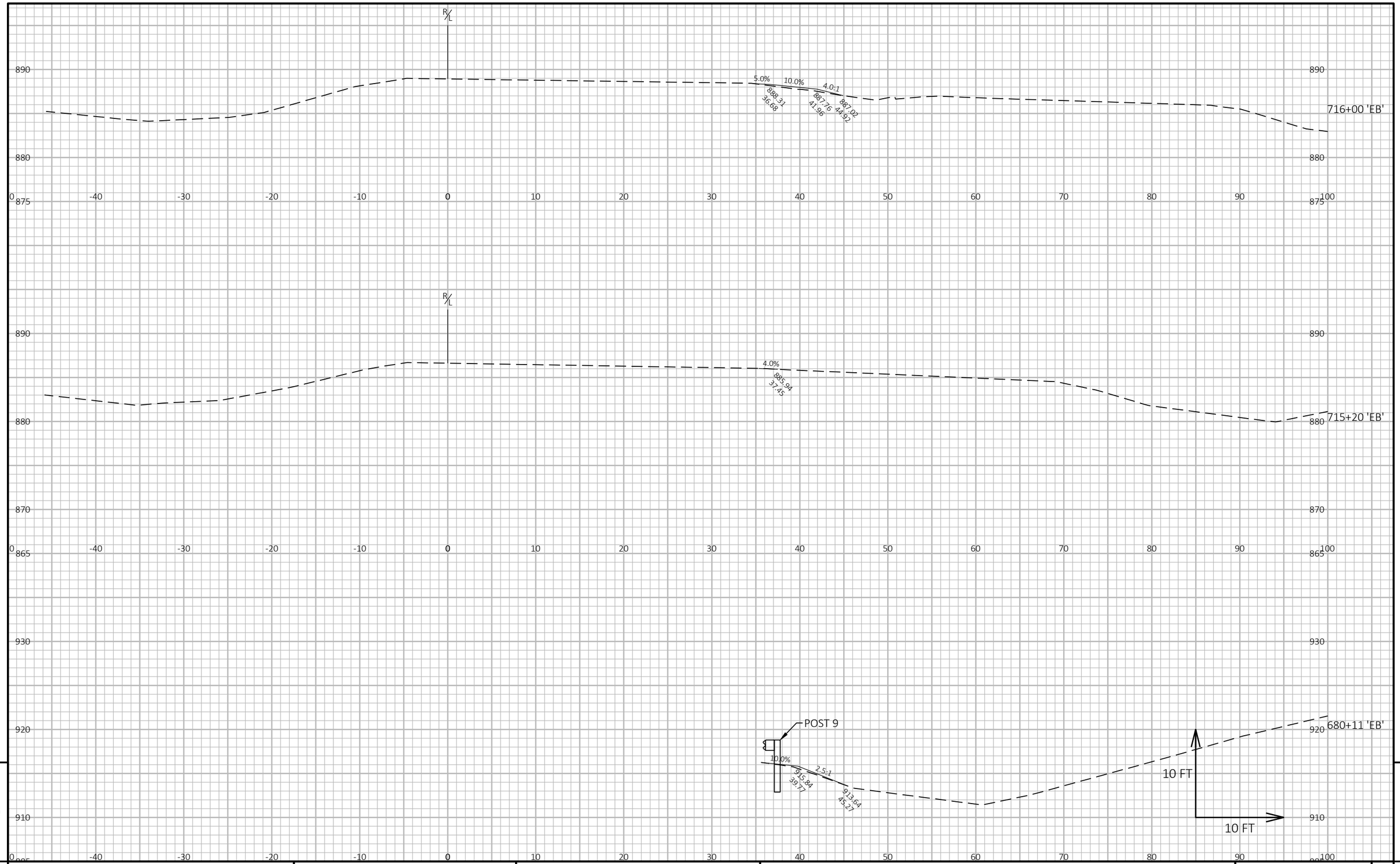

9

9

PROJECT NO: 1066-03-75	HWY: IH 94	COUNTY: DANE AND JEFFERSON	CROSS SECTIONS: IH 94 EB	SHEET 199	E

FILE NAME : P:\2020 PROJECTS\5020028 - WISDOT SWR IH 94\CIVIL3D\10660375\SHEETSPLAN\090101_XS-EB.DWG
LAYOUT NAME - 18

PLOT DATE : 2/6/2023 5:25 PM PLOT BY : KYLE CORNELIUS PLOT NAME : **PLOT SCALE :** 1 IN:10 FT HORZ. / 1 IN:10 FT VERT.

WISDOT/CADDS SHEET 49

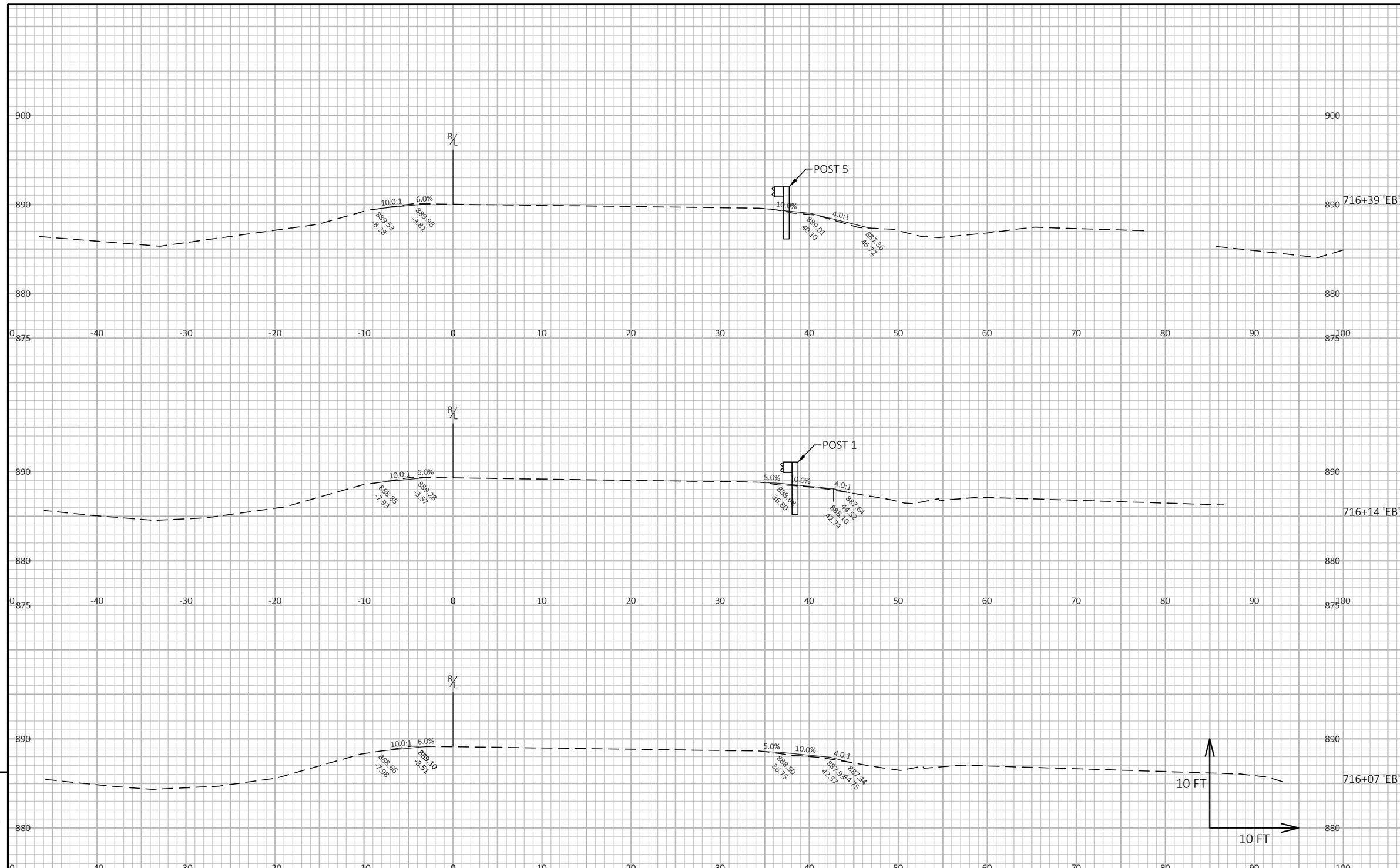

9

9

PROJECT NO: 1066-03-75	HWY: IH 94	COUNTY: DANE AND JEFFERSON	CROSS SECTIONS: IH 94 EB	SHEET 200	E

FILE NAME : P:\2020 PROJECTS\5020028 - WISDOT SWR IH 94\CIVIL3D\10660375\SHEETSPLAN\090101_XS-EB.DWG
LAYOUT NAME - 19

PLOT DATE : 2/6/2023 5:26 PM PLOT BY : KYLE CORNELIUS PLOT NAME : **PLOT SCALE :** 1 IN:10 FT HORZ. / 1 IN:10 FT VERT.

WISDOT/CADDS SHEET 49

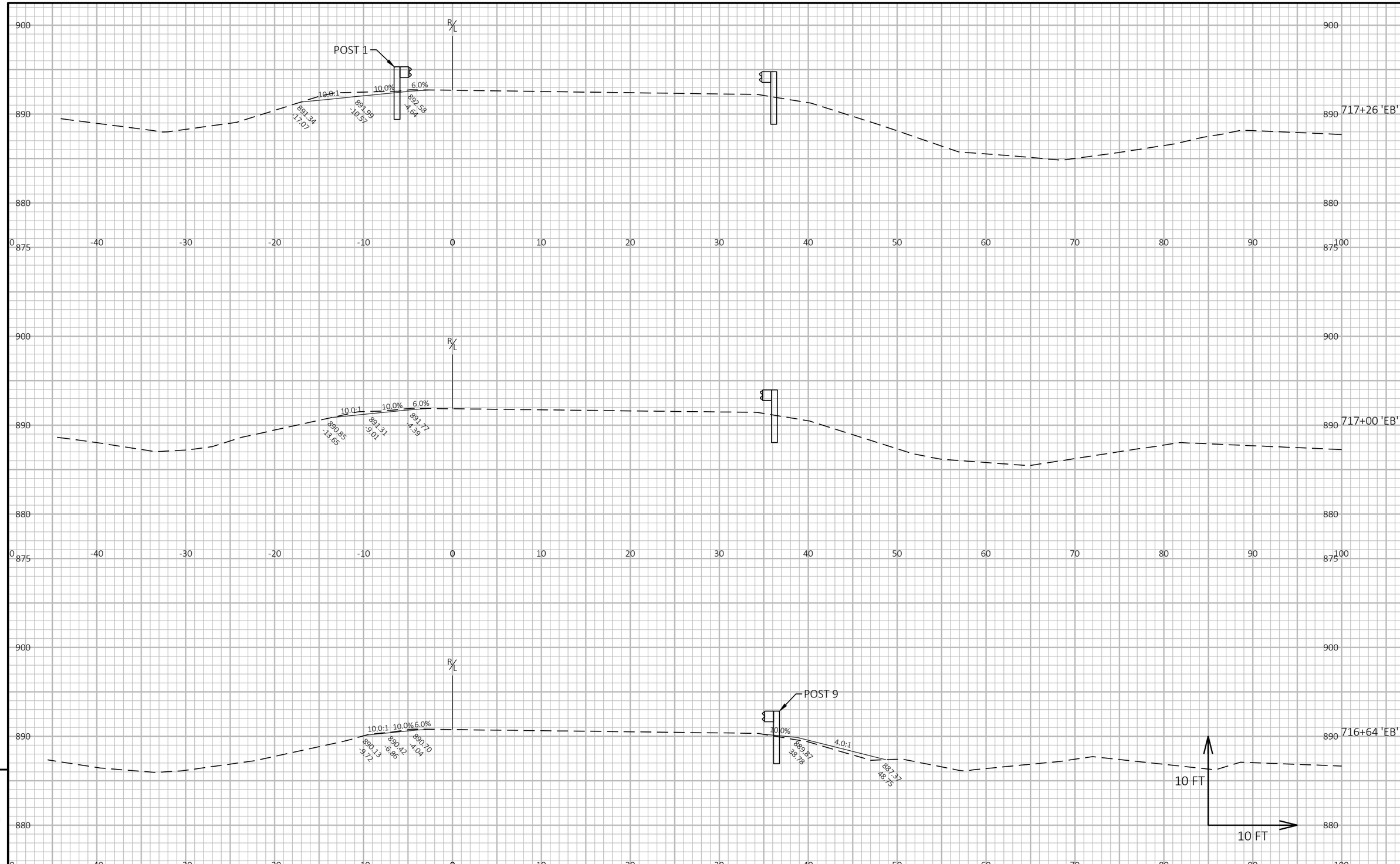

9

9

PROJECT NO: 1066-03-75	HWY: IH 94	COUNTY: DANE AND JEFFERSON	CROSS SECTIONS: IH 94 EB	SHEET 201	E

FILE NAME : P:\2020 PROJECTS\5020028 - WISDOT SWR IH 94\CIVIL3D\10660375\SHEETSPLAN\090101_XS-EB.DWG
LAYOUT NAME - 20

PLOT DATE : 2/6/2023 5:27 PM PLOT BY : KYLE CORNELIUS PLOT NAME : **PLOT SCALE :** 1 IN:10 FT HORZ. / 1 IN:10 FT VERT.

WISDOT/CADDS SHEET 49

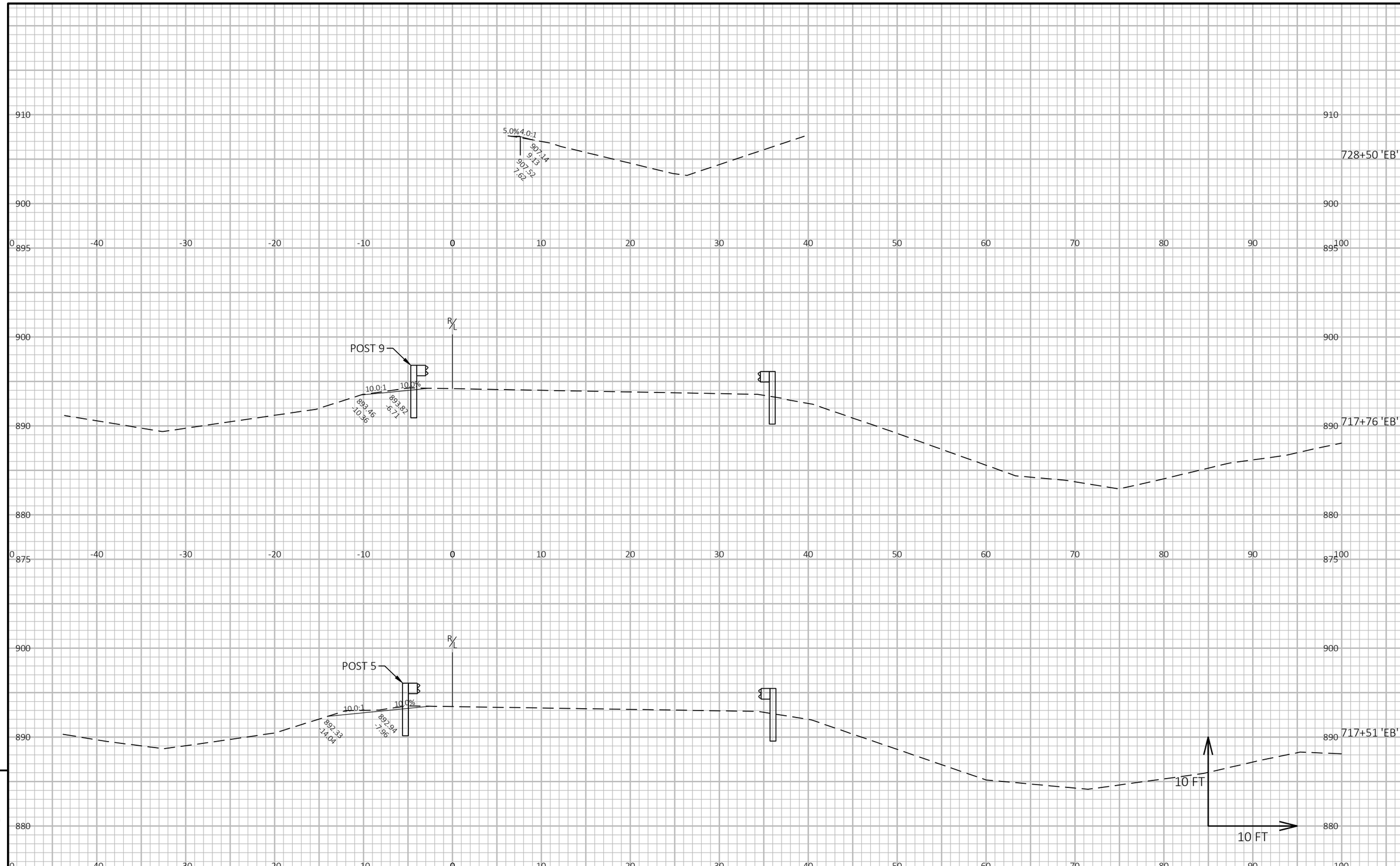

PROJECT NO: 1066-03-75	HWY: IH 94	COUNTY: DANE AND JEFFERSON	CROSS SECTIONS: IH 94 EB	SHEET 202	E

FILE NAME : P:\2020 PROJECTS\5020028 - WISDOT SWR IH 94\CIVIL3D\10660375\SHEETSPLAN\090101_XS-EB.DWG
LAYOUT NAME - 40
PLOT DATE : 2/6/2023 5:28 PM
PLOT BY : KYLE CORNELIUS
PLOT NAME :
PLOT SCALE : 1 IN:10 FT HORZ. / 1 IN:10 FT VERT.
WISDOT/CADDS SHEET 49

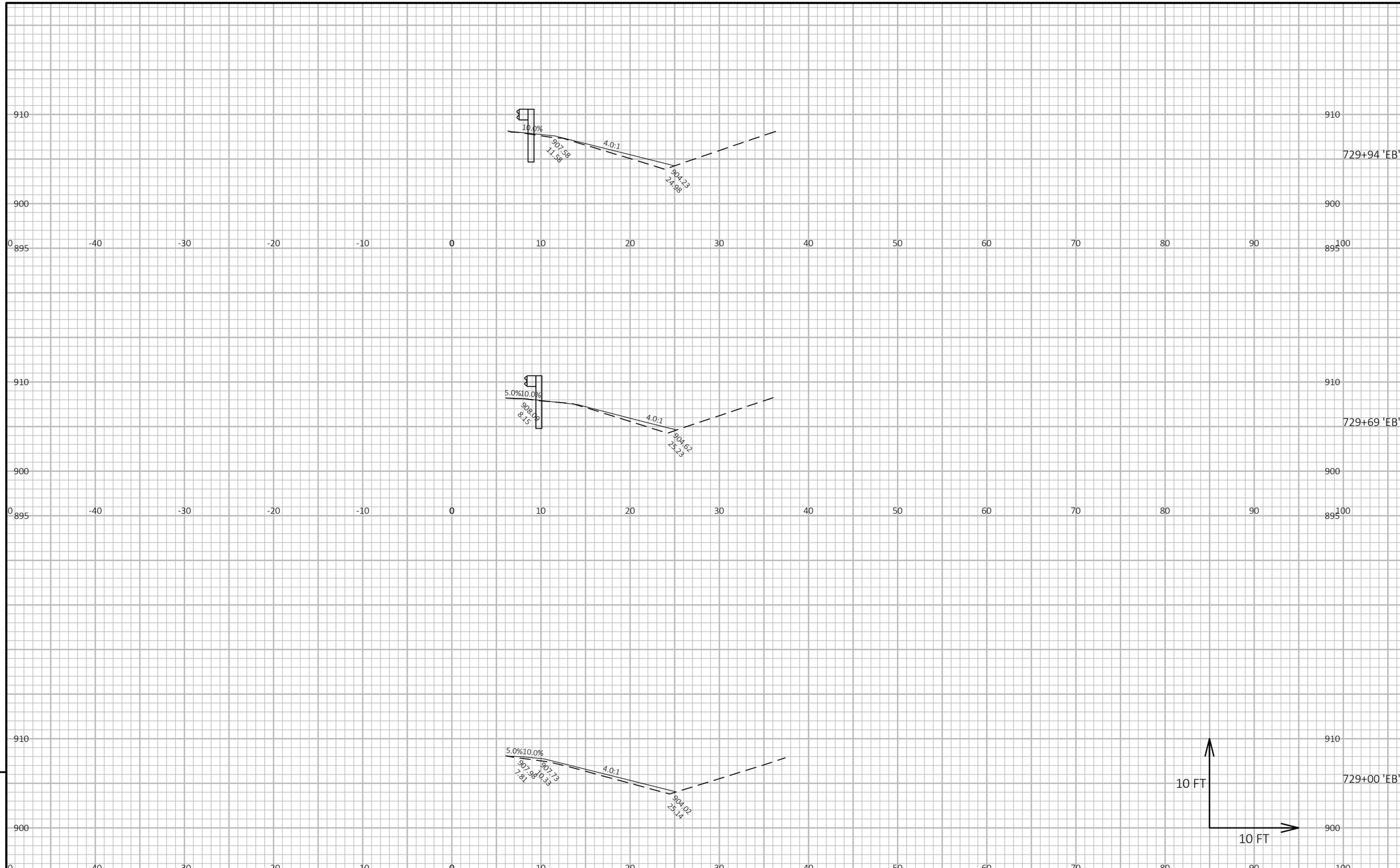

PROJECT NO: 1066-03-75	HWY: IH 94	COUNTY: DANE AND JEFFERSON	CROSS SECTIONS: IH 94 EB	SHEET 203	E

FILE NAME : P:\2020 PROJECTS\5020028 - WISDOT SWR IH 94\CIVIL3D\10660375\SHEETSPLAN\090101_XS-EB.DWG
LAYOUT NAME - 41
PLOT DATE : 2/6/2023 5:29 PM
PLOT BY : KYLE CORNELIUS
PLOT NAME :
PLOT SCALE : 1 IN:10 FT HORZ. / 1 IN:10 FT VERT.
WISDOT/CADDS SHEET 49

9

9

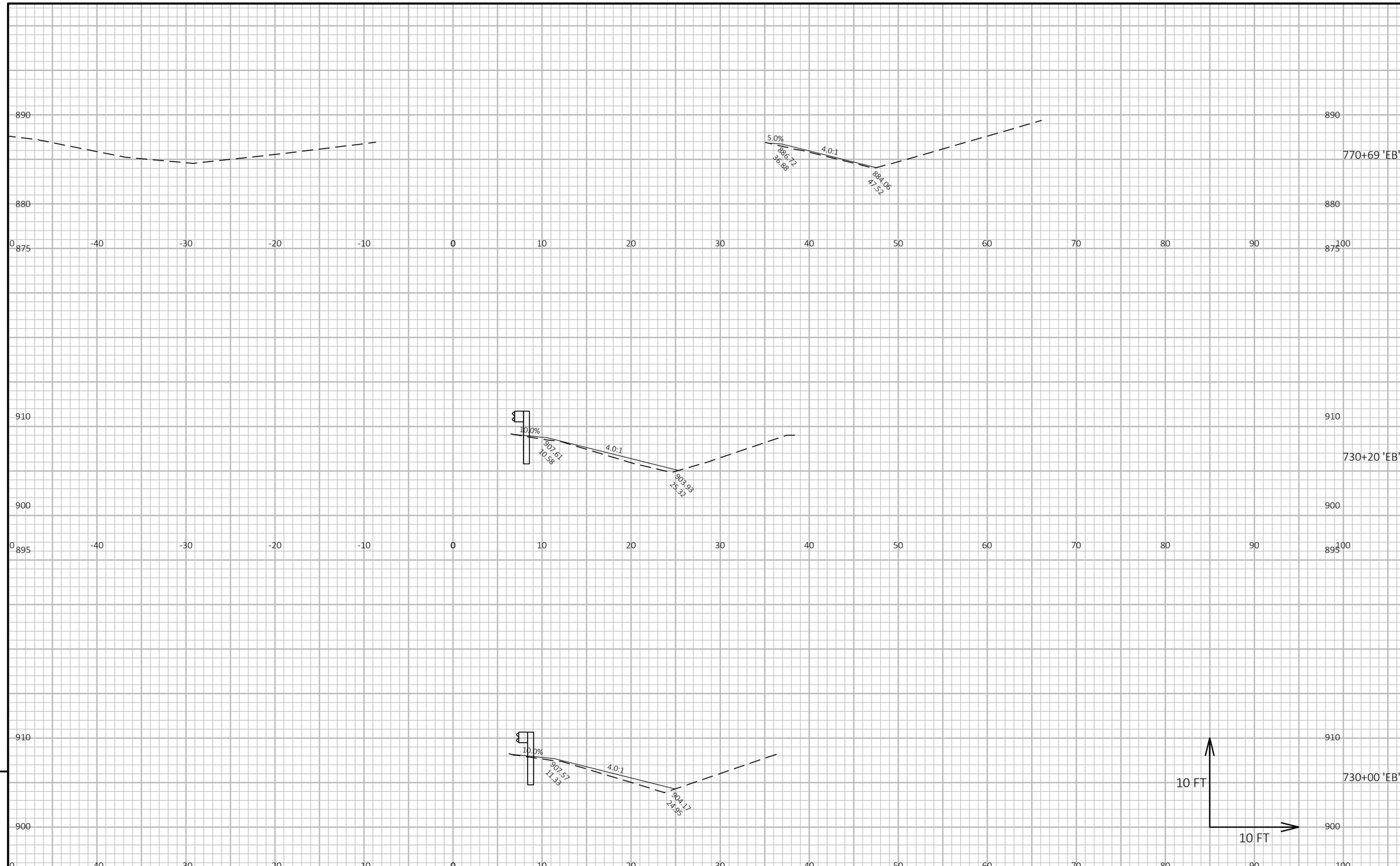

PROJECT NO: 1066-03-75	HWY: IH 94	COUNTY: DANE AND JEFFERSON	CROSS SECTIONS: IH 94 EB	SHEET 204	E

FILE NAME : P:\2020 PROJECTS\5020028 - WISDOT SWR IH 94\CIVIL3D\10660375\SHEETSPLAN\090101_XS-EB.DWG
LAYOUT NAME - 21
PLOT DATE : 2/6/2023 5:30 PM
PLOT BY : KYLE CORNELIUS
PLOT NAME :
PLOT SCALE : 1 IN:10 FT HORZ. / 1 IN:10 FT VERT.
WISDOT/CADDS SHEET 49

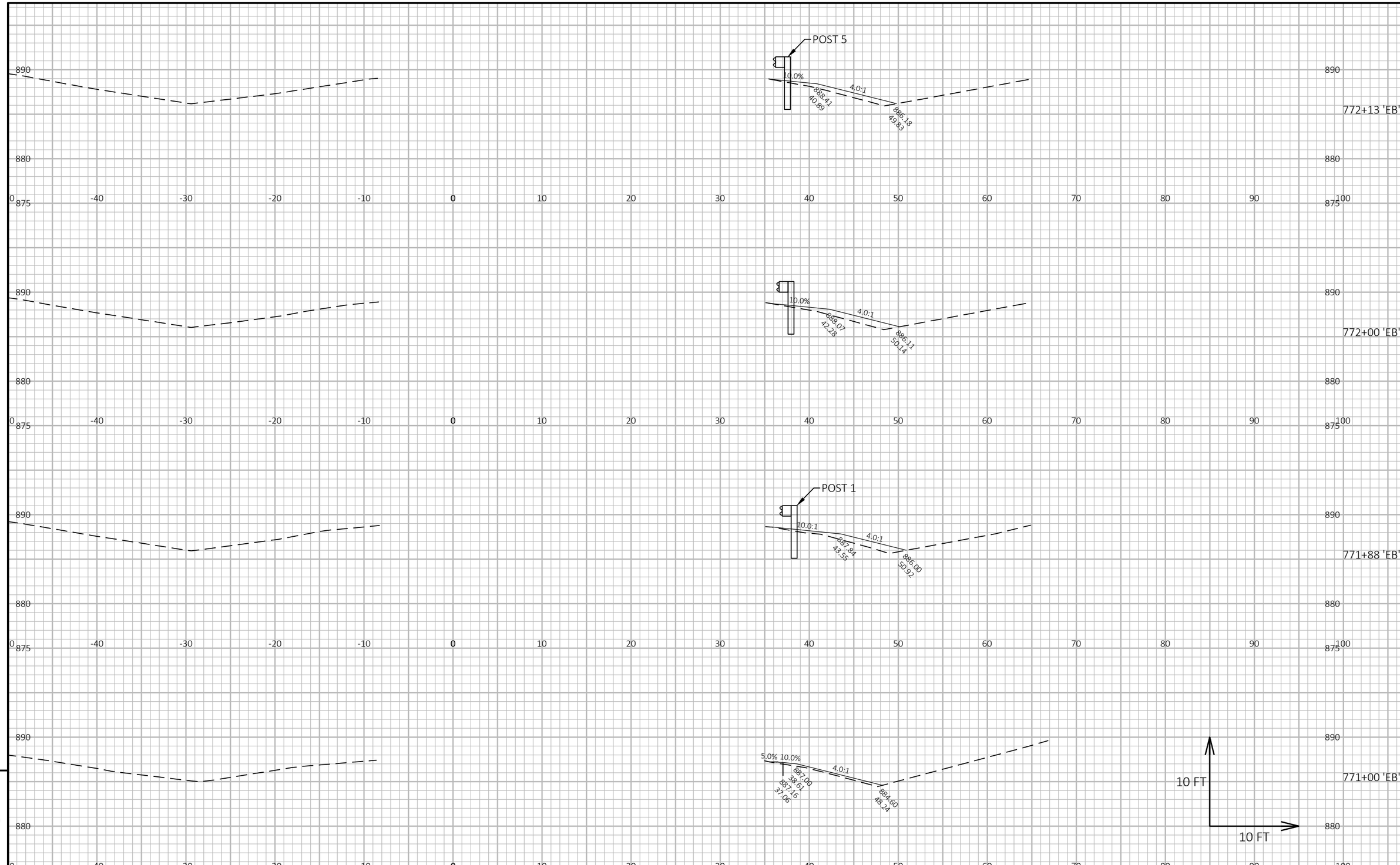

PROJECT NO: 1066-03-75	HWY: IH 94	COUNTY: DANE AND JEFFERSON	CROSS SECTIONS: IH 94 EB	SHEET 205	E

FILE NAME : P:\2020 PROJECTS\5020028 - WISDOT SWR IH 94\CIVIL3D\10660375\SHEETSPLAN\090101_XS-EB.DWG
LAYOUT NAME - 22
PLOT DATE : 2/6/2023 5:31 PM
PLOT BY : KYLE CORNELIUS
PLOT NAME :
PLOT SCALE : 1 IN:10 FT HORZ. / 1 IN:10 FT VERT.
WISDOT/CADDS SHEET 49

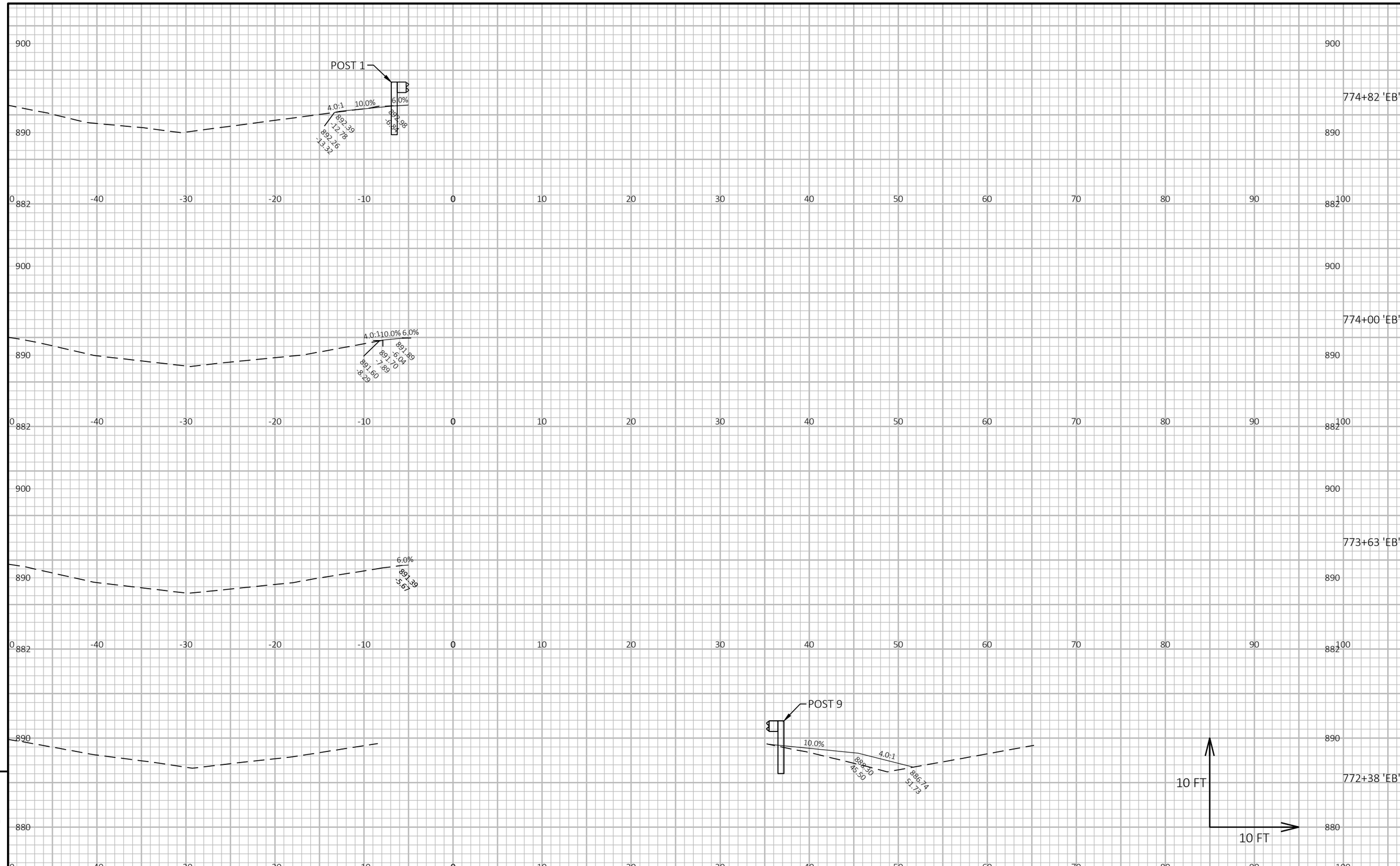

PROJECT NO: 1066-03-75	HWY: IH 94	COUNTY: DANE AND JEFFERSON	CROSS SECTIONS: IH 94 EB	SHEET 206	E

FILE NAME : P:\2020 PROJECTS\5020028 - WISDOT SWR IH 94\CIVIL3D\10660375\SHEETSPLAN\090101_XS-EB.DWG
LAYOUT NAME - 23
PLOT DATE : 2/6/2023 5:32 PM
PLOT BY : KYLE CORNELIUS
PLOT NAME :
PLOT SCALE : 1 IN:10 FT HORZ. / 1 IN:10 FT VERT.
WISDOT/CADDS SHEET 49

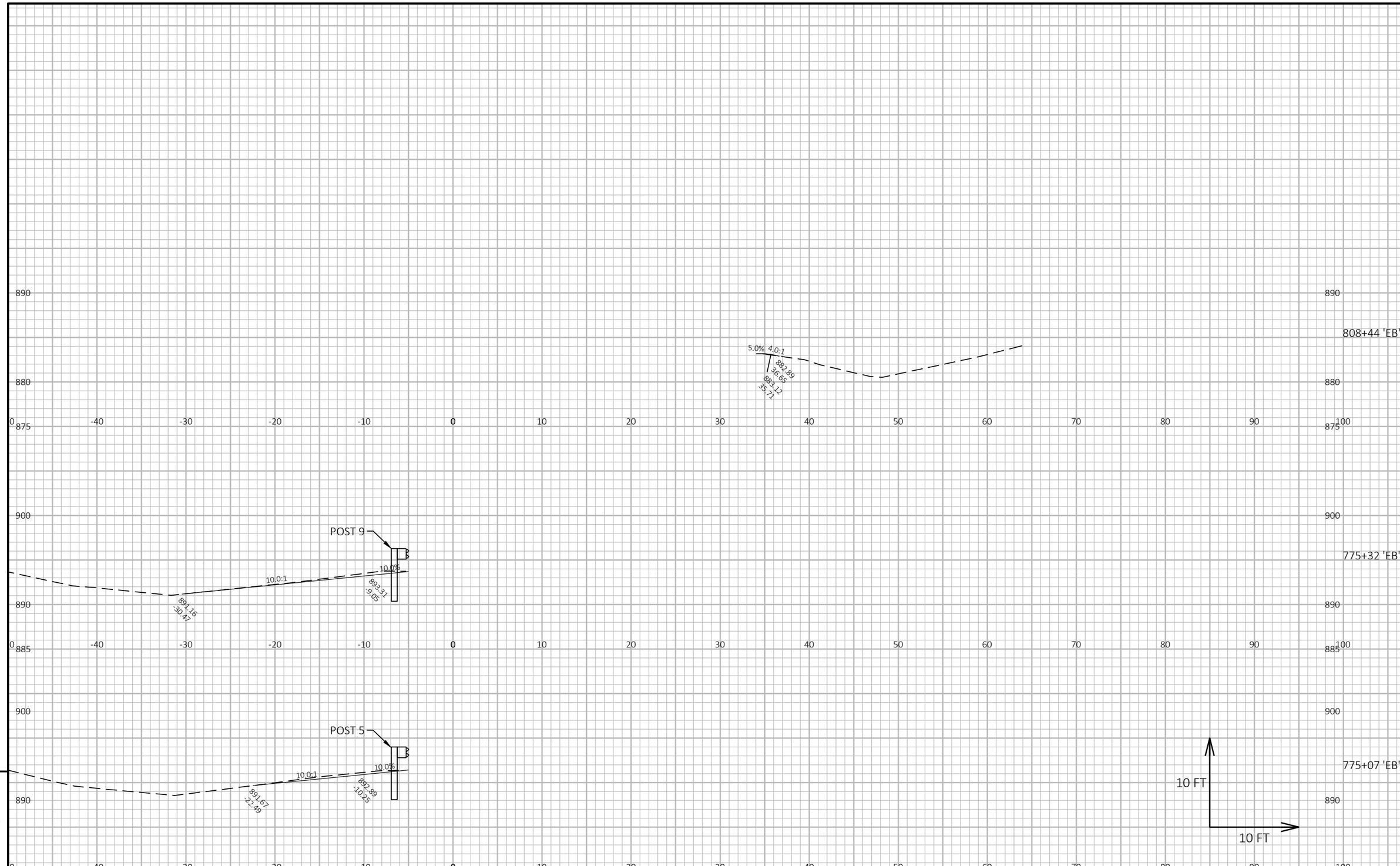

9

9

PROJECT NO: 1066-03-75	HWY: IH 94	COUNTY: DANE AND JEFFERSON	CROSS SECTIONS: IH 94 EB	SHEET 207	E

FILE NAME : P:\2020 PROJECTS\5020028 - WISDOT SWR IH 94\CIVIL3D\10660375\SHEETSPLAN\090101_XS-EB.DWG
LAYOUT NAME - 24

PLOT DATE : 2/6/2023 5:33 PM PLOT BY : KYLE CORNELIUS PLOT NAME : **PLOT SCALE :** 1 IN:10 FT HORZ. / 1 IN:10 FT VERT.

WISDOT/CADDS SHEET 49

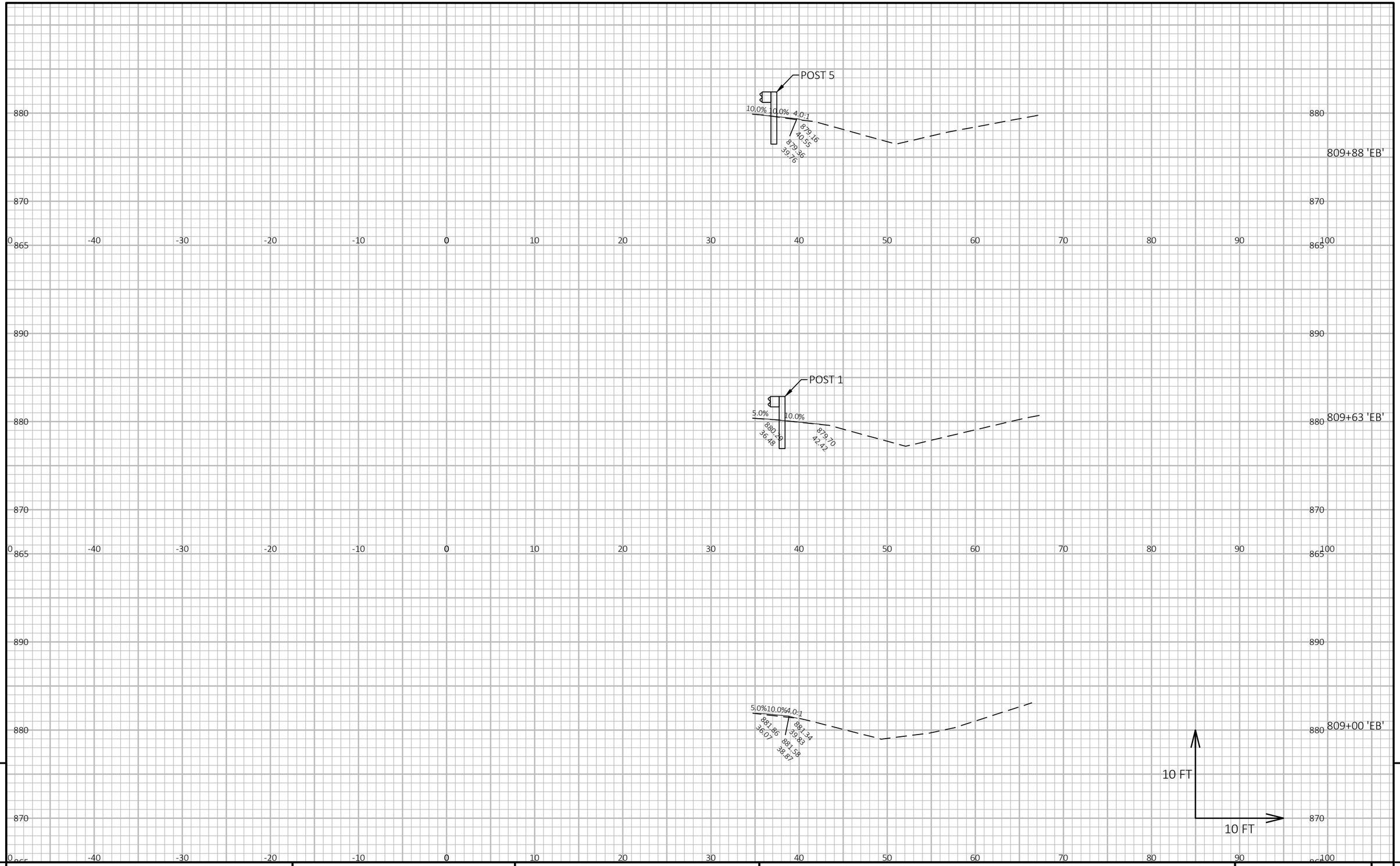

9

9

PROJECT NO: 1066-03-75	HWY: IH 94	COUNTY: DANE AND JEFFERSON	CROSS SECTIONS: IH 94 EB	SHEET 208	E

FILE NAME : P:\2020 PROJECTS\5020028 - WISDOT SWR IH 94\CIVIL3D\10660375\SHEETSPLAN\090101_XS-EB.DWG
LAYOUT NAME - 25

PLOT DATE : 2/6/2023 5:34 PM PLOT BY : KYLE CORNELIUS PLOT NAME : **PLOT SCALE :** 1 IN:10 FT HORZ. / 1 IN:10 FT VERT.

WISDOT/CADDS SHEET 49

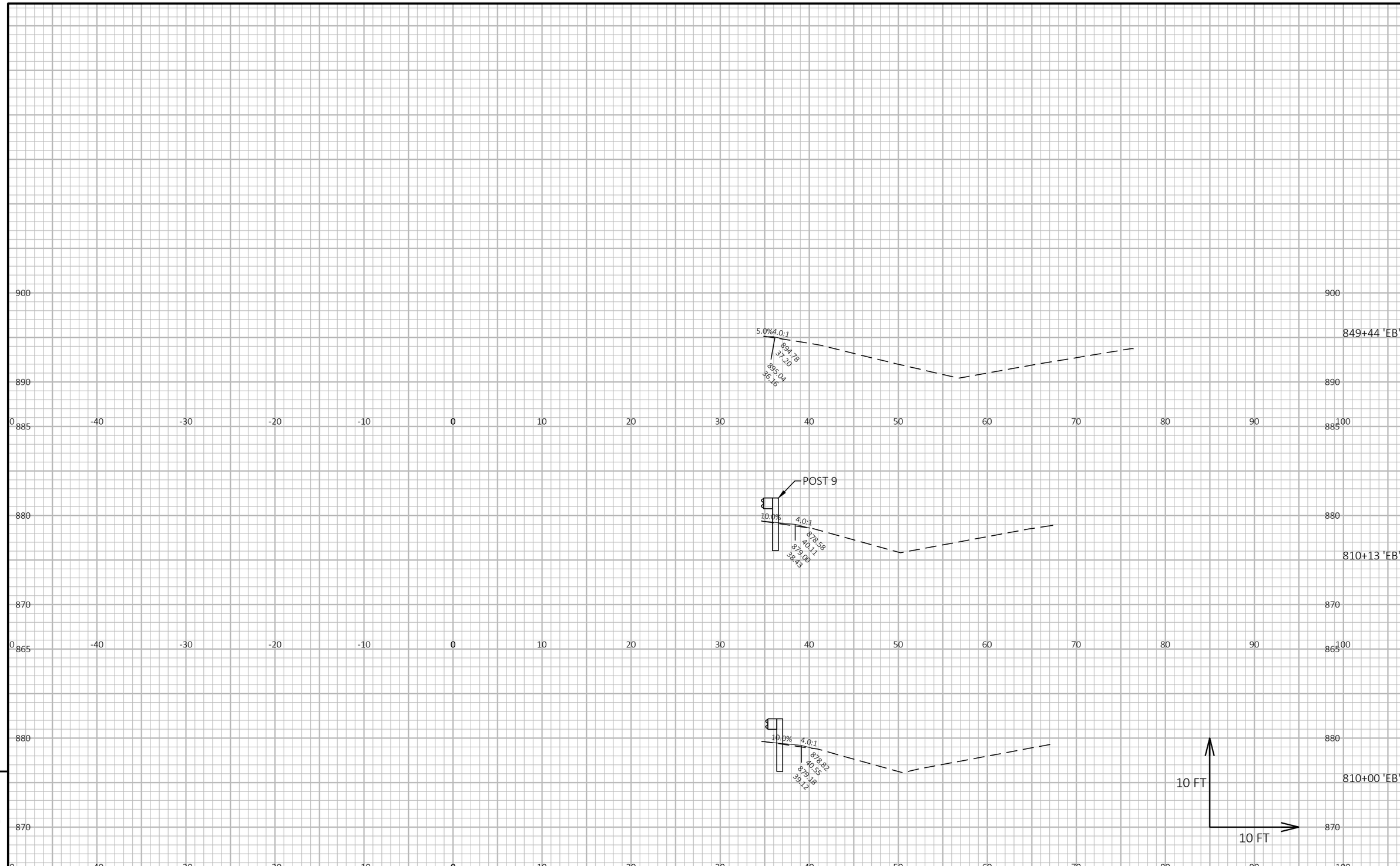

9

9

PROJECT NO: 1066-03-75	HWY: IH 94	COUNTY: DANE AND JEFFERSON	CROSS SECTIONS: IH 94 EB	SHEET 209	E

FILE NAME : P:\2020 PROJECTS\5020028 - WISDOT SWR IH 94\CIVIL3D\10660375\SHEETSPLAN\090101_XS-EB.DWG
LAYOUT NAME - 26

PLOT DATE : 2/6/2023 5:35 PM PLOT BY : KYLE CORNELIUS PLOT NAME : **PLOT SCALE :** 1 IN:10 FT HORZ. / 1 IN:10 FT VERT.

WISDOT/CADDS SHEET 49

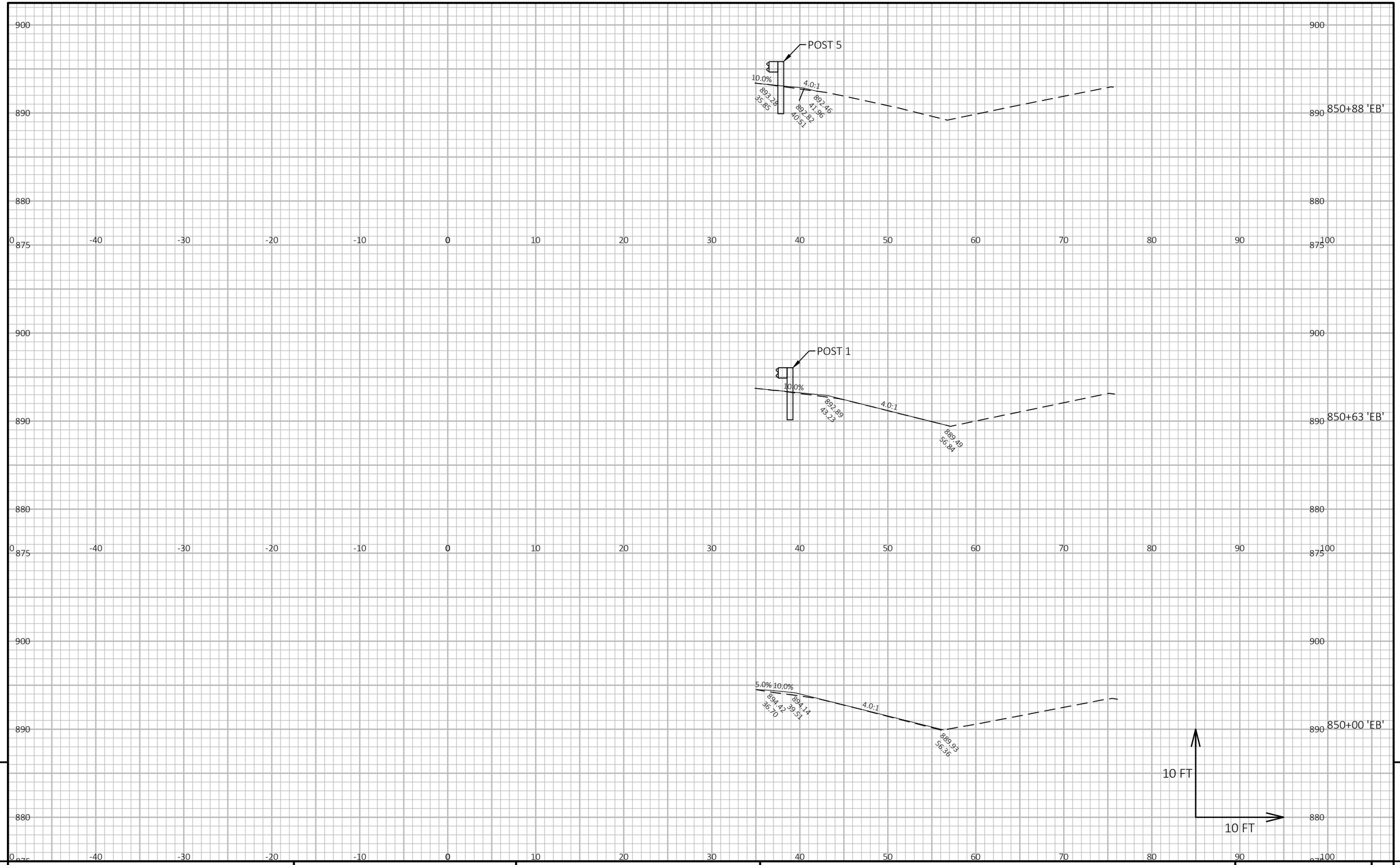

9

9

PROJECT NO: 1066-03-75	HWY: IH 94	COUNTY: DANE AND JEFFERSON	CROSS SECTIONS: IH 94 EB	SHEET 210	E

FILE NAME : P:\2020 PROJECTS\5020028 - WISDOT SWR IH 94\CIVIL3D\10660375\SHEETSPLAN\090101_XS-EB.DWG
LAYOUT NAME - 27

PLOT DATE : 2/6/2023 5:36 PM PLOT BY : KYLE CORNELIUS PLOT NAME : **PLOT SCALE :** 1 IN:10 FT HORZ. / 1 IN:10 FT VERT.

WISDOT/CADDS SHEET 49

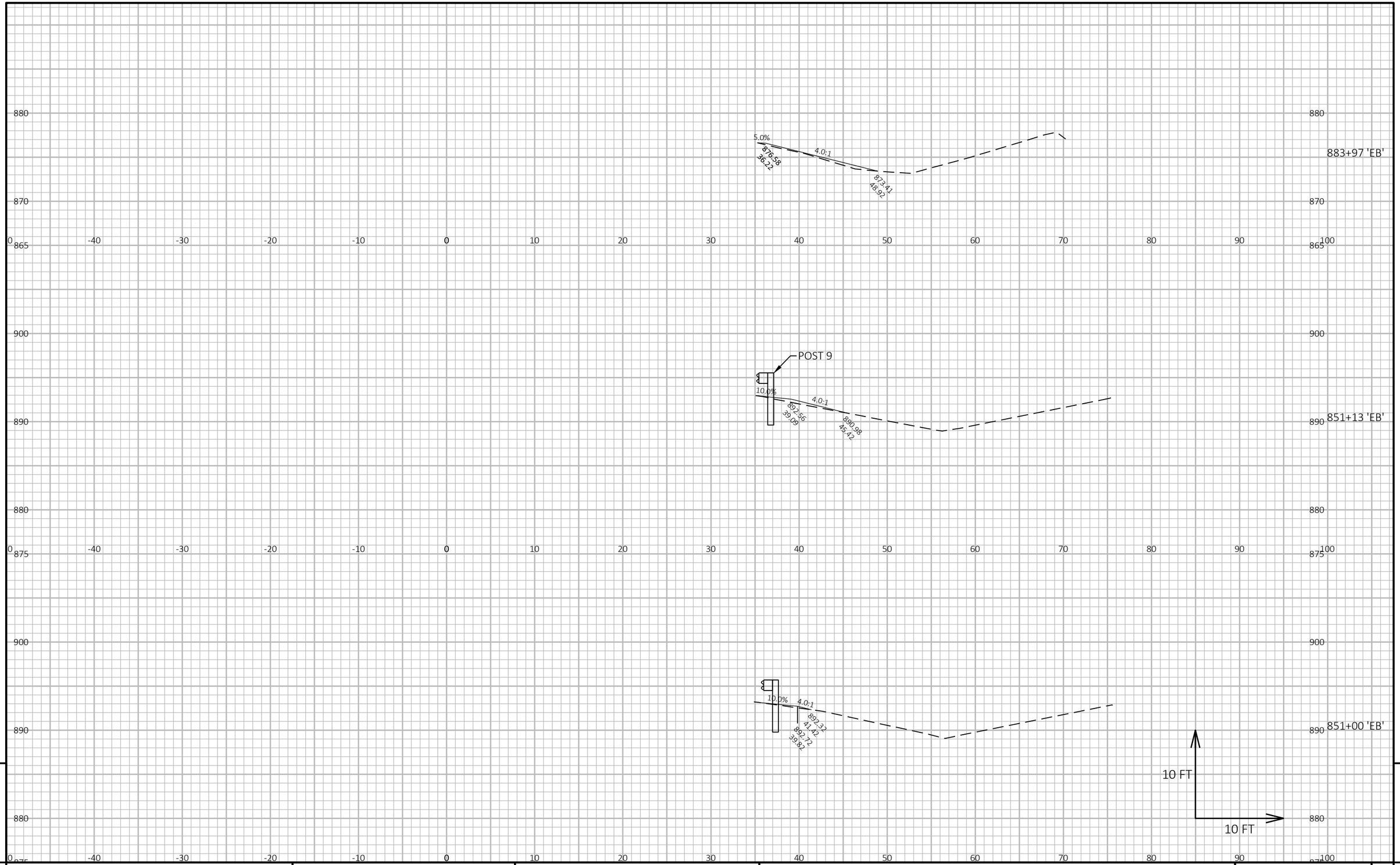

9

9

PROJECT NO: 1066-03-75	HWY: IH 94	COUNTY: DANE AND JEFFERSON	CROSS SECTIONS: IH 94 EB	SHEET 211	E

FILE NAME : P:\2020 PROJECTS\5020028 - WISDOT SWR IH 94\CIVIL3D\10660375\SHEETSPLAN\090101_XS-EB.DWG
LAYOUT NAME - 28
PLOT DATE : 2/6/2023 5:37 PM
PLOT BY : KYLE CORNELIUS
PLOT NAME :
PLOT SCALE : 1 IN:10 FT HORZ. / 1 IN:10 FT VERT.
WISDOT/CADDS SHEET 49

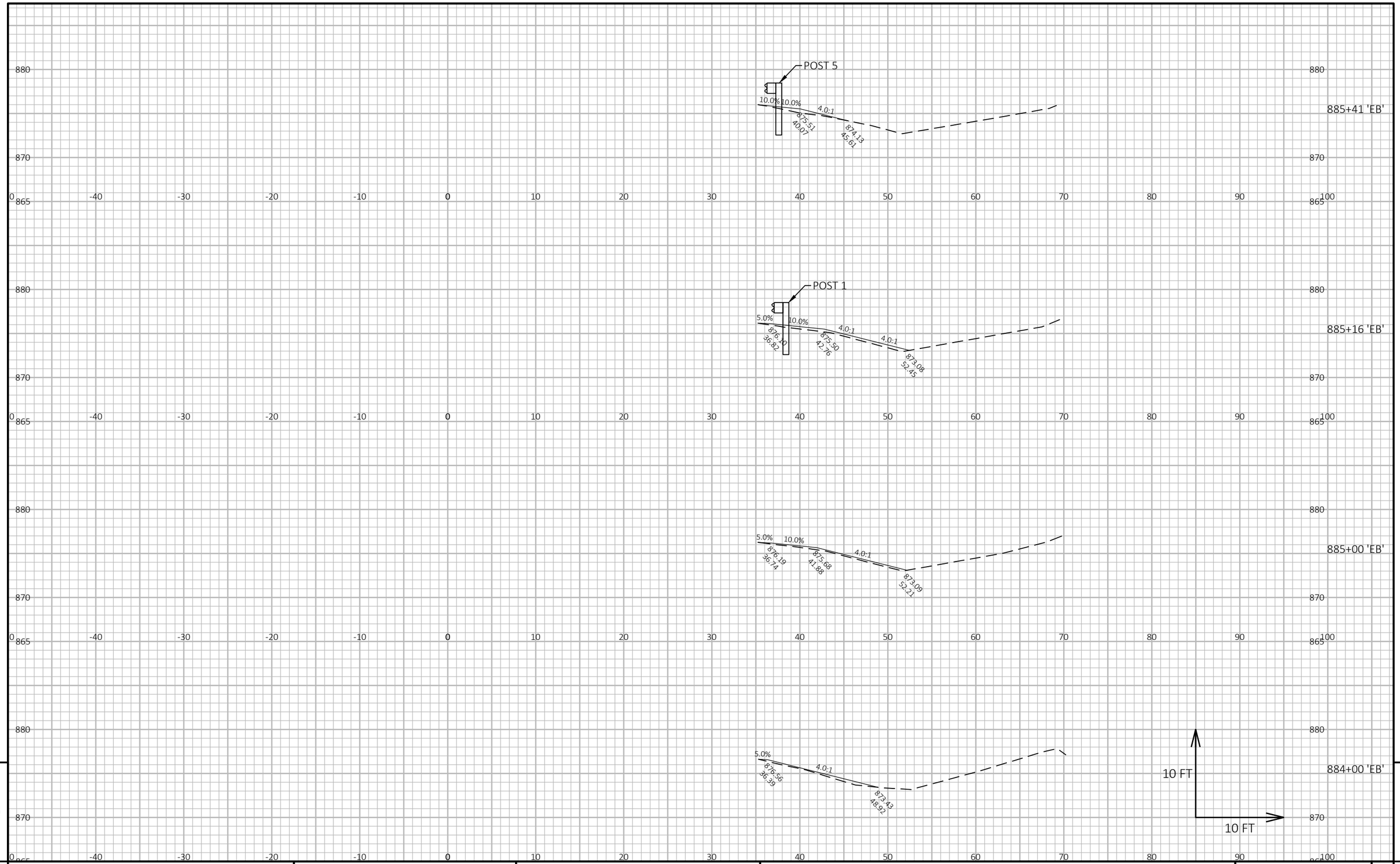

9

9

PROJECT NO: 1066-03-75	HWY: IH 94	COUNTY: DANE AND JEFFERSON	CROSS SECTIONS: IH 94 EB	SHEET 212	E

FILE NAME : P:\2020 PROJECTS\5020028 - WISDOT SWR IH 94\CIVIL3D\10660375\SHEETSPLAN\090101_XS-EB.DWG
LAYOUT NAME - 29

PLOT DATE : 2/6/2023 5:38 PM PLOT BY : KYLE CORNELIUS PLOT NAME : **PLOT SCALE :** 1 IN:10 FT HORZ. / 1 IN:10 FT VERT.

WISDOT/CADDS SHEET 49

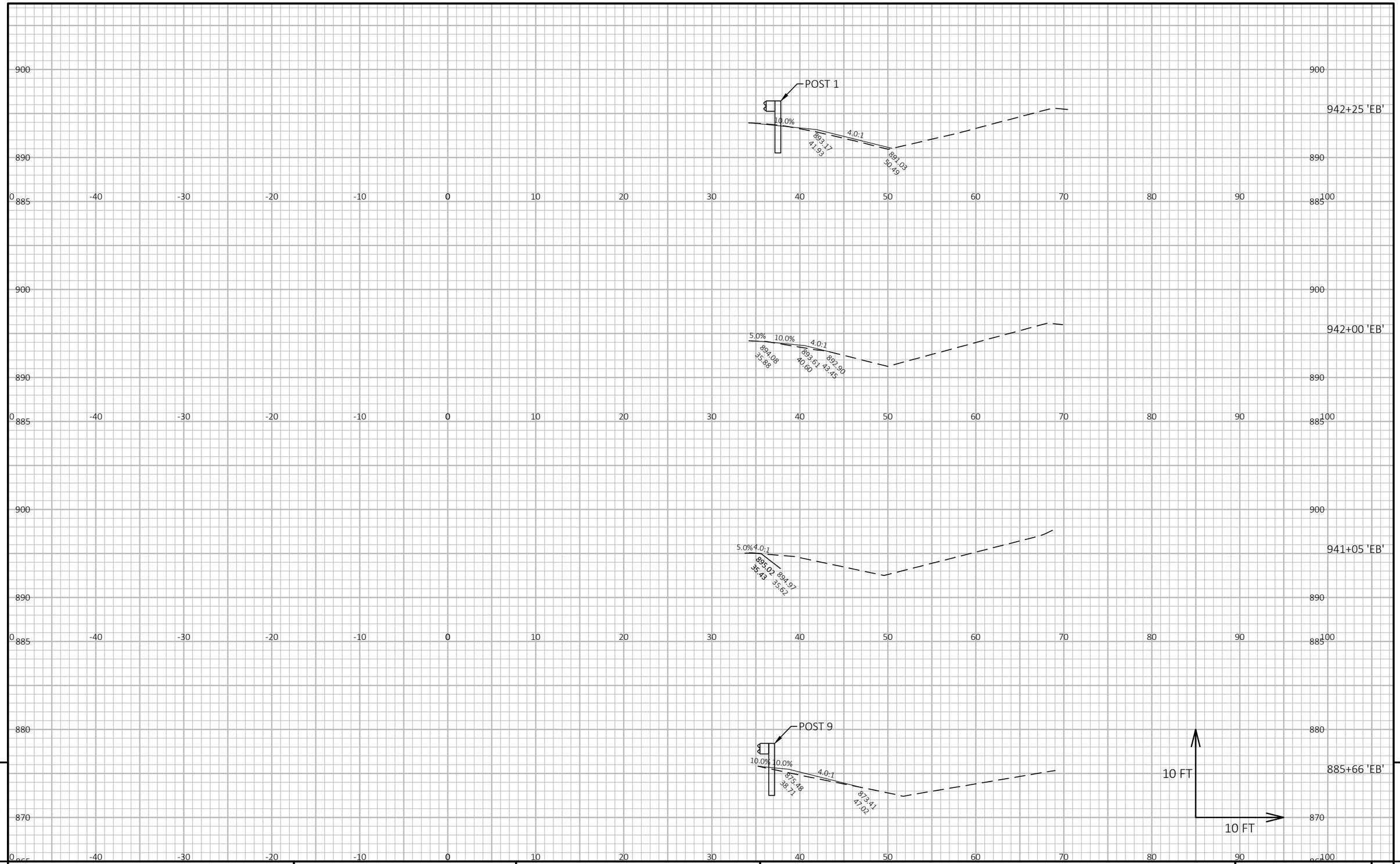

9

9

PROJECT NO: 1066-03-75	HWY: IH 94	COUNTY: DANE AND JEFFERSON	CROSS SECTIONS: IH 94 EB	SHEET 213	E

FILE NAME : P:\2020 PROJECTS\5020028 - WISDOT SWR IH 94\CIVIL3D\10660375\SHEETSPLAN\090101_XS-EB.DWG
LAYOUT NAME - 30
PLOT DATE : 2/6/2023 5:39 PM
PLOT BY : KYLE CORNELIUS
PLOT NAME :
PLOT SCALE : 1 IN:10 FT HORZ. / 1 IN:10 FT VERT.
WISDOT/CADDS SHEET 49

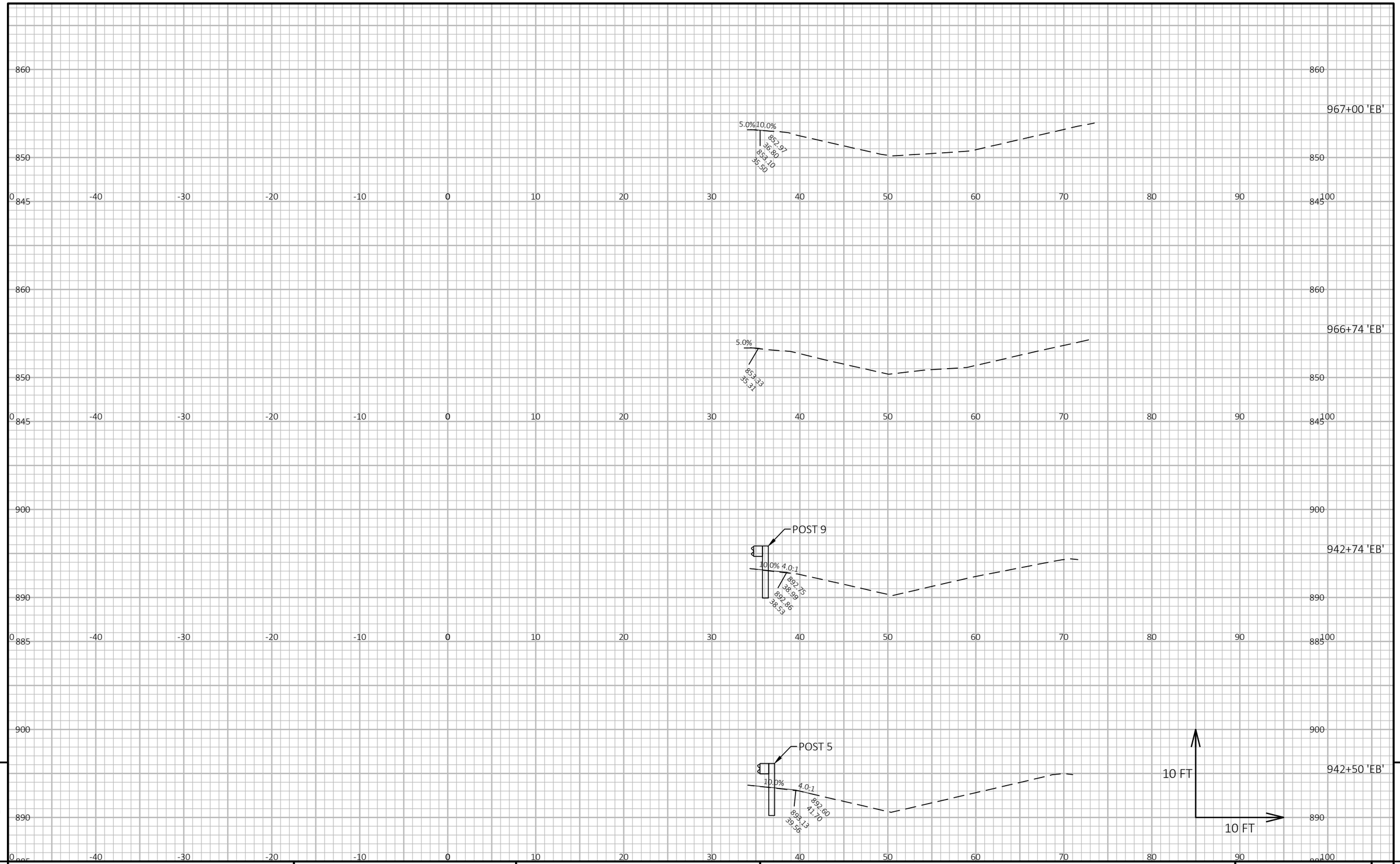

9

9

PROJECT NO: 1066-03-75	HWY: IH 94	COUNTY: DANE AND JEFFERSON	CROSS SECTIONS: IH 94 EB	SHEET 214	E

FILE NAME : P:\2020 PROJECTS\5020028 - WISDOT SWR IH 94\CIVIL3D\10660375\SHEETSPLAN\090101_XS-EB.DWG
LAYOUT NAME - 31

PLOT DATE : 2/6/2023 5:40 PM PLOT BY : KYLE CORNELIUS PLOT NAME : **PLOT SCALE :** 1 IN:10 FT HORZ. / 1 IN:10 FT VERT.

WISDOT/CADDS SHEET 49

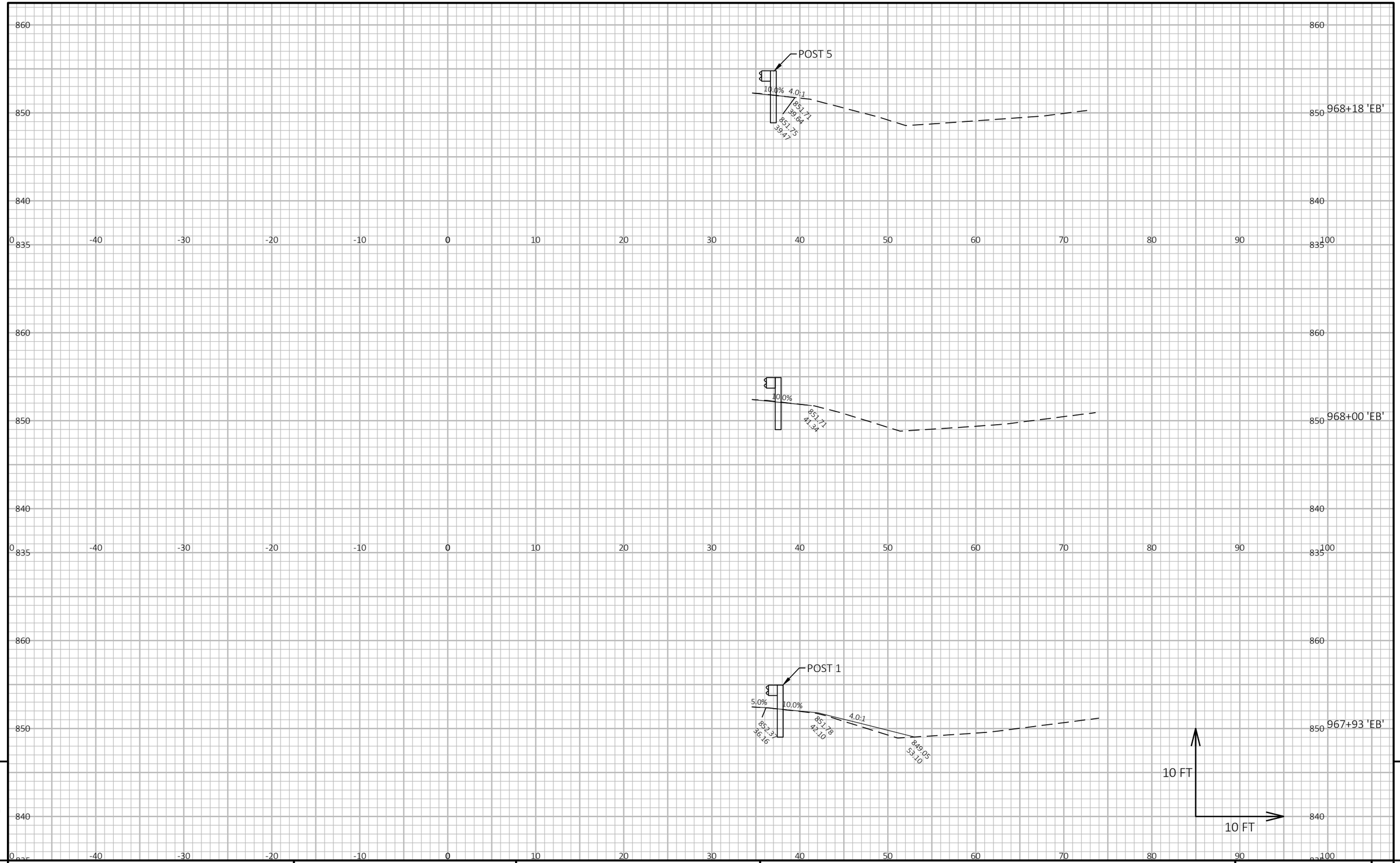

PROJECT NO: 1066-03-75	HWY: IH 94	COUNTY: DANE AND JEFFERSON	CROSS SECTIONS: IH 94 EB	SHEET 215	E

FILE NAME : P:\2020 PROJECTS\5020028 - WISDOT SWR IH 94\CIVIL3D\10660375\SHEETSPLAN\090101_XS-EB.DWG
LAYOUT NAME - 32
PLOT DATE : 2/6/2023 5:41 PM
PLOT BY : KYLE CORNELIUS
PLOT NAME :
PLOT SCALE : 1 IN:10 FT HORZ. / 1 IN:10 FT VERT.
WISDOT/CADDS SHEET 49

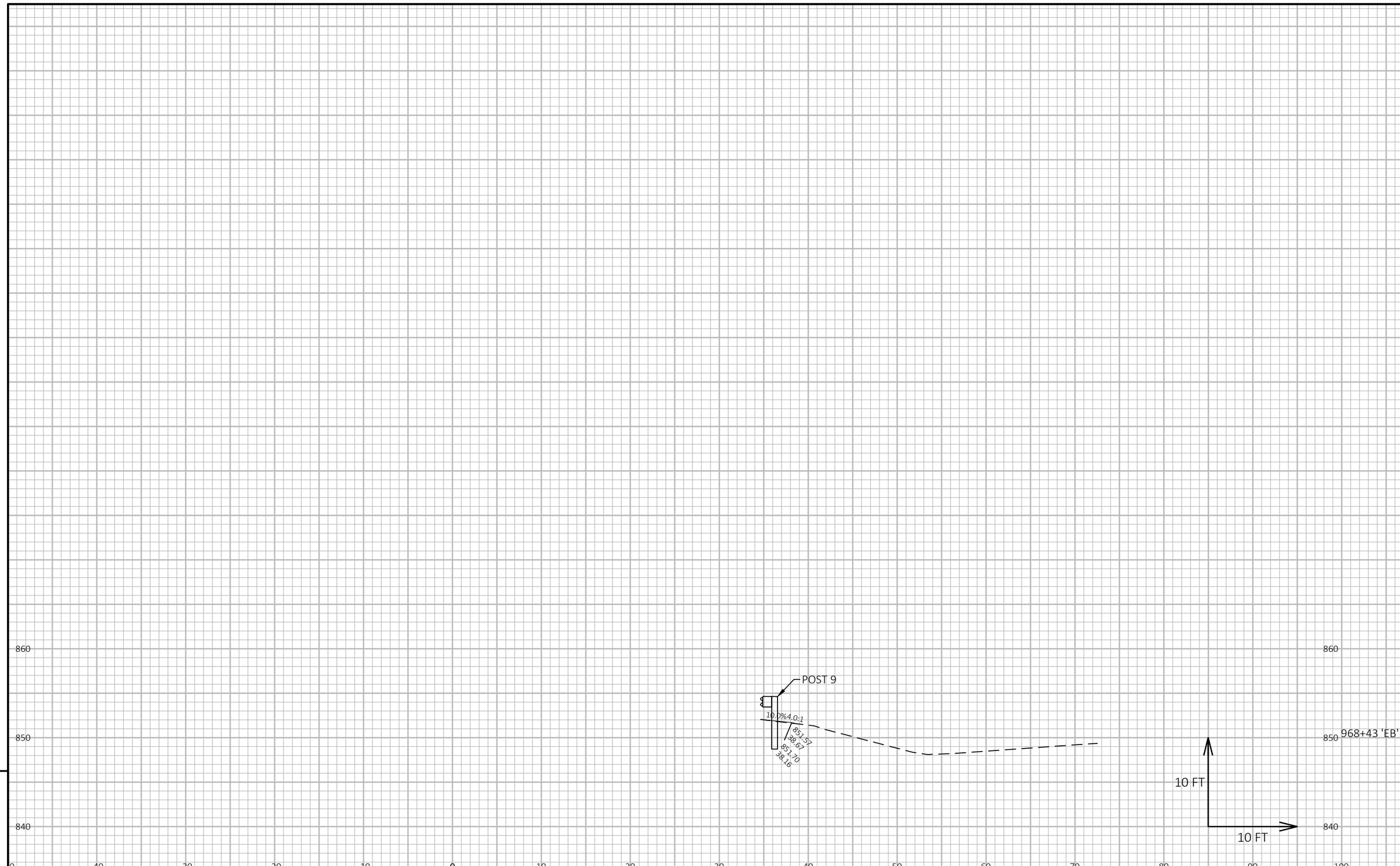

9

9

PROJECT NO: 1066-03-75	HWY: IH 94	COUNTY: DANE AND JEFFERSON	CROSS SECTIONS: IH 94 EB	SHEET 216	E

FILE NAME : P:\2020 PROJECTS\5020028 - WISDOT SWR IH 94\CIVIL3D\10660375\SHEETSPLAN\090101_XS-EB.DWG
LAYOUT NAME - 33

PLOT DATE : 2/6/2023 5:42 PM PLOT BY : KYLE CORNELIUS PLOT NAME : **PLOT SCALE :** 1 IN:10 FT HORZ. / 1 IN:10 FT VERT.

WISDOT/CADDS SHEET 49

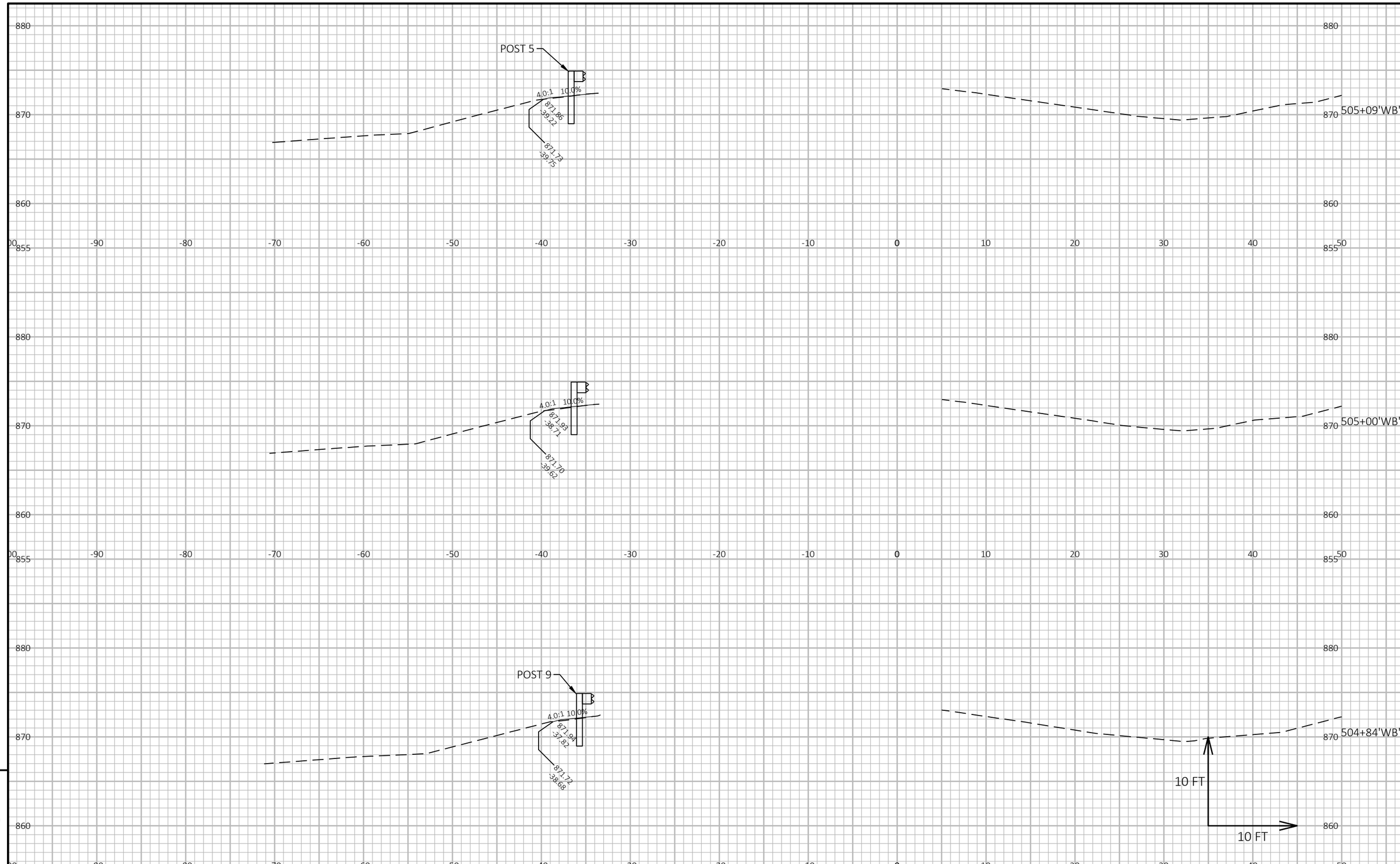

9

9

PROJECT NO: 1066-03-75	HWY: IH 94	COUNTY: DANE AND JEFFERSON	CROSS SECTIONS: IH 94 WB	SHEET 217	E

FILE NAME : P:\2020 PROJECTS\5020028 - WISDOT SWR IH 94\CIVIL3D\10660375\SHEETSPLAN\090102_XS-WB.DWG
LAYOUT NAME - 01

PLOT DATE : 2/6/2023 9:22 PM PLOT BY : KYLE CORNELIUS PLOT NAME : **PLOT SCALE :** 1 IN:10 FT HORZ. / 1 IN:10 FT VERT.

WISDOT/CADDS SHEET 49

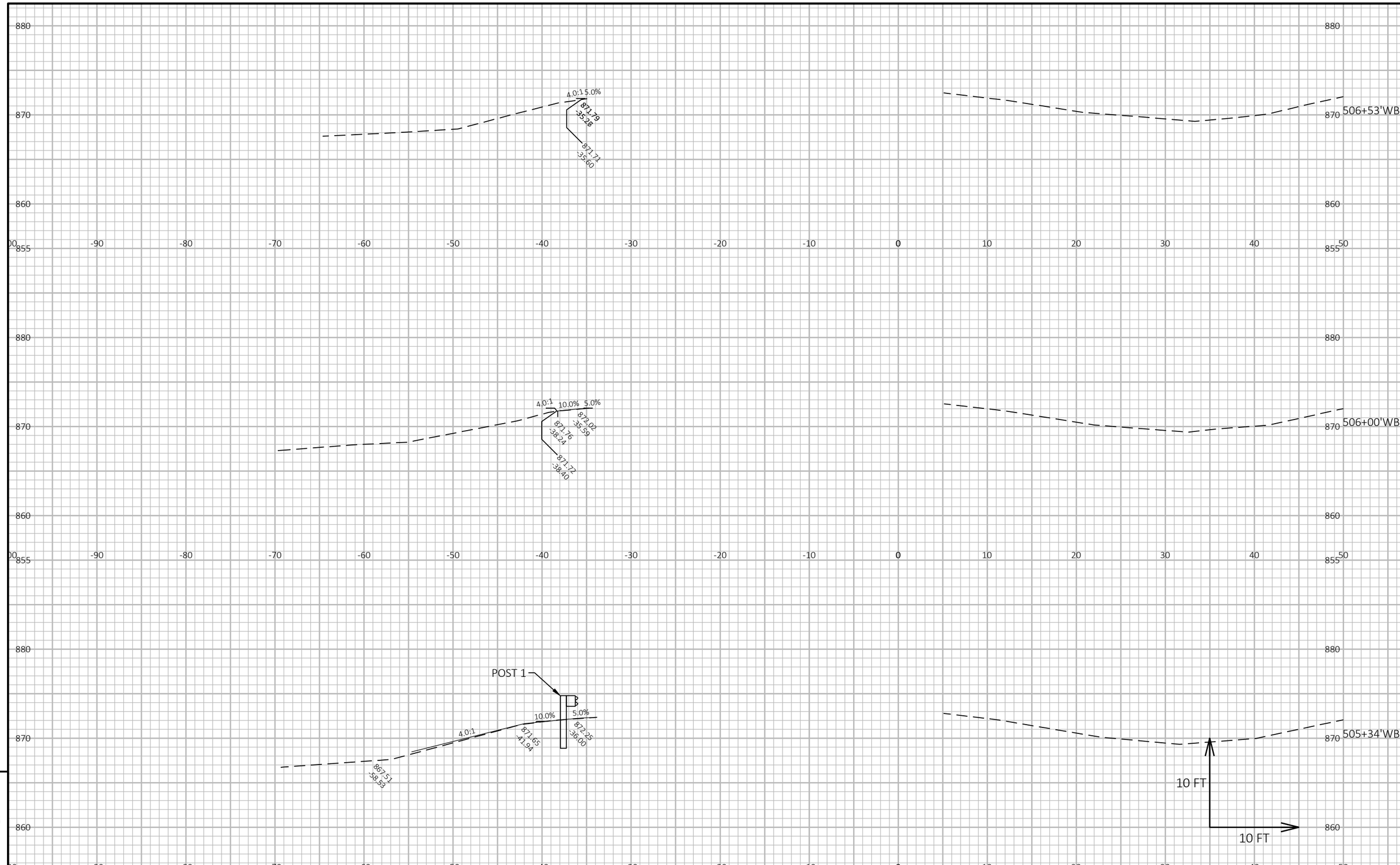

9

9

PROJECT NO: 1066-03-75	HWY: IH 94	COUNTY: DANE AND JEFFERSON	CROSS SECTIONS: IH 94 WB	SHEET 218	E

FILE NAME : P:\2020 PROJECTS\5020028 - WISDOT SWR IH 94\CIVIL3D\10660375\SHEETSPLAN\090102_XS-WB.DWG
LAYOUT NAME - 02
PLOT DATE : 2/6/2023 9:22 PM
PLOT BY : KYLE CORNELIUS
PLOT NAME :
PLOT SCALE : 1 IN:10 FT HORZ. / 1 IN:10 FT VERT.
WISDOT/CADDS SHEET 49

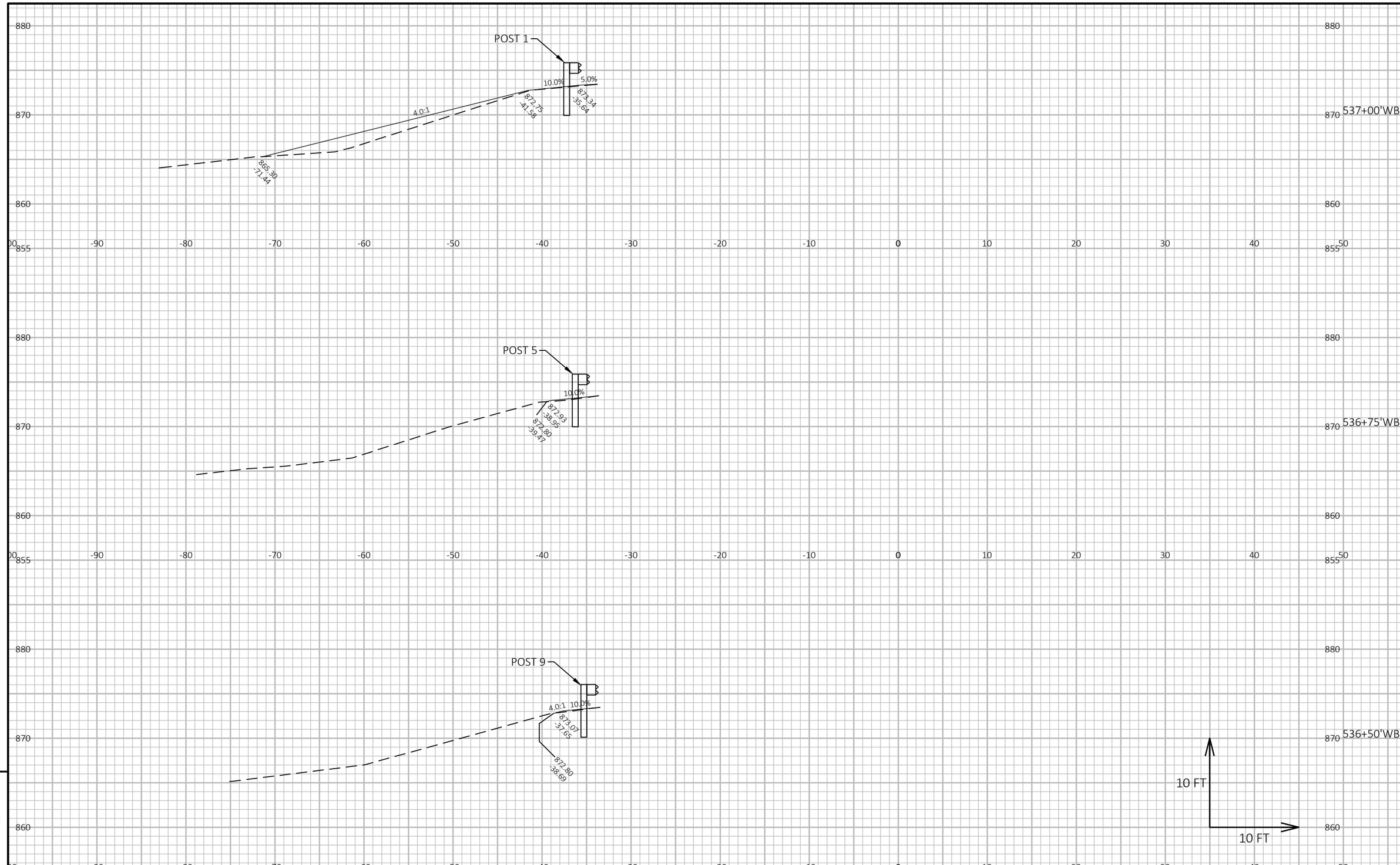

9

9

PROJECT NO: 1066-03-75	HWY: IH 94	COUNTY: DANE AND JEFFERSON	CROSS SECTIONS: IH 94 WB	SHEET 219	E

FILE NAME : P:\2020 PROJECTS\5020028 - WISDOT SWR IH 94\CIVIL3D\10660375\SHEETSPLAN\090102_XS-WB.DWG
LAYOUT NAME - 03

PLOT DATE : 2/6/2023 9:22 PM PLOT BY : KYLE CORNELIUS PLOT NAME : **PLOT SCALE :** 1 IN:10 FT HORZ. / 1 IN:10 FT VERT.

WISDOT/CADDS SHEET 49

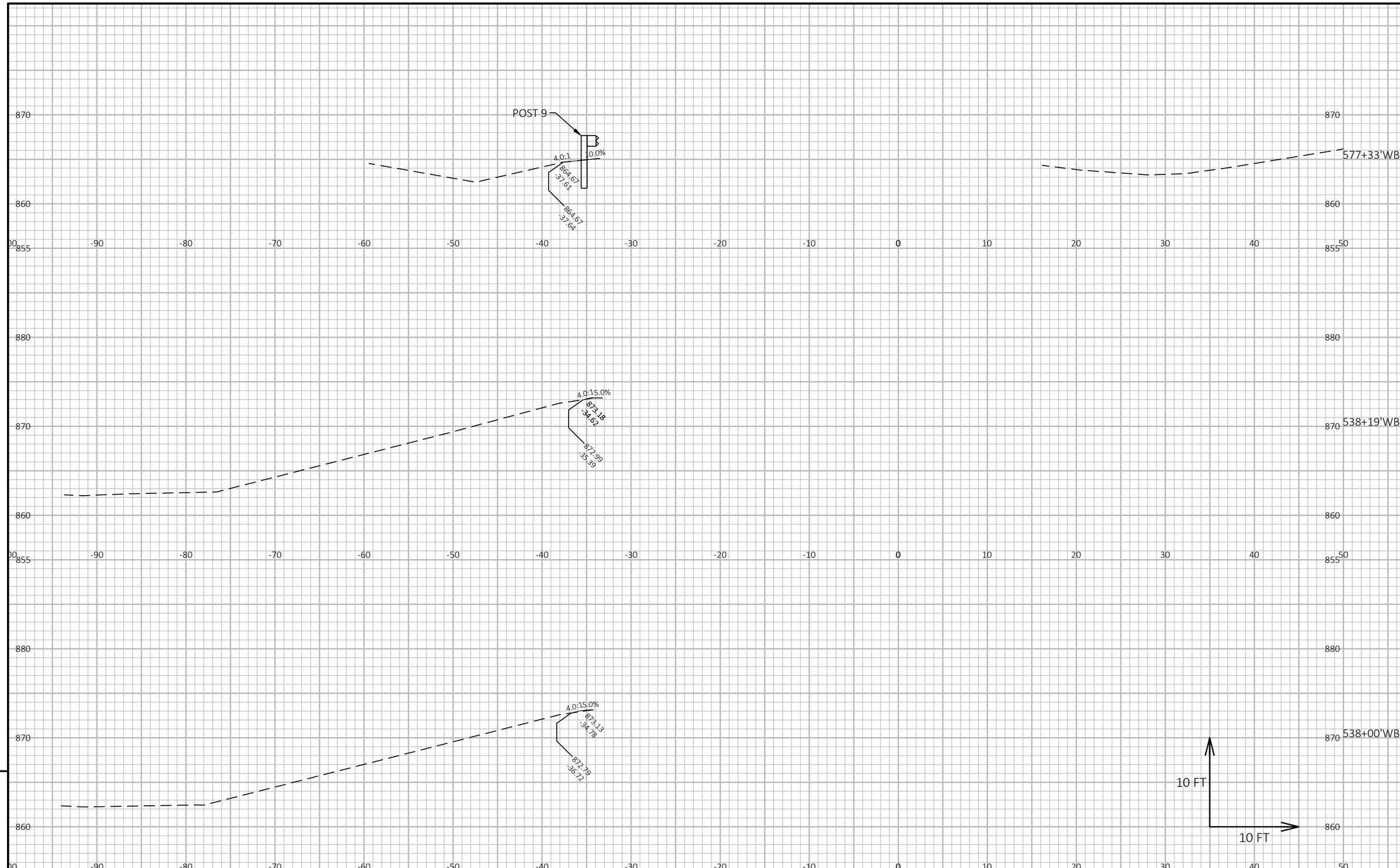

9

9

PROJECT NO: 1066-03-75	HWY: IH 94	COUNTY: DANE AND JEFFERSON	CROSS SECTIONS: IH 94 WB	SHEET 220	E

FILE NAME : P:\2020 PROJECTS\5020028 - WISDOT SWR IH 94\CIVIL3D\10660375\SHEETSPLAN\090102_XS-WB.DWG
LAYOUT NAME - 04

PLOT DATE : 2/6/2023 9:23 PM PLOT BY : KYLE CORNELIUS PLOT NAME : **PLOT SCALE :** 1 IN:10 FT HORZ. / 1 IN:10 FT VERT.

WISDOT/CADDS SHEET 49

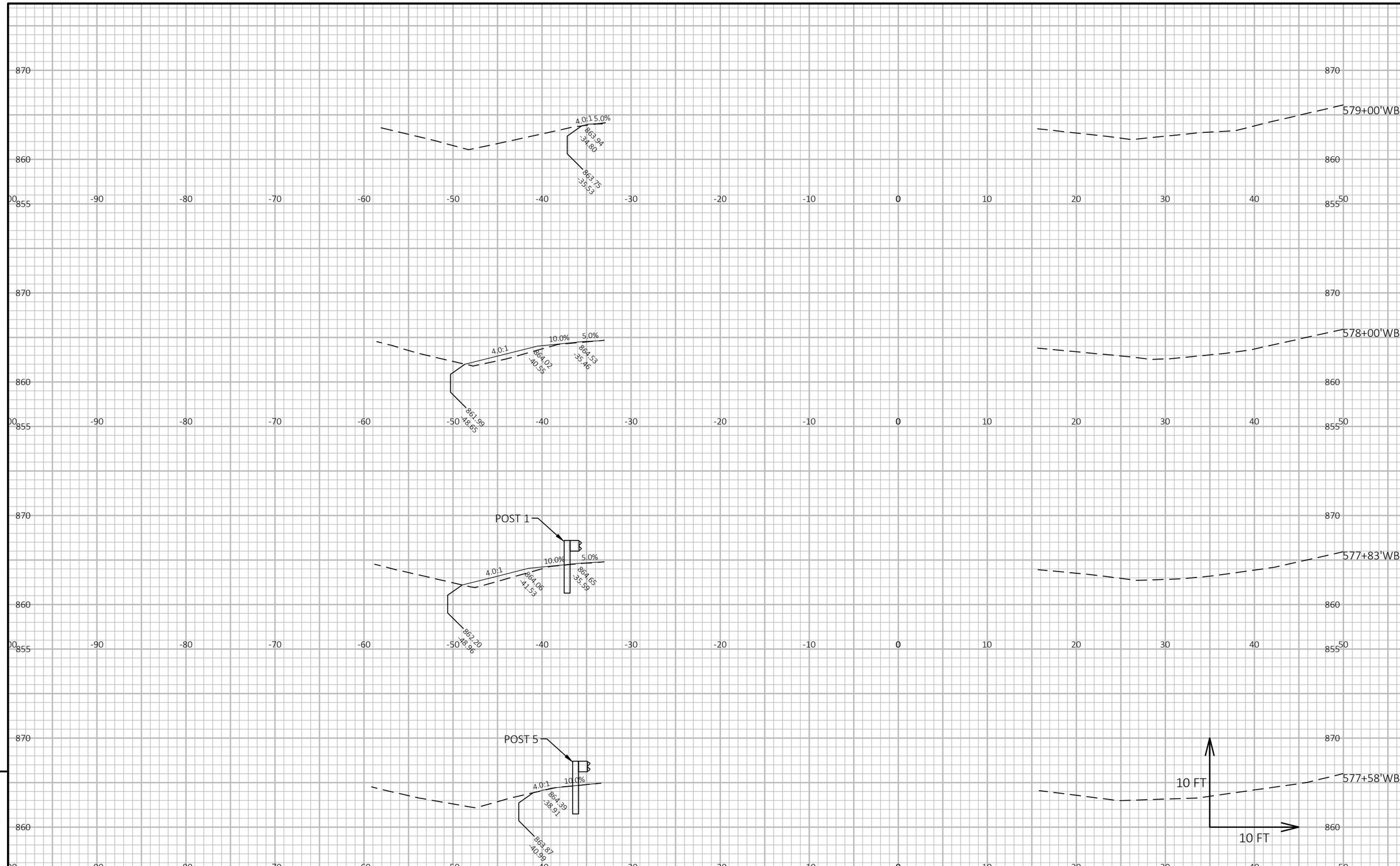

PROJECT NO: 1066-03-75	HWY: IH 94	COUNTY: DANE AND JEFFERSON	CROSS SECTIONS: IH 94 WB	SHEET 221	E

FILE NAME : P:\2020 PROJECTS\5020028 - WISDOT SWR IH 94\CIVIL3D\10660375\SHEETSPLAN\090102_XS-WB.DWG
LAYOUT NAME - 05
PLOT DATE : 2/6/2023 9:23 PM
PLOT BY : KYLE CORNELIUS
PLOT NAME :
PLOT SCALE : 1 IN:10 FT HORZ. / 1 IN:10 FT VERT.
WISDOT/CADDS SHEET 49

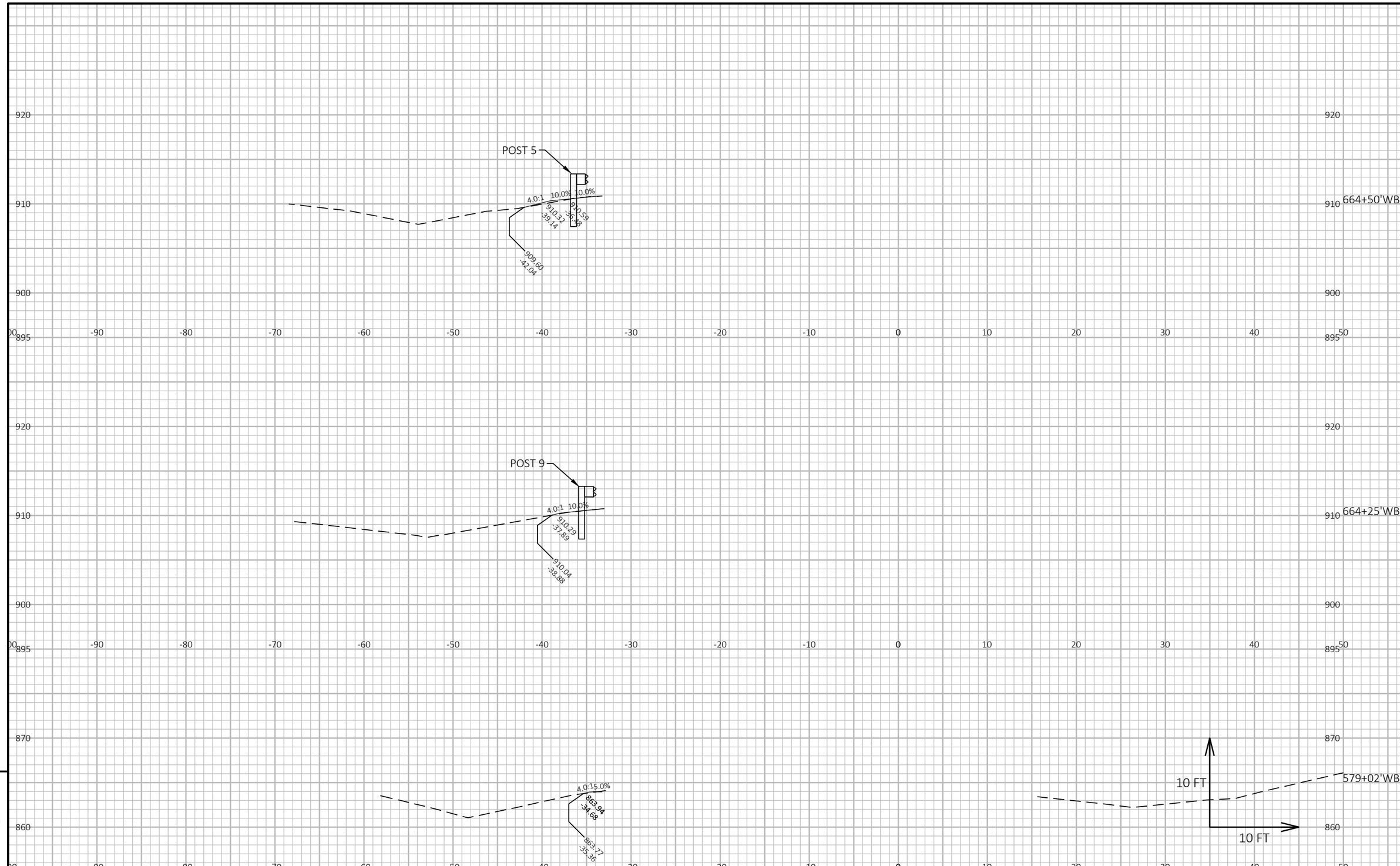

9

9

PROJECT NO: 1066-03-75	HWY: IH 94	COUNTY: DANE AND JEFFERSON	CROSS SECTIONS: IH 94 WB	SHEET 222	E

FILE NAME : P:\2020 PROJECTS\5020028 - WISDOT SWR IH 94\CIVIL3D\10660375\SHEETSPLAN\090102_XS-WB.DWG
LAYOUT NAME - 06

PLOT DATE : 2/6/2023 9:23 PM PLOT BY : KYLE CORNELIUS PLOT NAME : **PLOT SCALE :** 1 IN:10 FT HORZ. / 1 IN:10 FT VERT.

WISDOT/CADDS SHEET 49

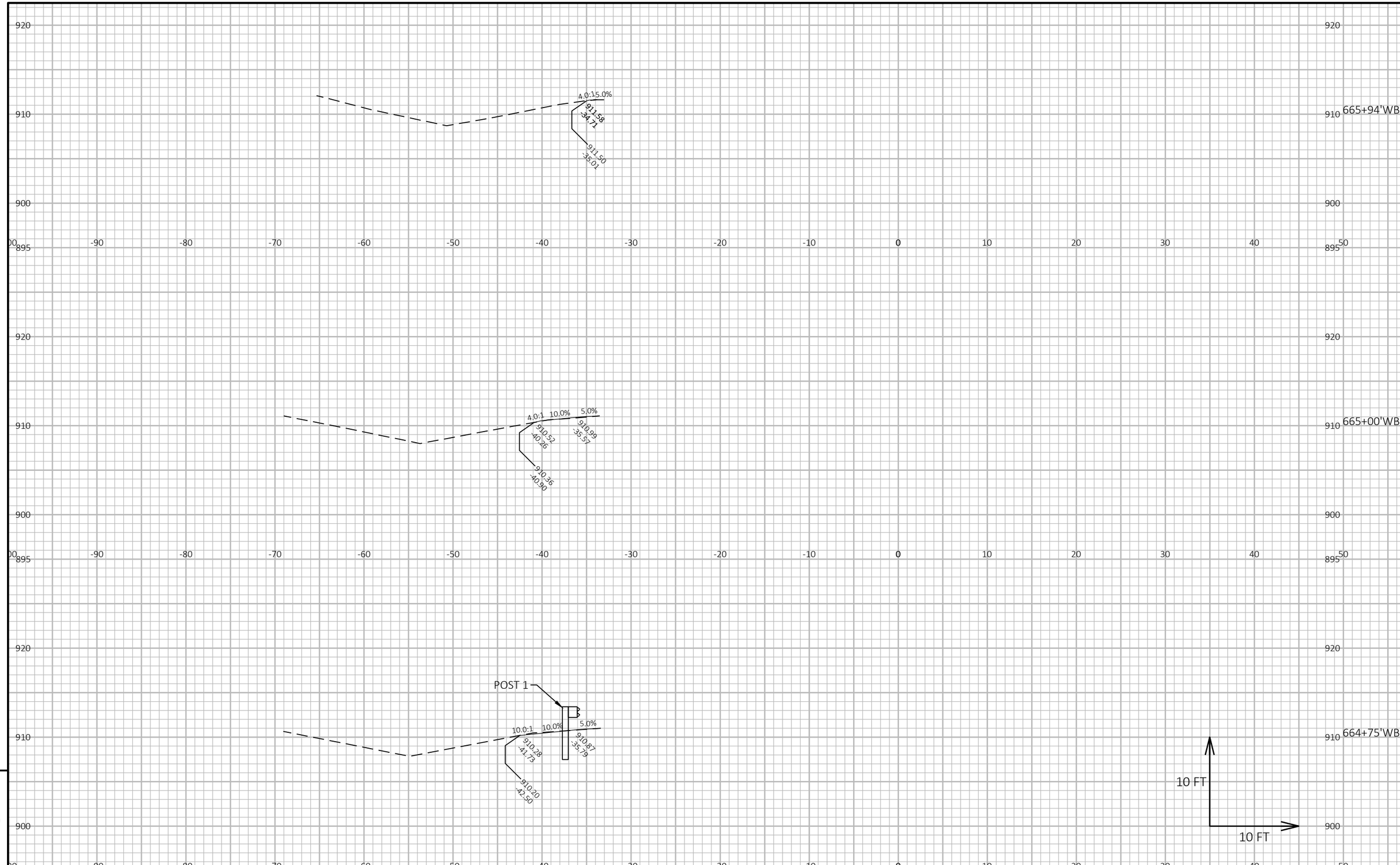

PROJECT NO: 1066-03-75	HWY: IH 94	COUNTY: DANE AND JEFFERSON	CROSS SECTIONS: IH 94 WB	SHEET 223	E

FILE NAME : P:\2020 PROJECTS\5020028 - WISDOT SWR IH 94\CIVIL3D\10660375\SHEETSPLAN\090102_XS-WB.DWG
LAYOUT NAME - 07
PLOT DATE : 2/6/2023 9:23 PM
PLOT BY : KYLE CORNELIUS
PLOT NAME :
PLOT SCALE : 1 IN:10 FT HORZ. / 1 IN:10 FT VERT.
WISDOT/CADDS SHEET 49

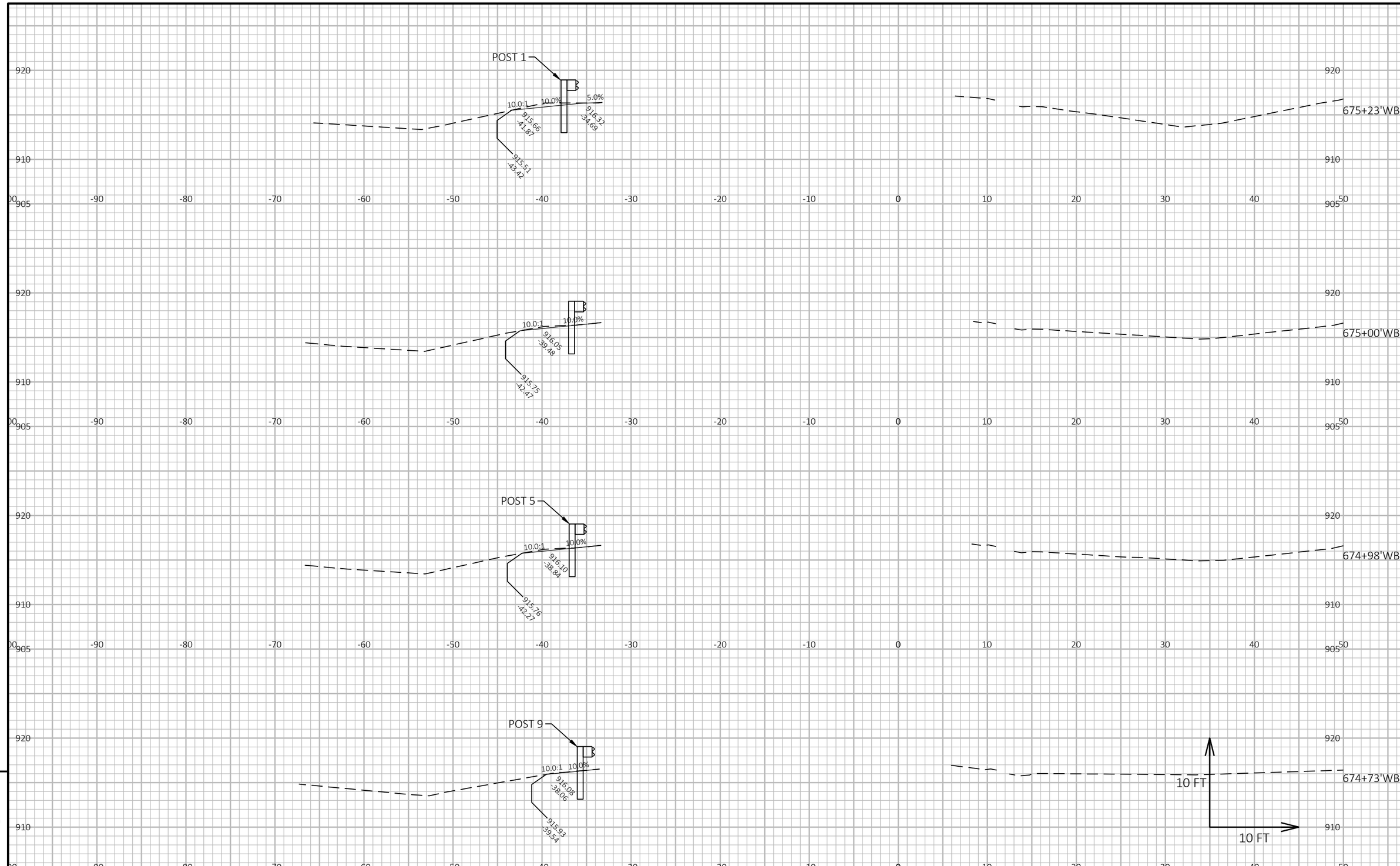

9

9

PROJECT NO: 1066-03-75	HWY: IH 94	COUNTY: DANE AND JEFFERSON	CROSS SECTIONS: IH 94 WB	SHEET 224	E

FILE NAME : P:\2020 PROJECTS\5020028 - WISDOT SWR IH 94\CIVIL3D\10660375\SHEETSPLAN\090102_XS-WB.DWG
LAYOUT NAME - 08

PLOT DATE : 2/6/2023 9:23 PM PLOT BY : KYLE CORNELIUS PLOT NAME : **PLOT SCALE :** 1 IN:10 FT HORZ. / 1 IN:10 FT VERT.

WISDOT/CADDS SHEET 49

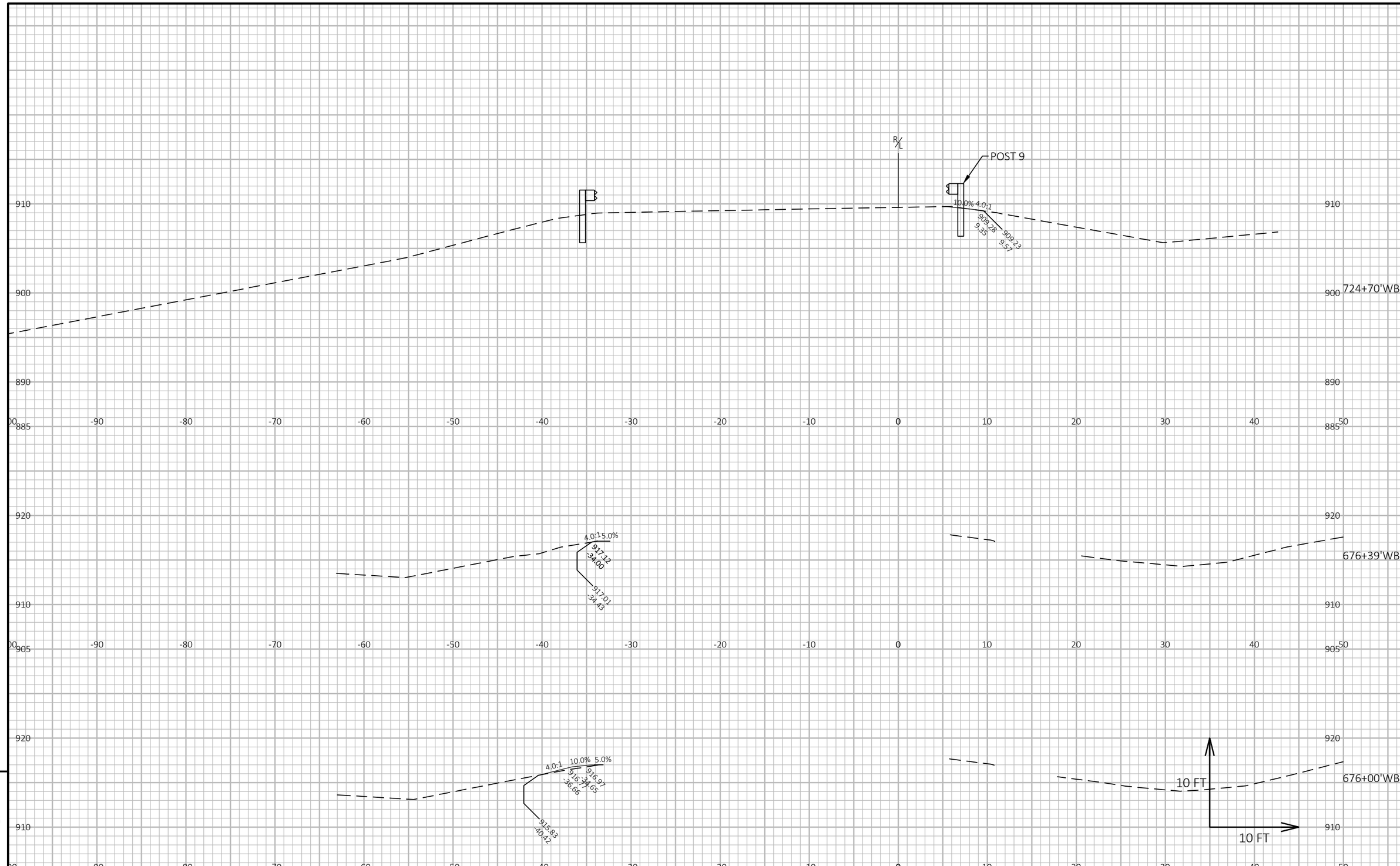

9

9

PROJECT NO: 1066-03-75	HWY: IH 94	COUNTY: DANE AND JEFFERSON	CROSS SECTIONS: IH 94 WB	SHEET 225	E

FILE NAME : P:\2020 PROJECTS\5020028 - WISDOT SWR IH 94\CIVIL3D\10660375\SHEETSPLAN\090102_XS-WB.DWG
LAYOUT NAME - 09

PLOT DATE : 2/6/2023 9:23 PM PLOT BY : KYLE CORNELIUS PLOT NAME : **PLOT SCALE :** 1 IN:10 FT HORZ. / 1 IN:10 FT VERT.

WISDOT/CADDS SHEET 49

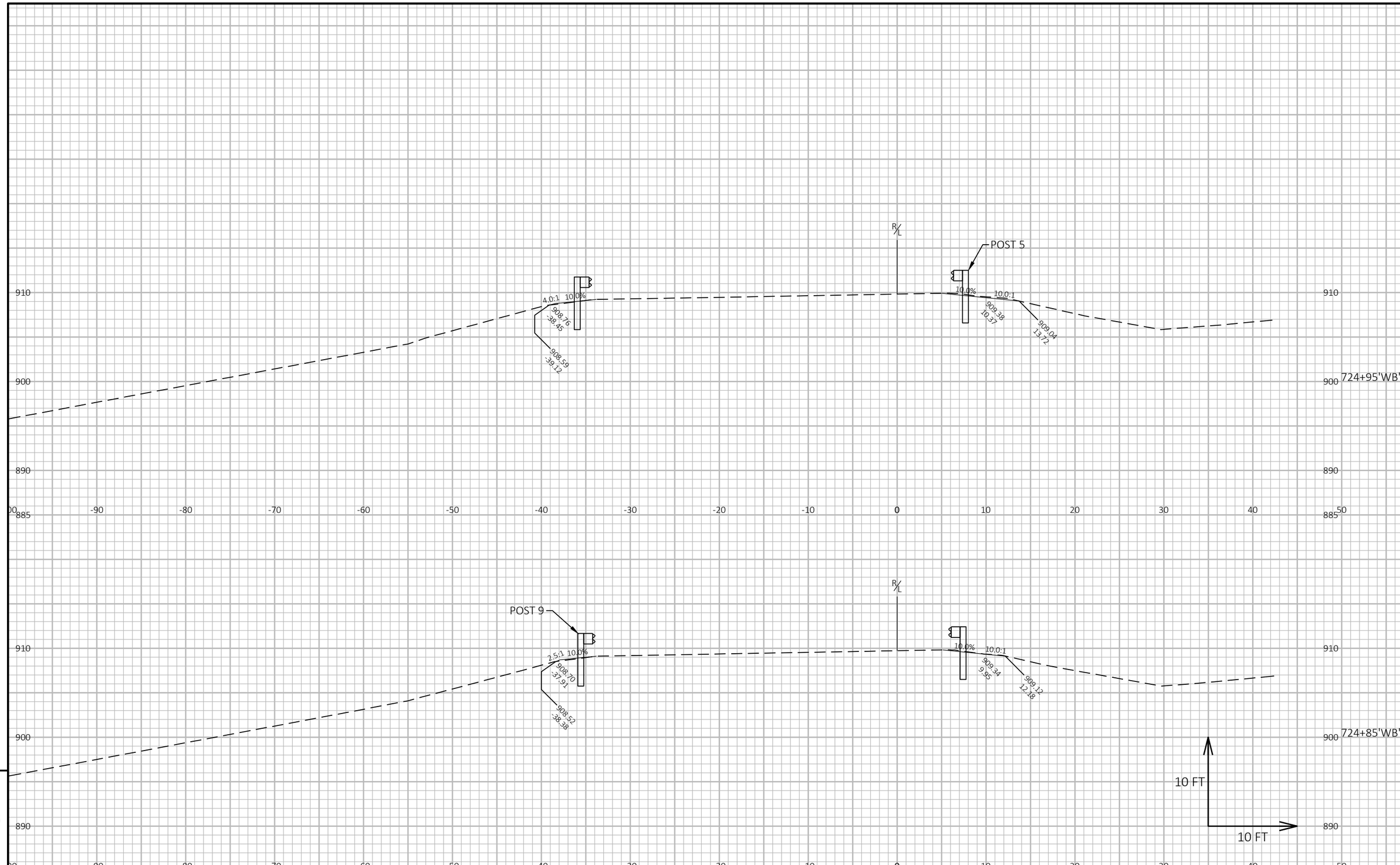

9

9

PROJECT NO: 1066-03-75	HWY: IH 94	COUNTY: DANE AND JEFFERSON	CROSS SECTIONS: IH 94 WB	SHEET 226	E

FILE NAME : P:\2020 PROJECTS\5020028 - WISDOT SWR IH 94\CIVIL3D\10660375\SHEETSPLAN\090102_XS-WB.DWG
LAYOUT NAME - 10
PLOT DATE : 2/6/2023 9:24 PM
PLOT BY : KYLE CORNELIUS
PLOT NAME :
PLOT SCALE : 1 IN:10 FT HORZ. / 1 IN:10 FT VERT.
WISDOT/CADDS SHEET 49

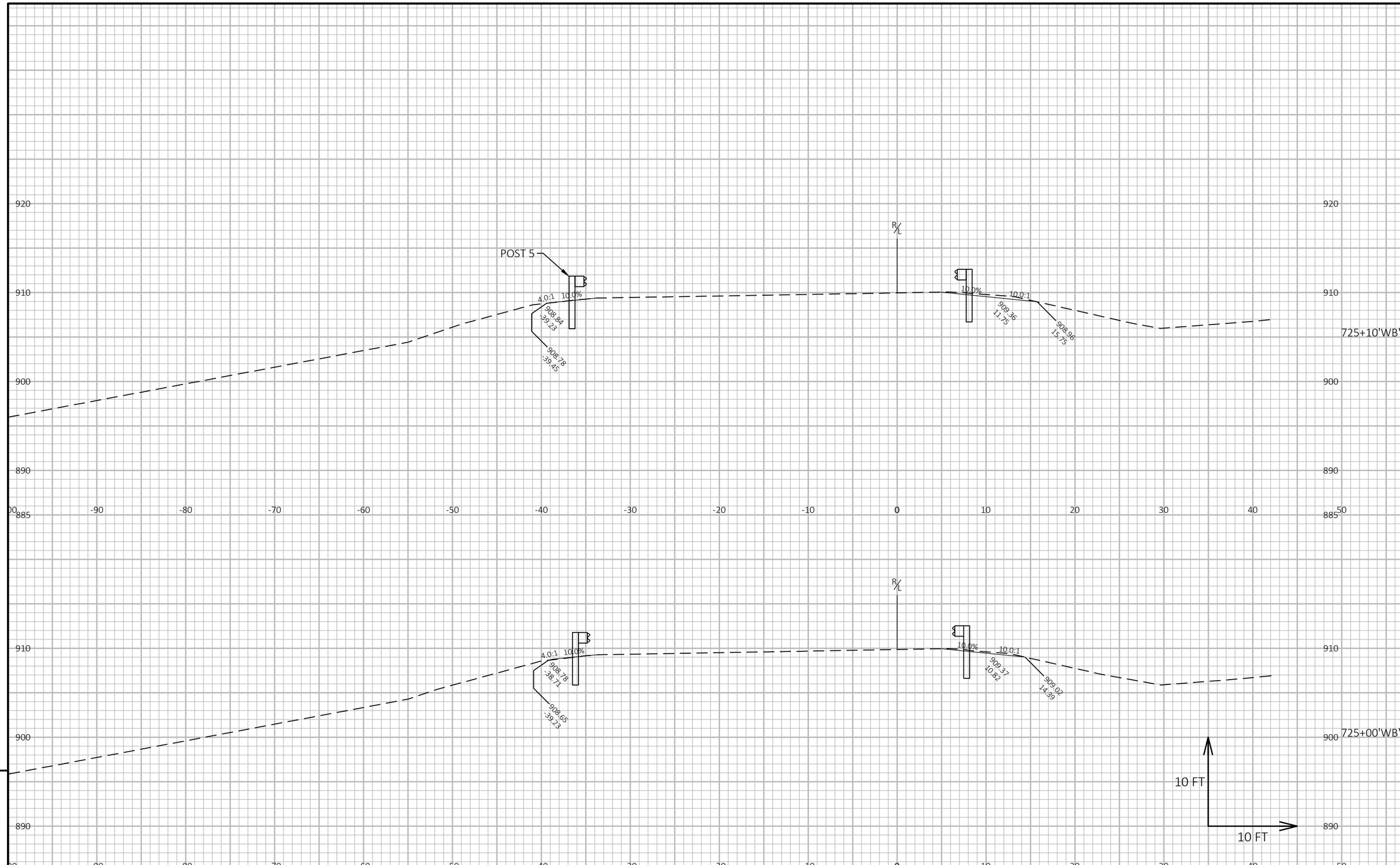

9

9

PROJECT NO: 1066-03-75	HWY: IH 94	COUNTY: DANE AND JEFFERSON	CROSS SECTIONS: IH 94 WB	SHEET 227	E

FILE NAME : P:\2020 PROJECTS\5020028 - WISDOT SWR IH 94\CIVIL3D\10660375\SHEETSPLAN\090102_XS-WB.DWG
LAYOUT NAME - 11

PLOT DATE : 2/6/2023 9:24 PM

PLOT BY : KYLE CORNELIUS

PLOT NAME :

PLOT SCALE : 1 IN:10 FT HORZ. / 1 IN:10 FT VERT.

WISDOT/CADDS SHEET 49

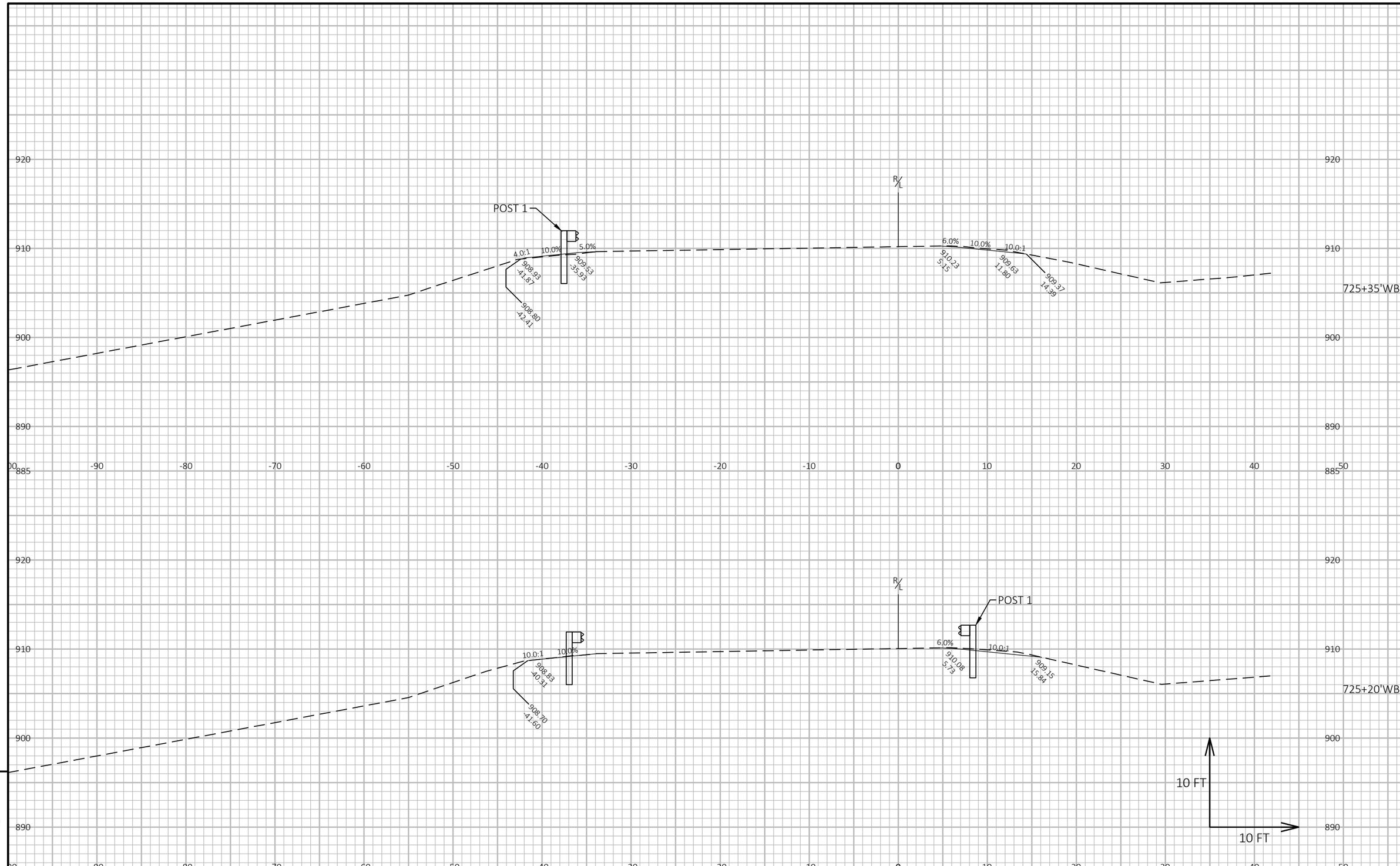

9

9

PROJECT NO: 1066-03-75	HWY: IH 94	COUNTY: DANE AND JEFFERSON	CROSS SECTIONS: IH 94 WB	SHEET 228	E

FILE NAME : P:\2020 PROJECTS\5020028 - WISDOT SWR IH 94\CIVIL3D\10660375\SHEETSPLAN\090102_XS-WB.DWG
LAYOUT NAME - 12
PLOT DATE : 2/6/2023 9:24 PM
PLOT BY : KYLE CORNELIUS
PLOT NAME :
PLOT SCALE : 1 IN:10 FT HORZ. / 1 IN:10 FT VERT.
WISDOT/CADDS SHEET 49

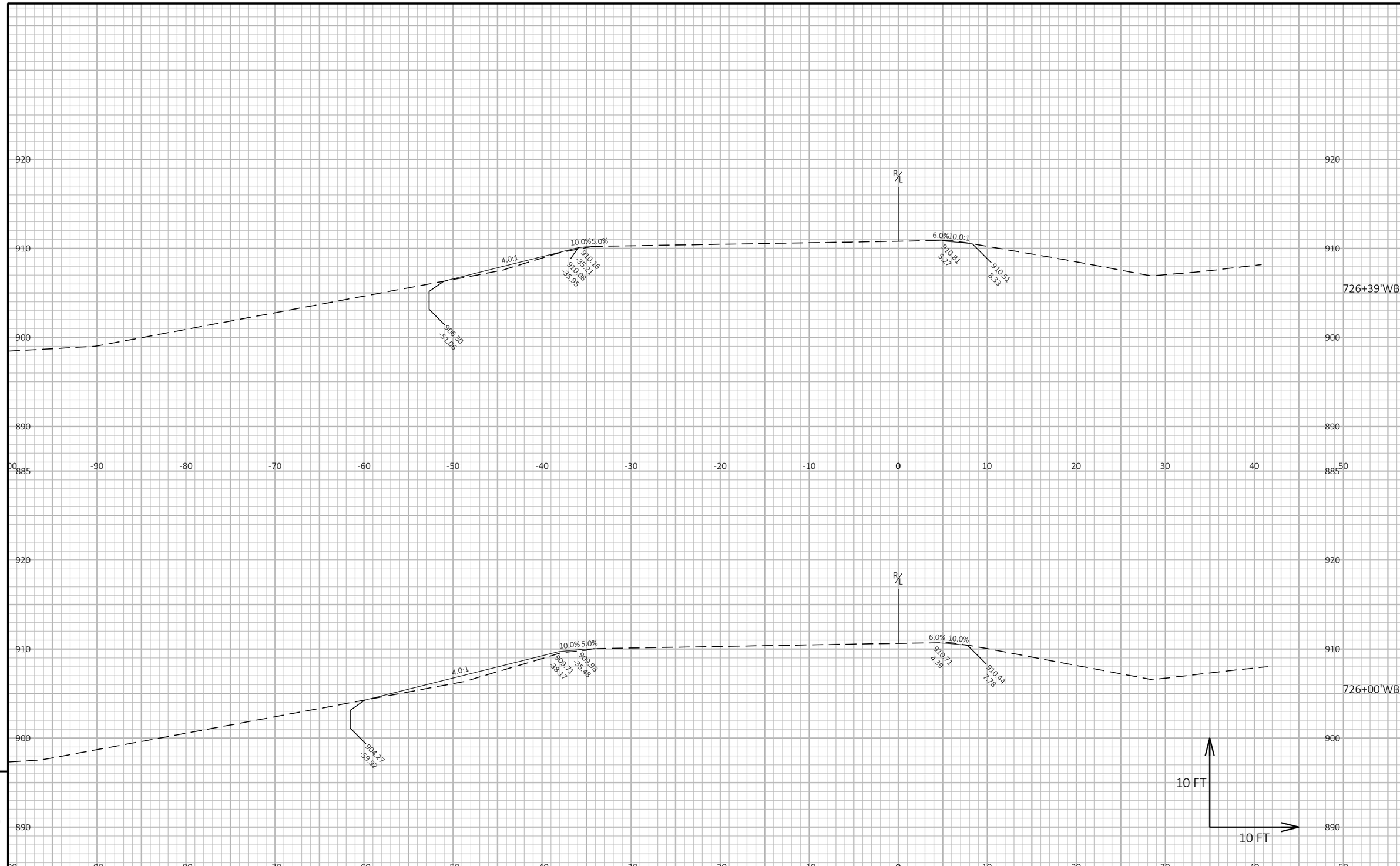

PROJECT NO: 1066-03-75	HWY: IH 94	COUNTY: DANE AND JEFFERSON	CROSS SECTIONS: IH 94 WB	SHEET 229	E

FILE NAME : P:\2020 PROJECTS\5020028 - WISDOT SWR IH 94\CIVIL3D\10660375\SHEETSPLAN\090102_XS-WB.DWG
LAYOUT NAME - 13
PLOT DATE : 2/6/2023 9:24 PM
PLOT BY : KYLE CORNELIUS
PLOT NAME :
PLOT SCALE : 1 IN:10 FT HORZ. / 1 IN:10 FT VERT.
WISDOT/CADDS SHEET 49

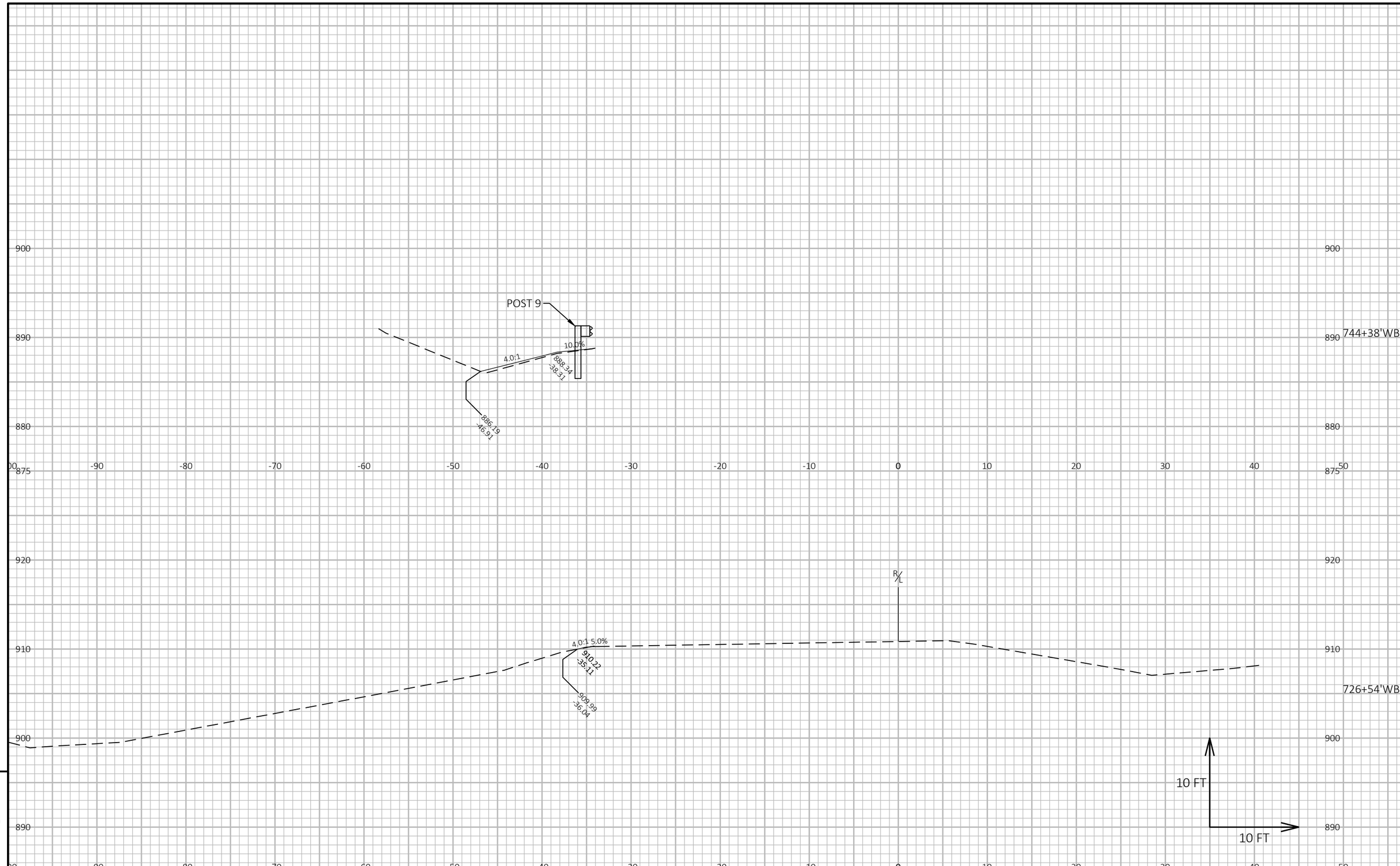

9

9

PROJECT NO: 1066-03-75	HWY: IH 94	COUNTY: DANE AND JEFFERSON	CROSS SECTIONS: IH 94 WB	SHEET 230	E

FILE NAME : P:\2020 PROJECTS\5020028 - WISDOT SWR IH 94\CIVIL3D\10660375\SHEETSPLAN\090102_XS-WB.DWG
LAYOUT NAME - 14
PLOT DATE : 2/6/2023 9:24 PM
PLOT BY : KYLE CORNELIUS
PLOT NAME :
PLOT SCALE : 1 IN:10 FT HORZ. / 1 IN:10 FT VERT.
WISDOT/CADDS SHEET 49

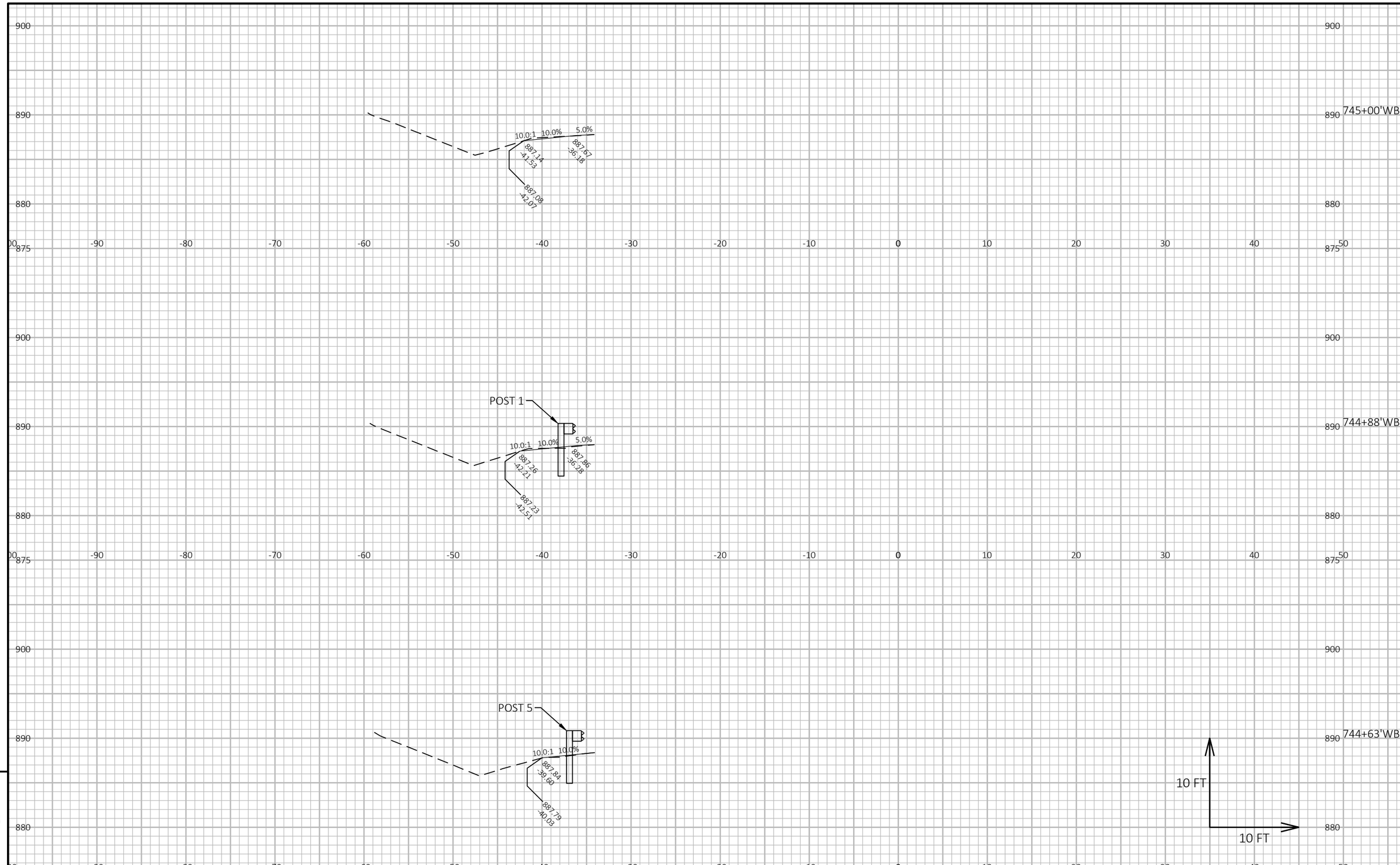

9

9

PROJECT NO: 1066-03-75	HWY: IH 94	COUNTY: DANE AND JEFFERSON	CROSS SECTIONS: IH 94 WB	SHEET 231	E

FILE NAME : P:\2020 PROJECTS\5020028 - WISDOT SWR IH 94\CIVIL3D\10660375\SHEETSPLAN\090102_XS-WB.DWG
LAYOUT NAME - 15

PLOT DATE : 2/6/2023 9:24 PM PLOT BY : KYLE CORNELIUS PLOT NAME : **PLOT SCALE :** 1 IN:10 FT HORZ. / 1 IN:10 FT VERT.

WISDOT/CADDS SHEET 49

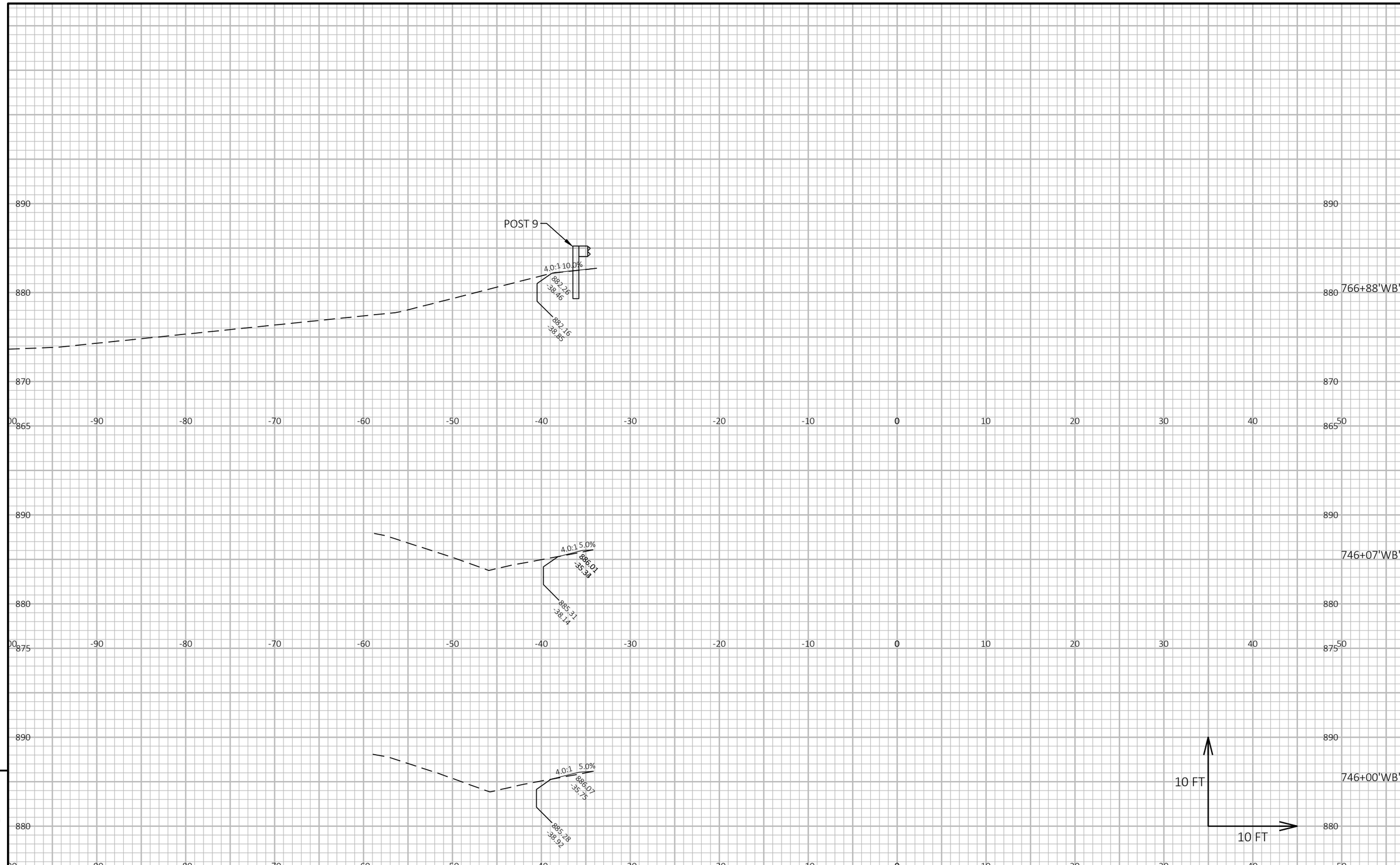

9

9

PROJECT NO: 1066-03-75	HWY: IH 94	COUNTY: DANE AND JEFFERSON	CROSS SECTIONS: IH 94 WB	SHEET 232	E

FILE NAME : P:\2020 PROJECTS\5020028 - WISDOT SWR IH 94\CIVIL3D\10660375\SHEETSPLAN\090102_XS-WB.DWG
LAYOUT NAME - 16

PLOT DATE : 2/6/2023 9:25 PM PLOT BY : KYLE CORNELIUS PLOT NAME : **PLOT SCALE :** 1 IN:10 FT HORZ. / 1 IN:10 FT VERT.

WISDOT/CADDS SHEET 49

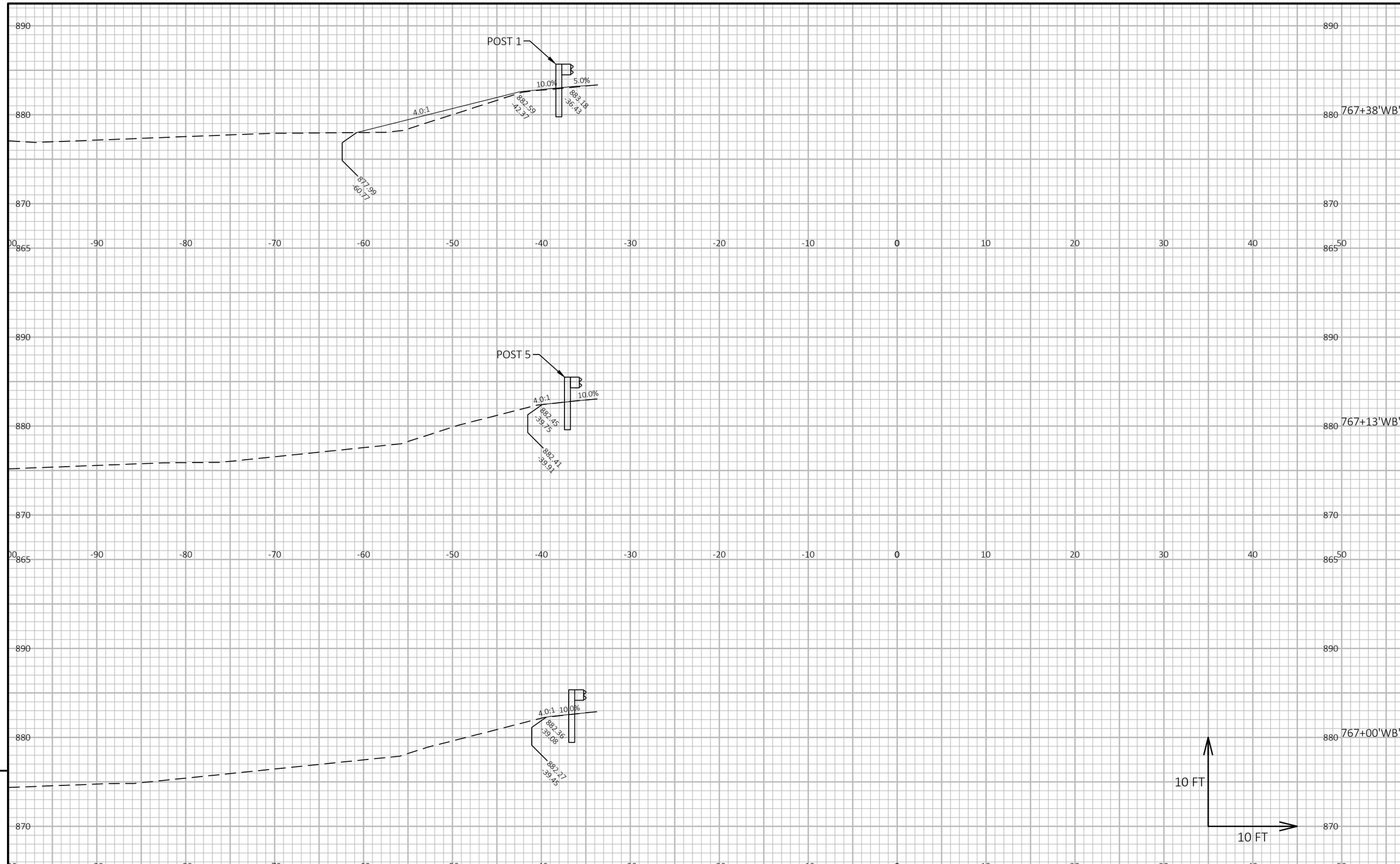

9

9

PROJECT NO: 1066-03-75	HWY: IH 94	COUNTY: DANE AND JEFFERSON	CROSS SECTIONS: IH 94 WB	SHEET 233	E

FILE NAME : P:\2020 PROJECTS\5020028 - WISDOT SWR IH 94\CIVIL3D\10660375\SHEETSPLAN\090102_XS-WB.DWG
LAYOUT NAME - 17

PLOT DATE : 2/6/2023 9:25 PM PLOT BY : KYLE CORNELIUS PLOT NAME : **PLOT SCALE :** 1 IN:10 FT HORZ. / 1 IN:10 FT VERT.

WISDOT/CADDS SHEET 49

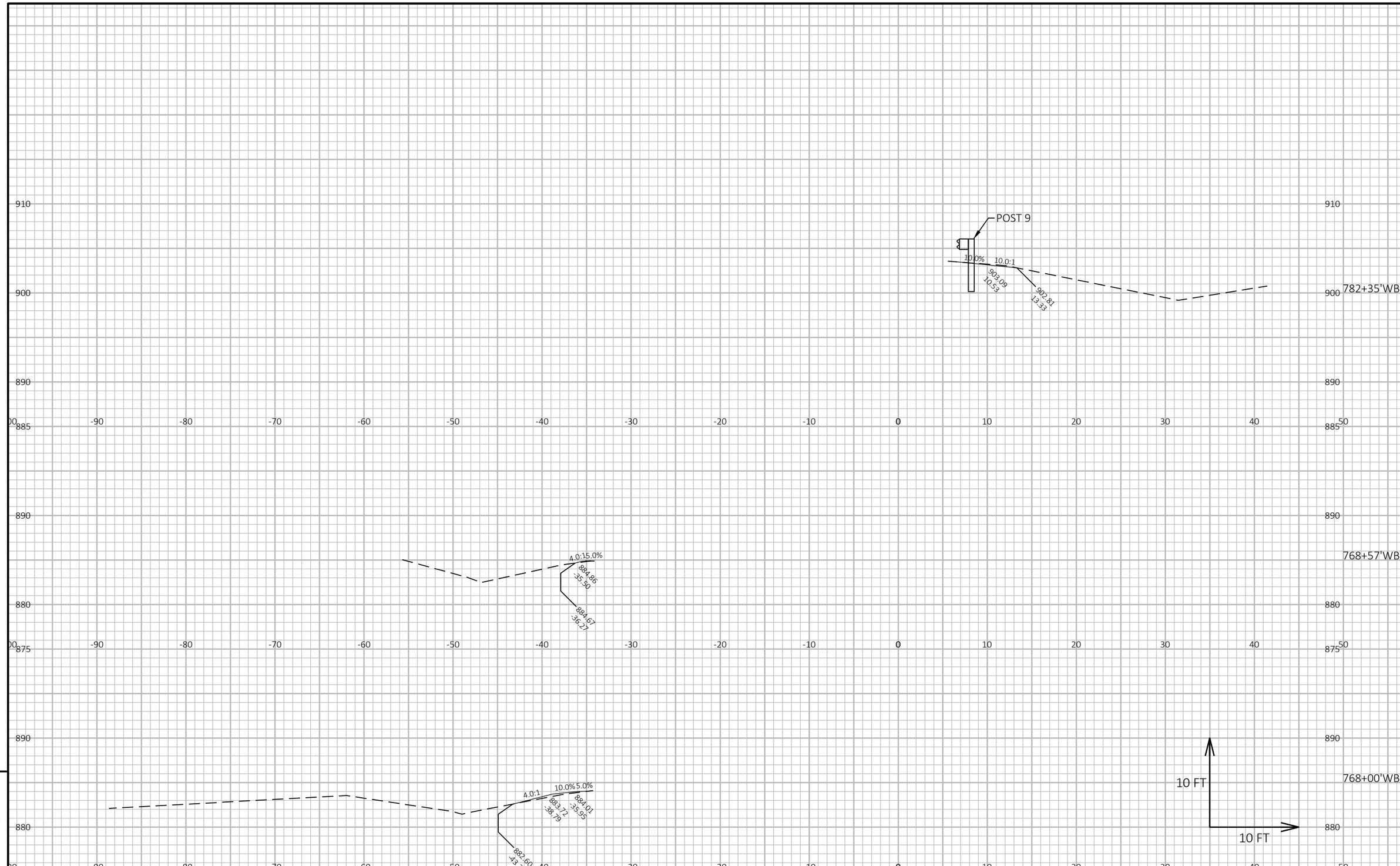

9

9

PROJECT NO: 1066-03-75	HWY: IH 94	COUNTY: DANE AND JEFFERSON	CROSS SECTIONS: IH 94 WB	SHEET 234	E

FILE NAME : P:\2020 PROJECTS\5020028 - WISDOT SWR IH 94\CIVIL3D\10660375\SHEETSPLAN\090102_XS-WB.DWG
LAYOUT NAME - 18

PLOT DATE : 2/6/2023 9:25 PM PLOT BY : KYLE CORNELIUS PLOT NAME : **PLOT SCALE :** 1 IN:10 FT HORZ. / 1 IN:10 FT VERT.

WISDOT/CADDS SHEET 49

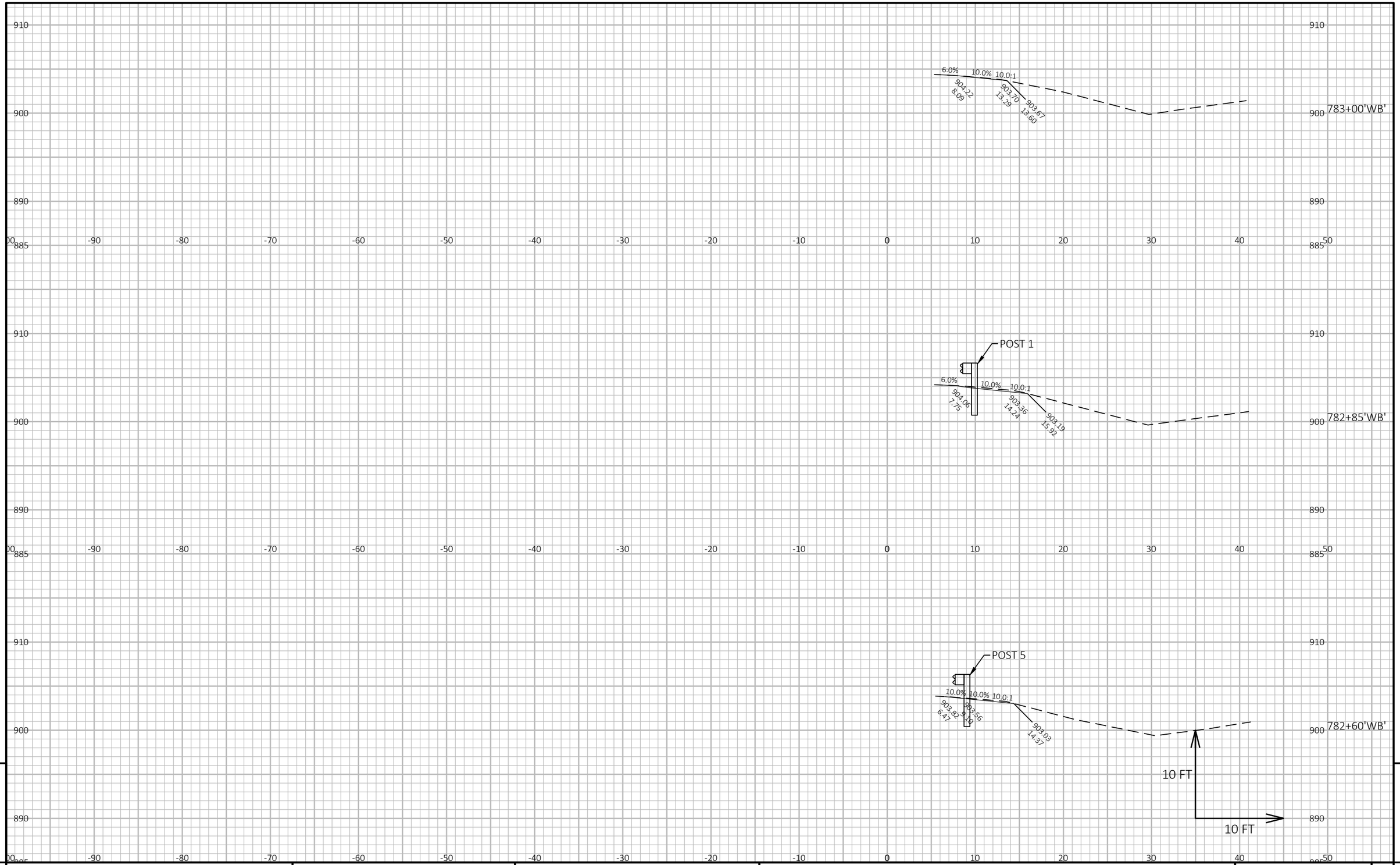

9

9

PROJECT NO: 1066-03-75	HWY: IH 94	COUNTY: DANE AND JEFFERSON	CROSS SECTIONS: IH 94 WB	SHEET 235	E

FILE NAME : P:\2020 PROJECTS\5020028 - WISDOT SWR IH 94\CIVIL3D\10660375\SHEETSPLAN\090102_XS-WB.DWG
LAYOUT NAME - 19

PLOT DATE : 2/6/2023 9:25 PM PLOT BY : KYLE CORNELIUS PLOT NAME : **PLOT SCALE :** 1 IN:10 FT HORZ. / 1 IN:10 FT VERT.

WISDOT/CADDS SHEET 49

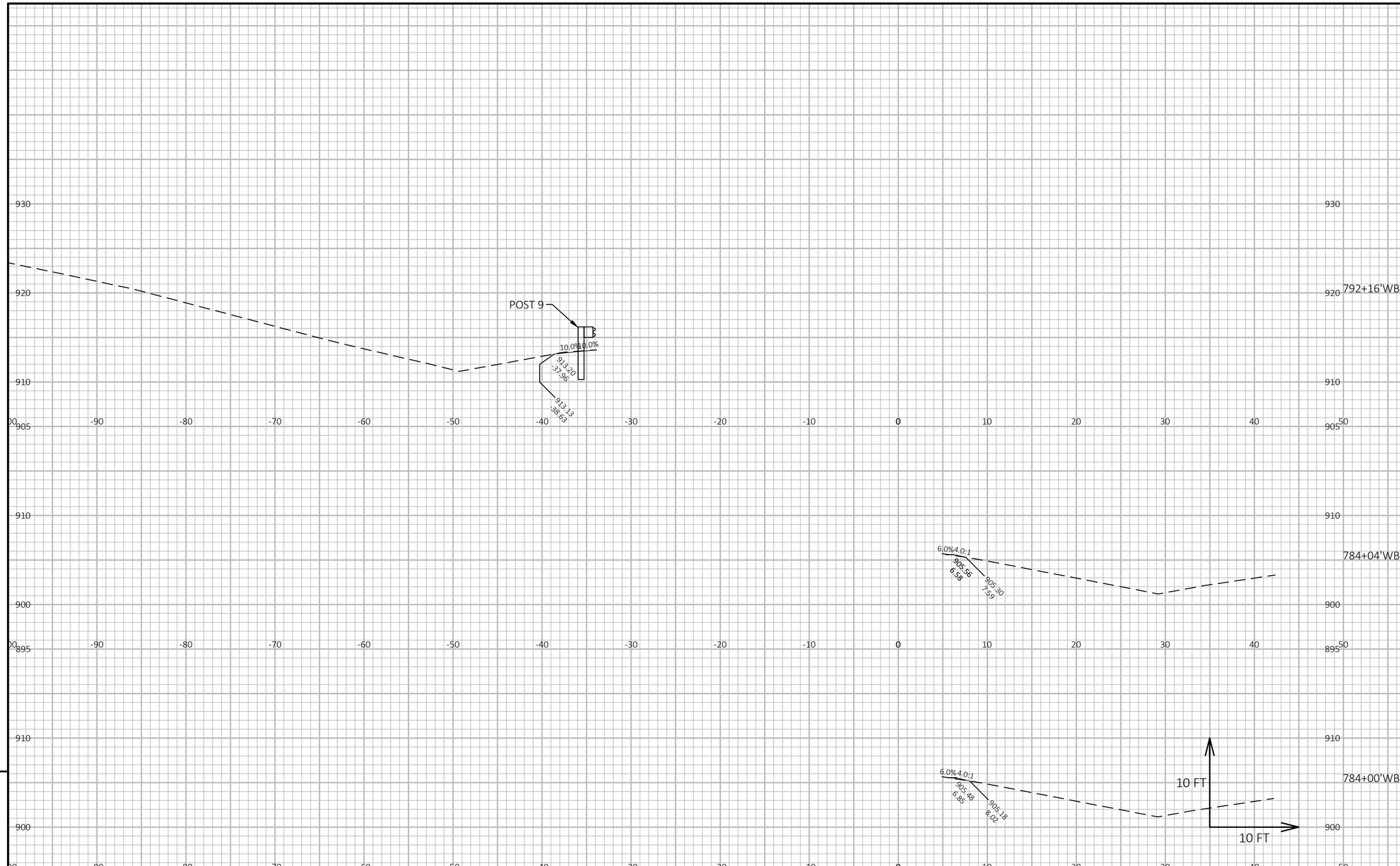

9

9

PROJECT NO: 1066-03-75	HWY: IH 94	COUNTY: DANE AND JEFFERSON	CROSS SECTIONS: IH 94 WB	SHEET 236	E

FILE NAME : P:\2020 PROJECTS\5020028 - WISDOT SWR IH 94\CIVIL3D\10660375\SHEETSPLAN\090102_XS-WB.DWG
LAYOUT NAME - 20

PLOT DATE : 2/6/2023 9:25 PM PLOT BY : KYLE CORNELIUS PLOT NAME : **PLOT SCALE :** 1 IN:10 FT HORZ. / 1 IN:10 FT VERT.

WISDOT/CADDS SHEET 49

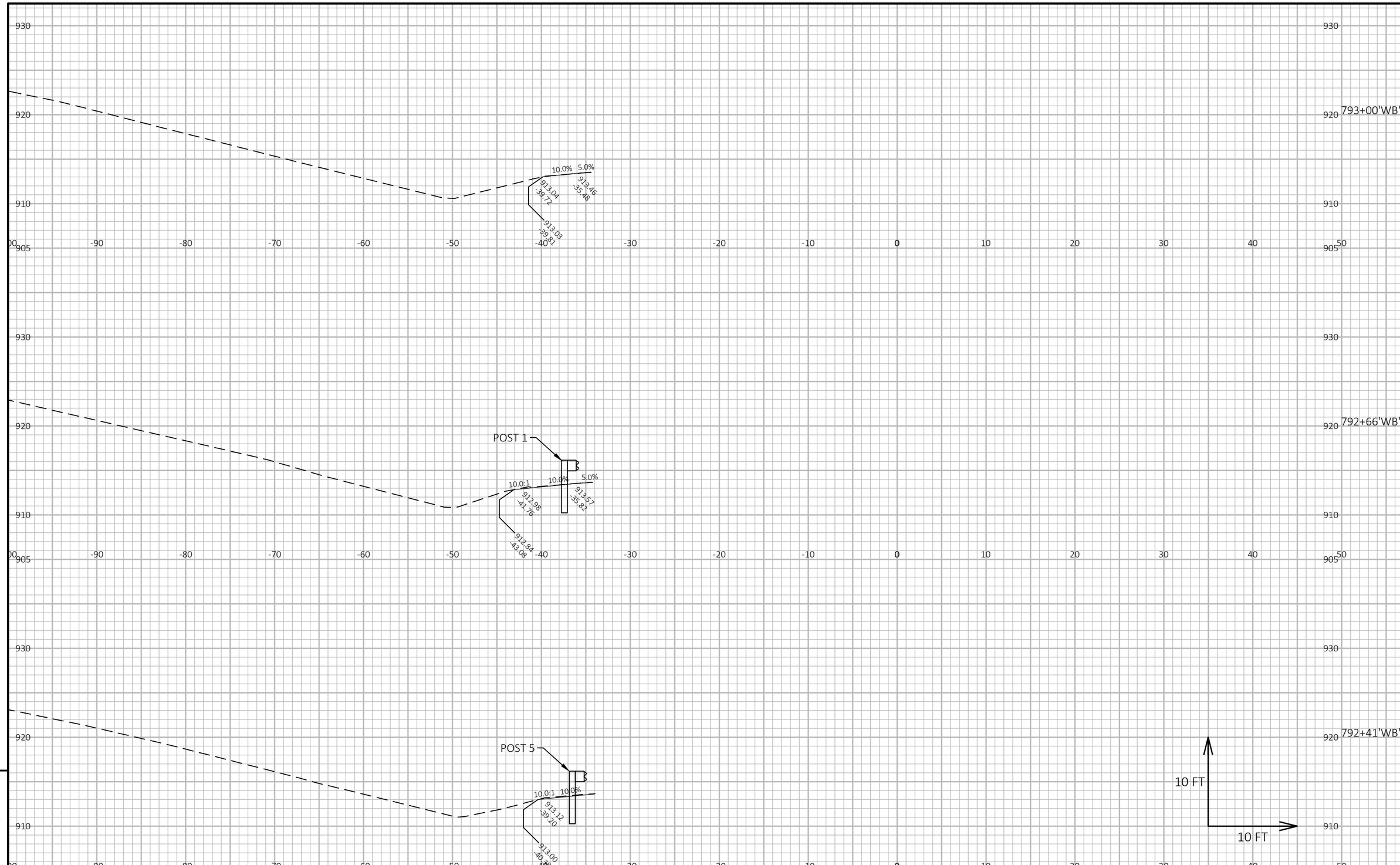

9

9

PROJECT NO: 1066-03-75	HWY: IH 94	COUNTY: DANE AND JEFFERSON	CROSS SECTIONS: IH 94 WB	SHEET 237	E

FILE NAME : P:\2020 PROJECTS\5020028 - WISDOT SWR IH 94\CIVIL3D\10660375\SHEETSPLAN\090102_XS-WB.DWG
LAYOUT NAME - 21

PLOT DATE : 2/6/2023 9:25 PM PLOT BY : KYLE CORNELIUS PLOT NAME : **PLOT SCALE :** 1 IN:10 FT HORZ. / 1 IN:10 FT VERT.

WISDOT/CADDS SHEET 49

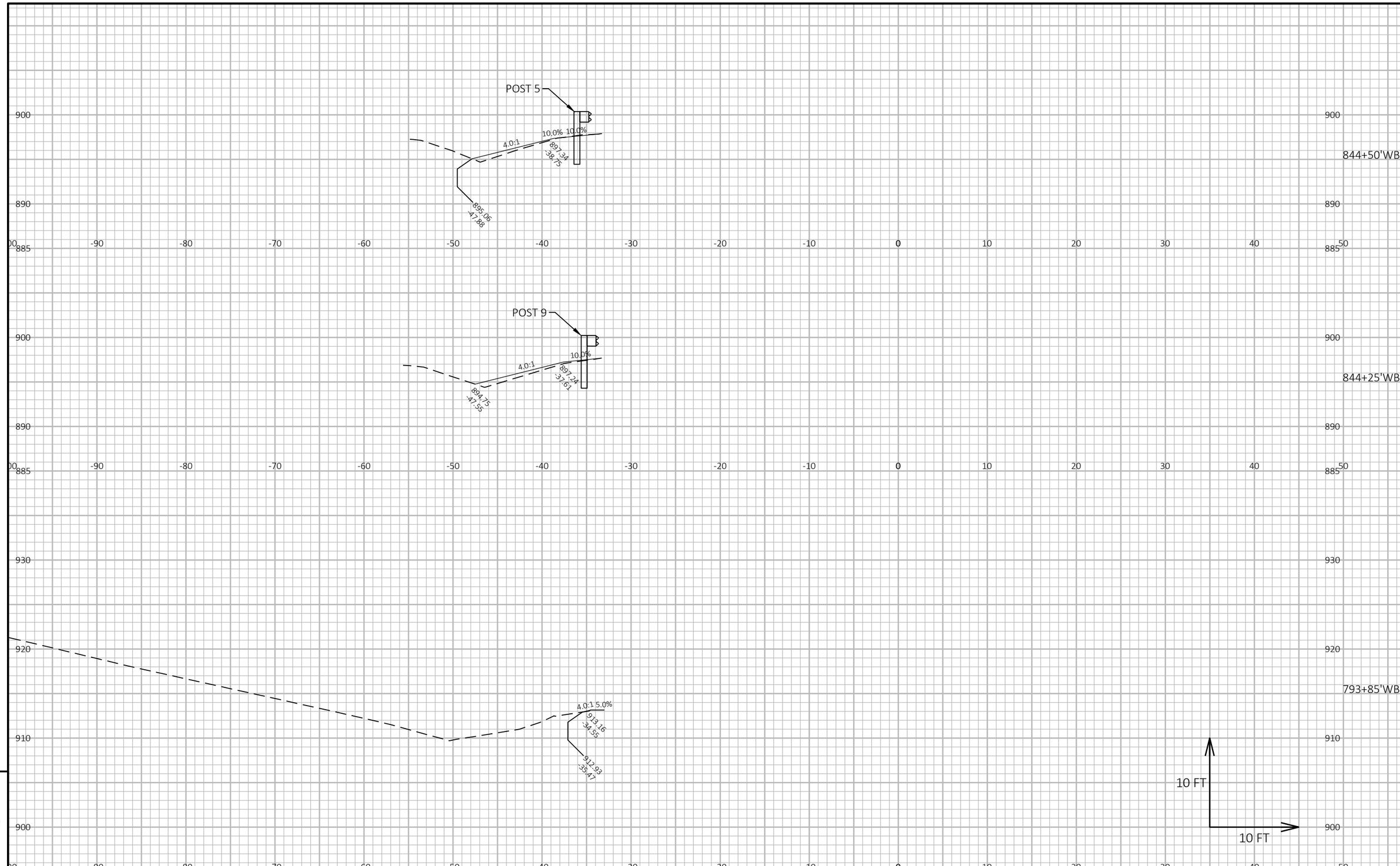

9

9

PROJECT NO: 1066-03-75	HWY: IH 94	COUNTY: DANE AND JEFFERSON	CROSS SECTIONS: IH 94 WB	SHEET 238	E

FILE NAME : P:\2020 PROJECTS\5020028 - WISDOT SWR IH 94\CIVIL3D\10660375\SHEETSPLAN\090102_XS-WB.DWG
LAYOUT NAME - 22

PLOT DATE : 2/6/2023 9:26 PM PLOT BY : KYLE CORNELIUS PLOT NAME : **PLOT SCALE :** 1 IN:10 FT HORZ. / 1 IN:10 FT VERT.

WISDOT/CADDS SHEET 49

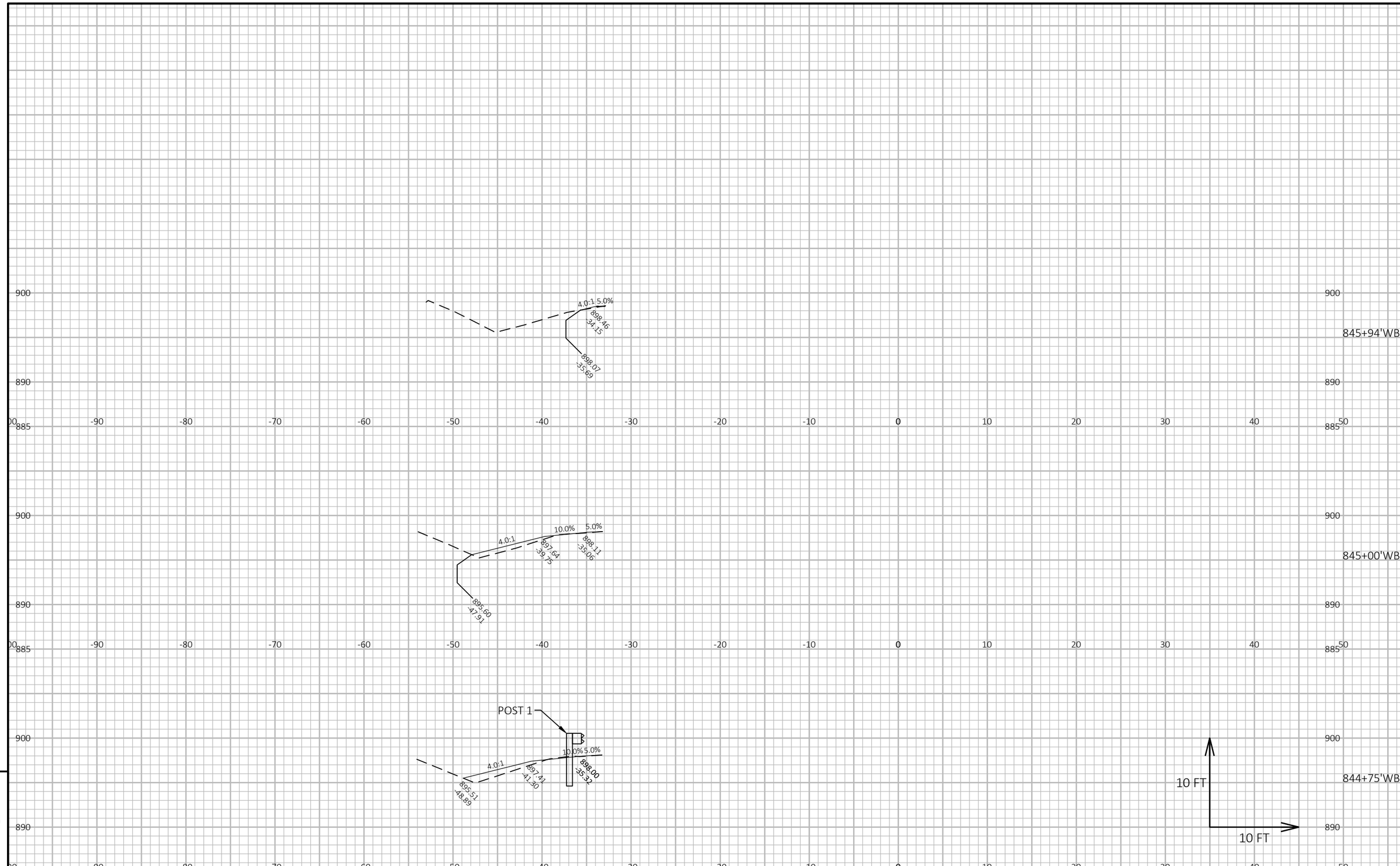

9

9

PROJECT NO: 1066-03-75	HWY: IH 94	COUNTY: DANE AND JEFFERSON	CROSS SECTIONS: IH 94 WB	SHEET 239	E

FILE NAME : P:\2020 PROJECTS\5020028 - WISDOT SWR IH 94\CIVIL3D\10660375\SHEETSPLAN\090102_XS-WB.DWG
LAYOUT NAME - 23
PLOT DATE : 2/6/2023 9:26 PM
PLOT BY : KYLE CORNELIUS
PLOT NAME :
PLOT SCALE : 1 IN:10 FT HORZ. / 1 IN:10 FT VERT.
WISDOT/CADDS SHEET 49

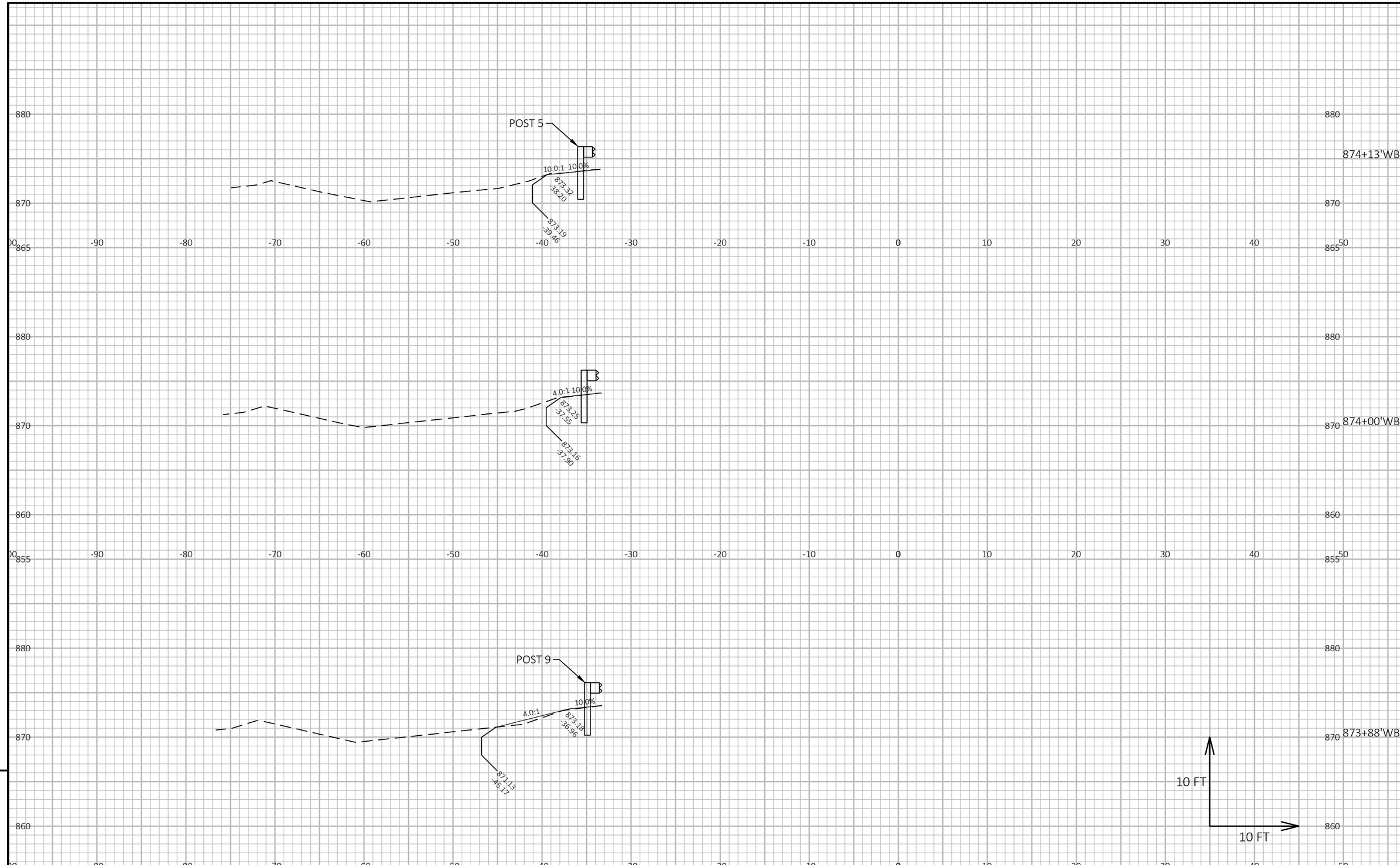

PROJECT NO: 1066-03-75	HWY: IH 94	COUNTY: DANE AND JEFFERSON	CROSS SECTIONS: IH 94 WB	SHEET 240	E

FILE NAME : P:\2020 PROJECTS\5020028 - WISDOT SWR IH 94\CIVIL3D\10660375\SHEETSPLAN\090102_XS-WB.DWG
LAYOUT NAME - 24
PLOT DATE : 2/6/2023 9:26 PM
PLOT BY : KYLE CORNELIUS
PLOT NAME :
PLOT SCALE : 1 IN:10 FT HORZ. / 1 IN:10 FT VERT.
WISDOT/CADDS SHEET 49

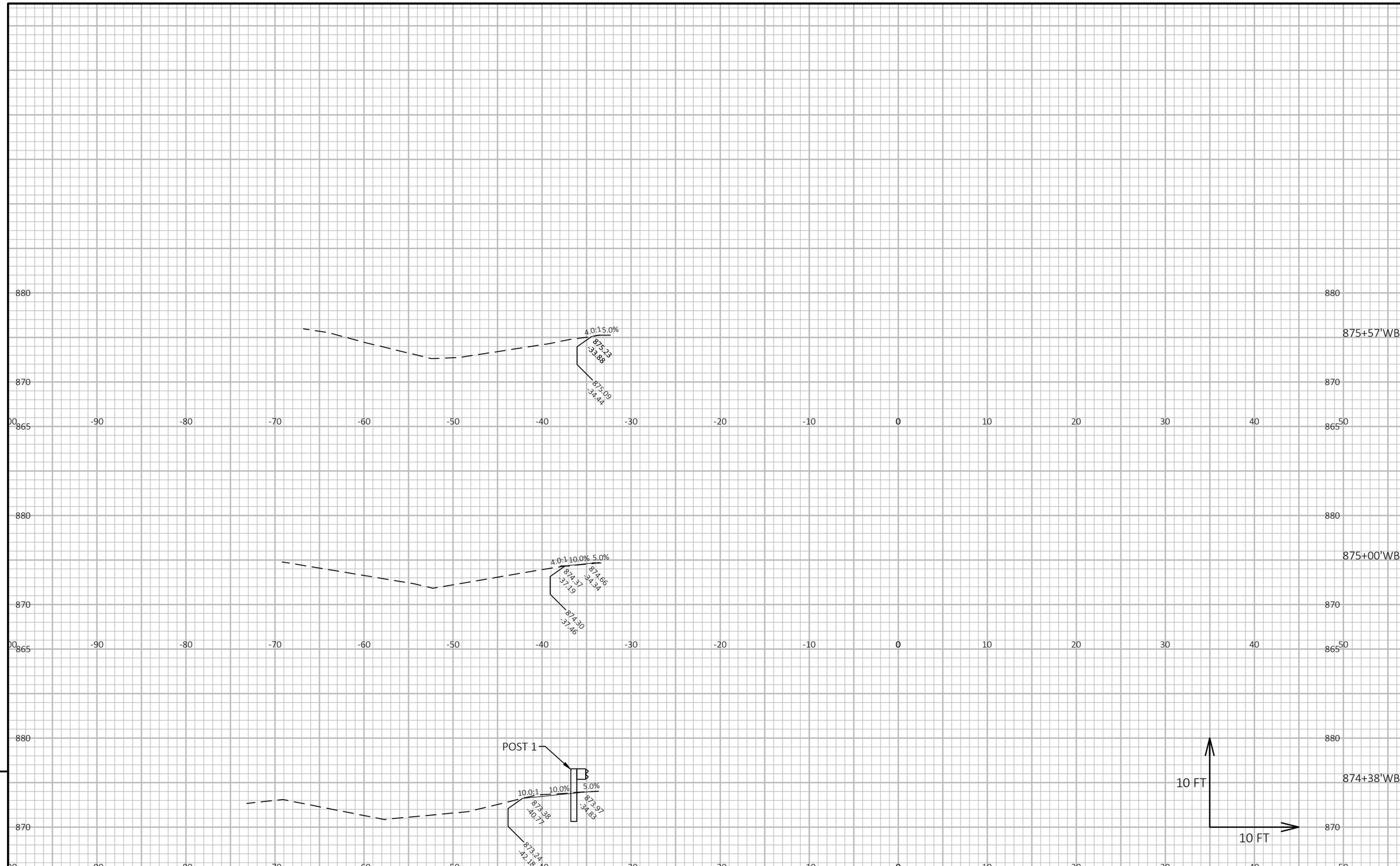

9

9

PROJECT NO: 1066-03-75	HWY: IH 94	COUNTY: DANE AND JEFFERSON	CROSS SECTIONS: IH 94 WB	SHEET 241	E

FILE NAME : P:\2020 PROJECTS\5020028 - WISDOT SWR IH 94\CIVIL3D\10660375\SHEETSPLAN\090102_XS-WB.DWG
LAYOUT NAME - 25

PLOT DATE : 2/6/2023 9:26 PM PLOT BY : KYLE CORNELIUS PLOT NAME : **PLOT SCALE :** 1 IN:10 FT HORZ. / 1 IN:10 FT VERT.

WISDOT/CADDS SHEET 49

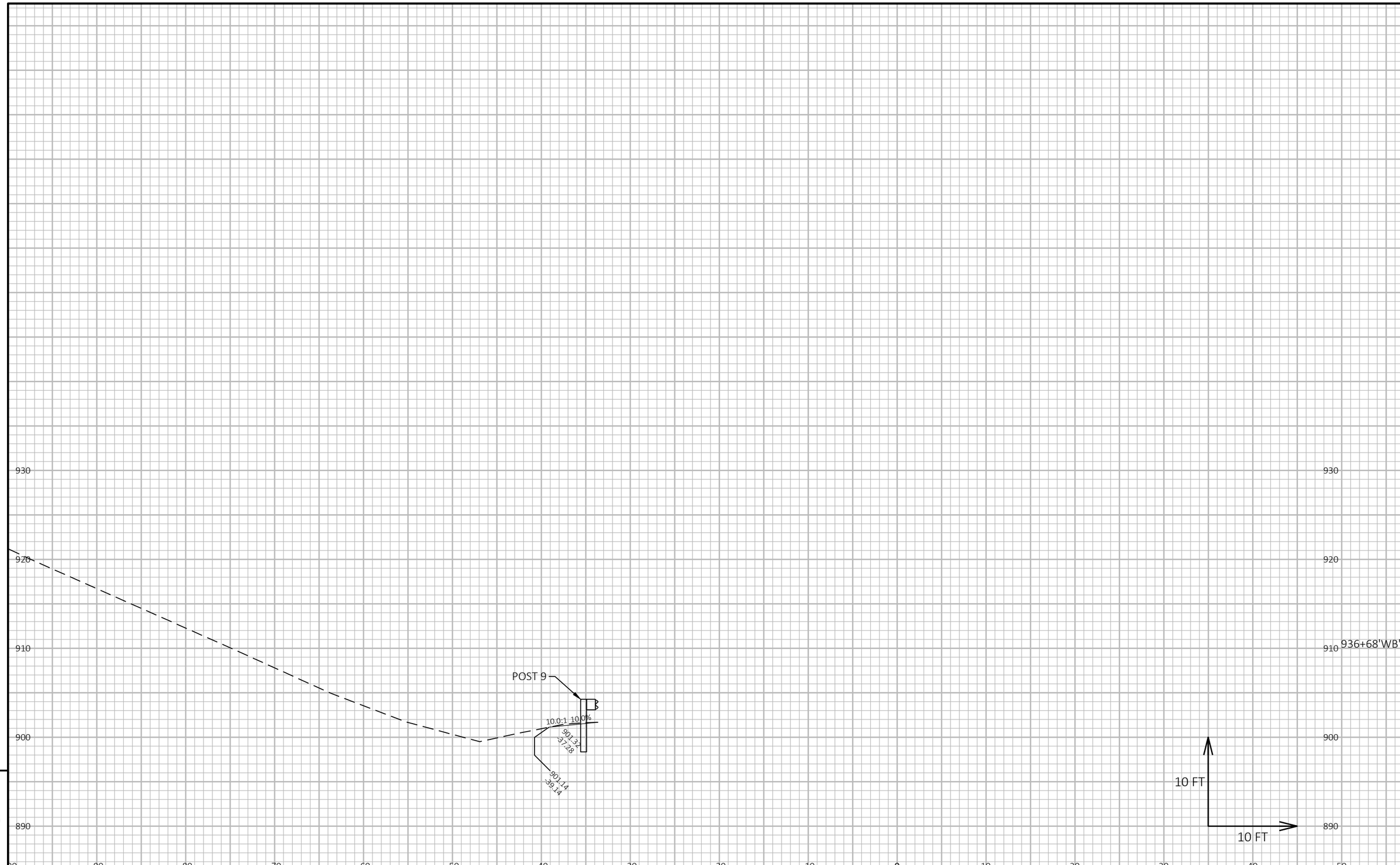

9

9

PROJECT NO: 1066-03-75	HWY: IH 94	COUNTY: DANE AND JEFFERSON	CROSS SECTIONS: IH 94 WB	SHEET 242	E

FILE NAME : P:\2020 PROJECTS\5020028 - WISDOT SWR IH 94\CIVIL3D\10660375\SHEETSPLAN\090102_XS-WB.DWG
LAYOUT NAME - 26

PLOT DATE : 2/6/2023 9:26 PM PLOT BY : KYLE CORNELIUS PLOT NAME : **PLOT SCALE :** 1 IN:10 FT HORZ. / 1 IN:10 FT VERT.

WISDOT/CADDS SHEET 49

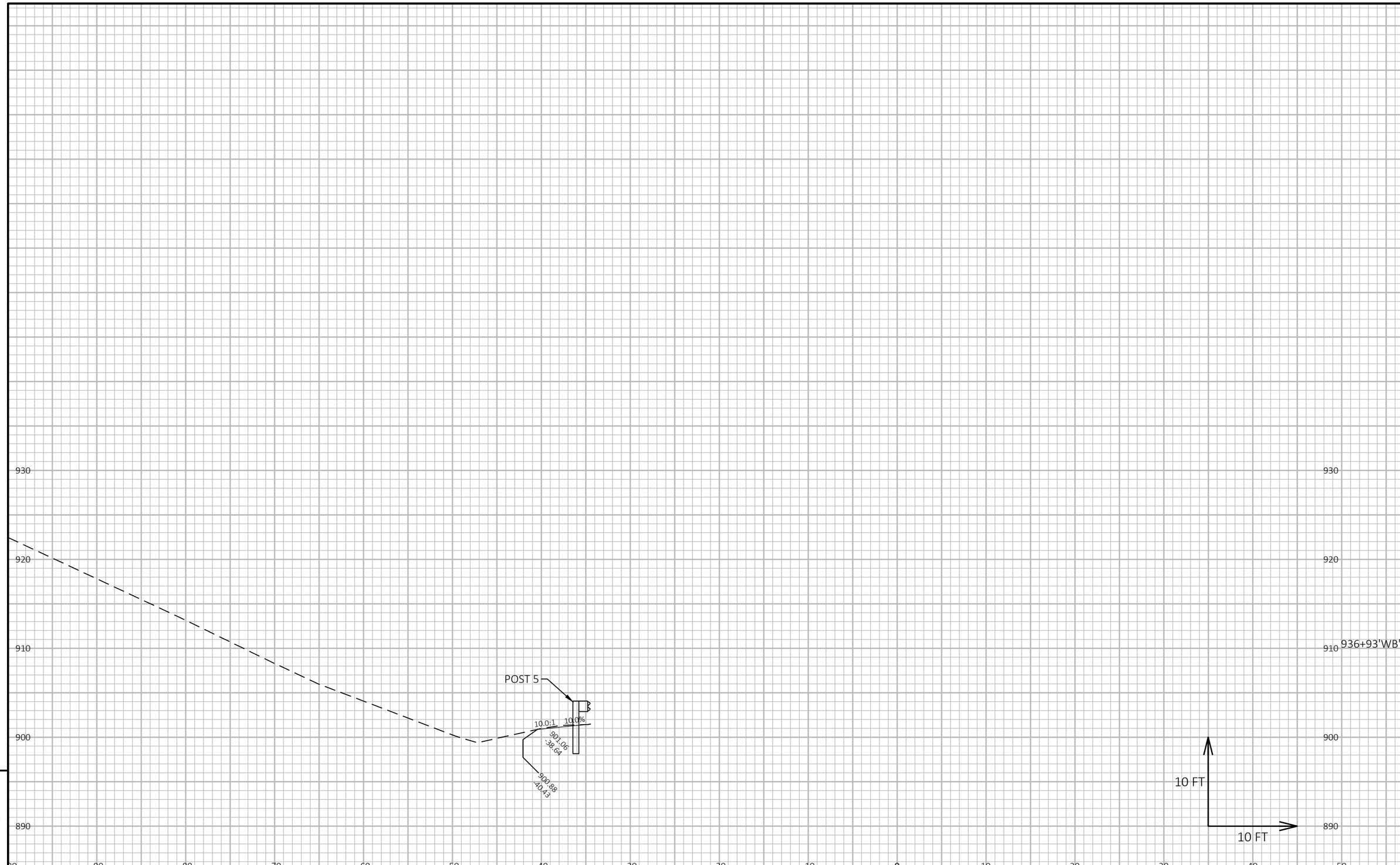

9

9

PROJECT NO: 1066-03-75	HWY: IH 94	COUNTY: DANE AND JEFFERSON	CROSS SECTIONS: IH 94 WB	SHEET 243	E

FILE NAME : P:\2020 PROJECTS\5020028 - WISDOT SWR IH 94\CIVIL3D\10660375\SHEETSPLAN\090102_XS-WB.DWG
LAYOUT NAME - 27

PLOT DATE : 2/6/2023 9:26 PM PLOT BY : KYLE CORNELIUS PLOT NAME : **PLOT SCALE :** 1 IN:10 FT HORZ. / 1 IN:10 FT VERT.

WISDOT/CADDS SHEET 49

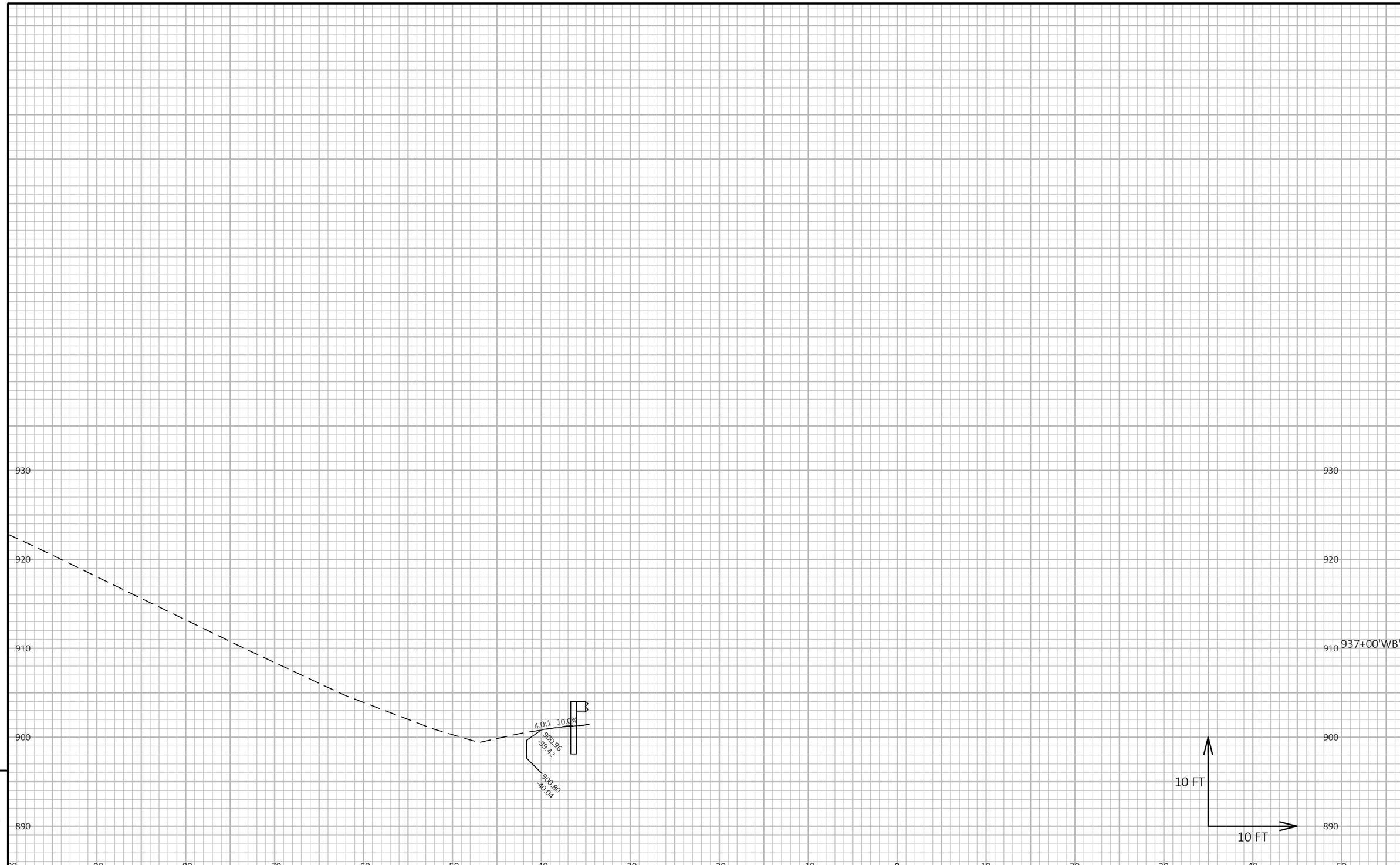

9

9

PROJECT NO: 1066-03-75	HWY: IH 94	COUNTY: DANE AND JEFFERSON	CROSS SECTIONS: IH 94 WB	SHEET 244	E

FILE NAME : P:\2020 PROJECTS\5020028 - WISDOT SWR IH 94\CIVIL3D\10660375\SHEETSPLAN\090102_XS-WB.DWG
LAYOUT NAME - 28

PLOT DATE : 2/6/2023 9:27 PM PLOT BY : KYLE CORNELIUS PLOT NAME : **PLOT SCALE :** 1 IN:10 FT HORZ. / 1 IN:10 FT VERT.

WISDOT/CADDS SHEET 49

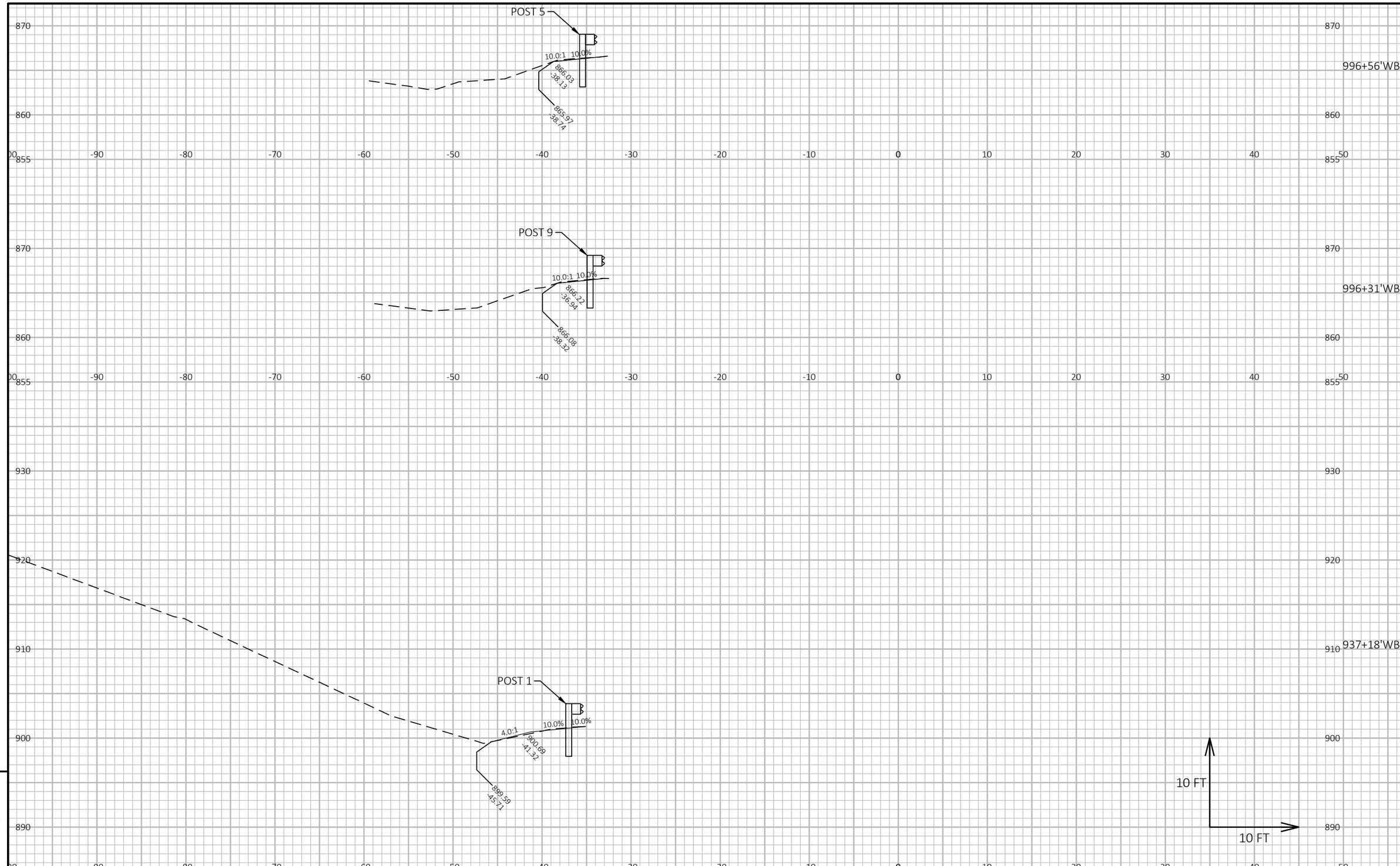

PROJECT NO: 1066-03-75	HWY: IH 94	COUNTY: DANE AND JEFFERSON	CROSS SECTIONS: IH 94 WB	SHEET 245	E

FILE NAME : P:\2020 PROJECTS\5020028 - WISDOT SWR IH 94\CIVIL3D\10660375\SHEETSPLAN\090102_XS-WB.DWG
LAYOUT NAME - 29
PLOT DATE : 2/6/2023 9:27 PM
PLOT BY : KYLE CORNELIUS
PLOT NAME :
PLOT SCALE : 1 IN:10 FT HORZ. / 1 IN:10 FT VERT.
WISDOT/CADDS SHEET 49

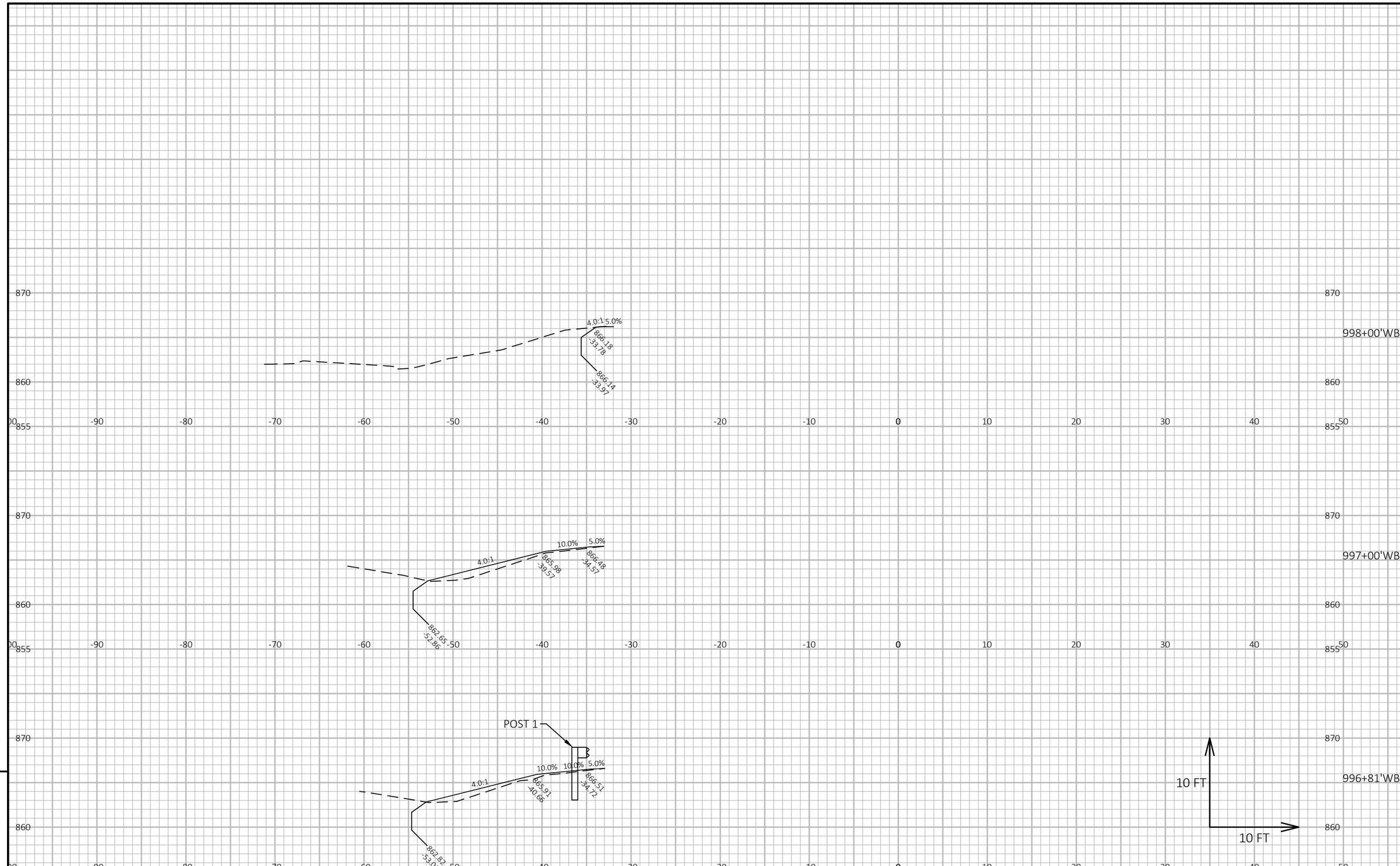

9

9

PROJECT NO: 1066-03-75	HWY: IH 94	COUNTY: DANE AND JEFFERSON	CROSS SECTIONS: IH 94 WB	SHEET 246	E

FILE NAME : P:\2020 PROJECTS\5020028 - WISDOT SWR IH 94\CIVIL3D\10660375\SHEETSPLAN\090102_XS-WB.DWG
LAYOUT NAME - 30

PLOT DATE : 2/6/2023 9:27 PM PLOT BY : KYLE CORNELIUS PLOT NAME : **PLOT SCALE :** 1 IN:10 FT HORZ. / 1 IN:10 FT VERT.

WISDOT/CADDS SHEET 49

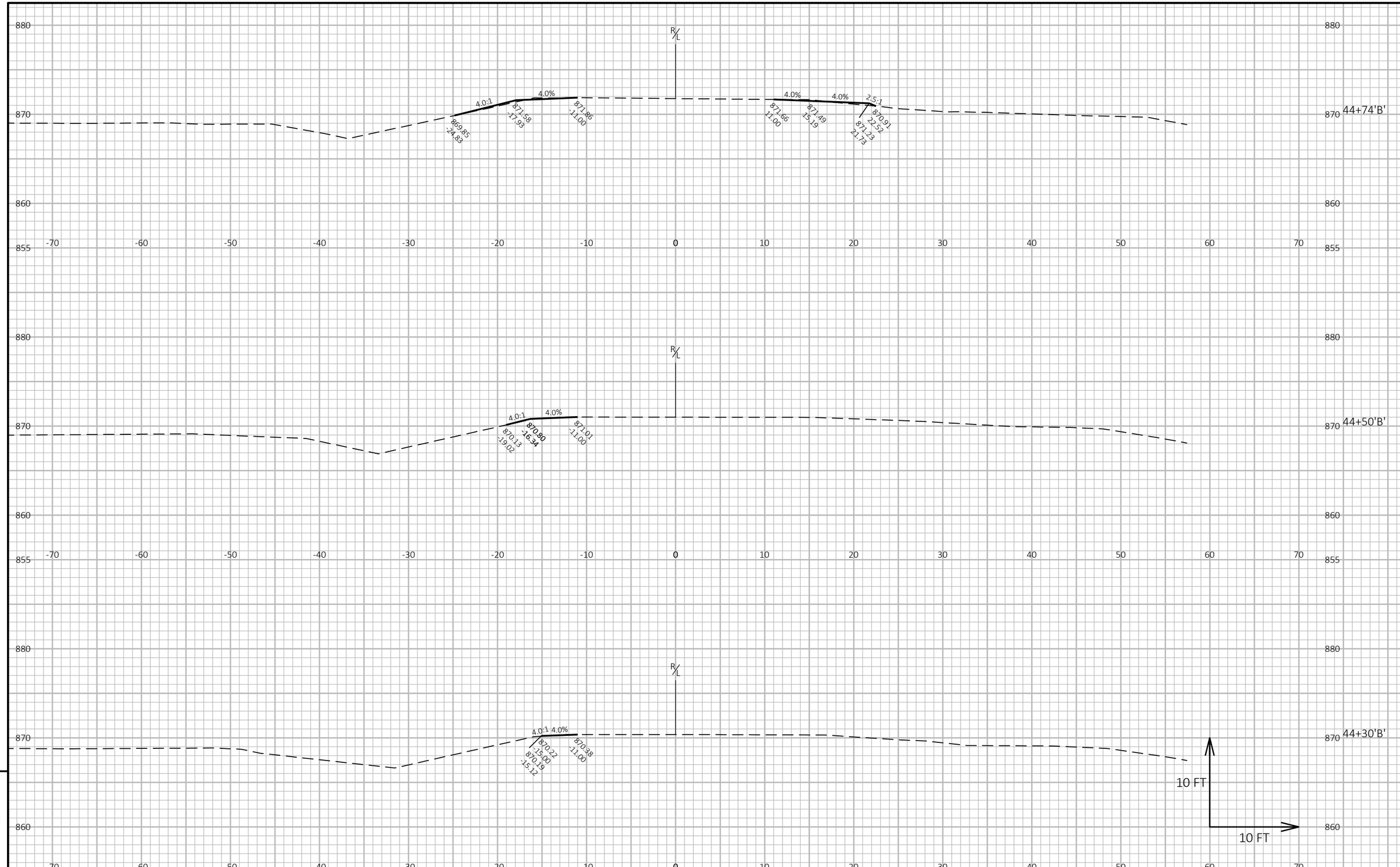

9

9

PROJECT NO: 1066-03-75	HWY: IH 94	COUNTY: DANE AND JEFFERSON	CROSS SECTIONS: BAXTER RD	SHEET 247	E

FILE NAME : P:\2020 PROJECTS\5020028 - WISDOT SWR IH 94\CIVIL3D\10660375\SHEETSPLAN\090103_XS-SIDEROADS.DWG
LAYOUT NAME - 01

PLOT DATE : 12/12/2022 11:57 AM PLOT BY : KYLE CORNELIUS PLOT NAME : **PLOT SCALE :** 1 IN:10 FT HORZ. / 1 IN:10 FT VERT.

WISDOT/CADDS SHEET 49

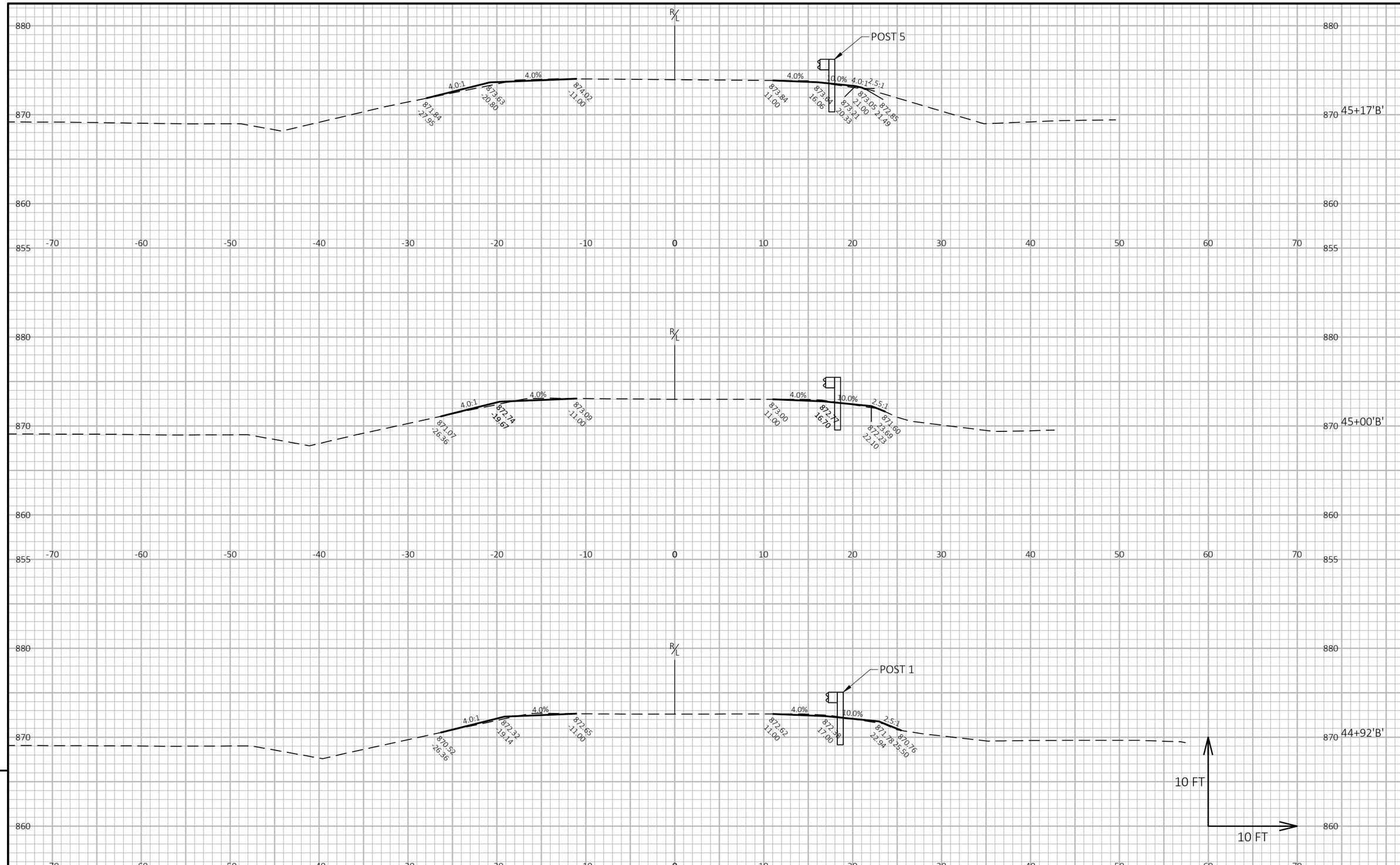

9

9

PROJECT NO: 1066-03-75	HWY: IH 94	COUNTY: DANE AND JEFFERSON	CROSS SECTIONS: BAXTER RD	SHEET 248	E

FILE NAME : P:\2020 PROJECTS\5020028 - WISDOT SWR IH 94\CIVIL3D\10660375\SHEETSPLAN\090103_XS-SIDEROADS.DWG
LAYOUT NAME - 02
PLOT DATE : 12/12/2022 2:09 PM
PLOT BY : KYLE CORNELIUS
PLOT NAME :
PLOT SCALE : 1 IN:10 FT HORZ. / 1 IN:10 FT VERT.

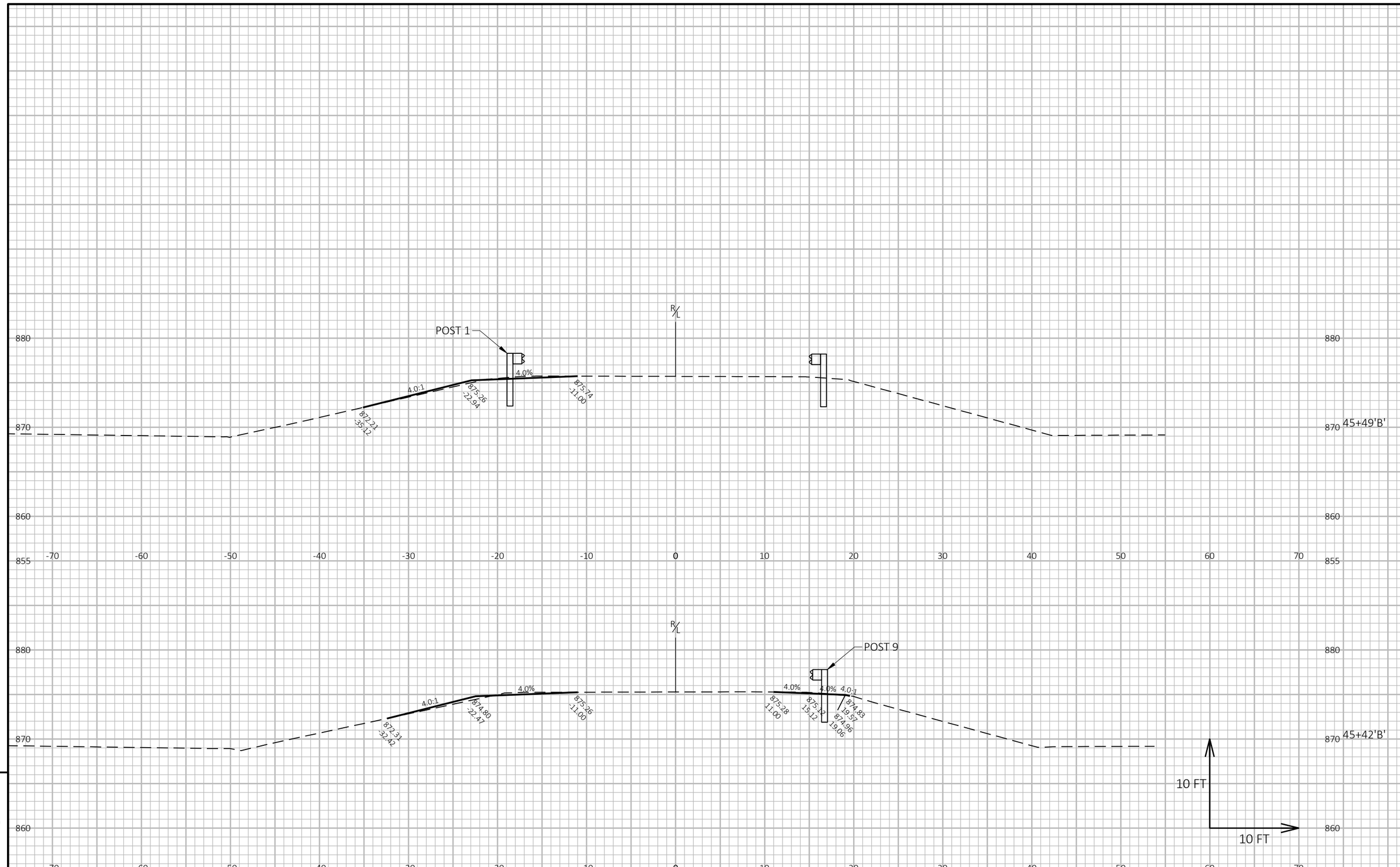

9

9

PROJECT NO: 1066-03-75	HWY: IH 94	COUNTY: DANE AND JEFFERSON	CROSS SECTIONS: BAXTER RD	SHEET 249	E

FILE NAME : P:\2020 PROJECTS\5020028 - WISDOT SWR IH 94\CIVIL3D\10660375\SHEETSPLAN\090103_XS-SIDEROADS.DWG
LAYOUT NAME - 03
PLOT DATE : 12/12/2022 11:59 AM PLOT BY : KYLE CORNELIUS PLOT NAME : **PLOT SCALE :** 1 IN:10 FT HORZ. / 1 IN:10 FT VERT.

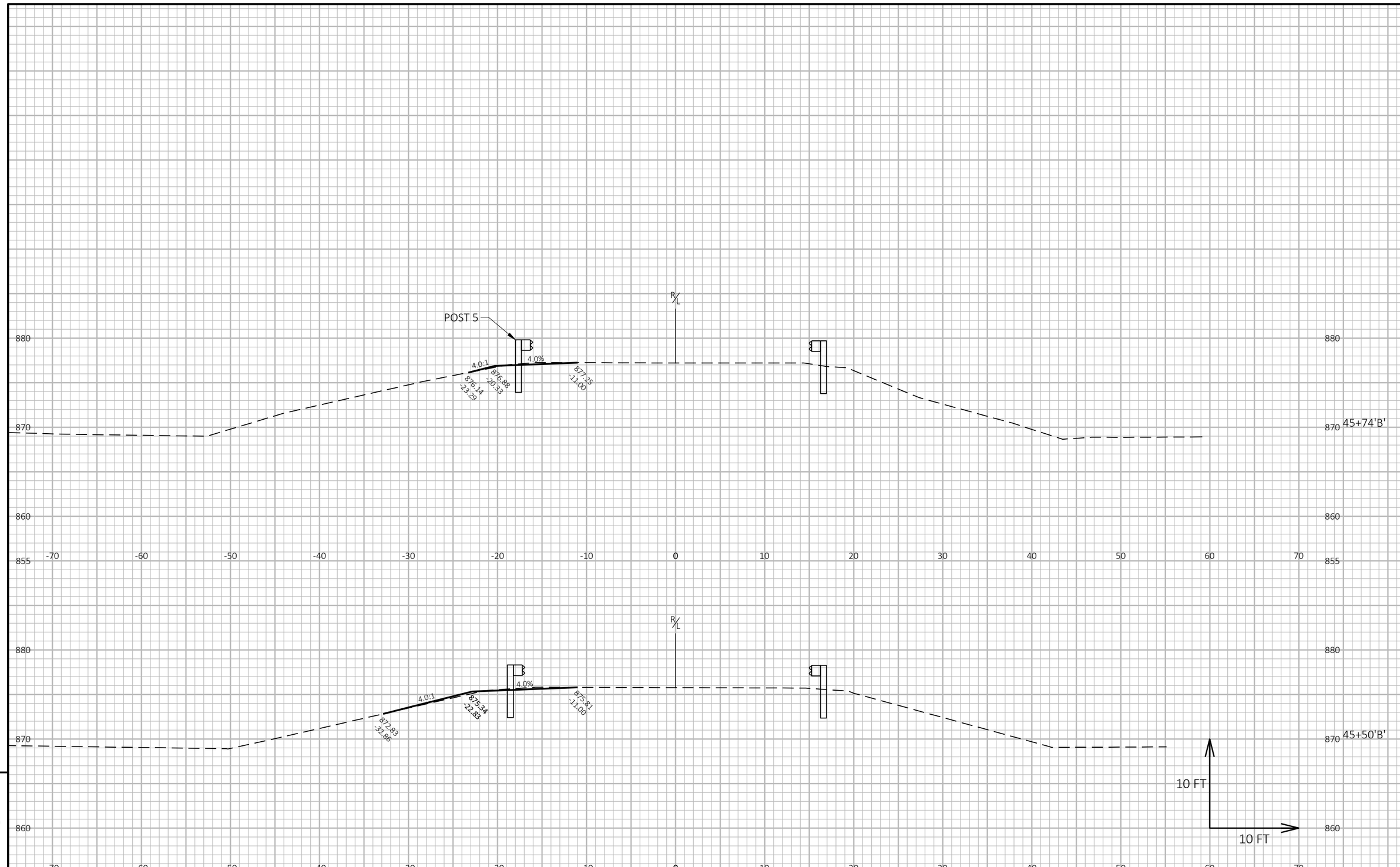

9

9

PROJECT NO: 1066-03-75	HWY: IH 94	COUNTY: DANE AND JEFFERSON	CROSS SECTIONS: BAXTER RD	SHEET 250	E

FILE NAME : P:\2020 PROJECTS\5020028 - WISDOT SWR IH 94\CIVIL3D\10660375\SHEETSPLAN\090103_XS-SIDEROADS.DWG
LAYOUT NAME - 04
PLOT DATE : 12/12/2022 12:00 PM
PLOT BY : KYLE CORNELIUS
PLOT NAME :
PLOT SCALE : 1 IN:10 FT HORZ. / 1 IN:10 FT VERT.
WISDOT/CADDS SHEET 49

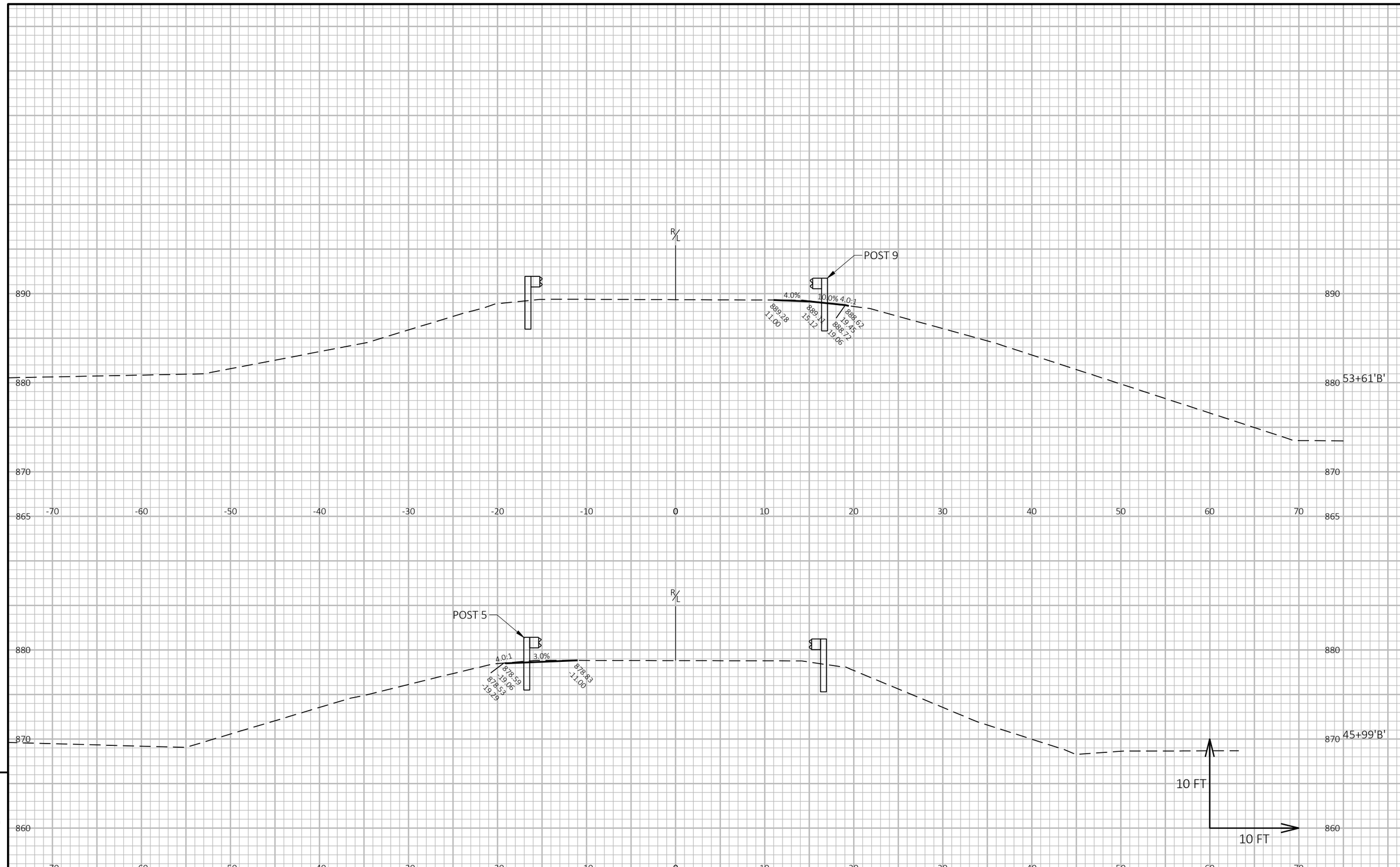

9

9

PROJECT NO: 1066-03-75	HWY: IH 94	COUNTY: DANE AND JEFFERSON	CROSS SECTIONS: BAXTER RD	SHEET 251	E

FILE NAME : P:\2020 PROJECTS\5020028 - WISDOT SWR IH 94\CIVIL3D\10660375\SHEETSPLAN\090103_XS-SIDEROADS.DWG
LAYOUT NAME - 05
PLOT DATE : 12/12/2022 12:01 PM PLOT BY : KYLE CORNELIUS PLOT NAME : **PLOT SCALE :** 1 IN:10 FT HORZ. / 1 IN:10 FT VERT.

WISDOT/CADDS SHEET 49

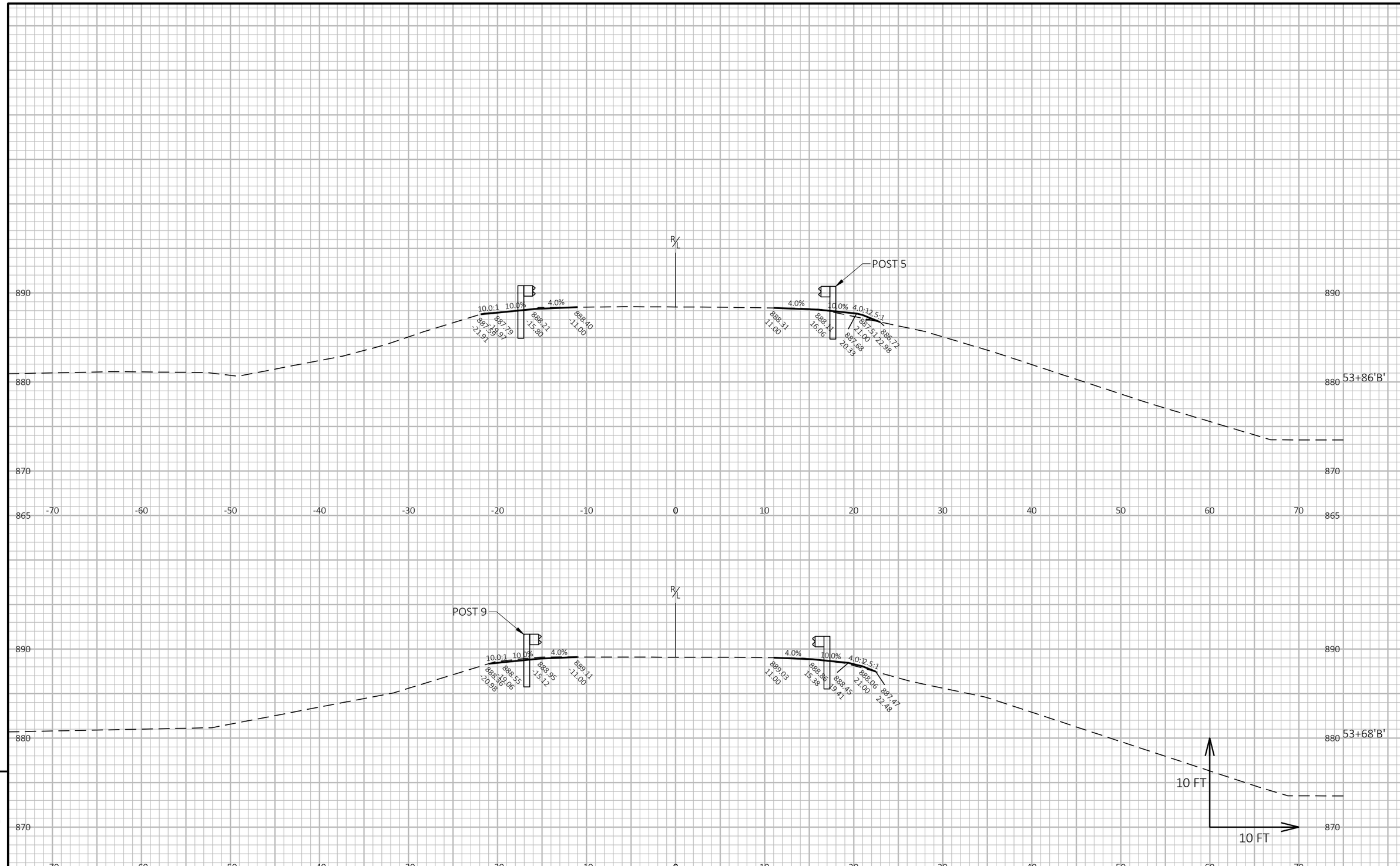

PROJECT NO: 1066-03-75	HWY: IH 94	COUNTY: DANE AND JEFFERSON	CROSS SECTIONS: BAXTER RD	SHEET 252	E

FILE NAME : P:\2020 PROJECTS\5020028 - WISDOT SWR IH 94\CIVIL3D\10660375\SHEETSPLAN\090103_XS-SIDEROADS.DWG
LAYOUT NAME - 06
PLOT DATE : 12/12/2022 12:02 PM PLOT BY : KYLE CORNELIUS PLOT NAME : PLOT SCALE : 1 IN:10 FT HORZ. / 1 IN:10 FT VERT.

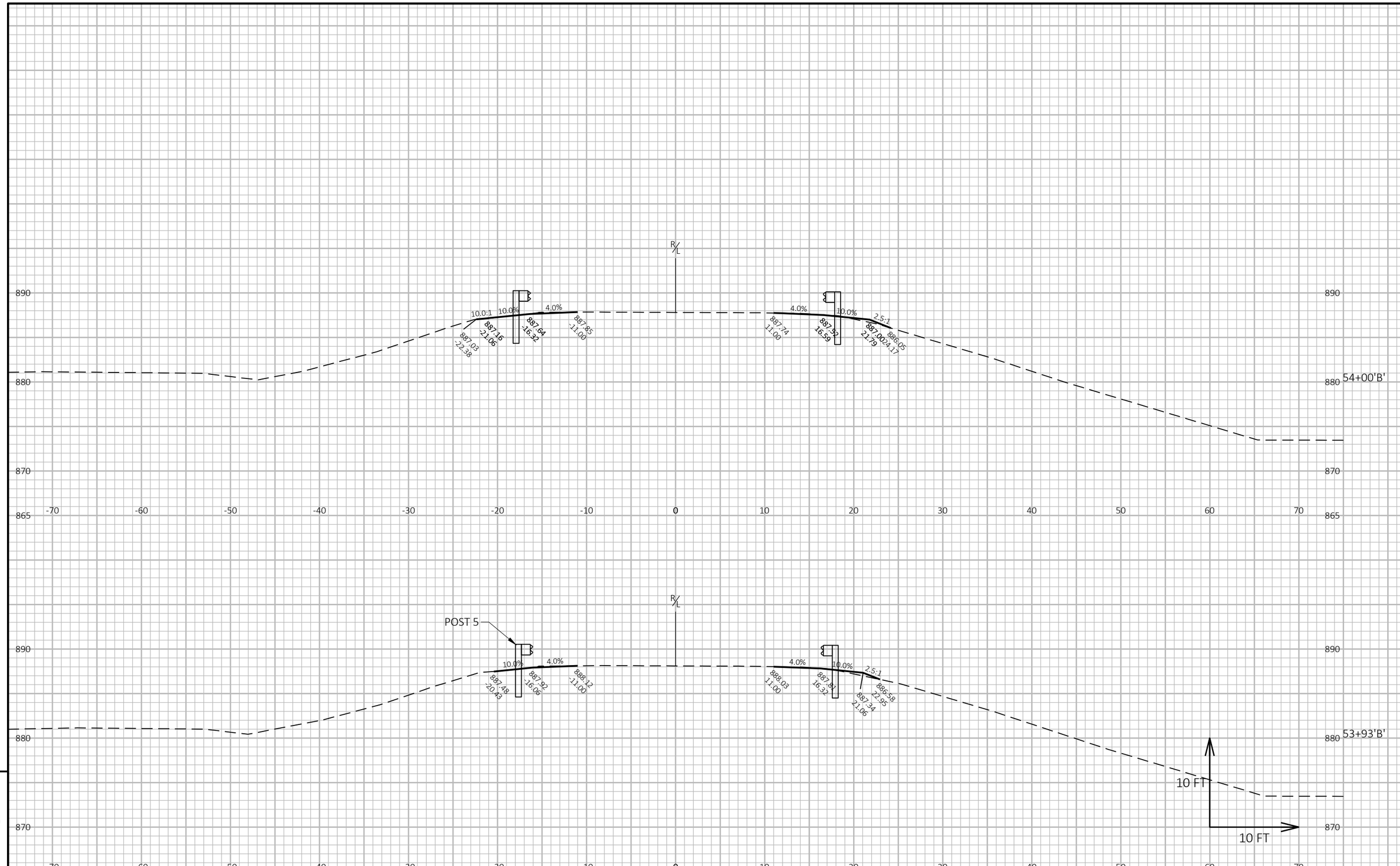

PROJECT NO: 1066-03-75	HWY: IH 94	COUNTY: DANE AND JEFFERSON	CROSS SECTIONS: BAXTER RD	SHEET 253	E

FILE NAME : P:\2020 PROJECTS\5020028 - WISDOT SWR IH 94\CIVIL3D\10660375\SHEETSPLAN\090103_XS-SIDEROADS.DWG
LAYOUT NAME - 07
PLOT DATE : 12/12/2022 12:03 PM
PLOT BY : KYLE CORNELIUS
PLOT NAME :
PLOT SCALE : 1 IN:10 FT HORZ. / 1 IN:10 FT VERT.
WISDOT/CADDS SHEET 49

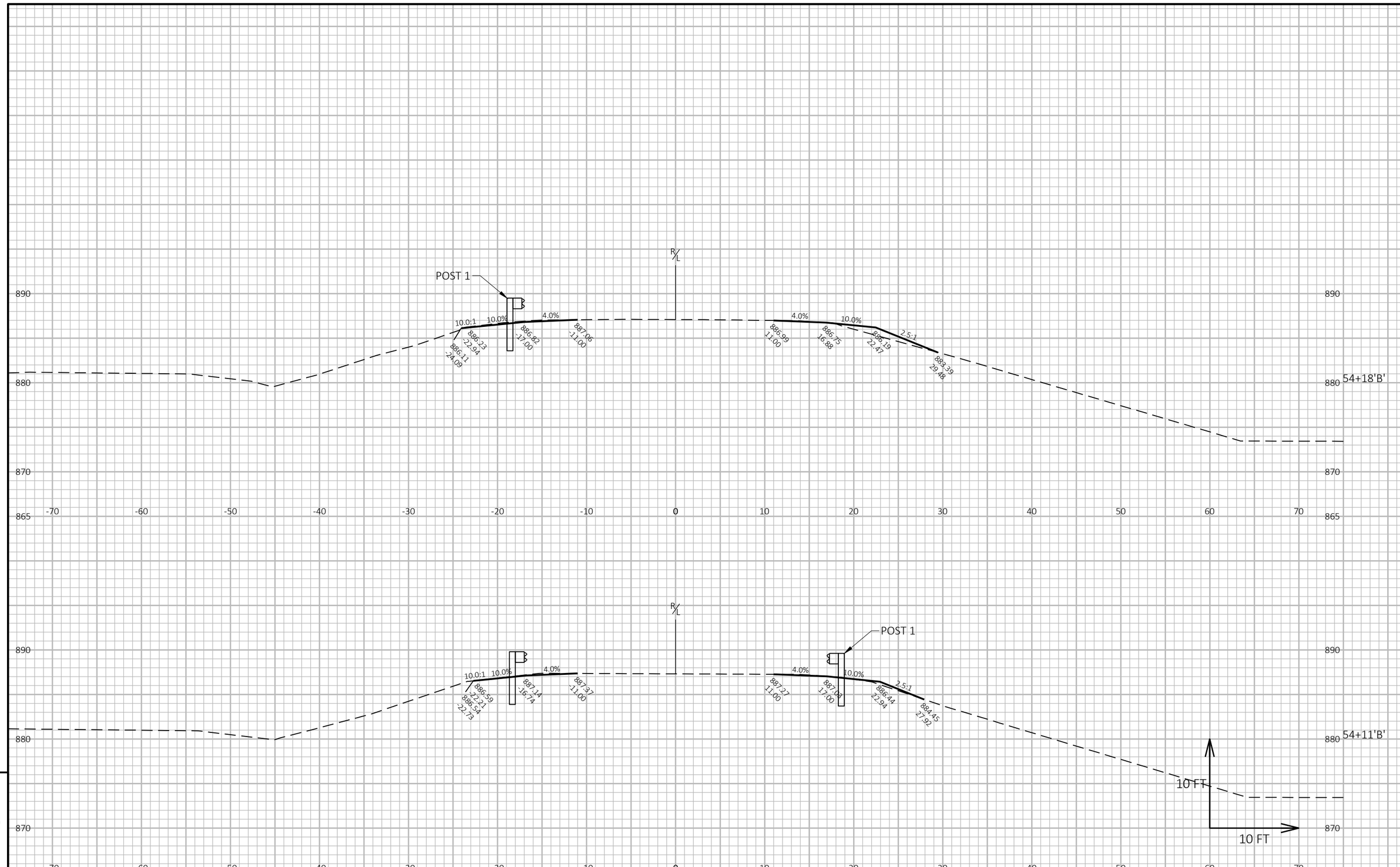

9

9

PROJECT NO: 1066-03-75	HWY: IH 94	COUNTY: DANE AND JEFFERSON	CROSS SECTIONS: BAXTER RD	SHEET 254	E

FILE NAME : P:\2020 PROJECTS\5020028 - WISDOT SWR IH 94\CIVIL3D\10660375\SHEETSPLAN\090103_XS-SIDEROADS.DWG
LAYOUT NAME - 08
PLOT DATE : 12/12/2022 12:04 PM
PLOT BY : KYLE CORNELIUS
PLOT NAME :
PLOT SCALE : 1 IN:10 FT HORZ. / 1 IN:10 FT VERT.
WISDOT/CADDS SHEET 49

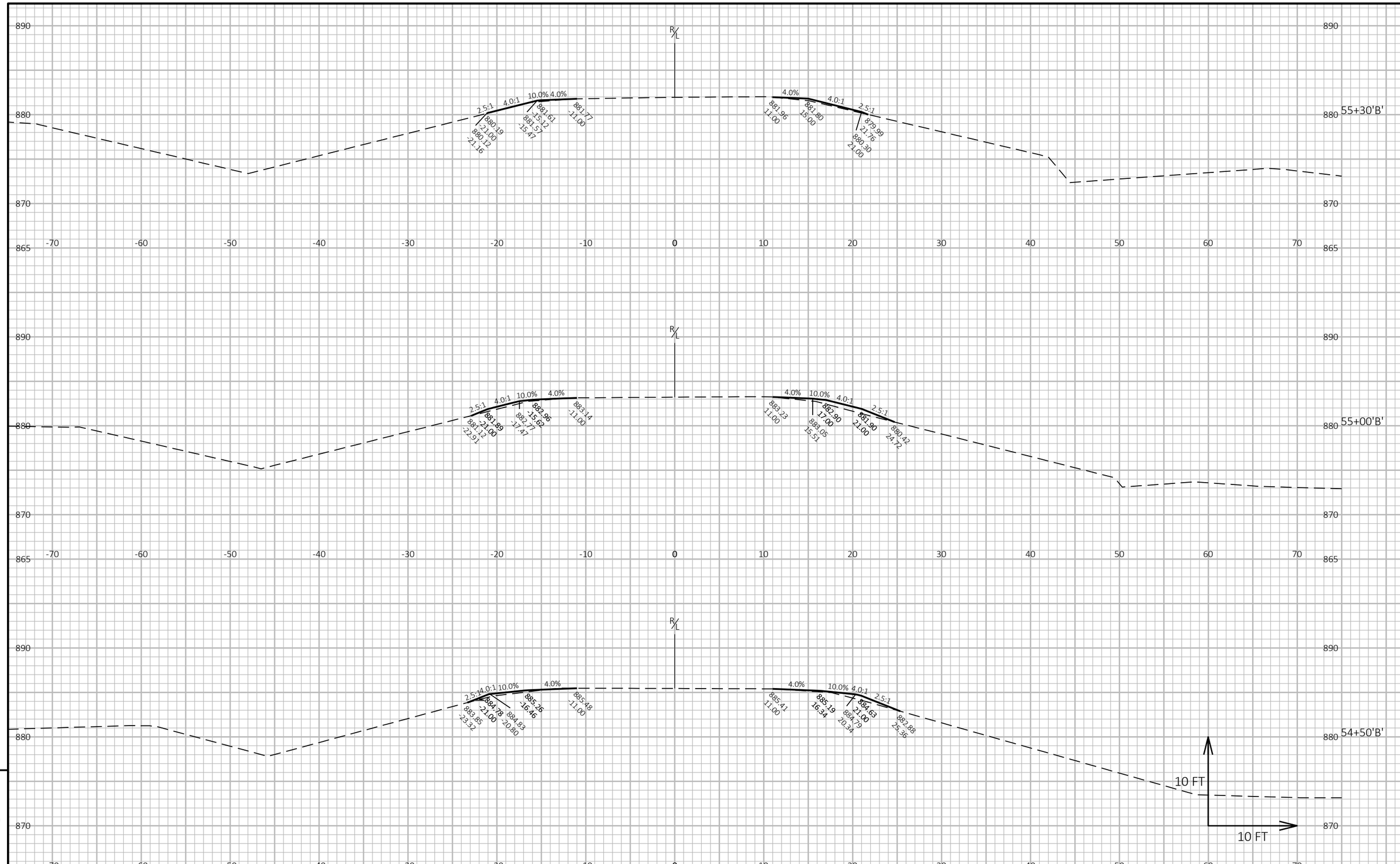

9

9

PROJECT NO: 1066-03-75	HWY: IH 94	COUNTY: DANE AND JEFFERSON	CROSS SECTIONS: BAXTER RD	SHEET 255	E

FILE NAME : P:\2020 PROJECTS\5020028 - WISDOT SWR IH 94\CIVIL3D\10660375\SHEETSPLAN\090103_XS-SIDEROADS.DWG
LAYOUT NAME - 09

PLOT DATE : 12/12/2022 2:18 PM PLOT BY : KYLE CORNELIUS PLOT NAME : PLOT SCALE : 1 IN:10 FT HORZ. / 1 IN:10 FT VERT.

WISDOT/CADDS SHEET 49

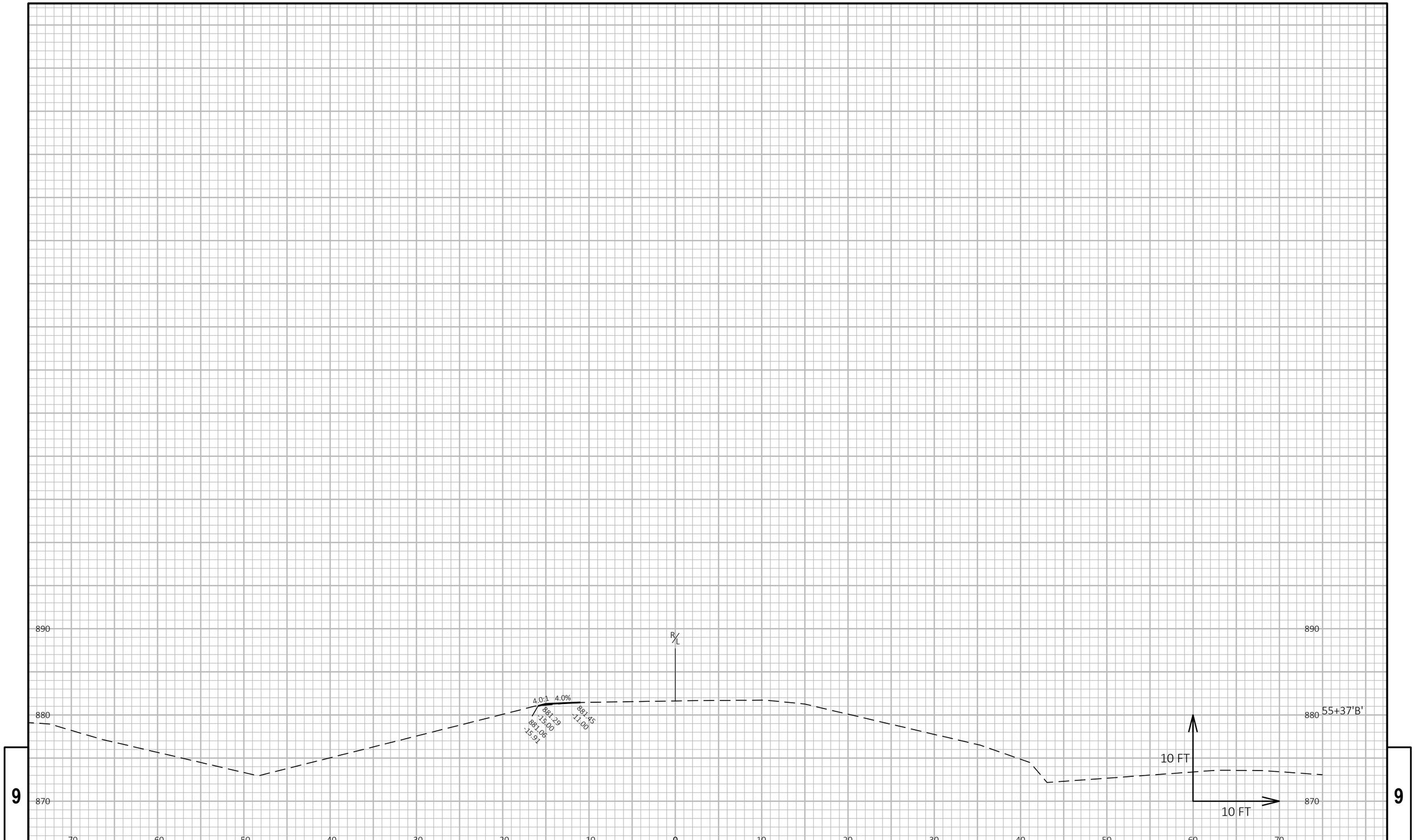

9

9

PROJECT NO: 1066-03-75	HWY: IH 94	COUNTY: DANE AND JEFFERSON	CROSS SECTIONS: BAXTER RD	SHEET 256	E

FILE NAME : P:\2020 PROJECTS\5020028 - WISDOT SWR IH 94\CIVIL3D\10660375\SHEETSPLAN\090103_XS-SIDEROADS.DWG
LAYOUT NAME - 10

PLOT DATE : 12/12/2022 12:05 PM PLOT BY : KYLE CORNELIUS PLOT NAME : **PLOT SCALE :** 1 IN:10 FT HORZ. / 1 IN:10 FT VERT.

WISDOT/CADDS SHEET 49

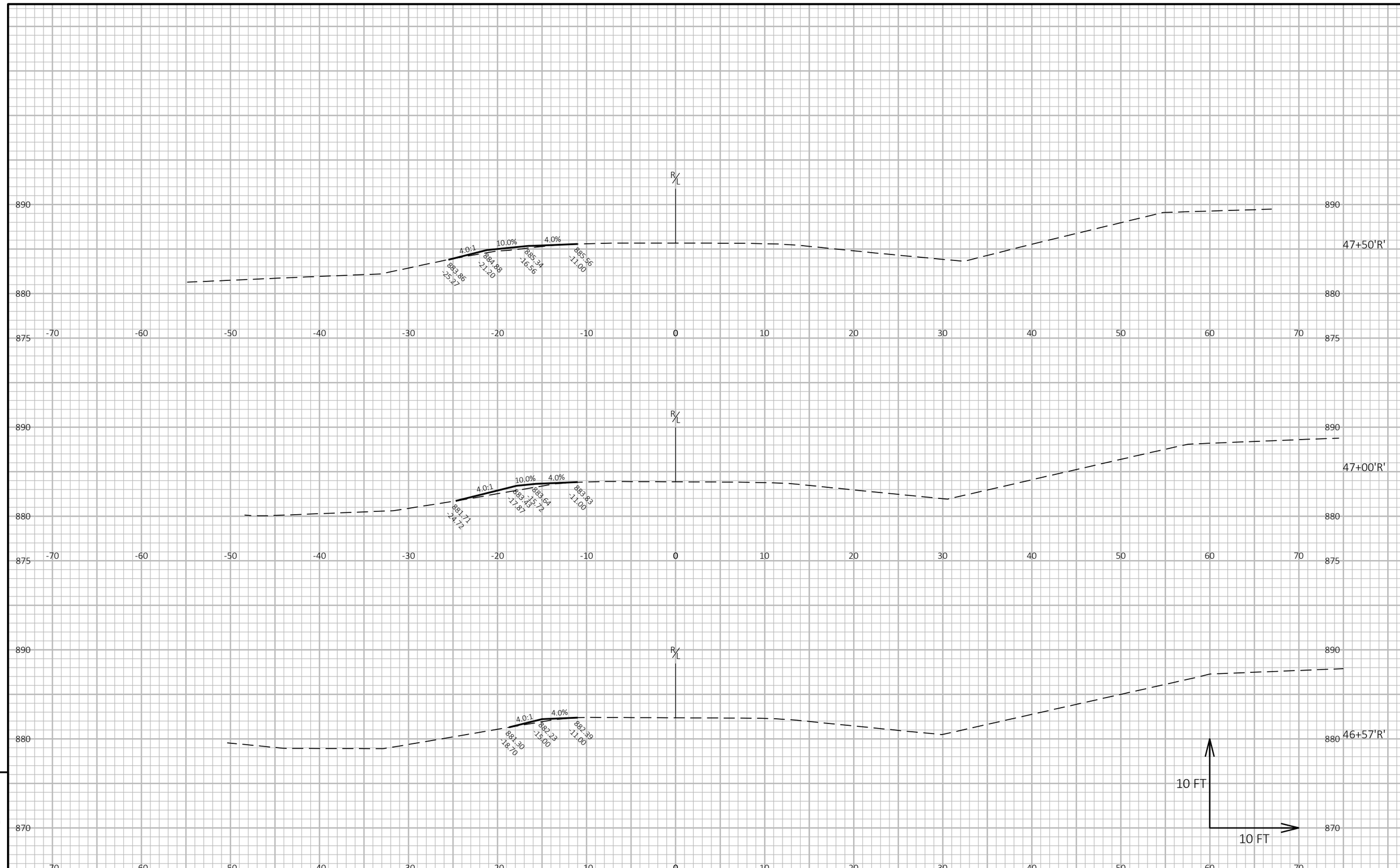

9

9

PROJECT NO: 1066-03-75	HWY: IH 94	COUNTY: DANE AND JEFFERSON	CROSS SECTIONS: RIDGE RD	SHEET 257	E

FILE NAME : P:\2020 PROJECTS\5020028 - WISDOT SWR IH 94\CIVIL3D\10660375\SHEETSPLAN\090103_XS-SIDEROADS.DWG
LAYOUT NAME - 12
PLOT DATE : 12/12/2022 12:06 PM
PLOT BY : KYLE CORNELIUS
PLOT NAME :
PLOT SCALE : 1 IN:10 FT HORZ. / 1 IN:10 FT VERT.
WISDOT/CADDS SHEET 49

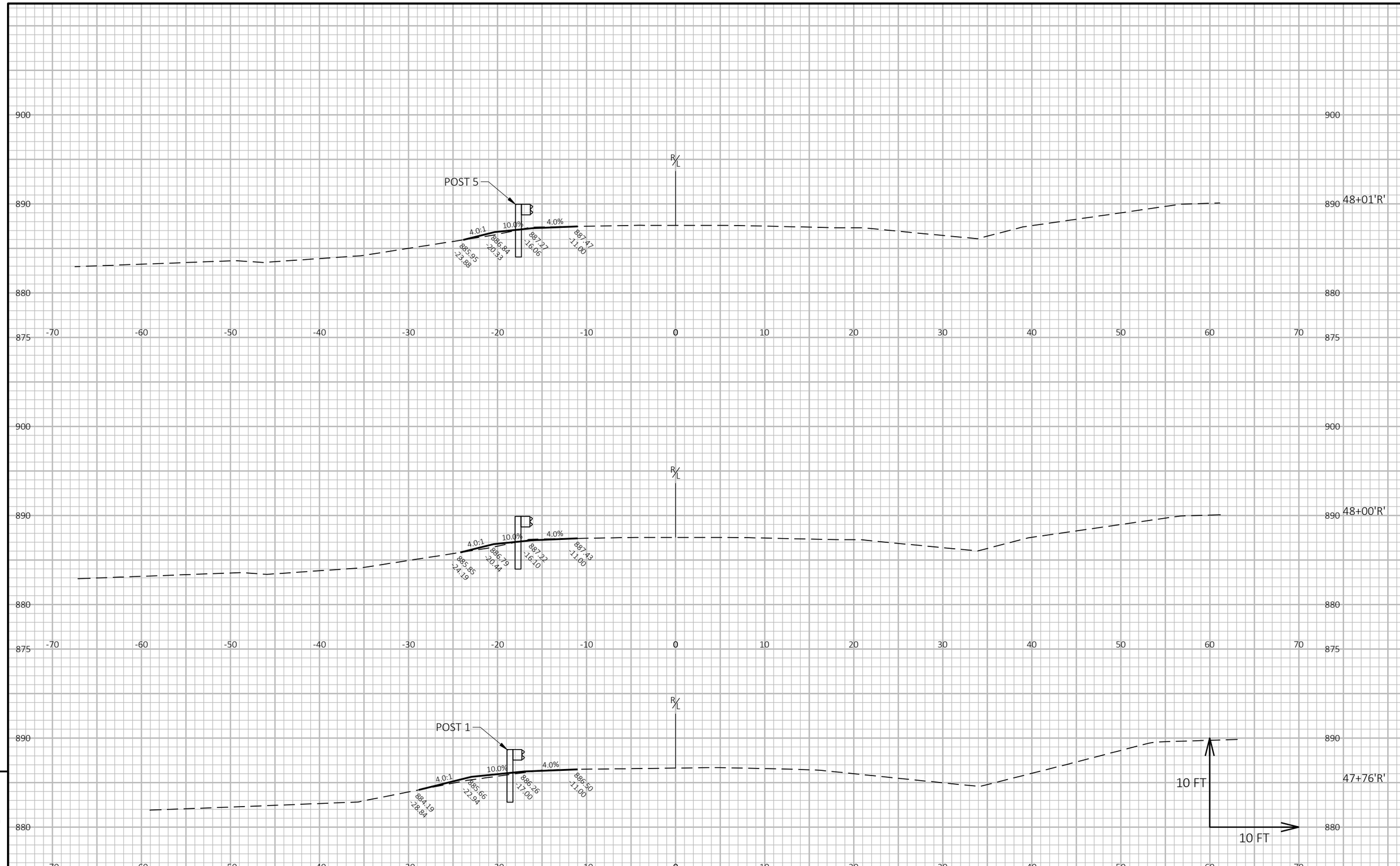

9

9

PROJECT NO: 1066-03-75	HWY: IH 94	COUNTY: DANE AND JEFFERSON	CROSS SECTIONS: RIDGE RD	SHEET 258	E

FILE NAME : P:\2020 PROJECTS\5020028 - WISDOT SWR IH 94\CIVIL3D\10660375\SHEETSPLAN\090103_XS-SIDEROADS.DWG
LAYOUT NAME - 13
PLOT DATE : 12/12/2022 12:07 PM
PLOT BY : KYLE CORNELIUS
PLOT NAME :
PLOT SCALE : 1 IN:10 FT HORZ. / 1 IN:10 FT VERT.
WISDOT/CADDS SHEET 49

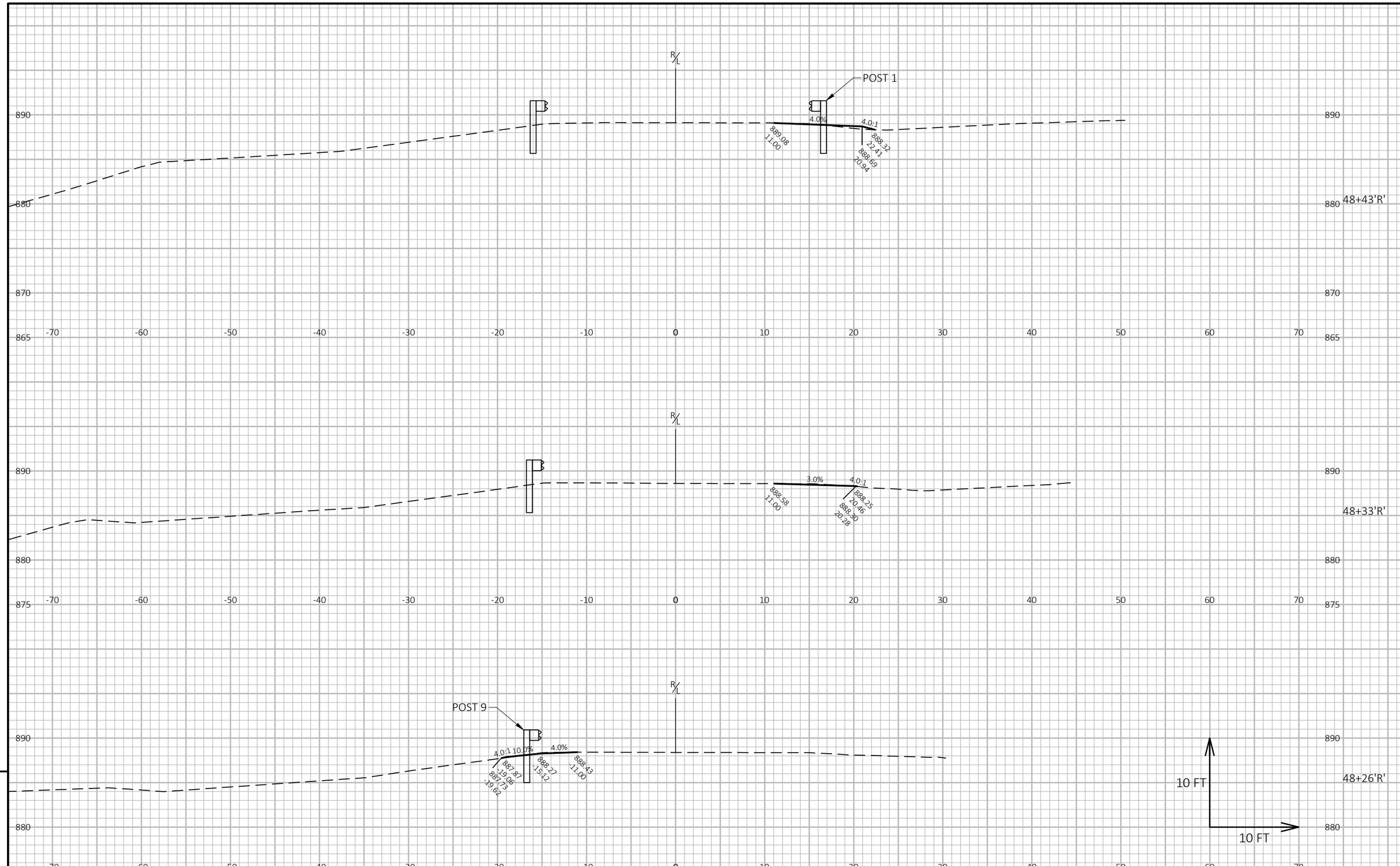

9

9

PROJECT NO: 1066-03-75	HWY: IH 94	COUNTY: DANE AND JEFFERSON	CROSS SECTIONS: RIDGE RD	SHEET 259	E

FILE NAME : P:\2020 PROJECTS\5020028 - WISDOT SWR IH 94\CIVIL3D\10660375\SHEETSPLAN\090103_XS-SIDEROADS.DWG
LAYOUT NAME - 14

PLOT DATE : 12/12/2022 12:08 PM PLOT BY : KYLE CORNELIUS PLOT NAME : **PLOT SCALE :** 1 IN:10 FT HORZ. / 1 IN:10 FT VERT.

WISDOT/CADDS SHEET 49

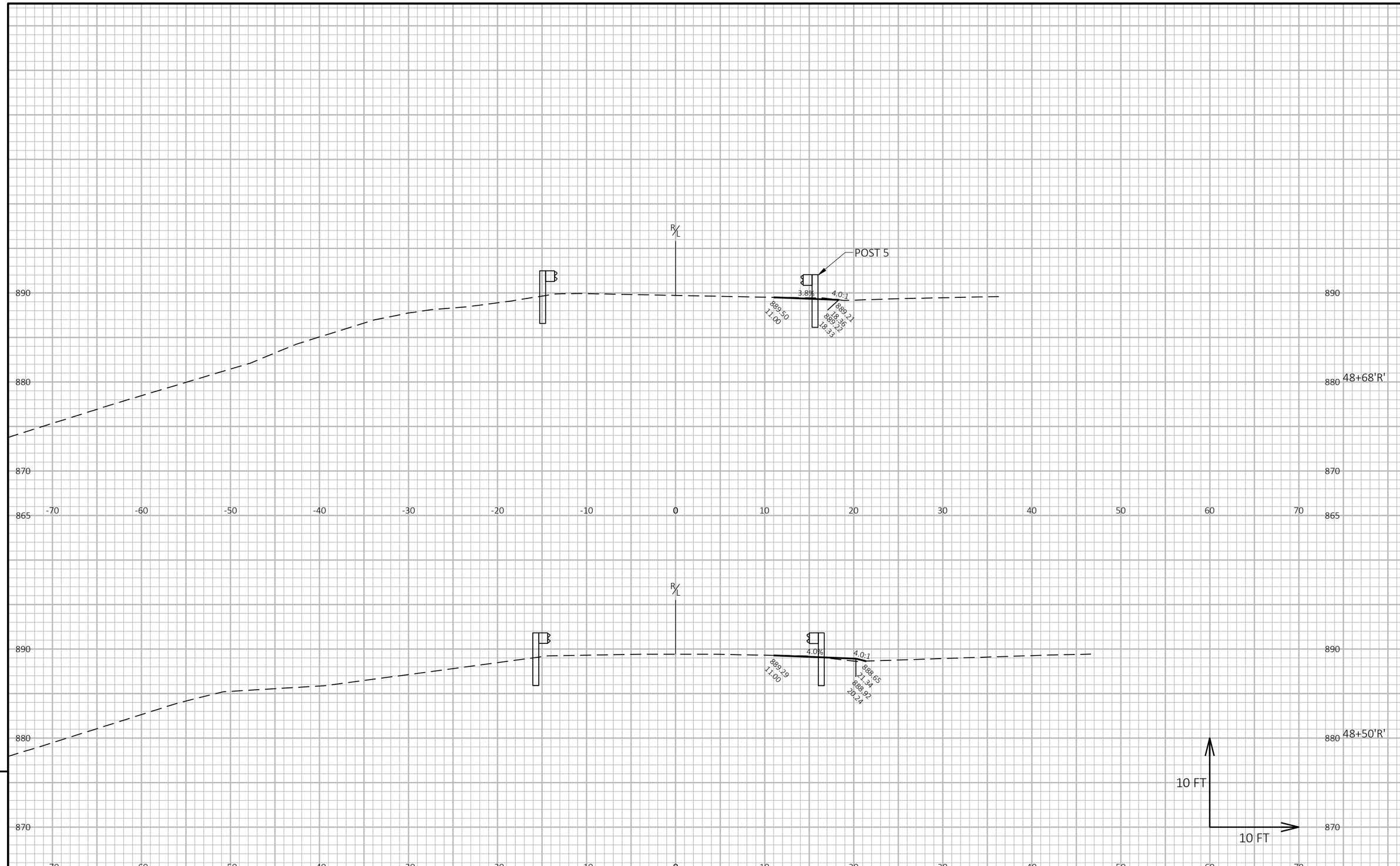

9

9

PROJECT NO: 1066-03-75	HWY: IH 94	COUNTY: DANE AND JEFFERSON	CROSS SECTIONS: RIDGE RD	SHEET 260	E

FILE NAME : P:\2020 PROJECTS\5020028 - WISDOT SWR IH 94\CIVIL3D\10660375\SHEETSPLAN\090103_XS-SIDEROADS.DWG
LAYOUT NAME - 15

PLOT DATE : 12/12/2022 12:09 PM PLOT BY : KYLE CORNELIUS PLOT NAME : **PLOT SCALE :** 1 IN:10 FT HORZ. / 1 IN:10 FT VERT.

WISDOT/CADDS SHEET 49

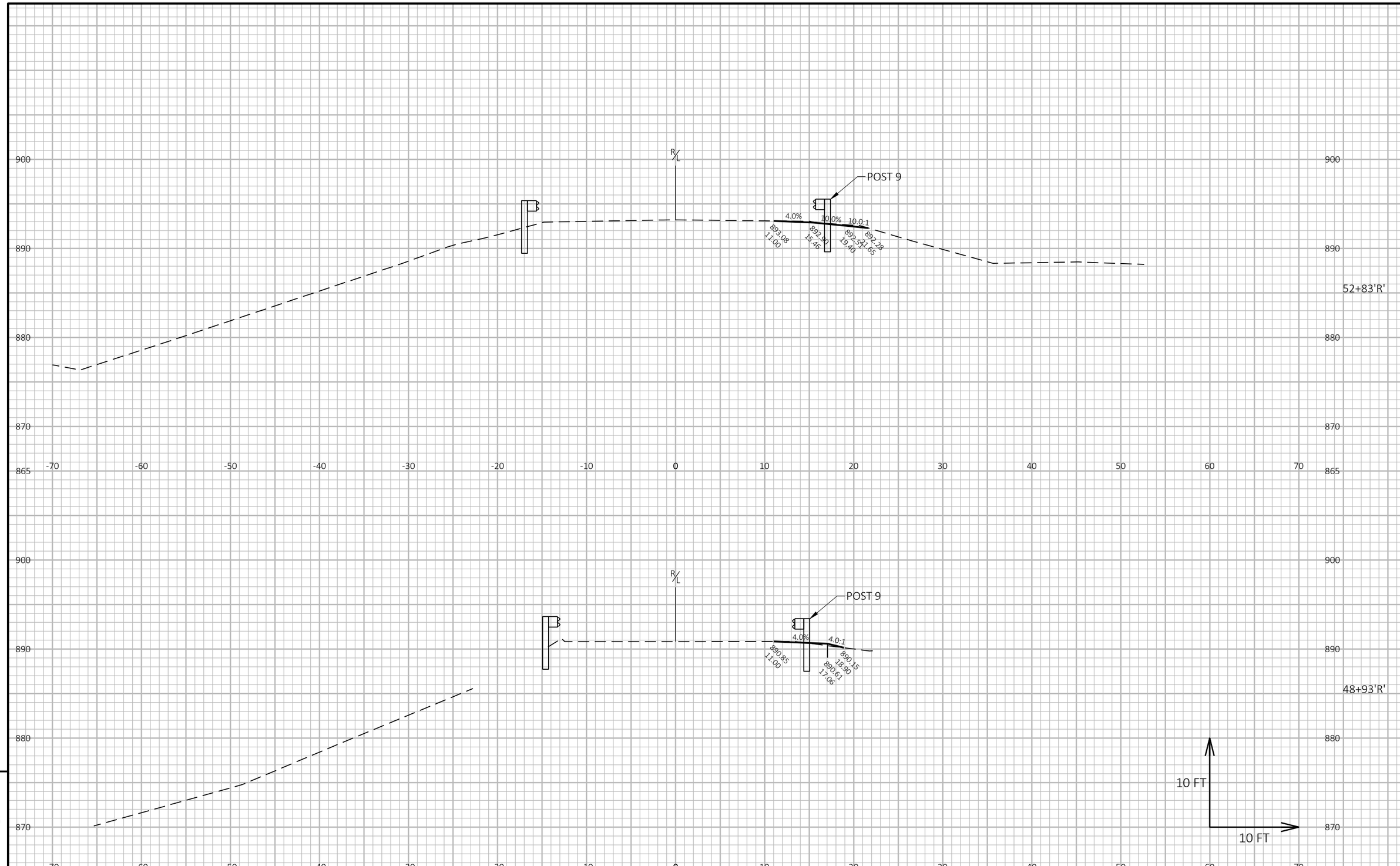

PROJECT NO: 1066-03-75	HWY: IH 94	COUNTY: DANE AND JEFFERSON	CROSS SECTIONS: RIDGE RD	SHEET 261	E

FILE NAME : P:\2020 PROJECTS\5020028 - WISDOT SWR IH 94\CIVIL3D\10660375\SHEETSPLAN\090103_XS-SIDEROADS.DWG
LAYOUT NAME - 16
PLOT DATE : 12/12/2022 12:10 PM PLOT BY : KYLE CORNELIUS PLOT NAME : **PLOT SCALE :** 1 IN:10 FT HORZ. / 1 IN:10 FT VERT.

WISDOT/CADDS SHEET 49

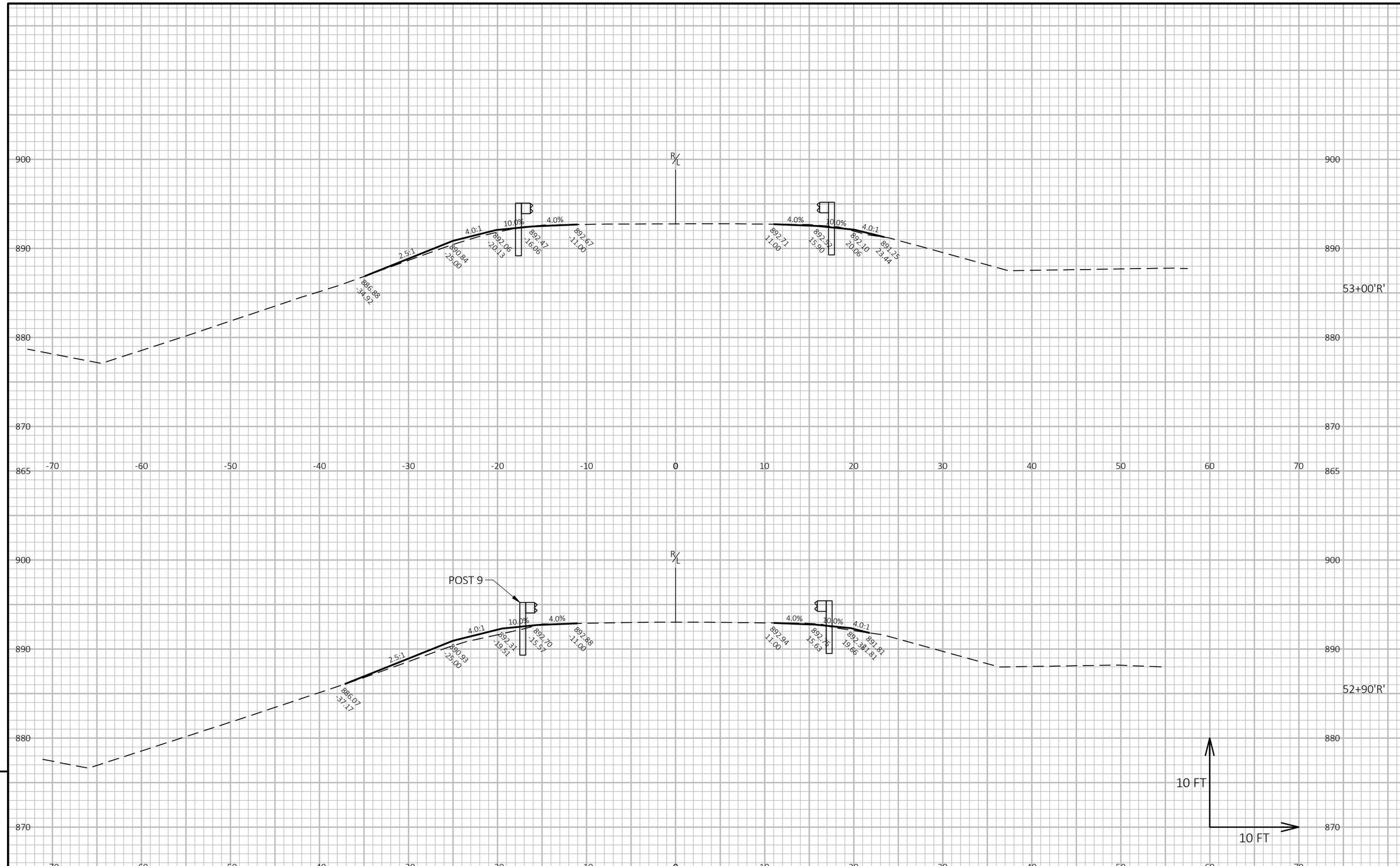

9

9

PROJECT NO: 1066-03-75	HWY: IH 94	COUNTY: DANE AND JEFFERSON	CROSS SECTIONS: RIDGE RD	SHEET 262	E

FILE NAME : P:\2020 PROJECTS\5020028 - WISDOT SWR IH 94\CIVIL3D\10660375\SHEETSPLAN\090103_XS-SIDEROADS.DWG
LAYOUT NAME - 17
PLOT DATE : 12/12/2022 12:11 PM
PLOT BY : KYLE CORNELIUS
PLOT NAME :
PLOT SCALE : 1 IN:10 FT HORZ. / 1 IN:10 FT VERT.
WISDOT/CADDS SHEET 49

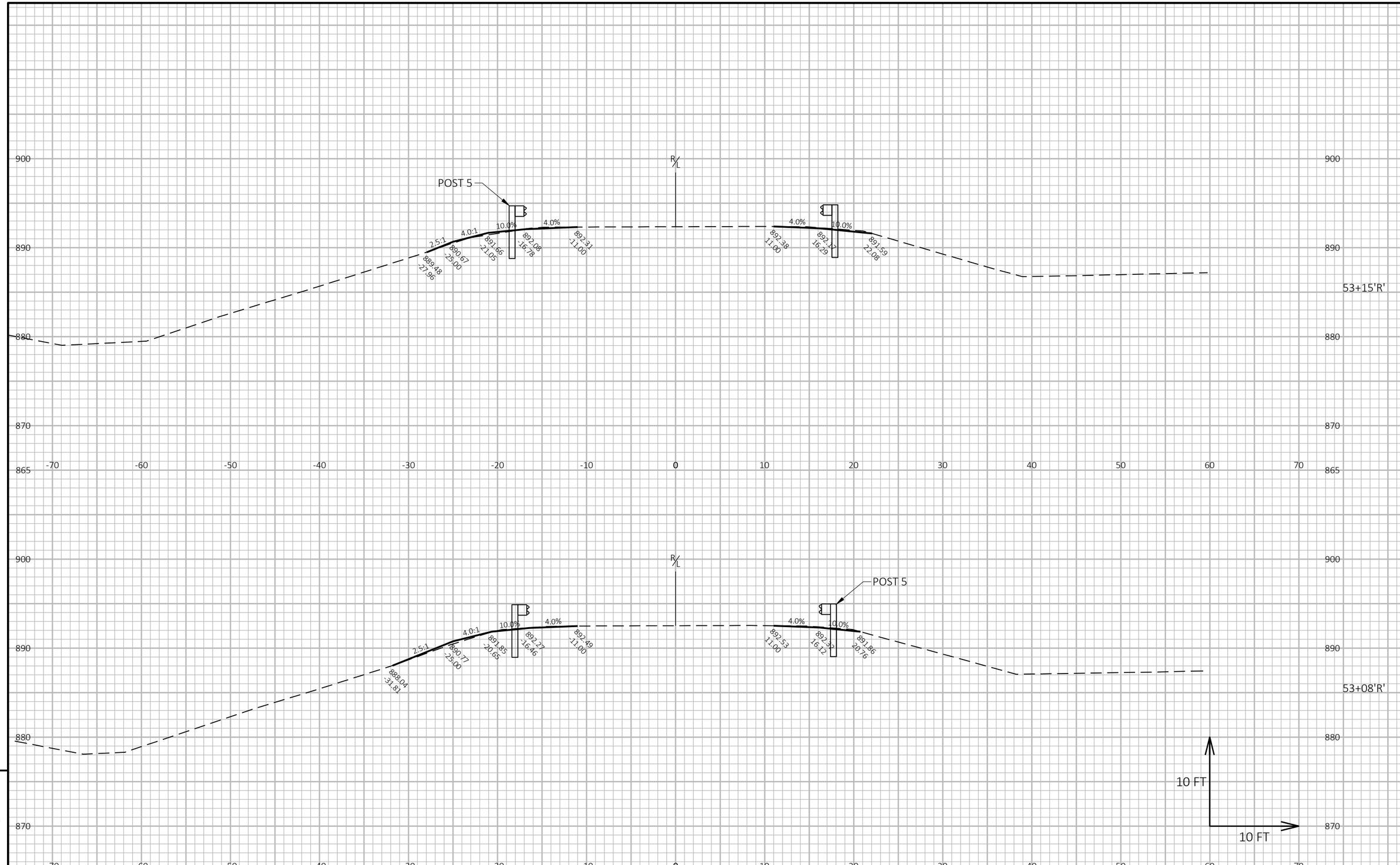

9

9

PROJECT NO: 1066-03-75	HWY: IH 94	COUNTY: DANE AND JEFFERSON	CROSS SECTIONS: RIDGE RD	SHEET 263	E

FILE NAME : P:\2020 PROJECTS\5020028 - WISDOT SWR IH 94\CIVIL3D\10660375\SHEETSPLAN\090103_XS-SIDEROADS.DWG
LAYOUT NAME - 18
PLOT DATE : 12/12/2022 2:22 PM
PLOT BY : KYLE CORNELIUS
PLOT NAME :
PLOT SCALE : 1 IN:10 FT HORZ. / 1 IN:10 FT VERT.
WISDOT/CADDS SHEET 49

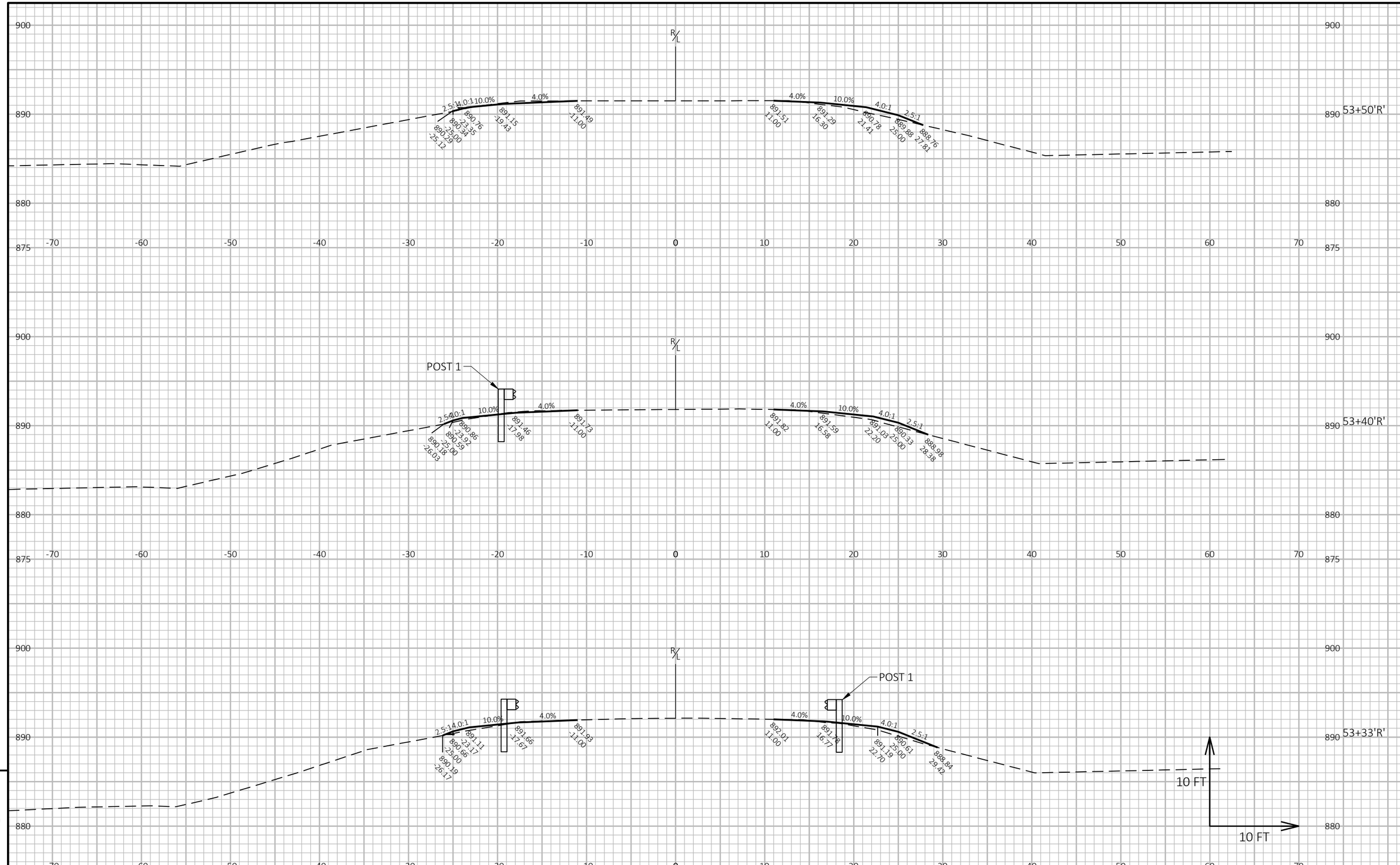

9

9

PROJECT NO: 1066-03-75	HWY: IH 94	COUNTY: DANE AND JEFFERSON	CROSS SECTIONS: RIDGE RD	SHEET 264	E

FILE NAME : P:\2020 PROJECTS\5020028 - WISDOT SWR IH 94\CIVIL3D\10660375\SHEETSPLAN\090103_XS-SIDEROADS.DWG
LAYOUT NAME - 19
PLOT DATE : 12/12/2022 2:25 PM PLOT BY : KYLE CORNELIUS PLOT NAME : **PLOT SCALE :** 1 IN:10 FT HORZ. / 1 IN:10 FT VERT.

WISDOT/CADDS SHEET 49

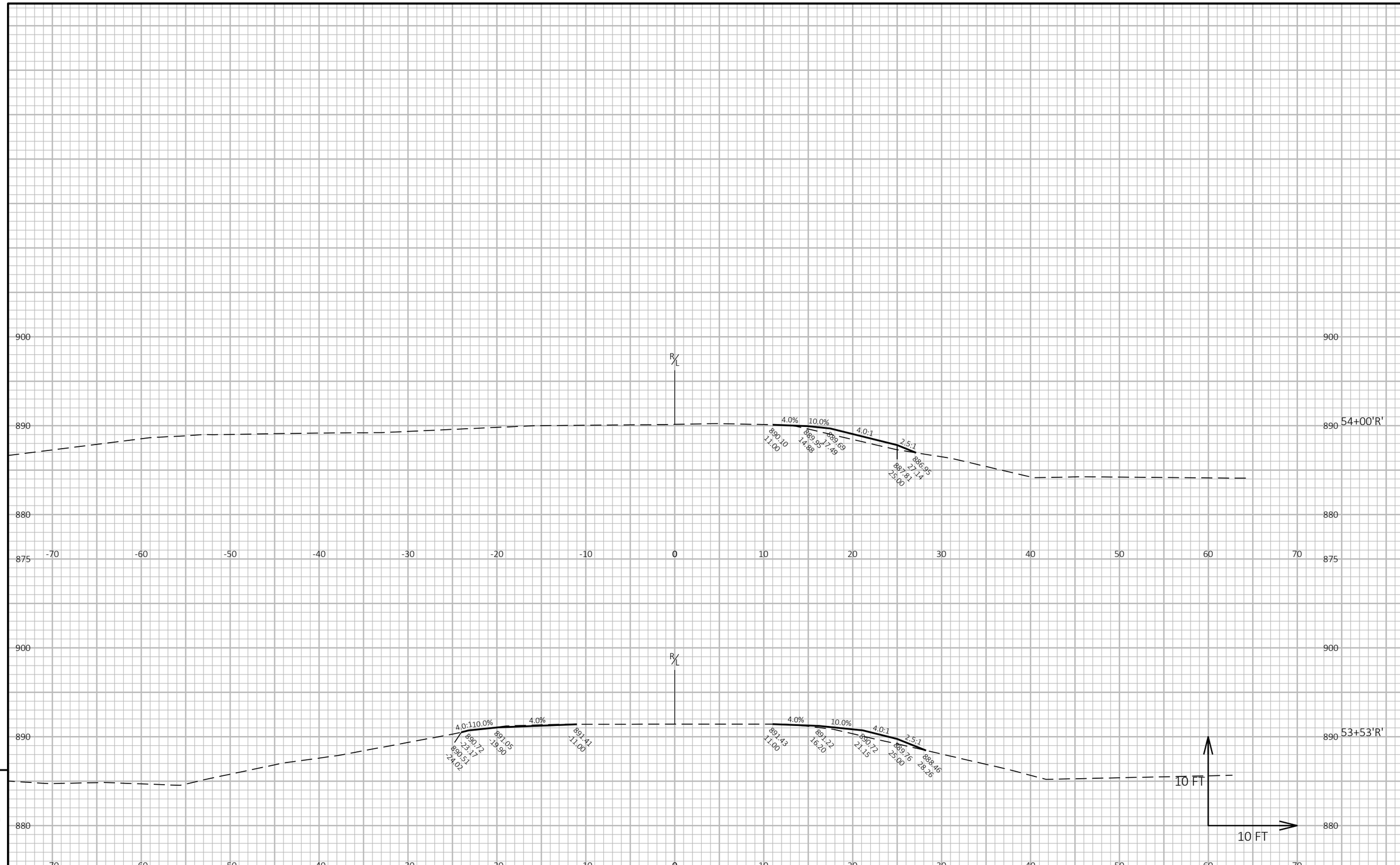

9

9

PROJECT NO: 1066-03-75	HWY: IH 94	COUNTY: DANE AND JEFFERSON	CROSS SECTIONS: RIDGE RD	SHEET 265	E

FILE NAME : P:\2020 PROJECTS\5020028 - WISDOT SWR IH 94\CIVIL3D\10660375\SHEETSPLAN\090103_XS-SIDEROADS.DWG
LAYOUT NAME - 20

PLOT DATE : 12/12/2022 12:13 PM PLOT BY : KYLE CORNELIUS PLOT NAME : **PLOT SCALE :** 1 IN:10 FT HORZ. / 1 IN:10 FT VERT.

WISDOT/CADDS SHEET 49

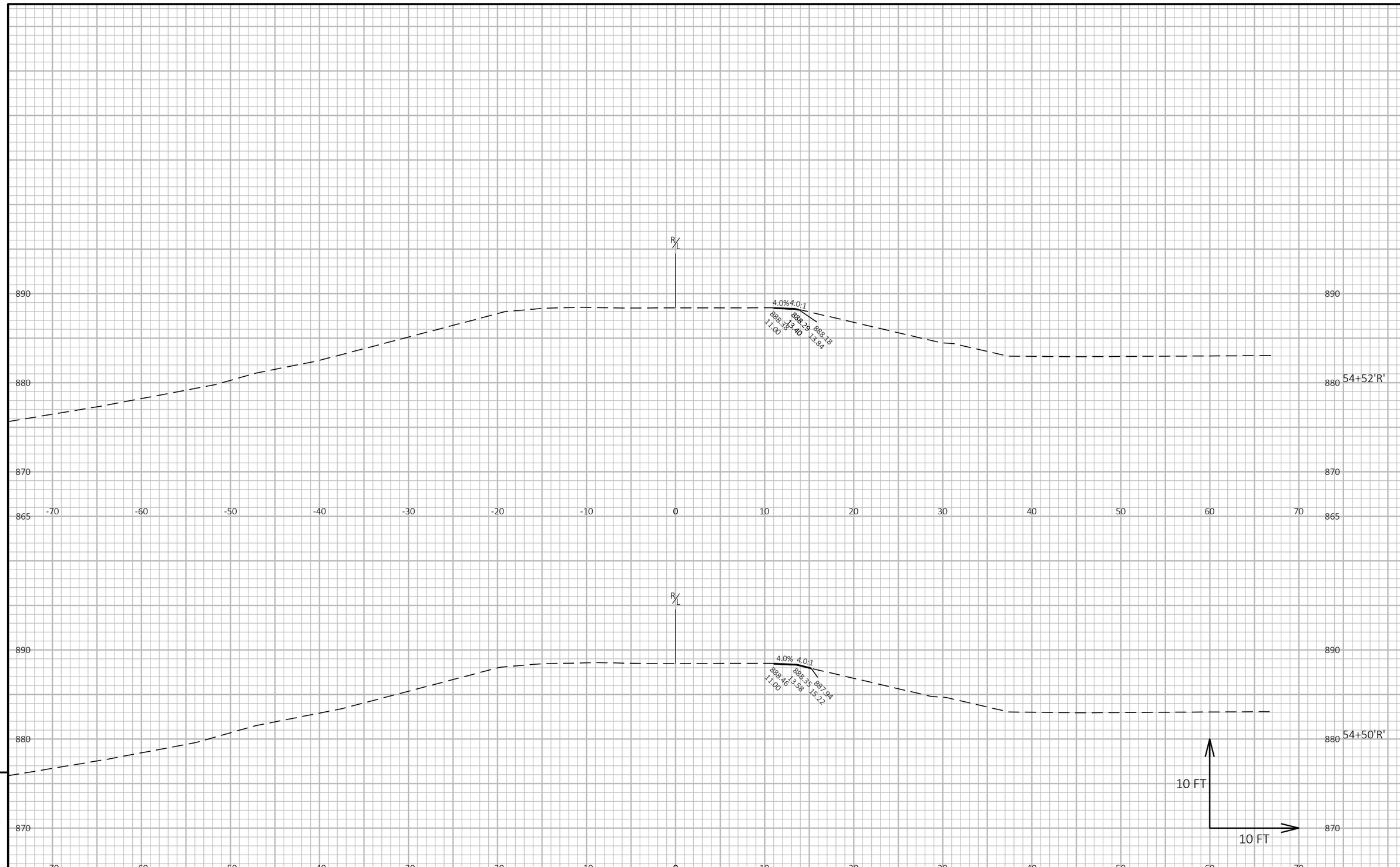

9

9

PROJECT NO: 1066-03-75	HWY: IH 94	COUNTY: DANE AND JEFFERSON	CROSS SECTIONS: RIDGE RD	SHEET 266	E

FILE NAME : P:\2020 PROJECTS\5020028 - WISDOT SWR IH 94\CIVIL3D\10660375\SHEETSPLAN\090103_XS-SIDEROADS.DWG
LAYOUT NAME - 21
PLOT DATE : 12/12/2022 12:14 PM
PLOT BY : KYLE CORNELIUS
PLOT NAME :
PLOT SCALE : 1 IN:10 FT HORZ. / 1 IN:10 FT VERT.
WISDOT/CADDS SHEET 49

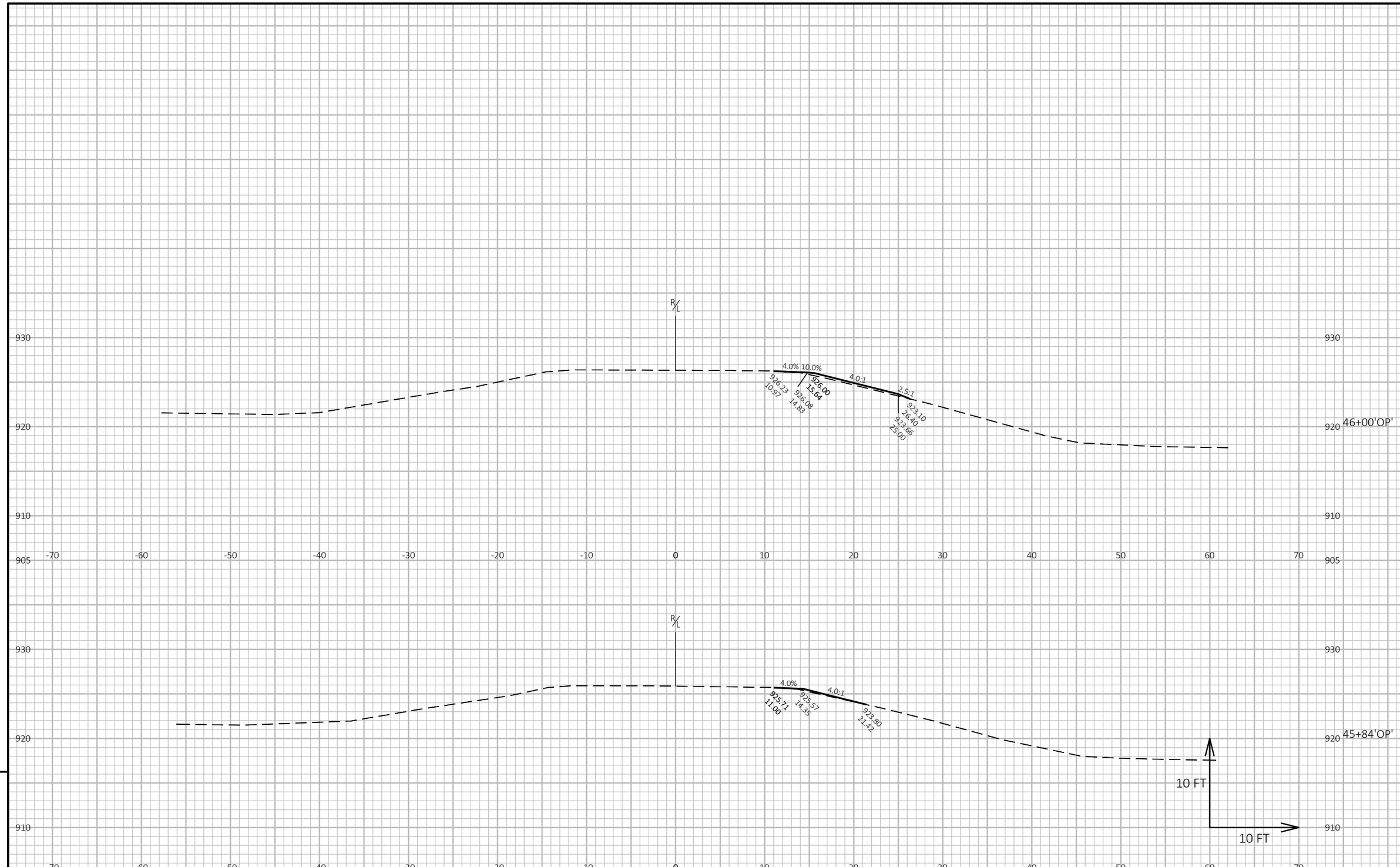

9

9

PROJECT NO: 1066-03-75	HWY: IH 94	COUNTY: DANE AND JEFFERSON	CROSS SECTIONS: OAK PARK RD	SHEET 267	E

FILE NAME : P:\2020 PROJECTS\5020028 - WISDOT SWR IH 94\CIVIL3D\10660375\SHEETSPLAN\090103_XS-SIDEROADS.DWG
LAYOUT NAME - 23

PLOT DATE : 12/12/2022 12:15 PM PLOT BY : KYLE CORNELIUS PLOT NAME : **PLOT SCALE :** 1 IN:10 FT HORZ. / 1 IN:10 FT VERT.

WISDOT/CADDS SHEET 49

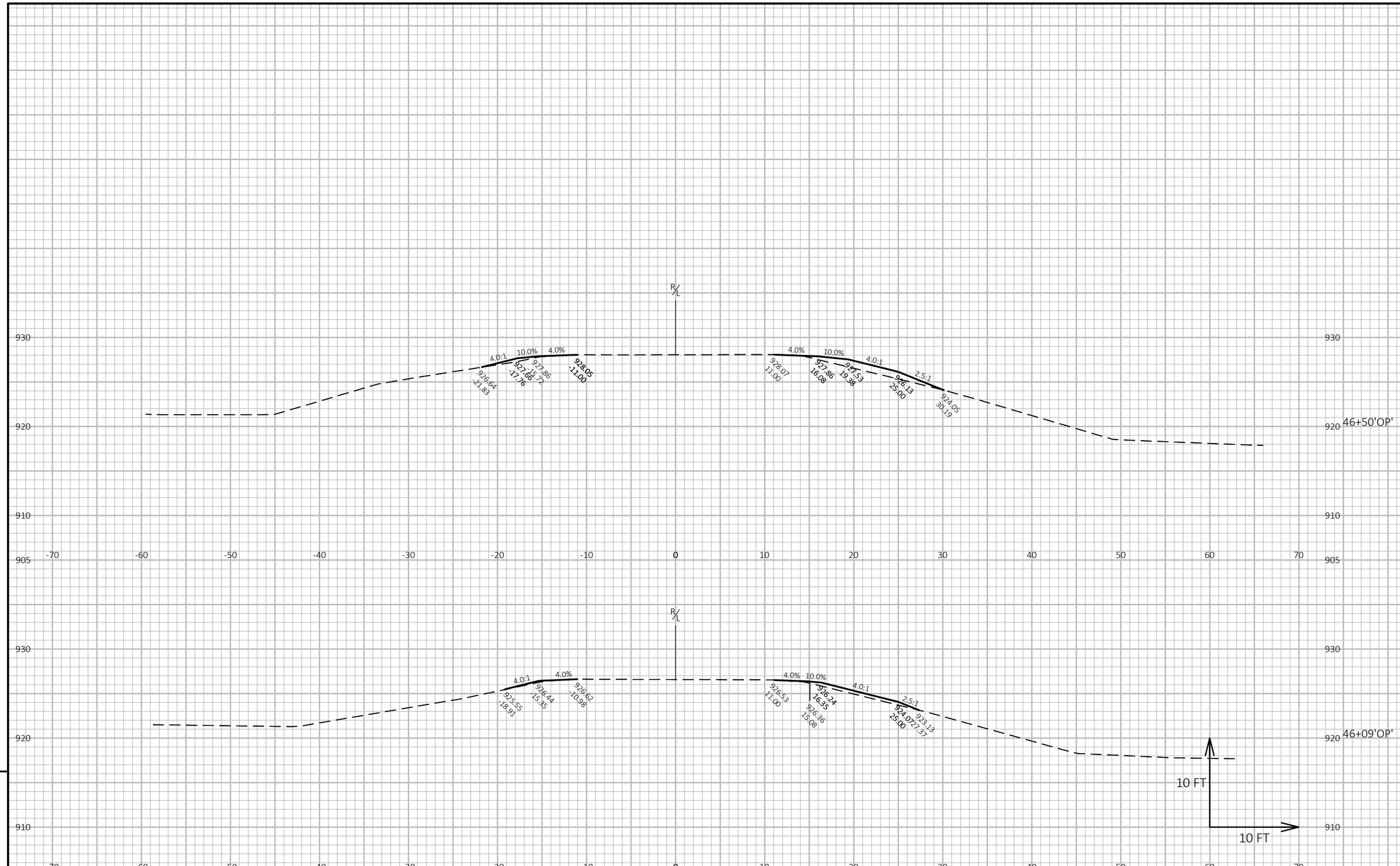

9

9

PROJECT NO: 1066-03-75	HWY: IH 94	COUNTY: DANE AND JEFFERSON	CROSS SECTIONS: OAK PARK RD	SHEET 268	E

FILE NAME : P:\2020 PROJECTS\5020028 - WISDOT SWR IH 94\CIVIL3D\10660375\SHEETSPLAN\090103_XS-SIDEROADS.DWG
LAYOUT NAME - 24
PLOT DATE : 12/12/2022 2:48 PM
PLOT BY : KYLE CORNELIUS
PLOT NAME :
PLOT SCALE : 1 IN:10 FT HORZ. / 1 IN:10 FT VERT.
WISDOT/CADDS SHEET 49

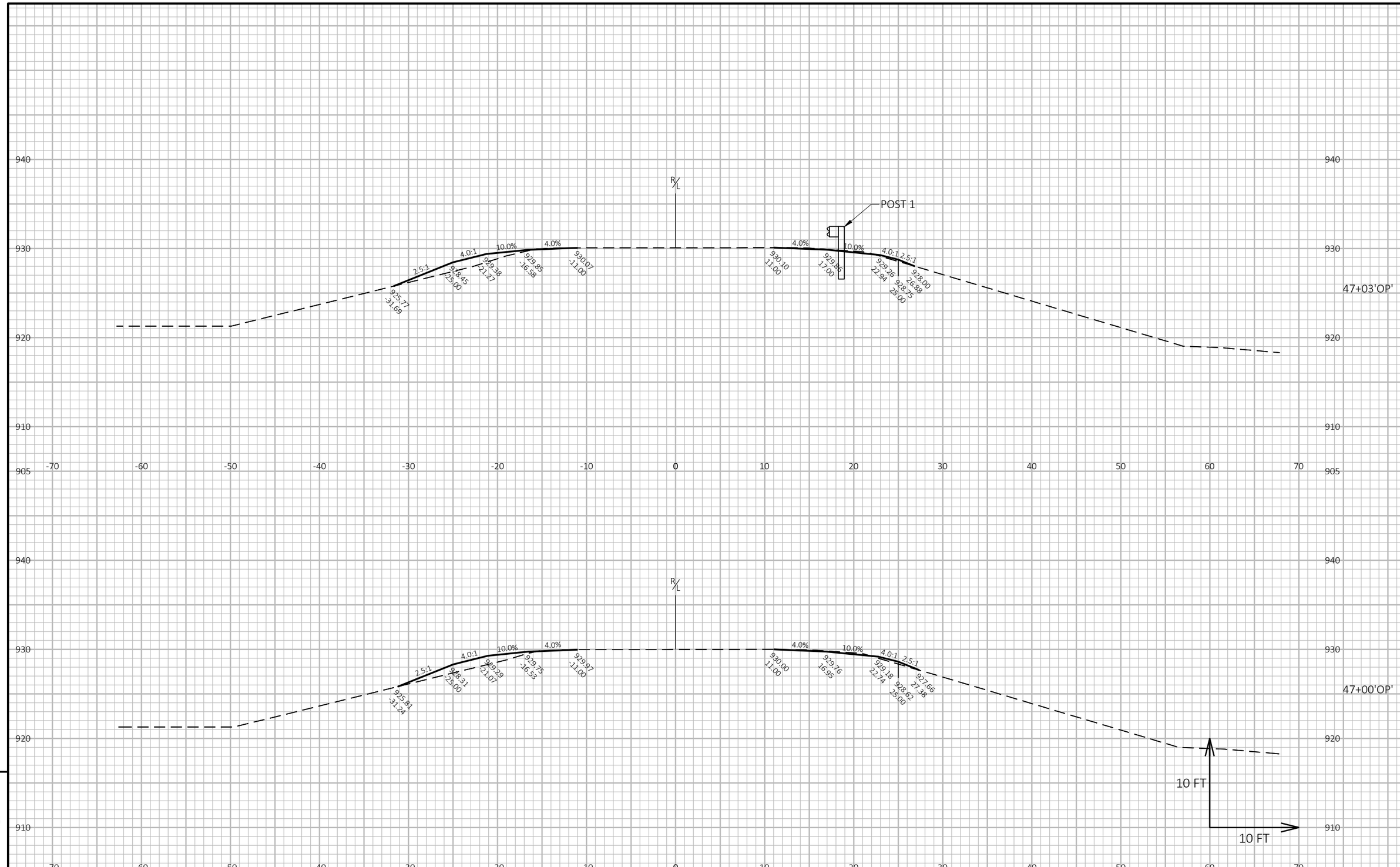

9

9

PROJECT NO: 1066-03-75	HWY: IH 94	COUNTY: DANE AND JEFFERSON	CROSS SECTIONS: OAK PARK RD	SHEET 269	E

FILE NAME : P:\2020 PROJECTS\5020028 - WISDOT SWR IH 94\CIVIL3D\10660375\SHEETSPLAN\090103_XS-SIDEROADS.DWG
LAYOUT NAME - 25

PLOT DATE : 12/12/2022 12:17 PM PLOT BY : KYLE CORNELIUS PLOT NAME : **PLOT SCALE :** 1 IN:10 FT HORZ. / 1 IN:10 FT VERT.

WISDOT/CADDS SHEET 49

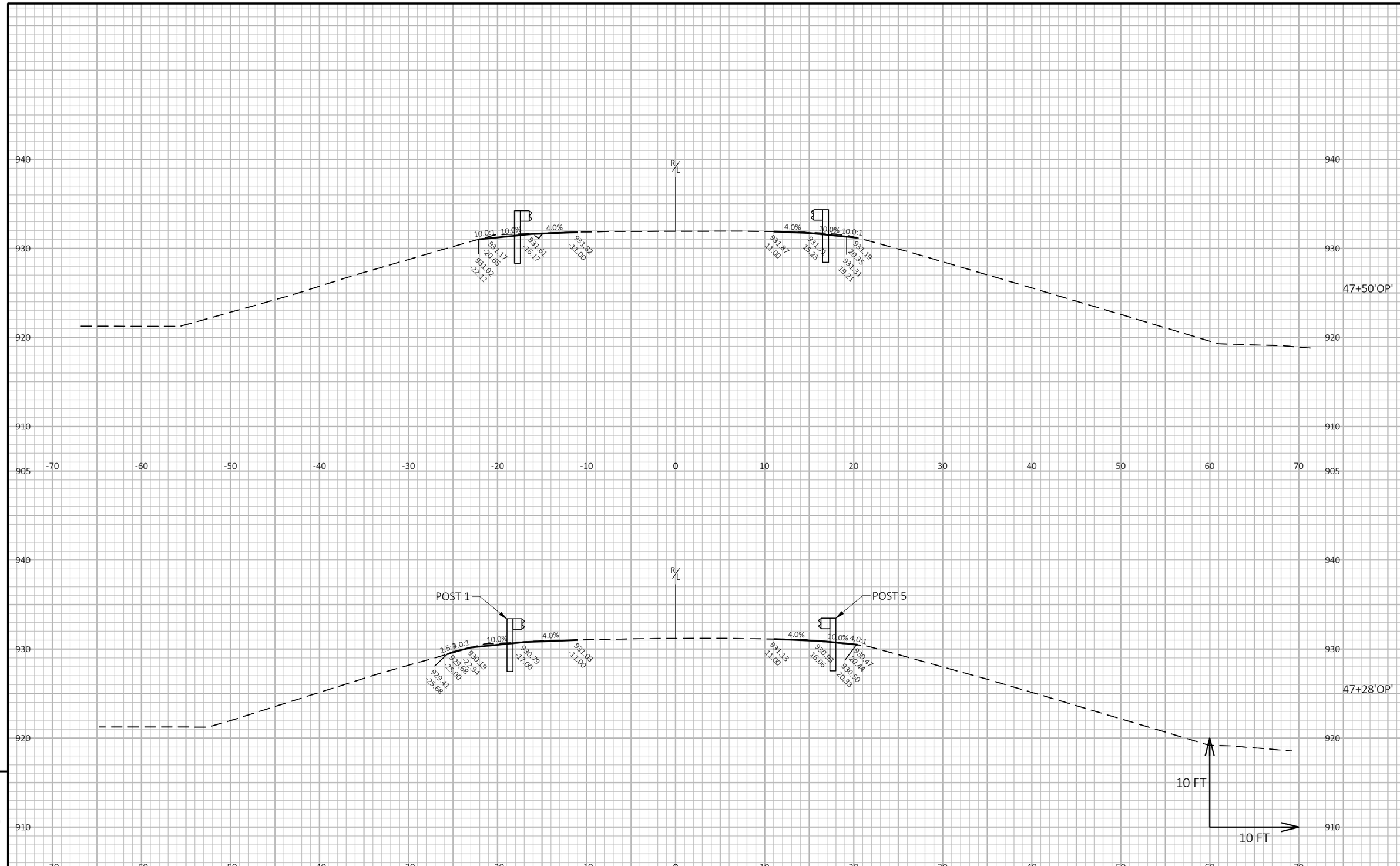

9

9

PROJECT NO: 1066-03-75	HWY: IH 94	COUNTY: DANE AND JEFFERSON	CROSS SECTIONS: OAK PARK RD	SHEET 270	E

FILE NAME : P:\2020 PROJECTS\5020028 - WISDOT SWR IH 94\CIVIL3D\10660375\SHEETSPLAN\090103_XS-SIDEROADS.DWG
LAYOUT NAME - 26
PLOT DATE : 12/12/2022 12:18 PM
PLOT BY : KYLE CORNELIUS
PLOT NAME :
PLOT SCALE : 1 IN:10 FT HORZ. / 1 IN:10 FT VERT.
WISDOT/CADDS SHEET 49

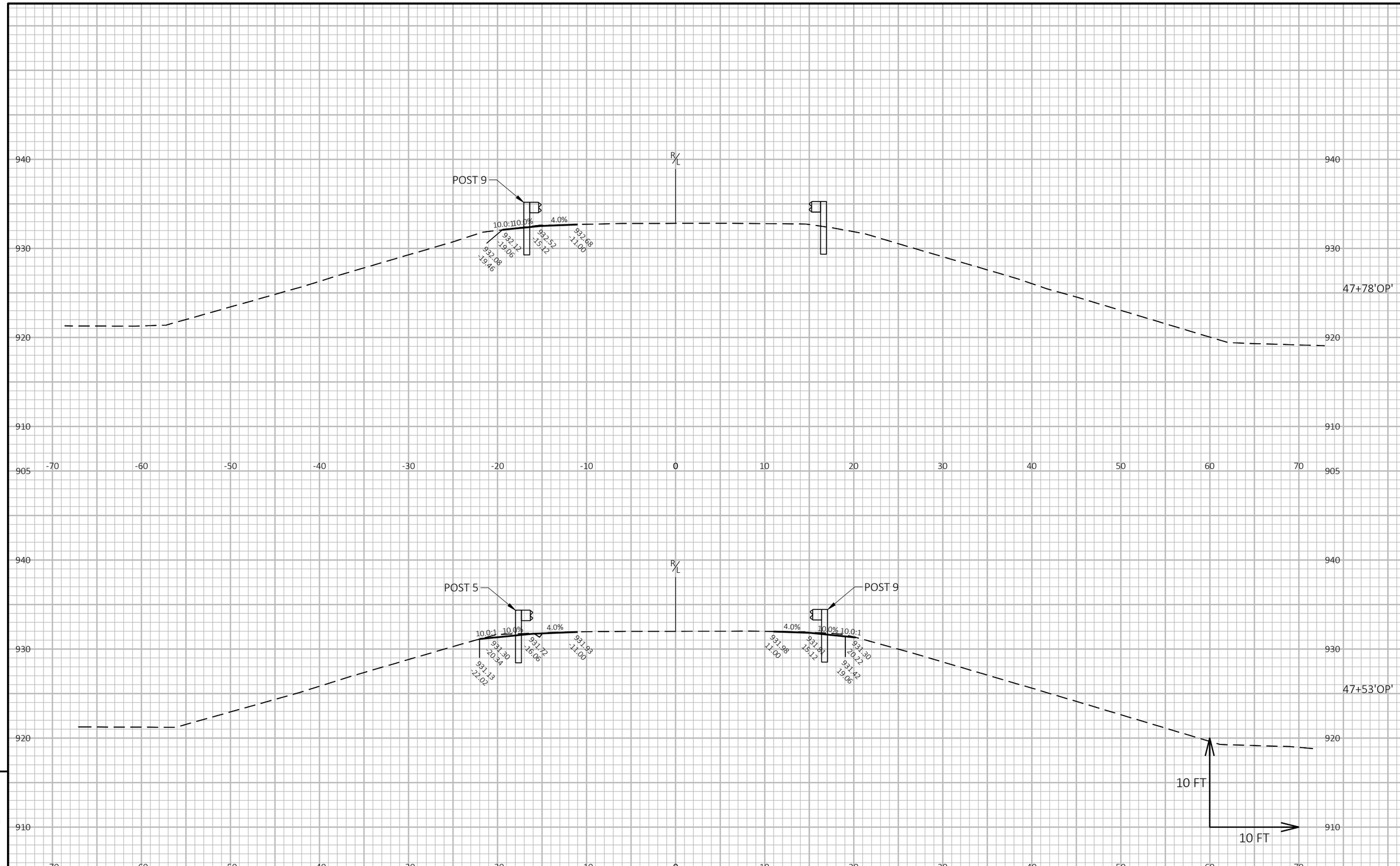

9

9

PROJECT NO: 1066-03-75	HWY: IH 94	COUNTY: DANE AND JEFFERSON	CROSS SECTIONS: OAK PARK RD	SHEET 271	E

FILE NAME : P:\2020 PROJECTS\5020028 - WISDOT SWR IH 94\CIVIL3D\10660375\SHEETSPLAN\090103_XS-SIDEROADS.DWG
LAYOUT NAME - 27
PLOT DATE : 12/12/2022 12:18 PM
PLOT BY : KYLE CORNELIUS
PLOT NAME :
PLOT SCALE : 1 IN:10 FT HORZ. / 1 IN:10 FT VERT.
WISDOT/CADDS SHEET 49

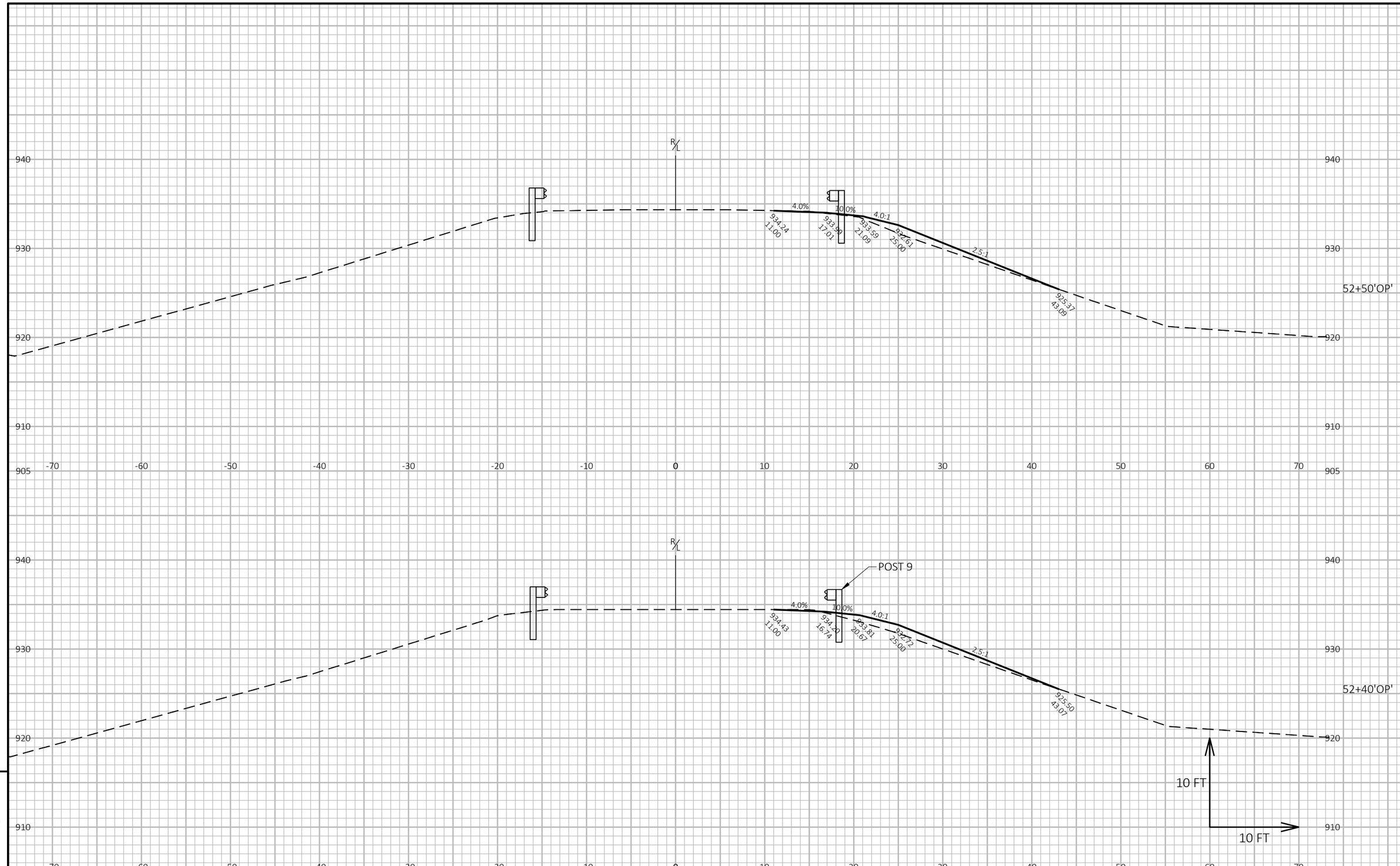

9

9

PROJECT NO: 1066-03-75	HWY: IH 94	COUNTY: DANE AND JEFFERSON	CROSS SECTIONS: OAK PARK RD	SHEET 272	E

FILE NAME : P:\2020 PROJECTS\5020028 - WISDOT SWR IH 94\CIVIL3D\10660375\SHEETSPLAN\090103_XS-SIDEROADS.DWG
LAYOUT NAME - 28

PLOT DATE : 12/12/2022 12:19 PM PLOT BY : KYLE CORNELIUS PLOT NAME : **PLOT SCALE :** 1 IN:10 FT HORZ. / 1 IN:10 FT VERT.

WISDOT/CADDS SHEET 49

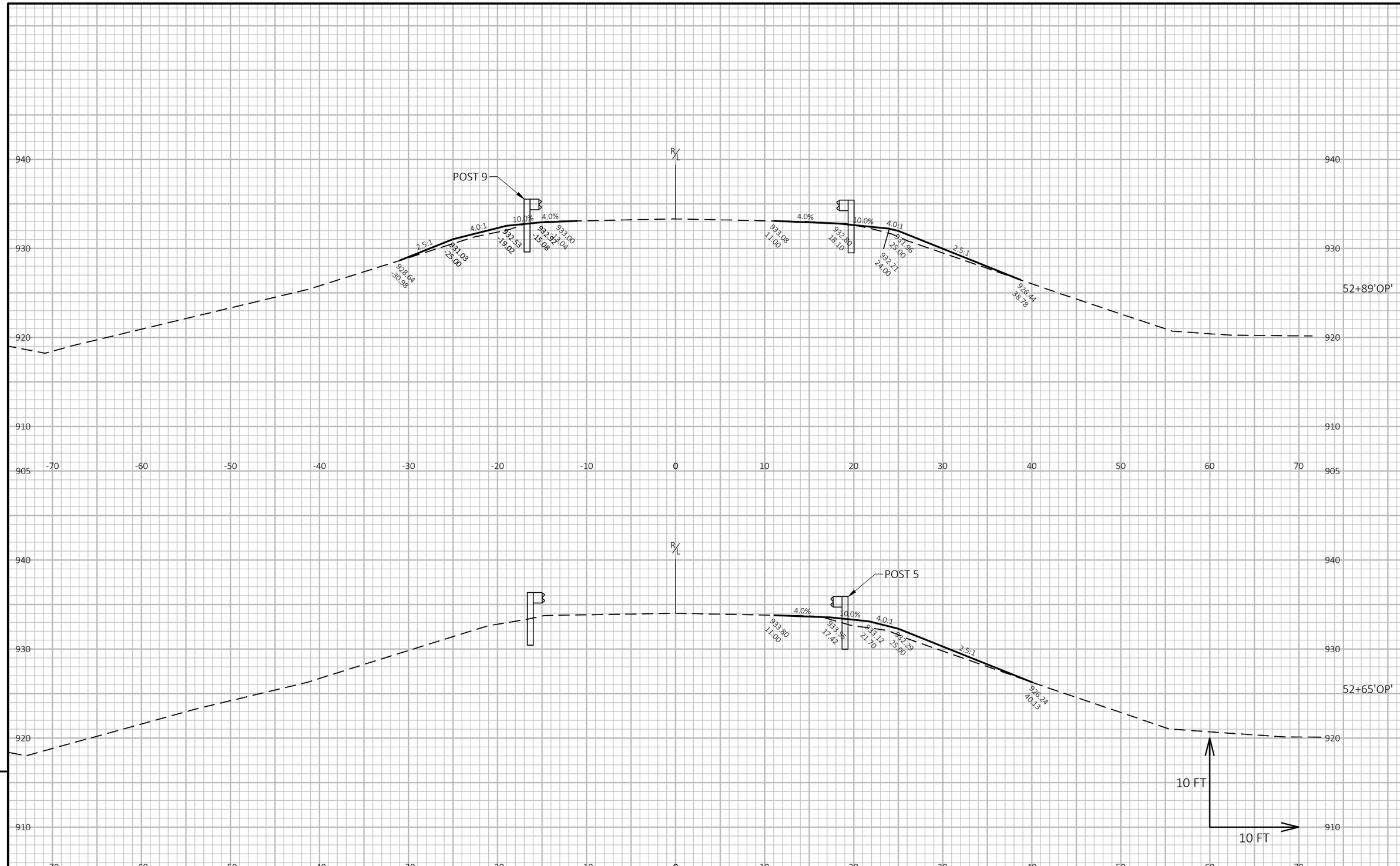

9

9

PROJECT NO: 1066-03-75	HWY: IH 94	COUNTY: DANE AND JEFFERSON	CROSS SECTIONS: OAK PARK RD	SHEET 273	E

FILE NAME : P:\2020 PROJECTS\5020028 - WISDOT SWR IH 94\CIVIL3D\10660375\SHEETSPLAN\090103_XS-SIDEROADS.DWG
LAYOUT NAME - 29

PLOT DATE : 12/12/2022 12:20 PM PLOT BY : KYLE CORNELIUS PLOT NAME : **PLOT SCALE :** 1 IN:10 FT HORZ. / 1 IN:10 FT VERT.

WISDOT/CADDS SHEET 49

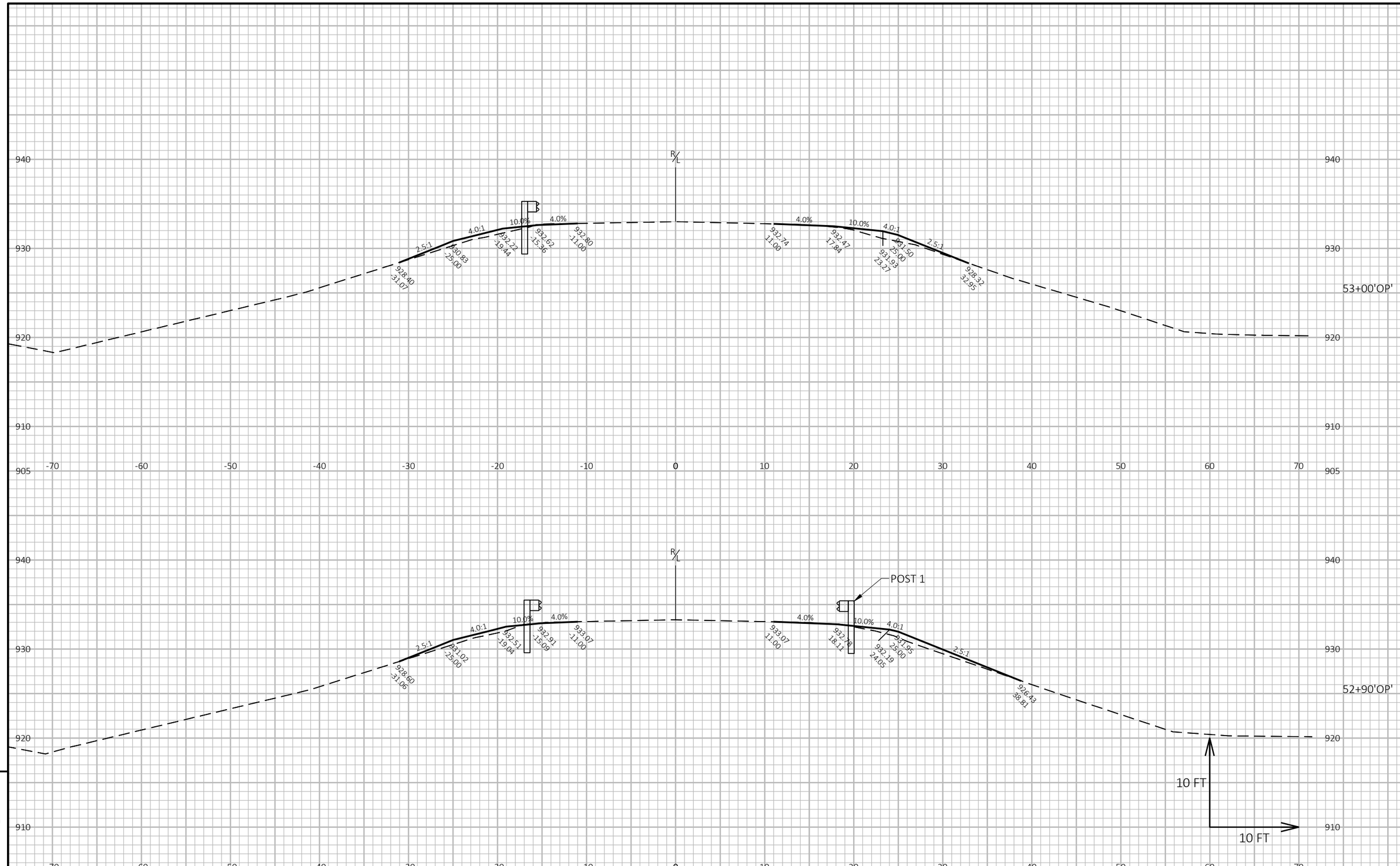

9

9

PROJECT NO: 1066-03-75	HWY: IH 94	COUNTY: DANE AND JEFFERSON	CROSS SECTIONS: OAK PARK RD	SHEET 274	E

FILE NAME : P:\2020 PROJECTS\5020028 - WISDOT SWR IH 94\CIVIL3D\10660375\SHEETSPLAN\090103_XS-SIDEROADS.DWG
LAYOUT NAME - 30

PLOT DATE : 12/12/2022 12:21 PM PLOT BY : KYLE CORNELIUS PLOT NAME : **PLOT SCALE :** 1 IN:10 FT HORZ. / 1 IN:10 FT VERT.

WISDOT/CADDS SHEET 49

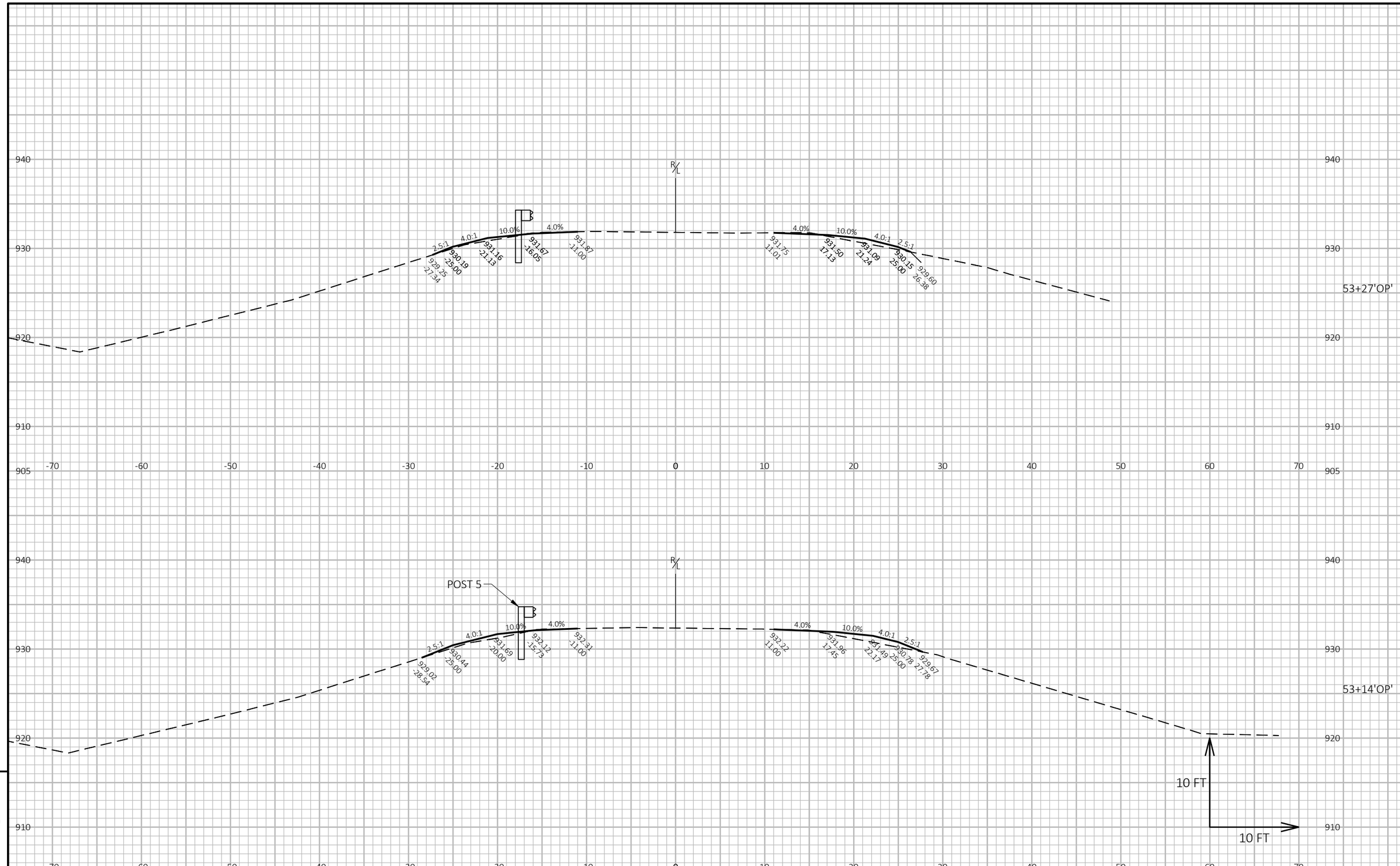

PROJECT NO: 1066-03-75	HWY: IH 94	COUNTY: DANE AND JEFFERSON	CROSS SECTIONS: OAK PARK RD	SHEET 275	E

FILE NAME : P:\2020 PROJECTS\5020028 - WISDOT SWR IH 94\CIVIL3D\10660375\SHEETSPLAN\090103_XS-SIDEROADS.DWG
LAYOUT NAME - 31
PLOT DATE : 12/12/2022 12:22 PM
PLOT BY : KYLE CORNELIUS
PLOT NAME :
PLOT SCALE : 1 IN:10 FT HORZ. / 1 IN:10 FT VERT.
WISDOT/CADDS SHEET 49

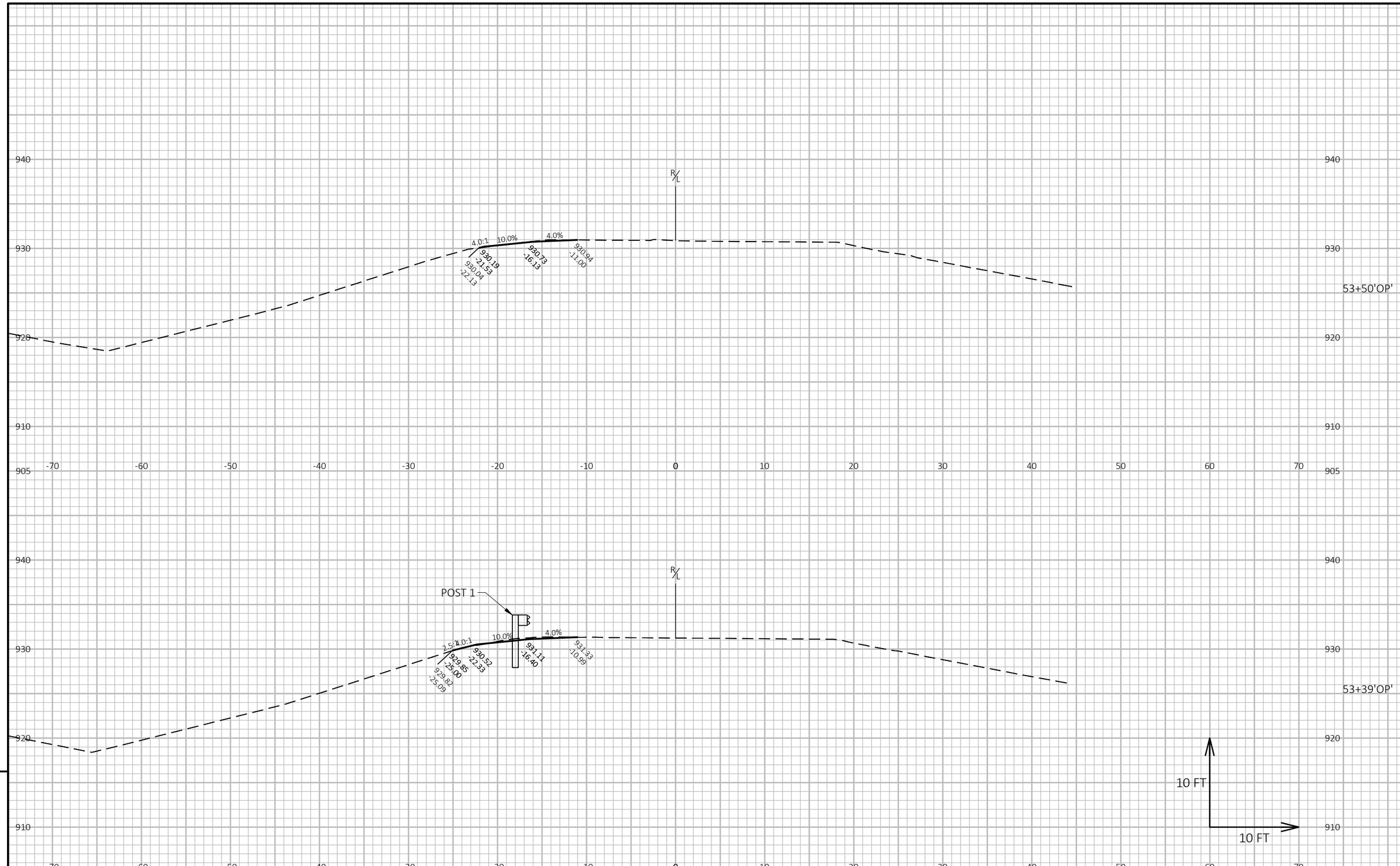

9

9

PROJECT NO: 1066-03-75	HWY: IH 94	COUNTY: DANE AND JEFFERSON	CROSS SECTIONS: OAK PARK RD	SHEET 276	E

FILE NAME : P:\2020 PROJECTS\5020028 - WISDOT SWR IH 94\CIVIL3D\10660375\SHEETSPLAN\090103_XS-SIDEROADS.DWG
LAYOUT NAME - 32

PLOT DATE : 12/12/2022 12:23 PM PLOT BY : KYLE CORNELIUS PLOT NAME : **PLOT SCALE :** 1 IN:10 FT HORZ. / 1 IN:10 FT VERT.

WISDOT/CADDS SHEET 49

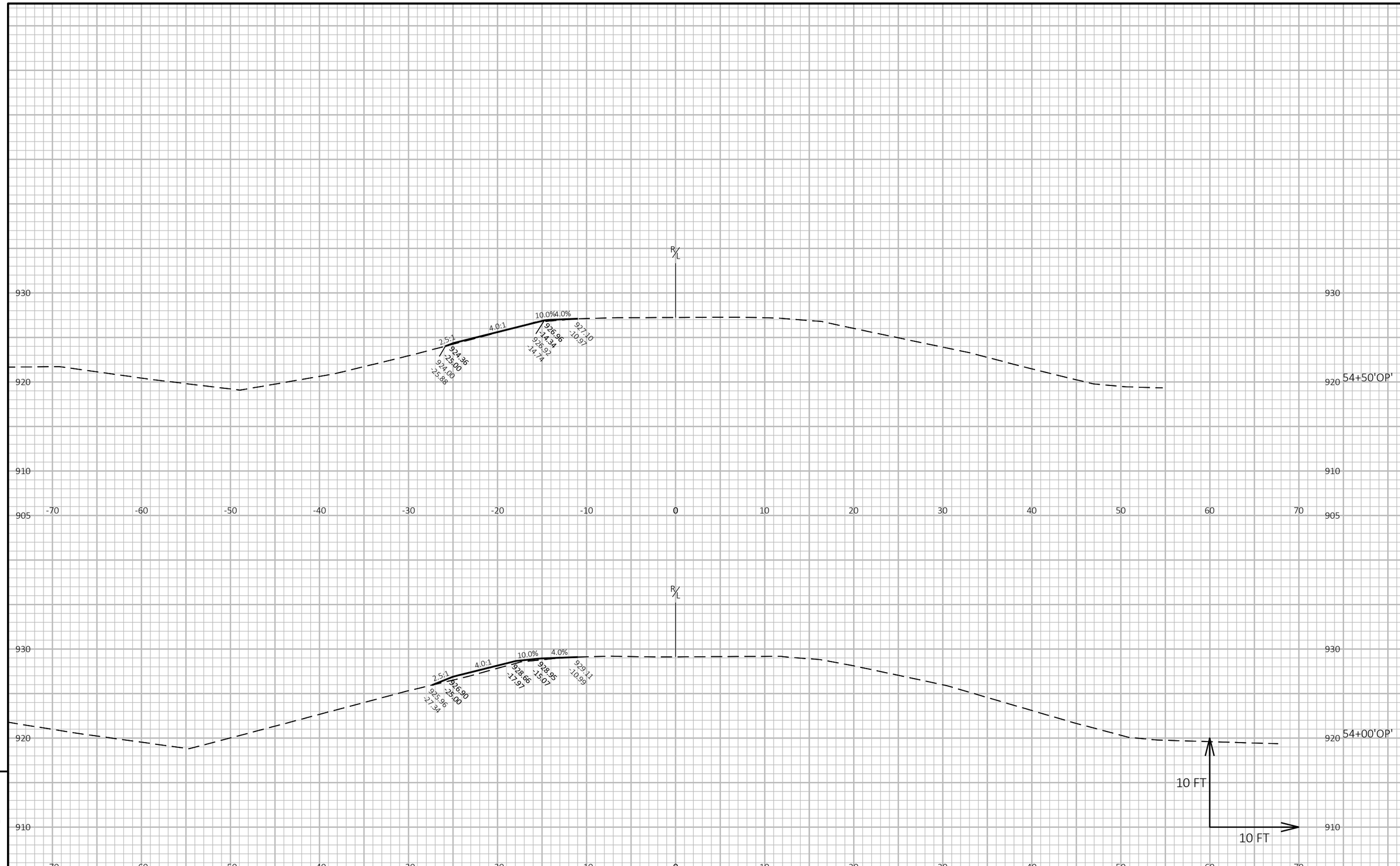

PROJECT NO: 1066-03-75	HWY: IH 94	COUNTY: DANE AND JEFFERSON	CROSS SECTIONS: OAK PARK RD	SHEET 277	E

FILE NAME : P:\2020 PROJECTS\5020028 - WISDOT SWR IH 94\CIVIL3D\10660375\SHEETSPLAN\090103_XS-SIDEROADS.DWG
LAYOUT NAME - 33
PLOT DATE : 12/12/2022 12:24 PM PLOT BY : KYLE CORNELIUS PLOT NAME : **PLOT SCALE :** 1 IN:10 FT HORZ. / 1 IN:10 FT VERT.

WISDOT/CADDS SHEET 49

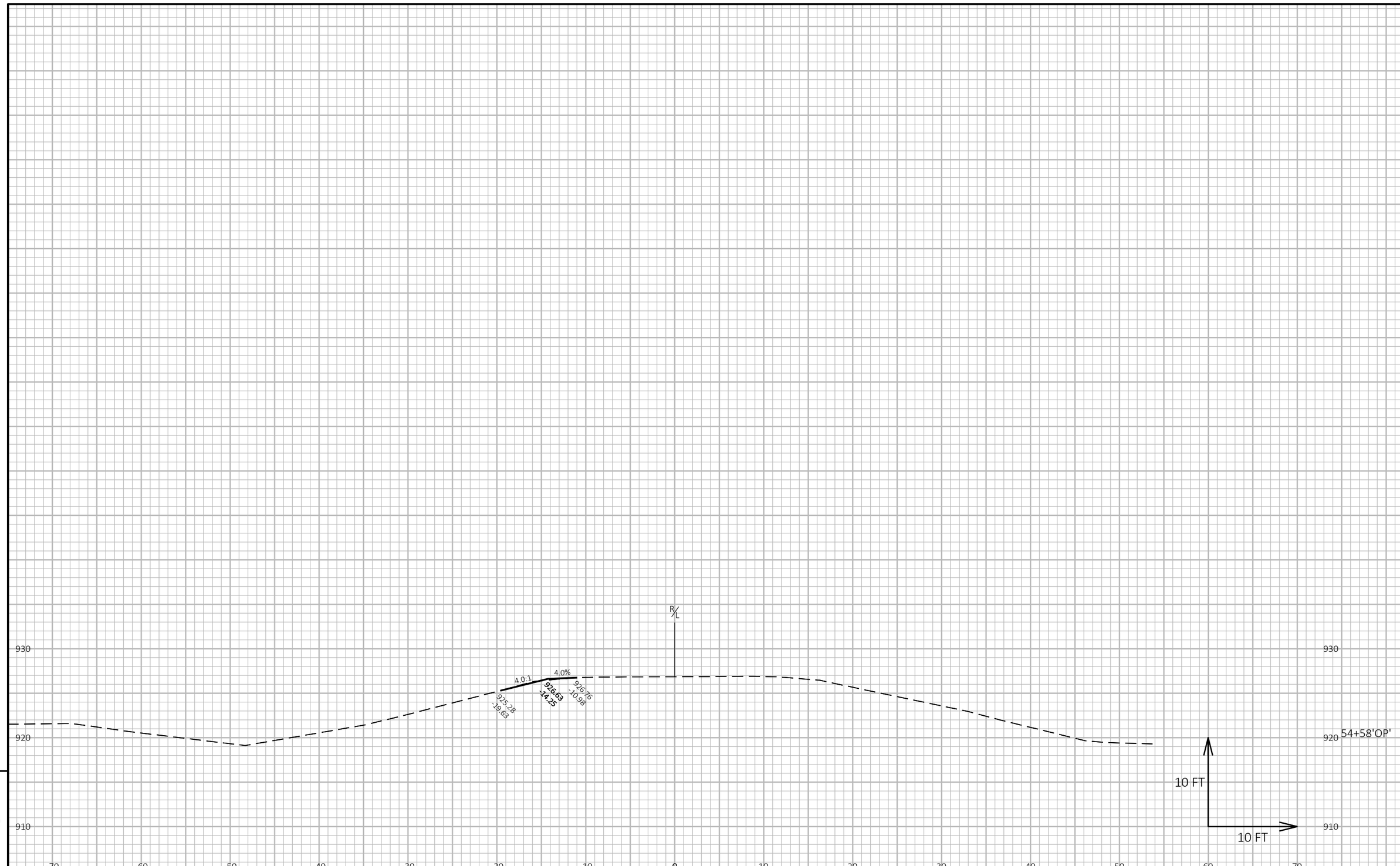

9

9

PROJECT NO: 1066-03-75	HWY: IH 94	COUNTY: DANE AND JEFFERSON	CROSS SECTIONS: OAK PARK RD	SHEET 278	E

FILE NAME : P:\2020 PROJECTS\5020028 - WISDOT SWR IH 94\CIVIL3D\10660375\SHEETSPLAN\090103_XS-SIDEROADS.DWG
LAYOUT NAME - 34

PLOT DATE : 12/12/2022 12:25 PM PLOT BY : KYLE CORNELIUS PLOT NAME :

PLOT SCALE : 1 IN:10 FT HORZ. / 1 IN:10 FT VERT.

WISDOT/CADDS SHEET 49

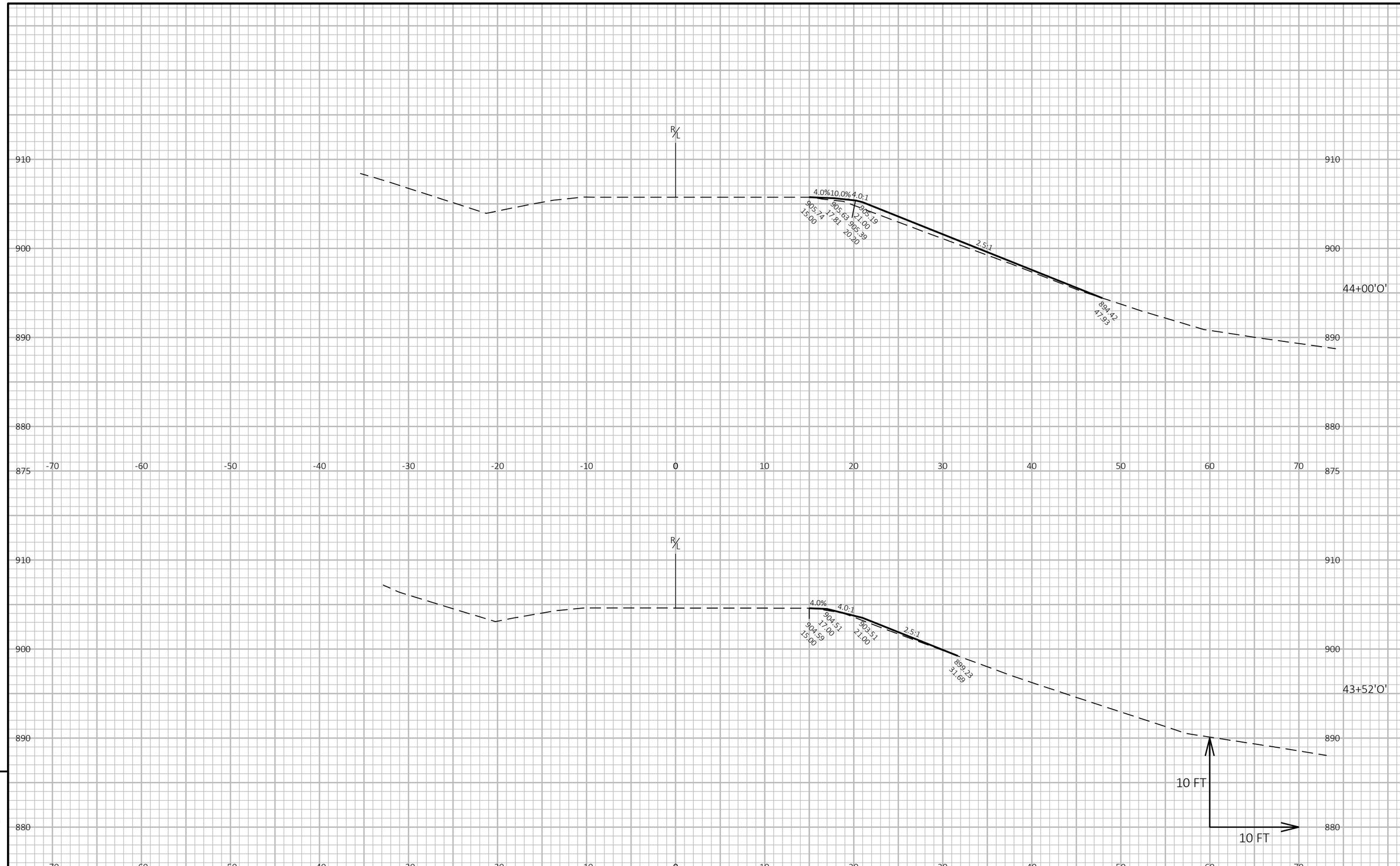

9

9

PROJECT NO: 1066-03-75	HWY: IH 94	COUNTY: DANE AND JEFFERSON	CROSS SECTIONS: CTH O	SHEET 279	E

FILE NAME : P:\2020 PROJECTS\5020028 - WISDOT SWR IH 94\CIVIL3D\10660375\SHEETSPLAN\090103_XS-SIDEROADS.DWG
LAYOUT NAME - 36

PLOT DATE : 12/12/2022 12:26 PM PLOT BY : KYLE CORNELIUS PLOT NAME :

PLOT SCALE : 1 IN:10 FT HORZ. / 1 IN:10 FT VERT.

WISDOT/CADDS SHEET 49

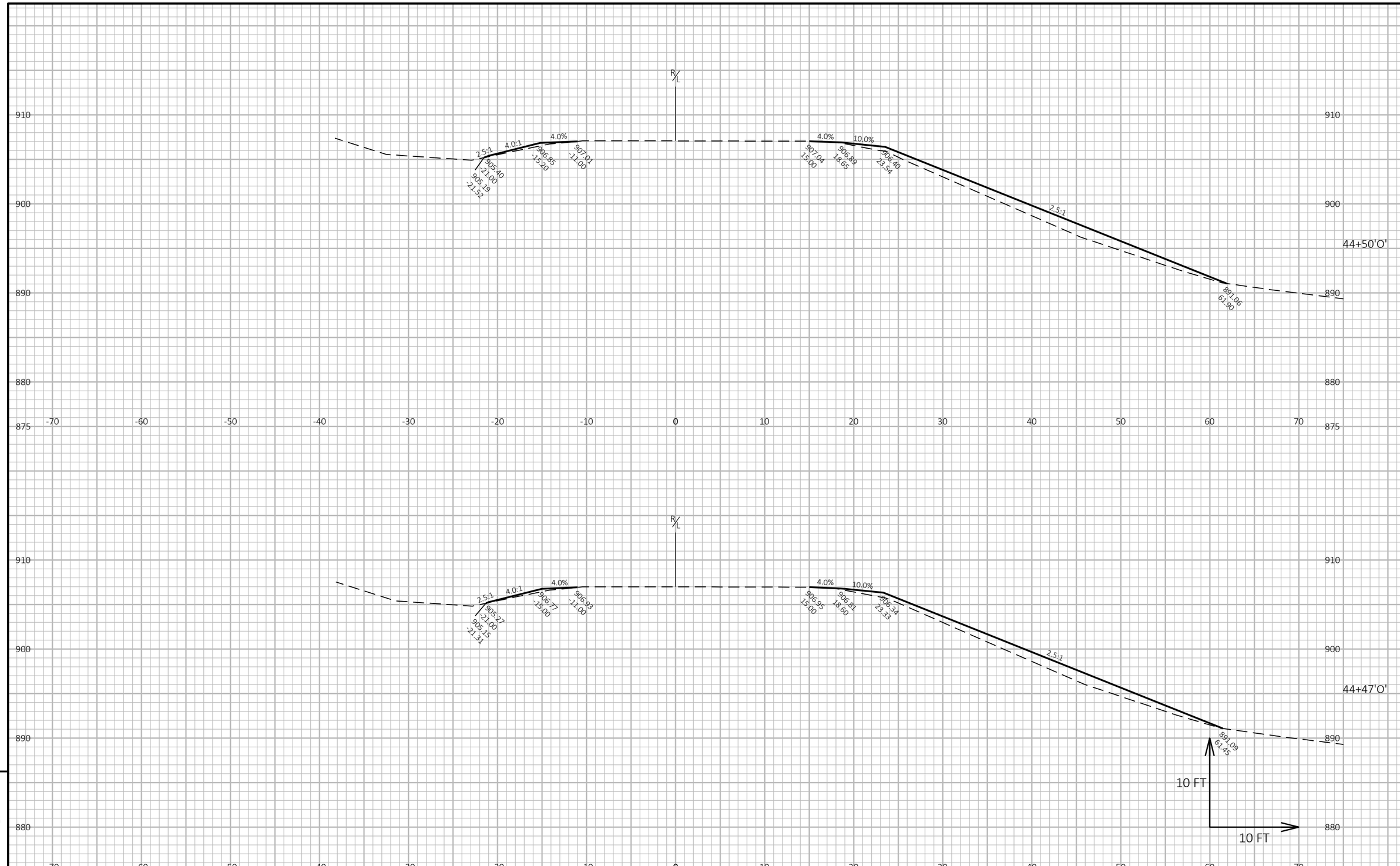

9

9

PROJECT NO: 1066-03-75	HWY: IH 94	COUNTY: DANE AND JEFFERSON	CROSS SECTIONS: CTH O	SHEET 280	E

FILE NAME : P:\2020 PROJECTS\5020028 - WISDOT SWR IH 94\CIVIL3D\10660375\SHEETSPLAN\090103_XS-SIDEROADS.DWG
LAYOUT NAME - 37

PLOT DATE : 12/12/2022 12:27 PM PLOT BY : KYLE CORNELIUS PLOT NAME :

PLOT SCALE : 1 IN:10 FT HORZ. / 1 IN:10 FT VERT.

WISDOT/CADDS SHEET 49

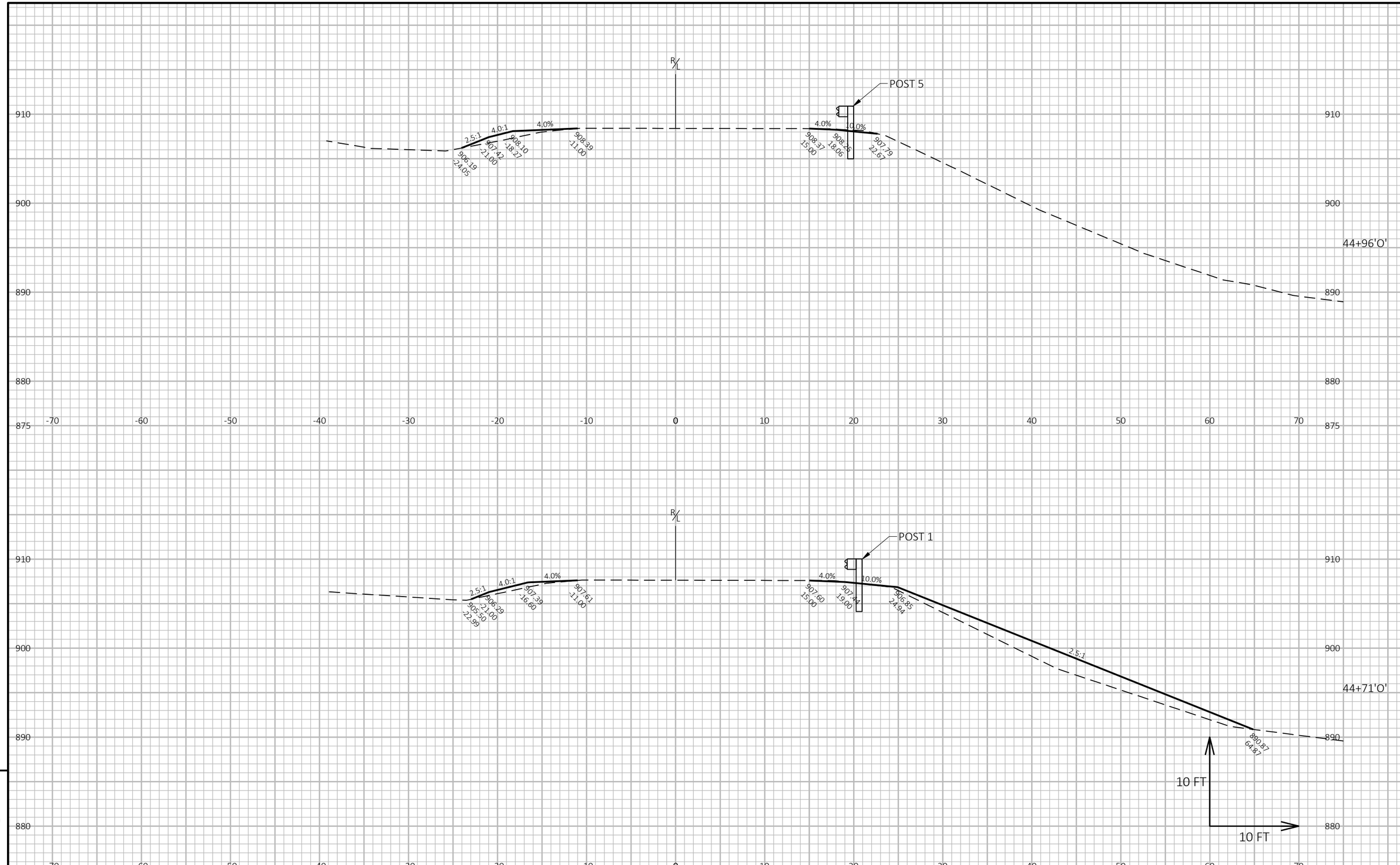

9

9

PROJECT NO: 1066-03-75	HWY: IH 94	COUNTY: DANE AND JEFFERSON	CROSS SECTIONS: CTH O	SHEET 281	E

FILE NAME : P:\2020 PROJECTS\5020028 - WISDOT SWR IH 94\CIVIL3D\10660375\SHEETSPLAN\090103_XS-SIDEROADS.DWG
LAYOUT NAME - 38
PLOT DATE : 12/12/2022 12:27 PM
PLOT BY : KYLE CORNELIUS
PLOT NAME :
PLOT SCALE : 1 IN:10 FT HORZ. / 1 IN:10 FT VERT.
WISDOT/CADDS SHEET 49

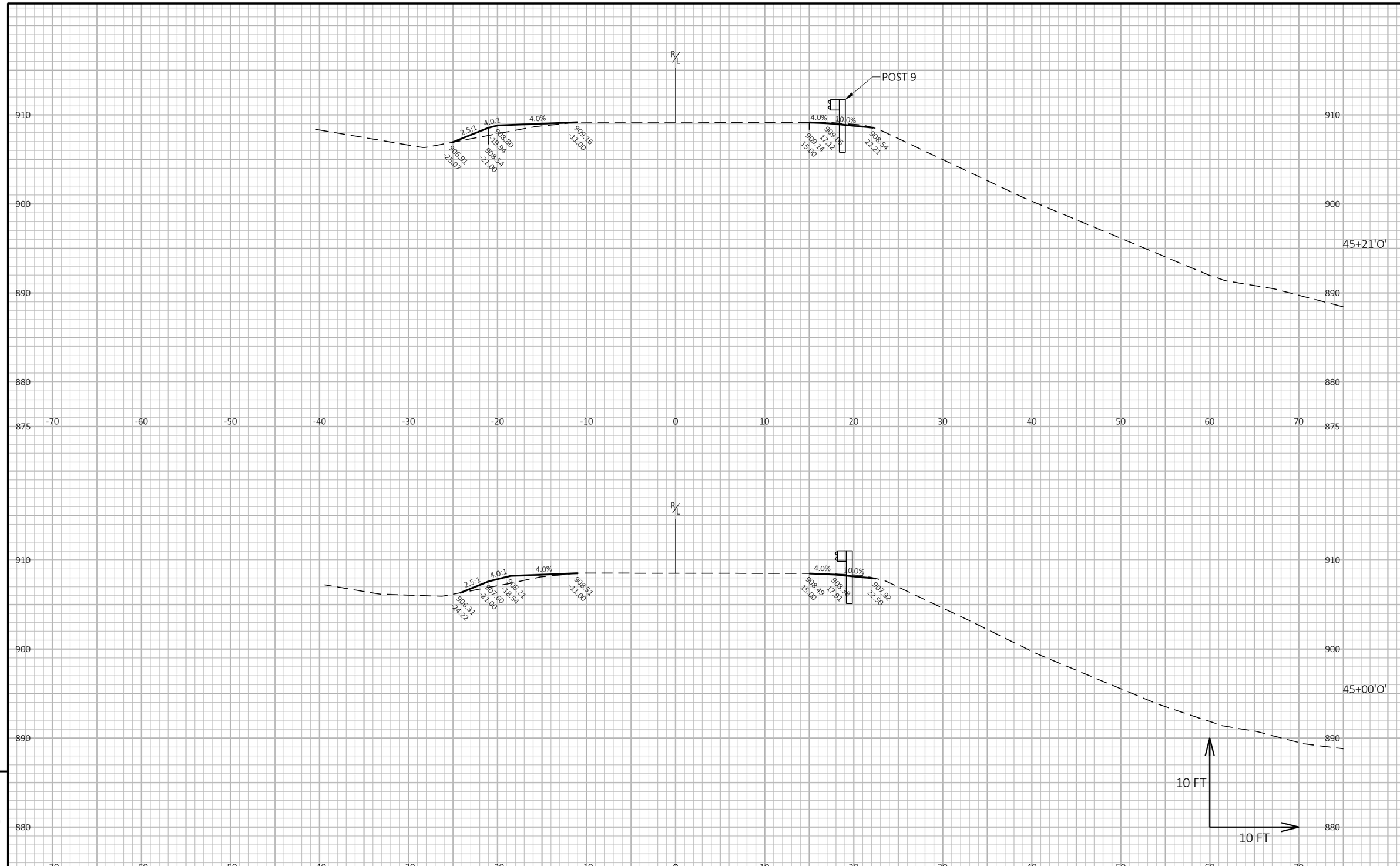

9

9

PROJECT NO: 1066-03-75	HWY: IH 94	COUNTY: DANE AND JEFFERSON	CROSS SECTIONS: CTH O	SHEET 282	E

FILE NAME : P:\2020 PROJECTS\5020028 - WISDOT SWR IH 94\CIVIL3D\10660375\SHEETSPLAN\090103_XS-SIDEROADS.DWG
LAYOUT NAME - 39

PLOT DATE : 12/12/2022 12:28 PM PLOT BY : KYLE CORNELIUS PLOT NAME : **PLOT SCALE :** 1 IN:10 FT HORZ. / 1 IN:10 FT VERT.

WISDOT/CADDS SHEET 49

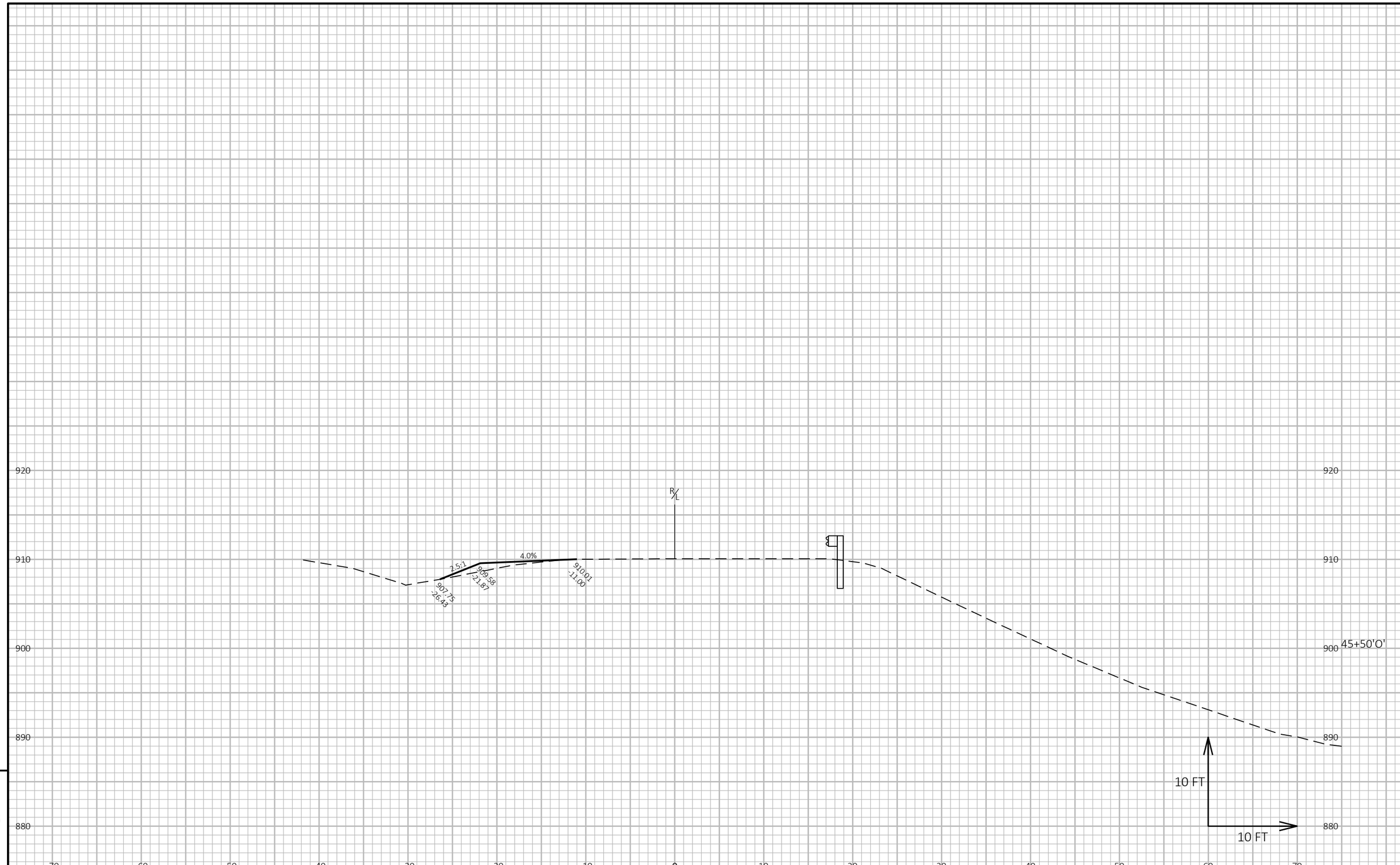

9

9

PROJECT NO: 1066-03-75	HWY: IH 94	COUNTY: DANE AND JEFFERSON	CROSS SECTIONS: CTH O	SHEET 283	E

FILE NAME : P:\2020 PROJECTS\5020028 - WISDOT SWR IH 94\CIVIL3D\10660375\SHEETSPLAN\090103_XS-SIDEROADS.DWG
LAYOUT NAME - 40

PLOT DATE : 12/12/2022 12:29 PM PLOT BY : KYLE CORNELIUS PLOT NAME : **PLOT SCALE :** 1 IN:10 FT HORZ. / 1 IN:10 FT VERT.

WISDOT/CADDS SHEET 49

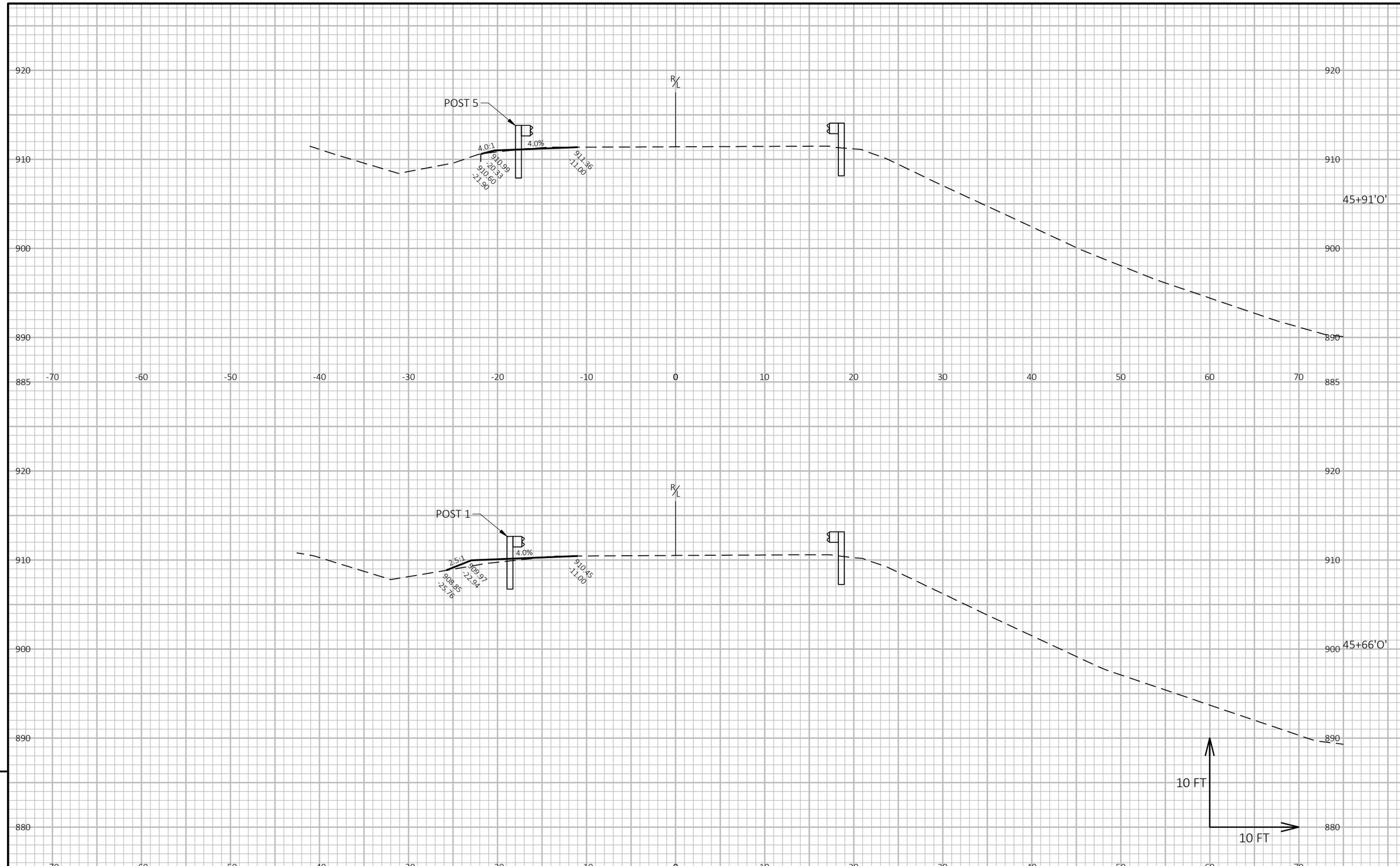

9

9

PROJECT NO: 1066-03-75	HWY: IH 94	COUNTY: DANE AND JEFFERSON	CROSS SECTIONS: CTH O	SHEET 284	E

FILE NAME : P:\2020 PROJECTS\5020028 - WISDOT SWR IH 94\CIVIL3D\10660375\SHEETSPLAN\090103_XS-SIDEROADS.DWG
LAYOUT NAME - 41
PLOT DATE : 12/12/2022 12:30 PM
PLOT BY : KYLE CORNELIUS
PLOT NAME :
PLOT SCALE : 1 IN:10 FT HORZ. / 1 IN:10 FT VERT.
WISDOT/CADDS SHEET 49

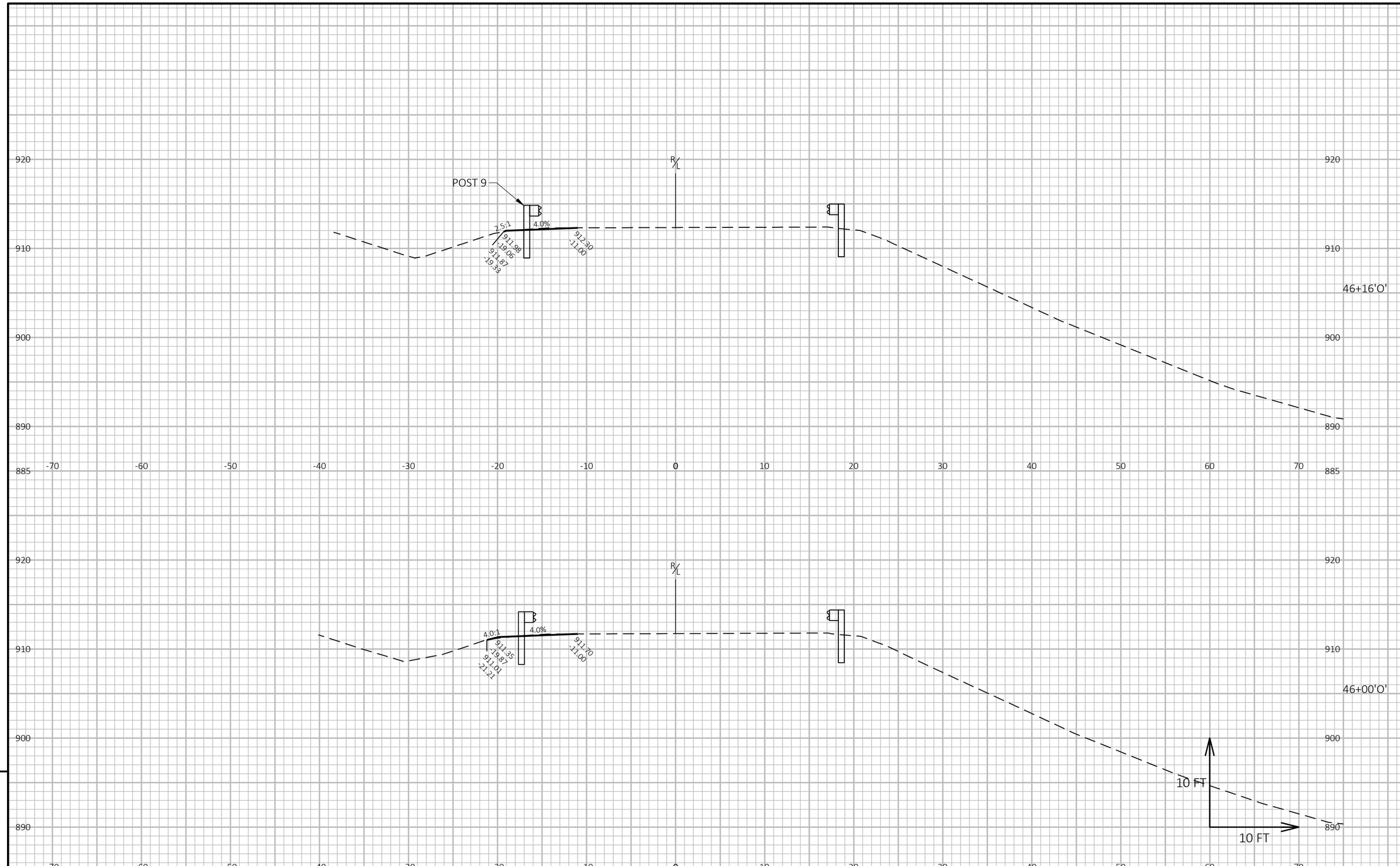

9

9

PROJECT NO: 1066-03-75	HWY: IH 94	COUNTY: DANE AND JEFFERSON	CROSS SECTIONS: CTH O	SHEET 285	E

FILE NAME : P:\2020 PROJECTS\5020028 - WISDOT SWR IH 94\CIVIL3D\10660375\SHEETSPLAN\090103_XS-SIDEROADS.DWG
LAYOUT NAME - 42

PLOT DATE : 12/12/2022 12:31 PM PLOT BY : KYLE CORNELIUS PLOT NAME : **PLOT SCALE :** 1 IN:10 FT HORZ. / 1 IN:10 FT VERT.

WISDOT/CADDS SHEET 49

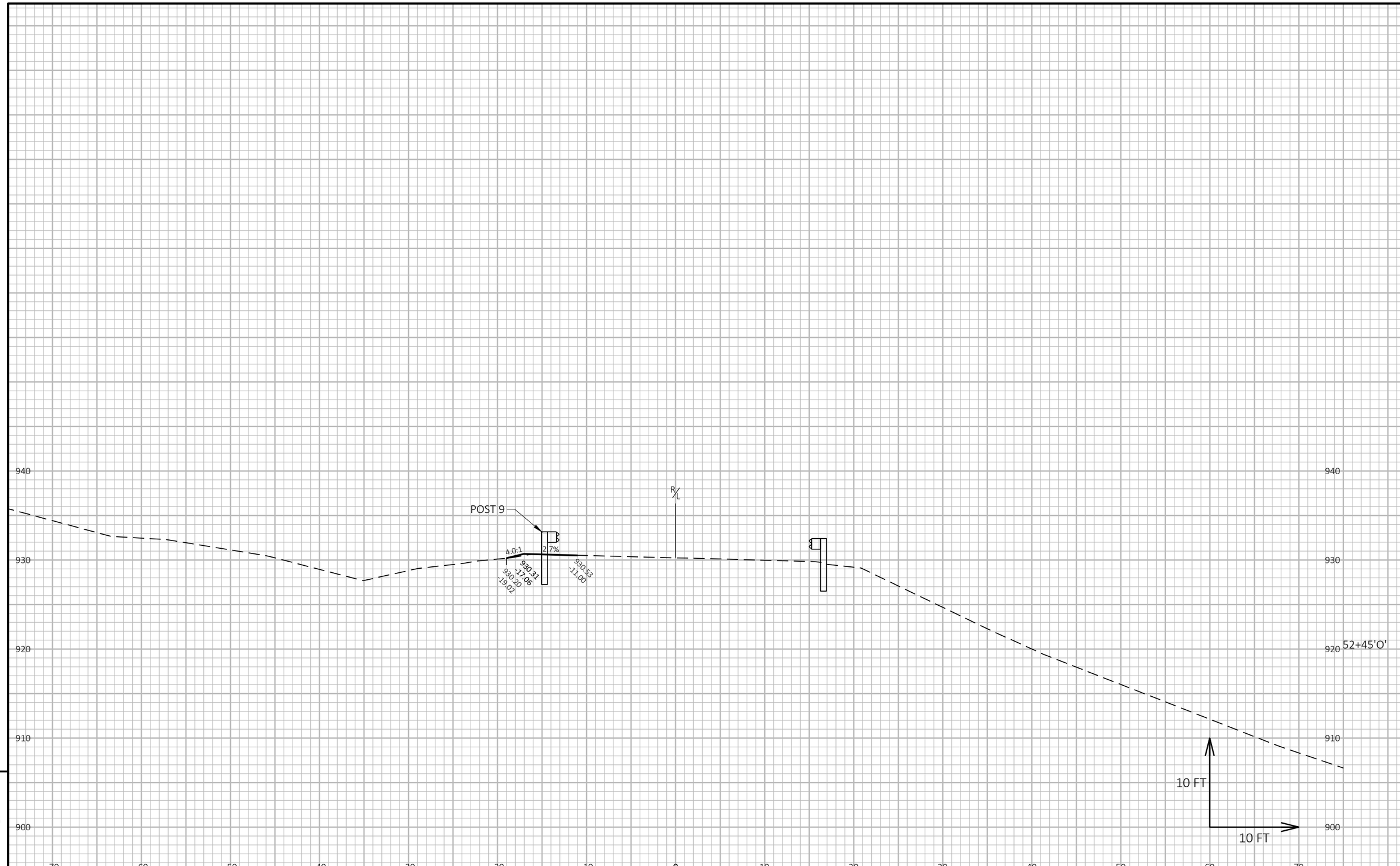

9

9

PROJECT NO: 1066-03-75	HWY: IH 94	COUNTY: DANE AND JEFFERSON	CROSS SECTIONS: CTH O	SHEET 286	E

FILE NAME : P:\2020 PROJECTS\5020028 - WISDOT SWR IH 94\CIVIL3D\10660375\SHEETSPLAN\090103_XS-SIDEROADS.DWG
LAYOUT NAME - 43

PLOT DATE : 12/12/2022 12:32 PM PLOT BY : KYLE CORNELIUS PLOT NAME : **PLOT SCALE :** 1 IN:10 FT HORZ. / 1 IN:10 FT VERT.

WISDOT/CADDS SHEET 49

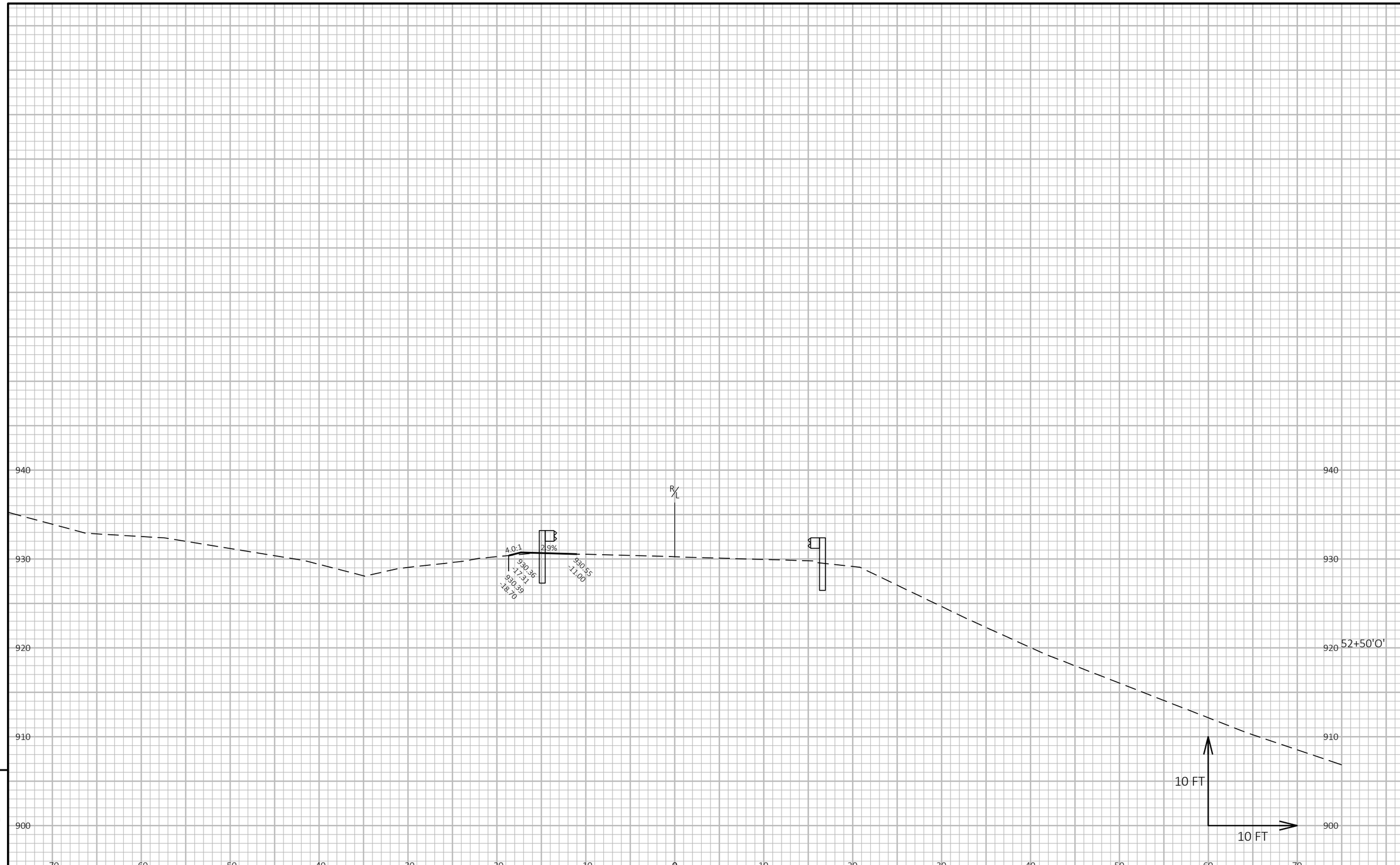

9

9

PROJECT NO: 1066-03-75	HWY: IH 94	COUNTY: DANE AND JEFFERSON	CROSS SECTIONS: CTH O	SHEET 287	E

FILE NAME : P:\2020 PROJECTS\5020028 - WISDOT SWR IH 94\CIVIL3D\10660375\SHEETSPLAN\090103_XS-SIDEROADS.DWG
LAYOUT NAME - 44

PLOT DATE : 12/12/2022 12:32 PM PLOT BY : KYLE CORNELIUS PLOT NAME : **PLOT SCALE :** 1 IN:10 FT HORZ. / 1 IN:10 FT VERT.

WISDOT/CADDS SHEET 49

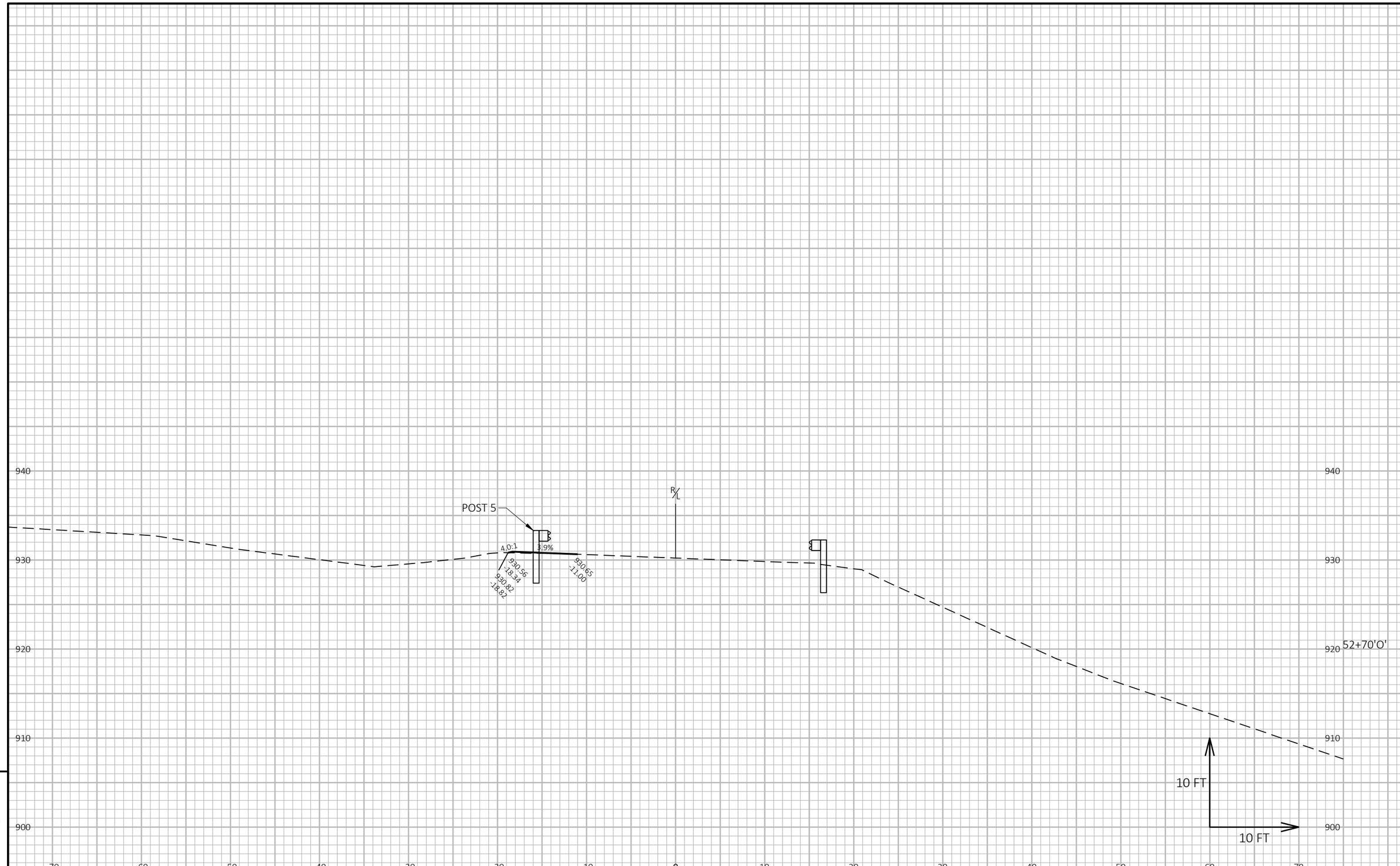

9

9

PROJECT NO: 1066-03-75	HWY: IH 94	COUNTY: DANE AND JEFFERSON	CROSS SECTIONS: CTH O	SHEET 288	E

FILE NAME : P:\2020 PROJECTS\5020028 - WISDOT SWR IH 94\CIVIL3D\10660375\SHEETSPLAN\090103_XS-SIDEROADS.DWG
LAYOUT NAME - 45

PLOT DATE : 12/12/2022 12:33 PM PLOT BY : KYLE CORNELIUS PLOT NAME : **PLOT SCALE :** 1 IN:10 FT HORZ. / 1 IN:10 FT VERT.

WISDOT/CADDS SHEET 49

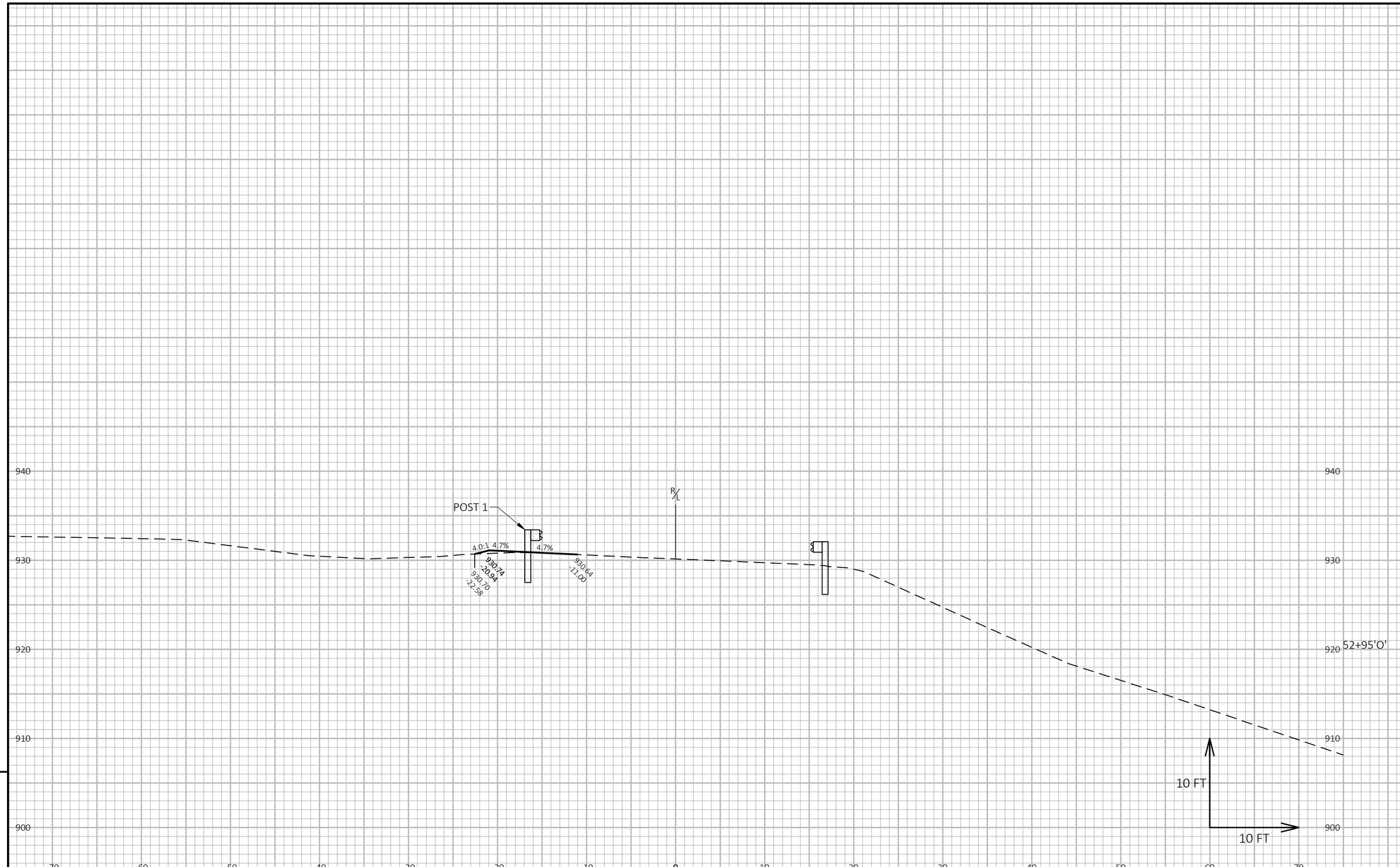

9

9

PROJECT NO: 1066-03-75	HWY: IH 94	COUNTY: DANE AND JEFFERSON	CROSS SECTIONS: CTH O	SHEET 289	E

FILE NAME : P:\2020 PROJECTS\5020028 - WISDOT SWR IH 94\CIVIL3D\10660375\SHEETSPLAN\090103_XS-SIDEROADS.DWG
LAYOUT NAME - 46

PLOT DATE : 12/12/2022 12:34 PM PLOT BY : KYLE CORNELIUS PLOT NAME : **PLOT SCALE :** 1 IN:10 FT HORZ. / 1 IN:10 FT VERT.

WISDOT/CADDS SHEET 49

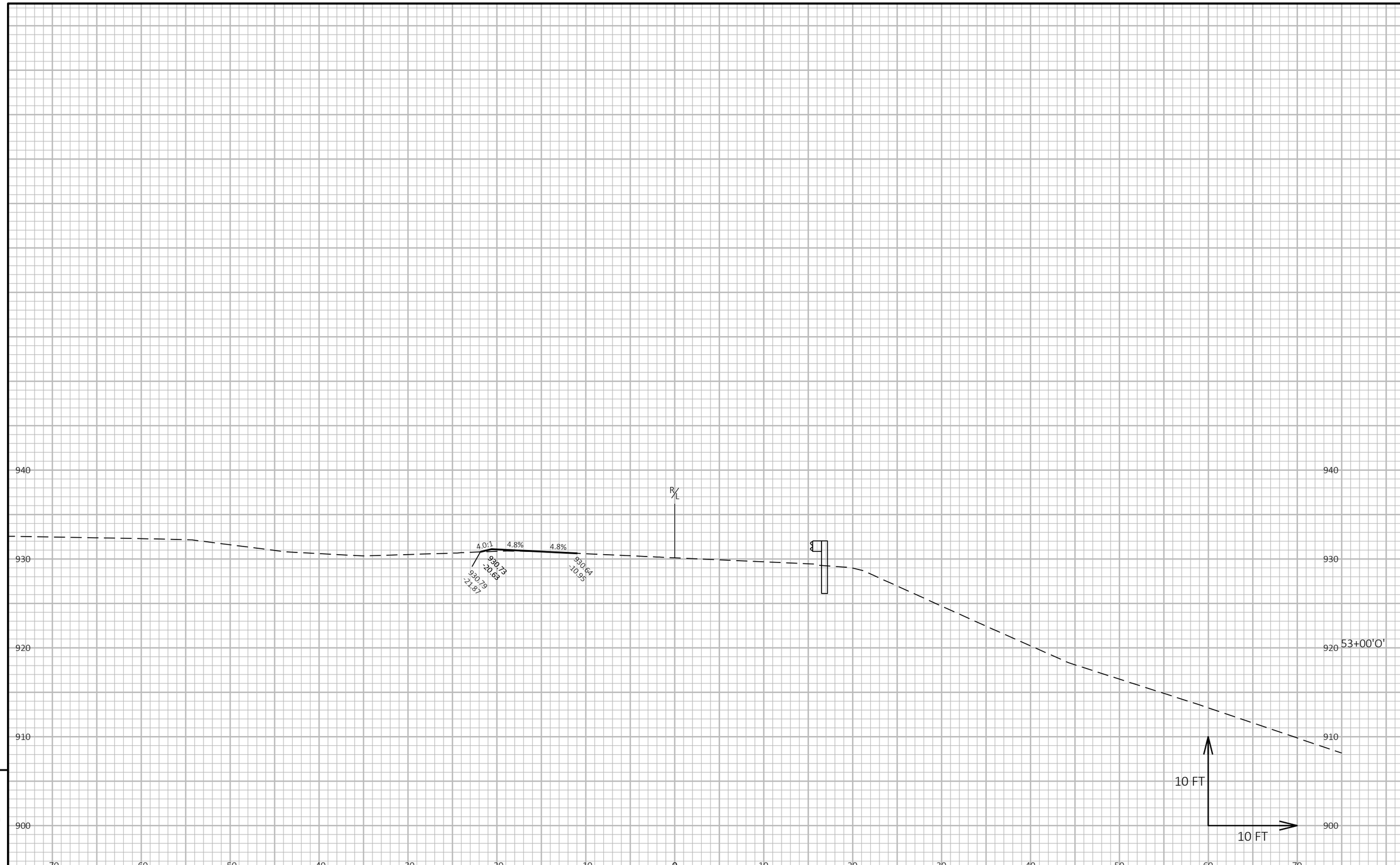

9

9

PROJECT NO: 1066-03-75	HWY: IH 94	COUNTY: DANE AND JEFFERSON	CROSS SECTIONS: CTH O	SHEET 290	E

FILE NAME : P:\2020 PROJECTS\5020028 - WISDOT SWR IH 94\CIVIL3D\10660375\SHEETSPLAN\090103_XS-SIDEROADS.DWG
LAYOUT NAME - 47

PLOT DATE : 12/12/2022 12:35 PM PLOT BY : KYLE CORNELIUS PLOT NAME : **PLOT SCALE :** 1 IN:10 FT HORZ. / 1 IN:10 FT VERT.

WISDOT/CADDS SHEET 49

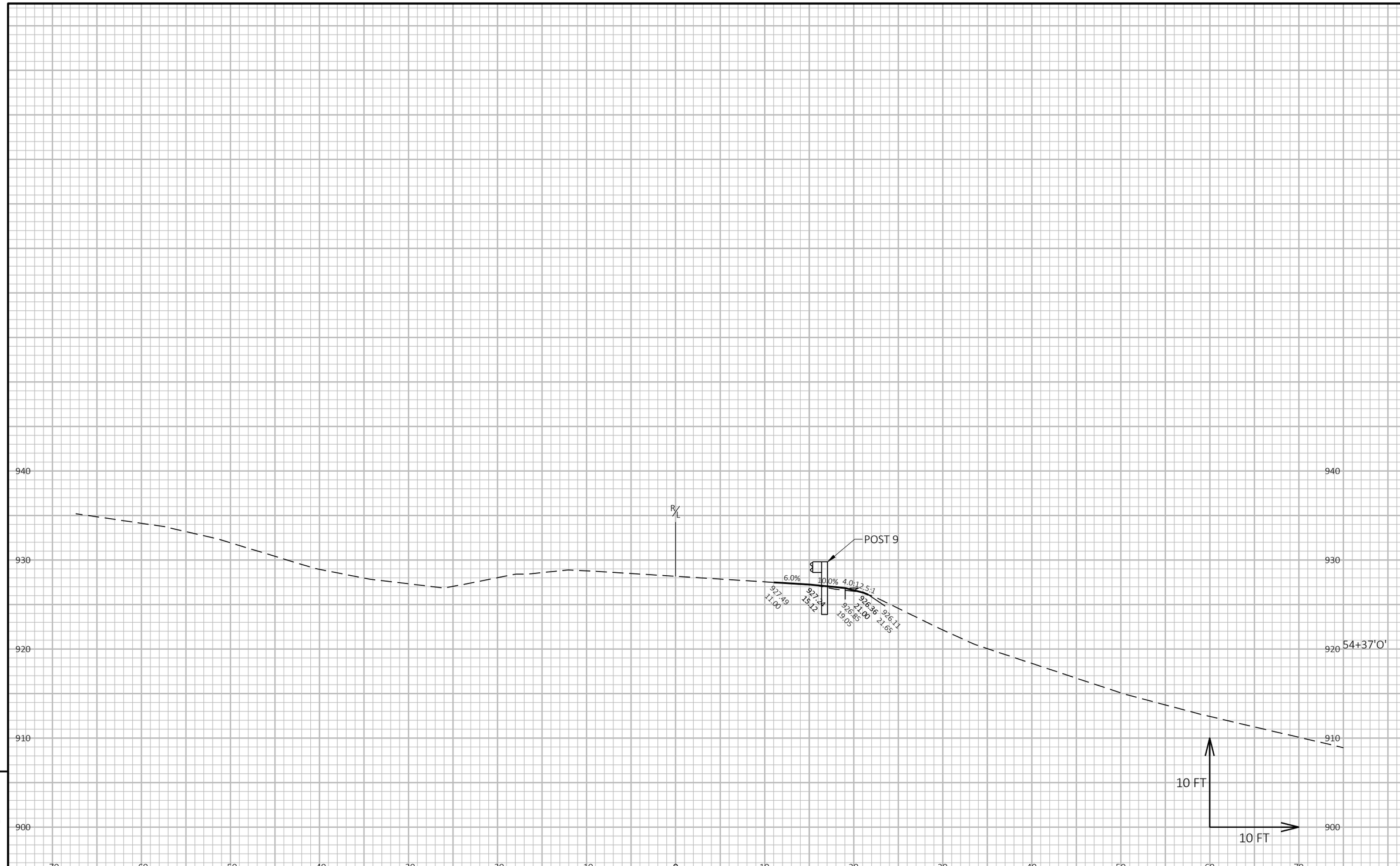

9

9

PROJECT NO: 1066-03-75	HWY: IH 94	COUNTY: DANE AND JEFFERSON	CROSS SECTIONS: CTH O	SHEET 291	E

FILE NAME : P:\2020 PROJECTS\5020028 - WISDOT SWR IH 94\CIVIL3D\10660375\SHEETSPLAN\090103_XS-SIDEROADS.DWG
LAYOUT NAME - 48

PLOT DATE : 12/12/2022 12:36 PM PLOT BY : KYLE CORNELIUS PLOT NAME :

PLOT SCALE : 1 IN:10 FT HORZ. / 1 IN:10 FT VERT.

WISDOT/CADDS SHEET 49

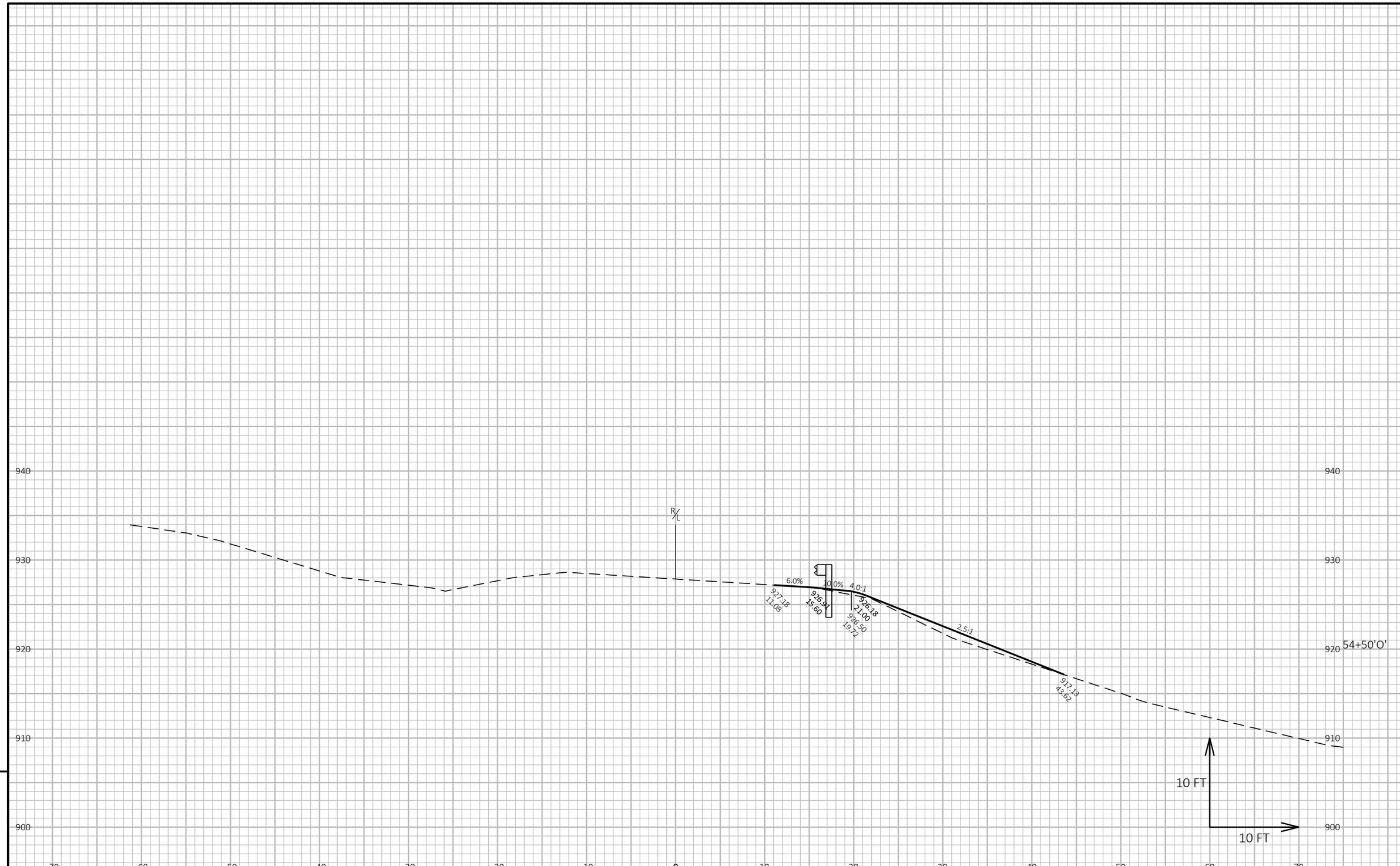

PROJECT NO: 1066-03-75	HWY: IH 94	COUNTY: DANE AND JEFFERSON	CROSS SECTIONS: CTH O	SHEET 292	E

FILE NAME : P:\2020 PROJECTS\5020028 - WISDOT SWR IH 94\CIVIL3D\10660375\SHEETSPLAN\090103_XS-SIDEROADS.DWG
LAYOUT NAME - 49
PLOT DATE : 12/12/2022 12:37 PM
PLOT BY : KYLE CORNELIUS
PLOT NAME :
PLOT SCALE : 1 IN:10 FT HORZ. / 1 IN:10 FT VERT.
WISDOT/CADDS SHEET 49

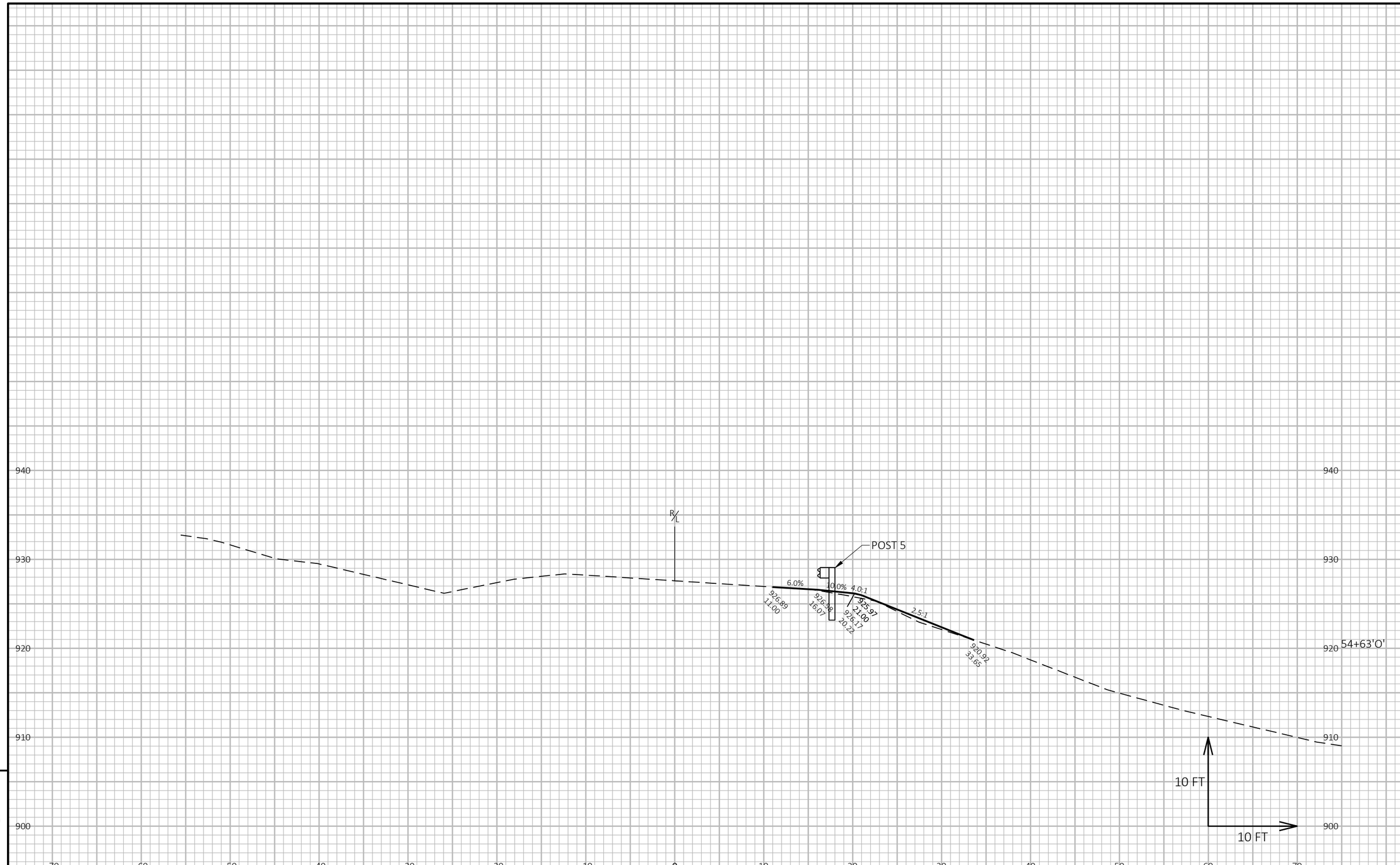

9

9

PROJECT NO: 1066-03-75	HWY: IH 94	COUNTY: DANE AND JEFFERSON	CROSS SECTIONS: CTH O	SHEET 293	E

FILE NAME : P:\2020 PROJECTS\5020028 - WISDOT SWR IH 94\CIVIL3D\10660375\SHEETSPLAN\090103_XS-SIDEROADS.DWG
LAYOUT NAME - 50

PLOT DATE : 12/12/2022 12:37 PM PLOT BY : KYLE CORNELIUS PLOT NAME :

PLOT SCALE : 1 IN:10 FT HORZ. / 1 IN:10 FT VERT.

WISDOT/CADDS SHEET 49

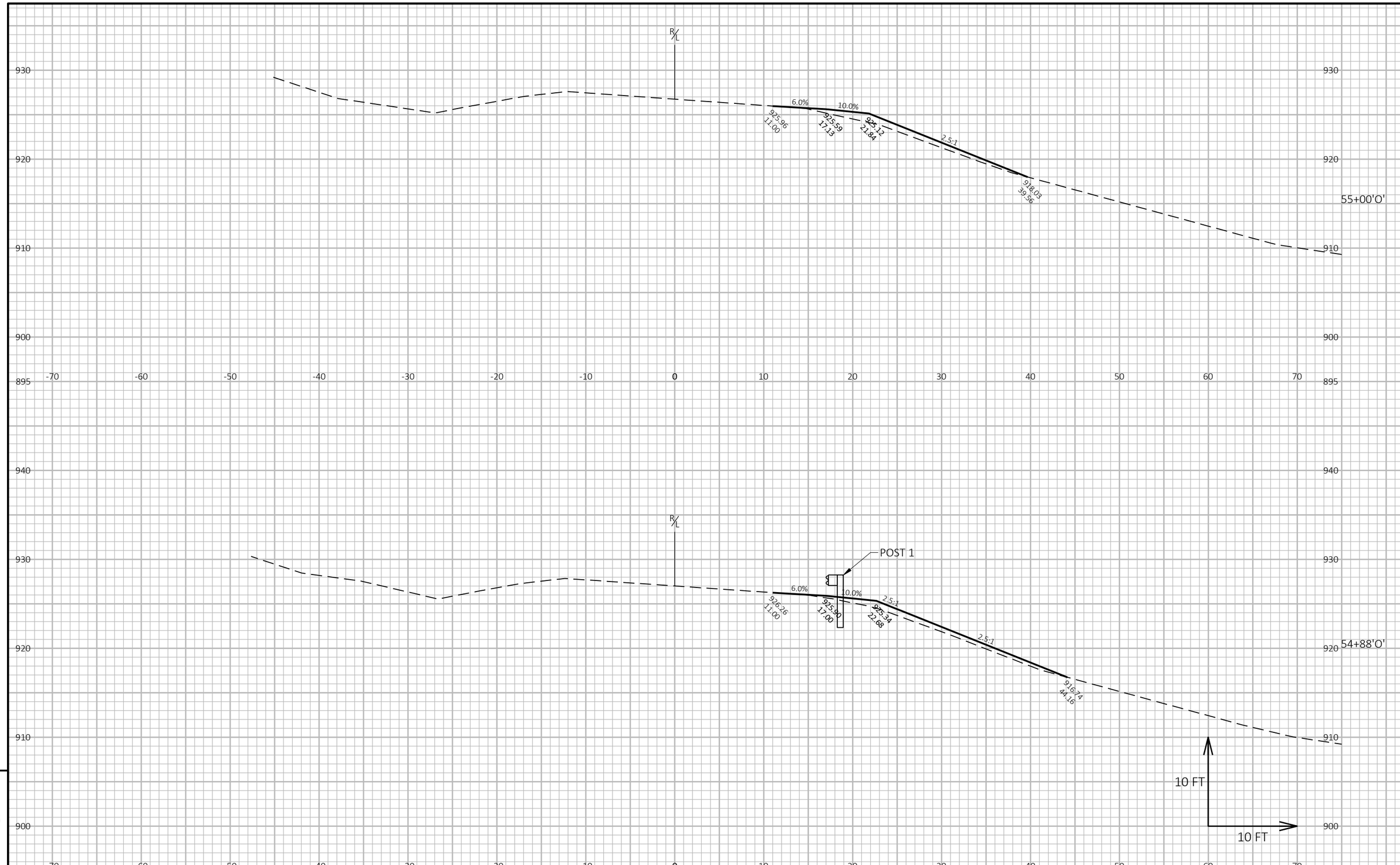

9

9

PROJECT NO: 1066-03-75	HWY: IH 94	COUNTY: DANE AND JEFFERSON	CROSS SECTIONS: CTH O	SHEET 294	E

FILE NAME : P:\2020 PROJECTS\5020028 - WISDOT SWR IH 94\CIVIL3D\10660375\SHEETSPLAN\090103_XS-SIDEROADS.DWG
LAYOUT NAME - 51

PLOT DATE : 12/12/2022 12:38 PM PLOT BY : KYLE CORNELIUS PLOT NAME :

PLOT SCALE : 1 IN:10 FT HORZ. / 1 IN:10 FT VERT.

WISDOT/CADDS SHEET 49

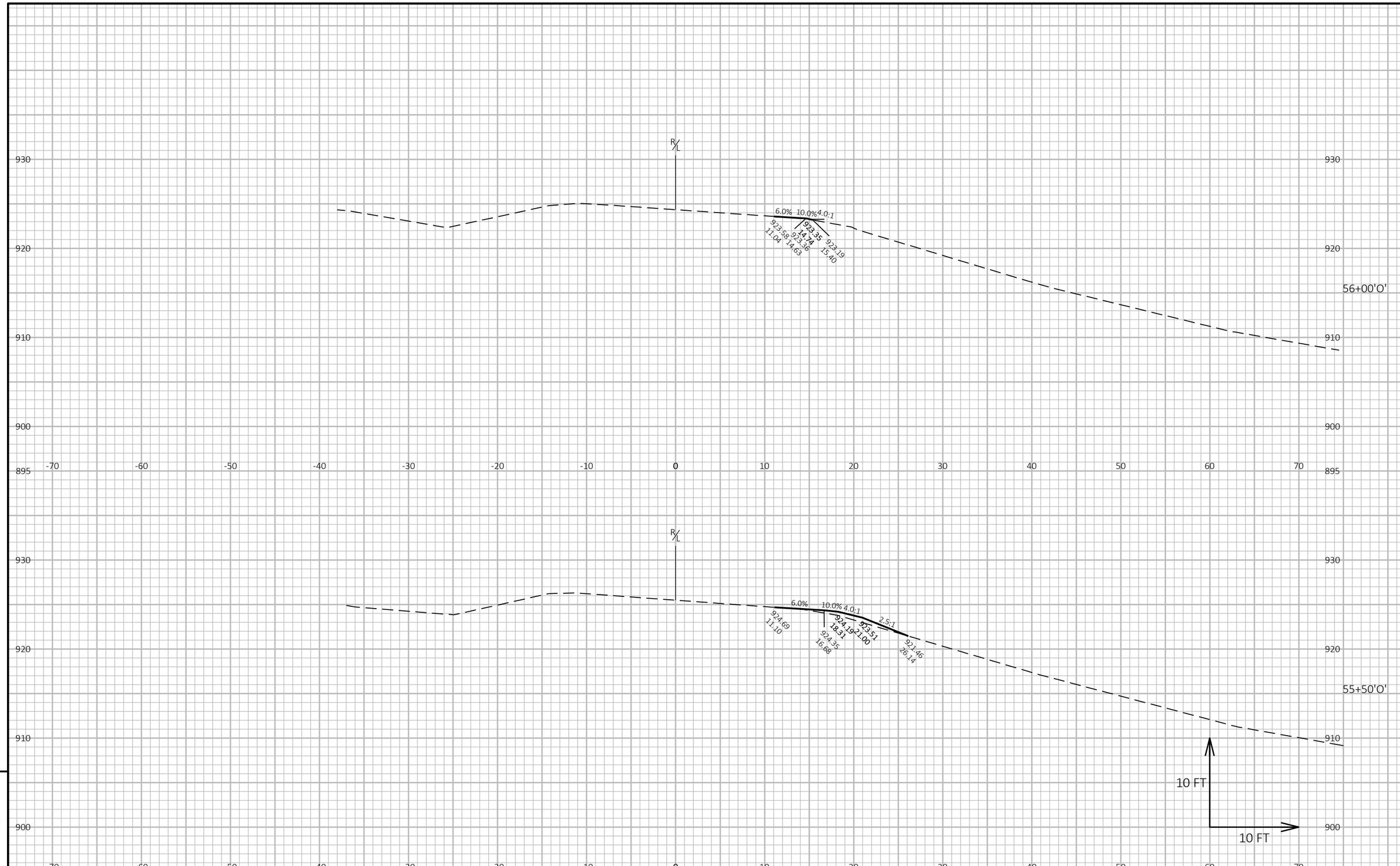

9

9

PROJECT NO: 1066-03-75	HWY: IH 94	COUNTY: DANE AND JEFFERSON	CROSS SECTIONS: CTH O	SHEET 295	E

FILE NAME : P:\2020 PROJECTS\5020028 - WISDOT SWR IH 94\CIVIL3D\10660375\SHEETSPLAN\090103_XS-SIDEROADS.DWG
LAYOUT NAME - 52

PLOT DATE : 12/12/2022 3:14 PM PLOT BY : KYLE CORNELIUS PLOT NAME : **PLOT SCALE :** 1 IN:10 FT HORZ. / 1 IN:10 FT VERT.

WISDOT/CADDS SHEET 49

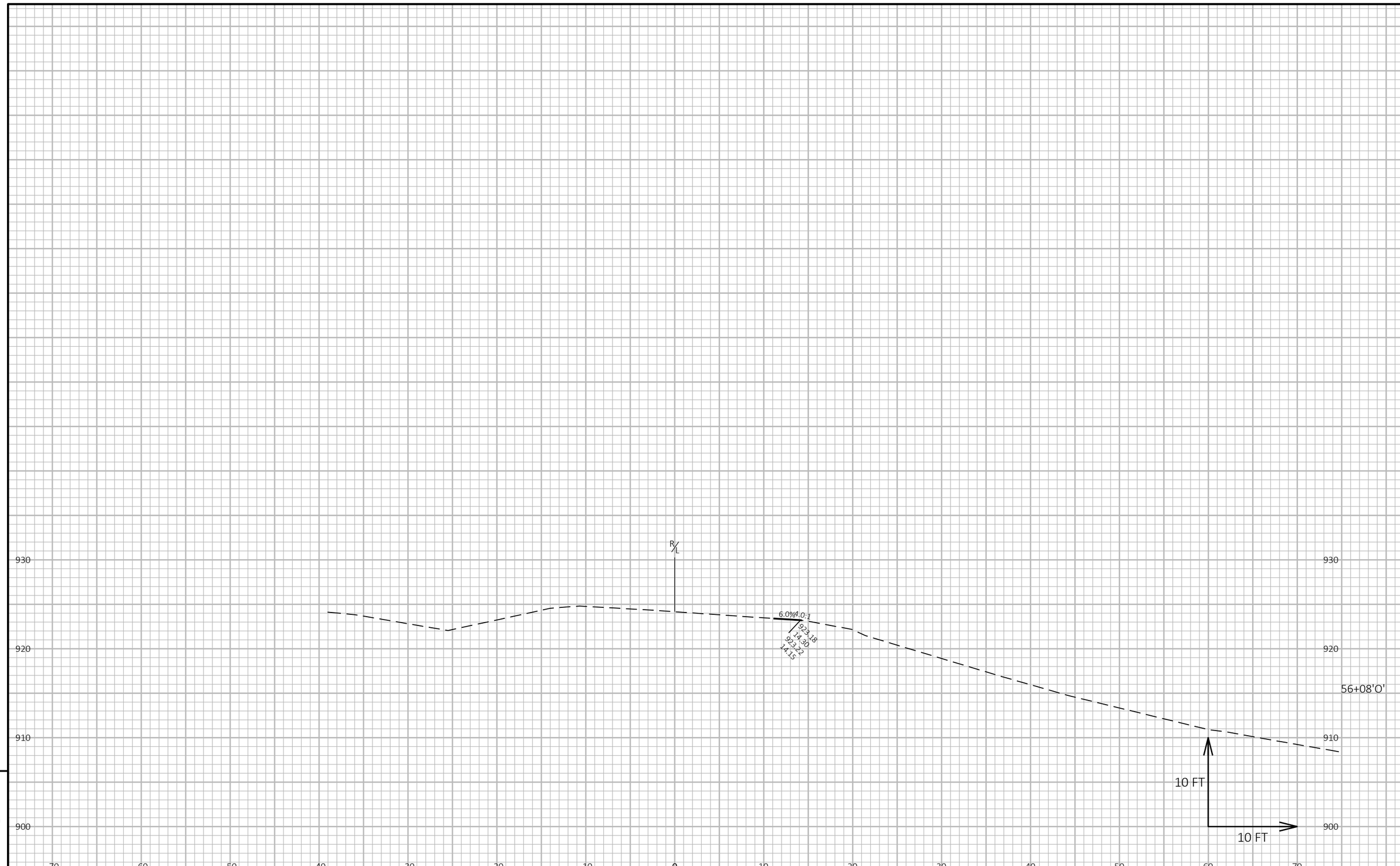

9

9

PROJECT NO: 1066-03-75	HWY: IH 94	COUNTY: DANE AND JEFFERSON	CROSS SECTIONS: CTH O	SHEET 296	E

FILE NAME : P:\2020 PROJECTS\5020028 - WISDOT SWR IH 94\CIVIL3D\10660375\SHEETSPLAN\090103_XS-SIDEROADS.DWG
LAYOUT NAME - 53

PLOT DATE : 12/12/2022 12:40 PM PLOT BY : KYLE CORNELIUS PLOT NAME :

PLOT SCALE : 1 IN:10 FT HORZ. / 1 IN:10 FT VERT.

WISDOT/CADDS SHEET 49

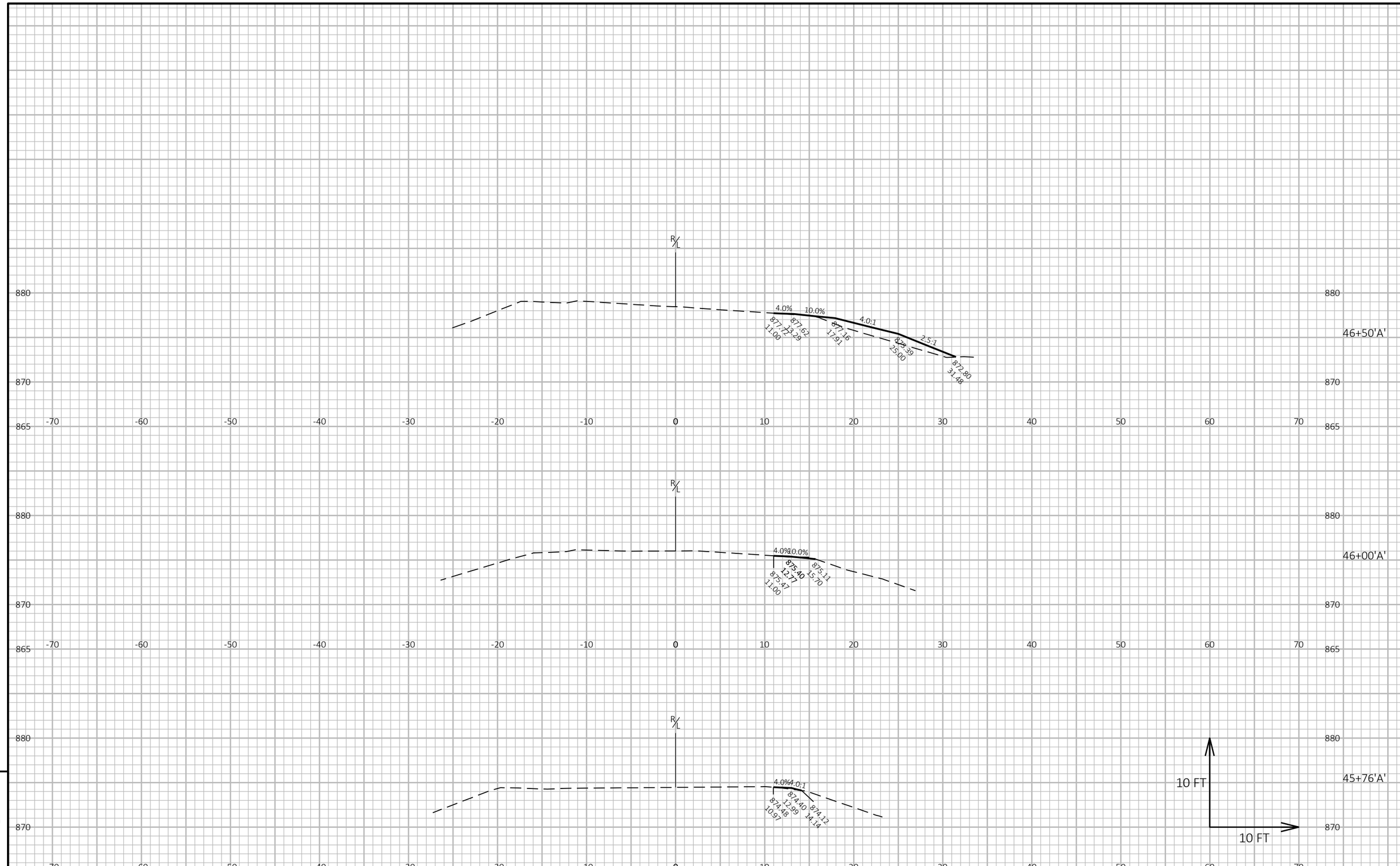

9

9

PROJECT NO: 1066-03-75	HWY: IH 94	COUNTY: DANE AND JEFFERSON	CROSS SECTIONS: AIRPORT RD	SHEET 297	E

FILE NAME : P:\2020 PROJECTS\5020028 - WISDOT SWR IH 94\CIVIL3D\10660375\SHEETSPLAN\090103_XS-SIDEROADS.DWG
LAYOUT NAME - 55

PLOT DATE : 12/12/2022 12:41 PM PLOT BY : KYLE CORNELIUS PLOT NAME : **PLOT SCALE :** 1 IN:10 FT HORZ. / 1 IN:10 FT VERT.

WISDOT/CADDS SHEET 49

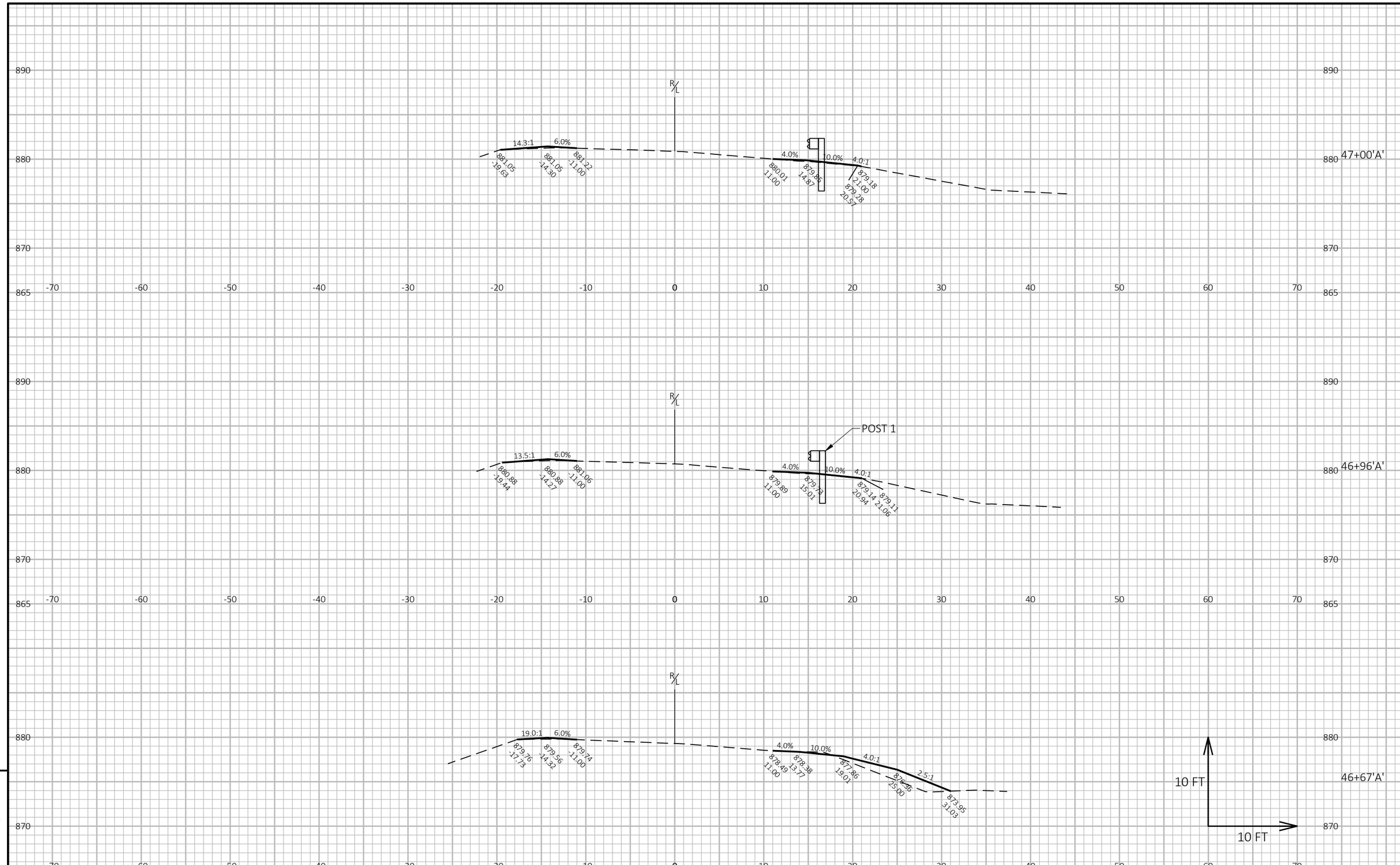

9

9

PROJECT NO: 1066-03-75	HWY: IH 94	COUNTY: DANE AND JEFFERSON	CROSS SECTIONS: AIRPORT RD	SHEET 298	E

FILE NAME : P:\2020 PROJECTS\5020028 - WISDOT SWR IH 94\CIVIL3D\10660375\SHEETSPLAN\090103_XS-SIDEROADS.DWG
LAYOUT NAME - 56

PLOT DATE : 12/12/2022 12:42 PM PLOT BY : KYLE CORNELIUS PLOT NAME : **PLOT SCALE :** 1 IN:10 FT HORZ. / 1 IN:10 FT VERT.

WISDOT/CADDS SHEET 49

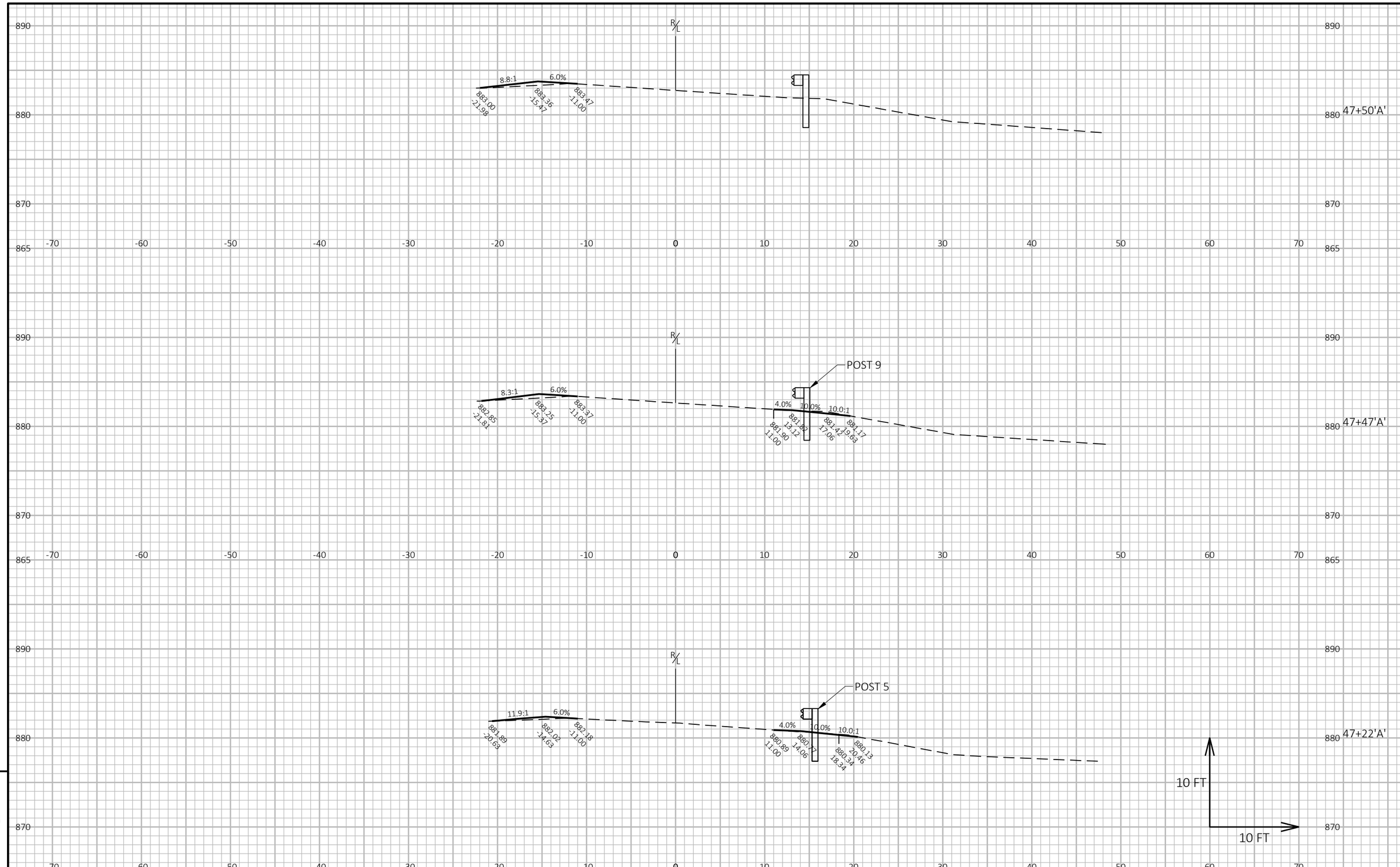

9

9

PROJECT NO: 1066-03-75	HWY: IH 94	COUNTY: DANE AND JEFFERSON	CROSS SECTIONS: AIRPORT RD	SHEET 299	E

FILE NAME : P:\2020 PROJECTS\5020028 - WISDOT SWR IH 94\CIVIL3D\10660375\SHEETSPLAN\090103_XS-SIDEROADS.DWG
LAYOUT NAME - 57

PLOT DATE : 12/12/2022 12:42 PM PLOT BY : KYLE CORNELIUS PLOT NAME : **PLOT SCALE :** 1 IN:10 FT HORZ. / 1 IN:10 FT VERT.

WISDOT/CADDS SHEET 49

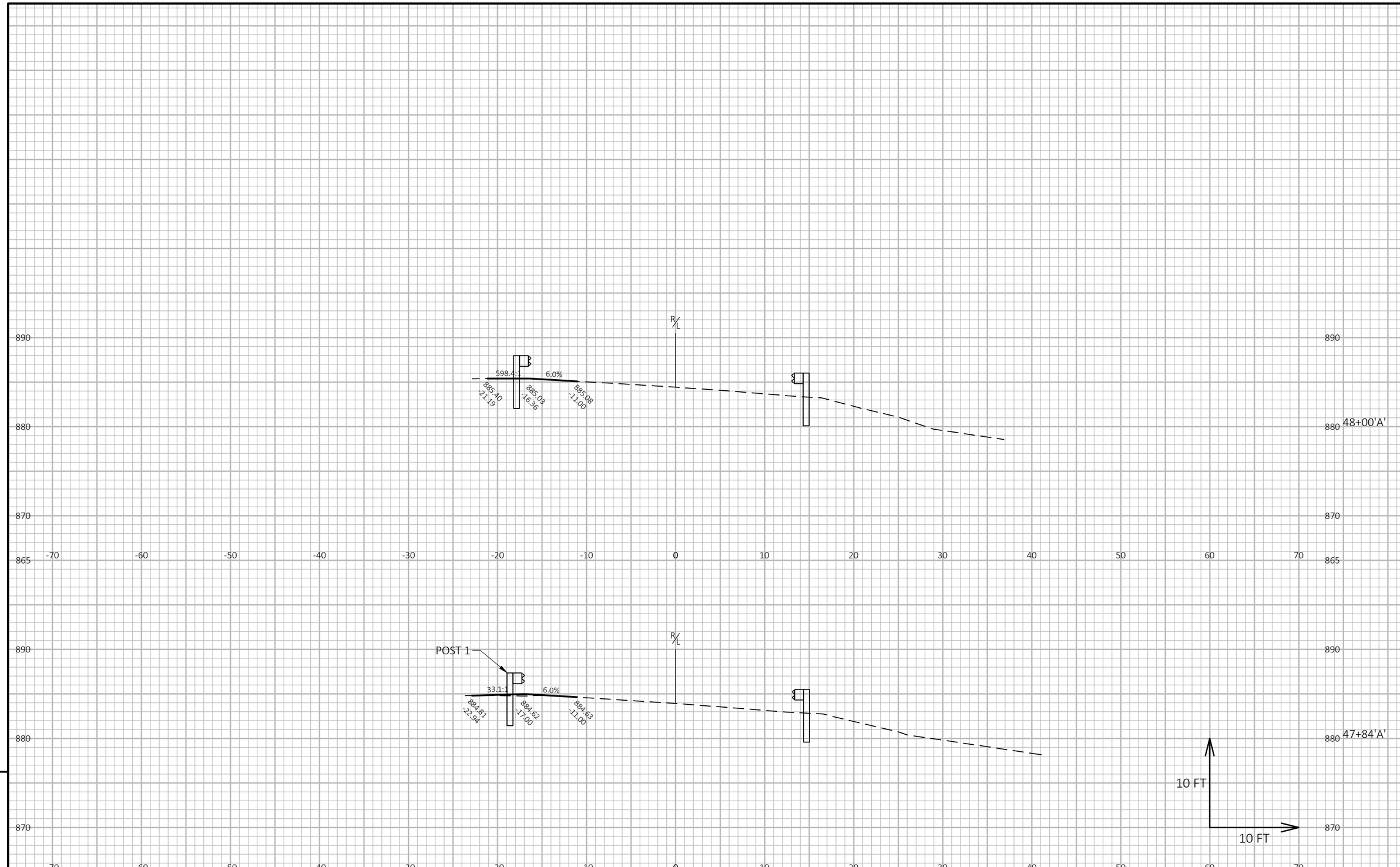

9

9

PROJECT NO: 1066-03-75	HWY: IH 94	COUNTY: DANE AND JEFFERSON	CROSS SECTIONS: AIRPORT RD	SHEET 300	E

FILE NAME : P:\2020 PROJECTS\5020028 - WISDOT SWR IH 94\CIVIL3D\10660375\SHEETSPLAN\090103_XS-SIDEROADS.DWG
LAYOUT NAME - 58

PLOT DATE : 12/12/2022 12:43 PM PLOT BY : KYLE CORNELIUS PLOT NAME : **PLOT SCALE :** 1 IN:10 FT HORZ. / 1 IN:10 FT VERT.

WISDOT/CADDS SHEET 49

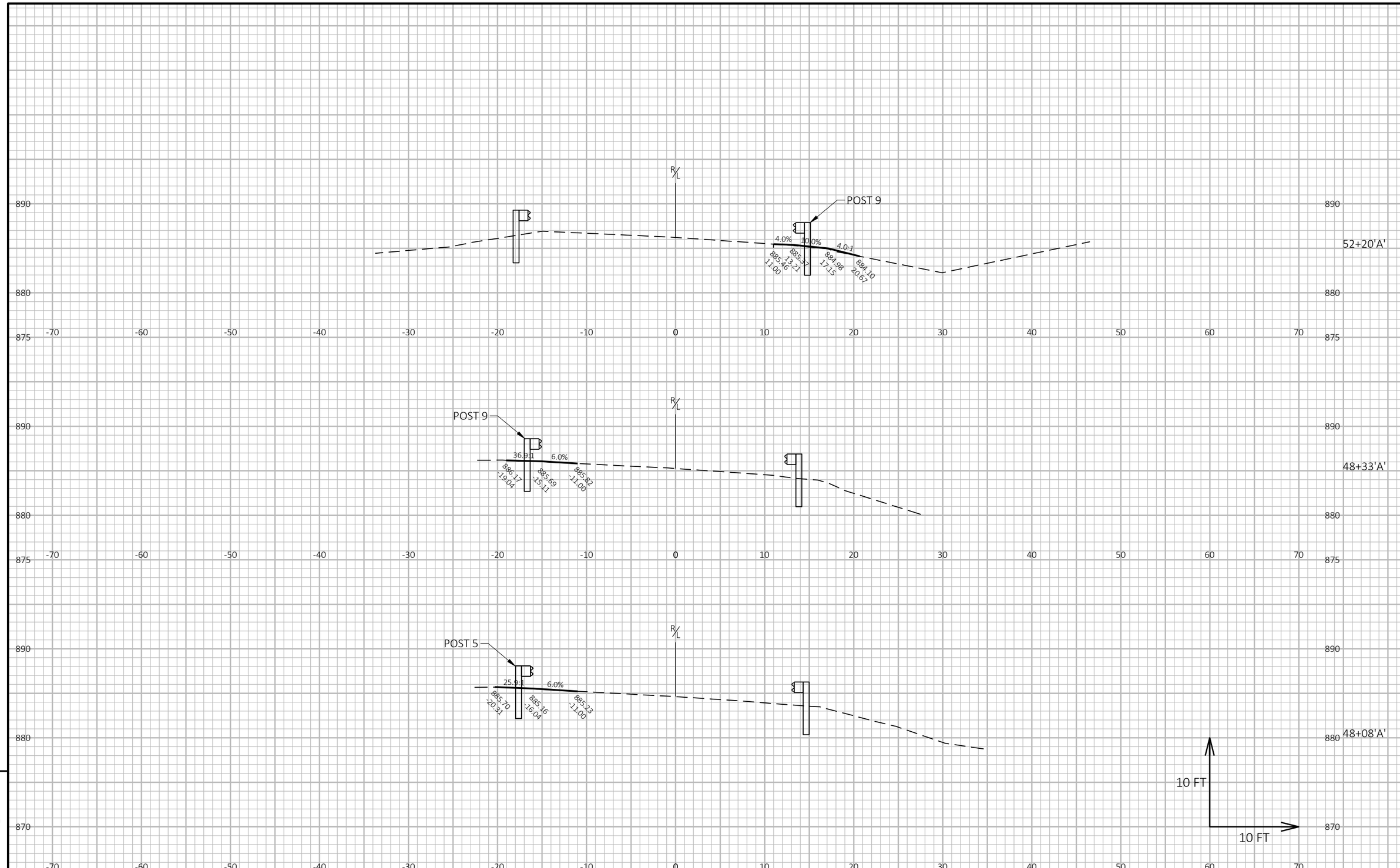

PROJECT NO: 1066-03-75	HWY: IH 94	COUNTY: DANE AND JEFFERSON	CROSS SECTIONS: AIRPORT RD	SHEET 301	E

FILE NAME : P:\2020 PROJECTS\5020028 - WISDOT SWR IH 94\CIVIL3D\10660375\SHEETSPLAN\090103_XS-SIDEROADS.DWG
LAYOUT NAME - 59
PLOT DATE : 12/12/2022 12:44 PM
PLOT BY : KYLE CORNELIUS
PLOT NAME :
PLOT SCALE : 1 IN:10 FT HORZ. / 1 IN:10 FT VERT.
WISDOT/CADDS SHEET 49

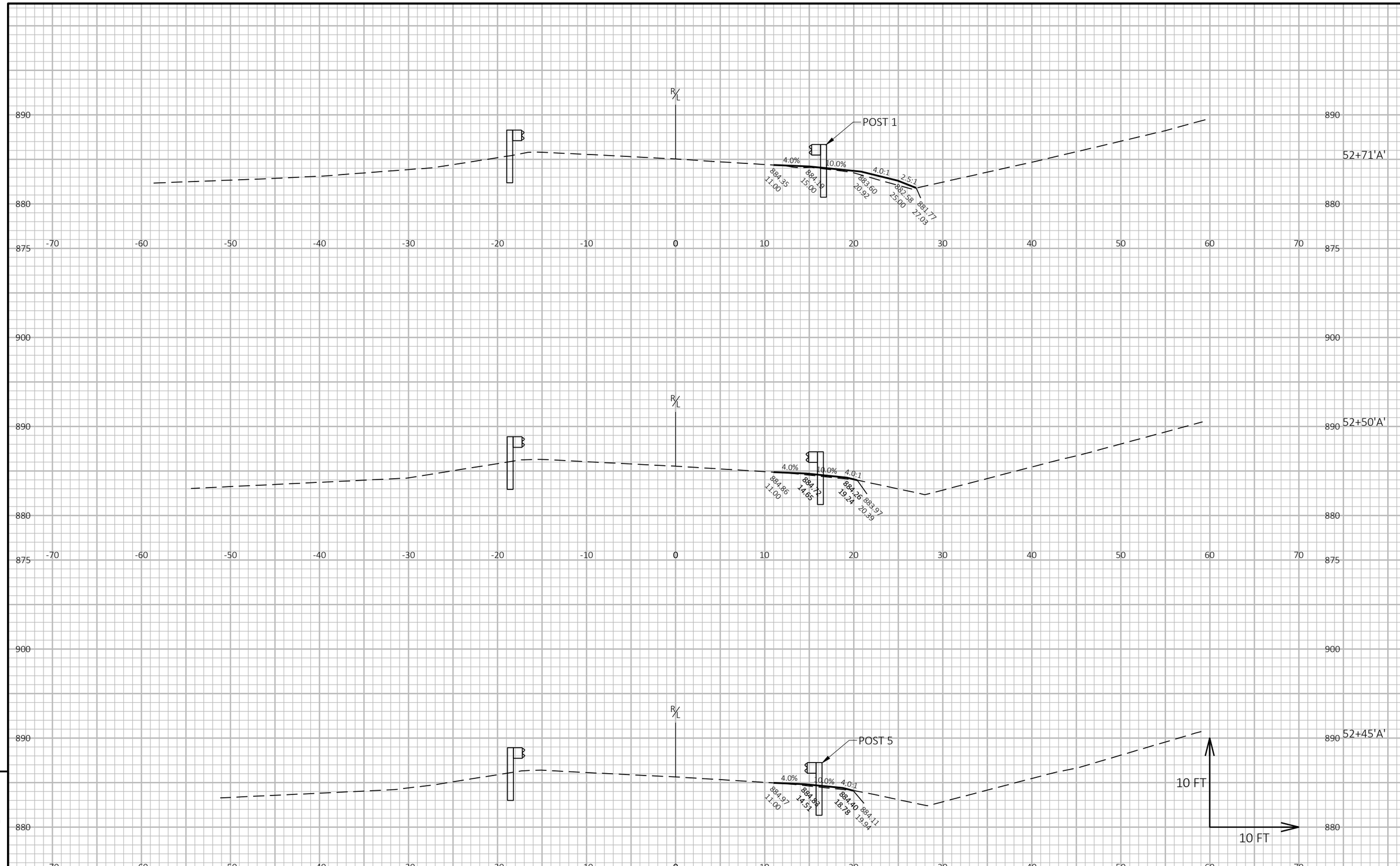

9

9

PROJECT NO: 1066-03-75	HWY: IH 94	COUNTY: DANE AND JEFFERSON	CROSS SECTIONS: AIRPORT RD	SHEET 302	E

FILE NAME : P:\2020 PROJECTS\5020028 - WISDOT SWR IH 94\CIVIL3D\10660375\SHEETSPLAN\090103_XS-SIDEROADS.DWG
LAYOUT NAME - 60

PLOT DATE : 12/12/2022 12:45 PM PLOT BY : KYLE CORNELIUS PLOT NAME : **PLOT SCALE :** 1 IN:10 FT HORZ. / 1 IN:10 FT VERT.

WISDOT/CADDS SHEET 49

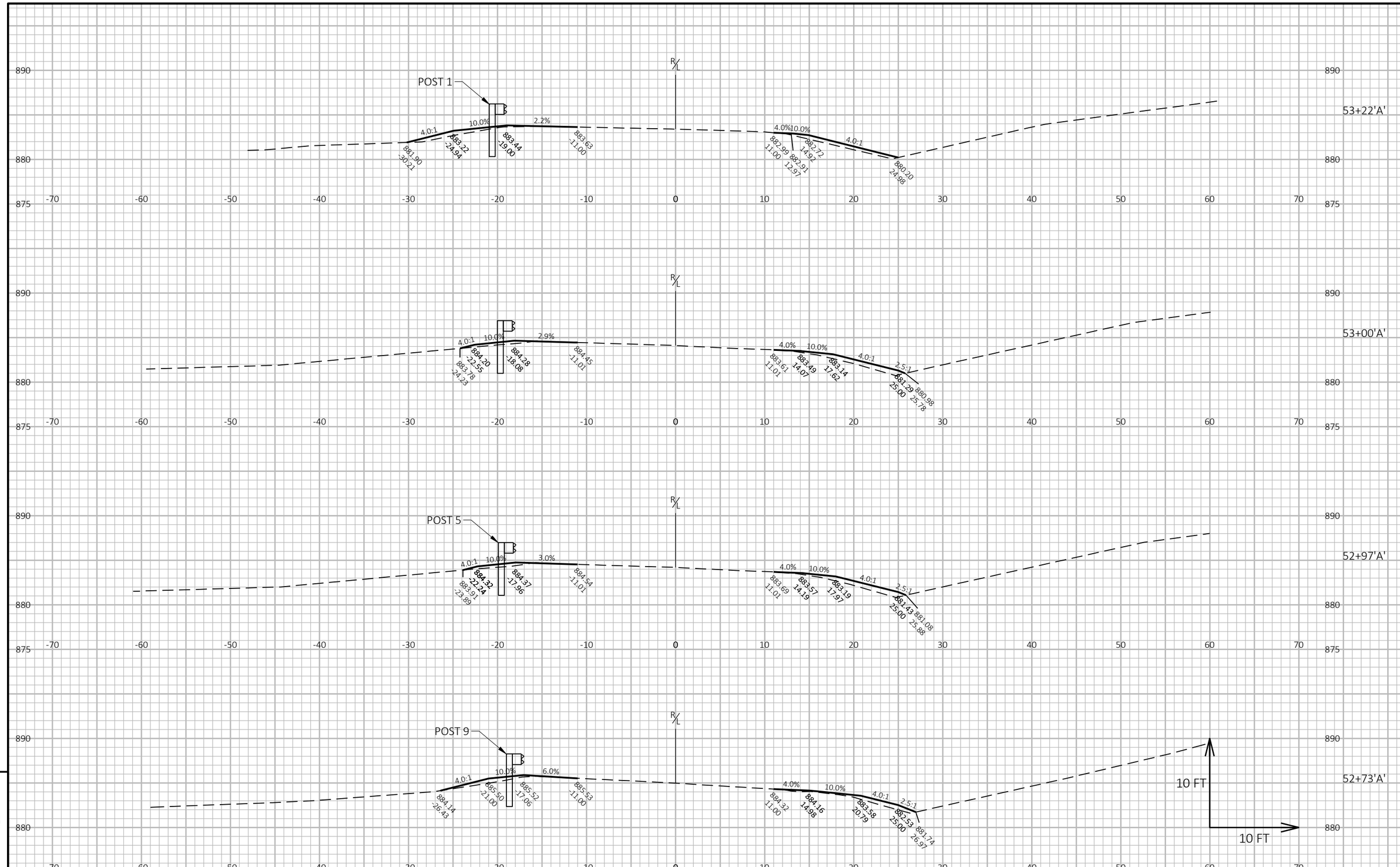

9

9

PROJECT NO: 1066-03-75	HWY: IH 94	COUNTY: DANE AND JEFFERSON	CROSS SECTIONS: AIRPORT RD	SHEET 303	E

FILE NAME : P:\2020 PROJECTS\5020028 - WISDOT SWR IH 94\CIVIL3D\10660375\SHEETSPLAN\090103_XS-SIDEROADS.DWG
LAYOUT NAME - 61
PLOT DATE : 12/12/2022 12:46 PM
PLOT BY : KYLE CORNELIUS
PLOT NAME :
PLOT SCALE : 1 IN:10 FT HORZ. / 1 IN:10 FT VERT.
WISDOT/CADDS SHEET 49

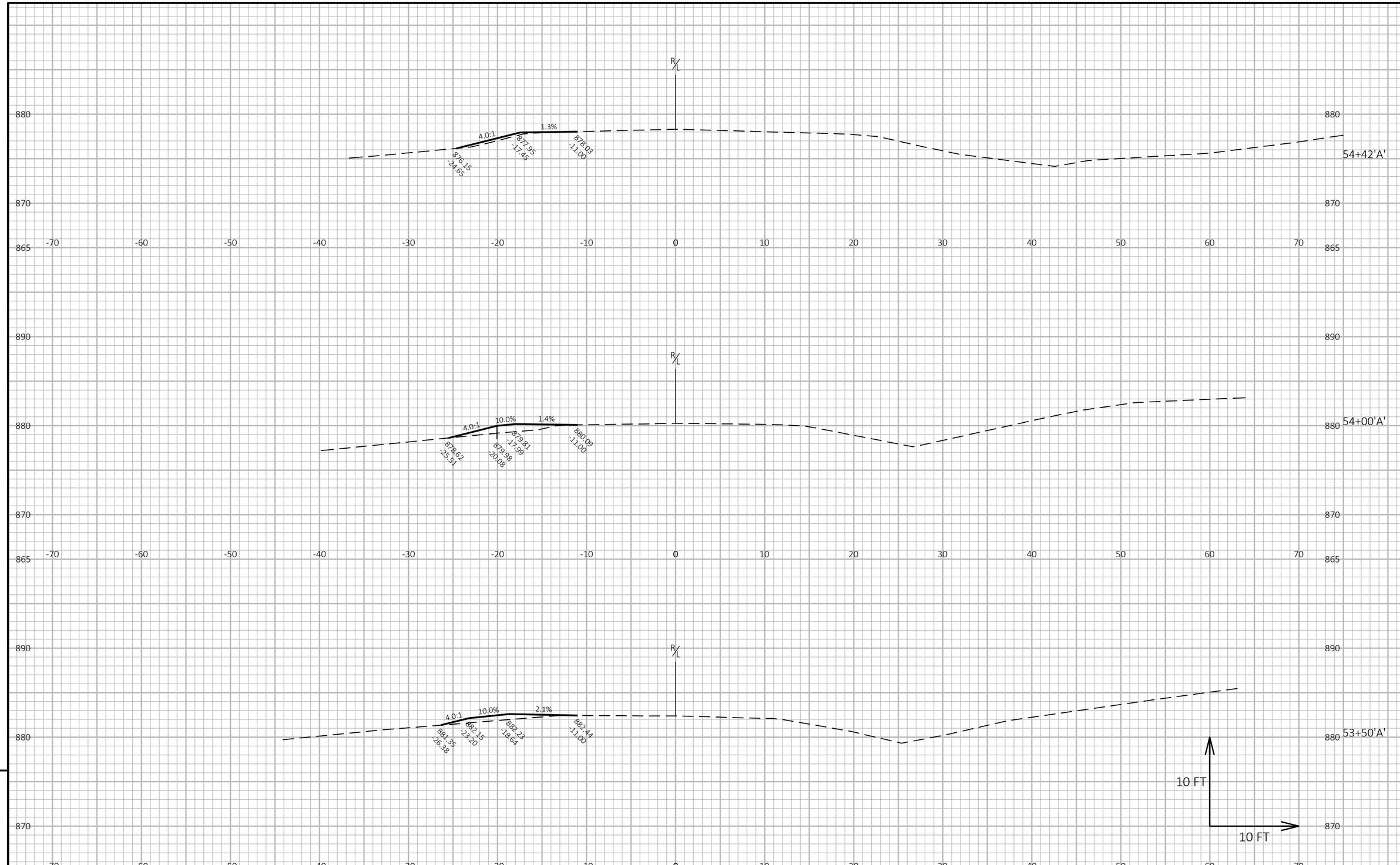

9

9

PROJECT NO: 1066-03-75	HWY: IH 94	COUNTY: DANE AND JEFFERSON	CROSS SECTIONS: AIRPORT RD	SHEET 304	E

FILE NAME : P:\2020 PROJECTS\5020028 - WISDOT SWR IH 94\CIVIL3D\10660375\SHEETSPLAN\090103_XS-SIDEROADS.DWG
LAYOUT NAME - 62
PLOT DATE : 12/12/2022 12:47 PM
PLOT BY : KYLE CORNELIUS
PLOT NAME :
PLOT SCALE : 1 IN:10 FT HORZ. / 1 IN:10 FT VERT.
WISDOT/CADDS SHEET 49

Notes

Wisconsin Department of Transportation

Dedicated people creating transportation solutions through innovation and exceptional service.

http://www.dot.wisconsin.gov